CONSTRUCTION SUMMARY

Cookstown - Zancor Homes (Cookstown) Ltd.

PURCHASER: Giancarlo De Santis **TEL:** RES.: 416-624-0896

LOT / PHASE	HOUSE TYPE	PRINT DATE
16 / 1	Sutton (50-02) Elev A	15-Sep-17

Ref#	Quantity - Description	Approved	Notes
4375	ADD GAS LINE TO STOVE (INCL. 15AMP, REQUIRED AS PER CODE; 40AMP WILL REMAIN)	27Jul17	
4376	ADD PLUG ABOVE FIREPLACE FOR FUTURE TV	27Jul17	
4434	CABINETS UPGRADE KITCHEN TO 4G IN LIEU OF STANDARD	15Sep17	
4435	CABINETS KITCHEN UPGRADE TO 44" HIGH SINGLE UPPER DOORS WITHTRIPLE STEP CROWN MOLDING E 62 MLD 100	15Sep17	
4438	CABINETS MASTER ENSUITE INCREASE HEIGHT OF VANITY	15Sep17	
4440	DELETE VANITY MIRROR IN MASTER ENSUITE ONLY	15Sep17	
4441	ELECTRICAL SHIFT STANDARD LIGHT IN KITCHEN COOKING AREA TO BE INSTALLED ABOVE KITCHEN ISLAND	15Sep17	
4443	HARDWOOD UPGRADE # 3 HARDWOOD MAIN AND 2ND FLOOR NON TILE AREAS IN LIEU OF STANDARD	15Sep17	
4456	PAINT STAIN INTERIOR OAK STAIRS	15Sep17	
4457	HVAC UPGRADE TO 10" EXHAUST DUCT IN KITCHEN	15Sep17	
4458	CABINETS ALLOW FOR A 36" WIDE STOVE IN KITCHEN	15Sep17	
4459	TILE DELETE ALL BATHROOM ACCESSORIES	15Sep17	
4460	COUNTER TOP KITCHENUPGRADE # 2	15Sep17	
4461	COUNTER TOP POWDER ROOM UP # 2 QUARTZ INCLUDES OVAL UNDERMOUNT SINK	15Sep17	
4462	COUNTER TOP UP # 2 MASTER ENSUITE	15Sep17	
4463	RAILINGS STANDARD IRON PICKETS UPGRADE OAK GROOVED HANDRAIL UPGRADE SQUARE POSTS	15Sep17	
4464	TRIM UPGRADE # 1 STEP BASEBAORD AND WINDOW TRIM	15Sep17	
4466	PLUMBING UPGRADE KITCHEN SINK TO BLANCO QUATRUS 5 15 U SUPER SINGLE MODEL # 401518	15Sep17	
4586	TILE MASTER ENSUITE UPGRADE # 4 FLOOR TILE TO BE INSTALLED ON SHOWER WALL	15Sep17	
4587	CABINETS KITCHEN DELETE CABINET HARDWARE IN KITCHEN DO NOT DRILL FOR KNOBS NO DOOR HARDWARE INCLUDED, NO WARRANTY ON HARDWARE	15Sep17	

This Document is Extremely Time Sensitive - Printed 15 Sep 17 at 16:49

ZANCOR HOMES COLOUR CHART

CABINETRY / COUNTERTOPS				
	DOOR STYLE	HARDWARE	COUNTERTOP	EDGE
Kitchen 4G FIBERBOARD	QT # 4503 PEPPERDUST W/BLC LINEN GLAZE	NO HOLE	# 9141 QUARTZ ICE SNOW(2)	FE-40
Island 4G FIBERBOARD	QT # 4503 PEPPERDUST W/BLC LINEN GLAZE	NO HOLE	# 9141 QUARTZ ICE SNOW(2)	FE-40
Servery	NA		NA	
Master Ensuite	QT 1022 STORM LP LAM	3487-160	VOLAKIS MARBLE (2)	FE-20
Main	NA			
Ensuite 2 & 3	QT 1303 WHITE FIBERBOARD	250 SC	DESIGNER WHITE D354-60	
Ensuite #4	QT 2501 PISTASHIO OAK	250 SC	CALCATTA MARBLE 4925K-07	
Powder Room	QT 2501 PISTASHIO OAK	250 SC	#7141 QUARTZ REFLECTION (2)	FE-20
Laundry	NA			
Basement Bath	NA			

TILES		INSERTS	THRESHOLDS
Main Foyer	CALCATTA GRIS 20" X 20"		Metal
Basement Foyer	NA		
Powder Room	CALCATTA GRIS 20" X 20"		
Mud Room	NA		
Main Hall	NA		
Kitchen Floor	CALCATTA GRIS 20" X 20"		
Breakfast Floor	CALCATTA GRIS 20" X 20"		
Kitchen Bk.Splash	OPTIONAL		
Laundry	CALCATTA GRIS 20" X 20"		
Mstr Ensuite Floor	CALCATTA GRIS 20" X 20"		
Mstr Ensuite Shower	CALCATTA GRIS 20" X 20" UPGRADE # 4	✓ NA	
Mstr Ens Tub Wall/Deck	NA		
Master Shower Floor	2 X 2 WHITE		
Master Shower Jamb	PERLATO ROYALE		
Main Bath Floor	NA		
Main Bath Tub Wall	NA		
Ensuite 2 & 3 Bath Floor	ALLURE GREY 12" X 24" INSTALL 1/4 BRICK		
Ensuite 2 & 3 Shower Wall	UNIWAL WHITE 8 X 10	NA	
Ensuite 2 & 3 Shower floor	WHITE 2 X 2		
Ensuite 2 & 3 Shower Jamb	BIANCA CARRERRA		
Ensuite #4 Bath Floor	NEW BYZANTINE GREY 12" X 24" INSTALL 1/4 BRICK		
Ensuite #4 Bath Wall	UNIWAL WHITE 8 X 10		

HARDWOOD / CARPET	
Living Room	VINTAGE SOLID SAWN WHITE OAK SELECT V PEARL GOTHAM 3 1/4" UP # 3
Dining Room	VINTAGE SOLID SAWN WHITE OAK SELECT V PEARL GOTHAM 3 1/4" UP # 3
Family/Great Room	VINTAGE SOLID SAWN WHITE OAK SELECT V PEARL GOTHAM 3 1/4" UP # 3
Library	VINTAGE SOLID SAWN WHITE OAK SELECT V PEARL GOTHAM 3 1/4" UP # 3
Kitchen *(Waiver)	NA
Main Foyer *(Waiver)	NA
Main Hall	VINTAGE SOLID SAWN WHITE OAK SELECT V PEARL GOTHAM 3 1/4" UP # 3
Upper Hall	VINTAGE SOLID SAWN WHITE OAK SELECT V PEARL GOTHAM 3 1/4" UP # 3
Master Bedroom	VINTAGE SOLID SAWN WHITE OAK SELECT V PEARL GOTHAM 3 1/4" UP # 3
Bedroom 2	VINTAGE SOLID SAWN WHITE OAK SELECT V PEARL GOTHAM 3 1/4" UP # 3
Bedroom 3	VINTAGE SOLID SAWN WHITE OAK SELECT V PEARL GOTHAM 3 1/4" UP # 3
Bedroom 4	VINTAGE SOLID SAWN WHITE OAK SELECT V PEARL GOTHAM 3 1/4" UP # 3
Carpet Underpad	NA
Basement Foyer	NA

FIREPLACES					
LOCATION	GREAT ROOM	Opt. Surround	NA	MANTLE	NF 8

MIRRORS & ACCESSORIES		PLASTER MOULDING	
Mirrors	DELETE MASTER ONLY ✓	Opt. Crown Moulding	NA
Bathroom Accessories	DELETE ALL BATHROOMS ✓	Location	NA

Purchaser has reviewed the colour chart	SITE & LOT	
******FOR TRADE USE******	COOKSTOWN	16
***Any upgrades in the colour chart must be accompanied with a PES. It is the responsibility of* all Trades to inform the builder of any discrepancies on sketches, PES and/or colour charts PRIOR to installation.**	DB / GA	8/17/17
**** PAGE 1 OF 2 ****	Purchaser Initial	Vendor

ZANCOR HOMES COLOUR CHART

STAIRS, RAILING & PICKETS & STAIR STAIN	
Stair Stain / Species:	STAIN TO MATCH GOTHAM
White Paint Req'd	NA
Main to 2nd Railing Details:	STD METAL PICKETS BLC SINGLE COLLAR/W ALT PLAIN /R6 3" GROOVED OAK HANDRAILSQUARE POSTS
Main to Top of Basement door Railing	METAL PICKETS BLC SINGLE COLLAR/W ALT PLAIN/ R6 3" GROOVED OAK HANDRAILSQUARE POSTS

TRIM	
Casing/Baseboards	UP # 1 STEP
Interior Doors	STANDARD
Interior Door Hardware	STANDARD
Exterior Door Hardware	STANDARD

PAINT			
Kitchen/Breakfast	WARM GREY	Master Beds	WARM GREY
Living Room	WARM GREY	Bedroom 2	WARM GREY
Dining Room	WARM GREY	Bedroom 3	WARM GREY
Family/Great room	WARM GREY	Bedroom 4	WARM GREY
Den/Study	WARM GREY	Master Ens.	WARM GREY
Main/Upper Hall	WARM GREY	Ensuite # 4	WARM GREY
Laundry	WARM GREY	Ensuite 2 & 3	WARM GREY
Powder Room	WARM GREY	Basement	NA

PLUMBING- UPGRADES TO BE DETAILED ON PES			
	FIXTURES	FAUCETS	NOTES
Kitchen	UPGRADE	STANDARD	R 15 U SUPER SINGLE # 401518
Powder Room	UPGRADE	STANDARD	OVAL UNDERMOUNT
Master Ensuite	UPGRADE	STANDARD	OVAL UNDERMOUNT
Ensuite 2 & 3	STANDARD	STANDARD	
Ensuite # 4	STANDARD	STANDARD	
BASEMENT	NA		
Other			

ZANCOR APPLIANCE REQUIREMENTS-UPGRADES TO BE DETAILED ON PES			
Appliance Package received in 'Schedule E'	**YES / NO Package Name:**		
	UPG (SEE PES)	**DECLINED**	**NOTES**
GAS LINE BBQ	STANDARD		
WATERLINE to Fridge	STANDARD		
Hood Fan Venting **SIZE**	10"	✓	
ELECTRICAL for Built-in Oven	NA		
ELECTRICAL for Built-in Micro / OTR	NA		
ELECTRICAL for Gas Stove	UPGRADE		
ELECTRICAL for Bar Fridge	NA		

DISCLAIMER	INITIALS	
Colours of all materials are as close as possible to Builders selection but not necessarily identical due to dye lot variances in manufacturing/manufacturers. Due to construction progress some items may have been pre-selected or installed. In this event the Vendors's selection must be accepted by the purchaser	DA	GA
Any changes to the colour chart after signing are subject to a **$5000** administration fee plus costs	DA	GA
Purchaser has checked and acknowledged accuracy of colour and selections before signing.	DA	GA

SITE: COOKSTOWN	**50-02 SUTTON -A LOT: 16**	
PURCHASER(S):	**DINA A DE SANTIS** **GIANCARLO DE SANTIS**	Dina DeSantis — Aug 10/17 **Purchaser Signature** — **Date**
HOME #/CELL #	**416 624-0896**	
EMAIL:		**Purchaser Signature** — **Date**
DÉCOR NOTES		**Décor Consultant Signature** — **Date** 8/17/17
FOR TRADE USE		
Any upgrades in the colour chart must be accompanied with a PES. ***It is the responsibility of all Trades to inform the builder of any discrepancies on sketches, PES and/or colour charts PRIOR to installation.***	ZANCOR HOMES	**Vendor Signature** — **Date**

***** PAGE 2 OF 2 *****

Aug 10/17
DD - GA

Lot 16.
June 20/17

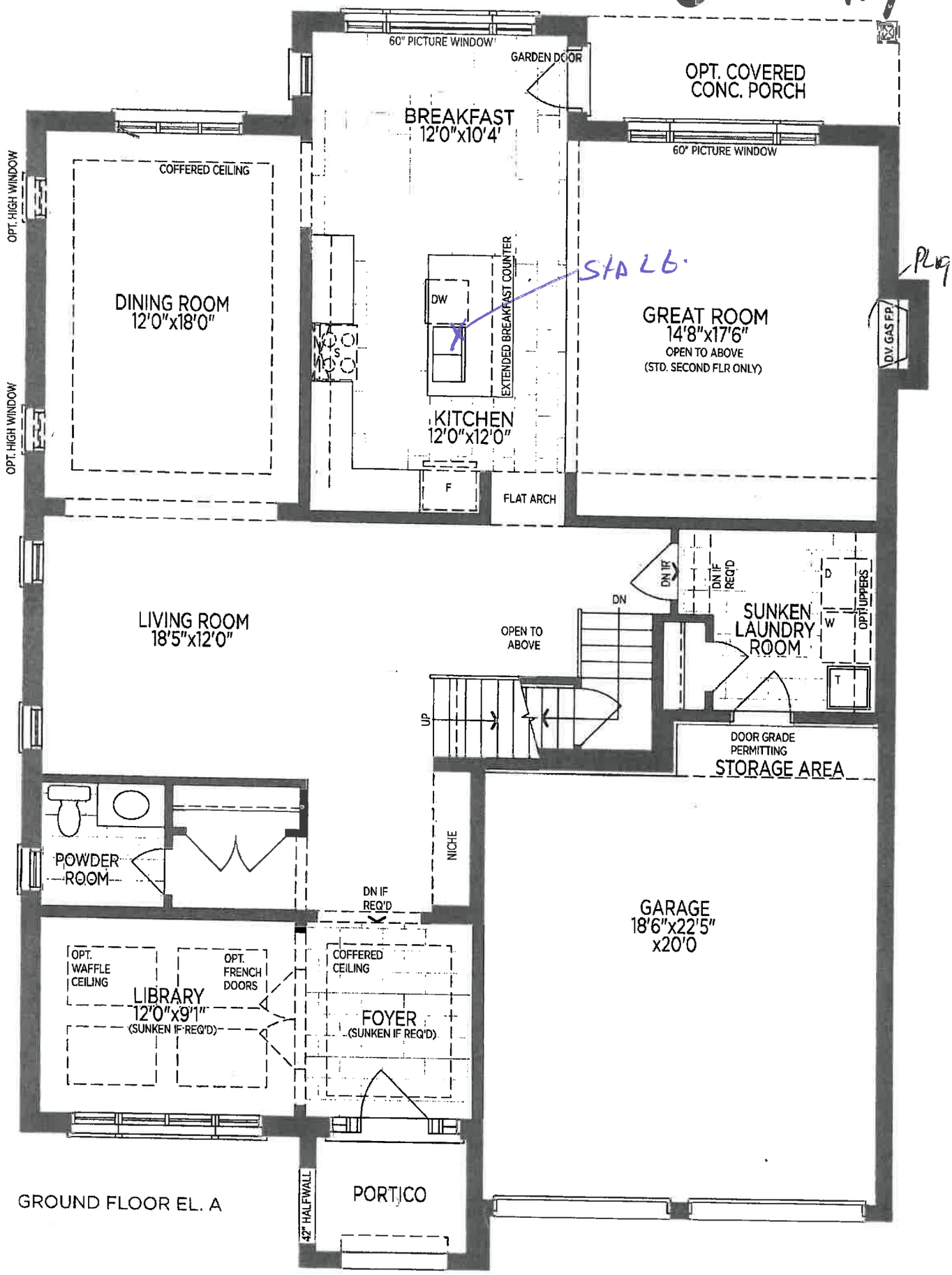

GROUND FLOOR EL. A

GA DD

SUTTON 50-02

Aug 10/17
D.D AA

L0616
June 20/17

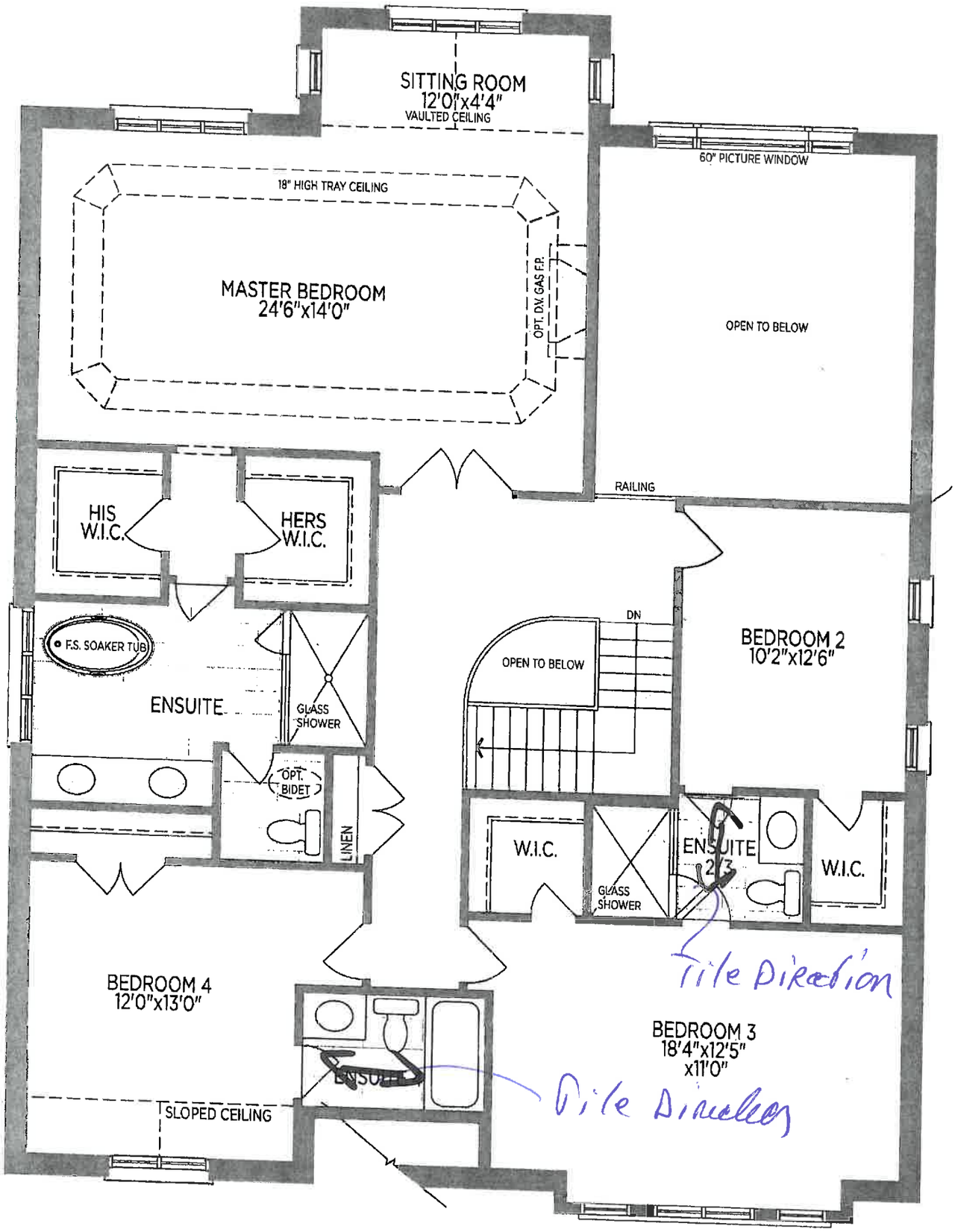

SECOND FLOOR EL. A

AA D.D

SUTTON 50-02

Aug 10/17

ZANCOR COOKSTOWN

Lo 616 COOKSTOWN

QTK STANDARD Cabinet Hardware

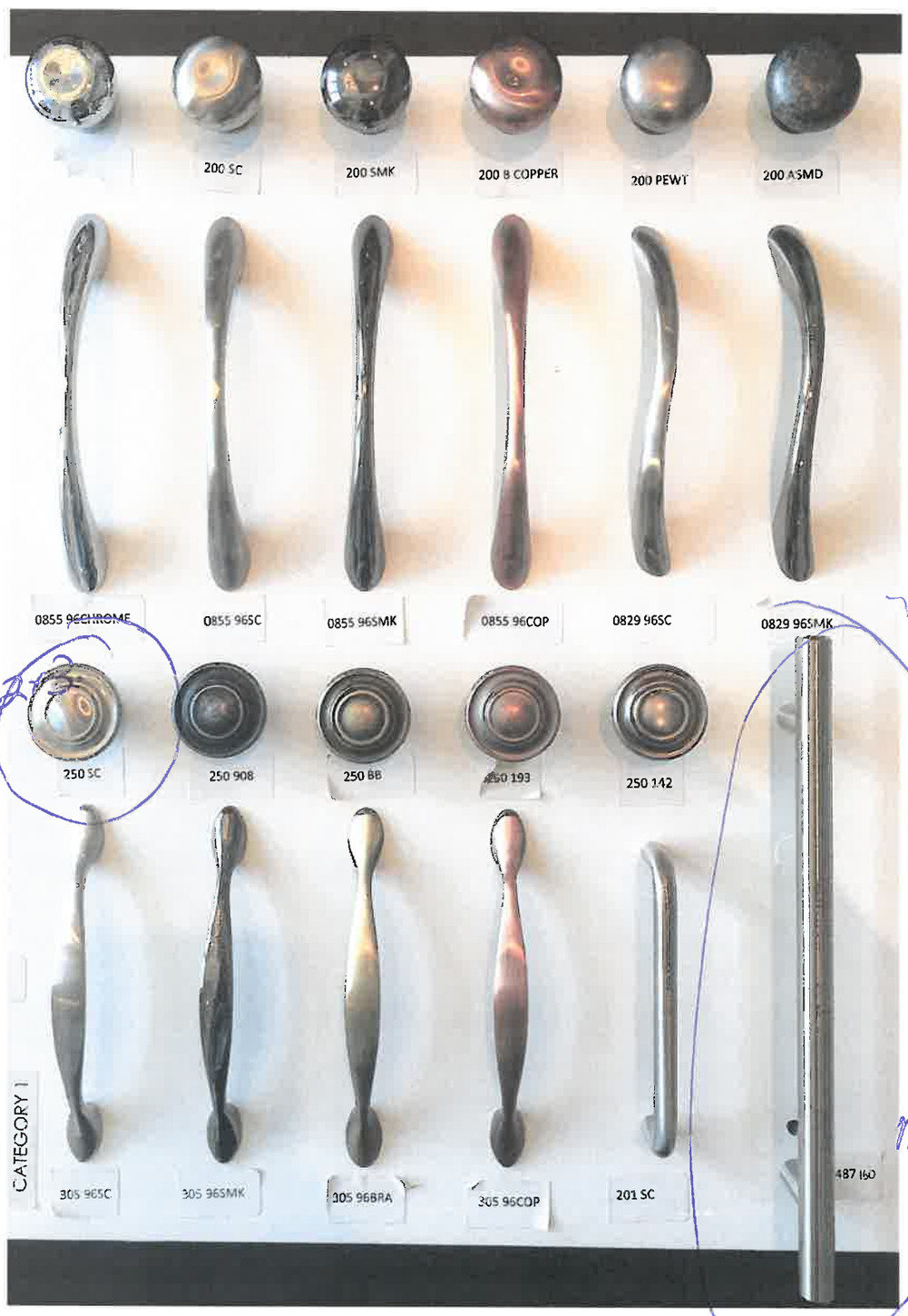

Kitchen NO Hardware Hole.

DD

Ensh 2/3

End 4 Powder

GA

master

your kitchen. your taste.

80 Sante Drive, Vaughan, ON L4K 3C4
T 416.746.1811 F 905.761.5901
www.QTK.ca info@qtk.ca

Q3800 August 10, 2017

PURCHASER: Zancor Homes (Cooksto	JOB NAME: LOT 16 CKT	SALES REP: Giovanni Toto

CUSTOMER WAIVER FOR CUSTOMERS SELECTING TO SUPPLY AND/OR INSTALL THEIR OWN HANDLES OR KNOBS ON CABINETRY

Customers are strongly recommended to select a handle from QTK's vast selection of decorative hardware at the time of door style and finish selections.

Please be advised, if the customer selects to not have decorative hardware (handles or knobs) installed by QTK, QTK will not be responsible for correcting any damages that may arise. This includes but is not limited to any scratches or touch ups required on any doors. The customer accepts full responsibility for any damage caused by installing their own hardware.

Customer acknowledges and understands that if they later decide they want QTK to install handles or knobs that either the customer has purchased from QTK or from another source that the customer will be responsible for the charges as per the QTK Fees & Changes Schedule set out in the Purchase Terms Form in addition to the cost of the actual hardware and installation of the hardware.

Please note that the cost QTK charges to drill & install the handles on site will be SIGNIFICANTLY higher than when they are drilled and installed in the factory - the reason is all our decorative handle drilling is completed by CNC machinery which makes the process very accurate and reliable.

By signing below the customer acknowledges and understands all of the items listed above and is forfeiting their warranty on the finish of the doors.

CUSTOMER SIGNATURE: Nina DeSantis DATE: Aug. 10/17

CUSTOMER SIGNATURE: Lyle Santos DATE: "

80 Sante Drive, Vaughan, ON L4K 3C4
T 416.746.1811 F 905.761.5901
www.qtk.ca info@qtk.ca

ZANCOR HOMES, CASTLES OF KING CITY			January 8, 2015
CATEGORY	DOOR STYLE	STAIN / COLOUR	STAIN / COLOUR
FIBERBOARD DOOR & COLOUR COMBINATIONS FOR GLAZED & HIGH GLOSS DOORS (CATEGORY 3G, 4G & 5G)			
3G	QT 1203 QT 1501 QT 1503 QT 4401 QT 4501 QT 4503 QT 4504	BURNT UMBER w/ BLACK GLAZE	PEPPERDUST w/ BLACK GLAZE
		CHAMOIS w/ BUTTER PECAN GLAZE	REVERE PEWTER w/ BLACK GLAZE
		CHAMOIS w/ ESPRESSO GLAZE	WHITE w/ GRAY GLAZE
		CLASSIC GRAY w/ GRAY GLAZE	WILLOW w/ BLACK GLAZE
		CLOUD WHITE w/ GRAY GLAZE	PEPPERDUST w/ BLACK GLAZE
		CLOUD WHITE w/ BUTTER PECAN GLAZE	REVERE PEWTER w/ BLACK GLAZE
		CLOUD WHITE w/ ESPRESSO GLAZE	WHITE w/ GRAY GLAZE
4G	QT 5401 QT 5501 QT 5503 QT 5504	CLOUD WHITE w/ CASHMERE GLAZE	WILLOW w/ BLACK GLAZE
		CLOUD WHITE w/ MOCHA GLAZE	
		IVORY w/ BUTTER PECAN GLAZE	
		IVORY w/ ESPRESSO GLAZE	
		IVORY w/ MOCHA GLAZE	
4G	QT 1203 QT 1501 QT 1503 QT 4401 QT 4501 QT 4503 QT 4504	ACADIA WHITE w/ BLACK LINEN GLAZE	DOESKIN w/ BLACK LINEN GLAZE
		BURNT UMBER w/ BLACK LINEN GLAZE	DOVE WING w/ BUTTER PECAN LINEN GLAZE
		CASHMERE w/ LIGHT BUTTER PECAN LINEN GLAZE	HALO w/ BLACK LINEN GLAZE
		CASHMERE w/ BUTTER PECAN LINEN GLAZE	IRON MOUNTAIN w/ BLACK LINEN GLAZE
		CHAMOIS w/ BUTTER PECAN LINEN GLAZE	IVORY w/ BUTTER PECAN LINEN GLAZE
		CHAMOIS w/ ESPRESSO LINEN GLAZE	IVORY w/ ESPRESSO LINEN GLAZE
		CHAMOIS w/ CASHMERE LINEN GLAZE	OXFORD WHITE w/ LIGHT GRAY LINEN GLAZE
		CHELSEA GRAY w/ BLACK LINEN GLAZE	PEPPERDUST w/ BLACK LINEN GLAZE
		CLASSIC GRAY w/ BLACK LINEN GLAZE	REVERE PEWTER w/ BLACK LINEN GLAZE
		CLASSIC GRAY w/ GRAY LINEN GLAZE	STEEL WOOL w/ BLACK LINEN GLAZE
		CLOUD WHITE w/ BLACK LINEN GLAZE	STONINGTON GRAY w/ BLACK LINEN GLAZE
		CLOUD WHITE w/ GRAY LINEN GLAZE	STORM w/ BLACK LINEN GLAZE
5G	QT 5401 QT 5501 QT 5503 QT 5504	CLOUD WHITE w/ LIGHT GRAY LINEN GLAZE	TAUS TAUPE w/ BLACK LINEN GLAZE
		CLOUD WHITE w/ LIGHT BUTTER PECAN LINEN GLAZE	WHITE w/ BLACK LINEN GLAZE
		CLOUD WHITE w/ BUTTER PECAN LINEN GLAZE	WHITE w/ GRAY LINEN GLAZE
		CLOUD WHITE w/ ESPRESSO LINEN GLAZE	WHITE w/ LIGHT GRAY LINEN GLAZE
		CLOUD WHITE w/ CASHMERE LINEN GLAZE	WHITE w/ LIGHT BUTTER PECAN LINEN GLAZE
		CLOUD WHITE w/ MOCHA LINEN GLAZE	WHITE w/ BUTTER PECAN LINEN GLAZE
		COTTON BALLS w/ BLACK LINEN GLAZE	WHITE DOWN w/ BUTTER PECAN LINEN GLAZE
		COVENTRY GRAY w/ BLACK LINEN GLAZE	WHITE DOWN w/ ESPRESSO LINEN GLAZE
		CREAM w/ BUTTER PECAN LINEN GLAZE	WILLOW w/ BLACK LINEN GLAZE
		CREAM w/ CASHMERE LINEN GLAZE	WROUGHT IRON w/ BLACK LINEN GLAZE
5G	QT 1025 **(HIGH GLOSS)**	ACADIA WHITE (HIGH GLOSS)	JET BLACK (HIGH GLOSS)
		BURNT UMBER (HIGH GLOSS)	OXFORD WHITE (HIGH GLOSS)
		CASHMERE (HIGH GLOSS)	PEPPERDUST (HIGH GLOSS)
		CHAMOIS (HIGH GLOSS)	PROVENCE CREAM (HIGH GLOSS)
		CHELSEA GREY (HIGH GLOSS)	REVERE PEWTER (HIGH GLOSS)
		CLASSIC GRAY (HIGH GLOSS)	STEEL WOOL (HIGH GLOSS)
		CLOUD WHITE (HIGH GLOSS)	STONINGTON GREY (HIGH GLOSS)
		COTTON BALLS (HIGH GLOSS)	STORM (HIGH GLOSS)
		COVENTRY GRAY (HIGH GLOSS)	TAUS TAUPE (HIGH GLOSS)
		CREAM (HIGH GLOSS)	VANILLA MILKSHAKE (HIGH GLOSS)
		DOESKIN (HIGH GLOSS)	WHITE (HIGH GLOSS)
		DOVE WING (HIGH GLOSS)	WHITE DOVE (HIGH GLOSS)
		GLACIER WHITE (HIGH GLOSS)	WHITE DOWN (HIGH GLOSS)
		HALO (HIGH GLOSS)	WILLOW (HIGH GLOSS)
		IRON MOUNTAIN (HIGH GLOSS)	WROUGHT IRON (HIGH GLOSS)
		IVORY (HIGH GLOSS)	

LOT 16 COOKSTOWN

Lo616
Aug 10/17

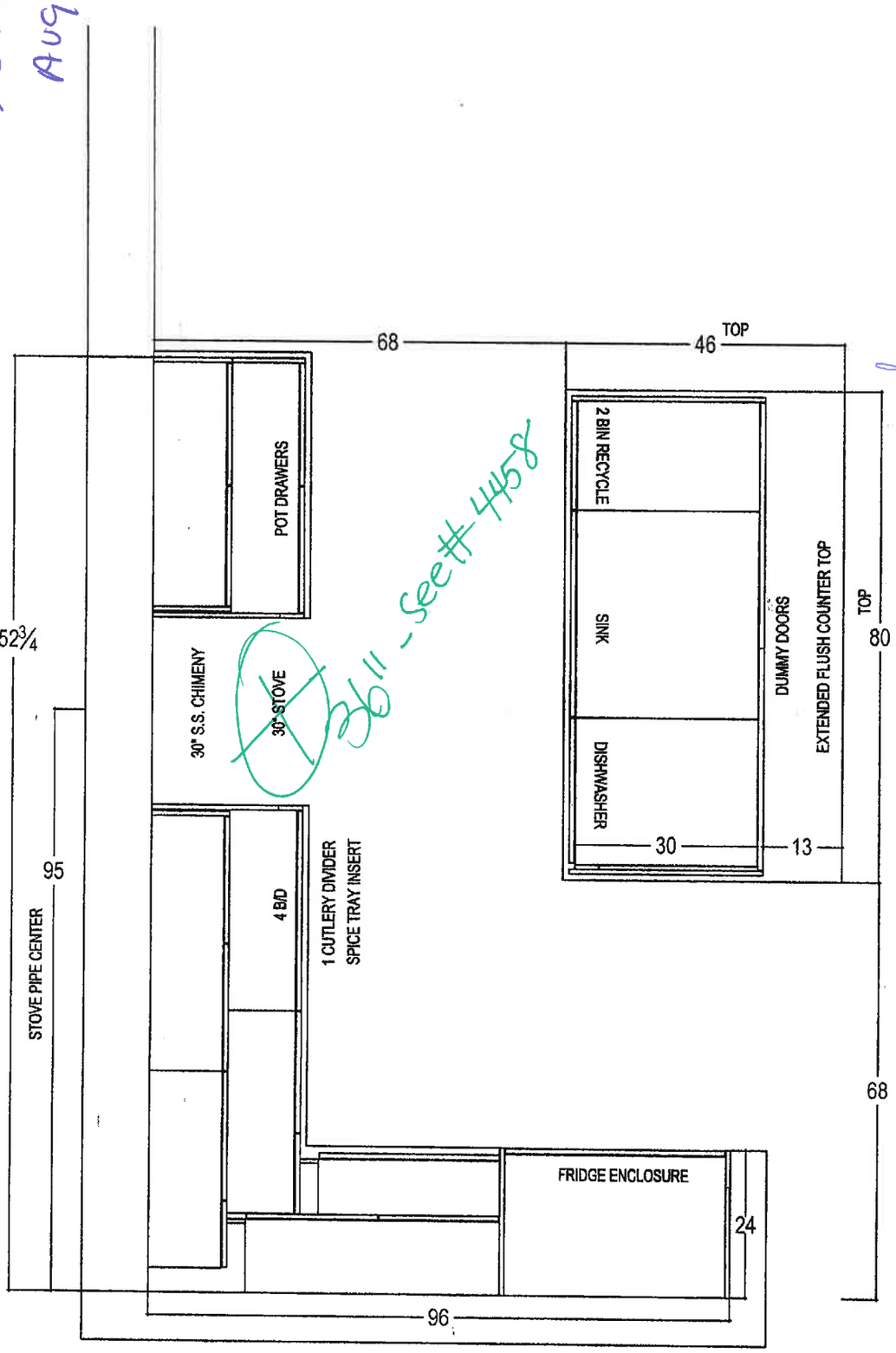

Z611 - See #4458

I accept uppers to 44" with triple 5¼p. crown
crown to ceiling

QTK your kitchen, your taste. 80 SANTE DRIVE, VAUGHAN, ON L4K 3C4, T: 416.746.1811 F:905.761.5901	CLIENT: ZANCOR HOMES	JOB NAME: 5002 SUTTON TAKEOFF	ROOM: KITCHEN - PLAN VIEW	DRAWN BY: RP
	SITE: COOKSTOWN	DOOR STYLE: __	DOOR HANDLE: __	SCALE: 1/2" = 1'-0"
	PHONE: __	FINISH: __	DRW HANDLE: __	DATE: JULY 14, 2017
	EMAIL: __	SPECIES: __	TOP: __	PAGE: 1/4

5002

Lot 16
Aug 10/17

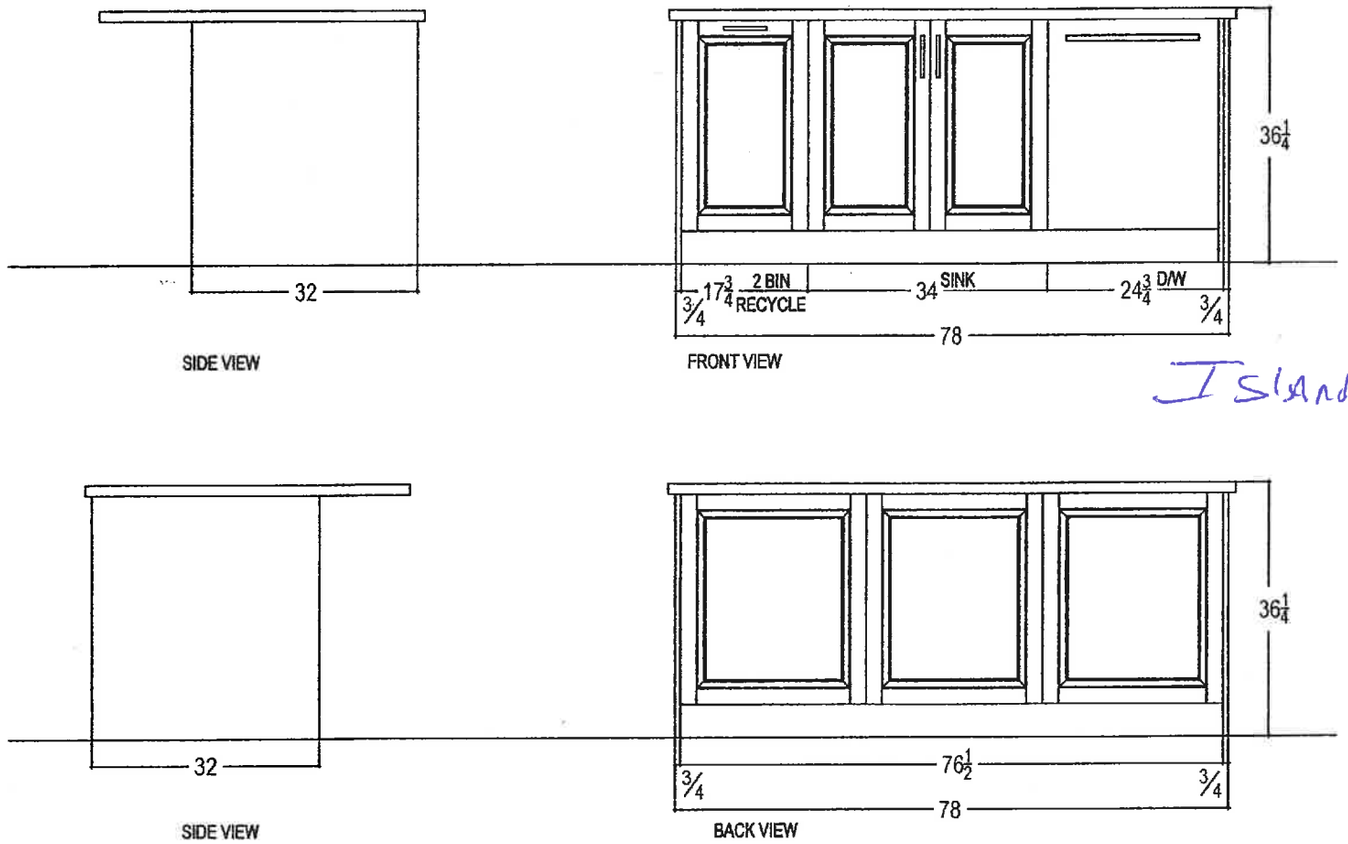

Island

D.D

5002

QTK
your kitchen. your taste.
80 SANTE DRIVE, VAUGHAN, ON L4K 3C4.
T: 416.746.1811 F:905.761.5901

CLIENT: ZANCOR HOMES	JOB NAME: 5002 SUTTON - TAKEOFF	ROOM: KITCHEN	DRAWN BY: RP	COMMENTS:
SITE: COOKSTOWN	DOOR STYLE: ___	DOOR HANDLE: ___	SCALE: 1/2" = 1'-0"	ISLAND ELEVATION
PHONE: ___	FINISH: ___	DRW HANDLE: ___	DATE: JULY 14, 2017	
EMAIL: ___	SPECIES: ___	TOP: NONE	PAGE: 4/4	

Lot 16
AUG 10/17

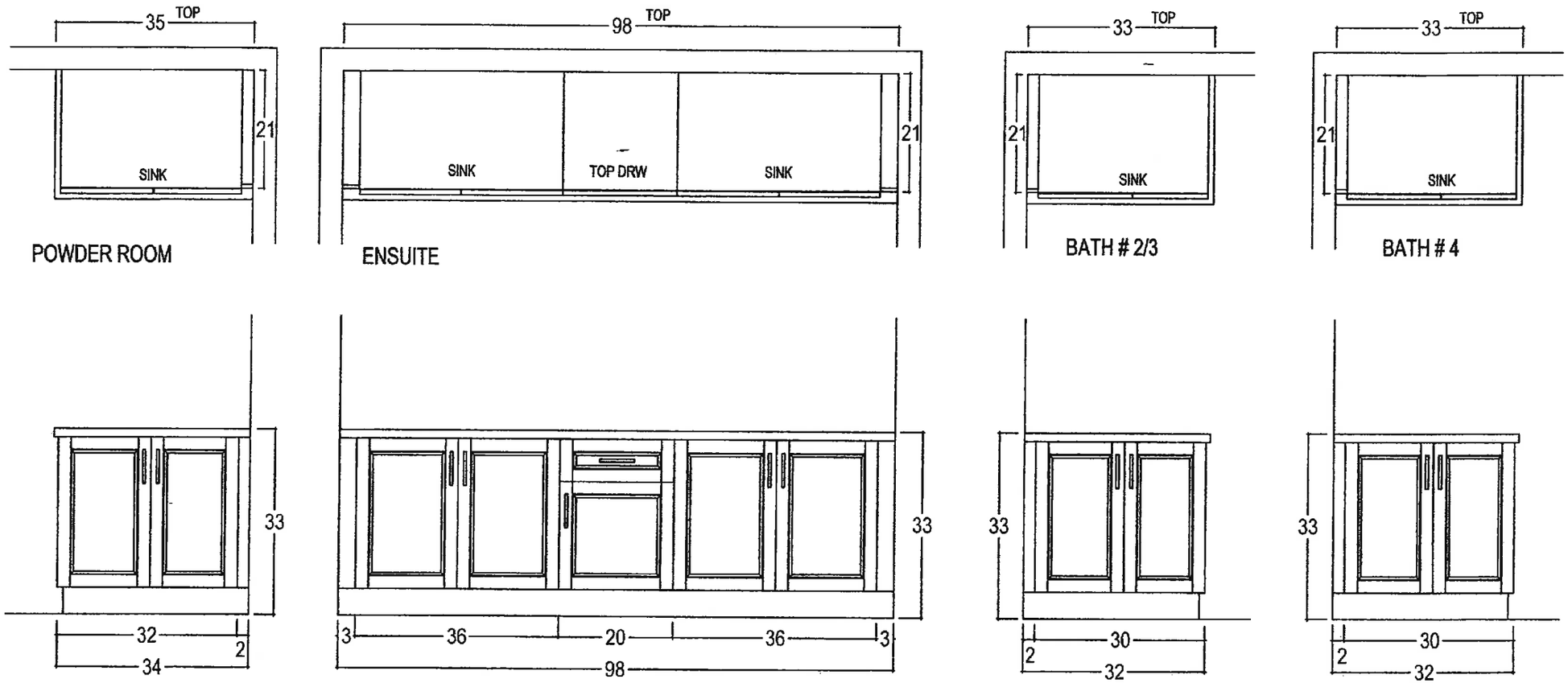

5001

your kitchen. your taste. 80 SANTE DRIVE, VAUGHAN, ON L4K 3C4, T: 416.746.1811 F:905.761.5901	CLIENT: ZANCOR HOMES	JOB NAME: 5002 SUTTON - TAKEOFF	ROOM: VANITIES	DRAWN BY: RP	COMMENTS:
	SITE: COOKSTOWN	DOOR STYLE: ___	DOOR HANDLE: ___	SCALE: 1/2" = 1'-0"	STANDARD 2ND SECOND FLOOR
	PHONE: ___	FINISH: ___	DRW HANDLE: ___	DATE: JULY 14, 2017	
	EMAIL: ___	SPECIES: ___	TOP: NONE	PAGE: 1/2	

Lot 16
Aug 10/17

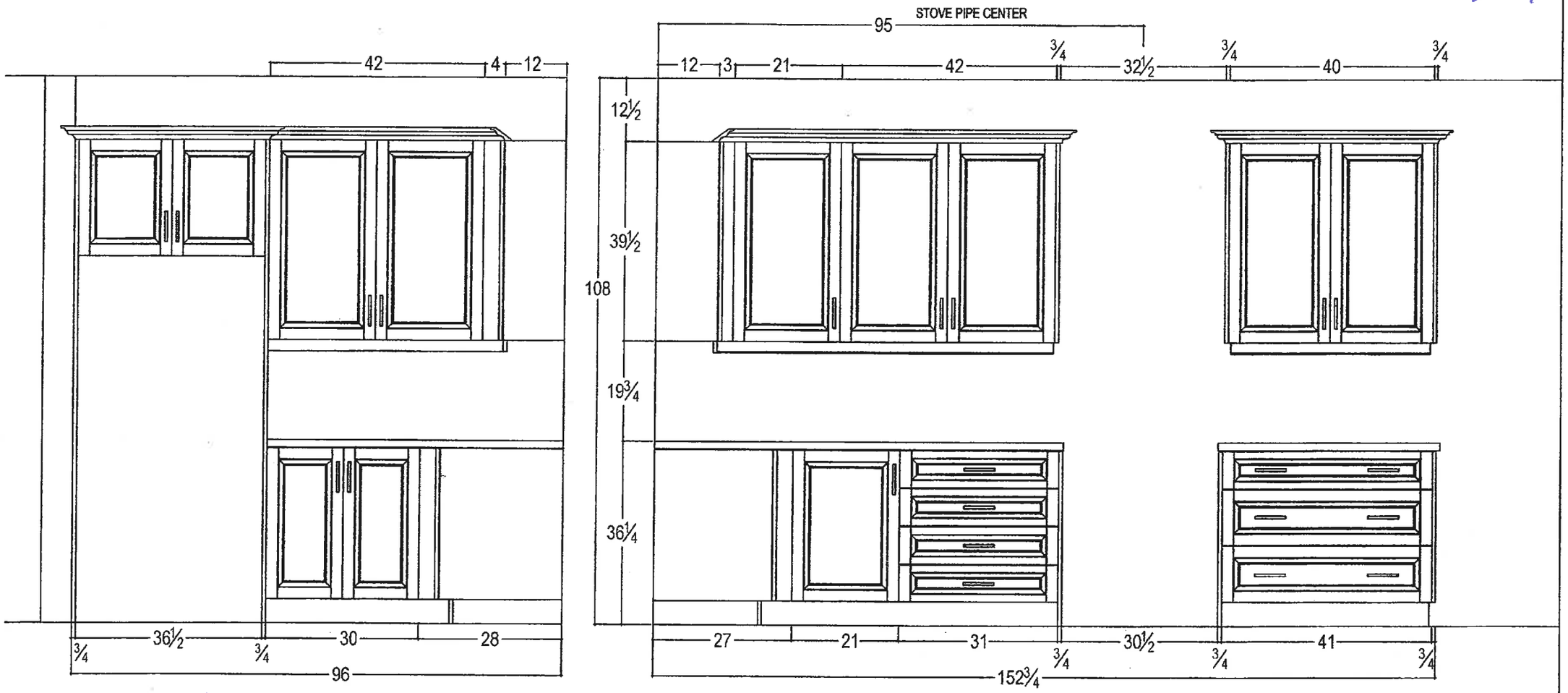

D.D

GA

5002

your kitchen. your taste.
80 SANTE DRIVE, VAUGHAN, ON L4K 3C4,
T: 416.746.1811 F:905.761.5901

CLIENT: ZANCOR HOMES	JOB NAME: 5002 SUTTON - TAKEOFF	ROOM: KITCHEN	DRAWN BY: RP	COMMENTS:
SITE: COOKSTOWN	DOOR STYLE: ___	DOOR HANDLE: ___	SCALE: 1/2" = 1'-0"	FRIDGE / STOVE WALL ELEVATION
PHONE: ___	FINISH: ___	DRW HANDLE: ___	DATE: JULY 14, 2017	
EMAIL: ___	SPECIES: ___	TOP: NONE	PAGE: 2/4	

ZANCOR
COOKSTOWN

ZANCOR HOMES

EDGE PROFILES (AURIVIA)

master + Powder

Vanity Standard Edges (20mm)

Kitchen Standard Edges (40mm)

Vanity Upgrade Edges (20mm)

Kitchen Upgrade Edges (40mm)

Cookstown
LOT / SITE

Lot 16

PURCHASER SIGNATURE

Aug 10/17
DATE

ZANCOR
HOMES

INTERIOR FINISHES ACKNOWLEDGEMENT / WAIVER

Purchaser accepts and acknowledges that the Builder reserves the right to substitute materials with those of equal or better quality where the manufacture, scheduling or delivery of materials may directly impact the Builder's ability to meet its' contractual obligations under the Agreement of Purchase and Sale.

PORCELAIN & NATURAL STONES: Due to the properties of natural stones including but not limited to **marble, granite, quartz,** no two pieces are exactly the same. Variations in colour, tone, granularity (pitting, fissures) and pattern are to be expected, including various lighting may affect the overall finished look. Stone should never be cleaned with lemon oil or vinegar. The purchaser acknowledges colour and product variations as well as natural imperfections that may exist with the selection of natural stone materials and shall not hold the Vendor liable for provision of same. D.D. GA

STONE COUNTERTOP JOINTS: Purchaser is aware that one joint will be at each corner and on either side of slide-in-range (if applicable). It will also be where the length of the counter top exceeds the length of a stone slab. Slabs are usually approximately 5'x 8'. D.D. GA

CERAMIC TILES: Due to manufacturing, shade (dye lots), product variations may exist that can affect the overall look of the finished product. Although every effort will be made to ensure the colours and materials selected are as close as possible to the samples, the purchaser acknowledges that the sample tiles supplied in the Design Centre may not be identical to the materials installed in the home. D.D. GA

STAIR STAINS: Due to the natural properties of wood, many variables can affect the overall look of the finished product. Factors including but not limited to wood type, knotting, graining, density, age, humidity, and air temperature can result in substantial variations in stain intensity. The purchaser accepts that although the Vendor will do their best to match stain the unfinished stairs as close as possible to the pre-finished floors, it is not possible to have an identical match and that there MAY be shade differences between the two products. D.D. GA

CABINETRY: Due to the natural properties of wood, slight variations apparent with cabinetry are to be expected. This includes but not limited to wood species, wood grain, colour, finish, product variations, and natural imperfections are all factors that may affect the overall look of the finished product. Such factors make exact colour matching impossible. The type and intensity of lighting in the areas of designated cabinetry placement may also highlight characteristics of cabinetry finish. All cabinets shall be finished with a white melamine interior box unless a finished interior is upgraded. Due to building specifications and/or on-site conditions, certain cabinetry upgrades may not be possible. The purchaser acknowledges that the Builder cannot guarantee the cabinetry finish or provision of certain upgrades and shall not hold the Builder liable for provision of same. D.D. GA

UPGRADES/EXTRAS: All upgrades and additional selections indicated on the colour chart must be accompanied by an upgrades/extras sheet (PES) and full payment otherwise the selection will be invalid. All colour charts and upgrades/extras will not proceed until verified and signed by an authorized signing officer at the Vendor's head office. **CHANGES WILL NOT BE PERMITTED UPON COMPLETION AND SUBMISSION OF THE COLOUR CHART.** D.D. GA

HARDWOOD / LAMINATE FLOORING: Due to the properties of wood and laminate, many variables can affect the overall look of the finished product. Variations include but not limited to wood type or laminate finish, colour/stain and wood grain are significant factors that make exact colour matching impossible. The purchaser acknowledges that the hardwood flooring is a pre-finished product in a controlled environment. Expansion, compression and cupping are characteristics of hardwood flooring once installed in the home. The purchaser acknowledges these may become apparent over time and despite the Builders' efforts to install the hardwood flooring materials in keeping with good workmanship, the Builder shall not be responsible nor held liable for minor variances of fluctuation in hardwood flooring materials. D.D. GA

UPGRADES/EXTRAS: All upgrades and additional selections indicated on the colour chart must be accompanied by an upgrades/extras sheet (PES) and full payment otherwise the selection will be invalid. All colour charts and upgrades/extras will not proceed until verified and signed by an authorized signing officer at the Vendor's head office. **CHANGES WILL NOT BE PERMITTED UPON COMPLETION AND SUBMISSION OF THE COLOUR CHART.** D.D. GA

HARDWOOD / LAMINATE WAIVER:

I/We understand hardwood flooring is classified as a porous material and as such not recommended by the Builder in certain areas. I/We understand there is a concern due to possible water and other substances being frequently splashed or spilled onto the floor and in contravention of Ontario Building Code Section 9.30.1.2(1).

"Finished flooring bathrooms, kitchens, public entrance halls, laundry & general storage areas shall consist of resilient flooring, felted-synthetic-fibre floor coverings, concrete, terrazzo, ceramic tile, mastic or other types of flooring providing similar degrees of water resistance.

I/We are prepared to assume full responsibility for any damage caused to the hardwood floor or subfloor due to moisture absorbency in the mentioned areas, and agree to waive any claims against the Township of residence, TARION and/or the Builder in relation to the matter. ****SEE COLOUR CHART FOR LOCATIONS**** D.D. GA

SITE: Cookstown

LOT: 16

DATE: Aug 10/17

APPLIANCE SPEC INFORMATION SHEET

STE & LOT: Lot 16. Cookstown **DATE:** Aug 10/17.

SITING: ☐ Standard ☐ Reverse

RANGE

- ☐ 30" (STD)
- ☑ 36"
- ☐ 48"
- ☑ GAS ☐ AMPS _____
- ☐ COOKTOP (APRON) ☐ AMPS _____
- ☐ COOKTOP (DROPIN) ☐ AMPS _____

REFRIGERATOR

- ☑ STANDARD OPENING 36" X 72"
- ☐ BUILT IN FRIDGE
- ☐ WATERLINE REQUIRED
- ☐ PANELLED/INTEGRATED
- ☐ FLUSH INSET

WALL OVENS

- ☐ 30"
- ☐ SINGLE ☐ AMPS _____
- ☐ DOUBLE ☐ AMPS _____
- ☐ STEAM OVEN ☐ AMPS _____
- ☐ WARMING DRAWER ☐ AMPS _____

MICROWAVES

- ☐ BUILT IN MICRO ☐ AMPS _____
- ☐ MICRO TRIM KIT ☐ MODEL _____
- ☐ OVER THE RANGE ☐ AMPS _____

HOOD FANS

- ☑ CHIMNEY (CENTRE VENT)
- ☐ UNDER CABINET
- ☐ FLUSH INSET
- ☐ 6 INCH (STD)
- ☐ 8 INCH
- ☑ 10 INCH

DISHWASHER

- ☐ 24" (STD SIZE)

LAUNDRY

- ☐ FRONT LOADING SIDE BY SIDE
- ☐ STACKABLE
- ☐ TOP LOAD

Specs to follow

MA D.D. Additional charges may apply for cabinetry, electrical and plumbing in order to accommodate the specs given by the homeowner.

MA D.D. **NOTE:** It is the Purchaser's responsibility to coordinate delivery, installation and hook up of appliances and to ensure they are installed as per Manufacturers specifications after closing.

MA D.D. Purchaser acknowledges responsibility for providing correct specification for such appliances. The purchaser agrees to deliver forthwith to the Builder the manufacturer's appliance specifications where the size exceeds the standard openings.

MA D.D. **If specs not received, the standard openings as determined by Zancor Homes will be provided. If rework/repair is required due to late specs received, additional costs will be applied.**

Appliance Specs are DUE (if not received during appointment):
2 WEEKS FROM SIGNED DATE ABOVE – Specs received after this date and changes are required to accommodate the appliances, an administration fee of minimum $250 will apply.
***Changes must be approved by head office.**

Purchaser Signature Dina DeSantis Date Aug 10/17

Purchaser Signature [signature] Date Aug 10/17

COAST Wholesale APPLIANCES

#1 - 1748 CREDITSTONE ROAD, VAUGHAN, ONT.
L4K 5V8 *** TOLL FREE 1-888-745-0622
PH:(905)303-6909 FX:(905)856-5325
TORONTO LINE:(416)745-0622

CHBA MEMBER Since 1978

"Innovative Products for Builders, Designers & Home Owners"

SALES ORDER

Sold To: GIANCARLO DE SANTIS
LOT 16 COOKSTOWN
COOKSTOWN
ON L9L 9L9

Ship To: GIANCARLO DE SANTIS
LOT 16 COOKSTOWN
COOKSTOWN
ON L9L 9L9
416-574-5880

Customer Class	Builders Allowance Name /# / Amount $			Ship Via	Invoice #
003 BLDR CUST SALES		#	$	COAST	1475930
Sales Representatives	**Address:**	**Terms**	**Prov.Tax #**	**Customer #**	**Order #**
F8 WAYNE W|18,7	LOT 16 COOKSTOWN	CASH SALES		JT528	1955390-01
	Shipping Location	**Date Ordered**	**Date Allocated**	**Date Required**	**Order Type**
	WOODBRIDGE WHSE	10AUG17	15MAY18		REGULAR ORDER
	Customer P.O.#	**Job #:**		**Change Order #:**	

Quantity Ordered	Quantity BackOrd	Quantity Shipped	Model / Description		Price	Extension
1	1		T36BB820SS	THERMADOR 36" 2 DOOR B/M FREEZER R/H PRO HANDLES		
1	1		DWHD440MFP	THERMADOR EMERALD 500 DISHWAHER SS PRO HANDLE		
1	1		WFW75HEFW	WHIRLPOOL FRONT LOAD WASHER WHITE 5.2 CU.FT, 8 CYCLES, SS DRUM		
1	1		YWED75HEFW	WHIRLPOOL ELECTRIC DRYER WHITE 7.4 CU.FT, 4 TEMPS, 6 CYCLES		
1	1		48372	EZ FLO STAINLESS STEEL BRAIDED 6" WASHING MACHINE FILL HOSE		
1	1		W10869845	WHIRLPOOL STACKING KIT		
1	1		INSTALLATION HOOKUP	INSTALLATION - HOOKUP WATERLINE TO FRIDG		
1	1		INSTALLATION-HOOKUP	INSTALLATION - HOOKUP OF GASLINE TO RANGE		
1	1		INSTALLATION/H/FAN	INSTALLATION OF HOOD FAN		
1	1		INSTALLATION/DISH	INSTALLATION OF DISHWASHER		
1	1		INSTALLATION LAUNDRY	STANDARD INSTALLATION LAUNDRY		
1	1		PFA	PACKAGE FREIGHT ALLOWANCE INCLUDED		
				Legend: * = Eco Fee Applicable, K = Keep for future shipment	**PAYMENT**	
			MC	3,200.00		
					SUBTOTAL	
					PST	
					DEL/FUEL S/C	
					HST	
					TOTAL	

Report to:						
SM	**CR**	**Shipper**		**Date Shipped**	**EXTENDED WARRANTY** ACCEPTED	REJECTED

GST# 81398 6668

Customer Copy

1955390-01/0000001

NOW 16 LOCATIONS TO SERVE YOU

www.coastappliances.com

EMAIL

AUG 17 2017

COAST Wholesale APPLIANCES

#1 - 1748 CREDITSTONE ROAD, VAUGHAN, ONT.
L4K 5V8 *** TOLL FREE 1-888-745-0622
PH:(905)303-6909 FX:(905)856-5325
TORONTO LINE:(416)745-0622

CHBA MEMBER Since 1978

"Innovative Products for Builders, Designers & Home Owners"

SALES ORDER

Sold To: GIANCARLO DE SANTIS
LOT 16 COOKSTOWN
COOKSTOWN
ON L9L 9L9

Ship To: GIANCARLO DE SANTIS
LOT 16 COOKSTOWN
COOKSTOWN
ON L9L 9L9
416-574-5880

Customer Class	Builders Allowance Name /# / Amount $			Ship Via	Invoice #
003 BLDR CUST SALES		#	$	COAST	1475930
Sales Representatives	**Address:**	**Terms**	**Prov.Tax #**	**Customer #**	**Order #**
F8 WAYNE W|18,7	LOT 16 COOKSTOWN	CASH SALES		JT528	1955390-01
	Shipping Location	**Date Ordered**	**Date Allocated**	**Date Required**	**Order Type**
	WOODBRIDGE WHSE	10AUG17	15MAY18		REGULAR ORDER
	Customer P.O.#	**Job #:**		**Change Order #:**	

Quantity Ordered	Quantity BackOrd	Quantity Shipped	Model / Description		Price	Extension
1	1		BA FRIDGE BASE	CONTRACT BUILDERS ALLOW FRIDGE BASE		
1	1		BA RANGE BASE	CONTRACT BUILDERS ALLOW RANGE BASE		
1	1		BA D/W BASE	CONTRACT BUILDERS ALLOW D/W BASE		
1	1		BA HOODFAN BASE	CONTRACT BUILDERS ALLOW HOODFAN BASE		
1	1		BA WASHER BASE	CONTRACT BUILDERS ALLOW WASHER BASE		
1	1		BA DRYER BASE	CONTRACT BUILDERS ALLOW DRYER BASE		
1	1		BA HOSES	BA HOSES		
1	1		BA STACKER BASE	CONTRACT BUILDERS ALLOW STACKER BASE		
1	1		BA	BUILDERS ALLOWANCE CREDIT FOR INSTALL STANDARD PACKAGE		
1	1		PAKNOBLUNG	THERMADOR BLUE KNOB KIT FOR GRAND RANGES		
1	1		HPCN36NS	THERMADOR 36" PRO CHIMNEY WALL HOOD PROFESSIONAL SERIES		
1	1		VTN1090R	THERMADOR 1000 CFM INTEGRATED BLOWER		
1	1		CHMHP366N	THERMADOR 6" PRO CHIMNEY EXTESNION FOR 36" HOOD		
				Legend: * = Eco Fee Applicable, K = Keep for future shipment	**PAYMENT**	
			MC	3,200.00		
					SUBTOTAL	
					PST	
					DEL/FUEL S/C	
					HST	
					TOTAL	

Report to:						
SM	**CR**	**Shipper**		**Date Shipped**	**EXTENDED WARRANTY** ACCEPTED	REJECTED

GST# 81398 6668

Customer Copy

1955390-01/0000001

AUG 17 2017

NOW 16 LOCATIONS TO SERVE YOU

www.coastappliances.com

EMAIL

COAST Wholesale APPLIANCES

#1 - 1748 CREDITSTONE ROAD, VAUGHAN, ONT.
L4K 5V8 *** TOLL FREE 1-888-745-0622
PH:(905)303-6909 FX:(905)856-5325
TORONTO LINE:(416)745-0622

CHBA MEMBER Since 1978

"Innovative Products for Builders, Designers & Home Owners"

SALES ORDER

Sold To: GIANCARLO DE SANTIS
LOT 16 COOKSTOWN
COOKSTOWN
ON L9L 9L9

Ship To: GIANCARLO DE SANTIS
LOT 16 COOKSTOWN
COOKSTOWN
ON L9L 9L9
416-574-5880

Customer Class	Builders Allowance Name /# / Amount $			Ship Via	Invoice #
003 BLDR CUST SALES		#	$	COAST	1475930
Sales Representatives	**Address:**	**Terms**	**Prov.Tax #**	**Customer #**	**Order #**
F8 WAYNE W|18,7	LOT 16 COOKSTOWN	CASH SALES		JT528	1955390-01
	Shipping Location	**Date Ordered**	**Date Allocated**	**Date Required**	**Order Type**
	WOODBRIDGE WHSE	10AUG17	15MAY18		REGULAR ORDER
	Customer P.O.#	**Job #:**		**Change Order #:**	

Quantity Ordered	Quantity BackOrd	Quantity Shipped	Model / Description	Price	Extension
1	1		PRG366GH THERMADOR 36" PRO HARMONY RANGE GAS SS 6 STAR BURNERS,STANDARD DEPTH		
			Legend: * = Eco Fee Applicable, K = Keep for future shipment		
			MC 3,200.00	PAYMENT	
26	26			SUBTOTAL	
				PST	
				DEL/FUEL S/C	
				HST	
				TOTAL	

Report to:						
SM	CR	Shipper		Date Shipped	EXTENDED WARRANTY ACCEPTED	EXTENDED WARRANTY REJECTED

GST# 81398 6668

Customer Copy

1955390-01/0000001

NOW 16 LOCATIONS TO SERVE YOU

www.coastappliances.com

EMAIL

AUG 17 2017

Lot 16
cooks town

PRG366GH
36-INCH GAS PRO HARMONY® RANGE
PROFESSIONAL SERIES, STANDARD-DEPTH, PORCELAIN COOKTOP SURFACE

Thermador
REAL INNOVATIONS FOR REAL COOKS®

Also Available:
PRL366GH - LP

FEATURES & BENEFITS

- ★ - Exclusive, patented Star® Burner–most even heating, unsurpassed flame coverage
- ★ - QuickClean Base® designed for easy surface cleaning
- ★ - Precision simmering capabilities as low as 100°F (375 BTU) with 2 ExtraLow® Simmer burners
- Professional style, continuous cast iron grates
- Truly Flush Mounted™, 24" standard cabinet depth

TECHNICAL DETAILS	
Circuit Breaker (A)	15 A
Volts (V)	120 V
Frequency (Hz)	60 Hz
Plug Type	120V-3 Prong
Power Cord Length (in)	72"
Energy Source	Gas
Gas Type	Natural Gas 15 mbar (USA)
Alternative Gas Type	Liquid Gas 27.5 mbar (USA)

SEE PAGE 2 FOR OPTIONAL ACCESSORIES

GENERAL PROPERTIES	
Oven Capacity	5.0 cu. ft.
Cooking Modes - Main / Large Cavity	Bake, Convection Bake, Broil, Proof
Cooking Modes - Small Cavity	N/A
Programs	Sabbath Function
Cleaning Type	N/A
Type of Grate	Continuous Cast Iron
Controls	Metal Knobs
Sealed Burners	Yes
OVEN PERFORMANCE	
Bake Power	20,000 BTU (NG)
Broil Power	27,000 BTU (NG)
Convection Power	N/A
BURNER PERFORMANCE	
Total Number of Cooktop Burners	6
Total Cooktop BTU	136,000 (NG)
Power of Front Left Burner BTU	18,000-3,000 XLO (NG)
Power of Back Left Burner BTU	18,000-3,000 XLO (NG)
Power of Back Center Burner BTU	18,000 (NG)
Power of Front Center Burner BTU	18,000 (NG)
Power of Center 12" Electric Griddle (W)	N/A
Power of Center 12" Electric Grill (W)	N/A
Power of Far Right 12" Electric Griddle (W)	N/A
Power of Back Right Burner BTU	18,000 (NG)
Power of Front Right Burner BTU	18,000 (NG)
DIMENSIONS & WEIGHT	
Overall Appliance Dimensions (HxWxD) (in)	35 7/8"–36 3/4" x 35 15/16" x 24 3/4"
Required Cutout Size (HxWxD) (in)	35 7/8"–36 3/4" x 36" x 24"
Adjustable Range Height (in.)	7/8"
Net Weight (lbs)	419 lbs
ACCESSORIES (INCLUDED)	
1 X Island Trim, 3 X Full Access Telescopic Racks, 1 X Broiler Pan	
WARRANTY	
Limited Warranty, Entire Appliance, Parts and Labor	2 Year

★ THERMADOR EXCLUSIVE

AUG 17 2017

Lo616

PRG366GH
36-INCH GAS PRO HARMONY® RANGE
PROFESSIONAL SERIES, STANDARD-DEPTH, PORCELAIN COOKTOP SURFACE

Thermador
REAL INNOVATIONS FOR REAL COOKS®

Cookstown

ACCESSORIES (OPTIONAL)

PAGRIDDLEN
Griddle for Indoor Electric Grill

PA12CHPBLK
12" Cutting Board

PWOKRINGHC
Wok Ring

PA36GLBH
9" Low Backguard

PAKNOBLUNH
Blue Knob Pro Harmony Kit

PAGRIDDLE
Griddle

36-INCH RANGE DIMENSIONS

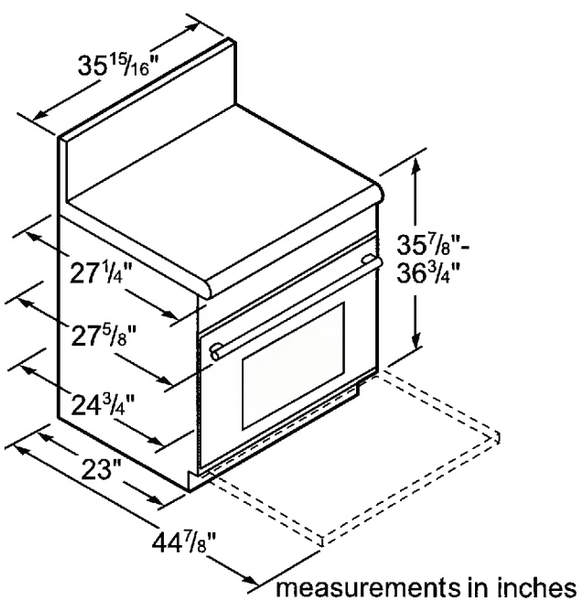

36-INCH RANGE CUTOUT DIMENSIONS

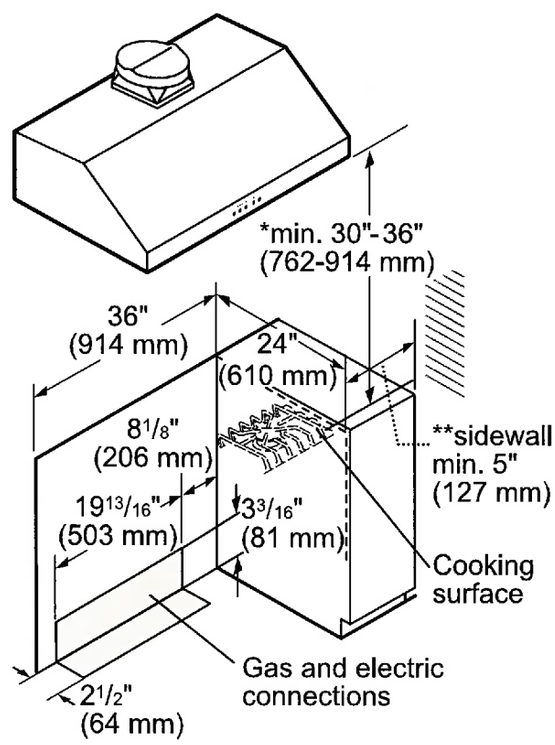

AUG 17 2017

Lo616

PRG366GH
36-INCH GAS PRO HARMONY® RANGE

PROFESSIONAL SERIES, STANDARD-DEPTH, PORCELAIN COOKTOP SURFACE

Thermador
REAL INNOVATIONS FOR REAL COOKS®

Cookstown

36-INCH RANGE CUTOUT DIMENSIONS

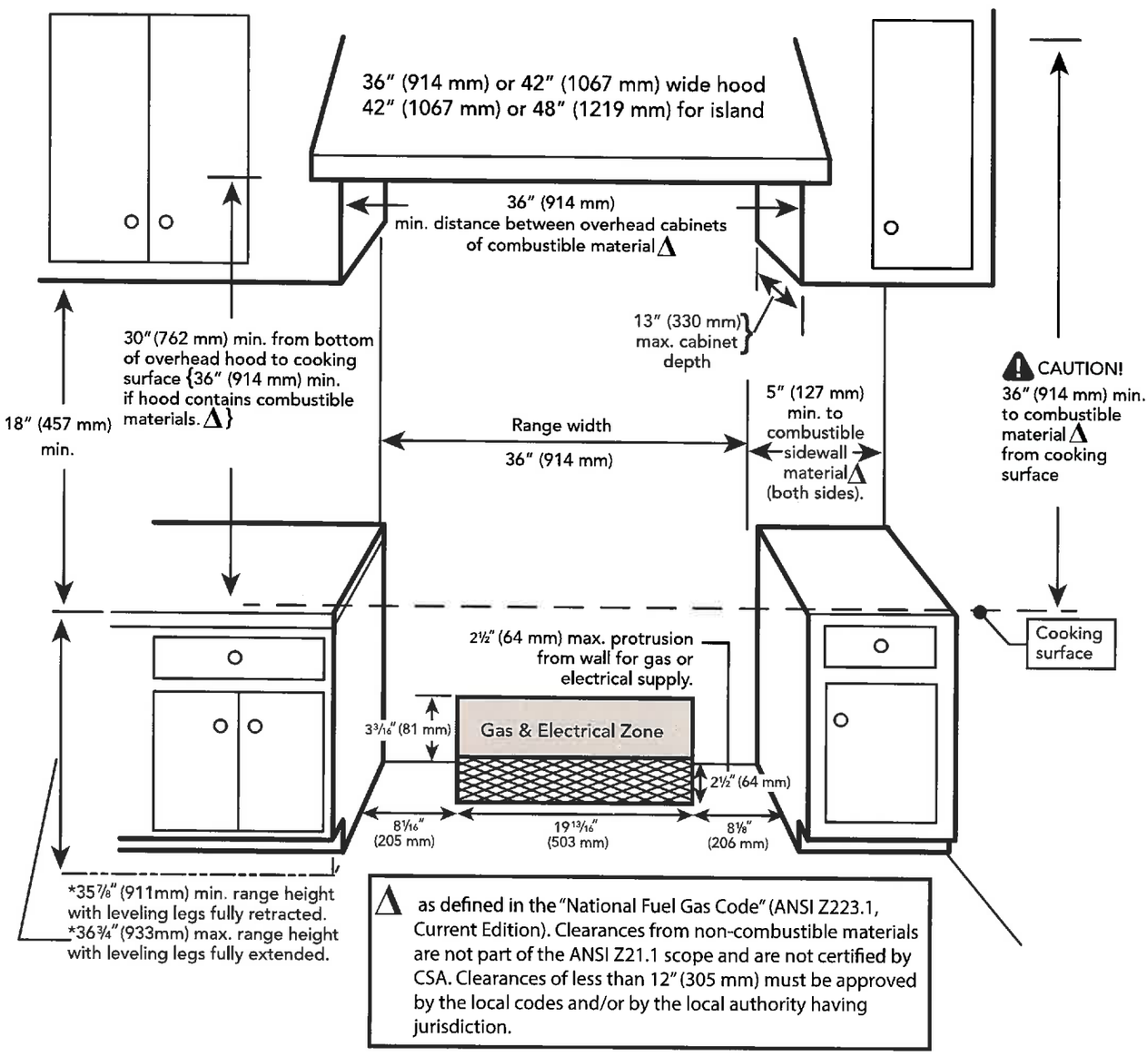

Δ as defined in the "National Fuel Gas Code" (ANSI Z223.1, Current Edition). Clearances from non-combustible materials are not part of the ANSI Z21.1 scope and are not certified by CSA. Clearances of less than 12" (305 mm) must be approved by the local codes and/or by the local authority having jurisdiction.

AUG 17 2017

Lo 6 16

PRG366GH
36-INCH GAS PRO HARMONY® RANGE

PROFESSIONAL SERIES, STANDARD-DEPTH, PORCELAIN COOKTOP SURFACE

Thermador
REAL INNOVATIONS FOR REAL COOKS®

Cooks.

36-INCH RANGE DIMENSIONS AND CLEARANCE REQUIREMENTS WITH "LOW BACK"

NOTE: A 36-inch minimum clearance is required between the top of the cooking surface and the bottom of an unprotected cabinet. A 30-inch clearance can be used when the bottom of the wood or metal cabinet is protected by not less than 1/4 inch of a flame retardant material covered with not less than No. 28 MSG sheet steel, 0.015 inch (0.4 mm) thick stainless steel, 0.024 inch (0.6 mm) aluminum, or 0.020 inch (0.5 mm) thick copper.

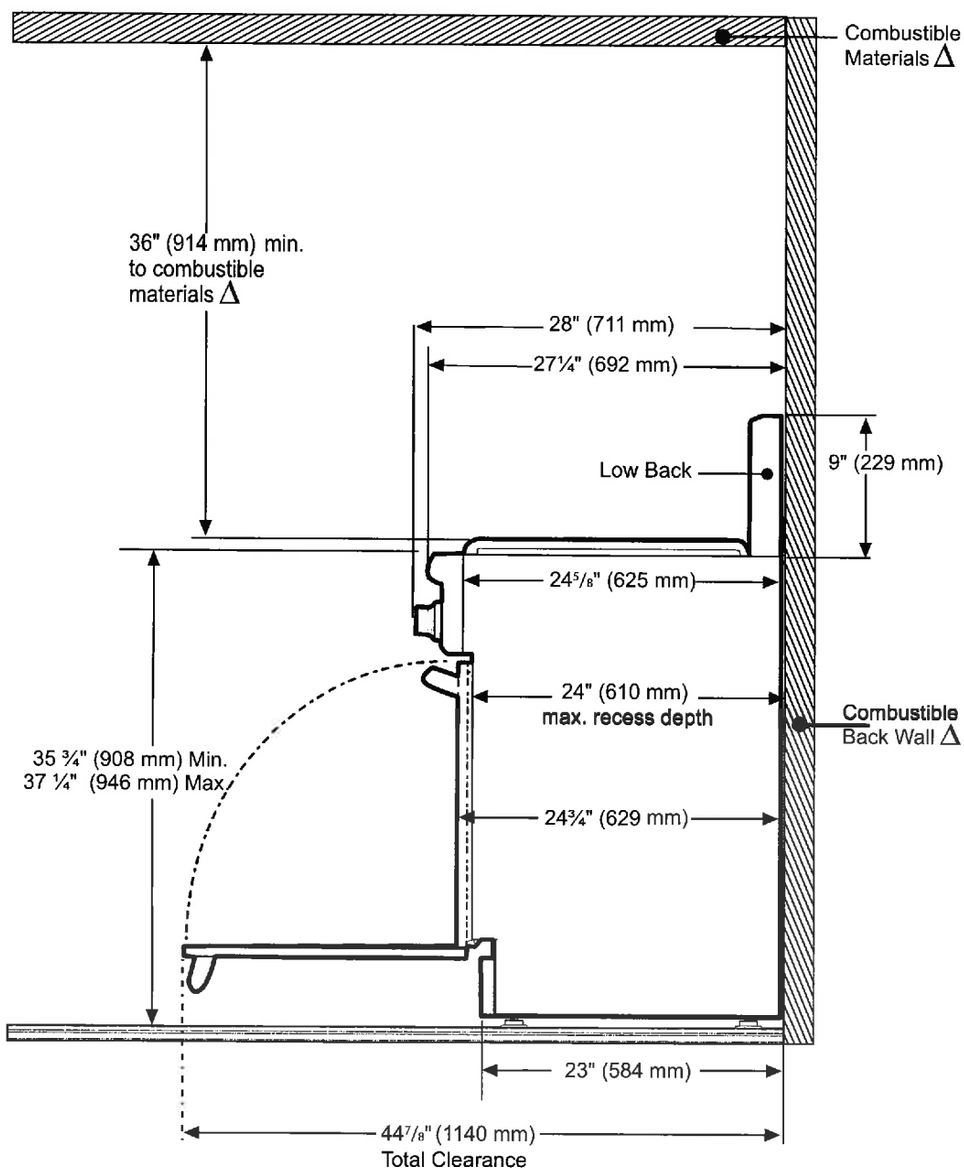

Δ As defined in the "National Fuel Gas Code" (ANSI Z223.1, Current Edition). Clearances from non-combustible materials are not part of the ANSI Z21.1 scope and are not certified by CSA. Clearances of less than 12" (305 mm) must be approved by the local codes and/or by the local authority having jurisdiction.

AUG 17 2017

Lo616

PRG366GH
36-INCH GAS PRO HARMONY® RANGE
PROFESSIONAL SERIES, STANDARD-DEPTH, PORCELAIN COOKTOP SURFACE

Thermador
REAL INNOVATIONS FOR REAL COOKS®

cooks

36-INCH RANGE DIMENSIONS AND CLEARANCE REQUIREMENTS WITH "FLUSH ISLAND TRIM"

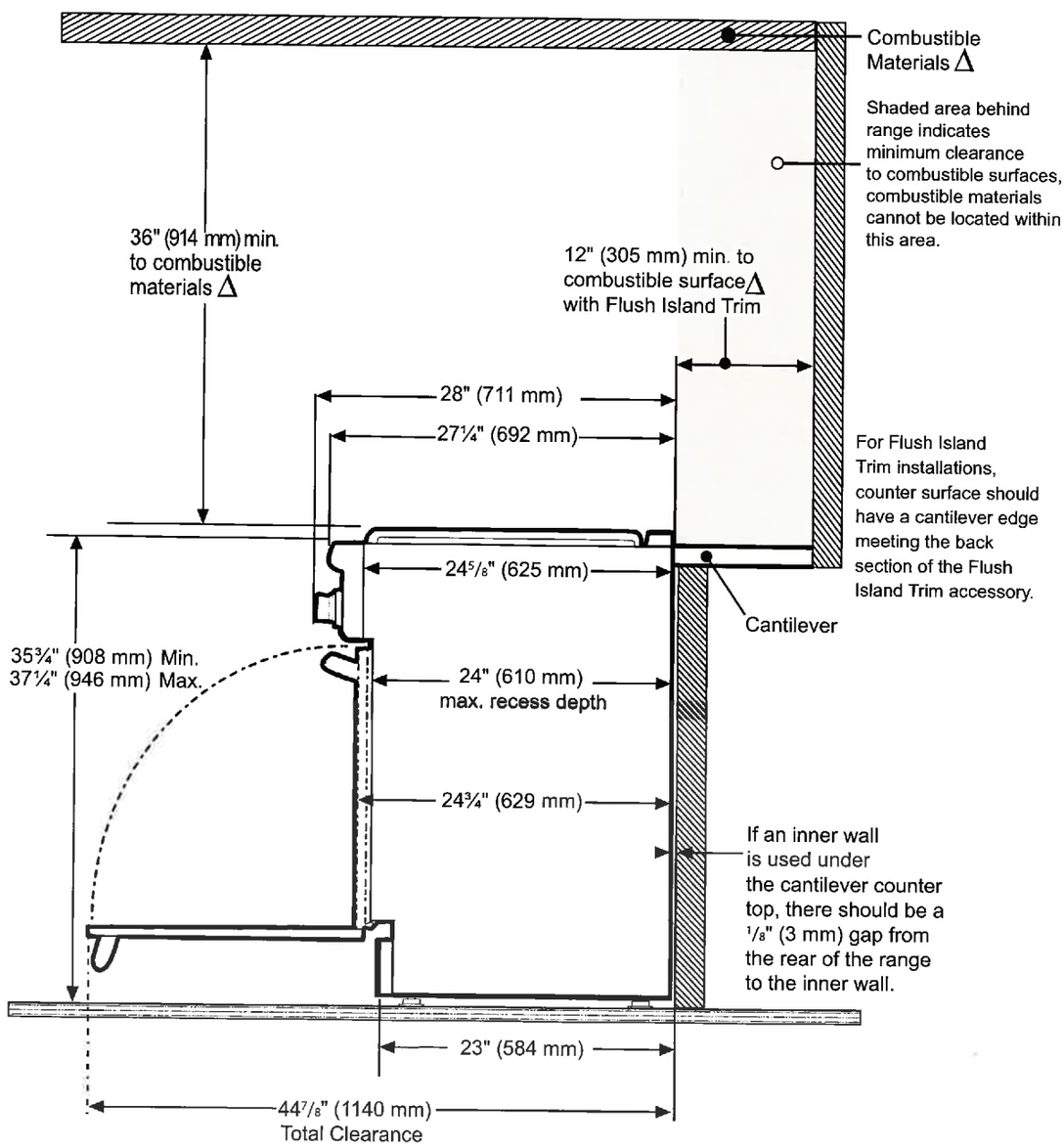

Δ As defined in the "National Fuel Gas Code" (ANSI Z223:1, Current Edition). Clearances from non-combustible materials are not part of the ANSI Z21.1 scope and are not certified by CSA. Clearances of less than 12" (305 mm) must be approved by the local codes and/or by the local authority having jurisdiction.

These warranties give you specific legal rights and you may have other rights that vary from state to state. Full warranty and limited warranty from date of installation. For complete warranty details, refer to your Use & Care manual, or ask your dealer.

Specifications are for planning purposes only. Refer to installation instructions and consult your countertop supplier prior to making counter opening. Consult with a heating and ventilation engineer for your specific ventilation requirements. For the most detailed information, refer to installation instructions accompanying product or write to Thermador indicating the model number. Specifications are correct at time of printing. Thermador reserves the right to change product specifications or design without notice. Some models are certified for use in Canada. Thermador is not responsible for products that are transported from the U.S. for use in Canada.

©2015 BSH HOME APPLIANCES CORPORATION. ALL RIGHTS RESERVED.

AUG 17 2017

Whirlpool®

Front-Loading Washer

Lo616
cooks

PRODUCT MODEL NUMBERS

WFW75HEF, WFW85HEF,
WFW90HEF, WFW92HEF

Washer Dimensions:

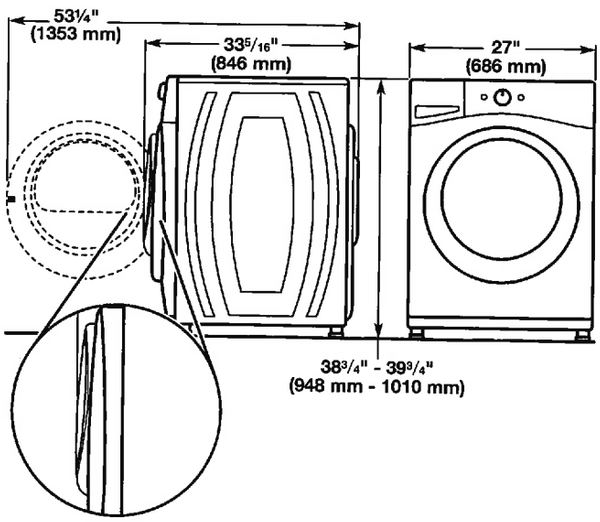

Recessed or closet installation - stacked washer and dryer

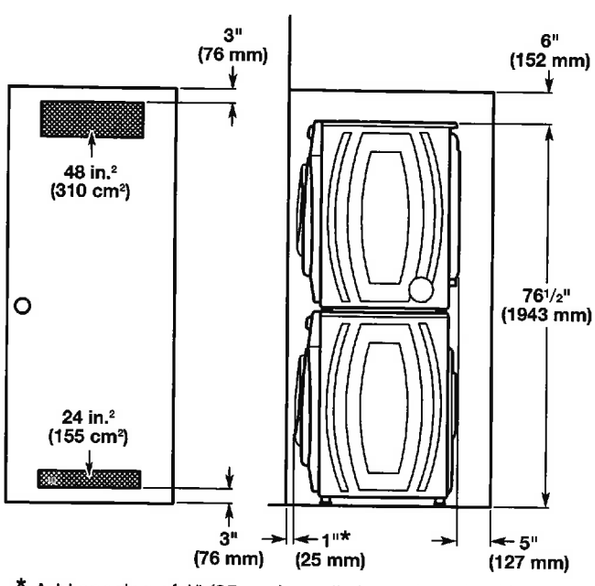

* Add spacing of 1" (25 mm) on all sides of washer/dryer.

PRODUCT MODEL NUMBERS

WFW7590F, WFW9290F,

Washer Dimensions:

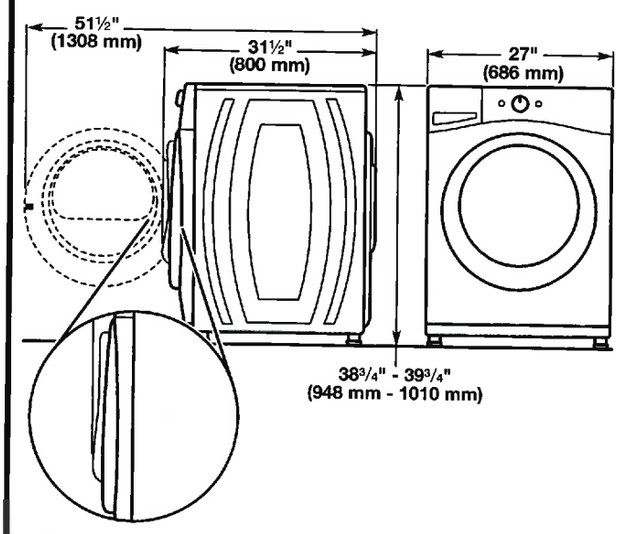

Recessed area or closet installation (washer only):

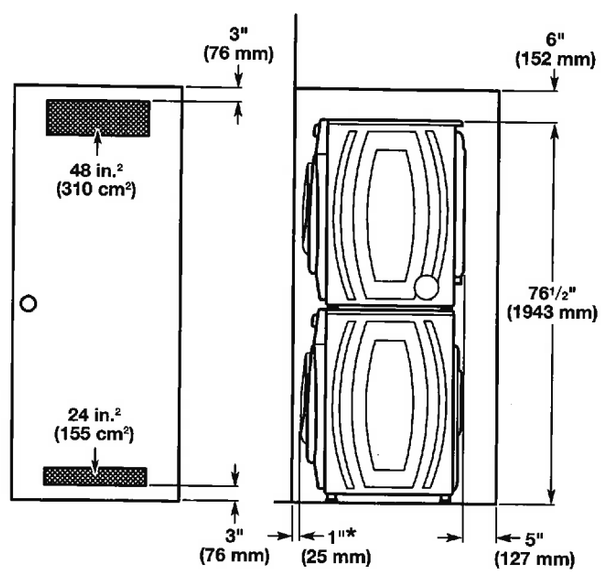

* Add spacing of 1" (25 mm) on all sides of washer.

W10775528A
9/2016

AUG 17 2017

Lo 616
Cooks

Custom cabinet installation (washer only):

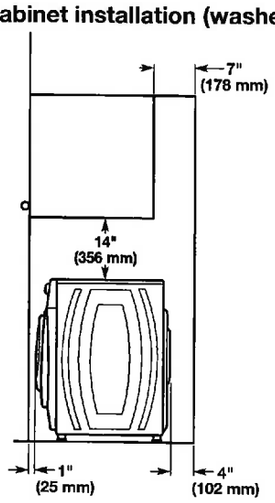

** Recommended 4" (102 mm), minimum 1.5" (38 mm)

Undercounter installation - washer only:

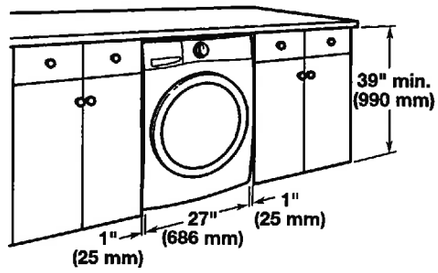

All dimensions show recommended spacing allowed, except for closet door ventilation openings which are the minimum required.

For each arrangement, consider allowing more space for ease of installation and servicing, and spacing for companion appliances and clearances for walls, doors, and floor moldings.

Space must be large enough to allow door to fully open. Add spacing of 1" (25 mm) on all sides of washer to reduce noise transfer. If a closet door or louvered door is installed, top and bottom air openings in door are required.

ELECTRICAL REQUIREMENTS

A 120 volt, 60 Hz., AC only, 15- or 20-amp, fused electrical supply is required. A time-delay fuse or circuit breaker is recommended. It is recommended that a separate circuit serving only this appliance be provided.

DRAIN SYSTEM

Drain system can be installed using a floor drain, wall standpipe, floor standpipe, or laundry tub. Select method you need.

IMPORTANT: To avoid siphoning, only 4.5" (114 mm) of drain hose should be inside standpipe. Always secure drain hose with cable tie.

Floor standpipe drain system

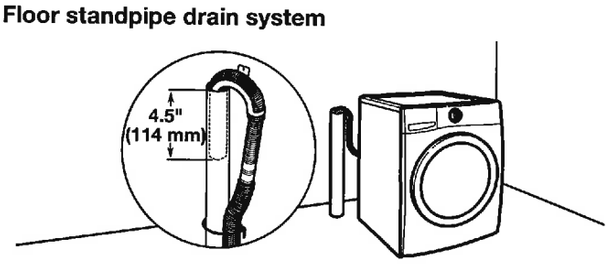

Minimum diameter for a standpipe drain: 2" (51 mm). Minimum carry-away capacity: 17 gal. (64 L) per minute. A 1/4" (6 mm) diameter to 1" (25 mm) diameter Standpipe Adapter Kit is available (Part Number 3363920). Top of standpipe must be at least 30" (762 mm) high; install no higher than 96" (2.44 m) from bottom of washer. If you have an overhead sewer and need to pump higher than 96" (2.44 m), a sump pump and associated hardware are needed. See "Alternate Parts".

Wall standpipe drain system

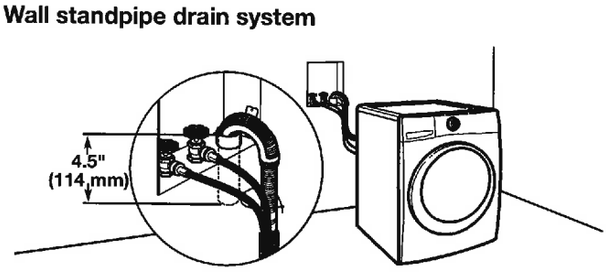

See requirements for floor standpipe drain system.

Laundry tub drain system

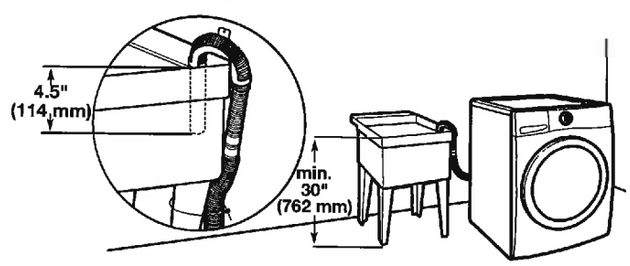

Minimum capacity: 20 gal. (76 L). Top of laundry tub must be at least 30" (762 mm) above floor; install no higher than 96" (2.44 m) from bottom of washer.

Floor drain system

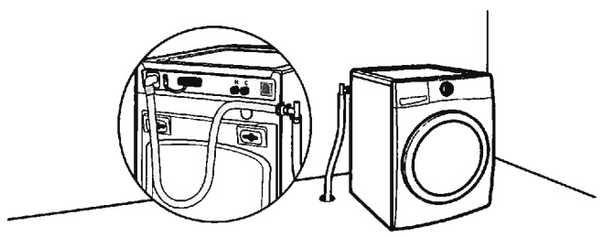

Floor drain system requires a Siphon Break Kit (Part Number 285834), 2 Connector Kits (Part Number 285835), and an Extension Drain Hose (Part Number 285863) that may be purchased separately. See "Alternate Parts". Minimum siphon break height: 28" (710 mm) from bottom of washer. (Additional hoses may be needed.)

Because Whirlpool Corporation policy includes a continuous commitment to improve our products, we reserve the right to change materials and specifications without notice.

Dimensions are for planning purposes only. For complete details, see Installation Instructions packed with product. Specifications subject to change without notice.

AUG 17 2017

Lo616

DWHD440MFP
EMERALD® 4-PROGRAM DISHWASHER
PROFESSIONAL SERIES HANDLE

Thermador
REAL INNOVATIONS FOR REAL COOKS®

cooks

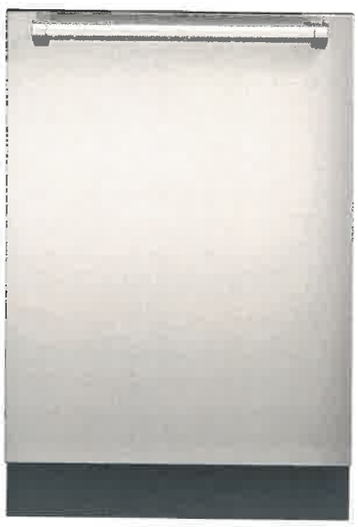

Also Available In:
DWHD440MFM - Flat Stainless Steel Panel with Masterpiece® Series Handle
DWHD440MPR - Custom Panel

FEATURES & BENEFITS
- Sens-A-Wash® measures water cleanliness and adjusts wash cycle
- Three stage advanced filtration recirculates water for sparkling results
- Accommodates 15 plate settings for your dinner parties
- Extra Dry Option ensures perfectly dry dishes and sanitizes 99.9% of bacteria
- Impressively Quiet®–48 dBA for peaceful kitchen experience

ACCESSORIES (OPTIONAL)	
Dishwasher Supply and Drainage Hose Extension 76 3/4"	SGZ1010UC
Dishwasher 3-Prong Power Cord 66 7/8"	SMZPC002UC
Dishwasher Accessory Kit	SGZ1052UC
Fine Silverware Carafe	SMZ5002UC
Power Cord with Connectors*	SGZPC001UC

*Use only this power cord for plug / receptacle connections

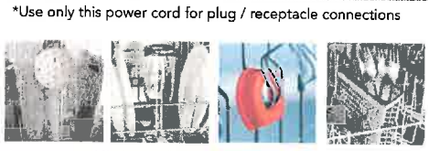

Accessory Kit includes Extra-tall-item Sprinkler, Vase / Bottle Holder, 3 Plastic Item Clips and Small Item Basket

Fine Silverware Carafe

GENERAL PROPERTIES	
Number Of Wash Cycles	4
Number Of Options	4
dBA	48
Third Rack	N/A
Rack Adjustability	Rackmatic 3-Stage
Tub Material	Stainless Steel
Control Type	Buttons
Concealed Heating Element	Yes
Leak Protection System	N/A
Water Softener	No
Five-Level Wash	Yes
Childlock	No
EFFICIENCY	
Water Usage Per Cycle (g)	2.9 g
Energy Efficiency Class	Tier 1
ENERGY STAR® Qualified	Yes
Total Annual Energy Consumption (kWh)	279 kWh
Total Annual Water Consumption (g)	624 g
CAPACITY	
Number Of Place Settings	15
TECHNICAL DETAILS	
Watts (W)	1,300 W
Current (A)	12 A
Volts (V)	120 V
Frequency (Hz)	60 Hz
Power Cord Length (in)	47 1/4"
Minimum Water Pressure (lb/sin)	14
Max. Temperature for Water Intake	120° F
Length Inlet Hose (in)	53"
Length Outlet Hose (in)	67"
DIMENSIONS & WEIGHT	
Overall Appliance Dimensions (HxWxD) (in)	33 7/8" x 23 9/16" x 23 3/4"
Required Cutout Size (HxWxD) (in)	33 7/8" x 23 5/8" x 24"
Adjustable Feet	Yes
Net Weight (lbs)	86 lbs
WARRANTY	
Full Warranty, Entire Appliance, Parts and Labor	2 Year
Limited Warranty for Microprocessor or Printed Circuit Board; Parts Only	3rd to 5th Year
Limited Warranty for Racks (Does Not Include Rack Components); Parts Only	3rd to 5th Year
Limited Warranty for Rust-through On Inner Tub Liner; Parts Only	Lifetime

AUG 17 2017

Lo616

DWHD440MFP
EMERALD® 4-PROGRAM DISHWASHER
PROFESSIONAL SERIES HANDLE

Thermador
REAL INNOVATIONS FOR REAL COOKS®

cooks

DISHWASHER & CUTOUT DIMENSIONS

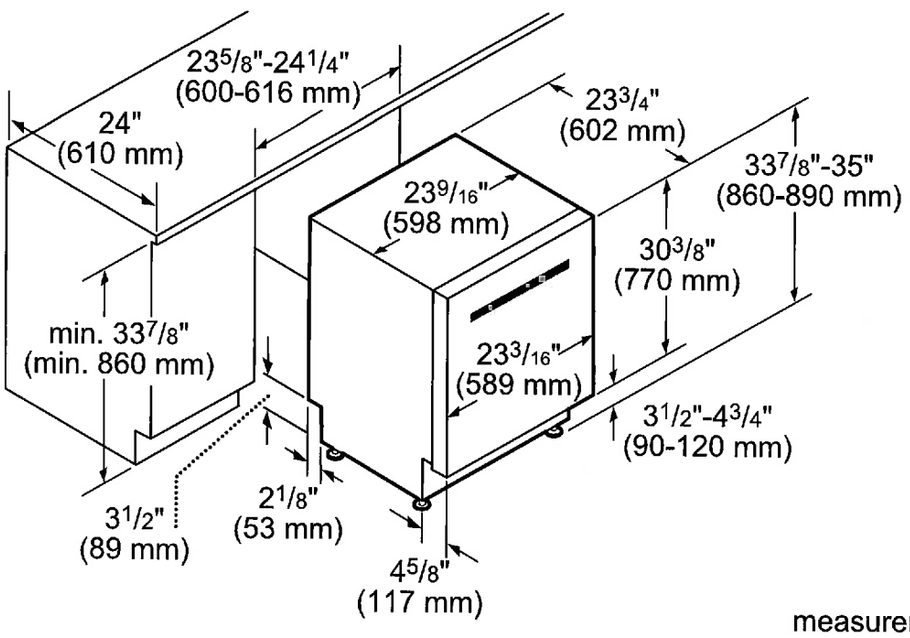

measurements in inches and mm

These warranties give you specific legal rights and you may have other rights that vary from state to state. Full warranty and limited warranty from date of installation. For complete warranty details, refer to your Use & Care manual, or ask your dealer.

Specifications are for planning purposes only. Refer to installation instructions and consult your countertop supplier prior to making counter opening. Consult with a heating and ventilation engineer for your specific ventilation requirements. For the most detailed information, refer to installation instructions accompanying product or write to Thermador indicating the model number. Specifications are correct at time of printing. Thermador reserves the right to change product specifications or design without notice. Some models are certified for use in Canada. Thermador is not responsible for products that are transported from the U.S. for use in Canada.

1 800 735 4328 | USA THERMADOR.COM | CANADA THERMADOR.CA | ©2015 BSH HOME APPLIANCES CORPORATION. ALL RIGHTS RESERVED. 04 / 15

AUG 17 2017

Lot 16

T36BB820SS
36-INCH PRE-ASSEMBLED 2-DOOR BOTTOM FREEZER WITH PROFESSIONAL HANDLES

FREEDOM® COLLECTION

Thermador
REAL INNOVATIONS FOR REAL COOKS®

cooks

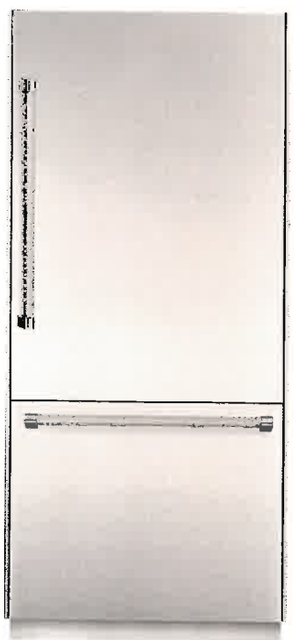

Also Available:
T36BB810SS with Masterpiece® Handles

FEATURES & BENEFITS

- Freedom® Hinge enables true flush design
- Full-height door–true cabinet integration without exposed venting grille
- All-LED sidewall and theater lighting
- Brightspace interior design
- Flat stainless steel panel kit door panel kit, pre-assembled

TEMPERATURE RANGES

Refrigeration	35°F (2°C) to 46°F (8°C)
Temperature Controlled Drawer	Fish 32°F (0°C) Meat 35°F (1.5°C) Produce 37°F (3°C)
Deli Drawer	Just above 32°F (0°C)
SuperCool	35.5°F (2°C) for approximately 9 hours
Energy Saving (Economy) Mode	Refrigerator: 45°F (7°C) Freezer: 3°F (-16°C)
Freezer	-9°F (-23°C) to 7°F (-14°C)
SuperFreeze®	-9°F (-23°C) for approximately 52 hours

ACCESSORIES (OPTIONAL)

HEATRKIT10 - Freedom® Heater Kit

Filters:
REPLFLTR10 - Freedom® Water Filter
SCRNFLTR10 - Filter By-Pass

GENERAL PROPERTIES

Reversible Door Swing	Yes
Lighting	All-LED Sidewall and Theater Lighting
Full Width Shelves - Refrigerator	3
Adjustable Shelves - Refrigerator	2
Shelf Material - Refrigerator	Glass Shelves w/Metal Trim
Full Extension Drawers at 90° Door Opening Angle	Yes
Humidity Control Drawer	Yes
Door Bins - Refrigerator	3
Gallon Door Bins	2
Defrost Process - Freezer	Frost-Free
Freezer Drawers	1
Ice Maker	Yes
Door Open Alarm	Yes
SuperCool	Yes
SuperFreeze®	Yes
Special Modes	Sabbath, Economy, Vacation

CAPACITY

Total Unit Gross Capacity (cu. ft.) - AHAM	20 cu. ft.
Refrigerator Gross Capacity (cu. ft.)	14 cu. ft.
Freezer Gross Capacity (cu. ft.)	6 cu. ft.

TECHNICAL DETAILS

Watts (W)	588 W
Current (A)	15 A
Volts (V)	120 V
Frequency (Hz)	60 Hz
Power Cord Length (in.)	78 3/4"
Plug Type	120V 3-Wire

DIMENSIONS & WEIGHT

Appliance Dimensions (H x W x D) (in.)	84" x 35 3/4" x 24 3/4"
Required Cutout Size (H x W x D) (in.)	84" x 36" x 24" or 25"
Net / Gross Weight (lbs)	526 / 573 lbs

EFFICIENCY

ENERGY STAR® Qualified	Yes
Annual Energy Consumption	591 kWh

WARRANTY

Limited, Entire Appliance, Parts and Labor on Any Part of the Refrigerator that Fails Because of a Manufacturing Defect	2 Year
Limited Warranty for Sealed Refrigeration System*; Parts And Labor	3rd to 6th Year
Limited Warranty for Sealed Refrigeration System*; Parts Only	7th to 12th Year

* Sealed refrigeration system includes compressor, evaporator, condenser, dryer / strainer and connection tubing

AUG 17 2017

2616

T36BB820SS
36-INCH PRE-ASSEMBLED 2-DOOR BOTTOM FREEZER WITH PROFESSIONAL HANDLES
FREEDOM® COLLECTION

Thermador
REAL INNOVATIONS FOR REAL COOKS®

COOKS

CUTOUT DIMENSIONS

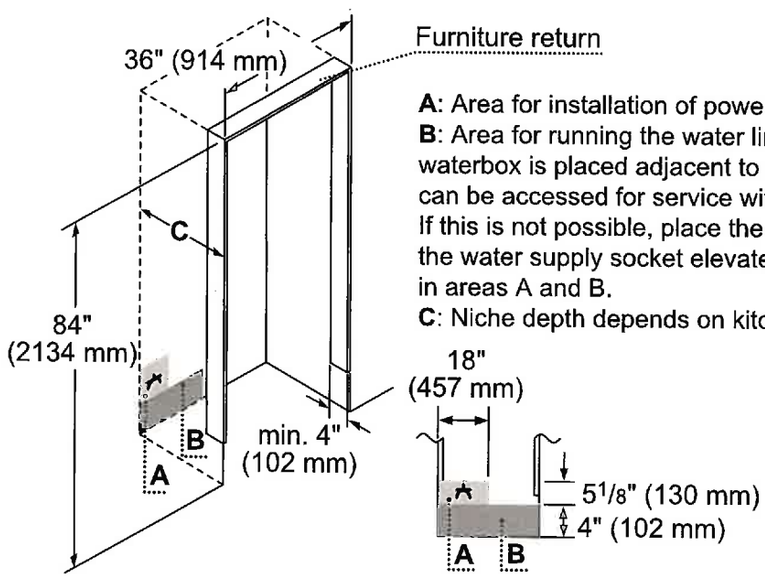

A: Area for installation of power connection.
B: Area for running the water line. It is recommended that the waterbox is placed adjacent to the installation cavity, so that it can be accessed for service without uninstalling the appliance. If this is not possible, place the recessed waterbox adjacent to the water supply socket elevated at the heights as referenced in areas A and B.
C: Niche depth depends on kitchen design.

TOP VIEW CLEARANCE

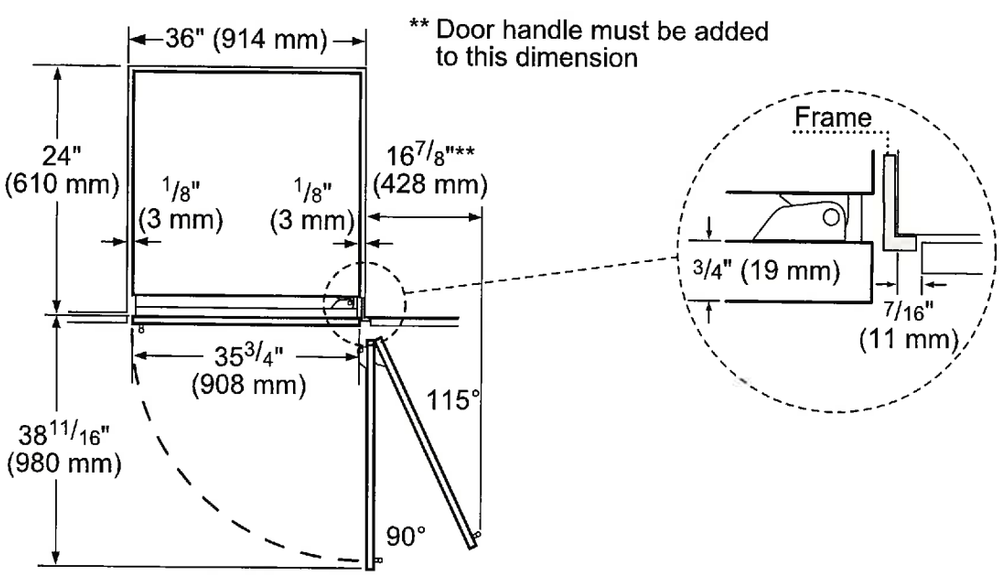

AUG 17 2017

Lot 16

T36BB820SS
36-INCH PRE-ASSEMBLED 2-DOOR BOTTOM FREEZER WITH PROFESSIONAL HANDLES

FREEDOM® COLLECTION

Thermador
REAL INNOVATIONS FOR REAL COOKS®

Books

PANEL DIMENSIONS

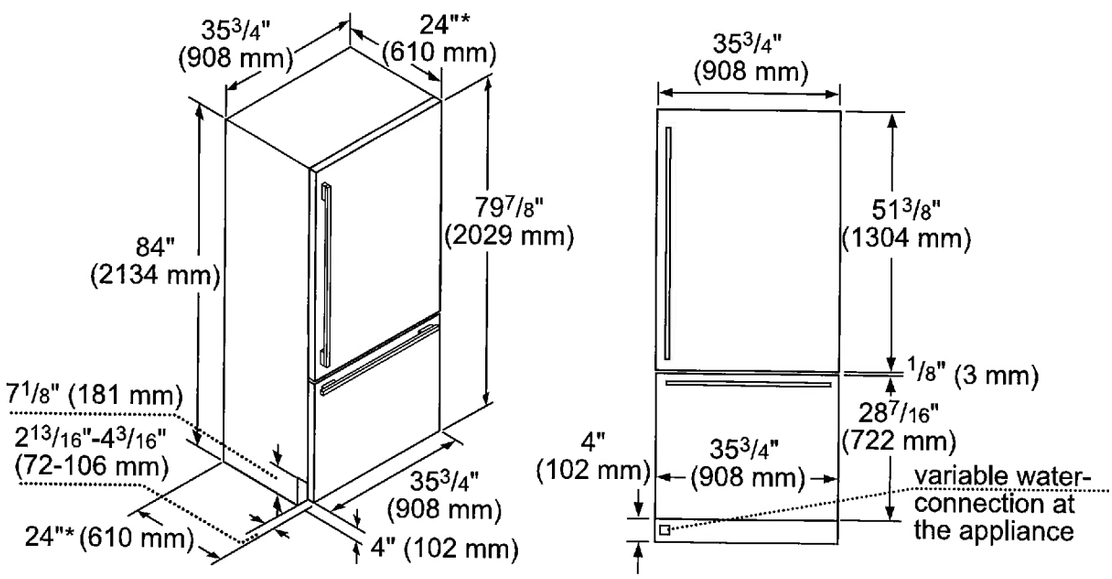

*Excludes thickness of door panel. If standard panel with 3/4" thickness is mounted, total depth is 24 3/4".

These warranties give you specific legal rights and you may have other rights that vary from state to state. Full warranty and limited warranty from date of installation. For complete warranty details, refer to your Use & Care manual, or ask your dealer.

Specifications are for planning purposes only. Refer to installation instructions and consult your countertop supplier prior to making counter opening. Consult with a heating and ventilation engineer for your specific ventilation requirements. For the most detailed information, refer to installation instructions accompanying product or write to Thermador indicating the model number. Specifications are correct at time of printing. Thermador reserves the right to change product specifications or design without notice. Some models are certified for use in Canada. Thermador is not responsible for products that are transported from the U.S. for use in Canada.

AUG 17 2017

Lo616

HPCN36NS
36-INCH CHIMNEY WALL HOOD
PROFESSIONAL SERIES

Thermador
REAL INNOVATIONS FOR REAL COOKS®

cooks

FEATURES & BENEFITS

- Three fan speeds
- Powerfully Quiet ventilation systems
- Dimmer lighting – for a soft lighting effect
- Commercial-Style Stainless Steel Baffle Filter
- Dishwasher safe grease collection trays are easily removed

ACCESSORIES (OPTIONAL)

25 ft. Blower Connector Cable - EXTNCB25

For use with the following Inline and Remote Blowers: VTR630D, VTR1030D, VTR1330E, VTI610D, VTI1010D

Roofplates

RFPLT600 - For use with 600 CFM Remote Blower VTR630D

RFPLT1000 - For use with 1000 CFM Remote Blower VTR1030D and 1300 CFM Blower VTR1330E

36" W Keep-Hot Shelf	KHS36QS
6" High Duct Cover	CHMHP366N
12" High Duct Cover	CHMHP3612N
18" - 35" High Duct Cover	CHMHP36TSN
36" W Stainless Steel Backsplash	PA36JBS

GENERAL PROPERTIES	
Operating Mode	Ducted
Maximum CFM	Blower Sold Separately
Sones	N/A
Number of Speed Settings	3-Stage
Motor Location	Blower Sold Separately
Number of Lights	2
Bulb Type	Halogen
Total Power of the Lamps (W)	40 W
Damper Included	Yes
Grease Filter Material	Washable Stainless Steel
Grease Filter Type	Commercial-Style Stainless Steel Baffle Filter

TECHNICAL DETAILS	
Watts (W)	N/A
Current (A)	15 A
Volts (V)	120 V
Frequency (Hz)	60 Hz
Plug Type	Fixed Connection, No Plug
Conduit Length	N/A

DIMENSIONS & WEIGHT	
Overall Appliance Dimensions (Width of Canopy Included) (HxWxD) (in)	18" x 35 15/16" x 24"
Height of The Chimney (in)	Duct Covers Sold Separately
Required Distance Above Cooktop / Range Cooking Surface	30" / 30"
Diameter of Air Duct (in) Top	10"
Net Weight (lbs)	70 lbs

ACCESSORIES (REQUIRED)

Blower (Sold Separately)

BLOWER OPTIONS	
Remote Blower (Mounted to Roof or External Wall)	VTR630D - 600 CFM
	VTR1030D - 1000 CFM
	VTR1330E - 1300 CFM
Inline Blower (Mounted Between Kitchen and External Wall)	VTI610D - 600 CFM
	VTI1010D - 1000 CFM
Integrated Blower (Mounted in Hood)	VTN1080N - 1000 CFM

WARRANTY	
Limited Warranty Parts and Labor	2 Year

AUG 17 2017

Lot 16

HPCN36NS
36-INCH CHIMNEY WALL HOOD
PROFESSIONAL SERIES

Thermador
REAL INNOVATIONS FOR REAL COOKS®

cooks

HOOD DIMENSIONS

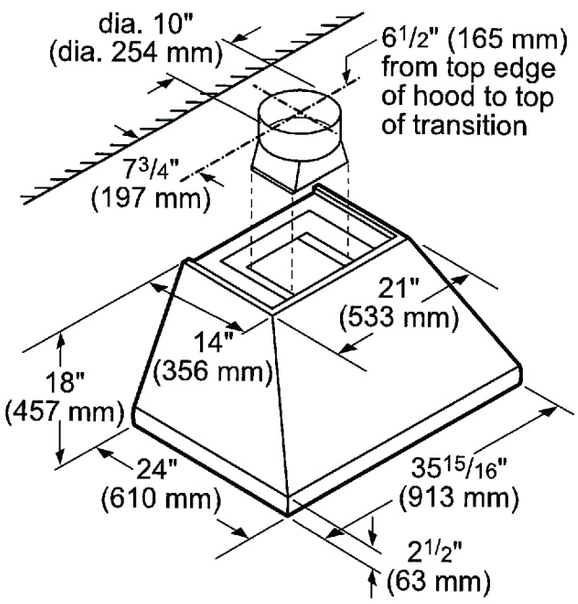

REMOTE BLOWER ACCESSORIES

ROOFPLATE RFPLT600

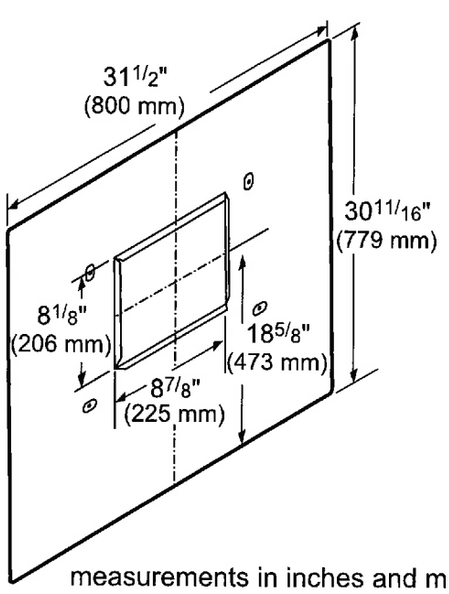

measurements in inches and mm

ROOFPLATE RFPLT1000

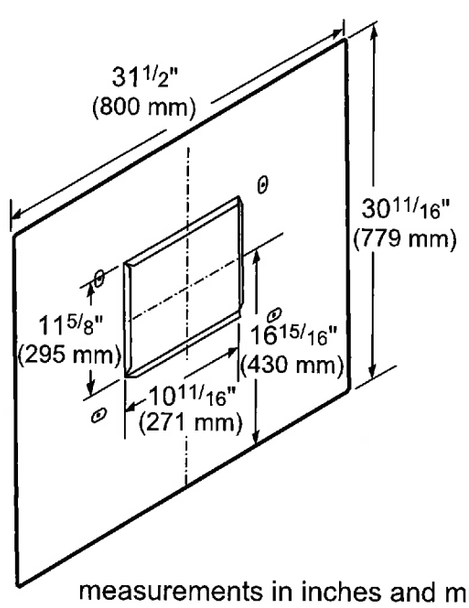

measurements in inches and mm

EXTNCB25

25 ft. Blower Connector Cable for use with the following Inline and Remote blowers: VTR630D, VTR1030D, VTR1330E, VTI610D, VTI1010D

AUG 17 2017

6 of 16

HPCN36NS
36-INCH CHIMNEY WALL HOOD
PROFESSIONAL SERIES

Thermador
REAL INNOVATIONS FOR REAL COOKS®

Cooks

OPTIONAL ACCESSORIES

6" HIGH DUCT COVER
CHMHP366N

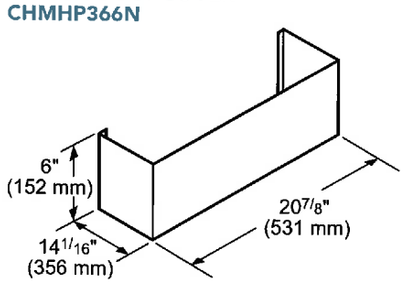

12" HIGH DUCT COVER
CHMHP3612N

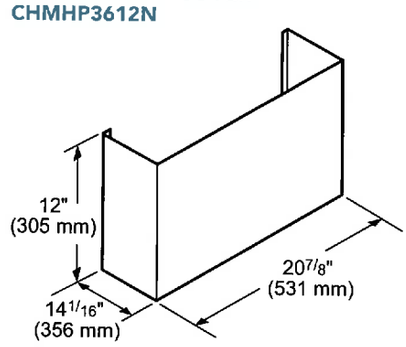

18" - 35" HIGH DUCT COVER
CHMHP36TSN

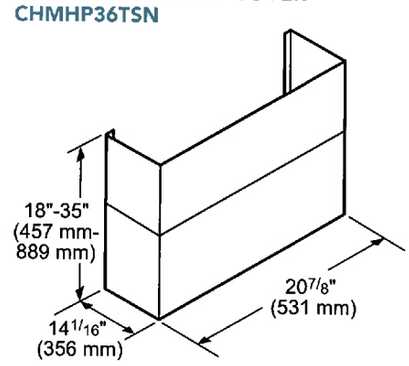

KEEP-HOT SHELF
KHS36QS 36" WIDE

- Stainless steel finish
- Convenient shelf allows dishes to keep hot at serving temperature.
- Includes stainless steel backguard and two shelves.

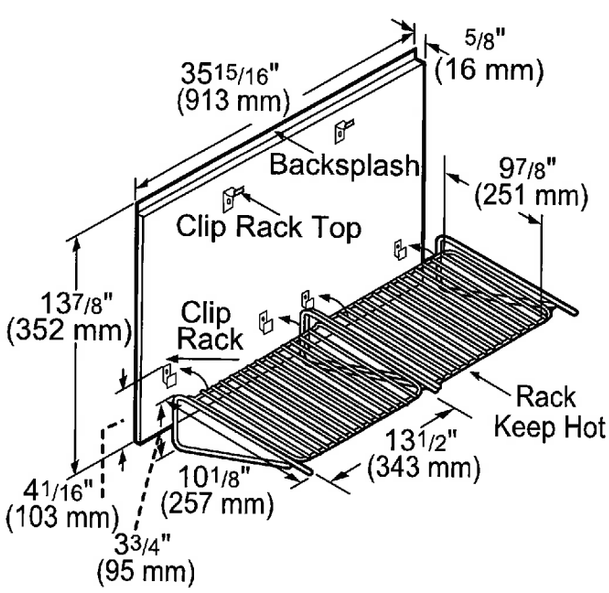

measurements in inches and mm

STAINLESS STEEL BACKSPLASH
PA36JBS 36" WIDE

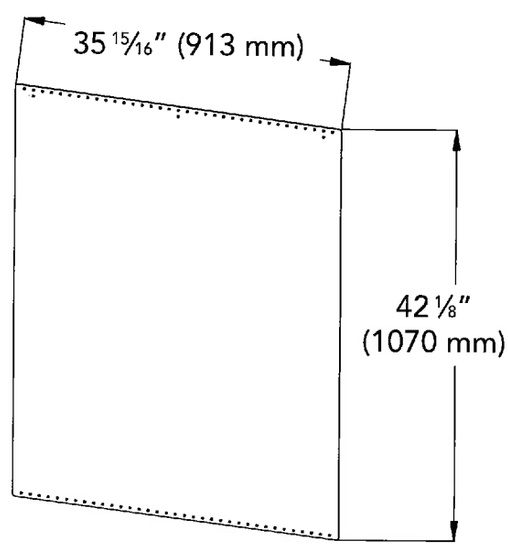

AUG 17 2017

Lot 16

HPCN36NS
36-INCH CHIMNEY WALL HOOD
PROFESSIONAL SERIES

Thermador
REAL INNOVATIONS FOR REAL COOKS®

COOKS

REMOTE BLOWERS (MOUNTED TO ROOF OR EXTERNAL WALL)

VTR630D–600 CFM

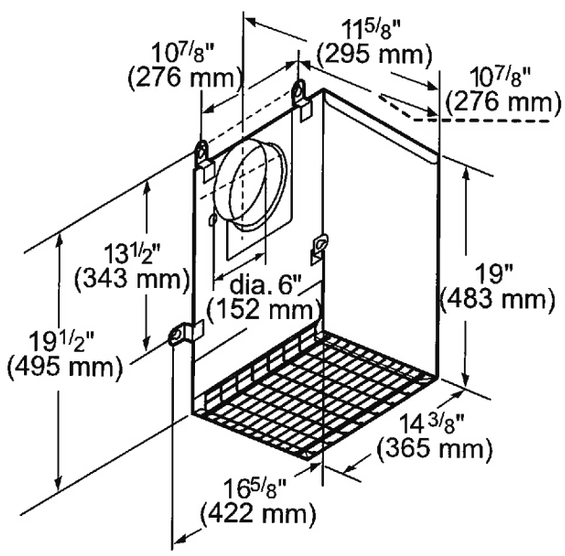

measurements in inches and mm

VTR1030D–1000 CFM

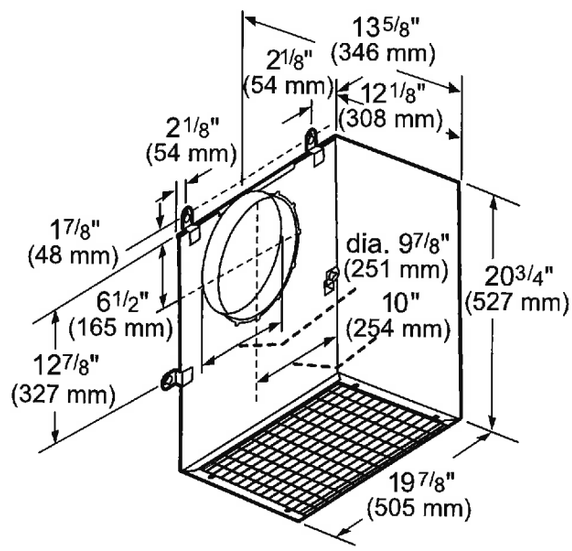

measurements in inches and mm

VTR1330E–1300 CFM

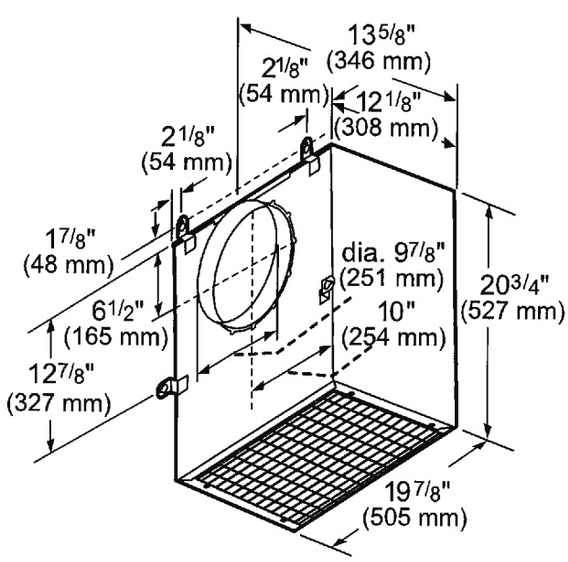

measurements in inches and mm

AUG 17 2017

Lot 16

HPCN36NS
36-INCH CHIMNEY WALL HOOD
PROFESSIONAL SERIES

Thermador
REAL INNOVATIONS FOR REAL COOKS

cooks

INLINE BLOWERS (MOUNTED BETWEEN KITCHEN AND EXTERNAL WALL)

VTI610D–600 CFM

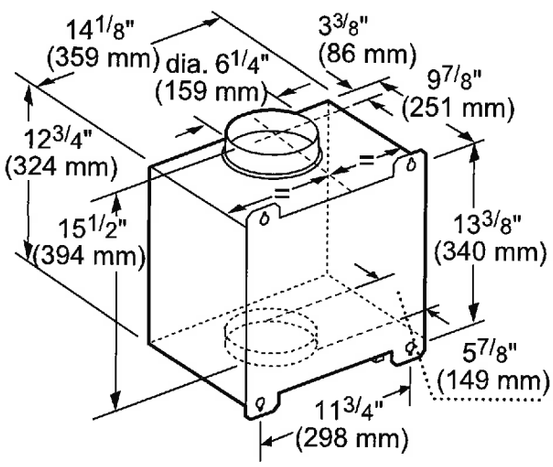

measurements in inches and mm

VTI1010D–1000 CFM

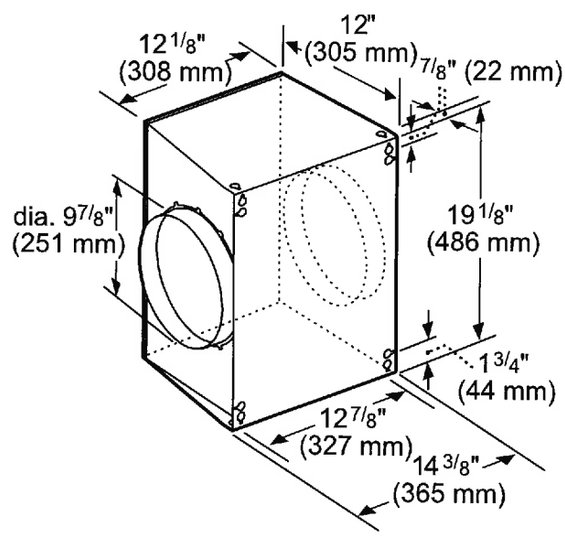

measurements in inches and mm

INTEGRATED BLOWERS (MOUNTED IN HOOD)

VTN1080N–1000 CFM

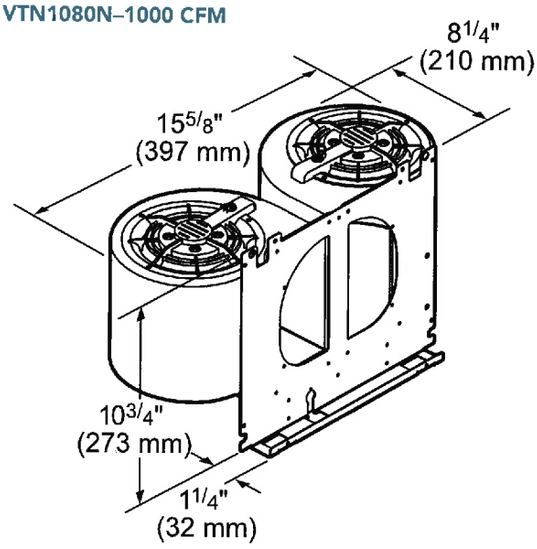

measurements in inches and mm

These warranties give you specific legal rights and you may have other rights that vary from state to state. Full warranty and limited warranty from date of installation. For complete warranty details, refer to your Use & Care manual, or ask your dealer.

Specifications are for planning purposes only. Refer to installation instructions and consult your countertop supplier prior to making counter opening. Consult with a heating and ventilation engineer for your specific ventilation requirements. For the most detailed information, refer to installation instructions accompanying product or write to Thermador indicating the model number. Specifications are correct at time of printing. Thermador reserves the right to change product specifications or design without notice. Some models are certified for use in Canada. Thermador is not responsible for products that are transported from the U.S. for use in Canada.

1 800 735 4328 | USA THERMADOR.COM | CANADA THERMADOR.CA | ©2015 BSH HOME APPLIANCES CORPORATION. ALL RIGHTS RESERVED. 04 / 15

AUG 17 2017

1616

Electric Dryer

PRODUCT MODEL NUMBERS

100KS

WED7505F, WED75HEF, WED7740F, WED77HEF, WED8540F, WED85HEF, WED90HEF, WED92HEF

Dryer Dimensions

Front view:

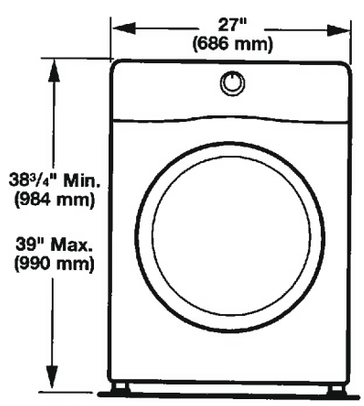

Side view:

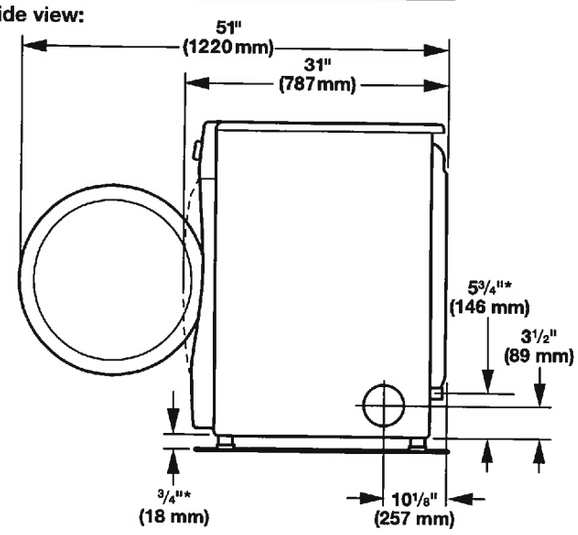

Back view:

NOTE: Most installations require a minimum of 5" (127 mm) clearance behind dryer for exhaust vent with elbow. See "Venting Requirements."

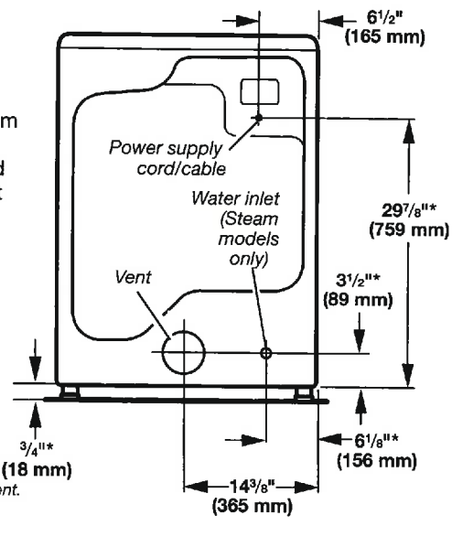

*Approx. measurement.

Installation spacing for recessed area or closet installation

All dimensions show recommended and minimum spacing allowed.

- Additional spacing should be considered for ease of installation and servicing.
- Additional clearances might be required for wall, door, floor moldings, and dryer venting.
- Additional spacing should be considered on all sides of the dryer to reduce noise transfer.
- For closet installation with a door, minimum ventilation openings in the top and bottom of the door are required. Louvered doors with equivalent ventilation openings are acceptable.
- Companion appliance spacing should also be considered.

Recommended installation clearances (dryer only):

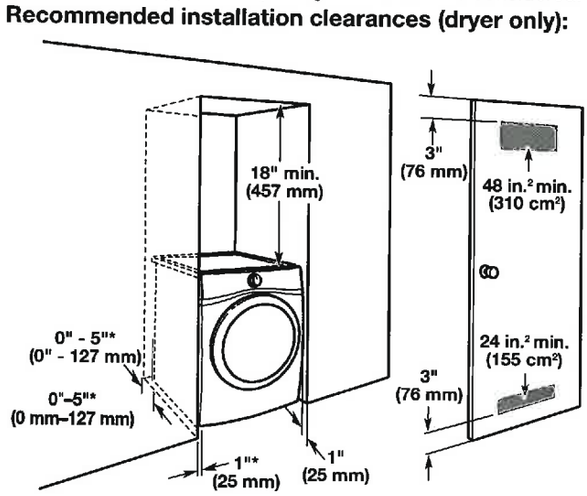

*0" (0 mm) spacing is allowed for straight-back venting only. For steam models only, inlet hose must not be kinked.

Minimum installation clearances (dryer only):

	Front	Sides	Rear	Top
Recessed	NA	0" (0 mm)	0" (0 mm)**	0" (0 mm)
Closet	NA	0" (0 mm)	0" (0 mm)**	0" (0 mm)
Under Counter	NA	1" (25 mm)	0" (0 mm)**	0" (0 mm)

**0" (0 mm) spacing is allowed for straight-back venting only.

Custom under counter installation:

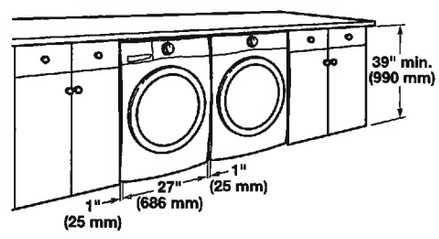

W10868947A
10/2016

AUG 17 2017

Lo616 rooks

ELECTRICAL REQUIREMENTS

To supply the required 3- or 4-wire, single phase, 120/240 volt, 60 Hz, AC only electrical supply (or 3- or 4-wire, 120/208 volt electrical supply, if specified on the serial/rating plate) on a separate 30-amp circuit, fused on both sides of the line. Connect to an individual branch circuit. Do not have a fuse in the neutral or grounding circuit.Do not use an extension cord.

VENTING REQUIREMENTS

Exhaust venting: Exhaust your dryer to the outside. 4" (102 mm) diameter vent is required. Rigid or flexible metal exhaust vent must be used. Do not use plastic or metal foil vet. Exhaust hood must be at least 12" (305 mm) from the ground or any object that may be in the path of the exhaust.

WARNING: To reduce the risk of fire, this dryer MUST BE EXHAUSTED OUTDOORS.

IMPORTANT: Observe all governing codes and ordinances. Dryer exhaust must not be connected into any gas vent, chimney, wall, ceiling, attic, crawlspace, or a concealed space of a building. Only rigid or flexible metal vent shall be used for exhausting.

- Only a 4" (102 mm) heavy metal exhaust vent and clamps may be used.
- Do not use plastic or metal foil vent.

Exhaust hoods:

Recommended Styles:

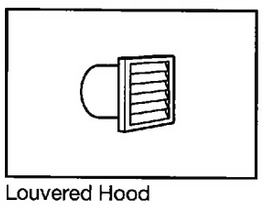

Louvered Hood

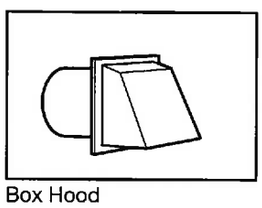

Box Hood

Acceptable Style:

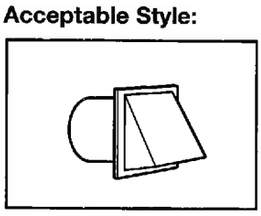

Angled Hood

Determine vent path:

- Select route that will provide straightest and most direct path outdoors.
- Plan installation to use fewest number of elbows and turns.
- When using elbows or making turns, allow as much room as possible.
- Bend vent gradually to avoid kinking.
- Use as few 90° turns as possible.

Determine vent length and elbows needed for best drying performance:

- Use the following "Vent System Charts" to determine type of vent material and hood combinations acceptable to use.

  NOTE: Do not use vent runs longer than those specified in "Vent System Charts."

  Exhaust systems longer than those specified will:

  - Shorten life of dryer.
  - Reduce performance, resulting in longer drying times and increased energy usage.

The "Vent System Charts" provide venting requirements that will help achieve best drying performance.

Standard Vent System Chart

Number of 90° elbows	Type of vent	Angled hoods
0	Rigid metal	64 ft. (20 m)
1	Rigid metal	54 ft. (16.5 m)
2	Rigid metal	44 ft. (13.4 m)
3	Rigid metal	35 ft. (10.7 m)
4	Rigid metal	27 ft. (8.2 m)

Long Vent System Chart

Number of 90° elbows	Type of vent	Angled hoods
0	Rigid metal	160 ft. (48.8 m)
1	Rigid metal	150 ft. (45.7 m)
2	Rigid metal	140 ft. (42.7 m)
3	Rigid metal	130 ft. (39.6 m)
4	Rigid metal	120 ft. (36.6 m)

To determine if your model has a long vent system, refer to the type code located on the serial number plate in the inner door well. Example: An electric model would be DA**LV** (Long Vent) – ELE – XXXXXXX-XXX.

NOTE: For long vent systems, use of box/louvered hoods will improve venting, regardless of length.

The dryer must be connected to the cold water faucet using new inlet hoses (not supplied). Do not use old hoses.

Because Whirlpool Corporation policy includes a continuous commitment to improve our products, we reserve the right to change materials and specifications without notice.

Dimensions are for planning purposes only. For complete details, see Installation Instructions packed with product. Specifications subject to change without notice.

AUG 17 2017