potvin KITCHENS & CABINETRY	BUILDER: VALECRAFT	PROJECT: PST PH6 E25	LOT: PST PH6 E25
	STANDARD KITCHEN LAYOUT	MODEL: 120 HUNTLEY STND	DATE: APRIL 25, 2023
		DATE: APRIL 25, 2023	
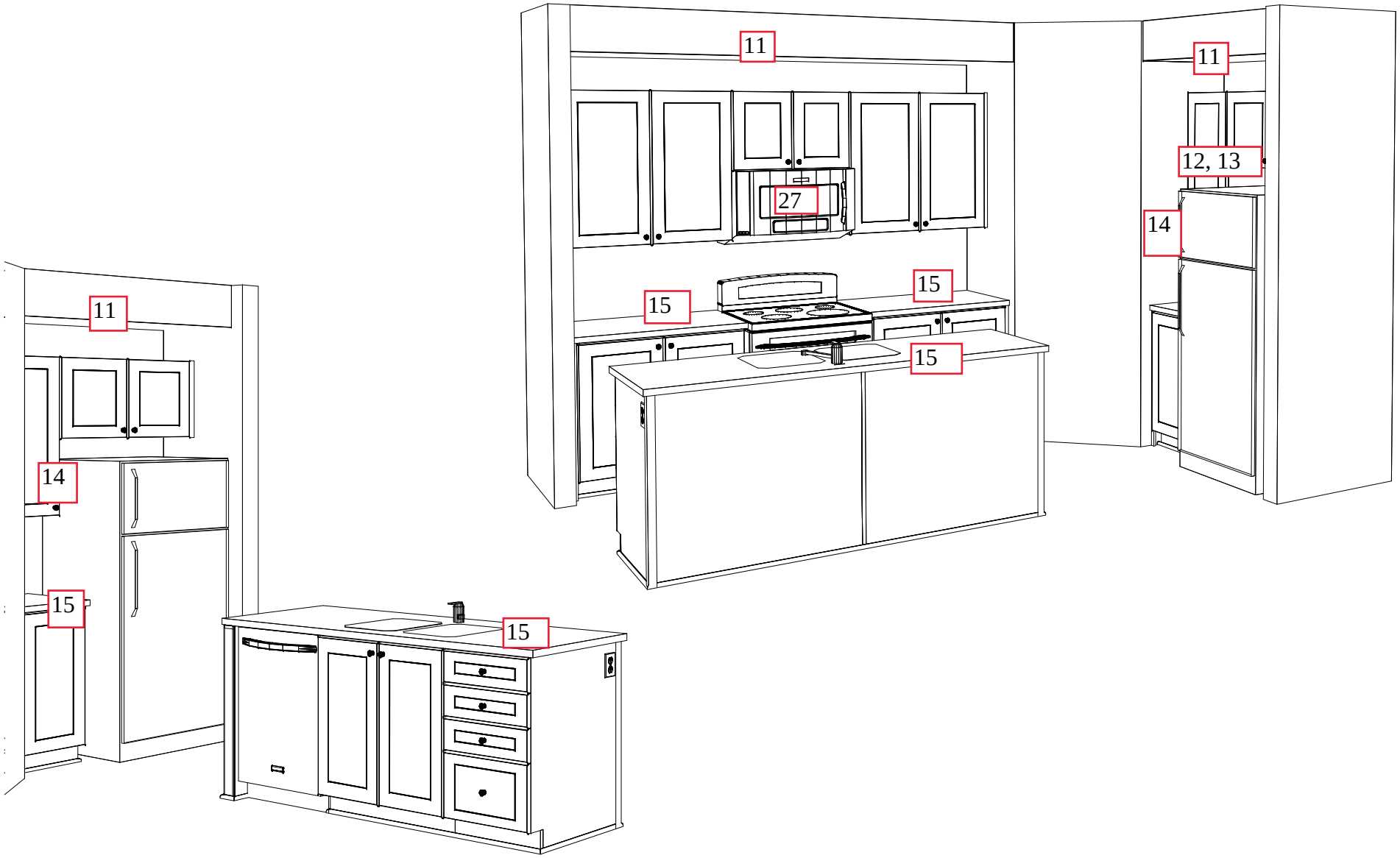
DIMENSIONS MAY VARY DEPENDING ON SITE MEASURES/CONDITIONS