CLIENT: VALECRAFT	**LOT:PST6-21**	* These plans are intended for production of cabinets ONLY. Potvin is not liable if they are used for other purposes. * Construction lines on plans are subjective and are drawn for representation only. Their dimensions are approximate and may vary due to site conditions. * Appliances in elevations and plans are generic templates and may not reflect actual selections.	PG# 1 of 3
ADDR.: 825 BRADLEY STND, ,			
SL #: 1080007			
Phone: Mobile:	OUT BY: ABBY/VAL DATE: 22/10/21		Sheet 1
Email :	**PST6-21**		

potvin KITCHENS & CABINETRY

MAR 31, 22

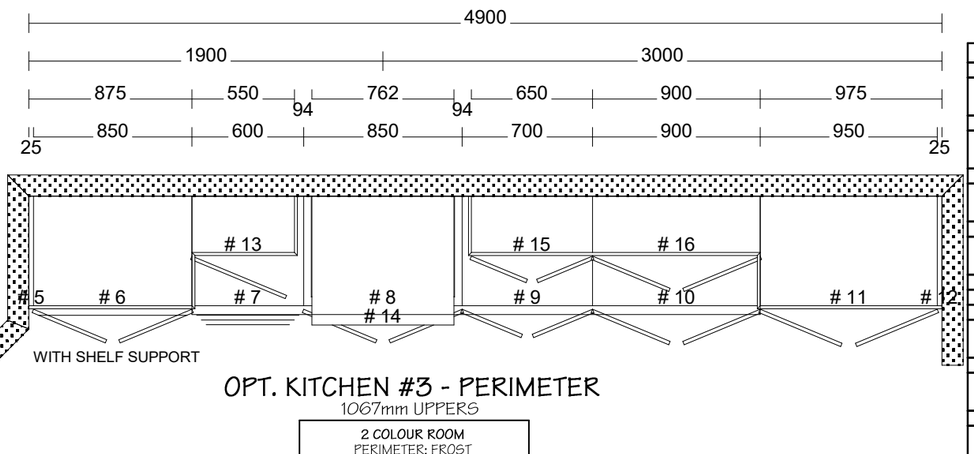

OPT. KITCHEN #3 - PERIMETER

1067mm UPPERS

2 COLOUR ROOM
PERIMETER: FROST

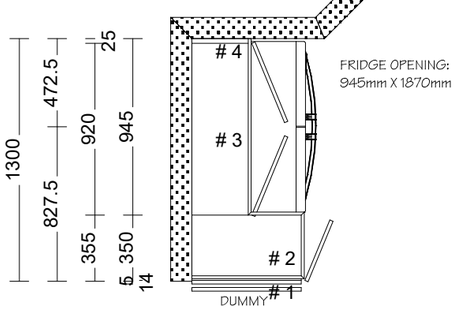

Room Name	
OPT. KITCHEN #3 - PERIMETER	
COUNTERTOPS	
QUARTZ BY OTHERS	
FINISH	
MDF Frost (O)	
HANDLES	
719160-195	
DOOR STYLE	
basedoor:Banff	MDF Frost
UpperDoor:Banff	MDF Frost
Drawer:Banff Drawer	MDF Frost
DRAWER GUIDE	
ARCITECH	
DOOR HINGE STYLE	
SOFTCLOSE HINGES	
Construction	
(A)Potvin 32mm	
CROWN MLDG	
Finished BulkHead 102	MDF Frost
LIGHT VALANCE	
NO VALANCE	MDF Frost

All Cabinets

No	Name	Width	Height	Depth
0	REFRIDGERATOR	914.5	1800	667
0	30" Electric Cooktop	768.5	50	540
1	tall dummy doors LEFT	19	2445	587
2	B350/2445/587	350	2445	587
3	UC920/575/302 Fridge	920	575	302
4	UC Filler	25	575	302
5	P Filler	25	2445	587
6	850/2445/587D DOven KOCE500ES	850	2445	587
7	LC600 PP 10-10-10	600	883	587
8	LC 850 SK USB	850	883	587
9	LC 700	700	883	587
10	LC 900	900	883	587
11	P950/2445/587	950	2445	587
12	P Filler	25	2445	587
13	UC550/1067	550	1067	302
14	Canopy Range Hood	762	756	690
15	UC650/1067	650	1067	302
16	UC900/1067	900	1067	302

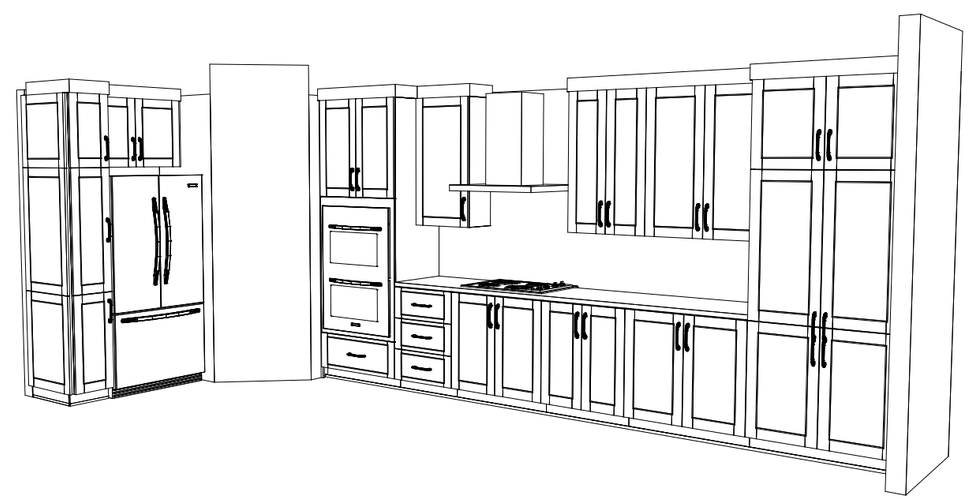

2 COLOUR KITCHEN - FROST

\\Portal\potvin-portal_AAACABINETS\JOBS_Builder's_Valecraft_Production\PLACE ST-THOMAS (EMBRUN)\PST6\PST6-21, BRADLEY\PST6-21, 825 BRADLEY STND_P.cvj

CLIENT: VALECRAFT	**LOT:PST6-21**	* These plans are intended for production of cabinets ONLY. Potvin is not liable if they are used for other purposes. * Construction lines on plans are subjective and are drawn for representation only. Their dimensions are approximate and may vary due to site conditions. * Appliances in elevations and plans are generic templates and may not reflect actual selections.	PG# 2 of 3
ADDR.: 825 BRADLEY STND, ,			Sheet 2
SL #: 1080007			
Phone: Mobile:	OUT BY: ABBY/VAL DATE: 22/10/21		
Email :	**PST6-21**		

potvin KITCHENS & CABINETRY

MAR 31, 22

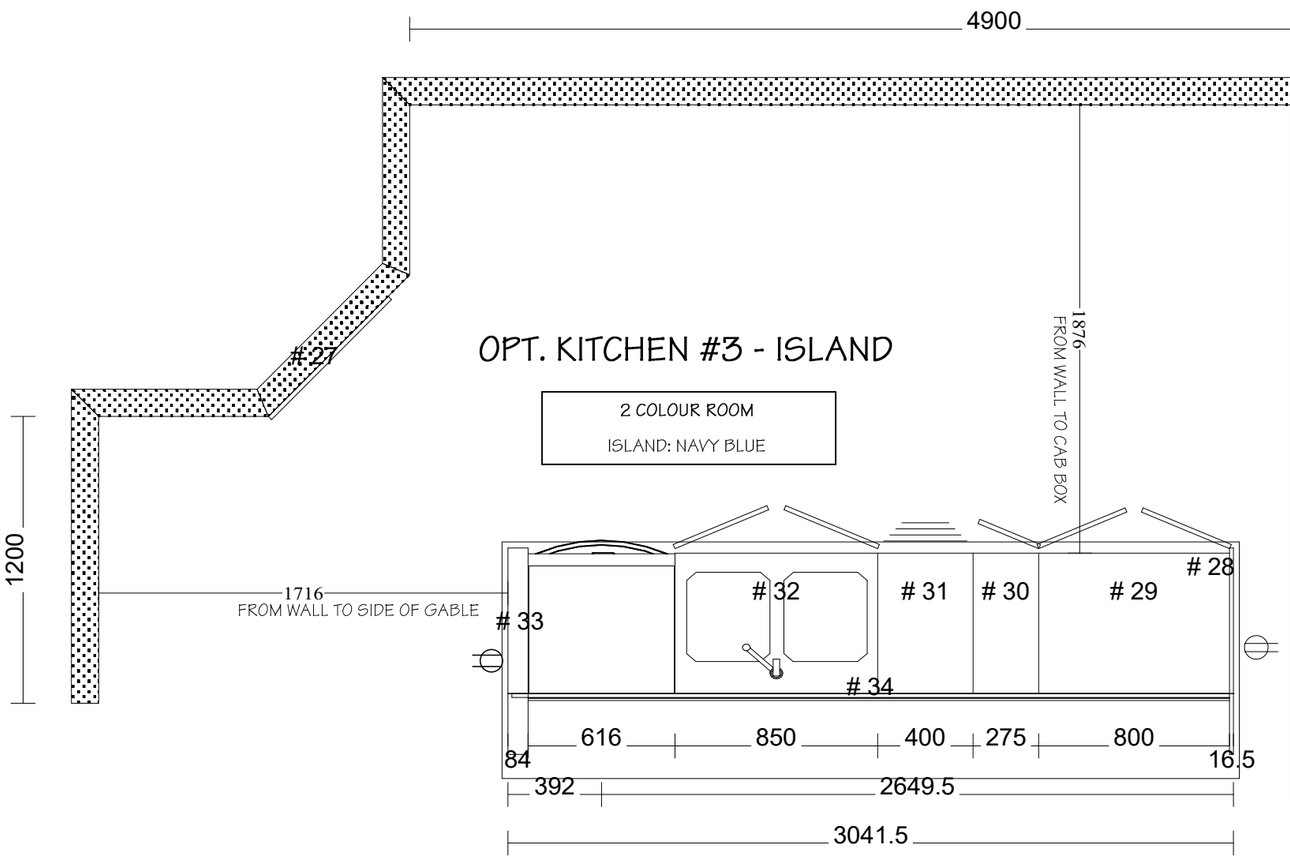

Room Name	
OPT. KITCHEN #3 - ISLAND	
COUNTERTOPS	
QUARTZ BY OTHERS	
FINISH	
MDF NavyBlue (O)	
HANDLES	
719160-195	
DOOR STYLE	
basedoor:Banff	**MDF NavyBlue**
UpperDoor:Banff	**MDF NavyBlue**
Drawer:Banff Drawer	**MDF NavyBlue**
DRAWER GUIDE	
ARCITECH	
DOOR HINGE STYLE	
SOFTCLOSE HINGES	
Construction	
(A)Potvin 32mm	
CROWN MLDG	
NO CROWN	**MDF NavyBlue**
LIGHT VALANCE	
NO VALANCE	**MDF NavyBlue**

All Cabinets

No	Name	Width	Height	Depth
0	DISHWASHER	616	883	587
0	Double W/Faucet/gray	762	101.5	457
27	DW FILLER T1S	711	102	19
28	DW GABLE	16.5	883	864
29	LC 800	800	883	587
30	LC 275	275	883	587
31	LC400D	400	883	587
32	LC 850 SK USB	850	883	587
33	DW Birch Right w Plug Std	84	883	864
34	ISLPANEL Horizontal	3008.5	883	16.5

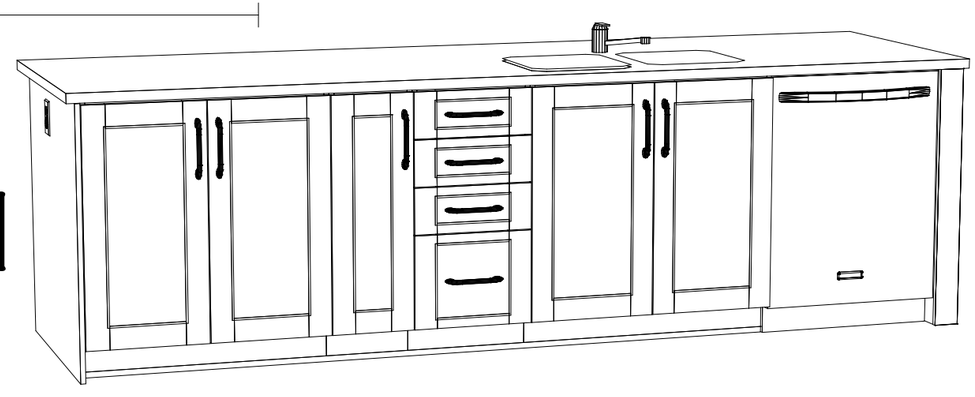

2 COLOUR KITCHEN NAVY BLUE

\\Portal\potvin-portal_AAACABINETS\JOBS_Builder's_Valecraft_ Production\PLACE ST-THOMAS (EMBRUN)\PST6\PST6-21, BRADLEY\PST6-21, 825 BRADLEY STND_P.cvj

CLIENT: VALECRAFT	**LOT:PST6-21**	* These plans are intended for production of cabinets ONLY. Potvin is not liable if they are used for other purposes. * Construction lines on plans are subjective and are drawn for representation only. Their dimensions are approximate and may vary due to site conditions. * Appliances in elevations and plans are generic templates and may not reflect actual selections.	PG# 3 of 3
ADDR.: 825 BRADLEY STND, ,			Sheet 3
SL #: 1080007			
Phone: Mobile:	OUT BY: ABBY/VAL DATE: 22/10/21		
Email :	**PST6-21**		

potvin KITCHENS & CABINETRY

MAR 31, 22

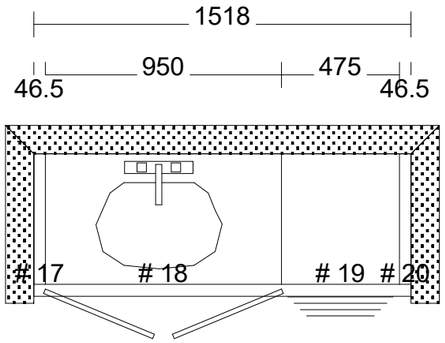

MAIN 2ND FLOOR

All Cabinets				
No	Name	Width	Height	Depth
0	Single W/Faucet	508	51	432
17	V Filler	46.5	819	524
18	V 950 SK	950	819	524
19	V475 4D	475	819	524
20	V Filler	46.5	819	524

Room Name	
MAIN 2ND FLOOR	
COUNTERTOPS	
QUARTZ BY OTHERS	
FINISH	
BirNatural (O)	
HANDLES	
7814-195	
DOOR STYLE	
basedoor:P100	**BirNatural**
UpperDoor:P100	**BirNatural**
Drawer:P100 DRAWER 5PC	**BirNatural**
DRAWER GUIDE	
ARCITECH	
DOOR HINGE STYLE	
SOFTCLOSE HINGES	
Construction	
(A)Potvin 32mm	

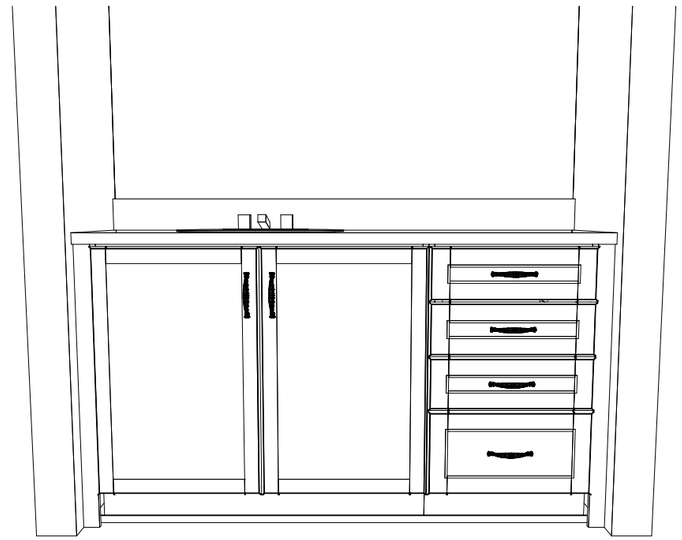

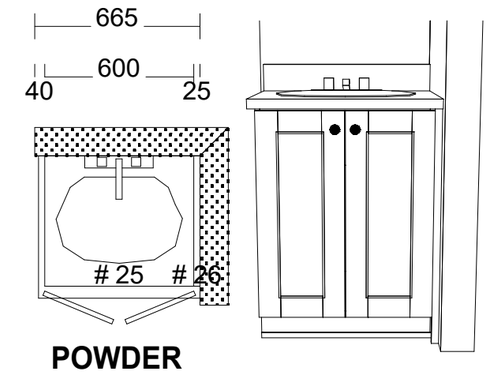

POWDER

All Cabinets				
No	Name	Width	Height	Depth
0	Single W/Faucet	508	51	432
25	V 600 SK	600	819	524
26	V Filler	25	819	524

Room Name	
POWDER	
COUNTERTOPS	
QUARTZ BY OTHERS	
FINISH	
MDF Frost (O)	
HANDLES	
5923900	
DOOR STYLE	
basedoor:Banff	**MDF Frost**
UpperDoor:Banff	**MDF Frost**
Drawer:Banff Drawer	**MDF Frost**
DRAWER GUIDE	
ARCITECH	
DOOR HINGE STYLE	
SOFTCLOSE HINGES	
Construction	
(A)Potvin 32mm	

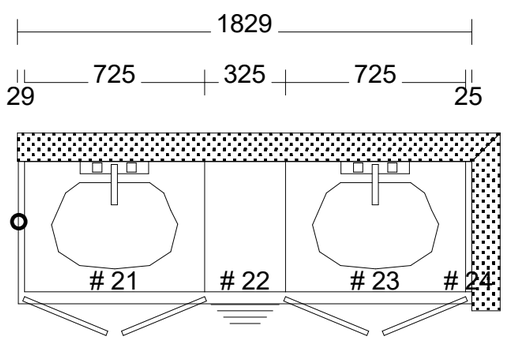

ENSUITE 2ND FLOOR

All Cabinets				
No	Name	Width	Height	Depth
0	Single W/Faucet	508	51	432
0	Single W/Faucet	508	51	432
21	V 725 SK	725	819	524
22	V325 4D	325	819	524

Room Name	
ENSUITE 2ND FLOOR	
COUNTERTOPS	
QUARTZ BY OTHERS	
FINISH	
BirNatural (O)	
HANDLES	
7814-195	
DOOR STYLE	
basedoor:P100	**BirNatural**
UpperDoor:P100	**BirNatural**
Drawer:P100 DRAWER 5PC	**BirNatural**
DRAWER GUIDE	
ARCITECH	
DOOR HINGE STYLE	
SOFTCLOSE HINGES	
Construction	
(A)Potvin 32mm	

\\Portal\potvin-portal_AAACABINETS\JOBS_Builder's_Valecraft_Production\PLACE ST-THOMAS (EMBRUN)\PST6\PST6-21, BRADLEY\PST6-21, 825 BRADLEY STND_P.cvj