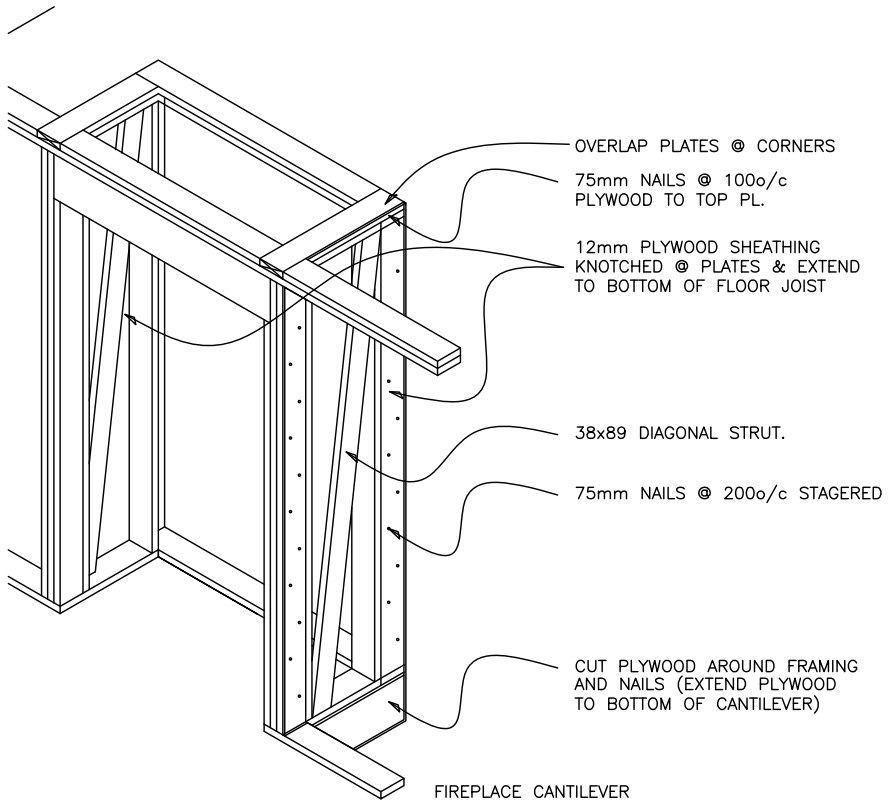

1. ISO (CANTILEVER FIREPLACE DETAIL)

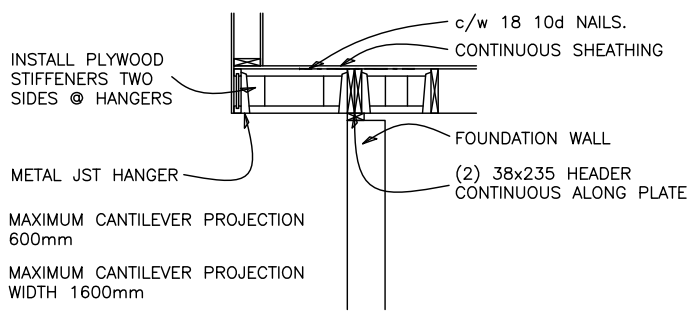

2. SECTION THROUGH (CANTILEVER FIREPLACE DETAIL)

CANTILEVERED FIREPLACE DETAIL

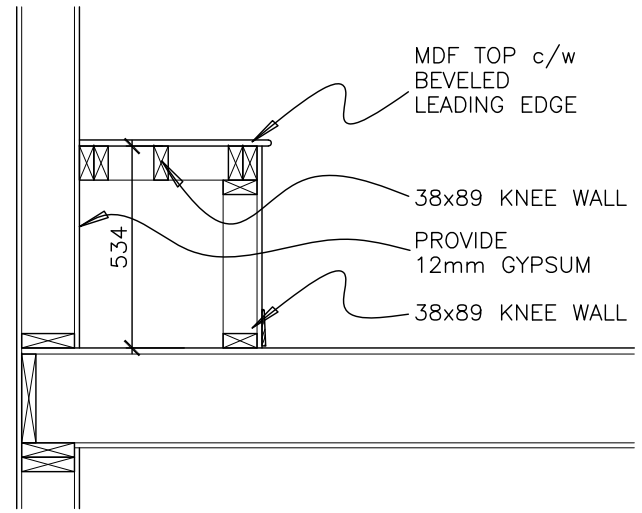

5a. CLOSED (STANDARD)

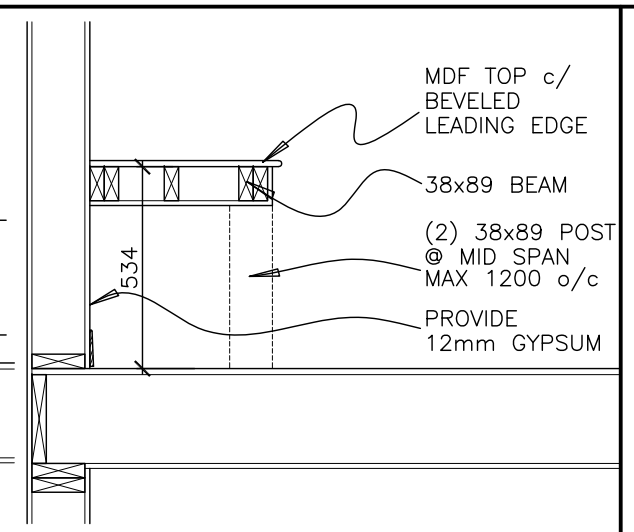

5b. OPEN BELOW (OPTION)

WINDOW SEAT DETAILS

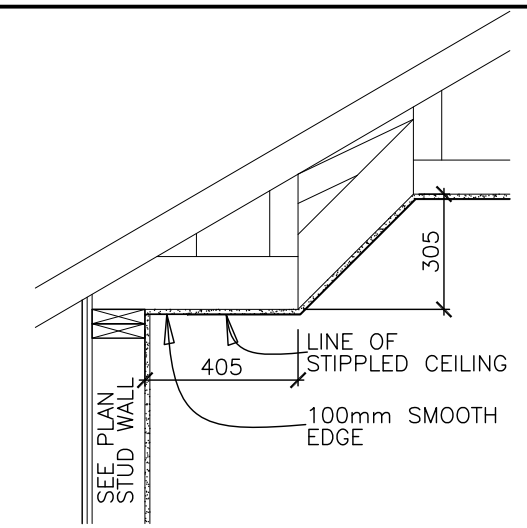

6a.TYPICAL COVE CEILING INTO TRUSSES

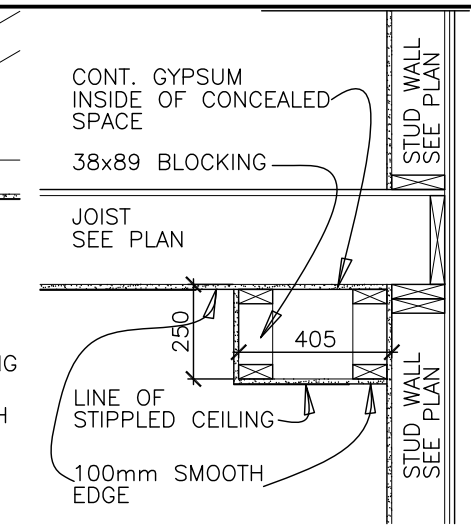

6b.TYPICAL COFFERED CEILING

COFFER AND COVE CEILING DETAILS

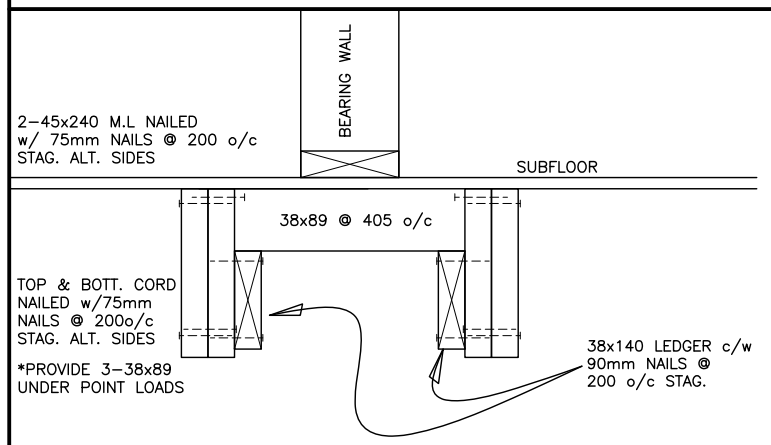

7a. SECTION THROUGH LOAD BEARING WALL PARALLEL TO JST. LVL BEAMS

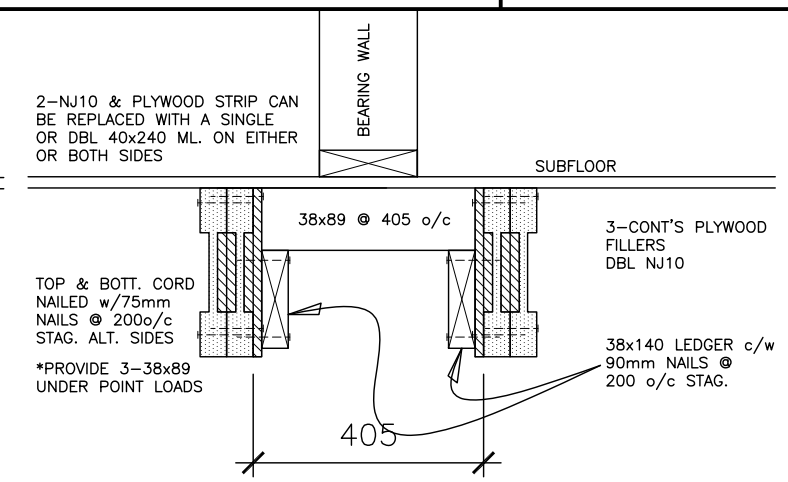

7b. SECTION THROUGH LOAD BEARING WALL PARALLEL TO JST. NJ10 BEAMS

LOAD BEARING MECHANICAL WALL SUPPORT

TENDER 2017

2012 OBC DRAWINGS

SINGLE FAMILY HOMES (SERIES 500, 700, 900)

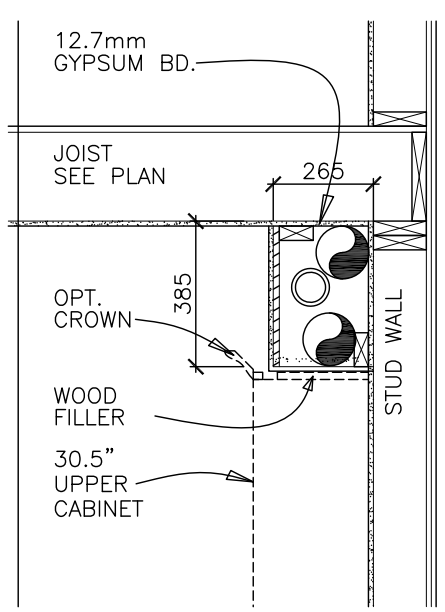

3a. DCBH (STANDARD)

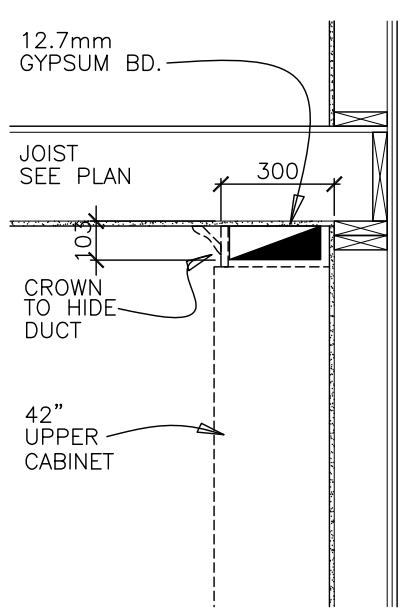

3b. DCBH (42" UPPER CABINETS)

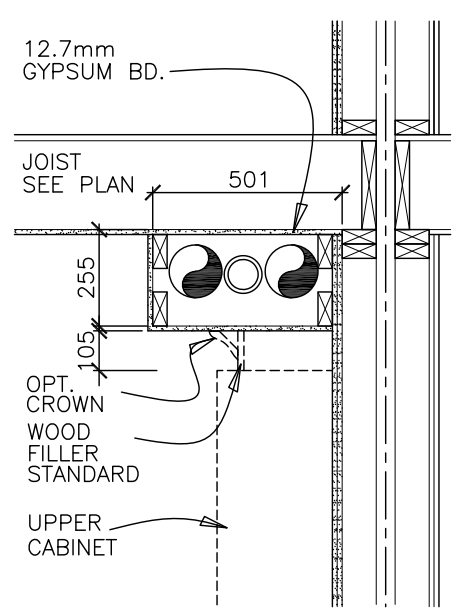

3c. DCBH (TOWNHOUSE)

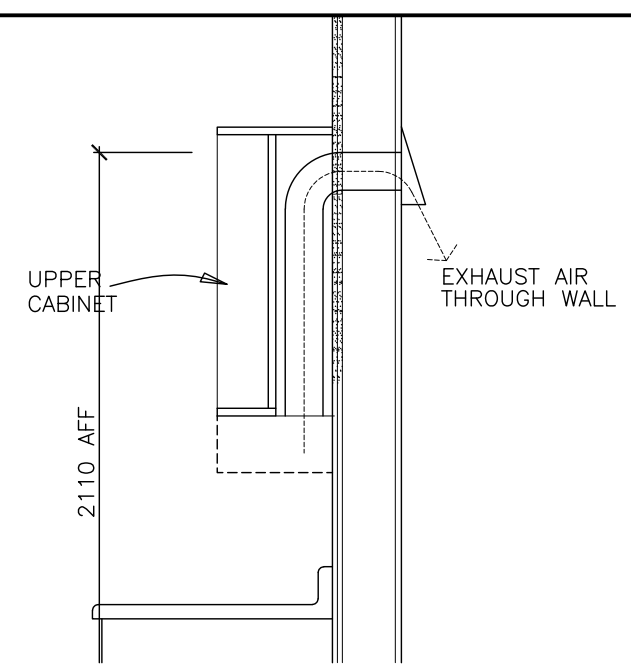

3d. STANDARD RANGE EXHAUST THROUGH REAR CABINET

BULKHEAD DETAILS OVER CABINETS

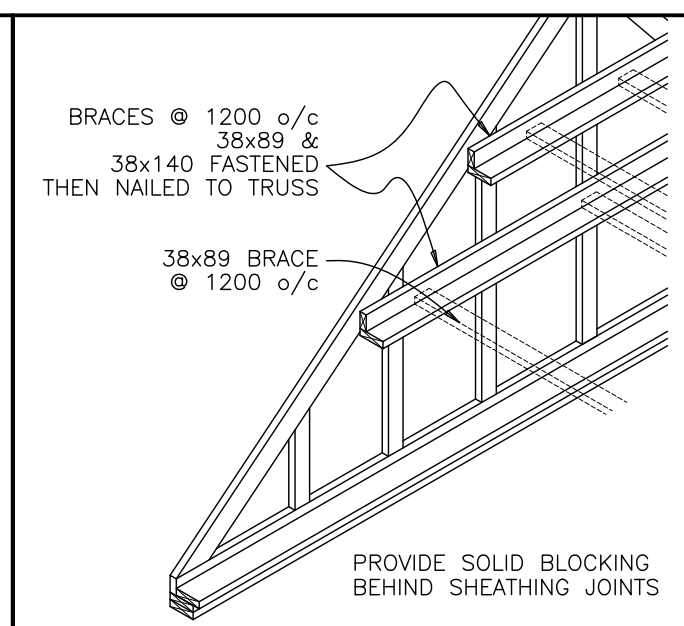

4. TYPICAL GABLE TRUSS BRACING DETAIL

NO	DESCRIPTION	DATE	BY
16.	STANDARD FOOTPRINT SPECIFICATION	03/18/15	SI
15.	STANDARD FOOTPRINT SPECIFICATION	03/13/14	AB
14.	STANDARD FOOTPRINT SPECIFICATION	31/05/07	PD
13.	2006 OBC DRAWINGS	04/25/07	AEV
12.	EXHAUST THOUGH REAR CABINET	26/05/04	SI
11.	DCBH 3a. HT. CHANGED	05/05/04	SI
10.	TENDER 2003	27/05/03	SI
9.	FLUSH BEAM PACKING DETAIL ADDED	15/05/03	SI
8.	SITE/FRAMER	18/07/02	SI
7.	DCBH STANDARD & FOR 42" UPPER	06/03/02	SI
6.	CANTILEVERED FIREPLACE PROJECTION	31/01/02	SI
5.	PORCH BM TO POST CONNECTION	23/01/02	SI
4.	GABLE TRUSS BRACING DETAIL	22/08/01	SI
3.	WIN. SEAT / FL. TRANSITIONS MOVED SP–3f	15/08/01	SI
2.	ISSUED FOR STRUCTURAL LETTER	07/05/01	SI
1.	ISSUED FOR CONST	09/04/01	SI

Valecraft Homes Ltd.

TITLE: FRAMING DETAILS

ACAD FILE: SP–3b.DWG

SCALE: 1:30

SINGLES & TOWNHOMES

DWG. SP-3b