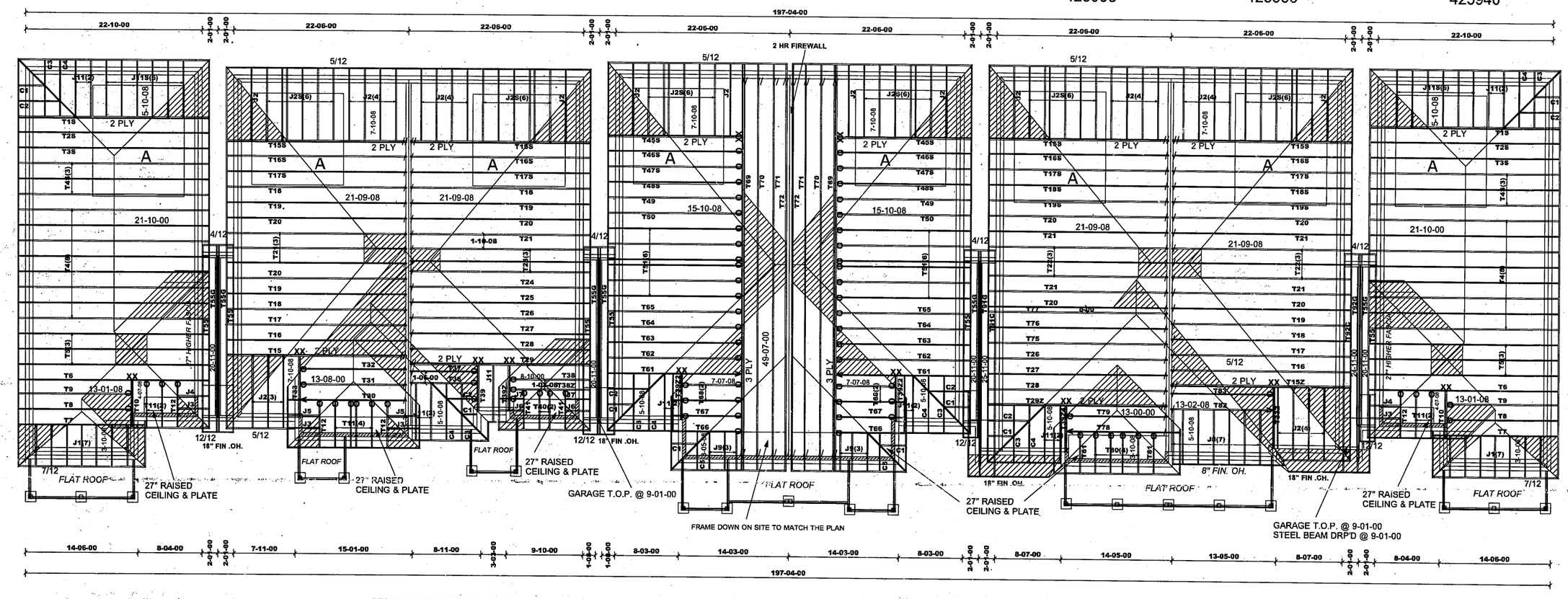

ASPHALT SHINGLES
12" FINISHED OH.
R.T.M.C.
2X6 EXTERIOR WALLS
2X6 FASCIA BOARD
6" BRICK DEDUCTION
(1" RIGID INSULATION)

HARDWARE:
LUS24 - (O)
LJS26DS - (V)
HGUS26-2 - (XX)
H2.5T - (/)

DENOTES CONV. FRAMING

DESIGN CONFORMS WITH OBC 2012 (2019 AMENDMENT)
OCCUPANCY: RESIDENTIAL PART: 9
Ss = 27.2 psf Sr = 8.4 psf

DESIGN LOADS:
TCSL = 23.3 psf
TCDL = 6.0 psf
BCLL = 0.0 psf
BCDL = 7.4 psf

All conventional framing to conform with Part 9 of O.B.C. 2012. Roof rafters that cross over or meet trusses to be min. 2x4 SPF #2 @ 24" o/c with a vertical post to the truss at each cross point. Vertical posts longer than 6' to have lateral bracing so that the distance between the post end points and lateral bracing does not exceed 6'.

ALL ROOF PITCHES ARE 6/12 UNLESS OTHERWISE NOTED

A: 12" RAISED COFF. CEILING

DWG# T-2406377 to T-2406477, T-1800218

LICENSED PROFESSIONAL ENGINEER
03-02-24
H. J. G. ALVES
100009024
PROVINCE OF ONTARIO

Structural component only
DWG# T-2406550

TRUSS PLACEMENT PLAN.

This is a truss placement plan only, NOT a final roof framing plan. These trusses are designed as individual building components to be incorporated into the building design at the specification of the building designer. See individual truss drawings for each component identified on this placement plan.

Please verify that all dimensions match the dimensions found on the job. The Building designer is responsible for the temporary/ permanent bracing of the roof and floor system and its integration into the bracing of the overall structure. The design of the truss support structure including headers, beams, walls, and columns is the responsibility of the building designer unless otherwise noted in this plan. Building designer to review and approve this plan to ascertain conformity to his overall structural plan.

M16021

TAMARACK ROOF TRUSSES INC.

Job Track: 52749	Builder / Location: ROYAL PINE HOMES / BRAMPTON	Model / Elevation: BLK 291 / UNITS 1-8 (COFF. IN MASTER BED)	Mitek ver 8.6.3.353
Layout ID: 425914	Project: SUMMER RIDGE ESTATES INC.		
Plan Log: 206082	Date: 2024-03-01 Designer:		

THESE DRAWINGS CONSTITUTE THE PROPERTY OF TAMARACK ROOF TRUSSES INC., SHALL NOT BE REPRODUCED, PUBLISHED, OR REDISTRIBUTED IN ANY MANNER OR UTILIZED FOR ANY PURPOSE OTHER THAN THE MANUFACTURE OF TRUSSES BY TAMARACK ROOF TRUSSES INC AND WILL BE RETRACTED BY TAMARACK ROOF TRUSSES INC IF UTLILZED FOR ANY OTHER PURPOSE.

DELIVERY SHIPLIST

TAMARACK ROOF TRUSSES INC.
ALPA LUMBER GROUP

Lumber Yard:	TAMARACK LUMBER	Job Track:	52749
Builder:	ROYAL PINE HOMES	PlanLog:	206082
Project:	SUMMER RIDGE ESTATES INC.	Layout ID:	425933
Location:	BRAMPTON	Ref #	
Model:	BLK 291	Page:	1 of 2
Lot #:		Date:	02-29-2024
Elevation:	B UNIT 1-BLK 291	Designer:	
		Sales Rep:	Rick DiCiano

Roof Trusses

PROFILE	QTY PLY	MARK TYPE	PITCH	SPAN	HEIGHT	LUMBER	OVERHANG LEFT RIGHT	HEEL HEIGHT LEFT RIGHT	LBS. BFT.	BUNDLE # STACK #	LOAD BY REMARKS
	1 2-ply	T1S Hip Girder	6 /12	21-10-00	4-01-12	2 x 4	1-04-08 1-04-08	1-02-08 1-02-08	185.72 123.67		
	1	T2S Hip	6 /12	21-10-00	5-01-12	2 x 4	1-04-08 1-04-08	1-02-08 1-02-08	94.52 61.17		
	1	T3S Hip	6 /12	21-10-00	6-01-12	2 x 4	1-04-08 1-04-08	1-02-08 1-02-08	101.68 64.67		
	8	T4 Common	6 /12	21-10-00	6-08-00	2 x 4	1-04-08 1-04-08	1-02-08 1-02-08	719.52 448.00		
	3	T4S Roof Special	6 /12	21-10-00	6-08-00	2 x 4	1-04-08 1-04-08	1-02-08 1-02-08	293.92 185.50		
	3	T5 Hip	6 /12	21-10-00	6-09-04	2 x 4	1-04-08 1-04-08	1-02-08 3-05-08	297.91 191.50		
	1	T6 Hip Girder	6 /12	21-10-00	5-09-04	2 x 4 2 x 6	1-04-08 1-04-08	1-02-08 3-05-08	112.57 70.67		
	1	T7 Hip Girder	6 /12	13-06-00	3-07-02	2 x 4	1-04-08 1-04-08	1-02-08 1-02-08	53.67 35.50		
	1	T8 Common	6 /12	13-01-08	4-07-00	2 x 4	1-04-08	1-02-08 1-04-12	51.51 32.67		
	1	T9 Half Hip	6 /12	13-01-08	4-10-12	2 x 4	1-04-08	1-02-08 4-10-12	54.71 35.00		
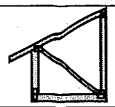	1 2-ply	T10 Monopitch Girder	6 /12	4-07-08	5-09-04	2 x 4 2 x 6	1-04-08	3-05-08 5-09-04	61.87 37.00		
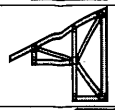	2	T11 Monopitch	6 /12	4-07-08	5-09-04	2 x 4	1-04-08	1-02-08 5-09-04	64.63 44.33		
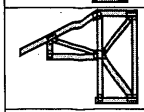	1	T12 Half Hip Girder	6 /12	4-07-08	4-09-04	2 x 4	1-04-08	1-02-08 4-09-04	30.43 21.00		
	1	T55 Roof Special	4 /12	20-11-00	6-04-03	2 x 4	1-03-08 1-09-08	4-10 1-09-15	78.88 50.33		

DELIVERY SHIPLIST

TAMARACK ROOF TRUSSES INC.
ALPA LUMBER GROUP

Lumber Yard:	TAMARACK LUMBER	Job Track:	52749
Builder:	ROYAL PINE HOMES	PlanLog:	206082
Project:	SUMMER RIDGE ESTATES INC.	Layout ID:	425933
Location:	BRAMPTON	Ref #	
Model:	BLK 291	Page:	2 of 2
Lot #:		Date:	02-29-2024
Elevation:	B UNIT 1-BLK 291	Designer:	
		Sales Rep:	Rick DiCiano

Roof Trusses

PROFILE	QTY PLY	MARK TYPE	PITCH	SPAN	HEIGHT	LUMBER	OVERHANG LEFT RIGHT	HEEL HEIGHT LEFT RIGHT	LBS. BFT.	BUNDLE # STACK #	LOAD BY REMARKS
	1	T55G GABLE	4 /12	**20-11-00**	6-04-03	2 x 4	1-03-08 1-09-08	4-10 1-09-15	81.17 52.17		
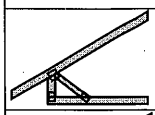	7	J1 Jack-Open	7 /12	**3-10-08**	3-07-02	2 x 4	1-04-08	1-04-00 3-07-02	97.11 63.00		
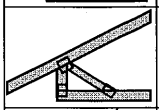	1	J3 Jack-Open	6 /12	**2-07-08**	2-06-04	2 x 4	1-04-08	1-02-08 2-06-04	10.39 7.00		
	1	J4 Jack-Open	6 /12	**2-07-08**	4-09-04	2 x 4	1-04-08	3-05-08 4-09-04	14.33 9.33		
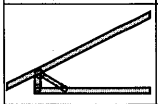	2	J11 Jack-Open	6 /12	**5-10-08**	4-01-12	2 x 4	1-04-08	1-02-08 4-01-12	36.48 23.33		
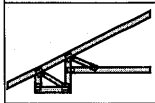	6	J11S Jack-Open	6 /12	**5-10-08**	4-01-12	2 x 4	1-04-08	1-02-08 3-01-12	126.71 88.00		
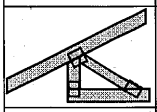	1	C1 Jack-Open	6 /12	**1-09-07**	2-01-04	2 x 4	1-04-08 1-01	1-02-08 2-01-04	8.47 5.67		
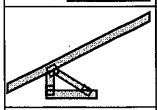	1	C2 Jack-Open	6 /12	**1-10-08**	3-01-04	2 x 4	1-04-08 1-10-15	1-02-08 2-01-12	11.02 7.00		
	1	C3 Jack-Open	6 /12	**1-09-07**	2-01-04	2 x 4	1-04-08 4-01-01	1-02-08 2-01-04	13.03 8.33		
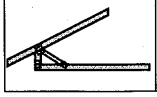	1	C4 Jack-Open	6 /12	**3-09-07**	3-01-04	2 x 4	1-04-08 2-01-01	1-02-08 3-01-04	15.58 9.67		

TOTAL # TRUSS= **50** TOTAL BFT OF ALL TRUSSES= **1674.51** BFT. TOTAL WEIGHT OF ALL TRSSES **2615.81** LBS

HARDWARE

QTY	TYPE	MODEL	LENGTH
1	Hardware	HGUS26-2	
5	Hardware	LUS24	

TOTAL NUMBER OF ITEMS= **6**

DELIVERY SHIPLIST

TAMARACK ROOF TRUSSES INC.
ALPA LUMBER GROUP

Lumber Yard:	TAMARACK LUMBER	Job Track:	52749
Builder:	ROYAL PINE HOMES	PlanLog:	206082
Project:	SUMMER RIDGE ESTATES INC.	Layout ID:	425934
Location:	BRAMPTON	Ref #	
Model:	BLK 291	Page:	1 of 2
Lot #:		Date:	02-29-2024
Elevation:	B1 UNIT 2-BLK 291	Designer:	
		Sales Rep:	Rick DiCiano

Roof Trusses

PROFILE	QTY PLY	MARK TYPE	PITCH	SPAN	HEIGHT	LUMBER	OVERHANG LEFT RIGHT	HEEL HEIGHT LEFT RIGHT	LBS. BFT.	BUNDLE # STACK #	LOAD BY REMARKS
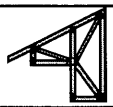	4	T11 Monopitch	6 /12	4-07-08	5-09-04	2 x 4	1-04-08	1-02-08 5-09-04	129.26 88.67		
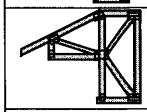	2	T12 Half Hip Girder	6 /12	4-07-08	4-09-04	2 x 4	1-04-08	1-02-08 4-09-04	60.85 42.00		
	1 2-ply	T15 Half Hip Girder	6 /12	21-09-08	4-04-06	2 x 4 2 x 6	1-04-08	1-02-08 4-04-06	220.42 134.00		
	1 2-ply	T15S Half Hip Girder	6 /12	21-09-08	4-04-06	2 x 4	1-04-08	1-02-08 4-04-06	197.4 128.00		
	1	T16 Half Hip	6 /12	21-09-08	5-02-06	2 x 4	1-04-08	1-02-08 5-02-06	88.52 55.17		
	1	T16S Half Hip	6 /12	21-09-08	5-02-06	2 x 4	1-04-08	1-02-08 5-02-06	100.24 63.83		
	1	T17 Half Hip	6 /12	21-09-08	6-00-06	2 x 4	1-04-08	1-02-08 6-00-06	92.51 58.17		
	1	T17S Half Hip	6 /12	21-09-08	6-00-06	2 x 4	1-04-08	1-02-08 6-00-06	105.69 68.83		
	2	T18 Half Hip	6 /12	21-09-08	6-10-06	2 x 4	1-04-08	1-02-08 6-10-06	193.8 121.67		
	2	T19 Half Hip	6 /12	21-09-08	7-08-06	2 x 4	1-04-08	1-02-08 7-08-06	203.15 129.00		
	2	T20 Half Hip	6 /12	21-09-08	8-06-06	2 x 4	1-04-08	1-02-08 8-06-06	200.2 125.33		
	3	T21 Half Hip	6 /12	21-09-08	9-04-06	2 x 4	1-04-08	1-02-08 9-04-06	317.79 197.00		
	1	T30 Hip Girder	6 /12	13-08-00	5-09-04	2 x 4	1-07-00 1-07-00	3-06-12 3-06-12	67.31 43.50		
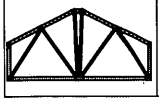	1	T31 Hip	6 /12	13-08-00	6-09-04	2 x 4		3-06-12 3-06-12	68.45 45.00		

DELIVERY SHIPLIST

TAMARACK ROOF TRUSSES INC.
ALPA LUMBER GROUP

Lumber Yard:	TAMARACK LUMBER	Job Track:	52749
Builder:	ROYAL PINE HOMES	PlanLog:	206082
Project:	SUMMER RIDGE ESTATES INC.	Layout ID:	425934
Location:	BRAMPTON	Ref #	
Model:	BLK 291	Page:	2 of 2
Lot #:		Date:	02-29-2024
Elevation:	B1 UNIT 2-BLK 291	Designer:	
		Sales Rep:	Rick DiCiano

Roof Trusses

PROFILE	QTY / PLY	MARK / TYPE	PITCH	SPAN	HEIGHT	LUMBER	OVERHANG LEFT / RIGHT	HEEL HEIGHT LEFT / RIGHT	LBS. / BFT.	BUNDLE # / STACK #	LOAD BY / REMARKS
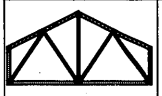	1	T32 Common	6 /12	13-08-00	6-11-12	2 x 4		3-06-12 3-06-12	64.02 40.83		
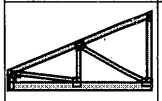	1 2-ply	T33 Monopitch Girder	5 /12	7-10-08	4-04-06	2 x 4 2 x 6		1-01-00 4-04-06	73.36 46.33		
	1	T55 Roof Special	4 /12	20-11-00	6-04-03	2 x 4	1-03-08 1-09-08	4-10 1-09-15	78.88 50.33		
	1	T55G GABLE	4 /12	20-11-00	6-04-03	2 x 4	1-03-08 1-09-08	4-10 1-09-15	81.17 52.17		
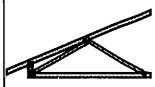	8	J2 Jack-Partial	5 /12	7-10-08	4-04-06	2 x 4	1-04-08	1-01-00 4-04-06	225.36 146.67		
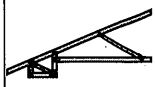	6	J2S Jack-Partial	5 /12	7-10-08	4-04-06	2 x 4	1-04-08	1-01-00 3-04-06	157.83 110.00		
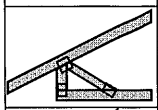	2	J3 Jack-Open	6 /12	2-07-08	2-06-04	2 x 4	1-04-08	1-02-08 2-06-04	20.78 14.00		
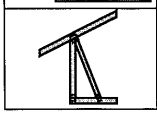	2	J5 Jack-Open	6 /12	2-05-00	4-09-04	2 x 4	1-07-00	3-06-12 4-09-04	28.58 20.00		

TOTAL # TRUSS= **48** TOTAL BFT OF ALL TRUSSES= **1780.5** BFT. TOTAL WEIGHT OF ALL TRSSES **2775.56** LBS

HARDWARE

QTY	TYPE	MODEL	LENGTH
21	Hardware	H2.5T	
1	Hardware	HGUS26-2	
1	Hardware	LJS26DS	
8	Hardware	LUS24	

TOTAL NUMBER OF ITEMS= **31**

DELIVERY SHIPLIST

TAMARACK ROOF TRUSSES INC.
ALPA LUMBER GROUP

Lumber Yard:	TAMARACK LUMBER	Job Track:	52749
Builder:	ROYAL PINE HOMES	PlanLog:	206082
Project:	SUMMER RIDGE ESTATES INC.	Layout ID:	425935
Location:	BRAMPTON	Ref #	
Model:	BLK 291	Page:	1 of 3
Lot #:		Date:	02-29-2024
Elevation:	B2 UNIT 3-BLK 291	Designer:	
		Sales Rep:	Rick DiCiano

Roof Trusses

PROFILE	QTY PLY	MARK TYPE	PITCH	SPAN	HEIGHT	LUMBER	OVERHANG LEFT RIGHT	HEEL HEIGHT LEFT RIGHT	LBS. BFT.	BUNDLE # STACK #	LOAD BY REMARKS
	1 2-ply	T15S Half Hip Girder	6 /12	**21-09-08**	4-04-06	2 x 4	1-04-08	1-02-08 4-04-06	197.4 128.00		
	1	T16S Half Hip	6 /12	**21-09-08**	5-02-06	2 x 4	1-04-08	1-02-08 5-02-06	100.24 63.83		
	1	T17S Half Hip	6 /12	**21-09-08**	6-00-06	2 x 4	1-04-08	1-02-08 6-00-06	105.69 68.83		
	1	T18 Half Hip	6 /12	**21-09-08**	6-10-06	2 x 4	1-04-08	1-02-08 6-10-06	96.9 60.83		
	1	T19 Half Hip	6 /12	**21-09-08**	7-08-06	2 x 4	1-04-08	1-02-08 7-08-06	101.57 64.50		
	1	T20 Half Hip	6 /12	**21-09-08**	8-06-06	2 x 4	1-04-08	1-02-08 8-06-06	100.1 62.67		
	1	T21 Half Hip	6 /12	**21-09-08**	9-04-06	2 x 4	1-04-08	1-02-08 9-04-06	105.93 65.67		
	3	T23 Half Hip	6 /12	**21-09-08**	10-01-12	2 x 4	1-04-08	1-02-08 10-01-12	332.75 204.50		
	1	T24 Half Hip	6 /12	**21-09-08**	9-01-12	2 x 4	1-04-08	1-02-08 9-01-12	100.29 62.00		
	1	T25 Half Hip	6 /12	**21-09-08**	8-01-12	2 x 4	1-04-08	1-02-08 8-01-12	98.11 61.00		
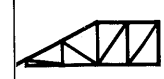	1	T26 Half Hip	6 /12	**21-09-08**	7-01-12	2 x 4	1-04-08	1-02-08 7-01-12	98.45 61.17		
	1	T27 Half Hip	6 /12	**21-09-08**	6-01-12	2 x 4	1-04-08	1-02-08 6-01-12	93.09 57.50		
	1	T28 Half Hip	6 /12	**21-09-08**	5-01-12	2 x 4	1-04-08	1-02-08 5-01-12	88.26 55.17		
	1 2-ply	T29 Half Hip Girder	6 /12	**21-09-08**	4-01-12	2 x 4 2 x 6	1-04-08	1-02-08 4-01-12	212.1 131.67		

DELIVERY SHIPLIST

TAMARACK ROOF TRUSSES INC.
ALPA LUMBER GROUP

Lumber Yard:	TAMARACK LUMBER	Job Track:	52749
Builder:	ROYAL PINE HOMES	PlanLog:	206082
Project:	SUMMER RIDGE ESTATES INC.	Layout ID:	425935
Location:	BRAMPTON	Ref #	
Model:	BLK 291	Page:	2 of 3
Lot #:		Date:	02-29-2024
Elevation:	B2 UNIT 3-BLK 291	Designer:	
		Sales Rep:	Rick DiCiano

Roof Trusses

PROFILE	QTY PLY	MARK TYPE	PITCH	SPAN	HEIGHT	LUMBER	OVERHANG LEFT RIGHT	HEEL HEIGHT LEFT RIGHT	LBS. BFT.	BUNDLE # STACK #	LOAD BY REMARKS
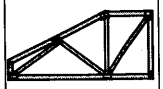	1	T36 Half Hip Girder	6 /12	**8-08-08**	4-01-12	2 x 4		1-02-08 4-01-12	37.79 24.50		
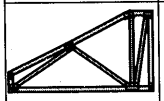	1	T37 Half Hip	6 /12	**8-08-08**	4-10-12	2 x 4		1-02-08 4-10-12	40.93 27.33		
	1	T38 Hip	6 /12	**8-10-00**	5-03-12	2 x 4	1-04-08	3-05-08 3-05-08	49.07 31.17		
	1	T38Z Hip Girder	6 /12	**8-10-00**	5-03-12	2 x 4	1-04-08	3-05-08 3-05-08	49.07 31.17		
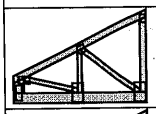	1 2-ply	T39 Monopitch Girder	6 /12	**5-10-08**	4-01-12	2 x 4 2 x 6		1-02-08 4-01-12	58.76 37.67		
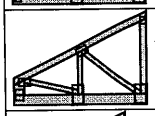	1 2-ply	T39Z Monopitch Girder	6 /12	**5-10-08**	4-01-12	2 x 4 2 x 6		1-02-08 4-01-12	58.76 37.67		
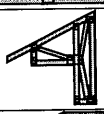	2	T40 Monopitch	6 /12	**3-08-08**	5-03-12	2 x 4	1-04-08	1-02-08 5-03-12	56.75 39.33		
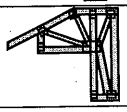	2	T41 Half Hip Girder	6 /12	**3-08-08**	4-03-12	2 x 4	1-04-08	1-02-08 4-03-12	54.15 37.67		
	1	T55 Roof Special	4 /12	**20-11-00**	6-04-03	2 x 4	1-03-08 1-09-08	4-10 1-09-15	78.88 50.33		
	1	T55G GABLE	4 /12	**20-11-00**	6-04-03	2 x 4	1-03-08 1-09-08	4-10 1-09-15	81.17 52.17		
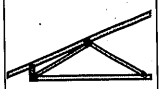	5	J2 Jack-Partial	5 /12	**7-10-08**	4-04-06	2 x 4	1-04-08	1-01-00 4-04-06	140.85 91.67		
	6	J2S Jack-Partial	5 /12	**7-10-08**	4-04-06	2 x 4	1-04-08	1-01-00 3-04-06	157.83 110.00		
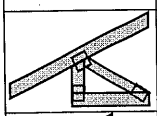	2	J6 Jack-Open	6 /12	**1-08-08**	2-00-12	2 x 4	1-04-08	1-02-08 2-00-12	16.35 11.33		
	2	J7 Jack-Open	6 /12	**1-08-08**	4-03-12	2 x 4	1-04-08	3-05-08 4-03-12	24.23 16.00		

DELIVERY SHIPLIST

TAMARACK ROOF TRUSSES INC.
ALPA LUMBER GROUP

Lumber Yard:	TAMARACK LUMBER	Job Track:	52749
Builder:	ROYAL PINE HOMES	PlanLog:	206082
Project:	SUMMER RIDGE ESTATES INC.	Layout ID:	425935
Location:	BRAMPTON	Ref #	
Model:	BLK 291	Page:	3 of 3
Lot #:		Date:	02-29-2024
Elevation:	B2 UNIT 3-BLK 291	Designer:	
		Sales Rep:	Rick DiCiano

Roof Trusses

PROFILE	QTY / PLY	MARK / TYPE	PITCH	SPAN	HEIGHT	LUMBER	OVERHANG LEFT / RIGHT	HEEL HEIGHT LEFT / RIGHT	LBS. / BFT.	BUNDLE # / STACK #	LOAD BY / REMARKS
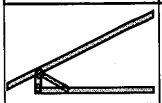	3	J11 Jack-Open	6 /12	**5-10-08**	4-01-12	2 x 4	1-04-08	1-02-08 4-01-12	54.72 35.00		
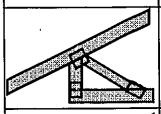	1	C1 Jack-Open	6 /12	**1-09-07**	2-01-04	2 x 4	1-04-08 1-01	1-02-08 2-01-04	8.47 5.67		
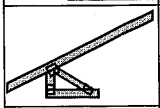	1	C2 Jack-Open	6 /12	**1-10-08**	3-01-04	2 x 4	1-04-08 1-10-15	1-02-08 2-01-12	11.02 7.00		
	1	C3 Jack-Open	6 /12	**1-09-07**	2-01-04	2 x 4	1-04-08 4-01-01	1-02-08 2-01-04	13.03 8.33		
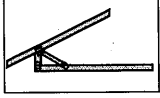	1	C4 Jack-Open	6 /12	**3-09-07**	3-01-04	2 x 4	1-04-08 2-01-01	1-02-08 3-01-04	15.58 9.67		

TOTAL # TRUSS= **54** TOTAL BFT OF ALL TRUSSES= **1811.02** BFT. TOTAL WEIGHT OF ALL TRSSES **2838.31** LBS

HARDWARE

QTY	TYPE	MODEL	LENGTH
20	Hardware	H2.5T	
2	Hardware	HGUS26-2	
10	Hardware	LUS24	

TOTAL NUMBER OF ITEMS= **32**

DELIVERY SHIPLIST

TAMARACK ROOF TRUSSES INC.
ALPA LUMBER GROUP

Lumber Yard:	TAMARACK LUMBER	Job Track:	52749
Builder:	ROYAL PINE HOMES	PlanLog:	206082
Project:	SUMMER RIDGE ESTATES INC.	Layout ID:	425936
Location:	BRAMPTON	Ref #	
Model:	BLK 291	Page:	1 of 3
Lot #:		Date:	02-29-2024
Elevation:	B1 UNIT 4-BLK 291	Designer:	
		Sales Rep:	Rick DiCiano

Roof Trusses

PROFILE	QTY PLY	MARK TYPE	PITCH	SPAN	HEIGHT	LUMBER	OVERHANG LEFT RIGHT	HEEL HEIGHT LEFT RIGHT	LBS. BFT.	BUNDLE # STACK #	LOAD BY REMARKS
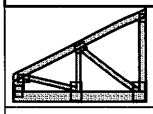	1 2-ply	T39Z2 Monopitch Girder	6 /12	**5-10-08**	4-01-12	2 x 4 2 x 6		1-02-08 4-01-12	58.76 37.67		
	1 2-ply	T45S Half Hip Girder	6 /12	**15-10-08**	4-04-06	2 x 4	1-04-08	1-02-08 4-04-06	147.56 96.33		
	1	T46S Half Hip	6 /12	**15-10-08**	5-02-06	2 x 4	1-04-08	1-02-08 5-02-06	75.45 48.50		
	1	T47S Half Hip	6 /12	**15-10-08**	6-00-06	2 x 4	1-04-08	1-02-08 6-00-06	79.8 52.50		
	1	T48S Half Hip	6 /12	**15-10-08**	6-10-06	2 x 4	1-04-08	1-02-08 6-10-06	86.16 56.33		
	1	T49 Half Hip	6 /12	**15-10-08**	7-08-06	2 x 4	1-04-08	1-02-08 7-08-06	75.06 47.50		
	1	T50 Half Hip	6 /12	**15-10-08**	8-06-06	2 x 4	1-04-08	1-02-08 8-06-06	79.07 49.67		
	6	T51 Monopitch	6 /12	**15-10-08**	9-01-12	2 x 4	1-04-08	1-02-08 9-01-12	423.25 262.00		
	1	T55 Roof Special	4 /12	**20-11-00**	6-04-03	2 x 4	1-03-08 1-09-08	4-10 1-09-15	78.88 50.33		
	1	T55G GABLE	4 /12	**20-11-00**	6-04-03	2 x 4	1-03-08 1-09-08	4-10 1-09-15	81.17 52.17		
	1	T61 Half Hip Girder	6 /12	**15-10-08**	4-01-12	2 x 4 2 x 6	1-04-08	1-02-08 4-01-12	80.37 49.67		
	1	T62 Half Hip	6 /12	**15-10-08**	5-01-12	2 x 4	1-04-08	1-02-08 5-01-12	69.69 43.33		
	1	T63 Half Hip	6 /12	**15-10-08**	6-01-12	2 x 4	1-04-08	1-02-08 6-01-12	68.58 42.50		
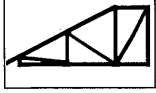	1	T64 Half Hip	6 /12	**15-10-08**	7-01-12	2 x 4	1-04-08	1-02-08 7-01-12	72.61 44.67		

DELIVERY SHIPLIST

TAMARACK ROOF TRUSSES INC.
ALPA LUMBER GROUP

Lumber Yard:	TAMARACK LUMBER	Job Track:	52749
Builder:	ROYAL PINE HOMES	PlanLog:	206082
Project:	SUMMER RIDGE ESTATES INC.	Layout ID:	425936
Location:	BRAMPTON	Ref #	
Model:	BLK 291	Page:	2 of 3
Lot #:		Date:	02-29-2024
Elevation:	B1 UNIT 4-BLK 291	Designer:	
		Sales Rep:	Rick DiCiano

Roof Trusses

PROFILE	QTY PLY	MARK TYPE	PITCH	SPAN	HEIGHT	LUMBER	OVERHANG LEFT RIGHT	HEEL HEIGHT LEFT RIGHT	LBS. BFT.	BUNDLE # STACK #	LOAD BY REMARKS
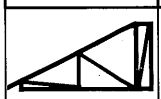	1	T65 Half Hip	6 /12	**15-10-08**	8-01-12	2 x 4	1-04-08	1-02-08 8-01-12	77.17 48.00		
	1	T66 Half Hip Girder	6 /12	**7-07-08**	2-11-04	2 x 4	1-04-08	1-02-08 2-11-04	31.41 21.33		
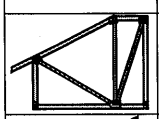	1	T67 Half Hip	6 /12	**7-07-08**	6-02-04	2 x 4	1-04-08	3-05-08 6-02-04	44.03 27.67		
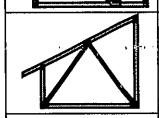	2	T68 Monopitch	6 /12	**7-07-08**	7-03-04	2 x 4	1-04-08	3-05-08 7-03-04	81.79 50.67		
	1 3-ply	T69 Hip Girder	5 /12	**49-07-00**	7-03-04	2 x 6	1-04-08 1-04-08	1-01-00 1-02-08	974.93 609.00		
	1	T70 Hip	5 /12	**49-07-00**	8-03-04	2 x 6	1-04-08 1-04-08	1-01-00 1-02-08	328.7 201.00		
	1	T71 Hip	5 /12	**49-07-00**	9-03-04	2 x 6	1-04-08 1-04-08	1-01-00 1-02-08	348.42 213.00		
	1	T72 Hip	5 /12	**49-07-00**	10-01-00	2 x 6	1-04-08 1-04-08	1-01-00 1-02-08	341.83 206.67		
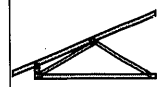	2	J2 Jack-Partial	5 /12	**7-10-08**	4-04-06	2 x 4	1-04-08	1-01-00 4-04-06	56.34 36.67		
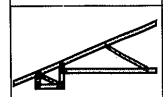	6	J2S Jack-Partial	5 /12	**7-10-08**	4-04-06	2 x 4	1-04-08	1-01-00 3-04-06	157.83 110.00		
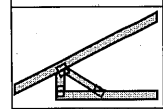	3	J9 Jack-Open	6 /12	**3-05-08**	2-11-04	2 x 4	1-04-08	1-02-08 2-11-04	37.21 25.00		
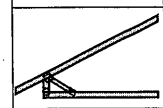	2	J11 Jack-Open	6 /12	**5-10-08**	4-01-12	2 x 4	1-04-08	1-02-08 4-01-12	36.48 23.33		
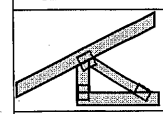	2	C1 Jack-Open	6 /12	**1-09-07**	2-01-04	2 x 4	1-04-08 1-01	1-02-08 2-01-04	16.93 11.33		
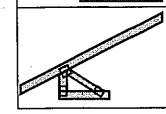	1	C2 Jack-Open	6 /12	**1-10-08**	3-01-04	2 x 4	1-04-08 1-10-15	1-02-08 2-01-12	11.02 7.00		

DELIVERY SHIPLIST

TAMARACK ROOF TRUSSES INC.
ALPA LUMBER GROUP

Lumber Yard:	TAMARACK LUMBER	Job Track:	52749
Builder:	ROYAL PINE HOMES	PlanLog:	206082
Project:	SUMMER RIDGE ESTATES INC.	Layout ID:	425936
Location:	BRAMPTON	Ref #	
Model:	BLK 291	Page:	3 of 3
Lot #:		Date:	02-29-2024
Elevation:	B1 UNIT 4-BLK 291	Designer:	
		Sales Rep:	Rick DiCiano

Roof Trusses

PROFILE	QTY PLY	MARK TYPE	PITCH	SPAN	HEIGHT	LUMBER	OVERHANG LEFT RIGHT	HEEL HEIGHT LEFT RIGHT	LBS. BFT.	BUNDLE # STACK #	LOAD BY REMARKS
	1	C3 Jack-Open	6 /12	1-09-07	2-01-04	2 x 4	1-04-08 4-01-01	1-02-08 2-01-04	13.03 8.33		
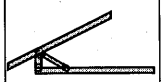	1	C4 Jack-Open	6 /12	3-09-07	3-01-04	2 x 4	1-04-08 2-01-01	1-02-08 3-01-04	15.58 9.67		
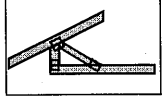	1	C5 Jack-Open	6 /12	1-09-07	2-01-04	2 x 4	1-04-08 1-08-01	1-02-08 2-01-04	10.27 7.00		

TOTAL # TRUSS= **51** TOTAL BFT OF ALL TRUSSES= **2548.84** BFT. TOTAL WEIGHT OF ALL TRSSES **4059.38** LBS

HARDWARE

QTY	TYPE	MODEL	LENGTH
16	Hardware	H2.5T	
2	Hardware	HGUS26-2	
1	Hardware	LJS26DS	
22	Hardware	LUS24	

TOTAL NUMBER OF ITEMS= **41**

DELIVERY SHIPLIST

TAMARACK ROOF TRUSSES INC.
ALPA LUMBER GROUP

Lumber Yard:	TAMARACK LUMBER	Job Track:	52749
Builder:	ROYAL PINE HOMES	PlanLog:	206082
Project:	SUMMER RIDGE ESTATES INC.	Layout ID:	425937
Location:	BRAMPTON	Ref #	
Model:	BLK 291	Page:	1 of 3
Lot #:		Date:	02-29-2024
Elevation:	B2 UNIT 5-BLK 291	Designer:	
		Sales Rep:	Rick DiCiano

Roof Trusses

PROFILE	QTY PLY	MARK TYPE	PITCH	SPAN	HEIGHT	LUMBER	OVERHANG LEFT RIGHT	HEEL HEIGHT LEFT RIGHT	LBS. BFT.	BUNDLE # STACK #	LOAD BY REMARKS
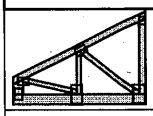	1 2-ply	T39Z2 Monopitch Girder	6 /12	**5-10-08**	4-01-12	2 x 4 2 x 6		1-02-08 4-01-12	58.76 37.67		
	1 2-ply	T45S Half Hip Girder	6 /12	**15-10-08**	4-04-06	2 x 4	1-04-08	1-02-08 4-04-06	147.56 96.33		
	1	T46S Half Hip	6 /12	**15-10-08**	5-02-06	2 x 4	1-04-08	1-02-08 5-02-06	75.45 48.50		
	1	T47S Half Hip	6 /12	**15-10-08**	6-00-06	2 x 4	1-04-08	1-02-08 6-00-06	79.8 52.50		
	1	T48S Half Hip	6 /12	**15-10-08**	6-10-06	2 x 4	1-04-08	1-02-08 6-10-06	86.16 56.33		
	1	T49 Half Hip	6 /12	**15-10-08**	7-08-06	2 x 4	1-04-08	1-02-08 7-08-06	75.06 47.50		
	1	T50 Half Hip	6 /12	**15-10-08**	8-06-06	2 x 4	1-04-08	1-02-08 8-06-06	79.07 49.67		
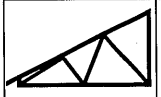	6	T51 Monopitch	6 /12	**15-10-08**	9-01-12	2 x 4	1-04-08	1-02-08 9-01-12	423.25 262.00		
	1	T55 Roof Special	4 /12	**20-11-00**	6-04-03	2 x 4	1-03-08 1-09-08	4-10 1-09-15	78.88 50.33		
	1	T55G GABLE	4 /12	**20-11-00**	6-04-03	2 x 4	1-03-08 1-09-08	4-10 1-09-15	81.17 52.17		
	1	T61 Half Hip Girder	6 /12	**15-10-08**	4-01-12	2 x 4 2 x 6	1-04-08	1-02-08 4-01-12	80.37 49.67		
	1	T62 Half Hip	6 /12	**15-10-08**	5-01-12	2 x 4	1-04-08	1-02-08 5-01-12	69.69 43.33		
	1	T63 Half Hip	6 /12	**15-10-08**	6-01-12	2 x 4	1-04-08	1-02-08 6-01-12	68.58 42.50		
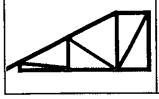	1	T64 Half Hip	6 /12	**15-10-08**	7-01-12	2 x 4	1-04-08	1-02-08 7-01-12	72.61 44.67		

DELIVERY SHIPLIST

TAMARACK ROOF TRUSSES INC.
ALPA LUMBER GROUP

Lumber Yard:	TAMARACK LUMBER	Job Track:	52749
Builder:	ROYAL PINE HOMES	PlanLog:	206082
Project:	SUMMER RIDGE ESTATES INC.	Layout ID:	425937
Location:	BRAMPTON	Ref #	
Model:	BLK 291	Page:	2 of 3
Lot #:		Date:	02-29-2024
Elevation:	B2 UNIT 5-BLK 291	Designer:	
		Sales Rep:	Rick DiCiano

Roof Trusses

PROFILE	QTY PLY	MARK TYPE	PITCH	SPAN	HEIGHT	LUMBER	OVERHANG LEFT RIGHT	HEEL HEIGHT LEFT RIGHT	LBS. BFT.	BUNDLE # STACK #	LOAD BY REMARKS
	1	T65 Half Hip	6 /12	**15-10-08**	8-01-12	2 x 4	1-04-08	1-02-08 8-01-12	77.17 48.00		
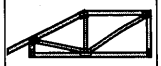	1	T66 Half Hip Girder	6 /12	**7-07-08**	2-11-04	2 x 4	1-04-08	1-02-08 2-11-04	31.41 21.33		
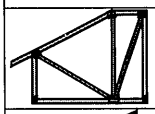	1	T67 Half Hip	6 /12	**7-07-08**	6-02-04	2 x 4	1-04-08	3-05-08 6-02-04	44.03 27.67		
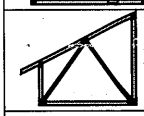	2	T68 Monopitch	6 /12	**7-07-08**	7-03-04	2 x 4	1-04-08	3-05-08 7-03-04	81.79 50.67		
	1 3-ply	T69 Hip Girder	5 /12	**49-07-00**	7-03-04	2 x 6	1-04-08 1-04-08	1-01-00 1-02-08	974.93 609.00		
	1	T70 Hip	5 /12	**49-07-00**	8-03-04	2 x 6	1-04-08 1-04-08	1-01-00 1-02-08	328.7 201.00		
	1	T71 Hip	5 /12	**49-07-00**	9-03-04	2 x 6	1-04-08 1-04-08	1-01-00 1-02-08	348.42 213.00		
	1	T72 Hip	5 /12	**49-07-00**	10-01-00	2 x 6	1-04-08 1-04-08	1-01-00 1-02-08	341.83 206.67		
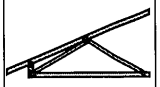	2	J2 Jack-Partial	5 /12	**7-10-08**	4-04-06	2 x 4	1-04-08	1-01-00 4-04-06	56.34 36.67		
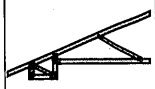	6	J2S Jack-Partial	5 /12	**7-10-08**	4-04-06	2 x 4	1-04-08	1-01-00 3-04-06	157.83 110.00		
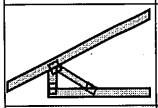	3	J9 Jack-Open	6 /12	**3-05-08**	2-11-04	2 x 4	1-04-08	1-02-08 2-11-04	37.21 25.00		
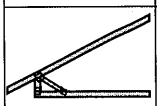	2	J11 Jack-Open	6 /12	**5-10-08**	4-01-12	2 x 4	1-04-08	1-02-08 4-01-12	36.48 23.33		
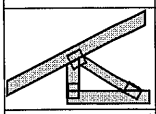	2	C1 Jack-Open	6 /12	**1-09-07**	2-01-04	2 x 4	1-04-08 1-01	1-02-08 2-01-04	16.93 11.33		
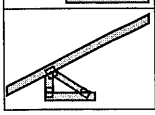	1	C2 Jack-Open	6 /12	**1-10-08**	3-01-04	2 x 4	1-04-08 1-10-15	1-02-08 2-01-12	11.02 7.00		

DELIVERY SHIPLIST

TAMARACK ROOF TRUSSES INC.
ALPA LUMBER GROUP

Lumber Yard:	TAMARACK LUMBER	Job Track:	52749
Builder:	ROYAL PINE HOMES	PlanLog:	206082
Project:	SUMMER RIDGE ESTATES INC.	Layout ID:	425937
Location:	BRAMPTON	Ref #	
Model:	BLK 291	Page:	3 of 3
Lot #:		Date:	02-29-2024
Elevation:	B2 UNIT 5-BLK 291	Designer:	
		Sales Rep:	Rick DiCiano

Roof Trusses

PROFILE	QTY / PLY	MARK / TYPE	PITCH	SPAN	HEIGHT	LUMBER	OVERHANG LEFT / RIGHT	HEEL HEIGHT LEFT / RIGHT	LBS. / BFT.	BUNDLE # / STACK #	LOAD BY / REMARKS
	1	C3 Jack-Open	6 /12	1-09-07	2-01-04	2 x 4	1-04-08 4-01-01	1-02-08 2-01-04	13.03 8.33		
	1	C4 Jack-Open	6 /12	3-09-07	3-01-04	2 x 4	1-04-08 2-01-01	1-02-08 3-01-04	15.58 9.67		
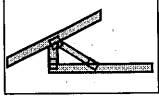	1	C5 Jack-Open	6 /12	1-09-07	2-01-04	2 x 4	1-04-08 1-08-01	1-02-08 2-01-04	10.27 7.00		

TOTAL # TRUSS= **51** TOTAL BFT OF ALL TRUSSES= **2548.84** BFT. TOTAL WEIGHT OF ALL TRSSES **4059.38** LBS

HARDWARE

QTY	TYPE	MODEL	LENGTH
16	Hardware	H2.5T	
2	Hardware	HGUS26-2	
1	Hardware	LJS26DS	
22	Hardware	LUS24	

TOTAL NUMBER OF ITEMS= **41**

DELIVERY SHIPLIST

TAMARACK ROOF TRUSSES INC.
ALPA LUMBER GROUP

Lumber Yard:	TAMARACK LUMBER	Job Track:	52749
Builder:	ROYAL PINE HOMES	PlanLog:	206082
Project:	SUMMER RIDGE ESTATES INC.	Layout ID:	425938
Location:	BRAMPTON	Ref #	
Model:	BLK 291	Page:	1 of 3
Lot #:		Date:	02-29-2024
Elevation:	B1 UNIT 6-BLK 291	Designer:	
		Sales Rep:	Rick DiCiano

Roof Trusses

PROFILE	QTY PLY	MARK TYPE	PITCH	SPAN	HEIGHT	LUMBER	OVERHANG LEFT RIGHT	HEEL HEIGHT LEFT RIGHT	LBS. BFT.	BUNDLE # STACK #	LOAD BY REMARKS
	1 2-ply	T15S Half Hip Girder	6 /12	**21-09-08**	4-04-06	2 x 4	1-04-08	1-02-08 4-04-06	197.4 128.00		
	1	T16S Half Hip	6 /12	**21-09-08**	5-02-06	2 x 4	1-04-08	1-02-08 5-02-06	100.24 63.83		
	1	T17S Half Hip	6 /12	**21-09-08**	6-00-06	2 x 4	1-04-08	1-02-08 6-00-06	105.69 68.83		
	1	T18S Half Hip	6 /12	**21-09-08**	6-10-06	2 x 4	1-04-08	1-02-08 6-10-06	113.2 73.67		
	1	T19S Half Hip	6 /12	**21-09-08**	7-08-06	2 x 4	1-04-08	1-02-08 7-08-06	115.8 75.00		
	2	T20 Half Hip	6 /12	**21-09-08**	8-06-06	2 x 4	1-04-08	1-02-08 8-06-06	200.2 125.33		
	2	T21 Half Hip	6 /12	**21-09-08**	9-04-06	2 x 4	1-04-08	1-02-08 9-04-06	211.86 131.33		
	3	T22 Half Hip	6 /12	**21-09-08**	10-02-06	2 x 4	1-04-08	1-02-08 10-02-06	333.57 204.50		
	1	T26 Half Hip	6 /12	**21-09-08**	7-01-12	2 x 4	1-04-08	1-02-08 7-01-12	98.45 61.17		
	1	T27 Half Hip	6 /12	**21-09-08**	6-01-12	2 x 4	1-04-08	1-02-08 6-01-12	93.09 57.50		
	1	T28 Half Hip	6 /12	**21-09-08**	5-01-12	2 x 4	1-04-08	1-02-08 5-01-12	88.26 55.17		
	1 2-ply	T29Z Half Hip Girder	6 /12	**21-09-08**	4-01-12	2 x 4 2 x 6	1-04-08	1-02-08 4-01-12	212.1 131.67		
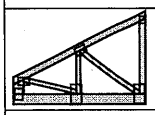	1 2-ply	T39Z4 Monopitch Girder	6 /12	**5-10-08**	4-01-12	2 x 4 2 x 6		1-02-08 4-01-12	58.76 37.67		
	1	T75 Hip	6 /12	**21-09-08**	8-01-12	2 x 4	1-04-08	1-02-08 8-00-04	98.11 61.00		

DELIVERY SHIPLIST

TAMARACK ROOF TRUSSES INC.
ALPA LUMBER GROUP

Lumber Yard:	TAMARACK LUMBER	Job Track:	52749
Builder:	ROYAL PINE HOMES	PlanLog:	206082
Project:	SUMMER RIDGE ESTATES INC.	Layout ID:	425938
Location:	BRAMPTON	Ref #	
Model:	BLK 291	Page:	2 of 3
Lot #:		Date:	02-29-2024
Elevation:	B1 UNIT 6-BLK 291	Designer:	
		Sales Rep:	Rick DiCiano

Roof Trusses

PROFILE	QTY PLY	MARK TYPE	PITCH	SPAN	HEIGHT	LUMBER	OVERHANG LEFT RIGHT	HEEL HEIGHT LEFT RIGHT	LBS. BFT.	BUNDLE # STACK #	LOAD BY REMARKS
	1	T76 Hip	6 /12	**21-09-08**	9-01-12	2 x 4	1-04-08	1-02-08 8-00-04	102.71 64.17		
	1	T77 Common	6 /12	**21-09-08**	10-00-12	2 x 4	1-04-08	1-02-08 8-00-04	109.08 67.50		
	1	T78 Hip Girder	6 /12	**13-00-00**	5-04-12	2 x 4	1-07-00 1-07-00	3-06-12 3-06-12	70.12 45.83		
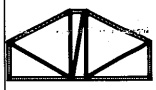	1	T79 Hip	6 /12	**13-00-00**	6-04-12	2 x 4		3-06-12 3-06-12	62.96 40.67		
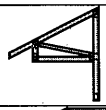	4	T80 Monopitch	6 /12	**3-10-08**	5-04-12	2 x 4	1-04-08	1-02-08 3-01-12	81.25 56.00		
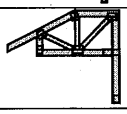	2	T81 Half Hip	6 /12	**3-10-08**	4-04-12	2 x 4	1-04-08	1-02-08 2-01-12	41.31 28.33		
	1	T91C Roof Special	4 /12	**25-11-00**	7-07-03	2 x 4	1-03-08 1-09-08	4-10 1-09-15	102.58 63.50		
	1	T91G GABLE	4 /12	**25-11-00**	7-07-03	2 x 4	1-03-08 1-09-08	4-10 1-09-15	105.98 66.50		
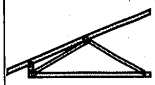	5	J2 Jack-Partial	5 /12	**7-10-08**	4-04-06	2 x 4	1-04-08	1-01-00 4-04-06	140.85 91.67		
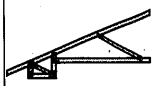	6	J2S Jack-Partial	5 /12	**7-10-08**	4-04-06	2 x 4	1-04-08	1-01-00 3-04-06	157.83 110.00		
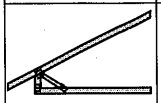	2	J11 Jack-Open	6 /12	**5-10-08**	4-01-12	2 x 4	1-04-08	1-02-08 4-01-12	36.48 23.33		
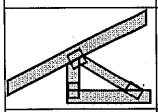	1	C1 Jack-Open	6 /12	**1-09-07**	2-01-04	2 x 4	1-04-08 1-01	1-02-08 2-01-04	8.47 5.67		
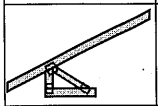	1	C2 Jack-Open	6 /12	**1-10-08**	3-01-04	2 x 4	1-04-08 1-10-15	1-02-08 2-01-12	11.02 7.00		
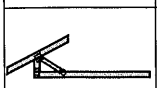	1	C3 Jack-Open	6 /12	**1-09-07**	2-01-04	2 x 4	1-04-08 4-01-01	1-02-08 2-01-04	13.03 8.33		

DELIVERY SHIPLIST

TAMARACK ROOF TRUSSES INC.
ALPA LUMBER GROUP

Lumber Yard:	TAMARACK LUMBER	Job Track:	52749
Builder:	ROYAL PINE HOMES	PlanLog:	206082
Project:	SUMMER RIDGE ESTATES INC.	Layout ID:	425938
Location:	BRAMPTON	Ref #	
Model:	BLK 291	Page:	3 of 3
Lot #:		Date:	02-29-2024
Elevation:	B1 UNIT 6-BLK 291	Designer:	
		Sales Rep:	Rick DiCiano

Roof Trusses

PROFILE	QTY PLY	MARK TYPE	PITCH	SPAN	HEIGHT	LUMBER	OVERHANG LEFT RIGHT	HEEL HEIGHT LEFT RIGHT	LBS. BFT.	BUNDLE # STACK #	LOAD BY REMARKS
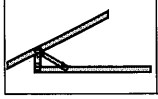	1	C4 Jack-Open	6 /12	3-09-07	3-01-04	2 x 4	1-04-08 2-01-01	1-02-08 3-01-04	15.58 9.67		

TOTAL # TRUSS= **50** TOTAL BFT OF ALL TRUSSES= **1962.84** BFT. TOTAL WEIGHT OF ALL TRSSES **3085.97** LBS

HARDWARE

QTY	TYPE	MODEL	LENGTH
23	Hardware	H2.5T	
1	Hardware	HGUS26-2	
1	Hardware	LJS26DS	
7	Hardware	LUS24	

TOTAL NUMBER OF ITEMS= **32**

DELIVERY SHIPLIST

TAMARACK ROOF TRUSSES INC.
ALPA LUMBER GROUP

Lumber Yard:	TAMARACK LUMBER	Job Track:	52749
Builder:	ROYAL PINE HOMES	PlanLog:	206082
Project:	SUMMER RIDGE ESTATES INC.	Layout ID:	425939
Location:	BRAMPTON	Ref #	
Model:	BLK 291	Page:	1 of 2
Lot #:		Date:	02-29-2024
Elevation:	B2 UNIT 7-BLK 291	Designer:	
		Sales Rep:	Rick DiCiano

Roof Trusses

PROFILE	QTY PLY	MARK TYPE	PITCH	SPAN	HEIGHT	LUMBER	OVERHANG LEFT RIGHT	HEEL HEIGHT LEFT RIGHT	LBS. BFT.	BUNDLE # STACK #	LOAD BY REMARKS
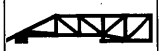	1 2-ply	T15S Half Hip Girder	6 /12	**21-09-08**	4-04-06	2 x 4	1-04-08	1-02-08 4-04-06	197.4 128.00		
	1 2-ply	T15Z Half Hip Girder	6 /12	**21-09-08**	4-04-06	2 x 4 2 x 6	1-04-08	1-02-08 4-04-06	220.42 134.00		
	1	T16 Half Hip	6 /12	**21-09-08**	5-02-06	2 x 4	1-04-08	1-02-08 5-02-06	88.52 55.17		
	1	T16S Half Hip	6 /12	**21-09-08**	5-02-06	2 x 4	1-04-08	1-02-08 5-02-06	100.24 63.83		
	1	T17 Half Hip	6 /12	**21-09-08**	6-00-06	2 x 4	1-04-08	1-02-08 6-00-06	92.51 58.17		
	1	T17S Half Hip	6 /12	**21-09-08**	6-00-06	2 x 4	1-04-08	1-02-08 6-00-06	105.69 68.83		
	1	T18 Half Hip	6 /12	**21-09-08**	6-10-06	2 x 4	1-04-08	1-02-08 6-10-06	96.9 60.83		
	1	T18S Half Hip	6 /12	**21-09-08**	6-10-06	2 x 4	1-04-08	1-02-08 6-10-06	113.2 73.67		
	1	T19 Half Hip	6 /12	**21-09-08**	7-08-06	2 x 4	1-04-08	1-02-08 7-08-06	101.57 64.50		
	1	T19S Half Hip	6 /12	**21-09-08**	7-08-06	2 x 4	1-04-08	1-02-08 7-08-06	115.8 75.00		
	2	T20 Half Hip	6 /12	**21-09-08**	8-06-06	2 x 4	1-04-08	1-02-08 8-06-06	200.2 125.33		
	2	T21 Half Hip	6 /12	**21-09-08**	9-04-06	2 x 4	1-04-08	1-02-08 9-04-06	211.86 131.33		
	3	T22 Half Hip	6 /12	**21-09-08**	10-02-06	2 x 4	1-04-08	1-02-08 10-02-06	333.57 204.50		
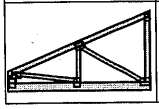	1 2-ply	T33Z Monopitch Girder	5 /12	**7-10-08**	4-04-06	2 x 4 2 x 6		1-01-00 4-04-06	73.36 46.33		

DELIVERY SHIPLIST

TAMARACK ROOF TRUSSES INC.
ALPA LUMBER GROUP

Lumber Yard:	TAMARACK LUMBER	Job Track:	52749
Builder:	ROYAL PINE HOMES	PlanLog:	206082
Project:	SUMMER RIDGE ESTATES INC.	Layout ID:	425939
Location:	BRAMPTON	Ref #	
Model:	BLK 291	Page:	2 of 2
Lot #:		Date:	02-29-2024
Elevation:	B2 UNIT 7-BLK 291	Designer:	
		Sales Rep:	Rick DiCiano

Roof Trusses

PROFILE	QTY / PLY	MARK / TYPE	PITCH	SPAN	HEIGHT	LUMBER	OVERHANG LEFT / RIGHT	HEEL HEIGHT LEFT / RIGHT	LBS. / BFT.	BUNDLE # / STACK #	LOAD BY / REMARKS
	1	T82 Half Hip Girder	6 /12	**13-02-08**	3-11-12	2 x 4		1-02-08 3-11-12	54.6 35.67		
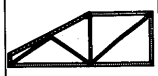	1	T83 Half Hip	6 /12	**13-02-08**	4-11-12	2 x 4		1-02-08 4-11-12	53.48 34.33		
	1	T92C Roof Special	4 /12	**24-11-00**	7-04-03	2 x 4	1-03-08 1-09-08	4-10 1-09-15	100.56 63.33		
	1	T92G GABLE	4 /12	**24-11-00**	7-04-03	2 x 4	1-03-08 1-09-08	4-10 1-09-15	101.19 65.17		
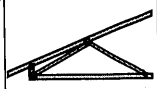	9	J2 Jack-Partial	5 /12	**7-10-08**	4-04-06	2 x 4	1-04-08	1-01-00 4-04-06	253.53 165.00		
	6	J2S Jack-Partial	5 /12	**7-10-08**	4-04-06	2 x 4	1-04-08	1-01-00 3-04-06	157.83 110.00		
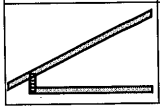	7	J8 Jack-Open	6 /12	**5-10-08**	3-11-12	2 x 4	1-00-08	1-00-08 3-11-12	114.33 70.00		

TOTAL # TRUSS= **47** TOTAL BFT OF ALL TRUSSES= **1832.99** BFT. TOTAL WEIGHT OF ALL TRSSES **2886.75** LBS

HARDWARE

QTY	TYPE	MODEL	LENGTH
21	Hardware	H2.5T	
1	Hardware	HGUS26-2	
1	Hardware	LJS26DS	
1	Hardware	LUS24	

TOTAL NUMBER OF ITEMS= **24**

DELIVERY SHIPLIST

TAMARACK ROOF TRUSSES INC.
ALPA LUMBER GROUP

Lumber Yard:	TAMARACK LUMBER	Job Track:	52749
Builder:	ROYAL PINE HOMES	PlanLog:	206082
Project:	SUMMER RIDGE ESTATES INC.	Layout ID:	425940
Location:	BRAMPTON	Ref #	
Model:	BLK 291	Page:	1 of 2
Lot #:		Date:	02-29-2024
Elevation:	B UNIT 8-BLK 291	Designer:	
		Sales Rep:	Rick DiCiano

Roof Trusses

PROFILE	QTY PLY	MARK TYPE	PITCH	SPAN	HEIGHT	LUMBER	OVERHANG LEFT RIGHT	HEEL HEIGHT LEFT RIGHT	LBS. BFT.	BUNDLE # STACK #	LOAD BY REMARKS
	1 2-ply	T1S Hip Girder	6 /12	**21-10-00**	4-01-12	2 x 4	1-04-08 1-04-08	1-02-08 1-02-08	185.72 123.67		
	1	T2S Hip	6 /12	**21-10-00**	5-01-12	2 x 4	1-04-08 1-04-08	1-02-08 1-02-08	94.52 61.17		
	1	T3S Hip	6 /12	**21-10-00**	6-01-12	2 x 4	1-04-08 1-04-08	1-02-08 1-02-08	101.68 64.67		
	8	T4 Common	6 /12	**21-10-00**	6-08-00	2 x 4	1-04-08 1-04-08	1-02-08 1-02-08	719.52 448.00		
	3	T4S Roof Special	6 /12	**21-10-00**	6-08-00	2 x 4	1-04-08 1-04-08	1-02-08 1-02-08	293.92 185.50		
	3	T5 Hip	6 /12	**21-10-00**	6-09-04	2 x 4	1-04-08 1-04-08	1-02-08 3-05-08	297.91 191.50		
	1	T6 Hip Girder	6 /12	**21-10-00**	5-09-04	2 x 4 2 x 6	1-04-08 1-04-08	1-02-08 3-05-08	112.57 70.67		
	1	T7 Hip Girder	6 /12	**13-06-00**	3-07-02	2 x 4	1-04-08 1-04-08	1-02-08 1-02-08	53.67 35.50		
	1	T8 Common	6 /12	**13-01-08**	4-07-00	2 x 4	1-04-08	1-02-08 1-04-12	51.51 32.67		
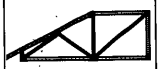	1	T9 Half Hip	6 /12	**13-01-08**	4-10-12	2 x 4	1-04-08	1-02-08 4-10-12	54.71 35.00		
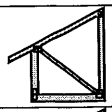	1 2-ply	T10 Monopitch Girder	6 /12	**4-07-08**	5-09-04	2 x 4 2 x 6	1-04-08	3-05-08 5-09-04	61.87 37.00		
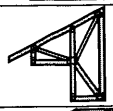	2	T11 Monopitch	6 /12	**4-07-08**	5-09-04	2 x 4	1-04-08	1-02-08 5-09-04	64.63 44.33		
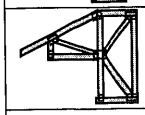	1	T12 Half Hip Girder	6 /12	**4-07-08**	4-09-04	2 x 4	1-04-08	1-02-08 4-09-04	30.43 21.00		
	1	T55 Roof Special	4 /12	**20-11-00**	6-04-03	2 x 4	1-03-08 1-09-08	4-10 1-09-15	78.88 50.33		

DELIVERY SHIPLIST

TAMARACK ROOF TRUSSES INC.
ALPA LUMBER GROUP

Lumber Yard:	TAMARACK LUMBER	Job Track:	52749
Builder:	ROYAL PINE HOMES	PlanLog:	206082
Project:	SUMMER RIDGE ESTATES INC.	Layout ID:	425940
Location:	BRAMPTON	Ref #	
Model:	BLK 291	Page:	2 of 2
Lot #:		Date:	02-29-2024
Elevation:	B UNIT 8-BLK 291	Designer:	
		Sales Rep:	Rick DiCiano

Roof Trusses

PROFILE	QTY / PLY	MARK / TYPE	PITCH	SPAN	HEIGHT	LUMBER	OVERHANG LEFT / RIGHT	HEEL HEIGHT LEFT / RIGHT	LBS. / BFT.	BUNDLE # / STACK #	LOAD BY / REMARKS
	1	T55G GABLE	4 /12	**20-11-00**	6-04-03	2 x 4	1-03-08 1-09-08	4-10 1-09-15	81.17 52.17		
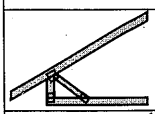	7	J1 Jack-Open	7 /12	**3-10-08**	3-07-02	2 x 4	1-04-08	1-04-00 3-07-02	97.11 63.00		
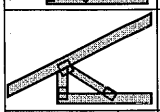	1	J3 Jack-Open	6 /12	**2-07-08**	2-06-04	2 x 4	1-04-08	1-02-08 2-06-04	10.39 7.00		
	1	J4 Jack-Open	6 /12	**2-07-08**	4-09-04	2 x 4	1-04-08	3-05-08 4-09-04	14.33 9.33		
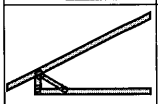	2	J11 Jack-Open	6 /12	**5-10-08**	4-01-12	2 x 4	1-04-08	1-02-08 4-01-12	36.48 23.33		
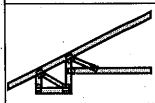	6	J11S Jack-Open	6 /12	**5-10-08**	4-01-12	2 x 4	1-04-08	1-02-08 3-01-12	126.71 88.00		
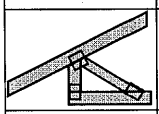	1	C1 Jack-Open	6 /12	**1-09-07**	2-01-04	2 x 4	1-04-08 1-01	1-02-08 2-01-04	8.47 5.67		
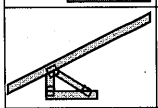	1	C2 Jack-Open	6 /12	**1-10-08**	3-01-04	2 x 4	1-04-08 1-10-15	1-02-08 2-01-12	11.02 7.00		
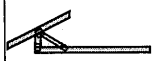	1	C3 Jack-Open	6 /12	**1-09-07**	2-01-04	2 x 4	1-04-08 4-01-01	1-02-08 2-01-04	13.03 8.33		
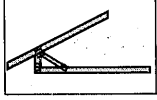	1	C4 Jack-Open	6 /12	**3-09-07**	3-01-04	2 x 4	1-04-08 2-01-01	1-02-08 3-01-04	15.58 9.67		

TOTAL # TRUSS= **50** TOTAL BFT OF ALL TRUSSES= **1674.51** BFT. TOTAL WEIGHT OF ALL TRSSES **2615.81** LBS

HARDWARE

QTY	TYPE	MODEL	LENGTH
1	Hardware	HGUS26-2	
5	Hardware	LUS24	

TOTAL NUMBER OF ITEMS= **6**

JOB NAME	TRUSS NAME	QUANTITY	PLY	JOB DESC.	DRWG NO.
425913	T1S	2	2	ROYAL PINE HOMES TRUSS DESC.	

Tamarack Roof Truss, Burlington

Version 8.630 S Aug 30 2023 MiTek Industries, Inc. Wed Feb 28 15:02:35 2024 Page 1
ID:sd0FDfbi38oVqvTaiRkhtSzPAoD-nXkeudwtJPfYvcAOWi81FP_Pz_PU?FC_OJ5LdzzgawY

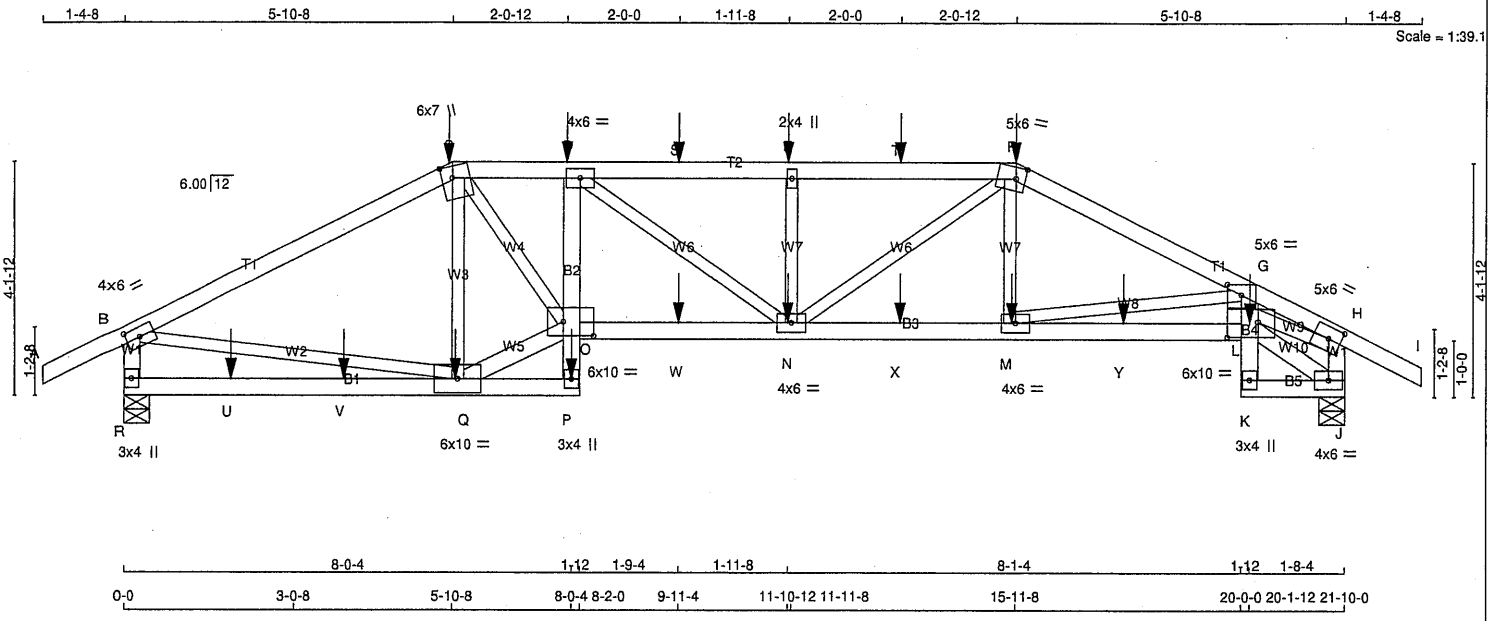

TOTAL WEIGHT = 4 X 93 = 371 lb

LUMBER

N. L. G. A. RULES

CHORDS	SIZE		LUMBER	DESCR.
A - C	2x4	DRY	No.2	SPF
C - F	2x4	DRY	No.2	SPF
F - I	2x4	DRY	No.2	SPF
R - B	2x4	DRY	No.2	SPF
J - H	2x4	DRY	No.2	SPF
R - P	2x4	DRY	No.2	SPF
P - D	2x4	DRY	No.2	SPF
O - L	2x4	DRY	No.2	SPF
K - G	2x4	DRY	No.2	SPF
K - J	2x4	DRY	No.2	SPF
ALL WEBS EXCEPT	2x3	DRY	No.2	SPF
Q - O	2x4	DRY	No.2	SPF
L - J	2x4	DRY	No.2	SPF

DRY: SEASONED LUMBER.

DESIGN CONSISTS OF 2 TRUSSES BUILT SEPARATELY THEN FASTENED TOGETHER AS FOLLOWS:

CHORDS #ROWS		SURFACE SPACING (IN)	LOAD(PLF)
TOP CHORDS : (0.122"X3") SPIRAL NAILS			
A- C	1	12	SIDE(61.0)
C- F	1	12	SIDE(61.0)
F- I	1	12	SIDE(61.0)
R- B	1	12	TOP
J- H	1	12	TOP
BOTTOM CHORDS : (0.122"X3") SPIRAL NAILS			
R- P	1	12	SIDE(61.0)
P- D	1	12	TOP
O- L	1	12	SIDE(61.0)
G- K	1	12	TOP
K- J	1	12	TOP
WEBS : (0.122"X3") SPIRAL NAILS			
2x3	1	6	
Q- C	1	6	SIDE(2.9)
2x4	1	6	

NAILS TO BE DRIVEN FROM ONE SIDE ONLY.

GIRDER NAILING ASSUMES NAILED HANGERS ARE FASTENED WITH MIN. 3-0 INCH NAILS.

LICENSED PROFESSIONAL ENGINEER
02-28-24
H. J. G. ALVES
100009024
PROVINCE OF ONTARIO

Structural component only
DWG# T-2406393

DIMENSIONS, SUPPORTS AND LOADINGS SPECIFIED BY FABRICATOR TO BE VERIFIED BY BUILDING DESIGNER

BEARINGS

JT	FACTORED GROSS REACTION VERT	HORZ	MAXIMUM FACTORED GROSS REACTION DOWN	HORZ	UPLIFT	INPUT BRG IN-SX	REQRD BRG IN-SX
R	2229	0	2229	0	0	5-8	1-8
J	2318	0	2318	0	0	5-8	1-8

UNFACTORED REACTIONS

JT	1ST LCASE COMBINED	SNOW	MAX./MIN. COMPONENT REACTIONS LIVE	PERM.LIVE	WIND	DEAD	SOIL
R	1583	1001 / 0	0 / 0	0 / 0	0 / 0	583 / 0	0 / 0
J	1647	1038 / 0	0 / 0	0 / 0	0 / 0	608 / 0	0 / 0

BEARING MATERIAL TO BE SPF NO.2 OR BETTER AT JOINT(S) R, J

BRACING

TOP CHORD TO BE SHEATHED OR MAX. PURLIN SPACING = 4.30 FT.
MAX. UNBRACED BOTTOM CHORD LENGTH = 7.81 FT OR RIGID CEILING DIRECTLY APPLIED.

ALL PITCH BREAKS AND PERIMETER CORNER JOINTS MUST BE LATERALLY RESTRAINED.

LOADING

TOTAL LOAD CASES: (4)

CHORDS

MEMB. FR-TO	MAX. FACTORED FORCE (LBS)	FACTORED VERT. LOAD (PLF) FROM	TO	LC1	MAX CSI (LC)	MAX. UNBRAC LENGTH
A- B	0 / 27	-84.9	-84.9	0.07 (1)	10.00	
B- C	-3078 / 0	-84.9	-84.9	0.37 (1)	4.90	
C- D	-4326 / 0	-84.9	-84.9	0.10 (1)	4.53	
D- S	-4576 / 0	-84.9	-84.9	0.22 (1)	4.30	
S- E	-4576 / 0	-84.9	-84.9	0.22 (1)	4.30	
E- T	-4576 / 0	-84.9	-84.9	0.22 (1)	4.30	
T- F	-4576 / 0	-84.9	-84.9	0.22 (1)	4.30	
F- G	-4122 / 0	-84.9	-84.9	0.25 (1)	4.47	
G- H	-4677 / 0	-84.9	-84.9	0.13 (1)	4.35	
H- I	0 / 27	-84.9	-84.9	0.07 (1)	10.00	
R- B	-2154 / 0	0.0	0.0	0.12 (1)	7.57	
J- H	-2112 / 0	0.0	0.0	0.12 (1)	7.63	
R- U	0 / 0	-18.5	-18.5	0.16 (4)	10.00	
U- V	0 / 0	-18.5	-18.5	0.16 (4)	10.00	
V- Q	0 / 0	-18.5	-18.5	0.16 (4)	10.00	
Q- P	0 / 118	-18.5	-18.5	0.16 (4)	10.00	
P- O	-3 / 0	0.0	0.0	0.09 (1)	10.00	
O- D	-596 / 0	0.0	0.0	0.10 (1)	7.81	
O- W	0 / 4371	-18.5	-18.5	0.47 (1)	10.00	
W- N	0 / 4371	-18.5	-18.5	0.47 (1)	10.00	
N- X	0 / 3707	-18.5	-18.5	0.39 (1)	10.00	
X- M	0 / 3707	-18.5	-18.5	0.39 (1)	10.00	
M- Y	0 / 4579	-18.5	-18.5	0.48 (1)	10.00	
Y- L	0 / 4579	-18.5	-18.5	0.48 (1)	10.00	
K- L	0 / 17	0.0	0.0	0.24 (1)	10.00	
L- G	0 / 233	0.0	0.0	0.26 (1)	10.00	
K- J	0 / 322	-18.5	-18.5	0.03 (1)	10.00	

WEBS

MEMB. FR-TO	MAX. FACTORED FORCE (LBS)	MAX CSI (LC)
Q- C	-1621 / 0	0.22 (1)
D- N	0 / 253	0.03 (1)
N- E	-594 / 0	0.06 (1)
N- F	0 / 1067	0.13 (1)
M- F	0 / 440	0.05 (1)
M- G	-902 / 0	0.15 (1)
Q- O	0 / 2901	0.26 (1)
C- O	0 / 2762	0.34 (1)
L- J	-374 / 0	0.02 (1)
L- H	0 / 4153	0.51 (1)
B- Q	0 / 2781	0.34 (1)

SPECIFIED CONCENTRATED LOADS (LBS)

JT	LOC.	LC1	MAX-	MAX+	FACE	DIR.	TYPE	HEEL	CONN.
C	5-10-8	-331	-331	---	BACK	VERT	TOTAL	---	C1
D	7-11-4	-113	-113	---	BACK	VERT	TOTAL	---	C1
E	11-10-12	-67	-67	---	BACK	VERT	TOTAL	---	C1
F	15-11-8	-225	-225	---	FRONT	VERT	TOTAL	---	C1
F	15-11-8	-73	-73	---	BACK	VERT	TOTAL	---	C1
L	20-1-12	-70	-70	---	BACK	VERT	TOTAL	---	C1
M	15-10-12	-65	-65	---	BACK	VERT	TOTAL	---	C1
N	11-10-12	-65	-65	---	BACK	VERT	TOTAL	---	C1
P	8-0-4	-35	-35	---	BACK	VERT	TOTAL	---	C1
Q	5-11-4	-29	-29	---	BACK	VERT	TOTAL	---	C1
S	9-11-4	-67	-67	---	BACK	VERT	TOTAL	---	C1

[M]

DESIGN CRITERIA

*** SPECIAL LOADS ANALYSIS ***
GEOMETRY AND/OR BASIC LOADS CHANGED BY USER.
LOADS WERE DERIVED FROM USER INPUT
NO FURTHER MODIFICATIONS WERE MADE

SPECIFIED LOADS:

TOP CH.	LL	=	23.3	PSF
	DL	=	6.0	PSF
BOT CH.	LL	=	0.0	PSF
	DL	=	7.4	PSF
TOTAL LOAD		=	36.7	PSF

SPACING = 24.0 IN. C/C

LOADING IN FLAT SECTION BASED ON A SLOPE OF 6.00/12

*** NON STANDARD GIRDER ***
ADDT'L USER-DEFINED LOADS APPLIED TO ALL LOAD CASES.

THIS TRUSS IS DESIGNED FOR RESIDENTIAL OR SMALL BUILDING REQUIREMENTS OF PART 9, NBCC 2015

THIS DESIGN COMPLIES WITH:
- PART 9 OF BCBC 2018 , NBC-2019AE
- PART 9 OF OBC 2012 (2019 AMENDMENT)
- CSA 086-14
- TPIC 2014

DESIGN ASSUMPTIONS
-OVERHANG NOT TO BE ALTERED OR CUT OFF.

(55 % OF 27.2 P.S.F. G.S.L. PLUS 8.4 P.S.F. RAIN LOAD) EQUALS 23.3 P.S.F. SPECIFIED ROOF LIVE LOAD

ALLOWABLE DEFL.(LL)= L/360 (0.73")
CALCULATED VERT. DEFL.(LL) = L/ 999 (0.10")
ALLOWABLE DEFL.(TL)= L/360 (0.73")
CALCULATED VERT. DEFL.(TL) = L/ 999 (0.19")

CSI: TC=0.37/1.00 (B-C:1) , BC=0.48/1.00 (L-M:1) , WB=0.51/1.00 (H-L:1) , SSI=0.19/1.00 (G-L:1)

DOL LUMBER=1.00 NAIL=1.00 LS BEND=1.00 COMP=1.00 SHEAR=1.00 TENS= 1.00

COMPANION LIVE LOAD FACTOR = 1.00

AUTOSOLVE RIGHT HEEL ONLY

TRUSS PLATE MANUFACTURER IS NOT RESPONSIBLE FOR QUALITY CONTROL IN THE TRUSS MANUFACTURING PLANT .

NAIL VALUES

PLATE	GRIP(DRY) (PSI) MAX	MIN	SHEAR (PLI) MAX	MIN	SECTION (PLI) MAX	MIN
MT20	650	371	1747	788	1987	1873

PLATE PLACEMENT TOL. = 0.250 inches

PLATE ROTATION TOL. = 5.0 Deg.

CONTINUED ON PAGE 2

JOB NAME	TRUSS NAME	QUANTITY	PLY	JOB DESC.	DRWG NO.
425913	T1S	2	2	ROYAL PINE HOMES TRUSS DESC.	

PLATES (table is in inches)

JT	TYPE	PLATES	W	LEN	Y	X
B	TMVW-t	MT20	4.0	6.0	2.00	3.00
C	TTWW+m	MT20	6.0	7.0	2.50	2.25
D	TMVW-t	MT20	4.0	6.0		
E	TMW+w	MT20	2.0	4.0		
F	TTWW-m	MT20	5.0	6.0	2.50	2.00
G	TMVW-p	MT20	5.0	6.0	2.25	3.00
H	TMVW-t	MT20	5.0	6.0	2.50	2.75
J	BMVW1-t	MT20	4.0	6.0		
K	BMV+p	MT20	3.0	4.0		
L	BVMWW-l	MT20	6.0	10.0	3.25	6.50
M	BMWW-t	MT20	4.0	6.0		
N	BMWWW-t	MT20	4.0	6.0		
O	BVMWW-l	MT20	6.0	10.0	3.00	6.50
P	BMV+p	MT20	3.0	4.0		
Q	BMWWW-t	MT20	6.0	10.0		
R	BMV1+p	MT20	3.0	4.0		

NOTES- (1)
1) Lateral braces to be a minimum of 2X4 SPF #2.

SPECIFIED CONCENTRATED LOADS (LBS)

JT	LOC.	LC1	MAX-	MAX+	FACE	DIR.	TYPE	HEEL	CONN.
T	13-10-12	-67	-67	---	BACK	VERT	TOTAL	---	C1
U	1-11-4	-29	-29	---	BACK	VERT	TOTAL	---	C1
V	3-11-4	-29	-29	---	BACK	VERT	TOTAL	---	C1
W	9-11-4	-65	-65	---	BACK	VERT	TOTAL	---	C1
X	13-10-12	-65	-65	---	BACK	VERT	TOTAL	---	C1
Y	17-10-12	-65	-65	---	BACK	VERT	TOTAL	---	C1

CONNECTION REQUIREMENTS

1) **C1:** A SUITABLE HANGER/MECHANICAL CONNECTION IS REQUIRED.

JSI GRIP= 0.77 (C) (INPUT = 0.90)
JSI METAL= 0.54 (H) (INPUT = 0.95)

LICENSED PROFESSIONAL ENGINEER
02-28-24
H. J. G. ALVES
100009024
PROVINCE OF ONTARIO

Structural component only
DWG# T-2406393

JOB NAME	TRUSS NAME	QUANTITY	PLY	JOB DESC.	DRWG NO.
425913	T2S	2	1	ROYAL PINE HOMES TRUSS DESC.	

Tamarack Roof Truss, Burlington

Version 8.630 S Aug 30 2023 MiTek Industries, Inc. Wed Feb 28 15:02:36 2024 Page 1
ID:VI_DQvi1e49Qy7axT?i10OzOYuG-FjH05zxW4jnPWmla4QfGodXZbOm?kjg8dzru9QzgawX

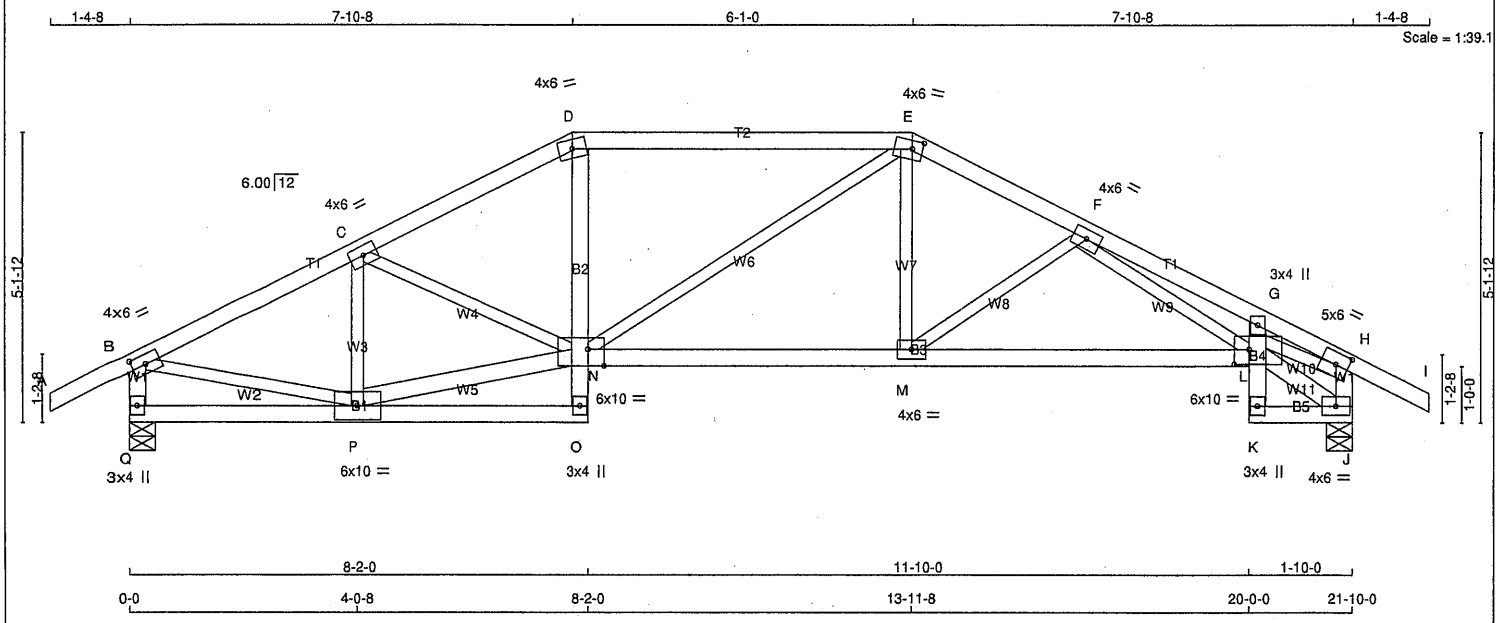

TOTAL WEIGHT = 2 X 95 = 189 lb
[M][F]

LUMBER
N. L. G. A. RULES

CHORDS	SIZE		LUMBER	DESCR.
A - D	2x4	DRY	No.2	SPF
D - E	2x4	DRY	No.2	SPF
E - I	2x4	DRY	No.2	SPF
Q - B	2x4	DRY	No.2	SPF
J - H	2x4	DRY	No.2	SPF
Q - O	2x4	DRY	No.2	SPF
O - D	2x4	DRY	No.2	SPF
N - L	2x4	DRY	No.2	SPF
K - G	2x4	DRY	No.2	SPF
K - J	2x4	DRY	No.2	SPF
ALL WEBS	2x3	DRY	No.2	SPF
EXCEPT				
L - J	2x4	DRY	No.2	SPF
P - N	2x4	DRY	No.2	SPF

DRY: SEASONED LUMBER.

PLATES (table is in inches)

JT	TYPE	PLATES	W	LEN	Y	X
B	TMVW-t	MT20	4.0	6.0	2.00	3.00
C	TMWW-t	MT20	4.0	6.0		
D	TTV-m	MT20	4.0	6.0		
E	TTWW-m	MT20	4.0	6.0	1.75	2.25
F	TMWW-t	MT20	4.0	6.0		
G	TMV+p	MT20	3.0	4.0		
H	TMVW-t	MT20	5.0	6.0	2.50	2.75
J	BMVW1-t	MT20	4.0	6.0		
K	BMV+p	MT20	3.0	4.0		
L	BVMWWW-l	MT20	6.0	10.0	3.00	3.25
M	BMWW-t	MT20	4.0	6.0		
N	BVMWWW-l	MT20	6.0	10.0	Edge	3.50
O	BMV+p	MT20	3.0	4.0		
P	BMWWW-t	MT20	6.0	10.0		
Q	BMV1+p	MT20	3.0	4.0		

Edge - INDICATES REFERENCE CORNER OF PLATE TOUCHES EDGE OF CHORD.

NOTES- (1)
1) Lateral braces to be a minimum of 2X4 SPF #2.

LICENSED PROFESSIONAL ENGINEER
02-28-24
H. J. G. ALVES
100009024
PROVINCE OF ONTARIO

Structural component only
DWG# T-2406394

DIMENSIONS, SUPPORTS AND LOADINGS SPECIFIED BY FABRICATOR TO BE VERIFIED BY BUILDING DESIGNER

BEARINGS

JT	FACTORED GROSS REACTION VERT	HORZ	MAXIMUM FACTORED GROSS REACTION DOWN	HORZ	UPLIFT	INPUT BRG IN-SX	REQRD BRG IN-SX
Q	1247	0	1247	0	0	5-8	1-8
J	1255	0	1255	0	0	5-8	1-8

UNFACTORED REACTIONS

JT	1ST LCASE COMBINED	MAX./MIN. COMPONENT REACTIONS SNOW	LIVE	PERM.LIVE	WIND	DEAD	SOIL
Q	883	573 / 0	0 / 0	0 / 0	0 / 0	309 / 0	0 / 0
J	888	578 / 0	0 / 0	0 / 0	0 / 0	310 / 0	0 / 0

BEARING MATERIAL TO BE SPF NO.2 OR BETTER AT JOINT(S) Q, J

BRACING
TOP CHORD TO BE SHEATHED OR MAX. PURLIN SPACING = 4.30 FT.
MAX. UNBRACED BOTTOM CHORD LENGTH = 7.81 FT OR RIGID CEILING DIRECTLY APPLIED.

ALL PITCH BREAKS AND PERIMETER CORNER JOINTS MUST BE LATERALLY RESTRAINED.

LOADING
TOTAL LOAD CASES: (4)

CHORDS

MEMB. FR-TO	MAX. FACTORED FORCE (LBS)	FACTORED VERT. LOAD LC1 (PLF) FROM	TO	MAX CSI (LC)	MAX. UNBRAC LENGTH
A- B	0 / 27	-84.9	-84.9	0.12 (1)	10.00
B- C	-1464 / 0	-84.9	-84.9	0.18 (1)	5.24
C- D	-1638 / 0	-84.9	-84.9	0.19 (1)	5.01
D- E	-1471 / 0	-84.9	-84.9	0.44 (1)	4.88
E- F	-1664 / 0	-84.9	-84.9	0.14 (1)	5.02
F- G	-2359 / 0	-84.9	-84.9	0.21 (1)	4.30
G- H	-2211 / 0	-84.9	-84.9	0.14 (1)	4.48
H- I	0 / 27	-84.9	-84.9	0.12 (1)	10.00
Q- B	-1214 / 0	0.0	0.0	0.12 (1)	7.26
J- H	-1150 / 0	0.0	0.0	0.12 (1)	7.42
Q- P	0 / 0	-18.5	-18.5	0.07 (4)	10.00
P- O	0 / 37	-18.5	-18.5	0.08 (4)	10.00
O- N	0 / 32	0.0	0.0	0.06 (1)	10.00
N- D	0 / 345	0.0	0.0	0.11 (1)	10.00
N- M	0 / 1484	-18.5	-18.5	0.34 (1)	10.00
M- L	0 / 1835	-18.5	-18.5	0.40 (1)	10.00
K- L	0 / 17	0.0	0.0	0.21 (1)	10.00
L- G	-115 / 0	0.0	0.0	0.16 (1)	7.81
K- J	0 / 151	-18.5	-18.5	0.03 (1)	10.00

WEBS

MEMB. FR-TO	MAX. FACTORED FORCE (LBS)	MAX CSI (LC)
P- C	-534 / 0	0.10 (1)
N- E	-26 / 0	0.03 (4)
M- E	0 / 393	0.09 (1)
B- P	0 / 1356	0.31 (1)
L- J	-175 / 0	0.02 (1)
L- H	0 / 1938	0.44 (1)
M- F	-443 / 0	0.12 (1)
F- L	0 / 373	0.08 (1)
P- N	0 / 1327	0.21 (1)
C- N	0 / 138	0.03 (1)

DESIGN CRITERIA

SPECIFIED LOADS:

TOP CH.	LL	=	23.3	PSF
	DL	=	6.0	PSF
BOT CH.	LL	=	0.0	PSF
	DL	=	7.4	PSF
TOTAL LOAD		=	36.7	PSF

SPACING = 24.0 IN. C/C

LOADING IN FLAT SECTION BASED ON A SLOPE OF 6.00/12

THIS TRUSS IS DESIGNED FOR RESIDENTIAL OR SMALL BUILDING REQUIREMENTS OF PART 9, NBCC 2015

THIS DESIGN COMPLIES WITH:
- PART 9 OF BCBC 2018 , NBC-2019AE
- PART 9 OF OBC 2012 (2019 AMENDMENT)
- CSA 086-14
- TPIC 2014

DESIGN ASSUMPTIONS
-OVERHANG NOT TO BE ALTERED OR CUT OFF.

(55 % OF 27.2 P.S.F. G.S.L. PLUS 8.4 P.S.F. RAIN LOAD) EQUALS 23.3 P.S.F. SPECIFIED ROOF LIVE LOAD

ALLOWABLE DEFL.(LL)= L/360 (0.73")
CALCULATED VERT. DEFL.(LL) = L/ 999 (0.07")
ALLOWABLE DEFL.(TL)= L/360 (0.73")
CALCULATED VERT. DEFL.(TL) = L/ 999 (0.14")

CSI: TC=0.44/1.00 (D-E:1) , BC=0.40/1.00 (L-M:1) , WB=0.44/1.00 (H-L:1) , SSI=0.20/1.00 (D-E:1)

DOL LUMBER=1.00 NAIL=1.00 LS BEND=1.10 COMP=1.10 SHEAR=1.10 TENS= 1.10

COMPANION LIVE LOAD FACTOR = 1.00

AUTOSOLVE LEFT HEEL ONLY

TRUSS PLATE MANUFACTURER IS NOT RESPONSIBLE FOR QUALITY CONTROL IN THE TRUSS MANUFACTURING PLANT .

NAIL VALUES

PLATE	GRIP(DRY) (PSI) MAX	MIN	SHEAR (PLI) MAX	MIN	SECTION (PLI) MAX	MIN
MT20	650	371	1747	788	1987	1873

PLATE PLACEMENT TOL. = 0.250 inches

PLATE ROTATION TOL. = 5.0 Deg.

JSI GRIP= 0.70 (B) (INPUT = 0.90)
JSI METAL= 0.52 (H) (INPUT = 0.95)

JOB NAME	TRUSS NAME	QUANTITY	PLY	JOB DESC.	DRWG NO.
425913	T3S	2	1	ROYAL PINE HOMES TRUSS DESC.	

Tamarack Roof Truss, Burlington

Version 8.630 S Aug 30 2023 MiTek Industries, Inc. Wed Feb 28 15:02:37 2024 Page 1
ID:VI_DQvi1e49Qy7axT?i10OzOYuG-jwrOJJy8q1vG8wKmd7AVKq3nbn65T9gHrdaRiszgawW

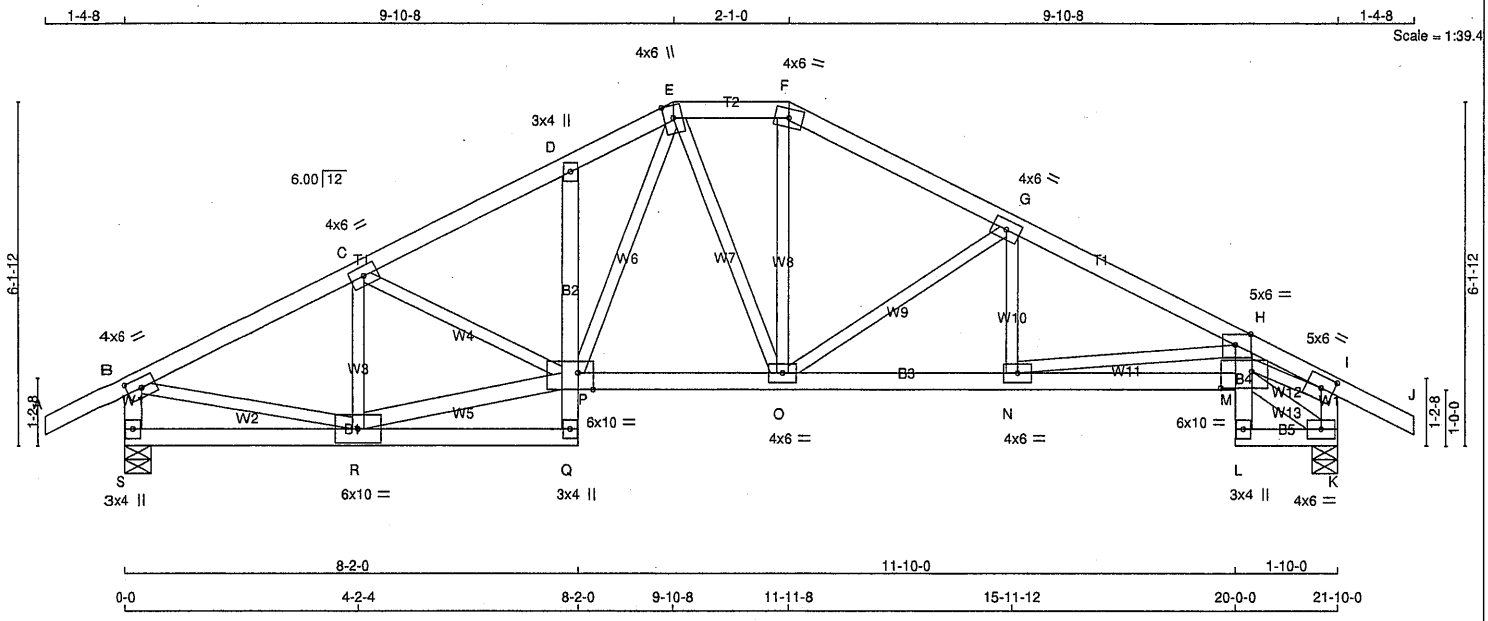

TOTAL WEIGHT = 2 X 102 = 203 lb

[M][F]

LUMBER

N. L. G. A. RULES

CHORDS	SIZE		LUMBER	DESCR.
A - E	2x4	DRY	No.2	SPF
E - F	2x4	DRY	No.2	SPF
F - J	2x4	DRY	No.2	SPF
S - B	2x4	DRY	No.2	SPF
K - I	2x4	DRY	No.2	SPF
S - Q	2x4	DRY	No.2	SPF
Q - D	2x4	DRY	No.2	SPF
P - M	2x4	DRY	No.2	SPF
L - H	2x4	DRY	No.2	SPF
L - K	2x4	DRY	No.2	SPF
ALL WEBS EXCEPT	2x3	DRY	No.2	SPF
M - K	2x4	DRY	No.2	SPF
R - P	2x4	DRY	No.2	SPF

DRY: SEASONED LUMBER.

PLATES (table is in inches)

JT	TYPE	PLATES	W	LEN	Y	X
B	TMVW-t	MT20	4.0	6.0	2.00	3.00
C	TMWW-t	MT20	4.0	6.0		
D	TMV+p	MT20	3.0	4.0		
E	TTWW+m	MT20	4.0	6.0	Edge	
F	TTW-m	MT20	4.0	6.0		
G	TMWW-t	MT20	4.0	6.0		
H	TMVW-p	MT20	5.0	6.0	Edge	3.25
I	TMVW-t	MT20	5.0	6.0	2.50	2.75
K	BMVW1-t	MT20	4.0	6.0		
L	BMV+p	MT20	3.0	4.0		
M	BVMWW-l	MT20	6.0	10.0	3.50	6.50
N	BMWW-t	MT20	4.0	6.0		
O	BMWWW-t	MT20	4.0	6.0		
P	BVMWWW-l	MT20	6.0	10.0	Edge	3.25
Q	BMV+p	MT20	3.0	4.0		
R	BMWWW-t	MT20	6.0	10.0		
S	BMV1+p	MT20	3.0	4.0		

Edge - INDICATES REFERENCE CORNER OF PLATE TOUCHES EDGE OF CHORD.

NOTES- (1)

1)

LICENSED PROFESSIONAL ENGINEER
02-28-24
H. J. G. ALVES
100009024
PROVINCE OF ONTARIO

Structural component only
DWG# T-2406395

DIMENSIONS, SUPPORTS AND LOADINGS SPECIFIED BY FABRICATOR TO BE VERIFIED BY BUILDING DESIGNER

BEARINGS

JT	FACTORED GROSS REACTION VERT	HORZ	MAXIMUM FACTORED GROSS REACTION DOWN	HORZ	UPLIFT	INPUT BRG IN-SX	REQRD BRG IN-SX
S	1247	0	1247	0	0	5-8	1-8
K	1255	0	1255	0	0	5-8	1-8

UNFACTORED REACTIONS

JT	1ST LCASE COMBINED	MAX./MIN. COMPONENT REACTIONS SNOW	LIVE	PERM.LIVE	WIND	DEAD	SOIL
S	883	573 / 0	0 / 0	0 / 0	0 / 0	309 / 0	0 / 0
K	888	578 / 0	0 / 0	0 / 0	0 / 0	310 / 0	0 / 0

BEARING MATERIAL TO BE SPF NO.2 OR BETTER AT JOINT(S) S, K

BRACING

TOP CHORD TO BE SHEATHED OR MAX. PURLIN SPACING = 4.43 FT.
MAX. UNBRACED BOTTOM CHORD LENGTH = 7.81 FT OR RIGID CEILING DIRECTLY APPLIED.

ALL PITCH BREAKS AND PERIMETER CORNER JOINTS MUST BE LATERALLY RESTRAINED.

LOADING

TOTAL LOAD CASES: (4)

CHORDS

MEMB. FR-TO	MAX. FACTORED FORCE (LBS)	FACTORED VERT. LOAD LC1 FROM (PLF)	TO	MAX CSI (LC)	MAX. UNBRAC LENGTH
A- B	0 / 27	-84.9	-84.9	0.12 (1)	10.00
B- C	-1466 / 0	-84.9	-84.9	0.19 (1)	5.23
C- D	-1644 / 0	-84.9	-84.9	0.18 (1)	5.00
D- E	-1651 / 0	-84.9	-84.9	0.07 (1)	5.11
E- F	-1257 / 0	-84.9	-84.9	0.06 (1)	5.69
F- G	-1415 / 0	-84.9	-84.9	0.20 (1)	5.28
G- H	-1939 / 0	-84.9	-84.9	0.23 (1)	4.64
H- I	-2276 / 0	-84.9	-84.9	0.14 (1)	4.43
I- J	0 / 27	-84.9	-84.9	0.12 (1)	10.00
S- B	-1213 / 0	0.0	0.0	0.12 (1)	7.27
K- I	-1146 / 0	0.0	0.0	0.12 (1)	7.43
S- R	0 / 0	-18.5	-18.5	0.07 (4)	10.00
R- Q	0 / 35	-18.5	-18.5	0.08 (4)	10.00
Q- P	0 / 30	0.0	0.0	0.05 (1)	10.00
P- D	-245 / 0	0.0	0.0	0.05 (1)	7.81
P- O	0 / 1247	-18.5	-18.5	0.24 (1)	10.00
O- N	0 / 1753	-18.5	-18.5	0.33 (1)	10.00
N- M	0 / 2234	-18.5	-18.5	0.40 (1)	10.00
L- M	0 / 17	0.0	0.0	0.22 (1)	10.00
M- H	0 / 98	0.0	0.0	0.23 (1)	10.00
L- K	0 / 156	-18.5	-18.5	0.03 (1)	10.00

WEBS

MEMB. FR-TO	MAX. FACTORED FORCE (LBS)	MAX CSI (LC)
R- C	-536 / 0	0.10 (1)
O- F	0 / 410	0.09 (1)
O- G	-612 / 0	0.25 (1)
N- G	0 / 156	0.04 (4)
N- H	-488 / 0	0.15 (1)
B- R	0 / 1355	0.30 (1)
M- K	-182 / 0	0.02 (1)
M- I	0 / 2011	0.45 (1)
R- P	0 / 1333	0.21 (1)
C- P	0 / 153	0.03 (1)
E- O	0 / 30	0.01 (4)
P- E	0 / 609	0.14 (1)

DESIGN CRITERIA

SPECIFIED LOADS:

TOP CH.	LL	=	23.3	PSF
	DL	=	6.0	PSF
BOT CH.	LL	=	0.0	PSF
	DL	=	7.4	PSF
TOTAL LOAD		=	36.7	PSF

SPACING = 24.0 IN. C/C

LOADING IN FLAT SECTION BASED ON A SLOPE OF 6.00/12

THIS TRUSS IS DESIGNED FOR RESIDENTIAL OR SMALL BUILDING REQUIREMENTS OF PART 9, NBCC 2015

THIS DESIGN COMPLIES WITH:
- PART 9 OF BCBC 2018 , NBC-2019AE
- PART 9 OF OBC 2012 (2019 AMENDMENT)
- CSA 086-14
- TPIC 2014

DESIGN ASSUMPTIONS
-OVERHANG NOT TO BE ALTERED OR CUT OFF.

(55 % OF 27.2 P.S.F. G.S.L. PLUS 8.4 P.S.F. RAIN LOAD) EQUALS 23.3 P.S.F. SPECIFIED ROOF LIVE LOAD

ALLOWABLE DEFL.(LL)= L/360 (0.73")
CALCULATED VERT. DEFL.(LL) = L/ 999 (0.07")
ALLOWABLE DEFL.(TL)= L/360 (0.73")
CALCULATED VERT. DEFL.(TL) = L/ 999 (0.13")

CSI: TC=0.23/1.00 (G-H:1) , BC=0.40/1.00 (M-N:1) , WB=0.45/1.00 (I-M:1) , SSI=0.17/1.00 (H-M:1)

DOL LUMBER=1.00 NAIL=1.00 LS BEND=1.10 COMP=1.10 SHEAR=1.10 TENS= 1.10

COMPANION LIVE LOAD FACTOR = 1.00

TRUSS PLATE MANUFACTURER IS NOT RESPONSIBLE FOR QUALITY CONTROL IN THE TRUSS MANUFACTURING PLANT .

NAIL VALUES

PLATE	GRIP(DRY) (PSI) MAX	MIN	SHEAR (PLI) MAX	MIN	SECTION (PLI) MAX	MIN
MT20	650	371	1747	788	1987	1873

PLATE PLACEMENT TOL. = 0.250 inches

PLATE ROTATION TOL. = 5.0 Deg.

JSI GRIP= 0.70 (I) (INPUT = 0.90)
JSI METAL= 0.54 (I) (INPUT = 0.95)

JOB NAME	TRUSS NAME	QUANTITY	PLY	JOB DESC.	DRWG NO.
425913	T4	16	1	ROYAL PINE HOMES TRUSS DESC.	

Tamarack Roof Truss, Burlington

Version 8.630 S Aug 30 2023 MiTek Industries, Inc. Wed Feb 28 15:02:39 2024 Page 1
ID:VI_DQvi1e49Qy7axT?i10OzOYuG-glz8k?zOMe9_NEU9lYDzPF94JbocxzaaJx3YmlzgawU

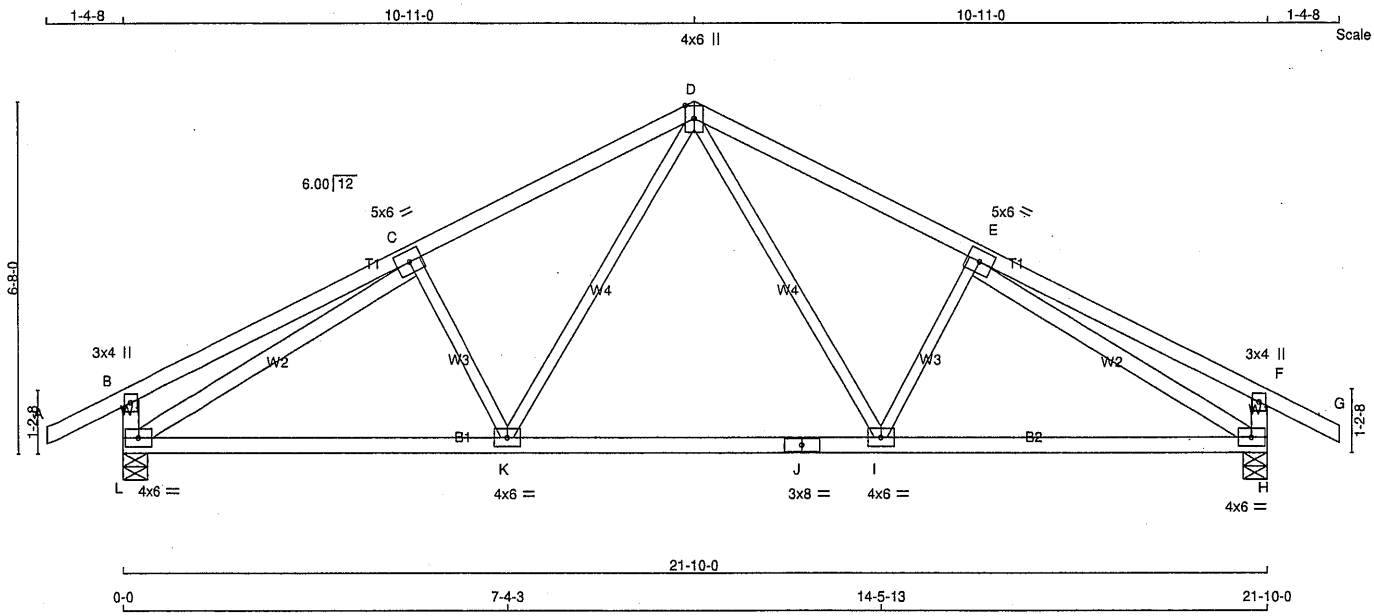

TOTAL WEIGHT = 16 X 90 = 1439 lb [M][F]

LUMBER

N. L. G. A. RULES

CHORDS	SIZE		LUMBER	DESCR.
A - D	2x4	DRY	No.2	SPF
D - G	2x4	DRY	No.2	SPF
L - B	2x4	DRY	No.2	SPF
H - F	2x4	DRY	No.2	SPF
L - J	2x4	DRY	No.2	SPF
J - H	2x4	DRY	No.2	SPF
ALL WEBS EXCEPT	2x3	DRY	No.2	SPF
L - C	2x4	DRY	No.2	SPF
E - H	2x4	DRY	No.2	SPF

DRY: SEASONED LUMBER.

PLATES (table is in inches)

JT	TYPE	PLATES	W	LEN	Y	X
B	TMV+p	MT20	3.0	4.0		
C	TMWW-t	MT20	5.0	6.0		
D	TTWW+p	MT20	4.0	6.0	Edge	
E	TMWW-t	MT20	5.0	6.0		
F	TMV+p	MT20	3.0	4.0		
H	BMVW1-t	MT20	4.0	6.0		
I	BMWW-t	MT20	4.0	6.0		
J	BS-t	MT20	3.0	8.0		
K	BMWW-t	MT20	4.0	6.0		
L	BMVW1-t	MT20	4.0	6.0		

Edge - INDICATES REFERENCE CORNER OF PLATE TOUCHES EDGE OF CHORD.

NOTES- (1)
1) Lateral braces to be a minimum of 2X4 SPF #2.

DIMENSIONS, SUPPORTS AND LOADINGS SPECIFIED BY FABRICATOR TO BE VERIFIED BY BUILDING DESIGNER

BEARINGS

JT	FACTORED GROSS REACTION VERT	HORZ	MAXIMUM FACTORED GROSS REACTION DOWN	HORZ	UPLIFT	INPUT BRG IN-SX	REQRD BRG IN-SX
L	1251	0	1251	0	0	5-8	1-8
H	1251	0	1251	0	0	5-8	1-8

UNFACTORED REACTIONS

JT	1ST LCASE COMBINED	MAX./MIN. COMPONENT REACTIONS SNOW	LIVE	PERM.LIVE	WIND	DEAD	SOIL
L	885	576 / 0	0 / 0	0 / 0	0 / 0	310 / 0	0 / 0
H	885	576 / 0	0 / 0	0 / 0	0 / 0	310 / 0	0 / 0

BEARING MATERIAL TO BE SPF NO.2 OR BETTER AT JOINT(S) L, H

BRACING

TOP CHORD TO BE SHEATHED OR MAX. PURLIN SPACING = 5.16 FT.
MAX. UNBRACED BOTTOM CHORD LENGTH = 10.00 FT OR RIGID CEILING DIRECTLY APPLIED.

ALL PITCH BREAKS AND PERIMETER CORNER JOINTS MUST BE LATERALLY RESTRAINED.

LOADING

TOTAL LOAD CASES: (4)

CHORDS

MEMB. FR-TO	MAX. FACTORED FORCE (LBS)	FACTORED VERT. LOAD LC1 (PLF) FROM	TO	MAX CSI (LC)	MAX. UNBRAC LENGTH
A- B	0 / 27	-84.9	-84.9	0.12 (1)	10.00
B- C	0 / 24	-84.9	-84.9	0.41 (1)	10.00
C- D	-1368 / 0	-84.9	-84.9	0.35 (1)	5.16
D- E	-1368 / 0	-84.9	-84.9	0.35 (1)	5.16
E- F	0 / 24	-84.9	-84.9	0.41 (1)	10.00
F- G	0 / 27	-84.9	-84.9	0.12 (1)	10.00
L- B	-299 / 0	0.0	0.0	0.03 (1)	7.81
H- F	-299 / 0	0.0	0.0	0.03 (1)	7.81
L- K	0 / 1347	-18.5	-18.5	0.34 (4)	10.00
K- J	0 / 964	-18.5	-18.5	0.31 (4)	10.00
J- I	0 / 964	-18.5	-18.5	0.31 (4)	10.00
I- H	0 / 1347	-18.5	-18.5	0.34 (4)	10.00

WEBS

MEMB. FR-TO	MAX. FACTORED FORCE (LBS)	MAX CSI (LC)
D- I	0 / 485	0.11 (1)
I- E	-313 / 0	0.09 (1)
K- D	0 / 485	0.11 (1)
C- K	-313 / 0	0.09 (1)
L- C	-1618 / 0	0.87 (1)
E- H	-1618 / 0	0.87 (1)

DESIGN CRITERIA

SPECIFIED LOADS:

TOP CH.	LL	=	23.3	PSF
	DL	=	6.0	PSF
BOT CH.	LL	=	0.0	PSF
	DL	=	7.4	PSF
TOTAL LOAD		=	36.7	PSF

SPACING = 24.0 IN. C/C

THIS TRUSS IS DESIGNED FOR RESIDENTIAL OR SMALL BUILDING REQUIREMENTS OF PART 9, NBCC 2015

THIS DESIGN COMPLIES WITH:
- PART 9 OF BCBC 2018 , NBC-2019AE
- PART 9 OF OBC 2012 (2019 AMENDMENT)
- CSA 086-14
- TPIC 2014

(55 % OF 27.2 P.S.F. G.S.L. PLUS 8.4 P.S.F. RAIN LOAD) EQUALS 23.3 P.S.F. SPECIFIED ROOF LIVE LOAD

ALLOWABLE DEFL.(LL)= L/360 (0.73")
CALCULATED VERT. DEFL.(LL) = L/ 999 (0.05")
ALLOWABLE DEFL.(TL)= L/360 (0.73")
CALCULATED VERT. DEFL.(TL) = L/ 999 (0.12")

CSI: TC=0.41/1.00 (E-F:1) , BC=0.34/1.00 (H-I:4) , WB=0.87/1.00 (E-H:1) , SSI=0.20/1.00 (D-E:1)

DOL LUMBER=1.00 NAIL=1.00 LS BEND=1.10 COMP=1.10 SHEAR=1.10 TENS= 1.10

COMPANION LIVE LOAD FACTOR = 1.00

AUTOSOLVE HEELS OFF

TRUSS PLATE MANUFACTURER IS NOT RESPONSIBLE FOR QUALITY CONTROL IN THE TRUSS MANUFACTURING PLANT .

NAIL VALUES

PLATE	GRIP(DRY) (PSI) MAX	MIN	SHEAR (PLI) MAX	MIN	SECTION (PLI) MAX	MIN
MT20	650	371	1747	788	1987	1873

PLATE PLACEMENT TOL. = 0.250 inches

PLATE ROTATION TOL. = 5.0 Deg.

JSI GRIP= 0.77 (H) (INPUT = 0.90)
JSI METAL= 0.36 (E) (INPUT = 0.95)

LICENSED PROFESSIONAL ENGINEER
02-28-24
H. J. G. ALVES
100009024
PROVINCE OF ONTARIO

Structural component only
DWG# T-2406396

JOB NAME	TRUSS NAME	QUANTITY	PLY	JOB DESC.	DRWG NO.
425913	T4S	6	1	ROYAL PINE HOMES TRUSS DESC.	

Tamarack Roof Truss, Burlington

Version 8.630 S Aug 30 2023 MiTek Industries, Inc. Wed Feb 28 15:02:40 2024 Page 1
ID:VI_DQvi1e49Qy7axT?i10OzOYuG-8VXXxL_07yHr?N3LJFkCyThGR?8BgWRjXbp5IBzgawT

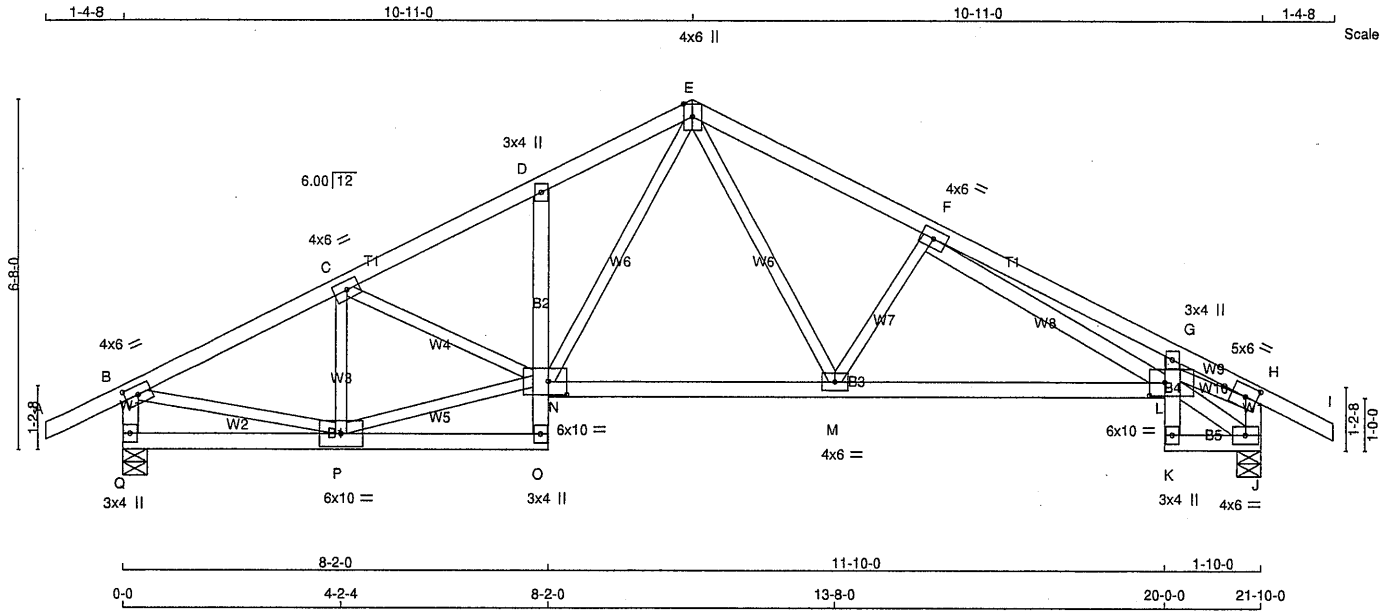

TOTAL WEIGHT = 6 X 98 = 588 lb

[M][F]

LUMBER

N. L. G. A. RULES

CHORDS	SIZE		LUMBER	DESCR.
A - E	2x4	DRY	No.2	SPF
E - I	2x4	DRY	No.2	SPF
Q - B	2x4	DRY	No.2	SPF
J - H	2x4	DRY	No.2	SPF
Q - O	2x4	DRY	No.2	SPF
O - D	2x4	DRY	No.2	SPF
N - L	2x4	DRY	No.2	SPF
K - G	2x4	DRY	No.2	SPF
K - J	2x4	DRY	No.2	SPF
ALL WEBS	2x3	DRY	No.2	SPF
EXCEPT				
F - L	2x4	DRY	No.2	SPF
L - J	2x4	DRY	No.2	SPF

DRY: SEASONED LUMBER.

PLATES (table is in inches)

JT	TYPE	PLATES	W	LEN	Y	X
B	TMVW-t	MT20	4.0	6.0	2.00	3.00
C	TMWW-t	MT20	4.0	6.0		
D	TMV+p	MT20	3.0	4.0		
E	TTWW+p	MT20	4.0	6.0	Edge	
F	TMWW-t	MT20	4.0	6.0		
G	TMV+p	MT20	3.0	4.0		
H	TMVW-t	MT20	5.0	6.0	2.50	2.75
J	BMVW1-t	MT20	4.0	6.0		
K	BMV+p	MT20	3.0	4.0		
L	BVMWWW-l	MT20	6.0	10.0	3.00	3.50
M	BMWW-t	MT20	4.0	6.0		
N	BVMWWW-l	MT20	6.0	10.0	3.00	4.25
O	BMV+p	MT20	3.0	4.0		
P	BMWWW-t	MT20	6.0	10.0		
Q	BMV1+p	MT20	3.0	4.0		

Edge - INDICATES REFERENCE CORNER OF PLATE TOUCHES EDGE OF CHORD.

NOTES- (1)
1) Lateral braces to be a minimum of 2X4 SPF #2.

LICENSED PROFESSIONAL ENGINEER
02-28-24
H. J. G. ALVES
100009024
PROVINCE OF ONTARIO

Structural component only
DWG# T-2406397

DIMENSIONS, SUPPORTS AND LOADINGS SPECIFIED BY FABRICATOR TO BE VERIFIED BY BUILDING DESIGNER

BEARINGS

JT	FACTORED GROSS REACTION VERT	HORZ	MAXIMUM FACTORED GROSS REACTION DOWN	HORZ	UPLIFT	INPUT BRG IN-SX	REQRD BRG IN-SX
Q	1247	0	1247	0	0	5-8	1-8
J	1255	0	1255	0	0	5-8	1-8

UNFACTORED REACTIONS

JT	1ST LCASE COMBINED	MAX./MIN. COMPONENT REACTIONS SNOW	LIVE	PERM.LIVE	WIND	DEAD	SOIL
Q	883	573 / 0	0 / 0	0 / 0	0 / 0	309 / 0	0 / 0
J	888	578 / 0	0 / 0	0 / 0	0 / 0	310 / 0	0 / 0

BEARING MATERIAL TO BE SPF NO.2 OR BETTER AT JOINT(S) Q, J

BRACING

TOP CHORD TO BE SHEATHED OR MAX. PURLIN SPACING = 4.13 FT.
MAX. UNBRACED BOTTOM CHORD LENGTH = 7.81 FT OR RIGID CEILING DIRECTLY APPLIED.

ALL PITCH BREAKS AND PERIMETER CORNER JOINTS MUST BE LATERALLY RESTRAINED.

LOADING

TOTAL LOAD CASES: (4)

CHORDS

MEMB. FR-TO	MAX. FACTORED FORCE (LBS)	FACTORED VERT. LOAD LC1 (PLF) FROM	TO	MAX CSI (LC)	MAX. UNBRAC LENGTH
A- B	0 / 27	-84.9	-84.9	0.12 (1)	10.00
B- C	-1463 / 0	-84.9	-84.9	0.19 (1)	5.23
C- D	-1645 / 0	-84.9	-84.9	0.18 (1)	5.01
D- E	-1654 / 0	-84.9	-84.9	0.11 (1)	5.08
E- F	-1622 / 0	-84.9	-84.9	0.27 (1)	4.93
F- G	-2436 / 0	-84.9	-84.9	0.32 (1)	4.13
G- H	-2274 / 0	-84.9	-84.9	0.14 (1)	4.43
H- I	0 / 27	-84.9	-84.9	0.12 (1)	10.00
Q- B	-1212 / 0	0.0	0.0	0.12 (1)	7.27
J- H	-1147 / 0	0.0	0.0	0.12 (1)	7.42
Q- P	0 / 0	-18.5	-18.5	0.07 (4)	10.00
P- O	0 / 44	-18.5	-18.5	0.08 (4)	10.00
O- N	0 / 31	0.0	0.0	0.06 (1)	10.00
N- D	-292 / 0	0.0	0.0	0.06 (1)	7.81
N- M	0 / 1135	-18.5	-18.5	0.30 (4)	10.00
M- L	0 / 1708	-18.5	-18.5	0.38 (1)	10.00
K- L	0 / 17	0.0	0.0	0.21 (1)	10.00
L- G	-216 / 0	0.0	0.0	0.16 (1)	7.81
K- J	0 / 155	-18.5	-18.5	0.03 (1)	10.00

WEBS

MEMB. FR-TO	MAX. FACTORED FORCE (LBS)	MAX CSI (LC)
P- C	-534 / 0	0.10 (1)
C- N	0 / 160	0.04 (1)
N- E	0 / 706	0.16 (1)
E- M	0 / 649	0.15 (1)
M- F	-519 / 0	0.12 (1)
F- L	0 / 592	0.10 (1)
B- P	0 / 1352	0.30 (1)
L- J	-180 / 0	0.02 (1)
L- H	0 / 2008	0.45 (1)

DESIGN CRITERIA

SPECIFIED LOADS:

TOP CH.	LL	=	23.3	PSF
	DL	=	6.0	PSF
BOT CH.	LL	=	0.0	PSF
	DL	=	7.4	PSF
TOTAL LOAD		=	36.7	PSF

SPACING = 24.0 IN. C/C

THIS TRUSS IS DESIGNED FOR RESIDENTIAL OR SMALL BUILDING REQUIREMENTS OF PART 9, NBCC 2015

THIS DESIGN COMPLIES WITH:
- PART 9 OF BCBC 2018 , NBC-2019AE
- PART 9 OF OBC 2012 (2019 AMENDMENT)
- CSA 086-14
- TPIC 2014

DESIGN ASSUMPTIONS
-OVERHANG NOT TO BE ALTERED OR CUT OFF.

(55 % OF 27.2 P.S.F. G.S.L. PLUS 8.4 P.S.F. RAIN LOAD) EQUALS 23.3 P.S.F. SPECIFIED ROOF LIVE LOAD

ALLOWABLE DEFL.(LL)= L/360 (0.73")
CALCULATED VERT. DEFL.(LL) = L/ 999 (0.07")
ALLOWABLE DEFL.(TL)= L/360 (0.73")
CALCULATED VERT. DEFL.(TL) = L/ 999 (0.16")

CSI: TC=0.32/1.00 (F-G:1) , BC=0.38/1.00 (L-M:1) , WB=0.45/1.00 (H-L:1) , SSI=0.18/1.00 (F-G:1)

DOL LUMBER=1.00 NAIL=1.00 LS BEND=1.10 COMP=1.10 SHEAR=1.10 TENS= 1.10

COMPANION LIVE LOAD FACTOR = 1.00

TRUSS PLATE MANUFACTURER IS NOT RESPONSIBLE FOR QUALITY CONTROL IN THE TRUSS MANUFACTURING PLANT .

NAIL VALUES

PLATE	GRIP(DRY) (PSI) MAX	MIN	SHEAR (PLI) MAX	MIN	SECTION (PLI) MAX	MIN
MT20	650	371	1747	788	1987	1873

PLATE PLACEMENT TOL. = 0.250 inches

PLATE ROTATION TOL. = 5.0 Deg.

JSI GRIP= 0.75 (N) (INPUT = 0.90)
JSI METAL= 0.54 (H) (INPUT = 0.95)

JOB NAME	TRUSS NAME	QUANTITY	PLY	JOB DESC.	DRWG NO.
425913	T5	6	1	ROYAL PINE HOMES TRUSS DESC.	

Tamarack Roof Truss, Burlington

Version 8.630 S Aug 30 2023 MiTek Industries, Inc. Wed Feb 28 15:02:41 2024 Page 1
ID:VI_DQvi1e49Qy7axT?i10OzOYuG-ch5v9g?euFPidXdXszFRVgERPPVtPzKtmFYfrdzgawS

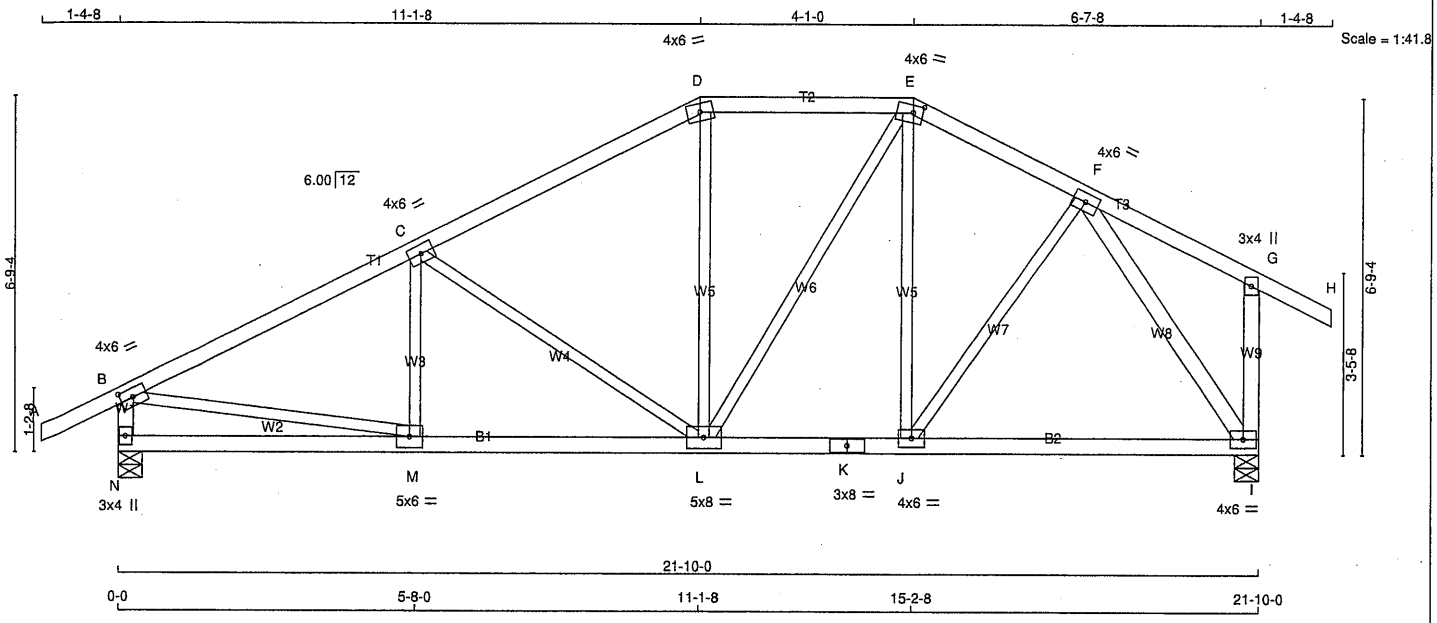

TOTAL WEIGHT = 6 X 99 = 596 lb

[M][F]

LUMBER

N. L. G. A. RULES

CHORDS	SIZE		LUMBER	DESCR.
A - D	2x4	DRY	No.2	SPF
D - E	2x4	DRY	No.2	SPF
E - H	2x4	DRY	No.2	SPF
N - B	2x4	DRY	No.2	SPF
I - G	2x4	DRY	No.2	SPF
N - K	2x4	DRY	No.2	SPF
K - I	2x4	DRY	No.2	SPF
ALL WEBS EXCEPT	2x3	DRY	No.2	SPF
F - I	2x4	DRY	No.2	SPF

DRY: SEASONED LUMBER.

PLATES (table is in inches)

JT	TYPE	PLATES	W	LEN	Y	X
B	TMVW-t	MT20	4.0	6.0	2.00	3.00
C	TMWW-t	MT20	4.0	6.0		
D	TTW-m	MT20	4.0	6.0		
E	TTWW-m	MT20	4.0	6.0	1.75	2.25
F	TMWW-t	MT20	4.0	6.0		
G	TMV+p	MT20	3.0	4.0		
I	BMVW1-t	MT20	4.0	6.0		
J	BMWW-t	MT20	4.0	6.0		
K	BS-t	MT20	3.0	8.0		
L	BMWWW-t	MT20	5.0	8.0		
M	BMWW-t	MT20	5.0	6.0		
N	BMV1+p	MT20	3.0	4.0		

NOTES- (1)
1) Lateral braces to be a minimum of 2X4 SPF #2.

DIMENSIONS, SUPPORTS AND LOADINGS SPECIFIED BY FABRICATOR TO BE VERIFIED BY BUILDING DESIGNER

BEARINGS

JT	FACTORED GROSS REACTION VERT	HORZ	MAXIMUM FACTORED GROSS REACTION DOWN	HORZ	UPLIFT	INPUT BRG IN-SX	REQRD BRG IN-SX
N	1251	0	1251	0	0	5-8	1-8
I	1251	0	1251	0	0	5-8	1-8

UNFACTORED REACTIONS

JT	1ST LCASE COMBINED	MAX./MIN. COMPONENT REACTIONS SNOW	LIVE	PERM.LIVE	WIND	DEAD	SOIL
N	885	576 / 0	0 / 0	0 / 0	0 / 0	310 / 0	0 / 0
I	885	576 / 0	0 / 0	0 / 0	0 / 0	310 / 0	0 / 0

BEARING MATERIAL TO BE SPF NO.2 OR BETTER AT JOINT(S) N, I

BRACING

TOP CHORD TO BE SHEATHED OR MAX. PURLIN SPACING = 4.95 FT.
MAX. UNBRACED BOTTOM CHORD LENGTH = 10.00 FT OR RIGID CEILING DIRECTLY APPLIED.

ALL PITCH BREAKS AND PERIMETER CORNER JOINTS MUST BE LATERALLY RESTRAINED.

LOADING

TOTAL LOAD CASES: (4)

CHORDS

MEMB. FR-TO	MAX. FACTORED FORCE (LBS)	FACTORED VERT. LOAD (PLF) FROM	TO	LC1 MAX CSI (LC)	MAX. UNBRAC LENGTH
A- B	0 / 27	-84.9	-84.9	0.12 (1)	10.00
B- C	-1502 / 0	-84.9	-84.9	0.37 (1)	4.95
C- D	-1088 / 0	-84.9	-84.9	0.35 (1)	5.63
D- E	-952 / 0	-84.9	-84.9	0.19 (1)	6.14
E- F	-930 / 0	-84.9	-84.9	0.12 (1)	6.25
F- G	0 / 15	-84.9	-84.9	0.15 (1)	10.00
G- H	0 / 27	-84.9	-84.9	0.12 (1)	10.00
N- B	-1207 / 0	0.0	0.0	0.12 (1)	7.29
I- G	-231 / 0	0.0	0.0	0.05 (1)	7.81
N- M	0 / 0	-18.5	-18.5	0.14 (4)	10.00
M- L	0 / 1365	-18.5	-18.5	0.29 (1)	10.00
L- K	0 / 817	-18.5	-18.5	0.25 (4)	10.00
K- J	0 / 817	-18.5	-18.5	0.25 (4)	10.00
J- I	0 / 670	-18.5	-18.5	0.23 (4)	10.00

WEBS

MEMB. FR-TO	MAX. FACTORED FORCE (LBS)	MAX CSI (LC)
M- C	-99 / 58	0.02 (1)
C- L	-500 / 0	0.41 (1)
L- D	0 / 129	0.04 (4)
L- E	0 / 258	0.06 (1)
J- E	-89 / 28	0.07 (1)
J- F	0 / 257	0.06 (1)
B- M	0 / 1382	0.31 (1)
F- I	-1177 / 0	0.47 (1)

DESIGN CRITERIA

SPECIFIED LOADS:

TOP CH.	LL	=	23.3	PSF
	DL	=	6.0	PSF
BOT CH.	LL	=	0.0	PSF
	DL	=	7.4	PSF
TOTAL LOAD		=	36.7	PSF

SPACING = 24.0 IN. C/C

LOADING IN FLAT SECTION BASED ON A SLOPE OF 6.00/12

THIS TRUSS IS DESIGNED FOR RESIDENTIAL OR SMALL BUILDING REQUIREMENTS OF PART 9, NBCC 2015

THIS DESIGN COMPLIES WITH:
- PART 9 OF BCBC 2018 , NBC-2019AE
- PART 9 OF OBC 2012 (2019 AMENDMENT)
- CSA 086-14
- TPIC 2014

(55 % OF 27.2 P.S.F. G.S.L. PLUS 8.4 P.S.F. RAIN LOAD) EQUALS 23.3 P.S.F. SPECIFIED ROOF LIVE LOAD

ALLOWABLE DEFL.(LL)= L/360 (0.73")
CALCULATED VERT. DEFL.(LL) = L/ 999 (0.04")
ALLOWABLE DEFL.(TL)= L/360 (0.73")
CALCULATED VERT. DEFL.(TL) = L/ 999 (0.08")

CSI: TC=0.37/1.00 (B-C:1) , BC=0.29/1.00 (L-M:1) , WB=0.47/1.00 (F-I:1) , SSI=0.21/1.00 (B-C:1)

DOL LUMBER=1.00 NAIL=1.00 LS BEND=1.10 COMP=1.10 SHEAR=1.10 TENS= 1.10

COMPANION LIVE LOAD FACTOR = 1.00

AUTOSOLVE LEFT HEEL ONLY

TRUSS PLATE MANUFACTURER IS NOT RESPONSIBLE FOR QUALITY CONTROL IN THE TRUSS MANUFACTURING PLANT .

NAIL VALUES

PLATE	GRIP(DRY) (PSI) MAX	MIN	SHEAR (PLI) MAX	MIN	SECTION (PLI) MAX	MIN
MT20	650	371	1747	788	1987	1873

PLATE PLACEMENT TOL. = 0.250 inches

PLATE ROTATION TOL. = 5.0 Deg.

JSI GRIP= 0.75 (E) (INPUT = 0.90)
JSI METAL= 0.38 (B) (INPUT = 0.95)

LICENSED PROFESSIONAL ENGINEER
02-28-24
H. J. G. ALVES
100009024
PROVINCE OF ONTARIO

Structural component only
DWG# T-2406398

JOB NAME	TRUSS NAME	QUANTITY	PLY	JOB DESC.	DRWG NO.
425913	T6	2	1	ROYAL PINE HOMES TRUSS DESC.	

Tamarack Roof Truss, Burlington

Version 8.630 S Aug 30 2023 MiTek Industries, Inc. Wed Feb 28 15:16:55 2024 Page 1
ID:sd0FDfbi38oVqvTaiRkhtSzPAoD-c_hIOhKKne?X4nwguJai6mcM_fx4VC9a86Qrp7zgaj6

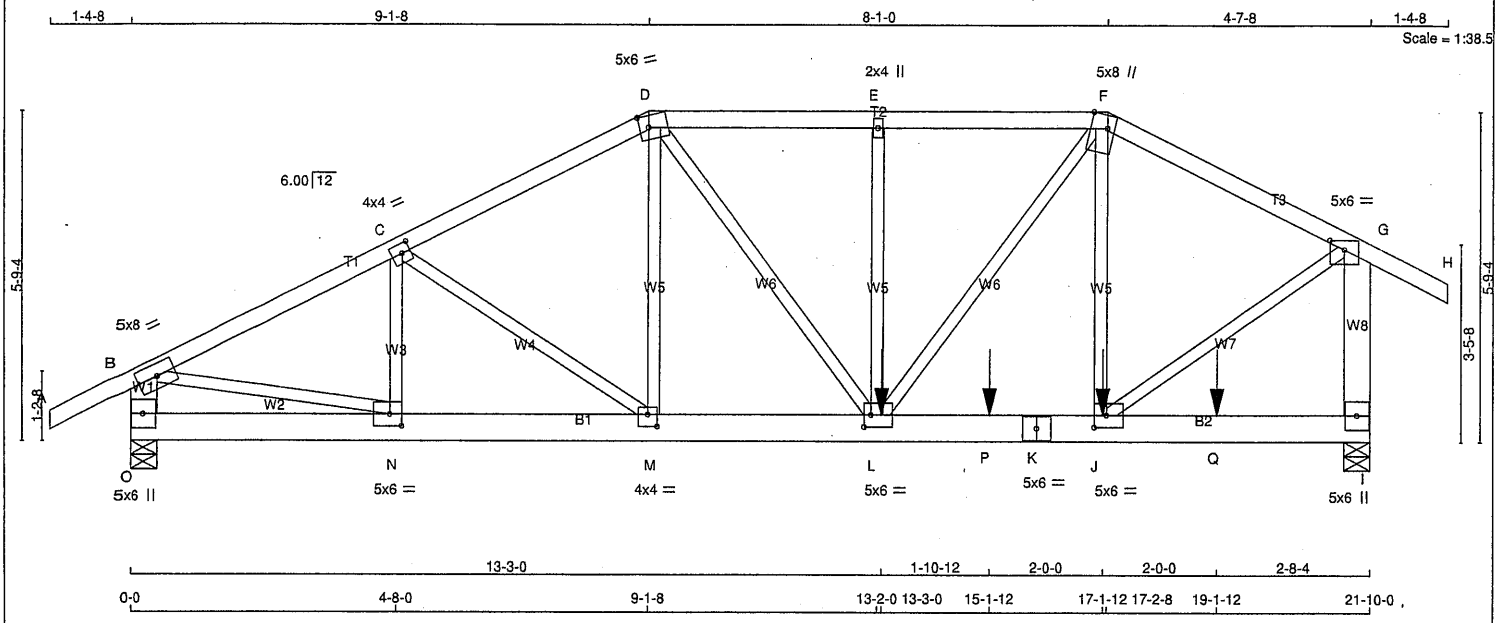

TOTAL WEIGHT = 2 X 113 = 225 lb

[M]

LUMBER

N. L. G. A. RULES

CHORDS	SIZE		LUMBER	DESCR.
A - D	2x4	DRY	No.2	SPF
D - F	2x4	DRY	No.2	SPF
F - H	2x4	DRY	No.2	SPF
O - B	2x6	DRY	No.2	SPF
I - G	2x6	DRY	No.2	SPF
O - K	2x6	DRY	No.2	SPF
K - I	2x6	DRY	No.2	SPF
ALL WEBS EXCEPT	2x3	DRY	No.2	SPF

DRY: SEASONED LUMBER.

PLATES (table is in inches)

JT	TYPE	PLATES	W	LEN	Y	X
B	TMVW-t	MT20	5.0	8.0		
C	TMWW-t	MT20	4.0	4.0	2.00	1.75
D	TTWW-m	MT20	5.0	6.0	2.50	2.00
E	TMW+w	MT20	2.0	4.0		
F	TTWW+m	MT20	5.0	8.0	Edge	3.50
G	TMVW-p	MT20	5.0	6.0	2.00	3.00
I	BMV1+p	MT20	5.0	6.0		
J	BMWW-t	MT20	5.0	6.0	2.50	2.50
K	BS-t	MT20	5.0	6.0		
L	BMWWW-t	MT20	5.0	6.0	2.50	1.50
M	BMWW-t	MT20	4.0	4.0	2.50	2.00
N	BMWW-t	MT20	5.0	6.0	2.50	2.50
O	BMV1+p	MT20	5.0	6.0		

Edge - INDICATES REFERENCE CORNER OF PLATE TOUCHES EDGE OF CHORD.

NOTES- (1)
1) Lateral braces to be a minimum of 2X4 SPF #2.

DIMENSIONS, SUPPORTS AND LOADINGS SPECIFIED BY FABRICATOR TO BE VERIFIED BY BUILDING DESIGNER

BEARINGS

JT	FACTORED GROSS REACTION VERT	HORZ	MAXIMUM FACTORED GROSS REACTION DOWN	HORZ	UPLIFT	INPUT BRG IN-SX	REQRD BRG IN-SX
O	1709	0	1709	0	0	5-8	1-14
I	2296	0	2296	0	0	5-8	2-8

UNFACTORED REACTIONS

JT	1ST LCASE COMBINED	MAX./MIN. COMPONENT REACTIONS SNOW	LIVE	PERM.LIVE	WIND	DEAD	SOIL
O	1208	793 / 0	0 / 0	0 / 0	0 / 0	415 / 0	0 / 0
I	1622	1076 / 0	0 / 0	0 / 0	0 / 0	546 / 0	0 / 0

BEARING MATERIAL TO BE SPF NO.2 OR BETTER AT JOINT(S) O, I

BRACING

TOP CHORD TO BE SHEATHED OR MAX. PURLIN SPACING = 4.10 FT.
MAX. UNBRACED BOTTOM CHORD LENGTH = 10.00 FT OR RIGID CEILING DIRECTLY APPLIED.

ALL PITCH BREAKS AND PERIMETER CORNER JOINTS MUST BE LATERALLY RESTRAINED.

LOADING

TOTAL LOAD CASES: (4)

CHORDS

MEMB. FR-TO	MAX. FACTORED FORCE (LBS)	FACTORED VERT. LOAD (PLF) FROM	TO	LC1	MAX CSI (LC)	MAX. UNBRAC LENGTH
A- B	0 / 27	-84.9	-84.9	0.14 (1)	10.00	
B- C	-2259 / 0	-84.9	-84.9	0.42 (1)	4.10	
C- D	-2139 / 0	-84.9	-84.9	0.40 (1)	4.21	
D- E	-2230 / 0	-84.9	-84.9	0.31 (1)	4.23	
E- F	-2230 / 0	-84.9	-84.9	0.31 (1)	4.23	
F- G	-1810 / 0	-84.9	-84.9	0.43 (1)	4.46	
G- H	0 / 27	-84.9	-84.9	0.14 (1)	10.00	
O- B	-1653 / 0	0.0	0.0	0.12 (1)	7.64	
I- G	-2179 / 0	0.0	0.0	0.28 (1)	6.87	
O- N	0 / 0	-18.5	-18.5	0.06 (1)	10.00	
N- M	0 / 2037	-18.5	-18.5	0.31 (1)	10.00	
M- L	0 / 1898	-18.5	-18.5	0.28 (1)	10.00	
L- P	0 / 1611	-18.5	-18.5	0.39 (1)	10.00	
P- K	0 / 1611	-18.5	-18.5	0.39 (1)	10.00	
K- J	0 / 1611	-18.5	-18.5	0.39 (1)	10.00	
J- Q	0 / 0	-18.5	-18.5	0.18 (1)	10.00	
Q- I	0 / 0	-18.5	-18.5	0.18 (1)	10.00	

WEBS

MEMB. FR-TO	MAX. FACTORED FORCE (LBS)	MAX CSI (LC)
N- C	-307 / 0	0.07 (1)
C- M	-174 / 0	0.09 (1)
M- D	0 / 224	0.06 (1)
D- L	0 / 553	0.14 (1)
L- E	-407 / 0	0.20 (1)
L- F	0 / 1031	0.26 (1)
B- N	0 / 2068	0.51 (1)
J- F	-349 / 0	0.17 (1)
J- G	0 / 1928	0.48 (1)

SPECIFIED CONCENTRATED LOADS (LBS)

JT	LOC.	LC1	MAX-	MAX+	FACE	DIR.	TYPE	HEEL	CONN.
J	17-1-12	-155	-155	---	FRONT	VERT	TOTAL	---	C1
L	13-3-0	-546	-546	---	FRONT	VERT	TOTAL	---	C1
P	15-1-12	-155	-155	---	FRONT	VERT	TOTAL	---	C1
Q	19-1-12	-204	-204	---	FRONT	VERT	TOTAL	---	C1

CONNECTION REQUIREMENTS

1) **C1:** A SUITABLE HANGER/MECHANICAL CONNECTION IS REQUIRED.

DESIGN CRITERIA

SPECIFIED LOADS:

TOP CH.	LL	=	23.3	PSF
	DL	=	6.0	PSF
BOT CH.	LL	=	0.0	PSF
	DL	=	7.4	PSF
TOTAL LOAD		=	36.7	PSF

SPACING = 24.0 IN. C/C

LOADING IN FLAT SECTION BASED ON A SLOPE OF 6.00/12

THIS TRUSS IS DESIGNED FOR RESIDENTIAL OR SMALL BUILDING REQUIREMENTS OF PART 9, NBCC 2015

THIS DESIGN COMPLIES WITH:
- PART 9 OF BCBC 2018 , NBC-2019AE
- PART 9 OF OBC 2012 (2019 AMENDMENT)
- CSA 086-14
- TPIC 2014

(55 % OF 27.2 P.S.F. G.S.L. PLUS 8.4 P.S.F. RAIN LOAD) EQUALS 23.3 P.S.F. SPECIFIED ROOF LIVE LOAD

ALLOWABLE DEFL.(LL)= L/360 (0.73")
CALCULATED VERT. DEFL.(LL) = L/ 999 (0.06")
ALLOWABLE DEFL.(TL)= L/360 (0.73")
CALCULATED VERT. DEFL.(TL) = L/ 999 (0.11")

CSI: TC=0.43/1.00 (F-G:1) , BC=0.39/1.00 (J-L:1) , WB=0.51/1.00 (B-N:1) , SSI=0.18/1.00 (B-C:1)

DOL LUMBER=1.00 NAIL=1.00 LS BEND=1.00 COMP=1.00 SHEAR=1.00 TENS= 1.00

COMPANION LIVE LOAD FACTOR = 1.00

AUTOSOLVE HEELS OFF

TRUSS PLATE MANUFACTURER IS NOT RESPONSIBLE FOR QUALITY CONTROL IN THE TRUSS MANUFACTURING PLANT .

NAIL VALUES

PLATE	GRIP(DRY) (PSI) MAX	MIN	SHEAR (PLI) MAX	MIN	SECTION (PLI) MAX	MIN
MT20	650	371	1747	788	1987	1873

PLATE PLACEMENT TOL. = 0.250 inches

PLATE ROTATION TOL. = 5.0 Deg.

JSI GRIP= 0.80 (D) (INPUT = 0.90)
JSI METAL= 0.46 (N) (INPUT = 0.95)

LICENSED PROFESSIONAL ENGINEER
02-28-24
H. J. G. ALVES
100009024
PROVINCE OF ONTARIO

Structural component only
DWG# T-2406399

JOB NAME	TRUSS NAME	QUANTITY	PLY	JOB DESC.	DRWG NO.
425913	T7	2	1	ROYAL PINE HOMES TRUSS DESC.	

Tamarack Roof Truss, Burlington

Version 8.630 S Aug 30 2023 MiTek Industries, Inc. Wed Feb 28 15:02:44 2024 Page 1
ID:sd0FDfbi38oVqvTaiRkhtSzPAoD-0Gm1ni1XBAoHU?M6Y5o86JswscXmcNhJSCnJRyzgawP

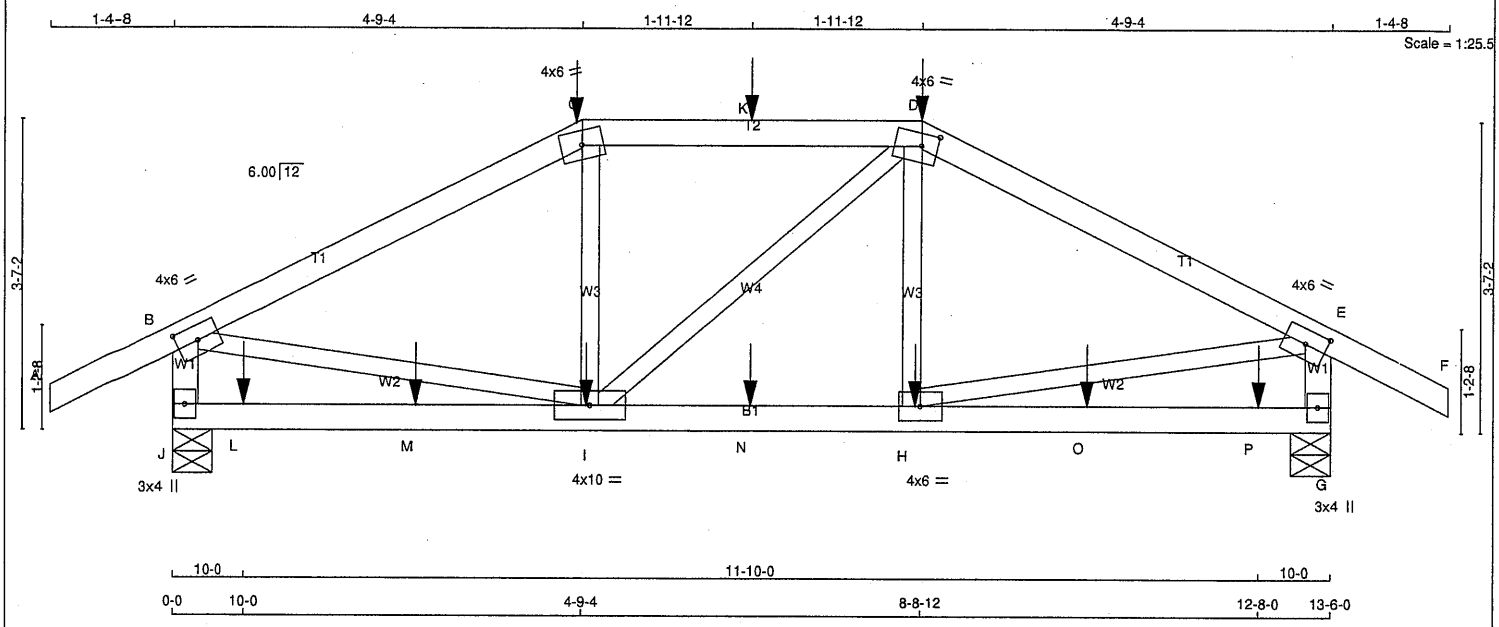

TOTAL WEIGHT = 2 X 54 = 107 lb [M]

LUMBER
N. L. G. A. RULES

CHORDS	SIZE		LUMBER	DESCR.
A - C	2x4	DRY	No.2	SPF
C - D	2x4	DRY	No.2	SPF
D - F	2x4	DRY	No.2	SPF
J - B	2x4	DRY	No.2	SPF
G - E	2x4	DRY	No.2	SPF
J - G	2x4	DRY	No.2	SPF
ALL WEBS EXCEPT	2x3	DRY	No.2	SPF

DRY: SEASONED LUMBER.

PLATES (table is in inches)

JT	TYPE	PLATES	W	LEN	Y	X
B	TMVW-t	MT20	4.0	6.0	2.00	3.00
C	TTW-m	MT20	4.0	6.0		
D	TTWW-m	MT20	4.0	6.0	1.75	2.25
E	TMVW-t	MT20	4.0	6.0	2.00	3.00
G	BMV1+p	MT20	3.0	4.0		
H	BMWW-t	MT20	4.0	6.0		
I	BMWWW-t	MT20	4.0	10.0		
J	BMV1+p	MT20	3.0	4.0		

NOTES- (1)
1) Lateral braces to be a minimum of 2X4 SPF #2.

DIMENSIONS, SUPPORTS AND LOADINGS SPECIFIED BY FABRICATOR TO BE VERIFIED BY BUILDING DESIGNER

BEARINGS

JT	FACTORED GROSS REACTION VERT	HORZ	MAXIMUM FACTORED GROSS REACTION DOWN	HORZ	UPLIFT	INPUT BRG IN-SX	REQRD BRG IN-SX
J	1218	0	1218	0	0	5-8	1-8
G	1219	0	1219	0	0	5-8	1-8

UNFACTORED REACTIONS

JT	1ST LCASE COMBINED	MAX./MIN. COMPONENT REACTIONS SNOW	LIVE	PERM.LIVE	WIND	DEAD	SOIL
J	862	562 / 0	0 / 0	0 / 0	0 / 0	300 / 0	0 / 0
G	863	562 / 0	0 / 0	0 / 0	0 / 0	301 / 0	0 / 0

BEARING MATERIAL TO BE SPF NO.2 OR BETTER AT JOINT(S) J, G

BRACING
TOP CHORD TO BE SHEATHED OR MAX. PURLIN SPACING = 5.00 FT.
MAX. UNBRACED BOTTOM CHORD LENGTH = 10.00 FT OR RIGID CEILING DIRECTLY APPLIED.

ALL PITCH BREAKS AND PERIMETER CORNER JOINTS MUST BE LATERALLY RESTRAINED.

LOADING
TOTAL LOAD CASES: (4)

CHORDS

MEMB. FR-TO	MAX. FACTORED FORCE (LBS)	FACTORED VERT. LOAD (PLF) FROM	TO	LC1	MAX CSI (LC)	MAX. UNBRAC LENGTH
A- B	0 / 27	-84.9	-84.9	0.14 (1)	10.00	
B- C	-1364 / 0	-84.9	-84.9	0.42 (1)	5.00	
C- K	-1214 / 0	-84.9	-84.9	0.40 (1)	5.23	
K- D	-1214 / 0	-84.9	-84.9	0.40 (1)	5.23	
D- E	-1359 / 0	-84.9	-84.9	0.42 (1)	5.00	
E- F	0 / 27	-84.9	-84.9	0.14 (1)	10.00	
J- B	-1158 / 0	0.0	0.0	0.13 (1)	7.37	
G- E	-1159 / 0	0.0	0.0	0.13 (1)	7.37	
J- L	0 / 0	-18.5	-18.5	0.15 (4)	10.00	
L- M	0 / 0	-18.5	-18.5	0.15 (4)	10.00	
M- I	0 / 0	-18.5	-18.5	0.15 (4)	10.00	
I- N	0 / 1212	-18.5	-18.5	0.27 (1)	10.00	
N- H	0 / 1212	-18.5	-18.5	0.27 (1)	10.00	
H- O	0 / 0	-18.5	-18.5	0.15 (4)	10.00	
O- P	0 / 0	-18.5	-18.5	0.15 (4)	10.00	
P- G	0 / 0	-18.5	-18.5	0.15 (4)	10.00	

WEBS

MEMB. FR-TO	MAX. FACTORED FORCE (LBS)	MAX CSI (LC)
I- C	-95 / 66	0.03 (4)
I- D	0 / 3	0.00 (4)
H- D	-98 / 64	0.02 (4)
B- I	0 / 1239	0.31 (1)
H- E	0 / 1236	0.31 (1)

SPECIFIED CONCENTRATED LOADS (LBS)

JT	LOC.	LC1	MAX-	MAX+	FACE	DIR.	TYPE	HEEL	CONN.
C	4-9-4	-30	-30	---	FRONT	VERT	DEAD	---	C1
C	4-9-4	-61	-61	---	FRONT	VERT	TOTAL	---	C1
C	4-9-4	-115	-115	---	FRONT	VERT	SNOW	---	C1
D	8-8-12	-30	-30	---	FRONT	VERT	DEAD	---	C1
D	8-8-12	-61	-61	---	FRONT	VERT	TOTAL	---	C1
D	8-8-12	-115	-115	---	FRONT	VERT	SNOW	---	C1
H	8-8-0	-14	-14	---	FRONT	VERT	TOTAL	---	C1
I	4-10-0	-14	-14	---	FRONT	VERT	TOTAL	---	C1
K	6-9-0	-55	-55	---	FRONT	VERT	TOTAL	---	C1
L	10-0	-15	-15	---	FRONT	VERT	TOTAL	---	C1
M	2-10-0	-14	-14	---	FRONT	VERT	TOTAL	---	C1
N	6-9-0	-14	-14	---	FRONT	VERT	TOTAL	---	C1
O	10-8-0	-14	-14	---	FRONT	VERT	TOTAL	---	C1
P	12-8-0	-15	-15	---	FRONT	VERT	TOTAL	---	C1

CONNECTION REQUIREMENTS

1) **C1:** A SUITABLE HANGER/MECHANICAL CONNECTION IS REQUIRED.

DESIGN CRITERIA

*** SPECIAL LOADS ANALYSIS ***
GEOMETRY AND/OR BASIC LOADS CHANGED BY USER.
LOADS WERE DERIVED FROM USER INPUT
NO FURTHER MODIFICATIONS WERE MADE

SPECIFIED LOADS:

TOP CH.	LL	=	23.3	PSF
	DL	=	6.0	PSF
BOT CH.	LL	=	0.0	PSF
	DL	=	7.4	PSF
TOTAL LOAD		=	36.7	PSF

SPACING = 24.0 IN. C/C

LOADING IN FLAT SECTION BASED ON A SLOPE OF 6.00/12

*** NON STANDARD GIRDER ***
ADDT'L USER-DEFINED LOADS APPLIED TO ALL LOAD CASES.

THIS TRUSS IS DESIGNED FOR RESIDENTIAL OR SMALL BUILDING REQUIREMENTS OF PART 9, NBCC 2015

THIS DESIGN COMPLIES WITH:
- PART 9 OF BCBC 2018 , NBC-2019AE
- PART 9 OF OBC 2012 (2019 AMENDMENT)
- CSA 086-14
- TPIC 2014

(55 % OF 27.2 P.S.F. G.S.L. PLUS 8.4 P.S.F. RAIN LOAD) EQUALS 23.3 P.S.F. SPECIFIED ROOF LIVE LOAD

ALLOWABLE DEFL.(LL)= L/360 (0.45")
CALCULATED VERT. DEFL.(LL) = L/ 999 (0.03")
ALLOWABLE DEFL.(TL)= L/360 (0.45")
CALCULATED VERT. DEFL.(TL) = L/ 999 (0.05")

CSI: TC=0.42/1.00 (B-C:1) , BC=0.27/1.00 (H-I:1) , WB=0.31/1.00 (B-I:1) , SSI=0.18/1.00 (C-D:1)

DOL LUMBER=1.00 NAIL=1.00 LS BEND=1.00 COMP=1.00 SHEAR=1.00 TENS= 1.00

COMPANION LIVE LOAD FACTOR = 1.00

TRUSS PLATE MANUFACTURER IS NOT RESPONSIBLE FOR QUALITY CONTROL IN THE TRUSS MANUFACTURING PLANT .

NAIL VALUES

PLATE	GRIP(DRY) (PSI) MAX	MIN	SHEAR (PLI) MAX	MIN	SECTION (PLI) MAX	MIN
MT20	650	371	1747	788	1987	1873

PLATE PLACEMENT TOL. = 0.250 inches

PLATE ROTATION TOL. = 5.0 Deg.

JSI GRIP= 0.75 (H) (INPUT = 0.90)
JSI METAL= 0.34 (B) (INPUT = 0.95)

LICENSED PROFESSIONAL ENGINEER
02-28-24
H. J. G. ALVES
100009024
PROVINCE OF ONTARIO

Structural component only
DWG# T-2406400

JOB NAME	TRUSS NAME	QUANTITY	PLY	JOB DESC.	DRWG NO.
425913	T8	2	1	ROYAL PINE HOMES TRUSS DESC.	

Tamarack Roof Truss, Burlington

Version 8.630 S Aug 30 2023 MiTek Industries, Inc. Wed Feb 28 15:02:45 2024 Page 1
ID:sd0FDfbi38oVqvTaiRkhtSzPAoD-USKQ_229yUw869xJ5pKNfWP9w0suLrnShsWs_OzgawO

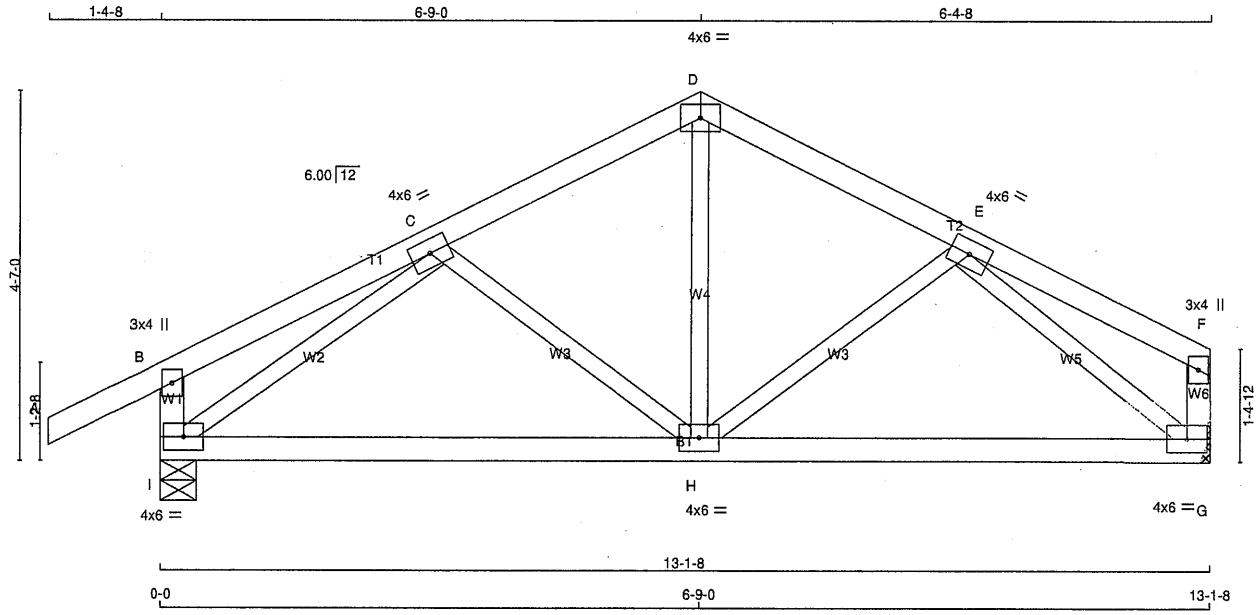

TOTAL WEIGHT = 2 X 52 = 103 lb
[M][F]

LUMBER
N. L. G. A. RULES

CHORDS	SIZE		LUMBER	DESCR.
A - D	2x4	DRY	No.2	SPF
D - F	2x4	DRY	No.2	SPF
I - B	2x4	DRY	No.2	SPF
G - F	2x4	DRY	No.2	SPF
I - G	2x4	DRY	No.2	SPF
ALL WEBS EXCEPT	2x3	DRY	No.2	SPF

DRY: SEASONED LUMBER.

PLATES (table is in inches)

JT	TYPE	PLATES	W	LEN	Y	X
B	TMV+p	MT20	3.0	4.0		
C	TMWW-t	MT20	4.0	6.0		
D	TTW-p	MT20	4.0	6.0		
E	TMWW-t	MT20	4.0	6.0		
F	TMV+p	MT20	3.0	4.0		
G	BMVW1-t	MT20	4.0	6.0		
H	BMWWW-t	MT20	4.0	6.0		
I	BMVW1-t	MT20	4.0	6.0		

NOTES- (1)
1) Lateral braces to be a minimum of 2X4 SPF #2.

DIMENSIONS, SUPPORTS AND LOADINGS SPECIFIED BY FABRICATOR TO BE VERIFIED BY BUILDING DESIGNER

BEARINGS

JT	FACTORED GROSS REACTION VERT	HORZ	MAXIMUM FACTORED GROSS REACTION DOWN	HORZ	UPLIFT	INPUT BRG IN-SX	REQRD BRG IN-SX
I	801	0	801	0	0	5-8	1-8
G	678	0	678	0	0	MECHANICAL	

A SUITABLE HANGER/MECHANICAL CONNECTION IS REQUIRED AT JOINT G. MINIMUM BEARING LENGTH AT JOINT G = 1-8.

UNFACTORED REACTIONS

JT	1ST LCASE COMBINED	MAX./MIN. COMPONENT REACTIONS SNOW	LIVE	PERM.LIVE	WIND	DEAD	SOIL
I	566	373 / 0	0 / 0	0 / 0	0 / 0	193 / 0	0 / 0
G	482	306 / 0	0 / 0	0 / 0	0 / 0	176 / 0	0 / 0

BEARING MATERIAL TO BE SPF NO.2 OR BETTER AT JOINT(S) I

BRACING
TOP CHORD TO BE SHEATHED OR MAX. PURLIN SPACING = 6.25 FT.
MAX. UNBRACED BOTTOM CHORD LENGTH = 10.00 FT OR RIGID CEILING DIRECTLY APPLIED.

ALL PITCH BREAKS AND PERIMETER CORNER JOINTS MUST BE LATERALLY RESTRAINED.

LOADING
TOTAL LOAD CASES: (4)

CHORDS

MEMB. FR-TO	MAX. FACTORED FORCE (LBS)	FACTORED VERT. LOAD (PLF) FROM	TO	LC1 CSI (LC)	MAX UNBRAC LENGTH
A- B	0 / 27	-84.9	-84.9	0.12 (1)	10.00
B- C	0 / 14	-84.9	-84.9	0.15 (1)	10.00
C- D	-619 / 0	-84.9	-84.9	0.11 (1)	6.25
D- E	-618 / 0	-84.9	-84.9	0.10 (1)	6.25
E- F	0 / 14	-84.9	-84.9	0.13 (1)	10.00
I- B	-235 / 0	0.0	0.0	0.02 (1)	7.81
G- F	-97 / 0	0.0	0.0	0.01 (1)	7.81
I- H	0 / 675	-18.5	-18.5	0.28 (4)	10.00
H- G	0 / 624	-18.5	-18.5	0.28 (4)	10.00

WEBS

MEMB. FR-TO	MAX. FACTORED FORCE (LBS)	MAX CSI (LC)
C- H	-168 / 0	0.05 (1)
H- D	0 / 315	0.07 (1)
H- E	-104 / 10	0.03 (1)
I- C	-850 / 0	0.25 (1)
E- G	-823 / 0	0.22 (1)

DESIGN CRITERIA

SPECIFIED LOADS:

TOP CH.	LL =	23.3	PSF
	DL =	6.0	PSF
BOT CH.	LL =	0.0	PSF
	DL =	7.4	PSF
TOTAL LOAD	=	36.7	PSF

SPACING = 24.0 IN. C/C

THIS TRUSS IS DESIGNED FOR RESIDENTIAL OR SMALL BUILDING REQUIREMENTS OF PART 9, NBCC 2015

THIS DESIGN COMPLIES WITH:
- PART 9 OF BCBC 2018 , NBC-2019AE
- PART 9 OF OBC 2012 (2019 AMENDMENT)
- CSA 086-14
- TPIC 2014

(55 % OF 27.2 P.S.F. G.S.L. PLUS 8.4 P.S.F. RAIN LOAD) EQUALS 23.3 P.S.F. SPECIFIED ROOF LIVE LOAD

ALLOWABLE DEFL.(LL)= L/360 (0.44")
CALCULATED VERT. DEFL.(LL) = L/ 999 (0.01")
ALLOWABLE DEFL.(TL)= L/360 (0.44")
CALCULATED VERT. DEFL.(TL) = L/ 999 (0.06")

CSI: TC=0.15/1.00 (B-C:1) , BC=0.28/1.00 (H-I:4) , WB=0.25/1.00 (C-I:1) , SSI=0.12/1.00 (B-C:1)

DOL LUMBER=1.00 NAIL=1.00 LS BEND=1.10 COMP=1.10 SHEAR=1.10 TENS= 1.10

COMPANION LIVE LOAD FACTOR = 1.00

AUTOSOLVE HEELS OFF

TRUSS PLATE MANUFACTURER IS NOT RESPONSIBLE FOR QUALITY CONTROL IN THE TRUSS MANUFACTURING PLANT .

NAIL VALUES

PLATE	GRIP(DRY) (PSI) MAX	MIN	SHEAR (PLI) MAX	MIN	SECTION (PLI) MAX	MIN
MT20	650	371	1747	788	1987	1873

PLATE PLACEMENT TOL. = 0.250 inches

PLATE ROTATION TOL. = 5.0 Deg.

JSI GRIP= 0.42 (I) (INPUT = 0.90)
JSI METAL= 0.17 (C) (INPUT = 0.95)

LICENSED PROFESSIONAL ENGINEER
02-28-24
H. J. G. ALVES
100009024
PROVINCE OF ONTARIO

Structural component only
DWG# T-2406401

JOB NAME	TRUSS NAME	QUANTITY	PLY	JOB DESC.	DRWG NO.
425913	T9	2	1	ROYAL PINE HOMES TRUSS DESC.	

Tamarack Roof Truss, Burlington

Version 8.630 S Aug 30 2023 MiTek Industries, Inc. Wed Feb 28 15:02:46 2024 Page 1
ID:sd0FDfbi38oVqvTaiRkhtSzPAoD-zfuoCO3njo2_jJWVfWrcCkxHlQCx4HTcwWGQWrzgawN

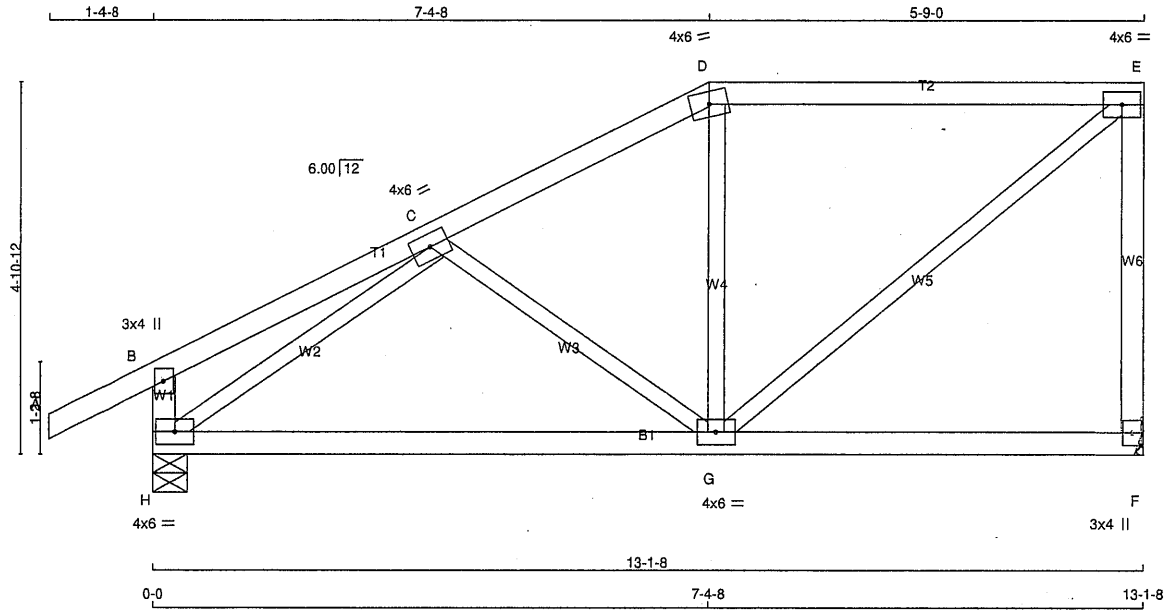

TOTAL WEIGHT = 2 X 55 = 109 lb
[M][F]

LUMBER
N. L. G. A. RULES

CHORDS	SIZE		LUMBER	DESCR.
A - D	2x4	DRY	No.2	SPF
D - E	2x4	DRY	No.2	SPF
F - E	2x4	DRY	No.2	SPF
H - B	2x4	DRY	No.2	SPF
H - F	2x4	DRY	No.2	SPF
ALL WEBS EXCEPT	2x3	DRY	No.2	SPF

DRY: SEASONED LUMBER.

PLATES (table is in inches)

JT	TYPE	PLATES	W	LEN	Y	X
B	TMV+p	MT20	3.0	4.0		
C	TMWW-t	MT20	4.0	6.0		
D	TTW-m	MT20	4.0	6.0		
E	TMVW-t	MT20	4.0	6.0		
F	BMV1+p	MT20	3.0	4.0		
G	BMWWW-t	MT20	4.0	6.0		
H	BMVW1-t	MT20	4.0	6.0		

NOTES- (1)
1) Lateral braces to be a minimum of 2X4 SPF #2.

DIMENSIONS, SUPPORTS AND LOADINGS SPECIFIED BY FABRICATOR TO BE VERIFIED BY BUILDING DESIGNER

BEARINGS

JT	FACTORED GROSS REACTION VERT	HORZ	MAXIMUM FACTORED GROSS REACTION DOWN	HORZ	UPLIFT	INPUT BRG IN-SX	REQRD BRG IN-SX
F	678	0	678	0	0	MECHANICAL	
H	801	0	801	0	0	5-8	1-8

A SUITABLE HANGER/MECHANICAL CONNECTION IS REQUIRED AT JOINT F. MINIMUM BEARING LENGTH AT JOINT F = 1-8.

UNFACTORED REACTIONS

MAX./MIN. COMPONENT REACTIONS

JT	1ST LCASE COMBINED	SNOW	LIVE	PERM.LIVE	WIND	DEAD	SOIL
F	482	306 / 0	0 / 0	0 / 0	0 / 0	176 / 0	0 / 0
H	566	373 / 0	0 / 0	0 / 0	0 / 0	193 / 0	0 / 0

BEARING MATERIAL TO BE SPF NO.2 OR BETTER AT JOINT(S) H

BRACING
TOP CHORD TO BE SHEATHED OR MAX. PURLIN SPACING = 6.25 FT.
MAX. UNBRACED BOTTOM CHORD LENGTH = 10.00 FT OR RIGID CEILING DIRECTLY APPLIED.

ALL PITCH BREAKS AND PERIMETER CORNER JOINTS MUST BE LATERALLY RESTRAINED.

LOADING
TOTAL LOAD CASES: (4)

CHORDS

MEMB. FR-TO	MAX. FACTORED FORCE (LBS)	FACTORED VERT. LOAD (PLF) FROM	TO	LC1 CSI (LC)	MAX UNBRAC LENGTH
A- B	0 / 27	-84.9	-84.9	0.12 (1)	10.00
B- C	0 / 16	-84.9	-84.9	0.18 (1)	10.00
C- D	-568 / 0	-84.9	-84.9	0.14 (1)	6.25
D- E	-490 / 0	-84.9	-84.9	0.36 (1)	6.25
F- E	-643 / 0	0.0	0.0	0.25 (1)	7.81
H- B	-244 / 0	0.0	0.0	0.02 (1)	7.81
H- G	0 / 674	-18.5	-18.5	0.29 (4)	10.00
G- F	0 / 0	-18.5	-18.5	0.24 (4)	10.00

WEBS

MEMB. FR-TO	MAX. FACTORED FORCE (LBS)	MAX CSI (LC)
C- G	-223 / 0	0.08 (1)
G- D	-117 / 26	0.04 (1)
G- E	0 / 633	0.14 (1)
H- C	-839 / 0	0.29 (1)

DESIGN CRITERIA

SPECIFIED LOADS:

TOP CH.	LL	=	23.3	PSF
	DL	=	6.0	PSF
BOT CH.	LL	=	0.0	PSF
	DL	=	7.4	PSF
TOTAL LOAD		=	36.7	PSF

SPACING = 24.0 IN. C/C

LOADING IN FLAT SECTION BASED ON A SLOPE OF 6.00/12

THIS TRUSS IS DESIGNED FOR RESIDENTIAL OR SMALL BUILDING REQUIREMENTS OF PART 9, NBCC 2015

THIS DESIGN COMPLIES WITH:
- PART 9 OF BCBC 2018 , NBC-2019AE
- PART 9 OF OBC 2012 (2019 AMENDMENT)
- CSA 086-14
- TPIC 2014

(55 % OF 27.2 P.S.F. G.S.L. PLUS 8.4 P.S.F. RAIN LOAD) EQUALS 23.3 P.S.F. SPECIFIED ROOF LIVE LOAD

ALLOWABLE DEFL.(LL)= L/360 (0.44")
CALCULATED VERT. DEFL.(LL) = L/ 999 (0.01")
ALLOWABLE DEFL.(TL)= L/360 (0.44")
CALCULATED VERT. DEFL.(TL) = L/ 999 (0.09")

CSI: TC=0.36/1.00 (D-E:1) , BC=0.29/1.00 (G-H:4) , WB=0.29/1.00 (C-H:1) , SSI=0.19/1.00 (D-E:1)

DOL LUMBER=1.00 NAIL=1.00 LS BEND=1.10 COMP=1.10 SHEAR=1.10 TENS= 1.10

COMPANION LIVE LOAD FACTOR = 1.00

TRUSS PLATE MANUFACTURER IS NOT RESPONSIBLE FOR QUALITY CONTROL IN THE TRUSS MANUFACTURING PLANT .

NAIL VALUES

PLATE	GRIP(DRY) (PSI) MAX	MIN	SHEAR (PLI) MAX	MIN	SECTION (PLI) MAX	MIN
MT20	650	371	1747	788	1987	1873

PLATE PLACEMENT TOL. = 0.250 inches

PLATE ROTATION TOL. = 5.0 Deg.

JSI GRIP= 0.75 (G) (INPUT = 0.90)
JSI METAL= 0.18 (G) (INPUT = 0.95)

LICENSED PROFESSIONAL ENGINEER
02-28-24
H. J. G. ALVES
100009024
PROVINCE OF ONTARIO

Structural component only
DWG# T-2406402

JOB NAME	TRUSS NAME	QUANTITY	PLY	JOB DESC.	DRWG NO.
425913	T10	2	2	ROYAL PINE HOMES TRUSS DESC.	

Tamarack Roof Truss, Burlington

Version 8.630 S Aug 30 2023 MiTek Industries, Inc. Wed Feb 28 15:02:47 2024 Page 1
ID:sd0FDfbi38oVqvTaiRkhtSzPAoD-RrSAPk4PU5ArLS5hDDMrkxUV1pX7poDl8A?z2HzgawM

Scale: 3/8"=1'

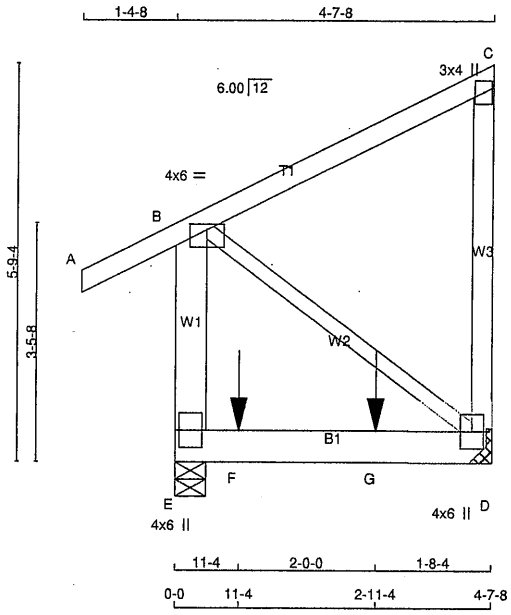

TOTAL WEIGHT = 4 X 31 = 124 lb

[M]

LUMBER

N. L. G. A. RULES

CHORDS	SIZE		LUMBER	DESCR.
A - C	2x4	DRY	No.2	SPF
D - C	2x4	DRY	No.2	SPF
E - B	2x6	DRY	No.2	SPF
E - D	2x6	DRY	No.2	SPF
ALL WEBS	2x3	DRY	No.2	SPF

DRY: SEASONED LUMBER.

DESIGN CONSISTS OF 2 TRUSSES BUILT SEPARATELY THEN FASTENED TOGETHER AS FOLLOWS:

CHORDS	#ROWS	SURFACE SPACING (IN)	LOAD(PLF)
TOP CHORDS : (0.122"X3") SPIRAL NAILS			
A- C	1	12	TOP
C- D	1	12	TOP
E- B	2	12	TOP
BOTTOM CHORDS : (0.122"X3") SPIRAL NAILS			
E- D	2	12	SIDE(0.0)
WEBS : (0.122"X3") SPIRAL NAILS			
2x3	1	6	

NAILS TO BE DRIVEN FROM ONE SIDE ONLY.

GIRDER NAILING ASSUMES NAILED HANGERS ARE FASTENED WITH MIN. 3-0 INCH NAILS.

TOP - COMPONENTS ARE LOADED FROM THE TOP AND MUST BE PLACED ON TOP EDGE OF ALL PLIES FOR THE LOAD TO BE TRANSFERRED TO EACH PLY.

SIDE - PLF SHOWN IS THE EQUIVALENT UDL APPLIED TO ONE SIDE THAT THE CORRESPONDING NAILING PATTERN SHALL BE CAPABLE OF TRANSFERING. REMAINING PLF MUST BE APPLIED ON THE OPPOSITE SIDE OR ON THE TOP.

PLATES (table is in inches)

JT	TYPE	PLATES	W	LEN	Y	X
B	TMVW-p	MT20	4.0	6.0	1.00	3.00
C	TMV+p	MT20	3.0	4.0		
D	BMVW1+p	MT20	4.0	6.0		
E	BMV1+p	MT20	4.0	6.0		

Structural component only
DWG# T-2406403

DIMENSIONS, SUPPORTS AND LOADINGS SPECIFIED BY FABRICATOR TO BE VERIFIED BY BUILDING DESIGNER

BEARINGS

JT	FACTORED GROSS REACTION VERT	HORZ	MAXIMUM FACTORED GROSS REACTION DOWN	HORZ	UPLIFT	INPUT BRG IN-SX	REQRD BRG IN-SX
D	792	0	792	0	0	MECHANICAL	
E	1129	0	1129	0	0	5-8	1-8

A SUITABLE HANGER/MECHANICAL CONNECTION IS REQUIRED AT JOINT D. MINIMUM BEARING LENGTH AT JOINT D = 1-8.

UNFACTORED REACTIONS

JT	1ST LCASE COMBINED	MAX./MIN. COMPONENT REACTIONS SNOW	LIVE	PERM.LIVE	WIND	DEAD	SOIL
D	561	364 / 0	0 / 0	0 / 0	0 / 0	197 / 0	0 / 0
E	797	530 / 0	0 / 0	0 / 0	0 / 0	267 / 0	0 / 0

BEARING MATERIAL TO BE SPF NO.2 OR BETTER AT JOINT(S) E

BRACING

TOP CHORD TO BE SHEATHED OR MAX. PURLIN SPACING = 10.00 FT.
MAX. UNBRACED BOTTOM CHORD LENGTH = 10.00 FT OR RIGID CEILING DIRECTLY APPLIED.

ALL PITCH BREAKS AND PERIMETER CORNER JOINTS MUST BE LATERALLY RESTRAINED.

LOADING

TOTAL LOAD CASES: (4)

CHORDS

MEMB. FR-TO	MAX. FACTORED FORCE (LBS)	FACTORED VERT. LOAD (PLF) FROM	TO	LC1 CSI (LC)	MAX. UNBRAC LENGTH
A- B	0 / 27	-84.9	-84.9	0.07 (1)	10.00
B- C	0 / 0	-84.9	-84.9	0.17 (1)	10.00
D- C	-196 / 0	0.0	0.0	0.06 (1)	7.81
E- B	-318 / 0	0.0	0.0	0.02 (1)	7.81
E- F	0 / 0	-18.5	-18.5	0.36 (1)	10.00
F- G	0 / 0	-18.5	-18.5	0.36 (1)	10.00
G- D	0 / 0	-18.5	-18.5	0.36 (1)	10.00

WEBS

MEMB. FR-TO	MAX. FACTORED FORCE (LBS)	MAX CSI (LC)
B- D	0 / 0	0.00 (1)

SPECIFIED CONCENTRATED LOADS (LBS)

JT	LOC.	LC1	MAX-	MAX+	FACE	DIR.	TYPE	HEEL	CONN.
F	11-4	-467	-467	---	BACK	VERT	TOTAL	---	C1
G	2-11-4	-467	-467	---	BACK	VERT	TOTAL	---	C1

CONNECTION REQUIREMENTS

1) **C1:** A SUITABLE HANGER/MECHANICAL CONNECTION IS REQUIRED.

DESIGN CRITERIA

SPECIFIED LOADS:

TOP	CH.	LL	=	23.3	PSF
		DL	=	6.0	PSF
BOT	CH.	LL	=	0.0	PSF
		DL	=	7.4	PSF
TOTAL	LOAD		=	36.7	PSF

SPACING = 24.0 IN. C/C

THIS TRUSS IS DESIGNED FOR RESIDENTIAL OR SMALL BUILDING REQUIREMENTS OF PART 9, NBCC 2015

THIS DESIGN COMPLIES WITH:
- PART 9 OF BCBC 2018 , NBC-2019AE
- PART 9 OF OBC 2012 (2019 AMENDMENT)
- CSA 086-14
- TPIC 2014

(55 % OF 27.2 P.S.F. G.S.L. PLUS 8.4 P.S.F. RAIN LOAD) EQUALS 23.3 P.S.F. SPECIFIED ROOF LIVE LOAD

ALLOWABLE DEFL.(LL)= L/360 (0.19")
CALCULATED VERT. DEFL.(LL) = L/ 999 (0.03")
ALLOWABLE DEFL.(TL)= L/360 (0.19")
CALCULATED VERT. DEFL.(TL) = L/ 999 (0.05")

CSI: TC=0.17/1.00 (B-C:1) , BC=0.36/1.00 (D-E:1) , WB=0.00/1.00 (B-D:1) , SSI=0.27/1.00 (D-E:1)

DOL LUMBER=1.00 NAIL=1.00 LS BEND=1.00 COMP=1.00 SHEAR=1.00 TENS= 1.00

COMPANION LIVE LOAD FACTOR = 1.00

AUTOSOLVE RIGHT HEEL ONLY

TRUSS PLATE MANUFACTURER IS NOT RESPONSIBLE FOR QUALITY CONTROL IN THE TRUSS MANUFACTURING PLANT .

NAIL VALUES

PLATE	GRIP(DRY) (PSI) MAX	MIN	SHEAR (PLI) MAX	MIN	SECTION (PLI) MAX	MIN
MT20	650	371	1747	788	1987	1873

PLATE PLACEMENT TOL. = 0.250 inches

PLATE ROTATION TOL. = 5.0 Deg.

JSI GRIP= 0.07 (B) (INPUT = 0.90)
JSI METAL= 0.03 (C) (INPUT = 0.95)

CONTINUED ON PAGE 2

JOB NAME	TRUSS NAME	QUANTITY	PLY	JOB DESC. ROYAL PINE HOMES	DRWG NO.
425913	T10	2	2	TRUSS DESC.	

NOTES- (1)
1) Lateral braces to be a minimum of 2X4 SPF #2.

LICENSED PROFESSIONAL ENGINEER
02-28-24
H. J. G. ALVES
100009024
PROVINCE OF ONTARIO

Structural component only
DWG# T-2406403

JOB NAME	TRUSS NAME	QUANTITY	PLY	JOB DESC.	DRWG NO.
425913	T11	8	1	ROYAL PINE HOMES TRUSS DESC.	

Tamarack Roof Truss, Burlington

Version 8.630 S Aug 30 2023 MiTek Industries, Inc. Wed Feb 28 15:02:48 2024 Page 1
ID:VI_DQvi1e49Qy7axT?i10OzOYuG-v10Yd441FPlizcgtnxt4H91gODyPYFYvNqlXajzgawL

Scale: 3/8"=1'

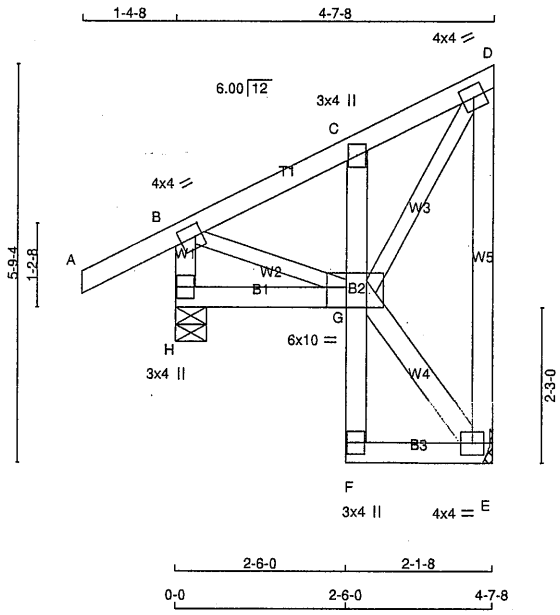

TOTAL WEIGHT = 8 X 32 = 259 lb

[M]

LUMBER

N. L. G. A. RULES

CHORDS	SIZE		LUMBER	DESCR.
A - D	2x4	DRY	No.2	SPF
E - D	2x4	DRY	No.2	SPF
H - B	2x4	DRY	No.2	SPF
H - G	2x4	DRY	No.2	SPF
F - C	2x4	DRY	No.2	SPF
F - E	2x4	DRY	No.2	SPF
ALL WEBS	2x3	DRY	No.2	SPF
EXCEPT				
G - E	2x4	DRY	No.2	SPF

DRY: SEASONED LUMBER.

PLATES (table is in inches)

JT	TYPE	PLATES	W	LEN	Y	X
B	TMVW-t	MT20	4.0	4.0	2.00	1.25
C	TMV+p	MT20	3.0	4.0		
D	TMVW-t	MT20	4.0	4.0		
E	BMVW1-t	MT20	4.0	4.0		
F	BMV+p	MT20	3.0	4.0		
G	BVMWWW-I	MT20	6.0	10.0	Edge	3.50
H	BMV1+p	MT20	3.0	4.0		

Edge - INDICATES REFERENCE CORNER OF PLATE TOUCHES EDGE OF CHORD.

NOTES- (1)
1) Lateral braces to be a minimum of 2X4 SPF #2.

DIMENSIONS, SUPPORTS AND LOADINGS SPECIFIED BY FABRICATOR TO BE VERIFIED BY BUILDING DESIGNER

BEARINGS

JT	FACTORED GROSS REACTION VERT	HORZ	MAXIMUM FACTORED GROSS REACTION DOWN	HORZ	UPLIFT	INPUT BRG IN-SX	REQRD BRG IN-SX
E	239	0	239	0	0	MECHANICAL	
H	361	0	361	0	0	5-8	1-8

A SUITABLE HANGER/MECHANICAL CONNECTION IS REQUIRED AT JOINT E. MINIMUM BEARING LENGTH AT JOINT E = 1-8.

UNFACTORED REACTIONS

JT	1ST LCASE COMBINED	MAX./MIN. COMPONENT REACTIONS SNOW	LIVE	PERM.LIVE	WIND	DEAD	SOIL
E	170	108 / 0	0 / 0	0 / 0	0 / 0	62 / 0	0 / 0
H	254	175 / 0	0 / 0	0 / 0	0 / 0	79 / 0	0 / 0

BEARING MATERIAL TO BE SPF NO.2 OR BETTER AT JOINT(S) H

BRACING

TOP CHORD TO BE SHEATHED OR MAX. PURLIN SPACING = 6.25 FT.
MAX. UNBRACED BOTTOM CHORD LENGTH = 7.81 FT OR RIGID CEILING DIRECTLY APPLIED.

ALL PITCH BREAKS AND PERIMETER CORNER JOINTS MUST BE LATERALLY RESTRAINED.

LOADING

TOTAL LOAD CASES: (4)

CHORDS

MEMB. FR-TO	MAX. FORCE (LBS)	FACTORED VERT. LOAD (PLF) FROM	TO	LC1 MAX CSI (LC)	MAX. UNBRAC LENGTH
A- B	0 / 27	-84.9	-84.9	0.12 (1)	10.00
B- C	-157 / 0	-84.9	-84.9	0.07 (1)	6.25
C- D	-163 / 0	-84.9	-84.9	0.07 (1)	6.25
E- D	-216 / 0	0.0	0.0	0.13 (1)	7.81
H- B	-337 / 0	0.0	0.0	0.03 (1)	7.81
H- G	0 / 0	-18.5	-18.5	0.04 (4)	10.00
F- G	0 / 21	0.0	0.0	0.02 (1)	10.00
G- C	-234 / 0	0.0	0.0	0.01 (1)	7.81
F- E	0 / 4	-18.5	-18.5	0.02 (4)	10.00

WEBS

MEMB. FR-TO	MAX. FORCE (LBS)	MAX CSI (LC)
B- G	0 / 156	0.04 (1)
G- E	-7 / 0	0.00 (1)
G- D	0 / 260	0.06 (1)

DESIGN CRITERIA

SPECIFIED LOADS:

TOP CH.	LL	=	23.3	PSF
	DL	=	6.0	PSF
BOT CH.	LL	=	0.0	PSF
	DL	=	7.4	PSF
TOTAL LOAD		=	36.7	PSF

SPACING = 24.0 IN. C/C

THIS TRUSS IS DESIGNED FOR RESIDENTIAL OR SMALL BUILDING REQUIREMENTS OF PART 9, NBCC 2015

THIS DESIGN COMPLIES WITH:
- PART 9 OF BCBC 2018 , NBC-2019AE
- PART 9 OF OBC 2012 (2019 AMENDMENT)
- CSA 086-14
- TPIC 2014

(55 % OF 27.2 P.S.F. G.S.L. PLUS 8.4 P.S.F. RAIN LOAD) EQUALS 23.3 P.S.F. SPECIFIED ROOF LIVE LOAD

ALLOWABLE DEFL.(LL)= L/360 (0.19")
CALCULATED VERT. DEFL.(LL) = L/ 999 (0.00")
ALLOWABLE DEFL.(TL)= L/360 (0.19")
CALCULATED VERT. DEFL.(TL) = L/ 999 (0.00")

CSI: TC=0.13/1.00 (D-E:1) , BC=0.04/1.00 (G-H:4) , WB=0.06/1.00 (D-G:1) , SSI=0.09/1.00 (B-C:1)

DOL LUMBER=1.00 NAIL=1.00 LS BEND=1.10 COMP=1.10 SHEAR=1.10 TENS= 1.10

COMPANION LIVE LOAD FACTOR = 1.00

AUTOSOLVE RIGHT HEEL ONLY

TRUSS PLATE MANUFACTURER IS NOT RESPONSIBLE FOR QUALITY CONTROL IN THE TRUSS MANUFACTURING PLANT .

NAIL VALUES

PLATE	GRIP(DRY) (PSI) MAX	MIN	SHEAR (PLI) MAX	MIN	SECTION (PLI) MAX	MIN
MT20	650	371	1747	788	1987	1873

PLATE PLACEMENT TOL. = 0.250 inches

PLATE ROTATION TOL. = 5.0 Deg.

JSI GRIP= 0.34 (D) (INPUT = 0.90)
JSI METAL= 0.09 (B) (INPUT = 0.95)

LICENSED PROFESSIONAL ENGINEER
02-28-24
H. J. G. ALVES
100009024
PROVINCE OF ONTARIO

Structural component only
DWG# T-2406404

JOB NAME	TRUSS NAME	QUANTITY	PLY	JOB DESC.	DRWG NO.
425913	T12	4	1	ROYAL PINE HOMES TRUSS DESC.	

Tamarack Roof Truss, Burlington

Version 8.630 S Aug 30 2023 MiTek Industries, Inc. Wed Feb 28 15:02:49 2024 Page 1

ID:sd0FDfbi38oVqvTaiRkhtSzPAoD-NDawqP5g0jQZarnF4KeOJpMZr2dINHhh2cUU479zgawK

Scale = 1:26.8

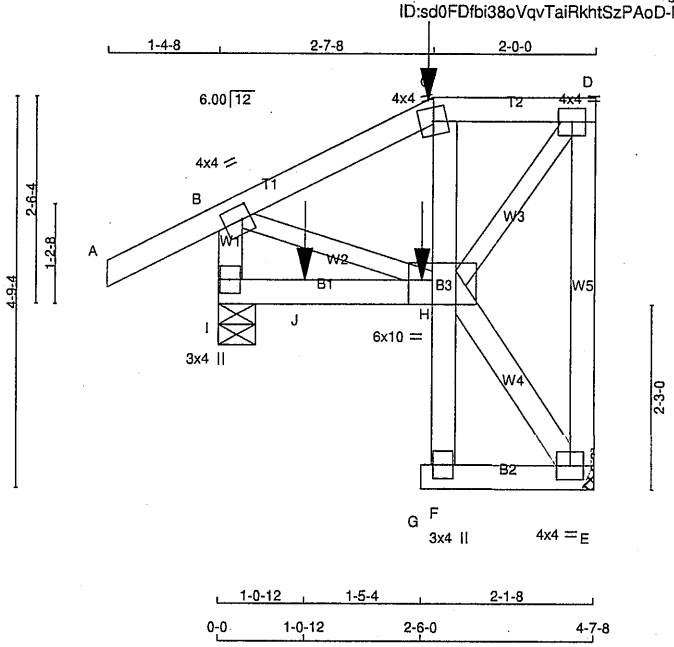

TOTAL WEIGHT = 4 X 30 = 122 lb

[M]

LUMBER

N. L. G. A. RULES

CHORDS	SIZE		LUMBER	DESCR.
A - C	2x4	DRY	No.2	SPF
C - D	2x4	DRY	No.2	SPF
E - D	2x4	DRY	No.2	SPF
I - B	2x4	DRY	No.2	SPF
I - H	2x4	DRY	No.2	SPF
F - C	2x4	DRY	No.2	SPF
G - E	2x4	DRY	No.2	SPF
ALL WEBS	2x3	DRY	No.2	SPF
EXCEPT				
H - E	2x4	DRY	No.2	SPF

DRY: SEASONED LUMBER.

PLATES (table is in inches)

JT	TYPE	PLATES	W	LEN	Y	X
B	TMVW-t	MT20	4.0	4.0	2.00	1.25
C	TTV-m	MT20	4.0	4.0		
D	TMVW-t	MT20	4.0	4.0		
E	BMVW1-t	MT20	4.0	4.0		
F	BMV+p	MT20	3.0	4.0		
H	BVMWWW-I	MT20	6.0	10.0	Edge 3.50	
I	BMV1+p	MT20	3.0	4.0		

Edge - INDICATES REFERENCE CORNER OF PLATE TOUCHES EDGE OF CHORD.

NOTES- (1)

1) Lateral braces to be a minimum of 2X4 SPF #2.

DIMENSIONS, SUPPORTS AND LOADINGS SPECIFIED BY FABRICATOR TO BE VERIFIED BY BUILDING DESIGNER

BEARINGS

JT	FACTORED GROSS REACTION VERT	HORZ	MAXIMUM FACTORED GROSS REACTION DOWN	HORZ	UPLIFT	INPUT BRG IN-SX	REQRD BRG IN-SX
E	308	0	308	0	0	MECHANICAL	
I	416	0	416	0	0	5-8	1-8

A SUITABLE HANGER/MECHANICAL CONNECTION IS REQUIRED AT JOINT E. MINIMUM BEARING LENGTH AT JOINT E = 1-8.

UNFACTORED REACTIONS

JT	1ST LCASE COMBINED	MAX./MIN. COMPONENT REACTIONS SNOW	LIVE	PERM.LIVE	WIND	DEAD	SOIL
E	218	139 / 0	0 / 0	0 / 0	0 / 0	80 / 0	0 / 0
I	293	198 / 0	0 / 0	0 / 0	0 / 0	95 / 0	0 / 0

BEARING MATERIAL TO BE SPF NO.2 OR BETTER AT JOINT(S) I

BRACING

TOP CHORD TO BE SHEATHED OR MAX. PURLIN SPACING = 6.25 FT.
MAX. UNBRACED BOTTOM CHORD LENGTH = 7.81 FT OR RIGID CEILING DIRECTLY APPLIED.

ALL PITCH BREAKS AND PERIMETER CORNER JOINTS MUST BE LATERALLY RESTRAINED.

LOADING

TOTAL LOAD CASES: (4)

CHORDS

MEMB. FR-TO	MAX. FACTORED FORCE (LBS)	FACTORED VERT. LOAD (PLF) FROM	TO	LC1 MAX CSI (LC)	MAX. UNBRAC LENGTH
A- B	0 / 27	-84.9	-84.9	0.14 (1)	10.00
B- C	-208 / 0	-84.9	-84.9	0.11 (1)	6.25
C- D	-168 / 0	-84.9	-84.9	0.06 (1)	6.25
E- D	-287 / 0	0.0	0.0	0.11 (1)	7.81
I- B	-387 / 0	0.0	0.0	0.04 (1)	7.81
I- J	0 / 0	-18.5	-18.5	0.05 (4)	10.00
J- H	0 / 0	-18.5	-18.5	0.05 (4)	10.00
F- H	0 / 25	0.0	0.0	0.02 (1)	10.00
H- C	-212 / 0	0.0	0.0	0.01 (1)	7.81
G- F	0 / 0	-18.5	-18.5	0.00 (4)	10.00
F- E	0 / 3	-18.5	-18.5	0.02 (4)	10.00

WEBS

MEMB. FR-TO	MAX. FACTORED FORCE (LBS)	MAX CSI (LC)
B- H	0 / 195	0.05 (1)
H- E	-5 / 0	0.00 (1)
H- D	0 / 263	0.07 (1)

SPECIFIED CONCENTRATED LOADS (LBS)

JT	LOC.	LC1	MAX-	MAX+	FACE	DIR.	TYPE	HEEL	CONN.
C	2-7-8	-11	-11	---	FRONT	VERT	DEAD	---	C1
C	2-7-8	-24	-24	---	BACK	VERT	TOTAL	---	C1
C	2-7-8	-40	-40	---	FRONT	VERT	SNOW	---	C1
H	2-6-0	-5	-5	---	BACK	VERT	TOTAL	---	C1
J	1-0-12	-5	-5	---	BACK	VERT	TOTAL	---	C1

CONNECTION REQUIREMENTS

1) **C1:** A SUITABLE HANGER/MECHANICAL CONNECTION IS REQUIRED.

DESIGN CRITERIA

*** SPECIAL LOADS ANALYSIS ***
GEOMETRY AND/OR BASIC LOADS CHANGED BY USER.
LOADS WERE DERIVED FROM USER INPUT
NO FURTHER MODIFICATIONS WERE MADE

SPECIFIED LOADS:

TOP CH.	LL	=	23.3	PSF
	DL	=	6.0	PSF
BOT CH.	LL	=	0.0	PSF
	DL	=	7.4	PSF
TOTAL LOAD		=	36.7	PSF

SPACING = 24.0 IN. C/C

LOADING IN FLAT SECTION BASED ON A SLOPE OF 6.00/12

*** NON STANDARD GIRDER ***
ADDT'L USER-DEFINED LOADS APPLIED TO ALL LOAD CASES.

THIS TRUSS IS DESIGNED FOR RESIDENTIAL OR SMALL BUILDING REQUIREMENTS OF PART 9, NBCC 2015

THIS DESIGN COMPLIES WITH:
- PART 9 OF BCBC 2018 , NBC-2019AE
- PART 9 OF OBC 2012 (2019 AMENDMENT)
- CSA 086-14
- TPIC 2014

(55 % OF 27.2 P.S.F. G.S.L. PLUS 8.4 P.S.F. RAIN LOAD) EQUALS 23.3 P.S.F. SPECIFIED ROOF LIVE LOAD

ALLOWABLE DEFL.(LL)= L/360 (0.19")
CALCULATED VERT. DEFL.(LL) = L/ 999 (0.00")
ALLOWABLE DEFL.(TL)= L/360 (0.19")
CALCULATED VERT. DEFL.(TL) = L/ 999 (0.01")

CSI: TC=0.14/1.00 (A-B:1) , BC=0.05/1.00 (H-I:4) , WB=0.07/1.00 (D-H:1) , SSI=0.09/1.00 (A-B:1)

DOL LUMBER=1.00 NAIL=1.00 LS BEND=1.00 COMP=1.00 SHEAR=1.00 TENS= 1.00

COMPANION LIVE LOAD FACTOR = 1.00

AUTOSOLVE RIGHT HEEL ONLY

TRUSS PLATE MANUFACTURER IS NOT RESPONSIBLE FOR QUALITY CONTROL IN THE TRUSS MANUFACTURING PLANT .

NAIL VALUES

PLATE	GRIP(DRY) (PSI) MAX	MIN	SHEAR (PLI) MAX	MIN	SECTION (PLI) MAX	MIN
MT20	650	371	1747	788	1987	1873

PLATE PLACEMENT TOL. = 0.250 inches

PLATE ROTATION TOL. = 5.0 Deg.

JSI GRIP= 0.30 (B) (INPUT = 0.90)
JSI METAL= 0.11 (B) (INPUT = 0.95)

LICENSED PROFESSIONAL ENGINEER
02-28-24
H. J. G. ALVES
100009024
PROVINCE OF ONTARIO

Structural component only
DWG# T-2406405

JOB NAME	TRUSS NAME	QUANTITY	PLY	JOB DESC.	DRWG NO.
425913	T15	1	2	ROYAL PINE HOMES TRUSS DESC.	

Tamarack Roof Truss, Burlington

Version 8.630 S Aug 30 2023 MiTek Industries, Inc. Wed Feb 28 15:02:50 2024 Page 1
ID:sd0FDfbi38oVqvTaiRkhtSzPAoD-rQ8J1l6In0YQCwqGuMvYMa6wK1XG02jBr8Edfczgawj

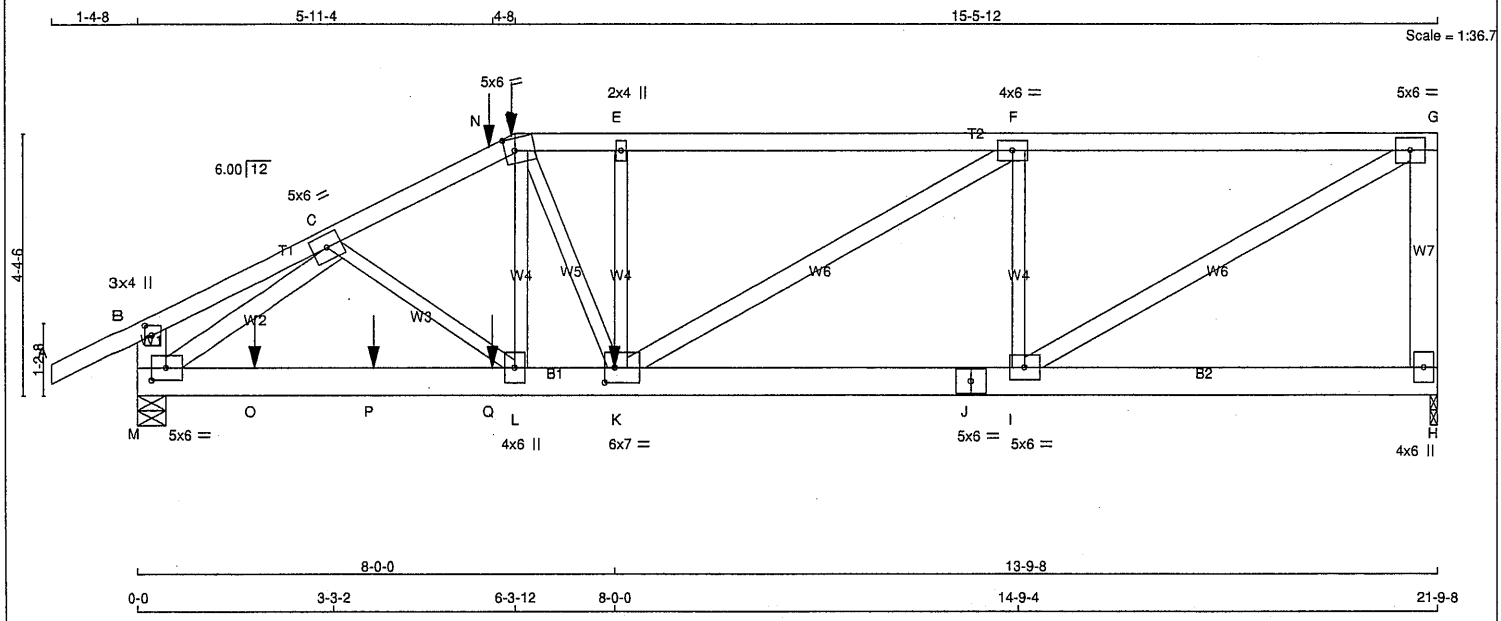

TOTAL WEIGHT = 2 X 110 = 220 lb

[M]

LUMBER

N. L. G. A. RULES

CHORDS	SIZE		LUMBER	DESCR.
A - D	2x4	DRY	No.2	SPF
D - G	2x4	DRY	No.2	SPF
H - G	2x6	DRY	No.2	SPF
M - B	2x6	DRY	No.2	SPF
M - J	2x6	DRY	No.2	SPF
J - H	2x6	DRY	No.2	SPF
ALL WEBS EXCEPT	2x3	DRY	No.2	SPF
M - C	2x4	DRY	No.2	SPF
I - G	2x4	DRY	No.2	SPF
K - F	2x4	DRY	No.2	SPF

DRY: SEASONED LUMBER.

DESIGN CONSISTS OF 2 TRUSSES BUILT SEPARATELY THEN FASTENED TOGETHER AS FOLLOWS:

CHORDS	#ROWS	SURFACE SPACING (IN)	LOAD(PLF)
TOP CHORDS : (0.122"X3") SPIRAL NAILS			
A- D	1	12	SIDE(61.0)
D- G	1	12	SIDE(61.0)
G- H	2	12	TOP
M- B	2	12	TOP
BOTTOM CHORDS : (0.122"X3") SPIRAL NAILS			
M- J	2	12	SIDE(183.1)
J- H	2	12	TOP
WEBS : (0.122"X3") SPIRAL NAILS			
L- D	1	6	SIDE(43.5)
E- K	1	6	SIDE(275.7)
2x3	1	6	
2x4	1	6	

NAILS TO BE DRIVEN FROM ONE SIDE ONLY.

GIRDER NAILING ASSUMES NAILED HANGERS ARE FASTENED WITH MIN. 3-0 INCH NAILS.

TOP - COMPONENTS ARE LOADED FROM THE TOP AND MUST BE PLACED ON TOP EDGE OF ALL PLIES FOR THE LOAD TO BE TRANSFERRED TO EACH PLY.

LICENSED PROFESSIONAL ENGINEER
02-28-24
H. J. G. ALVES
100009024
PROVINCE OF ONTARIO

Structural component only
DWG# T-2406406

DIMENSIONS, SUPPORTS AND LOADINGS SPECIFIED BY FABRICATOR TO BE VERIFIED BY BUILDING DESIGNER

BEARINGS

JT	FACTORED GROSS REACTION VERT	HORZ	MAXIMUM FACTORED GROSS REACTION DOWN	HORZ	UPLIFT	INPUT BRG IN-SX	REQRD BRG IN-SX
H	2122	0	2122	0	0	1-8	1-8
M	3478	0	3478	0	0	5-8	1-14

UNFACTORED REACTIONS

JT	1ST LCASE COMBINED	MAX./MIN. COMPONENT REACTIONS SNOW	LIVE	PERM.LIVE	WIND	DEAD	SOIL
H	1500	986 / 0	0 / 0	0 / 0	0 / 0	514 / 0	0 / 0
M	2454	1641 / 0	0 / 0	0 / 0	0 / 0	814 / 0	0 / 0

BEARING MATERIAL TO BE SPF NO.2 OR BETTER AT JOINT(S) H, M

BRACING

TOP CHORD TO BE SHEATHED OR MAX. PURLIN SPACING = 3.91 FT.
MAX. UNBRACED BOTTOM CHORD LENGTH = 10.00 FT OR RIGID CEILING DIRECTLY APPLIED.

ALL PITCH BREAKS AND PERIMETER CORNER JOINTS MUST BE LATERALLY RESTRAINED.

LOADING

TOTAL LOAD CASES: (4)

CHORDS

MEMB. FR-TO	MAX. FACTORED FORCE (LBS)	FACTORED VERT. LOAD (PLF) FROM	TO	LC1	MAX CSI (LC)	MAX. UNBRAC LENGTH
A- B	0 / 27	-84.9	-84.9	0.07 (1)	10.00	
B- C	0 / 8	-84.9	-84.9	0.06 (1)	10.00	
C- N	-4985 / 0	-84.9	-84.9	0.16 (1)	4.21	
N- D	-4985 / 0	-84.9	-84.9	0.16 (1)	4.21	
D- E	-4849 / 0	-84.9	-84.9	0.19 (1)	4.21	
E- F	-4850 / 0	-84.9	-84.9	0.55 (1)	3.91	
F- G	-3223 / 0	-84.9	-84.9	0.45 (1)	4.72	
H- G	-2067 / 0	0.0	0.0	0.19 (1)	7.81	
M- B	-239 / 0	0.0	0.0	0.01 (1)	7.81	
M- O	0 / 3913	-18.5	-18.5	0.44 (1)	10.00	
O- P	0 / 3913	-18.5	-18.5	0.44 (1)	10.00	
P- Q	0 / 3913	-18.5	-18.5	0.44 (1)	10.00	
Q- L	0 / 3913	-18.5	-18.5	0.44 (1)	10.00	
L- K	0 / 4473	-18.5	-18.5	0.46 (1)	10.00	
K- J	0 / 3223	-18.5	-18.5	0.28 (1)	10.00	
J- I	0 / 3223	-18.5	-18.5	0.28 (1)	10.00	
I- H	0 / 0	-18.5	-18.5	0.06 (4)	10.00	

WEBS

MEMB. FR-TO	MAX. FACTORED FORCE (LBS)	MAX CSI (LC)
L- D	0 / 576	0.07 (1)
D- K	0 / 917	0.11 (1)
K- E	-382 / 0	0.05 (1)
C- L	0 / 680	0.08 (1)
M- C	-4907 / 0	0.46 (1)
I- G	0 / 3707	0.33 (1)
K- F	0 / 1896	0.17 (1)
I- F	-1659 / 0	0.23 (1)

SPECIFIED CONCENTRATED LOADS (LBS)

JT	LOC.	LC1	MAX-	MAX+	FACE	DIR.	TYPE	HEEL	CONN.
D	6-3-12	-90	-90	---	FRONT	VERT	DEAD	---	C1
D	6-3-12	-348	-348	---	FRONT	VERT	SNOW	---	C1
K	8-0-0	-1242	-1242	---	FRONT	VERT	TOTAL	---	C1
N	5-11-4	-55	-55	---	FRONT	VERT	TOTAL	---	C1
O	1-11-4	-179	-179	---	FRONT	VERT	TOTAL	---	C1
P	3-11-4	-179	-179	---	FRONT	VERT	TOTAL	---	C1
Q	5-11-4	-179	-179	---	FRONT	VERT	TOTAL	---	C1

CONNECTION REQUIREMENTS

1) **C1:** A SUITABLE HANGER/MECHANICAL CONNECTION IS REQUIRED.

DESIGN CRITERIA

*** SPECIAL LOADS ANALYSIS ***
GEOMETRY AND/OR BASIC LOADS CHANGED BY USER.
LOADS WERE DERIVED FROM USER INPUT
NO FURTHER MODIFICATIONS WERE MADE

SPECIFIED LOADS:

TOP CH.	LL	=	23.3	PSF
	DL	=	6.0	PSF
BOT CH.	LL	=	0.0	PSF
	DL	=	7.4	PSF
TOTAL LOAD		=	36.7	PSF

SPACING = 24.0 IN. C/C

LOADING IN FLAT SECTION BASED ON A SLOPE OF 6.00/12

*** NON STANDARD GIRDER ***
ADDT'L USER-DEFINED LOADS APPLIED TO ALL LOAD CASES.

THIS TRUSS IS DESIGNED FOR RESIDENTIAL OR SMALL BUILDING REQUIREMENTS OF PART 9, NBCC 2015

THIS DESIGN COMPLIES WITH:
- PART 9 OF BCBC 2018 , NBC-2019AE
- PART 9 OF OBC 2012 (2019 AMENDMENT)
- CSA 086-14
- TPIC 2014

(55 % OF 27.2 P.S.F. G.S.L. PLUS 8.4 P.S.F. RAIN LOAD) EQUALS 23.3 P.S.F. SPECIFIED ROOF LIVE LOAD

ALLOWABLE DEFL.(LL)= L/360 (0.73")
CALCULATED VERT. DEFL.(LL) = L/ 999 (0.07")
ALLOWABLE DEFL.(TL)= L/360 (0.73")
CALCULATED VERT. DEFL.(TL) = L/ 999 (0.14")

CSI: TC=0.55/1.00 (E-F:1) , BC=0.46/1.00 (K-L:1) , WB=0.46/1.00 (C-M:1) , SSI=0.20/1.00 (L-M:1)

DOL LUMBER=1.00 NAIL=1.00 LS BEND=1.00 COMP=1.00 SHEAR=1.00 TENS= 1.00

COMPANION LIVE LOAD FACTOR = 1.00

AUTOSOLVE RIGHT HEEL ONLY

TRUSS PLATE MANUFACTURER IS NOT RESPONSIBLE FOR QUALITY CONTROL IN THE TRUSS MANUFACTURING PLANT .

NAIL VALUES

PLATE	GRIP(DRY) (PSI) MAX	MIN	SHEAR (PLI) MAX	MIN	SECTION (PLI) MAX	MIN
MT20	650	371	1747	788	1987	1873

PLATE PLACEMENT TOL. = 0.250 inches

PLATE ROTATION TOL. = 5.0 Deg.

JSI GRIP= 0.79 (M) (INPUT = 0.90)
JSI METAL= 0.58 (C) (INPUT = 0.95)

CONTINUED ON PAGE 2

JOB NAME	TRUSS NAME	QUANTITY	PLY	JOB DESC.	DRWG NO.
425913	T15	1	2	ROYAL PINE HOMES TRUSS DESC.	

PLATES (table is in inches)

JT	TYPE	PLATES	W	LEN	Y	X
B	TMV+p	MT20	3.0	4.0	2.00	1.25
C	TMWW-t	MT20	5.0	6.0		
D	TTWW-m	MT20	5.0	6.0	2.50	2.00
E	TMW+w	MT20	2.0	4.0		
F	TMWW-t	MT20	4.0	6.0		
G	TMVW-t	MT20	5.0	6.0		
H	BMV1+p	MT20	4.0	6.0		
I	BMWW-t	MT20	5.0	6.0		
J	BS-t	MT20	5.0	6.0		
K	BMWWW-t	MT20	6.0	7.0	3.00	2.00
L	BMWW+t	MT20	4.0	6.0		
M	BMVW1-t	MT20	5.0	6.0	2.50	2.75

NOTES- (1)
1) Lateral braces to be a minimum of 2X4 SPF #2.

LICENSED PROFESSIONAL ENGINEER
02-28-24
H. J. G. ALVES
100009024
PROVINCE OF ONTARIO

Structural component only
DWG# T-2406406

JOB NAME	TRUSS NAME	QUANTITY	PLY	JOB DESC.	DRWG NO.
425913	T15S	2	2	ROYAL PINE HOMES TRUSS DESC.	

Tamarack Roof Truss, Burlington

Version 8.630 S Aug 30 2023 MiTek Industries, Inc. Wed Feb 28 15:02:52 2024 Page 1
ID:sd0FDfbi38oVqvTaiRkhtSzPAoD-noF3SR8Yleo8REzf0ny0R?BlkqCtUtQUISjkjUzgawH

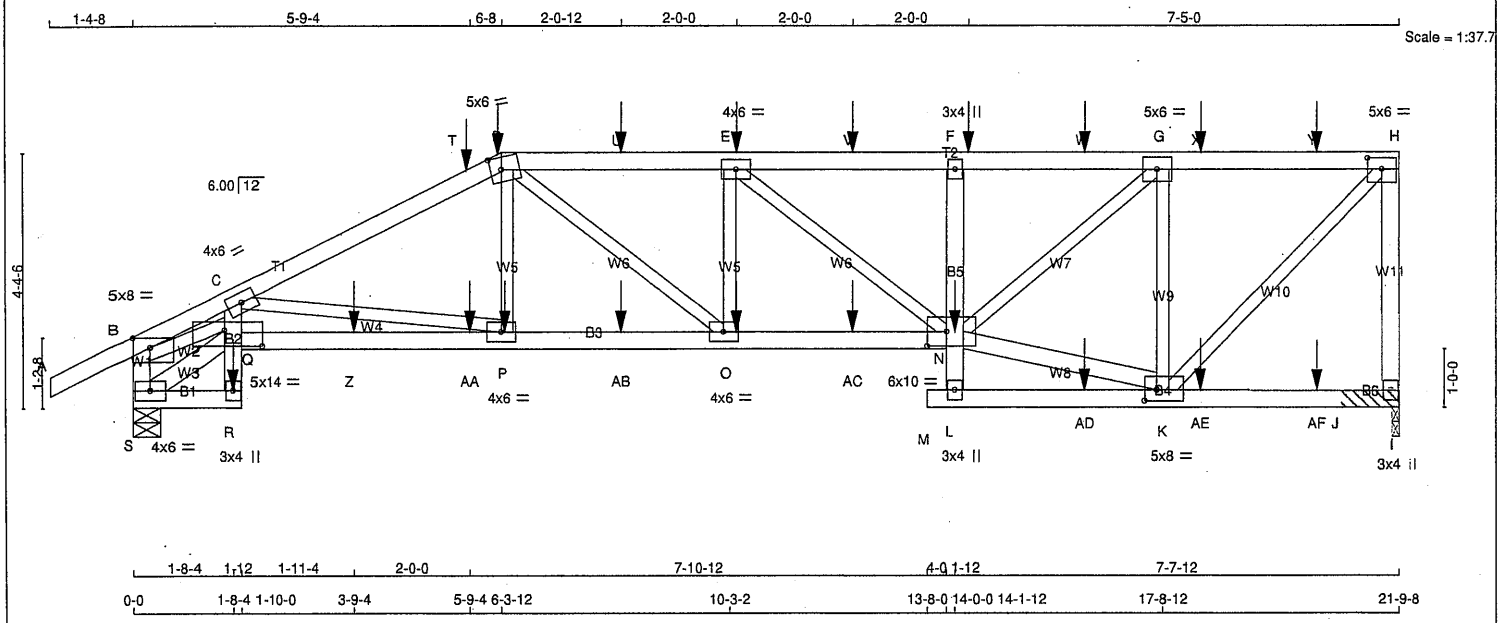

TOTAL WEIGHT = 4 X 99 = 395 lb

[M]

LUMBER

N. L. G. A. RULES

CHORDS	SIZE		LUMBER	DESCR.
A - D	2x4	DRY	No.2	SPF
D - H	2x4	DRY	No.2	SPF
I - H	2x4	DRY	No.2	SPF
S - B	2x4	DRY	No.2	SPF
S - R	2x4	DRY	No.2	SPF
R - C	2x4	DRY	No.2	SPF
Q - N	2x4	DRY	2100F 1.8E	SPF
L - F	2x4	DRY	No.2	SPF
M - I	2x4	DRY	No.2	SPF
ALL WEBS EXCEPT	2x3	DRY	No.2	SPF
S - Q	2x4	DRY	No.2	SPF
N - K	2x4	DRY	No.2	SPF

DRY: SEASONED LUMBER.

DESIGN CONSISTS OF 2 TRUSSES BUILT SEPARATELY THEN FASTENED TOGETHER AS FOLLOWS:

CHORDS	#ROWS	SURFACE SPACING (IN)	LOAD(PLF)
TOP CHORDS : (0.122"X3") SPIRAL NAILS			
A- D	1	12	SIDE(61.0)
D- H	1	12	SIDE(61.0)
H- I	1	12	TOP
S- B	1	12	TOP
BOTTOM CHORDS : (0.122"X3") SPIRAL NAILS			
S- R	1	12	SIDE(61.0)
R- C	1	12	SIDE(6.7)
Q- N	1	12	SIDE(65.9)
F- L	1	12	SIDE(0.3)
M- I	1	12	SIDE(0.0)
WEBS : (0.122"X3") SPIRAL NAILS			
P- D	1	6	SIDE(46.8)
E- O	1	6	SIDE(9.0)
2x3	1	6	
2x4	1	6	

NAILS TO BE DRIVEN FROM ONE SIDE ONLY.

GIRDER NAILING ASSUMES NAILED HANGERS ARE FASTENED WITH MIN. 3-0 INCH NAILS.

LICENSED PROFESSIONAL ENGINEER
02-28-24
H. J. G. ALVES
100009024
PROVINCE OF ONTARIO

Structural component only
DWG# T-2406407

DIMENSIONS, SUPPORTS AND LOADINGS SPECIFIED BY FABRICATOR TO BE VERIFIED BY BUILDING DESIGNER

BEARINGS

JT	FACTORED GROSS REACTION VERT	HORZ	MAXIMUM FACTORED GROSS REACTION DOWN	HORZ	UPLIFT	INPUT BRG IN-SX	REQRD BRG IN-SX
I	2941	0	2941	0	0	1-8	1-8 & BLOCK
S	3342	0	3342	0	0	5-8	1-13

UNFACTORED REACTIONS

JT	1ST LCASE COMBINED	MAX./MIN. COMPONENT REACTIONS SNOW	LIVE	PERM.LIVE	WIND	DEAD	SOIL
I	2086	1333 / 0	0 / 0	0 / 0	0 / 0	753 / 0	0 / 0
S	2365	1543 / 0	0 / 0	0 / 0	0 / 0	822 / 0	0 / 0

BEARING MATERIAL TO BE SPF NO.2 OR BETTER AT JOINT(S) I, S

2x4 DRY SPF No.2 BEARING BLOCK 12" LONG AT JT. I ATTACHED TO FRONT SIDE WITH 2 ROWS OF (0.122"X3") SPIRAL NAILS SPACED 4" C.C. 4 NAILS TOTAL.

BRACING

TOP CHORD TO BE SHEATHED OR MAX. PURLIN SPACING = 3.55 FT.
MAX. UNBRACED BOTTOM CHORD LENGTH = 7.81 FT OR RIGID CEILING DIRECTLY APPLIED.

ALL PITCH BREAKS AND PERIMETER CORNER JOINTS MUST BE LATERALLY RESTRAINED.

LOADING

TOTAL LOAD CASES: (4)

CHORDS

MEMB. FR-TO	MAX. FORCE (LBS)	FACTORED VERT. LOAD (PLF) FROM	TO	LC1	MAX CSI (LC)	MAX. UNBRAC LENGTH
A- B	0 / 27	-84.9	-84.9	0.07 (1)	10.00	
B- C	-6998 / 0	-84.9	-84.9	0.22 (1)	3.55	
C- T	-5934 / 0	-84.9	-84.9	0.40 (1)	3.69	
T- D	-5934 / 0	-84.9	-84.9	0.40 (1)	3.69	
D- U	-5865 / 0	-84.9	-84.9	0.22 (1)	3.87	
U- E	-5865 / 0	-84.9	-84.9	0.22 (1)	3.87	
E- V	-5096 / 0	-84.9	-84.9	0.18 (1)	4.15	
V- F	-5096 / 0	-84.9	-84.9	0.18 (1)	4.15	
F- W	-5048 / 0	-84.9	-84.9	0.22 (1)	4.13	
W- G	-5048 / 0	-84.9	-84.9	0.22 (1)	4.13	
G- X	-2537 / 0	-84.9	-84.9	0.15 (1)	5.53	
X- Y	-2537 / 0	-84.9	-84.9	0.15 (1)	5.53	
Y- H	-2537 / 0	-84.9	-84.9	0.15 (1)	5.53	
I- H	-2766 / 0	0.0	0.0	0.43 (1)	6.88	
S- B	-3041 / 0	0.0	0.0	0.17 (1)	6.62	
S- R	0 / 482	-18.5	-18.5	0.05 (1)	10.00	
R- Q	0 / 275	0.0	0.0	0.39 (1)	10.00	
Q- C	0 / 543	0.0	0.0	0.41 (1)	10.00	
Q- Z	0 / 6864	-18.5	-18.5	0.45 (1)	10.00	
Z-AA	0 / 6864	-18.5	-18.5	0.45 (1)	10.00	
AA- P	0 / 6864	-18.5	-18.5	0.45 (1)	10.00	
P-AB	0 / 5358	-18.5	-18.5	0.36 (1)	10.00	
AB- O	0 / 5358	-18.5	-18.5	0.36 (1)	10.00	
O-AC	0 / 5865	-18.5	-18.5	0.37 (1)	10.00	
AC- N	0 / 5865	-18.5	-18.5	0.37 (1)	10.00	
L- N	0 / 76	0.0	0.0	0.12 (1)	10.00	
N- F	-345 / 0	0.0	0.0	0.11 (1)	7.81	
M- L	0 / 0	-18.5	-18.5	0.00 (4)	10.00	
L-AD	0 / 149	-18.5	-18.5	0.19 (1)	10.00	
AD- K	0 / 149	-18.5	-18.5	0.19 (1)	10.00	
K-AE	0 / 0	-18.5	-18.5	0.18 (1)	10.00	
AE-AF	0 / 0	-18.5	-18.5	0.18 (1)	10.00	
AF- J	0 / 0	-18.5	-18.5	0.18 (1)	10.00	
J- I	0 / 0	-18.5	-18.5	0.18 (1)	10.00	

WEBS

MEMB. FR-TO	MAX. FORCE (LBS)	MAX CSI (LC)
C- P	-1567 / 0	0.31 (1)
P- D	0 / 1231	0.15 (1)
D- O	0 / 642	0.08 (1)
O- E	0 / 224	0.03 (1)
E- N	-980 / 0	0.20 (1)
K- G	-2605 / 0	0.39 (1)
K- H	0 / 3626	0.45 (1)
S- Q	-560 / 0	0.03 (1)
B- Q	0 / 6226	0.77 (1)
N- K	0 / 2525	0.22 (1)
N- G	0 / 3246	0.40 (1)

DESIGN CRITERIA

*** SPECIAL LOADS ANALYSIS ***
GEOMETRY AND/OR BASIC LOADS CHANGED BY USER.
LOADS WERE DERIVED FROM USER INPUT
NO FURTHER MODIFICATIONS WERE MADE

SPECIFIED LOADS:

TOP CH.	LL	=	23.3	PSF
	DL	=	6.0	PSF
BOT CH.	LL	=	0.0	PSF
	DL	=	7.4	PSF
TOTAL LOAD		=	36.7	PSF

SPACING = 24.0 IN. C/C

LOADING IN FLAT SECTION BASED ON A SLOPE OF 6.00/12

*** NON STANDARD GIRDER ***
ADDT'L USER-DEFINED LOADS APPLIED TO ALL LOAD CASES.

THIS TRUSS IS DESIGNED FOR RESIDENTIAL OR SMALL BUILDING REQUIREMENTS OF PART 9, NBCC 2015

THIS DESIGN COMPLIES WITH:
- PART 9 OF BCBC 2018 , NBC-2019AE
- PART 9 OF OBC 2012 (2019 AMENDMENT)
- CSA 086-14
- TPIC 2014

DESIGN ASSUMPTIONS
-OVERHANG NOT TO BE ALTERED OR CUT OFF.

(55 % OF 27.2 P.S.F. G.S.L. PLUS 8.4 P.S.F. RAIN LOAD) EQUALS 23.3 P.S.F. SPECIFIED ROOF LIVE LOAD

ALLOWABLE DEFL.(LL)= L/360 (0.73")
CALCULATED VERT. DEFL.(LL) = L/ 999 (0.12")
ALLOWABLE DEFL.(TL)= L/360 (0.73")
CALCULATED VERT. DEFL.(TL) = L/ 999 (0.23")

CSI: TC=0.43/1.00 (H-I:1) , BC=0.45/1.00 (P-Q:1) , WB=0.77/1.00 (B-Q:1) , SSI=0.28/1.00 (C-Q:1)

DOL LUMBER=1.00 NAIL=1.00 LS BEND=1.00 COMP=1.00 SHEAR=1.00 TENS= 1.00

COMPANION LIVE LOAD FACTOR = 1.00

TRUSS PLATE MANUFACTURER IS NOT RESPONSIBLE FOR QUALITY CONTROL IN THE TRUSS MANUFACTURING PLANT .

NAIL VALUES

PLATE	GRIP(DRY) (PSI) MAX	MIN	SHEAR (PLI) MAX	MIN	SECTION (PLI) MAX	MIN
MT20	650	371	1747	788	1987	1873

PLATE PLACEMENT TOL. = 0.250 inches

PLATE ROTATION TOL. = 5.0 Deg.

CONTINUED ON PAGE 2

JOB NAME	TRUSS NAME	QUANTITY	PLY	JOB DESC.	DRWG NO.
425913	T15S	2	2	ROYAL PINE HOMES TRUSS DESC.	

Tamarack Roof Truss, Burlington

Version 8.630 S Aug 30 2023 MiTek Industries, Inc. Wed Feb 28 15:02:52 2024 Page 2
ID:sd0FDfbi38oVqvTaiRkhtSzPAoD-noF3SR8Yleo8REzf0ny0R?BlkqCtUtQUlSjkiUzgawH

PLATES (table is in inches)

JT	TYPE	PLATES	W	LEN	Y	X
B	TMVW-p	MT20	5.0	8.0	2.00	3.50
C	TMVW-t	MT20	4.0	6.0		
D	TTWW-m	MT20	5.0	6.0	2.50	2.25
E	TMWW-t	MT20	4.0	6.0		
F	TMV+p	MT20	3.0	4.0		
G	TMWW-t	MT20	5.0	6.0		
H	TMVW-t	MT20	5.0	6.0	2.25	3.00
I	BMV1+p	MT20	3.0	4.0		
K	BMWWW-t	MT20	5.0	8.0	2.25	2.50
L	BMV+p	MT20	3.0	4.0		
N	BVMWWW-l	MT20	6.0	10.0	3.00	4.00
O	BMWW-t	MT20	4.0	6.0		
P	BMWW-t	MT20	4.0	6.0		
Q	BVMWW-l	MT20	5.0	14.0	3.25	7.50
R	BMV+p	MT20	3.0	4.0		
S	BMVW1-t	MT20	4.0	6.0		

NOTES- (1)
1) Lateral braces to be a minimum of 2X4 SPF #2.

SPECIFIED CONCENTRATED LOADS (LBS)

JT	LOC.	LC1	MAX-	MAX+	FACE	DIR.	TYPE	HEEL	CONN.
D	6-3-12	-90	-90	---	FRONT	VERT	DEAD	---	C1
D	6-3-12	-9	-9	---	FRONT	VERT	TOTAL	---	C1
D	6-3-12	-348	-348	---	FRONT	VERT	SNOW	---	C1
E	10-4-8	-6	-6	---	FRONT	VERT	TOTAL	---	C1
F	14-4-8	-37	-37	---	FRONT	VERT	TOTAL	---	C1
N	14-1-12	-181	-181	---	FRONT	VERT	TOTAL	---	C1
O	10-4-8	-205	-205	---	FRONT	VERT	TOTAL	---	C1
P	6-4-8	-205	-205	---	FRONT	VERT	TOTAL	---	C1
R	1-8-4	-185	-185	---	FRONT	VERT	TOTAL	---	C1
T	5-9-4	-17	-17	---	FRONT	VERT	TOTAL	---	C1
U	8-4-8	-6	-6	---	FRONT	VERT	TOTAL	---	C1
V	12-4-8	-6	-6	---	FRONT	VERT	TOTAL	---	C1
W	16-4-8	-37	-37	---	FRONT	VERT	TOTAL	---	C1
X	18-4-8	-37	-37	---	FRONT	VERT	TOTAL	---	C1
Y	20-4-8	-37	-37	---	FRONT	VERT	TOTAL	---	C1
Z	3-9-4	-205	-205	---	FRONT	VERT	TOTAL	---	C1
AA	5-9-4	-205	-205	---	FRONT	VERT	TOTAL	---	C1
AB	8-4-8	-205	-205	---	FRONT	VERT	TOTAL	---	C1
AC	12-4-8	-205	-205	---	FRONT	VERT	TOTAL	---	C1
AD	16-4-8	-179	-179	---	FRONT	VERT	TOTAL	---	C1
AE	18-4-8	-179	-179	---	FRONT	VERT	TOTAL	---	C1
AF	20-4-8	-179	-179	---	FRONT	VERT	TOTAL	---	C1

CONNECTION REQUIREMENTS

1) **C1:** A SUITABLE HANGER/MECHANICAL CONNECTION IS REQUIRED.

JSI GRIP= 0.79 (K) (INPUT = 0.90)
JSI METAL= 0.58 (Q) (INPUT = 0.95)

LICENSED PROFESSIONAL ENGINEER
02-28-24
H. J. G. ALVES
100009024
PROVINCE OF ONTARIO

Structural component only
DWG# T-2406407

JOB NAME	TRUSS NAME	QUANTITY	PLY	JOB DESC.	DRWG NO.
425914	T15Z	1	2	ROYAL PINE HOMES TRUSS DESC.	

Tamarack Roof Truss, Burlington

Version 8.630 S Aug 30 2023 MiTek Industries, Inc. Wed Feb 28 16:19:20 2024 Page 1
ID:sd0FDfbi38oVqvTaiRkhtSzPAoD-SSUWNEfRqIr9tIjQnLGwOWDIKH4xTyYoJF6WlZzgZob

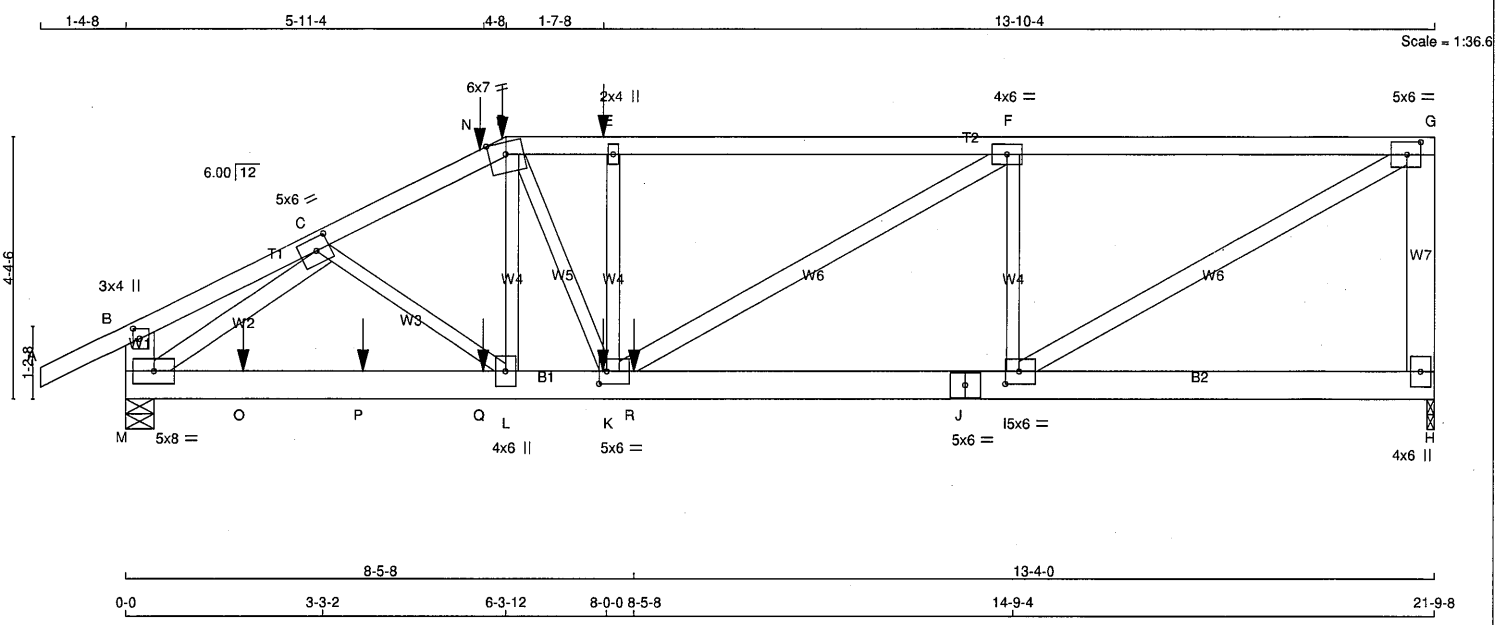

TOTAL WEIGHT = 2 X 110 = 220 lb

[M]

LUMBER

N. L. G. A. RULES

CHORDS	SIZE		LUMBER	DESCR.
A - D	2x4	DRY	No.2	SPF
D - G	2x4	DRY	No.2	SPF
H - G	2x6	DRY	No.2	SPF
M - B	2x6	DRY	No.2	SPF
M - J	2x6	DRY	No.2	SPF
J - H	2x6	DRY	No.2	SPF
ALL WEBS	2x3	DRY	No.2	SPF
EXCEPT				
M - C	2x4	DRY	No.2	SPF
I - G	2x4	DRY	No.2	SPF
K - F	2x4	DRY	No.2	SPF

DRY: SEASONED LUMBER.

DESIGN CONSISTS OF 2 TRUSSES BUILT SEPARATELY THEN FASTENED TOGETHER AS FOLLOWS:

CHORDS	#ROWS	SURFACE SPACING (IN)	LOAD(PLF)
TOP CHORDS : (0.122"X3") SPIRAL NAILS			
A- D	1	12	SIDE(61.0)
D- G	1	12	SIDE(61.0)
G- H	2	12	TOP
M- B	2	12	TOP
BOTTOM CHORDS : (0.122"X3") SPIRAL NAILS			
M- J	2	12	SIDE(183.1)
J- H	2	12	TOP
WEBS : (0.122"X3") SPIRAL NAILS			
L- D	1	6	SIDE(43.5)
E- K	1	6	SIDE(289.0)
2x3	1	6	
2x4	1	6	

NAILS TO BE DRIVEN FROM ONE SIDE ONLY.

GIRDER NAILING ASSUMES NAILED HANGERS ARE FASTENED WITH MIN. 3-0 INCH NAILS.

TOP - COMPONENTS ARE LOADED FROM THE TOP AND MUST BE PLACED ON TOP EDGE OF ALL PLIES FOR THE LOAD TO BE TRANSFERRED TO EACH PLY.

LICENSED PROFESSIONAL ENGINEER
02-28-24
H. J. G. ALVES
100009024
PROVINCE OF ONTARIO

Structural component only
DWG# T-2406458

DIMENSIONS, SUPPORTS AND LOADINGS SPECIFIED BY FABRICATOR TO BE VERIFIED BY BUILDING DESIGNER

BEARINGS

JT	FACTORED GROSS REACTION VERT	HORZ	MAXIMUM FACTORED GROSS REACTION DOWN	HORZ	UPLIFT	INPUT BRG IN-SX	REQRD BRG IN-SX
H	2283	0	2283	0	0	1-8	1-8
M	3671	0	3671	0	0	5-8	2-0

UNFACTORED REACTIONS

JT	1ST LCASE COMBINED	SNOW	LIVE	PERM.LIVE	WIND	DEAD	SOIL
		MAX./MIN. COMPONENT REACTIONS					
H	1615	1055 / 0	0 / 0	0 / 0	0 / 0	561 / 0	0 / 0
M	2593	1720 / 0	0 / 0	0 / 0	0 / 0	873 / 0	0 / 0

BEARING MATERIAL TO BE SPF NO.2 OR BETTER AT JOINT(S) H, M

BRACING

TOP CHORD TO BE SHEATHED OR MAX. PURLIN SPACING = 3.72 FT.
MAX. UNBRACED BOTTOM CHORD LENGTH = 10.00 FT OR RIGID CEILING DIRECTLY APPLIED.

ALL PITCH BREAKS AND PERIMETER CORNER JOINTS MUST BE LATERALLY RESTRAINED.

LOADING

TOTAL LOAD CASES: (4)

CHORDS

MEMB. FR-TO	MAX. FACTORED FORCE (LBS)	FACTORED VERT. LOAD (PLF) FROM	TO	LC1 CSI (LC)	MAX. UNBRAC LENGTH
A- B	0 / 27	-84.9	-84.9	0.07 (1)	10.00
B- C	0 / 8	-84.9	-84.9	0.06 (1)	10.00
C- N	-5323 / 0	-84.9	-84.9	0.17 (1)	4.08
N- D	-5323 / 0	-84.9	-84.9	0.17 (1)	4.08
D- E	-5342 / 0	-84.9	-84.9	0.20 (1)	4.03
E- F	-5343 / 0	-84.9	-84.9	0.59 (1)	3.72
F- G	-3519 / 0	-84.9	-84.9	0.47 (1)	4.54
H- G	-2235 / 0	0.0	0.0	0.20 (1)	7.81
M- B	-239 / 0	0.0	0.0	0.01 (1)	7.81
M- O	0 / 4164	-18.5	-18.5	0.46 (1)	10.00
O- P	0 / 4164	-18.5	-18.5	0.46 (1)	10.00
P- Q	0 / 4164	-18.5	-18.5	0.46 (1)	10.00
Q- L	0 / 4164	-18.5	-18.5	0.46 (1)	10.00
L- K	0 / 4768	-18.5	-18.5	0.47 (1)	10.00
K- R	0 / 3519	-18.5	-18.5	0.37 (1)	10.00
R- J	0 / 3519	-18.5	-18.5	0.37 (1)	10.00
J- I	0 / 3519	-18.5	-18.5	0.37 (1)	10.00
I- H	0 / 0	-18.5	-18.5	0.07 (4)	10.00

WEBS

MEMB. FR-TO	MAX. FACTORED FORCE (LBS)	MAX CSI (LC)
L- D	0 / 279	0.04 (4)
D- K	0 / 1400	0.17 (1)
K- E	-426 / 0	0.06 (1)
C- L	0 / 744	0.09 (1)
M- C	-5221 / 0	0.49 (1)
I- G	0 / 4047	0.36 (1)
K- F	0 / 2125	0.19 (1)
I- F	-1778 / 0	0.25 (1)

SPECIFIED CONCENTRATED LOADS (LBS)

JT	LOC.	LC1	MAX-	MAX+	FACE	DIR.	TYPE	HEEL	CONN.
D	6-3-12	-90	-90	---	FRONT	VERT	DEAD	---	C1
D	6-3-12	-348	-348	---	FRONT	VERT	SNOW	---	C1
E	7-11-4	-37	-37	---	BACK	VERT	TOTAL	---	C1
K	7-11-4	-179	-179	---	BACK	VERT	TOTAL	---	C1
N	5-11-4	-55	-55	---	BACK	VERT	TOTAL	---	C1
O	1-11-4	-179	-179	---	BACK	VERT	TOTAL	---	C1
P	3-11-4	-179	-179	---	BACK	VERT	TOTAL	---	C1
Q	5-11-4	-179	-179	---	BACK	VERT	TOTAL	---	C1
R	8-5-8	-1280	-1280	---	BACK	VERT	TOTAL	---	C1

CONNECTION REQUIREMENTS

1) **C1:** A SUITABLE HANGER/MECHANICAL CONNECTION IS REQUIRED.

DESIGN CRITERIA

*** SPECIAL LOADS ANALYSIS ***
GEOMETRY AND/OR BASIC LOADS CHANGED BY USER.
LOADS WERE DERIVED FROM USER INPUT
NO FURTHER MODIFICATIONS WERE MADE

SPECIFIED LOADS:

TOP CH.	LL	=	23.3	PSF
	DL	=	6.0	PSF
BOT CH.	LL	=	0.0	PSF
	DL	=	7.4	PSF
TOTAL LOAD		=	36.7	PSF

SPACING = 24.0 IN. C/C

LOADING IN FLAT SECTION BASED ON A SLOPE OF 6.00/12

*** NON STANDARD GIRDER ***
ADDT'L USER-DEFINED LOADS APPLIED TO ALL LOAD CASES.

THIS TRUSS IS DESIGNED FOR RESIDENTIAL OR SMALL BUILDING REQUIREMENTS OF PART 9, NBCC 2015

THIS DESIGN COMPLIES WITH:
- PART 9 OF BCBC 2018 , NBC-2019AE
- PART 9 OF OBC 2012 (2019 AMENDMENT)
- CSA 086-14
- TPIC 2014

(55 % OF 27.2 P.S.F. G.S.L. PLUS 8.4 P.S.F. RAIN LOAD) EQUALS 23.3 P.S.F. SPECIFIED ROOF LIVE LOAD

ALLOWABLE DEFL.(LL)= L/360 (0.73")
CALCULATED VERT. DEFL.(LL) = L/ 999 (0.09")
ALLOWABLE DEFL.(TL)= L/360 (0.73")
CALCULATED VERT. DEFL.(TL) = L/ 999 (0.16")

CSI: TC=0.59/1.00 (E-F:1) , BC=0.47/1.00 (K-L:1) , WB=0.49/1.00 (C-M:1) , SSI=0.59/1.00 (I-K:1)

DOL LUMBER=1.00 NAIL=1.00 LS BEND=1.00 COMP=1.00 SHEAR=1.00 TENS= 1.00

COMPANION LIVE LOAD FACTOR = 1.00

AUTOSOLVE RIGHT HEEL ONLY

TRUSS PLATE MANUFACTURER IS NOT RESPONSIBLE FOR QUALITY CONTROL IN THE TRUSS MANUFACTURING PLANT .

NAIL VALUES

PLATE	GRIP(DRY) (PSI) MAX	MIN	SHEAR (PLI) MAX	MIN	SECTION (PLI) MAX	MIN
MT20	650	371	1747	788	1987	1873

PLATE PLACEMENT TOL. = 0.250 inches

PLATE ROTATION TOL. = 5.0 Deg.

JSI GRIP= 0.79 (K) (INPUT = 0.90)
JSI METAL= 0.62 (C) (INPUT = 0.95)

CONTINUED ON PAGE 2

PLATES (table is in inches)

JT	TYPE	PLATES	W	LEN	Y	X
B	TMV+p	MT20	3.0	4.0	2.00	1.25
C	TMWW-t	MT20	5.0	6.0	2.50	2.75
D	TTWW-m	MT20	6.0	7.0	Edge	
E	TMW+w	MT20	2.0	4.0		
F	TMWW-t	MT20	4.0	6.0		
G	TMVW-t	MT20	5.0	6.0	2.50	2.75
H	BMV1+p	MT20	4.0	6.0		
I	BMWW-t	MT20	5.0	6.0	2.50	2.75
J	BS-t	MT20	5.0	6.0		
K	BMWWW-t	MT20	5.0	6.0	2.50	1.50
L	BMWW+t	MT20	4.0	6.0		
M	BMVW1-t	MT20	5.0	8.0		

Edge - INDICATES REFERENCE CORNER OF PLATE TOUCHES EDGE OF CHORD.

NOTES- (1)
1) Lateral braces to be a minimum of 2X4 SPF #2.

Structural component only
DWG# T-2406458

JOB NAME	TRUSS NAME	QUANTITY	PLY	JOB DESC.	DRWG NO.
425913	T16	1	1	ROYAL PINE HOMES TRUSS DESC.	

Tamarack Roof Truss, Burlington

Version 8.630 S Aug 30 2023 MiTek Industries, Inc. Wed Feb 28 15:02:53 2024 Page 1
ID:Vl_DQvi1e49Qy7axT?i10OzOYuG-F?pRgn8A3xw?3NYrZUTF_CkNyEaUDPaeX6SHGxzgawG

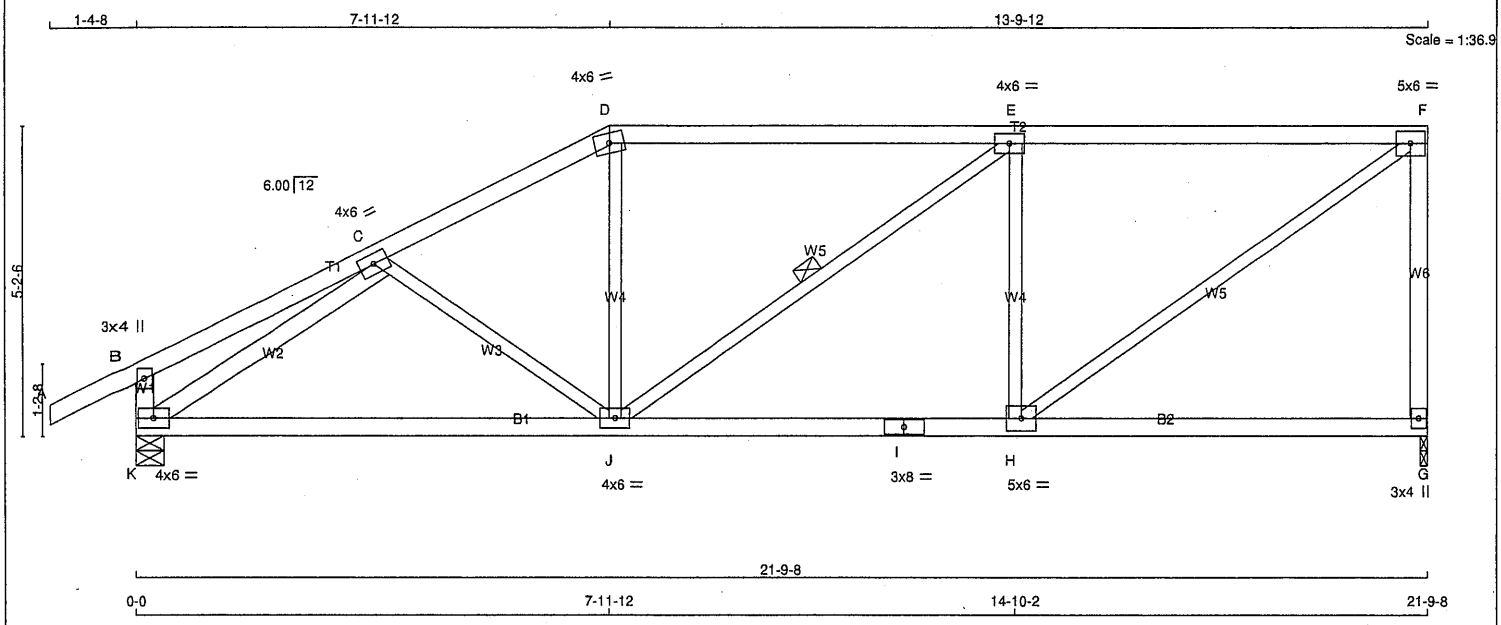

TOTAL WEIGHT = 89 lb

LUMBER
N. L. G. A. RULES

CHORDS	SIZE		LUMBER	DESCR.
A - D	2x4	DRY	No.2	SPF
D - F	2x4	DRY	No.2	SPF
G - F	2x4	DRY	No.2	SPF
K - B	2x4	DRY	No.2	SPF
K - I	2x4	DRY	No.2	SPF
I - G	2x4	DRY	No.2	SPF
ALL WEBS	2x3	DRY	No.2	SPF
EXCEPT				
K - C	2x4	DRY	No.2	SPF

DRY: SEASONED LUMBER.

PLATES (table is in inches)

JT	TYPE	PLATES	W	LEN	Y	X
B	TMV+p	MT20	3.0	4.0		
C	TMWW-t	MT20	4.0	6.0		
D	TTW-m	MT20	4.0	6.0		
E	TMWW-t	MT20	4.0	6.0		
F	TMVW-t	MT20	5.0	6.0		
G	BMV1+p	MT20	3.0	4.0		
H	BMWW-t	MT20	5.0	6.0		
I	BS-t	MT20	3.0	8.0		
J	BMWWW-t	MT20	4.0	6.0		
K	BMVW1-t	MT20	4.0	6.0		

NOTES- (1)
1) Lateral braces to be a minimum of 2X4 SPF #2.

DIMENSIONS, SUPPORTS AND LOADINGS SPECIFIED BY FABRICATOR TO BE VERIFIED BY BUILDING DESIGNER

BEARINGS

JT	FACTORED GROSS REACTION VERT	HORZ	MAXIMUM FACTORED GROSS REACTION DOWN	HORZ	UPLIFT	INPUT BRG IN-SX	REQRD BRG IN-SX
G	1126	0	1126	0	0	1-8	1-8
K	1248	0	1248	0	0	5-8	1-8

UNFACTORED REACTIONS

JT	1ST LCASE COMBINED	MAX./MIN. COMPONENT REACTIONS SNOW	LIVE	PERM.LIVE	WIND	DEAD	SOIL
G	799	507 / 0	0 / 0	0 / 0	0 / 0	292 / 0	0 / 0
K	884	575 / 0	0 / 0	0 / 0	0 / 0	309 / 0	0 / 0

BEARING MATERIAL TO BE SPF NO.2 OR BETTER AT JOINT(S) G, K

BRACING
TOP CHORD TO BE SHEATHED OR MAX. PURLIN SPACING = 4.54 FT.
MAX. UNBRACED BOTTOM CHORD LENGTH = 10.00 FT OR RIGID CEILING DIRECTLY APPLIED.

ALL PITCH BREAKS AND PERIMETER CORNER JOINTS MUST BE LATERALLY RESTRAINED.

1 LATERAL BRACE(S) AT 1/ 2 LENGTH OF E-J.

END VERTICAL(S) MUST BE SHEATHED OR HAVE BRACES AS INDICATED IN THE MAX. UNBRACED LENGTH COLUMN OF THE TABLE BELOW

LOADING
TOTAL LOAD CASES: (4)

CHORDS

MEMB. FR-TO	MAX. FACTORED FORCE (LBS)	FACTORED VERT. LOAD LC1 (PLF) FROM	TO	MAX CSI (LC)	MAX. UNBRAC LENGTH
A- B	0 / 27	-84.9	-84.9	0.12 (1)	10.00
B- C	0 / 17	-84.9	-84.9	0.21 (1)	10.00
C- D	-1338 / 0	-84.9	-84.9	0.24 (1)	5.33
D- E	-1186 / 0	-84.9	-84.9	0.78 (1)	4.57
E- F	-1201 / 0	-84.9	-84.9	0.78 (1)	4.54
G- F	-1072 / 0	0.0	0.0	0.50 (1)	7.61
K- B	-255 / 0	0.0	0.0	0.03 (1)	7.81
K- J	0 / 1286	-18.5	-18.5	0.36 (4)	10.00
J- I	0 / 1201	-18.5	-18.5	0.36 (4)	10.00
I- H	0 / 1201	-18.5	-18.5	0.36 (4)	10.00
H- G	0 / 0	-18.5	-18.5	0.18 (4)	10.00

WEBS

MEMB. FR-TO	MAX. FACTORED FORCE (LBS)	MAX CSI (LC)
C- J	-129 / 16	0.05 (1)
J- D	0 / 241	0.05 (1)
J- E	-19 / 21	0.01 (1)
H- E	-716 / 0	0.29 (1)
H- F	0 / 1471	0.33 (1)
K- C	-1588 / 0	0.46 (1)

DESIGN CRITERIA

SPECIFIED LOADS:

TOP CH.	LL	=	23.3	PSF
	DL	=	6.0	PSF
BOT CH.	LL	=	0.0	PSF
	DL	=	7.4	PSF
TOTAL LOAD		=	36.7	PSF

SPACING = 24.0 IN. C/C

LOADING IN FLAT SECTION BASED ON A SLOPE OF 6.00/12

THIS TRUSS IS DESIGNED FOR RESIDENTIAL OR SMALL BUILDING REQUIREMENTS OF PART 9, NBCC 2015

THIS DESIGN COMPLIES WITH:
- PART 9 OF BCBC 2018 , NBC-2019AE
- PART 9 OF OBC 2012 (2019 AMENDMENT)
- CSA 086-14
- TPIC 2014

(55 % OF 27.2 P.S.F. G.S.L. PLUS 8.4 P.S.F. RAIN LOAD) EQUALS 23.3 P.S.F. SPECIFIED ROOF LIVE LOAD

ALLOWABLE DEFL.(LL)= L/360 (0.73")
CALCULATED VERT. DEFL.(LL) = L/ 999 (0.05")
ALLOWABLE DEFL.(TL)= L/360 (0.73")
CALCULATED VERT. DEFL.(TL) = L/ 999 (0.15")

CSI: TC=0.78/1.00 (E-F:1) , BC=0.36/1.00 (J-K:4) , WB=0.46/1.00 (C-K:1) , SSI=0.29/1.00 (E-F:1)

DOL LUMBER=1.00 NAIL=1.00 LS BEND=1.10 COMP=1.10 SHEAR=1.10 TENS= 1.10

COMPANION LIVE LOAD FACTOR = 1.00

AUTOSOLVE RIGHT HEEL ONLY

TRUSS PLATE MANUFACTURER IS NOT RESPONSIBLE FOR QUALITY CONTROL IN THE TRUSS MANUFACTURING PLANT .

NAIL VALUES

PLATE	GRIP(DRY) (PSI) MAX	MIN	SHEAR (PLI) MAX	MIN	SECTION (PLI) MAX	MIN
MT20	650	371	1747	788	1987	1873

PLATE PLACEMENT TOL. = 0.250 inches

PLATE ROTATION TOL. = 5.0 Deg.

JSI GRIP= 0.76 (K) (INPUT = 0.90)
JSI METAL= 0.35 (I) (INPUT = 0.95)

LICENSED PROFESSIONAL ENGINEER
02-28-24
H. J. G. ALVES
100009024
PROVINCE OF ONTARIO

Structural component only
DWG# T-2406408

JOB NAME	TRUSS NAME	QUANTITY	PLY	JOB DESC.	DRWG NO.
425913	T16S	2	1	ROYAL PINE HOMES TRUSS DESC.	

Tamarack Roof Truss, Burlington

Version 8.630 S Aug 30 2023 MiTek Industries, Inc. Wed Feb 28 15:02:54 2024 Page 1
ID:VI_DQvi1e49Qy7axT?i10OzOYuG-kBNpt79oqF2shX717B_UWQHdzev6ys7nlmCroNzgawF

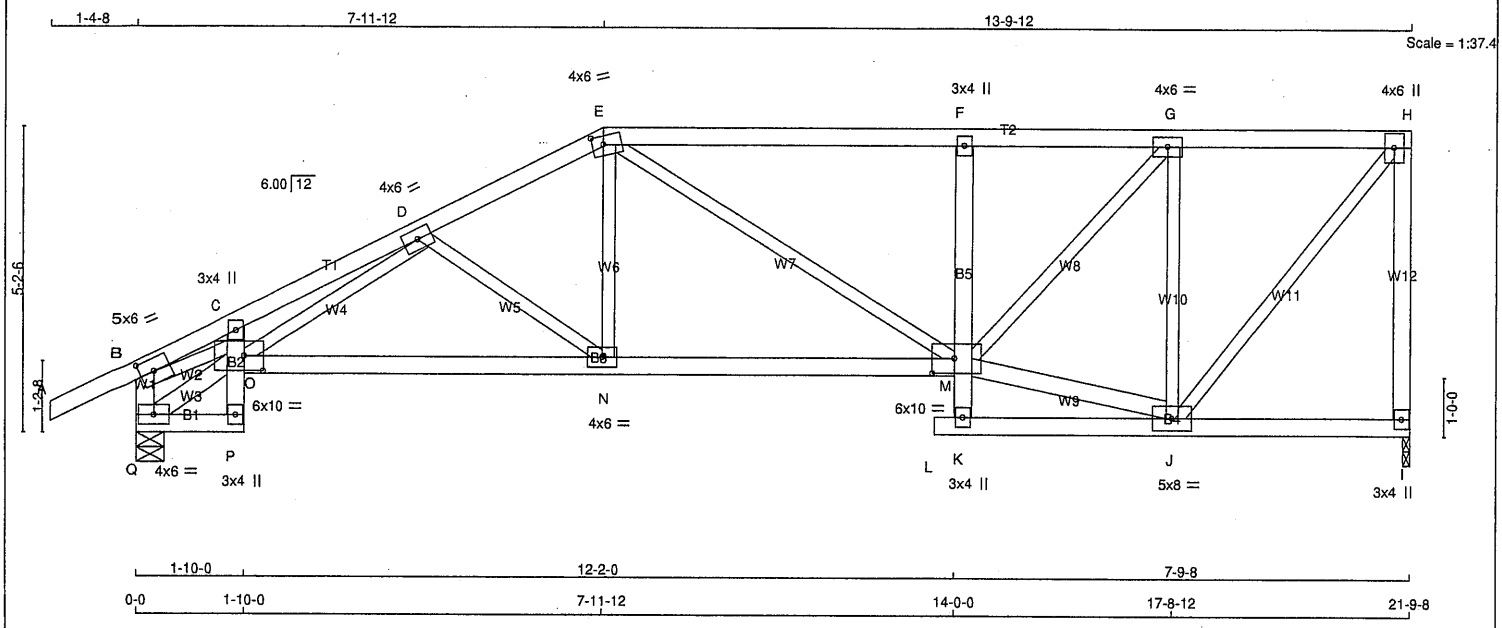

TOTAL WEIGHT = 2 X 100 = 200 lb [M]

LUMBER
N. L. G. A. RULES

CHORDS	SIZE		LUMBER	DESCR.
A - E	2x4	DRY	No.2	SPF
E - H	2x4	DRY	No.2	SPF
I - H	2x4	DRY	No.2	SPF
Q - B	2x4	DRY	No.2	SPF
Q - P	2x4	DRY	No.2	SPF
P - C	2x4	DRY	No.2	SPF
O - M	2x4	DRY	No.2	SPF
K - F	2x4	DRY	No.2	SPF
L - I	2x4	DRY	No.2	SPF
ALL WEBS EXCEPT	2x3	DRY	No.2	SPF
M - J	2x4	DRY	No.2	SPF
Q - O	2x4	DRY	No.2	SPF

DRY: SEASONED LUMBER.

PLATES (table is in inches)

JT	TYPE	PLATES	W	LEN	Y	X
B	TMVW-t	MT20	5.0	6.0	2.50	2.75
C	TMV+p	MT20	3.0	4.0		
D	TMWW-t	MT20	4.0	6.0		
E	TTWW-m	MT20	4.0	6.0	1.75	2.25
F	TMV+p	MT20	3.0	4.0		
G	TMWW-t	MT20	4.0	6.0		
H	TMVW+p	MT20	4.0	6.0		
I	BMV1+p	MT20	3.0	4.0		
J	BMWWW-t	MT20	5.0	8.0		
K	BMV+p	MT20	3.0	4.0		
M	BVMWWW-I	MT20	6.0	10.0	3.00	4.50
N	BMWW-t	MT20	4.0	6.0		
O	BVMWWW-I	MT20	6.0	10.0	3.00	3.75
P	BMV+p	MT20	3.0	4.0		
Q	BMVW1-t	MT20	4.0	6.0		

NOTES- (1)
1) Lateral braces to be a minimum of 2X4 SPF #2.

LICENSED PROFESSIONAL ENGINEER
02-28-24
H. J. G. ALVES
100009024
PROVINCE OF ONTARIO

Structural component only
DWG# T-2406409

DIMENSIONS, SUPPORTS AND LOADINGS SPECIFIED BY FABRICATOR TO BE VERIFIED BY BUILDING DESIGNER

BEARINGS

JT	FACTORED GROSS REACTION VERT	HORZ	MAXIMUM FACTORED GROSS REACTION DOWN	HORZ	UPLIFT	INPUT BRG IN-SX	REQRD BRG IN-SX
I	1128	0	1128	0	0	1-8	1-8
Q	1256	0	1256	0	0	5-8	1-8

UNFACTORED REACTIONS

JT	1ST LCASE COMBINED	MAX./MIN. COMPONENT REACTIONS SNOW	LIVE	PERM.LIVE	WIND	DEAD	SOIL
I	801	505 / 0	0 / 0	0 / 0	0 / 0	296 / 0	0 / 0
Q	889	577 / 0	0 / 0	0 / 0	0 / 0	312 / 0	0 / 0

BEARING MATERIAL TO BE SPF NO.2 OR BETTER AT JOINT(S) I, Q

BRACING
TOP CHORD TO BE SHEATHED OR MAX. PURLIN SPACING = 4.25 FT.
MAX. UNBRACED BOTTOM CHORD LENGTH = 7.81 FT OR RIGID CEILING DIRECTLY APPLIED.

ALL PITCH BREAKS AND PERIMETER CORNER JOINTS MUST BE LATERALLY RESTRAINED.

LOADING
TOTAL LOAD CASES: (4)

CHORDS

MEMB. FR-TO	MAX. FORCE (LBS)	FACTORED VERT. LOAD (PLF)	LC1 FROM	LC1 TO	MAX CSI (LC)	MAX. UNBRAC LENGTH
A- B	0 / 27	-84.9	-84.9	0.12 (1)	10.00	
B- C	-2215 / 0	-84.9	-84.9	0.17 (1)	4.43	
C- D	-2363 / 0	-84.9	-84.9	0.23 (1)	4.25	
D- E	-1655 / 0	-84.9	-84.9	0.19 (1)	4.97	
E- F	-1504 / 0	-84.9	-84.9	0.46 (1)	4.80	
F- G	-1494 / 0	-84.9	-84.9	0.41 (1)	4.83	
G- H	-770 / 0	-84.9	-84.9	0.20 (1)	6.25	
I- H	-1098 / 0	0.0	0.0	0.51 (1)	7.55	
Q- B	-1151 / 0	0.0	0.0	0.12 (1)	7.42	
Q- P	0 / 151	-18.5	-18.5	0.03 (1)	10.00	
P- O	0 / 17	0.0	0.0	0.21 (1)	10.00	
O- C	-119 / 0	0.0	0.0	0.21 (1)	7.81	
O- N	0 / 1832	-18.5	-18.5	0.40 (1)	10.00	
N- M	0 / 1476	-18.5	-18.5	0.34 (1)	10.00	
K- M	0 / 38	0.0	0.0	0.06 (1)	10.00	
M- F	-509 / 0	0.0	0.0	0.08 (1)	7.81	
L- K	0 / 0	-18.5	-18.5	0.00 (4)	10.00	
K- J	0 / 40	-18.5	-18.5	0.08 (4)	10.00	
J- I	0 / 0	-18.5	-18.5	0.07 (4)	10.00	

WEBS

MEMB. FR-TO	MAX. FORCE (LBS)	MAX CSI (LC)
O- D	0 / 381	0.09 (1)
D- N	-449 / 0	0.13 (1)
N- E	0 / 400	0.09 (1)
E- M	-21 / 34	0.02 (4)
J- G	-1064 / 0	0.43 (1)
J- H	0 / 1220	0.27 (1)
M- J	0 / 772	0.12 (1)
M- G	0 / 1049	0.24 (1)
Q- O	-175 / 0	0.02 (1)
B- O	0 / 1942	0.44 (1)

DESIGN CRITERIA

SPECIFIED LOADS:

TOP CH.	LL	=	23.3	PSF
	DL	=	6.0	PSF
BOT CH.	LL	=	0.0	PSF
	DL	=	7.4	PSF
TOTAL LOAD		=	36.7	PSF

SPACING = 24.0 IN. C/C

LOADING IN FLAT SECTION BASED ON A SLOPE OF 6.00/12

THIS TRUSS IS DESIGNED FOR RESIDENTIAL OR SMALL BUILDING REQUIREMENTS OF PART 9, NBCC 2015

THIS DESIGN COMPLIES WITH:
- PART 9 OF BCBC 2018 , NBC-2019AE
- PART 9 OF OBC 2012 (2019 AMENDMENT)
- CSA 086-14
- TPIC 2014

DESIGN ASSUMPTIONS
-OVERHANG NOT TO BE ALTERED OR CUT OFF.

(55 % OF 27.2 P.S.F. G.S.L. PLUS 8.4 P.S.F. RAIN LOAD) EQUALS 23.3 P.S.F. SPECIFIED ROOF LIVE LOAD

ALLOWABLE DEFL.(LL)= L/360 (0.73")
CALCULATED VERT. DEFL.(LL) = L/ 999 (0.07")
ALLOWABLE DEFL.(TL)= L/360 (0.73")
CALCULATED VERT. DEFL.(TL) = L/ 999 (0.15")

CSI: TC=0.51/1.00 (H-I:1) , BC=0.40/1.00 (N-O:1) , WB=0.44/1.00 (B-O:1) , SSI=0.24/1.00 (E-F:1)

DOL LUMBER=1.00 NAIL=1.00 LS BEND=1.10 COMP=1.10 SHEAR=1.10 TENS= 1.10

COMPANION LIVE LOAD FACTOR = 1.00

TRUSS PLATE MANUFACTURER IS NOT RESPONSIBLE FOR QUALITY CONTROL IN THE TRUSS MANUFACTURING PLANT .

NAIL VALUES

PLATE	GRIP(DRY) (PSI) MAX	MIN	SHEAR (PLI) MAX	MIN	SECTION (PLI) MAX	MIN
MT20	650	371	1747	788	1987	1873

PLATE PLACEMENT TOL. = 0.250 inches

PLATE ROTATION TOL. = 5.0 Deg.

JSI GRIP= 0.79 (O) (INPUT = 0.90)
JSI METAL= 0.52 (B) (INPUT = 0.95)

JOB NAME	TRUSS NAME	QUANTITY	PLY	JOB DESC.	DRWG NO.
425913	T17	1	1	ROYAL PINE HOMES TRUSS DESC.	

Tamarack Roof Truss, Burlington

Version 8.630 S Aug 30 2023 MiTek Industries, Inc. Wed Feb 28 15:02:55 2024 Page 1
ID:VI_DQvi1e49Qy7axT?i10OzOYuG-CNxC5TAQbZAjlhiEhvVj3dpku2HQhJUx_QxOKpzgawE

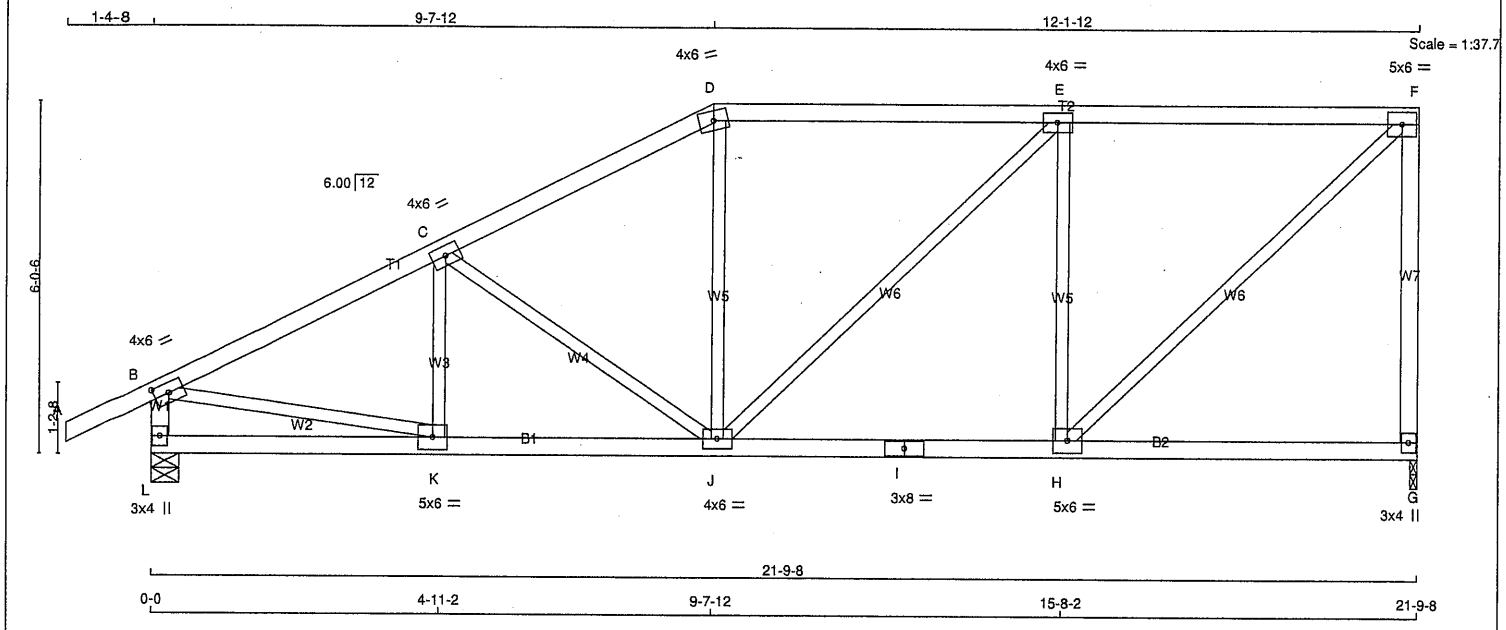

TOTAL WEIGHT = 93 lb

LUMBER
N. L. G. A. RULES

CHORDS	SIZE		LUMBER	DESCR.
A - D	2x4	DRY	No.2	SPF
D - F	2x4	DRY	No.2	SPF
G - F	2x4	DRY	No.2	SPF
L - B	2x4	DRY	No.2	SPF
L - I	2x4	DRY	No.2	SPF
I - G	2x4	DRY	No.2	SPF
ALL WEBS EXCEPT	2x3	DRY	No.2	SPF

DRY: SEASONED LUMBER.

PLATES (table is in inches)

JT	TYPE	PLATES	W	LEN	Y	X
B	TMVW-t	MT20	4.0	6.0	2.00	3.00
C	TMWW-t	MT20	4.0	6.0		
D	TTW-m	MT20	4.0	6.0		
E	TMWW-t	MT20	4.0	6.0		
F	TMVW-t	MT20	5.0	6.0		
G	BMV1+p	MT20	3.0	4.0		
H	BMWW-t	MT20	5.0	6.0		
I	BS-t	MT20	3.0	8.0		
J	BMWWW-t	MT20	4.0	6.0		
K	BMWW-t	MT20	5.0	6.0		
L	BMV1+p	MT20	3.0	4.0		

NOTES- (1)
1) Lateral braces to be a minimum of 2X4 SPF #2.

DIMENSIONS, SUPPORTS AND LOADINGS SPECIFIED BY FABRICATOR TO BE VERIFIED BY BUILDING DESIGNER

BEARINGS

JT	FACTORED GROSS REACTION VERT	HORZ	MAXIMUM FACTORED GROSS REACTION DOWN	HORZ	UPLIFT	INPUT BRG IN-SX	REQRD BRG IN-SX
G	1126	0	1126	0	0	1-8	1-8
L	1248	0	1248	0	0	5-8	1-8

UNFACTORED REACTIONS

JT	1ST LCASE COMBINED	MAX./MIN. COMPONENT REACTIONS SNOW	LIVE	PERM.LIVE	WIND	DEAD	SOIL
G	799	507 / 0	0 / 0	0 / 0	0 / 0	292 / 0	0 / 0
L	884	575 / 0	0 / 0	0 / 0	0 / 0	309 / 0	0 / 0

BEARING MATERIAL TO BE SPF NO.2 OR BETTER AT JOINT(S) G, L

BRACING
TOP CHORD TO BE SHEATHED OR MAX. PURLIN SPACING = 4.93 FT.
MAX. UNBRACED BOTTOM CHORD LENGTH = 10.00 FT OR RIGID CEILING DIRECTLY APPLIED.

ALL PITCH BREAKS AND PERIMETER CORNER JOINTS MUST BE LATERALLY RESTRAINED.

LOADING
TOTAL LOAD CASES: (4)

CHORDS

MEMB. FR-TO	MAX. FACTORED FORCE (LBS)	FACTORED VERT. LOAD (PLF) FROM	TO	LC1 MAX CSI (LC)	MAX. UNBRAC LENGTH
A- B	0 / 27	-84.9	-84.9	0.12 (1)	10.00
B- C	-1492 / 0	-84.9	-84.9	0.38 (1)	4.93
C- D	-1206 / 0	-84.9	-84.9	0.35 (1)	5.38
D- E	-1062 / 0	-84.9	-84.9	0.58 (1)	5.22
E- F	-941 / 0	-84.9	-84.9	0.57 (1)	5.48
G- F	-1080 / 0	0.0	0.0	0.75 (1)	7.60
L- B	-1208 / 0	0.0	0.0	0.12 (1)	7.28
L- K	0 / 0	-18.5	-18.5	0.09 (4)	10.00
K- J	0 / 1353	-18.5	-18.5	0.27 (1)	10.00
J- I	0 / 941	-18.5	-18.5	0.25 (4)	10.00
I- H	0 / 941	-18.5	-18.5	0.25 (4)	10.00
H- G	0 / 0	-18.5	-18.5	0.17 (4)	10.00

WEBS

MEMB. FR-TO	MAX. FACTORED FORCE (LBS)	MAX CSI (LC)
K- C	-154 / 21	0.03 (1)
C- J	-359 / 0	0.21 (1)
J- D	0 / 185	0.04 (4)
J- E	0 / 169	0.04 (1)
H- E	-756 / 0	0.43 (1)
H- F	0 / 1290	0.29 (1)
B- K	0 / 1376	0.31 (1)

DESIGN CRITERIA

SPECIFIED LOADS:

TOP CH.	LL =	23.3	PSF
	DL =	6.0	PSF
BOT CH.	LL =	0.0	PSF
	DL =	7.4	PSF
TOTAL LOAD	=	36.7	PSF

SPACING = 24.0 IN. C/C

LOADING IN FLAT SECTION BASED ON A SLOPE OF 6.00/12

THIS TRUSS IS DESIGNED FOR RESIDENTIAL OR SMALL BUILDING REQUIREMENTS OF PART 9, NBCC 2015

THIS DESIGN COMPLIES WITH:
- PART 9 OF BCBC 2018 , NBC-2019AE
- PART 9 OF OBC 2012 (2019 AMENDMENT)
- CSA 086-14
- TPIC 2014

(55 % OF 27.2 P.S.F. G.S.L. PLUS 8.4 P.S.F. RAIN LOAD) EQUALS 23.3 P.S.F. SPECIFIED ROOF LIVE LOAD

ALLOWABLE DEFL.(LL)= L/360 (0.73")
CALCULATED VERT. DEFL.(LL) = L/ 999 (0.04")
ALLOWABLE DEFL.(TL)= L/360 (0.73")
CALCULATED VERT. DEFL.(TL) = L/ 999 (0.09")

CSI: TC=0.75/1.00 (F-G:1) , BC=0.27/1.00 (J-K:1) , WB=0.43/1.00 (E-H:1) , SSI=0.25/1.00 (E-F:1)

DOL LUMBER=1.00 NAIL=1.00 LS BEND=1.10 COMP=1.10 SHEAR=1.10 TENS= 1.10

COMPANION LIVE LOAD FACTOR = 1.00

TRUSS PLATE MANUFACTURER IS NOT RESPONSIBLE FOR QUALITY CONTROL IN THE TRUSS MANUFACTURING PLANT .

NAIL VALUES

PLATE	GRIP(DRY) (PSI) MAX	MIN	SHEAR (PLI) MAX	MIN	SECTION (PLI) MAX	MIN
MT20	650	371	1747	788	1987	1873

PLATE PLACEMENT TOL. = 0.250 inches

PLATE ROTATION TOL. = 5.0 Deg.

JSI GRIP= 0.70 (B) (INPUT = 0.90)
JSI METAL= 0.37 (B) (INPUT = 0.95)

LICENSED PROFESSIONAL ENGINEER
02-28-24
H. J. G. ALVES
100009024
PROVINCE OF ONTARIO

Structural component only
DWG# T-2406410

JOB NAME	TRUSS NAME	QUANTITY	PLY	JOB DESC.	DRWG NO.
425913	T17S	2	1	ROYAL PINE HOMES TRUSS DESC.	

Tamarack Roof Truss, Burlington

Version 8.630 S Aug 30 2023 MiTek Industries, Inc. Wed Feb 28 15:02:57 2024 Page 1
ID:VI_DQvi1e49Qy7axT?i10OzOYuG-8m3yV9Bh7AQRY?scoKXB82u4CrxY9AQDSkQVPizgawC

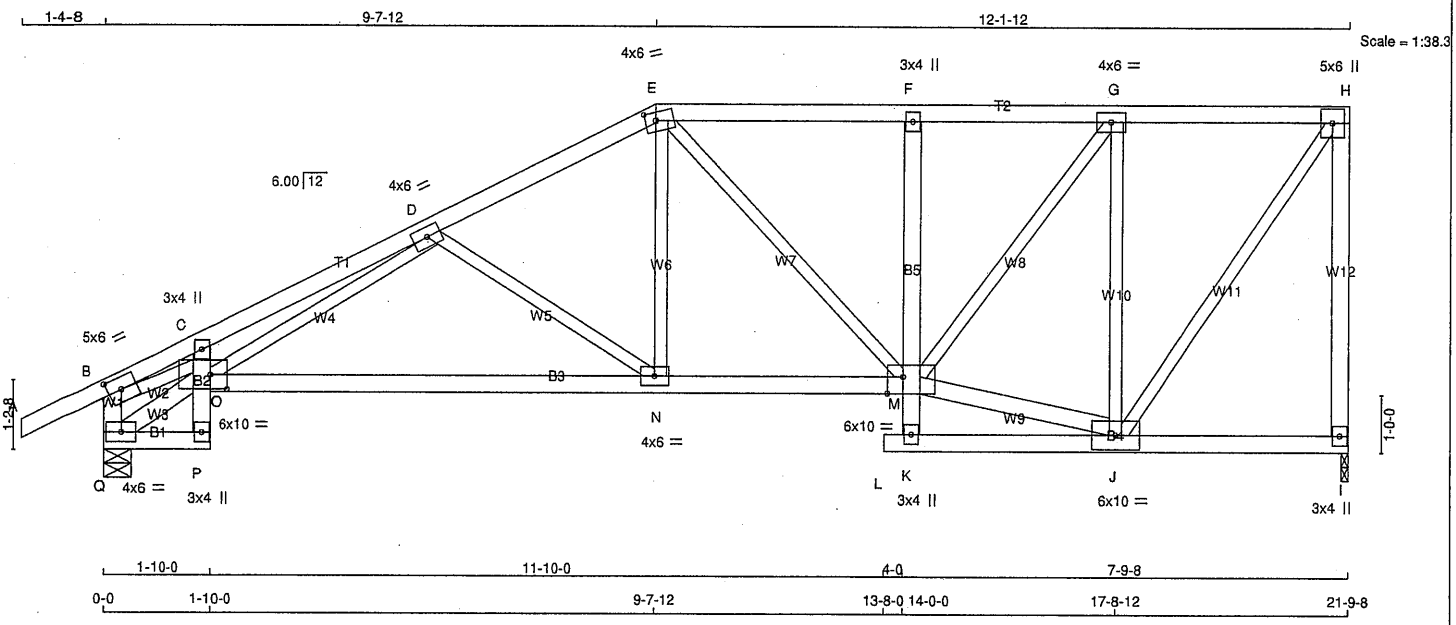

TOTAL WEIGHT = 2 X 106 = 211 lb [M]

LUMBER

N. L. G. A. RULES

CHORDS	SIZE		LUMBER	DESCR.
A - E	2x4	DRY	No.2	SPF
E - H	2x4	DRY	No.2	SPF
I - H	2x4	DRY	No.2	SPF
Q - B	2x4	DRY	No.2	SPF
Q - P	2x4	DRY	No.2	SPF
P - C	2x4	DRY	No.2	SPF
O - M	2x4	DRY	No.2	SPF
K - F	2x4	DRY	No.2	SPF
L - I	2x4	DRY	No.2	SPF
ALL WEBS	2x3	DRY	No.2	SPF
EXCEPT				
M - J	2x4	DRY	No.2	SPF
Q - O	2x4	DRY	No.2	SPF

DRY: SEASONED LUMBER.

PLATES (table is in inches)

JT	TYPE	PLATES	W	LEN	Y	X
B	TMVW-t	MT20	5.0	6.0	2.50	2.75
C	TMV+p	MT20	3.0	4.0		
D	TMWW-t	MT20	4.0	6.0		
E	TTWW-m	MT20	4.0	6.0	1.75	2.25
F	TMV+p	MT20	3.0	4.0		
G	TMWW-t	MT20	4.0	6.0		
H	TMVW+p	MT20	5.0	6.0		
I	BMV1+p	MT20	3.0	4.0		
J	BMWWW-t	MT20	6.0	10.0		
K	BMV+p	MT20	3.0	4.0		
M	BVMWWW-l	MT20	6.0	10.0	Edge	3.25
N	BMWW-t	MT20	4.0	6.0		
O	BVMWWW-l	MT20	6.0	10.0	3.00	3.50
P	BMV+p	MT20	3.0	4.0		
Q	BMVW1-t	MT20	4.0	6.0		

Edge - INDICATES REFERENCE CORNER OF PLATE TOUCHES EDGE OF CHORD.

NOTES (1)
1) Lateral braces to be a minimum of 2X4 SPF #2.

LICENSED PROFESSIONAL ENGINEER
02-28-24
H. J. G. ALVES
100009024
PROVINCE OF ONTARIO

Structural component only
DWG# T-2406411

DIMENSIONS, SUPPORTS AND LOADINGS SPECIFIED BY FABRICATOR TO BE VERIFIED BY BUILDING DESIGNER

BEARINGS

JT	FACTORED GROSS REACTION VERT	HORZ	MAXIMUM FACTORED GROSS REACTION DOWN	HORZ	UPLIFT	INPUT BRG IN-SX	REQRD BRG IN-SX
I	1128	0	1128	0	0	1-8	1-8
Q	1256	0	1256	0	0	5-8	1-8

UNFACTORED REACTIONS

JT	1ST LCASE COMBINED	MAX./MIN. COMPONENT REACTIONS SNOW	LIVE	PERM.LIVE	WIND	DEAD	SOIL
I	801	505 / 0	0 / 0	0 / 0	0 / 0	296 / 0	0 / 0
Q	889	577 / 0	0 / 0	0 / 0	0 / 0	312 / 0	0 / 0

BEARING MATERIAL TO BE SPF NO.2 OR BETTER AT JOINT(S) I, Q

BRACING

TOP CHORD TO BE SHEATHED OR MAX. PURLIN SPACING = 4.13 FT.
MAX. UNBRACED BOTTOM CHORD LENGTH = 7.81 FT OR RIGID CEILING DIRECTLY APPLIED.

ALL PITCH BREAKS AND PERIMETER CORNER JOINTS MUST BE LATERALLY RESTRAINED.

LOADING

TOTAL LOAD CASES: (4)

CHORDS

MEMB. FR-TO	MAX. FACTORED FORCE (LBS)	FACTORED VERT. LOAD LC1 (PLF) FROM	TO	MAX CSI (LC)	MAX. UNBRAC LENGTH
A- B	0 / 27	-84.9	-84.9	0.12 (1)	10.00
B- C	-2242 / 0	-84.9	-84.9	0.17 (1)	4.41
C- D	-2396 / 0	-84.9	-84.9	0.33 (1)	4.13
D- E	-1462 / 0	-84.9	-84.9	0.27 (1)	5.10
E- F	-1212 / 0	-84.9	-84.9	0.23 (1)	5.54
F- G	-1206 / 0	-84.9	-84.9	0.21 (1)	5.57
G- H	-664 / 0	-84.9	-84.9	0.18 (1)	6.25
I- H	-1098 / 0	0.0	0.0	0.77 (1)	7.55
Q- B	-1150 / 0	0.0	0.0	0.12 (1)	7.42
Q- P	0 / 153	-18.5	-18.5	0.03 (1)	10.00
P- O	0 / 17	0.0	0.0	0.21 (1)	10.00
O- C	-171 / 0	0.0	0.0	0.21 (1)	7.81
O- N	0 / 1739	-18.5	-18.5	0.42 (1)	10.00
N- M	0 / 1299	-18.5	-18.5	0.38 (4)	10.00
K- M	0 / 38	0.0	0.0	0.05 (1)	10.00
M- F	-380 / 0	0.0	0.0	0.08 (1)	7.81
L- K	0 / 0	-18.5	-18.5	0.00 (4)	10.00
K- J	0 / 31	-18.5	-18.5	0.08 (4)	10.00
J- I	0 / 0	-18.5	-18.5	0.07 (4)	10.00

WEBS

MEMB. FR-TO	MAX. FACTORED FORCE (LBS)	MAX CSI (LC)
O- D	0 / 519	0.12 (1)
N- E	0 / 451	0.10 (1)
E- M	-126 / 0	0.09 (1)
J- G	-1045 / 0	0.59 (1)
J- H	0 / 1162	0.26 (1)
M- J	0 / 669	0.11 (1)
M- G	0 / 878	0.20 (1)
Q- O	-177 / 0	0.02 (1)
B- O	0 / 1973	0.44 (1)

DESIGN CRITERIA

SPECIFIED LOADS:

TOP CH.	LL	=	23.3	PSF
	DL	=	6.0	PSF
BOT CH.	LL	=	0.0	PSF
	DL	=	7.4	PSF
TOTAL LOAD		=	36.7	PSF

SPACING = 24.0 IN. C/C

LOADING IN FLAT SECTION BASED ON A SLOPE OF 6.00/12

THIS TRUSS IS DESIGNED FOR RESIDENTIAL OR SMALL BUILDING REQUIREMENTS OF PART 9, NBCC 2015

THIS DESIGN COMPLIES WITH:
- PART 9 OF BCBC 2018 , NBC-2019AE
- PART 9 OF OBC 2012 (2019 AMENDMENT)
- CSA 086-14
- TPIC 2014

DESIGN ASSUMPTIONS
-OVERHANG NOT TO BE ALTERED OR CUT OFF.

(55 % OF 27.2 P.S.F. G.S.L. PLUS 8.4 P.S.F. RAIN LOAD) EQUALS 23.3 P.S.F. SPECIFIED ROOF LIVE LOAD

ALLOWABLE DEFL.(LL)= L/360 (0.73")
CALCULATED VERT. DEFL.(LL) = L/ 999 (0.07")
ALLOWABLE DEFL.(TL)= L/360 (0.73")
CALCULATED VERT. DEFL.(TL) = L/ 999 (0.23")

CSI: TC=0.77/1.00 (H-I:1) , BC=0.42/1.00 (N-O:1) , WB=0.59/1.00 (G-J:1) , SSI=0.17/1.00 (E-F:1)

DOL LUMBER=1.00 NAIL=1.00 LS BEND=1.10 COMP=1.10 SHEAR=1.10 TENS= 1.10

COMPANION LIVE LOAD FACTOR = 1.00

TRUSS PLATE MANUFACTURER IS NOT RESPONSIBLE FOR QUALITY CONTROL IN THE TRUSS MANUFACTURING PLANT .

NAIL VALUES

PLATE	GRIP(DRY) (PSI) MAX	MIN	SHEAR (PLI) MAX	MIN	SECTION (PLI) MAX	MIN
MT20	650	371	1747	788	1987	1873

PLATE PLACEMENT TOL. = 0.250 inches

PLATE ROTATION TOL. = 5.0 Deg.

JSI GRIP= 0.72 (G) (INPUT = 0.90)
JSI METAL= 0.53 (B) (INPUT = 0.95)

JOB NAME	TRUSS NAME	QUANTITY	PLY	JOB DESC.	DRWG NO.
425913	T18	3	1	ROYAL PINE HOMES TRUSS DESC.	

Tamarack Roof Truss, Burlington

Version 8.630 S Aug 30 2023 MiTek Industries, Inc. Wed Feb 28 15:02:58 2024 Page 1
ID:VI_DQvi1e49Qy7axT?i10OzOYuG-cydKjUCJuUYH99RoM13QhGRJvFIuucuNgOA2x8zgawB

Scale = 1:41.6

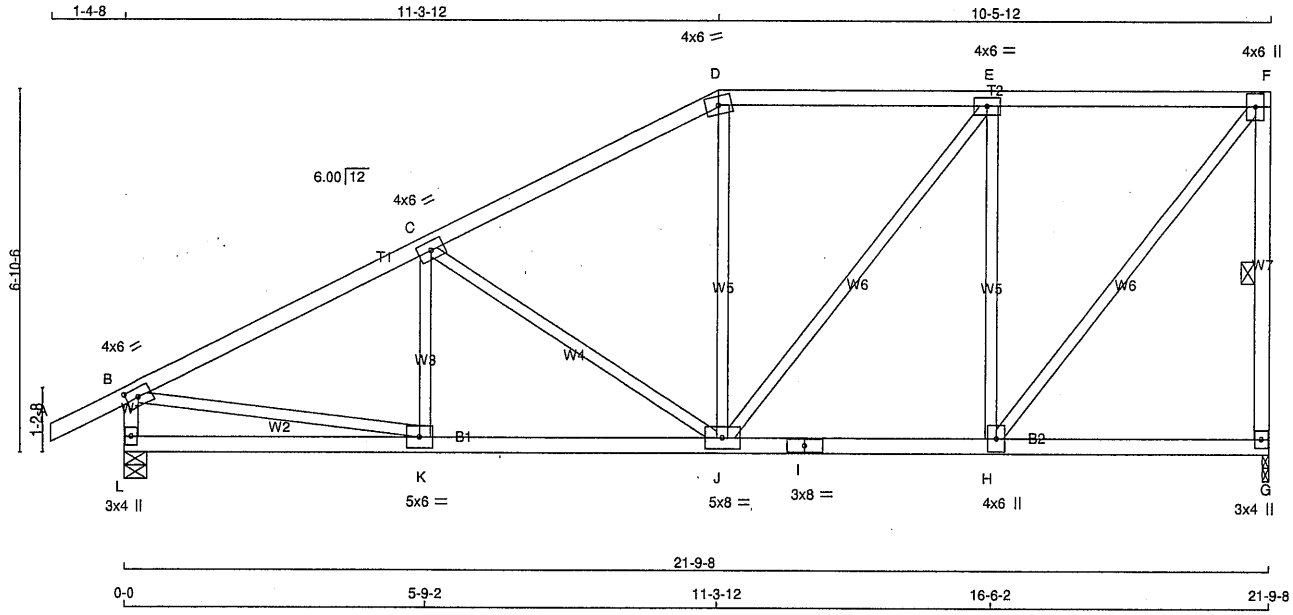

TOTAL WEIGHT = 3 X 97 = 291 lb
[M][F]

LUMBER
N. L. G. A. RULES

CHORDS	SIZE		LUMBER	DESCR.
A - D	2x4	DRY	No.2	SPF
D - F	2x4	DRY	No.2	SPF
G - F	2x4	DRY	No.2	SPF
L - B	2x4	DRY	No.2	SPF
L - I	2x4	DRY	No.2	SPF
I - G	2x4	DRY	No.2	SPF
ALL WEBS EXCEPT	2x3	DRY	No.2	SPF

DRY: SEASONED LUMBER.

PLATES (table is in inches)

JT	TYPE	PLATES	W	LEN	Y	X
B	TMVW-t	MT20	4.0	6.0	2.00	3.00
C	TMWW-t	MT20	4.0	6.0		
D	TTW-m	MT20	4.0	6.0		
E	TMWW-t	MT20	4.0	6.0		
F	TMVW+p	MT20	4.0	6.0		
G	BMV1+p	MT20	3.0	4.0		
H	BMWW+t	MT20	4.0	6.0		
I	BS-t	MT20	3.0	8.0		
J	BMWWW-t	MT20	5.0	8.0		
K	BMWW-t	MT20	5.0	6.0		
L	BMV1+p	MT20	3.0	4.0		

NOTES- (1)
1) Lateral braces to be a minimum of 2X4 SPF #2.

DIMENSIONS, SUPPORTS AND LOADINGS SPECIFIED BY FABRICATOR TO BE VERIFIED BY BUILDING DESIGNER

BEARINGS

JT	FACTORED GROSS REACTION VERT	HORZ	MAXIMUM FACTORED GROSS REACTION DOWN	HORZ	UPLIFT	INPUT BRG IN-SX	REQRD BRG IN-SX
G	1126	0	1126	0	0	1-8	1-8
L	1248	0	1248	0	0	5-8	1-8

UNFACTORED REACTIONS

JT	1ST LCASE COMBINED	MAX./MIN. COMPONENT REACTIONS SNOW	LIVE	PERM.LIVE	WIND	DEAD	SOIL
G	799	507 / 0	0 / 0	0 / 0	0 / 0	292 / 0	0 / 0
L	884	575 / 0	0 / 0	0 / 0	0 / 0	309 / 0	0 / 0

BEARING MATERIAL TO BE SPF NO.2 OR BETTER AT JOINT(S) G, L

BRACING
TOP CHORD TO BE SHEATHED OR MAX. PURLIN SPACING = 4.94 FT.
MAX. UNBRACED BOTTOM CHORD LENGTH = 10.00 FT OR RIGID CEILING DIRECTLY APPLIED.

ALL PITCH BREAKS AND PERIMETER CORNER JOINTS MUST BE LATERALLY RESTRAINED.

1 LATERAL BRACE(S) AT 1/ 2 LENGTH OF F-G.

END VERTICAL(S) MUST BE SHEATHED OR HAVE BRACES AS INDICATED IN THE MAX. UNBRACED LENGTH COLUMN OF THE TABLE BELOW

LOADING
TOTAL LOAD CASES: (4)

CHORDS

MEMB. FR-TO	FORCE (LBS)	FACTORED VERT. LOAD (PLF) FROM	TO	LC1 MAX CSI (LC)	MAX. UNBRAC LENGTH
A- B	0 / 27	-84.9	-84.9	0.12 (1)	10.00
B- C	-1497 / 0	-84.9	-84.9	0.38 (1)	4.94
C- D	-1071 / 0	-84.9	-84.9	0.36 (1)	5.64
D- E	-935 / 0	-84.9	-84.9	0.31 (1)	6.01
E- F	-735 / 0	-84.9	-84.9	0.30 (1)	6.25
G- F	-1086 / 0	0.0	0.0	0.23 (1)	6.07
L- B	-1204 / 0	0.0	0.0	0.12 (1)	7.29
L- K	0 / 0	-18.5	-18.5	0.14 (4)	10.00
K- J	0 / 1361	-18.5	-18.5	0.28 (1)	10.00
J- I	0 / 735	-18.5	-18.5	0.18 (4)	10.00
I- H	0 / 735	-18.5	-18.5	0.18 (4)	10.00
H- G	0 / 0	-18.5	-18.5	0.12 (4)	10.00

WEBS

MEMB. FR-TO	FORCE (LBS)	MAX CSI (LC)
K- C	-96 / 58	0.02 (1)
C- J	-514 / 0	0.44 (1)
J- D	0 / 123	0.04 (4)
J- E	0 / 327	0.07 (1)
H- E	-809 / 0	0.64 (1)
H- F	0 / 1174	0.26 (1)
B- K	0 / 1378	0.31 (1)

DESIGN CRITERIA

SPECIFIED LOADS:

TOP CH.	LL	=	23.3	PSF
	DL	=	6.0	PSF
BOT CH.	LL	=	0.0	PSF
	DL	=	7.4	PSF
TOTAL LOAD		=	36.7	PSF

SPACING = 24.0 IN. C/C

LOADING IN FLAT SECTION BASED ON A SLOPE OF 6.00/12

THIS TRUSS IS DESIGNED FOR RESIDENTIAL OR SMALL BUILDING REQUIREMENTS OF PART 9, NBCC 2015

THIS DESIGN COMPLIES WITH:
- PART 9 OF BCBC 2018 , NBC-2019AE
- PART 9 OF OBC 2012 (2019 AMENDMENT)
- CSA 086-14
- TPIC 2014

(55 % OF 27.2 P.S.F. G.S.L. PLUS 8.4 P.S.F. RAIN LOAD) EQUALS 23.3 P.S.F. SPECIFIED ROOF LIVE LOAD

ALLOWABLE DEFL.(LL)= L/360 (0.73")
CALCULATED VERT. DEFL.(LL) = L/ 999 (0.04")
ALLOWABLE DEFL.(TL)= L/360 (0.73")
CALCULATED VERT. DEFL.(TL) = L/ 999 (0.09")

CSI: TC=0.38/1.00 (B-C:1) , BC=0.28/1.00 (J-K:1) , WB=0.64/1.00 (E-H:1) , SSI=0.22/1.00 (E-F:1)

DOL LUMBER=1.00 NAIL=1.00 LS BEND=1.10 COMP=1.10 SHEAR=1.10 TENS= 1.10

COMPANION LIVE LOAD FACTOR = 1.00

TRUSS PLATE MANUFACTURER IS NOT RESPONSIBLE FOR QUALITY CONTROL IN THE TRUSS MANUFACTURING PLANT .

NAIL VALUES

PLATE	GRIP(DRY) (PSI) MAX	MIN	SHEAR (PLI) MAX	MIN	SECTION (PLI) MAX	MIN
MT20	650	371	1747	788	1987	1873

PLATE PLACEMENT TOL. = 0.250 inches

PLATE ROTATION TOL. = 5.0 Deg.

JSI GRIP= 0.69 (B) (INPUT = 0.90)
JSI METAL= 0.38 (B) (INPUT = 0.95)

LICENSED PROFESSIONAL ENGINEER
02-28-24
H. J. G. ALVES
100009024
PROVINCE OF ONTARIO

Structural component only
DWG# T-2406412

JOB NAME	TRUSS NAME	QUANTITY	PLY	JOB DESC.	DRWG NO.
425914	T18S	2	1	ROYAL PINE HOMES TRUSS DESC.	

Tamarack Roof Truss, Burlington

Version 8.630 S Aug 30 2023 MiTek Industries, Inc. Wed Feb 28 16:19:21 2024 Page 1
ID:VI_DQvi1e49Qy7axT?i10OzOYuG-wf2ubag3bcz0USIdL2n9xjlYihR0CKkyXvr3H?zgZoa

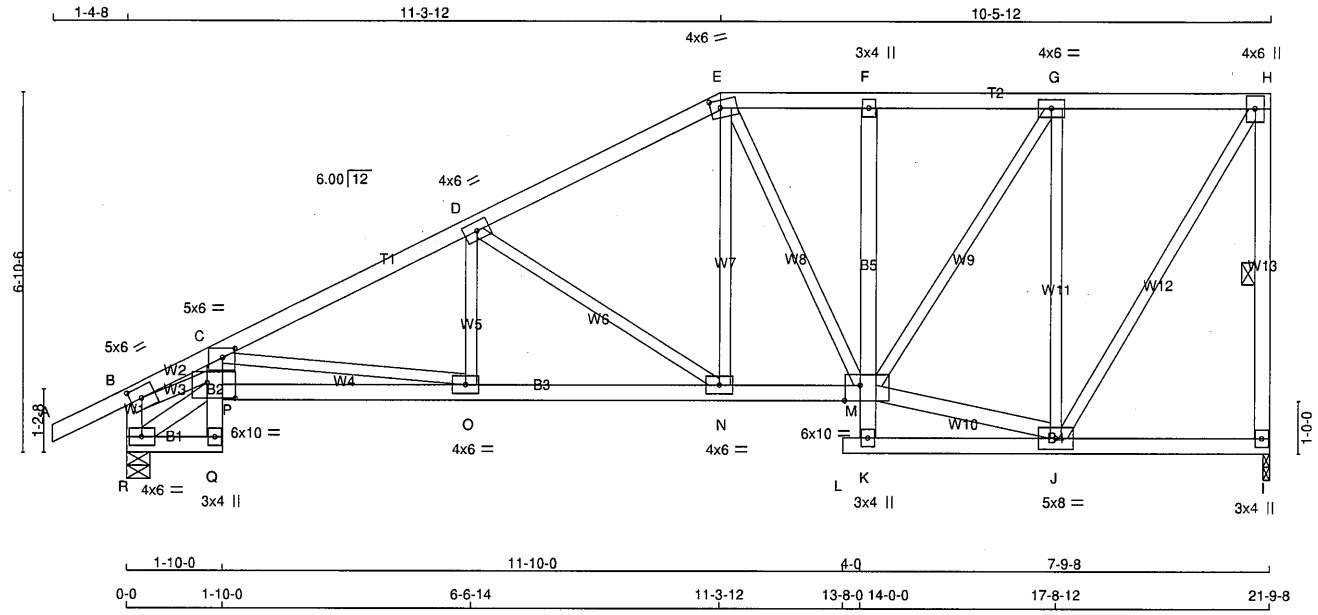

TOTAL WEIGHT = 2 X 113 = 226 lb

[M][F]

LUMBER

N. L. G. A. RULES

CHORDS	SIZE		LUMBER	DESCR.
A - E	2x4	DRY	No.2	SPF
E - H	2x4	DRY	No.2	SPF
I - H	2x4	DRY	No.2	SPF
R - B	2x4	DRY	No.2	SPF
R - Q	2x4	DRY	No.2	SPF
Q - C	2x4	DRY	No.2	SPF
P - M	2x4	DRY	No.2	SPF
K - F	2x4	DRY	No.2	SPF
L - I	2x4	DRY	No.2	SPF
ALL WEBS	2x3	DRY	No.2	SPF
EXCEPT				
M - J	2x4	DRY	No.2	SPF
R - P	2x4	DRY	No.2	SPF

DRY: SEASONED LUMBER.

PLATES (table is in inches)

JT	TYPE	PLATES	W	LEN	Y	X
B	TMVW-t	MT20	5.0	6.0	2.50	2.75
C	TMVW-p	MT20	5.0	6.0	2.00	2.75
D	TMWW-t	MT20	4.0	6.0		
E	TTWW-m	MT20	4.0	6.0	1.75	2.25
F	TMV+p	MT20	3.0	4.0		
G	TMWW-t	MT20	4.0	6.0		
H	TMVW+p	MT20	4.0	6.0		
I	BMV1+p	MT20	3.0	4.0		
J	BMWWW-t	MT20	5.0	8.0		
K	BMV+p	MT20	3.0	4.0		
M	BVMWWW-l	MT20	6.0	10.0	Edge	3.50
N	BMWW-t	MT20	4.0	6.0		
O	BMWW-t	MT20	4.0	6.0		
P	BVMWW-l	MT20	6.0	10.0	3.50	6.50
Q	BMV+p	MT20	3.0	4.0		
R	BMVW1-t	MT20	4.0	6.0		

Edge - INDICATES REFERENCE CORNER OF PLATE TOUCHES EDGE OF CHORD.

NOTES- (1)
1) Lateral braces to be a minimum of 2X4 SPF #2.

LICENSED PROFESSIONAL ENGINEER
02-28-24
H. J. G. ALVES
100009024
PROVINCE OF ONTARIO

Structural component only
DWG# T-2406459

DIMENSIONS, SUPPORTS AND LOADINGS SPECIFIED BY FABRICATOR TO BE VERIFIED BY BUILDING DESIGNER

BEARINGS

JT	FACTORED GROSS REACTION VERT	HORZ	MAXIMUM FACTORED GROSS REACTION DOWN	HORZ	UPLIFT	INPUT BRG IN-SX	REQRD BRG IN-SX
I	1128	0	1128	0	0	1-8	1-8
R	1256	0	1256	0	0	5-8	1-8

UNFACTORED REACTIONS

JT	1ST LCASE COMBINED	MAX./MIN. COMPONENT REACTIONS SNOW	LIVE	PERM.LIVE	WIND	DEAD	SOIL
I	801	505 / 0	0 / 0	0 / 0	0 / 0	296 / 0	0 / 0
R	889	577 / 0	0 / 0	0 / 0	0 / 0	312 / 0	0 / 0

BEARING MATERIAL TO BE SPF NO.2 OR BETTER AT JOINT(S) I, R

BRACING

TOP CHORD TO BE SHEATHED OR MAX. PURLIN SPACING = 4.39 FT.
MAX. UNBRACED BOTTOM CHORD LENGTH = 7.81 FT OR RIGID CEILING DIRECTLY APPLIED.

ALL PITCH BREAKS AND PERIMETER CORNER JOINTS MUST BE LATERALLY RESTRAINED.

1 LATERAL BRACE(S) AT 1/ 2 LENGTH OF H-I.

END VERTICAL(S) MUST BE SHEATHED OR HAVE BRACES AS INDICATED IN THE MAX. UNBRACED LENGTH COLUMN OF THE TABLE BELOW

LOADING

TOTAL LOAD CASES: (4)

CHORDS

MEMB. FR-TO	MAX. FACTORED FORCE (LBS)	FACTORED VERT. LOAD (PLF) FROM	TO	LC1	MAX CSI (LC)	MAX. UNBRAC LENGTH
A- B	0 / 27	-84.9	-84.9	0.12 (1)	10.00	
B- C	-2310 / 0	-84.9	-84.9	0.15 (1)	4.39	
C- D	-1871 / 0	-84.9	-84.9	0.30 (1)	4.63	
D- E	-1248 / 0	-84.9	-84.9	0.26 (1)	5.46	
E- F	-1017 / 0	-84.9	-84.9	0.08 (1)	6.13	
F- G	-1012 / 0	-84.9	-84.9	0.15 (1)	6.06	
G- H	-583 / 0	-84.9	-84.9	0.15 (1)	6.25	
I- H	-1098 / 0	0.0	0.0	0.24 (1)	6.04	
R- B	-1146 / 0	0.0	0.0	0.12 (1)	7.43	
R- Q	0 / 159	-18.5	-18.5	0.03 (1)	10.00	
Q- P	0 / 17	0.0	0.0	0.22 (1)	10.00	
P- C	0 / 82	0.0	0.0	0.23 (1)	10.00	
P- O	0 / 2260	-18.5	-18.5	0.42 (1)	10.00	
O- N	0 / 1692	-18.5	-18.5	0.32 (1)	10.00	
N- M	0 / 1104	-18.5	-18.5	0.21 (1)	10.00	
K- M	0 / 38	0.0	0.0	0.04 (1)	10.00	
M- F	-274 / 0	0.0	0.0	0.07 (1)	7.81	
L- K	0 / 0	-18.5	-18.5	0.00 (4)	10.00	
K- J	0 / 25	-18.5	-18.5	0.08 (4)	10.00	
J- I	0 / 0	-18.5	-18.5	0.08 (4)	10.00	

WEBS

MEMB. FR-TO	MAX. FACTORED FORCE (LBS)	MAX CSI (LC)
C- O	-574 / 0	0.23 (1)
O- D	0 / 185	0.05 (4)
D- N	-714 / 0	0.41 (1)
N- E	0 / 469	0.11 (1)
E- M	-193 / 0	0.13 (1)
J- G	-1027 / 0	0.82 (1)
J- H	0 / 1121	0.25 (1)
M- J	0 / 588	0.09 (1)
M- G	0 / 776	0.17 (1)
R- P	-185 / 0	0.02 (1)
B- P	0 / 2050	0.46 (1)

DESIGN CRITERIA

SPECIFIED LOADS:

TOP CH.	LL	=	23.3	PSF
	DL	=	6.0	PSF
BOT CH.	LL	=	0.0	PSF
	DL	=	7.4	PSF
TOTAL LOAD		=	36.7	PSF

SPACING = 24.0 IN. C/C

LOADING IN FLAT SECTION BASED ON A SLOPE OF 6.00/12

THIS TRUSS IS DESIGNED FOR RESIDENTIAL OR SMALL BUILDING REQUIREMENTS OF PART 9, NBCC 2015

THIS DESIGN COMPLIES WITH:
- PART 9 OF BCBC 2018 , NBC-2019AE
- PART 9 OF OBC 2012 (2019 AMENDMENT)
- CSA 086-14
- TPIC 2014

DESIGN ASSUMPTIONS
-OVERHANG NOT TO BE ALTERED OR CUT OFF.

(55 % OF 27.2 P.S.F. G.S.L. PLUS 8.4 P.S.F. RAIN LOAD) EQUALS 23.3 P.S.F. SPECIFIED ROOF LIVE LOAD

ALLOWABLE DEFL.(LL)= L/360 (0.73")
CALCULATED VERT. DEFL.(LL) = L/ 999 (0.07")
ALLOWABLE DEFL.(TL)= L/360 (0.73")
CALCULATED VERT. DEFL.(TL) = L/ 999 (0.14")

CSI: TC=0.30/1.00 (C-D:1) , BC=0.42/1.00 (O-P:1) , WB=0.82/1.00 (G-J:1) , SSI=0.18/1.00 (C-D:1)

DOL LUMBER=1.00 NAIL=1.00 LS BEND=1.10 COMP=1.10 SHEAR=1.10 TENS= 1.10

COMPANION LIVE LOAD FACTOR = 1.00

TRUSS PLATE MANUFACTURER IS NOT RESPONSIBLE FOR QUALITY CONTROL IN THE TRUSS MANUFACTURING PLANT .

NAIL VALUES

PLATE	GRIP(DRY) (PSI) MAX	MIN	SHEAR (PLI) MAX	MIN	SECTION (PLI) MAX	MIN
MT20	650	371	1747	788	1987	1873

PLATE PLACEMENT TOL. = 0.250 inches

PLATE ROTATION TOL. = 5.0 Deg.

JSI GRIP= 0.72 (J) (INPUT = 0.90)
JSI METAL= 0.54 (B) (INPUT = 0.95)

JOB NAME	TRUSS NAME	QUANTITY	PLY	JOB DESC.	DRWG NO.
425913	T19	3	1	ROYAL PINE HOMES TRUSS DESC.	

Tamarack Roof Truss, Burlington

Version 8.630 S Aug 30 2023 MiTek Industries, Inc. Wed Feb 28 15:02:59 2024 Page 1
ID:VI_DQvi1e49Qy7axT?i10OzOYuG-49AiwqDxfng8nI0?wlafDT_SYfeed1bWv2vcTazgawA

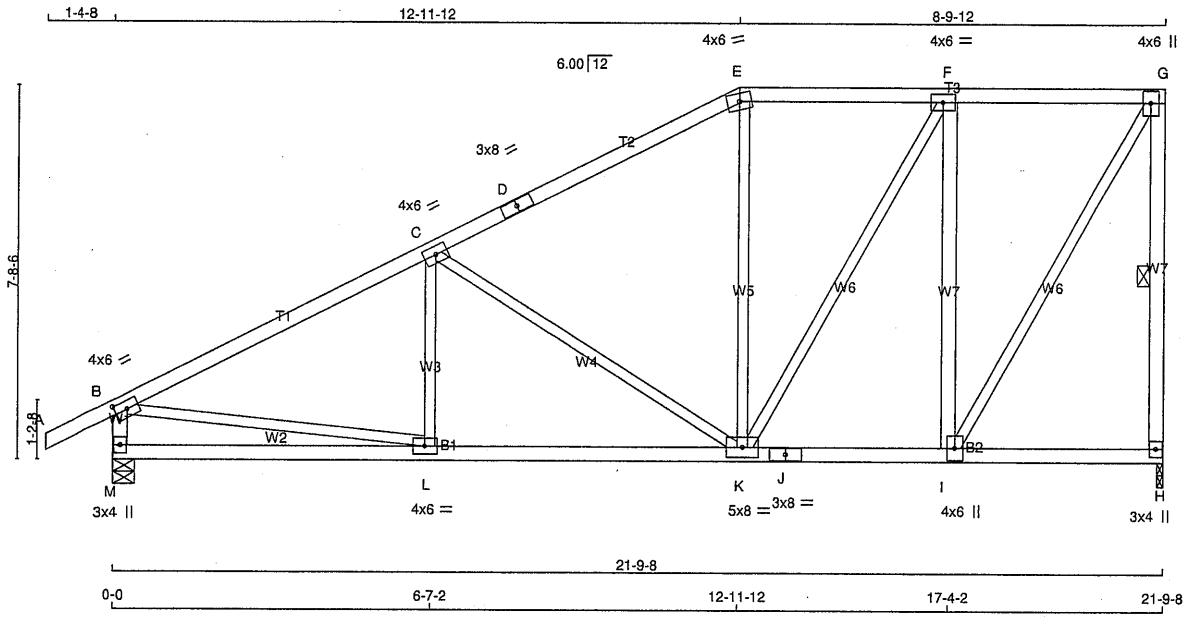

TOTAL WEIGHT = 3 X 104 = 312 lb

LUMBER

N. L. G. A. RULES

CHORDS	SIZE		LUMBER	DESCR.
A - D	2x4	DRY	No.2	SPF
D - E	2x4	DRY	No.2	SPF
E - G	2x4	DRY	No.2	SPF
H - G	2x4	DRY	No.2	SPF
M - B	2x4	DRY	No.2	SPF
M - J	2x4	DRY	No.2	SPF
J - H	2x4	DRY	No.2	SPF
ALL WEBS	2x3	DRY	No.2	SPF
EXCEPT				
I - F	2x4	DRY	No.2	SPF

DRY: SEASONED LUMBER.

PLATES (table is in inches)

JT	TYPE	PLATES	W	LEN	Y	X
B	TMVW-t	MT20	4.0	6.0	2.00	3.00
C	TMWW-t	MT20	4.0	6.0		
D	TS-t	MT20	3.0	8.0		
E	TTW-m	MT20	4.0	6.0		
F	TMWW-t	MT20	4.0	6.0		
G	TMVW+p	MT20	4.0	6.0		
H	BMV1+p	MT20	3.0	4.0		
I	BMWW+t	MT20	4.0	6.0		
J	BS-t	MT20	3.0	8.0		
K	BMWWW-t	MT20	5.0	8.0		
L	BMWW-t	MT20	4.0	6.0		
M	BMV1+p	MT20	3.0	4.0		

NOTES- (1)
1) Lateral braces to be a minimum of 2X4 SPF #2.

DIMENSIONS, SUPPORTS AND LOADINGS SPECIFIED BY FABRICATOR TO BE VERIFIED BY BUILDING DESIGNER

BEARINGS

JT	FACTORED GROSS REACTION VERT	HORZ	MAXIMUM FACTORED GROSS REACTION DOWN	HORZ	UPLIFT	INPUT BRG IN-SX	REQRD BRG IN-SX
H	1126	0	1126	0	0	1-8	1-8
M	1248	0	1248	0	0	5-8	1-8

UNFACTORED REACTIONS

JT	1ST LCASE COMBINED	MAX./MIN. COMPONENT REACTIONS SNOW	LIVE	PERM.LIVE	WIND	DEAD	SOIL
H	799	507 / 0	0 / 0	0 / 0	0 / 0	292 / 0	0 / 0
M	884	575 / 0	0 / 0	0 / 0	0 / 0	309 / 0	0 / 0

BEARING MATERIAL TO BE SPF NO.2 OR BETTER AT JOINT(S) H, M

BRACING

TOP CHORD TO BE SHEATHED OR MAX. PURLIN SPACING = 4.75 FT.
MAX. UNBRACED BOTTOM CHORD LENGTH = 10.00 FT OR RIGID CEILING DIRECTLY APPLIED.

ALL PITCH BREAKS AND PERIMETER CORNER JOINTS MUST BE LATERALLY RESTRAINED.

1 LATERAL BRACE(S) AT 1/ 2 LENGTH OF G-H.

END VERTICAL(S) MUST BE SHEATHED OR HAVE BRACES AS INDICATED IN THE MAX. UNBRACED LENGTH COLUMN OF THE TABLE BELOW

LOADING

TOTAL LOAD CASES: (4)

CHORDS

MEMB. FR-TO	MAX. FACTORED FORCE (LBS)	FACTORED VERT. LOAD LC1 (PLF) FROM	TO	MAX CSI (LC)	MAX. UNBRAC LENGTH
A- B	0 / 27	-84.9	-84.9	0.12 (1)	10.00
B- C	-1485 / 0	-84.9	-84.9	0.52 (1)	4.75
C- D	-924 / 0	-84.9	-84.9	0.47 (1)	5.76
D- E	-924 / 0	-84.9	-84.9	0.47 (1)	5.76
E- F	-800 / 0	-84.9	-84.9	0.21 (1)	6.25
F- G	-568 / 0	-84.9	-84.9	0.21 (1)	6.25
H- G	-1091 / 0	0.0	0.0	0.29 (1)	6.05
M- B	-1198 / 0	0.0	0.0	0.12 (1)	7.31
M- L	0 / 0	-18.5	-18.5	0.19 (4)	10.00
L- K	0 / 1355	-18.5	-18.5	0.32 (1)	10.00
K- J	0 / 568	-18.5	-18.5	0.15 (4)	10.00
J- I	0 / 568	-18.5	-18.5	0.15 (4)	10.00
I- H	0 / 0	-18.5	-18.5	0.07 (4)	10.00

WEBS

MEMB. FR-TO	MAX. FACTORED FORCE (LBS)	MAX CSI (LC)
L- C	-48 / 90	0.03 (4)
C- K	-662 / 0	0.81 (1)
K- E	0 / 78	0.03 (4)
K- F	0 / 464	0.10 (1)
I- F	-863 / 0	0.67 (1)
I- G	0 / 1104	0.25 (1)
B- L	0 / 1367	0.31 (1)

DESIGN CRITERIA

SPECIFIED LOADS:

TOP CH.	LL	=	23.3	PSF
	DL	=	6.0	PSF
BOT CH.	LL	=	0.0	PSF
	DL	=	7.4	PSF
TOTAL LOAD		=	36.7	PSF

SPACING = 24.0 IN. C/C

LOADING IN FLAT SECTION BASED ON A SLOPE OF 6.00/12

THIS TRUSS IS DESIGNED FOR RESIDENTIAL OR SMALL BUILDING REQUIREMENTS OF PART 9, NBCC 2015

THIS DESIGN COMPLIES WITH:
- PART 9 OF BCBC 2018 , NBC-2019AE
- PART 9 OF OBC 2012 (2019 AMENDMENT)
- CSA 086-14
- TPIC 2014

(55 % OF 27.2 P.S.F. G.S.L. PLUS 8.4 P.S.F. RAIN LOAD) EQUALS 23.3 P.S.F. SPECIFIED ROOF LIVE LOAD

ALLOWABLE DEFL.(LL)= L/360 (0.73")
CALCULATED VERT. DEFL.(LL) = L/ 999 (0.05")
ALLOWABLE DEFL.(TL)= L/360 (0.73")
CALCULATED VERT. DEFL.(TL) = L/ 999 (0.10")

CSI: TC=0.52/1.00 (B-C:1) , BC=0.32/1.00 (K-L:1) , WB=0.81/1.00 (C-K:1) , SSI=0.24/1.00 (B-C:1)

DOL LUMBER=1.00 NAIL=1.00 LS BEND=1.10 COMP=1.10 SHEAR=1.10 TENS= 1.10

COMPANION LIVE LOAD FACTOR = 1.00

TRUSS PLATE MANUFACTURER IS NOT RESPONSIBLE FOR QUALITY CONTROL IN THE TRUSS MANUFACTURING PLANT .

NAIL VALUES

PLATE	GRIP(DRY) (PSI) MAX	MIN	SHEAR (PLI) MAX	MIN	SECTION (PLI) MAX	MIN
MT20	650	371	1747	788	1987	1873

PLATE PLACEMENT TOL. = 0.250 inches

PLATE ROTATION TOL. = 5.0 Deg.

JSI GRIP= 0.79 (L) (INPUT = 0.90)
JSI METAL= 0.38 (B) (INPUT = 0.95)

LICENSED PROFESSIONAL ENGINEER
02-28-24
H. J. G. ALVES
100009024
PROVINCE OF ONTARIO

Structural component only
DWG# T-2406413

JOB NAME	TRUSS NAME	QUANTITY	PLY	JOB DESC.	DRWG NO.
425914	T19S	2	1	ROYAL PINE HOMES TRUSS DESC.	

Tamarack Roof Truss, Burlington

Version 8.630 S Aug 30 2023 MiTek Industries, Inc. Wed Feb 28 16:19:23 2024 Page 1
ID:Vl_DQvi1e49Qy7axT?i10OzOYuG-s19f?GhJ6DDkkmR?STpd08rsaV6QgDWF?DKAMuzgZoY

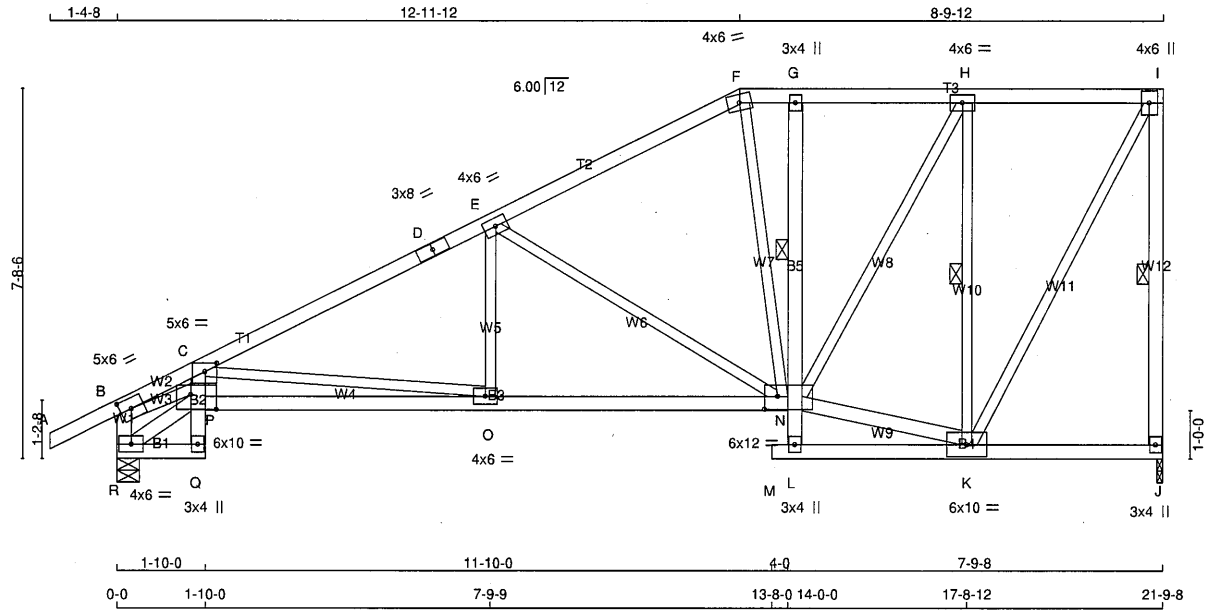

TOTAL WEIGHT = 2 X 116 = 232 lb

LUMBER

N. L. G. A. RULES

CHORDS	SIZE		LUMBER	DESCR.
A - D	2x4	DRY	No.2	SPF
D - F	2x4	DRY	No.2	SPF
F - I	2x4	DRY	No.2	SPF
J - I	2x4	DRY	No.2	SPF
R - B	2x4	DRY	No.2	SPF
R - Q	2x4	DRY	No.2	SPF
Q - C	2x4	DRY	No.2	SPF
P - N	2x4	DRY	No.2	SPF
L - G	2x4	DRY	No.2	SPF
M - J	2x4	DRY	No.2	SPF
ALL WEBS	2x3	DRY	No.2	SPF
EXCEPT				
R - P	2x4	DRY	No.2	SPF
N - K	2x4	DRY	No.2	SPF

DRY: SEASONED LUMBER.

PLATES (table is in inches)

JT	TYPE	PLATES	W	LEN	Y	X
B	TMVW-t	MT20	5.0	6.0	2.50	2.75
C	TMVW-p	MT20	5.0	6.0	2.00	3.00
D	TS-t	MT20	3.0	8.0		
E	TMWW-t	MT20	4.0	6.0		
F	TTW-m	MT20	4.0	6.0		
G	TMV+p	MT20	3.0	4.0		
H	TMWW-t	MT20	4.0	6.0		
I	TMVW+p	MT20	4.0	6.0		
J	BMV1+p	MT20	3.0	4.0		
K	BMWWW-t	MT20	6.0	10.0		
L	BMV+p	MT20	3.0	4.0		
N	BVMWWWW-t	MT20	6.0	12.0	3.25	3.25
O	BMWW-t	MT20	4.0	6.0		
P	BVMWW-l	MT20	6.0	10.0	3.75	6.50
Q	BMV+p	MT20	3.0	4.0		
R	BMVW1-t	MT20	4.0	6.0		

NOTES- (1)
1) Lateral braces to be a minimum of 2X4 SPF #2.

Structural component only
DWG# T-2406460

DIMENSIONS, SUPPORTS AND LOADINGS SPECIFIED BY FABRICATOR TO BE VERIFIED BY BUILDING DESIGNER

BEARINGS

JT	FACTORED GROSS REACTION VERT	HORZ	MAXIMUM FACTORED GROSS REACTION DOWN	HORZ	UPLIFT	INPUT BRG IN-SX	REQRD BRG IN-SX
J	1128	0	1128	0	0	1-8	1-8
R	1256	0	1256	0	0	5-8	1-8

UNFACTORED REACTIONS

JT	1ST LCASE COMBINED	MAX./MIN. COMPONENT REACTIONS SNOW	LIVE	PERM.LIVE	WIND	DEAD	SOIL
J	801	505 / 0	0 / 0	0 / 0	0 / 0	296 / 0	0 / 0
R	889	577 / 0	0 / 0	0 / 0	0 / 0	312 / 0	0 / 0

BEARING MATERIAL TO BE SPF NO.2 OR BETTER AT JOINT(S) J, R

BRACING

TOP CHORD TO BE SHEATHED OR MAX. PURLIN SPACING = 4.32 FT.
MAX. UNBRACED BOTTOM CHORD LENGTH = 6.25 FT OR RIGID CEILING DIRECTLY APPLIED.

ALL PITCH BREAKS AND PERIMETER CORNER JOINTS MUST BE LATERALLY RESTRAINED.

1 LATERAL BRACE(S) AT 1/ 2 LENGTH OF I-J, G-N, H-K.

END VERTICAL(S) MUST BE SHEATHED OR HAVE BRACES AS INDICATED IN THE MAX. UNBRACED LENGTH COLUMN OF THE TABLE BELOW

LOADING

TOTAL LOAD CASES: (4)

CHORDS

MEMB. FR-TO	MAX. FACTORED FORCE (LBS)	FACTORED VERT. LOAD LC1 (PLF) FROM	TO	MAX CSI (LC)	MAX. UNBRAC LENGTH
A- B	0 / 27	-84.9	-84.9	0.12 (1)	10.00
B- C	-2399 / 0	-84.9	-84.9	0.15 (1)	4.32
C- D	-1748 / 0	-84.9	-84.9	0.40 (1)	4.64
D- E	-1748 / 0	-84.9	-84.9	0.40 (1)	4.64
E- F	-964 / 0	-84.9	-84.9	0.34 (1)	5.90
F- G	-879 / 0	-84.9	-84.9	0.04 (1)	6.25
G- H	-875 / 0	-84.9	-84.9	0.15 (1)	6.25
H- I	-519 / 0	-84.9	-84.9	0.15 (1)	6.25
J- I	-1098 / 0	0.0	0.0	0.29 (1)	6.04
R- B	-1142 / 0	0.0	0.0	0.12 (1)	7.44
R- Q	0 / 166	-18.5	-18.5	0.04 (1)	10.00
Q- P	0 / 17	0.0	0.0	0.23 (1)	10.00
P- C	0 / 89	0.0	0.0	0.24 (1)	10.00
P- O	0 / 2368	-18.5	-18.5	0.49 (1)	10.00
O- N	0 / 1579	-18.5	-18.5	0.36 (1)	10.00
L- N	0 / 38	0.0	0.0	0.04 (1)	10.00
N- G	-187 / 0	0.0	0.0	0.03 (1)	6.25
M- L	0 / 0	-18.5	-18.5	0.00 (4)	10.00
L- K	0 / 22	-18.5	-18.5	0.08 (4)	10.00
K- J	0 / 0	-18.5	-18.5	0.08 (4)	10.00

WEBS

MEMB. FR-TO	MAX. FACTORED FORCE (LBS)	MAX CSI (LC)
C- O	-795 / 0	0.54 (1)
O- E	0 / 236	0.07 (4)
E- N	-864 / 0	0.86 (1)
F- N	0 / 231	0.05 (1)
K- H	-1012 / 0	0.38 (1)
K- I	0 / 1091	0.25 (1)
R- P	-193 / 0	0.02 (1)
B- P	0 / 2148	0.48 (1)
N- K	0 / 523	0.08 (1)
N- H	0 / 714	0.16 (1)

[M][F]

DESIGN CRITERIA

SPECIFIED LOADS:

TOP CH.	LL	=	23.3	PSF
	DL	=	6.0	PSF
BOT CH.	LL	=	0.0	PSF
	DL	=	7.4	PSF
TOTAL LOAD		=	36.7	PSF

SPACING = 24.0 IN. C/C

LOADING IN FLAT SECTION BASED ON A SLOPE OF 6.00/12

THIS TRUSS IS DESIGNED FOR RESIDENTIAL OR SMALL BUILDING REQUIREMENTS OF PART 9, NBCC 2015

THIS DESIGN COMPLIES WITH:
- PART 9 OF BCBC 2018 , NBC-2019AE
- PART 9 OF OBC 2012 (2019 AMENDMENT)
- CSA 086-14
- TPIC 2014

DESIGN ASSUMPTIONS
-OVERHANG NOT TO BE ALTERED OR CUT OFF.

(55 % OF 27.2 P.S.F. G.S.L. PLUS 8.4 P.S.F. RAIN LOAD) EQUALS 23.3 P.S.F. SPECIFIED ROOF LIVE LOAD

ALLOWABLE DEFL.(LL)= L/360 (0.73")
CALCULATED VERT. DEFL.(LL) = L/ 999 (0.07")
ALLOWABLE DEFL.(TL)= L/360 (0.73")
CALCULATED VERT. DEFL.(TL) = L/ 999 (0.16")

CSI: TC=0.40/1.00 (C-E:1) , BC=0.49/1.00 (O-P:1) , WB=0.86/1.00 (E-N:1) , SSI=0.21/1.00 (C-E:1)

DOL LUMBER=1.00 NAIL=1.00 LS BEND=1.10 COMP=1.10 SHEAR=1.10 TENS= 1.10

COMPANION LIVE LOAD FACTOR = 1.00

AUTOSOLVE RIGHT HEEL ONLY

TRUSS PLATE MANUFACTURER IS NOT RESPONSIBLE FOR QUALITY CONTROL IN THE TRUSS MANUFACTURING PLANT .

NAIL VALUES

PLATE	GRIP(DRY) (PSI) MAX	MIN	SHEAR (PLI) MAX	MIN	SECTION (PLI) MAX	MIN
MT20	650	371	1747	788	1987	1873

PLATE PLACEMENT TOL. = 0.250 inches

PLATE ROTATION TOL. = 5.0 Deg.

JSI GRIP= 0.74 (B) (INPUT = 0.90)
JSI METAL= 0.57 (B) (INPUT = 0.95)

JOB NAME	TRUSS NAME	QUANTITY	PLY	JOB DESC.	DRWG NO.
425913	T20	3	1	ROYAL PINE HOMES TRUSS DESC.	

Tamarack Roof Truss, Burlington

Version 8.630 S Aug 30 2023 MiTek Industries, Inc. Wed Feb 28 15:03:00 2024 Page 1
ID:VI_DQvi1e49Qy7axT?i10OzOYuG-YLk58AEZQ5p?PSaBUS5umhWbo3zNMXQg8if901zgawS

Scale: 1/4"=1'

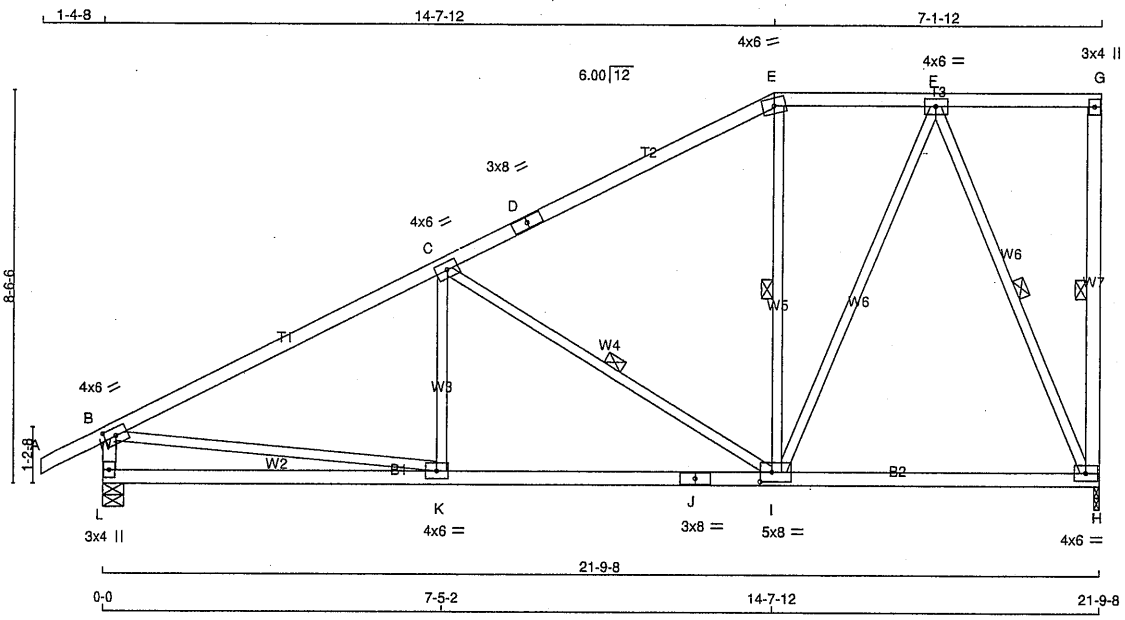

TOTAL WEIGHT = 3 X 100 = 300 lb
[M][F]

LUMBER
N. L. G. A. RULES

CHORDS	SIZE		LUMBER	DESCR.
A - D	2x4	DRY	No.2	SPF
D - E	2x4	DRY	No.2	SPF
E - G	2x4	DRY	No.2	SPF
H - G	2x4	DRY	No.2	SPF
L - B	2x4	DRY	No.2	SPF
L - J	2x4	DRY	No.2	SPF
J - H	2x4	DRY	No.2	SPF
ALL WEBS EXCEPT	2x3	DRY	No.2	SPF

DRY: SEASONED LUMBER.

PLATES (table is in inches)

JT	TYPE	PLATES	W	LEN	Y	X
B	TMVW-t	MT20	4.0	6.0	2.00	3.00
C	TMWW-t	MT20	4.0	6.0		
D	TS-t	MT20	3.0	8.0		
E	TTW-m	MT20	4.0	6.0		
F	TMWW-t	MT20	4.0	6.0		
G	TMV+p	MT20	3.0	4.0		
H	BMVW1-t	MT20	4.0	6.0		
I	BMWWW-t	MT20	5.0	8.0	2.50	3.00
J	BS-t	MT20	3.0	8.0		
K	BMWW-t	MT20	4.0	6.0		
L	BMV1+p	MT20	3.0	4.0		

NOTES- (1)
1) Lateral braces to be a minimum of 2X4 SPF #2.

LICENSED PROFESSIONAL ENGINEER
02-28-24
H. J. G. ALVES
100009024
PROVINCE OF ONTARIO

Structural component only
DWG# T-2406414

DIMENSIONS, SUPPORTS AND LOADINGS SPECIFIED BY FABRICATOR TO BE VERIFIED BY BUILDING DESIGNER

BEARINGS

JT	FACTORED GROSS REACTION VERT	HORZ	MAXIMUM FACTORED GROSS REACTION DOWN	HORZ	UPLIFT	INPUT BRG IN-SX	REQRD BRG IN-SX
H	1126	0	1126	0	0	1-8	1-8
L	1248	0	1248	0	0	5-8	1-8

UNFACTORED REACTIONS

JT	1ST LCASE COMBINED	MAX./MIN. COMPONENT REACTIONS SNOW	LIVE	PERM.LIVE	WIND	DEAD	SOIL
H	799	507 / 0	0 / 0	0 / 0	0 / 0	292 / 0	0 / 0
L	884	575 / 0	0 / 0	0 / 0	0 / 0	309 / 0	0 / 0

BEARING MATERIAL TO BE SPF NO.2 OR BETTER AT JOINT(S) H, L

BRACING
TOP CHORD TO BE SHEATHED OR MAX. PURLIN SPACING = 4.49 FT.
MAX. UNBRACED BOTTOM CHORD LENGTH = 10.00 FT OR RIGID CEILING DIRECTLY APPLIED.

ALL PITCH BREAKS AND PERIMETER CORNER JOINTS MUST BE LATERALLY RESTRAINED.

1 LATERAL BRACE(S) AT 1/ 2 LENGTH OF G-H, C-I, E-I, F-H.

END VERTICAL(S) MUST BE SHEATHED OR HAVE BRACES AS INDICATED IN THE MAX. UNBRACED LENGTH COLUMN OF THE TABLE BELOW

LOADING
TOTAL LOAD CASES: (4)

CHORDS

MEMB. FR-TO	MAX. FACTORED FORCE (LBS)	FACTORED VERT. LOAD LC1 (PLF) FROM	TO	MAX CSI (LC)	MAX. UNBRAC LENGTH
A- B	0 / 27	-84.9	-84.9	0.12 (1)	10.00
B- C	-1459 / 0	-84.9	-84.9	0.68 (1)	4.49
C- D	-775 / 0	-84.9	-84.9	0.61 (1)	5.83
D- E	-775 / 0	-84.9	-84.9	0.61 (1)	5.83
E- F	-662 / 0	-84.9	-84.9	0.14 (1)	6.25
F- G	0 / 0	-84.9	-84.9	0.18 (1)	10.00
H- G	-117 / 0	0.0	0.0	0.04 (1)	6.25
L- B	-1191 / 0	0.0	0.0	0.12 (1)	7.32
L- K	0 / 0	-18.5	-18.5	0.23 (4)	10.00
K- J	0 / 1335	-18.5	-18.5	0.35 (4)	10.00
J- I	0 / 1335	-18.5	-18.5	0.35 (4)	10.00
I- H	0 / 420	-18.5	-18.5	0.25 (4)	10.00

WEBS

MEMB. FR-TO	MAX. FACTORED FORCE (LBS)	MAX CSI (LC)
K- C	-14 / 110	0.04 (4)
C- I	-795 / 0	0.41 (1)
I- E	-12 / 56	0.02 (4)
B- K	0 / 1345	0.30 (1)
I- F	0 / 631	0.14 (1)
F- H	-1045 / 0	0.58 (1)

DESIGN CRITERIA

SPECIFIED LOADS:

TOP CH.	LL	=	23.3	PSF
	DL	=	6.0	PSF
BOT CH.	LL	=	0.0	PSF
	DL	=	7.4	PSF
TOTAL LOAD		=	36.7	PSF

SPACING = 24.0 IN. C/C

LOADING IN FLAT SECTION BASED ON A SLOPE OF 6.00/12

THIS TRUSS IS DESIGNED FOR RESIDENTIAL OR SMALL BUILDING REQUIREMENTS OF PART 9, NBCC 2015

THIS DESIGN COMPLIES WITH:
- PART 9 OF BCBC 2018 , NBC-2019AE
- PART 9 OF OBC 2012 (2019 AMENDMENT)
- CSA 086-14
- TPIC 2014

(55 % OF 27.2 P.S.F. G.S.L. PLUS 8.4 P.S.F. RAIN LOAD) EQUALS 23.3 P.S.F. SPECIFIED ROOF LIVE LOAD

ALLOWABLE DEFL.(LL)= L/360 (0.73")
CALCULATED VERT. DEFL.(LL) = L/ 999 (0.05")
ALLOWABLE DEFL.(TL)= L/360 (0.73")
CALCULATED VERT. DEFL.(TL) = L/ 999 (0.13")

CSI: TC=0.68/1.00 (B-C:1) , BC=0.35/1.00 (I-K:4) , WB=0.58/1.00 (F-H:1) , SSI=0.27/1.00 (B-C:1)

DOL LUMBER=1.00 NAIL=1.00 LS BEND=1.10 COMP=1.10 SHEAR=1.10 TENS= 1.10

COMPANION LIVE LOAD FACTOR = 1.00

TRUSS PLATE MANUFACTURER IS NOT RESPONSIBLE FOR QUALITY CONTROL IN THE TRUSS MANUFACTURING PLANT .

NAIL VALUES

PLATE	GRIP(DRY) (PSI) MAX	MIN	SHEAR (PLI) MAX	MIN	SECTION (PLI) MAX	MIN
MT20	650	371	1747	788	1987	1873

PLATE PLACEMENT TOL. = 0.250 inches

PLATE ROTATION TOL. = 5.0 Deg.

JSI GRIP= 0.76 (K) (INPUT = 0.90)
JSI METAL= 0.38 (B) (INPUT = 0.95)

JOB NAME	TRUSS NAME	QUANTITY	PLY	JOB DESC.	DRWG NO.
425913	T21	4	1	ROYAL PINE HOMES TRUSS DESC.	

Tamarack Roof Truss, Burlington

Version 8.630 S Aug 30 2023 MiTek Industries, Inc. Wed Feb 28 15:03:01 2024 Page 1
ID:VI_DQvi1e49Qy7axT?i10OzOYuG-0XITLWFBBPxs0c9N1Ac7Ju3p7TIQ5w2pMMOjYTzgaw8

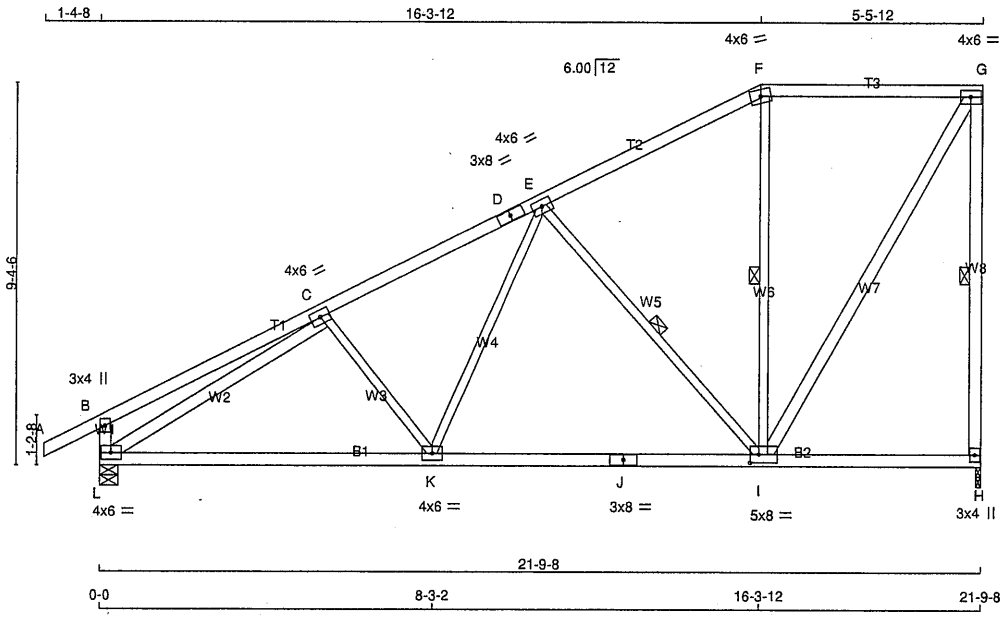

TOTAL WEIGHT = 4 X 106 = 424 lb
[M][F]

LUMBER
N. L. G. A. RULES

CHORDS	SIZE		LUMBER	DESCR.
A - D	2x4	DRY	No.2	SPF
D - F	2x4	DRY	No.2	SPF
F - G	2x4	DRY	No.2	SPF
H - G	2x4	DRY	No.2	SPF
L - B	2x4	DRY	No.2	SPF
L - J	2x4	DRY	No.2	SPF
J - H	2x4	DRY	No.2	SPF
ALL WEBS	2x3	DRY	No.2	SPF
EXCEPT				
I - G	2x4	DRY	No.2	SPF
L - C	2x4	DRY	No.2	SPF

DRY: SEASONED LUMBER.

PLATES (table is in inches)

JT	TYPE	PLATES	W	LEN	Y	X
B	TMV+p	MT20	3.0	4.0		
C	TMWW-t	MT20	4.0	6.0		
D	TS-t	MT20	3.0	8.0		
E	TMWW-t	MT20	4.0	6.0		
F	TTW-m	MT20	4.0	6.0		
G	TMVW-t	MT20	4.0	6.0		
H	BMV1+p	MT20	3.0	4.0		
I	BMWWW-t	MT20	5.0	8.0	2.50	2.50
J	BS-t	MT20	3.0	8.0		
K	BMWW-t	MT20	4.0	6.0		
L	BMVW1-t	MT20	4.0	6.0		

NOTES- (1)
1) Lateral braces to be a minimum of 2X4 SPF #2.

LICENSED PROFESSIONAL ENGINEER
02-28-24
H. J. G. ALVES
100009024
PROVINCE OF ONTARIO

Structural component only
DWG# T-2406415

DIMENSIONS, SUPPORTS AND LOADINGS SPECIFIED BY FABRICATOR TO BE VERIFIED BY BUILDING DESIGNER

BEARINGS

JT	FACTORED GROSS REACTION VERT	HORZ	MAXIMUM FACTORED GROSS REACTION DOWN	HORZ	UPLIFT	INPUT BRG IN-SX	REQRD BRG IN-SX
H	1126	0	1126	0	0	1-8	1-8
L	1248	0	1248	0	0	5-8	1-8

UNFACTORED REACTIONS

JT	1ST LCASE COMBINED	MAX./MIN. COMPONENT REACTIONS SNOW	LIVE	PERM.LIVE	WIND	DEAD	SOIL
H	799	507 / 0	0 / 0	0 / 0	0 / 0	292 / 0	0 / 0
L	884	575 / 0	0 / 0	0 / 0	0 / 0	309 / 0	0 / 0

BEARING MATERIAL TO BE SPF NO.2 OR BETTER AT JOINT(S) H, L

BRACING
TOP CHORD TO BE SHEATHED OR MAX. PURLIN SPACING = 5.36 FT.
MAX. UNBRACED BOTTOM CHORD LENGTH = 10.00 FT OR RIGID CEILING DIRECTLY APPLIED.

ALL PITCH BREAKS AND PERIMETER CORNER JOINTS MUST BE LATERALLY RESTRAINED.

1 LATERAL BRACE(S) AT 1/ 2 LENGTH OF G-H, E-I, F-I.

END VERTICAL(S) MUST BE SHEATHED OR HAVE BRACES AS INDICATED IN THE MAX. UNBRACED LENGTH COLUMN OF THE TABLE BELOW

LOADING
TOTAL LOAD CASES: (4)

CHORDS

MEMB. FR-TO	MAX. FACTORED FORCE (LBS)	FACTORED VERT. LOAD LC1 (PLF) FROM	TO	MAX CSI (LC)	MAX. UNBRAC LENGTH
A- B	0 / 27	-84.9	-84.9	0.12 (1)	10.00
B- C	0 / 20	-84.9	-84.9	0.33 (1)	10.00
C- D	-1295 / 0	-84.9	-84.9	0.29 (1)	5.36
D- E	-1295 / 0	-84.9	-84.9	0.29 (1)	5.36
E- F	-592 / 0	-84.9	-84.9	0.28 (1)	6.25
F- G	-509 / 0	-84.9	-84.9	0.33 (1)	6.25
H- G	-1091 / 0	0.0	0.0	0.45 (1)	6.05
L- B	-310 / 0	0.0	0.0	0.03 (1)	7.81
L- K	0 / 1319	-18.5	-18.5	0.42 (4)	10.00
K- J	0 / 997	-18.5	-18.5	0.40 (4)	10.00
J- I	0 / 997	-18.5	-18.5	0.40 (4)	10.00
I- H	0 / 0	-18.5	-18.5	0.18 (4)	10.00

WEBS

MEMB. FR-TO	MAX. FACTORED FORCE (LBS)	MAX CSI (LC)
C- K	-264 / 0	0.09 (1)
K- E	0 / 415	0.09 (1)
E- I	-747 / 0	0.36 (1)
I- F	-159 / 14	0.09 (1)
I- G	0 / 998	0.16 (1)
L- C	-1584 / 0	0.87 (1)

DESIGN CRITERIA

SPECIFIED LOADS:

TOP CH.	LL	=	23.3	PSF
	DL	=	6.0	PSF
BOT CH.	LL	=	0.0	PSF
	DL	=	7.4	PSF
TOTAL LOAD		=	36.7	PSF

SPACING = 24.0 IN. C/C

LOADING IN FLAT SECTION BASED ON A SLOPE OF 6.00/12

THIS TRUSS IS DESIGNED FOR RESIDENTIAL OR SMALL BUILDING REQUIREMENTS OF PART 9, NBCC 2015

THIS DESIGN COMPLIES WITH:
- PART 9 OF BCBC 2018 , NBC-2019AE
- PART 9 OF OBC 2012 (2019 AMENDMENT)
- CSA 086-14
- TPIC 2014

(55 % OF 27.2 P.S.F. G.S.L. PLUS 8.4 P.S.F. RAIN LOAD) EQUALS 23.3 P.S.F. SPECIFIED ROOF LIVE LOAD

ALLOWABLE DEFL.(LL)= L/360 (0.73")
CALCULATED VERT. DEFL.(LL) = L/ 999 (0.04")
ALLOWABLE DEFL.(TL)= L/360 (0.73")
CALCULATED VERT. DEFL.(TL) = L/ 999 (0.15")

CSI: TC=0.45/1.00 (G-H:1) , BC=0.42/1.00 (K-L:4) , WB=0.87/1.00 (C-L:1) , SSI=0.19/1.00 (B-C:1)

DOL LUMBER=1.00 NAIL=1.00 LS BEND=1.10 COMP=1.10 SHEAR=1.10 TENS= 1.10

COMPANION LIVE LOAD FACTOR = 1.00

AUTOSOLVE RIGHT HEEL ONLY

TRUSS PLATE MANUFACTURER IS NOT RESPONSIBLE FOR QUALITY CONTROL IN THE TRUSS MANUFACTURING PLANT .

NAIL VALUES

PLATE	GRIP(DRY) (PSI) MAX	MIN	SHEAR (PLI) MAX	MIN	SECTION (PLI) MAX	MIN
MT20	650	371	1747	788	1987	1873

PLATE PLACEMENT TOL. = 0.250 inches

PLATE ROTATION TOL. = 5.0 Deg.

JSI GRIP= 0.76 (C) (INPUT = 0.90)
JSI METAL= 0.42 (J) (INPUT = 0.95)

JOB NAME	TRUSS NAME	QUANTITY	PLY	JOB DESC.	DRWG NO.
425914	T22	6	1	ROYAL PINE HOMES TRUSS DESC.	

Tamarack Roof Truss, Burlington

Version 8.630 S Aug 30 2023 MiTek Industries, Inc. Wed Feb 28 16:19:24 2024 Page 1
ID:VI_DQvi1e49Qy7axT?i10OzOYuG-KEj1DciytXLbLw0C0AKsYMN?nuViPmGODt4juKzgZoX

Scale = 1:59.4

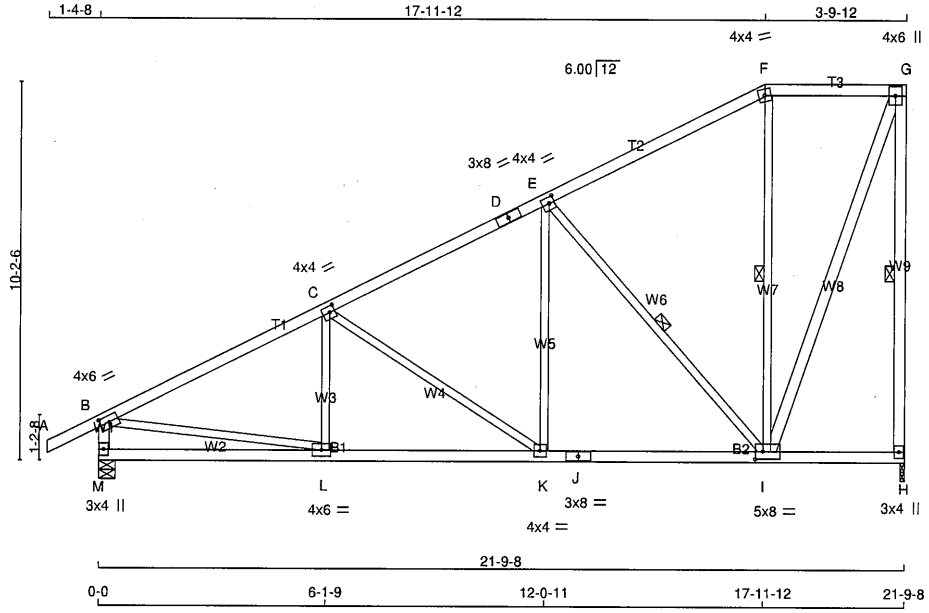

TOTAL WEIGHT = 6 X 111 = 667 lb

[M][F]

LUMBER

N. L. G. A. RULES

CHORDS	SIZE		LUMBER	DESCR.
A - D	2x4	DRY	No.2	SPF
D - F	2x4	DRY	No.2	SPF
F - G	2x4	DRY	No.2	SPF
H - G	2x4	DRY	No.2	SPF
M - B	2x4	DRY	No.2	SPF
M - J	2x4	DRY	No.2	SPF
J - H	2x4	DRY	No.2	SPF
ALL WEBS	2x3	DRY	No.2	SPF
EXCEPT				
I - G	2x4	DRY	No.2	SPF

DRY: SEASONED LUMBER.

PLATES (table is in inches)

JT	TYPE	PLATES	W	LEN	Y	X
B	TMVW-t	MT20	4.0	6.0	2.00	3.00
C	TMWW-t	MT20	4.0	4.0	2.00	1.75
D	TS-t	MT20	3.0	8.0		
E	TMWW-t	MT20	4.0	4.0	2.00	1.75
F	TTW-m	MT20	4.0	4.0		
G	TMVW+p	MT20	4.0	6.0		
H	BMV1+p	MT20	3.0	4.0		
I	BMWWW-t	MT20	5.0	8.0	2.50	2.50
J	BS-t	MT20	3.0	8.0		
K	BMWW-t	MT20	4.0	4.0		
L	BMWW-t	MT20	4.0	6.0		
M	BMV1+p	MT20	3.0	4.0		

NOTES- (1)
1) Lateral braces to be a minimum of 2X4 SPF #2.

DIMENSIONS, SUPPORTS AND LOADINGS SPECIFIED BY FABRICATOR TO BE VERIFIED BY BUILDING DESIGNER

BEARINGS

JT	FACTORED GROSS REACTION VERT	HORZ	MAXIMUM FACTORED GROSS REACTION DOWN	HORZ	UPLIFT	INPUT BRG IN-SX	REQRD BRG IN-SX
H	1126	0	1126	0	0	1-8	1-8
M	1248	0	1248	0	0	5-8	1-8

UNFACTORED REACTIONS

JT	1ST LCASE COMBINED	MAX./MIN. COMPONENT REACTIONS SNOW	LIVE	PERM.LIVE	WIND	DEAD	SOIL
H	799	507 / 0	0 / 0	0 / 0	0 / 0	292 / 0	0 / 0
M	884	575 / 0	0 / 0	0 / 0	0 / 0	309 / 0	0 / 0

BEARING MATERIAL TO BE SPF NO.2 OR BETTER AT JOINT(S) H, M

BRACING

TOP CHORD TO BE SHEATHED OR MAX. PURLIN SPACING = 4.93 FT.
MAX. UNBRACED BOTTOM CHORD LENGTH = 10.00 FT OR RIGID CEILING DIRECTLY APPLIED.

ALL PITCH BREAKS AND PERIMETER CORNER JOINTS MUST BE LATERALLY RESTRAINED.

1 LATERAL BRACE(S) AT 1/ 2 LENGTH OF G-H, E-I, F-I.

END VERTICAL(S) MUST BE SHEATHED OR HAVE BRACES AS INDICATED IN THE MAX. UNBRACED LENGTH COLUMN OF THE TABLE BELOW

LOADING

TOTAL LOAD CASES: (4)

CHORDS

MEMB. FR-TO	MAX. FACTORED FORCE (LBS)	FACTORED VERT. LOAD (PLF) FROM	TO	LC1	MAX CSI (LC)	MAX. UNBRAC LENGTH
A- B	0 / 27	-84.9	-84.9	0.12 (1)	10.00	
B- C	-1477 / 0	-84.9	-84.9	0.42 (1)	4.93	
C- D	-1035 / 0	-84.9	-84.9	0.34 (1)	5.76	
D- E	-1035 / 0	-84.9	-84.9	0.34 (1)	5.76	
E- F	-419 / 0	-84.9	-84.9	0.34 (1)	6.25	
F- G	-352 / 0	-84.9	-84.9	0.16 (1)	6.25	
H- G	-1103 / 0	0.0	0.0	0.56 (1)	6.03	
M- B	-1201 / 0	0.0	0.0	0.12 (1)	7.29	
M- L	0 / 0	-18.5	-18.5	0.15 (4)	10.00	
L- K	0 / 1341	-18.5	-18.5	0.29 (1)	10.00	
K- J	0 / 925	-18.5	-18.5	0.22 (1)	10.00	
J- I	0 / 925	-18.5	-18.5	0.22 (1)	10.00	
I- H	0 / 0	-18.5	-18.5	0.11 (4)	10.00	

WEBS

MEMB. FR-TO	MAX. FACTORED FORCE (LBS)	MAX CSI (LC)
L- C	-75 / 68	0.02 (4)
C- K	-499 / 0	0.49 (1)
K- E	0 / 390	0.09 (1)
E- I	-870 / 0	0.51 (1)
I- F	-187 / 0	0.13 (1)
I- G	0 / 1005	0.16 (1)
B- L	0 / 1355	0.30 (1)

DESIGN CRITERIA

SPECIFIED LOADS:

TOP CH.	LL	=	23.3	PSF
	DL	=	6.0	PSF
BOT CH.	LL	=	0.0	PSF
	DL	=	7.4	PSF
TOTAL LOAD		=	36.7	PSF

SPACING = 24.0 IN. C/C

LOADING IN FLAT SECTION BASED ON A SLOPE OF 6.00/12

THIS TRUSS IS DESIGNED FOR RESIDENTIAL OR SMALL BUILDING REQUIREMENTS OF PART 9, NBCC 2015

THIS DESIGN COMPLIES WITH:
- PART 9 OF BCBC 2018 , NBC-2019AE
- PART 9 OF OBC 2012 (2019 AMENDMENT)
- CSA 086-14
- TPIC 2014

(55 % OF 27.2 P.S.F. G.S.L. PLUS 8.4 P.S.F. RAIN LOAD) EQUALS 23.3 P.S.F. SPECIFIED ROOF LIVE LOAD

ALLOWABLE DEFL.(LL)= L/360 (0.73")
CALCULATED VERT. DEFL.(LL) = L/ 999 (0.05")
ALLOWABLE DEFL.(TL)= L/360 (0.73")
CALCULATED VERT. DEFL.(TL) = L/ 999 (0.10")

CSI: TC=0.56/1.00 (G-H:1) , BC=0.29/1.00 (K-L:1) , WB=0.51/1.00 (E-I:1) , SSI=0.22/1.00 (B-C:1)

DOL LUMBER=1.00 NAIL=1.00 LS BEND=1.10 COMP=1.10 SHEAR=1.10 TENS= 1.10

COMPANION LIVE LOAD FACTOR = 1.00

TRUSS PLATE MANUFACTURER IS NOT RESPONSIBLE FOR QUALITY CONTROL IN THE TRUSS MANUFACTURING PLANT .

NAIL VALUES

PLATE	GRIP(DRY) (PSI) MAX	MIN	SHEAR (PLI) MAX	MIN	SECTION (PLI) MAX	MIN
MT20	650	371	1747	788	1987	1873

PLATE PLACEMENT TOL. = 0.250 inches

PLATE ROTATION TOL. = 5.0 Deg.

JSI GRIP= 0.79 (L) (INPUT = 0.90)
JSI METAL= 0.37 (B) (INPUT = 0.95)

LICENSED PROFESSIONAL ENGINEER
02-28-24
H. J. G. ALVES
100009024
PROVINCE OF ONTARIO

Structural component only
DWG# T-2406461

JOB NAME	TRUSS NAME	QUANTITY	PLY	JOB DESC.	DRWG NO.
425913	T23	3	1	ROYAL PINE HOMES TRUSS DESC.	

Tamarack Roof Truss, Burlington

Version 8.630 S Aug 30 2023 MiTek Industries, Inc. Wed Feb 28 15:03:02 2024 Page 1
ID:VI_DQvi1e49Qy7axT?i10OzOYuG-VksrZsFpyi3jemkabt7Mr6czEsglqT5yb08G4vzgaw7

Scale = 1:59.1

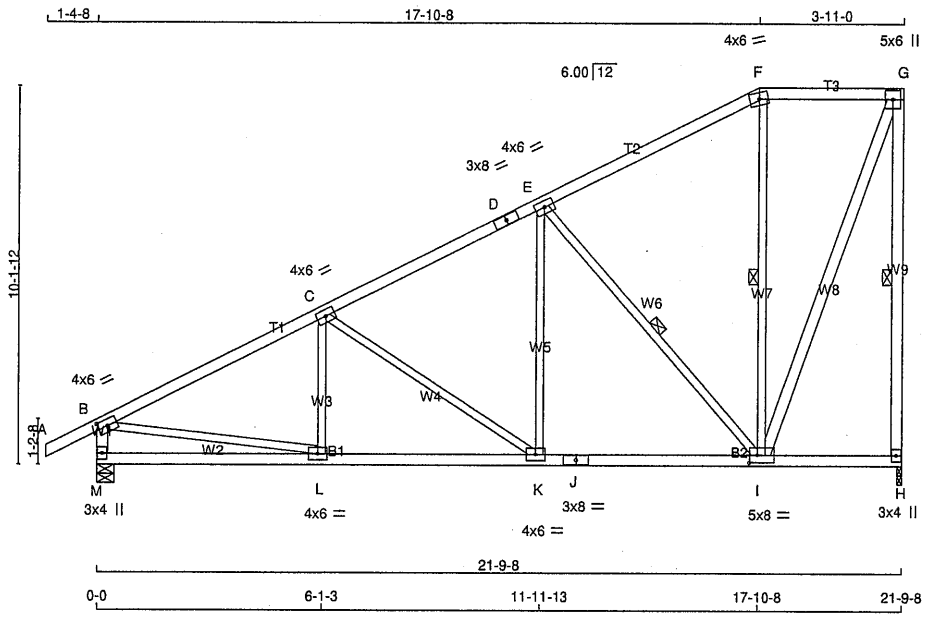

TOTAL WEIGHT = 3 X 111 = 333 lb

LUMBER
N. L. G. A. RULES

CHORDS	SIZE		LUMBER	DESCR.
A - D	2x4	DRY	No.2	SPF
D - F	2x4	DRY	No.2	SPF
F - G	2x4	DRY	No.2	SPF
H - G	2x4	DRY	No.2	SPF
M - B	2x4	DRY	No.2	SPF
M - J	2x4	DRY	No.2	SPF
J - H	2x4	DRY	No.2	SPF
ALL WEBS	2x3	DRY	No.2	SPF
EXCEPT				
I - G	2x4	DRY	No.2	SPF

DRY: SEASONED LUMBER.

PLATES (table is in inches)

JT	TYPE	PLATES	W	LEN	Y	X
B	TMVW-t	MT20	4.0	6.0	2.00	3.00
C	TMWW-t	MT20	4.0	6.0		
D	TS-t	MT20	3.0	8.0		
E	TMWW-t	MT20	4.0	6.0		
F	TTW-m	MT20	4.0	6.0		
G	TMVW+p	MT20	5.0	6.0		
H	BMV1+p	MT20	3.0	4.0		
I	BMWWW-t	MT20	5.0	8.0	2.50	2.50
J	BS-t	MT20	3.0	8.0		
K	BMWW-t	MT20	4.0	6.0		
L	BMWW-t	MT20	4.0	6.0		
M	BMV1+p	MT20	3.0	4.0		

NOTES- (1)
1) Lateral braces to be a minimum of 2X4 SPF #2.

DIMENSIONS, SUPPORTS AND LOADINGS SPECIFIED BY FABRICATOR TO BE VERIFIED BY BUILDING DESIGNER

BEARINGS

JT	FACTORED GROSS REACTION VERT	HORZ	MAXIMUM FACTORED GROSS REACTION DOWN	HORZ	UPLIFT	INPUT BRG IN-SX	REQRD BRG IN-SX
H	1126	0	1126	0	0	1-8	1-8
M	1248	0	1248	0	0	5-8	1-8

UNFACTORED REACTIONS

JT	1ST LCASE COMBINED	MAX./MIN. COMPONENT REACTIONS SNOW	LIVE	PERM.LIVE	WIND	DEAD	SOIL
H	799	507 / 0	0 / 0	0 / 0	0 / 0	292 / 0	0 / 0
M	884	575 / 0	0 / 0	0 / 0	0 / 0	309 / 0	0 / 0

BEARING MATERIAL TO BE SPF NO.2 OR BETTER AT JOINT(S) H, M

BRACING
TOP CHORD TO BE SHEATHED OR MAX. PURLIN SPACING = 4.94 FT.
MAX. UNBRACED BOTTOM CHORD LENGTH = 10.00 FT OR RIGID CEILING DIRECTLY APPLIED.

ALL PITCH BREAKS AND PERIMETER CORNER JOINTS MUST BE LATERALLY RESTRAINED.

1 LATERAL BRACE(S) AT 1/ 2 LENGTH OF G-H, E-I, F-I.

END VERTICAL(S) MUST BE SHEATHED OR HAVE BRACES AS INDICATED IN THE MAX. UNBRACED LENGTH COLUMN OF THE TABLE BELOW

LOADING
TOTAL LOAD CASES: (4)

CHORDS

MEMB. FR-TO	MAX. FACTORED FORCE (LBS)	FACTORED VERT. LOAD LC1 (PLF) FROM	TO	MAX CSI (LC)	MAX. UNBRAC LENGTH
A- B	0 / 27	-84.9	-84.9	0.12 (1)	10.00
B- C	-1478 / 0	-84.9	-84.9	0.41 (1)	4.94
C- D	-1041 / 0	-84.9	-84.9	0.33 (1)	5.75
D- E	-1041 / 0	-84.9	-84.9	0.33 (1)	5.75
E- F	-429 / 0	-84.9	-84.9	0.34 (1)	6.25
F- G	-362 / 0	-84.9	-84.9	0.17 (1)	6.25
H- G	-1101 / 0	0.0	0.0	0.55 (1)	6.03
M- B	-1201 / 0	0.0	0.0	0.12 (1)	7.29
M- L	0 / 0	-18.5	-18.5	0.15 (4)	10.00
L- K	0 / 1341	-18.5	-18.5	0.29 (1)	10.00
K- J	0 / 931	-18.5	-18.5	0.22 (1)	10.00
J- I	0 / 931	-18.5	-18.5	0.22 (1)	10.00
I- H	0 / 0	-18.5	-18.5	0.11 (4)	10.00

WEBS

MEMB. FR-TO	MAX. FACTORED FORCE (LBS)	MAX CSI (LC)
L- C	-77 / 67	0.02 (4)
C- K	-494 / 0	0.48 (1)
K- E	0 / 386	0.09 (1)
E- I	-863 / 0	0.50 (1)
I- F	-185 / 0	0.13 (1)
I- G	0 / 1004	0.16 (1)
B- L	0 / 1355	0.31 (1)

DESIGN CRITERIA [M][F]

SPECIFIED LOADS:

TOP CH.	LL =	23.3	PSF
	DL =	6.0	PSF
BOT CH.	LL =	0.0	PSF
	DL =	7.4	PSF
TOTAL LOAD	=	36.7	PSF

SPACING = 24.0 IN. C/C

LOADING IN FLAT SECTION BASED ON A SLOPE OF 6.00/12

THIS TRUSS IS DESIGNED FOR RESIDENTIAL OR SMALL BUILDING REQUIREMENTS OF PART 9, NBCC 2015

THIS DESIGN COMPLIES WITH:
- PART 9 OF BCBC 2018 , NBC-2019AE
- PART 9 OF OBC 2012 (2019 AMENDMENT)
- CSA 086-14
- TPIC 2014

(55 % OF 27.2 P.S.F. G.S.L. PLUS 8.4 P.S.F. RAIN LOAD) EQUALS 23.3 P.S.F. SPECIFIED ROOF LIVE LOAD

ALLOWABLE DEFL.(LL)= L/360 (0.73")
CALCULATED VERT. DEFL.(LL) = L/ 999 (0.05")
ALLOWABLE DEFL.(TL)= L/360 (0.73")
CALCULATED VERT. DEFL.(TL) = L/ 999 (0.09")

CSI: TC=0.55/1.00 (G-H:1) , BC=0.29/1.00 (K-L:1) , WB=0.50/1.00 (E-I:1) , SSI=0.21/1.00 (B-C:1)

DOL LUMBER=1.00 NAIL=1.00 LS BEND=1.10 COMP=1.10 SHEAR=1.10 TENS= 1.10

COMPANION LIVE LOAD FACTOR = 1.00

TRUSS PLATE MANUFACTURER IS NOT RESPONSIBLE FOR QUALITY CONTROL IN THE TRUSS MANUFACTURING PLANT .

NAIL VALUES

PLATE	GRIP(DRY) (PSI) MAX	MIN	SHEAR (PLI) MAX	MIN	SECTION (PLI) MAX	MIN
MT20	650	371	1747	788	1987	1873

PLATE PLACEMENT TOL. = 0.250 inches

PLATE ROTATION TOL. = 5.0 Deg.

JSI GRIP= 0.79 (L) (INPUT = 0.90)
JSI METAL= 0.37 (B) (INPUT = 0.95)

LICENSED PROFESSIONAL ENGINEER
02-28-24
H. J. G. ALVES
100009024
PROVINCE OF ONTARIO

Structural component only
DWG# T-2406416

JOB NAME	TRUSS NAME	QUANTITY	PLY	JOB DESC.	DRWG NO.
425913	T24	1	1	ROYAL PINE HOMES TRUSS DESC.	

Tamarack Roof Truss, Burlington

Version 8.630 S Aug 30 2023 MiTek Industries, Inc. Wed Feb 28 15:03:03 2024 Page 1
ID:VI_DQvi1e49Qy7axT?i10OzOYuG-zwQDmCGSj0BaGwJm9aebOJ84xG_AZvW6qgtpcMzgaw6

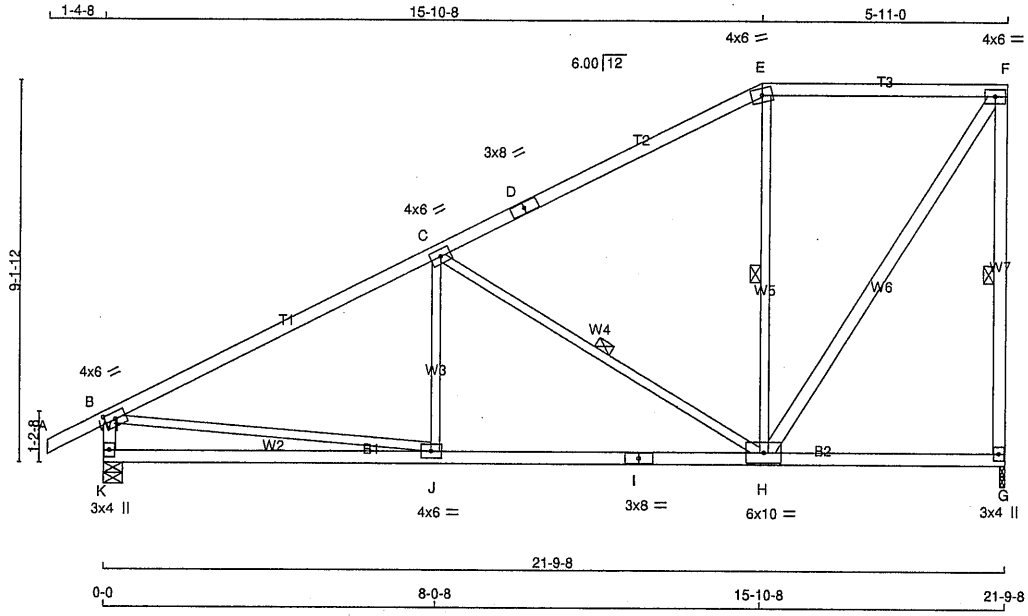

TOTAL WEIGHT = 100 lb

LUMBER
N. L. G. A. RULES

CHORDS	SIZE		LUMBER	DESCR.
A - D	2x4	DRY	No.2	SPF
D - E	2x4	DRY	No.2	SPF
E - F	2x4	DRY	No.2	SPF
G - F	2x4	DRY	No.2	SPF
K - B	2x4	DRY	No.2	SPF
K - I	2x4	DRY	No.2	SPF
I - G	2x4	DRY	No.2	SPF
ALL WEBS	2x3	DRY	No.2	SPF
EXCEPT				
H - F	2x4	DRY	No.2	SPF

DRY: SEASONED LUMBER.

PLATES (table is in inches)

JT	TYPE	PLATES	W	LEN	Y	X
B	TMVW-t	MT20	4.0	6.0	2.00	3.00
C	TMWW-t	MT20	4.0	6.0		
D	TS-t	MT20	3.0	8.0		
E	TTW-m	MT20	4.0	6.0		
F	TMVW-t	MT20	4.0	6.0		
G	BMV1+p	MT20	3.0	4.0		
H	BMWWW-t	MT20	6.0	10.0		
I	BS-t	MT20	3.0	8.0		
J	BMWW-t	MT20	4.0	6.0		
K	BMV1+p	MT20	3.0	4.0		

NOTES- (1)
1) Lateral braces to be a minimum of 2X4 SPF #2.

DIMENSIONS, SUPPORTS AND LOADINGS SPECIFIED BY FABRICATOR TO BE VERIFIED BY BUILDING DESIGNER

BEARINGS

JT	FACTORED GROSS REACTION VERT	HORZ	MAXIMUM FACTORED GROSS REACTION DOWN	HORZ	UPLIFT	INPUT BRG IN-SX	REQRD BRG IN-SX
G	1126	0	1126	0	0	1-8	1-8
K	1248	0	1248	0	0	5-8	1-8

UNFACTORED REACTIONS

JT	1ST LCASE COMBINED	MAX./MIN. COMPONENT REACTIONS SNOW	LIVE	PERM.LIVE	WIND	DEAD	SOIL
G	799	507 / 0	0 / 0	0 / 0	0 / 0	292 / 0	0 / 0
K	884	575 / 0	0 / 0	0 / 0	0 / 0	309 / 0	0 / 0

BEARING MATERIAL TO BE SPF NO.2 OR BETTER AT JOINT(S) G, K

BRACING
TOP CHORD TO BE SHEATHED OR MAX. PURLIN SPACING = 4.20 FT.
MAX. UNBRACED BOTTOM CHORD LENGTH = 10.00 FT OR RIGID CEILING DIRECTLY APPLIED.

ALL PITCH BREAKS AND PERIMETER CORNER JOINTS MUST BE LATERALLY RESTRAINED.

1 LATERAL BRACE(S) AT 1/ 2 LENGTH OF F-G, C-H, E-H.

END VERTICAL(S) MUST BE SHEATHED OR HAVE BRACES AS INDICATED IN THE MAX. UNBRACED LENGTH COLUMN OF THE TABLE BELOW

LOADING
TOTAL LOAD CASES: (4)

CHORDS

MEMB. FR-TO	MAX. FACTORED FORCE (LBS)	FACTORED VERT. LOAD (PLF) FROM	TO	LC1 CSI (LC)	MAX UNBRAC LENGTH
A- B	0 / 27	-84.9	-84.9	0.12 (1)	10.00
B- C	-1437 / 0	-84.9	-84.9	0.81 (1)	4.20
C- D	-654 / 0	-84.9	-84.9	0.73 (1)	5.83
D- E	-654 / 0	-84.9	-84.9	0.73 (1)	5.83
E- F	-549 / 0	-84.9	-84.9	0.38 (1)	6.25
G- F	-1086 / 0	0.0	0.0	0.42 (1)	6.07
K- B	-1188 / 0	0.0	0.0	0.12 (1)	7.32
K- J	0 / 0	-18.5	-18.5	0.29 (4)	10.00
J- I	0 / 1318	-18.5	-18.5	0.41 (4)	10.00
I- H	0 / 1318	-18.5	-18.5	0.41 (4)	10.00
H- G	0 / 0	-18.5	-18.5	0.19 (4)	10.00

WEBS

MEMB. FR-TO	MAX. FACTORED FORCE (LBS)	MAX CSI (LC)
J- C	0 / 135	0.05 (4)
C- H	-902 / 0	0.55 (1)
H- E	-224 / 4	0.12 (1)
H- F	0 / 1000	0.16 (1)
B- J	0 / 1326	0.30 (1)

DESIGN CRITERIA [M][F]

SPECIFIED LOADS:

TOP CH.	LL	=	23.3	PSF
	DL	=	6.0	PSF
BOT CH.	LL	=	0.0	PSF
	DL	=	7.4	PSF
TOTAL LOAD		=	36.7	PSF

SPACING = 24.0 IN. C/C

LOADING IN FLAT SECTION BASED ON A SLOPE OF 6.00/12

THIS TRUSS IS DESIGNED FOR RESIDENTIAL OR SMALL BUILDING REQUIREMENTS OF PART 9, NBCC 2015

THIS DESIGN COMPLIES WITH:
- PART 9 OF BCBC 2018 , NBC-2019AE
- PART 9 OF OBC 2012 (2019 AMENDMENT)
- CSA 086-14
- TPIC 2014

(55 % OF 27.2 P.S.F. G.S.L. PLUS 8.4 P.S.F. RAIN LOAD) EQUALS 23.3 P.S.F. SPECIFIED ROOF LIVE LOAD

ALLOWABLE DEFL.(LL)= L/360 (0.73")
CALCULATED VERT. DEFL.(LL) = L/ 999 (0.05")
ALLOWABLE DEFL.(TL)= L/360 (0.73")
CALCULATED VERT. DEFL.(TL) = L/ 999 (0.15")

CSI: TC=0.81/1.00 (B-C:1) , BC=0.41/1.00 (H-J:4) , WB=0.55/1.00 (C-H:1) , SSI=0.30/1.00 (B-C:1)

DOL LUMBER=1.00 NAIL=1.00 LS BEND=1.10 COMP=1.10 SHEAR=1.10 TENS= 1.10

COMPANION LIVE LOAD FACTOR = 1.00

TRUSS PLATE MANUFACTURER IS NOT RESPONSIBLE FOR QUALITY CONTROL IN THE TRUSS MANUFACTURING PLANT .

NAIL VALUES

PLATE	GRIP(DRY) (PSI) MAX	MIN	SHEAR (PLI) MAX	MIN	SECTION (PLI) MAX	MIN
MT20	650	371	1747	788	1987	1873

PLATE PLACEMENT TOL. = 0.250 inches

PLATE ROTATION TOL. = 5.0 Deg.

JSI GRIP= 0.75 (J) (INPUT = 0.90)
JSI METAL= 0.49 (I) (INPUT = 0.95)

LICENSED PROFESSIONAL ENGINEER
02-28-24
H. J. G. ALVES
100009024
PROVINCE OF ONTARIO

Structural component only
DWG# T-2406417

JOB NAME	TRUSS NAME	QUANTITY	PLY	JOB DESC.	DRWG NO.
425913	T25	1	1	ROYAL PINE HOMES TRUSS DESC.	

Tamarack Roof Truss, Burlington

Version 8.630 S Aug 30 2023 MiTek Industries, Inc. Wed Feb 28 15:03:04 2024 Page 1
ID:VI_DQvi1e49Qy7axT?i10OzOYuG-R6_bzYH4UKJRt4uyjI9qwXhI?gKzIMnF3KdN9ozgaw5

Scale = 1:45.7

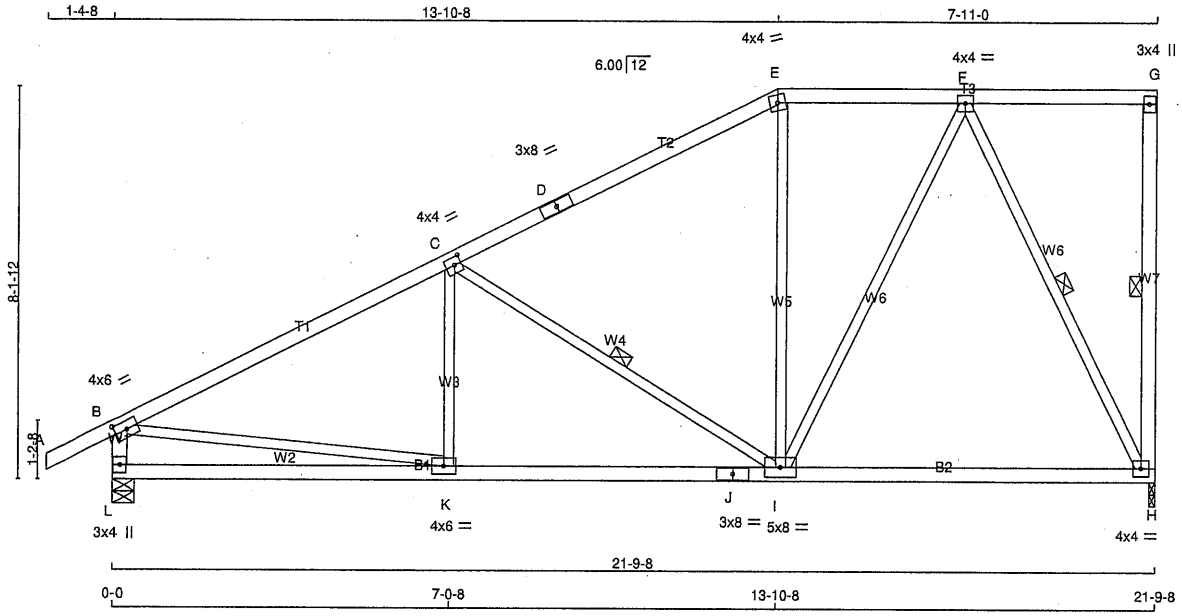

TOTAL WEIGHT = 98 lb
[M][F]

LUMBER
N. L. G. A. RULES

CHORDS	SIZE		LUMBER	DESCR.
A - D	2x4	DRY	No.2	SPF
D - E	2x4	DRY	No.2	SPF
E - G	2x4	DRY	No.2	SPF
H - G	2x4	DRY	No.2	SPF
L - B	2x4	DRY	No.2	SPF
L - J	2x4	DRY	No.2	SPF
J - H	2x4	DRY	No.2	SPF
ALL WEBS EXCEPT	2x3	DRY	No.2	SPF

DRY: SEASONED LUMBER.

PLATES (table is in inches)

JT	TYPE	PLATES	W	LEN	Y	X
B	TMVW-t	MT20	4.0	6.0	2.00	3.00
C	TMWW-t	MT20	4.0	4.0	2.00	1.75
D	TS-t	MT20	3.0	8.0		
E	TTW-m	MT20	4.0	4.0		
F	TMWW-t	MT20	4.0	4.0		
G	TMV+p	MT20	3.0	4.0		
H	BMVW1-t	MT20	4.0	4.0		
I	BMWWW-t	MT20	5.0	8.0		
J	BS-t	MT20	3.0	8.0		
K	BMWW-t	MT20	4.0	6.0		
L	BMV1+p	MT20	3.0	4.0		

NOTES- (1)
1) Lateral braces to be a minimum of 2X4 SPF #2.

LICENSED PROFESSIONAL ENGINEER
02-28-24
H. J. G. ALVES
100009024
PROVINCE OF ONTARIO

Structural component only
DWG# T-2406418

DIMENSIONS, SUPPORTS AND LOADINGS SPECIFIED BY FABRICATOR TO BE VERIFIED BY BUILDING DESIGNER

BEARINGS

JT	FACTORED GROSS REACTION VERT	HORZ	MAXIMUM FACTORED GROSS REACTION DOWN	HORZ	UPLIFT	INPUT BRG IN-SX	REQRD BRG IN-SX
H	1126	0	1126	0	0	1-8	1-8
L	1248	0	1248	0	0	5-8	1-8

UNFACTORED REACTIONS

JT	1ST LCASE COMBINED	MAX./MIN. COMPONENT REACTIONS SNOW	LIVE	PERM.LIVE	WIND	DEAD	SOIL
H	799	507 / 0	0 / 0	0 / 0	0 / 0	292 / 0	0 / 0
L	884	575 / 0	0 / 0	0 / 0	0 / 0	309 / 0	0 / 0

BEARING MATERIAL TO BE SPF NO.2 OR BETTER AT JOINT(S) H, L

BRACING
TOP CHORD TO BE SHEATHED OR MAX. PURLIN SPACING = 4.63 FT.
MAX. UNBRACED BOTTOM CHORD LENGTH = 10.00 FT OR RIGID CEILING DIRECTLY APPLIED.

ALL PITCH BREAKS AND PERIMETER CORNER JOINTS MUST BE LATERALLY RESTRAINED.

1 LATERAL BRACE(S) AT 1/ 2 LENGTH OF G-H, C-I, F-H.

END VERTICAL(S) MUST BE SHEATHED OR HAVE BRACES AS INDICATED IN THE MAX. UNBRACED LENGTH COLUMN OF THE TABLE BELOW

LOADING
TOTAL LOAD CASES: (4)

CHORDS

MEMB. FR-TO	MAX. FACTORED FORCE (LBS)	FACTORED VERT. LOAD LC1 (PLF) FROM	TO	MAX CSI (LC)	MAX. UNBRAC LENGTH
A- B	0 / 27	-84.9	-84.9	0.12 (1)	10.00
B- C	-1470 / 0	-84.9	-84.9	0.60 (1)	4.63
C- D	-850 / 0	-84.9	-84.9	0.55 (1)	5.79
D- E	-850 / 0	-84.9	-84.9	0.55 (1)	5.79
E- F	-731 / 0	-84.9	-84.9	0.17 (1)	6.25
F- G	0 / 0	-84.9	-84.9	0.22 (1)	10.00
H- G	-129 / 0	0.0	0.0	0.04 (1)	6.25
L- B	-1193 / 0	0.0	0.0	0.12 (1)	7.32
L- K	0 / 0	-18.5	-18.5	0.19 (4)	10.00
K- J	0 / 1343	-18.5	-18.5	0.37 (4)	10.00
J- I	0 / 1343	-18.5	-18.5	0.37 (4)	10.00
I- H	0 / 478	-18.5	-18.5	0.29 (4)	10.00

WEBS

MEMB. FR-TO	MAX. FACTORED FORCE (LBS)	MAX CSI (LC)
K- C	-37 / 92	0.03 (4)
C- I	-726 / 0	0.33 (1)
I- E	0 / 69	0.02 (4)
B- K	0 / 1354	0.30 (1)
I- F	0 / 581	0.13 (1)
F- H	-1053 / 0	0.55 (1)

DESIGN CRITERIA

SPECIFIED LOADS:

TOP CH.	LL	=	23.3	PSF
	DL	=	6.0	PSF
BOT CH.	LL	=	0.0	PSF
	DL	=	7.4	PSF
TOTAL LOAD		=	36.7	PSF

SPACING = 24.0 IN. C/C

LOADING IN FLAT SECTION BASED ON A SLOPE OF 6.00/12

THIS TRUSS IS DESIGNED FOR RESIDENTIAL OR SMALL BUILDING REQUIREMENTS OF PART 9, NBCC 2015

THIS DESIGN COMPLIES WITH:
- PART 9 OF BCBC 2018 , NBC-2019AE
- PART 9 OF OBC 2012 (2019 AMENDMENT)
- CSA 086-14
- TPIC 2014

(55 % OF 27.2 P.S.F. G.S.L. PLUS 8.4 P.S.F. RAIN LOAD) EQUALS 23.3 P.S.F. SPECIFIED ROOF LIVE LOAD

ALLOWABLE DEFL.(LL)= L/360 (0.73")
CALCULATED VERT. DEFL.(LL) = L/ 999 (0.04")
ALLOWABLE DEFL.(TL)= L/360 (0.73")
CALCULATED VERT. DEFL.(TL) = L/ 999 (0.12")

CSI: TC=0.60/1.00 (B-C:1) , BC=0.37/1.00 (I-K:4) , WB=0.55/1.00 (F-H:1) , SSI=0.26/1.00 (B-C:1)

DOL LUMBER=1.00 NAIL=1.00 LS BEND=1.10 COMP=1.10 SHEAR=1.10 TENS= 1.10

COMPANION LIVE LOAD FACTOR = 1.00

TRUSS PLATE MANUFACTURER IS NOT RESPONSIBLE FOR QUALITY CONTROL IN THE TRUSS MANUFACTURING PLANT .

NAIL VALUES

PLATE	GRIP(DRY) (PSI) MAX	MIN	SHEAR (PLI) MAX	MIN	SECTION (PLI) MAX	MIN
MT20	650	371	1747	788	1987	1873

PLATE PLACEMENT TOL. = 0.250 inches

PLATE ROTATION TOL. = 5.0 Deg.

JSI GRIP= 0.77 (K) (INPUT = 0.90)
JSI METAL= 0.50 (J) (INPUT = 0.95)

JOB NAME	TRUSS NAME	QUANTITY	PLY	JOB DESC.	DRWG NO.
425913	T26	1	1	ROYAL PINE HOMES TRUSS DESC.	

Tamarack Roof Truss, Burlington

Version 8.630 S Aug 30 2023 MiTek Industries, Inc. Wed Feb 28 15:03:05 2024 Page 1
ID:VI_DQvi1e49Qy7axT?i10OzOYuG-vIY_BuliEdRIVDT9G?h3TkEWU4hM1mCPHzMwhEzgaw4

Scale = 1:42.9

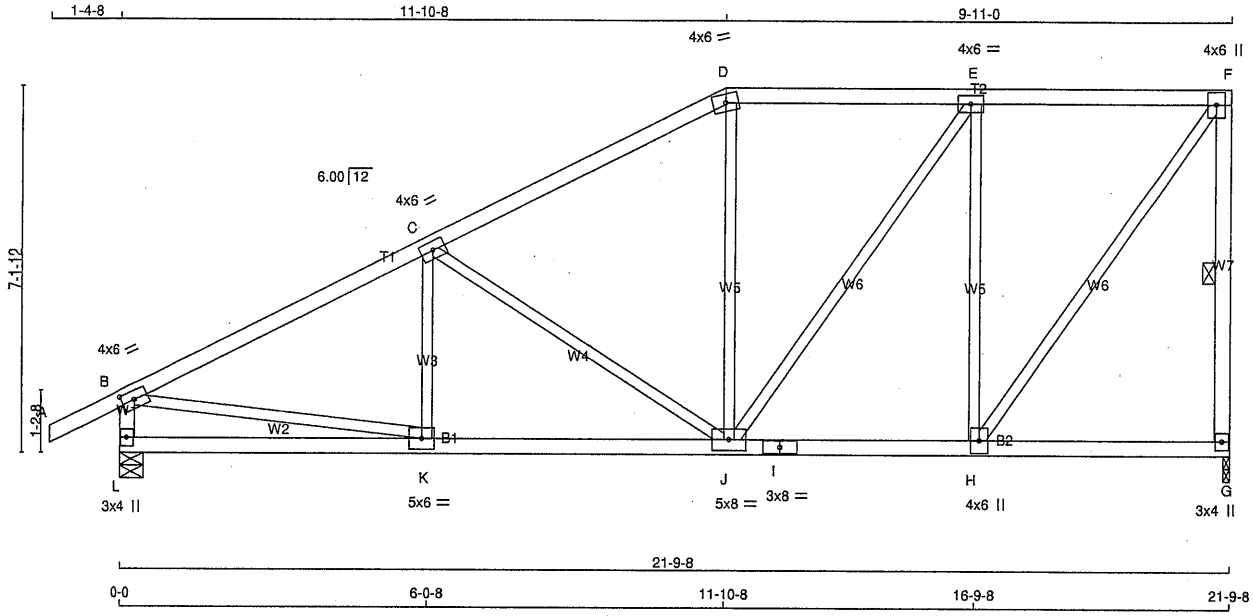

TOTAL WEIGHT = 98 lb
[M][F]

LUMBER
N. L. G. A. RULES

CHORDS	SIZE		LUMBER	DESCR.
A - D	2x4	DRY	No.2	SPF
D - F	2x4	DRY	No.2	SPF
G - F	2x4	DRY	No.2	SPF
L - B	2x4	DRY	No.2	SPF
L - I	2x4	DRY	No.2	SPF
I - G	2x4	DRY	No.2	SPF
ALL WEBS EXCEPT	2x3	DRY	No.2	SPF

DRY: SEASONED LUMBER.

PLATES (table is in inches)

JT	TYPE	PLATES	W	LEN	Y	X
B	TMVW-t	MT20	4.0	6.0	2.00	3.00
C	TMWW-t	MT20	4.0	6.0		
D	TTW-m	MT20	4.0	6.0		
E	TMWW-t	MT20	4.0	6.0		
F	TMVW+p	MT20	4.0	6.0		
G	BMV1+p	MT20	3.0	4.0		
H	BMWW+t	MT20	4.0	6.0		
I	BS-t	MT20	3.0	8.0		
J	BMWWW-t	MT20	5.0	8.0		
K	BMWW-t	MT20	5.0	6.0		
L	BMV1+p	MT20	3.0	4.0		

NOTES- (1)
1) Lateral braces to be a minimum of 2X4 SPF #2.

DIMENSIONS, SUPPORTS AND LOADINGS SPECIFIED BY FABRICATOR TO BE VERIFIED BY BUILDING DESIGNER

BEARINGS

JT	FACTORED GROSS REACTION VERT	HORZ	MAXIMUM FACTORED GROSS REACTION DOWN	HORZ	UPLIFT	INPUT BRG IN-SX	REQRD BRG IN-SX
G	1126	0	1126	0	0	1-8	1-8
L	1248	0	1248	0	0	5-8	1-8

UNFACTORED REACTIONS

JT	1ST LCASE COMBINED	MAX./MIN. COMPONENT REACTIONS SNOW	LIVE	PERM.LIVE	WIND	DEAD	SOIL
G	799	507 / 0	0 / 0	0 / 0	0 / 0	292 / 0	0 / 0
L	884	575 / 0	0 / 0	0 / 0	0 / 0	309 / 0	0 / 0

BEARING MATERIAL TO BE SPF NO.2 OR BETTER AT JOINT(S) G, L

BRACING
TOP CHORD TO BE SHEATHED OR MAX. PURLIN SPACING = 4.88 FT.
MAX. UNBRACED BOTTOM CHORD LENGTH = 10.00 FT OR RIGID CEILING DIRECTLY APPLIED.

ALL PITCH BREAKS AND PERIMETER CORNER JOINTS MUST BE LATERALLY RESTRAINED.

1 LATERAL BRACE(S) AT 1/ 2 LENGTH OF F-G.

END VERTICAL(S) MUST BE SHEATHED OR HAVE BRACES AS INDICATED IN THE MAX. UNBRACED LENGTH COLUMN OF THE TABLE BELOW

LOADING
TOTAL LOAD CASES: (4)

CHORDS

MEMB. FR-TO	MAX. FACTORED FORCE (LBS)	FACTORED VERT. LOAD LC1 (PLF) FROM	TO	MAX CSI (LC)	MAX. UNBRAC LENGTH
A- B	0 / 27	-84.9	-84.9	0.12 (1)	10.00
B- C	-1494 / 0	-84.9	-84.9	0.43 (1)	4.88
C- D	-1022 / 0	-84.9	-84.9	0.40 (1)	5.68
D- E	-890 / 0	-84.9	-84.9	0.27 (1)	6.18
E- F	-675 / 0	-84.9	-84.9	0.27 (1)	6.25
G- F	-1088 / 0	0.0	0.0	0.25 (1)	6.06
L- B	-1202 / 0	0.0	0.0	0.12 (1)	7.29
L- K	0 / 0	-18.5	-18.5	0.16 (4)	10.00
K- J	0 / 1360	-18.5	-18.5	0.30 (1)	10.00
J- I	0 / 675	-18.5	-18.5	0.16 (4)	10.00
I- H	0 / 675	-18.5	-18.5	0.16 (4)	10.00
H- G	0 / 0	-18.5	-18.5	0.10 (4)	10.00

WEBS

MEMB. FR-TO	MAX. FACTORED FORCE (LBS)	MAX CSI (LC)
K- C	-79 / 69	0.02 (4)
C- J	-565 / 0	0.55 (1)
J- D	0 / 100	0.03 (4)
J- E	0 / 374	0.08 (1)
H- E	-826 / 0	0.73 (1)
H- F	0 / 1146	0.26 (1)
B- K	0 / 1375	0.31 (1)

DESIGN CRITERIA

SPECIFIED LOADS:

TOP CH.	LL	=	23.3	PSF
	DL	=	6.0	PSF
BOT CH.	LL	=	0.0	PSF
	DL	=	7.4	PSF
TOTAL LOAD		=	36.7	PSF

SPACING = 24.0 IN. C/C

LOADING IN FLAT SECTION BASED ON A SLOPE OF 6.00/12

THIS TRUSS IS DESIGNED FOR RESIDENTIAL OR SMALL BUILDING REQUIREMENTS OF PART 9, NBCC 2015

THIS DESIGN COMPLIES WITH:
- PART 9 OF BCBC 2018 , NBC-2019AE
- PART 9 OF OBC 2012 (2019 AMENDMENT)
- CSA 086-14
- TPIC 2014

(55 % OF 27.2 P.S.F. G.S.L. PLUS 8.4 P.S.F. RAIN LOAD) EQUALS 23.3 P.S.F. SPECIFIED ROOF LIVE LOAD

ALLOWABLE DEFL.(LL)= L/360 (0.73")
CALCULATED VERT. DEFL.(LL) = L/ 999 (0.05")
ALLOWABLE DEFL.(TL)= L/360 (0.73")
CALCULATED VERT. DEFL.(TL) = L/ 999 (0.10")

CSI: TC=0.43/1.00 (B-C:1) , BC=0.30/1.00 (J-K:1) , WB=0.73/1.00 (E-H:1) , SSI=0.22/1.00 (B-C:1)

DOL LUMBER=1.00 NAIL=1.00 LS BEND=1.10 COMP=1.10 SHEAR=1.10 TENS= 1.10

COMPANION LIVE LOAD FACTOR = 1.00

TRUSS PLATE MANUFACTURER IS NOT RESPONSIBLE FOR QUALITY CONTROL IN THE TRUSS MANUFACTURING PLANT .

NAIL VALUES

PLATE	GRIP(DRY) (PSI) MAX	MIN	SHEAR (PLI) MAX	MIN	SECTION (PLI) MAX	MIN
MT20	650	371	1747	788	1987	1873

PLATE PLACEMENT TOL. = 0.250 inches

PLATE ROTATION TOL. = 5.0 Deg.

JSI GRIP= 0.69 (B) (INPUT = 0.90)
JSI METAL= 0.38 (B) (INPUT = 0.95)

LICENSED PROFESSIONAL ENGINEER
02-28-24
H. J. G. ALVES
100009024
PROVINCE OF ONTARIO

Structural component only
DWG# T-2406419

JOB NAME	TRUSS NAME	QUANTITY	PLY	JOB DESC.	DRWG NO.
425913	T27	1	1	ROYAL PINE HOMES TRUSS DESC.	

Tamarack Roof Truss, Burlington

Version 8.630 S Aug 30 2023 MiTek Industries, Inc. Wed Feb 28 15:03:06 2024 Page 1
ID:VI_DQvi1e49Qy7axT?i10OzOYuG-NV5MOEIK?xZ97N2LqjCI0ymbTU10mHqYWd6TDgzgaw3

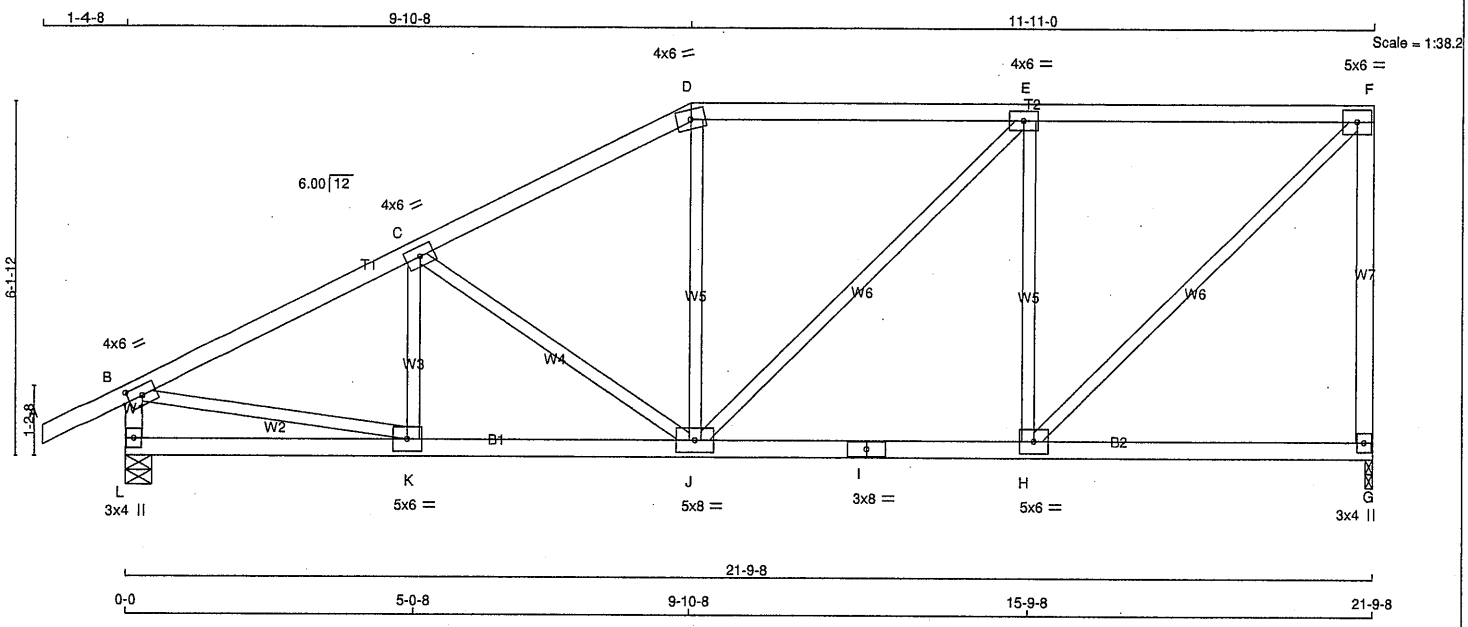

TOTAL WEIGHT = 93 lb

LUMBER
N. L. G. A. RULES

CHORDS	SIZE		LUMBER	DESCR.
A - D	2x4	DRY	No.2	SPF
D - F	2x4	DRY	No.2	SPF
G - F	2x4	DRY	No.2	SPF
L - B	2x4	DRY	No.2	SPF
L - I	2x4	DRY	No.2	SPF
I - G	2x4	DRY	No.2	SPF
ALL WEBS EXCEPT	2x3	DRY	No.2	SPF

DRY: SEASONED LUMBER.

PLATES (table is in inches)

JT	TYPE	PLATES	W	LEN	Y	X
B	TMVW-t	MT20	4.0	6.0	2.00	3.00
C	TMWW-t	MT20	4.0	6.0		
D	TTW-m	MT20	4.0	6.0		
E	TMWW-t	MT20	4.0	6.0		
F	TMVW-t	MT20	5.0	6.0		
G	BMV1+p	MT20	3.0	4.0		
H	BMWW-t	MT20	5.0	6.0		
I	BS-t	MT20	3.0	8.0		
J	BMWWW-t	MT20	5.0	8.0		
K	BMWW-t	MT20	5.0	6.0		
L	BMV1+p	MT20	3.0	4.0		

NOTES- (1)
1) Lateral braces to be a minimum of 2X4 SPF #2.

DIMENSIONS, SUPPORTS AND LOADINGS SPECIFIED BY FABRICATOR TO BE VERIFIED BY BUILDING DESIGNER

BEARINGS

JT	FACTORED GROSS REACTION VERT	HORZ	MAXIMUM FACTORED GROSS REACTION DOWN	HORZ	UPLIFT	INPUT BRG IN-SX	REQRD BRG IN-SX
G	1126	0	1126	0	0	1-8	1-8
L	1248	0	1248	0	0	5-8	1-8

UNFACTORED REACTIONS

JT	1ST LCASE COMBINED	MAX./MIN. COMPONENT REACTIONS SNOW	LIVE	PERM.LIVE	WIND	DEAD	SOIL
G	799	507 / 0	0 / 0	0 / 0	0 / 0	292 / 0	0 / 0
L	884	575 / 0	0 / 0	0 / 0	0 / 0	309 / 0	0 / 0

BEARING MATERIAL TO BE SPF NO.2 OR BETTER AT JOINT(S) G, L

BRACING
TOP CHORD TO BE SHEATHED OR MAX. PURLIN SPACING = 4.90 FT.
MAX. UNBRACED BOTTOM CHORD LENGTH = 10.00 FT OR RIGID CEILING DIRECTLY APPLIED.

ALL PITCH BREAKS AND PERIMETER CORNER JOINTS MUST BE LATERALLY RESTRAINED.

LOADING
TOTAL LOAD CASES: (4)

CHORDS

MEMB. FR-TO	MAX. FACTORED FORCE (LBS)	FACTORED VERT. LOAD LC1 (PLF) FROM	TO	MAX CSI (LC)	MAX. UNBRAC LENGTH
A- B	0 / 27	-84.9	-84.9	0.12 (1)	10.00
B- C	-1494 / 0	-84.9	-84.9	0.40 (1)	4.90
C- D	-1188 / 0	-84.9	-84.9	0.37 (1)	5.38
D- E	-1045 / 0	-84.9	-84.9	0.55 (1)	5.30
E- F	-910 / 0	-84.9	-84.9	0.54 (1)	5.60
G- F	-1081 / 0	0.0	0.0	0.80 (1)	7.59
L- B	-1208 / 0	0.0	0.0	0.12 (1)	7.28
L- K	0 / 0	-18.5	-18.5	0.10 (4)	10.00
K- J	0 / 1355	-18.5	-18.5	0.27 (1)	10.00
J- I	0 / 910	-18.5	-18.5	0.24 (4)	10.00
I- H	0 / 910	-18.5	-18.5	0.24 (4)	10.00
H- G	0 / 0	-18.5	-18.5	0.16 (4)	10.00

WEBS

MEMB. FR-TO	MAX. FACTORED FORCE (LBS)	MAX CSI (LC)
K- C	-145 / 26	0.03 (1)
C- J	-381 / 0	0.24 (1)
J- D	0 / 177	0.04 (4)
J- E	0 / 192	0.04 (1)
H- E	-763 / 0	0.45 (1)
H- F	0 / 1271	0.29 (1)
B- K	0 / 1377	0.31 (1)

DESIGN CRITERIA

SPECIFIED LOADS:

TOP CH.	LL	=	23.3	PSF
	DL	=	6.0	PSF
BOT CH.	LL	=	0.0	PSF
	DL	=	7.4	PSF
TOTAL LOAD		=	36.7	PSF

SPACING = 24.0 IN. C/C

LOADING IN FLAT SECTION BASED ON A SLOPE OF 6.00/12

THIS TRUSS IS DESIGNED FOR RESIDENTIAL OR SMALL BUILDING REQUIREMENTS OF PART 9, NBCC 2015

THIS DESIGN COMPLIES WITH:
- PART 9 OF BCBC 2018 , NBC-2019AE
- PART 9 OF OBC 2012 (2019 AMENDMENT)
- CSA 086-14
- TPIC 2014

(55 % OF 27.2 P.S.F. G.S.L. PLUS 8.4 P.S.F. RAIN LOAD) EQUALS 23.3 P.S.F. SPECIFIED ROOF LIVE LOAD

ALLOWABLE DEFL.(LL)= L/360 (0.73")
CALCULATED VERT. DEFL.(LL) = L/ 999 (0.04")
ALLOWABLE DEFL.(TL)= L/360 (0.73")
CALCULATED VERT. DEFL.(TL) = L/ 999 (0.08")

CSI: TC=0.80/1.00 (F-G:1) , BC=0.27/1.00 (J-K:1) , WB=0.45/1.00 (E-H:1) , SSI=0.25/1.00 (E-F:1)

DOL LUMBER=1.00 NAIL=1.00 LS BEND=1.10 COMP=1.10 SHEAR=1.10 TENS= 1.10

COMPANION LIVE LOAD FACTOR = 1.00

TRUSS PLATE MANUFACTURER IS NOT RESPONSIBLE FOR QUALITY CONTROL IN THE TRUSS MANUFACTURING PLANT .

NAIL VALUES

PLATE	GRIP(DRY) (PSI) MAX	MIN	SHEAR (PLI) MAX	MIN	SECTION (PLI) MAX	MIN
MT20	650	371	1747	788	1987	1873

PLATE PLACEMENT TOL. = 0.250 inches

PLATE ROTATION TOL. = 5.0 Deg.

JSI GRIP= 0.70 (B) (INPUT = 0.90)
JSI METAL= 0.37 (B) (INPUT = 0.95)

LICENSED PROFESSIONAL ENGINEER
02-28-24
H. J. G. ALVES
100009024
PROVINCE OF ONTARIO

Structural component only
DWG# T-2406420

JOB NAME	TRUSS NAME	QUANTITY	PLY	JOB DESC.	DRWG NO.
425913	T28	1	1	ROYAL PINE HOMES TRUSS DESC.	

Tamarack Roof Truss, Burlington

Version 8.630 S Aug 30 2023 MiTek Industries, Inc. Wed Feb 28 15:03:07 2024 Page 1
ID:VI_DQvi1e49Qy7axT?i10OzOYuG-rhfkcZJymFh0kXdXOQjXY9Jm9tMpVlCilHr1I7zgaw2

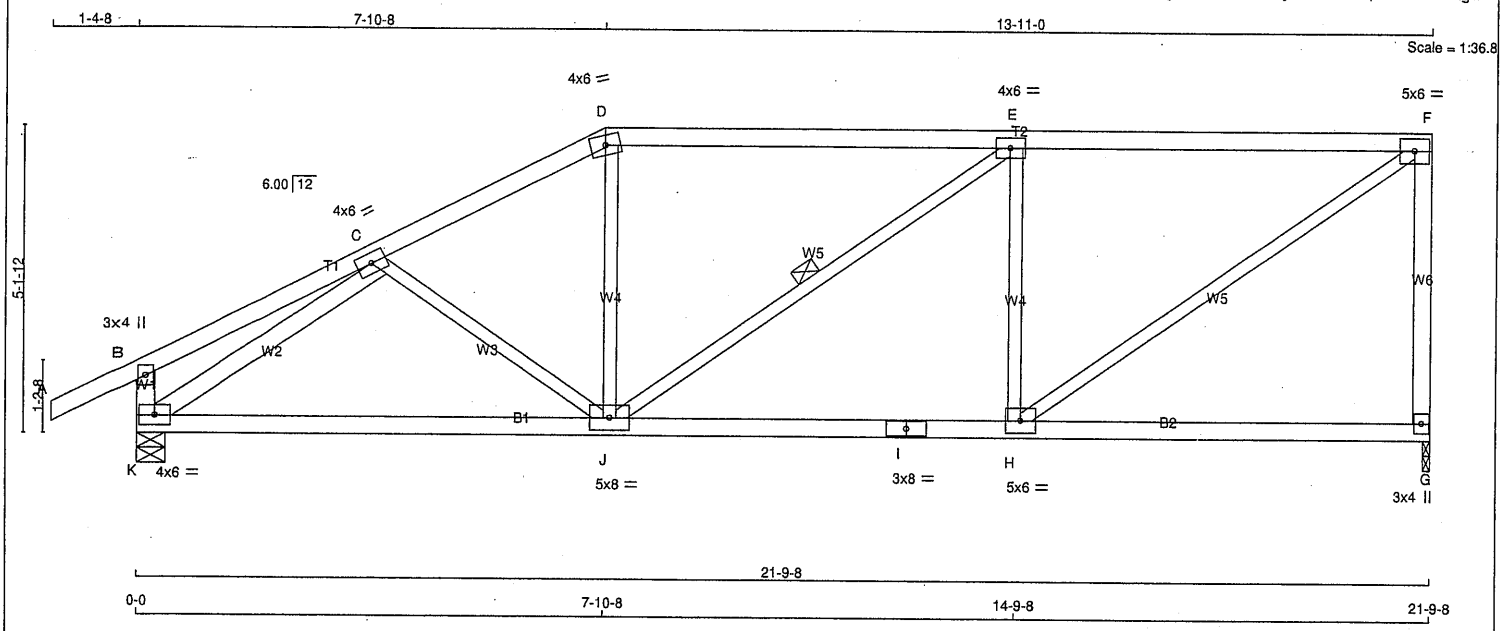

TOTAL WEIGHT = 88 lb
[M]

LUMBER
N. L. G. A. RULES

CHORDS	SIZE		LUMBER	DESCR.
A - D	2x4	DRY	No.2	SPF
D - F	2x4	DRY	No.2	SPF
G - F	2x4	DRY	No.2	SPF
K - B	2x4	DRY	No.2	SPF
K - I	2x4	DRY	No.2	SPF
I - G	2x4	DRY	No.2	SPF
ALL WEBS	2x3	DRY	No.2	SPF
EXCEPT				
K - C	2x4	DRY	No.2	SPF

DRY: SEASONED LUMBER.

PLATES (table is in inches)

JT	TYPE	PLATES	W	LEN Y	X
B	TMV+p	MT20	3.0	4.0	
C	TMWW-t	MT20	4.0	6.0	
D	TTW-m	MT20	4.0	6.0	
E	TMWW-t	MT20	4.0	6.0	
F	TMVW-t	MT20	5.0	6.0	
G	BMV1+p	MT20	3.0	4.0	
H	BMWW-t	MT20	5.0	6.0	
I	BS-t	MT20	3.0	8.0	
J	BMWWW-t	MT20	5.0	8.0	
K	BMVW1-t	MT20	4.0	6.0	

NOTES- (1)
1) Lateral braces to be a minimum of 2X4 SPF #2.

DIMENSIONS, SUPPORTS AND LOADINGS SPECIFIED BY FABRICATOR TO BE VERIFIED BY BUILDING DESIGNER

BEARINGS

JT	FACTORED GROSS REACTION VERT	HORZ	MAXIMUM FACTORED GROSS REACTION DOWN	HORZ	UPLIFT	INPUT BRG IN-SX	REQRD BRG IN-SX
G	1126	0	1126	0	0	1-8	1-8
K	1248	0	1248	0	0	5-8	1-8

UNFACTORED REACTIONS

JT	1ST LCASE COMBINED	MAX./MIN. COMPONENT REACTIONS SNOW	LIVE	PERM.LIVE	WIND	DEAD	SOIL
G	799	507 / 0	0 / 0	0 / 0	0 / 0	292 / 0	0 / 0
K	884	575 / 0	0 / 0	0 / 0	0 / 0	309 / 0	0 / 0

BEARING MATERIAL TO BE SPF NO.2 OR BETTER AT JOINT(S) G, K

BRACING
TOP CHORD TO BE SHEATHED OR MAX. PURLIN SPACING = 4.47 FT.
MAX. UNBRACED BOTTOM CHORD LENGTH = 10.00 FT OR RIGID CEILING DIRECTLY APPLIED.

ALL PITCH BREAKS AND PERIMETER CORNER JOINTS MUST BE LATERALLY RESTRAINED.

1 LATERAL BRACE(S) AT 1/ 2 LENGTH OF E-J.

END VERTICAL(S) MUST BE SHEATHED OR HAVE BRACES AS INDICATED IN THE MAX. UNBRACED LENGTH COLUMN OF THE TABLE BELOW

LOADING
TOTAL LOAD CASES: (4)

CHORDS

MEMB. FR-TO	MAX. FACTORED FORCE (LBS)	FACTORED VERT. LOAD LC1 (PLF) FROM	TO	MAX CSI (LC)	MAX. UNBRAC LENGTH
A- B	0 / 27	-84.9	-84.9	0.12 (1)	10.00
B- C	0 / 16	-84.9	-84.9	0.20 (1)	10.00
C- D	-1344 / 0	-84.9	-84.9	0.23 (1)	5.33
D- E	-1192 / 0	-84.9	-84.9	0.79 (1)	4.52
E- F	-1220 / 0	-84.9	-84.9	0.80 (1)	4.47
G- F	-1072 / 0	0.0	0.0	0.48 (1)	7.61
K- B	-254 / 0	0.0	0.0	0.03 (1)	7.81
K- J	0 / 1284	-18.5	-18.5	0.36 (4)	10.00
J- I	0 / 1220	-18.5	-18.5	0.36 (4)	10.00
I- H	0 / 1220	-18.5	-18.5	0.36 (4)	10.00
H- G	0 / 0	-18.5	-18.5	0.19 (4)	10.00

WEBS

MEMB. FR-TO	MAX. FACTORED FORCE (LBS)	MAX CSI (LC)
C- J	-120 / 18	0.05 (1)
J- D	0 / 244	0.05 (1)
J- E	-35 / 15	0.02 (1)
H- E	-712 / 0	0.28 (1)
H- F	0 / 1485	0.33 (1)
K- C	-1588 / 0	0.45 (1)

DESIGN CRITERIA

SPECIFIED LOADS:

TOP CH.	LL	=	23.3	PSF
	DL	=	6.0	PSF
BOT CH.	LL	=	0.0	PSF
	DL	=	7.4	PSF
TOTAL LOAD		=	36.7	PSF

SPACING = 24.0 IN. C/C

LOADING IN FLAT SECTION BASED ON A SLOPE OF 6.00/12

THIS TRUSS IS DESIGNED FOR RESIDENTIAL OR SMALL BUILDING REQUIREMENTS OF PART 9, NBCC 2015

THIS DESIGN COMPLIES WITH:
- PART 9 OF BCBC 2018 , NBC-2019AE
- PART 9 OF OBC 2012 (2019 AMENDMENT)
- CSA 086-14
- TPIC 2014

(55 % OF 27.2 P.S.F. G.S.L. PLUS 8.4 P.S.F. RAIN LOAD) EQUALS 23.3 P.S.F. SPECIFIED ROOF LIVE LOAD

ALLOWABLE DEFL.(LL)= L/360 (0.73")
CALCULATED VERT. DEFL.(LL) = L/ 999 (0.05")
ALLOWABLE DEFL.(TL)= L/360 (0.73")
CALCULATED VERT. DEFL.(TL) = L/ 999 (0.15")

CSI: TC=0.80/1.00 (E-F:1) , BC=0.36/1.00 (H-J:4) , WB=0.45/1.00 (C-K:1) , SSI=0.29/1.00 (E-F:1)

DOL LUMBER=1.00 NAIL=1.00 LS BEND=1.10 COMP=1.10 SHEAR=1.10 TENS= 1.10

COMPANION LIVE LOAD FACTOR = 1.00

AUTOSOLVE RIGHT HEEL ONLY

TRUSS PLATE MANUFACTURER IS NOT RESPONSIBLE FOR QUALITY CONTROL IN THE TRUSS MANUFACTURING PLANT .

NAIL VALUES

PLATE	GRIP(DRY) (PSI) MAX	MIN	SHEAR (PLI) MAX	MIN	SECTION (PLI) MAX	MIN
MT20	650	371	1747	788	1987	1873

PLATE PLACEMENT TOL. = 0.250 inches

PLATE ROTATION TOL. = 5.0 Deg.

JSI GRIP= 0.76 (K) (INPUT = 0.90)
JSI METAL= 0.35 (I) (INPUT = 0.95)

LICENSED PROFESSIONAL ENGINEER
02-28-24
H. J. G. ALVES
100009024
PROVINCE OF ONTARIO

Structural component only
DWG# T-2406421

JOB NAME	TRUSS NAME	QUANTITY	PLY	JOB DESC.	DRWG NO.
425913	T29	1	2	ROYAL PINE HOMES TRUSS DESC.	

Tamarack Roof Truss, Burlington

Version 8.630 S Aug 30 2023 MiTek Industries, Inc. Wed Feb 28 15:03:09 2024 Page 1
ID:sd0FDfbi38oVqvTaiRkhtSzPAoD-n4nU1FLClsxk_rmwVrl?daOBFhzBzfb_CbK8q?zgaw0

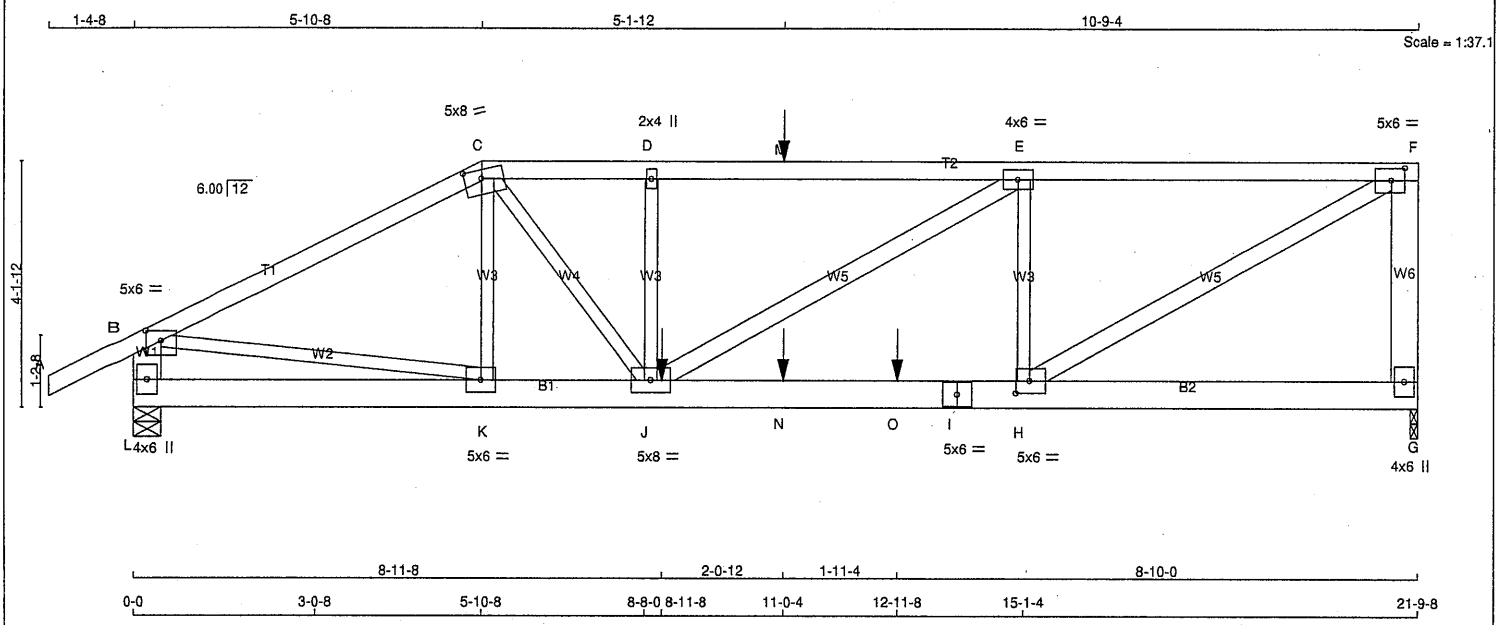

TOTAL WEIGHT = 2 X 106 = 212 lb [M]

LUMBER

N. L. G. A. RULES

CHORDS	SIZE		LUMBER	DESCR.
A - C	2x4	DRY	No.2	SPF
C - F	2x4	DRY	No.2	SPF
G - F	2x6	DRY	No.2	SPF
L - B	2x6	DRY	No.2	SPF
L - I	2x6	DRY	No.2	SPF
I - G	2x6	DRY	No.2	SPF
ALL WEBS	2x3	DRY	No.2	SPF
EXCEPT				
H - F	2x4	DRY	No.2	SPF
J - E	2x4	DRY	No.2	SPF

DRY: SEASONED LUMBER.

DESIGN CONSISTS OF 2 TRUSSES BUILT SEPARATELY THEN FASTENED TOGETHER AS FOLLOWS:

CHORDS	#ROWS	SURFACE SPACING (IN)	LOAD(PLF)
TOP CHORDS : (0.122"X3") SPIRAL NAILS			
A- C	1	12	TOP
C- F	1	12	SIDE(0.0)
F- G	2	12	TOP
L- B	2	12	TOP
BOTTOM CHORDS : (0.122"X3") SPIRAL NAILS			
L- I	2	12	SIDE(183.1)
I- G	2	12	TOP
WEBS : (0.122"X3") SPIRAL NAILS			
D- J	1	6	SIDE(88.7)
2x3	1	6	
2x4	1	6	

NAILS TO BE DRIVEN FROM ONE SIDE ONLY.

GIRDER NAILING ASSUMES NAILED HANGERS ARE FASTENED WITH MIN. 3-0 INCH NAILS.

TOP - COMPONENTS ARE LOADED FROM THE TOP AND MUST BE PLACED ON TOP EDGE OF ALL PLIES FOR THE LOAD TO BE TRANSFERRED TO EACH PLY.

DIMENSIONS, SUPPORTS AND LOADINGS SPECIFIED BY FABRICATOR TO BE VERIFIED BY BUILDING DESIGNER

BEARINGS

JT	FACTORED GROSS REACTION VERT	HORZ	MAXIMUM FACTORED GROSS REACTION DOWN	HORZ	UPLIFT	INPUT BRG IN-SX	REQRD BRG IN-SX
G	2317	0	2317	0	0	1-8	1-8
L	2427	0	2427	0	0	5-8	1-8

UNFACTORED REACTIONS

JT	1ST LCASE COMBINED	SNOW	MAX./MIN. COMPONENT REACTIONS LIVE	PERM.LIVE	WIND	DEAD	SOIL
G	1640	1068 / 0	0 / 0	0 / 0	0 / 0	572 / 0	0 / 0
L	1715	1132 / 0	0 / 0	0 / 0	0 / 0	583 / 0	0 / 0

BEARING MATERIAL TO BE SPF NO.2 OR BETTER AT JOINT(S) G, L

BRACING

TOP CHORD TO BE SHEATHED OR MAX. PURLIN SPACING = 4.05 FT.
MAX. UNBRACED BOTTOM CHORD LENGTH = 10.00 FT OR RIGID CEILING DIRECTLY APPLIED.

ALL PITCH BREAKS AND PERIMETER CORNER JOINTS MUST BE LATERALLY RESTRAINED.

LOADING

TOTAL LOAD CASES: (4)

CHORDS

MEMB. FR-TO	MAX. FACTORED FORCE (LBS)	FACTORED VERT. LOAD (PLF) FROM	TO	LC1 CSI (LC)	MAX UNBRAC LENGTH
A- B	0 / 27	-84.9	-84.9	0.07 (1)	10.00
B- C	-3484 / 0	-84.9	-84.9	0.39 (1)	4.64
C- D	-4500 / 0	-84.9	-84.9	0.27 (1)	4.25
D- M	-4500 / 0	-84.9	-84.9	0.50 (1)	4.05
M- E	-4500 / 0	-84.9	-84.9	0.50 (1)	4.05
E- F	-3752 / 0	-84.9	-84.9	0.47 (1)	4.41
G- F	-2334 / 0	0.0	0.0	0.19 (1)	7.81
L- B	-2358 / 0	0.0	0.0	0.08 (1)	7.81
L- K	0 / 0	-18.5	-18.5	0.05 (4)	10.00
K- J	0 / 3099	-18.5	-18.5	0.38 (1)	10.00
J- N	0 / 3752	-18.5	-18.5	0.69 (1)	10.00
N- O	0 / 3752	-18.5	-18.5	0.69 (1)	10.00
O- I	0 / 3752	-18.5	-18.5	0.69 (1)	10.00
I- H	0 / 3752	-18.5	-18.5	0.69 (1)	10.00
H- G	0 / 0	-18.5	-18.5	0.19 (1)	10.00

WEBS

MEMB. FR-TO	MAX. FACTORED FORCE (LBS)	MAX CSI (LC)
K- C	-556 / 0	0.07 (1)
B- K	0 / 3143	0.39 (1)
C- J	0 / 2298	0.28 (1)
J- D	-545 / 0	0.07 (1)
H- F	0 / 4307	0.38 (1)
J- E	0 / 871	0.08 (1)
H- E	-1150 / 0	0.15 (1)

SPECIFIED CONCENTRATED LOADS (LBS)

JT	LOC.	LC1	MAX-	MAX+	FACE	DIR.	TYPE	HEEL	CONN.
J	8-11-8	-733	-733	---	BACK	VERT	TOTAL	---	C1
M	11-0-4	-113	-113	---	BACK	VERT	TOTAL	---	C1
N	11-0-4	-29	-29	---	BACK	VERT	TOTAL	---	C1
O	12-11-8	-796	-796	---	BACK	VERT	TOTAL	---	C1

CONNECTION REQUIREMENTS

1) C1: A SUITABLE HANGER/MECHANICAL CONNECTION IS REQUIRED.

DESIGN CRITERIA

SPECIFIED LOADS:

TOP CH.	LL	=	23.3	PSF
	DL	=	6.0	PSF
BOT CH.	LL	=	0.0	PSF
	DL	=	7.4	PSF
TOTAL LOAD		=	36.7	PSF

SPACING = 24.0 IN. C/C

LOADING IN FLAT SECTION BASED ON A SLOPE OF 6.00/12

THIS TRUSS IS DESIGNED FOR RESIDENTIAL OR SMALL BUILDING REQUIREMENTS OF PART 9, NBCC 2015

THIS DESIGN COMPLIES WITH:
- PART 9 OF BCBC 2018 , NBC-2019AE
- PART 9 OF OBC 2012 (2019 AMENDMENT)
- CSA 086-14
- TPIC 2014

(55 % OF 27.2 P.S.F. G.S.L. PLUS 8.4 P.S.F. RAIN LOAD) EQUALS 23.3 P.S.F. SPECIFIED ROOF LIVE LOAD

ALLOWABLE DEFL.(LL)= L/360 (0.73")
CALCULATED VERT. DEFL.(LL) = L/ 999 (0.11")
ALLOWABLE DEFL.(TL)= L/360 (0.73")
CALCULATED VERT. DEFL.(TL) = L/ 999 (0.21")

CSI: TC=0.50/1.00 (D-E:1) , BC=0.69/1.00 (H-J:1) , WB=0.39/1.00 (B-K:1) , SSI=0.27/1.00 (H-J:1)

DOL LUMBER=1.00 NAIL=1.00 LS BEND=1.00 COMP=1.00 SHEAR=1.00 TENS= 1.00

COMPANION LIVE LOAD FACTOR = 1.00

AUTOSOLVE RIGHT HEEL ONLY

TRUSS PLATE MANUFACTURER IS NOT RESPONSIBLE FOR QUALITY CONTROL IN THE TRUSS MANUFACTURING PLANT .

NAIL VALUES

PLATE	GRIP(DRY) (PSI) MAX	MIN	SHEAR (PLI) MAX	MIN	SECTION (PLI) MAX	MIN
MT20	650	371	1747	788	1987	1873

PLATE PLACEMENT TOL. = 0.250 inches

PLATE ROTATION TOL. = 5.0 Deg.

JSI GRIP= 0.78 (F) (INPUT = 0.90)
JSI METAL= 0.51 (I) (INPUT = 0.95)

LICENSED PROFESSIONAL ENGINEER
02-28-24
H. J. G. ALVES
100009024
PROVINCE OF ONTARIO

Structural component only
DWG# T-2406422

CONTINUED ON PAGE 2

JOB NAME	TRUSS NAME	QUANTITY	PLY	JOB DESC. ROYAL PINE HOMES	DRWG NO.
425913	T29	1	2	TRUSS DESC.	

Tamarack Roof Truss, Burlington

ID:sd0FDfbi38oVqvTaiRkhtSzPAoD-n4nU1FLClsxk_rmwVrl?daOBFhzBzfb_CbK8q?zgaw0

PLATES (table is in inches)

JT	TYPE	PLATES	W	LEN	Y	X
B	TMVW-p	MT20	5.0	6.0	2.00	3.00
C	TTWW-m	MT20	5.0	8.0	1.75	3.50
D	TMW+w	MT20	2.0	4.0		
E	TMWW-t	MT20	4.0	6.0		
F	TMVW-t	MT20	5.0	6.0	2.50	2.75
G	BMV1+p	MT20	4.0	6.0		
H	BMWW-t	MT20	5.0	6.0	2.50	2.75
I	BS-t	MT20	5.0	6.0		
J	BMWWW-t	MT20	5.0	8.0		
K	BMWW-t	MT20	5.0	6.0		
L	BMV1+p	MT20	4.0	6.0		

NOTES- (1)
1) Lateral braces to be a minimum of 2X4 SPF #2.

Structural component only
DWG# T-2406422

JOB NAME	TRUSS NAME	QUANTITY	PLY	JOB DESC.	DRWG NO.
425914	T29Z	1	2	ROYAL PINE HOMES TRUSS DESC.	

Tamarack Roof Truss, Burlington

Version 8.630 S Aug 30 2023 MiTek Industries, Inc. Wed Feb 28 16:19:25 2024 Page 1
ID:sd0FDfbi38oVqvTaiRkhtSzPAoD-oQHPQyjaeqTSz4bOaur55ZwBJlrG8EoXSXpHQmzgZoW

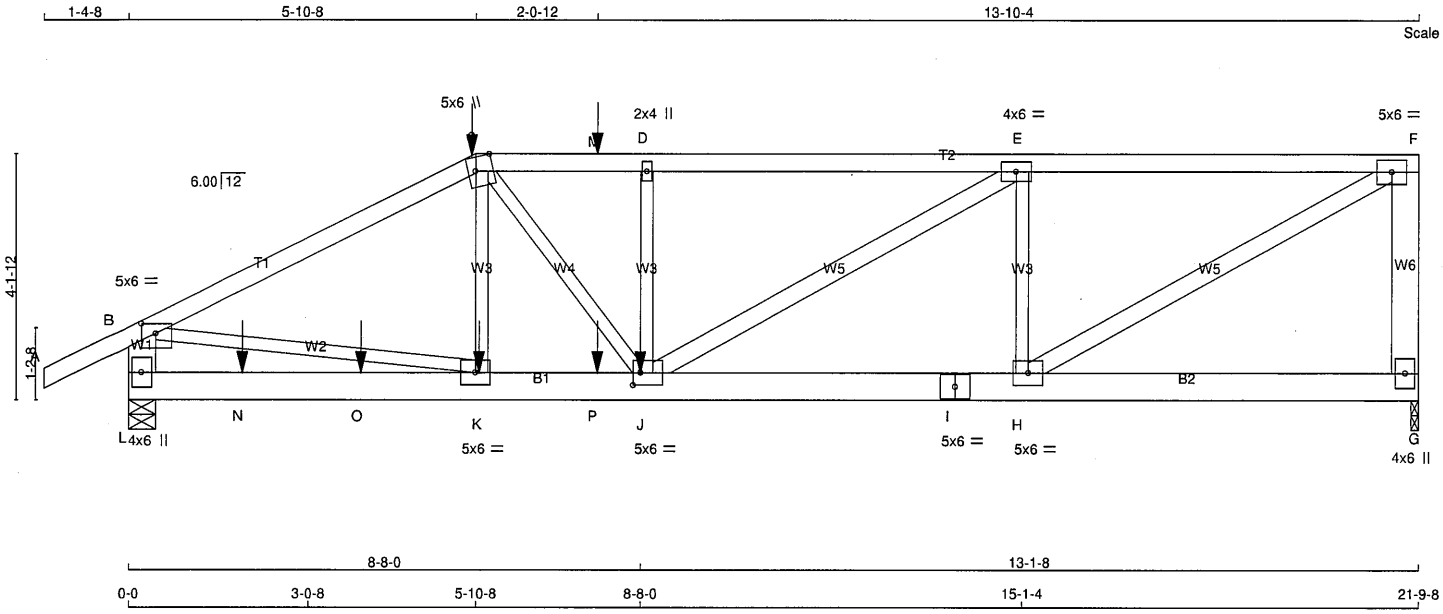

TOTAL WEIGHT = 2 X 106 = 212 lb

[M]

LUMBER

N. L. G. A. RULES

CHORDS	SIZE		LUMBER	DESCR.
A - C	2x4	DRY	No.2	SPF
C - F	2x4	DRY	No.2	SPF
G - F	2x6	DRY	No.2	SPF
L - B	2x6	DRY	No.2	SPF
L - I	2x6	DRY	No.2	SPF
I - G	2x6	DRY	No.2	SPF
ALL WEBS EXCEPT	2x3	DRY	No.2	SPF
H - F	2x4	DRY	No.2	SPF
J - E	2x4	DRY	No.2	SPF

DRY: SEASONED LUMBER.

DESIGN CONSISTS OF 2 TRUSSES BUILT SEPARATELY THEN FASTENED TOGETHER AS FOLLOWS:

CHORDS	#ROWS	SURFACE SPACING (IN)	LOAD(PLF)
TOP CHORDS : (0.122"X3") SPIRAL NAILS			
A- C	1	12	SIDE(61.0)
C- F	1	12	SIDE(61.0)
F- G	2	12	TOP
L- B	2	12	TOP
BOTTOM CHORDS : (0.122"X3") SPIRAL NAILS			
L- I	2	12	SIDE(183.1)
I- G	2	12	TOP
WEBS : (0.122"X3") SPIRAL NAILS			
K- C	1	6	SIDE(7.5)
D- J	1	6	SIDE(178.6)
2x3	1	6	
2x4	1	6	

NAILS TO BE DRIVEN FROM ONE SIDE ONLY.

GIRDER NAILING ASSUMES NAILED HANGERS ARE FASTENED WITH MIN. 3-0 INCH NAILS.

TOP - COMPONENTS ARE LOADED FROM THE TOP AND MUST BE PLACED ON TOP EDGE OF ALL PLIES FOR THE LOAD TO BE TRANSFERRED TO EACH PLY.

LICENSED PROFESSIONAL ENGINEER
02-28-24
H. J. G. ALVES
100009024
PROVINCE OF ONTARIO

Structural component only
DWG# T-2406462

DIMENSIONS, SUPPORTS AND LOADINGS SPECIFIED BY FABRICATOR TO BE VERIFIED BY BUILDING DESIGNER

BEARINGS

JT	FACTORED GROSS REACTION VERT	HORZ	MAXIMUM FACTORED GROSS REACTION DOWN	HORZ	UPLIFT	INPUT BRG IN-SX	REQRD BRG IN-SX
G	1911	0	1911	0	0	1-8	1-8
L	2655	0	2655	0	0	5-8	1-8

UNFACTORED REACTIONS

JT	1ST LCASE COMBINED	SNOW	LIVE	PERM.LIVE	WIND	DEAD	SOIL
		MAX./MIN. COMPONENT REACTIONS					
G	1353	878 / 0	0 / 0	0 / 0	0 / 0	474 / 0	0 / 0
L	1879	1223 / 0	0 / 0	0 / 0	0 / 0	657 / 0	0 / 0

BEARING MATERIAL TO BE SPF NO.2 OR BETTER AT JOINT(S) G, L

BRACING

TOP CHORD TO BE SHEATHED OR MAX. PURLIN SPACING = 4.21 FT.
MAX. UNBRACED BOTTOM CHORD LENGTH = 10.00 FT OR RIGID CEILING DIRECTLY APPLIED.

ALL PITCH BREAKS AND PERIMETER CORNER JOINTS MUST BE LATERALLY RESTRAINED.

LOADING

TOTAL LOAD CASES: (4)

CHORDS MEMB. FR-TO	MAX. FACTORED FORCE (LBS)	FACTORED VERT. LOAD (PLF) FROM	TO	LC1	MAX CSI (LC)	MAX. UNBRAC LENGTH	WEBS MEMB. FR-TO	MAX. FACTORED FORCE (LBS)	MAX CSI (LC)
A- B	0 / 27	-84.9	-84.9		0.07 (1)	10.00	K- C	-251 / 71	0.03 (1)
B- C	-3849 / 0	-84.9	-84.9		0.41 (1)	4.44	B- K	0 / 3472	0.43 (1)
C- M	-4284 / 0	-84.9	-84.9		0.19 (1)	4.44	C- J	0 / 1395	0.17 (1)
M- D	-4284 / 0	-84.9	-84.9		0.19 (1)	4.44	J- D	-519 / 0	0.07 (1)
D- E	-4284 / 0	-84.9	-84.9		0.45 (1)	4.21	H- F	0 / 3321	0.29 (1)
E- F	-2893 / 0	-84.9	-84.9		0.38 (1)	5.00	J- E	0 / 1619	0.14 (1)
G- F	-1857 / 0	0.0	0.0		0.15 (1)	7.81	H- E	-1474 / 0	0.19 (1)
L- B	-2566 / 0	0.0	0.0		0.09 (1)	7.81			
L- N	0 / 0	-18.5	-18.5		0.08 (4)	10.00			
N- O	0 / 0	-18.5	-18.5		0.08 (4)	10.00			
O- K	0 / 0	-18.5	-18.5		0.08 (4)	10.00			
K- P	0 / 3434	-18.5	-18.5		0.27 (1)	10.00			
P- J	0 / 3434	-18.5	-18.5		0.27 (1)	10.00			
J- I	0 / 2893	-18.5	-18.5		0.24 (1)	10.00			
I- H	0 / 2893	-18.5	-18.5		0.24 (1)	10.00			
H- G	0 / 0	-18.5	-18.5		0.05 (4)	10.00			

SPECIFIED CONCENTRATED LOADS (LBS)

JT	LOC.	LC1	MAX-	MAX+	FACE	DIR.	TYPE	HEEL	CONN.
C	5-10-8	-343	-343	---	FRONT	VERT	TOTAL	---	C1
J	8-8-0	-977	-977	---	FRONT	VERT	TOTAL	---	C1
K	5-11-4	-29	-29	---	FRONT	VERT	TOTAL	---	C1
M	7-11-4	-113	-113	---	FRONT	VERT	TOTAL	---	C1
N	1-11-4	-29	-29	---	FRONT	VERT	TOTAL	---	C1
O	3-11-4	-29	-29	---	FRONT	VERT	TOTAL	---	C1
P	7-11-4	-29	-29	---	FRONT	VERT	TOTAL	---	C1

CONNECTION REQUIREMENTS

1) **C1:** A SUITABLE HANGER/MECHANICAL CONNECTION IS REQUIRED.

DESIGN CRITERIA

SPECIFIED LOADS:

TOP CH.	LL	=	23.3	PSF
	DL	=	6.0	PSF
BOT CH.	LL	=	0.0	PSF
	DL	=	7.4	PSF
TOTAL LOAD		=	36.7	PSF

SPACING = 24.0 IN. C/C

LOADING IN FLAT SECTION BASED ON A SLOPE OF 6.00/12

THIS TRUSS IS DESIGNED FOR RESIDENTIAL OR SMALL BUILDING REQUIREMENTS OF PART 9, NBCC 2015

THIS DESIGN COMPLIES WITH:
- PART 9 OF BCBC 2018 , NBC-2019AE
- PART 9 OF OBC 2012 (2019 AMENDMENT)
- CSA 086-14
- TPIC 2014

(55 % OF 27.2 P.S.F. G.S.L. PLUS 8.4 P.S.F. RAIN LOAD) EQUALS 23.3 P.S.F. SPECIFIED ROOF LIVE LOAD

ALLOWABLE DEFL.(LL)= L/360 (0.73")
CALCULATED VERT. DEFL.(LL) = L/ 999 (0.07")
ALLOWABLE DEFL.(TL)= L/360 (0.73")
CALCULATED VERT. DEFL.(TL) = L/ 999 (0.13")

CSI: TC=0.45/1.00 (D-E:1) , BC=0.27/1.00 (J-K:1) , WB=0.43/1.00 (B-K:1) , SSI=0.15/1.00 (E-F:1)

DOL LUMBER=1.00 NAIL=1.00 LS BEND=1.00 COMP=1.00 SHEAR=1.00 TENS= 1.00

COMPANION LIVE LOAD FACTOR = 1.00

AUTOSOLVE RIGHT HEEL ONLY

TRUSS PLATE MANUFACTURER IS NOT RESPONSIBLE FOR QUALITY CONTROL IN THE TRUSS MANUFACTURING PLANT .

NAIL VALUES

PLATE	GRIP(DRY) (PSI) MAX	MIN	SHEAR (PLI) MAX	MIN	SECTION (PLI) MAX	MIN
MT20	650	371	1747	788	1987	1873

PLATE PLACEMENT TOL. = 0.250 inches

PLATE ROTATION TOL. = 5.0 Deg.

JSI GRIP= 0.80 (C) (INPUT = 0.90)
JSI METAL= 0.39 (K) (INPUT = 0.95)

CONTINUED ON PAGE 2

JOB NAME	TRUSS NAME	QUANTITY	PLY	JOB DESC.	DRWG NO.
425914	T29Z	1	2	ROYAL PINE HOMES TRUSS DESC.	

PLATES (table is in inches)

JT	TYPE	PLATES	W	LEN	Y	X
B	TMVW-p	MT20	5.0	6.0	2.00	2.75
C	TTWW+m	MT20	5.0	6.0	Edge	3.50
D	TMW+w	MT20	2.0	4.0		
E	TMWW-t	MT20	4.0	6.0		
F	TMVW-t	MT20	5.0	6.0		
G	BMV1+p	MT20	4.0	6.0		
H	BMWW-t	MT20	5.0	6.0		
I	BS-t	MT20	5.0	6.0		
J	BMWWW-t	MT20	5.0	6.0	2.50	1.50
K	BMWW-t	MT20	5.0	6.0		
L	BMV1+p	MT20	4.0	6.0		

Edge - INDICATES REFERENCE CORNER OF PLATE TOUCHES EDGE OF CHORD.

NOTES- (1)
1) Lateral braces to be a minimum of 2X4 SPF #2.

LICENSED PROFESSIONAL ENGINEER
02-28-24
H. J. G. ALVES
100009024
PROVINCE OF ONTARIO

Structural component only
DWG# T-2406462

JOB NAME	TRUSS NAME	QUANTITY	PLY	JOB DESC.	DRWG NO.
425913	T30	1	1	ROYAL PINE HOMES TRUSS DESC.	

Tamarack Roof Truss, Burlington

Version 8.630 S Aug 30 2023 MiTek Industries, Inc. Wed Feb 28 15:03:10 2024 Page 1
ID:sd0FDfbi38oVqvTaiRkhtSzPAoD-GGLtEbMr3A3ab?L63ZGEAoxNd5J0i8T8RF4hMSzgaw?

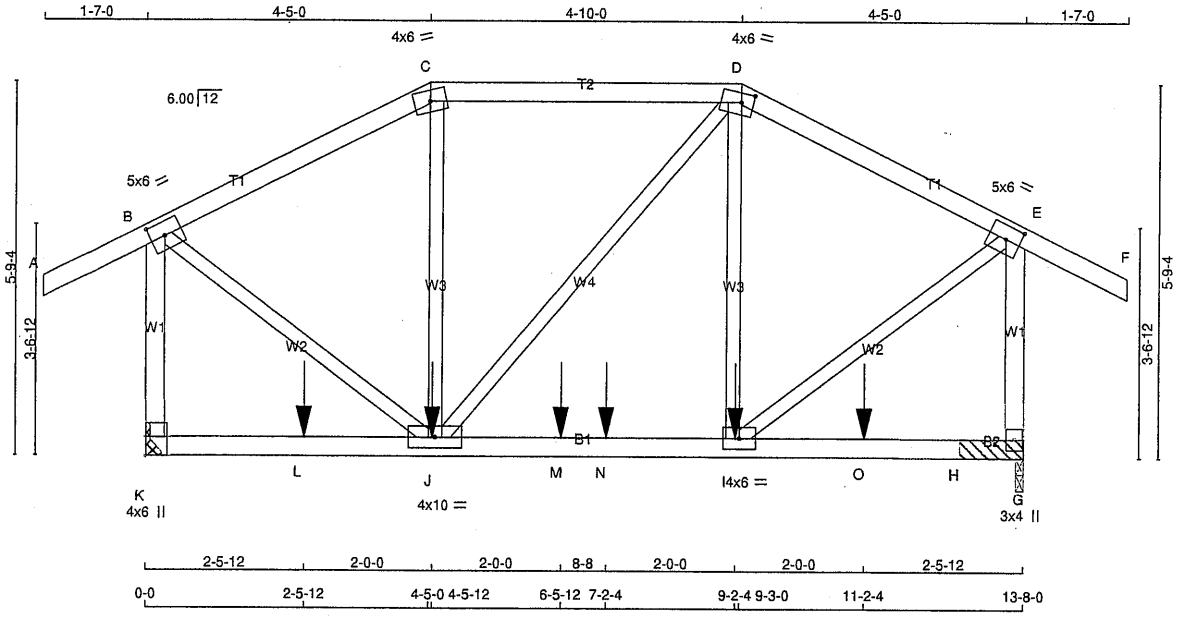

TOTAL WEIGHT = 67 lb

LUMBER
N. L. G. A. RULES

CHORDS	SIZE		LUMBER	DESCR.
A - C	2x4	DRY	No.2	SPF
C - D	2x4	DRY	No.2	SPF
D - F	2x4	DRY	No.2	SPF
K - B	2x4	DRY	No.2	SPF
G - E	2x4	DRY	No.2	SPF
K - G	2x4	DRY	No.2	SPF
ALL WEBS EXCEPT	2x3	DRY	No.2	SPF

DRY: SEASONED LUMBER.

PLATES (table is in inches)

JT	TYPE	PLATES	W	LEN	Y	X
B	TMVW-t	MT20	5.0	6.0	2.50	2.75
C	TTW-m	MT20	4.0	6.0		
D	TTWW-m	MT20	4.0	6.0	1.75	2.25
E	TMVW-t	MT20	5.0	6.0	2.50	2.75
G	BMV1+p	MT20	3.0	4.0		
I	BMWW-t	MT20	4.0	6.0		
J	BMWWW-t	MT20	4.0	10.0		
K	BMV1+t	MT20	4.0	6.0	3.50	

NOTES- (1)
1) Lateral braces to be a minimum of 2X4 SPF #2.

DIMENSIONS, SUPPORTS AND LOADINGS SPECIFIED BY FABRICATOR TO BE VERIFIED BY BUILDING DESIGNER

BEARINGS

JT	FACTORED GROSS REACTION VERT	HORZ	MAXIMUM FACTORED GROSS REACTION DOWN	HORZ	UPLIFT	INPUT BRG IN-SX	REQRD BRG IN-SX
K	1576	0	1576	0	0	MECHANICAL	
G	1576	0	1576	0	0	1-8	1-8 & BLOCK

A SUITABLE HANGER/MECHANICAL CONNECTION IS REQUIRED AT JOINT K. MINIMUM BEARING LENGTH AT JOINT K = 3-8.

UNFACTORED REACTIONS

JT	1ST LCASE COMBINED	MAX./MIN. COMPONENT REACTIONS SNOW	LIVE	PERM.LIVE	WIND	DEAD	SOIL
K	1111	749 / 0	0 / 0	0 / 0	0 / 0	362 / 0	0 / 0
G	1111	749 / 0	0 / 0	0 / 0	0 / 0	362 / 0	0 / 0

BEARING MATERIAL TO BE SPF NO.2 OR BETTER AT JOINT(S) G

2x4 DRY SPF No.2 BEARING BLOCK 12" LONG AT JT. G ATTACHED TO FRONT SIDE WITH 2 ROWS OF (0.122"X3") SPIRAL NAILS SPACED 2" C.C. 12 NAILS TOTAL.

BRACING
TOP CHORD TO BE SHEATHED OR MAX. PURLIN SPACING = 5.66 FT.
MAX. UNBRACED BOTTOM CHORD LENGTH = 10.00 FT OR RIGID CEILING DIRECTLY APPLIED.

ALL PITCH BREAKS AND PERIMETER CORNER JOINTS MUST BE LATERALLY RESTRAINED.

LOADING
TOTAL LOAD CASES: (4)

CHORDS

MEMB. FR-TO	MAX. FACTORED FORCE (LBS)	FACTORED VERT. LOAD LC1 (PLF) FROM	TO	MAX CSI (LC)	MAX. UNBRAC LENGTH
A- B	0 / 31	-84.9	-84.9	0.18 (1)	10.00
B- C	-1043 / 0	-84.9	-84.9	0.34 (1)	5.66
C- D	-933 / 0	-84.9	-84.9	0.40 (1)	5.80
D- E	-1043 / 0	-84.9	-84.9	0.34 (1)	5.66
E- F	0 / 31	-84.9	-84.9	0.18 (1)	10.00
K- B	-1466 / 0	0.0	0.0	0.32 (1)	6.72
G- E	-1466 / 0	0.0	0.0	0.32 (1)	6.72
K- L	0 / 0	-18.5	-18.5	0.42 (1)	10.00
L- J	0 / 0	-18.5	-18.5	0.42 (1)	10.00
J- M	0 / 933	-18.5	-18.5	0.58 (1)	10.00
M- N	0 / 933	-18.5	-18.5	0.58 (1)	10.00
N- I	0 / 933	-18.5	-18.5	0.58 (1)	10.00
I- O	0 / 0	-18.5	-18.5	0.42 (1)	10.00
O- H	0 / 0	-18.5	-18.5	0.42 (1)	10.00
H- G	0 / 0	-18.5	-18.5	0.42 (1)	10.00

WEBS

MEMB. FR-TO	MAX. FACTORED FORCE (LBS)	MAX CSI (LC)
J- C	0 / 79	0.03 (4)
J- D	0 / 0	0.00 (1)
I- D	0 / 78	0.03 (4)
B- J	0 / 1148	0.28 (1)
I- E	0 / 1148	0.28 (1)

SPECIFIED CONCENTRATED LOADS (LBS)

JT	LOC.	LC1	MAX-	MAX+	FACE	DIR.	TYPE	HEEL	CONN.
I	9-2-4	-155	-155	---	FRONT	VERT	TOTAL	---	C1
J	4-5-12	-155	-155	---	FRONT	VERT	TOTAL	---	C1
L	2-5-12	-204	-204	---	FRONT	VERT	TOTAL	---	C1
M	6-5-12	-155	-155	---	FRONT	VERT	TOTAL	---	C1
N	7-2-4	-155	-155	---	FRONT	VERT	TOTAL	---	C1
O	11-2-4	-204	-204	---	FRONT	VERT	TOTAL	---	C1

CONNECTION REQUIREMENTS

1) **C1:** A SUITABLE HANGER/MECHANICAL CONNECTION IS REQUIRED.

DESIGN CRITERIA

SPECIFIED LOADS:

TOP CH.	LL	=	23.3	PSF
	DL	=	6.0	PSF
BOT CH.	LL	=	0.0	PSF
	DL	=	7.4	PSF
TOTAL LOAD		=	36.7	PSF

SPACING = 24.0 IN. C/C

LOADING IN FLAT SECTION BASED ON A SLOPE OF 6.00/12

THIS TRUSS IS DESIGNED FOR RESIDENTIAL OR SMALL BUILDING REQUIREMENTS OF PART 9, NBCC 2015

THIS DESIGN COMPLIES WITH:
- PART 9 OF BCBC 2018 , NBC-2019AE
- PART 9 OF OBC 2012 (2019 AMENDMENT)
- CSA 086-14
- TPIC 2014

(55 % OF 27.2 P.S.F. G.S.L. PLUS 8.4 P.S.F. RAIN LOAD) EQUALS 23.3 P.S.F. SPECIFIED ROOF LIVE LOAD

ALLOWABLE DEFL.(LL)= L/360 (0.46")
CALCULATED VERT. DEFL.(LL) = L/ 999 (0.04")
ALLOWABLE DEFL.(TL)= L/360 (0.46")
CALCULATED VERT. DEFL.(TL) = L/ 999 (0.08")

CSI: TC=0.40/1.00 (C-D:1) , BC=0.58/1.00 (I-J:1) , WB=0.28/1.00 (B-J:1) , SSI=0.23/1.00 (I-J:1)

DOL LUMBER=1.00 NAIL=1.00 LS BEND=1.00 COMP=1.00 SHEAR=1.00 TENS= 1.00

COMPANION LIVE LOAD FACTOR = 1.00

TRUSS PLATE MANUFACTURER IS NOT RESPONSIBLE FOR QUALITY CONTROL IN THE TRUSS MANUFACTURING PLANT .

NAIL VALUES

PLATE	GRIP(DRY) (PSI) MAX	MIN	SHEAR (PLI) MAX	MIN	SECTION (PLI) MAX	MIN
MT20	650	371	1747	788	1987	1873

PLATE PLACEMENT TOL. = 0.250 inches

PLATE ROTATION TOL. = 5.0 Deg.

JSI GRIP= 0.71 (B) (INPUT = 0.90)
JSI METAL= 0.27 (B) (INPUT = 0.95)

LICENSED PROFESSIONAL ENGINEER
02-28-24
H. J. G. ALVES
100009024
PROVINCE OF ONTARIO

Structural component only
DWG# T-2406423

JOB NAME	TRUSS NAME	QUANTITY	PLY	JOB DESC.	DRWG NO.
425913	T31	1	1	ROYAL PINE HOMES TRUSS DESC.	

Tamarack Roof Truss, Burlington

Version 8.630 S Aug 30 2023 MiTek Industries, Inc. Wed Feb 28 15:03:11 2024 Page 1
ID:Vl_DQvi1e49Qy7axT?i10OzOYuG-kSvFRxMTqTBRD8wIdGnTi?UcQVk?RaMHgvpEuuzgaw_

Scale = 1:39.9

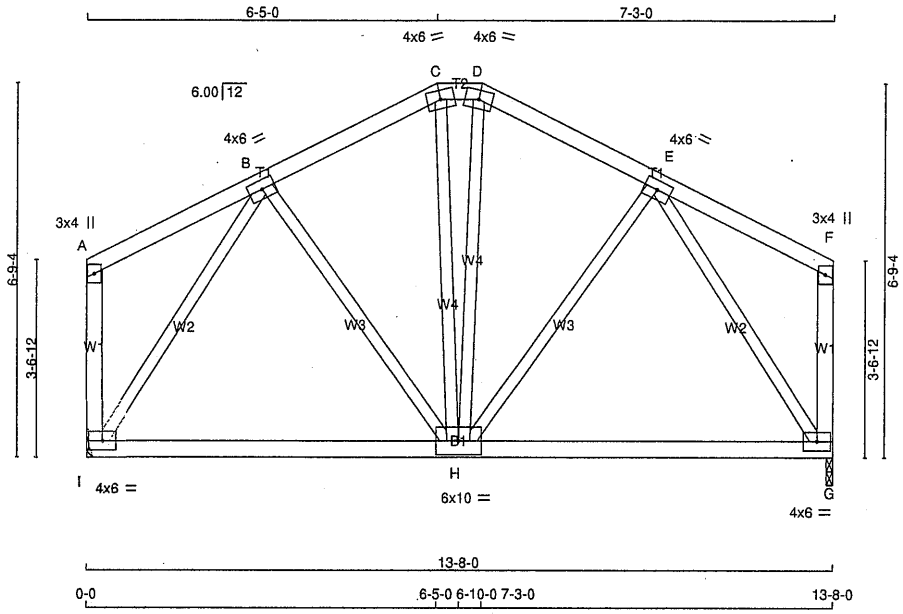

TOTAL WEIGHT = 68 lb

LUMBER
N. L. G. A. RULES

CHORDS	SIZE		LUMBER	DESCR.
A - C	2x4	DRY	No.2	SPF
C - D	2x4	DRY	No.2	SPF
D - F	2x4	DRY	No.2	SPF
I - A	2x4	DRY	No.2	SPF
G - F	2x4	DRY	No.2	SPF
I - G	2x4	DRY	No.2	SPF
ALL WEBS EXCEPT	2x3	DRY	No.2	SPF

DRY: SEASONED LUMBER.

PLATES (table is in inches)

JT	TYPE	PLATES	W	LEN	Y	X
A	TMV+p	MT20	3.0	4.0		
B	TMWW-t	MT20	4.0	6.0		
C	TTW-m	MT20	4.0	6.0		
D	TTW-m	MT20	4.0	6.0		
E	TMWW-t	MT20	4.0	6.0		
F	TMV+p	MT20	3.0	4.0		
G	BMVW1-t	MT20	4.0	6.0		
H	BMWWWW*-I	MT20	6.0	10.0		
I	BMVW1-t	MT20	4.0	6.0		

NOTES- (1)
1) Lateral braces to be a minimum of 2X4 SPF #2.

DIMENSIONS, SUPPORTS AND LOADINGS SPECIFIED BY FABRICATOR TO BE VERIFIED BY BUILDING DESIGNER

BEARINGS

JT	FACTORED GROSS REACTION VERT	HORZ	MAXIMUM FACTORED GROSS REACTION DOWN	HORZ	UPLIFT	INPUT BRG IN-SX	REQRD BRG IN-SX
I	706	0	706	0	0	MECHANICAL	
G	706	0	706	0	0	1-8	1-8

A SUITABLE HANGER/MECHANICAL CONNECTION IS REQUIRED AT JOINT I. MINIMUM BEARING LENGTH AT JOINT I = 1-8.

UNFACTORED REACTIONS

JT	1ST LCASE COMBINED	MAX./MIN. COMPONENT REACTIONS SNOW	LIVE	PERM.LIVE	WIND	DEAD	SOIL
I	501	318 / 0	0 / 0	0 / 0	0 / 0	183 / 0	0 / 0
G	501	318 / 0	0 / 0	0 / 0	0 / 0	183 / 0	0 / 0

BEARING MATERIAL TO BE SPF NO.2 OR BETTER AT JOINT(S) G

BRACING
TOP CHORD TO BE SHEATHED OR MAX. PURLIN SPACING = 6.25 FT.
MAX. UNBRACED BOTTOM CHORD LENGTH = 10.00 FT OR RIGID CEILING DIRECTLY APPLIED.

ALL PITCH BREAKS AND PERIMETER CORNER JOINTS MUST BE LATERALLY RESTRAINED.

LOADING
TOTAL LOAD CASES: (4)

CHORDS

MEMB. FR-TO	MAX. FACTORED FORCE (LBS)	FACTORED VERT. LOAD (PLF) FROM	TO	LC1 CSI (LC)	MAX UNBRAC LENGTH
A- B	0 / 14	-84.9	-84.9	0.14 (1)	10.00
B- C	-444 / 0	-84.9	-84.9	0.11 (1)	6.25
C- D	-387 / 0	-84.9	-84.9	0.01 (1)	6.25
D- E	-444 / 0	-84.9	-84.9	0.11 (1)	6.25
E- F	0 / 14	-84.9	-84.9	0.14 (1)	10.00
I- A	-105 / 0	0.0	0.0	0.02 (1)	7.81
G- F	-105 / 0	0.0	0.0	0.02 (1)	7.81
I- H	0 / 367	-18.5	-18.5	0.28 (4)	10.00
H- G	0 / 367	-18.5	-18.5	0.28 (4)	10.00

WEBS

MEMB. FR-TO	MAX. FACTORED FORCE (LBS)	MAX CSI (LC)
B- H	0 / 50	0.02 (4)
H- E	0 / 50	0.02 (4)
I- B	-664 / 0	0.37 (1)
E- G	-664 / 0	0.37 (1)
C- H	0 / 55	0.02 (4)
H- D	0 / 55	0.02 (4)

DESIGN CRITERIA

SPECIFIED LOADS:

TOP CH.	LL =	23.3	PSF
	DL =	6.0	PSF
BOT CH.	LL =	0.0	PSF
	DL =	7.4	PSF
TOTAL LOAD	=	36.7	PSF

SPACING = 24.0 IN. C/C

LOADING IN FLAT SECTION BASED ON A SLOPE OF 6.00/12

THIS TRUSS IS DESIGNED FOR RESIDENTIAL OR SMALL BUILDING REQUIREMENTS OF PART 9, NBCC 2015

THIS DESIGN COMPLIES WITH:
- PART 9 OF BCBC 2018 , NBC-2019AE
- PART 9 OF OBC 2012 (2019 AMENDMENT)
- CSA 086-14
- TPIC 2014

(55 % OF 27.2 P.S.F. G.S.L. PLUS 8.4 P.S.F. RAIN LOAD) EQUALS 23.3 P.S.F. SPECIFIED ROOF LIVE LOAD

ALLOWABLE DEFL.(LL)= L/360 (0.46")
CALCULATED VERT. DEFL.(LL) = L/ 999 (0.01")
ALLOWABLE DEFL.(TL)= L/360 (0.46")
CALCULATED VERT. DEFL.(TL) = L/ 999 (0.05")

CSI: TC=0.14/1.00 (A-B:1) , BC=0.28/1.00 (H-I:4) , WB=0.37/1.00 (B-I:1) , SSI=0.12/1.00 (A-B:1)

DOL LUMBER=1.00 NAIL=1.00 LS BEND=1.10 COMP=1.10 SHEAR=1.10 TENS= 1.10

COMPANION LIVE LOAD FACTOR = 1.00

TRUSS PLATE MANUFACTURER IS NOT RESPONSIBLE FOR QUALITY CONTROL IN THE TRUSS MANUFACTURING PLANT .

NAIL VALUES

PLATE	GRIP(DRY) (PSI) MAX	MIN	SHEAR (PLI) MAX	MIN	SECTION (PLI) MAX	MIN
MT20	650	371	1747	788	1987	1873

PLATE PLACEMENT TOL. = 0.250 inches

PLATE ROTATION TOL. = 5.0 Deg.

JSI GRIP= 0.42 (G) (INPUT = 0.90)
JSI METAL= 0.13 (B) (INPUT = 0.95)

LICENSED PROFESSIONAL ENGINEER
02-28-24
H. J. G. ALVES
100009024
PROVINCE OF ONTARIO

Structural component only
DWG# T-2406424

JOB NAME	TRUSS NAME	QUANTITY	PLY	JOB DESC.	DRWG NO.
425913	T32	1	1	ROYAL PINE HOMES TRUSS DESC.	

Tamarack Roof Truss, Burlington

Version 8.630 S Aug 30 2023 MiTek Industries, Inc. Wed Feb 28 15:03:12 2024 Page 1
ID:VI_DQvi1e49Qy7axT?i10OzOYuG-CfTdfHN5bnJlrlVVBzJiFD0nuu4EA?6RuZZoQKzgavz

Scale = 1:41.6

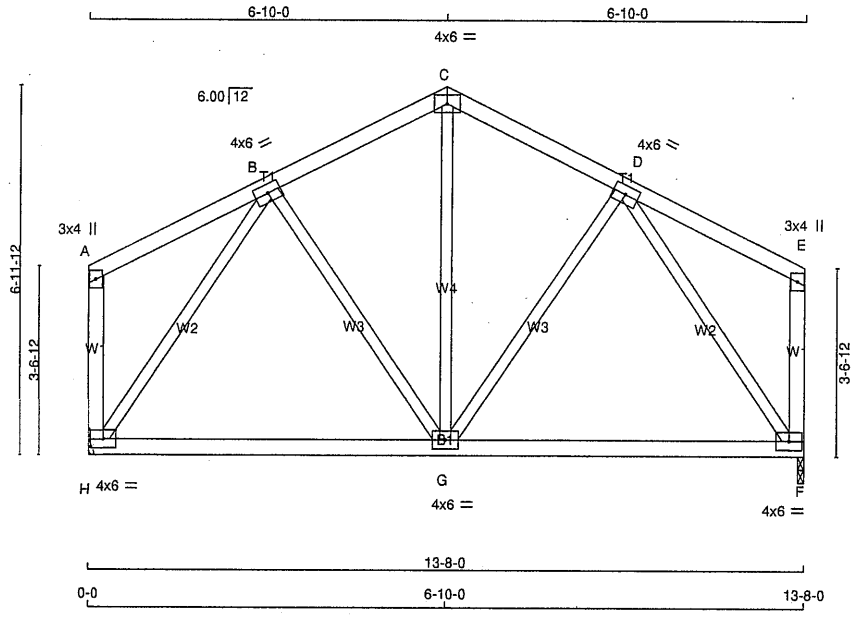

TOTAL WEIGHT = 64 lb

LUMBER
N. L. G. A. RULES

CHORDS	SIZE		LUMBER	DESCR.
A - C	2x4	DRY	No.2	SPF
C - E	2x4	DRY	No.2	SPF
H - A	2x4	DRY	No.2	SPF
F - E	2x4	DRY	No.2	SPF
H - F	2x4	DRY	No.2	SPF
ALL WEBS EXCEPT	2x3	DRY	No.2	SPF

DRY: SEASONED LUMBER.

PLATES (table is in inches)

JT	TYPE	PLATES	W	LEN	Y	X
A	TMV+p	MT20	3.0	4.0		
B	TMWW-t	MT20	4.0	6.0		
C	TTW-p	MT20	4.0	6.0		
D	TMWW-t	MT20	4.0	6.0		
E	TMV+p	MT20	3.0	4.0		
F	BMVW1-t	MT20	4.0	6.0		
G	BMWWW-t	MT20	4.0	6.0		
H	BMVW1-t	MT20	4.0	6.0		

NOTES- (1)
1) Lateral braces to be a minimum of 2X4 SPF #2.

DIMENSIONS, SUPPORTS AND LOADINGS SPECIFIED BY FABRICATOR TO BE VERIFIED BY BUILDING DESIGNER

BEARINGS

JT	FACTORED GROSS REACTION VERT	HORZ	MAXIMUM FACTORED GROSS REACTION DOWN	HORZ	UPLIFT	INPUT BRG IN-SX	REQRD BRG IN-SX
H	706	0	706	0	0	MECHANICAL	
F	706	0	706	0	0	1-8	1-8

A SUITABLE HANGER/MECHANICAL CONNECTION IS REQUIRED AT JOINT H. MINIMUM BEARING LENGTH AT JOINT H = 1-8.

UNFACTORED REACTIONS

JT	1ST LCASE COMBINED	MAX./MIN. COMPONENT REACTIONS SNOW	LIVE	PERM.LIVE	WIND	DEAD	SOIL
H	501	318 / 0	0 / 0	0 / 0	0 / 0	183 / 0	0 / 0
F	501	318 / 0	0 / 0	0 / 0	0 / 0	183 / 0	0 / 0

BEARING MATERIAL TO BE SPF NO.2 OR BETTER AT JOINT(S) F

BRACING
TOP CHORD TO BE SHEATHED OR MAX. PURLIN SPACING = 6.25 FT.
MAX. UNBRACED BOTTOM CHORD LENGTH = 10.00 FT OR RIGID CEILING DIRECTLY APPLIED.

ALL PITCH BREAKS AND PERIMETER CORNER JOINTS MUST BE LATERALLY RESTRAINED.

LOADING
TOTAL LOAD CASES: (4)

CHORDS

MEMB. FR-TO	MAX. FACTORED FORCE (LBS)	FACTORED VERT. LOAD LC1 (PLF) FROM	TO	MAX CSI (LC)	MAX. UNBRAC LENGTH
A- B	0 / 15	-84.9	-84.9	0.16 (1)	10.00
B- C	-437 / 0	-84.9	-84.9	0.12 (1)	6.25
C- D	-437 / 0	-84.9	-84.9	0.12 (1)	6.25
D- E	0 / 15	-84.9	-84.9	0.16 (1)	10.00
H- A	-112 / 0	0.0	0.0	0.02 (1)	7.81
F- E	-112 / 0	0.0	0.0	0.02 (1)	7.81
H- G	0 / 377	-18.5	-18.5	0.28 (4)	10.00
G- F	0 / 377	-18.5	-18.5	0.28 (4)	10.00

WEBS

MEMB. FR-TO	MAX. FACTORED FORCE (LBS)	MAX CSI (LC)
G- C	0 / 157	0.04 (4)
G- D	0 / 43	0.02 (4)
B- G	0 / 43	0.02 (4)
H- B	-664 / 0	0.40 (1)
D- F	-664 / 0	0.40 (1)

DESIGN CRITERIA

SPECIFIED LOADS:

TOP CH.	LL =	23.3	PSF
	DL =	6.0	PSF
BOT CH.	LL =	0.0	PSF
	DL =	7.4	PSF
TOTAL LOAD	=	36.7	PSF

SPACING = 24.0 IN. C/C

THIS TRUSS IS DESIGNED FOR RESIDENTIAL OR SMALL BUILDING REQUIREMENTS OF PART 9, NBCC 2015

THIS DESIGN COMPLIES WITH:
- PART 9 OF BCBC 2018 , NBC-2019AE
- PART 9 OF OBC 2012 (2019 AMENDMENT)
- CSA 086-14
- TPIC 2014

(55 % OF 27.2 P.S.F. G.S.L. PLUS 8.4 P.S.F. RAIN LOAD) EQUALS 23.3 P.S.F. SPECIFIED ROOF LIVE LOAD

ALLOWABLE DEFL.(LL)= L/360 (0.46")
CALCULATED VERT. DEFL.(LL) = L/ 999 (0.01")
ALLOWABLE DEFL.(TL)= L/360 (0.46")
CALCULATED VERT. DEFL.(TL) = L/ 999 (0.05")

CSI: TC=0.16/1.00 (A-B:1) , BC=0.28/1.00 (G-H:4) , WB=0.40/1.00 (B-H:1) , SSI=0.13/1.00 (A-B:1)

DOL LUMBER=1.00 NAIL=1.00 LS BEND=1.10 COMP=1.10 SHEAR=1.10 TENS= 1.10

COMPANION LIVE LOAD FACTOR = 1.00

TRUSS PLATE MANUFACTURER IS NOT RESPONSIBLE FOR QUALITY CONTROL IN THE TRUSS MANUFACTURING PLANT .

NAIL VALUES

PLATE	GRIP(DRY) (PSI) MAX	MIN	SHEAR (PLI) MAX	MIN	SECTION (PLI) MAX	MIN
MT20	650	371	1747	788	1987	1873

PLATE PLACEMENT TOL. = 0.250 inches

PLATE ROTATION TOL. = 5.0 Deg.

JSI GRIP= 0.41 (F) (INPUT = 0.90)
JSI METAL= 0.13 (B) (INPUT = 0.95)

LICENSED PROFESSIONAL ENGINEER
02-28-24
H. J. G. ALVES
100009024
PROVINCE OF ONTARIO

Structural component only
DWG# T-2406425

JOB NAME	TRUSS NAME	QUANTITY	PLY	JOB DESC.	DRWG NO.
425913	T33	1	2	ROYAL PINE HOMES TRUSS DESC.	

Tamarack Roof Truss, Burlington

Version 8.630 S Aug 30 2023 MiTek Industries, Inc. Wed Feb 28 15:03:13 2024 Page 1
ID:sd0FDfbi38oVqvTaiRkhtSzPAoD-gr1?sdOjM5R9TS4hkhqxoQZzOIONvSza7DILymzgavy

Scale = 1:25.8

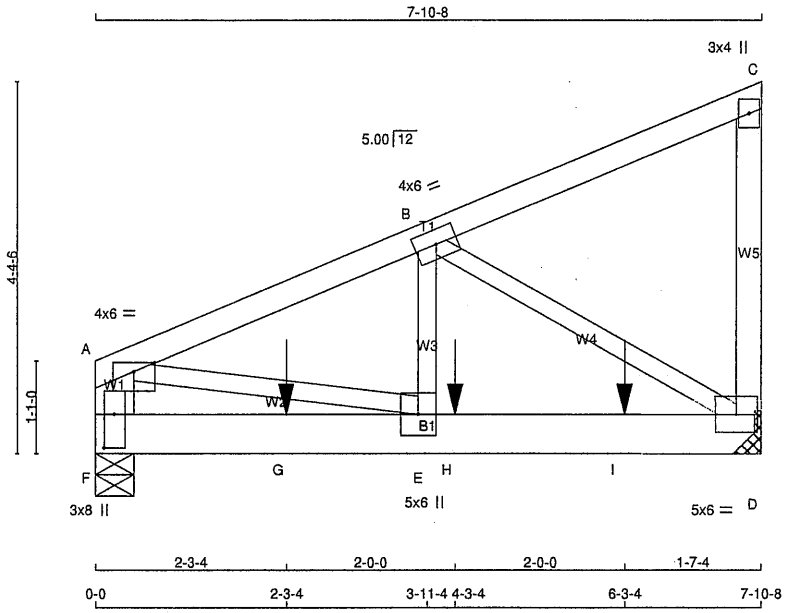

TOTAL WEIGHT = 2 X 37 = 73 lb

[M]

LUMBER

N. L. G. A. RULES

CHORDS	SIZE		LUMBER	DESCR.
A - C	2x4	DRY	No.2	SPF
D - C	2x4	DRY	No.2	SPF
F - A	2x6	DRY	No.2	SPF
F - D	2x6	DRY	No.2	SPF
ALL WEBS EXCEPT	2x3	DRY	No.2	SPF

DRY: SEASONED LUMBER.

DESIGN CONSISTS OF 2 TRUSSES BUILT SEPARATELY THEN FASTENED TOGETHER AS FOLLOWS:

CHORDS	#ROWS	SURFACE SPACING (IN)	LOAD(PLF)
TOP CHORDS : (0.122"X3") SPIRAL NAILS			
A- C	1	12	TOP
C- D	1	12	TOP
F- A	2	12	TOP
BOTTOM CHORDS : (0.122"X3") SPIRAL NAILS			
F- D	2	12	SIDE(183.1)
WEBS : (0.122"X3") SPIRAL NAILS			
2x3	1	6	

NAILS TO BE DRIVEN FROM ONE SIDE ONLY.

GIRDER NAILING ASSUMES NAILED HANGERS ARE FASTENED WITH MIN. 3-0 INCH NAILS.

TOP - COMPONENTS ARE LOADED FROM THE TOP AND MUST BE PLACED ON TOP EDGE OF ALL PLIES FOR THE LOAD TO BE TRANSFERRED TO EACH PLY.

SIDE - PLF SHOWN IS THE EQUIVALENT UDL APPLIED TO ONE SIDE THAT THE CORRESPONDING NAILING PATTERN SHALL BE CAPABLE OF TRANSFERING. REMAINING PLF MUST BE APPLIED ON THE OPPOSITE SIDE OR ON THE TOP.

PLATES (table is in inches)

JT	TYPE	PLATES	W	LEN	Y	X
A	TMVW-p	MT20	4.0	6.0	Edge	
B	TMWW-t	MT20	4.0	6.0		

LICENSED PROFESSIONAL ENGINEER
02-28-24
H. J. G. ALVES
100009024
PROVINCE OF ONTARIO

Structural component only
DWG# T-2406426

DIMENSIONS, SUPPORTS AND LOADINGS SPECIFIED BY FABRICATOR TO BE VERIFIED BY BUILDING DESIGNER

BEARINGS

JT	FACTORED GROSS REACTION VERT	HORZ	MAXIMUM FACTORED GROSS REACTION DOWN	HORZ	UPLIFT	INPUT BRG IN-SX	REQRD BRG IN-SX
D	1777	0	1777	0	0	MECHANICAL	
F	1971	0	1971	0	0	5-8	1-8

A SUITABLE HANGER/MECHANICAL CONNECTION IS REQUIRED AT JOINT D. MINIMUM BEARING LENGTH AT JOINT D = 1-8.

UNFACTORED REACTIONS

JT	1ST LCASE COMBINED	MAX./MIN. COMPONENT REACTIONS SNOW	LIVE	PERM.LIVE	WIND	DEAD	SOIL
D	1257	825 / 0	0 / 0	0 / 0	0 / 0	431 / 0	0 / 0
F	1391	927 / 0	0 / 0	0 / 0	0 / 0	464 / 0	0 / 0

BEARING MATERIAL TO BE SPF NO.2 OR BETTER AT JOINT(S) F

BRACING

TOP CHORD TO BE SHEATHED OR MAX. PURLIN SPACING = 5.71 FT.
MAX. UNBRACED BOTTOM CHORD LENGTH = 10.00 FT OR RIGID CEILING DIRECTLY APPLIED.

ALL PITCH BREAKS AND PERIMETER CORNER JOINTS MUST BE LATERALLY RESTRAINED.

LOADING

TOTAL LOAD CASES: (4)

CHORDS

MEMB. FR-TO	MAX. FACTORED FORCE (LBS)	FACTORED VERT. LOAD (PLF) FROM	TO	LC1 MAX CSI (LC)	MAX. UNBRAC LENGTH
A- B	-2393 / 0	-84.9	-84.9	0.11 (1)	5.71
B- C	-11 / 0	-84.9	-84.9	0.09 (1)	6.25
D- C	-137 / 0	0.0	0.0	0.02 (1)	7.81
F- A	-1455 / 0	0.0	0.0	0.05 (1)	7.81
F- G	0 / 0	-18.5	-18.5	0.41 (1)	10.00
G- E	0 / 0	-18.5	-18.5	0.41 (1)	10.00
E- H	0 / 2220	-18.5	-18.5	0.41 (1)	10.00
H- I	0 / 2220	-18.5	-18.5	0.41 (1)	10.00
I- D	0 / 2220	-18.5	-18.5	0.41 (1)	10.00

WEBS

MEMB. FR-TO	MAX. FACTORED FORCE (LBS)	MAX CSI (LC)
E- B	0 / 1849	0.23 (1)
B- D	-2581 / 0	0.43 (1)
A- E	0 / 2254	0.28 (1)

SPECIFIED CONCENTRATED LOADS (LBS)

JT	LOC.	LC1	MAX-	MAX+	FACE	DIR.	TYPE	HEEL	CONN.
G	2-3-4	-1097	-1097	---	BACK	VERT	TOTAL	---	C1
H	4-3-4	-487	-487	---	FRONT	VERT	TOTAL	---	C1
I	6-3-4	-487	-487	---	FRONT	VERT	TOTAL	---	C1

CONNECTION REQUIREMENTS

1) **C1:** A SUITABLE HANGER/MECHANICAL CONNECTION IS REQUIRED.

DESIGN CRITERIA

SPECIFIED LOADS:

TOP	CH.	LL	=	23.3	PSF
		DL	=	6.0	PSF
BOT	CH.	LL	=	0.0	PSF
		DL	=	7.4	PSF
TOTAL	LOAD		=	36.7	PSF

SPACING = 24.0 IN. C/C

THIS TRUSS IS DESIGNED FOR RESIDENTIAL OR SMALL BUILDING REQUIREMENTS OF PART 9, NBCC 2015

THIS DESIGN COMPLIES WITH:
- PART 9 OF BCBC 2018 , NBC-2019AE
- PART 9 OF OBC 2012 (2019 AMENDMENT)
- CSA 086-14
- TPIC 2014

(55 % OF 27.2 P.S.F. G.S.L. PLUS 8.4 P.S.F. RAIN LOAD) EQUALS 23.3 P.S.F. SPECIFIED ROOF LIVE LOAD

ALLOWABLE DEFL.(LL)= L/360 (0.26")
CALCULATED VERT. DEFL.(LL) = L/ 999 (0.03")
ALLOWABLE DEFL.(TL)= L/360 (0.26")
CALCULATED VERT. DEFL.(TL) = L/ 999 (0.05")

CSI: TC=0.11/1.00 (A-B:1) , BC=0.41/1.00 (E-F:1) , WB=0.43/1.00 (B-D:1) , SSI=0.37/1.00 (D-E:1)

DOL LUMBER=1.00 NAIL=1.00 LS BEND=1.00 COMP=1.00 SHEAR=1.00 TENS= 1.00

COMPANION LIVE LOAD FACTOR = 1.00

AUTOSOLVE RIGHT HEEL ONLY

TRUSS PLATE MANUFACTURER IS NOT RESPONSIBLE FOR QUALITY CONTROL IN THE TRUSS MANUFACTURING PLANT .

NAIL VALUES

PLATE	GRIP(DRY) (PSI) MAX	MIN	SHEAR (PLI) MAX	MIN	SECTION (PLI) MAX	MIN
MT20	650	371	1747	788	1987	1873

PLATE PLACEMENT TOL. = 0.250 inches

PLATE ROTATION TOL. = 5.0 Deg.

JSI GRIP= 0.72 (B) (INPUT = 0.90)
JSI METAL= 0.40 (E) (INPUT = 0.95)

CONTINUED ON PAGE 2

PLATES (table is in inches)

JT	TYPE	PLATES	W	LEN	Y	X
C	TMV+p	MT20	3.0	4.0		
D	BMVW1-t	MT20	5.0	6.0		
E	BMWW+t	MT20	5.0	6.0		
F	BMV1+p	MT20	3.0	8.0	4.75	1.50

Edge - INDICATES REFERENCE CORNER OF PLATE TOUCHES EDGE OF CHORD.

NOTES- (1)
1) Lateral braces to be a minimum of 2X4 SPF #2.

LICENSED PROFESSIONAL ENGINEER
02-28-24
H. J. G. ALVES
100009024
PROVINCE OF ONTARIO

Structural component only
DWG# T-2406426

JOB NAME	TRUSS NAME	QUANTITY	PLY	JOB DESC.	DRWG NO.
425914	T33Z	1	2	ROYAL PINE HOMES TRUSS DESC.	

Tamarack Roof Truss, Burlington

Version 8.630 S Aug 30 2023 MiTek Industries, Inc. Wed Feb 28 16:19:26 2024 Page 1
ID:sd0FDfbi38oVqvTaiRkhtSzPAoD-HcrneHkCP8blbDAa7bMKdnSSLiAytjphhBZqzDzgZoV

Scale = 1:25.8

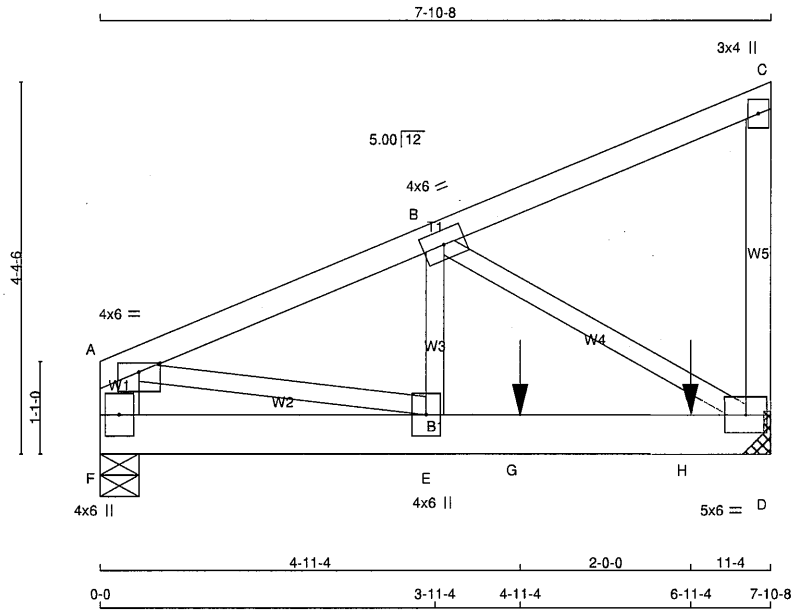

TOTAL WEIGHT = 2 X 37 = 73 lb [M]

LUMBER

N. L. G. A. RULES

CHORDS	SIZE		LUMBER	DESCR.
A - C	2x4	DRY	No.2	SPF
D - C	2x4	DRY	No.2	SPF
F - A	2x6	DRY	No.2	SPF
F - D	2x6	DRY	No.2	SPF
ALL WEBS EXCEPT	2x3	DRY	No.2	SPF

DRY: SEASONED LUMBER.

DESIGN CONSISTS OF 2 TRUSSES BUILT SEPARATELY THEN FASTENED TOGETHER AS FOLLOWS:

CHORDS #ROWS	SURFACE SPACING (IN)	LOAD(PLF)
TOP CHORDS : (0.122"X3") SPIRAL NAILS		
A- C 1	12	TOP
C- D 1	12	TOP
F- A 2	12	TOP
BOTTOM CHORDS : (0.122"X3") SPIRAL NAILS		
F- D 2	12	SIDE(40.9)
WEBS : (0.122"X3") SPIRAL NAILS		
2x3 1	6	

NAILS TO BE DRIVEN FROM ONE SIDE ONLY.

GIRDER NAILING ASSUMES NAILED HANGERS ARE FASTENED WITH MIN. 3-0 INCH NAILS.

TOP - COMPONENTS ARE LOADED FROM THE TOP AND MUST BE PLACED ON TOP EDGE OF ALL PLIES FOR THE LOAD TO BE TRANSFERRED TO EACH PLY.

SIDE - PLF SHOWN IS THE EQUIVALENT UDL APPLIED TO ONE SIDE THAT THE CORRESPONDING NAILING PATTERN SHALL BE CAPABLE OF TRANSFERING. REMAINING PLF MUST BE APPLIED ON THE OPPOSITE SIDE OR ON THE TOP.

PLATES (table is in inches)

JT	TYPE	PLATES	W	LEN	Y	X
A	TMVW-p	MT20	4.0	6.0	Edge	
B	TMWW-t	MT20	4.0	6.0		

LICENSED PROFESSIONAL ENGINEER
02-28-24
H. J. G. ALVES
100009024
PROVINCE OF ONTARIO

Structural component only
DWG# T-2406463

DIMENSIONS, SUPPORTS AND LOADINGS SPECIFIED BY FABRICATOR TO BE VERIFIED BY BUILDING DESIGNER

BEARINGS

JT	FACTORED GROSS REACTION VERT	HORZ	MAXIMUM FACTORED GROSS REACTION DOWN	HORZ	UPLIFT	INPUT BRG IN-SX	REQRD BRG IN-SX
D	1828	0	1828	0	0	MECHANICAL	
F	1185	0	1185	0	0	5-8	1-8

A SUITABLE HANGER/MECHANICAL CONNECTION IS REQUIRED AT JOINT D. MINIMUM BEARING LENGTH AT JOINT D = 1-8.

UNFACTORED REACTIONS

JT	1ST LCASE COMBINED	MAX./MIN. COMPONENT REACTIONS SNOW	LIVE	PERM.LIVE	WIND	DEAD	SOIL
D	1295	836 / 0	0 / 0	0 / 0	0 / 0	459 / 0	0 / 0
F	840	538 / 0	0 / 0	0 / 0	0 / 0	302 / 0	0 / 0

BEARING MATERIAL TO BE SPF NO.2 OR BETTER AT JOINT(S) F

BRACING

TOP CHORD TO BE SHEATHED OR MAX. PURLIN SPACING = 6.25 FT.
MAX. UNBRACED BOTTOM CHORD LENGTH = 10.00 FT OR RIGID CEILING DIRECTLY APPLIED.

ALL PITCH BREAKS AND PERIMETER CORNER JOINTS MUST BE LATERALLY RESTRAINED.

LOADING

TOTAL LOAD CASES: (4)

CHORDS

MEMB. FR-TO	MAX. FACTORED FORCE (LBS)	FACTORED VERT. LOAD (PLF) FROM	TO	LC1 CSI (LC)	MAX UNBRAC LENGTH
A- B	-1761 / 0	-84.9	-84.9	0.11 (1)	6.25
B- C	-13 / 0	-84.9	-84.9	0.10 (1)	6.25
D- C	-134 / 0	0.0	0.0	0.02 (1)	7.81
F- A	-1106 / 0	0.0	0.0	0.04 (1)	7.81
F- E	0 / 0	-100.3	-100.3	0.17 (1)	10.00
E- G	0 / 1637	-100.3	-100.3	0.37 (1)	10.00
G- H	0 / 1637	-18.5	-18.5	0.37 (1)	10.00
H- D	0 / 1637	-18.5	-18.5	0.37 (1)	10.00

WEBS

MEMB. FR-TO	MAX. FACTORED FORCE (LBS)	MAX CSI (LC)
E- B	0 / 1254	0.16 (1)
B- D	-1903 / 0	0.32 (1)
A- E	0 / 1662	0.21 (1)

SPECIFIED CONCENTRATED LOADS (LBS)

JT	LOC.	LC1	MAX-	MAX+	FACE	DIR.	TYPE	HEEL	CONN.
G	4-11-4	-801	-801	---	BACK	VERT	TOTAL	---	C1
H	6-11-4	-470	-470	---	BACK	VERT	TOTAL	---	C1

CONNECTION REQUIREMENTS

1) **C1:** A SUITABLE HANGER/MECHANICAL CONNECTION IS REQUIRED.

DESIGN CRITERIA

SPECIFIED LOADS:

TOP CH.	LL	=	23.3	PSF
	DL	=	6.0	PSF
BOT CH.	LL	=	0.0	PSF
	DL	=	7.4	PSF
TOTAL LOAD		=	36.7	PSF

SPACING = 24.0 IN. C/C

GIRDER TYPE: CStdGirder
START DISTANCE = 0-0
START SPAN CARRIED = 5-6-0
END DISTANCE = 4-11-4
END SPAN CARRIED = 5-6-0
END WALL WIDTH = 4-0
APPLIED TO FRONT SIDE OF BOTTOM CHORD.
- ADDT'L LOADS BASED ON 55 % OF GSL.

THIS TRUSS IS DESIGNED FOR RESIDENTIAL OR SMALL BUILDING REQUIREMENTS OF PART 9, NBCC 2015

THIS DESIGN COMPLIES WITH:
- PART 9 OF BCBC 2018 , NBC-2019AE
- PART 9 OF OBC 2012 (2019 AMENDMENT)
- CSA 086-14
- TPIC 2014

(55 % OF 27.2 P.S.F. G.S.L. PLUS 8.4 P.S.F. RAIN LOAD) EQUALS 23.3 P.S.F. SPECIFIED ROOF LIVE LOAD

ALLOWABLE DEFL.(LL)= L/360 (0.26")
CALCULATED VERT. DEFL.(LL) = L/ 999 (0.02")
ALLOWABLE DEFL.(TL)= L/360 (0.26")
CALCULATED VERT. DEFL.(TL) = L/ 999 (0.04")

CSI: TC=0.11/1.00 (A-B:1) , BC=0.37/1.00 (D-E:1) , WB=0.32/1.00 (B-D:1) , SSI=0.41/1.00 (D-E:1)

DOL LUMBER=1.00 NAIL=1.00 LS BEND=1.00 COMP=1.00 SHEAR=1.00 TENS= 1.00

COMPANION LIVE LOAD FACTOR = 1.00

AUTOSOLVE RIGHT HEEL ONLY

TRUSS PLATE MANUFACTURER IS NOT RESPONSIBLE FOR QUALITY CONTROL IN THE TRUSS MANUFACTURING PLANT .

NAIL VALUES

PLATE	GRIP(DRY) (PSI) MAX	MIN	SHEAR (PLI) MAX	MIN	SECTION (PLI) MAX	MIN
MT20	650	371	1747	788	1987	1873

PLATE PLACEMENT TOL. = 0.250 inches

PLATE ROTATION TOL. = 5.0 Deg.

JSI GRIP= 0.69 (E) (INPUT = 0.90)
JSI METAL= 0.37 (E) (INPUT = 0.95)

CONTINUED ON PAGE 2

JOB NAME	TRUSS NAME	QUANTITY	PLY	JOB DESC.	DRWG NO.
425914	T33Z	1	2	ROYAL PINE HOMES TRUSS DESC.	

PLATES (table is in inches)

JT	TYPE	PLATES	W	LEN	Y	X
C	TMV+p	MT20	3.0	4.0		
D	BMVW1-t	MT20	5.0	6.0		
E	BMWW+t	MT20	4.0	6.0		
F	BMV1+p	MT20	4.0	6.0		

Edge - INDICATES REFERENCE CORNER OF PLATE TOUCHES EDGE OF CHORD.

NOTES- (1)
1) Lateral braces to be a minimum of 2X4 SPF #2.

LICENSED PROFESSIONAL ENGINEER
02-28-24
H. J. G. ALVES
100009024
PROVINCE OF ONTARIO

Structural component only
DWG# T-2406463

JOB NAME	TRUSS NAME	QUANTITY	PLY	JOB DESC.	DRWG NO.
425913	T36	1	1	ROYAL PINE HOMES TRUSS DESC.	

Tamarack Roof Truss, Burlington

Version 8.630 S Aug 30 2023 MiTek Industries, Inc. Wed Feb 28 15:03:14 2024 Page 1
ID:sd0FDfbi38oVqvTaiRkhtSzPAoD-81aN4zPL7OZ04cftIOLAKe64YilmeyKkMt2vUDzgavx

Scale = 1:25.7

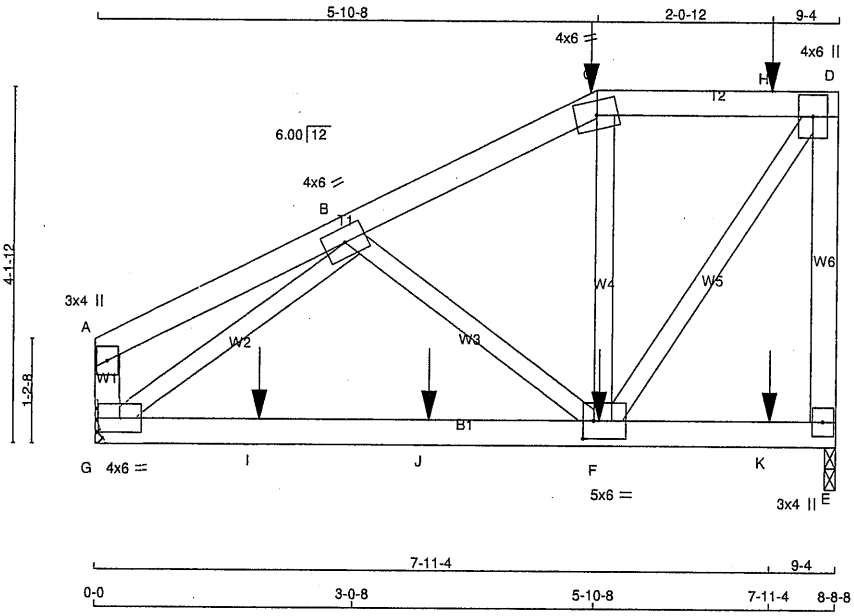

TOTAL WEIGHT = 38 lb

LUMBER
N. L. G. A. RULES

CHORDS	SIZE		LUMBER	DESCR.
A - C	2x4	DRY	No.2	SPF
C - D	2x4	DRY	No.2	SPF
E - D	2x4	DRY	No.2	SPF
G - A	2x4	DRY	No.2	SPF
G - E	2x4	DRY	No.2	SPF
ALL WEBS EXCEPT	2x3	DRY	No.2	SPF

DRY: SEASONED LUMBER.

PLATES (table is in inches)

JT	TYPE	PLATES	W	LEN	Y	X
A	TMV+p	MT20	3.0	4.0		
B	TMWW-t	MT20	4.0	6.0		
C	TTW-m	MT20	4.0	6.0		
D	TMVW+p	MT20	4.0	6.0		
E	BMV1+p	MT20	3.0	4.0		
F	BMWWW-t	MT20	5.0	6.0	2.50	1.50
G	BMVW1-t	MT20	4.0	6.0		

NOTES- (1)
1) Lateral braces to be a minimum of 2X4 SPF #2.

DIMENSIONS, SUPPORTS AND LOADINGS SPECIFIED BY FABRICATOR TO BE VERIFIED BY BUILDING DESIGNER

BEARINGS

JT	FACTORED GROSS REACTION VERT	HORZ	MAXIMUM FACTORED GROSS REACTION DOWN	HORZ	UPLIFT	INPUT BRG IN-SX	REQRD BRG IN-SX
E	1015	0	1015	0	0	1-8	1-8
G	683	0	683	0	0	MECHANICAL	

A SUITABLE HANGER/MECHANICAL CONNECTION IS REQUIRED AT JOINT G. MINIMUM BEARING LENGTH AT JOINT G = 1-8.

UNFACTORED REACTIONS

JT	1ST LCASE COMBINED	MAX./MIN. COMPONENT REACTIONS SNOW	LIVE	PERM.LIVE	WIND	DEAD	SOIL
E	719	464 / 0	0 / 0	0 / 0	0 / 0	255 / 0	0 / 0
G	488	295 / 0	0 / 0	0 / 0	0 / 0	192 / 0	0 / 0

BEARING MATERIAL TO BE SPF NO.2 OR BETTER AT JOINT(S) E

BRACING
TOP CHORD TO BE SHEATHED OR MAX. PURLIN SPACING = 6.25 FT.
MAX. UNBRACED BOTTOM CHORD LENGTH = 10.00 FT OR RIGID CEILING DIRECTLY APPLIED.

ALL PITCH BREAKS AND PERIMETER CORNER JOINTS MUST BE LATERALLY RESTRAINED.

LOADING
TOTAL LOAD CASES: (4)

CHORDS

MEMB. FR-TO	MAX. FACTORED FORCE (LBS)	FACTORED VERT. LOAD LC1 (PLF) FROM	TO	MAX CSI (LC)	MAX. UNBRAC LENGTH
A- B	0 / 12	-84.9	-84.9	0.12 (1)	10.00
B- C	-624 / 0	-84.9	-84.9	0.13 (1)	6.25
C- H	-533 / 0	-84.9	-84.9	0.25 (1)	6.25
H- D	-533 / 0	-84.9	-84.9	0.25 (1)	6.25
E- D	-999 / 0	0.0	0.0	0.28 (1)	7.79
G- A	-98 / 0	0.0	0.0	0.01 (1)	7.81
G- I	0 / 633	-18.5	-18.5	0.34 (4)	10.00
I- J	0 / 633	-18.5	-18.5	0.34 (4)	10.00
J- F	0 / 633	-18.5	-18.5	0.34 (4)	10.00
F- K	0 / 0	-18.5	-18.5	0.28 (4)	10.00
K- E	0 / 0	-18.5	-18.5	0.28 (4)	10.00

WEBS

MEMB. FR-TO	MAX. FACTORED FORCE (LBS)	MAX CSI (LC)
F- C	-470 / 0	0.13 (1)
F- D	0 / 923	0.23 (1)
B- F	-111 / 4	0.03 (1)
G- B	-813 / 0	0.21 (1)

SPECIFIED CONCENTRATED LOADS (LBS)

JT	LOC.	LC1	MAX-	MAX+	FACE	DIR.	TYPE	HEEL	CONN.
C	5-10-8	-331	-331	---	BACK	VERT	TOTAL	---	C1
F	5-11-4	-29	-29	---	BACK	VERT	TOTAL	---	C1
H	7-11-4	-120	-120	---	BACK	VERT	TOTAL	---	C1
I	1-11-4	-29	-29	---	BACK	VERT	TOTAL	---	C1
J	3-11-4	-29	-29	---	BACK	VERT	TOTAL	---	C1
K	7-11-4	-30	-30	---	BACK	VERT	TOTAL	---	C1

CONNECTION REQUIREMENTS

1) C1: A SUITABLE HANGER/MECHANICAL CONNECTION IS REQUIRED.

DESIGN CRITERIA

SPECIFIED LOADS:

TOP CH.	LL =	23.3	PSF
	DL =	6.0	PSF
BOT CH.	LL =	0.0	PSF
	DL =	7.4	PSF
TOTAL LOAD	=	36.7	PSF

SPACING = 24.0 IN. C/C

LOADING IN FLAT SECTION BASED ON A SLOPE OF 6.00/12

THIS TRUSS IS DESIGNED FOR RESIDENTIAL OR SMALL BUILDING REQUIREMENTS OF PART 9, NBCC 2015

THIS DESIGN COMPLIES WITH:
- PART 9 OF BCBC 2018 , NBC-2019AE
- PART 9 OF OBC 2012 (2019 AMENDMENT)
- CSA 086-14
- TPIC 2014

(55 % OF 27.2 P.S.F. G.S.L. PLUS 8.4 P.S.F. RAIN LOAD) EQUALS 23.3 P.S.F. SPECIFIED ROOF LIVE LOAD

ALLOWABLE DEFL.(LL)= L/360 (0.29")
CALCULATED VERT. DEFL.(LL) = L/ 999 (0.01")
ALLOWABLE DEFL.(TL)= L/360 (0.29")
CALCULATED VERT. DEFL.(TL) = L/ 999 (0.08")

CSI: TC=0.28/1.00 (D-E:1) , BC=0.34/1.00 (F-G:4) , WB=0.23/1.00 (D-F:1) , SSI=0.21/1.00 (C-D:1)

DOL LUMBER=1.00 NAIL=1.00 LS BEND=1.00 COMP=1.00 SHEAR=1.00 TENS= 1.00

COMPANION LIVE LOAD FACTOR = 1.00

AUTOSOLVE RIGHT HEEL ONLY

TRUSS PLATE MANUFACTURER IS NOT RESPONSIBLE FOR QUALITY CONTROL IN THE TRUSS MANUFACTURING PLANT .

NAIL VALUES

PLATE	GRIP(DRY) (PSI) MAX	MIN	SHEAR (PLI) MAX	MIN	SECTION (PLI) MAX	MIN
MT20	650	371	1747	788	1987	1873

PLATE PLACEMENT TOL. = 0.250 inches

PLATE ROTATION TOL. = 5.0 Deg.

JSI GRIP= 0.68 (F) (INPUT = 0.90)
JSI METAL= 0.24 (D) (INPUT = 0.95)

LICENSED PROFESSIONAL ENGINEER
02-28-24
H. J. G. ALVES
100009024
PROVINCE OF ONTARIO

Structural component only
DWG# T-2406427

JOB NAME	TRUSS NAME	QUANTITY	PLY	JOB DESC.	DRWG NO.
425913	T37	1	1	ROYAL PINE HOMES TRUSS DESC.	

Tamarack Roof Truss, Burlington

Version 8.630 S Aug 30 2023 MiTek Industries, Inc. Wed Feb 28 15:03:15 2024 Page 1
ID:VI_DQvi1e49Qy7axT?i10OzOYuG-cE8mHIPzuihtimE4s6sPtreGP661NQhtaXnS1fzgavw

Scale = 1:30.1

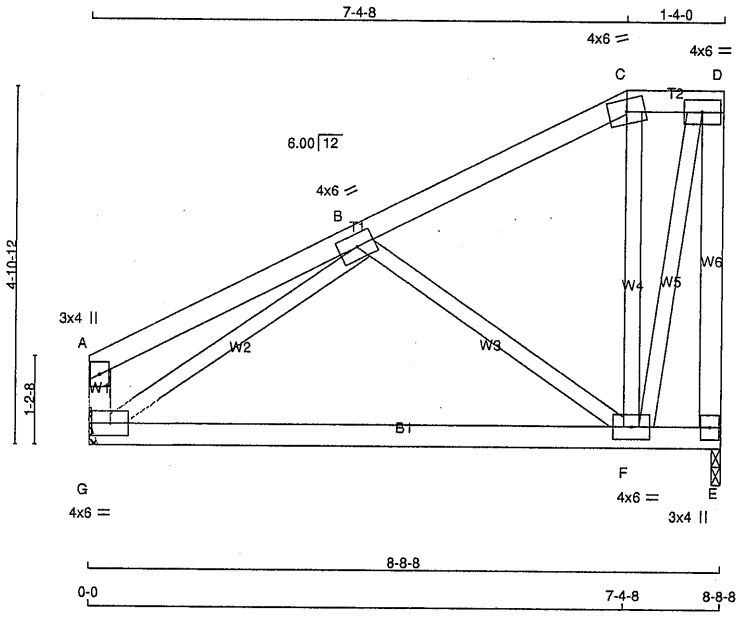

TOTAL WEIGHT = 41 lb
[M][F]

LUMBER
N. L. G. A. RULES

CHORDS	SIZE		LUMBER	DESCR.
A - C	2x4	DRY	No.2	SPF
C - D	2x4	DRY	No.2	SPF
E - D	2x4	DRY	No.2	SPF
G - A	2x4	DRY	No.2	SPF
G - E	2x4	DRY	No.2	SPF
ALL WEBS EXCEPT	2x3	DRY	No.2	SPF

DRY: SEASONED LUMBER.

PLATES (table is in inches)

JT	TYPE	PLATES	W	LEN	Y	X
A	TMV+p	MT20	3.0	4.0		
B	TMWW-t	MT20	4.0	6.0		
C	TTW-m	MT20	4.0	6.0		
D	TMVW-t	MT20	4.0	6.0		
E	BMV1+p	MT20	3.0	4.0		
F	BMWWW-t	MT20	4.0	6.0		
G	BMVW1-t	MT20	4.0	6.0		

NOTES- (1)
1) Lateral braces to be a minimum of 2X4 SPF.#2.

DIMENSIONS, SUPPORTS AND LOADINGS SPECIFIED BY FABRICATOR TO BE VERIFIED BY BUILDING DESIGNER

BEARINGS

JT	FACTORED GROSS REACTION VERT	HORZ	MAXIMUM FACTORED GROSS REACTION DOWN	HORZ	UPLIFT	INPUT BRG IN-SX	REQRD BRG IN-SX
E	450	0	450	0	0	1-8	1-8
G	450	0	450	0	0	MECHANICAL	

A SUITABLE HANGER/MECHANICAL CONNECTION IS REQUIRED AT JOINT G. MINIMUM BEARING LENGTH AT JOINT G = 1-8.

UNFACTORED REACTIONS

JT	1ST LCASE COMBINED	MAX./MIN. COMPONENT REACTIONS SNOW	LIVE	PERM.LIVE	WIND	DEAD	SOIL
E	319	203 / 0	0 / 0	0 / 0	0 / 0	117 / 0	0 / 0
G	319	203 / 0	0 / 0	0 / 0	0 / 0	117 / 0	0 / 0

BEARING MATERIAL TO BE SPF NO.2 OR BETTER AT JOINT(S) E

BRACING
TOP CHORD TO BE SHEATHED OR MAX. PURLIN SPACING = 6.25 FT.
MAX. UNBRACED BOTTOM CHORD LENGTH = 10.00 FT OR RIGID CEILING DIRECTLY APPLIED.

ALL PITCH BREAKS AND PERIMETER CORNER JOINTS MUST BE LATERALLY RESTRAINED.

LOADING
TOTAL LOAD CASES: (4)

CHORDS

MEMB. FR-TO	MAX. FACTORED FORCE (LBS)	FACTORED VERT. LOAD (PLF) FROM	TO	LC1 MAX CSI (LC)	MAX. UNBRAC LENGTH
A- B	0 / 16	-84.9	-84.9	0.19 (1)	10.00
B- C	-158 / 0	-84.9	-84.9	0.14 (1)	6.25
C- D	-123 / 0	-84.9	-84.9	0.02 (1)	6.25
E- D	-518 / 0	0.0	0.0	0.21 (1)	7.81
G- A	-120 / 0	0.0	0.0	0.01 (1)	7.81
G- F	0 / 368	-18.5	-18.5	0.27 (4)	10.00
F- E	0 / 0	-18.5	-18.5	0.25 (4)	10.00

WEBS

MEMB. FR-TO	MAX. FACTORED FORCE (LBS)	MAX CSI (LC)
B- F	-300 / 0	0.11 (1)
F- C	-113 / 0	0.04 (1)
F- D	0 / 478	0.11 (1)
G- B	-459 / 0	0.16 (1)

DESIGN CRITERIA

SPECIFIED LOADS:

TOP CH.	LL	=	23.3	PSF
	DL	=	6.0	PSF
BOT CH.	LL	=	0.0	PSF
	DL	=	7.4	PSF
TOTAL LOAD		=	36.7	PSF

SPACING = 24.0 IN. C/C

LOADING IN FLAT SECTION BASED ON A SLOPE OF 6.00/12

THIS TRUSS IS DESIGNED FOR RESIDENTIAL OR SMALL BUILDING REQUIREMENTS OF PART 9, NBCC 2015

THIS DESIGN COMPLIES WITH:
- PART 9 OF BCBC 2018 , NBC-2019AE
- PART 9 OF OBC 2012 (2019 AMENDMENT)
- CSA 086-14
- TPIC 2014

(55 % OF 27.2 P.S.F. G.S.L. PLUS 8.4 P.S.F. RAIN LOAD) EQUALS 23.3 P.S.F. SPECIFIED ROOF LIVE LOAD

ALLOWABLE DEFL.(LL)= L/360 (0.29")
CALCULATED VERT. DEFL.(LL) = L/ 999 (0.01")
ALLOWABLE DEFL.(TL)= L/360 (0.29")
CALCULATED VERT. DEFL.(TL) = L/ 999 (0.08")

CSI: TC=0.21/1.00 (D-E:1) , BC=0.27/1.00 (F-G:4) , WB=0.16/1.00 (B-G:1) , SSI=0.14/1.00 (A-B:1)

DOL LUMBER=1.00 NAIL=1.00 LS BEND=1.10 COMP=1.10 SHEAR=1.10 TENS= 1.10

COMPANION LIVE LOAD FACTOR = 1.00

TRUSS PLATE MANUFACTURER IS NOT RESPONSIBLE FOR QUALITY CONTROL IN THE TRUSS MANUFACTURING PLANT .

NAIL VALUES

PLATE	GRIP(DRY) (PSI) MAX	MIN	SHEAR (PLI) MAX	MIN	SECTION (PLI) MAX	MIN
MT20	650	371	1747	788	1987	1873

PLATE PLACEMENT TOL. = 0.250 inches

PLATE ROTATION TOL. = 5.0 Deg.

JSI GRIP= 0.73 (F) (INPUT = 0.90)
JSI METAL= 0.15 (F) (INPUT = 0.95)

LICENSED PROFESSIONAL ENGINEER
02-28-24
H. J. G. ALVES
100009024
PROVINCE OF ONTARIO

Structural component only
DWG# T-2406428

JOB NAME	TRUSS NAME	QUANTITY	PLY	JOB DESC.	DRWG NO.
425913	T38	1	1	ROYAL PINE HOMES TRUSS DESC.	

Tamarack Roof Truss, Burlington

Version 8.630 S Aug 30 2023 MiTek Industries, Inc. Wed Feb 28 15:03:16 2024 Page 1
ID:VI_DQvi1e49Qy7axT?i10OzOYuG-4Qi8VeQbf0qkKwpGQpNeP3BS1WVQ6vT0pBX?Z5zgavv

Scale = 1:32.5

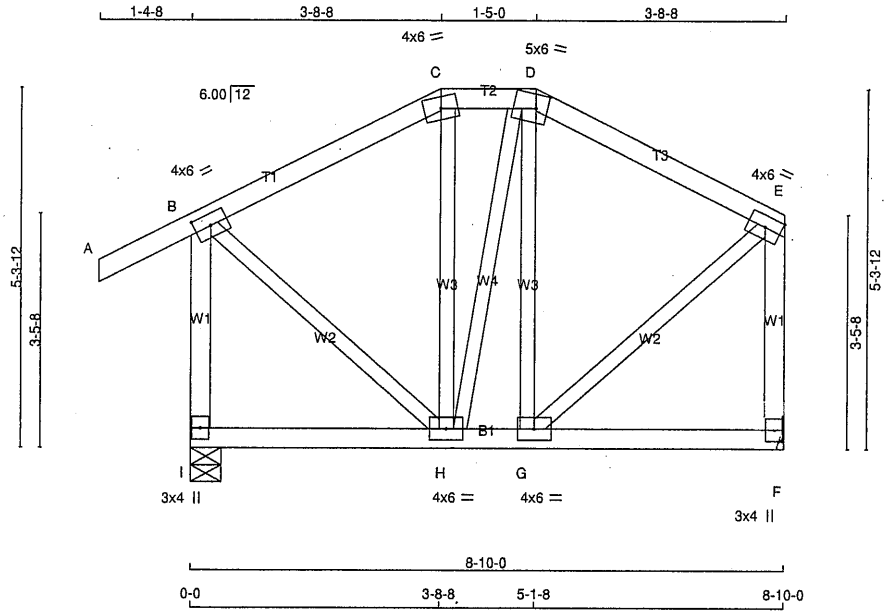

TOTAL WEIGHT = 49 lb

LUMBER
N. L. G. A. RULES

CHORDS	SIZE		LUMBER	DESCR.
A - C	2x4	DRY	No.2	SPF
C - D	2x4	DRY	No.2	SPF
D - E	2x4	DRY	No.2	SPF
I - B	2x4	DRY	No.2	SPF
F - E	2x4	DRY	No.2	SPF
I - F	2x4	DRY	No.2	SPF
ALL WEBS EXCEPT	2x3	DRY	No.2	SPF

DRY: SEASONED LUMBER.

PLATES (table is in inches)

JT	TYPE	PLATES	W	LEN	Y	X
B	TMVW-t	MT20	4.0	6.0	2.00	3.00
C	TTW-m	MT20	4.0	6.0		
D	TTWW-m	MT20	5.0	6.0	2.50	2.00
E	TMVW-t	MT20	4.0	6.0		Edge
F	BMV1+p	MT20	3.0	4.0		
G	BMWW-t	MT20	4.0	6.0		
H	BMWWW-t	MT20	4.0	6.0		
I	BMV1+p	MT20	3.0	4.0		

Edge - INDICATES REFERENCE CORNER OF PLATE TOUCHES EDGE OF CHORD.

NOTES- (1)
1) Lateral braces to be a minimum of 2X4 SPF #2.

DIMENSIONS, SUPPORTS AND LOADINGS SPECIFIED BY FABRICATOR TO BE VERIFIED BY BUILDING DESIGNER

BEARINGS

JT	FACTORED GROSS REACTION VERT	HORZ	MAXIMUM FACTORED GROSS REACTION DOWN	HORZ	UPLIFT	INPUT BRG IN-SX	REQRD BRG IN-SX
I	579	0	579	0	0	5-8	1-8
F	457	0	457	0	0	MECHANICAL	

A SUITABLE HANGER/MECHANICAL CONNECTION IS REQUIRED AT JOINT F. MINIMUM BEARING LENGTH AT JOINT F = 1-8.

UNFACTORED REACTIONS

JT	1ST LCASE COMBINED	MAX./MIN. COMPONENT REACTIONS SNOW	LIVE	PERM.LIVE	WIND	DEAD	SOIL
I	408	273 / 0	0 / 0	0 / 0	0 / 0	136 / 0	0 / 0
F	324	206 / 0	0 / 0	0 / 0	0 / 0	118 / 0	0 / 0

BEARING MATERIAL TO BE SPF NO.2 OR BETTER AT JOINT(S) I

BRACING
TOP CHORD TO BE SHEATHED OR MAX. PURLIN SPACING = 6.25 FT.
MAX. UNBRACED BOTTOM CHORD LENGTH = 10.00 FT OR RIGID CEILING DIRECTLY APPLIED.

ALL PITCH BREAKS AND PERIMETER CORNER JOINTS MUST BE LATERALLY RESTRAINED.

LOADING
TOTAL LOAD CASES: (4)

CHORDS

MEMB. FR-TO	MAX. FACTORED FORCE (LBS)	FACTORED VERT. LOAD LC1 (PLF) FROM	TO	MAX CSI (LC)	MAX. UNBRAC LENGTH
A- B	0 / 27	-84.9	-84.9	0.12 (1)	10.00
B- C	-226 / 0	-84.9	-84.9	0.15 (1)	6.25
C- D	-199 / 0	-84.9	-84.9	0.02 (1)	6.25
D- E	-227 / 0	-84.9	-84.9	0.15 (1)	6.25
I- B	-548 / 0	0.0	0.0	0.11 (1)	7.81
F- E	-427 / 0	0.0	0.0	0.08 (1)	7.81
I- H	0 / 0	-18.5	-18.5	0.06 (4)	10.00
H- G	0 / 201	-18.5	-18.5	0.07 (4)	10.00
G- F	0 / 0	-18.5	-18.5	0.05 (4)	10.00

WEBS

MEMB. FR-TO	MAX. FACTORED FORCE (LBS)	MAX CSI (LC)
H- C	-116 / 0	0.05 (1)
H- D	-5 / 0	0.00 (1)
G- D	-110 / 0	0.05 (1)
B- H	0 / 262	0.06 (1)
G- E	0 / 263	0.06 (1)

DESIGN CRITERIA

SPECIFIED LOADS:

TOP CH.	LL	=	23.3	PSF
	DL	=	6.0	PSF
BOT CH.	LL	=	0.0	PSF
	DL	=	7.4	PSF
TOTAL LOAD		=	36.7	PSF

SPACING = 24.0 IN. C/C

LOADING IN FLAT SECTION BASED ON A SLOPE OF 6.00/12

THIS TRUSS IS DESIGNED FOR RESIDENTIAL OR SMALL BUILDING REQUIREMENTS OF PART 9, NBCC 2015

THIS DESIGN COMPLIES WITH:
- PART 9 OF BCBC 2018 , NBC-2019AE
- PART 9 OF OBC 2012 (2019 AMENDMENT)
- CSA 086-14
- TPIC 2014

(55 % OF 27.2 P.S.F. G.S.L. PLUS 8.4 P.S.F. RAIN LOAD) EQUALS 23.3 P.S.F. SPECIFIED ROOF LIVE LOAD

ALLOWABLE DEFL.(LL)= L/360 (0.29")
CALCULATED VERT. DEFL.(LL) = L/ 999 (0.00")
ALLOWABLE DEFL.(TL)= L/360 (0.29")
CALCULATED VERT. DEFL.(TL) = L/ 999 (0.01")

CSI: TC=0.15/1.00 (D-E:1) , BC=0.07/1.00 (G-H:4) , WB=0.06/1.00 (E-G:1) , SSI=0.11/1.00 (B-C:1)

DOL LUMBER=1.00 NAIL=1.00 LS BEND=1.10 COMP=1.10 SHEAR=1.10 TENS= 1.10

COMPANION LIVE LOAD FACTOR = 1.00

TRUSS PLATE MANUFACTURER IS NOT RESPONSIBLE FOR QUALITY CONTROL IN THE TRUSS MANUFACTURING PLANT .

NAIL VALUES

PLATE	GRIP(DRY) (PSI) MAX	MIN	SHEAR (PLI) MAX	MIN	SECTION (PLI) MAX	MIN
MT20	650	371	1747	788	1987	1873

PLATE PLACEMENT TOL. = 0.250 inches

PLATE ROTATION TOL. = 5.0 Deg.

JSI GRIP= 0.31 (H) (INPUT = 0.90)
JSI METAL= 0.08 (B) (INPUT = 0.95)

LICENSED PROFESSIONAL ENGINEER
02-28-24
H. J. G. ALVES
100009024
PROVINCE OF ONTARIO

Structural component only
DWG# T-2406429

JOB NAME	TRUSS NAME	QUANTITY	PLY	JOB DESC.	DRWG NO.
425913	T38Z	1	1	ROYAL PINE HOMES TRUSS DESC.	

Tamarack Roof Truss, Burlington

Version 8.630 S Aug 30 2023 MiTek Industries, Inc. Wed Feb 28 15:03:17 2024 Page 1
ID:sd0FDfbi38oVqvTaiRkhtSzPAoD-YcGWi_REQJybx3OSzXutyGjccvoLrKcA2rGZ5Yzgavu

Scale = 1:32.5

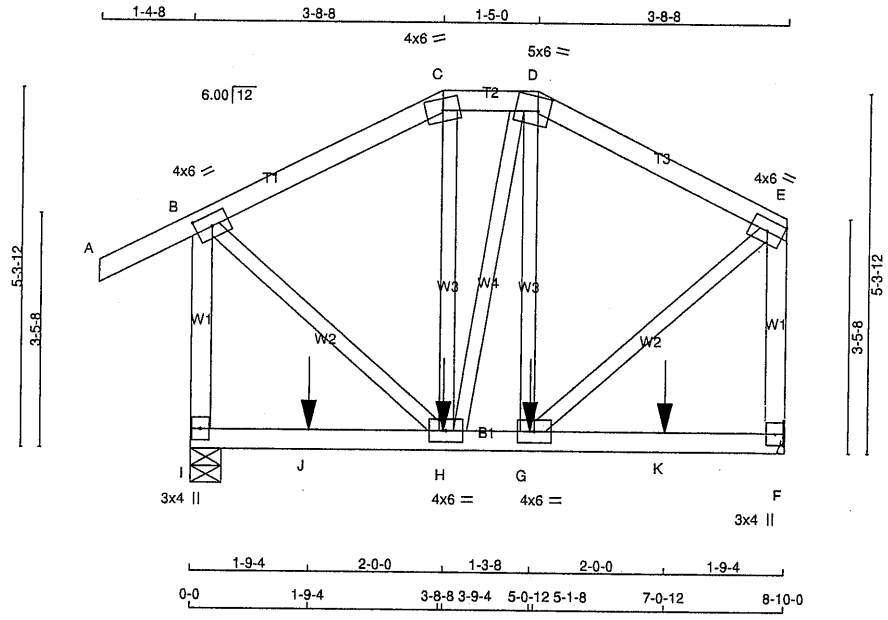

TOTAL WEIGHT = 49 lb [M]

LUMBER
N. L. G. A. RULES

CHORDS	SIZE		LUMBER	DESCR.
A - C	2x4	DRY	No.2	SPF
C - D	2x4	DRY	No.2	SPF
D - E	2x4	DRY	No.2	SPF
I - B	2x4	DRY	No.2	SPF
F - E	2x4	DRY	No.2	SPF
I - F	2x4	DRY	No.2	SPF
ALL WEBS EXCEPT	2x3	DRY	No.2	SPF

DRY: SEASONED LUMBER.

PLATES (table is in inches)

JT	TYPE	PLATES	W	LEN	Y	X
B	TMVW-t	MT20	4.0	6.0	2.00	3.00
C	TTW-m	MT20	4.0	6.0		
D	TTWW-m	MT20	5.0	6.0	2.50	2.00
E	TMVW-t	MT20	4.0	6.0		Edge
F	BMV1+p	MT20	3.0	4.0		
G	BMWW-t	MT20	4.0	6.0		
H	BMWWW-t	MT20	4.0	6.0		
I	BMV1+p	MT20	3.0	4.0		

Edge - INDICATES REFERENCE CORNER OF PLATE TOUCHES EDGE OF CHORD.

NOTES- (1)
1) Lateral braces to be a minimum of 2X4 SPF #2.

DIMENSIONS, SUPPORTS AND LOADINGS SPECIFIED BY FABRICATOR TO BE VERIFIED BY BUILDING DESIGNER

BEARINGS

JT	FACTORED GROSS REACTION VERT	HORZ	MAXIMUM FACTORED GROSS REACTION DOWN	HORZ	UPLIFT	INPUT BRG IN-SX	REQRD BRG IN-SX
I	917	0	917	0	0	5-8	1-8
F	794	0	794	0	0	MECHANICAL	

A SUITABLE HANGER/MECHANICAL CONNECTION IS REQUIRED AT JOINT F. MINIMUM BEARING LENGTH AT JOINT F = 1-8.

UNFACTORED REACTIONS

JT	1ST LCASE COMBINED	MAX./MIN. COMPONENT REACTIONS SNOW	LIVE	PERM.LIVE	WIND	DEAD	SOIL
I	645	439 / 0	0 / 0	0 / 0	0 / 0	206 / 0	0 / 0
F	561	372 / 0	0 / 0	0 / 0	0 / 0	189 / 0	0 / 0

BEARING MATERIAL TO BE SPF NO.2 OR BETTER AT JOINT(S) I

BRACING
TOP CHORD TO BE SHEATHED OR MAX. PURLIN SPACING = 6.25 FT.
MAX. UNBRACED BOTTOM CHORD LENGTH = 10.00 FT OR RIGID CEILING DIRECTLY APPLIED.

ALL PITCH BREAKS AND PERIMETER CORNER JOINTS MUST BE LATERALLY RESTRAINED.

LOADING
TOTAL LOAD CASES: (4)

CHORDS

MEMB. FR-TO	MAX. FORCE (LBS)	FACTORED VERT. LOAD (PLF) FROM	TO	LC1 MAX CSI (LC)	MAX. UNBRAC LENGTH
A- B	0 / 27	-84.9	-84.9	0.14 (1)	10.00
B- C	-453 / 0	-84.9	-84.9	0.22 (1)	6.25
C- D	-405 / 0	-84.9	-84.9	0.03 (1)	6.25
D- E	-453 / 0	-84.9	-84.9	0.22 (1)	6.25
I- B	-818 / 0	0.0	0.0	0.17 (1)	7.81
F- E	-696 / 0	0.0	0.0	0.14 (1)	7.81
I- J	0 / 0	-18.5	-18.5	0.22 (1)	10.00
J- H	0 / 0	-18.5	-18.5	0.22 (1)	10.00
H- G	0 / 405	-18.5	-18.5	0.21 (1)	10.00
G- K	0 / 0	-18.5	-18.5	0.22 (1)	10.00
K- F	0 / 0	-18.5	-18.5	0.22 (1)	10.00

WEBS

MEMB. FR-TO	MAX. FORCE (LBS)	MAX CSI (LC)
H- C	-14 / 25	0.01 (4)
H- D	0 / 0	0.00 (1)
G- D	-13 / 24	0.01 (4)
B- H	0 / 525	0.13 (1)
G- E	0 / 526	0.13 (1)

SPECIFIED CONCENTRATED LOADS (LBS)

JT	LOC.	LC1	MAX-	MAX+	FACE	DIR.	TYPE	HEEL	CONN.
G	5-0-12	-121	-121	---	BACK	VERT	TOTAL	---	C1
H	3-9-4	-121	-121	---	BACK	VERT	TOTAL	---	C1
J	1-9-4	-116	-116	---	BACK	VERT	TOTAL	---	C1
K	7-0-12	-116	-116	---	BACK	VERT	TOTAL	---	C1

CONNECTION REQUIREMENTS

1) C1: A SUITABLE HANGER/MECHANICAL CONNECTION IS REQUIRED.

DESIGN CRITERIA

SPECIFIED LOADS:

TOP CH.	LL	=	23.3	PSF
	DL	=	6.0	PSF
BOT CH.	LL	=	0.0	PSF
	DL	=	7.4	PSF
TOTAL LOAD		=	36.7	PSF

SPACING = 24.0 IN. C/C

LOADING IN FLAT SECTION BASED ON A SLOPE OF 6.00/12

THIS TRUSS IS DESIGNED FOR RESIDENTIAL OR SMALL BUILDING REQUIREMENTS OF PART 9, NBCC 2015

THIS DESIGN COMPLIES WITH:
- PART 9 OF BCBC 2018 , NBC-2019AE
- PART 9 OF OBC 2012 (2019 AMENDMENT)
- CSA 086-14
- TPIC 2014

(55 % OF 27.2 P.S.F. G.S.L. PLUS 8.4 P.S.F. RAIN LOAD) EQUALS 23.3 P.S.F. SPECIFIED ROOF LIVE LOAD

ALLOWABLE DEFL.(LL)= L/360 (0.29")
CALCULATED VERT. DEFL.(LL) = L/ 999 (0.02")
ALLOWABLE DEFL.(TL)= L/360 (0.29")
CALCULATED VERT. DEFL.(TL) = L/ 999 (0.04")

CSI: TC=0.22/1.00 (D-E:1) , BC=0.22/1.00 (H-I:1) , WB=0.13/1.00 (E-G:1) , SSI=0.12/1.00 (B-C:1)

DOL LUMBER=1.00 NAIL=1.00 LS BEND=1.00 COMP=1.00 SHEAR=1.00 TENS= 1.00

COMPANION LIVE LOAD FACTOR = 1.00

TRUSS PLATE MANUFACTURER IS NOT RESPONSIBLE FOR QUALITY CONTROL IN THE TRUSS MANUFACTURING PLANT .

NAIL VALUES

PLATE	GRIP(DRY) (PSI) MAX	MIN	SHEAR (PLI) MAX	MIN	SECTION (PLI) MAX	MIN
MT20	650	371	1747	788	1987	1873

PLATE PLACEMENT TOL. = 0.250 inches

PLATE ROTATION TOL. = 5.0 Deg.

JSI GRIP= 0.62 (H) (INPUT = 0.90)
JSI METAL= 0.15 (H) (INPUT = 0.95)

LICENSED PROFESSIONAL ENGINEER
02-28-24
H. J. G. ALVES
100009024
PROVINCE OF ONTARIO

Structural component only
DWG# T-2406430

JOB NAME	TRUSS NAME	QUANTITY	PLY	JOB DESC.	DRWG NO.
425913	T39	1	2	ROYAL PINE HOMES TRUSS DESC.	

Tamarack Roof Truss, Burlington

Version 8.630 S Aug 30 2023 MiTek Industries, Inc. Wed Feb 28 15:03:19 2024 Page 1
ID:sd0FDfbi38oVqvTaiRkhtSzPAoD-V?OG7gSUxwCJBNXr5yxL1hp?jjVUJF9TV9lgAQzgavs

Scale = 1:24.7

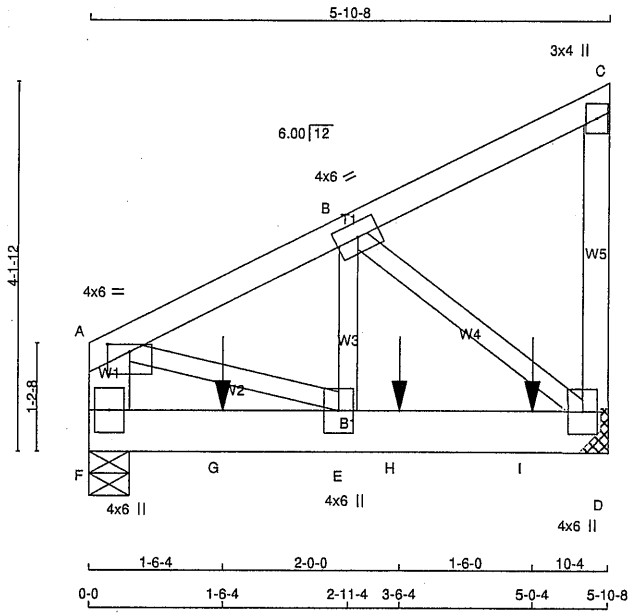

TOTAL WEIGHT = 2 X 29 = 59 lb

LUMBER
N. L. G. A. RULES

CHORDS	SIZE		LUMBER	DESCR.
A - C	2x4	DRY	No.2	SPF
D - C	2x4	DRY	No.2	SPF
F - A	2x6	DRY	No.2	SPF
F - D	2x6	DRY	No.2	SPF
ALL WEBS EXCEPT	2x3	DRY	No.2	SPF

DRY: SEASONED LUMBER.

DESIGN CONSISTS OF 2 TRUSSES BUILT SEPARATELY THEN FASTENED TOGETHER AS FOLLOWS:

CHORDS #ROWS	SURFACE SPACING (IN)	LOAD(PLF)
TOP CHORDS : (0.122"X3") SPIRAL NAILS		
A- C 1	12	TOP
C- D 1	12	TOP
F- A 2	12	TOP
BOTTOM CHORDS : (0.122"X3") SPIRAL NAILS		
F- D 2	12	SIDE(0.0)
WEBS : (0.122"X3") SPIRAL NAILS		
2x3 1	6	

NAILS TO BE DRIVEN FROM ONE SIDE ONLY.

GIRDER NAILING ASSUMES NAILED HANGERS ARE FASTENED WITH MIN. 3-0 INCH NAILS.

TOP - COMPONENTS ARE LOADED FROM THE TOP AND MUST BE PLACED ON TOP EDGE OF ALL PLIES FOR THE LOAD TO BE TRANSFERRED TO EACH PLY.

SIDE - PLF SHOWN IS THE EQUIVALENT UDL APPLIED TO ONE SIDE THAT THE CORRESPONDING NAILING PATTERN SHALL BE CAPABLE OF TRANSFERING. REMAINING PLF MUST BE APPLIED ON THE OPPOSITE SIDE OR ON THE TOP.

PLATES (table is in inches)

JT	TYPE	PLATES	W	LEN	Y	X
A	TMWW-p	MT20	4.0	6.0	1.00	3.00
B	TMWW-t	MT20	4.0	6.0		

LICENSED PROFESSIONAL ENGINEER
02-28-24
H. J. G. ALVES
100009024
PROVINCE OF ONTARIO

Structural component only
DWG# T-2406431

DIMENSIONS, SUPPORTS AND LOADINGS SPECIFIED BY FABRICATOR TO BE VERIFIED BY BUILDING DESIGNER

BEARINGS

JT	FACTORED GROSS REACTION VERT	HORZ	MAXIMUM FACTORED GROSS REACTION DOWN	HORZ	UPLIFT	INPUT BRG IN-SX	REQRD BRG IN-SX
D	1146	0	1146	0	0	MECHANICAL	
F	845	0	845	0	0	5-8	1-8

A SUITABLE HANGER/MECHANICAL CONNECTION IS REQUIRED AT JOINT D. MINIMUM BEARING LENGTH AT JOINT D = 1-8.

UNFACTORED REACTIONS

JT	1ST LCASE COMBINED	MAX./MIN. COMPONENT REACTIONS SNOW	LIVE	PERM.LIVE	WIND	DEAD	SOIL
D	811	527 / 0	0 / 0	0 / 0	0 / 0	284 / 0	0 / 0
F	596	400 / 0	0 / 0	0 / 0	0 / 0	196 / 0	0 / 0

BEARING MATERIAL TO BE SPF NO.2 OR BETTER AT JOINT(S) F

BRACING
TOP CHORD TO BE SHEATHED OR MAX. PURLIN SPACING = 6.25 FT.
MAX. UNBRACED BOTTOM CHORD LENGTH = 10.00 FT OR RIGID CEILING DIRECTLY APPLIED.

ALL PITCH BREAKS AND PERIMETER CORNER JOINTS MUST BE LATERALLY RESTRAINED.

LOADING
TOTAL LOAD CASES: (4)

CHORDS

MEMB. FR-TO	MAX. FORCE (LBS)	FACTORED VERT. LOAD (PLF) FROM	TO	LC1	MAX CSI (LC)	MAX. UNBRAC LENGTH
A- B	-923 / 0	-84.9	-84.9	0.06 (1)	6.25	
B- C	-11 / 0	-84.9	-84.9	0.05 (1)	6.25	
D- C	-100 / 0	0.0	0.0	0.01 (1)	7.81	
F- A	-750 / 0	0.0	0.0	0.03 (1)	7.81	
F- G	0 / 0	-18.5	-18.5	0.08 (1)	10.00	
G- E	0 / 0	-18.5	-18.5	0.08 (1)	10.00	
E- H	0 / 835	-18.5	-18.5	0.18 (1)	10.00	
H- I	0 / 835	-18.5	-18.5	0.18 (1)	10.00	
I- D	0 / 835	-18.5	-18.5	0.18 (1)	10.00	

WEBS

MEMB. FR-TO	MAX. FORCE (LBS)	MAX CSI (LC)
E- B	0 / 769	0.10 (1)
B- D	-1058 / 0	0.13 (1)
A- E	0 / 867	0.11 (1)

SPECIFIED CONCENTRATED LOADS (LBS)

JT	LOC.	LC1	MAX-	MAX+	FACE	DIR.	TYPE	HEEL	CONN.
G	1-6-4	-197	-197	---	BACK	VERT	TOTAL	---	C1
H	3-6-4	-473	-473	---	BACK	VERT	TOTAL	---	C1
I	5-0-4	-306	-306	---	BACK	VERT	TOTAL	---	C1

CONNECTION REQUIREMENTS

1) C1: A SUITABLE HANGER/MECHANICAL CONNECTION IS REQUIRED.

DESIGN CRITERIA

SPECIFIED LOADS:

TOP CH.	LL =	23.3	PSF
	DL =	6.0	PSF
BOT CH.	LL =	0.0	PSF
	DL =	7.4	PSF
TOTAL LOAD	=	36.7	PSF

SPACING = 24.0 IN. C/C

THIS TRUSS IS DESIGNED FOR RESIDENTIAL OR SMALL BUILDING REQUIREMENTS OF PART 9, NBCC 2015

THIS DESIGN COMPLIES WITH:
- PART 9 OF BCBC 2018 , NBC-2019AE
- PART 9 OF OBC 2012 (2019 AMENDMENT)
- CSA 086-14
- TPIC 2014

(55 % OF 27.2 P.S.F. G.S.L. PLUS 8.4 P.S.F. RAIN LOAD) EQUALS 23.3 P.S.F. SPECIFIED ROOF LIVE LOAD

ALLOWABLE DEFL.(LL)= L/360 (0.20")
CALCULATED VERT. DEFL.(LL) = L/ 999 (0.01")
ALLOWABLE DEFL.(TL)= L/360 (0.20")
CALCULATED VERT. DEFL.(TL) = L/ 999 (0.01")

CSI: TC=0.06/1.00 (A-B:1) , BC=0.18/1.00 (D-E:1) , WB=0.13/1.00 (B-D:1) , SSI=0.25/1.00 (D-E:1)

DOL LUMBER=1.00 NAIL=1.00 LS BEND=1.00 COMP=1.00 SHEAR=1.00 TENS= 1.00

COMPANION LIVE LOAD FACTOR = 1.00

AUTOSOLVE RIGHT HEEL ONLY

TRUSS PLATE MANUFACTURER IS NOT RESPONSIBLE FOR QUALITY CONTROL IN THE TRUSS MANUFACTURING PLANT .

NAIL VALUES

PLATE	GRIP(DRY) (PSI) MAX	MIN	SHEAR (PLI) MAX	MIN	SECTION (PLI) MAX	MIN
MT20	650	371	1747	788	1987	1873

PLATE PLACEMENT TOL. = 0.250 inches

PLATE ROTATION TOL. = 5.0 Deg.

JSI GRIP= 0.39 (D) (INPUT = 0.90)
JSI METAL= 0.19 (D) (INPUT = 0.95)

CONTINUED ON PAGE 2

JOB NAME	TRUSS NAME	QUANTITY	PLY	JOB DESC. ROYAL PINE HOMES	DRWG NO.
425913	T39	1	2	TRUSS DESC.	

PLATES (table is in inches)

JT	TYPE	PLATES	W	LEN	Y	X
C	TMV+p	MT20	3.0	4.0		
D	BMVW1+p	MT20	4.0	6.0		
E	BMWW+t	MT20	4.0	6.0		
F	BMV1+p	MT20	4.0	6.0		

NOTES- (1)
1) Lateral braces to be a minimum of 2X4 SPF #2.

Structural component only
DWG# T-2406431

JOB NAME	TRUSS NAME	QUANTITY	PLY	JOB DESC.	DRWG NO.
425913	T39Z	1	2	ROYAL PINE HOMES TRUSS DESC.	

Tamarack Roof Truss, Burlington

Version 8.630 S Aug 30 2023 MiTek Industries, Inc. Wed Feb 28 15:03:20 2024 Page 1
ID:sd0FDfbi38oVqvTaiRkhtSzPAoD-zByeK0T6iEKAoX61ffSaavLAU7rq2hzckpVDiszgavr

Scale = 1:24.7

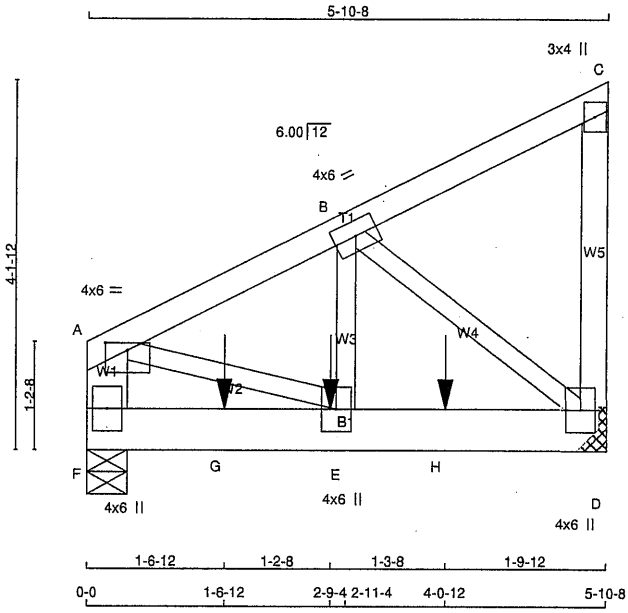

TOTAL WEIGHT = 2 X 29 = 59 lb [M]

LUMBER
N. L. G. A. RULES

CHORDS	SIZE		LUMBER	DESCR.
A - C	2x4	DRY	No.2	SPF
D - C	2x4	DRY	No.2	SPF
F - A	2x6	DRY	No.2	SPF
F - D	2x6	DRY	No.2	SPF
ALL WEBS EXCEPT	2x3	DRY	No.2	SPF

DRY: SEASONED LUMBER.

DESIGN CONSISTS OF 2 TRUSSES BUILT SEPARATELY THEN FASTENED TOGETHER AS FOLLOWS:

CHORDS	#ROWS	SURFACE SPACING (IN)	LOAD(PLF)
TOP CHORDS : (0.122"X3") SPIRAL NAILS			
A- C	1	12	TOP
C- D	1	12	TOP
F- A	2	12	TOP
BOTTOM CHORDS : (0.122"X3") SPIRAL NAILS			
F- D	2	12	SIDE(183.1)
WEBS : (0.122"X3") SPIRAL NAILS			
B- E	1	6	SIDE(19.4)
2x3	1	6	

NAILS TO BE DRIVEN FROM ONE SIDE ONLY.

GIRDER NAILING ASSUMES NAILED HANGERS ARE FASTENED WITH MIN. 3-0 INCH NAILS.

TOP - COMPONENTS ARE LOADED FROM THE TOP AND MUST BE PLACED ON TOP EDGE OF ALL PLIES FOR THE LOAD TO BE TRANSFERRED TO EACH PLY.

SIDE - PLF SHOWN IS THE EQUIVALENT UDL APPLIED TO ONE SIDE THAT THE CORRESPONDING NAILING PATTERN SHALL BE CAPABLE OF TRANSFERING. REMAINING PLF MUST BE APPLIED ON THE OPPOSITE SIDE OR ON THE TOP.

PLATES (table is in inches)

JT	TYPE	PLATES	W	LEN	Y	X
A	TMVW-p	MT20	4.0	6.0	1.00	3.00

LICENSED PROFESSIONAL ENGINEER
02-28-24
H. J. G. ALVES
100009024
PROVINCE OF ONTARIO

Structural component only
DWG# T-2406432

DIMENSIONS, SUPPORTS AND LOADINGS SPECIFIED BY FABRICATOR TO BE VERIFIED BY BUILDING DESIGNER

BEARINGS

JT	FACTORED GROSS REACTION VERT	HORZ	MAXIMUM FACTORED GROSS REACTION DOWN	HORZ	UPLIFT	INPUT BRG IN-SX	REQRD BRG IN-SX
D	1060	0	1060	0	0	MECHANICAL	
F	1008	0	1008	0	0	5-8	1-8

A SUITABLE HANGER/MECHANICAL CONNECTION IS REQUIRED AT JOINT D. MINIMUM BEARING LENGTH AT JOINT D = 1-8.

UNFACTORED REACTIONS

JT	1ST LCASE COMBINED	MAX./MIN. COMPONENT REACTIONS SNOW	LIVE	PERM.LIVE	WIND	DEAD	SOIL
D	748	501 / 0	0 / 0	0 / 0	0 / 0	247 / 0	0 / 0
F	709	486 / 0	0 / 0	0 / 0	0 / 0	224 / 0	0 / 0

BEARING MATERIAL TO BE SPF NO.2 OR BETTER AT JOINT(S) F

BRACING
TOP CHORD TO BE SHEATHED OR MAX. PURLIN SPACING = 6.25 FT.
MAX. UNBRACED BOTTOM CHORD LENGTH = 10.00 FT OR RIGID CEILING DIRECTLY APPLIED.

ALL PITCH BREAKS AND PERIMETER CORNER JOINTS MUST BE LATERALLY RESTRAINED.

LOADING
TOTAL LOAD CASES: (4)

CHORDS

MEMB. FR-TO	MAX. FACTORED FORCE (LBS)	FACTORED VERT. LOAD (PLF) FROM	TO	LC1 MAX CSI (LC)	MAX. UNBRAC LENGTH
A- B	-1120 / 0	-84.9	-84.9	0.06 (1)	6.25
B- C	-10 / 0	-84.9	-84.9	0.05 (1)	6.25
D- C	-102 / 0	0.0	0.0	0.01 (1)	7.81
F- A	-888 / 0	0.0	0.0	0.03 (1)	7.81
F- G	0 / 0	-18.5	-18.5	0.06 (1)	10.00
G- E	0 / 0	-18.5	-18.5	0.06 (1)	10.00
E- H	0 / 1011	-18.5	-18.5	0.17 (1)	10.00
H- D	0 / 1011	-18.5	-18.5	0.17 (1)	10.00

WEBS

MEMB. FR-TO	MAX. FACTORED FORCE (LBS)	MAX CSI (LC)
E- B	0 / 997	0.12 (1)
B- D	-1281 / 0	0.15 (1)
A- E	0 / 1050	0.13 (1)

SPECIFIED CONCENTRATED LOADS (LBS)

JT	LOC.	LC1	MAX-	MAX+	FACE	DIR.	TYPE	HEEL	CONN.
E	2-9-4	-546	-546	---	FRONT	VERT	TOTAL	---	C1
G	1-6-12	-171	-171	---	BACK	VERT	TOTAL	---	C1
H	4-0-12	-309	-309	---	FRONT	VERT	TOTAL	---	C1

CONNECTION REQUIREMENTS

1) C1: A SUITABLE HANGER/MECHANICAL CONNECTION IS REQUIRED.

DESIGN CRITERIA

SPECIFIED LOADS:

TOP CH.	LL	=	23.3	PSF
	DL	=	6.0	PSF
BOT CH.	LL	=	0.0	PSF
	DL	=	7.4	PSF
TOTAL LOAD		=	36.7	PSF

SPACING = 24.0 IN. C/C

THIS TRUSS IS DESIGNED FOR RESIDENTIAL OR SMALL BUILDING REQUIREMENTS OF PART 9, NBCC 2015

THIS DESIGN COMPLIES WITH:
- PART 9 OF BCBC 2018 , NBC-2019AE
- PART 9 OF OBC 2012 (2019 AMENDMENT)
- CSA 086-14
- TPIC 2014

(55 % OF 27.2 P.S.F. G.S.L. PLUS 8.4 P.S.F. RAIN LOAD) EQUALS 23.3 P.S.F. SPECIFIED ROOF LIVE LOAD

ALLOWABLE DEFL.(LL)= L/360 (0.20")
CALCULATED VERT. DEFL.(LL) = L/ 999 (0.01")
ALLOWABLE DEFL.(TL)= L/360 (0.20")
CALCULATED VERT. DEFL.(TL) = L/ 999 (0.01")

CSI: TC=0.06/1.00 (A-B:1) , BC=0.17/1.00 (D-E:1) , WB=0.15/1.00 (B-D:1) , SSI=0.11/1.00 (D-E:1)

DOL LUMBER=1.00 NAIL=1.00 LS BEND=1.00 COMP=1.00 SHEAR=1.00 TENS= 1.00

COMPANION LIVE LOAD FACTOR = 1.00

AUTOSOLVE RIGHT HEEL ONLY

TRUSS PLATE MANUFACTURER IS NOT RESPONSIBLE FOR QUALITY CONTROL IN THE TRUSS MANUFACTURING PLANT .

NAIL VALUES

PLATE	GRIP(DRY) (PSI) MAX	MIN	SHEAR (PLI) MAX	MIN	SECTION (PLI) MAX	MIN
MT20	650	371	1747	788	1987	1873

PLATE PLACEMENT TOL. = 0.250 inches

PLATE ROTATION TOL. = 5.0 Deg.

JSI GRIP= 0.47 (D) (INPUT = 0.90)
JSI METAL= 0.23 (D) (INPUT = 0.95)

CONTINUED ON PAGE 2

JOB NAME	TRUSS NAME	QUANTITY	PLY	JOB DESC.	DRWG NO.
425913	T39Z	1	2	ROYAL PINE HOMES TRUSS DESC.	

Tamarack Roof Truss, Burlington

ID:sd0FDfbi38oVqvTaiRkhtSzPAoD-zByeK0T6iEKAoX61ffSaavLAU7rq2hzckpVDiszgavr

PLATES (table is in inches)

JT	TYPE	PLATES	W	LEN	Y	X
B	TMWW-t	MT20	4.0	6.0		
C	TMV+p	MT20	3.0	4.0		
D	BMVW1+p	MT20	4.0	6.0		
E	BMWW+t	MT20	4.0	6.0		
F	BMV1+p	MT20	4.0	6.0		

NOTES- (1)
1) Lateral braces to be a minimum of 2X4 SPF #2.

LICENSED PROFESSIONAL ENGINEER
02-28-24
H. J. G. ALVES
100009024
PROVINCE OF ONTARIO

Structural component only
DWG# T-2406432

JOB NAME	TRUSS NAME	QUANTITY	PLY	JOB DESC.	DRWG NO.
425913	T39Z2	2	2	ROYAL PINE HOMES TRUSS DESC.	

Tamarack Roof Truss, Burlington

Version 8.630 S Aug 30 2023 MiTek Industries, Inc. Wed Feb 28 15:03:21 2024 Page 1
ID:sd0FDfbi38oVqvTaiRkhtSzPAoD-RNV1YMUkTYS1QhhDCMzp66uLCXBCn9llzTEmEJzgavc

Scale = 1:24.7

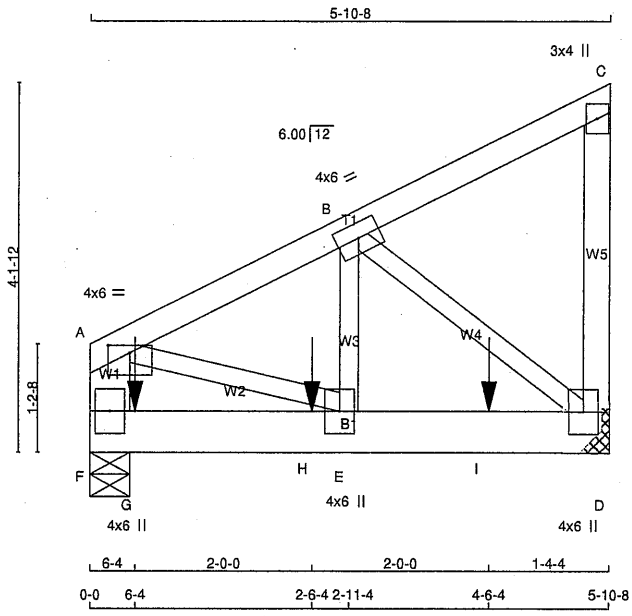

TOTAL WEIGHT = 4 X 29 = 118 lb

LUMBER
N. L. G. A. RULES

CHORDS	SIZE		LUMBER	DESCR.
A - C	2x4	DRY	No.2	SPF
D - C	2x4	DRY	No.2	SPF
F - A	2x6	DRY	No.2	SPF
F - D	2x6	DRY	No.2	SPF
ALL WEBS EXCEPT	2x3	DRY	No.2	SPF

DRY: SEASONED LUMBER.

DESIGN CONSISTS OF 2 TRUSSES BUILT SEPARATELY THEN FASTENED TOGETHER AS FOLLOWS:

CHORDS	#ROWS	SURFACE SPACING (IN)	LOAD(PLF)
TOP CHORDS : (0.122"X3") SPIRAL NAILS			
A- C	1	12	TOP
C- D	1	12	TOP
F- A	2	3	SIDE(9.0)
BOTTOM CHORDS : (0.122"X3") SPIRAL NAILS			
F- D	2	12	SIDE(122.0)
WEBS : (0.122"X3") SPIRAL NAILS			
2x3	1	6	

NAILS TO BE DRIVEN FROM ONE SIDE ONLY.

GIRDER NAILING ASSUMES NAILED HANGERS ARE FASTENED WITH MIN. 3-0 INCH NAILS.

TOP - COMPONENTS ARE LOADED FROM THE TOP AND MUST BE PLACED ON TOP EDGE OF ALL PLIES FOR THE LOAD TO BE TRANSFERRED TO EACH PLY.

SIDE - PLF SHOWN IS THE EQUIVALENT UDL APPLIED TO ONE SIDE THAT THE CORRESPONDING NAILING PATTERN SHALL BE CAPABLE OF TRANSFERING. REMAINING PLF MUST BE APPLIED ON THE OPPOSITE SIDE OR ON THE TOP.

PLATES (table is in inches)

JT	TYPE	PLATES	W	LEN	Y	X
A	TMVW-p	MT20	4.0	6.0	1.00	3.00
B	TMWW-t	MT20	4.0	6.0		

LICENSED PROFESSIONAL ENGINEER
02-28-24
H. J. G. ALVES
100009024
PROVINCE OF ONTARIO

Structural component only
DWG# T-2406433

DIMENSIONS, SUPPORTS AND LOADINGS SPECIFIED BY FABRICATOR TO BE VERIFIED BY BUILDING DESIGNER

BEARINGS

JT	FACTORED GROSS REACTION VERT	HORZ	MAXIMUM FACTORED GROSS REACTION DOWN	HORZ	UPLIFT	INPUT BRG IN-SX	REQRD BRG IN-SX
D	945	0	945	0	0	MECHANICAL	
F	1160	0	1160	0	0	5-8	1-8

A SUITABLE HANGER/MECHANICAL CONNECTION IS REQUIRED AT JOINT D. MINIMUM BEARING LENGTH AT JOINT D = 1-8.

UNFACTORED REACTIONS

JT	1ST LCASE COMBINED	MAX./MIN. COMPONENT REACTIONS SNOW	LIVE	PERM.LIVE	WIND	DEAD	SOIL
D	666	452 / 0	0 / 0	0 / 0	0 / 0	214 / 0	0 / 0
F	817	556 / 0	0 / 0	0 / 0	0 / 0	261 / 0	0 / 0

BEARING MATERIAL TO BE SPF NO.2 OR BETTER AT JOINT(S) F

BRACING
TOP CHORD TO BE SHEATHED OR MAX. PURLIN SPACING = 6.25 FT.
MAX. UNBRACED BOTTOM CHORD LENGTH = 10.00 FT OR RIGID CEILING DIRECTLY APPLIED.

ALL PITCH BREAKS AND PERIMETER CORNER JOINTS MUST BE LATERALLY RESTRAINED.

LOADING
TOTAL LOAD CASES: (4)

CHORDS

MEMB. FR-TO	MAX. FORCE (LBS)	FACTORED VERT. LOAD LC1 (PLF) FROM	TO	MAX CSI (LC)	MAX. UNBRAC LENGTH
A- B	-871 / 0	-84.9	-84.9	0.06 (1)	6.25
B- C	-11 / 0	-84.9	-84.9	0.05 (1)	6.25
D- C	-100 / 0	0.0	0.0	0.01 (1)	7.81
F- A	-713 / 0	0.0	0.0	0.03 (1)	7.81
F- G	0 / 0	-18.5	-18.5	0.08 (1)	10.00
G- H	0 / 0	-18.5	-18.5	0.08 (1)	10.00
H- E	0 / 0	-18.5	-18.5	0.08 (1)	10.00
E- I	0 / 789	-18.5	-18.5	0.16 (1)	10.00
I- D	0 / 789	-18.5	-18.5	0.16 (1)	10.00

WEBS

MEMB. FR-TO	MAX. FORCE (LBS)	MAX CSI (LC)
E- B	0 / 709	0.09 (1)
B- D	-999 / 0	0.12 (1)
A- E	0 / 818	0.10 (1)

SPECIFIED CONCENTRATED LOADS (LBS)

JT	LOC.	LC1	MAX-	MAX+	FACE	DIR.	TYPE	HEEL	CONN.
G	6-4	-353	-353	---	BACK	VERT	TOTAL	---	C1
H	2-6-4	-349	-349	---	BACK	VERT	TOTAL	---	C1
I	4-6-4	-349	-349	---	FRONT	VERT	TOTAL	---	C1

CONNECTION REQUIREMENTS

1) **C1:** A SUITABLE HANGER/MECHANICAL CONNECTION IS REQUIRED.

[M]

DESIGN CRITERIA

SPECIFIED LOADS:

TOP CH.	LL =	23.3	PSF
	DL =	6.0	PSF
BOT CH.	LL =	0.0	PSF
	DL =	7.4	PSF
TOTAL LOAD	=	36.7	PSF

SPACING = 24.0 IN. C/C

THIS TRUSS IS DESIGNED FOR RESIDENTIAL OR SMALL BUILDING REQUIREMENTS OF PART 9, NBCC 2015

THIS DESIGN COMPLIES WITH:
- PART 9 OF BCBC 2018 , NBC-2019AE
- PART 9 OF OBC 2012 (2019 AMENDMENT)
- CSA 086-14
- TPIC 2014

(55 % OF 27.2 P.S.F. G.S.L. PLUS 8.4 P.S.F. RAIN LOAD) EQUALS 23.3 P.S.F. SPECIFIED ROOF LIVE LOAD

ALLOWABLE DEFL.(LL)= L/360 (0.20")
CALCULATED VERT. DEFL.(LL) = L/ 999 (0.00")
ALLOWABLE DEFL.(TL)= L/360 (0.20")
CALCULATED VERT. DEFL.(TL) = L/ 999 (0.01")

CSI: TC=0.06/1.00 (A-B:1) , BC=0.16/1.00 (D-E:1) , WB=0.12/1.00 (B-D:1) , SSI=0.20/1.00 (E-F:1)

DOL LUMBER=1.00 NAIL=1.00 LS BEND=1.00 COMP=1.00 SHEAR=1.00 TENS= 1.00

COMPANION LIVE LOAD FACTOR = 1.00

AUTOSOLVE RIGHT HEEL ONLY

TRUSS PLATE MANUFACTURER IS NOT RESPONSIBLE FOR QUALITY CONTROL IN THE TRUSS MANUFACTURING PLANT .

NAIL VALUES

PLATE	GRIP(DRY) (PSI) MAX	MIN	SHEAR (PLI) MAX	MIN	SECTION (PLI) MAX	MIN
MT20	650	371	1747	788	1987	1873

PLATE PLACEMENT TOL. = 0.250 inches

PLATE ROTATION TOL. = 5.0 Deg.

JSI GRIP= 0.37 (D) (INPUT = 0.90)
JSI METAL= 0.18 (D) (INPUT = 0.95)

CONTINUED ON PAGE 2

JOB NAME	TRUSS NAME	QUANTITY	PLY	JOB DESC. ROYAL PINE HOMES	DRWG NO.
425913	T39Z2	2	2	TRUSS DESC.	

PLATES (table is in inches)

JT	TYPE	PLATES	W	LEN	Y	X
C	TMV+p	MT20	3.0	4.0		
D	BMVW1+p	MT20	4.0	6.0		
E	BMWW+t	MT20	4.0	6.0		
F	BMV1+p	MT20	4.0	6.0		

NOTES- (1)
1) Lateral braces to be a minimum of 2X4 SPF #2.

LICENSED PROFESSIONAL ENGINEER
02-28-24
H. J. G. ALVES
100009024
PROVINCE OF ONTARIO

Structural component only
DWG# T-2406433

JOB NAME	TRUSS NAME	QUANTITY	PLY	JOB DESC.	DRWG NO.
425914	T39Z4	1	2	ROYAL PINE HOMES TRUSS DESC.	

Tamarack Roof Truss, Burlington

Version 8.630 S Aug 30 2023 MiTek Industries, Inc. Wed Feb 28 16:19:28 2024 Page 1
ID:sd0FDfbi38oVqvTaiRkhtSzPAoD-D?zY3zlSxIr0qXKzF0PojCYpiWtaLfH_8V2x15zgZoT

Scale = 1:25.3

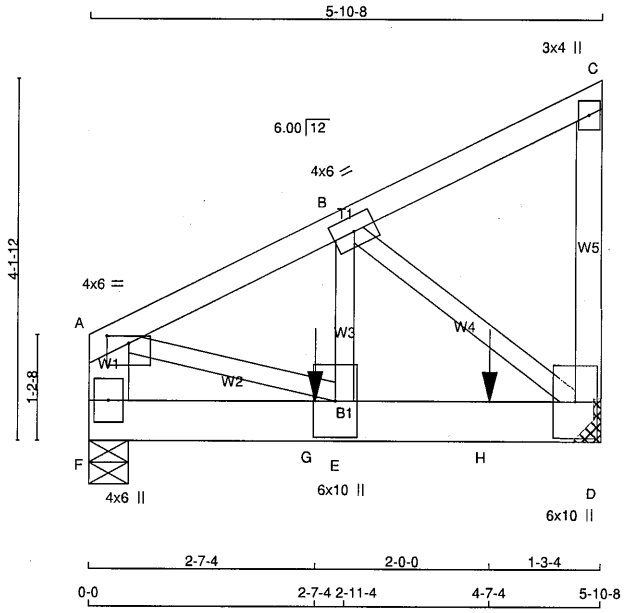

TOTAL WEIGHT = 2 X 29 = 59 lb
[M]

LUMBER
N. L. G. A. RULES

CHORDS	SIZE		LUMBER	DESCR.
A - C	2x4	DRY	No.2	SPF
D - C	2x4	DRY	No.2	SPF
F - A	2x6	DRY	No.2	SPF
F - D	2x6	DRY	No.2	SPF
ALL WEBS EXCEPT	2x3	DRY	No.2	SPF

DRY: SEASONED LUMBER.

DESIGN CONSISTS OF 2 TRUSSES BUILT SEPARATELY THEN FASTENED TOGETHER AS FOLLOWS:

CHORDS #ROWS	SURFACE SPACING (IN)	LOAD(PLF)
TOP CHORDS : (0.122"X3") SPIRAL NAILS		
A- C 1	12	TOP
C- D 1	12	TOP
F- A 2	12	TOP
BOTTOM CHORDS : (0.122"X3") SPIRAL NAILS		
F- D 2	12	SIDE(183.1)
WEBS : (0.122"X3") SPIRAL NAILS		
B- E 1	5	SIDE(163.8)
2x3 1	6	

NAILS TO BE DRIVEN FROM ONE SIDE ONLY.

GIRDER NAILING ASSUMES NAILED HANGERS ARE FASTENED WITH MIN. 3-0 INCH NAILS.

TOP - COMPONENTS ARE LOADED FROM THE TOP AND MUST BE PLACED ON TOP EDGE OF ALL PLIES FOR THE LOAD TO BE TRANSFERRED TO EACH PLY.

SIDE - PLF SHOWN IS THE EQUIVALENT UDL APPLIED TO ONE SIDE THAT THE CORRESPONDING NAILING PATTERN SHALL BE CAPABLE OF TRANSFERING. REMAINING PLF MUST BE APPLIED ON THE OPPOSITE SIDE OR ON THE TOP.

PLATES (table is in inches)

JT	TYPE	PLATES	W	LEN	Y	X
A	TMVW-p	MT20	4.0	6.0	1.00	3.00

LICENSED PROFESSIONAL ENGINEER
02-28-24
H. J. G. ALVES
100009024
PROVINCE OF ONTARIO

Structural component only
DWG# T-2406464

DIMENSIONS, SUPPORTS AND LOADINGS SPECIFIED BY FABRICATOR TO BE VERIFIED BY BUILDING DESIGNER

BEARINGS

JT	FACTORED GROSS REACTION VERT	HORZ	MAXIMUM FACTORED GROSS REACTION DOWN	HORZ	UPLIFT	INPUT BRG IN-SX	REQRD BRG IN-SX
D	1405	0	1405	0	0	MECHANICAL	
F	1185	0	1185	0	0	5-8	1-8

A SUITABLE HANGER/MECHANICAL CONNECTION IS REQUIRED AT JOINT D. MINIMUM BEARING LENGTH AT JOINT D = 1-8.

UNFACTORED REACTIONS

JT	1ST LCASE COMBINED	MAX./MIN. COMPONENT REACTIONS SNOW	LIVE	PERM.LIVE	WIND	DEAD	SOIL
D	992	660 / 0	0 / 0	0 / 0	0 / 0	332 / 0	0 / 0
F	836	562 / 0	0 / 0	0 / 0	0 / 0	274 / 0	0 / 0

BEARING MATERIAL TO BE SPF NO.2 OR BETTER AT JOINT(S) F

BRACING
TOP CHORD TO BE SHEATHED OR MAX. PURLIN SPACING = 6.25 FT.
MAX. UNBRACED BOTTOM CHORD LENGTH = 10.00 FT OR RIGID CEILING DIRECTLY APPLIED.

ALL PITCH BREAKS AND PERIMETER CORNER JOINTS MUST BE LATERALLY RESTRAINED.

LOADING
TOTAL LOAD CASES: (4)

CHORDS

MEMB. FR-TO	MAX. FACTORED FORCE (LBS)	FACTORED VERT. LOAD (PLF) FROM	TO	LC1	MAX CSI (LC)	MAX. UNBRAC LENGTH
A- B	-1384 / 0	-84.9	-84.9	0.05 (1)	6.25	
B- C	-10 / 0	-84.9	-84.9	0.05 (1)	10.00	
D- C	-103 / 0	0.0	0.0	0.01 (1)	7.81	
F- A	-1073 / 0	0.0	0.0	0.04 (1)	7.81	
F- G	0 / 0	-18.5	-18.5	0.08 (1)	10.00	
G- E	0 / 0	-18.5	-18.5	0.08 (1)	10.00	
E- H	0 / 1247	-18.5	-18.5	0.23 (1)	10.00	
H- D	0 / 1247	-18.5	-18.5	0.23 (1)	10.00	

WEBS

MEMB. FR-TO	MAX. FACTORED FORCE (LBS)	MAX CSI (LC)
E- B	0 / 1301	0.16 (1)
B- D	-1580 / 0	0.19 (1)
A- E	0 / 1294	0.16 (1)

SPECIFIED CONCENTRATED LOADS (LBS)

JT	LOC.	LC1	MAX-	MAX+	FACE	DIR.	TYPE	HEEL	CONN.
G	2-7-4	-935	-935	---	FRONT	VERT	TOTAL	---	C1
H	4-7-4	-462	-462	---	FRONT	VERT	TOTAL	---	C1

CONNECTION REQUIREMENTS

1) **C1:** A SUITABLE HANGER/MECHANICAL CONNECTION IS REQUIRED.

DESIGN CRITERIA

SPECIFIED LOADS:

TOP CH.	LL	=	23.3	PSF
	DL	=	6.0	PSF
BOT CH.	LL	=	0.0	PSF
	DL	=	7.4	PSF
TOTAL LOAD		=	36.7	PSF

SPACING = 24.0 IN. C/C

THIS TRUSS IS DESIGNED FOR RESIDENTIAL OR SMALL BUILDING REQUIREMENTS OF PART 9, NBCC 2015

THIS DESIGN COMPLIES WITH:
- PART 9 OF BCBC 2018 , NBC-2019AE
- PART 9 OF OBC 2012 (2019 AMENDMENT)
- CSA 086-14
- TPIC 2014

(55 % OF 27.2 P.S.F. G.S.L. PLUS 8.4 P.S.F. RAIN LOAD) EQUALS 23.3 P.S.F. SPECIFIED ROOF LIVE LOAD

ALLOWABLE DEFL.(LL)= L/360 (0.20")
CALCULATED VERT. DEFL.(LL) = L/ 999 (0.01")
ALLOWABLE DEFL.(TL)= L/360 (0.20")
CALCULATED VERT. DEFL.(TL) = L/ 999 (0.01")

CSI: TC=0.05/1.00 (A-B:1) , BC=0.23/1.00 (D-E:1) , WB=0.19/1.00 (B-D:1) , SSI=0.42/1.00 (E-F:1)

DOL LUMBER=1.00 NAIL=1.00 LS BEND=1.00 COMP=1.00 SHEAR=1.00 TENS= 1.00

COMPANION LIVE LOAD FACTOR = 1.00

AUTOSOLVE RIGHT HEEL ONLY

TRUSS PLATE MANUFACTURER IS NOT RESPONSIBLE FOR QUALITY CONTROL IN THE TRUSS MANUFACTURING PLANT .

NAIL VALUES

PLATE	GRIP(DRY) (PSI) MAX	MIN	SHEAR (PLI) MAX	MIN	SECTION (PLI) MAX	MIN
MT20	650	371	1747	788	1987	1873

PLATE PLACEMENT TOL. = 0.250 inches

PLATE ROTATION TOL. = 5.0 Deg.

JSI GRIP= 0.52 (B) (INPUT = 0.90)
JSI METAL= 0.19 (E) (INPUT = 0.95)

CONTINUED ON PAGE 2

JOB NAME	TRUSS NAME	QUANTITY	PLY	JOB DESC. ROYAL PINE HOMES	DRWG NO.
425914	T39Z4	1	2	TRUSS DESC.	

Tamarack Roof Truss, Burlington

Version 8.630 S Aug 30 2023 MiTek Industries, Inc. Wed Feb 28 16:19:28 2024 Page 2
ID:sd0FDfbi38oVqvTaiRkhtSzPAoD-D?zY3zlSxlr0gXKzF0PojCYpiWtaLfH_8V2x15zgZoT

PLATES (table is in inches)

JT	TYPE	PLATES	W	LEN	Y	X
B	TMWW-t	MT20	4.0	6.0		
C	TMV+p	MT20	3.0	4.0		
D	BMVW1+p	MT20	6.0	10.0		
E	BMWW+t	MT20	6.0	10.0		
F	BMV1+p	MT20	4.0	6.0		

NOTES- (1)
1) Lateral braces to be a minimum of 2X4 SPF #2.

Structural component only
DWG# T-2406464

JOB NAME	TRUSS NAME	QUANTITY	PLY	JOB DESC.	DRWG NO.
425913	T40	2	1	ROYAL PINE HOMES TRUSS DESC.	

Tamarack Roof Truss, Burlington

Version 8.630 S Aug 30 2023 MiTek Industries, Inc. Wed Feb 28 15:03:22 2024 Page 1
ID:VI_DQvi1e49Qy7axT?i10OzOYuG-va3PliVMErau2rGQm4U2fKRUewZMWd7vB7_Kmlzgavp

Scale = 1:29.8

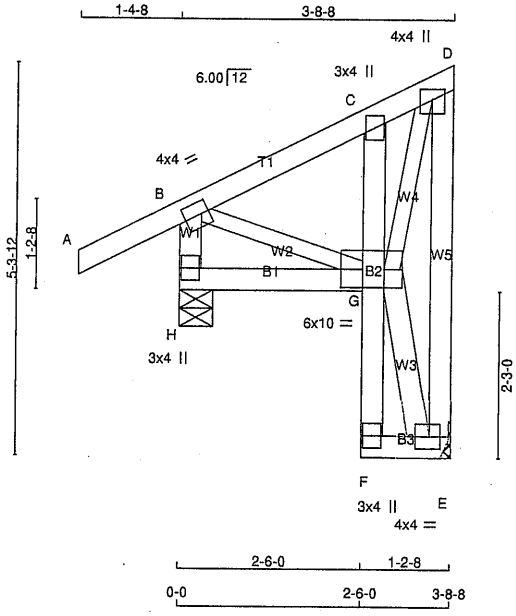

TOTAL WEIGHT = 2 X 28 = 57 lb [M]

LUMBER
N. L. G. A. RULES

CHORDS	SIZE		LUMBER	DESCR.
A - D	2x4	DRY	No.2	SPF
E - D	2x4	DRY	No.2	SPF
H - B	2x4	DRY	No.2	SPF
H - G	2x4	DRY	No.2	SPF
F - C	2x4	DRY	No.2	SPF
F - E	2x4	DRY	No.2	SPF
ALL WEBS EXCEPT	2x3	DRY	No.2	SPF
G - E	2x4	DRY	No.2	SPF

DRY: SEASONED LUMBER.

PLATES (table is in inches)

JT	TYPE	PLATES	W	LEN	Y	X
B	TMVW-t	MT20	4.0	4.0	2.00	1.25
C	TMV+p	MT20	3.0	4.0		
D	TMVW+p	MT20	4.0	4.0	1.75	2.00
E	BMVW1-t	MT20	4.0	4.0	2.00	1.75
F	BMV+p	MT20	3.0	4.0		
G	BVMWWW-l	MT20	6.0	10.0	3.00	3.50
H	BMV1+p	MT20	3.0	4.0		

NOTES- (1)
1) Lateral braces to be a minimum of 2X4 SPF #2.

DIMENSIONS, SUPPORTS AND LOADINGS SPECIFIED BY FABRICATOR TO BE VERIFIED BY BUILDING DESIGNER

BEARINGS

JT	FACTORED GROSS REACTION VERT	HORZ	MAXIMUM FACTORED GROSS REACTION DOWN	HORZ	UPLIFT	INPUT BRG IN-SX	REQRD BRG IN-SX
E	192	0	192	0	0	MECHANICAL	
H	314	0	314	0	0	5-8	1-8

A SUITABLE HANGER/MECHANICAL CONNECTION IS REQUIRED AT JOINT E. MINIMUM BEARING LENGTH AT JOINT E = 1-8.

UNFACTORED REACTIONS

JT	1ST LCASE COMBINED	MAX./MIN. COMPONENT REACTIONS SNOW	LIVE	PERM.LIVE	WIND	DEAD	SOIL
E	136	86 / 0	0 / 0	0 / 0	0 / 0	50 / 0	0 / 0
H	220	153 / 0	0 / 0	0 / 0	0 / 0	67 / 0	0 / 0

BEARING MATERIAL TO BE SPF NO.2 OR BETTER AT JOINT(S) H

BRACING
TOP CHORD TO BE SHEATHED OR MAX. PURLIN SPACING = 6.25 FT.
MAX. UNBRACED BOTTOM CHORD LENGTH = 7.81 FT OR RIGID CEILING DIRECTLY APPLIED.

ALL PITCH BREAKS AND PERIMETER CORNER JOINTS MUST BE LATERALLY RESTRAINED.

LOADING
TOTAL LOAD CASES: (5)

CHORDS

MEMB. FR-TO	MAX. FACTORED FORCE (LBS)	FACTORED VERT. LOAD LC1 (PLF) FROM	TO	MAX CSI (LC)	MAX. UNBRAC LENGTH
A- B	0 / 27	-84.9	-84.9	0.14 (5)	10.00
B- C	-91 / 0	-84.9	-84.9	0.07 (1)	6.25
C- D	-104 / 0	-84.9	-84.9	0.06 (1)	6.25
E- D	-173 / 0	0.0	0.0	0.08 (1)	7.81
H- B	-289 / 0	0.0	0.0	0.03 (1)	7.81
H- G	0 / 0	-18.5	-18.5	0.04 (4)	10.00
F- G	0 / 11	0.0	0.0	0.02 (1)	10.00
G- C	-207 / 0	0.0	0.0	0.01 (1)	7.81
F- E	0 / 4	-18.5	-18.5	0.01 (4)	10.00

WEBS

MEMB. FR-TO	MAX. FACTORED FORCE (LBS)	MAX CSI (LC)
B- G	0 / 93	0.02 (1)
G- D	0 / 216	0.05 (1)
G- E	-10 / 0	0.00 (1)

CANTILEVER ANALYSIS HAS BEEN CONSIDERED IN THIS DESIGN

DESIGN CRITERIA

SPECIFIED LOADS:

TOP CH.	LL	=	23.3	PSF
	DL	=	6.0	PSF
BOT CH.	LL	=	0.0	PSF
	DL	=	7.4	PSF
TOTAL LOAD		=	36.7	PSF

SPACING = 24.0 IN. C/C

THIS TRUSS IS DESIGNED FOR RESIDENTIAL OR SMALL BUILDING REQUIREMENTS OF PART 9, NBCC 2015

THIS DESIGN COMPLIES WITH:
- PART 9 OF BCBC 2018 , NBC-2019AE
- PART 9 OF OBC 2012 (2019 AMENDMENT)
- CSA 086-14
- TPIC 2014

(55 % OF 27.2 P.S.F. G.S.L. PLUS 8.4 P.S.F. RAIN LOAD) EQUALS 23.3 P.S.F. SPECIFIED ROOF LIVE LOAD

ALLOWABLE DEFL.(LL)= L/360 (0.19")
CALCULATED VERT. DEFL.(LL) = L/ 999 (0.00")
ALLOWABLE DEFL.(TL)= L/360 (0.19")
CALCULATED VERT. DEFL.(TL) = L/ 999 (0.00")

CSI: TC=0.14/1.00 (A-B:5) , BC=0.04/1.00 (G-H:4) , WB=0.05/1.00 (D-G:1) , SSI=0.10/1.00 (A-B:5)

DOL LUMBER=1.00 NAIL=1.00 LS BEND=1.10 COMP=1.10 SHEAR=1.10 TENS= 1.10

COMPANION LIVE LOAD FACTOR = 1.00

AUTOSOLVE RIGHT HEEL ONLY

TRUSS PLATE MANUFACTURER IS NOT RESPONSIBLE FOR QUALITY CONTROL IN THE TRUSS MANUFACTURING PLANT .

NAIL VALUES

PLATE	GRIP(DRY) (PSI) MAX	MIN	SHEAR (PLI) MAX	MIN	SECTION (PLI) MAX	MIN
MT20	650	371	1747	788	1987	1873

PLATE PLACEMENT TOL. = 0.250 inches

PLATE ROTATION TOL. = 5.0 Deg.

JSI GRIP= 0.30 (D) (INPUT = 0.90)
JSI METAL= 0.07 (G) (INPUT = 0.95)

LICENSED PROFESSIONAL ENGINEER
02-28-24
H. J. G. ALVES
100009024
PROVINCE OF ONTARIO

Structural component only
DWG# T-2406434

JOB NAME	TRUSS NAME	QUANTITY	PLY	JOB DESC.	DRWG NO.
425913	T41	2	1	ROYAL PINE HOMES TRUSS DESC.	

Tamarack Roof Truss, Burlington

Version 8.630 S Aug 30 2023 MiTek Industries, Inc. Wed Feb 28 15:03:23 2024 Page 1
ID:sd0FDfbi38oVqvTaiRkhtSzPAoD-Nmdnz2W_?9ikf_rcKn?HCXzfvKuXF4Z2QnjtJBzgavo

Scale = 1:24.6

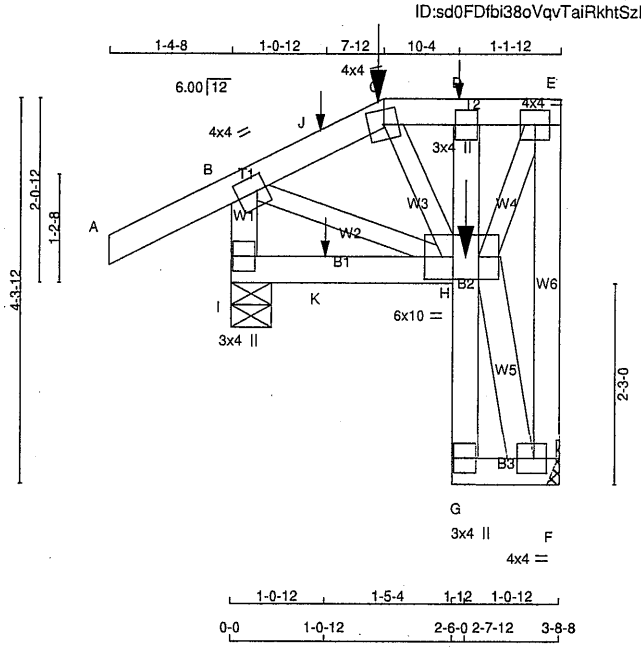

TOTAL WEIGHT = 2 X 27 = 54 lb

LUMBER
N. L. G. A. RULES

CHORDS	SIZE		LUMBER	DESCR.
A - C	2x4	DRY	No.2	SPF
C - E	2x4	DRY	No.2	SPF
F - E	2x4	DRY	No.2	SPF
I - B	2x4	DRY	No.2	SPF
I - H	2x4	DRY	No.2	SPF
G - D	2x4	DRY	No.2	SPF
G - F	2x4	DRY	No.2	SPF
ALL WEBS	2x3	DRY	No.2	SPF
EXCEPT				
H - F	2x4	DRY	No.2	SPF

DRY: SEASONED LUMBER.

PLATES (table is in inches)

JT	TYPE	PLATES	W	LEN	Y	X
B	TMVW-t	MT20	4.0	4.0	2.00	1.25
C	TTW-m	MT20	4.0	4.0		
D	TMV+p	MT20	3.0	4.0		
E	TMVW-t	MT20	4.0	4.0		
F	BMVW1-t	MT20	4.0	4.0	2.00	1.75
G	BMV+p	MT20	3.0	4.0		
H	BVMWWWW*4	MT20	6.0	10.0	3.00	2.50
I	BMV1+p	MT20	3.0	4.0		

NOTES- (1)
1) Lateral braces to be a minimum of 2X4 SPF #2.

LICENSED PROFESSIONAL ENGINEER
02-28-24
H. J. G. ALVES
100009024
PROVINCE OF ONTARIO

Structural component only
DWG# T-2406435

DIMENSIONS, SUPPORTS AND LOADINGS SPECIFIED BY FABRICATOR TO BE VERIFIED BY BUILDING DESIGNER

BEARINGS

JT	FACTORED GROSS REACTION VERT	HORZ	MAXIMUM FACTORED GROSS REACTION DOWN	HORZ	UPLIFT	INPUT BRG IN-SX	REQRD BRG IN-SX
F	183	0	183	0	0	MECHANICAL	
I	354	0	354	0	0	5-8	1-8

A SUITABLE HANGER/MECHANICAL CONNECTION IS REQUIRED AT JOINT F. MINIMUM BEARING LENGTH AT JOINT F = 1-8.

UNFACTORED REACTIONS

JT	1ST LCASE COMBINED	SNOW	LIVE	PERM.LIVE	WIND	DEAD	SOIL
	MAX./MIN. COMPONENT REACTIONS						
F	131	80 / -13	0 / 0	0 / 0	0 / 0	50 / 0	0 / 0
I	248	175 / 0	0 / 0	0 / 0	0 / 0	73 / 0	0 / 0

BEARING MATERIAL TO BE SPF NO.2 OR BETTER AT JOINT(S) I

BRACING
TOP CHORD TO BE SHEATHED OR MAX. PURLIN SPACING = 6.25 FT.
MAX. UNBRACED BOTTOM CHORD LENGTH = 7.81 FT OR RIGID CEILING DIRECTLY APPLIED.

ALL PITCH BREAKS AND PERIMETER CORNER JOINTS MUST BE LATERALLY RESTRAINED.

LOADING
TOTAL LOAD CASES: (9)

CHORDS

MEMB. FR-TO	MAX. FACTORED FORCE (LBS)	FACTORED VERT. LOAD LC1 (PLF) FROM	TO	MAX CSI (LC)	MAX. UNBRAC LENGTH
A- B	0 / 27	-84.9	-84.9	0.17 (5)	10.00
B- J	-133 / 0	-84.9	-84.9	0.17 (5)	6.25
J- C	-133 / 0	-84.9	-84.9	0.17 (5)	6.25
C- D	-79 / 0	-84.9	-84.9	0.01 (6)	6.25
D- E	-75 / 0	-84.9	-84.9	0.02 (1)	6.25
F- E	-168 / 0	0.0	0.0	0.05 (1)	7.81
I- B	-329 / 0	0.0	0.0	0.04 (1)	7.81
I- K	0 / 0	-18.5	-18.5	0.04 (4)	10.00
K- H	0 / 0	-18.5	-18.5	0.04 (4)	10.00
G- H	0 / 11	0.0	0.0	0.01 (1)	10.00
H- D	-90 / 3	0.0	0.0	0.01 (1)	7.81
G- F	0 / 3	-18.5	-18.5	0.01 (4)	10.00

WEBS

MEMB. FR-TO	MAX. FACTORED FORCE (LBS)	MAX CSI (LC)
C- H	-41 / 32	0.01 (5)
B- H	-9 / 104	0.03 (1)
H- F	-6 / 0	0.00 (1)
H- E	0 / 146	0.04 (1)

SPECIFIED CONCENTRATED LOADS (LBS)

JT	LOC.	LC1	MAX-	MAX+	FACE	DIR.	TYPE	HEEL	CONN.
C	1-8-8	-4	-4	---	FRONT	VERT	DEAD	---	C1
C	1-8-8	-15	-15	---	FRONT	VERT	SNOW	---	C1
D	2-6-12	1	1	71	BACK	VERT	TOTAL	---	C1
H	2-7-12	-3	-3	---	BACK	VERT	TOTAL	---	C1
J	1-0-12	1	1	67	BACK	VERT	TOTAL	---	C1
K	1-0-12	1	1	---	BACK	VERT	TOTAL	---	C1

CONNECTION REQUIREMENTS

1) **C1:** A SUITABLE HANGER/MECHANICAL CONNECTION IS REQUIRED.

CANTILEVER ANALYSIS HAS BEEN CONSIDERED IN THIS DESIGN

[M]

DESIGN CRITERIA

*** SPECIAL LOADS ANALYSIS ***
GEOMETRY AND/OR BASIC LOADS CHANGED BY USER.
LOADS WERE DERIVED FROM USER INPUT
NO FURTHER MODIFICATIONS WERE MADE

SPECIFIED LOADS:

TOP CH.	LL	=	23.3	PSF
	DL	=	6.0	PSF
BOT CH.	LL	=	0.0	PSF
	DL	=	7.4	PSF
TOTAL LOAD		=	36.7	PSF

SPACING = 24.0 IN. C/C

LOADING IN FLAT SECTION BASED ON A SLOPE OF 6.00/12

*** NON STANDARD GIRDER ***
ADDT'L USER-DEFINED LOADS APPLIED TO ALL LOAD CASES.

THIS TRUSS IS DESIGNED FOR RESIDENTIAL OR SMALL BUILDING REQUIREMENTS OF PART 9, NBCC 2015

THIS DESIGN COMPLIES WITH:
- PART 9 OF BCBC 2018 , NBC-2019AE
- PART 9 OF OBC 2012 (2019 AMENDMENT)
- CSA 086-14
- TPIC 2014

DESIGN ASSUMPTIONS
-OVERHANG NOT TO BE ALTERED OR CUT OFF.

(55 % OF 27.2 P.S.F. G.S.L. PLUS 8.4 P.S.F. RAIN LOAD) EQUALS 23.3 P.S.F. SPECIFIED ROOF LIVE LOAD

ALLOWABLE DEFL.(LL)= L/360 (0.19")
CALCULATED VERT. DEFL.(LL) = L/ 999 (0.00")
ALLOWABLE DEFL.(TL)= L/360 (0.19")
CALCULATED VERT. DEFL.(TL) = L/ 999 (0.00")

CSI: TC=0.17/1.00 (A-B:5) , BC=0.04/1.00 (H-I:4) , WB=0.04/1.00 (E-H:1) , SSI=0.12/1.00 (A-B:5)

DOL LUMBER=1.00 NAIL=1.00 LS BEND=1.00 COMP=1.00 SHEAR=1.00 TENS= 1.00

COMPANION LIVE LOAD FACTOR = 1.00

TRUSS PLATE MANUFACTURER IS NOT RESPONSIBLE FOR QUALITY CONTROL IN THE TRUSS MANUFACTURING PLANT .

NAIL VALUES

PLATE	GRIP(DRY) (PSI) MAX	MIN	SHEAR (PLI) MAX	MIN	SECTION (PLI) MAX	MIN
MT20	650	371	1747	788	1987	1873

PLATE PLACEMENT TOL. = 0.250 inches

PLATE ROTATION TOL. = 5.0 Deg.

CONTINUED ON PAGE 2

JOB NAME	TRUSS NAME	QUANTITY	PLY	JOB DESC.	DRWG NO.
425913	T41	2	1	ROYAL PINE HOMES TRUSS DESC.	

JSI GRIP= 0.19 (E) (INPUT = 0.90)
JSI METAL= 0.08 (B) (INPUT = 0.95)

LICENSED PROFESSIONAL ENGINEER
02-28-24
H. J. G. ALVES
100009024
PROVINCE OF ONTARIO

Structural component only
DWG# T-2406435

JOB NAME	TRUSS NAME	QUANTITY	PLY	JOB DESC.	DRWG NO.
425913	T45S	2	2	ROYAL PINE HOMES TRUSS DESC.	

Tamarack Roof Truss, Burlington

Version 8.630 S Aug 30 2023 MiTek Industries, Inc. Wed Feb 28 15:03:25 2024 Page 1
ID:sd0FDfbi38oVqvTaiRkhtSzPAoD-J9IXOjXFXmySvI??RC2lHy3yn8QljsrLu5C_N4zgavm

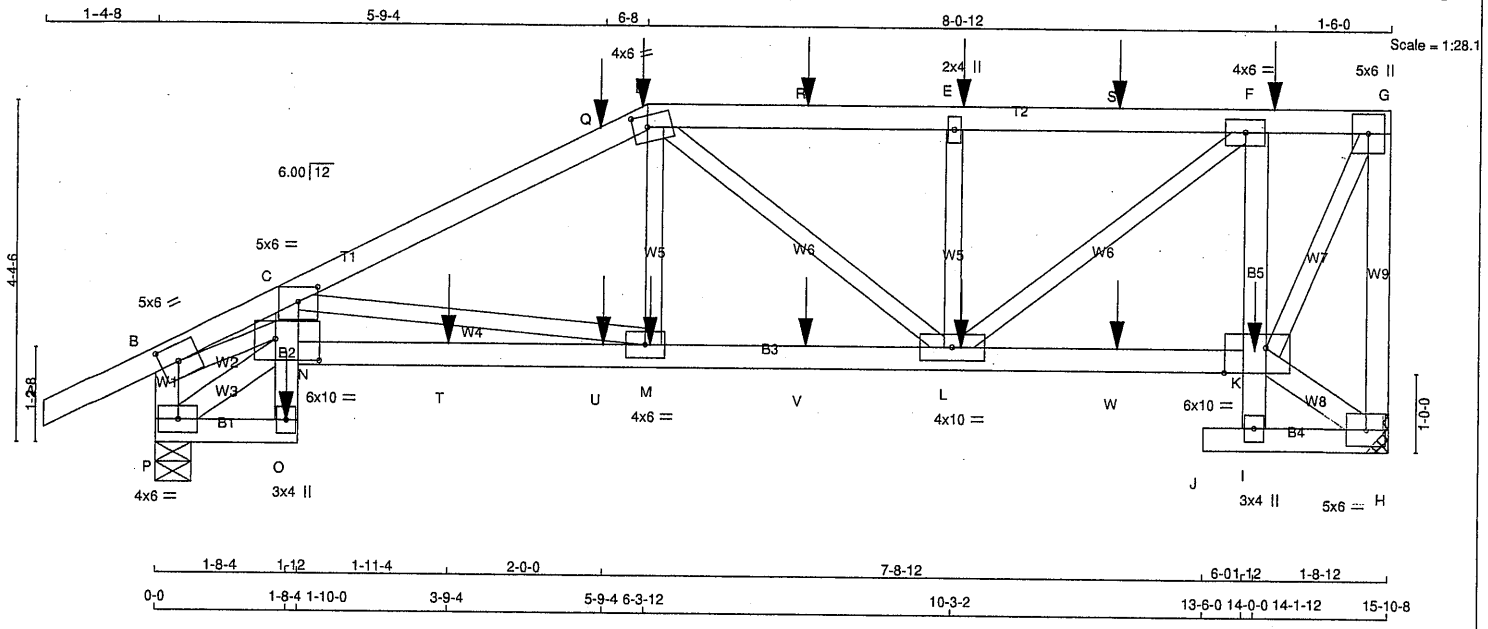

TOTAL WEIGHT = 4 X 74 = 295 lb [M]

LUMBER

N. L. G. A. RULES

CHORDS	SIZE		LUMBER	DESCR.
A - D	2x4	DRY	No.2	SPF
D - G	2x4	DRY	No.2	SPF
H - G	2x4	DRY	No.2	SPF
P - B	2x4	DRY	No.2	SPF
P - O	2x4	DRY	No.2	SPF
O - C	2x4	DRY	No.2	SPF
N - K	2x4	DRY	No.2	SPF
I - F	2x4	DRY	No.2	SPF
J - H	2x4	DRY	No.2	SPF
ALL WEBS EXCEPT	2x3	DRY	No.2	SPF
P - N	2x4	DRY	No.2	SPF
K - H	2x4	DRY	No.2	SPF

DRY: SEASONED LUMBER.

DESIGN CONSISTS OF 2 TRUSSES BUILT SEPARATELY THEN FASTENED TOGETHER AS FOLLOWS:

CHORDS	#ROWS	SURFACE SPACING (IN)	LOAD(PLF)
TOP CHORDS : (0.122"X3") SPIRAL NAILS			
A- D	1	12	SIDE(61.0)
D- G	1	12	SIDE(61.0)
G- H	1	12	TOP
P- B	1	12	TOP
BOTTOM CHORDS : (0.122"X3") SPIRAL NAILS			
P- O	1	12	SIDE(61.0)
O- C	1	12	SIDE(6.7)
N- K	1	12	SIDE(61.0)
F- I	1	12	SIDE(4.8)
J- H	1	12	TOP
WEBS : (0.122"X3") SPIRAL NAILS			
M- D	1	6	SIDE(43.5)
E- L	1	6	SIDE(13.9)
2x3	1	6	
2x4	1	6	

NAILS TO BE DRIVEN FROM ONE SIDE ONLY.

GIRDER NAILING ASSUMES NAILED HANGERS ARE FASTENED WITH MIN. 3-0 INCH NAILS.

LICENSED PROFESSIONAL ENGINEER
02-28-24
H. J. G. ALVES
100009024
PROVINCE OF ONTARIO

Structural component only
DWG# T-2406436

DIMENSIONS, SUPPORTS AND LOADINGS SPECIFIED BY FABRICATOR TO BE VERIFIED BY BUILDING DESIGNER

BEARINGS

JT	FACTORED GROSS REACTION VERT	HORZ	MAXIMUM FACTORED GROSS REACTION DOWN	HORZ	UPLIFT	INPUT BRG IN-SX	REQRD BRG IN-SX
H	2259	0	2259	0	0	MECHANICAL	
P	2503	0	2503	0	0	5-8	1-8

A SUITABLE HANGER/MECHANICAL CONNECTION IS REQUIRED AT JOINT H. MINIMUM BEARING LENGTH AT JOINT H = 1-8.

UNFACTORED REACTIONS

JT	1ST LCASE COMBINED	SNOW	MAX./MIN. COMPONENT REACTIONS LIVE	PERM.LIVE	WIND	DEAD	SOIL
H	1602	1028 / 0	0 / 0	0 / 0	0 / 0	574 / 0	0 / 0
P	1770	1162 / 0	0 / 0	0 / 0	0 / 0	608 / 0	0 / 0

BEARING MATERIAL TO BE SPF NO.2 OR BETTER AT JOINT(S) P

BRACING

TOP CHORD TO BE SHEATHED OR MAX. PURLIN SPACING = 4.17 FT.
MAX. UNBRACED BOTTOM CHORD LENGTH = 7.81 FT OR RIGID CEILING DIRECTLY APPLIED.

ALL PITCH BREAKS AND PERIMETER CORNER JOINTS MUST BE LATERALLY RESTRAINED.

LOADING

TOTAL LOAD CASES: (4)

CHORDS

MEMB. FR-TO	MAX. FACTORED FORCE (LBS)	FACTORED VERT. LOAD (PLF) FROM	TO	LC1	MAX CSI (LC)	MAX. UNBRAC LENGTH
A- B	0 / 27	-84.9	-84.9	0.07 (1)	10.00	
B- C	-5112 / 0	-84.9	-84.9	0.15 (1)	4.17	
C- Q	-4007 / 0	-84.9	-84.9	0.29 (1)	4.48	
Q- D	-4007 / 0	-84.9	-84.9	0.29 (1)	4.48	
D- R	-3075 / 0	-84.9	-84.9	0.13 (1)	5.16	
R- E	-3075 / 0	-84.9	-84.9	0.13 (1)	5.16	
E- S	-3075 / 0	-84.9	-84.9	0.13 (1)	5.16	
S- F	-3075 / 0	-84.9	-84.9	0.13 (1)	5.16	
F- G	-1217 / 0	-84.9	-84.9	0.05 (1)	6.25	
H- G	-2202 / 0	0.0	0.0	0.34 (1)	7.51	
P- B	-2279 / 0	0.0	0.0	0.13 (1)	7.42	
P- O	0 / 353	-18.5	-18.5	0.04 (1)	10.00	
O- N	0 / 275	0.0	0.0	0.29 (1)	10.00	
N- C	0 / 519	0.0	0.0	0.31 (1)	10.00	
N- T	0 / 5014	-18.5	-18.5	0.70 (1)	10.00	
T- U	0 / 5014	-18.5	-18.5	0.70 (1)	10.00	
U- M	0 / 5014	-18.5	-18.5	0.70 (1)	10.00	
M- V	0 / 3631	-18.5	-18.5	0.54 (1)	10.00	
V- L	0 / 3631	-18.5	-18.5	0.54 (1)	10.00	
L- W	0 / 1241	-18.5	-18.5	0.30 (1)	10.00	
W- K	0 / 1241	-18.5	-18.5	0.30 (1)	10.00	
I- K	0 / 31	0.0	0.0	0.06 (1)	10.00	
K- F	-1767 / 0	0.0	0.0	0.09 (1)	7.81	
J- I	0 / 0	-18.5	-18.5	0.00 (4)	10.00	
I- H	0 / 71	-18.5	-18.5	0.01 (4)	10.00	

WEBS

MEMB. FR-TO	MAX. FACTORED FORCE (LBS)	MAX CSI (LC)
C- M	-1441 / 0	0.29 (1)
M- D	0 / 1207	0.15 (1)
D- L	-704 / 0	0.14 (1)
L- E	-389 / 0	0.04 (1)
L- F	0 / 2339	0.29 (1)
P- N	-411 / 0	0.02 (1)
K- H	-83 / 0	0.00 (1)
K- G	0 / 2482	0.31 (1)
B- N	0 / 4546	0.56 (1)

SPECIFIED CONCENTRATED LOADS (LBS)

JT	LOC.	LC1	MAX-	MAX+	FACE	DIR.	TYPE	HEEL	CONN.
D	6-3-12	-90	-90	---	FRONT	VERT	DEAD	---	C1
D	6-3-12	-9	-9	---	BACK	VERT	TOTAL	---	C1
D	6-3-12	-348	-348	---	FRONT	VERT	SNOW	---	C1
E	10-4-8	-6	-6	---	BACK	VERT	TOTAL	---	C1
F	14-4-8	-37	-37	---	BACK	VERT	TOTAL	---	C1
K	14-1-12	-180	-180	---	BACK	VERT	TOTAL	---	C1
L	10-4-8	-205	-205	---	BACK	VERT	TOTAL	---	C1
M	6-4-8	-205	-205	---	BACK	VERT	TOTAL	---	C1
O	1-8-4	-185	-185	---	BACK	VERT	TOTAL	---	C1

DESIGN CRITERIA

*** SPECIAL LOADS ANALYSIS ***
GEOMETRY AND/OR BASIC LOADS CHANGED BY USER.
LOADS WERE DERIVED FROM USER INPUT
NO FURTHER MODIFICATIONS WERE MADE

SPECIFIED LOADS:

TOP CH.	LL	=	23.3	PSF
	DL	=	6.0	PSF
BOT CH.	LL	=	0.0	PSF
	DL	=	7.4	PSF
TOTAL LOAD		=	36.7	PSF

SPACING = 24.0 IN. C/C

LOADING IN FLAT SECTION BASED ON A SLOPE OF 6.00/12

*** NON STANDARD GIRDER ***
ADDT'L USER-DEFINED LOADS APPLIED TO ALL LOAD CASES.

THIS TRUSS IS DESIGNED FOR RESIDENTIAL OR SMALL BUILDING REQUIREMENTS OF PART 9, NBCC 2015

THIS DESIGN COMPLIES WITH:
- PART 9 OF BCBC 2018 , NBC-2019AE
- PART 9 OF OBC 2012 (2019 AMENDMENT)
- CSA 086-14
- TPIC 2014

DESIGN ASSUMPTIONS
-OVERHANG NOT TO BE ALTERED OR CUT OFF.

(55 % OF 27.2 P.S.F. G.S.L. PLUS 8.4 P.S.F. RAIN LOAD) EQUALS 23.3 P.S.F. SPECIFIED ROOF LIVE LOAD

ALLOWABLE DEFL.(LL)= L/360 (0.53")
CALCULATED VERT. DEFL.(LL) = L/ 999 (0.08")
ALLOWABLE DEFL.(TL)= L/360 (0.53")
CALCULATED VERT. DEFL.(TL) = L/ 999 (0.16")

CSI: TC=0.34/1.00 (G-H:1) , BC=0.70/1.00 (M-N:1) , WB=0.56/1.00 (B-N:1) , SSI=0.21/1.00 (M-N:1)

DOL LUMBER=1.00 NAIL=1.00 LS BEND=1.00 COMP=1.00 SHEAR=1.00 TENS= 1.00

COMPANION LIVE LOAD FACTOR = 1.00

TRUSS PLATE MANUFACTURER IS NOT RESPONSIBLE FOR QUALITY CONTROL IN THE TRUSS MANUFACTURING PLANT .

NAIL VALUES

PLATE	GRIP(DRY) (PSI) MAX	MIN	SHEAR (PLI) MAX	MIN	SECTION (PLI) MAX	MIN
MT20	650	371	1747	788	1987	1873

PLATE PLACEMENT TOL. = 0.250 inches

PLATE ROTATION TOL. = 5.0 Deg.

CONTINUED ON PAGE 2

JOB NAME	TRUSS NAME	QUANTITY	PLY	JOB DESC.	DRWG NO.
425913	T45S	2	2	ROYAL PINE HOMES TRUSS DESC.	

PLATES (table is in inches)

JT	TYPE	PLATES	W	LEN	Y	X
B	TMVW-t	MT20	5.0	6.0	2.50	2.75
C	TMVW-p	MT20	5.0	6.0	2.25	3.00
D	TTWW-m	MT20	4.0	6.0	1.75	2.25
E	TMW+w	MT20	2.0	4.0		
F	TMVW-t	MT20	4.0	6.0		
G	TMVW+p	MT20	5.0	6.0		
H	BMVW1-t	MT20	5.0	6.0		
I	BMV+p	MT20	3.0	4.0		
K	BVMWW-l	MT20	6.0	10.0	Edge	6.25
L	BMWWW-t	MT20	4.0	10.0		
M	BMWW-t	MT20	4.0	6.0		
N	BVMWW-l	MT20	6.0	10.0	3.25	6.75
O	BMV+p	MT20	3.0	4.0		
P	BMVW1-t	MT20	4.0	6.0		

Edge - INDICATES REFERENCE CORNER OF PLATE TOUCHES EDGE OF CHORD.

NOTES- (1)
1) Lateral braces to be a minimum of 2X4 SPF #2.

SPECIFIED CONCENTRATED LOADS (LBS)

JT	LOC.	LC1	MAX-	MAX+	FACE	DIR.	TYPE	HEEL	CONN.
Q	5-9-4	-17	-17	---	BACK	VERT	TOTAL	---	C1
R	8-4-8	-6	-6	---	BACK	VERT	TOTAL	---	C1
S	12-4-8	-6	-6	---	BACK	VERT	TOTAL	---	C1
T	3-9-4	-205	-205	---	BACK	VERT	TOTAL	---	C1
U	5-9-4	-205	-205	---	BACK	VERT	TOTAL	---	C1
V	8-4-8	-205	-205	---	BACK	VERT	TOTAL	---	C1
W	12-4-8	-205	-205	---	BACK	VERT	TOTAL	---	C1

CONNECTION REQUIREMENTS

1) **C1:** A SUITABLE HANGER/MECHANICAL CONNECTION IS REQUIRED.

JSI GRIP= 0.77 (B) (INPUT = 0.90)
JSI METAL= 0.59 (B) (INPUT = 0.95)

LICENSED PROFESSIONAL ENGINEER
02-28-24
H. J. G. ALVES
100009024
PROVINCE OF ONTARIO

Structural component only
DWG# T-2406436

JOB NAME	TRUSS NAME	QUANTITY	PLY	JOB DESC.	DRWG NO.
425913	T46S	2	1	ROYAL PINE HOMES TRUSS DESC.	

Tamarack Roof Truss, Burlington

Version 8.630 S Aug 30 2023 MiTek Industries, Inc. Wed Feb 28 15:03:26 2024 Page 1
ID:VI_DQvi1e49Qy7axT?i10OzOYuG-oLJwb3YtI44JWSaB?wZ_pAb61Ys6SJlV6lyXvWzgavt

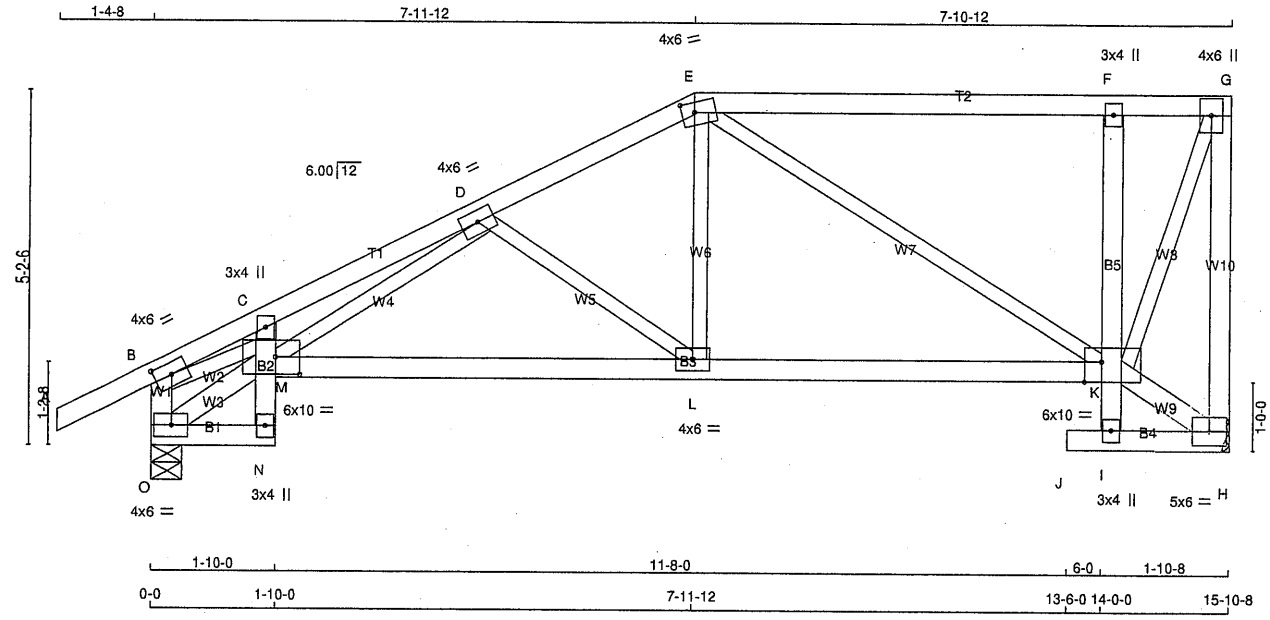

TOTAL WEIGHT = 2 X 75 = 151 lb [M]

LUMBER
N. L. G. A. RULES

CHORDS	SIZE		LUMBER	DESCR.
A - E	2x4	DRY	No.2	SPF
E - G	2x4	DRY	No.2	SPF
H - G	2x4	DRY	No.2	SPF
O - B	2x4	DRY	No.2	SPF
O - N	2x4	DRY	No.2	SPF
N - C	2x4	DRY	No.2	SPF
M - K	2x4	DRY	No.2	SPF
I - F	2x4	DRY	No.2	SPF
J - H	2x4	DRY	No.2	SPF
ALL WEBS EXCEPT	2x3	DRY	No.2	SPF
O - M	2x4	DRY	No.2	SPF
K - H	2x4	DRY	No.2	SPF

DRY: SEASONED LUMBER.

PLATES (table is in inches)

JT	TYPE	PLATES	W	LEN	Y	X
B	TMVW-t	MT20	4.0	6.0	2.00	3.00
C	TMV+p	MT20	3.0	4.0		
D	TMWW-t	MT20	4.0	6.0		
E	TTWW-m	MT20	4.0	6.0	1.75	2.25
F	TMV+p	MT20	3.0	4.0		
G	TMVW+p	MT20	4.0	6.0		
H	BMVW1-t	MT20	5.0	6.0		
I	BMV+p	MT20	3.0	4.0		
K	BVMWWW-l	MT20	6.0	10.0	Edge	3.00
L	BMWW-t	MT20	4.0	6.0		
M	BVMWWW-l	MT20	6.0	10.0	3.00	4.25
N	BMV+p	MT20	3.0	4.0		
O	BMVW1-t	MT20	4.0	6.0		

Edge - INDICATES REFERENCE CORNER OF PLATE TOUCHES EDGE OF CHORD.

NOTES- (1)
1) Lateral braces to be a minimum of 2X4 SPF #2.

LICENSED PROFESSIONAL ENGINEER
02-28-24
H. J. G. ALVES
100009024
PROVINCE OF ONTARIO

Structural component only
DWG# T-2406437

DIMENSIONS, SUPPORTS AND LOADINGS SPECIFIED BY FABRICATOR TO BE VERIFIED BY BUILDING DESIGNER

BEARINGS

JT	FACTORED GROSS REACTION VERT	HORZ	MAXIMUM FACTORED GROSS REACTION DOWN	HORZ	UPLIFT	INPUT BRG IN-SX	REQRD BRG IN-SX
H	826	0	826	0	0	MECHANICAL	
O	949	0	949	0	0	5-8	1-8

A SUITABLE HANGER/MECHANICAL CONNECTION IS REQUIRED AT JOINT H. MINIMUM BEARING LENGTH AT JOINT H = 1-8.

UNFACTORED REACTIONS

JT	1ST LCASE MAX. COMBINED	MAX./MIN. COMPONENT REACTIONS SNOW	LIVE	PERM.LIVE	WIND	DEAD	SOIL
H	587	367 / 0	0 / 0	0 / 0	0 / 0	220 / 0	0 / 0
O	672	440 / 0	0 / 0	0 / 0	0 / 0	232 / 0	0 / 0

BEARING MATERIAL TO BE SPF NO.2 OR BETTER AT JOINT(S) O

BRACING
TOP CHORD TO BE SHEATHED OR MAX. PURLIN SPACING = 4.99 FT.
MAX. UNBRACED BOTTOM CHORD LENGTH = 7.81 FT OR RIGID CEILING DIRECTLY APPLIED.

ALL PITCH BREAKS AND PERIMETER CORNER JOINTS MUST BE LATERALLY RESTRAINED.

LOADING
TOTAL LOAD CASES: (4)

CHORDS

MEMB. FR-TO	MAX. FACTORED FORCE (LBS)	FACTORED VERT. LOAD LC1 (PLF) FROM	TO	MAX CSI (LC)	MAX. UNBRAC LENGTH
A- B	0 / 27	-84.9	-84.9	0.12 (1)	10.00
B- C	-1547 / 0	-84.9	-84.9	0.15 (1)	5.15
C- D	-1638 / 0	-84.9	-84.9	0.18 (1)	4.99
D- E	-954 / 0	-84.9	-84.9	0.16 (1)	6.16
E- F	-405 / 0	-84.9	-84.9	0.44 (1)	6.25
F- G	-398 / 0	-84.9	-84.9	0.42 (1)	6.25
H- G	-794 / 0	0.0	0.0	0.37 (1)	7.81
O- B	-871 / 0	0.0	0.0	0.09 (1)	7.81
O- N	0 / 105	-18.5	-18.5	0.03 (1)	10.00
N- M	0 / 17	0.0	0.0	0.15 (1)	10.00
M- C	-123 / 0	0.0	0.0	0.14 (1)	7.81
M- L	0 / 1192	-18.5	-18.5	0.31 (4)	10.00
L- K	0 / 849	-18.5	-18.5	0.28 (4)	10.00
I- K	0 / 31	0.0	0.0	0.04 (1)	10.00
K- F	-564 / 0	0.0	0.0	0.07 (1)	7.81
J- I	0 / 0	-18.5	-18.5	0.01 (4)	10.00
I- H	0 / 26	-18.5	-18.5	0.02 (4)	10.00

WEBS

MEMB. FR-TO	MAX. FACTORED FORCE (LBS)	MAX CSI (LC)
L- E	0 / 391	0.09 (1)
E- K	-525 / 0	0.52 (1)
O- M	-122 / 0	0.01 (1)
B- M	0 / 1351	0.30 (1)
D- L	-432 / 0	0.12 (1)
M- D	0 / 364	0.08 (1)
K- H	-30 / 0	0.00 (1)
K- G	0 / 984	0.22 (1)

DESIGN CRITERIA

SPECIFIED LOADS:

TOP CH.	LL	=	23.3	PSF
	DL	=	6.0	PSF
BOT CH.	LL	=	0.0	PSF
	DL	=	7.4	PSF
TOTAL LOAD		=	36.7	PSF

SPACING = 24.0 IN. C/C

LOADING IN FLAT SECTION BASED ON A SLOPE OF 6.00/12

THIS TRUSS IS DESIGNED FOR RESIDENTIAL OR SMALL BUILDING REQUIREMENTS OF PART 9, NBCC 2015

THIS DESIGN COMPLIES WITH:
- PART 9 OF BCBC 2018 , NBC-2019AE
- PART 9 OF OBC 2012 (2019 AMENDMENT)
- CSA 086-14
- TPIC 2014

DESIGN ASSUMPTIONS
-OVERHANG NOT TO BE ALTERED OR CUT OFF.

(55 % OF 27.2 P.S.F. G.S.L. PLUS 8.4 P.S.F. RAIN LOAD) EQUALS 23.3 P.S.F. SPECIFIED ROOF LIVE LOAD

ALLOWABLE DEFL.(LL)= L/360 (0.53")
CALCULATED VERT. DEFL.(LL) = L/ 999 (0.03")
ALLOWABLE DEFL.(TL)= L/360 (0.53")
CALCULATED VERT. DEFL.(TL) = L/ 999 (0.10")

CSI: TC=0.44/1.00 (E-F:1) , BC=0.31/1.00 (L-M:4) , WB=0.52/1.00 (E-K:1) , SSI=0.24/1.00 (E-F:1)

DOL LUMBER=1.00 NAIL=1.00 LS BEND=1.10 COMP=1.10 SHEAR=1.10 TENS= 1.10

COMPANION LIVE LOAD FACTOR = 1.00

TRUSS PLATE MANUFACTURER IS NOT RESPONSIBLE FOR QUALITY CONTROL IN THE TRUSS MANUFACTURING PLANT .

NAIL VALUES

PLATE	GRIP(DRY) (PSI) MAX	MIN	SHEAR (PLI) MAX	MIN	SECTION (PLI) MAX	MIN
MT20	650	371	1747	788	1987	1873

PLATE PLACEMENT TOL. = 0.250 inches

PLATE ROTATION TOL. = 5.0 Deg.

JSI GRIP= 0.73 (M) (INPUT = 0.90)
JSI METAL= 0.37 (B) (INPUT = 0.95)

JOB NAME	TRUSS NAME	QUANTITY	PLY	JOB DESC.	DRWG NO.
425913	T47S	2	1	ROYAL PINE HOMES TRUSS DESC.	

Tamarack Roof Truss, Burlington

Version 8.630 S Aug 30 2023 MiTek Industries, Inc. Wed Feb 28 15:03:27 2024 Page 1
ID:VI_DQvi1e49Qy7axT?i10OzOYuG-GXtloPZV3OCA8c9NZd4DMN8FwxBfBoseLPh5Szzgavk

Scale = 1:36.0

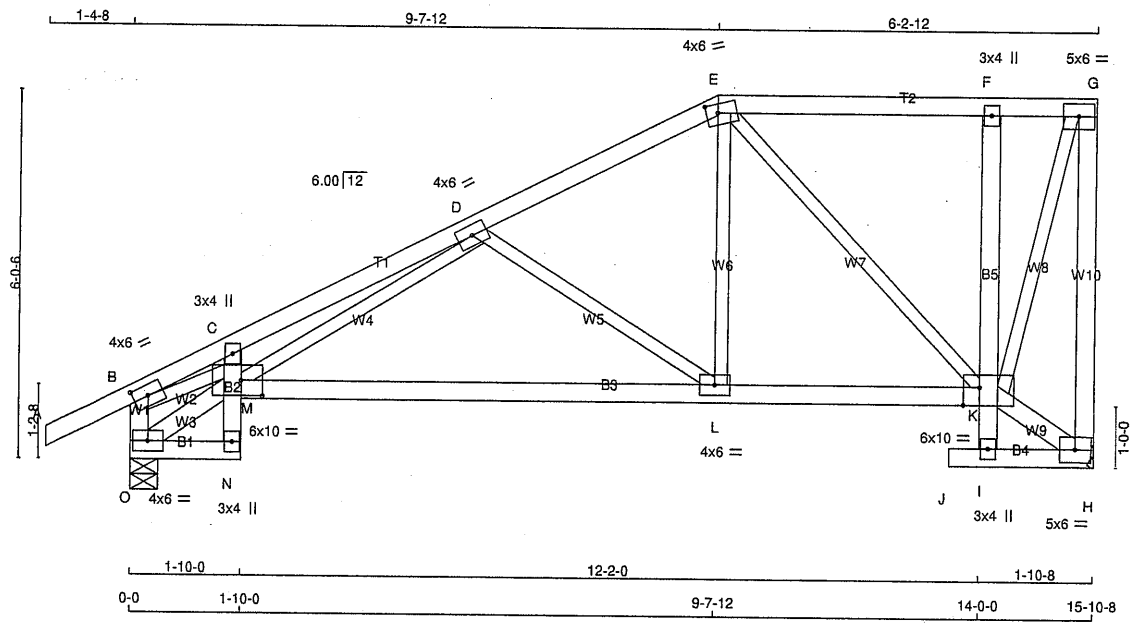

TOTAL WEIGHT = 2 X 80 = 160 lb

[M][F]

LUMBER

N. L. G. A. RULES

CHORDS	SIZE		LUMBER	DESCR.
A - E	2x4	DRY	No.2	SPF
E - G	2x4	DRY	No.2	SPF
H - G	2x4	DRY	No.2	SPF
O - B	2x4	DRY	No.2	SPF
O - N	2x4	DRY	No.2	SPF
N - C	2x4	DRY	No.2	SPF
M - K	2x4	DRY	No.2	SPF
I - F	2x4	DRY	No.2	SPF
J - H	2x4	DRY	No.2	SPF
ALL WEBS EXCEPT	2x3	DRY	No.2	SPF
K - H	2x4	DRY	No.2	SPF
O - M	2x4	DRY	No.2	SPF

DRY: SEASONED LUMBER.

PLATES (table is in inches)

JT	TYPE	PLATES	W	LEN	Y	X
B	TMVW-t	MT20	4.0	6.0	2.00	3.00
C	TMV+p	MT20	3.0	4.0		
D	TMWW-t	MT20	4.0	6.0		
E	TTWW-m	MT20	4.0	6.0	1.75	2.25
F	TMV+p	MT20	3.0	4.0		
G	TMVW-t	MT20	5.0	6.0		
H	BMVW1-t	MT20	5.0	6.0		
I	BMV+p	MT20	3.0	4.0		
K	BVMWWW-I	MT20	6.0	10.0	Edge	3.25
L	BMWW-t	MT20	4.0	6.0		
M	BVMWWW-I	MT20	6.0	10.0	3.00	4.25
N	BMV+p	MT20	3.0	4.0		
O	BMVW1-t	MT20	4.0	6.0		

Edge - INDICATES REFERENCE CORNER OF PLATE TOUCHES EDGE OF CHORD.

NOTES- (1)
1) Lateral braces to be a minimum of 2X4 SPF #2.

DIMENSIONS, SUPPORTS AND LOADINGS SPECIFIED BY FABRICATOR TO BE VERIFIED BY BUILDING DESIGNER

BEARINGS

JT	FACTORED GROSS REACTION VERT	HORZ	MAXIMUM FACTORED GROSS REACTION DOWN	HORZ	UPLIFT	INPUT BRG IN-SX	REQRD BRG IN-SX
H	826	0	826	0	0	MECHANICAL	
O	949	0	949	0	0	5-8	1-8

A SUITABLE HANGER/MECHANICAL CONNECTION IS REQUIRED AT JOINT H. MINIMUM BEARING LENGTH AT JOINT H = 1-8.

UNFACTORED REACTIONS

JT	1ST LCASE COMBINED	MAX./MIN. COMPONENT REACTIONS SNOW	LIVE	PERM.LIVE	WIND	DEAD	SOIL
H	587	367 / 0	0 / 0	0 / 0	0 / 0	220 / 0	0 / 0
O	672	440 / 0	0 / 0	0 / 0	0 / 0	232 / 0	0 / 0

BEARING MATERIAL TO BE SPF NO.2 OR BETTER AT JOINT(S) O

BRACING

TOP CHORD TO BE SHEATHED OR MAX. PURLIN SPACING = 4.94 FT.
MAX. UNBRACED BOTTOM CHORD LENGTH = 7.81 FT OR RIGID CEILING DIRECTLY APPLIED.

ALL PITCH BREAKS AND PERIMETER CORNER JOINTS MUST BE LATERALLY RESTRAINED.

LOADING

TOTAL LOAD CASES: (4)

CHORDS

MEMB. FR-TO	MAX. FACTORED FORCE (LBS)	FACTORED VERT. LOAD (PLF) FROM	TO	LC1 CSI (LC)	MAX UNBRAC LENGTH
A- B	0 / 27	-84.9	-84.9	0.12 (1)	10.00
B- C	-1574 / 0	-84.9	-84.9	0.12 (1)	5.16
C- D	-1670 / 0	-84.9	-84.9	0.21 (1)	4.94
D- E	-764 / 0	-84.9	-84.9	0.18 (1)	6.25
E- F	-300 / 0	-84.9	-84.9	0.19 (1)	6.25
F- G	-295 / 0	-84.9	-84.9	0.16 (1)	6.25
H- G	-796 / 0	0.0	0.0	0.55 (1)	7.81
O- B	-870 / 0	0.0	0.0	0.09 (1)	7.81
O- N	0 / 107	-18.5	-18.5	0.03 (1)	10.00
N- M	0 / 17	0.0	0.0	0.15 (1)	10.00
M- C	-173 / 0	0.0	0.0	0.11 (1)	7.81
M- L	0 / 1104	-18.5	-18.5	0.35 (4)	10.00
L- K	0 / 675	-18.5	-18.5	0.32 (4)	10.00
I- K	0 / 31	0.0	0.0	0.04 (1)	10.00
K- F	-384 / 0	0.0	0.0	0.06 (1)	7.81
J- I	0 / 0	-18.5	-18.5	0.01 (4)	10.00
I- H	0 / 24	-18.5	-18.5	0.02 (4)	10.00

WEBS

MEMB. FR-TO	MAX. FACTORED FORCE (LBS)	MAX CSI (LC)
M- D	0 / 497	0.11 (1)
D- L	-526 / 0	0.22 (1)
L- E	0 / 443	0.10 (1)
E- K	-544 / 0	0.40 (1)
K- H	-27 / 0	0.00 (1)
K- G	0 / 861	0.19 (1)
O- M	-125 / 0	0.01 (1)
B- M	0 / 1382	0.31 (1)

DESIGN CRITERIA

SPECIFIED LOADS:

TOP CH.	LL	=	23.3	PSF
	DL	=	6.0	PSF
BOT CH.	LL	=	0.0	PSF
	DL	=	7.4	PSF
TOTAL LOAD		=	36.7	PSF

SPACING = 24.0 IN. C/C

LOADING IN FLAT SECTION BASED ON A SLOPE OF 6.00/12

THIS TRUSS IS DESIGNED FOR RESIDENTIAL OR SMALL BUILDING REQUIREMENTS OF PART 9, NBCC 2015

THIS DESIGN COMPLIES WITH:
- PART 9 OF BCBC 2018 , NBC-2019AE
- PART 9 OF OBC 2012 (2019 AMENDMENT)
- CSA 086-14
- TPIC 2014

DESIGN ASSUMPTIONS
-OVERHANG NOT TO BE ALTERED OR CUT OFF.

(55 % OF 27.2 P.S.F. G.S.L. PLUS 8.4 P.S.F. RAIN LOAD) EQUALS 23.3 P.S.F. SPECIFIED ROOF LIVE LOAD

ALLOWABLE DEFL.(LL)= L/360 (0.53")
CALCULATED VERT. DEFL.(LL) = L/ 999 (0.03")
ALLOWABLE DEFL.(TL)= L/360 (0.53")
CALCULATED VERT. DEFL.(TL) = L/ 999 (0.17")

CSI: TC=0.55/1.00 (G-H:1) , BC=0.35/1.00 (L-M:4) , WB=0.40/1.00 (E-K:1) , SSI=0.18/1.00 (E-F:1)

DOL LUMBER=1.00 NAIL=1.00 LS BEND=1.10 COMP=1.10 SHEAR=1.10 TENS= 1.10

COMPANION LIVE LOAD FACTOR = 1.00

TRUSS PLATE MANUFACTURER IS NOT RESPONSIBLE FOR QUALITY CONTROL IN THE TRUSS MANUFACTURING PLANT .

NAIL VALUES

PLATE	GRIP(DRY) (PSI) MAX	MIN	SHEAR (PLI) MAX	MIN	SECTION (PLI) MAX	MIN
MT20	650	371	1747	788	1987	1873

PLATE PLACEMENT TOL. = 0.250 inches

PLATE ROTATION TOL. = 5.0 Deg.

JSI GRIP= 0.75 (M) (INPUT = 0.90)
JSI METAL= 0.38 (B) (INPUT = 0.95)

LICENSED PROFESSIONAL ENGINEER
02-28-24
H. J. G. ALVES
100009024
PROVINCE OF ONTARIO

Structural component only
DWG# T-2406438

JOB NAME	TRUSS NAME	QUANTITY	PLY	JOB DESC.	DRWG NO.
425913	T48S	2	1	ROYAL PINE HOMES TRUSS DESC.	

Tamarack Roof Truss, Burlington

Version 8.630 S Aug 30 2023 MiTek Industries, Inc. Wed Feb 28 15:03:28 2024 Page 1
ID:VI_DQvi1e49Qy7axT?i10OzOYuG-kkRg0lZ7qhK1mmjZ7KbSvbhUGLYWwF0na2Re_Pzgavj

Scale = 1:40.9

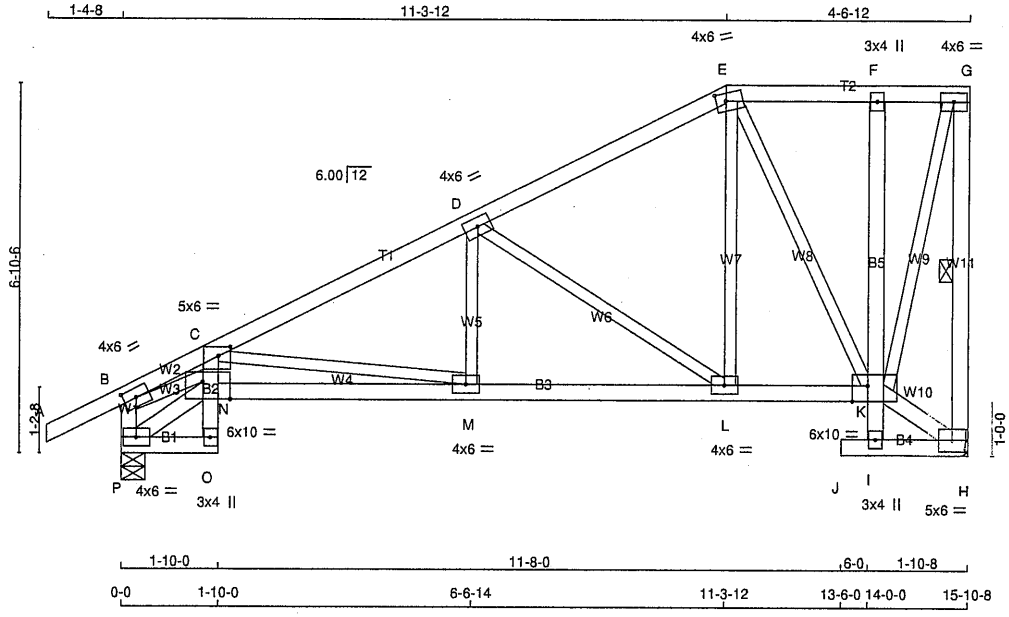

TOTAL WEIGHT = 2 X 86 = 172 lb
[M][F]

LUMBER
N. L. G. A. RULES

CHORDS	SIZE		LUMBER	DESCR.
A - E	2x4	DRY	No.2	SPF
E - G	2x4	DRY	No.2	SPF
H - G	2x4	DRY	No.2	SPF
P - B	2x4	DRY	No.2	SPF
P - O	2x4	DRY	No.2	SPF
O - C	2x4	DRY	No.2	SPF
N - K	2x4	DRY	No.2	SPF
I - F	2x4	DRY	No.2	SPF
J - H	2x4	DRY	No.2	SPF
ALL WEBS EXCEPT	2x3	DRY	No.2	SPF
P - N	2x4	DRY	No.2	SPF
K - H	2x4	DRY	No.2	SPF

DRY: SEASONED LUMBER.

PLATES (table is in inches)

JT	TYPE	PLATES	W	LEN	Y	X
B	TMVW-t	MT20	4.0	6.0	2.00	3.00
C	TMVW-p	MT20	5.0	6.0	2.00	2.75
D	TMWW-t	MT20	4.0	6.0		
E	TTWW-m	MT20	4.0	6.0	1.75	2.25
F	TMV+p	MT20	3.0	4.0		
G	TMVW-t	MT20	4.0	6.0		
H	BMVW1-t	MT20	5.0	6.0		
I	BMV+p	MT20	3.0	4.0		
K	BVMWWW-l	MT20	6.0	10.0	Edge	3.50
L	BMWW-t	MT20	4.0	6.0		
M	BMWW-t	MT20	4.0	6.0		
N	BVMWW-l	MT20	6.0	10.0	Edge	6.00
O	BMV+p	MT20	3.0	4.0		
P	BMVW1-t	MT20	4.0	6.0		

Edge - INDICATES REFERENCE CORNER OF PLATE TOUCHES EDGE OF CHORD.

NOTES- (1)
1) Lateral braces to be a minimum of 2X4 SPF #2.

LICENSED PROFESSIONAL ENGINEER
02-28-24
H. J. G. ALVES
100009024
PROVINCE OF ONTARIO

Structural component only
DWG# T-2406439

DIMENSIONS, SUPPORTS AND LOADINGS SPECIFIED BY FABRICATOR TO BE VERIFIED BY BUILDING DESIGNER

BEARINGS

JT	FACTORED GROSS REACTION VERT	HORZ	MAXIMUM FACTORED GROSS REACTION DOWN	HORZ	UPLIFT	INPUT BRG IN-SX	REQRD BRG IN-SX
H	826	0	826	0	0	MECHANICAL	
P	949	0	949	0	0	5-8	1-8

A SUITABLE HANGER/MECHANICAL CONNECTION IS REQUIRED AT JOINT H. MINIMUM BEARING LENGTH AT JOINT H = 1-8.

UNFACTORED REACTIONS

JT	1ST LCASE COMBINED	MAX./MIN. COMPONENT REACTIONS SNOW	LIVE	PERM.LIVE	WIND	DEAD	SOIL
H	587	367 / 0	0 / 0	0 / 0	0 / 0	220 / 0	0 / 0
P	672	440 / 0	0 / 0	0 / 0	0 / 0	232 / 0	0 / 0

BEARING MATERIAL TO BE SPF NO.2 OR BETTER AT JOINT(S) P

BRACING
TOP CHORD TO BE SHEATHED OR MAX. PURLIN SPACING = 5.08 FT.
MAX. UNBRACED BOTTOM CHORD LENGTH = 7.81 FT OR RIGID CEILING DIRECTLY APPLIED.

ALL PITCH BREAKS AND PERIMETER CORNER JOINTS MUST BE LATERALLY RESTRAINED.

1 LATERAL BRACE(S) AT 1/ 2 LENGTH OF G-H.

END VERTICAL(S) MUST BE SHEATHED OR HAVE BRACES AS INDICATED IN THE MAX. UNBRACED LENGTH COLUMN OF THE TABLE BELOW

LOADING
TOTAL LOAD CASES: (4)

CHORDS

MEMB. FR-TO	MAX. FORCE (LBS)	FACTORED VERT. LOAD LC1 FROM (PLF)	TO	MAX CSI (LC)	MAX. UNBRAC LENGTH
A- B	0 / 27	-84.9	-84.9	0.12 (1)	10.00
B- C	-1634 / 0	-84.9	-84.9	0.12 (1)	5.08
C- D	-1169 / 0	-84.9	-84.9	0.26 (1)	5.60
D- E	-551 / 0	-84.9	-84.9	0.24 (1)	6.25
E- F	-237 / 0	-84.9	-84.9	0.07 (1)	6.25
F- G	-233 / 0	-84.9	-84.9	0.05 (1)	6.25
H- G	-797 / 0	0.0	0.0	0.17 (1)	6.25
P- B	-867 / 0	0.0	0.0	0.09 (1)	7.81
P- O	0 / 113	-18.5	-18.5	0.03 (1)	10.00
O- N	0 / 17	0.0	0.0	0.16 (1)	10.00
N- C	0 / 72	0.0	0.0	0.17 (1)	10.00
N- M	0 / 1599	-18.5	-18.5	0.31 (1)	10.00
M- L	0 / 1062	-18.5	-18.5	0.22 (1)	10.00
L- K	0 / 482	-18.5	-18.5	0.10 (1)	10.00
I- K	0 / 31	0.0	0.0	0.03 (1)	10.00
K- F	-238 / 0	0.0	0.0	0.06 (1)	7.81
J- I	0 / 0	-18.5	-18.5	0.01 (4)	10.00
I- H	0 / 22	-18.5	-18.5	0.02 (4)	10.00

WEBS

MEMB. FR-TO	MAX. FORCE (LBS)	MAX CSI (LC)
C- M	-544 / 0	0.22 (1)
M- D	0 / 183	0.05 (4)
D- L	-705 / 0	0.41 (1)
L- E	0 / 461	0.10 (1)
E- K	-539 / 0	0.36 (1)
P- N	-131 / 0	0.01 (1)
B- N	0 / 1450	0.33 (1)
K- H	-26 / 0	0.00 (1)
K- G	0 / 787	0.18 (1)

DESIGN CRITERIA

SPECIFIED LOADS:

TOP CH.	LL	=	23.3	PSF
	DL	=	6.0	PSF
BOT CH.	LL	=	0.0	PSF
	DL	=	7.4	PSF
TOTAL LOAD		=	36.7	PSF

SPACING = 24.0 IN. C/C

LOADING IN FLAT SECTION BASED ON A SLOPE OF 6.00/12

THIS TRUSS IS DESIGNED FOR RESIDENTIAL OR SMALL BUILDING REQUIREMENTS OF PART 9, NBCC 2015

THIS DESIGN COMPLIES WITH:
- PART 9 OF BCBC 2018 , NBC-2019AE
- PART 9 OF OBC 2012 (2019 AMENDMENT)
- CSA 086-14
- TPIC 2014

DESIGN ASSUMPTIONS
-OVERHANG NOT TO BE ALTERED OR CUT OFF.

(55 % OF 27.2 P.S.F. G.S.L. PLUS 8.4 P.S.F. RAIN LOAD) EQUALS 23.3 P.S.F. SPECIFIED ROOF LIVE LOAD

ALLOWABLE DEFL.(LL)= L/360 (0.53")
CALCULATED VERT. DEFL.(LL) = L/ 999 (0.04")
ALLOWABLE DEFL.(TL)= L/360 (0.53")
CALCULATED VERT. DEFL.(TL) = L/ 999 (0.09")

CSI: TC=0.26/1.00 (C-D:1) , BC=0.31/1.00 (M-N:1) , WB=0.41/1.00 (D-L:1) , SSI=0.17/1.00 (D-E:1)

DOL LUMBER=1.00 NAIL=1.00 LS BEND=1.10 COMP=1.10 SHEAR=1.10 TENS= 1.10

COMPANION LIVE LOAD FACTOR = 1.00

TRUSS PLATE MANUFACTURER IS NOT RESPONSIBLE FOR QUALITY CONTROL IN THE TRUSS MANUFACTURING PLANT .

NAIL VALUES

PLATE	GRIP(DRY) (PSI) MAX	MIN	SHEAR (PLI) MAX	MIN	SECTION (PLI) MAX	MIN
MT20	650	371	1747	788	1987	1873

PLATE PLACEMENT TOL. = 0.250 inches

PLATE ROTATION TOL. = 5.0 Deg.

JSI GRIP= 0.65 (E) (INPUT = 0.90)
JSI METAL= 0.39 (B) (INPUT = 0.95)

JOB NAME	TRUSS NAME	QUANTITY	PLY	JOB DESC.	DRWG NO.
425913	T49	2	1	ROYAL PINE HOMES TRUSS DESC.	

Tamarack Roof Truss, Burlington

Version 8.630 S Aug 30 2023 MiTek Industries, Inc. Wed Feb 28 15:03:29 2024 Page 1
ID:VI_DQvi1e49Qy7axT?i10OzOYuG-Cw_2D5alb?SuNvImg26hRoDbSltGfbfxoiABWrzgavi

Scale = 1:44.7

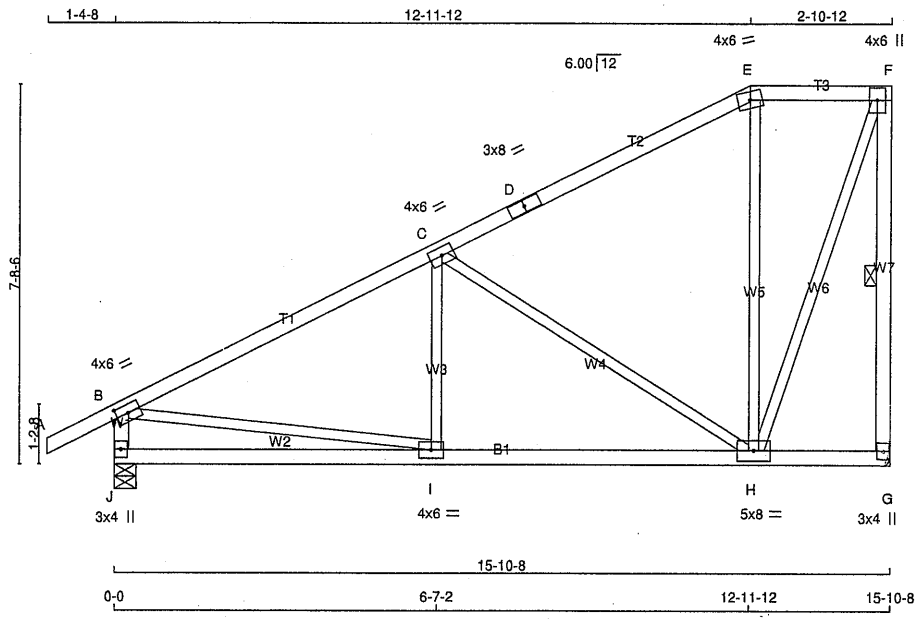

TOTAL WEIGHT = 2 X 75 = 150 lb

[M][F]

LUMBER
N. L. G. A. RULES

CHORDS	SIZE		LUMBER	DESCR.
A - D	2x4	DRY	No.2	SPF
D - E	2x4	DRY	No.2	SPF
E - F	2x4	DRY	No.2	SPF
G - F	2x4	DRY	No.2	SPF
J - B	2x4	DRY	No.2	SPF
J - G	2x4	DRY	No.2	SPF
ALL WEBS EXCEPT	2x3	DRY	No.2	SPF

DRY: SEASONED LUMBER.

PLATES (table is in inches)

JT	TYPE	PLATES	W	LEN	Y	X
B	TMVW-t	MT20	4.0	6.0	2.00	3.00
C	TMWW-t	MT20	4.0	6.0		
D	TS-t	MT20	3.0	8.0		
E	TTW-m	MT20	4.0	6.0		
F	TMVW+p	MT20	4.0	6.0		
G	BMV1+p	MT20	3.0	4.0		
H	BMWWW-t	MT20	5.0	8.0		
I	BMWW-t	MT20	4.0	6.0		
J	BMV1+p	MT20	3.0	4.0		

NOTES- (1)
1) Lateral braces to be a minimum of 2X4 SPF #2.

DIMENSIONS, SUPPORTS AND LOADINGS SPECIFIED BY FABRICATOR TO BE VERIFIED BY BUILDING DESIGNER

BEARINGS

JT	FACTORED GROSS REACTION VERT	HORZ	MAXIMUM FACTORED GROSS REACTION DOWN	HORZ	UPLIFT	INPUT BRG IN-SX	REQRD BRG IN-SX
G	820	0	820	0	0	MECHANICAL	
J	943	0	943	0	0	5-8	1-8

A SUITABLE HANGER/MECHANICAL CONNECTION IS REQUIRED AT JOINT G. MINIMUM BEARING LENGTH AT JOINT G = 1-8.

UNFACTORED REACTIONS

JT	1ST LCASE COMBINED	MAX./MIN. COMPONENT REACTIONS SNOW	LIVE	PERM.LIVE	WIND	DEAD	SOIL
G	582	370 / 0	0 / 0	0 / 0	0 / 0	213 / 0	0 / 0
J	667	437 / 0	0 / 0	0 / 0	0 / 0	230 / 0	0 / 0

BEARING MATERIAL TO BE SPF NO.2 OR BETTER AT JOINT(S) J

BRACING
TOP CHORD TO BE SHEATHED OR MAX. PURLIN SPACING = 5.68 FT.
MAX. UNBRACED BOTTOM CHORD LENGTH = 10.00 FT OR RIGID CEILING DIRECTLY APPLIED.

ALL PITCH BREAKS AND PERIMETER CORNER JOINTS MUST BE LATERALLY RESTRAINED.

1 LATERAL BRACE(S) AT 1/ 2 LENGTH OF F-G.

END VERTICAL(S) MUST BE SHEATHED OR HAVE BRACES AS INDICATED IN THE MAX. UNBRACED LENGTH COLUMN OF THE TABLE BELOW

LOADING
TOTAL LOAD CASES: (4)

CHORDS

MEMB. FR-TO	MAX. FACTORED FORCE (LBS)	FACTORED VERT. LOAD LC1 (PLF) FROM	TO	MAX CSI (LC)	MAX. UNBRAC LENGTH
A- B	0 / 27	-84.9	-84.9	0.12 (1)	10.00
B- C	-950 / 0	-84.9	-84.9	0.49 (1)	5.68
C- D	-323 / 0	-84.9	-84.9	0.46 (1)	6.25
D- E	-323 / 0	-84.9	-84.9	0.46 (1)	6.25
E- F	-258 / 0	-84.9	-84.9	0.09 (1)	6.25
G- F	-808 / 0	0.0	0.0	0.21 (1)	6.25
J- B	-893 / 0	0.0	0.0	0.09 (1)	7.81
J- I	0 / 0	-18.5	-18.5	0.20 (4)	10.00
I- H	0 / 876	-18.5	-18.5	0.28 (4)	10.00
H- G	0 / 0	-18.5	-18.5	0.10 (4)	10.00

WEBS

MEMB. FR-TO	MAX. FACTORED FORCE (LBS)	MAX CSI (LC)
I- C	0 / 114	0.04 (4)
C- H	-733 / 0	0.89 (1)
H- E	-195 / 0	0.21 (1)
H- F	0 / 733	0.16 (1)
B- I	0 / 885	0.20 (1)

DESIGN CRITERIA

SPECIFIED LOADS:

TOP CH.	LL	=	23.3	PSF
	DL	=	6.0	PSF
BOT CH.	LL	=	0.0	PSF
	DL	=	7.4	PSF
TOTAL LOAD		=	36.7	PSF

SPACING = 24.0 IN. C/C

LOADING IN FLAT SECTION BASED ON A SLOPE OF 6.00/12

THIS TRUSS IS DESIGNED FOR RESIDENTIAL OR SMALL BUILDING REQUIREMENTS OF PART 9, NBCC 2015

THIS DESIGN COMPLIES WITH:
- PART 9 OF BCBC 2018 , NBC-2019AE
- PART 9 OF OBC 2012 (2019 AMENDMENT)
- CSA 086-14
- TPIC 2014

(55 % OF 27.2 P.S.F. G.S.L. PLUS 8.4 P.S.F. RAIN LOAD) EQUALS 23.3 P.S.F. SPECIFIED ROOF LIVE LOAD

ALLOWABLE DEFL.(LL)= L/360 (0.53")
CALCULATED VERT. DEFL.(LL) = L/ 999 (0.03")
ALLOWABLE DEFL.(TL)= L/360 (0.53")
CALCULATED VERT. DEFL.(TL) = L/ 999 (0.07")

CSI: TC=0.49/1.00 (B-C:1) , BC=0.28/1.00 (H-I:4) , WB=0.89/1.00 (C-H:1) , SSI=0.24/1.00 (B-C:1)

DOL LUMBER=1.00 NAIL=1.00 LS BEND=1.10 COMP=1.10 SHEAR=1.10 TENS= 1.10

COMPANION LIVE LOAD FACTOR = 1.00

TRUSS PLATE MANUFACTURER IS NOT RESPONSIBLE FOR QUALITY CONTROL IN THE TRUSS MANUFACTURING PLANT .

NAIL VALUES

PLATE	GRIP(DRY) (PSI) MAX	MIN	SHEAR (PLI) MAX	MIN	SECTION (PLI) MAX	MIN
MT20	650	371	1747	788	1987	1873

PLATE PLACEMENT TOL. = 0.250 inches

PLATE ROTATION TOL. = 5.0 Deg.

JSI GRIP= 0.66 (H) (INPUT = 0.90)
JSI METAL= 0.26 (B) (INPUT = 0.95)

LICENSED PROFESSIONAL ENGINEER
02-28-24
H. J. G. ALVES
100009024
PROVINCE OF ONTARIO

Structural component only
DWG# T-2406440

JOB NAME	TRUSS NAME	QUANTITY	PLY	JOB DESC.	DRWG NO.
425913	T50	2	1	ROYAL PINE HOMES TRUSS DESC.	

Tamarack Roof Truss, Burlington

Version 8.630 S Aug 30 2023 MiTek Industries, Inc. Wed Feb 28 15:03:30 2024 Page 1
ID:VI_DQvi1e49Qy7axT?i10OzOYuG-g6YQRRbNMJal?3tyEldw_0mkv9CdO7r41Mwl2Hzgavh

Scale = 1:51.3

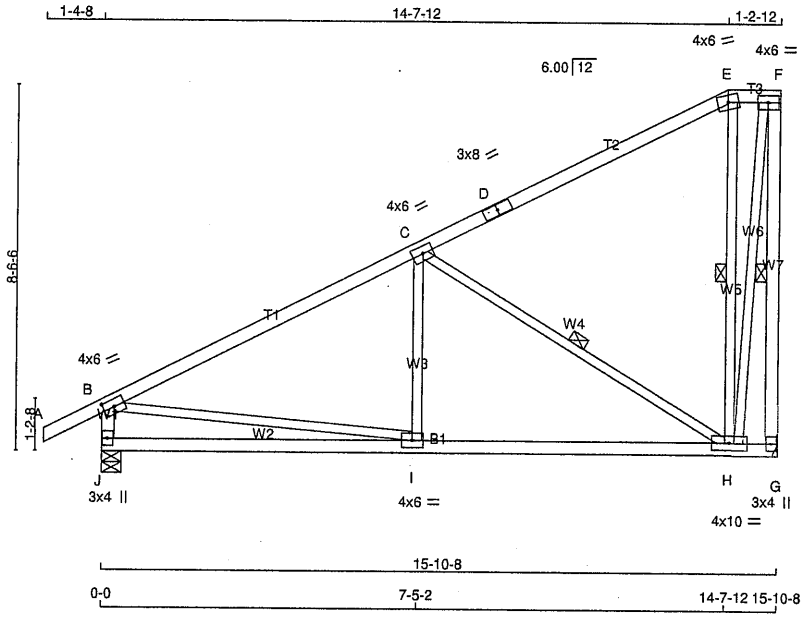

TOTAL WEIGHT = 2 X 79 = 158 lb
[M][F]

LUMBER
N. L. G. A. RULES

CHORDS	SIZE		LUMBER	DESCR.
A - D	2x4	DRY	No.2	SPF
D - E	2x4	DRY	No.2	SPF
E - F	2x4	DRY	No.2	SPF
G - F	2x4	DRY	No.2	SPF
J - B	2x4	DRY	No.2	SPF
J - G	2x4	DRY	No.2	SPF
ALL WEBS EXCEPT	2x3	DRY	No.2	SPF

DRY: SEASONED LUMBER.

PLATES (table is in inches)

JT	TYPE	PLATES	W	LEN	Y	X
B	TMVW-t	MT20	4.0	6.0	2.00	3.00
C	TMWW-t	MT20	4.0	6.0		
D	TS-t	MT20	3.0	8.0		
E	TTW-m	MT20	4.0	6.0		
F	TMVW-t	MT20	4.0	6.0		
G	BMV1+p	MT20	3.0	4.0		
H	BMWWW-t	MT20	4.0	10.0		
I	BMWW-t	MT20	4.0	6.0		
J	BMV1+p	MT20	3.0	4.0		

NOTES- (1)
1) Lateral braces to be a minimum of 2X4 SPF #2.

DIMENSIONS, SUPPORTS AND LOADINGS SPECIFIED BY FABRICATOR TO BE VERIFIED BY BUILDING DESIGNER

BEARINGS

JT	FACTORED GROSS REACTION VERT	HORZ	MAXIMUM FACTORED GROSS REACTION DOWN	HORZ	UPLIFT	INPUT BRG IN-SX	REQRD BRG IN-SX
G	820	0	820	0	0	MECHANICAL	
J	943	0	943	0	0	5-8	1-8

A SUITABLE HANGER/MECHANICAL CONNECTION IS REQUIRED AT JOINT G. MINIMUM BEARING LENGTH AT JOINT G = 1-8.

UNFACTORED REACTIONS

JT	1ST LCASE COMBINED	MAX./MIN. COMPONENT REACTIONS SNOW	LIVE	PERM.LIVE	WIND	DEAD	SOIL
G	582	370 / 0	0 / 0	0 / 0	0 / 0	213 / 0	0 / 0
J	667	437 / 0	0 / 0	0 / 0	0 / 0	230 / 0	0 / 0

BEARING MATERIAL TO BE SPF NO.2 OR BETTER AT JOINT(S) J

BRACING
TOP CHORD TO BE SHEATHED OR MAX. PURLIN SPACING = 5.43 FT.
MAX. UNBRACED BOTTOM CHORD LENGTH = 10.00 FT OR RIGID CEILING DIRECTLY APPLIED.

ALL PITCH BREAKS AND PERIMETER CORNER JOINTS MUST BE LATERALLY RESTRAINED.

1 LATERAL BRACE(S) AT 1/ 2 LENGTH OF F-G, C-H, E-H.

END VERTICAL(S) MUST BE SHEATHED OR HAVE BRACES AS INDICATED IN THE MAX. UNBRACED LENGTH COLUMN OF THE TABLE BELOW

LOADING
TOTAL LOAD CASES: (4)

CHORDS

MEMB. FR-TO	MAX. FACTORED FORCE (LBS)	FACTORED VERT. LOAD LC1 (PLF) FROM	TO	MAX CSI (LC)	MAX. UNBRAC LENGTH
A- B	0 / 27	-84.9	-84.9	0.12 (1)	10.00
B- C	-914 / 0	-84.9	-84.9	0.64 (1)	5.43
C- D	-158 / 0	-84.9	-84.9	0.60 (1)	6.25
D- E	-158 / 0	-84.9	-84.9	0.60 (1)	6.25
E- F	-107 / 0	-84.9	-84.9	0.02 (1)	6.25
G- F	-836 / 0	0.0	0.0	0.28 (1)	6.25
J- B	-888 / 0	0.0	0.0	0.09 (1)	7.81
J- I	0 / 0	-18.5	-18.5	0.26 (4)	10.00
I- H	0 / 848	-18.5	-18.5	0.33 (4)	10.00
H- G	0 / 0	-18.5	-18.5	0.11 (4)	10.00

WEBS

MEMB. FR-TO	MAX. FACTORED FORCE (LBS)	MAX CSI (LC)
I- C	0 / 142	0.05 (4)
C- H	-872 / 0	0.45 (1)
H- E	-227 / 0	0.11 (1)
H- F	0 / 792	0.18 (1)
B- I	0 / 854	0.19 (1)

DESIGN CRITERIA

SPECIFIED LOADS:

TOP CH.	LL	=	23.3	PSF
	DL	=	6.0	PSF
BOT CH.	LL	=	0.0	PSF
	DL	=	7.4	PSF
TOTAL LOAD		=	36.7	PSF

SPACING = 24.0 IN. C/C

LOADING IN FLAT SECTION BASED ON A SLOPE OF 6.00/12

THIS TRUSS IS DESIGNED FOR RESIDENTIAL OR SMALL BUILDING REQUIREMENTS OF PART 9, NBCC 2015

THIS DESIGN COMPLIES WITH:
- PART 9 OF BCBC 2018 , NBC-2019AE
- PART 9 OF OBC 2012 (2019 AMENDMENT)
- CSA 086-14
- TPIC 2014

(55 % OF 27.2 P.S.F. G.S.L. PLUS 8.4 P.S.F. RAIN LOAD) EQUALS 23.3 P.S.F. SPECIFIED ROOF LIVE LOAD

ALLOWABLE DEFL.(LL)= L/360 (0.53")
CALCULATED VERT. DEFL.(LL) = L/ 999 (0.03")
ALLOWABLE DEFL.(TL)= L/360 (0.53")
CALCULATED VERT. DEFL.(TL) = L/ 999 (0.10")

CSI: TC=0.64/1.00 (B-C:1) , BC=0.33/1.00 (H-I:4) , WB=0.45/1.00 (C-H:1) , SSI=0.27/1.00 (B-C:1)

DOL LUMBER=1.00 NAIL=1.00 LS BEND=1.10 COMP=1.10 SHEAR=1.10 TENS= 1.10

COMPANION LIVE LOAD FACTOR = 1.00

TRUSS PLATE MANUFACTURER IS NOT RESPONSIBLE FOR QUALITY CONTROL IN THE TRUSS MANUFACTURING PLANT .

NAIL VALUES

PLATE	GRIP(DRY) (PSI) MAX	MIN	SHEAR (PLI) MAX	MIN	SECTION (PLI) MAX	MIN
MT20	650	371	1747	788	1987	1873

PLATE PLACEMENT TOL. = 0.250 inches

PLATE ROTATION TOL. = 5.0 Deg.

JSI GRIP= 0.67 (H) (INPUT = 0.90)
JSI METAL= 0.25 (B) (INPUT = 0.95)

LICENSED PROFESSIONAL ENGINEER
02-28-24
H. J. G. ALVES
100009024
PROVINCE OF ONTARIO

Structural component only
DWG# T-2406441

JOB NAME	TRUSS NAME	QUANTITY	PLY	JOB DESC.	DRWG NO.
425913	T51	12	1	ROYAL PINE HOMES TRUSS DESC.	

Tamarack Roof Truss, Burlington

Version 8.630 S Aug 30 2023 MiTek Industries, Inc. Wed Feb 28 15:03:32 2024 Page 1
ID:VI_DQvi1e49Qy7axT?i10OzOYuG-cVgBs7deuwrTEN1LMAgO3Rr9lytxsz?NVgPs7Azgavf

Scale = 1:52.1

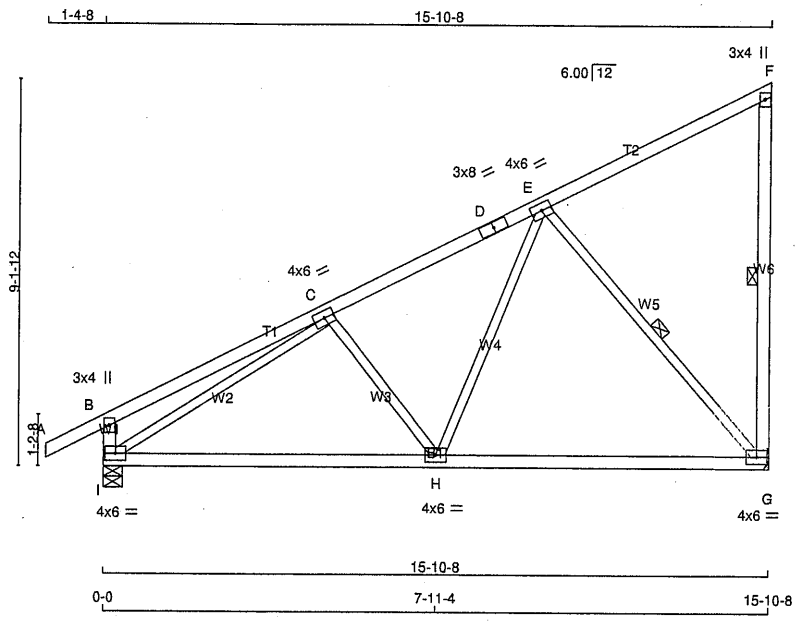

TOTAL WEIGHT = 12 X 71 = 846 lb
[M][F]

LUMBER
N. L. G. A. RULES

CHORDS	SIZE		LUMBER	DESCR.
A - D	2x4	DRY	No.2	SPF
D - F	2x4	DRY	No.2	SPF
G - F	2x4	DRY	No.2	SPF
I - B	2x4	DRY	No.2	SPF
I - G	2x4	DRY	No.2	SPF
ALL WEBS EXCEPT	2x3	DRY	No.2	SPF

DRY: SEASONED LUMBER.

PLATES (table is in inches)

JT	TYPE	PLATES	W	LEN	Y	X
B	TMV+p	MT20	3.0	4.0		
C	TMWW-t	MT20	4.0	6.0		
D	TS-t	MT20	3.0	8.0		
E	TMWW-t	MT20	4.0	6.0		
F	TMV+p	MT20	3.0	4.0		
G	BMVW1-t	MT20	4.0	6.0		
H	BMWW-t	MT20	4.0	6.0		
I	BMVW1-t	MT20	4.0	6.0		

NOTES- (1)
1) Lateral braces to be a minimum of 2X4 SPF #2.

DIMENSIONS, SUPPORTS AND LOADINGS SPECIFIED BY FABRICATOR TO BE VERIFIED BY BUILDING DESIGNER

BEARINGS

JT	FACTORED GROSS REACTION VERT	HORZ	MAXIMUM FACTORED GROSS REACTION DOWN	HORZ	UPLIFT	INPUT BRG IN-SX	REQRD BRG IN-SX
G	820	0	820	0	0	MECHANICAL	
I	943	0	943	0	0	5-8	1-8

A SUITABLE HANGER/MECHANICAL CONNECTION IS REQUIRED AT JOINT G. MINIMUM BEARING LENGTH AT JOINT G = 1-8.

UNFACTORED REACTIONS

JT	1ST LCASE COMBINED	MAX./MIN. COMPONENT REACTIONS SNOW	LIVE	PERM.LIVE	WIND	DEAD	SOIL
G	582	370 / 0	0 / 0	0 / 0	0 / 0	213 / 0	0 / 0
I	667	437 / 0	0 / 0	0 / 0	0 / 0	230 / 0	0 / 0

BEARING MATERIAL TO BE SPF NO.2 OR BETTER AT JOINT(S) I

BRACING
TOP CHORD TO BE SHEATHED OR MAX. PURLIN SPACING = 6.25 FT.
MAX. UNBRACED BOTTOM CHORD LENGTH = 10.00 FT OR RIGID CEILING DIRECTLY APPLIED.

ALL PITCH BREAKS AND PERIMETER CORNER JOINTS MUST BE LATERALLY RESTRAINED.

1 LATERAL BRACE(S) AT 1/ 2 LENGTH OF F-G, E-G.

END VERTICAL(S) MUST BE SHEATHED OR HAVE BRACES AS INDICATED IN THE MAX. UNBRACED LENGTH COLUMN OF THE TABLE BELOW

LOADING
TOTAL LOAD CASES: (4)

CHORDS

MEMB. FR-TO	MAX. FACTORED FORCE (LBS)	FACTORED VERT. LOAD LC1 (PLF) FROM	TO	MAX CSI (LC)	MAX. UNBRAC LENGTH
A- B	0 / 27	-84.9	-84.9	0.12 (1)	10.00
B- C	0 / 18	-84.9	-84.9	0.29 (1)	10.00
C- D	-760 / 0	-84.9	-84.9	0.27 (1)	6.25
D- E	-760 / 0	-84.9	-84.9	0.27 (1)	6.25
E- F	-20 / 0	-84.9	-84.9	0.28 (1)	6.25
G- F	-187 / 0	0.0	0.0	0.07 (1)	6.25
I- B	-305 / 0	0.0	0.0	0.03 (1)	7.81
I- H	0 / 866	-18.5	-18.5	0.41 (4)	10.00
H- G	0 / 517	-18.5	-18.5	0.38 (4)	10.00

WEBS

MEMB. FR-TO	MAX. FACTORED FORCE (LBS)	MAX CSI (LC)
C- H	-299 / 0	0.10 (1)
H- E	0 / 450	0.10 (1)
E- G	-775 / 0	0.34 (1)
I- C	-1042 / 0	0.73 (1)

DESIGN CRITERIA

SPECIFIED LOADS:

TOP CH.	LL	=	23.3	PSF
	DL	=	6.0	PSF
BOT CH.	LL	=	0.0	PSF
	DL	=	7.4	PSF
TOTAL LOAD		=	36.7	PSF

SPACING = 24.0 IN. C/C

THIS TRUSS IS DESIGNED FOR RESIDENTIAL OR SMALL BUILDING REQUIREMENTS OF PART 9, NBCC 2015

THIS DESIGN COMPLIES WITH:
- PART 9 OF BCBC 2018 , NBC-2019AE
- PART 9 OF OBC 2012 (2019 AMENDMENT)
- CSA 086-14
- TPIC 2014

(55 % OF 27.2 P.S.F. G.S.L. PLUS 8.4 P.S.F. RAIN LOAD) EQUALS 23.3 P.S.F. SPECIFIED ROOF LIVE LOAD

ALLOWABLE DEFL.(LL)= L/360 (0.53")
CALCULATED VERT. DEFL.(LL) = L/ 999 (0.02")
ALLOWABLE DEFL.(TL)= L/360 (0.53")
CALCULATED VERT. DEFL.(TL) = L/ 999 (0.10")

CSI: TC=0.29/1.00 (B-C:1) , BC=0.41/1.00 (H-I:4) , WB=0.73/1.00 (C-I:1) , SSI=0.19/1.00 (E-F:1)

DOL LUMBER=1.00 NAIL=1.00 LS BEND=1.10 COMP=1.10 SHEAR=1.10 TENS= 1.10

COMPANION LIVE LOAD FACTOR = 1.00

TRUSS PLATE MANUFACTURER IS NOT RESPONSIBLE FOR QUALITY CONTROL IN THE TRUSS MANUFACTURING PLANT .

NAIL VALUES

PLATE	GRIP(DRY) (PSI) MAX	MIN	SHEAR (PLI) MAX	MIN	SECTION (PLI) MAX	MIN
MT20	650	371	1747	788	1987	1873

PLATE PLACEMENT TOL. = 0.250 inches

PLATE ROTATION TOL. = 5.0 Deg.

JSI GRIP= 0.52 (I) (INPUT = 0.90)
JSI METAL= 0.22 (C) (INPUT = 0.95)

LICENSED PROFESSIONAL ENGINEER
02-28-24
H. J. G. ALVES
100009024
PROVINCE OF ONTARIO

Structural component only
DWG# T-2406442

JOB NAME	TRUSS NAME	QUANTITY	PLY	JOB DESC.	DRWG NO.
425913	T55	6	1	ROYAL PINE HOMES TRUSS DESC.	

Tamarack Roof Truss, Burlington

Version 8.630 S Aug 30 2023 MiTek Industries, Inc. Wed Feb 28 15:03:33 2024 Page 1
ID:BlaVeunaME1?qkeVm6JJQNzgujs-4hEZ3SdGeEzKsXcXvuBdceOJnMCpbPcXjK8Pfczgave

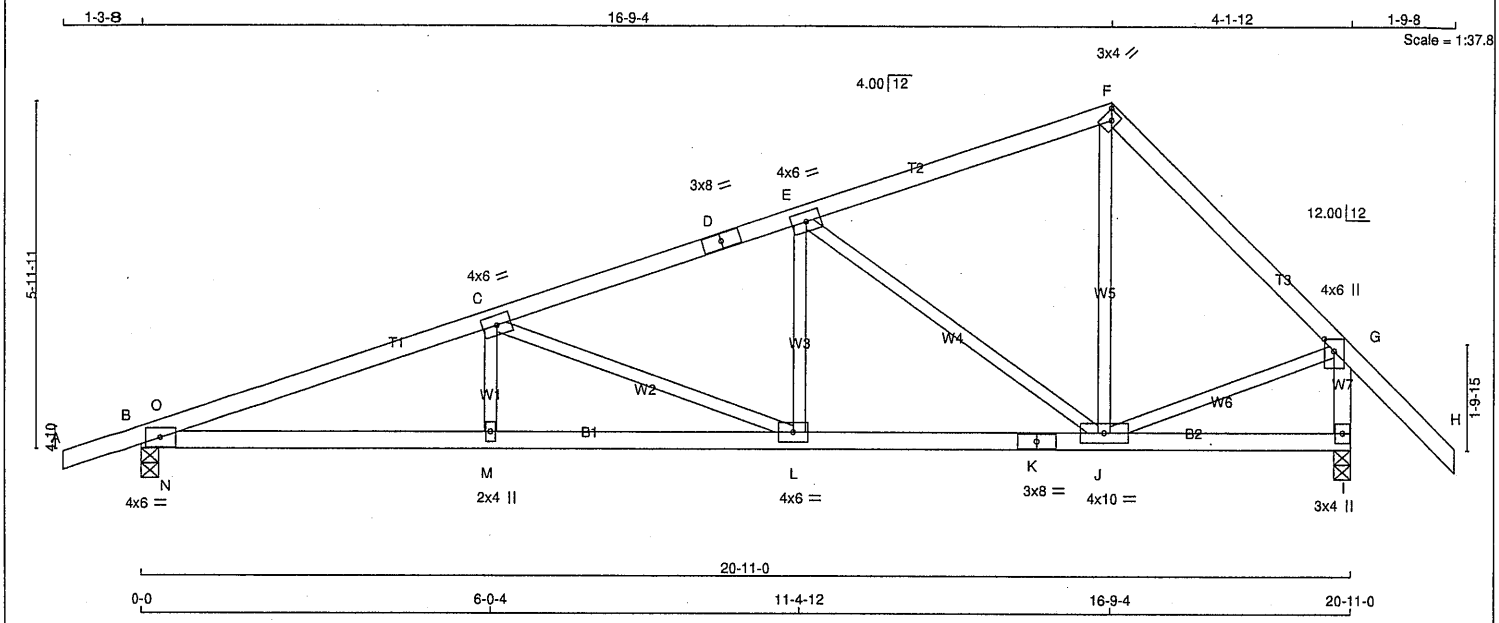

TOTAL WEIGHT = 6 X 79 = 473 lb

[M][F]

LUMBER

N. L. G. A. RULES

CHORDS	SIZE		LUMBER	DESCR.
A - D	2x4	DRY	No.2	SPF
D - F	2x4	DRY	No.2	SPF
F - H	2x4	DRY	No.2	SPF
I - G	2x4	DRY	No.2	SPF
B - K	2x4	DRY	No.2	SPF
K - I	2x4	DRY	No.2	SPF
ALL WEBS EXCEPT	2x3	DRY	No.2	SPF

DRY: SEASONED LUMBER.

PLATES (table is in inches)

JT	TYPE	PLATES	W	LEN	Y	X
B	TMB1-I	MT20	4.0	6.0		
C	TMWW-t	MT20	4.0	6.0		
D	TS-t	MT20	3.0	8.0		
E	TMWW-t	MT20	4.0	6.0		
F	TTW+h	MT20	3.0	4.0	Edge 1.75	
G	TMVW+p	MT20	4.0	6.0	2.50	2.00
I	BMV1+p	MT20	3.0	4.0		
J	BMWWW-t	MT20	4.0	10.0		
K	BS-t	MT20	3.0	8.0		
L	BMWW-t	MT20	4.0	6.0		
M	BMW+w	MT20	2.0	4.0		

Edge - INDICATES REFERENCE CORNER OF PLATE TOUCHES EDGE OF CHORD.

NOTES- (1)
1) Lateral braces to be a minimum of 2X4 SPF #2.

DIMENSIONS, SUPPORTS AND LOADINGS SPECIFIED BY FABRICATOR TO BE VERIFIED BY BUILDING DESIGNER

BEARINGS

JT	FACTORED GROSS REACTION VERT	HORZ	MAXIMUM FACTORED GROSS REACTION DOWN	HORZ	UPLIFT	INPUT BRG IN-SX	REQRD BRG IN-SX
B	1195	0	1195	0	0	3-8	1-8
I	1242	0	1242	0	0	3-8	1-8

UNFACTORED REACTIONS

JT	1ST LCASE COMBINED	MAX./MIN. COMPONENT REACTIONS SNOW	LIVE	PERM.LIVE	WIND	DEAD	SOIL
B	846	549 / 0	0 / 0	0 / 0	0 / 0	296 / 0	0 / 0
I	878	575 / 0	0 / 0	0 / 0	0 / 0	303 / 0	0 / 0

BEARING MATERIAL TO BE SPF NO.2 OR BETTER AT JOINT(S) B, I

BRACING

TOP CHORD TO BE SHEATHED OR MAX. PURLIN SPACING = 4.13 FT.
MAX. UNBRACED BOTTOM CHORD LENGTH = 10.00 FT OR RIGID CEILING DIRECTLY APPLIED.

ALL PITCH BREAKS AND PERIMETER CORNER JOINTS MUST BE LATERALLY RESTRAINED.

LOADING

TOTAL LOAD CASES: (4)

CHORDS

MEMB. FR-TO	MAX. FACTORED FORCE (LBS)	FACTORED VERT. LOAD (PLF) FROM	TO	LC1 MAX CSI (LC)	MAX. UNBRAC LENGTH
A- B	0 / 15	-84.9	-84.9	0.11 (1)	10.00
B- O	-2497 / 0	-84.9	-84.9	0.19 (1)	4.22
O- C	-2444 / 0	-84.9	-84.9	0.34 (1)	4.13
C- D	-1595 / 0	-84.9	-84.9	0.30 (1)	4.93
D- E	-1595 / 0	-84.9	-84.9	0.30 (1)	4.93
E- F	-705 / 0	-84.9	-84.9	0.28 (1)	6.25
F- G	-917 / 0	-84.9	-84.9	0.20 (1)	6.22
G- H	0 / 57	-84.9	-84.9	0.22 (1)	10.00
I- G	-1212 / 0	0.0	0.0	0.13 (1)	7.27
B- N	0 / 2322	-18.5	-18.5	0.45 (1)	10.00
N- M	0 / 2322	-18.5	-18.5	0.49 (1)	10.00
M- L	0 / 2322	-18.5	-18.5	0.42 (1)	10.00
L- K	0 / 1517	-18.5	-18.5	0.30 (1)	10.00
K- J	0 / 1517	-18.5	-18.5	0.30 (1)	10.00
J- I	0 / 0	-18.5	-18.5	0.10 (4)	10.00

WEBS

MEMB. FR-TO	MAX. FACTORED FORCE (LBS)	MAX CSI (LC)
M- C	0 / 120	0.04 (4)
C- L	-864 / 0	0.50 (1)
L- E	0 / 411	0.09 (1)
E- J	-1069 / 0	0.83 (1)
J- F	0 / 509	0.11 (1)
J- G	0 / 685	0.15 (1)
N- O	-75 / 84	0.00 (1)

DESIGN CRITERIA

SPECIFIED LOADS:

TOP CH.	LL	=	23.3	PSF
	DL	=	6.0	PSF
BOT CH.	LL	=	0.0	PSF
	DL	=	7.4	PSF
TOTAL LOAD		=	36.7	PSF

SPACING = 24.0 IN. C/C

THIS TRUSS IS DESIGNED FOR RESIDENTIAL OR SMALL BUILDING REQUIREMENTS OF PART 9, NBCC 2015

THIS DESIGN COMPLIES WITH:
- PART 9 OF BCBC 2018 , NBC-2019AE
- PART 9 OF OBC 2012 (2019 AMENDMENT)
- CSA 086-14
- TPIC 2014

(55 % OF 27.2 P.S.F. G.S.L. PLUS 8.4 P.S.F. RAIN LOAD) EQUALS 23.3 P.S.F. SPECIFIED ROOF LIVE LOAD

ALLOWABLE DEFL.(LL)= L/360 (0.70")
CALCULATED VERT. DEFL.(LL) = L/ 999 (0.09")
ALLOWABLE DEFL.(TL)= L/360 (0.70")
CALCULATED VERT. DEFL.(TL) = L/ 999 (0.17")

CSI: TC=0.34/1.00 (C-O:1) , BC=0.49/1.00 (M-N:1) , WB=0.83/1.00 (E-J:1) , SSI=0.20/1.00 (E-F:1)

DOL LUMBER=1.00 NAIL=1.00 LS BEND=1.10 COMP=1.10 SHEAR=1.10 TENS= 1.10

COMPANION LIVE LOAD FACTOR = 1.00

TRUSS PLATE MANUFACTURER IS NOT RESPONSIBLE FOR QUALITY CONTROL IN THE TRUSS MANUFACTURING PLANT .

NAIL VALUES

PLATE	GRIP(DRY) (PSI) MAX	MIN	SHEAR (PLI) MAX	MIN	SECTION (PLI) MAX	MIN
MT20	650	371	1747	788	1987	1873

PLATE PLACEMENT TOL. = 0.250 inches

PLATE ROTATION TOL. = 5.0 Deg.

JSI GRIP= 0.75 (F) (INPUT = 0.90)
JSI METAL= 0.52 (B) (INPUT = 0.95)

LICENSED PROFESSIONAL ENGINEER
02-28-24
H. J. G. ALVES
100009024
PROVINCE OF ONTARIO

Structural component only
DWG# T-2406443

JOB NAME	TRUSS NAME	QUANTITY	PLY	JOB DESC.	DRWG NO.
425913	T55G	6	1	ROYAL PINE HOMES TRUSS DESC.	

Tamarack Roof Truss, Burlington

Version 8.630 S Aug 30 2023 MiTek Industries, Inc. Wed Feb 28 15:03:34 2024 Page 1
ID:BlaVeunaME1?qkeVm6JJQNzgujs-ZuoxGoeuPX5BUhBjTbis8sxWRmdIK1Zgy_uyB3zgavd

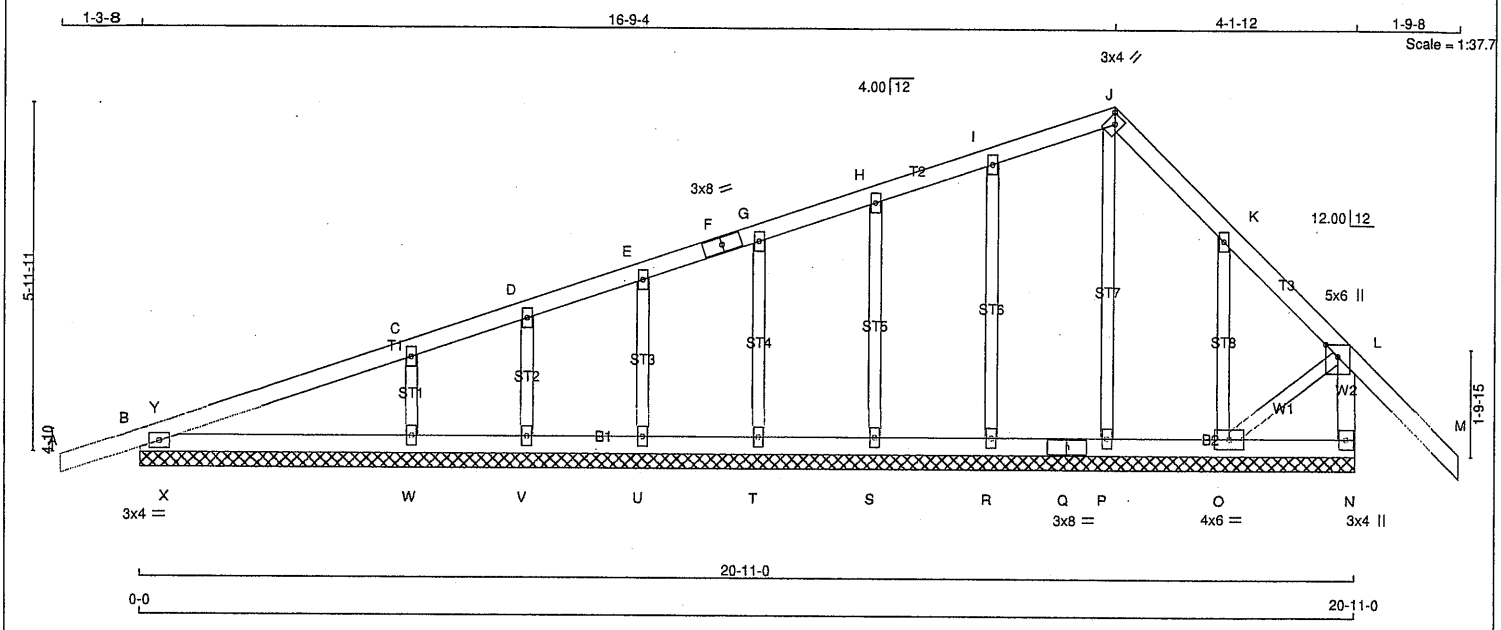

TOTAL WEIGHT = 6 X 81 = 487 lb

LUMBER
N. L. G. A. RULES

CHORDS	SIZE		LUMBER	DESCR.
A - F	2x4	DRY	No.2	SPF
F - J	2x4	DRY	No.2	SPF
J - M	2x4	DRY	No.2	SPF
N - L	2x4	DRY	No.2	SPF
B - Q	2x4	DRY	No.2	SPF
Q - N	2x4	DRY	No.2	SPF
ALL WEBS	2x3	DRY	No.2	SPF
ALL GABLE WEBS	2x3	DRY	No.2	SPF

DRY: SEASONED LUMBER.

GABLE STUDS SPACED AT 2-0-0 OC.

PLATES (table is in inches)

JT	TYPE	PLATES	W	LEN	Y	X
B	TMB1-I	MT20	3.0	4.0		
C, D, E, G, H, I, K						
C	TMW+w	MT20	2.0	4.0		
F	TS-t	MT20	3.0	8.0		
J	TTW+h	MT20	3.0	4.0	Edge	1.75
L	TMVW+p	MT20	5.0	6.0	Edge	
N	BMV1+p	MT20	3.0	4.0		
O	BMWW1-t	MT20	4.0	6.0		
P, R, S, T, U, V, W						
P	BMW1+w	MT20	2.0	4.0		
Q	BS-t	MT20	3.0	8.0		

Edge - INDICATES REFERENCE CORNER OF PLATE TOUCHES EDGE OF CHORD.

NOTES- (1)
1) Lateral braces to be a minimum of 2X4 SPF #2.

DIMENSIONS, SUPPORTS AND LOADINGS SPECIFIED BY FABRICATOR TO BE VERIFIED BY BUILDING DESIGNER

BEARINGS

THIS TRUSS DESIGNED FOR CONTINUOUS BEARINGS.

THIS TRUSS REQUIRES RIGID SHEATHING ON EXPOSED FACE.

BEARING MATERIAL TO BE SPF NO.2 OR BETTER AT JOINT(S)

BRACING
TOP CHORD TO BE SHEATHED OR MAX. PURLIN SPACING = 6.25 FT.
MAX. UNBRACED BOTTOM CHORD LENGTH = 10.00 FT OR RIGID CEILING DIRECTLY APPLIED.

ALL PITCH BREAKS AND PERIMETER CORNER JOINTS MUST BE LATERALLY RESTRAINED.

LOADING
TOTAL LOAD CASES: (4)

CHORDS

MEMB. FR-TO	MAX. FACTORED FORCE (LBS)	FACTORED VERT. LOAD LC1 (PLF) FROM	TO	MAX CSI (LC)	MAX. UNBRAC LENGTH
A- B	0 / 15	-84.9	-84.9	0.11 (1)	10.00
B- Y	-40 / 0	-84.9	-84.9	0.03 (4)	6.25
Y- C	-37 / 0	-84.9	-84.9	0.19 (1)	6.25
C- D	-58 / 0	-84.9	-84.9	0.19 (1)	6.25
D- E	-29 / 0	-84.9	-84.9	0.05 (1)	6.25
E- F	-32 / 0	-84.9	-84.9	0.05 (1)	6.25
F- G	-32 / 0	-84.9	-84.9	0.05 (1)	6.25
G- H	-29 / 0	-84.9	-84.9	0.04 (1)	6.25
H- I	-26 / 0	-84.9	-84.9	0.05 (1)	6.25
I- J	-31 / 0	-84.9	-84.9	0.05 (1)	6.25
J- K	-40 / 0	-84.9	-84.9	0.05 (1)	6.25
K- L	-89 / 0	-84.9	-84.9	0.21 (1)	6.25
L- M	0 / 57	-84.9	-84.9	0.22 (1)	10.00
N- L	-368 / 0	0.0	0.0	0.04 (1)	7.81
B- X	0 / 45	-18.5	-18.5	0.13 (1)	10.00
X- W	0 / 45	-18.5	-18.5	0.13 (1)	10.00
W- V	0 / 34	-18.5	-18.5	0.10 (1)	10.00
V- U	0 / 33	-18.5	-18.5	0.02 (1)	10.00
U- T	0 / 30	-18.5	-18.5	0.02 (4)	10.00
T- S	0 / 28	-18.5	-18.5	0.02 (4)	10.00
S- R	0 / 26	-18.5	-18.5	0.02 (4)	10.00
R- Q	0 / 24	-18.5	-18.5	0.02 (4)	10.00
Q- P	0 / 24	-18.5	-18.5	0.02 (4)	10.00
P- O	0 / 26	-18.5	-18.5	0.02 (4)	10.00
O- N	0 / 0	-18.5	-18.5	0.02 (4)	10.00

WEBS

MEMB. FR-TO	MAX. FACTORED FORCE (LBS)	MAX CSI (LC)
P- J	-121 / 0	0.07 (1)
R- I	-198 / 0	0.08 (1)
S- H	-164 / 0	0.05 (1)
T- G	-166 / 0	0.04 (1)
U- E	-188 / 0	0.04 (1)
V- D	-85 / 0	0.01 (1)
W- C	-356 / 0	0.05 (1)
O- K	-109 / 0	0.03 (1)
O- L	0 / 35	0.01 (1)
X- Y	-180 / 10	0.00 (1)

[M]

DESIGN CRITERIA

SPECIFIED LOADS:

TOP CH.	LL	=	23.3	PSF
	DL	=	6.0	PSF
BOT CH.	LL	=	0.0	PSF
	DL	=	7.4	PSF
TOTAL LOAD		=	36.7	PSF

SPACING = 24.0 IN. C/C

THIS TRUSS IS DESIGNED FOR RESIDENTIAL OR SMALL BUILDING REQUIREMENTS OF PART 9, NBCC 2015

THIS DESIGN COMPLIES WITH:
- PART 9 OF BCBC 2018 , NBC-2019AE
- PART 9 OF OBC 2012 (2019 AMENDMENT)
- CSA 086-14
- TPIC 2014

DESIGN ASSUMPTIONS
-OVERHANG NOT TO BE ALTERED OR CUT OFF.

(55 % OF 27.2 P.S.F. G.S.L. PLUS 8.4 P.S.F. RAIN LOAD) EQUALS 23.3 P.S.F. SPECIFIED ROOF LIVE LOAD

CSI: TC=0.22/1.00 (L-M:1) , BC=0.13/1.00 (W-X:1) , WB=0.08/1.00 (I-R:1) , SSI=0.15/1.00 (C-Y:1)

DOL LUMBER=1.00 NAIL=1.00 LS BEND=1.10 COMP=1.10 SHEAR=1.10 TENS= 1.10

COMPANION LIVE LOAD FACTOR = 1.00

TRUSS PLATE MANUFACTURER IS NOT RESPONSIBLE FOR QUALITY CONTROL IN THE TRUSS MANUFACTURING PLANT .

NAIL VALUES

PLATE	GRIP(DRY) (PSI) MAX	MIN	SHEAR (PLI) MAX	MIN	SECTION (PLI) MAX	MIN
MT20	650	371	1747	788	1987	1873

PLATE PLACEMENT TOL. = 0.250 inches

PLATE ROTATION TOL. = 5.0 Deg.

JSI GRIP= 0.61 (J) (INPUT = 0.90)
JSI METAL= 0.10 (C) (INPUT = 0.95)

LICENSED PROFESSIONAL ENGINEER
02-28-24
H. J. G. ALVES
100009024
PROVINCE OF ONTARIO

Structural component only
DWG# T-2406444

JOB NAME	TRUSS NAME	QUANTITY	PLY	JOB DESC.	DRWG NO.
425913	T61	2	1	ROYAL PINE HOMES TRUSS DESC.	

Tamarack Roof Truss, Burlington

Version 8.630 S Aug 30 2023 MiTek Industries, Inc. Wed Feb 28 15:03:35 2024 Page 1
ID:sd0FDfbi38oVqvTaiRkhtSzPAoD-14MJU8fWArD15qmw1JD5h3TYaAvu3NLpBedWkVzgavc

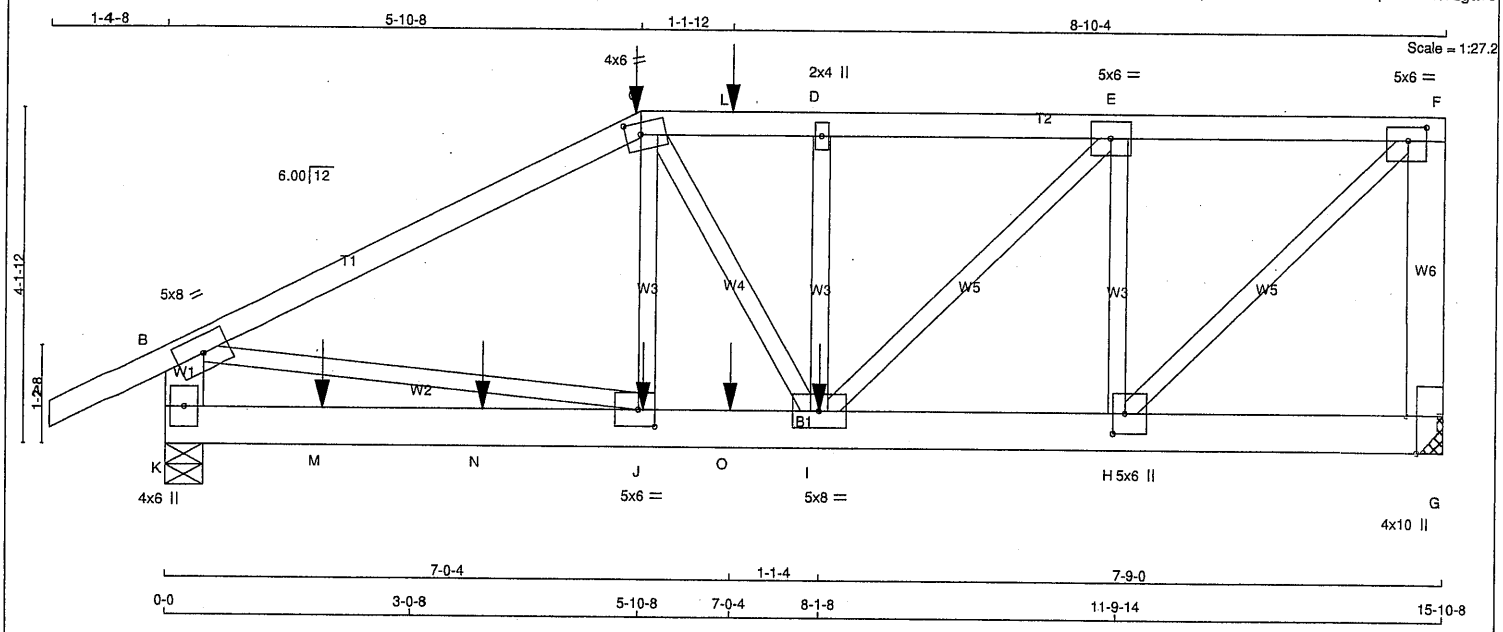

TOTAL WEIGHT = 2 X 80 = 161 lb [M]

LUMBER
N. L. G. A. RULES

CHORDS	SIZE		LUMBER	DESCR.
A - C	2x4	DRY	No.2	SPF
C - F	2x4	DRY	No.2	SPF
G - F	2x6	DRY	No.2	SPF
K - B	2x6	DRY	No.2	SPF
K - G	2x6	DRY	No.2	SPF
ALL WEBS EXCEPT	2x3	DRY	No.2	SPF

DRY: SEASONED LUMBER.

PLATES (table is in inches)

JT	TYPE	PLATES	W	LEN	Y	X
B	TMVW-t	MT20	5.0	8.0		
C	TTWW-m	MT20	4.0	6.0	1.75	2.25
D	TMW+w	MT20	2.0	4.0		
E	TMWW-t	MT20	5.0	6.0		
F	TMVW-t	MT20	5.0	6.0	2.00	2.75
G	BMV1+t	MT20	4.0	10.0	Edge	1.50
H	BMWW+t	MT20	5.0	6.0	3.00	1.75
I	BMWWW-t	MT20	5.0	8.0		
J	BMWW-t	MT20	5.0	6.0	2.50	2.50
K	BMV1+p	MT20	4.0	6.0		

Edge - INDICATES REFERENCE CORNER OF PLATE TOUCHES EDGE OF CHORD.

NOTES- (1)
1) Lateral braces to be a minimum of 2X4 SPF #2.

LICENSED PROFESSIONAL ENGINEER
02-28-24
H. J. G. ALVES
100009024
PROVINCE OF ONTARIO

Structural component only
DWG# T-2406445

DIMENSIONS, SUPPORTS AND LOADINGS SPECIFIED BY FABRICATOR TO BE VERIFIED BY BUILDING DESIGNER

BEARINGS

JT	FACTORED GROSS REACTION VERT	HORZ	MAXIMUM FACTORED GROSS REACTION DOWN	HORZ	UPLIFT	INPUT BRG IN-SX	REQRD BRG IN-SX
G	1587	0	1587	0	0	MECHANICAL	
K	1889	0	1889	0	0	5-8	2-1

A SUITABLE HANGER/MECHANICAL CONNECTION IS REQUIRED AT JOINT G. MINIMUM BEARING LENGTH AT JOINT G = 3-8.

UNFACTORED REACTIONS

JT	1ST LCASE COMBINED	MAX./MIN. COMPONENT REACTIONS SNOW	LIVE	PERM.LIVE	WIND	DEAD	SOIL
G	1122	737 / 0	0 / 0	0 / 0	0 / 0	386 / 0	0 / 0
K	1337	871 / 0	0 / 0	0 / 0	0 / 0	466 / 0	0 / 0

BEARING MATERIAL TO BE SPF NO.2 OR BETTER AT JOINT(S) K

BRACING
TOP CHORD TO BE SHEATHED OR MAX. PURLIN SPACING = 3.39 FT.
MAX. UNBRACED BOTTOM CHORD LENGTH = 10.00 FT OR RIGID CEILING DIRECTLY APPLIED.

ALL PITCH BREAKS AND PERIMETER CORNER JOINTS MUST BE LATERALLY RESTRAINED.

LOADING
TOTAL LOAD CASES: (4)

CHORDS

MEMB. FR-TO	MAX. FACTORED FORCE (LBS)	FACTORED VERT. LOAD (PLF) FROM	TO	LC1 CSI (LC)	MAX UNBRAC LENGTH
A- B	0 / 27	-84.9	-84.9	0.14 (1)	10.00
B- C	-2511 / 0	-84.9	-84.9	0.83 (1)	3.39
C- L	-2419 / 0	-84.9	-84.9	0.25 (1)	4.14
L- D	-2419 / 0	-84.9	-84.9	0.25 (1)	4.14
D- E	-2419 / 0	-84.9	-84.9	0.29 (1)	4.11
E- F	-1521 / 0	-84.9	-84.9	0.24 (1)	5.04
G- F	-1556 / 0	0.0	0.0	0.25 (1)	7.81
K- B	-1804 / 0	0.0	0.0	0.13 (1)	7.39
K- M	0 / 0	-18.5	-18.5	0.15 (4)	10.00
M- N	0 / 0	-18.5	-18.5	0.15 (4)	10.00
N- J	0 / 0	-18.5	-18.5	0.15 (4)	10.00
J- O	0 / 2243	-18.5	-18.5	0.39 (1)	10.00
O- I	0 / 2243	-18.5	-18.5	0.39 (1)	10.00
I- H	0 / 1521	-18.5	-18.5	0.30 (1)	10.00
H- G	0 / 0	-18.5	-18.5	0.04 (4)	10.00

WEBS

MEMB. FR-TO	MAX. FACTORED FORCE (LBS)	MAX CSI (LC)
J- C	-54 / 157	0.06 (4)
C- I	0 / 342	0.08 (1)
I- D	-336 / 0	0.09 (1)
H- F	0 / 2078	0.51 (1)
I- E	0 / 1283	0.32 (1)
H- E	-1294 / 0	0.33 (1)
B- J	0 / 2266	0.56 (1)

SPECIFIED CONCENTRATED LOADS (LBS)

JT	LOC.	LC1	MAX-	MAX+	FACE	DIR.	TYPE	HEEL	CONN.
C	5-10-8	-331	-331	---	FRONT	VERT	TOTAL	---	C1
I	8-1-8	-651	-651	---	FRONT	VERT	TOTAL	---	C1
J	5-11-4	-29	-29	---	FRONT	VERT	TOTAL	---	C1
L	7-0-4	-113	-113	---	FRONT	VERT	TOTAL	---	C1
M	1-11-4	-29	-29	---	FRONT	VERT	TOTAL	---	C1
N	3-11-4	-29	-29	---	FRONT	VERT	TOTAL	---	C1
O	7-0-4	-29	-29	---	FRONT	VERT	TOTAL	---	C1

CONNECTION REQUIREMENTS

1) **C1:** A SUITABLE HANGER/MECHANICAL CONNECTION IS REQUIRED.

DESIGN CRITERIA

SPECIFIED LOADS:

TOP CH.	LL	=	23.3	PSF
	DL	=	6.0	PSF
BOT CH.	LL	=	0.0	PSF
	DL	=	7.4	PSF
TOTAL LOAD		=	36.7	PSF

SPACING = 24.0 IN. C/C

LOADING IN FLAT SECTION BASED ON A SLOPE OF 6.00/12

THIS TRUSS IS DESIGNED FOR RESIDENTIAL OR SMALL BUILDING REQUIREMENTS OF PART 9, NBCC 2015

THIS DESIGN COMPLIES WITH:
- PART 9 OF BCBC 2018 , NBC-2019AE
- PART 9 OF OBC 2012 (2019 AMENDMENT)
- CSA 086-14
- TPIC 2014

(55 % OF 27.2 P.S.F. G.S.L. PLUS 8.4 P.S.F. RAIN LOAD) EQUALS 23.3 P.S.F. SPECIFIED ROOF LIVE LOAD

ALLOWABLE DEFL.(LL)= L/360 (0.53")
CALCULATED VERT. DEFL.(LL) = L/ 999 (0.06")
ALLOWABLE DEFL.(TL)= L/360 (0.53")
CALCULATED VERT. DEFL.(TL) = L/ 999 (0.11")

CSI: TC=0.83/1.00 (B-C:1) , BC=0.39/1.00 (I-J:1) , WB=0.56/1.00 (B-J:1) , SSI=0.19/1.00 (B-C:1)

DOL LUMBER=1.00 NAIL=1.00 LS BEND=1.00 COMP=1.00 SHEAR=1.00 TENS= 1.00

COMPANION LIVE LOAD FACTOR = 1.00

AUTOSOLVE RIGHT HEEL ONLY

TRUSS PLATE MANUFACTURER IS NOT RESPONSIBLE FOR QUALITY CONTROL IN THE TRUSS MANUFACTURING PLANT .

NAIL VALUES

PLATE	GRIP(DRY) (PSI) MAX	MIN	SHEAR (PLI) MAX	MIN	SECTION (PLI) MAX	MIN
MT20	650	371	1747	788	1987	1873

PLATE PLACEMENT TOL. = 0.250 inches

PLATE ROTATION TOL. = 5.0 Deg.

JSI GRIP= 0.79 (C) (INPUT = 0.90)
JSI METAL= 0.55 (H) (INPUT = 0.95)

JOB NAME	TRUSS NAME	QUANTITY	PLY	JOB DESC.	DRWG NO.
425913	T62	2	1	ROYAL PINE HOMES TRUSS DESC.	

Tamarack Roof Truss, Burlington

Version 8.630 S Aug 30 2023 MiTek Industries, Inc. Wed Feb 28 15:03:37 2024 Page 1
ID:sd0FDfbi38oVqvTaiRkhtSzPAoD-zST4vqgmiSTIL8vI8jFZmUY?YzcWXJ86ey6coNzgava

Scale = 1:31.4

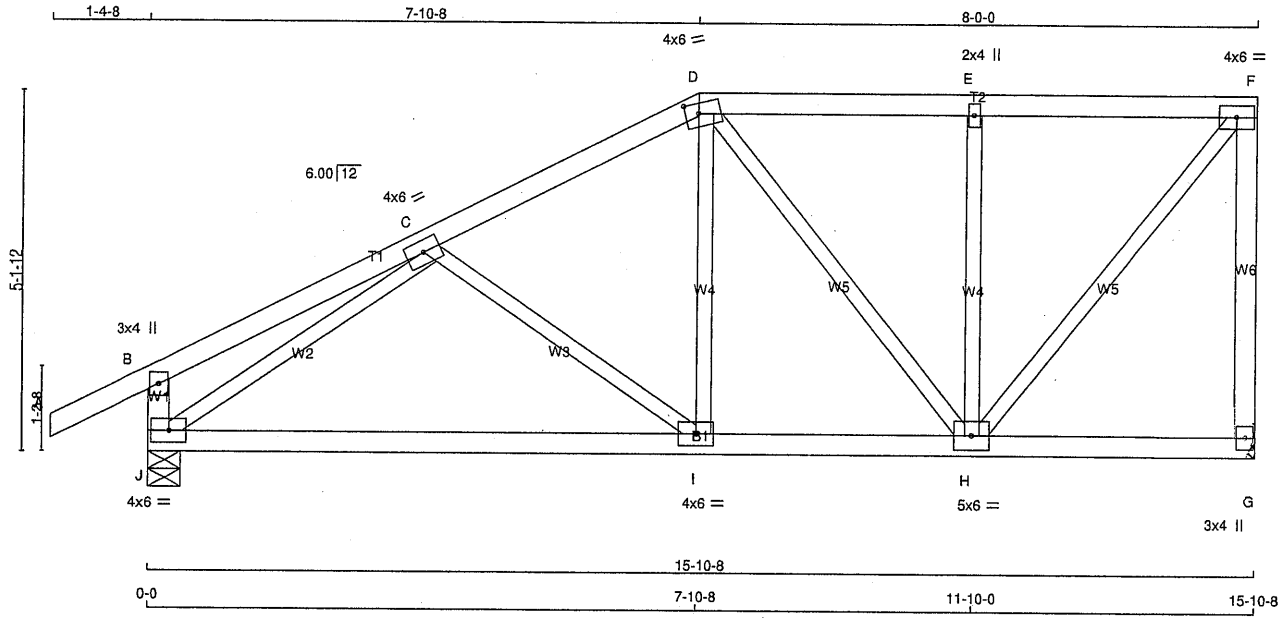

TOTAL WEIGHT = 2 X 70 = 139 lb [M]

LUMBER
N. L. G. A. RULES

CHORDS	SIZE		LUMBER	DESCR.
A - D	2x4	DRY	No.2	SPF
D - F	2x4	DRY	No.2	SPF
G - F	2x4	DRY	No.2	SPF
J - B	2x4	DRY	No.2	SPF
J - G	2x4	DRY	No.2	SPF
ALL WEBS EXCEPT	2x3	DRY	No.2	SPF

DRY: SEASONED LUMBER.

PLATES (table is in inches)

JT	TYPE	PLATES	W	LEN	Y	X
B	TMV+p	MT20	3.0	4.0		
C	TMWW-t	MT20	4.0	6.0		
D	TTWW-m	MT20	4.0	6.0	1.75	2.25
E	TMW+w	MT20	2.0	4.0		
F	TMVW-t	MT20	4.0	6.0		
G	BMV1+p	MT20	3.0	4.0		
H	BMWWW-t	MT20	5.0	6.0		
I	BMWW-t	MT20	4.0	6.0		
J	BMVW1-t	MT20	4.0	6.0		

NOTES (1)
1) Lateral braces to be a minimum of 2X4 SPF #2.

DIMENSIONS, SUPPORTS AND LOADINGS SPECIFIED BY FABRICATOR TO BE VERIFIED BY BUILDING DESIGNER

BEARINGS

JT	FACTORED GROSS REACTION VERT	HORZ	MAXIMUM FACTORED GROSS REACTION DOWN	HORZ	UPLIFT	INPUT BRG IN-SX	REQRD BRG IN-SX
G	820	0	820	0	0	MECHANICAL	
J	943	0	943	0	0	5-8	1-8

A SUITABLE HANGER/MECHANICAL CONNECTION IS REQUIRED AT JOINT G. MINIMUM BEARING LENGTH AT JOINT G = 1-8.

UNFACTORED REACTIONS

JT	1ST LCASE COMBINED	MAX./MIN. COMPONENT REACTIONS SNOW	LIVE	PERM.LIVE	WIND	DEAD	SOIL
G	582	370 / 0	0 / 0	0 / 0	0 / 0	213 / 0	0 / 0
J	667	437 / 0	0 / 0	0 / 0	0 / 0	230 / 0	0 / 0

BEARING MATERIAL TO BE SPF NO.2 OR BETTER AT JOINT(S) J

BRACING
TOP CHORD TO BE SHEATHED OR MAX. PURLIN SPACING = 6.25 FT.
MAX. UNBRACED BOTTOM CHORD LENGTH = 10.00 FT OR RIGID CEILING DIRECTLY APPLIED.

ALL PITCH BREAKS AND PERIMETER CORNER JOINTS MUST BE LATERALLY RESTRAINED.

LOADING
TOTAL LOAD CASES: (4)

CHORDS

MEMB. FR-TO	MAX. FACTORED FORCE (LBS)	FACTORED VERT. LOAD LC1 (PLF) FROM	TO	MAX CSI (LC)	MAX. UNBRAC LENGTH
A- B	0 / 27	-84.9	-84.9	0.12 (1)	10.00
B- C	0 / 17	-84.9	-84.9	0.20 (1)	10.00
C- D	-787 / 0	-84.9	-84.9	0.21 (1)	6.25
D- E	-543 / 0	-84.9	-84.9	0.22 (1)	6.25
E- F	-543 / 0	-84.9	-84.9	0.22 (1)	6.25
G- F	-784 / 0	0.0	0.0	0.35 (1)	7.81
J- B	-253 / 0	0.0	0.0	0.03 (1)	7.81
J- I	0 / 864	-18.5	-18.5	0.32 (4)	10.00
I- H	0 / 694	-18.5	-18.5	0.31 (4)	10.00
H- G	0 / 0	-18.5	-18.5	0.08 (4)	10.00

WEBS

MEMB. FR-TO	MAX. FACTORED FORCE (LBS)	MAX CSI (LC)
C- I	-216 / 0	0.09 (1)
I- D	0 / 273	0.06 (1)
J- C	-1069 / 0	0.41 (1)
H- F	0 / 848	0.19 (1)
D- H	-239 / 0	0.16 (1)
H- E	-418 / 0	0.16 (1)

DESIGN CRITERIA

SPECIFIED LOADS:

TOP CH.	LL	=	23.3	PSF
	DL	=	6.0	PSF
BOT CH.	LL	=	0.0	PSF
	DL	=	7.4	PSF
TOTAL LOAD		=	36.7	PSF

SPACING = 24.0 IN. C/C

LOADING IN FLAT SECTION BASED ON A SLOPE OF 6.00/12

THIS TRUSS IS DESIGNED FOR RESIDENTIAL OR SMALL BUILDING REQUIREMENTS OF PART 9, NBCC 2015

THIS DESIGN COMPLIES WITH:
- PART 9 OF BCBC 2018 , NBC-2019AE
- PART 9 OF OBC 2012 (2019 AMENDMENT)
- CSA 086-14
- TPIC 2014

(55 % OF 27.2 P.S.F. G.S.L. PLUS 8.4 P.S.F. RAIN LOAD) EQUALS 23.3 P.S.F. SPECIFIED ROOF LIVE LOAD

ALLOWABLE DEFL.(LL)= L/360 (0.53")
CALCULATED VERT. DEFL.(LL) = L/ 999 (0.02")
ALLOWABLE DEFL.(TL)= L/360 (0.53")
CALCULATED VERT. DEFL.(TL) = L/ 999 (0.13")

CSI: TC=0.35/1.00 (F-G:1) , BC=0.32/1.00 (I-J:4) , WB=0.41/1.00 (C-J:1) , SSI=0.16/1.00 (E-F:1)

DOL LUMBER=1.00 NAIL=1.00 LS BEND=1.10 COMP=1.10 SHEAR=1.10 TENS= 1.10

COMPANION LIVE LOAD FACTOR = 1.00

TRUSS PLATE MANUFACTURER IS NOT RESPONSIBLE FOR QUALITY CONTROL IN THE TRUSS MANUFACTURING PLANT .

NAIL VALUES

PLATE	GRIP(DRY) (PSI) MAX	MIN	SHEAR (PLI) MAX	MIN	SECTION (PLI) MAX	MIN
MT20	650	371	1747	788	1987	1873

PLATE PLACEMENT TOL. = 0.250 inches

PLATE ROTATION TOL. = 5.0 Deg.

JSI GRIP= 0.75 (H) (INPUT = 0.90)
JSI METAL= 0.23 (H) (INPUT = 0.95)

LICENSED PROFESSIONAL ENGINEER
02-28-24
H. J. G. ALVES
100009024
PROVINCE OF ONTARIO

Structural component only
DWG# T-2406446

JOB NAME	TRUSS NAME	QUANTITY	PLY	JOB DESC.	DRWG NO.
425913	T63	2	1	ROYAL PINE HOMES TRUSS DESC.	

Tamarack Roof Truss, Burlington

Version 8.630 S Aug 30 2023 MiTek Industries, Inc. Wed Feb 28 15:03:38 2024 Page 1
ID:sd0FDfbi38oVqvTaiRkhtSzPAoD-Rf1S6AhPTmbcyIUUiRmoJi57vNzDGoLGtcsALqzgavZ

Scale = 1:36.3

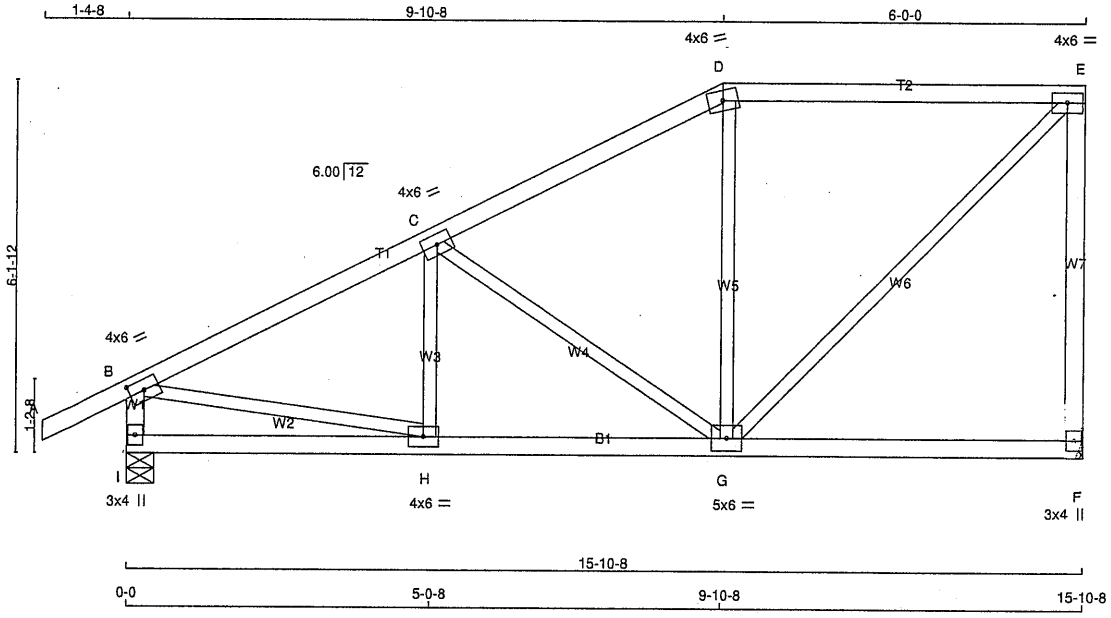

TOTAL WEIGHT = 2 X 69 = 137 lb

[M][F]

LUMBER
N. L. G. A. RULES

CHORDS	SIZE		LUMBER	DESCR.
A - D	2x4	DRY	No.2	SPF
D - E	2x4	DRY	No.2	SPF
F - E	2x4	DRY	No.2	SPF
I - B	2x4	DRY	No.2	SPF
I - F	2x4	DRY	No.2	SPF
ALL WEBS EXCEPT	2x3	DRY	No.2	SPF

DRY: SEASONED LUMBER.

PLATES (table is in inches)

JT	TYPE	PLATES	W	LEN	Y	X
B	TMVW-t	MT20	4.0	6.0	2.00	3.00
C	TMWW-t	MT20	4.0	6.0		
D	TTW-m	MT20	4.0	6.0		
E	TMVW-t	MT20	4.0	6.0		
F	BMV1+p	MT20	3.0	4.0		
G	BMWWW-t	MT20	5.0	6.0		
H	BMWW-t	MT20	4.0	6.0		
I	BMV1+p	MT20	3.0	4.0		

NOTES- (1)
1) Lateral braces to be a minimum of 2X4 SPF #2.

DIMENSIONS, SUPPORTS AND LOADINGS SPECIFIED BY FABRICATOR TO BE VERIFIED BY BUILDING DESIGNER

BEARINGS

JT	FACTORED GROSS REACTION VERT	HORZ	MAXIMUM FACTORED GROSS REACTION DOWN	HORZ	UPLIFT	INPUT BRG IN-SX	REQRD BRG IN-SX
F	820	0	820	0	0	MECHANICAL	
I	943	0	943	0	0	5-8	1-8

A SUITABLE HANGER/MECHANICAL CONNECTION IS REQUIRED AT JOINT F. MINIMUM BEARING LENGTH AT JOINT F = 1-8.

UNFACTORED REACTIONS

JT	1ST LCASE COMBINED	MAX./MIN. COMPONENT REACTIONS SNOW	LIVE	PERM.LIVE	WIND	DEAD	SOIL
F	582	370 / 0	0 / 0	0 / 0	0 / 0	213 / 0	0 / 0
I	667	437 / 0	0 / 0	0 / 0	0 / 0	230 / 0	0 / 0

BEARING MATERIAL TO BE SPF NO.2 OR BETTER AT JOINT(S) I

BRACING
TOP CHORD TO BE SHEATHED OR MAX. PURLIN SPACING = 5.94 FT.
MAX. UNBRACED BOTTOM CHORD LENGTH = 10.00 FT OR RIGID CEILING DIRECTLY APPLIED.

ALL PITCH BREAKS AND PERIMETER CORNER JOINTS MUST BE LATERALLY RESTRAINED.

LOADING
TOTAL LOAD CASES: (4)

CHORDS

MEMB. FR-TO	MAX. FACTORED FORCE (LBS)	FACTORED VERT. LOAD (PLF) FROM	TO	LC1	MAX CSI (LC)	MAX. UNBRAC LENGTH
A- B	0 / 27	-84.9	-84.9	0.12 (1)	10.00	
B- C	-991 / 0	-84.9	-84.9	0.27 (1)	5.94	
C- D	-614 / 0	-84.9	-84.9	0.26 (1)	6.25	
D- E	-525 / 0	-84.9	-84.9	0.39 (1)	6.25	
F- E	-775 / 0	0.0	0.0	0.57 (1)	7.81	
I- B	-902 / 0	0.0	0.0	0.09 (1)	7.81	
I- H	0 / 0	-18.5	-18.5	0.10 (4)	10.00	
H- G	0 / 906	-18.5	-18.5	0.22 (1)	10.00	
G- F	0 / 0	-18.5	-18.5	0.14 (4)	10.00	

WEBS

MEMB. FR-TO	MAX. FACTORED FORCE (LBS)	MAX CSI (LC)
H- C	-69 / 49	0.02 (4)
C- G	-460 / 0	0.29 (1)
G- D	-144 / 18	0.09 (1)
G- E	0 / 740	0.17 (1)
B- H	0 / 921	0.21 (1)

DESIGN CRITERIA

SPECIFIED LOADS:

TOP CH.	LL	=	23.3	PSF
	DL	=	6.0	PSF
BOT CH.	LL	=	0.0	PSF
	DL	=	7.4	PSF
TOTAL LOAD		=	36.7	PSF

SPACING = 24.0 IN. C/C

LOADING IN FLAT SECTION BASED ON A SLOPE OF 6.00/12

THIS TRUSS IS DESIGNED FOR RESIDENTIAL OR SMALL BUILDING REQUIREMENTS OF PART 9, NBCC 2015

THIS DESIGN COMPLIES WITH:
- PART 9 OF BCBC 2018 , NBC-2019AE
- PART 9 OF OBC 2012 (2019 AMENDMENT)
- CSA 086-14
- TPIC 2014

(55 % OF 27.2 P.S.F. G.S.L. PLUS 8.4 P.S.F. RAIN LOAD) EQUALS 23.3 P.S.F. SPECIFIED ROOF LIVE LOAD

ALLOWABLE DEFL.(LL)= L/360 (0.53")
CALCULATED VERT. DEFL.(LL) = L/ 999 (0.02")
ALLOWABLE DEFL.(TL)= L/360 (0.53")
CALCULATED VERT. DEFL.(TL) = L/ 999 (0.05")

CSI: TC=0.57/1.00 (E-F:1) , BC=0.22/1.00 (G-H:1) , WB=0.29/1.00 (C-G:1) , SSI=0.20/1.00 (D-E:1)

DOL LUMBER=1.00 NAIL=1.00 LS BEND=1.10 COMP=1.10 SHEAR=1.10 TENS= 1.10

COMPANION LIVE LOAD FACTOR = 1.00

TRUSS PLATE MANUFACTURER IS NOT RESPONSIBLE FOR QUALITY CONTROL IN THE TRUSS MANUFACTURING PLANT .

NAIL VALUES

PLATE	GRIP(DRY) (PSI) MAX	MIN	SHEAR (PLI) MAX	MIN	SECTION (PLI) MAX	MIN
MT20	650	371	1747	788	1987	1873

PLATE PLACEMENT TOL. = 0.250 inches

PLATE ROTATION TOL. = 5.0 Deg.

JSI GRIP= 0.68 (G) (INPUT = 0.90)
JSI METAL= 0.26 (B) (INPUT = 0.95)

LICENSED PROFESSIONAL ENGINEER
02-28-24
H. J. G. ALVES
100009024
PROVINCE OF ONTARIO

Structural component only
DWG# T-2406447

JOB NAME	TRUSS NAME	QUANTITY	PLY	JOB DESC.	DRWG NO.
425913	T64	2	1	ROYAL PINE HOMES TRUSS DESC.	

Tamarack Roof Truss, Burlington

Version 8.630 S Aug 30 2023 MiTek Industries, Inc. Wed Feb 28 15:03:39 2024 Page 1
ID:sd0FDfbi38oVqvTaiRkhtSzPAoD-vrbqKWi1E4jTaS3hG8I1rveKHnJA?ANP6GbjtGzgavY

Scale = 1:42.1

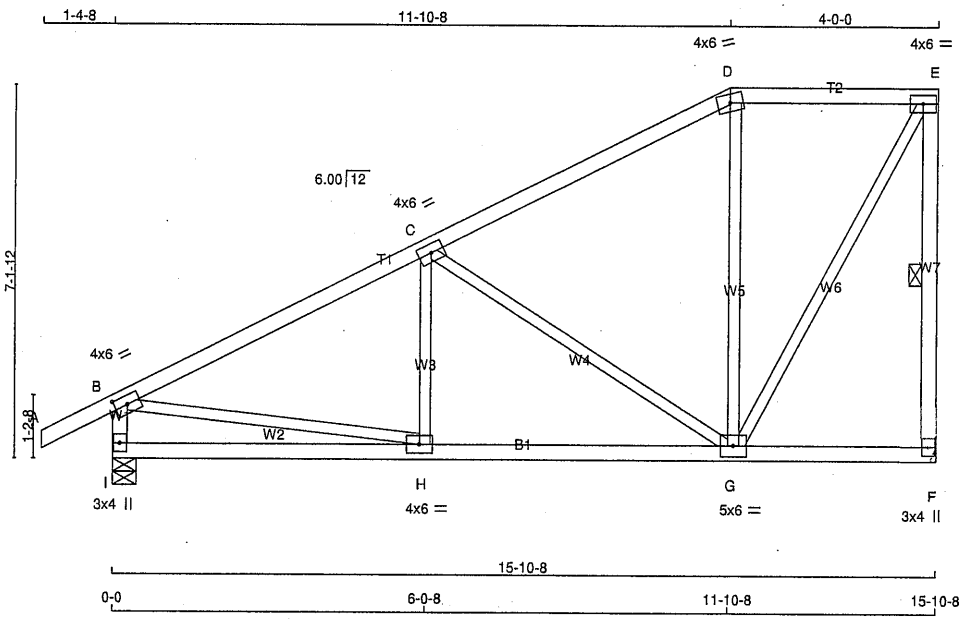

TOTAL WEIGHT = 2 X 73 = 145 lb

LUMBER
N. L. G. A. RULES

CHORDS	SIZE		LUMBER	DESCR.
A - D	2x4	DRY	No.2	SPF
D - E	2x4	DRY	No.2	SPF
F - E	2x4	DRY	No.2	SPF
I - B	2x4	DRY	No.2	SPF
I - F	2x4	DRY	No.2	SPF
ALL WEBS EXCEPT	2x3	DRY	No.2	SPF

DRY: SEASONED LUMBER.

PLATES (table is in inches)

JT	TYPE	PLATES	W	LEN	Y	X
B	TMVW-t	MT20	4.0	6.0	2.00	3.00
C	TMWW-t	MT20	4.0	6.0		
D	TTW-m	MT20	4.0	6.0		
E	TMVW-t	MT20	4.0	6.0		
F	BMV1+p	MT20	3.0	4.0		
G	BMWWW-t	MT20	5.0	6.0		
H	BMWW-t	MT20	4.0	6.0		
I	BMV1+p	MT20	3.0	4.0		

NOTES- (1)
1) Lateral braces to be a minimum of 2X4 SPF #2.

DIMENSIONS, SUPPORTS AND LOADINGS SPECIFIED BY FABRICATOR TO BE VERIFIED BY BUILDING DESIGNER

BEARINGS

JT	FACTORED GROSS REACTION VERT	HORZ	MAXIMUM FACTORED GROSS REACTION DOWN	HORZ	UPLIFT	INPUT BRG IN-SX	REQRD BRG IN-SX
F	820	0	820	0	0	MECHANICAL	
I	943	0	943	0	0	5-8	1-8

A SUITABLE HANGER/MECHANICAL CONNECTION IS REQUIRED AT JOINT F. MINIMUM BEARING LENGTH AT JOINT F = 1-8.

UNFACTORED REACTIONS

JT	1ST LCASE COMBINED	MAX./MIN. COMPONENT REACTIONS SNOW	LIVE	PERM.LIVE	WIND	DEAD	SOIL
F	582	370 / 0	0 / 0	0 / 0	0 / 0	213 / 0	0 / 0
I	667	437 / 0	0 / 0	0 / 0	0 / 0	230 / 0	0 / 0

BEARING MATERIAL TO BE SPF NO.2 OR BETTER AT JOINT(S) I

BRACING
TOP CHORD TO BE SHEATHED OR MAX. PURLIN SPACING = 5.79 FT.
MAX. UNBRACED BOTTOM CHORD LENGTH = 10.00 FT OR RIGID CEILING DIRECTLY APPLIED.

ALL PITCH BREAKS AND PERIMETER CORNER JOINTS MUST BE LATERALLY RESTRAINED.

1 LATERAL BRACE(S) AT 1/ 2 LENGTH OF E-F.

END VERTICAL(S) MUST BE SHEATHED OR HAVE BRACES AS INDICATED IN THE MAX. UNBRACED LENGTH COLUMN OF THE TABLE BELOW

LOADING
TOTAL LOAD CASES: (4)

CHORDS

MEMB. FR-TO	MAX. FACTORED FORCE (LBS)	FACTORED VERT. LOAD LC1 (PLF) FROM	TO	MAX CSI (LC)	MAX. UNBRAC LENGTH
A- B	0 / 27	-84.9	-84.9	0.12 (1)	10.00
B- C	-970 / 0	-84.9	-84.9	0.40 (1)	5.79
C- D	-428 / 0	-84.9	-84.9	0.38 (1)	6.25
D- E	-355 / 0	-84.9	-84.9	0.17 (1)	6.25
F- E	-794 / 0	0.0	0.0	0.18 (1)	6.25
I- B	-897 / 0	0.0	0.0	0.09 (1)	7.81
I- H	0 / 0	-18.5	-18.5	0.16 (4)	10.00
H- G	0 / 891	-18.5	-18.5	0.24 (4)	10.00
G- F	0 / 0	-18.5	-18.5	0.09 (4)	10.00

WEBS

MEMB. FR-TO	MAX. FACTORED FORCE (LBS)	MAX CSI (LC)
H- C	-8 / 94	0.03 (4)
C- G	-639 / 0	0.62 (1)
G- D	-176 / 0	0.16 (1)
G- E	0 / 719	0.16 (1)
B- H	0 / 901	0.20 (1)

DESIGN CRITERIA

SPECIFIED LOADS:

TOP CH.	LL	=	23.3	PSF
	DL	=	6.0	PSF
BOT CH.	LL	=	0.0	PSF
	DL	=	7.4	PSF
TOTAL LOAD		=	36.7	PSF

SPACING = 24.0 IN. C/C

LOADING IN FLAT SECTION BASED ON A SLOPE OF 6.00/12

THIS TRUSS IS DESIGNED FOR RESIDENTIAL OR SMALL BUILDING REQUIREMENTS OF PART 9, NBCC 2015

THIS DESIGN COMPLIES WITH:
- PART 9 OF BCBC 2018 , NBC-2019AE
- PART 9 OF OBC 2012 (2019 AMENDMENT)
- CSA 086-14
- TPIC 2014

(55 % OF 27.2 P.S.F. G.S.L. PLUS 8.4 P.S.F. RAIN LOAD) EQUALS 23.3 P.S.F. SPECIFIED ROOF LIVE LOAD

ALLOWABLE DEFL.(LL)= L/360 (0.53")
CALCULATED VERT. DEFL.(LL) = L/ 999 (0.02")
ALLOWABLE DEFL.(TL)= L/360 (0.53")
CALCULATED VERT. DEFL.(TL) = L/ 999 (0.06")

CSI: TC=0.40/1.00 (B-C:1) , BC=0.24/1.00 (G-H:4) , WB=0.62/1.00 (C-G:1) , SSI=0.22/1.00 (B-C:1)

DOL LUMBER=1.00 NAIL=1.00 LS BEND=1.10 COMP=1.10 SHEAR=1.10 TENS= 1.10

COMPANION LIVE LOAD FACTOR = 1.00

TRUSS PLATE MANUFACTURER IS NOT RESPONSIBLE FOR QUALITY CONTROL IN THE TRUSS MANUFACTURING PLANT .

NAIL VALUES

PLATE	GRIP(DRY) (PSI) MAX	MIN	SHEAR (PLI) MAX	MIN	SECTION (PLI) MAX	MIN
MT20	650	371	1747	788	1987	1873

PLATE PLACEMENT TOL. = 0.250 inches

PLATE ROTATION TOL. = 5.0 Deg.

JSI GRIP= 0.74 (E) (INPUT = 0.90)
JSI METAL= 0.26 (B) (INPUT = 0.95)

LICENSED PROFESSIONAL ENGINEER
02-28-24
H. J. G. ALVES
100009024
PROVINCE OF ONTARIO

Structural component only
DWG# T-2406448

JOB NAME	TRUSS NAME	QUANTITY	PLY	JOB DESC.	DRWG NO.
425913	T65	2	1	ROYAL PINE HOMES TRUSS DESC.	

Tamarack Roof Truss, Burlington

Version 8.630 S Aug 30 2023 MiTek Industries, Inc. Wed Feb 28 15:03:40 2024 Page 1
ID:sd0FDfbi38oVqvTaiRkhtSzPAoD-N19CXsjf?NrKCcetqspGO7ATTBeOkhXYKwLHPizgavX

Scale = 1:45.7

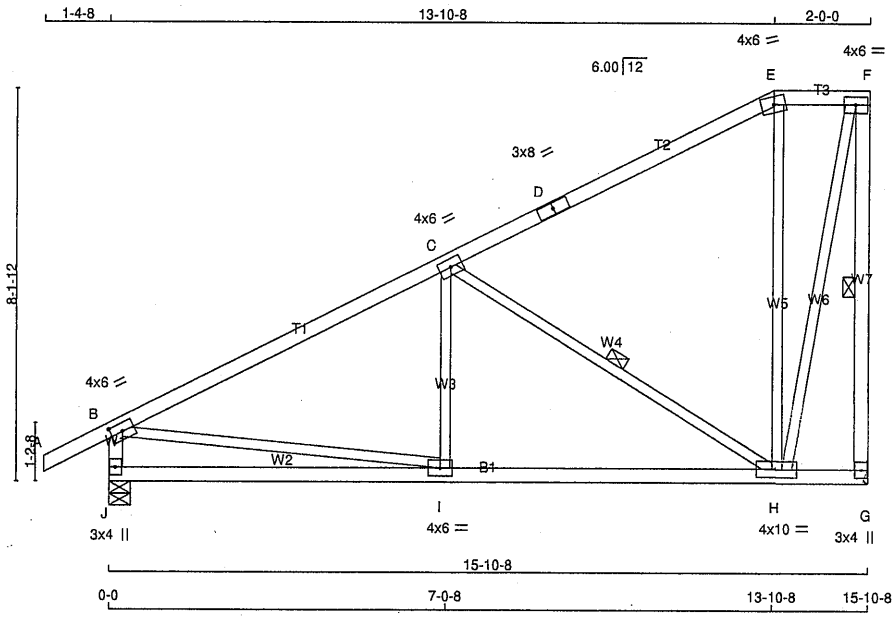

TOTAL WEIGHT = 2 X 77 = 154 lb
[M][F]

LUMBER
N. L. G. A. RULES

CHORDS	SIZE		LUMBER	DESCR.
A - D	2x4	DRY	No.2	SPF
D - E	2x4	DRY	No.2	SPF
E - F	2x4	DRY	No.2	SPF
G - F	2x4	DRY	No.2	SPF
J - B	2x4	DRY	No.2	SPF
J - G	2x4	DRY	No.2	SPF
ALL WEBS EXCEPT	2x3	DRY	No.2	SPF

DRY: SEASONED LUMBER.

PLATES (table is in inches)

JT	TYPE	PLATES	W	LEN	Y	X
B	TMVW-t	MT20	4.0	6.0	2.00	3.00
C	TMWW-t	MT20	4.0	6.0		
D	TS-t	MT20	3.0	8.0		
E	TTW-m	MT20	4.0	6.0		
F	TMVW-t	MT20	4.0	6.0		
G	BMV1+p	MT20	3.0	4.0		
H	BMWWW-t	MT20	4.0	10.0		
I	BMWW-t	MT20	4.0	6.0		
J	BMV1+p	MT20	3.0	4.0		

NOTES- (1)
1) Lateral braces to be a minimum of 2X4 SPF #2.

DIMENSIONS, SUPPORTS AND LOADINGS SPECIFIED BY FABRICATOR TO BE VERIFIED BY BUILDING DESIGNER

BEARINGS

JT	FACTORED GROSS REACTION VERT	HORZ	MAXIMUM FACTORED GROSS REACTION DOWN	HORZ	UPLIFT	INPUT BRG IN-SX	REQRD BRG IN-SX
G	820	0	820	0	0	MECHANICAL	
J	943	0	943	0	0	5-8	1-8

A SUITABLE HANGER/MECHANICAL CONNECTION IS REQUIRED AT JOINT G. MINIMUM BEARING LENGTH AT JOINT G = 1-8.

UNFACTORED REACTIONS

JT	1ST LCASE COMBINED	MAX./MIN. COMPONENT REACTIONS SNOW	LIVE	PERM.LIVE	WIND	DEAD	SOIL
G	582	370 / 0	0 / 0	0 / 0	0 / 0	213 / 0	0 / 0
J	667	437 / 0	0 / 0	0 / 0	0 / 0	230 / 0	0 / 0

BEARING MATERIAL TO BE SPF NO.2 OR BETTER AT JOINT(S) J

BRACING
TOP CHORD TO BE SHEATHED OR MAX. PURLIN SPACING = 5.56 FT.
MAX. UNBRACED BOTTOM CHORD LENGTH = 10.00 FT OR RIGID CEILING DIRECTLY APPLIED.

ALL PITCH BREAKS AND PERIMETER CORNER JOINTS MUST BE LATERALLY RESTRAINED.

1 LATERAL BRACE(S) AT 1/ 2 LENGTH OF F-G, C-H.

END VERTICAL(S) MUST BE SHEATHED OR HAVE BRACES AS INDICATED IN THE MAX. UNBRACED LENGTH COLUMN OF THE TABLE BELOW

LOADING
TOTAL LOAD CASES: (4)

CHORDS

MEMB. FR-TO	MAX. FACTORED FORCE (LBS)	FACTORED VERT. LOAD LC1 (PLF) FROM	TO	MAX CSI (LC)	MAX. UNBRAC LENGTH
A- B	0 / 27	-84.9	-84.9	0.12 (1)	10.00
B- C	-931 / 0	-84.9	-84.9	0.57 (1)	5.56
C- D	-235 / 0	-84.9	-84.9	0.53 (1)	6.25
D- E	-235 / 0	-84.9	-84.9	0.53 (1)	6.25
E- F	-178 / 0	-84.9	-84.9	0.04 (1)	6.25
G- F	-822 / 0	0.0	0.0	0.25 (1)	6.25
J- B	-891 / 0	0.0	0.0	0.09 (1)	7.81
J- I	0 / 0	-18.5	-18.5	0.23 (4)	10.00
I- H	0 / 862	-18.5	-18.5	0.31 (4)	10.00
H- G	0 / 0	-18.5	-18.5	0.11 (4)	10.00

WEBS

MEMB. FR-TO	MAX. FACTORED FORCE (LBS)	MAX CSI (LC)
I- C	0 / 129	0.04 (4)
C- H	-807 / 0	0.37 (1)
H- E	-211 / 0	0.27 (1)
H- F	0 / 759	0.17 (1)
B- I	0 / 869	0.20 (1)

DESIGN CRITERIA

SPECIFIED LOADS:

TOP CH.	LL	=	23.3	PSF
	DL	=	6.0	PSF
BOT CH.	LL	=	0.0	PSF
	DL	=	7.4	PSF
TOTAL LOAD		=	36.7	PSF

SPACING = 24.0 IN. C/C

LOADING IN FLAT SECTION BASED ON A SLOPE OF 6.00/12

THIS TRUSS IS DESIGNED FOR RESIDENTIAL OR SMALL BUILDING REQUIREMENTS OF PART 9, NBCC 2015

THIS DESIGN COMPLIES WITH:
- PART 9 OF BCBC 2018 , NBC-2019AE
- PART 9 OF OBC 2012 (2019 AMENDMENT)
- CSA 086-14
- TPIC 2014

(55 % OF 27.2 P.S.F. G.S.L. PLUS 8.4 P.S.F. RAIN LOAD) EQUALS 23.3 P.S.F. SPECIFIED ROOF LIVE LOAD

ALLOWABLE DEFL.(LL)= L/360 (0.53")
CALCULATED VERT. DEFL.(LL) = L/ 999 (0.03")
ALLOWABLE DEFL.(TL)= L/360 (0.53")
CALCULATED VERT. DEFL.(TL) = L/ 999 (0.08")

CSI: TC=0.57/1.00 (B-C:1) , BC=0.31/1.00 (H-I:4) , WB=0.37/1.00 (C-H:1) , SSI=0.26/1.00 (B-C:1)

DOL LUMBER=1.00 NAIL=1.00 LS BEND=1.10 COMP=1.10 SHEAR=1.10 TENS= 1.10

COMPANION LIVE LOAD FACTOR = 1.00

TRUSS PLATE MANUFACTURER IS NOT RESPONSIBLE FOR QUALITY CONTROL IN THE TRUSS MANUFACTURING PLANT .

NAIL VALUES

PLATE	GRIP(DRY) (PSI) MAX	MIN	SHEAR (PLI) MAX	MIN	SECTION (PLI) MAX	MIN
MT20	650	371	1747	788	1987	1873

PLATE PLACEMENT TOL. = 0.250 inches

PLATE ROTATION TOL. = 5.0 Deg.

JSI GRIP= 0.62 (H) (INPUT = 0.90)
JSI METAL= 0.25 (B) (INPUT = 0.95)

LICENSED PROFESSIONAL ENGINEER
02-28-24
H. J. G. ALVES
100009024
PROVINCE OF ONTARIO

Structural component only
DWG# T-2406449

JOB NAME	TRUSS NAME	QUANTITY	PLY	JOB DESC.	DRWG NO.
425913	T66	2	1	ROYAL PINE HOMES TRUSS DESC.	

Tamarack Roof Truss, Burlington

Version 8.630 S Aug 30 2023 MiTek Industries, Inc. Wed Feb 28 15:03:41 2024 Page 1
ID:sd0FDfbi38oVqvTaiRkhtSzPAoD-rEjbkBkHmhzBqID3NZKVwKjgYa1jTBRiZa4qx9zgavW

Scale = 1:18.7

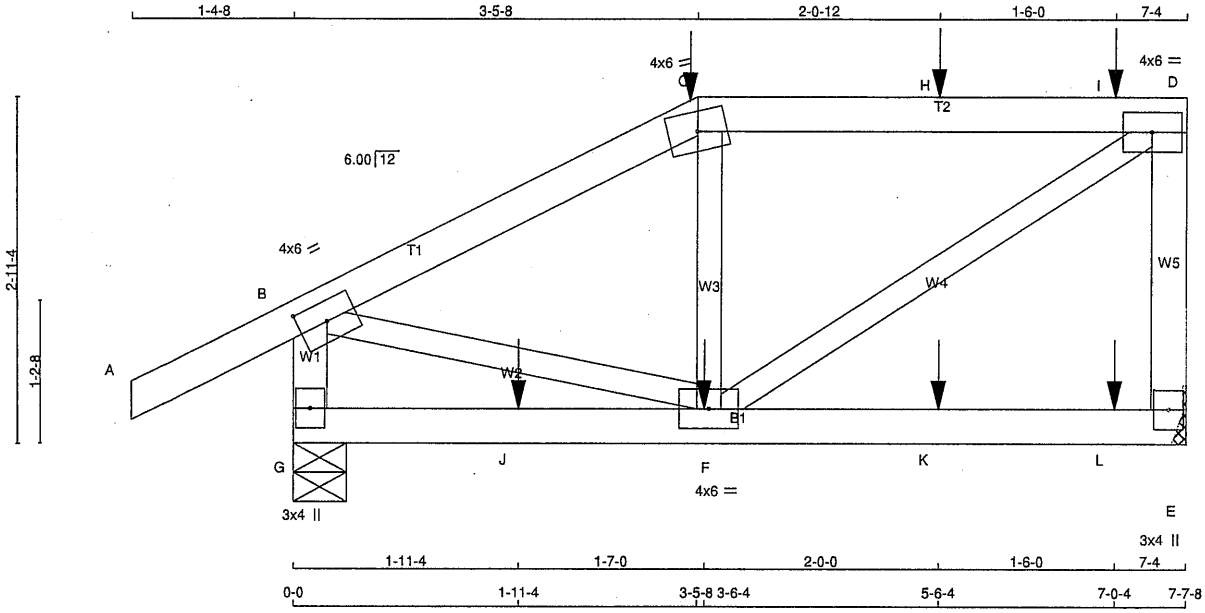

TOTAL WEIGHT = 2 X 31 = 63 lb [M]

LUMBER
N. L. G. A. RULES

CHORDS	SIZE		LUMBER	DESCR.
A - C	2x4	DRY	No.2	SPF
C - D	2x4	DRY	No.2	SPF
E - D	2x4	DRY	No.2	SPF
G - B	2x4	DRY	No.2	SPF
G - E	2x4	DRY	No.2	SPF
ALL WEBS EXCEPT	2x3	DRY	No.2	SPF

DRY: SEASONED LUMBER.

PLATES (table is in inches)

JT	TYPE	PLATES	W	LEN	Y	X
B	TMVW-t	MT20	4.0	6.0	2.00	3.00
C	TTW-m	MT20	4.0	6.0		
D	TMVW-t	MT20	4.0	6.0		
E	BMV1+p	MT20	3.0	4.0		
F	BMWWW-t	MT20	4.0	6.0		
G	BMV1+p	MT20	3.0	4.0		

NOTES- (1)
1) Lateral braces to be a minimum of 2X4 SPF #2.

DIMENSIONS, SUPPORTS AND LOADINGS SPECIFIED BY FABRICATOR TO BE VERIFIED BY BUILDING DESIGNER

BEARINGS

JT	FACTORED GROSS REACTION VERT	HORZ	MAXIMUM FACTORED GROSS REACTION DOWN	HORZ	UPLIFT	INPUT BRG IN-SX	REQRD BRG IN-SX
E	632	0	632	0	0	MECHANICAL	
G	665	0	665	0	0	5-8	1-8

A SUITABLE HANGER/MECHANICAL CONNECTION IS REQUIRED AT JOINT E. MINIMUM BEARING LENGTH AT JOINT E = 1-8.

UNFACTORED REACTIONS

JT	1ST LCASE COMBINED	MAX./MIN. COMPONENT REACTIONS SNOW	LIVE	PERM.LIVE	WIND	DEAD	SOIL
E	448	287 / 0	0 / 0	0 / 0	0 / 0	161 / 0	0 / 0
G	469	312 / 0	0 / 0	0 / 0	0 / 0	158 / 0	0 / 0

BEARING MATERIAL TO BE SPF NO.2 OR BETTER AT JOINT(S) G

BRACING
TOP CHORD TO BE SHEATHED OR MAX. PURLIN SPACING = 6.25 FT.
MAX. UNBRACED BOTTOM CHORD LENGTH = 10.00 FT OR RIGID CEILING DIRECTLY APPLIED.

ALL PITCH BREAKS AND PERIMETER CORNER JOINTS MUST BE LATERALLY RESTRAINED.

LOADING
TOTAL LOAD CASES: (4)

CHORDS

MEMB. FR-TO	MAX. FACTORED FORCE (LBS)	FACTORED VERT. LOAD (PLF) FROM	TO	LC1 MAX CSI (LC)	MAX. UNBRAC LENGTH
A- B	0 / 27	-84.9	-84.9	0.14 (1)	10.00
B- C	-545 / 0	-84.9	-84.9	0.20 (1)	6.25
C- H	-464 / 0	-84.9	-84.9	0.42 (1)	6.25
H- I	-464 / 0	-84.9	-84.9	0.42 (1)	6.25
I- D	-464 / 0	-84.9	-84.9	0.42 (1)	6.25
E- D	-583 / 0	0.0	0.0	0.09 (1)	7.81
G- B	-634 / 0	0.0	0.0	0.07 (1)	7.81
G- J	0 / 0	-18.5	-18.5	0.11 (4)	10.00
J- F	0 / 0	-18.5	-18.5	0.11 (4)	10.00
F- K	0 / 0	-18.5	-18.5	0.11 (4)	10.00
K- L	0 / 0	-18.5	-18.5	0.11 (4)	10.00
L- E	0 / 0	-18.5	-18.5	0.11 (4)	10.00

WEBS

MEMB. FR-TO	MAX. FACTORED FORCE (LBS)	MAX CSI (LC)
F- C	-311 / 0	0.06 (1)
F- D	0 / 557	0.14 (1)
B- F	0 / 502	0.12 (1)

SPECIFIED CONCENTRATED LOADS (LBS)

JT	LOC.	LC1	MAX-	MAX+	FACE	DIR.	TYPE	HEEL	CONN.
C	3-5-8	-131	-131	---	FRONT	VERT	TOTAL	---	C1
F	3-6-4	-11	-11	---	FRONT	VERT	TOTAL	---	C1
H	5-6-4	-43	-43	---	FRONT	VERT	TOTAL	---	C1
I	7-0-4	-54	-54	---	FRONT	VERT	TOTAL	---	C1
J	1-11-4	-11	-11	---	FRONT	VERT	TOTAL	---	C1
K	5-6-4	-11	-11	---	FRONT	VERT	TOTAL	---	C1
L	7-0-4	-14	-14	---	FRONT	VERT	TOTAL	---	C1

CONNECTION REQUIREMENTS

1) **C1:** A SUITABLE HANGER/MECHANICAL CONNECTION IS REQUIRED.

DESIGN CRITERIA

SPECIFIED LOADS:

TOP CH.	LL	=	23.3	PSF
	DL	=	6.0	PSF
BOT CH.	LL	=	0.0	PSF
	DL	=	7.4	PSF
TOTAL LOAD		=	36.7	PSF

SPACING = 24.0 IN. C/C

LOADING IN FLAT SECTION BASED ON A SLOPE OF 6.00/12

THIS TRUSS IS DESIGNED FOR RESIDENTIAL OR SMALL BUILDING REQUIREMENTS OF PART 9, NBCC 2015

THIS DESIGN COMPLIES WITH:
- PART 9 OF BCBC 2018 , NBC-2019AE
- PART 9 OF OBC 2012 (2019 AMENDMENT)
- CSA 086-14
- TPIC 2014

(55 % OF 27.2 P.S.F. G.S.L. PLUS 8.4 P.S.F. RAIN LOAD) EQUALS 23.3 P.S.F. SPECIFIED ROOF LIVE LOAD

ALLOWABLE DEFL.(LL)= L/360 (0.25")
CALCULATED VERT. DEFL.(LL) = L/ 999 (0.01")
ALLOWABLE DEFL.(TL)= L/360 (0.25")
CALCULATED VERT. DEFL.(TL) = L/ 999 (0.02")

CSI: TC=0.42/1.00 (C-D:1) , BC=0.11/1.00 (F-G:4) , WB=0.14/1.00 (D-F:1) , SSI=0.24/1.00 (C-D:1)

DOL LUMBER=1.00 NAIL=1.00 LS BEND=1.00 COMP=1.00 SHEAR=1.00 TENS= 1.00

COMPANION LIVE LOAD FACTOR = 1.00

TRUSS PLATE MANUFACTURER IS NOT RESPONSIBLE FOR QUALITY CONTROL IN THE TRUSS MANUFACTURING PLANT .

NAIL VALUES

PLATE	GRIP(DRY) (PSI) MAX	MIN	SHEAR (PLI) MAX	MIN	SECTION (PLI) MAX	MIN
MT20	650	371	1747	788	1987	1873

PLATE PLACEMENT TOL. = 0.250 inches

PLATE ROTATION TOL. = 5.0 Deg.

JSI GRIP= 0.67 (F) (INPUT = 0.90)
JSI METAL= 0.16 (F) (INPUT = 0.95)

LICENSED PROFESSIONAL ENGINEER
02-28-24
H. J. G. ALVES
100009024
PROVINCE OF ONTARIO

Structural component only
DWG# T-2406450

JOB NAME	TRUSS NAME	QUANTITY	PLY	JOB DESC.	DRWG NO.
425913	T67	2	1	ROYAL PINE HOMES TRUSS DESC.	

Tamarack Roof Truss, Burlington

Version 8.630 S Aug 30 2023 MiTek Industries, Inc. Wed Feb 28 15:03:42 2024 Page 1
ID:sd0FDfbi38oVqvTaiRkhtSzPAoD-KQHzyXkvX?52RvoGxHrkTYGsm_MkCeIroEqNUbzgavV

Scale = 1:37.5

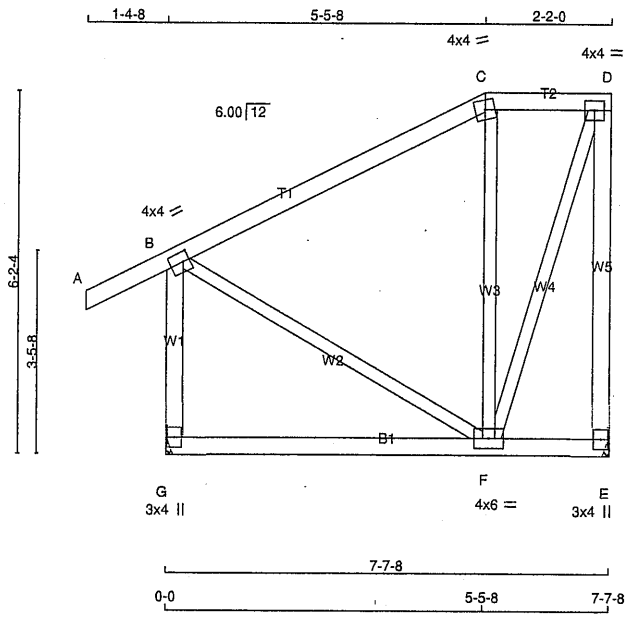

TOTAL WEIGHT = 2 X 44 = 88 lb
[M][F]

LUMBER
N. L. G. A. RULES

CHORDS	SIZE		LUMBER	DESCR.
A - C	2x4	DRY	No.2	SPF
C - D	2x4	DRY	No.2	SPF
E - D	2x4	DRY	No.2	SPF
G - B	2x4	DRY	No.2	SPF
G - E	2x4	DRY	No.2	SPF
ALL WEBS EXCEPT	2x3	DRY	No.2	SPF

DRY: SEASONED LUMBER.

PLATES (table is in inches)

JT	TYPE	PLATES	W	LEN	Y	X
B	TMVW-t	MT20	4.0	4.0	2.00	1.25
C	TTW-m	MT20	4.0	4.0		
D	TMVW-t	MT20	4.0	4.0		
E	BMV1+p	MT20	3.0	4.0		
F	BMWWW-t	MT20	4.0	6.0		
G	BMV1+p	MT20	3.0	4.0		

NOTES- (1)
1) Lateral braces to be a minimum of 2X4 SPF #2.

DIMENSIONS, SUPPORTS AND LOADINGS SPECIFIED BY FABRICATOR TO BE VERIFIED BY BUILDING DESIGNER

BEARINGS

JT	FACTORED GROSS REACTION VERT	HORZ	MAXIMUM FACTORED GROSS REACTION DOWN	HORZ	UPLIFT	INPUT BRG IN-SX	REQRD BRG IN-SX
E	394	0	394	0	0	MECHANICAL	
G	516	0	516	0	0	MECHANICAL	

A SUITABLE HANGER/MECHANICAL CONNECTION IS REQUIRED AT JOINT E, G. MINIMUM BEARING LENGTH AT JOINT E = 1-8, JOINT G = 1-8.

UNFACTORED REACTIONS

JT	1ST LCASE COMBINED	MAX./MIN. COMPONENT REACTIONS SNOW	LIVE	PERM.LIVE	WIND	DEAD	SOIL
E	280	178 / 0	0 / 0	0 / 0	0 / 0	102 / 0	0 / 0
G	364	245 / 0	0 / 0	0 / 0	0 / 0	119 / 0	0 / 0

BRACING
TOP CHORD TO BE SHEATHED OR MAX. PURLIN SPACING = 6.25 FT.
MAX. UNBRACED BOTTOM CHORD LENGTH = 10.00 FT OR RIGID CEILING DIRECTLY APPLIED.

ALL PITCH BREAKS AND PERIMETER CORNER JOINTS MUST BE LATERALLY RESTRAINED.

LOADING
TOTAL LOAD CASES: (4)

CHORDS

MEMB. FR-TO	MAX. FACTORED FORCE (LBS)	FACTORED VERT. LOAD LC1 (PLF) FROM	TO	MAX CSI (LC)	MAX. UNBRAC LENGTH
A- B	0 / 27	-84.9	-84.9	0.12 (1)	10.00
B- C	-125 / 0	-84.9	-84.9	0.32 (1)	6.25
C- D	-107 / 0	-84.9	-84.9	0.05 (1)	6.25
E- D	-397 / 0	0.0	0.0	0.30 (1)	7.81
G- B	-473 / 0	0.0	0.0	0.09 (1)	7.81
G- F	0 / 0	-18.5	-18.5	0.12 (4)	10.00
F- E	0 / 0	-18.5	-18.5	0.12 (4)	10.00

WEBS

MEMB. FR-TO	MAX. FACTORED FORCE (LBS)	MAX CSI (LC)
F- C	-268 / 0	0.16 (1)
F- D	0 / 324	0.07 (1)
B- F	0 / 128	0.03 (1)

DESIGN CRITERIA

SPECIFIED LOADS:

TOP CH.	LL	=	23.3	PSF
	DL	=	6.0	PSF
BOT CH.	LL	=	0.0	PSF
	DL	=	7.4	PSF
TOTAL LOAD		=	36.7	PSF

SPACING = 24.0 IN. C/C

LOADING IN FLAT SECTION BASED ON A SLOPE OF 6.00/12

THIS TRUSS IS DESIGNED FOR RESIDENTIAL OR SMALL BUILDING REQUIREMENTS OF PART 9, NBCC 2015

THIS DESIGN COMPLIES WITH:
- PART 9 OF BCBC 2018 , NBC-2019AE
- PART 9 OF OBC 2012 (2019 AMENDMENT)
- CSA 086-14
- TPIC 2014

(55 % OF 27.2 P.S.F. G.S.L. PLUS 8.4 P.S.F. RAIN LOAD) EQUALS 23.3 P.S.F. SPECIFIED ROOF LIVE LOAD

ALLOWABLE DEFL.(LL)= L/360 (0.25")
CALCULATED VERT. DEFL.(LL) = L/ 999 (0.00")
ALLOWABLE DEFL.(TL)= L/360 (0.25")
CALCULATED VERT. DEFL.(TL) = L/ 999 (0.03")

CSI: TC=0.32/1.00 (B-C:1) , BC=0.12/1.00 (F-G:4) , WB=0.16/1.00 (C-F:1) , SSI=0.16/1.00 (B-C:1)

DOL LUMBER=1.00 NAIL=1.00 LS BEND=1.10 COMP=1.10 SHEAR=1.10 TENS= 1.10

COMPANION LIVE LOAD FACTOR = 1.00

TRUSS PLATE MANUFACTURER IS NOT RESPONSIBLE FOR QUALITY CONTROL IN THE TRUSS MANUFACTURING PLANT .

NAIL VALUES

PLATE	GRIP(DRY) (PSI) MAX	MIN	SHEAR (PLI) MAX	MIN	SECTION (PLI) MAX	MIN
MT20	650	371	1747	788	1987	1873

PLATE PLACEMENT TOL. = 0.250 inches

PLATE ROTATION TOL. = 5.0 Deg.

JSI GRIP= 0.46 (F) (INPUT = 0.90)
JSI METAL= 0.10 (F) (INPUT = 0.95)

LICENSED PROFESSIONAL ENGINEER
02-28-24
H. J. G. ALVES
100009024
PROVINCE OF ONTARIO

Structural component only
DWG# T-2406451

JOB NAME	TRUSS NAME	QUANTITY	PLY	JOB DESC.	DRWG NO.
425913	T68	4	1	ROYAL PINE HOMES TRUSS DESC.	

Tamarack Roof Truss, Burlington

Version 8.630 S Aug 30 2023 MiTek Industries, Inc. Wed Feb 28 15:03:43 2024 Page 1
ID:VI_DQvi1e49Qy7axT?i10OzOYuG-ocrL9tlXIIDv33NSV_Mz?lo3lOeqx5O?1uZx01zgavU

Scale = 1:43.2

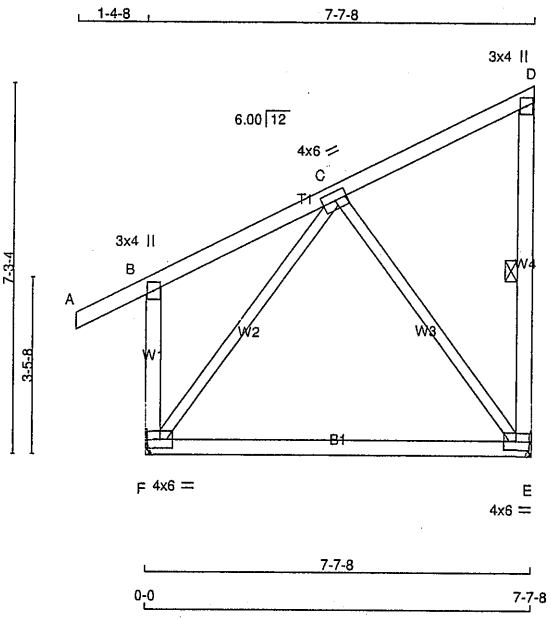

TOTAL WEIGHT = 4 X 41 = 164 lb

LUMBER
N. L. G. A. RULES

CHORDS	SIZE		LUMBER	DESCR.
A - D	2x4	DRY	No.2	SPF
E - D	2x4	DRY	No.2	SPF
F - B	2x4	DRY	No.2	SPF
F - E	2x4	DRY	No.2	SPF
ALL WEBS EXCEPT	2x3	DRY	No.2	SPF

DRY: SEASONED LUMBER.

PLATES (table is in inches)

JT	TYPE	PLATES	W	LEN	Y	X
B	TMV+p	MT20	3.0	4.0		
C	TMWW-t	MT20	4.0	6.0		
D	TMV+p	MT20	3.0	4.0		
E	BMVW1-t	MT20	4.0	6.0		
F	BMVW1-t	MT20	4.0	6.0		

NOTES- (1)
1) Lateral braces to be a minimum of 2X4 SPF #2.

DIMENSIONS, SUPPORTS AND LOADINGS SPECIFIED BY FABRICATOR TO BE VERIFIED BY BUILDING DESIGNER

BEARINGS

JT	FACTORED GROSS REACTION VERT	HORZ	MAXIMUM FACTORED GROSS REACTION DOWN	HORZ	UPLIFT	INPUT BRG IN-SX	REQRD BRG IN-SX
E	394	0	394	0	0	MECHANICAL	
F	516	0	516	0	0	MECHANICAL	

A SUITABLE HANGER/MECHANICAL CONNECTION IS REQUIRED AT JOINT E, F. MINIMUM BEARING LENGTH AT JOINT E = 1-8, JOINT F = 1-8.

UNFACTORED REACTIONS

JT	1ST LCASE COMBINED	MAX./MIN. COMPONENT REACTIONS SNOW	LIVE	PERM.LIVE	WIND	DEAD	SOIL
E	280	178 / 0	0 / 0	0 / 0	0 / 0	102 / 0	0 / 0
F	364	245 / 0	0 / 0	0 / 0	0 / 0	119 / 0	0 / 0

BRACING
TOP CHORD TO BE SHEATHED OR MAX. PURLIN SPACING = 6.25 FT.
MAX. UNBRACED BOTTOM CHORD LENGTH = 10.00 FT OR RIGID CEILING DIRECTLY APPLIED.

ALL PITCH BREAKS AND PERIMETER CORNER JOINTS MUST BE LATERALLY RESTRAINED.

1 LATERAL BRACE(S) AT 1/ 2 LENGTH OF D-E.

END VERTICAL(S) MUST BE SHEATHED OR HAVE BRACES AS INDICATED IN THE MAX. UNBRACED LENGTH COLUMN OF THE TABLE BELOW

LOADING
TOTAL LOAD CASES: (4)

CHORDS

MEMB. FR-TO	MAX. FACTORED FORCE (LBS)	FACTORED VERT. LOAD LC1 (PLF) FROM	TO	MAX CSI (LC)	MAX. UNBRAC LENGTH
A- B	0 / 27	-84.9	-84.9	0.12 (1)	10.00
B- C	0 / 18	-84.9	-84.9	0.21 (1)	10.00
C- D	-17 / 0	-84.9	-84.9	0.16 (1)	6.25
E- D	-127 / 0	0.0	0.0	0.03 (1)	6.25
F- B	-240 / 0	0.0	0.0	0.05 (1)	7.81
F- E	0 / 153	-18.5	-18.5	0.32 (4)	10.00

WEBS

MEMB. FR-TO	MAX. FACTORED FORCE (LBS)	MAX CSI (LC)
C- E	-249 / 0	0.17 (1)
F- C	-257 / 0	0.17 (1)

[M][F]

DESIGN CRITERIA

SPECIFIED LOADS:

TOP CH.	LL	=	23.3	PSF
	DL	=	6.0	PSF
BOT CH.	LL	=	0.0	PSF
	DL	=	7.4	PSF
TOTAL LOAD		=	36.7	PSF

SPACING = 24.0 IN. C/C

THIS TRUSS IS DESIGNED FOR RESIDENTIAL OR SMALL BUILDING REQUIREMENTS OF PART 9, NBCC 2015

THIS DESIGN COMPLIES WITH:
- PART 9 OF BCBC 2018 , NBC-2019AE
- PART 9 OF OBC 2012 (2019 AMENDMENT)
- CSA 086-14
- TPIC 2014

(55 % OF 27.2 P.S.F. G.S.L. PLUS 8.4 P.S.F. RAIN LOAD) EQUALS 23.3 P.S.F. SPECIFIED ROOF LIVE LOAD

ALLOWABLE DEFL.(TL)= L/360 (0.25")
CALCULATED VERT. DEFL.(TL) = L/ 600 (0.15")

CSI: TC=0.21/1.00 (B-C:1) , BC=0.32/1.00 (E-F:4) , WB=0.17/1.00 (C-E:1) , SSI=0.14/1.00 (C-D:1)

DOL LUMBER=1.00 NAIL=1.00 LS BEND=1.10 COMP=1.10 SHEAR=1.10 TENS= 1.10

COMPANION LIVE LOAD FACTOR = 1.00

TRUSS PLATE MANUFACTURER IS NOT RESPONSIBLE FOR QUALITY CONTROL IN THE TRUSS MANUFACTURING PLANT .

NAIL VALUES

PLATE	GRIP(DRY) (PSI) MAX	MIN	SHEAR (PLI) MAX	MIN	SECTION (PLI) MAX	MIN
MT20	650	371	1747	788	1987	1873

PLATE PLACEMENT TOL. = 0.250 inches

PLATE ROTATION TOL. = 5.0 Deg.

JSI GRIP= 0.16 (F) (INPUT = 0.90)
JSI METAL= 0.07 (B) (INPUT = 0.95)

LICENSED PROFESSIONAL ENGINEER
02-28-24
H. J. G. ALVES
100009024
PROVINCE OF ONTARIO

Structural component only
DWG# T-2406452

JOB NAME	TRUSS NAME	QUANTITY	PLY	JOB DESC.	DRWG NO.
425913	T69	2	3	ROYAL PINE HOMES TRUSS DESC.	

Tamarack Roof Truss, Burlington

Version 8.630 S Aug 30 2023 MiTek Industries, Inc. Wed Feb 28 15:03:46 2024 Page 1
ID:sd0FDfbi38oVqvTaiRkhtSzPAoD-CBWUovnQbDbUwX51A6wgdOQSibch8LsRjsobdMzgavR

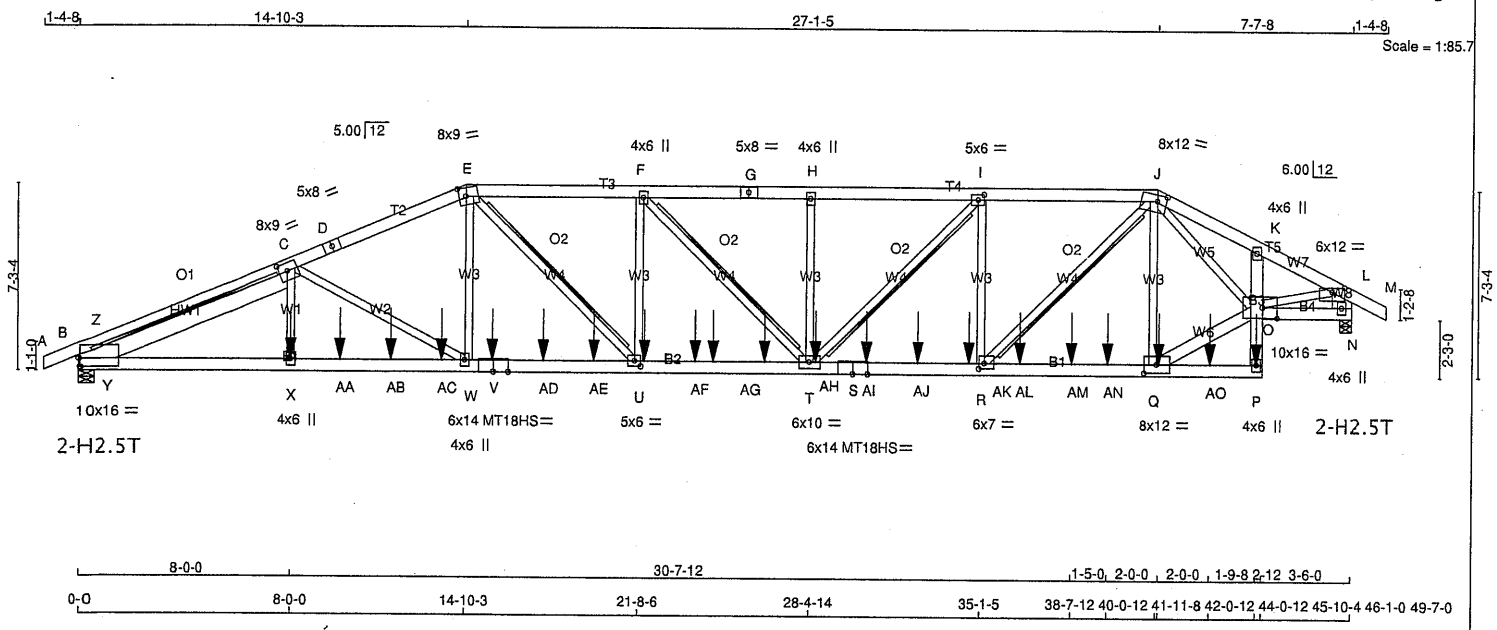

TOTAL WEIGHT = 6 X 325 = 1950 lb

[M]

LUMBER

N. L. G. A. RULES

CHORDS	SIZE		LUMBER	DESCR.
A - D	2x6	DRY	No.2	SPF
D - E	2x6	DRY	No.2	SPF
E - G	2x6	DRY	No.2	SPF
G - J	2x6	DRY	No.2	SPF
J - M	2x6	DRY	No.2	SPF
N - L	2x10	DRY	No.2	SPF
B - V	2x6	DRY	2100F 1.8E	SPF
V - S	2x6	DRY	2100F 1.8E	SPF
S - P	2x6	DRY	2100F 1.8E	SPF
P - K	2x6	DRY	No.2	SPF
O - N	2x6	DRY	No.2	SPF
REINFORCING MEMBERS				
HW1	2x8	DRY	No.2	SPF
ALL WEBS EXCEPT	2x4	DRY	2100F 1.8E	SPF
X - C	2x4	DRY	No.2	SPF
Q - O	2x6	DRY	No.2	SPF
J - O	2x4	DRY	No.2	SPF
R - J	2x4	DRY	No.2	SPF
E - U	2x4	DRY	No.2	SPF
T - I	2x4	DRY	No.2	SPF
F - T	2x4	DRY	No.2	SPF

DRY: SEASONED LUMBER.

DESIGN CONSISTS OF 3 TRUSSES BUILT SEPARATELY THEN FASTENED TOGETHER AS FOLLOWS:

CHORDS	#ROWS	SURFACE SPACING (IN)	LOAD(PLF)
TOP CHORDS : (0.122"X3") SPIRAL NAILS			
A-D	2	12	TOP
D-E	2	12	TOP
E-G	2	12	TOP
G-J	2	12	TOP
J-M	2	12	TOP
N-L	3	12	TOP
BOTTOM CHORDS : (0.122"X3") SPIRAL NAILS			
B-V	2	11	SIDE(454.9)
V-S	2	11	SIDE(454.9)
S-P	2	9	SIDE(568.7)
P-K	2	12	TOP

LICENSED PROFESSIONAL ENGINEER
02-28-24
H. J. G. ALVES
100009024
PROVINCE OF ONTARIO

Structural component only
DWG# T-2406453

DIMENSIONS, SUPPORTS AND LOADINGS SPECIFIED BY FABRICATOR TO BE VERIFIED BY BUILDING DESIGNER

BEARINGS

JT	FACTORED GROSS REACTION VERT	HORZ	MAXIMUM FACTORED GROSS REACTION DOWN	HORZ	UPLIFT	INPUT BRG IN-SX	REQRD BRG IN-SX
B	12573	0	12938	246	-1216	5-8	4-11
N	12513	0	12704	0	-1179	5-8	4-9

PROVIDE ANCHORAGE AT BEARING JOINT B FOR 1216 LBS FACTORED UPLIFT
PROVIDE ANCHORAGE AT BEARING JOINT N FOR 1179 LBS FACTORED UPLIFT

PROVIDE FOR 246 LBS FACTORED HORIZONTAL REACTION AT JOINT B

UNFACTORED REACTIONS

JT	1ST LCASE COMBINED	SNOW	MAX./MIN. COMPONENT REACTIONS LIVE	PERM.LIVE	WIND	DEAD	SOIL
B	9035	5882 / 0	521 / 0	0 / 0	0 / -1197	2875 / 0	0 / 0
N	8987	5768 / 0	521 / 0	0 / 0	0 / -1170	2825 / 0	0 / 0
HORIZONTAL REACTIONS							
B	---	0 / 0	0 / 0	0 / 0	176 / -29	0 / 0	0 /0

BEARING MATERIAL TO BE SPF NO.2 OR BETTER AT JOINT(S) B, N

BRACING

MAX. UNBRACED TOP CHORD LENGTH = 2.67 FT.
MAX. UNBRACED BOTTOM CHORD LENGTH = 6.25 FT OR RIGID CEILING DIRECTLY APPLIED.

ALL PITCH BREAKS AND PERIMETER CORNER JOINTS MUST BE LATERALLY RESTRAINED.

2x6 DRY SPF No.2 T-BRACE AT J-R, E-U, I-T, F-T, C-Y

FASTEN T AND I-BRACES TO NARROW EDGE OF WEB WITH ONE ROW PER PLY OF 3" COMMON WIRE NAILS @ 6" O.C. WITH 3" MINIMUM END DISTANCE. BRACE MUST COVER 90% OF WEB LENGTH.

END VERTICAL(S) MUST BE SHEATHED OR HAVE BRACES AS INDICATED IN THE MAX. UNBRACED LENGTH COLUMN OF THE TABLE BELOW

LOADING

TOTAL LOAD CASES: (18)

CHORDS

MEMB. FR-TO	MAX. FACTORED FORCE (LBS)	FACTORED VERT. LOAD LC1 (PLF) FROM	TO	MAX CSI (LC)	MAX. UNBRAC LENGTH
A-B	0 / 0	-105.2	-105.2	0.03 (2)	10.00
B-Z	-16974 / 1529	-105.2	-105.2	0.26 (2)	3.53
Z-C	-12921 / 1378	-105.2	-105.2	0.24 (2)	4.05
C-D	-24045 / 2046	-105.2	-105.2	0.57 (2)	2.81
D-E	-24045 / 2046	-105.2	-105.2	0.57 (2)	2.81
E-F	-26070 / 2286	-105.2	-105.2	0.65 (2)	2.67
F-G	-25682 / 2230	-105.2	-105.2	0.59 (2)	2.73
G-H	-25682 / 2230	-105.2	-105.2	0.59 (2)	2.73
H-I	-25682 / 2230	-105.2	-105.2	0.59 (2)	2.73
I-J	-21522 / 1891	-105.2	-105.2	0.48 (2)	3.06
J-K	-18866 / 1805	-105.2	-105.2	0.34 (2)	3.29
K-L	-19515 / 1713	-105.2	-105.2	0.35 (2)	3.23
L-M	0 / 40	-105.2	-105.2	0.03 (3)	10.00
N-L	-12631 / 1195	0.0	0.0	0.16 (3)	6.55
B-Y	-1362 / 11915	-39.5	-39.5	0.26 (2)	6.25
Y-X	-2141 / 24838	-39.5	-39.5	0.46 (2)	6.25
X-AA	-2143 / 24760	-39.5	-39.5	0.63 (2)	6.25
AA-AB	-2143 / 24760	-39.5	-39.5	0.63 (2)	6.25
AB-AC	-2143 / 24760	-39.5	-39.5	0.63 (2)	6.25
AC-W	-2143 / 24760	-39.5	-39.5	0.63 (2)	6.25
W-V	-1765 / 22274	-39.5	-39.5	0.59 (2)	6.25
V-AD	-1765 / 22274	-39.5	-39.5	0.59 (2)	6.25
AD-AE	-1765 / 22274	-39.5	-39.5	0.59 (2)	6.25
AE-U	-1765 / 22274	-39.5	-39.5	0.59 (2)	6.25
U-AF	-2084 / 26070	-39.5	-39.5	0.62 (2)	6.25

WEBS

MEMB. FR-TO	MAX. FACTORED FORCE (LBS)	MAX CSI (LC)
X-C	0 / 3534	0.19 (2)
C-W	-2985 / 439	0.58 (2)
W-E	-164 / 4730	0.12 (2)
Q-J	-4584 / 560	0.56 (3)
O-L	-1454 / 17712	0.44 (3)
Q-O	-1077 / 14600	0.57 (3)
J-O	-622 / 5559	0.30 (3)
R-J	-1006 / 11897	0.64 (2)
E-U	-582 / 5775	0.31 (3)
R-I	-5097 / 780	0.63 (2)
U-F	-780 / 473	0.10 (3)
T-I	-484 / 5931	0.32 (2)
F-T	-553 / 79	0.06 (2)
T-H	-757 / 349	0.09 (2)
Y-Z	-277 / 6605	0.00 (1)
Y-C	-14791 / 892	0.97 (2)

DESIGN CRITERIA

SPECIFIED LOADS:

TOP CH.	LL	=	30.1	PSF
	DL	=	6.0	PSF
BOT CH.	LL	=	10.5	PSF
	DL	=	7.4	PSF
TOTAL LOAD		=	54.0	PSF

SPACING = 24.0 IN. C/C

LOADING IN FLAT SECTION BASED ON A SLOPE OF 5.00/12

THIS TRUSS IS DESIGNED FOR COMMERCIAL OR INDUSTRIAL BUILDING REQUIREMENTS OF PART 4, NBCC 2015

THIS DESIGN COMPLIES WITH:
- PART 4 OF BCBC 2018 , NBC-2019AE
- PART 4 OF OBC 2012 (2019 AMENDMENT)
- CSA 086-14
- TPIC 2014

DESIGN ASSUMPTIONS
- SLOPE REDUCTION FACTOR NOT USED

(80 % OF 27.2 P.S.F. G.S.L. PLUS 8.4 P.S.F. RAIN LOAD) TIMES IMPORTANCE FACTOR EQUALS 30.1 P.S.F. SPECIFIED ROOF LIVE LOAD

ALLOWABLE DEFL.(LL)= L/360 (1.65")
CALCULATED VERT. DEFL.(LL) = L/ 999 (0.43")
ALLOWABLE DEFL.(TL)= L/180 (3.31")
CALCULATED VERT. DEFL.(TL) = L/ 907 (0.66")

CSI: TC=0.65/1.00 (E-F:2) , BC=0.63/1.00 (W-X:2) , WB=0.97/1.00 (C-Y:2) , SSI=0.34/1.00 (R-T:2)

DOL LUMBER=1.00 NAIL=1.00 LS BEND=1.10 COMP=1.10 SHEAR=1.10 TENS= 1.10

SNOW LOAD IMPORTANCE FACTOR = 1.00
WIND LOAD IMPORTANCE FACTOR = 1.00
LIVE LOAD IMPORTANCE FACTOR = 1.00
COMPANION LIVE LOAD FACTOR = 1.00

AUTOSOLVE HEELS OFF

TRUSS PLATE MANUFACTURER IS NOT RESPONSIBLE FOR QUALITY CONTROL IN THE TRUSS MANUFACTURING PLANT .

NAIL VALUES

PLATE	GRIP(DRY) (PSI) MAX	MIN	SHEAR (PLI) MAX	MIN	SECTION (PLI) MAX	MIN
MT20	650	371	1747	788	1987	1873
MT18HS	586	403	2455	1382	3163	3004

PLATE PLACEMENT TOL. = 0.250 inches

PLATE ROTATION TOL. = 5.0 Deg.

JSI GRIP= 0.80 (W) (INPUT = 0.90)
JSI METAL= 0.78 (E) (INPUT = 0.95)

CONTINUED ON PAGE 2

O- N	2	12	TOP
WEBS : (0.122"X3") SPIRAL NAILS			
C- X	1	4	SIDE(251.9)
2x4	1	6	
2x6	2	6	
2x8	2	6	

STAGGER NAILS BY HALF THE SPACING IN ADJACENT PLIES.

GIRDER NAILING ASSUMES NAILED HANGERS ARE FASTENED WITH MIN. 3-0 INCH NAILS.

TOP - COMPONENTS ARE LOADED FROM THE TOP AND MUST BE PLACED ON TOP EDGE OF ALL PLIES FOR THE LOAD TO BE TRANSFERRED TO EACH PLY.

SIDE - PLF SHOWN IS THE EQUIVALENT UDL APPLIED TO ONE SIDE THAT THE CORRESPONDING NAILING PATTERN SHALL BE CAPABLE OF TRANSFERING. REMAINING PLF MUST BE APPLIED ON THE OPPOSITE SIDE OR ON THE TOP.

PLATES (table is in inches)

JT	TYPE	PLATES	W	LEN	Y	X
B	TMBMW1-I	MT20	10.0	16.0	4.00	0.50
C	TMWWW-t	MT20	8.0	9.0	3.75	4.00
D	TS-t	MT20	5.0	8.0		
E	TTWW-m	MT20	8.0	9.0	4.00	3.25
F	TMWW+t	MT20	4.0	6.0		
G	TS-t	MT20	5.0	8.0		
H	TMW+w	MT20	4.0	6.0		
I	TMWW-t	MT20	5.0	6.0	2.50	2.75
J	TTWWW-m	MT20	8.0	12.0	3.00	4.25
K	TMV+p	MT20	4.0	6.0		
L	TMVW-p	MT20	6.0	12.0	2.00	6.00
N	BMV1+p	MT20	4.0	6.0		
O	BVMWWW-I	MT20	10.0	16.0	5.00	6.75
P	BMV+p	MT20	4.0	6.0		
Q	BMWW-t	MT20	8.0	12.0	4.00	5.75
R	BMWW-t	MT20	6.0	7.0	2.50	2.50
S	BS-t	MT18HS	6.0	14.0		
T	BMWWW-t	MT20	6.0	10.0		
U	BMWW-t	MT20	5.0	6.0	2.50	2.75
V	BS-t	MT18HS	6.0	14.0		
W	BMWW+t	MT20	4.0	6.0		
X	BMW+w	MT20	4.0	6.0		

NOTES- (1)
1) Lateral braces to be a minimum of 2X4 SPF #2.

LOADING
TOTAL LOAD CASES: (18)

CHORDS

MEMB. FR-TO	MAX. FACTORED FORCE (LBS)	FACTORED VERT. LOAD (PLF) FROM	TO	LC1 MAX CSI (LC)	MAX. UNBRAC LENGTH
AF-AG	-2084 / 26070	-39.5	-39.5	0.62 (2)	6.25
AG-AH	-2084 / 26070	-39.5	-39.5	0.62 (2)	6.25
AH- T	-2084 / 26070	-39.5	-39.5	0.62 (2)	6.25
T- S	-1689 / 21522	-39.5	-39.5	0.55 (2)	6.25
S-AI	-1689 / 21522	-39.5	-39.5	0.55 (2)	6.25
AI-AJ	-1689 / 21522	-39.5	-39.5	0.55 (2)	6.25
AJ-AK	-1689 / 21522	-39.5	-39.5	0.55 (2)	6.25
AK- R	-1689 / 21522	-39.5	-39.5	0.55 (2)	6.25
R-AL	-975 / 13198	-39.5	-39.5	0.45 (3)	6.25
AL-AM	-975 / 13198	-39.5	-39.5	0.45 (3)	6.25
AM-AN	-975 / 13198	-39.5	-39.5	0.45 (3)	6.25
AN- Q	-975 / 13198	-39.5	-39.5	0.45 (3)	6.25
Q-AO	-51 / 539	-39.5	-39.5	0.23 (3)	6.25
AO- P	-51 / 539	-39.5	-39.5	0.23 (3)	6.25
P- O	0 / 452	0.0	0.0	0.29 (3)	10.00
O- K	-4 / 484	0.0	0.0	0.28 (2)	10.00
O- N	-7 / 15	-39.5	-39.5	0.03 (17)	10.00

WEBS

MEMB. FR-TO	MAX. FACTORED FORCE (LBS)	MAX CSI (LC)

SPECIFIED CONCENTRATED LOADS (LBS)

JT	LOC.	LC1	MAX-	MAX+	FACE	DIR.	TYPE	HEEL	CONN.
P	45-10-4	-439	-439	---	FRONT	VERT	TOTAL	---	C1
Q	42-0-12	-265	-265	---	FRONT	VERT	TOTAL	---	C1
T	28-7-12	-568	-568	---	FRONT	VERT	TOTAL	---	C1
U	21-11-4	-568	-568	---	FRONT	VERT	TOTAL	---	C1
V	15-11-4	-568	-568	---	FRONT	VERT	TOTAL	---	C1
X	8-0-0	-1587	-1587	---	FRONT	VERT	TOTAL	---	C1
AA	9-11-4	-572	-572	---	FRONT	VERT	TOTAL	---	C1
AB	11-11-4	-572	-572	---	FRONT	VERT	TOTAL	---	C1
AC	13-11-4	-572	-572	---	FRONT	VERT	TOTAL	---	C1
AD	17-11-4	-568	-568	---	FRONT	VERT	TOTAL	---	C1
AE	19-11-4	-568	-568	---	FRONT	VERT	TOTAL	---	C1
AF	23-11-4	-568	-568	---	FRONT	VERT	TOTAL	---	C1
AG	24-7-12	-568	-568	---	FRONT	VERT	TOTAL	---	C1
AH	26-7-12	-568	-568	---	FRONT	VERT	TOTAL	---	C1
AI	30-7-12	-568	-568	---	FRONT	VERT	TOTAL	---	C1
AJ	32-7-12	-568	-568	---	FRONT	VERT	TOTAL	---	C1
AK	34-7-12	-568	-568	---	FRONT	VERT	TOTAL	---	C1
AL	36-7-12	-568	-568	---	FRONT	VERT	TOTAL	---	C1
AM	38-7-12	-1107	-1107	---	FRONT	VERT	TOTAL	---	C1
AN	40-0-12	-265	-265	---	FRONT	VERT	TOTAL	---	C1
AO	44-0-12	-265	-265	---	FRONT	VERT	TOTAL	---	C1

CONNECTION REQUIREMENTS

1) **C1:** A SUITABLE HANGER/MECHANICAL CONNECTION IS REQUIRED.

TRUSS HAS BEEN CHECKED FOR UNBALANCED LOADING
AS PER NBCC 4.1.6.2.(8)

WIND LOAD APPLIED IS DERIVED FROM REFERENCE VELOCITY PRESSURE OF { 9.2} PSF AT {30-0-0} FT-IN-SX REFERENCE HEIGHT ABOVE GRADE AND USING EXTERNAL PEAK COEFFICIENTS, CpCg, BASED ON THE {MAIN WIND FORCE RESISTING SYSTEM}.INTERNAL WIND PRESSURE IS BASED ON DESIGN {CATEGORY 2}. BUILDING MAY BE LOCATED ON {OPEN TERRAIN}, AND TRUSS IS DESIGNED TO BE LOCATED AT LEAST {0-0} FT-IN-SX AWAY FROM EAVE.TRUSS UPLIFT IS BASED ON TOP AND BOTTOM CHORD DEAD LOADS OF 5.0 PSF AND 5.0 PSF RESPECTIVELY.

LICENSED PROFESSIONAL ENGINEER
02-28-24
H. J. G. ALVES
100009024
PROVINCE OF ONTARIO

Structural component only
DWG# T-2406453

JOB NAME	TRUSS NAME	QUANTITY	PLY	JOB DESC.	DRWG NO.
425913	T70	2	1	ROYAL PINE HOMES TRUSS DESC.	

Tamarack Roof Truss, Burlington

Version 8.630 S Aug 30 2023 MiTek Industries, Inc. Wed Feb 28 15:03:48 2024 Page 1
ID:sd0FDfbi38oVqvTaiRkhtSzPAoD-8aeECbpg6rsB9qFPIXy8ipWmGPE3cB7kAAHihFzgavP

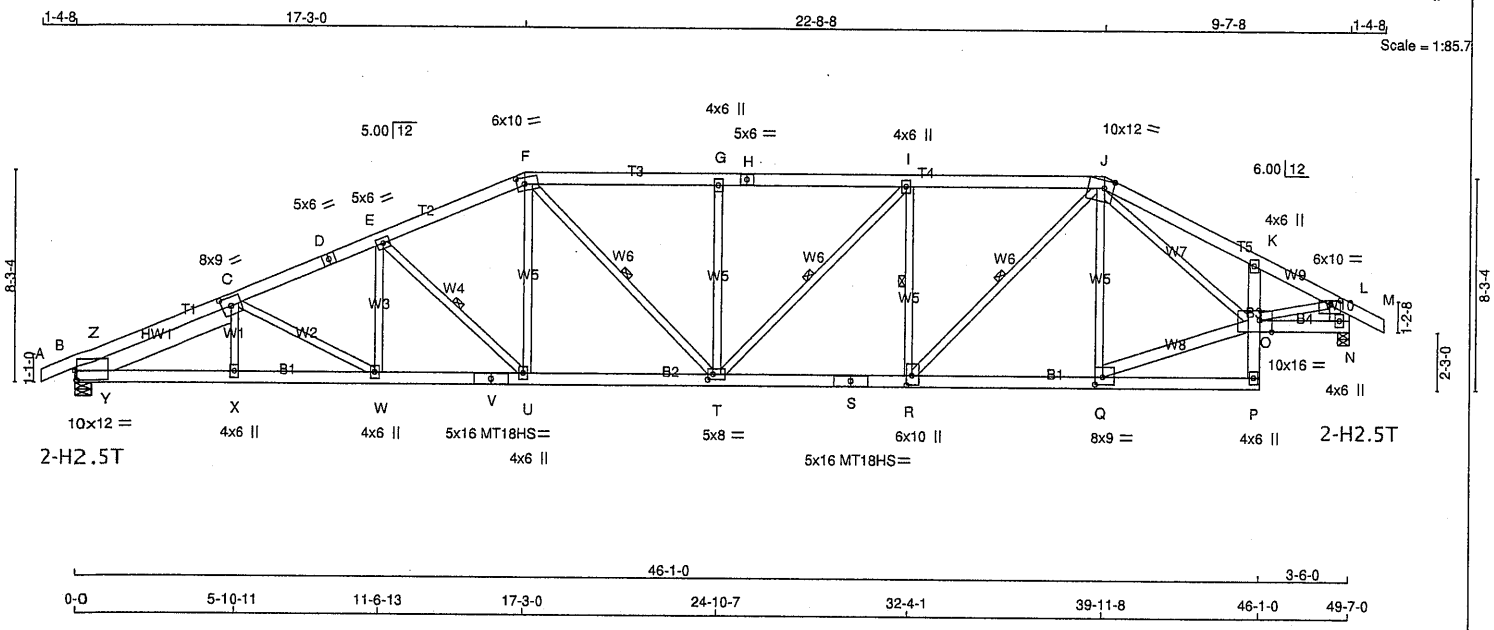

TOTAL WEIGHT = 2 X 329 = 657 lb

LUMBER
N. L. G. A. RULES

CHORDS	SIZE		LUMBER	DESCR.
A - D	2x6	DRY	No.2	SPF
D - F	2x6	DRY	No.2	SPF
F - H	2x6	DRY	No.2	SPF
H - J	2x6	DRY	No.2	SPF
J - M	2x6	DRY	No.2	SPF
N - L	2x10	DRY	No.2	SPF
B - V	2x6	DRY	No.2	SPF
V - S	2x6	DRY	No.2	SPF
S - P	2x6	DRY	No.2	SPF
P - K	2x6	DRY	No.2	SPF
O - N	2x6	DRY	No.2	SPF
REINFORCING MEMBERS				
HW1	2x8	DRY	No.2	SPF
ALL WEBS EXCEPT	2x4	DRY	No.2	SPF
Q - O	2x6	DRY	No.2	SPF

DRY: SEASONED LUMBER.

PLATES (table is in inches)

JT	TYPE	PLATES	W	LEN	Y	X
B	TMBMW1-I	MT20	10.0	12.0	4.50	0.50
C	TMWWW-t	MT20	8.0	9.0	4.00	3.75
D	TS-t	MT20	5.0	6.0		
E	TMWW-t	MT20	5.0	6.0		
F	TTWW-m	MT20	6.0	10.0	3.00	3.75
G	TMW+w	MT20	4.0	6.0		
H	TS-t	MT20	5.0	6.0		
I	TMWW+t	MT20	4.0	6.0		
J	TTWWW-m	MT20	10.0	12.0	3.75	4.25
K	TMV+p	MT20	4.0	6.0		
L	TMVW-p	MT20	6.0	10.0	2.00	5.00
N	BMV1+p	MT20	4.0	6.0		
O	BVMWWW-I	MT20	10.0	16.0	5.50	5.50
P	BMV+p	MT20	4.0	6.0		
Q	BMWW-t	MT20	8.0	9.0	3.50	3.50
R	BMWW+t	MT20	6.0	10.0	4.50	2.50
S	BS-t	MT18HS	5.0	16.0		
T	BMWWW-t	MT20	5.0	8.0	2.50	2.50
U	BMWW+t	MT20	4.0	6.0		

LICENSED PROFESSIONAL ENGINEER
02-28-24
H. J. G. ALVES
100009024
PROVINCE OF ONTARIO

Structural component only
DWG# T-2406454

DIMENSIONS, SUPPORTS AND LOADINGS SPECIFIED BY FABRICATOR TO BE VERIFIED BY BUILDING DESIGNER

BEARINGS

JT	FACTORED GROSS REACTION VERT	HORZ	MAXIMUM FACTORED GROSS REACTION DOWN	HORZ	UPLIFT	INPUT BRG IN-SX	REQRD BRG IN-SX
B	3742	0	4070	271	-1204	5-8	4-7
N	3743	0	3852	0	-1155	5-8	4-3

PROVIDE ANCHORAGE AT BEARING JOINT B FOR 1204 LBS FACTORED UPLIFT
PROVIDE ANCHORAGE AT BEARING JOINT N FOR 1155 LBS FACTORED UPLIFT

PROVIDE FOR 271 LBS FACTORED HORIZONTAL REACTION AT JOINT B

UNFACTORED REACTIONS

JT	1ST LCASE COMBINED	MAX./MIN. COMPONENT REACTIONS SNOW	LIVE	PERM.LIVE	WIND	DEAD	SOIL
B	2782	1798 / 0	521 / 0	0 / 0	0 / -1188	682 / 0	0 / 0
N	2783	1652 / 0	521 / 0	0 / 0	0 / -1153	682 / 0	0 / 0
HORIZONTAL REACTIONS							
B	---	0 / 0	0 / 0	0 / 0	194 / -48	0 / 0	0 /0

BEARING MATERIAL TO BE SPF NO.2 OR BETTER AT JOINT(S) B, N

BRACING
MAX. UNBRACED TOP CHORD LENGTH = 2.92 FT.
MAX. UNBRACED BOTTOM CHORD LENGTH = 5.58 FT OR RIGID CEILING DIRECTLY APPLIED.

ALL PITCH BREAKS AND PERIMETER CORNER JOINTS MUST BE LATERALLY RESTRAINED.

1 LATERAL BRACE(S) AT 1/ 2 LENGTH OF E-U, J-R, F-T, I-R, I-T.

END VERTICAL(S) MUST BE SHEATHED OR HAVE BRACES AS INDICATED IN THE MAX. UNBRACED LENGTH COLUMN OF THE TABLE BELOW

LOADING
TOTAL LOAD CASES: (18)

CHORDS

MEMB. FR-TO	MAX. FACTORED FORCE (LBS)	FACTORED VERT. LOAD LC1 (PLF) FROM	TO	MAX CSI (LC)	MAX. UNBRAC LENGTH
A- B	0 / 0	-105.2	-105.2	0.09 (2)	10.00
B- Z	-5235 / 1506	-105.2	-105.2	0.23 (2)	3.69
Z- C	-3979 / 1278	-105.2	-105.2	0.25 (2)	4.14
C- D	-6904 / 2140	-105.2	-105.2	0.55 (2)	2.98
D- E	-6904 / 2140	-105.2	-105.2	0.55 (2)	2.98
E- F	-6026 / 1949	-105.2	-105.2	0.48 (2)	3.25
F- G	-6116 / 2036	-105.2	-105.2	0.76 (2)	2.94
G- H	-6116 / 2036	-105.2	-105.2	0.77 (2)	2.92
H- I	-6116 / 2036	-105.2	-105.2	0.77 (2)	2.92
I- J	-5434 / 1825	-105.2	-105.2	0.71 (2)	3.15
J- K	-5328 / 1846	-105.2	-105.2	0.50 (3)	3.39
K- L	-5502 / 1713	-105.2	-105.2	0.28 (14)	3.57
L- M	0 / 40	-105.2	-105.2	0.09 (3)	10.00
N- L	-3778 / 1172	0.0	0.0	0.14 (3)	6.83
B- Y	-1319 / 3674	-39.5	-39.5	0.49 (2)	6.25
Y- X	-2122 / 6639	-39.5	-39.5	0.89 (2)	5.58
X- W	-2123 / 6633	-39.5	-39.5	0.88 (2)	5.58
W- V	-1972 / 6386	-39.5	-39.5	0.86 (2)	5.75
V- U	-1972 / 6386	-39.5	-39.5	0.86 (2)	5.75
U- T	-1627 / 5557	-39.5	-39.5	0.76 (2)	6.16
T- S	-1584 / 5435	-39.5	-39.5	0.74 (2)	6.22
S- R	-1584 / 5435	-39.5	-39.5	0.74 (2)	6.22
R- Q	-982 / 3607	-39.5	-39.5	0.57 (3)	6.25
Q- P	-63 / 189	-39.5	-39.5	0.20 (4)	6.25
P- O	0 / 111	0.0	0.0	0.29 (3)	10.00
O- K	-600 / 398	0.0	0.0	0.29 (3)	7.81
O- N	-7 / 15	-39.5	-39.5	0.06 (17)	10.00

WEBS

MEMB. FR-TO	MAX. FACTORED FORCE (LBS)	MAX CSI (LC)
X- C	0 / 277	0.05 (17)
C- W	-282 / 231	0.14 (2)
W- E	-31 / 388	0.06 (5)
E- U	-1160 / 479	0.34 (2)
U- F	-273 / 1074	0.23 (13)
Q- J	-964 / 409	0.82 (3)
R- J	-861 / 2780	0.51 (13)
F- T	-421 / 1387	0.25 (14)
R- I	-1707 / 687	0.48 (2)
T- G	-992 / 464	0.84 (3)
T- I	-305 / 986	0.18 (13)
Q- O	-998 / 3667	0.43 (3)
J- O	-583 / 1544	0.53 (14)
O- L	-1468 / 5033	0.81 (3)
Y- Z	-396 / 1840	0.00 (1)
Y- C	-3482 / 943	0.82 (2)

DESIGN CRITERIA [M]

SPECIFIED LOADS:

TOP CH.	LL =	30.1	PSF
	DL =	6.0	PSF
BOT CH.	LL =	10.5	PSF
	DL =	7.4	PSF
TOTAL LOAD	=	54.0	PSF

SPACING = 24.0 IN. C/C

LOADING IN FLAT SECTION BASED ON A SLOPE OF 5.00/12

THIS TRUSS IS DESIGNED FOR COMMERCIAL OR INDUSTRIAL BUILDING REQUIREMENTS OF PART 4, NBCC 2015

THIS DESIGN COMPLIES WITH:
- PART 4 OF BCBC 2018 , NBC-2019AE
- PART 4 OF OBC 2012 (2019 AMENDMENT)
- CSA 086-14
- TPIC 2014

DESIGN ASSUMPTIONS
- SLOPE REDUCTION FACTOR NOT USED

(80 % OF 27.2 P.S.F. G.S.L. PLUS 8.4 P.S.F. RAIN LOAD) TIMES IMPORTANCE FACTOR EQUALS 30.1 P.S.F. SPECIFIED ROOF LIVE LOAD

ALLOWABLE DEFL.(LL)= L/360 (1.65")
CALCULATED VERT. DEFL.(LL) = L/ 999 (0.33")
ALLOWABLE DEFL.(TL)= L/180 (3.31")
CALCULATED VERT. DEFL.(TL) = L/ 999 (0.46")

CSI: TC=0.77/1.00 (G-I:2) , BC=0.89/1.00 (X-Y:2) , WB=0.84/1.00 (G-T:3) , SSI=0.33/1.00 (I-J:3)

DOL LUMBER=1.00 NAIL=1.00 LS BEND=1.10 COMP=1.10 SHEAR=1.10 TENS= 1.10

SNOW LOAD IMPORTANCE FACTOR = 1.00
WIND LOAD IMPORTANCE FACTOR = 1.00
LIVE LOAD IMPORTANCE FACTOR = 1.00
COMPANION LIVE LOAD FACTOR = 1.00

AUTOSOLVE HEELS OFF

TRUSS PLATE MANUFACTURER IS NOT RESPONSIBLE FOR QUALITY CONTROL IN THE TRUSS MANUFACTURING PLANT .

NAIL VALUES

PLATE	GRIP(DRY) (PSI) MAX	MIN	SHEAR (PLI) MAX	MIN	SECTION (PLI) MAX	MIN
MT20	650	371	1747	788	1987	1873
MT18HS	586	403	2455	1382	3163	3004

PLATE PLACEMENT TOL. = 0.250 inches

PLATE ROTATION TOL. = 5.0 Deg.

JSI GRIP= 0.80 (B) (INPUT = 0.90)
JSI METAL= 0.75 (B) (INPUT = 0.95)

CONTINUED ON PAGE 2

JOB NAME	TRUSS NAME	QUANTITY	PLY	JOB DESC. ROYAL PINE HOMES	DRWG NO.
425913	T70	2	1	TRUSS DESC.	

PLATES (table is in inches)

JT	TYPE	PLATES	W	LEN	Y	X
V	BS-t	MT18HS	5.0	16.0		
W	BMWW+t	MT20	4.0	6.0		
X	BMW+w	MT20	4.0	6.0		

NOTES- (1)
1) Lateral braces to be a minimum of 2X4 SPF #2.

TRUSS HAS BEEN CHECKED FOR UNBALANCED LOADING
AS PER NBCC 4.1.6.2.(8)

WIND LOAD APPLIED IS DERIVED FROM REFERENCE VELOCITY PRESSURE OF { 9.2} PSF AT {30-0-0} FT-IN-SX REFERENCE HEIGHT ABOVE GRADE AND USING EXTERNAL PEAK COEFFICIENTS, CpCg, BASED ON THE {MAIN WIND FORCE RESISTING SYSTEM}.INTERNAL WIND PRESSURE IS BASED ON DESIGN {CATEGORY 2}. BUILDING MAY BE LOCATED ON {OPEN TERRAIN}, AND TRUSS IS DESIGNED TO BE LOCATED AT LEAST {0-0} FT-IN-SX AWAY FROM EAVE.TRUSS UPLIFT IS BASED ON TOP AND BOTTOM CHORD DEAD LOADS OF 5.0 PSF AND 5.0 PSF RESPECTIVELY.

LICENSED PROFESSIONAL ENGINEER
02-28-24
H. J. G. ALVES
100009024
PROVINCE OF ONTARIO

Structural component only
DWG# T-2406454

JOB NAME	TRUSS NAME	QUANTITY	PLY	JOB DESC.	DRWG NO.
425913	T71	2	1	ROYAL PINE HOMES TRUSS DESC.	

Tamarack Roof Truss, Burlington

Version 8.630 S Aug 30 2023 MiTek Industries, Inc. Wed Feb 28 15:03:49 2024 Page 1
ID:sd0FDfbi38oVqvTaiRkhtSzPAoD-cmCcQxqIt8_2n_qcrFTNF02zhpYELeRtPq0FDhzgavO

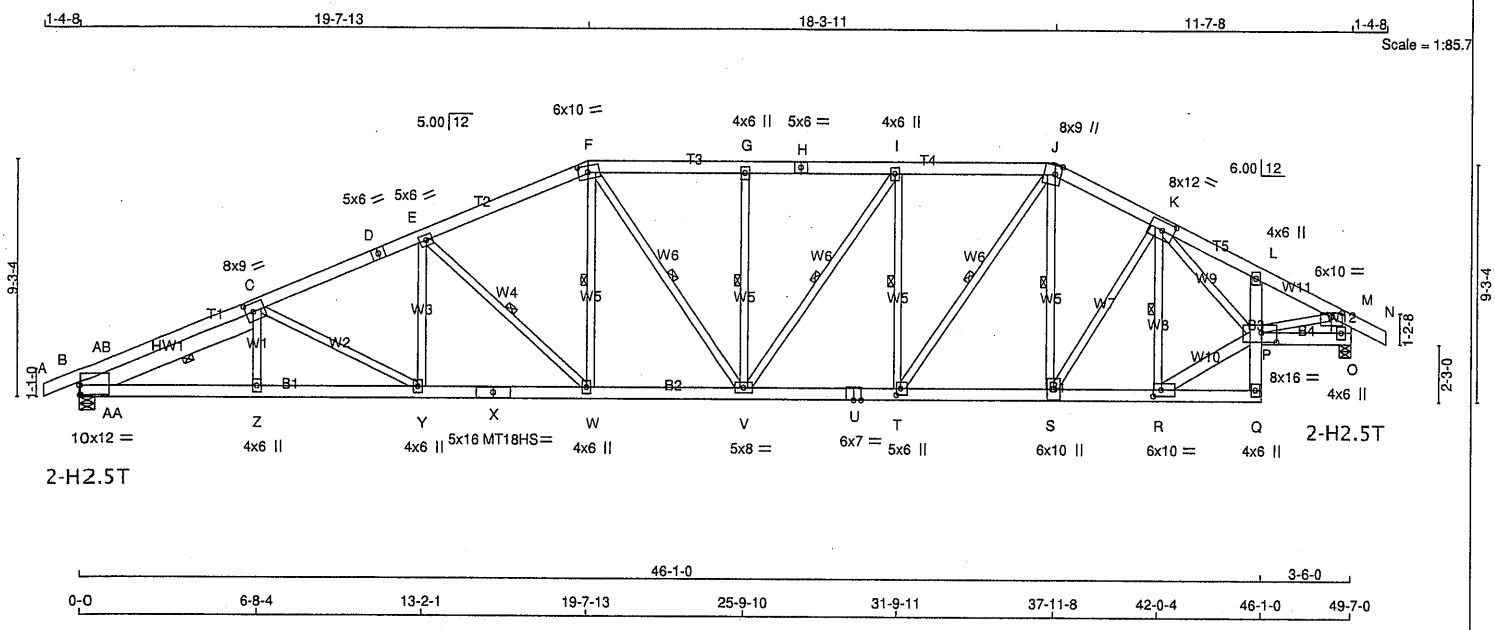

TOTAL WEIGHT = 2 X 348 = 697 lb

LUMBER
N. L. G. A. RULES

CHORDS	SIZE		LUMBER	DESCR.
A - D	2x6	DRY	No.2	SPF
D - F	2x6	DRY	No.2	SPF
F - H	2x6	DRY	No.2	SPF
H - J	2x6	DRY	No.2	SPF
J - N	2x6	DRY	No.2	SPF
O - M	2x10	DRY	No.2	SPF
B - X	2x6	DRY	No.2	SPF
X - U	2x6	DRY	No.2	SPF
U - Q	2x6	DRY	No.2	SPF
Q - L	2x6	DRY	No.2	SPF
P - O	2x6	DRY	No.2	SPF
REINFORCING MEMBERS				
HW1	2x8	DRY	No.2	SPF
ALL WEBS EXCEPT	2x4	DRY	No.2	SPF
R - P	2x6	DRY	No.2	SPF

DRY: SEASONED LUMBER.

PLATES (table is in inches)

JT	TYPE	PLATES	W	LEN	Y	X
B	TMBMW1-I	MT20	10.0	12.0	4.50	0.25
C	TMWWW-t	MT20	8.0	9.0	4.00	3.50
D	TS-t	MT20	5.0	6.0		
E	TMWW-t	MT20	5.0	6.0		
F	TTWW-m	MT20	6.0	10.0	3.00	4.50
G	TMW+w	MT20	4.0	6.0		
H	TS-t	MT20	5.0	6.0		
I	TMWW+t	MT20	4.0	6.0		
J	TTWW+m	MT20	8.0	9.0	4.25	2.75
K	TMWWW-t	MT20	8.0	12.0	4.00	5.25
L	TMV+p	MT20	4.0	6.0		
M	TMVW-p	MT20	6.0	10.0	2.00	5.00
O	BMV1+p	MT20	4.0	6.0		
P	BVMWWW-I	MT20	8.0	16.0	4.50	7.00
Q	BMV+p	MT20	4.0	6.0		
R	BMWW-t	MT20	6.0	10.0	3.00	3.75
S	BMWW+t	MT20	6.0	10.0		
T	BMWW+t	MT20	5.0	6.0	3.00	2.00
U	BS-t	MT20	6.0	7.0		

LICENSED PROFESSIONAL ENGINEER
02-28-24
H. J. G. ALVES
100009024
PROVINCE OF ONTARIO

Structural component only
DWG# T-2406455

DIMENSIONS, SUPPORTS AND LOADINGS SPECIFIED BY FABRICATOR TO BE VERIFIED BY BUILDING DESIGNER

BEARINGS

JT	FACTORED GROSS REACTION VERT	HORZ	MAXIMUM FACTORED GROSS REACTION DOWN	HORZ	UPLIFT	INPUT BRG IN-SX	REQRD BRG IN-SX
B	3742	0	4024	297	-1189	5-8	4-6
O	3743	0	3757	0	-1128	5-8	4-1

PROVIDE ANCHORAGE AT BEARING JOINT B FOR 1189 LBS FACTORED UPLIFT
PROVIDE ANCHORAGE AT BEARING JOINT O FOR 1128 LBS FACTORED UPLIFT

PROVIDE FOR 297 LBS FACTORED HORIZONTAL REACTION AT JOINT B

UNFACTORED REACTIONS

JT	1ST LCASE COMBINED	MAX./MIN. COMPONENT REACTIONS SNOW	LIVE	PERM.LIVE	WIND	DEAD	SOIL
B	2782	1768 / 0	521 / 0	0 / 0	0 / -1177	682 / 0	0 / 0
O	2783	1589 / 0	521 / 0	0 / 0	0 / -1134	682 / 0	0 / 0
HORIZONTAL REACTIONS							
B	---	0 / 0	0 / 0	0 / 0	212 / -66	0 / 0	0 /0

BEARING MATERIAL TO BE SPF NO.2 OR BETTER AT JOINT(S) B, O

BRACING
MAX. UNBRACED TOP CHORD LENGTH = 2.94 FT.
MAX. UNBRACED BOTTOM CHORD LENGTH = 5.57 FT OR RIGID CEILING DIRECTLY APPLIED.

ALL PITCH BREAKS AND PERIMETER CORNER JOINTS MUST BE LATERALLY RESTRAINED.

1 LATERAL BRACE(S) AT 1/ 2 LENGTH OF E-W, F-W, J-S, K-R, J-T, F-V, I-T, G-V, I-V, C-AA.

END VERTICAL(S) MUST BE SHEATHED OR HAVE BRACES AS INDICATED IN THE MAX. UNBRACED LENGTH COLUMN OF THE TABLE BELOW

LOADING
TOTAL LOAD CASES: (18)

CHORDS

MEMB. FR-TO	MAX. FACTORED FORCE (LBS)	FACTORED VERT. LOAD LC1 (PLF) FROM	TO	MAX CSI (LC)	MAX. UNBRAC LENGTH
A- B	0 / 0	-105.2	-105.2	0.09 (2)	10.00
B-AB	-5255 / 1500	-105.2	-105.2	0.28 (2)	3.63
AB- C	-4030 / 1307	-105.2	-105.2	0.30 (2)	4.08
C- D	-6614 / 2062	-105.2	-105.2	0.66 (2)	2.94
D- E	-6614 / 2062	-105.2	-105.2	0.66 (2)	2.94
E- F	-5504 / 1818	-105.2	-105.2	0.57 (2)	3.30
F- G	-5233 / 1805	-105.2	-105.2	0.45 (2)	3.49
G- H	-5233 / 1806	-105.2	-105.2	0.46 (2)	3.47
H- I	-5233 / 1806	-105.2	-105.2	0.46 (2)	3.47
I- J	-4700 / 1639	-105.2	-105.2	0.43 (2)	3.67
J- K	-4101 / 1414	-105.2	-105.2	0.25 (3)	4.08
K- L	-5093 / 1688	-105.2	-105.2	0.30 (3)	3.67
L- M	-5316 / 1620	-105.2	-105.2	0.31 (3)	3.59
M- N	0 / 40	-105.2	-105.2	0.09 (3)	10.00
O- M	-3683 / 1145	0.0	0.0	0.14 (3)	6.90
B-AA	-1361 / 3723	-39.5	-39.5	0.48 (2)	6.25
AA- Z	-2127 / 6613	-39.5	-39.5	0.90 (2)	5.57
Z- Y	-2128 / 6606	-39.5	-39.5	0.88 (2)	5.58
Y- X	-1893 / 6118	-39.5	-39.5	0.81 (2)	5.83
X- W	-1893 / 6118	-39.5	-39.5	0.81 (2)	5.83
W- V	-1474 / 5072	-39.5	-39.5	0.68 (2)	6.25
V- U	-1357 / 4700	-39.5	-39.5	0.63 (1)	6.25
U- T	-1357 / 4700	-39.5	-39.5	0.63 (1)	6.25
T- S	-963 / 3638	-39.5	-39.5	0.50 (1)	6.25
S- R	-906 / 3456	-39.5	-39.5	0.48 (1)	6.25
R- Q	-49 / 160	-39.5	-39.5	0.09 (4)	6.25
Q- P	0 / 72	0.0	0.0	0.25 (1)	10.00
P- L	-298 / 226	0.0	0.0	0.24 (1)	7.81
P- O	-7 / 15	-39.5	-39.5	0.06 (17)	10.00

WEBS

MEMB. FR-TO	MAX. FACTORED FORCE (LBS)	MAX CSI (LC)
Z- C	0 / 313	0.05 (17)
C- Y	-554 / 267	0.39 (2)
Y- E	-64 / 552	0.09 (5)
E- W	-1449 / 576	0.56 (2)
W- F	-339 / 1246	0.20 (2)
S- J	-455 / 146	0.16 (9)
S- K	-112 / 731	0.12 (2)
R- K	-1736 / 535	0.38 (1)
T- J	-689 / 2230	0.39 (13)
F- V	-293 / 964	0.17 (14)
T- I	-1580 / 618	0.58 (2)
V- G	-793 / 371	0.29 (3)
V- I	-295 / 947	0.17 (13)
R- P	-999 / 3822	0.45 (1)
K- P	-568 / 1794	0.29 (3)
P- M	-1365 / 4830	0.78 (1)
AA-AB	-340 / 1757	0.00 (1)
AA- C	-3353 / 889	0.39 (2)

[M]

DESIGN CRITERIA

SPECIFIED LOADS:

TOP CH.	LL	=	30.1	PSF
	DL	=	6.0	PSF
BOT CH.	LL	=	10.5	PSF
	DL	=	7.4	PSF
TOTAL LOAD		=	54.0	PSF

SPACING = 24.0 IN. C/C

LOADING IN FLAT SECTION BASED ON A SLOPE OF 5.00/12

THIS TRUSS IS DESIGNED FOR COMMERCIAL OR INDUSTRIAL BUILDING REQUIREMENTS OF PART 4, NBCC 2015

THIS DESIGN COMPLIES WITH:
- PART 4 OF BCBC 2018 , NBC-2019AE
- PART 4 OF OBC 2012 (2019 AMENDMENT)
- CSA 086-14
- TPIC 2014

DESIGN ASSUMPTIONS
- SLOPE REDUCTION FACTOR NOT USED

(80 % OF 27.2 P.S.F. G.S.L. PLUS 8.4 P.S.F. RAIN LOAD) TIMES IMPORTANCE FACTOR EQUALS 30.1 P.S.F. SPECIFIED ROOF LIVE LOAD

ALLOWABLE DEFL.(LL)= L/360 (1.65")
CALCULATED VERT. DEFL.(LL) = L/ 999 (0.28")
ALLOWABLE DEFL.(TL)= L/180 (3.31")
CALCULATED VERT. DEFL.(TL) = L/ 999 (0.40")

CSI: TC=0.66/1.00 (C-E:2) , BC=0.90/1.00 (Z-AA:2) , WB=0.78/1.00 (M-P:1) , SSI=0.27/1.00 (I-J:3)

DOL LUMBER=1.00 NAIL=1.00 LS BEND=1.10 COMP=1.10 SHEAR=1.10 TENS= 1.10

SNOW LOAD IMPORTANCE FACTOR = 1.00
WIND LOAD IMPORTANCE FACTOR = 1.00
LIVE LOAD IMPORTANCE FACTOR = 1.00
COMPANION LIVE LOAD FACTOR = 1.00

AUTOSOLVE HEELS OFF

TRUSS PLATE MANUFACTURER IS NOT RESPONSIBLE FOR QUALITY CONTROL IN THE TRUSS MANUFACTURING PLANT .

NAIL VALUES

PLATE	GRIP(DRY) (PSI) MAX	MIN	SHEAR (PLI) MAX	MIN	SECTION (PLI) MAX	MIN
MT20	650	371	1747	788	1987	1873
MT18HS	586	403	2455	1382	3163	3004

PLATE PLACEMENT TOL. = 0.250 inches

PLATE ROTATION TOL. = 5.0 Deg.

JSI GRIP= 0.77 (B) (INPUT = 0.90)
JSI METAL= 0.75 (B) (INPUT = 0.95)

CONTINUED ON PAGE 2

PLATES (table is in inches)

JT	TYPE	PLATES	W	LEN	Y	X
V	BMWWW-t	MT20	5.0	8.0		
W	BMWW+t	MT20	4.0	6.0		
X	BS-t	MT18HS	5.0	16.0		
Y	BMWW+t	MT20	4.0	6.0		
Z	BMW+w	MT20	4.0	6.0		

NOTES- (1)
1) Lateral braces to be a minimum of 2X4 SPF #2.

TRUSS HAS BEEN CHECKED FOR UNBALANCED LOADING
AS PER NBCC 4.1.6.2.(8)

WIND LOAD APPLIED IS DERIVED FROM REFERENCE VELOCITY PRESSURE OF { 9.2} PSF AT {30-0-0} FT-IN-SX REFERENCE HEIGHT ABOVE GRADE AND USING EXTERNAL PEAK COEFFICIENTS, CpCg, BASED ON THE {MAIN WIND FORCE RESISTING SYSTEM}.INTERNAL WIND PRESSURE IS BASED ON DESIGN {CATEGORY 2}. BUILDING MAY BE LOCATED ON {OPEN TERRAIN}, AND TRUSS IS DESIGNED TO BE LOCATED AT LEAST {0-0} FT-IN-SX AWAY FROM EAVE.TRUSS UPLIFT IS BASED ON TOP AND BOTTOM CHORD DEAD LOADS OF 5.0 PSF AND 5.0 PSF RESPECTIVELY.

LICENSED PROFESSIONAL ENGINEER
02-28-24
H. J. G. ALVES
100009024
PROVINCE OF ONTARIO

Structural component only
DWG# T-2406455

JOB NAME	TRUSS NAME	QUANTITY	PLY	JOB DESC.	DRWG NO.
425913	T72	2	1	ROYAL PINE HOMES TRUSS DESC.	

Tamarack Roof Truss, Burlington

Version 8.630 S Aug 30 2023 MiTek Industries, Inc. Wed Feb 28 15:03:50 2024 Page 1
ID:sd0FDfbi38oVqvTaiRkhtSzPAoD-5zm_dGqweS6vP8PoPy_coEb6IDuS45P1eUmpm7zgavN

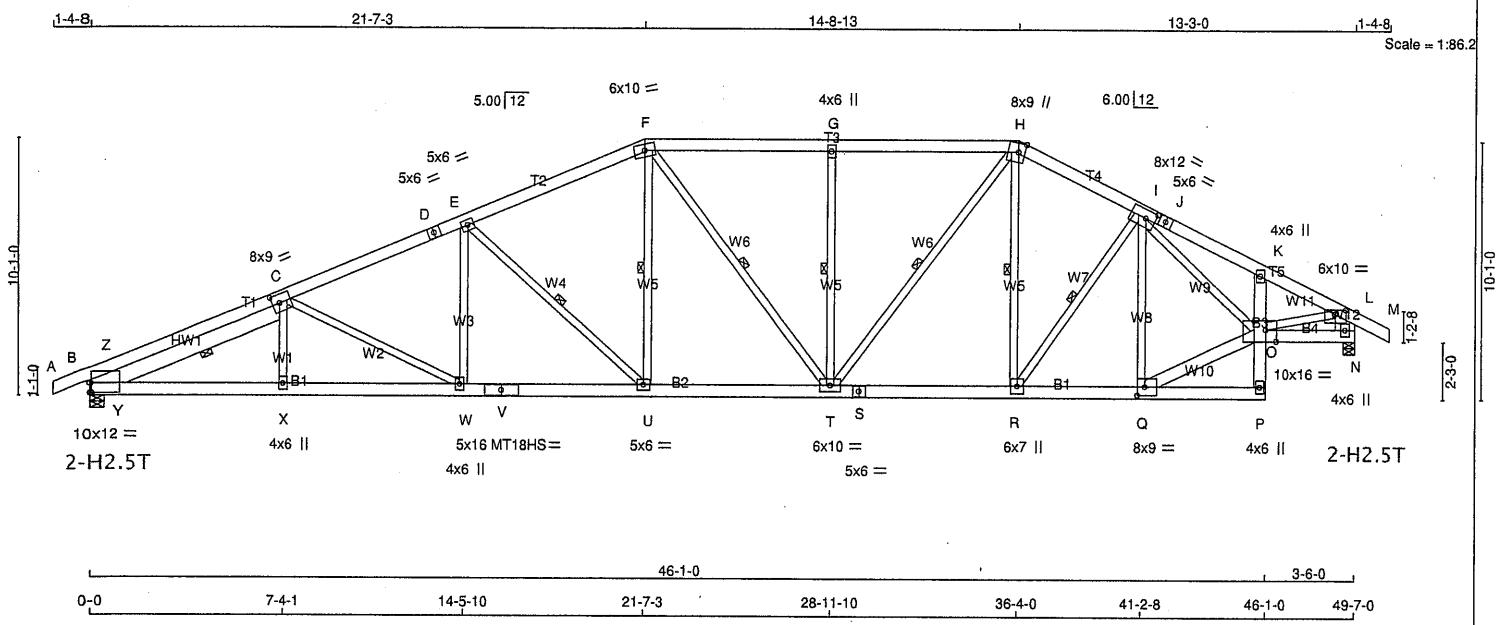

TOTAL WEIGHT = 2 X 342 = 684 lb

LUMBER

N. L. G. A. RULES

CHORDS	SIZE		LUMBER	DESCR.
A - D	2x6	DRY	No.2	SPF
D - F	2x6	DRY	No.2	SPF
F - H	2x6	DRY	No.2	SPF
H - J	2x6	DRY	No.2	SPF
J - M	2x6	DRY	No.2	SPF
N - L	2x10	DRY	No.2	SPF
B - V	2x6	DRY	No.2	SPF
V - S	2x6	DRY	No.2	SPF
S - P	2x6	DRY	No.2	SPF
P - K	2x6	DRY	No.2	SPF
O - N	2x6	DRY	No.2	SPF
REINFORCING MEMBERS				
HW1	2x8	DRY	No.2	SPF
ALL WEBS EXCEPT	2x4	DRY	No.2	SPF
Q - I	2x4	DRY	2100F 1.8E	SPF
Q - O	2x6	DRY	No.2	SPF

DRY: SEASONED LUMBER.

PLATES (table is in inches)

JT	TYPE	PLATES	W	LEN	Y	X
B	TMBMW1-I	MT20	10.0	12.0	4.50	0.25
C	TMWWW-t	MT20	8.0	9.0	4.00	3.25
D	TS-t	MT20	5.0	6.0		
E	TMWW-t	MT20	5.0	6.0		
F	TTWW-m	MT20	6.0	10.0		
G	TMW+w	MT20	4.0	6.0		
H	TTWW+m	MT20	8.0	9.0	4.25	3.00
I	TMWWW-t	MT20	8.0	12.0	4.00	4.50
J	TS-t	MT20	5.0	6.0		
K	TMV+p	MT20	4.0	6.0		
L	TMVW-p	MT20	6.0	10.0	2.00	5.00
N	BMV1+p	MT20	4.0	6.0		
O	BVMWWW-I	MT20	10.0	16.0	Edge	5.00
P	BMV+p	MT20	4.0	6.0		
Q	BMWW-t	MT20	8.0	9.0	4.00	3.50
R	BMWW+t	MT20	6.0	7.0		
S	BS-t	MT20	5.0	6.0		
T	BMWWW-t	MT20	6.0	10.0		

LICENSED PROFESSIONAL ENGINEER
02-28-24
H. J. G. ALVES
100009024
PROVINCE OF ONTARIO

Structural component only
DWG# T-2406456

DIMENSIONS, SUPPORTS AND LOADINGS SPECIFIED BY FABRICATOR TO BE VERIFIED BY BUILDING DESIGNER

BEARINGS

JT	FACTORED GROSS REACTION VERT	HORZ	MAXIMUM FACTORED GROSS REACTION DOWN	HORZ	UPLIFT	INPUT BRG IN-SX	REQRD BRG IN-SX
B	3742	0	3981	317	-1174	5-8	4-5
N	3743	0	3743	0	-1104	5-8	4-1

PROVIDE ANCHORAGE AT BEARING JOINT B FOR 1174 LBS FACTORED UPLIFT
PROVIDE ANCHORAGE AT BEARING JOINT N FOR 1104 LBS FACTORED UPLIFT

PROVIDE FOR 317 LBS FACTORED HORIZONTAL REACTION AT JOINT B

UNFACTORED REACTIONS

JT	1ST LCASE COMBINED	MAX./MIN. COMPONENT REACTIONS SNOW	LIVE	PERM.LIVE	WIND	DEAD	SOIL
B	2782	1739 / 0	521 / 0	0 / 0	0 / -1167	682 / 0	0 / 0
N	2783	1580 / 0	521 / 0	0 / 0	10 / -1117	682 / 0	0 / 0
HORIZONTAL REACTIONS							
B	---	0 / 0	0 / 0	0 / 0	227 / -80	0 / 0	0 /0

BEARING MATERIAL TO BE SPF NO.2 OR BETTER AT JOINT(S) B, N

BRACING

MAX. UNBRACED TOP CHORD LENGTH = 2.89 FT.
MAX. UNBRACED BOTTOM CHORD LENGTH = 5.57 FT OR RIGID CEILING DIRECTLY APPLIED.

ALL PITCH BREAKS AND PERIMETER CORNER JOINTS MUST BE LATERALLY RESTRAINED.

1 LATERAL BRACE(S) AT 1/ 2 LENGTH OF E-U, F-U, F-T, G-T, H-T, H-R, I-R, C-Y.

END VERTICAL(S) MUST BE SHEATHED OR HAVE BRACES AS INDICATED IN THE MAX. UNBRACED LENGTH COLUMN OF THE TABLE BELOW

LOADING

TOTAL LOAD CASES: (18)

CHORDS

MEMB. FR-TO	MAX. FACTORED FORCE (LBS)	FACTORED VERT. LOAD LC1 (PLF) FROM	TO	MAX CSI (LC)	MAX. UNBRAC LENGTH
A- B	0 / 0	-105.2	-105.2	0.09 (2)	10.00
B- Z	-5264 / 1494	-105.2	-105.2	0.33 (2)	3.58
Z- C	-4071 / 1332	-105.2	-105.2	0.37 (2)	4.00
C- D	-6339 / 1988	-105.2	-105.2	0.77 (2)	2.89
D- E	-6339 / 1988	-105.2	-105.2	0.77 (2)	2.89
E- F	-5056 / 1701	-105.2	-105.2	0.65 (2)	3.34
F- G	-4574 / 1619	-105.2	-105.2	0.70 (2)	3.36
G- H	-4574 / 1619	-105.2	-105.2	0.70 (2)	3.36
H- I	-4100 / 1384	-105.2	-105.2	0.32 (3)	4.02
I- J	-5110 / 1670	-105.2	-105.2	0.37 (3)	3.60
J- K	-5110 / 1670	-105.2	-105.2	0.37 (3)	3.60
K- L	-5328 / 1588	-105.2	-105.2	0.29 (1)	3.60
L- M	0 / 40	-105.2	-105.2	0.09 (3)	10.00
N- L	-3670 / 1121	0.0	0.0	0.14 (1)	6.90
B- Y	-1396 / 3762	-39.5	-39.5	0.47 (2)	6.25
Y- X	-2119 / 6551	-39.5	-39.5	0.90 (2)	5.57
X- W	-2120 / 6545	-39.5	-39.5	0.87 (2)	5.58
W- V	-1819 / 5865	-39.5	-39.5	0.80 (2)	5.91
V- U	-1819 / 5865	-39.5	-39.5	0.80 (2)	5.91
U- T	-1341 / 4656	-39.5	-39.5	0.66 (2)	6.25
T- S	-931 / 3639	-39.5	-39.5	0.53 (1)	6.25
S- R	-931 / 3639	-39.5	-39.5	0.53 (1)	6.25
R- Q	-899 / 3543	-39.5	-39.5	0.50 (1)	6.25
Q- P	-49 / 160	-39.5	-39.5	0.09 (4)	6.25
P- O	0 / 93	0.0	0.0	0.25 (1)	10.00
O- K	-359 / 256	0.0	0.0	0.24 (1)	7.81
O- N	-7 / 15	-39.5	-39.5	0.06 (17)	10.00

WEBS

MEMB. FR-TO	MAX. FACTORED FORCE (LBS)	MAX CSI (LC)
X- C	0 / 349	0.06 (17)
C- W	-768 / 340	0.71 (2)
W- E	-91 / 664	0.11 (5)
E- U	-1664 / 656	0.79 (2)
U- F	-381 / 1415	0.23 (2)
F- T	-220 / 669	0.18 (2)
T- G	-1091 / 511	0.50 (3)
T- H	-614 / 1951	0.48 (13)
R- H	-312 / 274	0.14 (9)
R- I	-66 / 599	0.10 (2)
Q- I	-1435 / 459	0.62 (1)
O- L	-1338 / 4845	0.78 (1)
Q- O	-954 / 3766	0.44 (1)
I- O	-514 / 1565	0.26 (14)
Y- Z	-290 / 1680	0.00 (1)
Y- C	-3212 / 832	0.45 (2)

[M]

DESIGN CRITERIA

SPECIFIED LOADS:

TOP CH.	LL	=	30.1	PSF
	DL	=	6.0	PSF
BOT CH.	LL	=	10.5	PSF
	DL	=	7.4	PSF
TOTAL LOAD		=	54.0	PSF

SPACING = 24.0 IN. C/C

LOADING IN FLAT SECTION BASED ON A SLOPE OF 5.00/12

THIS TRUSS IS DESIGNED FOR COMMERCIAL OR INDUSTRIAL BUILDING REQUIREMENTS OF PART 4, NBCC 2015

THIS DESIGN COMPLIES WITH:
- PART 4 OF BCBC 2018 , NBC-2019AE
- PART 4 OF OBC 2012 (2019 AMENDMENT)
- CSA 086-14
- TPIC 2014

DESIGN ASSUMPTIONS
- SLOPE REDUCTION FACTOR NOT USED

(80 % OF 27.2 P.S.F. G.S.L. PLUS 8.4 P.S.F. RAIN LOAD) TIMES IMPORTANCE FACTOR EQUALS 30.1 P.S.F. SPECIFIED ROOF LIVE LOAD

ALLOWABLE DEFL.(LL)= L/360 (1.65")
CALCULATED VERT. DEFL.(LL) = L/ 999 (0.27")
ALLOWABLE DEFL.(TL)= L/180 (3.31")
CALCULATED VERT. DEFL.(TL) = L/ 999 (0.38")

CSI: TC=0.77/1.00 (C-E:2) , BC=0.90/1.00 (X-Y:2) , WB=0.79/1.00 (E-U:2) , SSI=0.33/1.00 (F-G:3)

DOL LUMBER=1.00 NAIL=1.00 LS BEND=1.10 COMP=1.10 SHEAR=1.10 TENS= 1.10

SNOW LOAD IMPORTANCE FACTOR = 1.00
WIND LOAD IMPORTANCE FACTOR = 1.00
LIVE LOAD IMPORTANCE FACTOR = 1.00
COMPANION LIVE LOAD FACTOR = 1.00

AUTOSOLVE HEELS OFF

TRUSS PLATE MANUFACTURER IS NOT RESPONSIBLE FOR QUALITY CONTROL IN THE TRUSS MANUFACTURING PLANT .

NAIL VALUES

PLATE	GRIP(DRY) (PSI) MAX	MIN	SHEAR (PLI) MAX	MIN	SECTION (PLI) MAX	MIN
MT20	650	371	1747	788	1987	1873
MT18HS	586	403	2455	1382	3163	3004

PLATE PLACEMENT TOL. = 0.250 inches

PLATE ROTATION TOL. = 5.0 Deg.

JSI GRIP= 0.79 (C) (INPUT = 0.90)
JSI METAL= 0.74 (B) (INPUT = 0.95)

CONTINUED ON PAGE 2

JOB NAME	TRUSS NAME	QUANTITY	PLY	JOB DESC. ROYAL PINE HOMES	DRWG NO.
425913	T72	2	1	TRUSS DESC.	

Tamarack Roof Truss, Burlington

PLATES (table is in inches)

JT	TYPE	PLATES	W	LEN	Y	X
U	BMWW-t	MT20	5.0	6.0		
V	BS-t	MT18HS	5.0	16.0		
W	BMWW+t	MT20	4.0	6.0		
X	BMW+w	MT20	4.0	6.0		

Edge - INDICATES REFERENCE CORNER OF PLATE TOUCHES EDGE OF CHORD.

NOTES- (1)
1) Lateral braces to be a minimum of 2X4 SPF #2.

TRUSS HAS BEEN CHECKED FOR UNBALANCED LOADING AS PER NBCC 4.1.6.2.(8)

WIND LOAD APPLIED IS DERIVED FROM REFERENCE VELOCITY PRESSURE OF { 9.2} PSF AT {30-0-0} FT-IN-SX REFERENCE HEIGHT ABOVE GRADE AND USING EXTERNAL PEAK COEFFICIENTS, CpCg, BASED ON THE {MAIN WIND FORCE RESISTING SYSTEM}.INTERNAL WIND PRESSURE IS BASED ON DESIGN {CATEGORY 2}. BUILDING MAY BE LOCATED ON {OPEN TERRAIN}, AND TRUSS IS DESIGNED TO BE LOCATED AT LEAST {0-0} FT-IN-SX AWAY FROM EAVE.TRUSS UPLIFT IS BASED ON TOP AND BOTTOM CHORD DEAD LOADS OF 5.0 PSF AND 5.0 PSF RESPECTIVELY.

LICENSED PROFESSIONAL ENGINEER
02-28-24
H. J. G. ALVES
100009024
PROVINCE OF ONTARIO

Structural component only
DWG# T-2406456

JOB NAME	TRUSS NAME	QUANTITY	PLY	JOB DESC.	DRWG NO.
425914	T75	1	1	ROYAL PINE HOMES TRUSS DESC.	

Tamarack Roof Truss, Burlington

Version 8.630 S Aug 30 2023 MiTek Industries, Inc. Wed Feb 28 16:19:29 2024 Page 1
ID:sd0FDfbi38oVqvTaiRkhtSzPAoD-hBXwGJm4i3ztShv9pkw1FP4rvvBe40r7N9nUaYzgZoS

Scale = 1:45.7

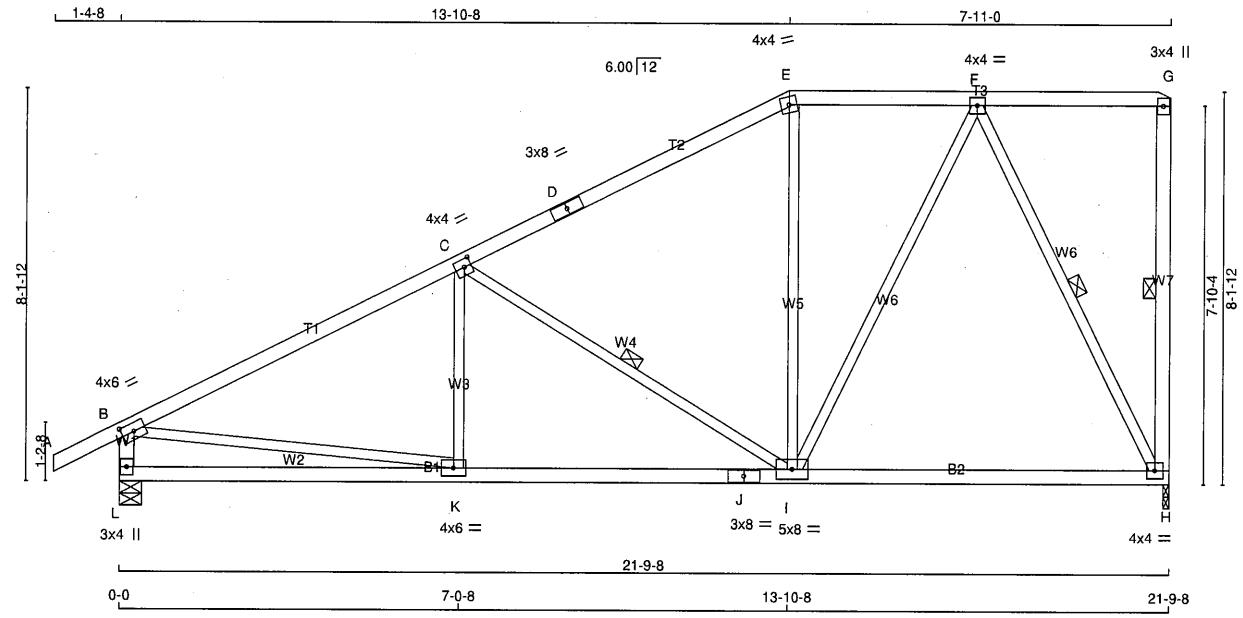

TOTAL WEIGHT = 98 lb

LUMBER
N. L. G. A. RULES

CHORDS	SIZE		LUMBER	DESCR.
A - D	2x4	DRY	No.2	SPF
D - E	2x4	DRY	No.2	SPF
E - G	2x4	DRY	No.2	SPF
L - B	2x4	DRY	No.2	SPF
H - G	2x4	DRY	No.2	SPF
L - J	2x4	DRY	No.2	SPF
J - H	2x4	DRY	No.2	SPF
ALL WEBS EXCEPT	2x3	DRY	No.2	SPF

DRY: SEASONED LUMBER.

PLATES (table is in inches)

JT	TYPE	PLATES	W	LEN	Y	X
B	TMVW-t	MT20	4.0	6.0	2.00	3.00
C	TMWW-t	MT20	4.0	4.0	2.00	1.75
D	TS-t	MT20	3.0	8.0		
E	TTW-m	MT20	4.0	4.0		
F	TMWW-t	MT20	4.0	4.0		
G	TMV+p	MT20	3.0	4.0		
H	BMVW1-t	MT20	4.0	4.0		
I	BMWWW-t	MT20	5.0	8.0		
J	BS-t	MT20	3.0	8.0		
K	BMWW-t	MT20	4.0	6.0		
L	BMV1+p	MT20	3.0	4.0		

NOTES- (1)
1) Lateral braces to be a minimum of 2X4 SPF #2.

DIMENSIONS, SUPPORTS AND LOADINGS SPECIFIED BY FABRICATOR TO BE VERIFIED BY BUILDING DESIGNER

BEARINGS

JT	FACTORED GROSS REACTION VERT	HORZ	MAXIMUM FACTORED GROSS REACTION DOWN	HORZ	UPLIFT	INPUT BRG IN-SX	REQRD BRG IN-SX
L	1248	0	1248	0	0	5-8	1-8
H	1126	0	1126	0	0	1-8	1-8

UNFACTORED REACTIONS

JT	1ST LCASE COMBINED	MAX./MIN. COMPONENT REACTIONS SNOW	LIVE	PERM.LIVE	WIND	DEAD	SOIL
L	884	575 / 0	0 / 0	0 / 0	0 / 0	309 / 0	0 / 0
H	799	507 / 0	0 / 0	0 / 0	0 / 0	292 / 0	0 / 0

BEARING MATERIAL TO BE SPF NO.2 OR BETTER AT JOINT(S) L, H

BRACING
TOP CHORD TO BE SHEATHED OR MAX. PURLIN SPACING = 4.63 FT.
MAX. UNBRACED BOTTOM CHORD LENGTH = 10.00 FT OR RIGID CEILING DIRECTLY APPLIED.

ALL PITCH BREAKS AND PERIMETER CORNER JOINTS MUST BE LATERALLY RESTRAINED.

1 LATERAL BRACE(S) AT 1/ 2 LENGTH OF C-I, G-H, F-H.

END VERTICAL(S) MUST BE SHEATHED OR HAVE BRACES AS INDICATED IN THE MAX. UNBRACED LENGTH COLUMN OF THE TABLE BELOW

LOADING
TOTAL LOAD CASES: (4)

CHORDS

MEMB. FR-TO	MAX. FACTORED FORCE (LBS)	FACTORED VERT. LOAD LC1 (PLF) FROM	TO	MAX CSI (LC)	MAX. UNBRAC LENGTH
A- B	0 / 27	-84.9	-84.9	0.12 (1)	10.00
B- C	-1470 / 0	-84.9	-84.9	0.60 (1)	4.63
C- D	-850 / 0	-84.9	-84.9	0.55 (1)	5.79
D- E	-850 / 0	-84.9	-84.9	0.55 (1)	5.79
E- F	-731 / 0	-84.9	-84.9	0.17 (1)	6.25
F- G	0 / 0	-84.9	-84.9	0.22 (1)	10.00
L- B	-1193 / 0	0.0	0.0	0.12 (1)	7.32
H- G	-129 / 0	0.0	0.0	0.04 (1)	6.25
L- K	0 / 0	-18.5	-18.5	0.19 (4)	10.00
K- J	0 / 1343	-18.5	-18.5	0.37 (4)	10.00
J- I	0 / 1343	-18.5	-18.5	0.37 (4)	10.00
I- H	0 / 478	-18.5	-18.5	0.29 (4)	10.00

WEBS

MEMB. FR-TO	MAX. FACTORED FORCE (LBS)	MAX CSI (LC)
K- C	-37 / 92	0.03 (4)
C- I	-726 / 0	0.33 (1)
I- E	0 / 69	0.02 (4)
B- K	0 / 1354	0.30 (1)
I- F	0 / 581	0.13 (1)
F- H	-1053 / 0	0.55 (1)

[M][F]

DESIGN CRITERIA

SPECIFIED LOADS:

TOP CH.	LL	=	23.3	PSF
	DL	=	6.0	PSF
BOT CH.	LL	=	0.0	PSF
	DL	=	7.4	PSF
TOTAL LOAD		=	36.7	PSF

SPACING = 24.0 IN. C/C

LOADING IN FLAT SECTION BASED ON A SLOPE OF 6.00/12

THIS TRUSS IS DESIGNED FOR RESIDENTIAL OR SMALL BUILDING REQUIREMENTS OF PART 9, NBCC 2015

THIS DESIGN COMPLIES WITH:
- PART 9 OF BCBC 2018 , NBC-2019AE
- PART 9 OF OBC 2012 (2019 AMENDMENT)
- CSA 086-14
- TPIC 2014

(55 % OF 27.2 P.S.F. G.S.L. PLUS 8.4 P.S.F. RAIN LOAD) EQUALS 23.3 P.S.F. SPECIFIED ROOF LIVE LOAD

ALLOWABLE DEFL.(LL)= L/360 (0.73")
CALCULATED VERT. DEFL.(LL) = L/ 999 (0.04")
ALLOWABLE DEFL.(TL)= L/360 (0.73")
CALCULATED VERT. DEFL.(TL) = L/ 999 (0.12")

CSI: TC=0.60/1.00 (B-C:1) , BC=0.37/1.00 (I-K:4) , WB=0.55/1.00 (F-H:1) , SSI=0.26/1.00 (B-C:1)

DOL LUMBER=1.00 NAIL=1.00 LS BEND=1.10 COMP=1.10 SHEAR=1.10 TENS= 1.10

COMPANION LIVE LOAD FACTOR = 1.00

AUTOSOLVE LEFT HEEL ONLY

TRUSS PLATE MANUFACTURER IS NOT RESPONSIBLE FOR QUALITY CONTROL IN THE TRUSS MANUFACTURING PLANT .

NAIL VALUES

PLATE	GRIP(DRY) (PSI) MAX	MIN	SHEAR (PLI) MAX	MIN	SECTION (PLI) MAX	MIN
MT20	650	371	1747	788	1987	1873

PLATE PLACEMENT TOL. = 0.250 inches

PLATE ROTATION TOL. = 5.0 Deg.

JSI GRIP= 0.77 (K) (INPUT = 0.90)
JSI METAL= 0.50 (J) (INPUT = 0.95)

LICENSED PROFESSIONAL ENGINEER
02-28-24
H. J. G. ALVES
100009024
PROVINCE OF ONTARIO

Structural component only
DWG# T-2406465

JOB NAME	TRUSS NAME	QUANTITY	PLY	JOB DESC.	DRWG NO.
425914	T76	1	1	ROYAL PINE HOMES TRUSS DESC.	

Tamarack Roof Truss, Burlington

Version 8.630 S Aug 30 2023 MiTek Industries, Inc. Wed Feb 28 16:19:30 2024 Page 1
ID:sd0FDfbi38oVqvTaiRkhtSzPAoD-9O4lUfniTN5k3rULMRRGoddzMJWJpSaHcpX26_zgZoR

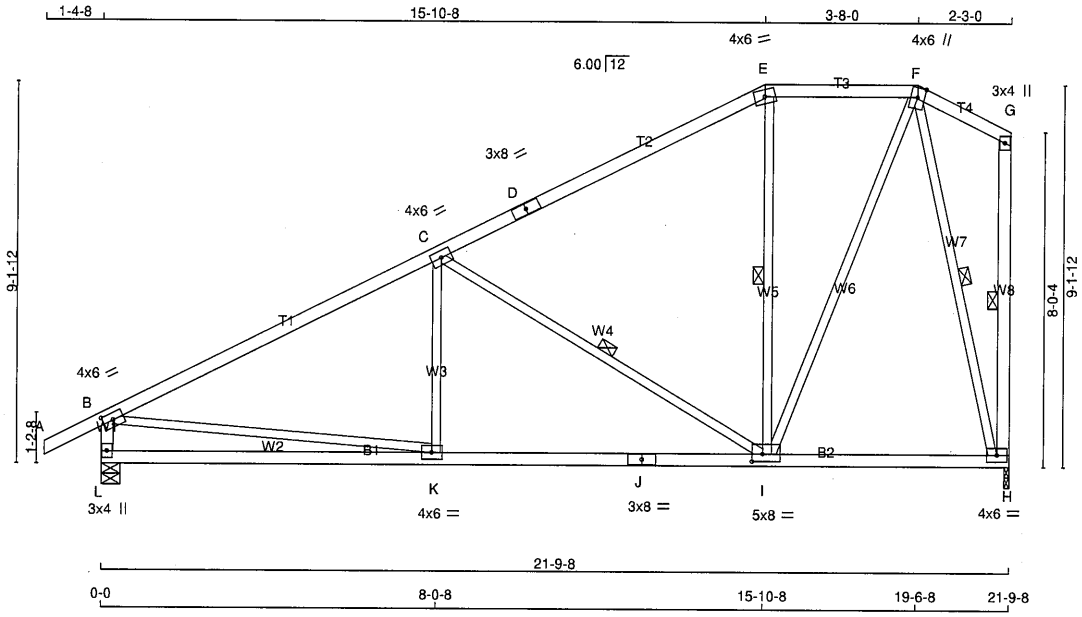

TOTAL WEIGHT = 103 lb

[M][F]

LUMBER

N. L. G. A. RULES

CHORDS	SIZE		LUMBER	DESCR.
A - D	2x4	DRY	No.2	SPF
D - E	2x4	DRY	No.2	SPF
E - F	2x4	DRY	No.2	SPF
F - G	2x4	DRY	No.2	SPF
L - B	2x4	DRY	No.2	SPF
H - G	2x4	DRY	No.2	SPF
L - J	2x4	DRY	No.2	SPF
J - H	2x4	DRY	No.2	SPF
ALL WEBS EXCEPT	2x3	DRY	No.2	SPF

DRY: SEASONED LUMBER.

PLATES (table is in inches)

JT	TYPE	PLATES	W	LEN	Y	X
B	TMVW-t	MT20	4.0	6.0	2.00	3.00
C	TMWW-t	MT20	4.0	6.0		
D	TS-t	MT20	3.0	8.0		
E	TTW-m	MT20	4.0	6.0		
F	TTWW+m	MT20	4.0	6.0	Edge	
G	TMV+p	MT20	3.0	4.0		
H	BMVW1-t	MT20	4.0	6.0		
I	BMWWW-t	MT20	5.0	8.0	2.25	3.00
J	BS-t	MT20	3.0	8.0		
K	BMWW-t	MT20	4.0	6.0		
L	BMV1+p	MT20	3.0	4.0		

Edge - INDICATES REFERENCE CORNER OF PLATE TOUCHES EDGE OF CHORD.

NOTES- (1)
1) Lateral braces to be a minimum of 2X4 SPF #2.

DIMENSIONS, SUPPORTS AND LOADINGS SPECIFIED BY FABRICATOR TO BE VERIFIED BY BUILDING DESIGNER

BEARINGS

JT	FACTORED GROSS REACTION VERT	HORZ	MAXIMUM FACTORED GROSS REACTION DOWN	HORZ	UPLIFT	INPUT BRG IN-SX	REQRD BRG IN-SX
L	1248	0	1248	0	0	5-8	1-8
H	1126	0	1126	0	0	1-8	1-8

UNFACTORED REACTIONS

JT	1ST LCASE COMBINED	MAX./MIN. COMPONENT REACTIONS SNOW	LIVE	PERM.LIVE	WIND	DEAD	SOIL
L	884	575 / 0	0 / 0	0 / 0	0 / 0	309 / 0	0 / 0
H	799	507 / 0	0 / 0	0 / 0	0 / 0	292 / 0	0 / 0

BEARING MATERIAL TO BE SPF NO.2 OR BETTER AT JOINT(S) L, H

BRACING

TOP CHORD TO BE SHEATHED OR MAX. PURLIN SPACING = 4.20 FT.
MAX. UNBRACED BOTTOM CHORD LENGTH = 10.00 FT OR RIGID CEILING DIRECTLY APPLIED.

ALL PITCH BREAKS AND PERIMETER CORNER JOINTS MUST BE LATERALLY RESTRAINED.

1 LATERAL BRACE(S) AT 1/ 2 LENGTH OF C-I, E-I, G-H, F-H.

END VERTICAL(S) MUST BE SHEATHED OR HAVE BRACES AS INDICATED IN THE MAX. UNBRACED LENGTH COLUMN OF THE TABLE BELOW

LOADING

TOTAL LOAD CASES: (4)

CHORDS

MEMB. FR-TO	MAX. FACTORED FORCE (LBS)	FACTORED VERT. LOAD (PLF) FROM	TO	LC1 CSI (LC)	MAX UNBRAC LENGTH
A- B	0 / 27	-84.9	-84.9	0.12 (1)	10.00
B- C	-1437 / 0	-84.9	-84.9	0.81 (1)	4.20
C- D	-654 / 0	-84.9	-84.9	0.73 (1)	5.83
D- E	-654 / 0	-84.9	-84.9	0.73 (1)	5.83
E- F	-550 / 0	-84.9	-84.9	0.15 (1)	6.25
F- G	0 / 0	-84.9	-84.9	0.07 (1)	10.00
L- B	-1188 / 0	0.0	0.0	0.12 (1)	7.32
H- G	-95 / 0	0.0	0.0	0.03 (1)	6.25
L- K	0 / 0	-18.5	-18.5	0.29 (4)	10.00
K- J	0 / 1318	-18.5	-18.5	0.41 (4)	10.00
J- I	0 / 1318	-18.5	-18.5	0.41 (4)	10.00
I- H	0 / 252	-18.5	-18.5	0.21 (4)	10.00

WEBS

MEMB. FR-TO	MAX. FACTORED FORCE (LBS)	MAX CSI (LC)
K- C	0 / 136	0.05 (4)
C- I	-902 / 0	0.56 (1)
I- E	-128 / 23	0.07 (1)
B- K	0 / 1326	0.30 (1)
I- F	0 / 797	0.18 (1)
F- H	-1022 / 0	0.59 (1)

DESIGN CRITERIA

SPECIFIED LOADS:

TOP CH.	LL	=	23.3	PSF
	DL	=	6.0	PSF
BOT CH.	LL	=	0.0	PSF
	DL	=	7.4	PSF
TOTAL LOAD		=	36.7	PSF

SPACING = 24.0 IN. C/C

LOADING IN FLAT SECTION BASED ON A SLOPE OF 6.00/12

THIS TRUSS IS DESIGNED FOR RESIDENTIAL OR SMALL BUILDING REQUIREMENTS OF PART 9, NBCC 2015

THIS DESIGN COMPLIES WITH:
- PART 9 OF BCBC 2018 , NBC-2019AE
- PART 9 OF OBC 2012 (2019 AMENDMENT)
- CSA 086-14
- TPIC 2014

(55 % OF 27.2 P.S.F. G.S.L. PLUS 8.4 P.S.F. RAIN LOAD) EQUALS 23.3 P.S.F. SPECIFIED ROOF LIVE LOAD

ALLOWABLE DEFL.(LL)= L/360 (0.73")
CALCULATED VERT. DEFL.(LL) = L/ 999 (0.05")
ALLOWABLE DEFL.(TL)= L/360 (0.73")
CALCULATED VERT. DEFL.(TL) = L/ 999 (0.15")

CSI: TC=0.81/1.00 (B-C:1) , BC=0.41/1.00 (I-K:4) , WB=0.59/1.00 (F-H:1) , SSI=0.30/1.00 (B-C:1)

DOL LUMBER=1.00 NAIL=1.00 LS BEND=1.10 COMP=1.10 SHEAR=1.10 TENS= 1.10

COMPANION LIVE LOAD FACTOR = 1.00

AUTOSOLVE LEFT HEEL ONLY

TRUSS PLATE MANUFACTURER IS NOT RESPONSIBLE FOR QUALITY CONTROL IN THE TRUSS MANUFACTURING PLANT .

NAIL VALUES

PLATE	GRIP(DRY) (PSI) MAX	MIN	SHEAR (PLI) MAX	MIN	SECTION (PLI) MAX	MIN
MT20	650	371	1747	788	1987	1873

PLATE PLACEMENT TOL. = 0.250 inches

PLATE ROTATION TOL. = 5.0 Deg.

JSI GRIP= 0.75 (K) (INPUT = 0.90)
JSI METAL= 0.49 (J) (INPUT = 0.95)

LICENSED PROFESSIONAL ENGINEER
02-28-24
H. J. G. ALVES
100009024
PROVINCE OF ONTARIO

Structural component only
DWG# T-2406466

JOB NAME	TRUSS NAME	QUANTITY	PLY	JOB DESC.	DRWG NO.
425914	T77	1	1	ROYAL PINE HOMES TRUSS DESC.	

Tamarack Roof Truss, Burlington

Version 8.630 S Aug 30 2023 MiTek Industries, Inc. Wed Feb 28 16:19:32 2024 Page 1
ID:sd0FDfbi38oVqvTaiRkhtSzPAoD-5mC2uLoz?_LSJ8ekUsTkt2iPN7DsHIMZ3709AszgZoP

Scale = 1:56.7

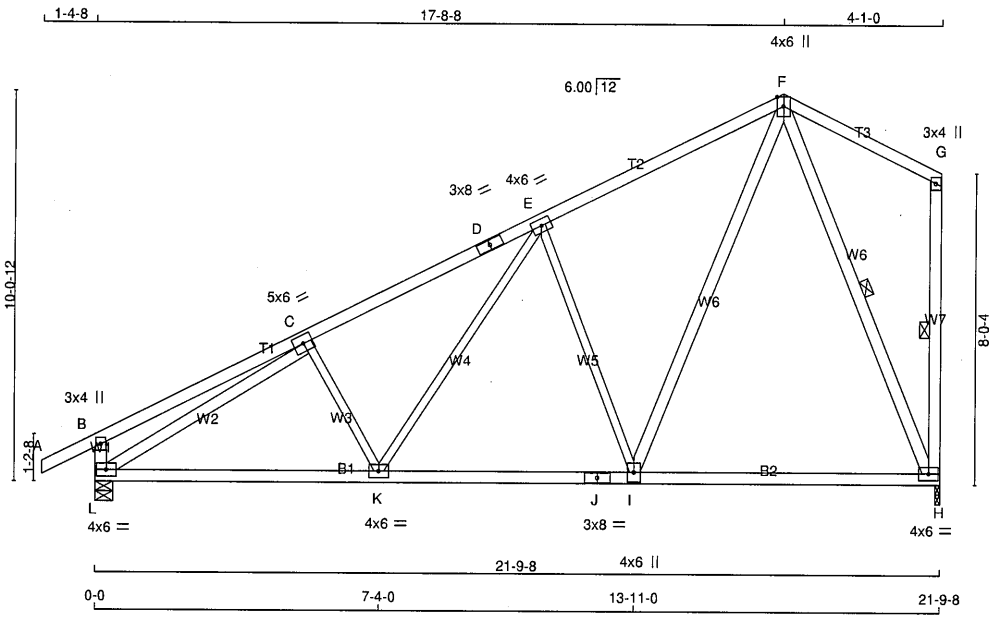

TOTAL WEIGHT = 109 lb

[M][F]

LUMBER
N. L. G. A. RULES

CHORDS	SIZE		LUMBER	DESCR.
A - D	2x4	DRY	No.2	SPF
D - F	2x4	DRY	No.2	SPF
F - G	2x4	DRY	No.2	SPF
L - B	2x4	DRY	No.2	SPF
H - G	2x4	DRY	No.2	SPF
L - J	2x4	DRY	No.2	SPF
J - H	2x4	DRY	No.2	SPF
ALL WEBS EXCEPT	2x4	DRY	No.2	SPF
C - K	2x3	DRY	No.2	SPF
K - E	2x3	DRY	No.2	SPF
E - I	2x3	DRY	No.2	SPF

DRY: SEASONED LUMBER.

PLATES (table is in inches)

JT	TYPE	PLATES	W	LEN	Y	X
B	TMV+p	MT20	3.0	4.0		
C	TMWW-t	MT20	5.0	6.0		
D	TS-t	MT20	3.0	8.0		
E	TMWW-t	MT20	4.0	6.0		
F	TTWW+p	MT20	4.0	6.0	Edge	
G	TMV+p	MT20	3.0	4.0		
H	BMVW1-t	MT20	4.0	6.0		
I	BMWW+t	MT20	4.0	6.0		
J	BS-t	MT20	3.0	8.0		
K	BMWW-t	MT20	4.0	6.0		
L	BMVW1-t	MT20	4.0	6.0		

Edge - INDICATES REFERENCE CORNER OF PLATE TOUCHES EDGE OF CHORD.

NOTES- (1)
1) Lateral braces to be a minimum of 2X4 SPF #2.

DIMENSIONS, SUPPORTS AND LOADINGS SPECIFIED BY FABRICATOR TO BE VERIFIED BY BUILDING DESIGNER

BEARINGS

JT	FACTORED GROSS REACTION VERT	HORZ	MAXIMUM FACTORED GROSS REACTION DOWN	HORZ	UPLIFT	INPUT BRG IN-SX	REQRD BRG IN-SX
L	1248	0	1248	0	0	5-8	1-8
H	1126	0	1126	0	0	1-8	1-8

UNFACTORED REACTIONS

JT	1ST LCASE COMBINED	MAX./MIN. COMPONENT REACTIONS SNOW	LIVE	PERM.LIVE	WIND	DEAD	SOIL
L	884	575 / 0	0 / 0	0 / 0	0 / 0	309 / 0	0 / 0
H	799	507 / 0	0 / 0	0 / 0	0 / 0	292 / 0	0 / 0

BEARING MATERIAL TO BE SPF NO.2 OR BETTER AT JOINT(S) L, H

BRACING
TOP CHORD TO BE SHEATHED OR MAX. PURLIN SPACING = 5.16 FT.
MAX. UNBRACED BOTTOM CHORD LENGTH = 10.00 FT OR RIGID CEILING DIRECTLY APPLIED.

ALL PITCH BREAKS AND PERIMETER CORNER JOINTS MUST BE LATERALLY RESTRAINED.

1 LATERAL BRACE(S) AT 1/ 2 LENGTH OF G-H, F-H.

END VERTICAL(S) MUST BE SHEATHED OR HAVE BRACES AS INDICATED IN THE MAX. UNBRACED LENGTH COLUMN OF THE TABLE BELOW

LOADING
TOTAL LOAD CASES: (4)

CHORDS

MEMB. FR-TO	MAX. FACTORED FORCE (LBS)	FACTORED VERT. LOAD (PLF) FROM	TO	LC1 CSI (LC)	MAX UNBRAC LENGTH
A- B	0 / 27	-84.9	-84.9	0.12 (1)	10.00
B- C	0 / 21	-84.9	-84.9	0.34 (1)	10.00
C- D	-1335 / 0	-84.9	-84.9	0.39 (1)	5.16
D- E	-1335 / 0	-84.9	-84.9	0.39 (1)	5.16
E- F	-819 / 0	-84.9	-84.9	0.40 (1)	6.17
F- G	0 / 0	-84.9	-84.9	0.24 (1)	10.00
L- B	-302 / 0	0.0	0.0	0.03 (1)	7.81
H- G	-173 / 0	0.0	0.0	0.05 (1)	6.25
L- K	0 / 1329	-18.5	-18.5	0.34 (1)	10.00
K- J	0 / 970	-18.5	-18.5	0.33 (4)	10.00
J- I	0 / 970	-18.5	-18.5	0.33 (4)	10.00
I- H	0 / 374	-18.5	-18.5	0.27 (4)	10.00

WEBS

MEMB. FR-TO	MAX. FACTORED FORCE (LBS)	MAX CSI (LC)
C- K	-266 / 0	0.08 (1)
K- E	0 / 433	0.10 (1)
E- I	-761 / 0	0.74 (1)
I- F	0 / 929	0.15 (1)
L- C	-1599 / 0	0.82 (1)
F- H	-968 / 0	0.57 (1)

DESIGN CRITERIA

SPECIFIED LOADS:

TOP CH.	LL	=	23.3	PSF
	DL	=	6.0	PSF
BOT CH.	LL	=	0.0	PSF
	DL	=	7.4	PSF
TOTAL LOAD		=	36.7	PSF

SPACING = 24.0 IN. C/C

THIS TRUSS IS DESIGNED FOR RESIDENTIAL OR SMALL BUILDING REQUIREMENTS OF PART 9, NBCC 2015

THIS DESIGN COMPLIES WITH:
- PART 9 OF BCBC 2018 , NBC-2019AE
- PART 9 OF OBC 2012 (2019 AMENDMENT)
- CSA 086-14
- TPIC 2014

(55 % OF 27.2 P.S.F. G.S.L. PLUS 8.4 P.S.F. RAIN LOAD) EQUALS 23.3 P.S.F. SPECIFIED ROOF LIVE LOAD

ALLOWABLE DEFL.(LL)= L/360 (0.73")
CALCULATED VERT. DEFL.(LL) = L/ 999 (0.04")
ALLOWABLE DEFL.(TL)= L/360 (0.73")
CALCULATED VERT. DEFL.(TL) = L/ 999 (0.13")

CSI: TC=0.40/1.00 (E-F:1) , BC=0.34/1.00 (K-L:1) , WB=0.82/1.00 (C-L:1) , SSI=0.22/1.00 (E-F:1)

DOL LUMBER=1.00 NAIL=1.00 LS BEND=1.10 COMP=1.10 SHEAR=1.10 TENS= 1.10

COMPANION LIVE LOAD FACTOR = 1.00

AUTOSOLVE HEELS OFF

TRUSS PLATE MANUFACTURER IS NOT RESPONSIBLE FOR QUALITY CONTROL IN THE TRUSS MANUFACTURING PLANT .

NAIL VALUES

PLATE	GRIP(DRY) (PSI) MAX	MIN	SHEAR (PLI) MAX	MIN	SECTION (PLI) MAX	MIN
MT20	650	371	1747	788	1987	1873

PLATE PLACEMENT TOL. = 0.250 inches

PLATE ROTATION TOL. = 5.0 Deg.

JSI GRIP= 0.76 (L) (INPUT = 0.90)
JSI METAL= 0.40 (J) (INPUT = 0.95)

LICENSED PROFESSIONAL ENGINEER
02-28-24
H. J. G. ALVES
100009024
PROVINCE OF ONTARIO

Structural component only
DWG# T-2406467

JOB NAME	TRUSS NAME	QUANTITY	PLY	JOB DESC. ROYAL PINE HOMES	DRWG NO.
425914	T78	1	1	TRUSS DESC.	

Tamarack Roof Truss, Burlington

Version 8.630 S Aug 30 2023 MiTek Industries, Inc. Wed Feb 28 16:19:33 2024 Page 1
ID:sd0FDfbi38oVqvTaiRkhtSzPAoD-ZymR6hpbmlTJwlCw2Z?zQFFc1XZw0uvjInlijJzgZoO

Scale: 3/8"=1'

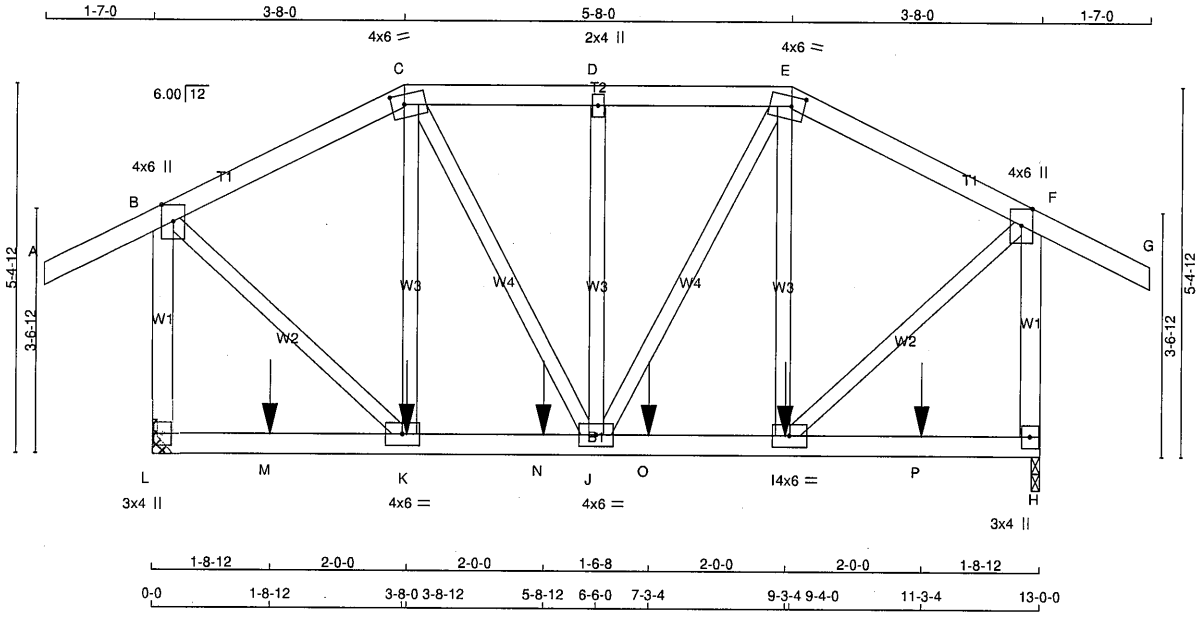

TOTAL WEIGHT = 70 lb
[M]

LUMBER
N. L. G. A. RULES

CHORDS	SIZE		LUMBER	DESCR.
A - C	2x4	DRY	No.2	SPF
C - E	2x4	DRY	No.2	SPF
E - G	2x4	DRY	No.2	SPF
L - B	2x4	DRY	No.2	SPF
H - F	2x4	DRY	No.2	SPF
L - H	2x4	DRY	No.2	SPF
ALL WEBS EXCEPT	2x3	DRY	No.2	SPF

DRY: SEASONED LUMBER.

PLATES (table is in inches)

JT	TYPE	PLATES	W	LEN	Y	X
B	TMVW+p	MT20	4.0	6.0	Edge	
C	TTWW-m	MT20	4.0	6.0	1.75	2.25
D	TMW+w	MT20	2.0	4.0		
E	TTWW-m	MT20	4.0	6.0	1.75	2.25
F	TMVW+p	MT20	4.0	6.0	Edge	
H	BMV1+p	MT20	3.0	4.0		
I	BMWW-t	MT20	4.0	6.0		
J	BMWWW-t	MT20	4.0	6.0		
K	BMWW-t	MT20	4.0	6.0		
L	BMV1+p	MT20	3.0	4.0		

Edge - INDICATES REFERENCE CORNER OF PLATE TOUCHES EDGE OF CHORD.

NOTES- (1)
1) Lateral braces to be a minimum of 2X4 SPF #2.

DIMENSIONS, SUPPORTS AND LOADINGS SPECIFIED BY FABRICATOR TO BE VERIFIED BY BUILDING DESIGNER

BEARINGS

JT	FACTORED GROSS REACTION VERT	HORZ	MAXIMUM FACTORED GROSS REACTION DOWN	HORZ	UPLIFT	INPUT BRG IN-SX	REQRD BRG IN-SX
L	1348	0	1348	0	0	MECHANICAL	
H	1348	0	1348	0	0	1-8	1-8

A SUITABLE HANGER/MECHANICAL CONNECTION IS REQUIRED AT JOINT L. MINIMUM BEARING LENGTH AT JOINT L = 1-8.

UNFACTORED REACTIONS

JT	1ST LCASE COMBINED	MAX./MIN. COMPONENT REACTIONS SNOW	LIVE	PERM.LIVE	WIND	DEAD	SOIL
L	950	645 / 0	0 / 0	0 / 0	0 / 0	304 / 0	0 / 0
H	950	645 / 0	0 / 0	0 / 0	0 / 0	304 / 0	0 / 0

BEARING MATERIAL TO BE SPF NO.2 OR BETTER AT JOINT(S) H

BRACING
TOP CHORD TO BE SHEATHED OR MAX. PURLIN SPACING = 6.25 FT.
MAX. UNBRACED BOTTOM CHORD LENGTH = 10.00 FT OR RIGID CEILING DIRECTLY APPLIED.

ALL PITCH BREAKS AND PERIMETER CORNER JOINTS MUST BE LATERALLY RESTRAINED.

LOADING
TOTAL LOAD CASES: (4)

CHORDS

MEMB. FR-TO	MAX. FORCE (LBS)	FACTORED VERT. LOAD (PLF) FROM	TO	LC1 MAX CSI (LC)	MAX. UNBRAC LENGTH
A- B	0 / 31	-84.9	-84.9	0.18 (1)	10.00
B- C	-781 / 0	-84.9	-84.9	0.23 (1)	6.25
C- D	-845 / 0	-84.9	-84.9	0.11 (1)	6.25
D- E	-845 / 0	-84.9	-84.9	0.11 (1)	6.25
E- F	-781 / 0	-84.9	-84.9	0.23 (1)	6.25
F- G	0 / 31	-84.9	-84.9	0.18 (1)	10.00
L- B	-1248 / 0	0.0	0.0	0.27 (1)	7.16
H- F	-1248 / 0	0.0	0.0	0.27 (1)	7.16
L- M	0 / 0	-18.5	-18.5	0.22 (1)	10.00
M- K	0 / 0	-18.5	-18.5	0.22 (1)	10.00
K- N	0 / 694	-18.5	-18.5	0.28 (1)	10.00
N- J	0 / 694	-18.5	-18.5	0.28 (1)	10.00
J- O	0 / 694	-18.5	-18.5	0.28 (1)	10.00
O- I	0 / 694	-18.5	-18.5	0.28 (1)	10.00
I- P	0 / 0	-18.5	-18.5	0.22 (1)	10.00
P- H	0 / 0	-18.5	-18.5	0.22 (1)	10.00

WEBS

MEMB. FR-TO	MAX. FORCE (LBS)	MAX CSI (LC)
K- C	-174 / 0	0.08 (1)
C- J	0 / 310	0.08 (1)
J- D	-284 / 0	0.13 (1)
J- E	0 / 310	0.08 (1)
I- E	-174 / 0	0.08 (1)
B- K	0 / 922	0.23 (1)
I- F	0 / 922	0.23 (1)

SPECIFIED CONCENTRATED LOADS (LBS)

JT	LOC.	LC1	MAX-	MAX+	FACE	DIR.	TYPE	HEEL	CONN.
I	9-3-4	-127	-127	---	FRONT	VERT	TOTAL	---	C1
K	3-8-12	-127	-127	---	FRONT	VERT	TOTAL	---	C1
M	1-8-12	-121	-121	---	FRONT	VERT	TOTAL	---	C1
N	5-8-12	-127	-127	---	FRONT	VERT	TOTAL	---	C1
O	7-3-4	-127	-127	---	FRONT	VERT	TOTAL	---	C1
P	11-3-4	-121	-121	---	FRONT	VERT	TOTAL	---	C1

CONNECTION REQUIREMENTS

1) **C1:** A SUITABLE HANGER/MECHANICAL CONNECTION IS REQUIRED.

DESIGN CRITERIA

SPECIFIED LOADS:

TOP CH.	LL	=	23.3	PSF
	DL	=	6.0	PSF
BOT CH.	LL	=	0.0	PSF
	DL	=	7.4	PSF
TOTAL LOAD		=	36.7	PSF

SPACING = 24.0 IN. C/C

LOADING IN FLAT SECTION BASED ON A SLOPE OF 6.00/12

THIS TRUSS IS DESIGNED FOR RESIDENTIAL OR SMALL BUILDING REQUIREMENTS OF PART 9, NBCC 2015

THIS DESIGN COMPLIES WITH:
- PART 9 OF BCBC 2018 , NBC-2019AE
- PART 9 OF OBC 2012 (2019 AMENDMENT)
- CSA 086-14
- TPIC 2014

(55 % OF 27.2 P.S.F. G.S.L. PLUS 8.4 P.S.F. RAIN LOAD) EQUALS 23.3 P.S.F. SPECIFIED ROOF LIVE LOAD

ALLOWABLE DEFL.(LL)= L/360 (0.43")
CALCULATED VERT. DEFL.(LL) = L/ 999 (0.02")
ALLOWABLE DEFL.(TL)= L/360 (0.43")
CALCULATED VERT. DEFL.(TL) = L/ 999 (0.04")

CSI: TC=0.27/1.00 (F-H:1) , BC=0.28/1.00 (J-K:1) , WB=0.23/1.00 (B-K:1) , SSI=0.12/1.00 (C-D:1)

DOL LUMBER=1.00 NAIL=1.00 LS BEND=1.00 COMP=1.00 SHEAR=1.00 TENS= 1.00

COMPANION LIVE LOAD FACTOR = 1.00

TRUSS PLATE MANUFACTURER IS NOT RESPONSIBLE FOR QUALITY CONTROL IN THE TRUSS MANUFACTURING PLANT .

NAIL VALUES

PLATE	GRIP(DRY) (PSI) MAX	MIN	SHEAR (PLI) MAX	MIN	SECTION (PLI) MAX	MIN
MT20	650	371	1747	788	1987	1873

PLATE PLACEMENT TOL. = 0.250 inches

PLATE ROTATION TOL. = 5.0 Deg.

JSI GRIP= 0.73 (C) (INPUT = 0.90)
JSI METAL= 0.42 (B) (INPUT = 0.95)

LICENSED PROFESSIONAL ENGINEER
02-28-24
H. J. G. ALVES
100009024
PROVINCE OF ONTARIO

Structural component only
DWG# T-2406468

JOB NAME	TRUSS NAME	QUANTITY	PLY	JOB DESC.	DRWG NO.
425914	T79	1	1	ROYAL PINE HOMES TRUSS DESC.	

Tamarack Roof Truss, Burlington

Version 8.630 S Aug 30 2023 MiTek Industries, Inc. Wed Feb 28 16:19:34 2024 Page 1
ID:sd0FDfbi38oVqvTaiRkhtSzPAoD-29KpJ0qDXbbAYSn7bHWCyTomZwx0INGsXRVFFIzgZoN

Scale = 1:37.7

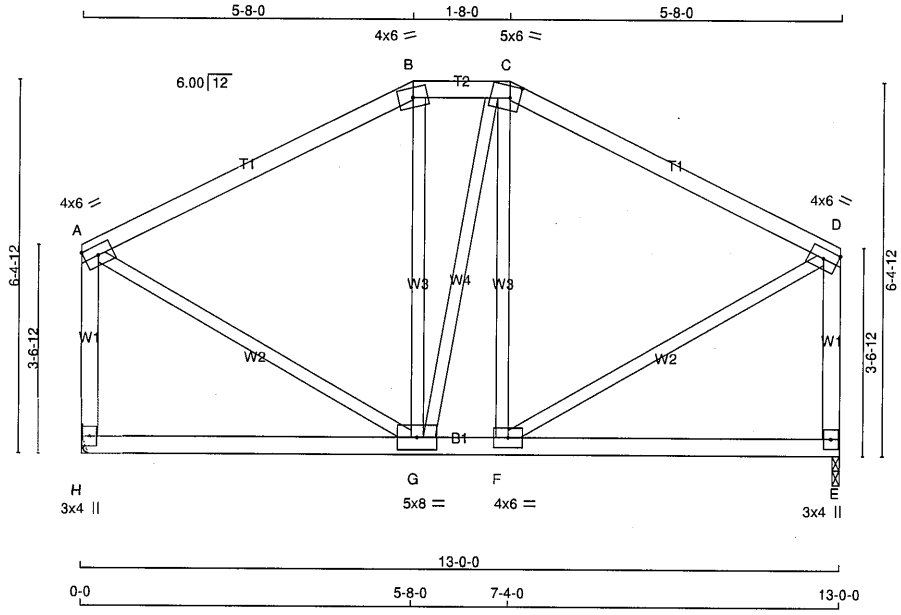

TOTAL WEIGHT = 63 lb
[M][F]

LUMBER
N. L. G. A. RULES

CHORDS	SIZE		LUMBER	DESCR.
A - B	2x4	DRY	No.2	SPF
B - C	2x4	DRY	No.2	SPF
C - D	2x4	DRY	No.2	SPF
H - A	2x4	DRY	No.2	SPF
E - D	2x4	DRY	No.2	SPF
H - E	2x4	DRY	No.2	SPF
ALL WEBS EXCEPT	2x3	DRY	No.2	SPF

DRY: SEASONED LUMBER.

PLATES (table is in inches)

JT	TYPE	PLATES	W	LEN	Y	X
A	TMVW-t	MT20	4.0	6.0		Edge
B	TTW-m	MT20	4.0	6.0		
C	TTWW-m	MT20	5.0	6.0	2.50	2.00
D	TMVW-t	MT20	4.0	6.0		Edge
E	BMV1+p	MT20	3.0	4.0		
F	BMWW-t	MT20	4.0	6.0		
G	BMWWW-t	MT20	5.0	8.0		
H	BMV1+p	MT20	3.0	4.0		

Edge - INDICATES REFERENCE CORNER OF PLATE TOUCHES EDGE OF CHORD.

NOTES- (1)
1) Lateral braces to be a minimum of 2X4 SPF #2.

DIMENSIONS, SUPPORTS AND LOADINGS SPECIFIED BY FABRICATOR TO BE VERIFIED BY BUILDING DESIGNER

BEARINGS

JT	FACTORED GROSS REACTION VERT	HORZ	MAXIMUM FACTORED GROSS REACTION DOWN	HORZ	UPLIFT	INPUT BRG IN-SX	REQRD BRG IN-SX
H	672	0	672	0	0	MECHANICAL	
E	672	0	672	0	0	1-8	1-8

A SUITABLE HANGER/MECHANICAL CONNECTION IS REQUIRED AT JOINT H. MINIMUM BEARING LENGTH AT JOINT H = 1-8.

UNFACTORED REACTIONS

JT	1ST LCASE COMBINED	MAX./MIN. COMPONENT REACTIONS SNOW	LIVE	PERM.LIVE	WIND	DEAD	SOIL
H	477	303 / 0	0 / 0	0 / 0	0 / 0	174 / 0	0 / 0
E	477	303 / 0	0 / 0	0 / 0	0 / 0	174 / 0	0 / 0

BEARING MATERIAL TO BE SPF NO.2 OR BETTER AT JOINT(S) E

BRACING
TOP CHORD TO BE SHEATHED OR MAX. PURLIN SPACING = 6.25 FT.
MAX. UNBRACED BOTTOM CHORD LENGTH = 10.00 FT OR RIGID CEILING DIRECTLY APPLIED.

ALL PITCH BREAKS AND PERIMETER CORNER JOINTS MUST BE LATERALLY RESTRAINED.

LOADING
TOTAL LOAD CASES: (4)

CHORDS

MEMB. FR-TO	MAX. FACTORED FORCE (LBS)	FACTORED VERT. LOAD (PLF) FROM	TO	LC1	MAX CSI (LC)	MAX. UNBRAC LENGTH
A- B	-406 / 0	-84.9	-84.9	0.35 (1)	6.25	
B- C	-361 / 0	-84.9	-84.9	0.03 (1)	6.25	
C- D	-407 / 0	-84.9	-84.9	0.35 (1)	6.25	
H- A	-627 / 0	0.0	0.0	0.13 (1)	7.81	
E- D	-628 / 0	0.0	0.0	0.13 (1)	7.81	
H- G	0 / 0	-18.5	-18.5	0.13 (4)	10.00	
G- F	0 / 362	-18.5	-18.5	0.16 (4)	10.00	
F- E	0 / 0	-18.5	-18.5	0.13 (4)	10.00	

WEBS

MEMB. FR-TO	MAX. FACTORED FORCE (LBS)	MAX CSI (LC)
G- B	-129 / 8	0.09 (1)
G- C	-3 / 0	0.00 (1)
F- C	-126 / 8	0.08 (1)
A- G	0 / 417	0.09 (1)
F- D	0 / 418	0.09 (1)

DESIGN CRITERIA

SPECIFIED LOADS:

TOP CH.	LL	=	23.3	PSF
	DL	=	6.0	PSF
BOT CH.	LL	=	0.0	PSF
	DL	=	7.4	PSF
TOTAL LOAD		=	36.7	PSF

SPACING = 24.0 IN. C/C

LOADING IN FLAT SECTION BASED ON A SLOPE OF 6.00/12

THIS TRUSS IS DESIGNED FOR RESIDENTIAL OR SMALL BUILDING REQUIREMENTS OF PART 9, NBCC 2015

THIS DESIGN COMPLIES WITH:
- PART 9 OF BCBC 2018 , NBC-2019AE
- PART 9 OF OBC 2012 (2019 AMENDMENT)
- CSA 086-14
- TPIC 2014

(55 % OF 27.2 P.S.F. G.S.L. PLUS 8.4 P.S.F. RAIN LOAD) EQUALS 23.3 P.S.F. SPECIFIED ROOF LIVE LOAD

ALLOWABLE DEFL.(LL)= L/360 (0.43")
CALCULATED VERT. DEFL.(LL) = L/ 999 (0.01")
ALLOWABLE DEFL.(TL)= L/360 (0.43")
CALCULATED VERT. DEFL.(TL) = L/ 999 (0.04")

CSI: TC=0.35/1.00 (C-D:1) , BC=0.16/1.00 (F-G:4) , WB=0.09/1.00 (D-F:1) , SSI=0.17/1.00 (A-B:1)

DOL LUMBER=1.00 NAIL=1.00 LS BEND=1.10 COMP=1.10 SHEAR=1.10 TENS= 1.10

COMPANION LIVE LOAD FACTOR = 1.00

TRUSS PLATE MANUFACTURER IS NOT RESPONSIBLE FOR QUALITY CONTROL IN THE TRUSS MANUFACTURING PLANT .

NAIL VALUES

PLATE	GRIP(DRY) (PSI) MAX	MIN	SHEAR (PLI) MAX	MIN	SECTION (PLI) MAX	MIN
MT20	650	371	1747	788	1987	1873

PLATE PLACEMENT TOL. = 0.250 inches

PLATE ROTATION TOL. = 5.0 Deg.

JSI GRIP= 0.33 (D) (INPUT = 0.90)
JSI METAL= 0.12 (D) (INPUT = 0.95)

LICENSED PROFESSIONAL ENGINEER
02-28-24
H. J. G. ALVES
100009024
PROVINCE OF ONTARIO

Structural component only
DWG# T-2406469

JOB NAME	TRUSS NAME	QUANTITY	PLY	JOB DESC. ROYAL PINE HOMES	DRWG NO.
425914	T80	4	1	TRUSS DESC.	

Tamarack Roof Truss, Burlington

Version 8.630 S Aug 30 2023 MiTek Industries, Inc. Wed Feb 28 16:19:35 2024 Page 1
ID:sd0FDfbi38oVqvTaiRkhtSzPAoD-WLuBXMrrlvk1AcMJ9_1RVgKzPKIYUrz0l5EpnBzgZoM

Scale = 1:30.2

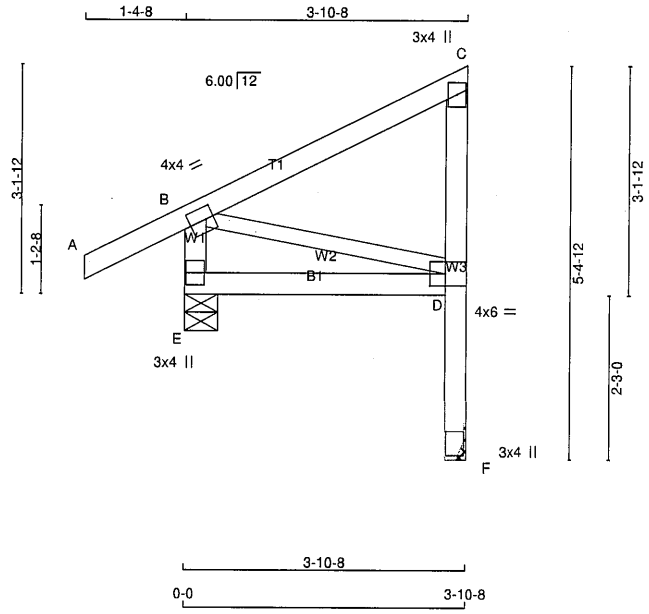

TOTAL WEIGHT = 4 X 20 = 81 lb
[M]

LUMBER
N. L. G. A. RULES

CHORDS	SIZE		LUMBER	DESCR.
A - C	2x4	DRY	No.2	SPF
F - C	2x4	DRY	No.2	SPF
E - B	2x4	DRY	No.2	SPF
E - D	2x4	DRY	No.2	SPF
ALL WEBS	2x3	DRY	No.2	SPF

DRY: SEASONED LUMBER.

PLATES (table is in inches)

JT	TYPE	PLATES	W	LEN	Y	X
B	TMVW-t	MT20	4.0	4.0	2.00	1.25
C	TMV+p	MT20	3.0	4.0		
D	BVMW-I	MT20	4.0	6.0	2.00	2.50
D	TP+p	MT20	3.0	4.0	25.75	0.25
E	BMV1+p	MT20	3.0	4.0		

NOTES- (1)
1) Lateral braces to be a minimum of 2X4 SPF #2.

DIMENSIONS, SUPPORTS AND LOADINGS SPECIFIED BY FABRICATOR TO BE VERIFIED BY BUILDING DESIGNER

BEARINGS

JT	FACTORED GROSS REACTION VERT	HORZ	MAXIMUM FACTORED GROSS REACTION DOWN	HORZ	UPLIFT	INPUT BRG IN-SX	REQRD BRG IN-SX
F	200	0	200	0	0	MECHANICAL	
E	322	0	322	0	0	5-8	1-8

A SUITABLE HANGER/MECHANICAL CONNECTION IS REQUIRED AT JOINT F. MINIMUM BEARING LENGTH AT JOINT F = 1-12.

UNFACTORED REACTIONS

JT	1ST LCASE COMBINED	MAX./MIN. COMPONENT REACTIONS SNOW	LIVE	PERM.LIVE	WIND	DEAD	SOIL
F	142	90 / 0	0 / 0	0 / 0	0 / 0	52 / 0	0 / 0
E	227	157 / 0	0 / 0	0 / 0	0 / 0	69 / 0	0 / 0

BEARING MATERIAL TO BE SPF NO.2 OR BETTER AT JOINT(S) E

BRACING
TOP CHORD TO BE SHEATHED OR MAX. PURLIN SPACING = 10.00 FT.
MAX. UNBRACED BOTTOM CHORD LENGTH = 10.00 FT OR RIGID CEILING DIRECTLY APPLIED.

ALL PITCH BREAKS AND PERIMETER CORNER JOINTS MUST BE LATERALLY RESTRAINED.

LOADING
TOTAL LOAD CASES: (5)

CHORDS

MEMB. FR-TO	MAX. FACTORED FORCE (LBS)	FACTORED VERT. LOAD (PLF) FROM	TO	LC1 CSI	MAX (LC)	MAX. UNBRAC LENGTH
A- B	0 / 27	-84.9	-84.9	0.14	(5)	10.00
B- C	0 / 0	-84.9	-84.9	0.22	(1)	10.00
F- D	-200 / 0	0.0	0.0	0.03	(1)	7.81
D- C	-164 / 0	0.0	0.0	0.03	(1)	7.81
E- B	-287 / 0	0.0	0.0	0.03	(1)	7.81
E- D	0 / 0	-18.5	-18.5	0.08	(4)	10.00

WEBS

MEMB. FR-TO	MAX. FACTORED FORCE (LBS)	MAX CSI (LC)
B- D	0 / 0	0.00 (1)

CANTILEVER ANALYSIS HAS BEEN CONSIDERED IN THIS DESIGN

DESIGN CRITERIA

SPECIFIED LOADS:

TOP CH.	LL	=	23.3	PSF
	DL	=	6.0	PSF
BOT CH.	LL	=	0.0	PSF
	DL	=	7.4	PSF
TOTAL LOAD		=	36.7	PSF

SPACING = 24.0 IN. C/C

THIS TRUSS IS DESIGNED FOR RESIDENTIAL OR SMALL BUILDING REQUIREMENTS OF PART 9, NBCC 2015

THIS DESIGN COMPLIES WITH:
- PART 9 OF BCBC 2018 , NBC-2019AE
- PART 9 OF OBC 2012 (2019 AMENDMENT)
- CSA 086-14
- TPIC 2014

(55 % OF 27.2 P.S.F. G.S.L. PLUS 8.4 P.S.F. RAIN LOAD) EQUALS 23.3 P.S.F. SPECIFIED ROOF LIVE LOAD

ALLOWABLE DEFL.(LL)= L/360 (0.19")
CALCULATED VERT. DEFL.(LL) = L/ 999 (0.00")
ALLOWABLE DEFL.(TL)= L/360 (0.19")
CALCULATED VERT. DEFL.(TL) = L/ 999 (0.01")

CSI: TC=0.22/1.00 (B-C:1) , BC=0.08/1.00 (D-E:4) , WB=0.00/1.00 (B-D:1) , SSI=0.11/1.00 (B-C:1)

DOL LUMBER=1.00 NAIL=1.00 LS BEND=1.10 COMP=1.10 SHEAR=1.10 TENS= 1.10

COMPANION LIVE LOAD FACTOR = 1.00

TRUSS PLATE MANUFACTURER IS NOT RESPONSIBLE FOR QUALITY CONTROL IN THE TRUSS MANUFACTURING PLANT .

NAIL VALUES

PLATE	GRIP(DRY) (PSI) MAX	MIN	SHEAR (PLI) MAX	MIN	SECTION (PLI) MAX	MIN
MT20	650	371	1747	788	1987	1873

PLATE PLACEMENT TOL. = 0.250 inches

PLATE ROTATION TOL. = 5.0 Deg.

JSI GRIP= 0.17 (B) (INPUT = 0.90)
JSI METAL= 0.05 (C) (INPUT = 0.95)

LICENSED PROFESSIONAL ENGINEER
02-28-24
H. J. G. ALVES
100009024
PROVINCE OF ONTARIO

Structural component only
DWG# T-2406470

JOB NAME	TRUSS NAME	QUANTITY	PLY	JOB DESC.	DRWG NO.
425914	T81	2	1	ROYAL PINE HOMES TRUSS DESC.	

Tamarack Roof Truss, Burlington

Version 8.630 S Aug 30 2023 MiTek Industries, Inc. Wed Feb 28 16:19:36 2024 Page 1
ID:sd0FDfbi38oVqvTaiRkhtSzPAoD-_XSZkirT3DsunmxVjiYg1ut83kfnDIj9_I_MJezgZoL

Scale = 1:25.0

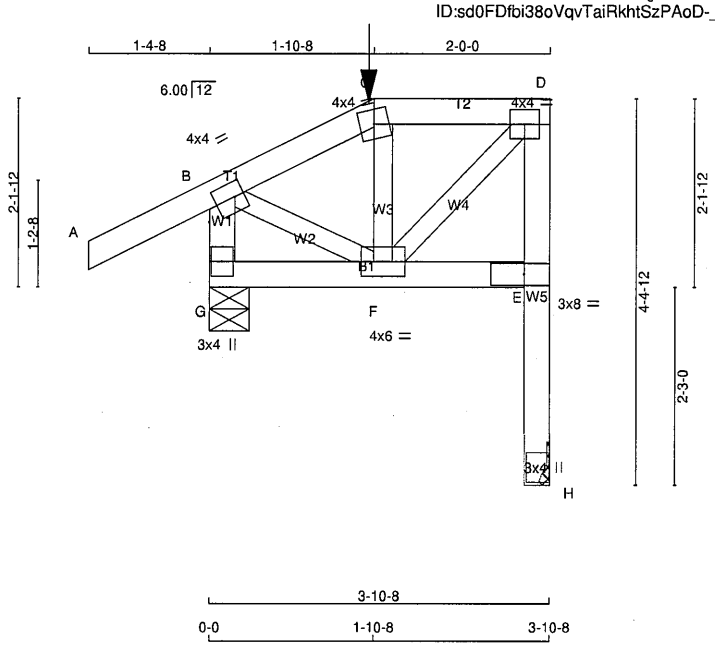

TOTAL WEIGHT = 2 X 21 = 41 lb

LUMBER
N. L. G. A. RULES

CHORDS	SIZE		LUMBER	DESCR.
A - C	2x4	DRY	No.2	SPF
C - D	2x4	DRY	No.2	SPF
H - D	2x4	DRY	No.2	SPF
G - B	2x4	DRY	No.2	SPF
G - E	2x4	DRY	No.2	SPF
ALL WEBS EXCEPT	2x3	DRY	No.2	SPF

DRY: SEASONED LUMBER.

PLATES (table is in inches)

JT	TYPE	PLATES	W	LEN	Y	X
B	TMVW-t	MT20	4.0	4.0	2.00	1.25
B	TP+p	MT20	3.0	4.0	3.50	3.50
C	TTW-m	MT20	4.0	4.0		
D	TMVW-t	MT20	4.0	4.0		
E	BVM-l	MT20	3.0	8.0	1.50	4.50
F	BMWWW-t	MT20	4.0	6.0		
G	BMV1+p	MT20	3.0	4.0		

NOTES- (1)
1) Lateral braces to be a minimum of 2X4 SPF #2.

Structural component only
DWG# T-2406471

DIMENSIONS, SUPPORTS AND LOADINGS SPECIFIED BY FABRICATOR TO BE VERIFIED BY BUILDING DESIGNER

BEARINGS

JT	FACTORED GROSS REACTION VERT	HORZ	MAXIMUM FACTORED GROSS REACTION DOWN	HORZ	UPLIFT	INPUT BRG IN-SX	REQRD BRG IN-SX
H	192	0	192	0	0	MECHANICAL	
G	360	0	360	0	0	5-8	1-8

A SUITABLE HANGER/MECHANICAL CONNECTION IS REQUIRED AT JOINT H. MINIMUM BEARING LENGTH AT JOINT H = 1-12.

UNFACTORED REACTIONS

JT	1ST LCASE COMBINED	MAX./MIN. COMPONENT REACTIONS SNOW	LIVE	PERM.LIVE	WIND	DEAD	SOIL
H	136	86 / -12	0 / 0	0 / 0	0 / 0	51 / 0	0 / 0
G	253	178 / 0	0 / 0	0 / 0	0 / 0	74 / 0	0 / 0

BEARING MATERIAL TO BE SPF NO.2 OR BETTER AT JOINT(S) G

BRACING
TOP CHORD TO BE SHEATHED OR MAX. PURLIN SPACING = 6.25 FT.
MAX. UNBRACED BOTTOM CHORD LENGTH = 10.00 FT OR RIGID CEILING DIRECTLY APPLIED.

ALL PITCH BREAKS AND PERIMETER CORNER JOINTS MUST BE LATERALLY RESTRAINED.

LOADING
TOTAL LOAD CASES: (5)

CHORDS

MEMB. FR-TO	MAX. FACTORED FORCE (LBS)	FACTORED VERT. LOAD LC1 (PLF) FROM	TO	MAX CSI (LC)	MAX. UNBRAC LENGTH
A- B	0 / 27	-84.9	-84.9	0.16 (5)	10.00
B- C	-132 / 0	-84.9	-84.9	0.15 (5)	6.25
C- D	-93 / 0	-84.9	-84.9	0.06 (1)	6.25
H- E	-192 / 0	0.0	0.0	0.03 (1)	7.81
E- D	-175 / 0	0.0	0.0	0.02 (1)	7.81
G- B	-343 / 0	0.0	0.0	0.04 (1)	7.81
G- F	0 / 0	-18.5	-18.5	0.02 (4)	10.00
F- E	0 / 0	-18.5	-18.5	0.02 (4)	10.00

WEBS

MEMB. FR-TO	MAX. FACTORED FORCE (LBS)	MAX CSI (LC)
F- C	-97 / 24	0.02 (1)
F- D	0 / 130	0.03 (1)
B- F	0 / 108	0.03 (1)

SPECIFIED CONCENTRATED LOADS (LBS)

JT	LOC.	LC1	MAX-	MAX+	FACE	DIR.	TYPE	HEEL	CONN.
C	1-10-8	-4	-4	---	FRONT	VERT	DEAD	---	C1
C	1-10-8	-16	-16	---	FRONT	VERT	SNOW	---	C1

CONNECTION REQUIREMENTS

1) **C1:** A SUITABLE HANGER/MECHANICAL CONNECTION IS REQUIRED.

CANTILEVER ANALYSIS HAS BEEN CONSIDERED IN THIS DESIGN

[M]

DESIGN CRITERIA

*** SPECIAL LOADS ANALYSIS ***
GEOMETRY AND/OR BASIC LOADS CHANGED BY USER.
LOADS WERE DERIVED FROM USER INPUT
NO FURTHER MODIFICATIONS WERE MADE

SPECIFIED LOADS:

TOP CH.	LL	=	23.3	PSF
	DL	=	6.0	PSF
BOT CH.	LL	=	0.0	PSF
	DL	=	7.4	PSF
TOTAL LOAD		=	36.7	PSF

SPACING = 24.0 IN. C/C

LOADING IN FLAT SECTION BASED ON A SLOPE OF 6.00/12

*** NON STANDARD GIRDER ***
ADDT'L USER-DEFINED LOADS APPLIED TO ALL LOAD CASES.

THIS TRUSS IS DESIGNED FOR RESIDENTIAL OR SMALL BUILDING REQUIREMENTS OF PART 9, NBCC 2015

THIS DESIGN COMPLIES WITH:
- PART 9 OF BCBC 2018 , NBC-2019AE
- PART 9 OF OBC 2012 (2019 AMENDMENT)
- CSA 086-14
- TPIC 2014

DESIGN ASSUMPTIONS
-OVERHANG NOT TO BE ALTERED OR CUT OFF.

(55 % OF 27.2 P.S.F. G.S.L. PLUS 8.4 P.S.F. RAIN LOAD) EQUALS 23.3 P.S.F. SPECIFIED ROOF LIVE LOAD

ALLOWABLE DEFL.(LL)= L/360 (0.19")
CALCULATED VERT. DEFL.(LL) = L/ 999 (0.00")
ALLOWABLE DEFL.(TL)= L/360 (0.19")
CALCULATED VERT. DEFL.(TL) = L/ 999 (0.00")

CSI: TC=0.16/1.00 (A-B:5) , BC=0.02/1.00 (F-G:4) , WB=0.03/1.00 (D-F:1) , SSI=0.11/1.00 (A-B:5)

DOL LUMBER=1.00 NAIL=1.00 LS BEND=1.00 COMP=1.00 SHEAR=1.00 TENS= 1.00

COMPANION LIVE LOAD FACTOR = 1.00

TRUSS PLATE MANUFACTURER IS NOT RESPONSIBLE FOR QUALITY CONTROL IN THE TRUSS MANUFACTURING PLANT .

NAIL VALUES

PLATE	GRIP(DRY) (PSI) MAX	MIN	SHEAR (PLI) MAX	MIN	SECTION (PLI) MAX	MIN
MT20	650	371	1747	788	1987	1873

PLATE PLACEMENT TOL. = 0.250 inches

PLATE ROTATION TOL. = 5.0 Deg.

CONTINUED ON PAGE 2

JOB NAME	TRUSS NAME	QUANTITY	PLY	JOB DESC. ROYAL PINE HOMES	DRWG NO.
425914	T81	2	1	TRUSS DESC.	

JSI GRIP= 0.20 (B) (INPUT = 0.90)
JSI METAL= 0.08 (B) (INPUT = 0.95)

LICENSED PROFESSIONAL ENGINEER
02-28-24
H. J. G. ALVES
100009024
PROVINCE OF ONTARIO

Structural component only
DWG# T-2406471

JOB NAME	TRUSS NAME	QUANTITY	PLY	JOB DESC.	DRWG NO.
425914	T82	1	1	ROYAL PINE HOMES TRUSS DESC.	

Tamarack Roof Truss, Burlington

Version 8.630 S Aug 30 2023 MiTek Industries, Inc. Wed Feb 28 16:19:38 2024 Page 1
ID:sd0FDfbi38oVqvTaiRkhtSzPAoD-wwZK9Otkaq6c135uq6a87JyRXYG9h7sSR3TTOWzgZoJ

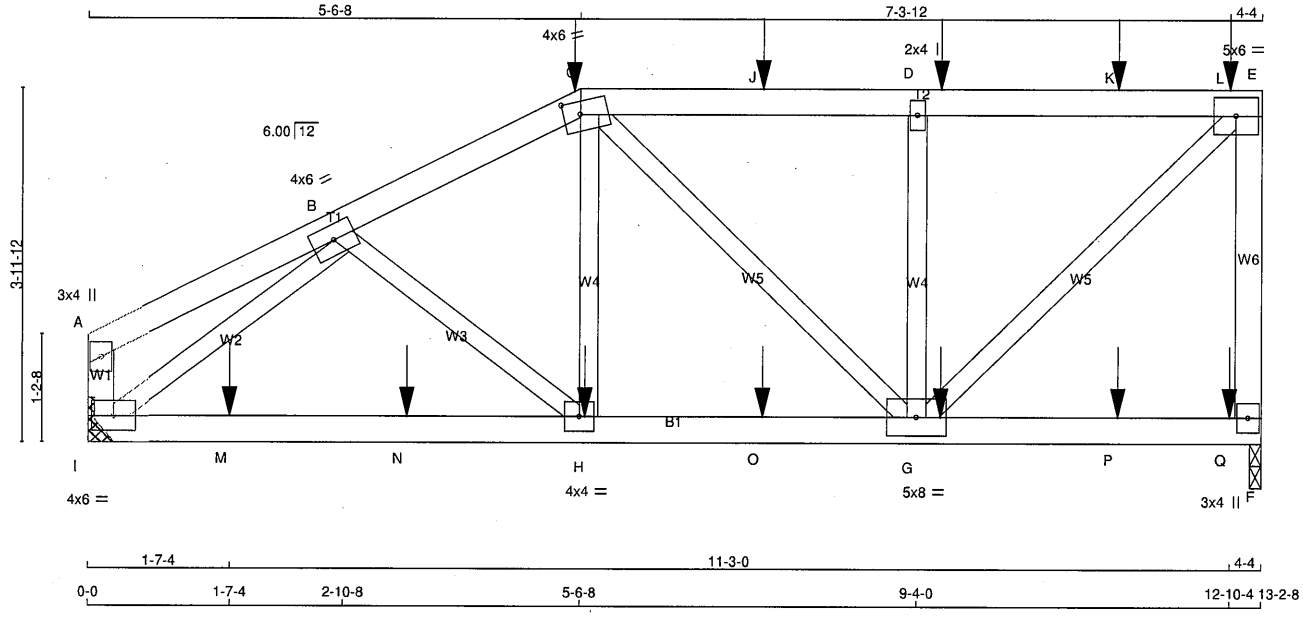

TOTAL WEIGHT = 55 lb

LUMBER
N. L. G. A. RULES

CHORDS	SIZE		LUMBER	DESCR.
A - C	2x4	DRY	No.2	SPF
C - E	2x4	DRY	No.2	SPF
F - E	2x4	DRY	No.2	SPF
I - A	2x4	DRY	No.2	SPF
I - F	2x4	DRY	No.2	SPF
ALL WEBS EXCEPT	2x3	DRY	No.2	SPF

DRY: SEASONED LUMBER.

PLATES (table is in inches)

JT	TYPE	PLATES	W	LEN	Y	X
A	TMV+p	MT20	3.0	4.0		
B	TMWW-t	MT20	4.0	6.0		
C	TTWW-m	MT20	4.0	6.0	1.75	2.25
D	TMW+w	MT20	2.0	4.0		
E	TMVW-t	MT20	5.0	6.0		
F	BMV1+p	MT20	3.0	4.0		
G	BMWWW-t	MT20	5.0	8.0		
H	BMWW-t	MT20	4.0	4.0		
I	BMVW1-t	MT20	4.0	6.0		

NOTES- (1)
1) Lateral braces to be a minimum of 2X4 SPF #2.

DIMENSIONS, SUPPORTS AND LOADINGS SPECIFIED BY FABRICATOR TO BE VERIFIED BY BUILDING DESIGNER

BEARINGS

JT	FACTORED GROSS REACTION VERT	HORZ	MAXIMUM FACTORED GROSS REACTION DOWN	HORZ	UPLIFT	INPUT BRG IN-SX	REQRD BRG IN-SX
F	1353	0	1353	0	0	1-8	1-8
I	1149	0	1149	0	0	MECHANICAL	

A SUITABLE HANGER/MECHANICAL CONNECTION IS REQUIRED AT JOINT I. MINIMUM BEARING LENGTH AT JOINT I = 1-8.

UNFACTORED REACTIONS

JT	1ST LCASE COMBINED	MAX./MIN. COMPONENT REACTIONS SNOW	LIVE	PERM.LIVE	WIND	DEAD	SOIL
F	960	615 / 0	0 / 0	0 / 0	0 / 0	345 / 0	0 / 0
I	816	518 / 0	0 / 0	0 / 0	0 / 0	298 / 0	0 / 0

BEARING MATERIAL TO BE SPF NO.2 OR BETTER AT JOINT(S) F

BRACING
TOP CHORD TO BE SHEATHED OR MAX. PURLIN SPACING = 5.32 FT.
MAX. UNBRACED BOTTOM CHORD LENGTH = 10.00 FT OR RIGID CEILING DIRECTLY APPLIED.

ALL PITCH BREAKS AND PERIMETER CORNER JOINTS MUST BE LATERALLY RESTRAINED.

LOADING
TOTAL LOAD CASES: (4)

CHORDS

MEMB. FR-TO	MAX. FACTORED FORCE (LBS)	FACTORED VERT. LOAD (PLF) FROM	TO	LC1 MAX CSI (LC)	MAX. UNBRAC LENGTH
A- B	0 / 9	-84.9	-84.9	0.09 (1)	10.00
B- C	-1438 / 0	-84.9	-84.9	0.11 (1)	5.32
C- J	-1043 / 0	-84.9	-84.9	0.35 (1)	5.63
J- D	-1043 / 0	-84.9	-84.9	0.35 (1)	5.63
D- K	-1043 / 0	-84.9	-84.9	0.35 (1)	5.63
K- L	-1043 / 0	-84.9	-84.9	0.35 (1)	5.63
L- E	-1043 / 0	-84.9	-84.9	0.35 (1)	5.63
F- E	-1278 / 0	0.0	0.0	0.33 (1)	7.10
I- A	-99 / 0	0.0	0.0	0.01 (1)	7.81
I- M	0 / 1194	-18.5	-18.5	0.34 (1)	10.00
M- N	0 / 1194	-18.5	-18.5	0.34 (1)	10.00
N- H	0 / 1194	-18.5	-18.5	0.34 (1)	10.00
H- O	0 / 1280	-18.5	-18.5	0.33 (1)	10.00
O- G	0 / 1280	-18.5	-18.5	0.33 (1)	10.00
G- P	0 / 0	-18.5	-18.5	0.14 (4)	10.00
P- Q	0 / 0	-18.5	-18.5	0.14 (4)	10.00
Q- F	0 / 0	-18.5	-18.5	0.14 (4)	10.00

WEBS

MEMB. FR-TO	MAX. FACTORED FORCE (LBS)	MAX CSI (LC)
H- C	0 / 153	0.06 (4)
G- E	0 / 1440	0.36 (1)
C- G	-330 / 0	0.15 (1)
G- D	-649 / 0	0.17 (1)
B- H	0 / 106	0.03 (4)
I- B	-1547 / 0	0.38 (1)

SPECIFIED CONCENTRATED LOADS (LBS)

JT	LOC.	LC1	MAX-	MAX+	FACE	DIR.	TYPE	HEEL	CONN.
C	5-6-8	-57	-57	---	FRONT	VERT	DEAD	---	C1
C	5-6-8	-76	-76	---	BACK	VERT	TOTAL	---	C1
C	5-6-8	-222	-222	---	FRONT	VERT	SNOW	---	C1
D	9-7-4	-70	-70	---	BACK	VERT	TOTAL	---	C1
G	9-7-4	-21	-21	---	BACK	VERT	TOTAL	---	C1
H	5-7-4	-21	-21	---	BACK	VERT	TOTAL	---	C1
J	7-7-4	-70	-70	---	BACK	VERT	TOTAL	---	C1
K	11-7-4	-70	-70	---	BACK	VERT	TOTAL	---	C1
L	12-10-4	-89	-89	---	BACK	VERT	TOTAL	---	C1
M	1-7-4	-21	-21	---	BACK	VERT	TOTAL	---	C1
N	3-7-4	-21	-21	---	BACK	VERT	TOTAL	---	C1
O	7-7-4	-21	-21	---	BACK	VERT	TOTAL	---	C1
P	11-7-4	-21	-21	---	BACK	VERT	TOTAL	---	C1
Q	12-10-4	-26	-26	---	BACK	VERT	TOTAL	---	C1

DESIGN CRITERIA

*** SPECIAL LOADS ANALYSIS ***
GEOMETRY AND/OR BASIC LOADS CHANGED BY USER.
LOADS WERE DERIVED FROM USER INPUT
NO FURTHER MODIFICATIONS WERE MADE

SPECIFIED LOADS:

TOP CH.	LL	=	23.3	PSF
	DL	=	6.0	PSF
BOT CH.	LL	=	0.0	PSF
	DL	=	7.4	PSF
TOTAL LOAD		=	36.7	PSF

SPACING = 24.0 IN. C/C

LOADING IN FLAT SECTION BASED ON A SLOPE OF 6.00/12

*** NON STANDARD GIRDER ***
ADDT'L USER-DEFINED LOADS APPLIED TO ALL LOAD CASES.

THIS TRUSS IS DESIGNED FOR RESIDENTIAL OR SMALL BUILDING REQUIREMENTS OF PART 9, NBCC 2015

THIS DESIGN COMPLIES WITH:
- PART 9 OF BCBC 2018 , NBC-2019AE
- PART 9 OF OBC 2012 (2019 AMENDMENT)
- CSA 086-14
- TPIC 2014

(55 % OF 27.2 P.S.F. G.S.L. PLUS 8.4 P.S.F. RAIN LOAD) EQUALS 23.3 P.S.F. SPECIFIED ROOF LIVE LOAD

ALLOWABLE DEFL.(LL)= L/360 (0.44")
CALCULATED VERT. DEFL.(LL) = L/ 999 (0.03")
ALLOWABLE DEFL.(TL)= L/360 (0.44")
CALCULATED VERT. DEFL.(TL) = L/ 999 (0.08")

CSI: TC=0.35/1.00 (D-E:1) , BC=0.34/1.00 (H-I:1) , WB=0.38/1.00 (B-I:1) , SSI=0.25/1.00 (D-E:1)

DOL LUMBER=1.00 NAIL=1.00 LS BEND=1.00 COMP=1.00 SHEAR=1.00 TENS= 1.00

COMPANION LIVE LOAD FACTOR = 1.00

AUTOSOLVE RIGHT HEEL ONLY

TRUSS PLATE MANUFACTURER IS NOT RESPONSIBLE FOR QUALITY CONTROL IN THE TRUSS MANUFACTURING PLANT .

NAIL VALUES

PLATE	GRIP(DRY) (PSI) MAX	MIN	SHEAR (PLI) MAX	MIN	SECTION (PLI) MAX	MIN
MT20	650	371	1747	788	1987	1873

PLATE PLACEMENT TOL. = 0.250 inches

PLATE ROTATION TOL. = 5.0 Deg.

JSI GRIP= 0.78 (I) (INPUT = 0.90)
JSI METAL= 0.35 (B) (INPUT = 0.95)

CONTINUED ON PAGE 2

LICENSED PROFESSIONAL ENGINEER
02-28-24
H. J. G. ALVES
100009024
PROVINCE OF ONTARIO

Structural component only
DWG# T-2406472

CONNECTION REQUIREMENTS

1) **C1:** A SUITABLE HANGER/MECHANICAL CONNECTION IS REQUIRED.

LICENSED PROFESSIONAL ENGINEER
02-28-24
H. J. G. ALVES
100009024
PROVINCE OF ONTARIO

Structural component only
DWG# T-2406472

JOB NAME	TRUSS NAME	QUANTITY	PLY	JOB DESC.	DRWG NO.
425914	T83	1	1	ROYAL PINE HOMES TRUSS DESC.	

Tamarack Roof Truss, Burlington

Version 8.630 S Aug 30 2023 MiTek Industries, Inc. Wed Feb 28 16:19:39 2024 Page 1
ID:sd0FDfbi38oVqvTaiRkhtSzPAoD-O67iMkuML8ESeDg4Oq5NfWVclxc3QbFbgjC0wzzgZol

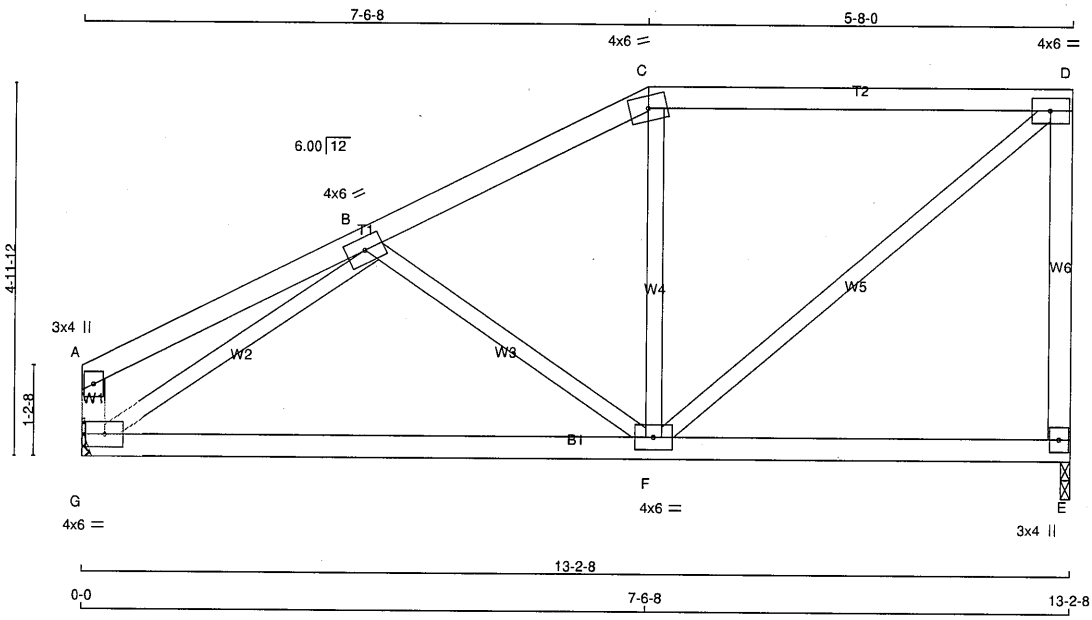

TOTAL WEIGHT = 53 lb

LUMBER
N. L. G. A. RULES

CHORDS	SIZE		LUMBER	DESCR.
A - C	2x4	DRY	No.2	SPF
C - D	2x4	DRY	No.2	SPF
E - D	2x4	DRY	No.2	SPF
G - A	2x4	DRY	No.2	SPF
G - E	2x4	DRY	No.2	SPF
ALL WEBS EXCEPT	2x3	DRY	No.2	SPF

DRY: SEASONED LUMBER.

PLATES (table is in inches)

JT	TYPE	PLATES	W	LEN	Y	X
A	TMV+p	MT20	3.0	4.0		
B	TMWW-t	MT20	4.0	6.0		
C	TTW-m	MT20	4.0	6.0		
D	TMVW-t	MT20	4.0	6.0		
E	BMV1+p	MT20	3.0	4.0		
F	BMWWW-t	MT20	4.0	6.0		
G	BMVW1-t	MT20	4.0	6.0		

NOTES- (1)
1) Lateral braces to be a minimum of 2X4 SPF #2.

DIMENSIONS, SUPPORTS AND LOADINGS SPECIFIED BY FABRICATOR TO BE VERIFIED BY BUILDING DESIGNER

BEARINGS

JT	FACTORED GROSS REACTION VERT	HORZ	MAXIMUM FACTORED GROSS REACTION DOWN	HORZ	UPLIFT	INPUT BRG IN-SX	REQRD BRG IN-SX
E	683	0	683	0	0	1-8	1-8
G	683	0	683	0	0	MECHANICAL	

A SUITABLE HANGER/MECHANICAL CONNECTION IS REQUIRED AT JOINT G. MINIMUM BEARING LENGTH AT JOINT G = 1-8.

UNFACTORED REACTIONS

JT	1ST LCASE COMBINED	MAX./MIN. COMPONENT REACTIONS SNOW	LIVE	PERM.LIVE	WIND	DEAD	SOIL
E	485	308 / 0	0 / 0	0 / 0	0 / 0	177 / 0	0 / 0
G	485	308 / 0	0 / 0	0 / 0	0 / 0	177 / 0	0 / 0

BEARING MATERIAL TO BE SPF NO.2 OR BETTER AT JOINT(S) E

BRACING
TOP CHORD TO BE SHEATHED OR MAX. PURLIN SPACING = 6.25 FT.
MAX. UNBRACED BOTTOM CHORD LENGTH = 10.00 FT OR RIGID CEILING DIRECTLY APPLIED.

ALL PITCH BREAKS AND PERIMETER CORNER JOINTS MUST BE LATERALLY RESTRAINED.

LOADING
TOTAL LOAD CASES: (4)

CHORDS

MEMB. FR-TO	MAX. FACTORED FORCE (LBS)	FACTORED VERT. LOAD (PLF) FROM	TO	LC1	MAX CSI (LC)	MAX. UNBRAC LENGTH
A- B	0 / 16	-84.9	-84.9	0.19 (1)	10.00	
B- C	-563 / 0	-84.9	-84.9	0.15 (1)	6.25	
C- D	-486 / 0	-84.9	-84.9	0.35 (1)	6.25	
E- D	-649 / 0	0.0	0.0	0.27 (1)	7.81	
G- A	-124 / 0	0.0	0.0	0.01 (1)	7.81	
G- F	0 / 679	-18.5	-18.5	0.30 (4)	10.00	
F- E	0 / 0	-18.5	-18.5	0.25 (4)	10.00	

WEBS

MEMB. FR-TO	MAX. FACTORED FORCE (LBS)	MAX CSI (LC)
B- F	-235 / 0	0.09 (1)
F- C	-119 / 25	0.04 (1)
F- D	0 / 635	0.14 (1)
G- B	-844 / 0	0.30 (1)

DESIGN CRITERIA [M][F]

SPECIFIED LOADS:

TOP CH.	LL	=	23.3	PSF
	DL	=	6.0	PSF
BOT CH.	LL	=	0.0	PSF
	DL	=	7.4	PSF
TOTAL LOAD		=	36.7	PSF

SPACING = 24.0 IN. C/C

LOADING IN FLAT SECTION BASED ON A SLOPE OF 6.00/12

THIS TRUSS IS DESIGNED FOR RESIDENTIAL OR SMALL BUILDING REQUIREMENTS OF PART 9, NBCC 2015

THIS DESIGN COMPLIES WITH:
- PART 9 OF BCBC 2018 , NBC-2019AE
- PART 9 OF OBC 2012 (2019 AMENDMENT)
- CSA 086-14
- TPIC 2014

(55 % OF 27.2 P.S.F. G.S.L. PLUS 8.4 P.S.F. RAIN LOAD) EQUALS 23.3 P.S.F. SPECIFIED ROOF LIVE LOAD

ALLOWABLE DEFL.(LL)= L/360 (0.44")
CALCULATED VERT. DEFL.(LL) = L/ 999 (0.01")
ALLOWABLE DEFL.(TL)= L/360 (0.44")
CALCULATED VERT. DEFL.(TL) = L/ 999 (0.10")

CSI: TC=0.35/1.00 (C-D:1) , BC=0.30/1.00 (F-G:4) , WB=0.30/1.00 (B-G:1) , SSI=0.19/1.00 (C-D:1)

DOL LUMBER=1.00 NAIL=1.00 LS BEND=1.10 COMP=1.10 SHEAR=1.10 TENS= 1.10

COMPANION LIVE LOAD FACTOR = 1.00

TRUSS PLATE MANUFACTURER IS NOT RESPONSIBLE FOR QUALITY CONTROL IN THE TRUSS MANUFACTURING PLANT .

NAIL VALUES

PLATE	GRIP(DRY) (PSI) MAX	MIN	SHEAR (PLI) MAX	MIN	SECTION (PLI) MAX	MIN
MT20	650	371	1747	788	1987	1873

PLATE PLACEMENT TOL. = 0.250 inches

PLATE ROTATION TOL. = 5.0 Deg.

JSI GRIP= 0.75 (F) (INPUT = 0.90)
JSI METAL= 0.19 (F) (INPUT = 0.95)

LICENSED PROFESSIONAL ENGINEER
02-28-24
H. J. G. ALVES
100009024
PROVINCE OF ONTARIO

Structural component only
DWG# T-2406473

JOB NAME	TRUSS NAME	QUANTITY	PLY	JOB DESC.	DRWG NO.
425914	T91C	1	1	ROYAL PINE HOMES TRUSS DESC.	

Tamarack Roof Truss, Burlington

Version 8.630 S Aug 30 2023 MiTek Industries, Inc. Wed Feb 28 16:19:40 2024 Page 1
ID:FKLRYfY9FU?Txu1_f4rwjlzgucQ-sJh4a4v_6RMJGNFGyXdcCk2kkLtV9z7lvNyaSPzgZoH

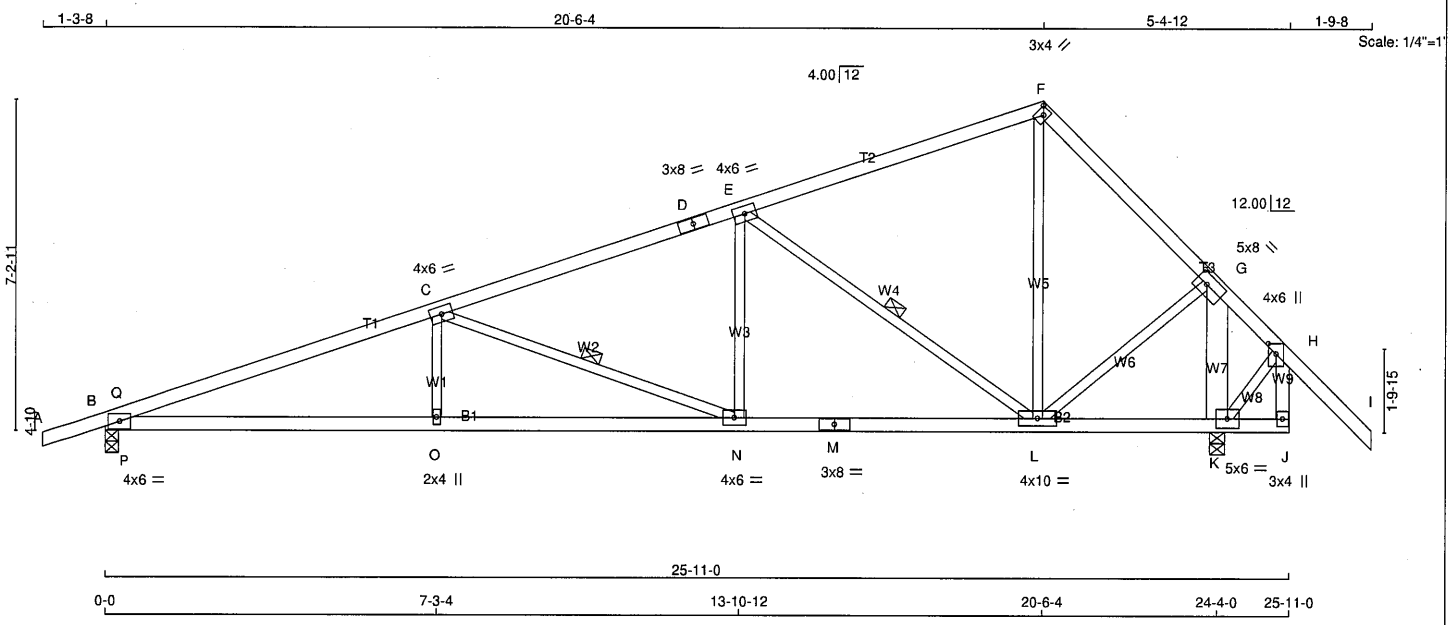

25-11-0

0-0 7-3-4 13-10-12 20-6-4 24-4-0 25-11-0

TOTAL WEIGHT = 103 lb

LUMBER
N. L. G. A. RULES

CHORDS	SIZE		LUMBER	DESCR.
A - D	2x4	DRY	No.2	SPF
D - F	2x4	DRY	No.2	SPF
F - I	2x4	DRY	No.2	SPF
J - H	2x4	DRY	No.2	SPF
B - M	2x4	DRY	No.2	SPF
M - J	2x4	DRY	No.2	SPF
ALL WEBS EXCEPT	2x3	DRY	No.2	SPF
K - G	2x6	DRY	No.2	SPF

DRY: SEASONED LUMBER.

PLATES (table is in inches)

JT	TYPE	PLATES	W	LEN	Y	X
B	TMB1-l	MT20	4.0	6.0		
C	TMWW-t	MT20	4.0	6.0		
D	TS-t	MT20	3.0	8.0		
E	TMWW-t	MT20	4.0	6.0		
F	TTW+h	MT20	3.0	4.0	Edge	1.75
G	TMWW-t	MT20	5.0	8.0	2.50	3.00
H	TMVW+p	MT20	4.0	6.0	2.75	2.00
J	BMV+p	MT20	3.0	4.0		
K	BMWW1-t	MT20	5.0	6.0		
L	BMWWW-t	MT20	4.0	10.0		
M	BS-t	MT20	3.0	8.0		
N	BMWW-t	MT20	4.0	6.0		
O	BMW+w	MT20	2.0	4.0		

Edge - INDICATES REFERENCE CORNER OF PLATE TOUCHES EDGE OF CHORD.

NOTES- (1)
1) Lateral braces to be a minimum of 2X4 SPF #2.

DIMENSIONS, SUPPORTS AND LOADINGS SPECIFIED BY FABRICATOR TO BE VERIFIED BY BUILDING DESIGNER

BEARINGS

JT	FACTORED GROSS REACTION VERT	HORZ	MAXIMUM FACTORED GROSS REACTION DOWN	HORZ	UPLIFT	INPUT BRG IN-SX	REQRD BRG IN-SX
B	1349	0	1349	0	0	3-8	1-8
K	1604	0	1604	0	0	3-15	1-12

UNFACTORED REACTIONS

JT	1ST LCASE COMBINED	MAX./MIN. COMPONENT REACTIONS SNOW	LIVE	PERM.LIVE	WIND	DEAD	SOIL
B	956	617 / 0	0 / 0	0 / 0	0 / 0	338 / 0	0 / 0
K	1135	740 / 0	0 / 0	0 / 0	0 / 0	395 / 0	0 / 0

BEARING MATERIAL TO BE SPF NO.2 OR BETTER AT JOINT(S) B, K

BRACING
TOP CHORD TO BE SHEATHED OR MAX. PURLIN SPACING = 3.70 FT.
MAX. UNBRACED BOTTOM CHORD LENGTH = 6.25 FT OR RIGID CEILING DIRECTLY APPLIED.

ALL PITCH BREAKS AND PERIMETER CORNER JOINTS MUST BE LATERALLY RESTRAINED.

1 LATERAL BRACE(S) AT 1/ 2 LENGTH OF C-N, E-L.

END VERTICAL(S) MUST BE SHEATHED OR HAVE BRACES AS INDICATED IN THE MAX. UNBRACED LENGTH COLUMN OF THE TABLE BELOW

LOADING
TOTAL LOAD CASES: (4)

CHORDS

MEMB. FR-TO	MAX. FACTORED FORCE (LBS)	FACTORED VERT. LOAD (PLF) FROM	TO	LC1 CSI (LC)	MAX UNBRAC LENGTH
A- B	0 / 15	-84.9	-84.9	0.11 (1)	10.00
B- Q	-2818 / 0	-84.9	-84.9	0.26 (1)	3.94
Q- C	-2783 / 0	-84.9	-84.9	0.56 (1)	3.70
C- D	-1701 / 0	-84.9	-84.9	0.47 (1)	4.60
D- E	-1701 / 0	-84.9	-84.9	0.47 (1)	4.60
E- F	-587 / 0	-84.9	-84.9	0.44 (1)	6.25
F- G	-778 / 0	-84.9	-84.9	0.16 (1)	6.25
G- H	0 / 166	-84.9	-84.9	0.23 (1)	10.00
H- I	0 / 57	-84.9	-84.9	0.22 (1)	10.00
J- H	-2 / 6	0.0	0.0	0.00 (4)	7.81
B- P	0 / 2647	-18.5	-18.5	0.56 (1)	10.00
P- O	0 / 2647	-18.5	-18.5	0.61 (1)	10.00
O- N	0 / 2647	-18.5	-18.5	0.53 (1)	10.00
N- M	0 / 1617	-18.5	-18.5	0.34 (1)	10.00
M- L	0 / 1617	-18.5	-18.5	0.34 (1)	10.00
L- K	-135 / 0	-18.5	-18.5	0.09 (4)	6.25
K- J	0 / 0	-18.5	-18.5	0.04 (1)	10.00

WEBS

MEMB. FR-TO	FORCE (LBS)	MAX CSI (LC)
O- C	0 / 153	0.05 (4)
C- N	-1101 / 0	0.38 (1)
N- E	0 / 509	0.11 (1)
E- L	-1328 / 0	0.58 (1)
L- F	0 / 357	0.08 (1)
K- G	-1416 / 0	0.13 (1)
L- G	0 / 851	0.19 (1)
K- H	-185 / 0	0.03 (1)
P- Q	-159 / 99	0.00 (1)

DESIGN CRITERIA

SPECIFIED LOADS:

TOP CH.	LL	=	23.3	PSF
	DL	=	6.0	PSF
BOT CH.	LL	=	0.0	PSF
	DL	=	7.4	PSF
TOTAL LOAD		=	36.7	PSF

SPACING = 24.0 IN. C/C

THIS TRUSS IS DESIGNED FOR RESIDENTIAL OR SMALL BUILDING REQUIREMENTS OF PART 9, NBCC 2015

THIS DESIGN COMPLIES WITH:
- PART 9 OF BCBC 2018 , NBC-2019AE
- PART 9 OF OBC 2012 (2019 AMENDMENT)
- CSA 086-14
- TPIC 2014

DESIGN ASSUMPTIONS
-OVERHANG NOT TO BE ALTERED OR CUT OFF.

(55 % OF 27.2 P.S.F. G.S.L. PLUS 8.4 P.S.F. RAIN LOAD) EQUALS 23.3 P.S.F. SPECIFIED ROOF LIVE LOAD

ALLOWABLE DEFL.(LL)= L/360 (0.81")
CALCULATED VERT. DEFL.(LL) = L/ 999 (0.12")
ALLOWABLE DEFL.(TL)= L/360 (0.81")
CALCULATED VERT. DEFL.(TL) = L/ 999 (0.26")

CANTILEVER DEFLECTION:
ALLOWABLE DEFL.(LL)= L/120 (0.19")
CALCULATED VERT. DEFL.(LL) = L/ 999 (0.01")
ALLOWABLE DEFL.(TL)= L/120 (0.19")
CALCULATED VERT. DEFL.(TL) = L/ 999 (0.02")

CSI: TC=0.56/1.00 (C-Q:1) , BC=0.61/1.00 (O-P:1) , WB=0.58/1.00 (E-L:1) , SSI=0.25/1.00 (E-F:1)

DOL LUMBER=1.00 NAIL=1.00 LS BEND=1.10 COMP=1.10 SHEAR=1.10 TENS= 1.10

COMPANION LIVE LOAD FACTOR = 1.00

TRUSS PLATE MANUFACTURER IS NOT RESPONSIBLE FOR QUALITY CONTROL IN THE TRUSS MANUFACTURING PLANT .

NAIL VALUES

PLATE	GRIP(DRY) (PSI) MAX	MIN	SHEAR (PLI) MAX	MIN	SECTION (PLI) MAX	MIN
MT20	650	371	1747	788	1987	1873

PLATE PLACEMENT TOL. = 0.250 inches

PLATE ROTATION TOL. = 5.0 Deg.

JSI GRIP= 0.71 (B) (INPUT = 0.90)
JSI METAL= 0.59 (B) (INPUT = 0.95)

LICENSED PROFESSIONAL ENGINEER
02-28-24
H. J. G. ALVES
100009024
PROVINCE OF ONTARIO

Structural component only
DWG# T-2406474

JOB NAME	TRUSS NAME	QUANTITY	PLY	JOB DESC.	DRWG NO.
425914	T91G	1	1	ROYAL PINE HOMES TRUSS DESC.	

Tamarack Roof Truss, Burlington

Version 8.630 S Aug 30 2023 MiTek Industries, Inc. Wed Feb 28 16:19:41 2024 Page 1
ID:FKLRYfY9FU?Txu1_f4rwjlzgucQ-LVFSnQvctlUAuXqTWF8rkxa_ulLPtXlu80h7?rzgZoG

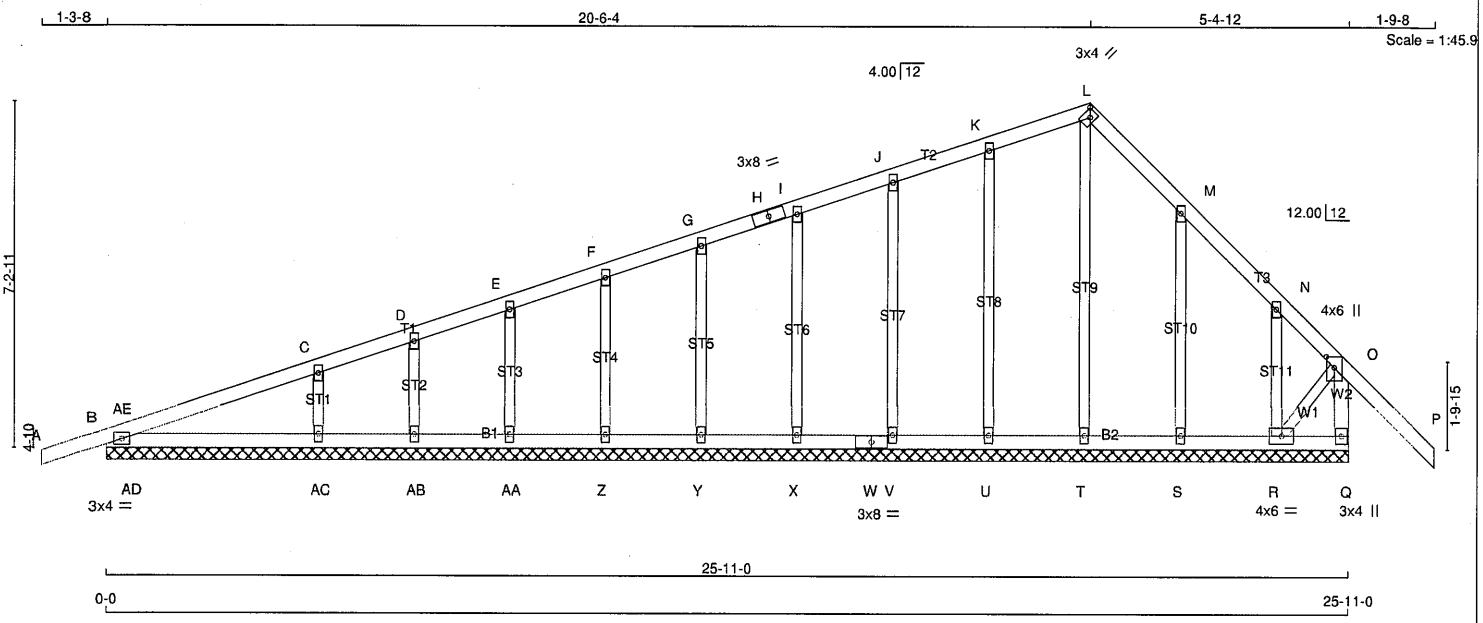

TOTAL WEIGHT = 106 lb [M]

LUMBER
N. L. G. A. RULES

CHORDS	SIZE		LUMBER	DESCR.
A - H	2x4	DRY	No.2	SPF
H - L	2x4	DRY	No.2	SPF
L - P	2x4	DRY	No.2	SPF
Q - O	2x4	DRY	No.2	SPF
B - W	2x4	DRY	No.2	SPF
W - Q	2x4	DRY	No.2	SPF
ALL WEBS	2x3	DRY	No.2	SPF
ALL GABLE WEBS	2x3	DRY	No.2	SPF

DRY: SEASONED LUMBER.

GABLE STUDS SPACED AT 2-0-0 OC.

PLATES (table is in inches)

JT	TYPE	PLATES	W	LEN	Y	X
B	TMB1-I	MT20	3.0	4.0		
C, D, E, F, G, I, J, K, M, N						
C	TMW+w	MT20	2.0	4.0		
H	TS-t	MT20	3.0	8.0		
L	TTW+h	MT20	3.0	4.0	Edge	1.75
O	TMVW+p	MT20	4.0	6.0	2.75	2.00
Q	BMV1+p	MT20	3.0	4.0		
R	BMWW1-t	MT20	4.0	6.0		
S, T, U, V, X, Y, Z, AA, AB, AC						
S	BMW1+w	MT20	2.0	4.0		
W	BS-t	MT20	3.0	8.0		

Edge - INDICATES REFERENCE CORNER OF PLATE TOUCHES EDGE OF CHORD.

NOTES- (1)
1) Lateral braces to be a minimum of 2X4 SPF #2.

LICENSED PROFESSIONAL ENGINEER
02-28-24
H. J. G. ALVES
100009024
PROVINCE OF ONTARIO

Structural component only
DWG# T-2406475

DIMENSIONS, SUPPORTS AND LOADINGS SPECIFIED BY FABRICATOR TO BE VERIFIED BY BUILDING DESIGNER

BEARINGS

THIS TRUSS DESIGNED FOR CONTINUOUS BEARINGS.

THIS TRUSS REQUIRES RIGID SHEATHING ON EXPOSED FACE.

BEARING MATERIAL TO BE SPF NO.2 OR BETTER AT JOINT(S)

BRACING
TOP CHORD TO BE SHEATHED OR MAX. PURLIN SPACING = 6.25 FT.
MAX. UNBRACED BOTTOM CHORD LENGTH = 10.00 FT OR RIGID CEILING DIRECTLY APPLIED.

ALL PITCH BREAKS AND PERIMETER CORNER JOINTS MUST BE LATERALLY RESTRAINED.

LOADING
TOTAL LOAD CASES: (4)

CHORDS

MEMB. FR-TO	MAX. FACTORED FORCE (LBS)	FACTORED VERT. LOAD LC1 (PLF) FROM	TO	MAX CSI (LC)	MAX. UNBRAC LENGTH
A- B	0 / 15	-84.9	-84.9	0.11 (1)	10.00
B-AE	-36 / 0	-84.9	-84.9	0.03 (4)	6.25
AE- C	-30 / 0	-84.9	-84.9	0.17 (1)	6.25
C- D	-48 / 0	-84.9	-84.9	0.17 (1)	6.25
D- E	-23 / 0	-84.9	-84.9	0.05 (1)	6.25
E- F	-25 / 0	-84.9	-84.9	0.05 (1)	6.25
F- G	-22 / 0	-84.9	-84.9	0.04 (1)	6.25
G- H	-20 / 0	-84.9	-84.9	0.04 (1)	6.25
H- I	-20 / 0	-84.9	-84.9	0.04 (1)	6.25
I- J	-18 / 0	-84.9	-84.9	0.04 (1)	6.25
J- K	-15 / 0	-84.9	-84.9	0.05 (1)	6.25
K- L	-20 / 0	-84.9	-84.9	0.05 (1)	6.25
L- M	-37 / 0	-84.9	-84.9	0.06 (1)	6.25
M- N	-13 / 0	-84.9	-84.9	0.06 (1)	6.25
N- O	-109 / 0	-84.9	-84.9	0.21 (1)	6.25
O- P	0 / 57	-84.9	-84.9	0.22 (1)	10.00
Q- O	-374 / 0	0.0	0.0	0.04 (1)	7.81
B-AD	0 / 38	-18.5	-18.5	0.12 (1)	10.00
AD-AC	0 / 38	-18.5	-18.5	0.12 (1)	10.00
AC-AB	0 / 28	-18.5	-18.5	0.09 (1)	10.00
AB-AA	0 / 26	-18.5	-18.5	0.02 (4)	10.00
AA- Z	0 / 23	-18.5	-18.5	0.02 (4)	10.00
Z- Y	0 / 21	-18.5	-18.5	0.02 (4)	10.00
Y- X	0 / 19	-18.5	-18.5	0.02 (4)	10.00
X- W	0 / 17	-18.5	-18.5	0.02 (4)	10.00
W- V	0 / 17	-18.5	-18.5	0.02 (4)	10.00
V- U	0 / 16	-18.5	-18.5	0.02 (4)	10.00
U- T	0 / 14	-18.5	-18.5	0.02 (4)	10.00
T- S	0 / 16	-18.5	-18.5	0.02 (4)	10.00
S- R	0 / 20	-18.5	-18.5	0.02 (4)	10.00
R- Q	0 / 0	-18.5	-18.5	0.01 (4)	10.00

WEBS

MEMB. FR-TO	MAX. FACTORED FORCE (LBS)	MAX CSI (LC)
T- L	-118 / 0	0.11 (1)
U- K	-198 / 0	0.14 (1)
V- J	-163 / 0	0.09 (1)
X- I	-170 / 0	0.07 (1)
Y- G	-170 / 0	0.05 (1)
Z- F	-165 / 0	0.04 (1)
AA- E	-185 / 0	0.03 (1)
AB- D	-97 / 0	0.02 (1)
AC- C	-335 / 0	0.05 (1)
S- M	-208 / 0	0.09 (1)
R- N	-9 / 0	0.00 (1)
R- O	0 / 29	0.01 (1)
AD-AE	-163 / 9	0.00 (1)

DESIGN CRITERIA

SPECIFIED LOADS:

TOP CH.	LL	=	23.3	PSF
	DL	=	6.0	PSF
BOT CH.	LL	=	0.0	PSF
	DL	=	7.4	PSF
TOTAL LOAD		=	36.7	PSF

SPACING = 24.0 IN. C/C

THIS TRUSS IS DESIGNED FOR RESIDENTIAL OR SMALL BUILDING REQUIREMENTS OF PART 9, NBCC 2015

THIS DESIGN COMPLIES WITH:
- PART 9 OF BCBC 2018 , NBC-2019AE
- PART 9 OF OBC 2012 (2019 AMENDMENT)
- CSA 086-14
- TPIC 2014

DESIGN ASSUMPTIONS
-OVERHANG NOT TO BE ALTERED OR CUT OFF.

(55 % OF 27.2 P.S.F. G.S.L. PLUS 8.4 P.S.F. RAIN LOAD) EQUALS 23.3 P.S.F. SPECIFIED ROOF LIVE LOAD

CSI: TC=0.22/1.00 (O-P:1) , BC=0.12/1.00 (B-AD:1) , WB=0.14/1.00 (K-U:1) , SSI=0.14/1.00 (C-AE:1)

DOL LUMBER=1.00 NAIL=1.00 LS BEND=1.10 COMP=1.10 SHEAR=1.10 TENS= 1.10

COMPANION LIVE LOAD FACTOR = 1.00

TRUSS PLATE MANUFACTURER IS NOT RESPONSIBLE FOR QUALITY CONTROL IN THE TRUSS MANUFACTURING PLANT .

NAIL VALUES

PLATE	GRIP(DRY) (PSI) MAX	MIN	SHEAR (PLI) MAX	MIN	SECTION (PLI) MAX	MIN
MT20	650	371	1747	788	1987	1873

PLATE PLACEMENT TOL. = 0.250 inches

PLATE ROTATION TOL. = 5.0 Deg.

JSI GRIP= 0.61 (L) (INPUT = 0.90)
JSI METAL= 0.11 (M) (INPUT = 0.95)

JOB NAME	TRUSS NAME	QUANTITY	PLY	JOB DESC.	DRWG NO.
425914	T92C	1	1	ROYAL PINE HOMES TRUSS DESC.	

Tamarack Roof Truss, Burlington

Version 8.630 S Aug 30 2023 MiTek Industries, Inc. Wed Feb 28 16:19:43 2024 Page 1
ID:FKLRYfY9FU?Txu1_f4rwjlzgucQ-HuNDC5xsPMku7rzrdgAJqMgGoZvZLJbBbKAE3kzgZoE

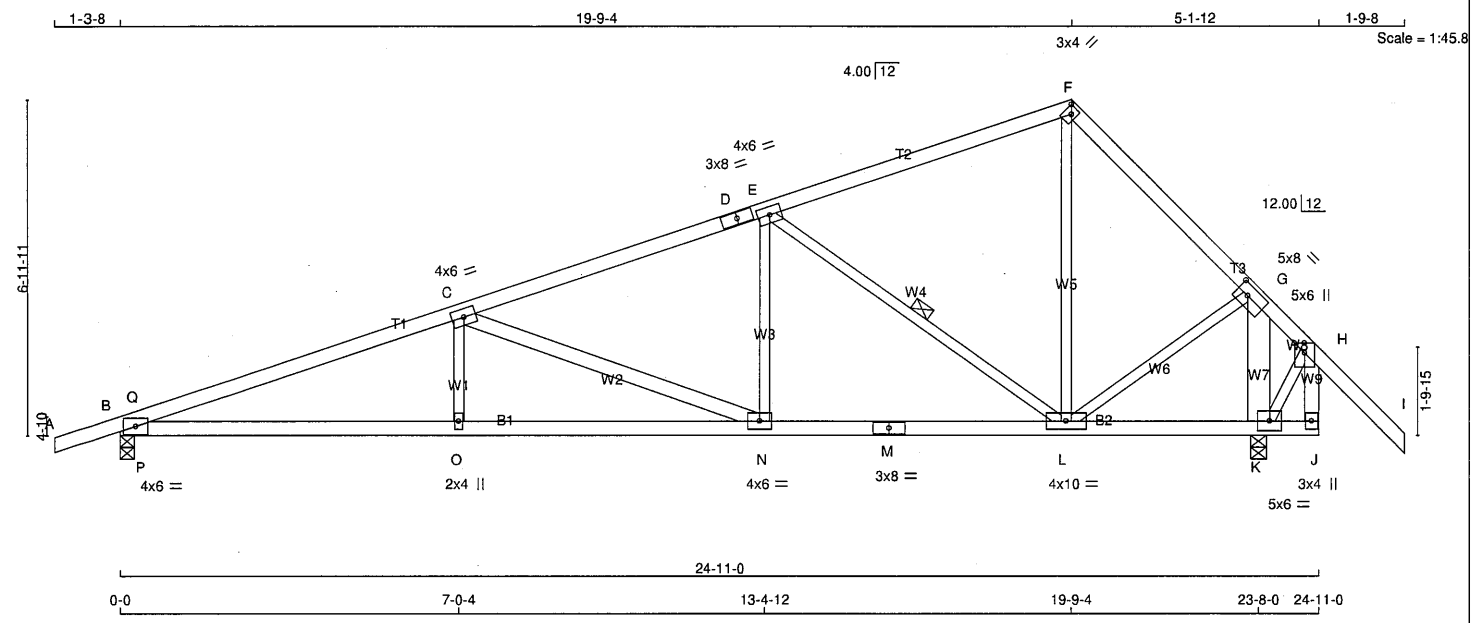

TOTAL WEIGHT = 101 lb

LUMBER
N. L. G. A. RULES

CHORDS	SIZE		LUMBER	DESCR.
A - D	2x4	DRY	No.2	SPF
D - F	2x4	DRY	No.2	SPF
F - I	2x4	DRY	No.2	SPF
J - H	2x4	DRY	No.2	SPF
B - M	2x4	DRY	No.2	SPF
M - J	2x4	DRY	No.2	SPF
ALL WEBS EXCEPT	2x3	DRY	No.2	SPF
C - N	2x4	DRY	No.2	SPF
K - G	2x6	DRY	No.2	SPF

DRY: SEASONED LUMBER.

PLATES (table is in inches)

JT	TYPE	PLATES	W	LEN	Y	X
B	TMB1-I	MT20	4.0	6.0		
C	TMWW-t	MT20	4.0	6.0		
D	TS-t	MT20	3.0	8.0		
E	TMWW-t	MT20	4.0	6.0		
F	TTW+h	MT20	3.0	4.0	Edge	1.75
G	TMWW-t	MT20	5.0	8.0	2.50	3.00
H	TMVW+p	MT20	5.0	6.0	Edge	
J	BMV+p	MT20	3.0	4.0		
K	BMWW1-t	MT20	5.0	6.0		
L	BMWWW-t	MT20	4.0	10.0		
M	BS-t	MT20	3.0	8.0		
N	BMWW-t	MT20	4.0	6.0		
O	BMW+w	MT20	2.0	4.0		

Edge - INDICATES REFERENCE CORNER OF PLATE TOUCHES EDGE OF CHORD.

NOTES- (1)
1) Lateral braces to be a minimum of 2X4 SPF #2.

LICENSED PROFESSIONAL ENGINEER
02-28-24
H. J. G. ALVES
100009024
PROVINCE OF ONTARIO

Structural component only
DWG# T-2406476

DIMENSIONS, SUPPORTS AND LOADINGS SPECIFIED BY FABRICATOR TO BE VERIFIED BY BUILDING DESIGNER

BEARINGS

JT	FACTORED GROSS REACTION VERT	HORZ	MAXIMUM FACTORED GROSS REACTION DOWN	HORZ	UPLIFT	INPUT BRG IN-SX	REQRD BRG IN-SX
B	1318	0	1318	0	0	3-8	1-8
K	1531	0	1531	0	0	3-15	1-11

UNFACTORED REACTIONS

JT	1ST LCASE COMBINED	SNOW	LIVE	PERM.LIVE	WIND	DEAD	SOIL
		MAX./MIN. COMPONENT REACTIONS					
B	934	604 / 0	0 / 0	0 / 0	0 / 0	330 / 0	0 / 0
K	1084	707 / 0	0 / 0	0 / 0	0 / 0	376 / 0	0 / 0

BEARING MATERIAL TO BE SPF NO.2 OR BETTER AT JOINT(S) B, K

BRACING
TOP CHORD TO BE SHEATHED OR MAX. PURLIN SPACING = 3.79 FT.
MAX. UNBRACED BOTTOM CHORD LENGTH = 6.25 FT OR RIGID CEILING DIRECTLY APPLIED.

ALL PITCH BREAKS AND PERIMETER CORNER JOINTS MUST BE LATERALLY RESTRAINED.

1 LATERAL BRACE(S) AT 1/ 2 LENGTH OF E-L.

END VERTICAL(S) MUST BE SHEATHED OR HAVE BRACES AS INDICATED IN THE MAX. UNBRACED LENGTH COLUMN OF THE TABLE BELOW

LOADING
TOTAL LOAD CASES: (4)

CHORDS

MEMB. FR-TO	MAX. FACTORED FORCE (LBS)	FACTORED VERT. LOAD LC1 (PLF) FROM	TO	MAX CSI (LC)	MAX. UNBRAC LENGTH
A- B	0 / 15	-84.9	-84.9	0.11 (1)	10.00
B- Q	-2757 / 0	-84.9	-84.9	0.24 (1)	3.99
Q- C	-2718 / 0	-84.9	-84.9	0.51 (1)	3.79
C- D	-1680 / 0	-84.9	-84.9	0.43 (1)	4.68
D- E	-1680 / 0	-84.9	-84.9	0.43 (1)	4.68
E- F	-611 / 0	-84.9	-84.9	0.40 (1)	6.25
F- G	-812 / 0	-84.9	-84.9	0.16 (1)	6.25
G- H	0 / 129	-84.9	-84.9	0.23 (1)	10.00
H- I	0 / 57	-84.9	-84.9	0.22 (1)	10.00
J- H	-12 / 0	0.0	0.0	0.00 (1)	7.81
B- P	0 / 2585	-18.5	-18.5	0.53 (1)	10.00
P- O	0 / 2585	-18.5	-18.5	0.58 (1)	10.00
O- N	0 / 2585	-18.5	-18.5	0.51 (1)	10.00
N- M	0 / 1597	-18.5	-18.5	0.33 (1)	10.00
M- L	0 / 1597	-18.5	-18.5	0.33 (1)	10.00
L- K	-109 / 0	-18.5	-18.5	0.09 (4)	6.25
K- J	0 / 0	-18.5	-18.5	0.04 (1)	10.00

WEBS

MEMB. FR-TO	MAX. FACTORED FORCE (LBS)	MAX CSI (LC)
O- C	0 / 147	0.05 (4)
C- N	-1057 / 0	0.66 (1)
N- E	0 / 490	0.11 (1)
E- L	-1276 / 0	0.52 (1)
L- F	0 / 394	0.09 (1)
K- G	-1336 / 0	0.11 (1)
L- G	0 / 807	0.18 (1)
K- H	-169 / 0	0.03 (1)
P- Q	-140 / 97	0.00 (1)

DESIGN CRITERIA

SPECIFIED LOADS:

TOP CH.	LL	=	23.3	PSF
	DL	=	6.0	PSF
BOT CH.	LL	=	0.0	PSF
	DL	=	7.4	PSF
TOTAL LOAD		=	36.7	PSF

SPACING = 24.0 IN. C/C

THIS TRUSS IS DESIGNED FOR RESIDENTIAL OR SMALL BUILDING REQUIREMENTS OF PART 9, NBCC 2015

THIS DESIGN COMPLIES WITH:
- PART 9 OF BCBC 2018 , NBC-2019AE
- PART 9 OF OBC 2012 (2019 AMENDMENT)
- CSA 086-14
- TPIC 2014

DESIGN ASSUMPTIONS
-OVERHANG NOT TO BE ALTERED OR CUT OFF.

(55 % OF 27.2 P.S.F. G.S.L. PLUS 8.4 P.S.F. RAIN LOAD) EQUALS 23.3 P.S.F. SPECIFIED ROOF LIVE LOAD

ALLOWABLE DEFL.(LL)= L/360 (0.79")
CALCULATED VERT. DEFL.(LL) = L/ 999 (0.11")
ALLOWABLE DEFL.(TL)= L/360 (0.79")
CALCULATED VERT. DEFL.(TL) = L/ 999 (0.23")

CANTILEVER DEFLECTION:
ALLOWABLE DEFL.(LL)= L/120 (0.19")
CALCULATED VERT. DEFL.(LL) = L/ 999 (0.01")
ALLOWABLE DEFL.(TL)= L/120 (0.19")
CALCULATED VERT. DEFL.(TL) = L/ 999 (0.01")

CSI: TC=0.51/1.00 (C-Q:1) , BC=0.58/1.00 (O-P:1) , WB=0.66/1.00 (C-N:1) , SSI=0.24/1.00 (E-F:1)

DOL LUMBER=1.00 NAIL=1.00 LS BEND=1.10 COMP=1.10 SHEAR=1.10 TENS= 1.10

COMPANION LIVE LOAD FACTOR = 1.00

TRUSS PLATE MANUFACTURER IS NOT RESPONSIBLE FOR QUALITY CONTROL IN THE TRUSS MANUFACTURING PLANT .

NAIL VALUES

PLATE	GRIP(DRY) (PSI) MAX	MIN	SHEAR (PLI) MAX	MIN	SECTION (PLI) MAX	MIN
MT20	650	371	1747	788	1987	1873

PLATE PLACEMENT TOL. = 0.250 inches

PLATE ROTATION TOL. = 5.0 Deg.

JSI GRIP= 0.70 (B) (INPUT = 0.90)
JSI METAL= 0.58 (B) (INPUT = 0.95)

JOB NAME	TRUSS NAME	QUANTITY	PLY	JOB DESC.	DRWG NO.
425914	T92G	1	1	ROYAL PINE HOMES TRUSS DESC.	

Tamarack Roof Truss, Burlington

Version 8.630 S Aug 30 2023 MiTek Industries, Inc. Wed Feb 28 16:19:44 2024 Page 1
ID:FKLRYfY9FU?Txu1_f4rwjlzgucQ-l4xbQRyUAgsll?Y2BNhYMaCV8yNc4vFKq_wnbAzgZoD

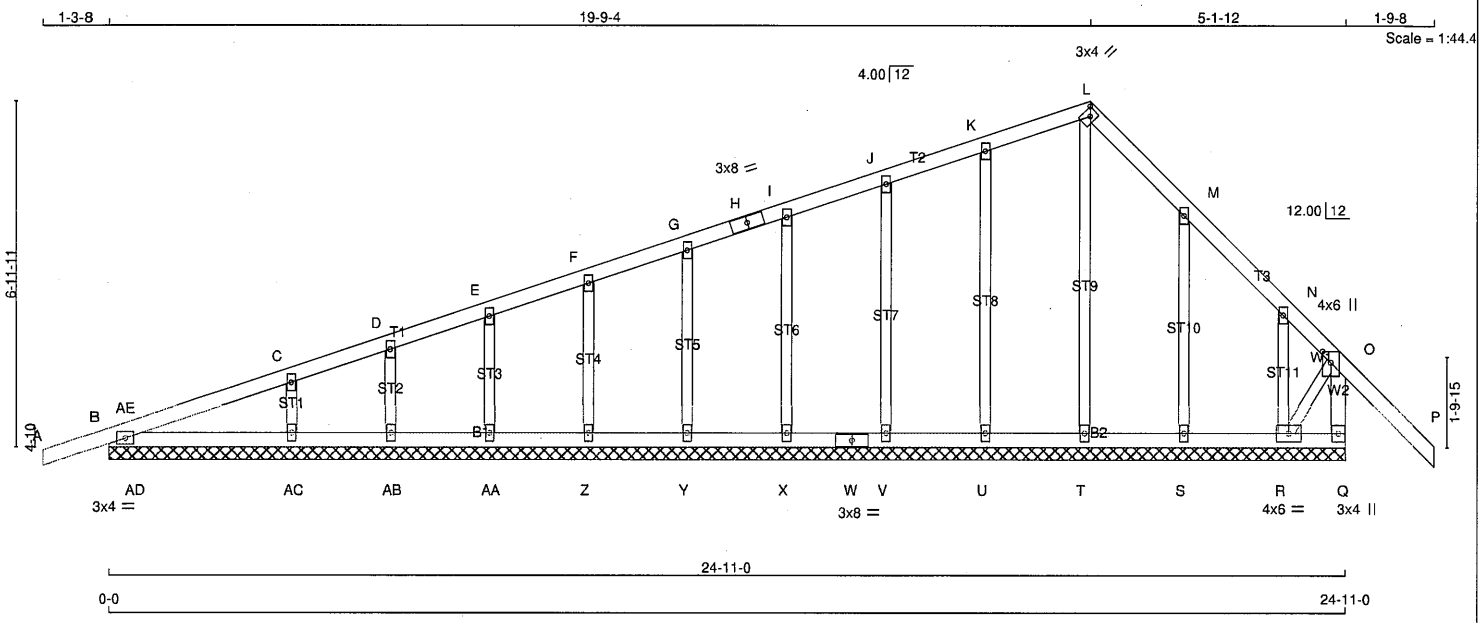

TOTAL WEIGHT = 101 lb [M]

LUMBER
N. L. G. A. RULES

CHORDS	SIZE		LUMBER	DESCR.
A - H	2x4	DRY	No.2	SPF
H - L	2x4	DRY	No.2	SPF
L - P	2x4	DRY	No.2	SPF
Q - O	2x4	DRY	No.2	SPF
B - W	2x4	DRY	No.2	SPF
W - Q	2x4	DRY	No.2	SPF
ALL WEBS	2x3	DRY	No.2	SPF
ALL GABLE WEBS	2x3	DRY	No.2	SPF

DRY: SEASONED LUMBER.

GABLE STUDS SPACED AT 2-0-0 OC.

PLATES (table is in inches)

JT	TYPE	PLATES	W	LEN	Y	X
B	TMB1-I	MT20	3.0	4.0		
C, D, E, F, G, I, J, K, M, N						
C	TMW+w	MT20	2.0	4.0		
H	TS-t	MT20	3.0	8.0		
L	TTW+h	MT20	3.0	4.0	Edge	1.75
O	TMVW+p	MT20	4.0	6.0	2.75	2.00
Q	BMV1+p	MT20	3.0	4.0		
R	BMWW1-t	MT20	4.0	6.0		
S, T, U, V, X, Y, Z, AA, AB, AC						
S	BMW1+w	MT20	2.0	4.0		
W	BS-t	MT20	3.0	8.0		

Edge - INDICATES REFERENCE CORNER OF PLATE TOUCHES EDGE OF CHORD.

NOTES- (1)
1) Lateral braces to be a minimum of 2X4 SPF #2.

Structural component only
DWG# T-2406477

DIMENSIONS, SUPPORTS AND LOADINGS SPECIFIED BY FABRICATOR TO BE VERIFIED BY BUILDING DESIGNER

BEARINGS

THIS TRUSS DESIGNED FOR CONTINUOUS BEARINGS.

THIS TRUSS REQUIRES RIGID SHEATHING ON EXPOSED FACE.

PROVIDE ANCHORAGE AT BEARING JOINT R FOR 150 LBS FACTORED UPLIFT
BEARING MATERIAL TO BE SPF NO.2 OR BETTER AT JOINT(S).

BRACING
TOP CHORD TO BE SHEATHED OR MAX. PURLIN SPACING = 6.25 FT.
MAX. UNBRACED BOTTOM CHORD LENGTH = 10.00 FT OR RIGID CEILING DIRECTLY APPLIED.

ALL PITCH BREAKS AND PERIMETER CORNER JOINTS MUST BE LATERALLY RESTRAINED.

LOADING
TOTAL LOAD CASES: (4)

CHORDS

MEMB. FR-TO	MAX. FACTORED FORCE (LBS)	FACTORED VERT. LOAD LC1 (PLF) FROM	TO	MAX CSI (LC)	MAX. UNBRAC LENGTH
A- B	0 / 15	-84.9	-84.9	0.11 (1)	10.00
B-AE	-37 / 0	-84.9	-84.9	0.03 (4)	6.25
AE- C	-24 / 0	-84.9	-84.9	0.11 (1)	6.25
C- D	-33 / 0	-84.9	-84.9	0.11 (1)	6.25
D- E	-17 / 0	-84.9	-84.9	0.04 (1)	6.25
E- F	-16 / 0	-84.9	-84.9	0.04 (1)	6.25
F- G	-13 / 0	-84.9	-84.9	0.04 (1)	6.25
G- H	-11 / 0	-84.9	-84.9	0.04 (1)	6.25
H- I	-11 / 0	-84.9	-84.9	0.04 (1)	6.25
I- J	-10 / 0	-84.9	-84.9	0.04 (1)	10.00
J- K	-6 / 0	-84.9	-84.9	0.05 (1)	10.00
K- L	-12 / 0	-84.9	-84.9	0.05 (1)	6.25
L- M	-26 / 0	-84.9	-84.9	0.05 (1)	6.25
M- N	-3 / 0	-84.9	-84.9	0.05 (1)	10.00
N- O	-112 / 0	-84.9	-84.9	0.21 (1)	6.25
O- P	0 / 57	-84.9	-84.9	0.22 (1)	10.00
Q- O	-370 / 0	0.0	0.0	0.04 (1)	7.81
B-AD	0 / 31	-18.5	-18.5	0.08 (1)	10.00
AD-AC	0 / 31	-18.5	-18.5	0.08 (1)	10.00
AC-AB	0 / 21	-18.5	-18.5	0.06 (1)	10.00
AB-AA	0 / 18	-18.5	-18.5	0.02 (4)	10.00
AA- Z	0 / 15	-18.5	-18.5	0.02 (4)	10.00
Z- Y	0 / 13	-18.5	-18.5	0.02 (4)	10.00
Y- X	0 / 11	-18.5	-18.5	0.02 (4)	10.00
X- W	0 / 9	-18.5	-18.5	0.02 (4)	10.00
W- V	0 / 9	-18.5	-18.5	0.02 (4)	10.00
V- U	0 / 8	-18.5	-18.5	0.02 (4)	10.00
U- T	0 / 6	-18.5	-18.5	0.02 (4)	10.00
T- S	0 / 8	-18.5	-18.5	0.02 (4)	10.00
S- R	0 / 13	-18.5	-18.5	0.02 (4)	10.00
R- Q	0 / 0	-18.5	-18.5	0.01 (4)	10.00

WEBS

MEMB. FR-TO	MAX. FACTORED FORCE (LBS)	MAX CSI (LC)
T- L	-129 / 0	0.11 (1)
U- K	-198 / 0	0.13 (1)
V- J	-163 / 0	0.08 (1)
X- I	-170 / 0	0.06 (1)
Y- G	-169 / 0	0.05 (1)
Z- F	-167 / 0	0.04 (1)
AA- E	-179 / 0	0.03 (1)
AB- D	-127 / 0	0.02 (1)
AC- C	-276 / 0	0.04 (1)
S- M	-206 / 0	0.08 (1)
R- N	0 / 22	0.00 (1)
R- O	0 / 18	0.00 (1)
AD-AE	-117 / 6	0.00 (1)

DESIGN CRITERIA

SPECIFIED LOADS:

TOP CH.	LL	=	23.3	PSF
	DL	=	6.0	PSF
BOT CH.	LL	=	0.0	PSF
	DL	=	7.4	PSF
TOTAL LOAD		=	36.7	PSF

SPACING = 24.0 IN. C/C

THIS TRUSS IS DESIGNED FOR RESIDENTIAL OR SMALL BUILDING REQUIREMENTS OF PART 9, NBCC 2015

THIS DESIGN COMPLIES WITH:
- PART 9 OF BCBC 2018 , NBC-2019AE
- PART 9 OF OBC 2012 (2019 AMENDMENT)
- CSA 086-14
- TPIC 2014

DESIGN ASSUMPTIONS
-OVERHANG NOT TO BE ALTERED OR CUT OFF.

(55 % OF 27.2 P.S.F. G.S.L. PLUS 8.4 P.S.F. RAIN LOAD) EQUALS 23.3 P.S.F. SPECIFIED ROOF LIVE LOAD

CSI: TC=0.22/1.00 (O-P:1) , BC=0.08/1.00 (B-AD:1) , WB=0.13/1.00 (K-U:1) , SSI=0.12/1.00 (C-AE:1)

DOL LUMBER=1.00 NAIL=1.00 LS BEND=1.10 COMP=1.10 SHEAR=1.10 TENS= 1.10

COMPANION LIVE LOAD FACTOR = 1.00

TRUSS PLATE MANUFACTURER IS NOT RESPONSIBLE FOR QUALITY CONTROL IN THE TRUSS MANUFACTURING PLANT .

NAIL VALUES

PLATE	GRIP(DRY) (PSI) MAX	MIN	SHEAR (PLI) MAX	MIN	SECTION (PLI) MAX	MIN
MT20	650	371	1747	788	1987	1873

PLATE PLACEMENT TOL. = 0.250 inches

PLATE ROTATION TOL. = 5.0 Deg.

JSI GRIP= 0.61 (L) (INPUT = 0.90)
JSI METAL= 0.11 (M) (INPUT = 0.95)

JOB NAME	TRUSS NAME	QUANTITY	PLY	JOB DESC.	DRWG NO.
425913	J1	14	1	ROYAL PINE HOMES TRUSS DESC.	

Tamarack Roof Truss, Burlington

Version 8.630 S Aug 30 2023 MiTek Industries, Inc. Wed Feb 28 15:02:21 2024 Page 1
ID:VI_DQvi1e49Qy7axT?i10OzOYuG-BrtLyrm5c6uXDT6hhmukhSP2sLjPj1nwA7ib7nzgawm

Scale = 1:20.9

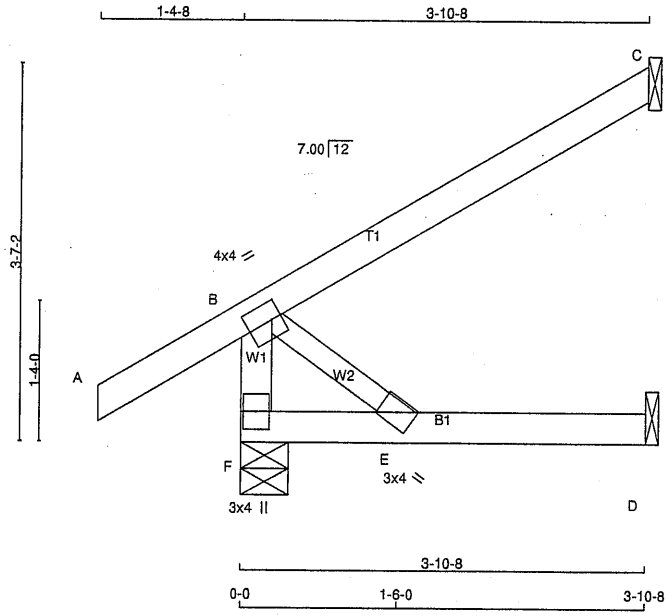

TOTAL WEIGHT = 14 X 14 = 194 lb [M]

LUMBER
N. L. G. A. RULES

CHORDS	SIZE		LUMBER	DESCR.
F - B	2x4	DRY	No.2	SPF
A - C	2x4	DRY	No.2	SPF
F - D	2x4	DRY	No.2	SPF
ALL WEBS	2x3	DRY	No.2	SPF

DRY: SEASONED LUMBER.

PLATES (table is in inches)

JT	TYPE	PLATES	W	LEN	Y	X
B	TMVW-t	MT20	4.0	4.0	2.00	1.00
E	BMW+w	MT20	3.0	4.0		
F	BMV1+p	MT20	3.0	4.0		

NOTES- (1)
1) Lateral braces to be a minimum of 2X4 SPF #2.

DIMENSIONS, SUPPORTS AND LOADINGS SPECIFIED BY FABRICATOR TO BE VERIFIED BY BUILDING DESIGNER

BEARINGS

JT	FACTORED GROSS REACTION VERT	HORZ	MAXIMUM FACTORED GROSS REACTION DOWN	HORZ	UPLIFT	INPUT BRG IN-SX	REQRD BRG IN-SX
F	323	0	323	0	0	5-8	1-8
C	164	0	164	0	0	1-8	1-8
D	36	0	40	0	0	1-8	1-8

SEE MITEK STANDARD DETAIL MSD2015-H FOR CONNECTION TO JOINT(S) C , D

UNFACTORED REACTIONS

JT	1ST LCASE COMBINED	MAX./MIN. COMPONENT REACTIONS SNOW	LIVE	PERM.LIVE	WIND	DEAD	SOIL
F	227	158 / 0	0 / 0	0 / 0	0 / 0	69 / 0	0 / 0
C	113	90 / 0	0 / 0	0 / 0	0 / 0	23 / 0	0 / 0
D	29	0 / 0	0 / 0	0 / 0	0 / 0	29 / 0	0 / 0

BEARING MATERIAL TO BE SPF NO.2 OR BETTER AT JOINT(S) F, C

BRACING
TOP CHORD TO BE SHEATHED OR MAX. PURLIN SPACING = 10.00 FT.
MAX. UNBRACED BOTTOM CHORD LENGTH = 10.00 FT OR RIGID CEILING DIRECTLY APPLIED.

ALL PITCH BREAKS AND PERIMETER CORNER JOINTS MUST BE LATERALLY RESTRAINED.

LOADING
TOTAL LOAD CASES: (5)

CHORDS

MEMB. FR-TO	MAX. FACTORED FORCE (LBS)	FACTORED VERT. LOAD LC1 (PLF) FROM	TO	MAX CSI (LC)	MAX. UNBRAC LENGTH
F- B	-287 / 0	0.0	0.0	0.03 (1)	7.81
A- B	0 / 31	-84.9	-84.9	0.14 (5)	10.00
B- C	0 / 0	-84.9	-84.9	0.22 (1)	10.00
F- E	0 / 0	-18.5	-18.5	0.08 (4)	10.00
E- D	0 / 0	-18.5	-18.5	0.08 (4)	10.00

WEBS

MEMB. FR-TO	MAX. FACTORED FORCE (LBS)	MAX CSI (LC)
B- E	0 / 0	0.00 (1)

CANTILEVER ANALYSIS HAS BEEN CONSIDERED IN THIS DESIGN

DESIGN CRITERIA

SPECIFIED LOADS:

TOP CH.	LL	=	23.3	PSF
	DL	=	6.0	PSF
BOT CH.	LL	=	0.0	PSF
	DL	=	7.4	PSF
TOTAL LOAD		=	36.7	PSF

SPACING = 24.0 IN. C/C

THIS TRUSS IS DESIGNED FOR RESIDENTIAL OR SMALL BUILDING REQUIREMENTS OF PART 9, NBCC 2015

THIS DESIGN COMPLIES WITH:
- PART 9 OF BCBC 2018 , NBC-2019AE
- PART 9 OF OBC 2012 (2019 AMENDMENT)
- CSA 086-14
- TPIC 2014

(55 % OF 27.2 P.S.F. G.S.L. PLUS 8.4 P.S.F. RAIN LOAD) EQUALS 23.3 P.S.F. SPECIFIED ROOF LIVE LOAD

ALLOWABLE DEFL.(LL)= L/360 (0.19")
CALCULATED VERT. DEFL.(LL) = L/ 999 (0.00")
ALLOWABLE DEFL.(TL)= L/360 (0.19")
CALCULATED VERT. DEFL.(TL) = L/ 999 (0.01")

CSI: TC=0.22/1.00 (B-C:1) , BC=0.08/1.00 (D-E:4) , WB=0.00/1.00 (B-E:1) , SSI=0.11/1.00 (B-C:1)

DOL LUMBER=1.00 NAIL=1.00 LS BEND=1.10 COMP=1.10 SHEAR=1.10 TENS= 1.10

COMPANION LIVE LOAD FACTOR = 1.00

AUTOSOLVE RIGHT HEEL ONLY

TRUSS PLATE MANUFACTURER IS NOT RESPONSIBLE FOR QUALITY CONTROL IN THE TRUSS MANUFACTURING PLANT .

NAIL VALUES

PLATE	GRIP(DRY) (PSI) MAX	MIN	SHEAR (PLI) MAX	MIN	SECTION (PLI) MAX	MIN
MT20	650	371	1747	788	1987	1873

PLATE PLACEMENT TOL. = 0.250 inches

PLATE ROTATION TOL. = 5.0 Deg.

JSI GRIP= 0.17 (B) (INPUT = 0.90)
JSI METAL= 0.05 (B) (INPUT = 0.95)

LICENSED PROFESSIONAL ENGINEER
02-28-24
H. J. G. ALVES
100009024
PROVINCE OF ONTARIO

Structural component only
DWG# T-2406382

JOB NAME	TRUSS NAME	QUANTITY	PLY	JOB DESC.	DRWG NO.
425913	J2	17	1	ROYAL PINE HOMES TRUSS DESC.	

Tamarack Roof Truss, Burlington

Version 8.630 S Aug 30 2023 MiTek Industries, Inc. Wed Feb 28 15:02:23 2024 Page 1
ID:Vl_DQvi1e49Qy7axT?i10OzOYuG-8D?5NXnM8j8FTmF4pBwDmtUPv8LOBvCDdRBiCgzgawk

Scale = 1:24.6

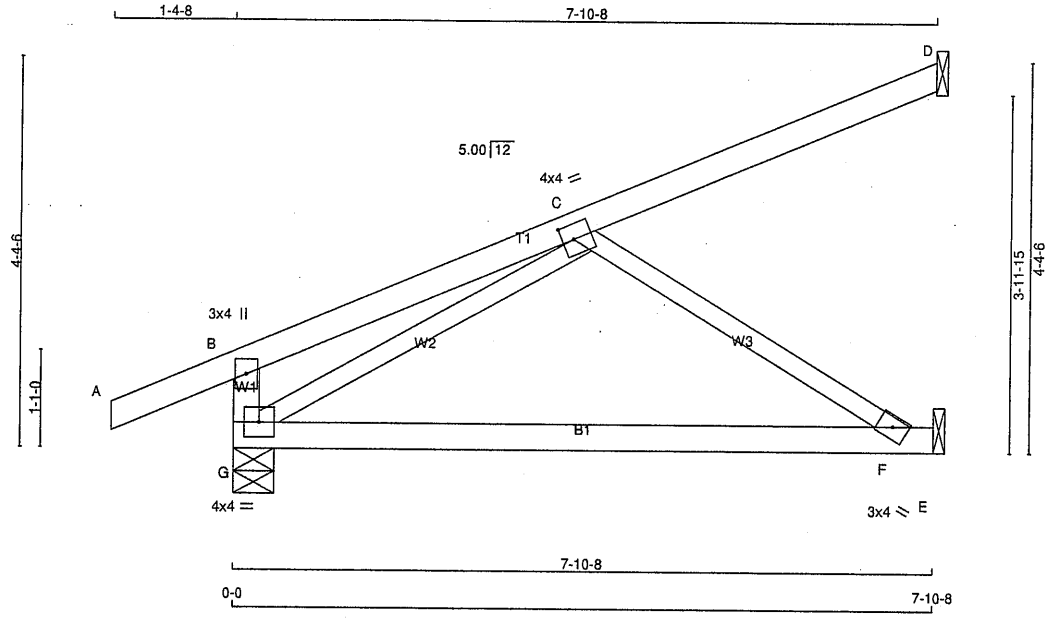

TOTAL WEIGHT = 17 X 28 = 479 lb
[M][F]

LUMBER
N. L. G. A. RULES

CHORDS	SIZE		LUMBER	DESCR.
G - B	2x4	DRY	No.2	SPF
A - D	2x4	DRY	No.2	SPF
G - E	2x4	DRY	No.2	SPF
ALL WEBS	2x3	DRY	No.2	SPF

DRY: SEASONED LUMBER.

PLATES (table is in inches)

JT	TYPE	PLATES	W	LEN	Y	X
B	TMV+p	MT20	3.0	4.0		
C	TMWW-t	MT20	4.0	4.0	2.00	1.50
F	BMW+w	MT20	3.0	4.0		
G	BMVW1-t	MT20	4.0	4.0		

NOTES- (1)
1) Lateral braces to be a minimum of 2X4 SPF #2.

DIMENSIONS, SUPPORTS AND LOADINGS SPECIFIED BY FABRICATOR TO BE VERIFIED BY BUILDING DESIGNER

BEARINGS

JT	FACTORED GROSS REACTION VERT	HORZ	MAXIMUM FACTORED GROSS REACTION DOWN	HORZ	UPLIFT	INPUT BRG IN-SX	REQRD BRG IN-SX
G	528	0	528	0	0	5-8	1-8
D	138	0	138	0	0	1-8	1-8
E	269	0	269	0	0	1-8	1-8

SEE MITEK STANDARD DETAIL MSD2015-H FOR CONNECTION TO JOINT(S) D , E

UNFACTORED REACTIONS

JT	1ST LCASE COMBINED	MAX./MIN. COMPONENT REACTIONS SNOW	LIVE	PERM.LIVE	WIND	DEAD	SOIL
G	373	250 / 0	0 / 0	0 / 0	0 / 0	123 / 0	0 / 0
D	95	73 / 0	0 / 0	0 / 0	0 / 0	22 / 0	0 / 0
E	194	110 / 0	0 / 0	0 / 0	0 / 0	84 / 0	0 / 0

BEARING MATERIAL TO BE SPF NO.2 OR BETTER AT JOINT(S) G

BRACING
TOP CHORD TO BE SHEATHED OR MAX. PURLIN SPACING = 6.25 FT.
MAX. UNBRACED BOTTOM CHORD LENGTH = 10.00 FT OR RIGID CEILING DIRECTLY APPLIED.

ALL PITCH BREAKS AND PERIMETER CORNER JOINTS MUST BE LATERALLY RESTRAINED.

LOADING
TOTAL LOAD CASES: (4)

CHORDS

MEMB. FR-TO	MAX. FACTORED FORCE (LBS)	FACTORED VERT. LOAD (PLF) FROM	TO	LC1 MAX CSI (LC)	MAX. UNBRAC LENGTH
G- B	-251 / 0	0.0	0.0	0.03 (1)	7.81
A- B	0 / 23	-84.9	-84.9	0.12 (1)	10.00
B- C	0 / 13	-84.9	-84.9	0.18 (1)	10.00
C- D	-13 / 0	-84.9	-84.9	0.14 (1)	6.25
G- F	0 / 311	-18.5	-18.5	0.37 (4)	10.00
F- E	0 / 0	-18.5	-18.5	0.17 (1)	10.00

WEBS

MEMB. FR-TO	MAX. FACTORED FORCE (LBS)	MAX CSI (LC)
G- C	-366 / 0	0.12 (1)
C- F	-374 / 0	0.13 (1)

DESIGN CRITERIA

SPECIFIED LOADS:

TOP CH.	LL =	23.3	PSF
	DL =	6.0	PSF
BOT CH.	LL =	0.0	PSF
	DL =	7.4	PSF
TOTAL LOAD	=	36.7	PSF

SPACING = 24.0 IN. C/C

THIS TRUSS IS DESIGNED FOR RESIDENTIAL OR SMALL BUILDING REQUIREMENTS OF PART 9, NBCC 2015

THIS DESIGN COMPLIES WITH:
- PART 9 OF BCBC 2018 , NBC-2019AE
- PART 9 OF OBC 2012 (2019 AMENDMENT)
- CSA 086-14
- TPIC 2014

(55 % OF 27.2 P.S.F. G.S.L. PLUS 8.4 P.S.F. RAIN LOAD) EQUALS 23.3 P.S.F. SPECIFIED ROOF LIVE LOAD

ALLOWABLE DEFL.(LL)= L/360 (0.26")
CALCULATED VERT. DEFL.(LL) = L/ 999 (0.05")
ALLOWABLE DEFL.(TL)= L/360 (0.26")
CALCULATED VERT. DEFL.(TL) = L/ 379 (0.25")

CSI: TC=0.18/1.00 (B-C:1) , BC=0.37/1.00 (F-G:4) , WB=0.13/1.00 (C-F:1) , SSI=0.21/1.00 (E-F:1)

DOL LUMBER=1.00 NAIL=1.00 LS BEND=1.10 COMP=1.10 SHEAR=1.10 TENS= 1.10

COMPANION LIVE LOAD FACTOR = 1.00

TRUSS PLATE MANUFACTURER IS NOT RESPONSIBLE FOR QUALITY CONTROL IN THE TRUSS MANUFACTURING PLANT .

NAIL VALUES

PLATE	GRIP(DRY) (PSI) MAX	MIN	SHEAR (PLI) MAX	MIN	SECTION (PLI) MAX	MIN
MT20	650	371	1747	788	1987	1873

PLATE PLACEMENT TOL. = 0.250 inches

PLATE ROTATION TOL. = 5.0 Deg.

JSI GRIP= 0.34 (C) (INPUT = 0.90)
JSI METAL= 0.13 (F) (INPUT = 0.95)

LICENSED PROFESSIONAL ENGINEER
02-28-24
H. J. G. ALVES
100009024
PROVINCE OF ONTARIO

Structural component only
DWG# T-2406383

JOB NAME	TRUSS NAME	QUANTITY	PLY	JOB DESC.	DRWG NO.
425913	J2S	24	1	ROYAL PINE HOMES TRUSS DESC.	

Tamarack Roof Truss, Burlington

Version 8.630 S Aug 30 2023 MiTek Industries, Inc. Wed Feb 28 15:02:25 2024 Page 1
ID:VI_DQvi1e49Qy7axT?i10OzOYuG-4c7soCpcfLOzi4PTwczhrlaiey1Cfq6W5lgpGZzgawi

Scale = 1:24.6

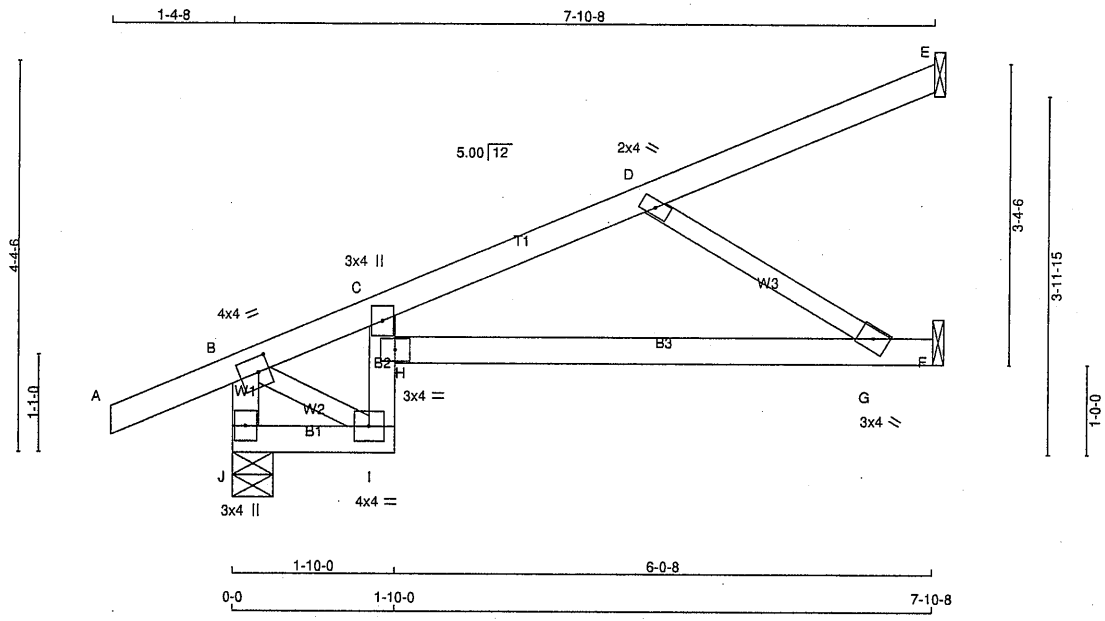

TOTAL WEIGHT = 24 X 26 = 631 lb [M]

LUMBER
N. L. G. A. RULES

CHORDS	SIZE		LUMBER	DESCR.
J - B	2x4	DRY	No.2	SPF
A - E	2x4	DRY	No.2	SPF
J - I	2x4	DRY	No.2	SPF
I - C	2x4	DRY	No.2	SPF
H - F	2x4	DRY	No.2	SPF
ALL WEBS	2x3	DRY	No.2	SPF

DRY: SEASONED LUMBER.

PLATES (table is in inches)

JT	TYPE	PLATES	W	LEN	Y	X
B	TMVW-t	MT20	4.0	4.0	2.00	1.50
C	TMV+p	MT20	3.0	4.0		
D	TMW+w	MT20	2.0	4.0		
G	BMW+w	MT20	3.0	4.0		
H	BVM-l	MT20	3.0	4.0		
I	BMVW-t	MT20	4.0	4.0		
J	BMV1+p	MT20	3.0	4.0		

NOTES- (1)
1) Lateral braces to be a minimum of 2X4 SPF #2.

DIMENSIONS, SUPPORTS AND LOADINGS SPECIFIED BY FABRICATOR TO BE VERIFIED BY BUILDING DESIGNER

BEARINGS

JT	FACTORED GROSS REACTION VERT	HORZ	MAXIMUM FACTORED GROSS REACTION DOWN	HORZ	UPLIFT	INPUT BRG IN-SX	REQRD BRG IN-SX
J	539	0	539	0	0	5-8	1-8
E	90	0	90	0	0	1-8	1-8
F	306	0	306	0	0	1-8	1-8

SEE MITEK STANDARD DETAIL MSD2015-H FOR CONNECTION TO JOINT(S) E , F

UNFACTORED REACTIONS

JT	1ST LCASE COMBINED	MAX./MIN. COMPONENT REACTIONS SNOW	LIVE	PERM.LIVE	WIND	DEAD	SOIL
J	380	256 / 0	0 / 0	0 / 0	0 / 0	124 / 0	0 / 0
E	62	53 / 0	0 / 0	0 / 0	0 / 0	9 / 0	0 / 0
F	220	124 / 0	0 / 0	0 / 0	0 / 0	95 / 0	0 / 0

BEARING MATERIAL TO BE SPF NO.2 OR BETTER AT JOINT(S) J

BRACING
TOP CHORD TO BE SHEATHED OR MAX. PURLIN SPACING = 6.25 FT.
MAX. UNBRACED BOTTOM CHORD LENGTH = 7.81 FT OR RIGID CEILING DIRECTLY APPLIED.

ALL PITCH BREAKS AND PERIMETER CORNER JOINTS MUST BE LATERALLY RESTRAINED.

LOADING
TOTAL LOAD CASES: (4)

CHORDS

MEMB. FR-TO	MAX. FACTORED FORCE (LBS)	FACTORED VERT. LOAD LC1 (PLF) FROM	TO	MAX CSI (LC)	MAX. UNBRAC LENGTH
J- B	-560 / 0	0.0	0.0	0.05 (4)	7.81
A- B	0 / 23	-84.9	-84.9	0.12 (1)	10.00
B- C	-323 / 0	-84.9	-84.9	0.24 (1)	6.25
C- D	-381 / 0	-84.9	-84.9	0.36 (1)	6.25
D- E	-17 / 0	-84.9	-84.9	0.19 (1)	6.25
J- I	0 / 32	-18.5	-18.5	0.08 (1)	10.00
I- H	-42 / 8	0.0	0.0	0.24 (1)	7.81
H- C	0 / 88	0.0	0.0	0.22 (1)	10.00
H- G	0 / 399	-18.5	-18.5	0.35 (1)	10.00
G- F	0 / 0	-18.5	-18.5	0.27 (1)	10.00

WEBS

MEMB. FR-TO	MAX. FACTORED FORCE (LBS)	MAX CSI (LC)
D- G	-484 / 0	0.11 (1)
B- I	0 / 223	0.05 (1)

DESIGN CRITERIA

SPECIFIED LOADS:

TOP CH.	LL	=	23.3	PSF
	DL	=	6.0	PSF
BOT CH.	LL	=	0.0	PSF
	DL	=	7.4	PSF
TOTAL LOAD		=	36.7	PSF

SPACING = 24.0 IN. C/C

THIS TRUSS IS DESIGNED FOR RESIDENTIAL OR SMALL BUILDING REQUIREMENTS OF PART 9, NBCC 2015

THIS DESIGN COMPLIES WITH:
- PART 9 OF BCBC 2018 , NBC-2019AE
- PART 9 OF OBC 2012 (2019 AMENDMENT)
- CSA 086-14
- TPIC 2014

DESIGN ASSUMPTIONS
-OVERHANG NOT TO BE ALTERED OR CUT OFF.

(55 % OF 27.2 P.S.F. G.S.L. PLUS 8.4 P.S.F. RAIN LOAD) EQUALS 23.3 P.S.F. SPECIFIED ROOF LIVE LOAD

ALLOWABLE DEFL.(LL)= L/360 (0.26")
CALCULATED VERT. DEFL.(LL) = L/ 999 (0.09")
ALLOWABLE DEFL.(TL)= L/360 (0.26")
CALCULATED VERT. DEFL.(TL) = L/ 424 (0.22")

CSI: TC=0.36/1.00 (C-D:1) , BC=0.35/1.00 (G-H:1) , WB=0.11/1.00 (D-G:1) , SSI=0.24/1.00 (F-G:1)

DOL LUMBER=1.00 NAIL=1.00 LS BEND=1.10 COMP=1.10 SHEAR=1.10 TENS= 1.10

COMPANION LIVE LOAD FACTOR = 1.00

TRUSS PLATE MANUFACTURER IS NOT RESPONSIBLE FOR QUALITY CONTROL IN THE TRUSS MANUFACTURING PLANT .

NAIL VALUES

PLATE	GRIP(DRY) (PSI) MAX	MIN	SHEAR (PLI) MAX	MIN	SECTION (PLI) MAX	MIN
MT20	650	371	1747	788	1987	1873

PLATE PLACEMENT TOL. = 0.250 inches

PLATE ROTATION TOL. = 5.0 Deg.

JSI GRIP= 0.37 (I) (INPUT = 0.90)
JSI METAL= 0.22 (D) (INPUT = 0.95)

LICENSED PROFESSIONAL ENGINEER
02-28-24
H. J. G. ALVES
100009024
PROVINCE OF ONTARIO

Structural component only
DWG# T-2406384

JOB NAME	TRUSS NAME	QUANTITY	PLY	JOB DESC.	DRWG NO.
425913	J3	4	1	ROYAL PINE HOMES TRUSS DESC.	

Tamarack Roof Truss, Burlington

Version 8.630 S Aug 30 2023 MiTek Industries, Inc. Wed Feb 28 15:02:26 2024 Page 1
ID:VI_DQvi1e49Qy7axT?i10OzOYuG-YohE?YpEQeWqKE_fUJUwOW6vwMRGOI0fJPQMp?zgawh

Scale = 1:15.6

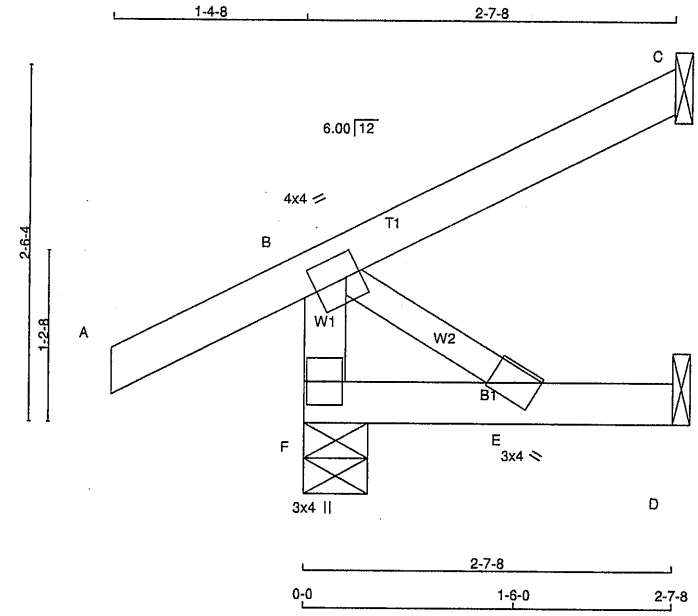

TOTAL WEIGHT = 4 X 10 = 42 lb [M]

LUMBER
N. L. G. A. RULES

CHORDS	SIZE		LUMBER	DESCR.
F - B	2x4	DRY	No.2	SPF
A - C	2x4	DRY	No.2	SPF
F - D	2x4	DRY	No.2	SPF
ALL WEBS	2x3	DRY	No.2	SPF

DRY: SEASONED LUMBER.

PLATES (table is in inches)

JT	TYPE	PLATES	W	LEN	Y	X
B	TMVW-t	MT20	4.0	4.0	2.00	1.25
E	BMW+w	MT20	3.0	4.0		
F	BMV1+p	MT20	3.0	4.0		

NOTES- (1)
1) Lateral braces to be a minimum of 2X4 SPF #2.

DIMENSIONS, SUPPORTS AND LOADINGS SPECIFIED BY FABRICATOR TO BE VERIFIED BY BUILDING DESIGNER

BEARINGS

JT	FACTORED GROSS REACTION VERT	HORZ	MAXIMUM FACTORED GROSS REACTION DOWN	HORZ	UPLIFT	INPUT BRG IN-SX	REQRD BRG IN-SX
F	258	0	258	0	0	5-8	1-8
C	111	0	111	0	0	1-8	1-8
D	24	0	27	0	0	1-8	1-8

SEE MITEK STANDARD DETAIL MSD2015-H FOR CONNECTION TO JOINT(S) C , D

UNFACTORED REACTIONS

JT	1ST LCASE COMBINED	MAX./MIN. COMPONENT REACTIONS SNOW	LIVE	PERM.LIVE	WIND	DEAD	SOIL
F	181	128 / 0	0 / 0	0 / 0	0 / 0	52 / 0	0 / 0
C	77	61 / 0	0 / 0	0 / 0	0 / 0	16 / 0	0 / 0
D	19	0 / 0	0 / 0	0 / 0	0 / 0	19 / 0	0 / 0

BEARING MATERIAL TO BE SPF NO.2 OR BETTER AT JOINT(S) F, C

BRACING
TOP CHORD TO BE SHEATHED OR MAX. PURLIN SPACING = 10.00 FT.
MAX. UNBRACED BOTTOM CHORD LENGTH = 10.00 FT OR RIGID CEILING DIRECTLY APPLIED.

ALL PITCH BREAKS AND PERIMETER CORNER JOINTS MUST BE LATERALLY RESTRAINED.

LOADING
TOTAL LOAD CASES: (5)

CHORDS

MEMB. FR-TO	MAX. FACTORED FORCE (LBS)	FACTORED VERT. LOAD LC1 (PLF) FROM	TO	MAX CSI (LC)	MAX. UNBRAC LENGTH
F- B	-234 / 0	0.0	0.0	0.02 (1)	7.81
A- B	0 / 27	-84.9	-84.9	0.13 (5)	10.00
B- C	0 / 0	-84.9	-84.9	0.10 (1)	10.00
F- E	0 / 0	-18.5	-18.5	0.04 (4)	10.00
E- D	0 / 0	-18.5	-18.5	0.04 (4)	10.00

WEBS

MEMB. FR-TO	MAX. FACTORED FORCE (LBS)	MAX CSI (LC)
B- E	0 / 0	0.00 (1)

CANTILEVER ANALYSIS HAS BEEN CONSIDERED IN THIS DESIGN

DESIGN CRITERIA

SPECIFIED LOADS:

TOP CH.	LL =	23.3	PSF
	DL =	6.0	PSF
BOT CH.	LL =	0.0	PSF
	DL =	7.4	PSF
TOTAL LOAD	=	36.7	PSF

SPACING = 24.0 IN. C/C

THIS TRUSS IS DESIGNED FOR RESIDENTIAL OR SMALL BUILDING REQUIREMENTS OF PART 9, NBCC 2015

THIS DESIGN COMPLIES WITH:
- PART 9 OF BCBC 2018 , NBC-2019AE
- PART 9 OF OBC 2012 (2019 AMENDMENT)
- CSA 086-14
- TPIC 2014

(55 % OF 27.2 P.S.F. G.S.L. PLUS 8.4 P.S.F. RAIN LOAD) EQUALS 23.3 P.S.F. SPECIFIED ROOF LIVE LOAD

ALLOWABLE DEFL.(LL)= L/360 (0.19")
CALCULATED VERT. DEFL.(LL) = L/ 999 (0.00")
ALLOWABLE DEFL.(TL)= L/360 (0.19")
CALCULATED VERT. DEFL.(TL) = L/ 999 (0.00")

CSI: TC=0.13/1.00 (A-B:5) , BC=0.04/1.00 (E-F:4) , WB=0.00/1.00 (B-E:1) , SSI=0.09/1.00 (A-B:5)

DOL LUMBER=1.00 NAIL=1.00 LS BEND=1.10 COMP=1.10 SHEAR=1.10 TENS= 1.10

COMPANION LIVE LOAD FACTOR = 1.00

AUTOSOLVE RIGHT HEEL ONLY

TRUSS PLATE MANUFACTURER IS NOT RESPONSIBLE FOR QUALITY CONTROL IN THE TRUSS MANUFACTURING PLANT .

NAIL VALUES

PLATE	GRIP(DRY) (PSI) MAX	MIN	SHEAR (PLI) MAX	MIN	SECTION (PLI) MAX	MIN
MT20	650	371	1747	788	1987	1873

PLATE PLACEMENT TOL. = 0.250 inches

PLATE ROTATION TOL. = 5.0 Deg.

JSI GRIP= 0.14 (B) (INPUT = 0.90)
JSI METAL= 0.04 (B) (INPUT = 0.95)

LICENSED PROFESSIONAL ENGINEER
02-28-24
H. J. G. ALVES
100009024
PROVINCE OF ONTARIO

Structural component only
DWG# T-2406385

JOB NAME	TRUSS NAME	QUANTITY	PLY	JOB DESC.	DRWG NO.
425913	J4	2	1	ROYAL PINE HOMES TRUSS DESC.	

Tamarack Roof Truss, Burlington

Version 8.630 S Aug 30 2023 MiTek Industries, Inc. Wed Feb 28 15:02:27 2024 Page 1
ID:VI_DQvi1e49Qy7axT?i10OzOYuG-0?FcCuqsByehxOZr21?9wjf4flnV7lGpY39vLRzgawg

Scale = 1:27.2

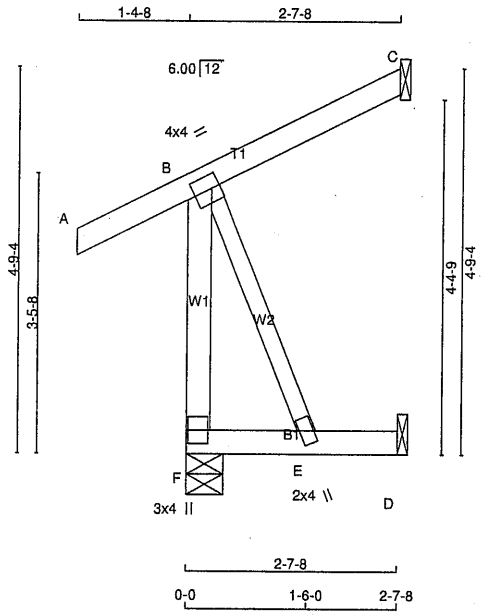

TOTAL WEIGHT = 2 X 14 = 29 lb

LUMBER
N. L. G. A. RULES

CHORDS	SIZE		LUMBER	DESCR.
F - B	2x4	DRY	No.2	SPF
A - C	2x4	DRY	No.2	SPF
F - D	2x4	DRY	No.2	SPF
ALL WEBS	2x3	DRY	No.2	SPF

DRY: SEASONED LUMBER.

PLATES (table is in inches)

JT	TYPE	PLATES	W	LEN	Y	X
B	TMVW-t	MT20	4.0	4.0	2.00	1.25
E	BMW+w	MT20	2.0	4.0		
F	BMV1+p	MT20	3.0	4.0		

NOTES- (1)
1) Lateral braces to be a minimum of 2X4 SPF #2.

DIMENSIONS, SUPPORTS AND LOADINGS SPECIFIED BY FABRICATOR TO BE VERIFIED BY BUILDING DESIGNER

BEARINGS

JT	FACTORED GROSS REACTION VERT	HORZ	MAXIMUM FACTORED GROSS REACTION DOWN	HORZ	UPLIFT	INPUT BRG IN-SX	REQRD BRG IN-SX
F	258	0	258	0	0	5-8	1-8
C	111	0	111	0	0	1-8	1-8
D	24	0	27	0	0	1-8	1-8

SEE MITEK STANDARD DETAIL MSD2015-H FOR CONNECTION TO JOINT(S) C , D

UNFACTORED REACTIONS

JT	1ST LCASE COMBINED	MAX./MIN. COMPONENT REACTIONS SNOW	LIVE	PERM.LIVE	WIND	DEAD	SOIL
F	181	128 / 0	0 / 0	0 / 0	0 / 0	52 / 0	0 / 0
C	77	61 / 0	0 / 0	0 / 0	0 / 0	16 / 0	0 / 0
D	19	0 / 0	0 / 0	0 / 0	0 / 0	19 / 0	0 / 0

BEARING MATERIAL TO BE SPF NO.2 OR BETTER AT JOINT(S) F

BRACING
TOP CHORD TO BE SHEATHED OR MAX. PURLIN SPACING = 10.00 FT.
MAX. UNBRACED BOTTOM CHORD LENGTH = 10.00 FT OR RIGID CEILING DIRECTLY APPLIED.

ALL PITCH BREAKS AND PERIMETER CORNER JOINTS MUST BE LATERALLY RESTRAINED.

LOADING
TOTAL LOAD CASES: (5)

CHORDS

MEMB. FR-TO	MAX. FACTORED FORCE (LBS)	FACTORED VERT. LOAD (PLF)	LC1 FROM	TO	MAX CSI (LC)	MAX. UNBRAC LENGTH
F- B	-234 / 0	0.0	0.0		0.05 (1)	7.81
A- B	0 / 27	-84.9	-84.9		0.13 (5)	10.00
B- C	0 / 0	-84.9	-84.9		0.10 (1)	10.00
F- E	0 / 0	-18.5	-18.5		0.04 (4)	10.00
E- D	0 / 0	-18.5	-18.5		0.04 (4)	10.00

WEBS

MEMB. FR-TO	MAX. FACTORED FORCE (LBS)	MAX CSI (LC)
B- E	0 / 0	0.00 (1)

CANTILEVER ANALYSIS HAS BEEN CONSIDERED IN THIS DESIGN

DESIGN CRITERIA

SPECIFIED LOADS:

TOP CH.	LL	=	23.3	PSF
	DL	=	6.0	PSF
BOT CH.	LL	=	0.0	PSF
	DL	=	7.4	PSF
TOTAL LOAD		=	36.7	PSF

SPACING = 24.0 IN. C/C

THIS TRUSS IS DESIGNED FOR RESIDENTIAL OR SMALL BUILDING REQUIREMENTS OF PART 9, NBCC 2015

THIS DESIGN COMPLIES WITH:
- PART 9 OF BCBC 2018 , NBC-2019AE
- PART 9 OF OBC 2012 (2019 AMENDMENT)
- CSA 086-14
- TPIC 2014

(55 % OF 27.2 P.S.F. G.S.L. PLUS 8.4 P.S.F. RAIN LOAD) EQUALS 23.3 P.S.F. SPECIFIED ROOF LIVE LOAD

ALLOWABLE DEFL.(LL)= L/360 (0.19")
CALCULATED VERT. DEFL.(LL) = L/ 999 (0.00")
ALLOWABLE DEFL.(TL)= L/360 (0.19")
CALCULATED VERT. DEFL.(TL) = L/ 999 (0.00")

CSI: TC=0.13/1.00 (A-B:5) , BC=0.04/1.00 (E-F:4) , WB=0.00/1.00 (B-E:1) , SSI=0.09/1.00 (A-B:5)

DOL LUMBER=1.00 NAIL=1.00 LS BEND=1.10 COMP=1.10 SHEAR=1.10 TENS= 1.10

COMPANION LIVE LOAD FACTOR = 1.00

TRUSS PLATE MANUFACTURER IS NOT RESPONSIBLE FOR QUALITY CONTROL IN THE TRUSS MANUFACTURING PLANT .

NAIL VALUES

PLATE	GRIP(DRY) (PSI) MAX	MIN	SHEAR (PLI) MAX	MIN	SECTION (PLI) MAX	MIN
MT20	650	371	1747	788	1987	1873

PLATE PLACEMENT TOL. = 0.250 inches

PLATE ROTATION TOL. = 5.0 Deg.

JSI GRIP= 0.14 (B) (INPUT = 0.90)
JSI METAL= 0.04 (B) (INPUT = 0.95)

LICENSED PROFESSIONAL ENGINEER
02-28-24
H. J. G. ALVES
100009024
PROVINCE OF ONTARIO

Structural component only
DWG# T-2406386

JOB NAME	TRUSS NAME	QUANTITY	PLY	JOB DESC.	DRWG NO.
425913	J5	2	1	ROYAL PINE HOMES TRUSS DESC.	

Tamarack Roof Truss, Burlington

Version 8.630 S Aug 30 2023 MiTek Industries, Inc. Wed Feb 28 15:02:28 2024 Page 1
ID:VI_DQvi1e49Qy7axT?i10OzOYuG-UBo_QErUyGmYZX81ckWOTxCFu97qsCWynjvTttzgawf

Scale = 1:27.2

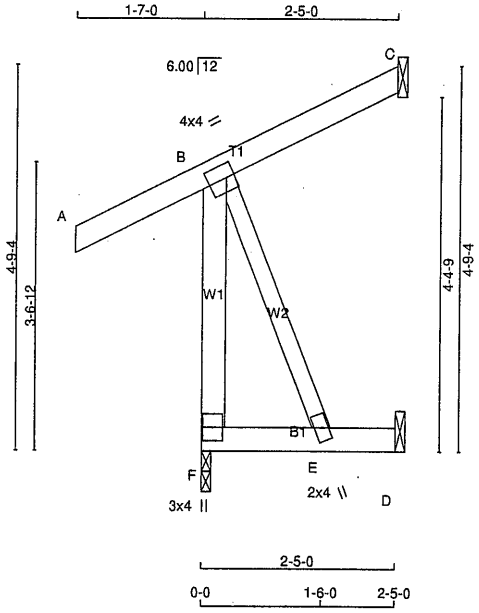

TOTAL WEIGHT = 2 X 14 = 29 lb
[M]

LUMBER
N. L. G. A. RULES

CHORDS	SIZE		LUMBER	DESCR.
F - B	2x4	DRY	No.2	SPF
A - C	2x4	DRY	No.2	SPF
F - D	2x4	DRY	No.2	SPF
ALL WEBS	2x3	DRY	No.2	SPF

DRY: SEASONED LUMBER.

PLATES (table is in inches)

JT	TYPE	PLATES	W	LEN	Y	X
B	TMVW-t	MT20	4.0	4.0	2.00	1.25
E	BMW+w	MT20	2.0	4.0		
F	BMV1+p	MT20	3.0	4.0		

NOTES- (1)
1) Lateral braces to be a minimum of 2X4 SPF #2.

DIMENSIONS, SUPPORTS AND LOADINGS SPECIFIED BY FABRICATOR TO BE VERIFIED BY BUILDING DESIGNER

BEARINGS

JT	FACTORED GROSS REACTION VERT	HORZ	MAXIMUM FACTORED GROSS REACTION DOWN	HORZ	UPLIFT	INPUT BRG IN-SX	REQRD BRG IN-SX
F	265	0	265	0	0	1-8	1-8
C	103	0	103	0	0	1-8	1-8
D	22	0	25	0	0	1-8	1-8

SEE MITEK STANDARD DETAIL MSD2015-H FOR CONNECTION TO JOINT(S) C , D

UNFACTORED REACTIONS

JT	1ST LCASE COMBINED	MAX./MIN. COMPONENT REACTIONS SNOW	LIVE	PERM.LIVE	WIND	DEAD	SOIL
F	185	133 / 0	0 / 0	0 / 0	0 / 0	52 / 0	0 / 0
C	71	56 / 0	0 / 0	0 / 0	0 / 0	14 / 0	0 / 0
D	18	0 / 0	0 / 0	0 / 0	0 / 0	18 / 0	0 / 0

BEARING MATERIAL TO BE SPF NO.2 OR BETTER AT JOINT(S) F

BRACING
TOP CHORD TO BE SHEATHED OR MAX. PURLIN SPACING = 10.00 FT.
MAX. UNBRACED BOTTOM CHORD LENGTH = 10.00 FT OR RIGID CEILING DIRECTLY APPLIED.

ALL PITCH BREAKS AND PERIMETER CORNER JOINTS MUST BE LATERALLY RESTRAINED.

LOADING
TOTAL LOAD CASES: (5)

CHORDS

MEMB. FR-TO	MAX. FACTORED FORCE (LBS)	FACTORED VERT. LOAD LC1 (PLF) FROM	TO	MAX CSI (LC)	MAX. UNBRAC LENGTH
F- B	-242 / 0	0.0	0.0	0.05 (1)	7.81
A- B	0 / 31	-84.9	-84.9	0.17 (5)	10.00
B- C	0 / 0	-84.9	-84.9	0.08 (1)	10.00
F- E	0 / 0	-18.5	-18.5	0.03 (4)	10.00
E- D	0 / 0	-18.5	-18.5	0.03 (4)	10.00

WEBS

MEMB. FR-TO	MAX. FACTORED FORCE (LBS)	MAX CSI (LC)
B- E	0 / 0	0.00 (1)

CANTILEVER ANALYSIS HAS BEEN CONSIDERED IN THIS DESIGN

DESIGN CRITERIA

SPECIFIED LOADS:

TOP CH.	LL	=	23.3	PSF
	DL	=	6.0	PSF
BOT CH.	LL	=	0.0	PSF
	DL	=	7.4	PSF
TOTAL LOAD		=	36.7	PSF

SPACING = 24.0 IN. C/C

THIS TRUSS IS DESIGNED FOR RESIDENTIAL OR SMALL BUILDING REQUIREMENTS OF PART 9, NBCC 2015

THIS DESIGN COMPLIES WITH:
- PART 9 OF BCBC 2018 , NBC-2019AE
- PART 9 OF OBC 2012 (2019 AMENDMENT)
- CSA 086-14
- TPIC 2014

(55 % OF 27.2 P.S.F. G.S.L. PLUS 8.4 P.S.F. RAIN LOAD) EQUALS 23.3 P.S.F. SPECIFIED ROOF LIVE LOAD

ALLOWABLE DEFL.(LL)= L/360 (0.19")
CALCULATED VERT. DEFL.(LL) = L/ 999 (0.00")
ALLOWABLE DEFL.(TL)= L/360 (0.19")
CALCULATED VERT. DEFL.(TL) = L/ 999 (0.00")

CSI: TC=0.17/1.00 (A-B:5) , BC=0.03/1.00 (E-F:4) , WB=0.00/1.00 (B-E:1) , SSI=0.10/1.00 (A-B:5)

DOL LUMBER=1.00 NAIL=1.00 LS BEND=1.10 COMP=1.10 SHEAR=1.10 TENS= 1.10

COMPANION LIVE LOAD FACTOR = 1.00

TRUSS PLATE MANUFACTURER IS NOT RESPONSIBLE FOR QUALITY CONTROL IN THE TRUSS MANUFACTURING PLANT .

NAIL VALUES

PLATE	GRIP(DRY) (PSI) MAX	MIN	SHEAR (PLI) MAX	MIN	SECTION (PLI) MAX	MIN
MT20	650	371	1747	788	1987	1873

PLATE PLACEMENT TOL. = 0.250 inches

PLATE ROTATION TOL. = 5.0 Deg.

JSI GRIP= 0.14 (B) (INPUT = 0.90)
JSI METAL= 0.04 (B) (INPUT = 0.95)

LICENSED PROFESSIONAL ENGINEER
02-28-24
H. J. G. ALVES
100009024
PROVINCE OF ONTARIO

Structural component only
DWG# T-2406387

JOB NAME	TRUSS NAME	QUANTITY	PLY	JOB DESC.	DRWG NO.
425913	J6	2	1	ROYAL PINE HOMES TRUSS DESC.	

Tamarack Roof Truss, Burlington

Version 8.630 S Aug 30 2023 MiTek Industries, Inc. Wed Feb 28 15:02:29 2024 Page 1
ID:VI_DQvi1e49Qy7axT?i10OzOYuG-yNMNdas7jZvPBhjE9R1d08kRHZTMbfI6?Ne0PKzgawe

Scale = 1:13.3

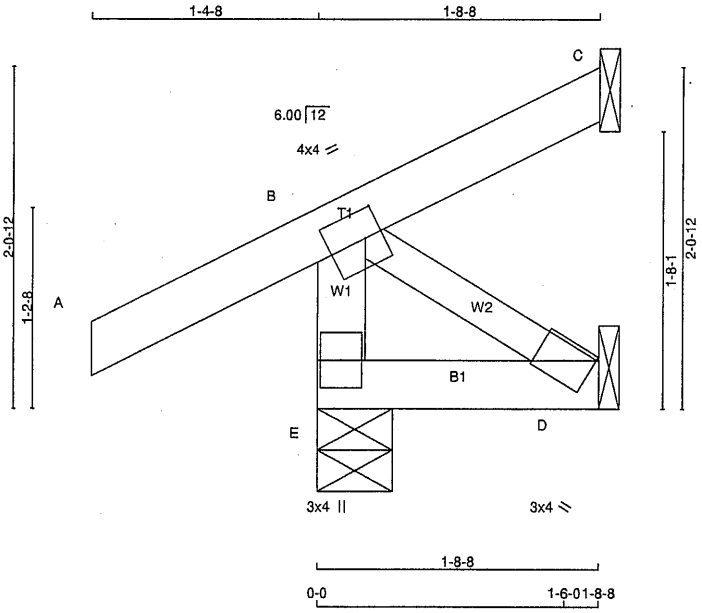

TOTAL WEIGHT = 2 X 8 = 16 lb
[M]

LUMBER
N. L. G. A. RULES

CHORDS	SIZE		LUMBER	DESCR.
E - B	2x4	DRY	No.2	SPF
A - C	2x4	DRY	No.2	SPF
E - D	2x4	DRY	No.2	SPF
ALL WEBS	2x3	DRY	No.2	SPF

DRY: SEASONED LUMBER.

PLATES (table is in inches)

JT	TYPE	PLATES	W	LEN	Y	X
B	TMVW-t	MT20	4.0	4.0	2.00	1.25
D	BMW1+w	MT20	3.0	4.0		
E	BMV1+p	MT20	3.0	4.0		

NOTES- (1)
1) Lateral braces to be a minimum of 2X4 SPF #2.

DIMENSIONS, SUPPORTS AND LOADINGS SPECIFIED BY FABRICATOR TO BE VERIFIED BY BUILDING DESIGNER

BEARINGS

JT	FACTORED GROSS REACTION VERT	HORZ	MAXIMUM FACTORED GROSS REACTION DOWN	HORZ	UPLIFT	INPUT BRG IN-SX	REQRD BRG IN-SX
E	260	0	260	0	0	5-8	1-8
C	21	0	21	0	-42	1-8	1-8
D	14	0	16	0	0	1-8	1-8

SEE MITEK STANDARD DETAIL MSD2015-H FOR CONNECTION TO JOINT(S) C , D

PROVIDE ANCHORAGE AT BEARING JOINT C FOR 150 LBS FACTORED UPLIFT

UNFACTORED REACTIONS

JT	1ST LCASE COMBINED	MAX./MIN. COMPONENT REACTIONS SNOW	LIVE	PERM.LIVE	WIND	DEAD	SOIL
E	181	135 / 0	0 / 0	0 / 0	0 / 0	46 / 0	0 / 0
C	14	12 / -28	0 / 0	0 / 0	0 / 0	3 / 0	0 / 0
D	11	0 / 0	0 / 0	0 / 0	0 / 0	11 / 0	0 / 0

BEARING MATERIAL TO BE SPF NO.2 OR BETTER AT JOINT(S) E

BRACING
TOP CHORD TO BE SHEATHED OR MAX. PURLIN SPACING = 6.25 FT.
MAX. UNBRACED BOTTOM CHORD LENGTH = 10.00 FT OR RIGID CEILING DIRECTLY APPLIED.

ALL PITCH BREAKS AND PERIMETER CORNER JOINTS MUST BE LATERALLY RESTRAINED.

LOADING
TOTAL LOAD CASES: (5)

CHORDS

MEMB. FR-TO	FORCE (LBS)	FACTORED VERT. LOAD (PLF) FROM	TO	LC1 MAX CSI (LC)	MAX. UNBRAC LENGTH
E- B	-246 / 0	0.0	0.0	0.02 (1)	7.81
A- B	0 / 27	-84.9	-84.9	0.12 (1)	10.00
B- C	-23 / 0	-84.9	-84.9	0.12 (1)	6.25
E- D	0 / 0	-18.5	-18.5	0.01 (4)	10.00

WEBS

MEMB. FR-TO	FORCE (LBS)	MAX CSI (LC)
B- D	0 / 0	0.00 (1)

CANTILEVER ANALYSIS HAS BEEN CONSIDERED IN THIS DESIGN

DESIGN CRITERIA

SPECIFIED LOADS:

TOP CH.	LL	=	23.3	PSF
	DL	=	6.0	PSF
BOT CH.	LL	=	0.0	PSF
	DL	=	7.4	PSF
TOTAL LOAD		=	36.7	PSF

SPACING = 24.0 IN. C/C

THIS TRUSS IS DESIGNED FOR RESIDENTIAL OR SMALL BUILDING REQUIREMENTS OF PART 9, NBCC 2015

THIS DESIGN COMPLIES WITH:
- PART 9 OF BCBC 2018 , NBC-2019AE
- PART 9 OF OBC 2012 (2019 AMENDMENT)
- CSA 086-14
- TPIC 2014

DESIGN ASSUMPTIONS
-OVERHANG NOT TO BE ALTERED OR CUT OFF.

(55 % OF 27.2 P.S.F. G.S.L. PLUS 8.4 P.S.F. RAIN LOAD) EQUALS 23.3 P.S.F. SPECIFIED ROOF LIVE LOAD

ALLOWABLE DEFL.(TL)= L/360 (0.19")
CALCULATED VERT. DEFL.(TL) = L/ 999 (0.00")

CSI: TC=0.12/1.00 (A-B:1) , BC=0.01/1.00 (D-E:4) , WB=0.00/1.00 (B-D:1) , SSI=0.09/1.00 (B-C:1)

DOL LUMBER=1.00 NAIL=1.00 LS BEND=1.10 COMP=1.10 SHEAR=1.10 TENS= 1.10

COMPANION LIVE LOAD FACTOR = 1.00

AUTOSOLVE RIGHT HEEL ONLY

TRUSS PLATE MANUFACTURER IS NOT RESPONSIBLE FOR QUALITY CONTROL IN THE TRUSS MANUFACTURING PLANT .

NAIL VALUES

PLATE	GRIP(DRY) (PSI) MAX	MIN	SHEAR (PLI) MAX	MIN	SECTION (PLI) MAX	MIN
MT20	650	371	1747	788	1987	1873

PLATE PLACEMENT TOL. = 0.250 inches

PLATE ROTATION TOL. = 5.0 Deg.

JSI GRIP= 0.14 (B) (INPUT = 0.90)
JSI METAL= 0.04 (B) (INPUT = 0.95)

LICENSED PROFESSIONAL ENGINEER
02-28-24
H. J. G. ALVES
100009024
PROVINCE OF ONTARIO

Structural component only
DWG# T-2406388

JOB NAME	TRUSS NAME	QUANTITY	PLY	JOB DESC.	DRWG NO.
425913	J7	2	1	ROYAL PINE HOMES TRUSS DESC.	

Tamarack Roof Truss, Burlington

Version 8.630 S Aug 30 2023 MiTek Industries, Inc. Wed Feb 28 15:02:30 2024 Page 1
ID:VI_DQvi1e49Qy7axT?i10OzOYuG-RawlrwtlUt1GorlQj9YsYMHc1zpaK6?FE1Oaymzgawc

Scale = 1:25.0

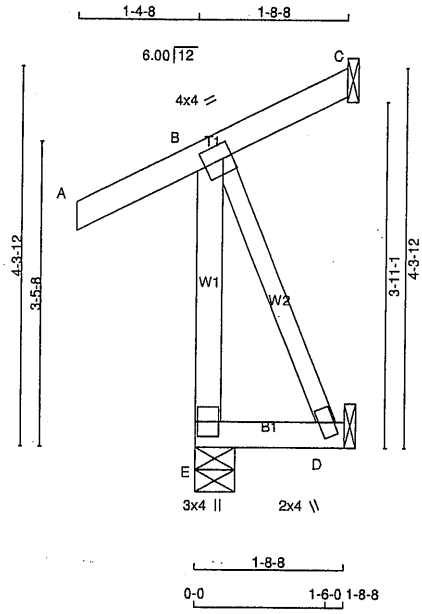

TOTAL WEIGHT = 2 X 12 = 24 lb

LUMBER
N. L. G. A. RULES

CHORDS	SIZE		LUMBER	DESCR.
E - B	2x4	DRY	No.2	SPF
A - C	2x4	DRY	No.2	SPF
E - D	2x4	DRY	No.2	SPF
ALL WEBS	2x3	DRY	No.2	SPF

DRY: SEASONED LUMBER.

PLATES (table is in inches)

JT	TYPE	PLATES	W	LEN	Y	X
B	TMVW-t	MT20	4.0	4.0	2.00	1.25
D	BMW1+w	MT20	2.0	4.0		
E	BMV1+p	MT20	3.0	4.0		

NOTES- (1)
1) Lateral braces to be a minimum of 2X4 SPF #2.

DIMENSIONS, SUPPORTS AND LOADINGS SPECIFIED BY FABRICATOR TO BE VERIFIED BY BUILDING DESIGNER

BEARINGS

JT	FACTORED GROSS REACTION VERT	HORZ	MAXIMUM FACTORED GROSS REACTION DOWN	HORZ	UPLIFT	INPUT BRG IN-SX	REQRD BRG IN-SX
E	260	0	260	0	0	5-8	1-8
C	21	0	21	0	-42	1-8	1-8
D	14	0	16	0	0	1-8	1-8

SEE MITEK STANDARD DETAIL MSD2015-H FOR CONNECTION TO JOINT(S) C , D

PROVIDE ANCHORAGE AT BEARING JOINT C FOR 150 LBS FACTORED UPLIFT

UNFACTORED REACTIONS

JT	1ST LCASE COMBINED	MAX./MIN. COMPONENT REACTIONS SNOW	LIVE	PERM.LIVE	WIND	DEAD	SOIL
E	181	135 / 0	0 / 0	0 / 0	0 / 0	46 / 0	0 / 0
C	14	12 / -28	0 / 0	0 / 0	0 / 0	3 / 0	0 / 0
D	11	0 / 0	0 / 0	0 / 0	0 / 0	11 / 0	0 / 0

BEARING MATERIAL TO BE SPF NO.2 OR BETTER AT JOINT(S) E

BRACING
TOP CHORD TO BE SHEATHED OR MAX. PURLIN SPACING = 6.25 FT.
MAX. UNBRACED BOTTOM CHORD LENGTH = 10.00 FT OR RIGID CEILING DIRECTLY APPLIED.

ALL PITCH BREAKS AND PERIMETER CORNER JOINTS MUST BE LATERALLY RESTRAINED.

LOADING
TOTAL LOAD CASES: (5)

CHORDS

MEMB. FR-TO	MAX. FACTORED FORCE (LBS)	FACTORED VERT. LOAD (PLF) FROM	TO	LC1 CSI (LC)	MAX UNBRAC LENGTH
E- B	-246 / 0	0.0	0.0	0.05 (1)	7.81
A- B	0 / 27	-84.9	-84.9	0.12 (1)	10.00
B- C	-23 / 0	-84.9	-84.9	0.12 (1)	6.25
E- D	0 / 0	-18.5	-18.5	0.01 (4)	10.00

WEBS

MEMB. FR-TO	MAX. FACTORED FORCE (LBS)	MAX CSI (LC)
B- D	0 / 0	0.00 (1)

CANTILEVER ANALYSIS HAS BEEN CONSIDERED IN THIS DESIGN

DESIGN CRITERIA

SPECIFIED LOADS:

TOP CH.	LL =	23.3	PSF
	DL =	6.0	PSF
BOT CH.	LL =	0.0	PSF
	DL =	7.4	PSF
TOTAL LOAD	=	36.7	PSF

SPACING = 24.0 IN. C/C

THIS TRUSS IS DESIGNED FOR RESIDENTIAL OR SMALL BUILDING REQUIREMENTS OF PART 9, NBCC 2015

THIS DESIGN COMPLIES WITH:
- PART 9 OF BCBC 2018 , NBC-2019AE
- PART 9 OF OBC 2012 (2019 AMENDMENT)
- CSA 086-14
- TPIC 2014

DESIGN ASSUMPTIONS
-OVERHANG NOT TO BE ALTERED OR CUT OFF.

(55 % OF 27.2 P.S.F. G.S.L. PLUS 8.4 P.S.F. RAIN LOAD) EQUALS 23.3 P.S.F. SPECIFIED ROOF LIVE LOAD

ALLOWABLE DEFL.(TL)= L/360 (0.19")
CALCULATED VERT. DEFL.(TL) = L/ 999 (0.00")

CSI: TC=0.12/1.00 (A-B:1) , BC=0.01/1.00 (D-E:4) , WB=0.00/1.00 (B-D:1) , SSI=0.09/1.00 (B-C:1)

DOL LUMBER=1.00 NAIL=1.00 LS BEND=1.10 COMP=1.10 SHEAR=1.10 TENS= 1.10

COMPANION LIVE LOAD FACTOR = 1.00

TRUSS PLATE MANUFACTURER IS NOT RESPONSIBLE FOR QUALITY CONTROL IN THE TRUSS MANUFACTURING PLANT .

NAIL VALUES

PLATE	GRIP(DRY) (PSI) MAX	MIN	SHEAR (PLI) MAX	MIN	SECTION (PLI) MAX	MIN
MT20	650	371	1747	788	1987	1873

PLATE PLACEMENT TOL. = 0.250 inches

PLATE ROTATION TOL. = 5.0 Deg.

JSI GRIP= 0.14 (B) (INPUT = 0.90)
JSI METAL= 0.04 (B) (INPUT = 0.95)

LICENSED PROFESSIONAL ENGINEER
02-28-24
H. J. G. ALVES
100009024
PROVINCE OF ONTARIO

Structural component only
DWG# T-2406389

JOB NAME	TRUSS NAME	QUANTITY	PLY	JOB DESC.	DRWG NO.
425914	J8	7	1	ROYAL PINE HOMES TRUSS DESC.	

Tamarack Roof Truss, Burlington

Version 8.630 S Aug 30 2023 MiTek Industries, Inc. Wed Feb 28 16:19:19 2024 Page 1
ID:VI_DQvi1e49Qy7axT?i10OzOYuG-_Gw8Auep3_iIF98EDdkhrIgCstqxkc0f4bMzD7zgZoc

Scale = 1:22.6

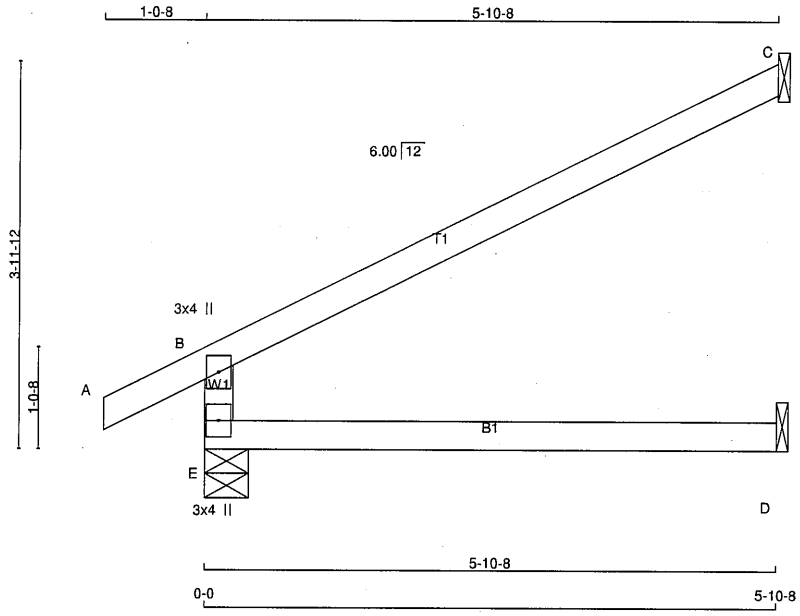

TOTAL WEIGHT = 7 X 16 = 114 lb

LUMBER
N. L. G. A. RULES

CHORDS	SIZE		LUMBER	DESCR.
E - B	2x4	DRY	No.2	SPF
A - C	2x4	DRY	No.2	SPF
E - D	2x4	DRY	No.2	SPF

DRY: SEASONED LUMBER.

PLATES (table is in inches)

JT	TYPE	PLATES	W	LEN	Y	X
B	TMV+p	MT20	3.0	4.0		
E	BMV1+p	MT20	3.0	4.0		

NOTES- (1)
1) Lateral braces to be a minimum of 2X4 SPF #2.

DIMENSIONS, SUPPORTS AND LOADINGS SPECIFIED BY FABRICATOR TO BE VERIFIED BY BUILDING DESIGNER

BEARINGS

JT	FACTORED GROSS REACTION VERT	HORZ	MAXIMUM FACTORED GROSS REACTION DOWN	HORZ	UPLIFT	INPUT BRG IN-SX	REQRD BRG IN-SX
E	470	0	470	0	0	5-8	1-8
C	187	0	187	0	0	1-8	1-8
D	44	0	50	0	0	1-8	1-8

SEE MITEK STANDARD DETAIL MSD2015-H FOR CONNECTION TO JOINT(S) C , D

UNFACTORED REACTIONS

JT	1ST LCASE COMBINED	MAX./MIN. COMPONENT REACTIONS SNOW	LIVE	PERM.LIVE	WIND	DEAD	SOIL
E	331	223 / 0	0 / 0	0 / 0	0 / 0	109 / 0	0 / 0
C	129	103 / 0	0 / 0	0 / 0	0 / 0	26 / 0	0 / 0
D	36	0 / 0	0 / 0	0 / 0	0 / 0	36 / 0	0 / 0

BEARING MATERIAL TO BE SPF NO.2 OR BETTER AT JOINT(S) E, C

BRACING
TOP CHORD TO BE SHEATHED OR MAX. PURLIN SPACING = 6.25 FT.
MAX. UNBRACED BOTTOM CHORD LENGTH = 10.00 FT OR RIGID CEILING DIRECTLY APPLIED.

ALL PITCH BREAKS AND PERIMETER CORNER JOINTS MUST BE LATERALLY RESTRAINED.

LOADING
TOTAL LOAD CASES: (4)

CHORDS MEMB. FR-TO	MAX. FACTORED FORCE (LBS)	FACTORED VERT. LOAD LC1 (PLF) FROM	TO	MAX CSI (LC)	MAX. UNBRAC LENGTH	WEBS MEMB. FR-TO	MAX. FACTORED FORCE (LBS)	MAX CSI (LC)
E- B	-405 / 0	0.0	0.0	0.11 (4)	7.81			
A- B	0 / 21	-84.9	-84.9	0.07 (1)	10.00			
B- C	-28 / 0	-84.9	-84.9	0.38 (1)	6.25			
E- D	0 / 0	-18.5	-18.5	0.14 (4)	10.00			

DESIGN CRITERIA [M][F]

SPECIFIED LOADS:

TOP CH.	LL	=	23.3	PSF
	DL	=	6.0	PSF
BOT CH.	LL	=	0.0	PSF
	DL	=	7.4	PSF
TOTAL LOAD		=	36.7	PSF

SPACING = 24.0 IN. C/C

THIS TRUSS IS DESIGNED FOR RESIDENTIAL OR SMALL BUILDING REQUIREMENTS OF PART 9, NBCC 2015

THIS DESIGN COMPLIES WITH:
- PART 9 OF BCBC 2018 , NBC-2019AE
- PART 9 OF OBC 2012 (2019 AMENDMENT)
- CSA 086-14
- TPIC 2014

DESIGN ASSUMPTIONS
-OVERHANG NOT TO BE ALTERED OR CUT OFF.

(55 % OF 27.2 P.S.F. G.S.L. PLUS 8.4 P.S.F. RAIN LOAD) EQUALS 23.3 P.S.F. SPECIFIED ROOF LIVE LOAD

ALLOWABLE DEFL.(LL)= L/360 (0.20")
CALCULATED VERT. DEFL.(LL) = L/ 999 (0.00")
ALLOWABLE DEFL.(TL)= L/360 (0.20")
CALCULATED VERT. DEFL.(TL) = L/ 999 (0.03")

CSI: TC=0.38/1.00 (B-C:1) , BC=0.14/1.00 (D-E:4) , WB=0.00/1.00 (n/a:0) , SSI=0.22/1.00 (B-C:1)

DOL LUMBER=1.00 NAIL=1.00 LS BEND=1.10 COMP=1.10 SHEAR=1.10 TENS= 1.10

COMPANION LIVE LOAD FACTOR = 1.00

AUTOSOLVE RIGHT HEEL ONLY

TRUSS PLATE MANUFACTURER IS NOT RESPONSIBLE FOR QUALITY CONTROL IN THE TRUSS MANUFACTURING PLANT .

NAIL VALUES

PLATE	GRIP(DRY) (PSI) MAX	MIN	SHEAR (PLI) MAX	MIN	SECTION (PLI) MAX	MIN
MT20	650	371	1747	788	1987	1873

PLATE PLACEMENT TOL. = 0.250 inches

PLATE ROTATION TOL. = 5.0 Deg.

JSI GRIP= 0.16 (E) (INPUT = 0.90)
JSI METAL= 0.11 (B) (INPUT = 0.95)

LICENSED PROFESSIONAL ENGINEER
02-28-24
H. J. G. ALVES
100009024
PROVINCE OF ONTARIO

Structural component only
DWG# T-2406457

JOB NAME	TRUSS NAME	QUANTITY	PLY	JOB DESC.	DRWG NO.
425913	J9	6	1	ROYAL PINE HOMES TRUSS DESC.	

Tamarack Roof Truss, Burlington

Version 8.630 S Aug 30 2023 MiTek Industries, Inc. Wed Feb 28 15:02:31 2024 Page 1
ID:VI_DQvi1e49Qy7axT?i10OzOYuG-vmU72GtNFB97Q?tcHs455Zqm1N8?3ZFOTh77UCzgawc

Scale = 1:17.6

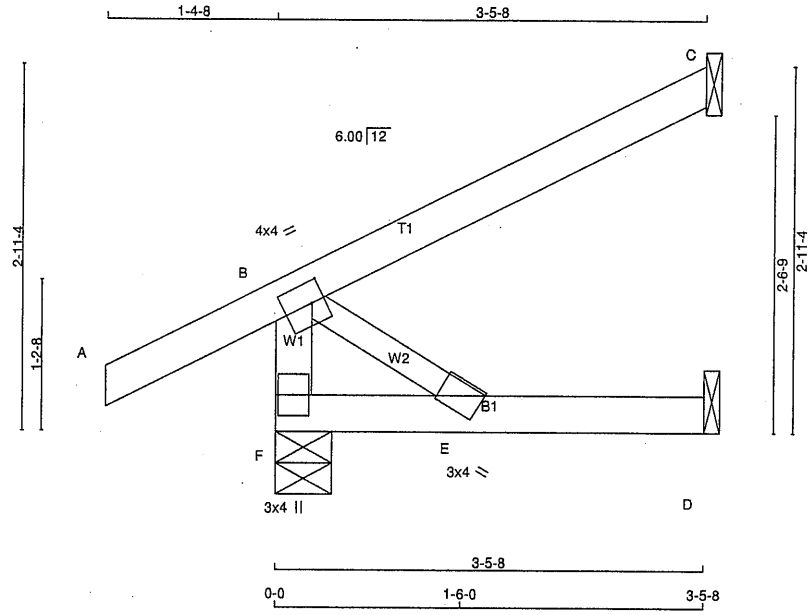

TOTAL WEIGHT = 6 X 12 = 74 lb
[M]

LUMBER
N. L. G. A. RULES

CHORDS	SIZE		LUMBER	DESCR.
F - B	2x4	DRY	No.2	SPF
A - C	2x4	DRY	No.2	SPF
F - D	2x4	DRY	No.2	SPF
ALL WEBS	2x3	DRY	No.2	SPF

DRY: SEASONED LUMBER.

PLATES (table is in inches)

JT	TYPE	PLATES	W	LEN	Y	X
B	TMVW-t	MT20	4.0	4.0	2.00	1.25
E	BMW+w	MT20	3.0	4.0		
F	BMV1+p	MT20	3.0	4.0		

NOTES- (1)
1) Lateral braces to be a minimum of 2X4 SPF #2.

DIMENSIONS, SUPPORTS AND LOADINGS SPECIFIED BY FABRICATOR TO BE VERIFIED BY BUILDING DESIGNER

BEARINGS

JT	FACTORED GROSS REACTION VERT	HORZ	MAXIMUM FACTORED GROSS REACTION DOWN	HORZ	UPLIFT	INPUT BRG IN-SX	REQRD BRG IN-SX
F	301	0	301	0	0	5-8	1-8
C	147	0	147	0	0	1-8	1-8
D	32	0	36	0	0	1-8	1-8

SEE MITEK STANDARD DETAIL MSD2015-H FOR CONNECTION TO JOINT(S) C , D

UNFACTORED REACTIONS

JT	1ST LCASE COMBINED	MAX./MIN. COMPONENT REACTIONS SNOW	LIVE	PERM.LIVE	WIND	DEAD	SOIL
F	211	148 / 0	0 / 0	0 / 0	0 / 0	64 / 0	0 / 0
C	101	81 / 0	0 / 0	0 / 0	0 / 0	21 / 0	0 / 0
D	26	0 / 0	0 / 0	0 / 0	0 / 0	26 / 0	0 / 0

BEARING MATERIAL TO BE SPF NO.2 OR BETTER AT JOINT(S) F

BRACING
TOP CHORD TO BE SHEATHED OR MAX. PURLIN SPACING = 10.00 FT.
MAX. UNBRACED BOTTOM CHORD LENGTH = 10.00 FT OR RIGID CEILING DIRECTLY APPLIED.

ALL PITCH BREAKS AND PERIMETER CORNER JOINTS MUST BE LATERALLY RESTRAINED.

LOADING
TOTAL LOAD CASES: (5)

CHORDS

MEMB. FR-TO	MAX. FACTORED FORCE (LBS)	FACTORED VERT. LOAD (PLF) FROM	TO	LC1 MAX CSI (LC)	MAX. UNBRAC LENGTH
F- B	-269 / 0	0.0	0.0	0.03 (1)	7.81
A- B	0 / 27	-84.9	-84.9	0.14 (5)	10.00
B- C	0 / 0	-84.9	-84.9	0.17 (1)	10.00
F- E	0 / 0	-18.5	-18.5	0.06 (4)	10.00
E- D	0 / 0	-18.5	-18.5	0.06 (4)	10.00

WEBS

MEMB. FR-TO	MAX. FACTORED FORCE (LBS)	MAX CSI (LC)
B- E	0 / 0	0.00 (1)

CANTILEVER ANALYSIS HAS BEEN CONSIDERED IN THIS DESIGN

DESIGN CRITERIA

SPECIFIED LOADS:

TOP CH.	LL	=	23.3	PSF
	DL	=	6.0	PSF
BOT CH.	LL	=	0.0	PSF
	DL	=	7.4	PSF
TOTAL LOAD		=	36.7	PSF

SPACING = 24.0 IN. C/C

THIS TRUSS IS DESIGNED FOR RESIDENTIAL OR SMALL BUILDING REQUIREMENTS OF PART 9, NBCC 2015

THIS DESIGN COMPLIES WITH:
- PART 9 OF BCBC 2018 , NBC-2019AE
- PART 9 OF OBC 2012 (2019 AMENDMENT)
- CSA 086-14
- TPIC 2014

(55 % OF 27.2 P.S.F. G.S.L. PLUS 8.4 P.S.F. RAIN LOAD) EQUALS 23.3 P.S.F. SPECIFIED ROOF LIVE LOAD

ALLOWABLE DEFL.(LL)= L/360 (0.19")
CALCULATED VERT. DEFL.(LL) = L/ 999 (0.00")
ALLOWABLE DEFL.(TL)= L/360 (0.19")
CALCULATED VERT. DEFL.(TL) = L/ 999 (0.01")

CSI: TC=0.17/1.00 (B-C:1) , BC=0.06/1.00 (D-E:4) , WB=0.00/1.00 (B-E:1) , SSI=0.10/1.00 (B-C:1)

DOL LUMBER=1.00 NAIL=1.00 LS BEND=1.10 COMP=1.10 SHEAR=1.10 TENS= 1.10

COMPANION LIVE LOAD FACTOR = 1.00

AUTOSOLVE RIGHT HEEL ONLY

TRUSS PLATE MANUFACTURER IS NOT RESPONSIBLE FOR QUALITY CONTROL IN THE TRUSS MANUFACTURING PLANT .

NAIL VALUES

PLATE	GRIP(DRY) (PSI) MAX	MIN	SHEAR (PLI) MAX	MIN	SECTION (PLI) MAX	MIN
MT20	650	371	1747	788	1987	1873

PLATE PLACEMENT TOL. = 0.250 inches

PLATE ROTATION TOL. = 5.0 Deg.

JSI GRIP= 0.16 (B) (INPUT = 0.90)
JSI METAL= 0.04 (B) (INPUT = 0.95)

LICENSED PROFESSIONAL ENGINEER
02-28-24
H. J. G. ALVES
100009024
PROVINCE OF ONTARIO

Structural component only
DWG# T-2406390

JOB NAME	TRUSS NAME	QUANTITY	PLY	JOB DESC.	DRWG NO.
425913	J11	11	1	ROYAL PINE HOMES TRUSS DESC.	

Tamarack Roof Truss, Burlington

Version 8.630 S Aug 30 2023 MiTek Industries, Inc. Wed Feb 28 15:02:32 2024 Page 1
ID:VI_DQvi1e49Qy7axT?i10OzOYuG-Ny2VGbu?0UH_29RprabKdnMshmSJo0VYiLtg0fzgawb

Scale = 1:23.5

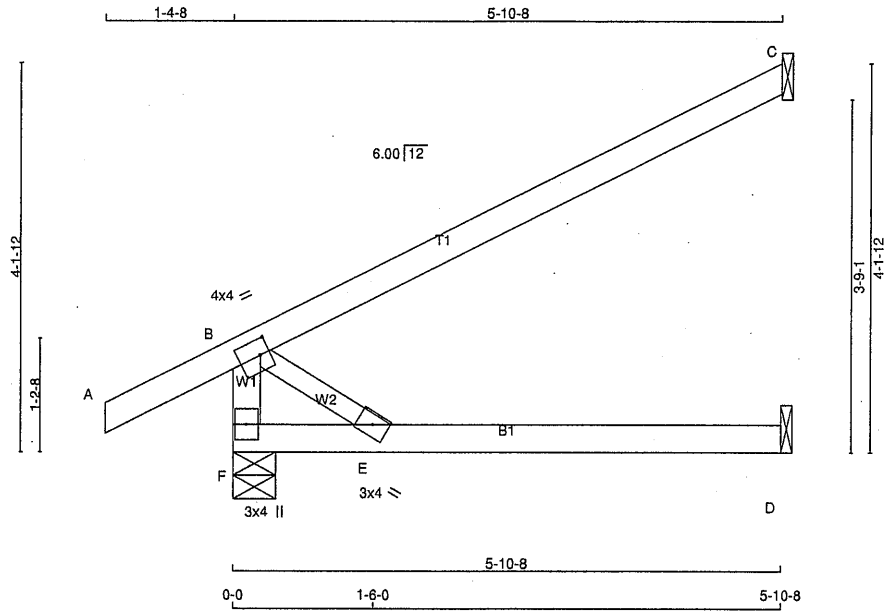

TOTAL WEIGHT = 11 X 18 = 201 lb

[M]

LUMBER
N. L. G. A. RULES

CHORDS	SIZE		LUMBER	DESCR.
F - B	2x4	DRY	No.2	SPF
A - C	2x4	DRY	No.2	SPF
F - D	2x4	DRY	No.2	SPF
ALL WEBS	2x3	DRY	No.2	SPF

DRY: SEASONED LUMBER.

PLATES (table is in inches)

JT	TYPE	PLATES	W	LEN	Y	X
B	TMVW-t	MT20	4.0	4.0	2.00	1.25
E	BMW+w	MT20	3.0	4.0		
F	BMV1+p	MT20	3.0	4.0		

NOTES- (1)
1) Lateral braces to be a minimum of 2X4 SPF #2.

DIMENSIONS, SUPPORTS AND LOADINGS SPECIFIED BY FABRICATOR TO BE VERIFIED BY BUILDING DESIGNER

BEARINGS

JT	FACTORED GROSS REACTION VERT	HORZ	MAXIMUM FACTORED GROSS REACTION DOWN	HORZ	UPLIFT	INPUT BRG IN-SX	REQRD BRG IN-SX
F	426	0	426	0	0	5-8	1-8
C	249	0	249	0	0	1-8	1-8
D	54	0	61	0	0	1-8	1-8

SEE MITEK STANDARD DETAIL MSD2015-H FOR CONNECTION TO JOINT(S) C , D

UNFACTORED REACTIONS

JT	1ST LCASE COMBINED	MAX./MIN. COMPONENT REACTIONS SNOW	LIVE	PERM.LIVE	WIND	DEAD	SOIL
F	300	204 / 0	0 / 0	0 / 0	0 / 0	96 / 0	0 / 0
C	172	137 / 0	0 / 0	0 / 0	0 / 0	35 / 0	0 / 0
D	43	0 / 0	0 / 0	0 / 0	0 / 0	43 / 0	0 / 0

BEARING MATERIAL TO BE SPF NO.2 OR BETTER AT JOINT(S) F

BRACING
TOP CHORD TO BE SHEATHED OR MAX. PURLIN SPACING = 10.00 FT.
MAX. UNBRACED BOTTOM CHORD LENGTH = 10.00 FT OR RIGID CEILING DIRECTLY APPLIED.

ALL PITCH BREAKS AND PERIMETER CORNER JOINTS MUST BE LATERALLY RESTRAINED.

LOADING
TOTAL LOAD CASES: (4)

CHORDS

MEMB. FR-TO	MAX. FACTORED FORCE (LBS)	FACTORED VERT. LOAD (PLF) FROM	TO	LC1	MAX CSI (LC)	MAX. UNBRAC LENGTH
F- B	-371 / 0	0.0	0.0	0.04 (1)	7.81	
A- B	0 / 27	-84.9	-84.9	0.12 (1)	10.00	
B- C	0 / 0	-84.9	-84.9	0.50 (1)	10.00	
F- E	0 / 0	-18.5	-18.5	0.14 (4)	10.00	
E- D	0 / 0	-18.5	-18.5	0.19 (4)	10.00	

WEBS

MEMB. FR-TO	MAX. FACTORED FORCE (LBS)	MAX CSI (LC)
B- E	0 / 0	0.00 (1)

DESIGN CRITERIA

SPECIFIED LOADS:

TOP CH.	LL =	23.3	PSF
	DL =	6.0	PSF
BOT CH.	LL =	0.0	PSF
	DL =	7.4	PSF
TOTAL LOAD	=	36.7	PSF

SPACING = 24.0 IN. C/C

THIS TRUSS IS DESIGNED FOR RESIDENTIAL OR SMALL BUILDING REQUIREMENTS OF PART 9, NBCC 2015

THIS DESIGN COMPLIES WITH:
- PART 9 OF BCBC 2018 , NBC-2019AE
- PART 9 OF OBC 2012 (2019 AMENDMENT)
- CSA 086-14
- TPIC 2014

(55 % OF 27.2 P.S.F. G.S.L. PLUS 8.4 P.S.F. RAIN LOAD) EQUALS 23.3 P.S.F. SPECIFIED ROOF LIVE LOAD

ALLOWABLE DEFL.(LL)= L/360 (0.20")
CALCULATED VERT. DEFL.(LL) = L/ 999 (0.00")
ALLOWABLE DEFL.(TL)= L/360 (0.20")
CALCULATED VERT. DEFL.(TL) = L/ 999 (0.05")

CSI: TC=0.50/1.00 (B-C:1) , BC=0.19/1.00 (D-E:4) , WB=0.00/1.00 (B-E:1) , SSI=0.17/1.00 (B-C:1)

DOL LUMBER=1.00 NAIL=1.00 LS BEND=1.10 COMP=1.10 SHEAR=1.10 TENS= 1.10

COMPANION LIVE LOAD FACTOR = 1.00

AUTOSOLVE RIGHT HEEL ONLY

TRUSS PLATE MANUFACTURER IS NOT RESPONSIBLE FOR QUALITY CONTROL IN THE TRUSS MANUFACTURING PLANT .

NAIL VALUES

PLATE	GRIP(DRY) (PSI) MAX	MIN	SHEAR (PLI) MAX	MIN	SECTION (PLI) MAX	MIN
MT20	650	371	1747	788	1987	1873

PLATE PLACEMENT TOL. = 0.250 inches

PLATE ROTATION TOL. = 5.0 Deg.

JSI GRIP= 0.22 (B) (INPUT = 0.90)
JSI METAL= 0.06 (B) (INPUT = 0.95)

LICENSED PROFESSIONAL ENGINEER
02-28-24
H. J. G. ALVES
100009024
PROVINCE OF ONTARIO

Structural component only
DWG# T-2406391

JOB NAME	TRUSS NAME	QUANTITY	PLY	JOB DESC.	DRWG NO.
425913	J11S	12	1	ROYAL PINE HOMES TRUSS DESC.	

Tamarack Roof Truss, Burlington

Version 8.630 S Aug 30 2023 MiTek Industries, Inc. Wed Feb 28 15:02:33 2024 Page 1
ID:VI_DQvi1e49Qy7axT?i10OzOYuG-r8ctTxvdnoPqfJ0?OH6ZA_v48AlZXSjhw?cEZ5zgawa

Scale = 1:23.5

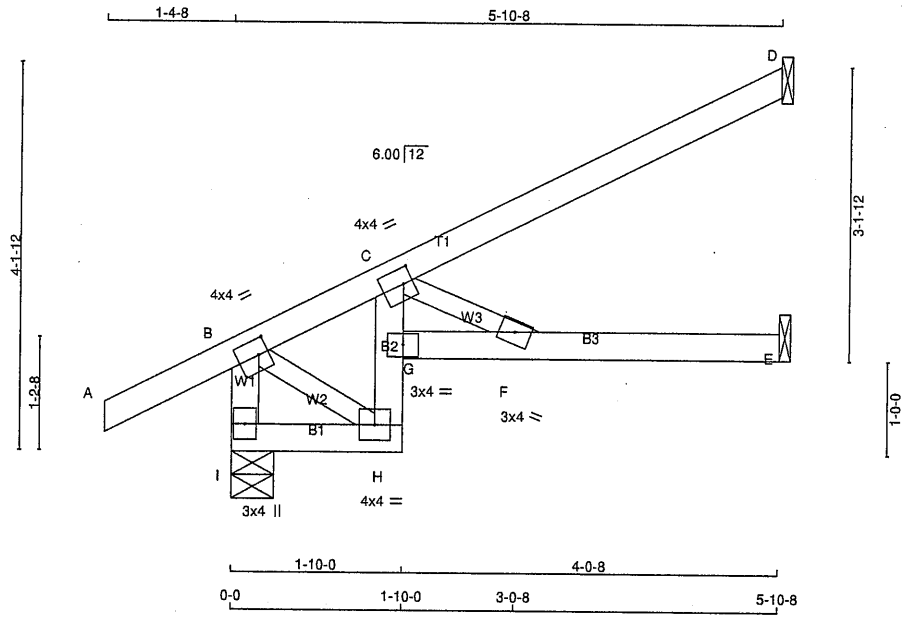

TOTAL WEIGHT = 12 X 21 = 253 lb [M]

LUMBER
N. L. G. A. RULES

CHORDS	SIZE		LUMBER	DESCR.
I - B	2x4	DRY	No.2	SPF
A - D	2x4	DRY	No.2	SPF
I - H	2x4	DRY	No.2	SPF
H - C	2x4	DRY	No.2	SPF
G - E	2x4	DRY	No.2	SPF
ALL WEBS	2x3	DRY	No.2	SPF

DRY: SEASONED LUMBER.

PLATES (table is in inches)

JT	TYPE	PLATES	W	LEN	Y	X
B	TMVW-t	MT20	4.0	4.0	2.00	1.25
C	TMVW-t	MT20	4.0	4.0	2.00	1.25
F	BMW+w	MT20	3.0	4.0		
G	BVM-I	MT20	3.0	4.0		
H	BMVW-t	MT20	4.0	4.0		
I	BMV1+p	MT20	3.0	4.0		

NOTES- (1)
1) Lateral braces to be a minimum of 2X4 SPF #2.

DIMENSIONS, SUPPORTS AND LOADINGS SPECIFIED BY FABRICATOR TO BE VERIFIED BY BUILDING DESIGNER

BEARINGS

JT	FACTORED GROSS REACTION VERT	HORZ	MAXIMUM FACTORED GROSS REACTION DOWN	HORZ	UPLIFT	INPUT BRG IN-SX	REQRD BRG IN-SX
I	441	0	441	0	0	5-8	1-8
D	180	0	180	0	0	1-8	1-8
E	108	0	108	0	0	1-8	1-8

SEE MITEK STANDARD DETAIL MSD2015-H FOR CONNECTION TO JOINT(S) D , E

UNFACTORED REACTIONS

JT	1ST LCASE COMBINED	MAX./MIN. COMPONENT REACTIONS SNOW	LIVE	PERM.LIVE	WIND	DEAD	SOIL
I	310	212 / 0	0 / 0	0 / 0	0 / 0	98 / 0	0 / 0
D	125	95 / 0	0 / 0	0 / 0	0 / 0	31 / 0	0 / 0
E	80	34 / 0	0 / 0	0 / 0	0 / 0	46 / 0	0 / 0

BEARING MATERIAL TO BE SPF NO.2 OR BETTER AT JOINT(S) I, D

BRACING
TOP CHORD TO BE SHEATHED OR MAX. PURLIN SPACING = 6.25 FT.
MAX. UNBRACED BOTTOM CHORD LENGTH = 7.81 FT OR RIGID CEILING DIRECTLY APPLIED.

ALL PITCH BREAKS AND PERIMETER CORNER JOINTS MUST BE LATERALLY RESTRAINED.

LOADING
TOTAL LOAD CASES: (4)

CHORDS

MEMB. FR-TO	MAX. FACTORED FORCE (LBS)	FACTORED VERT. LOAD LC1 (PLF) FROM	TO	MAX CSI (LC)	MAX. UNBRAC LENGTH
I- B	-425 / 0	0.0	0.0	0.04 (1)	7.81
A- B	0 / 27	-84.9	-84.9	0.12 (1)	10.00
B- C	-213 / 0	-84.9	-84.9	0.12 (1)	6.25
C- D	0 / 4	-84.9	-84.9	0.26 (1)	10.00
I- H	0 / 0	-18.5	-18.5	0.02 (4)	10.00
H- G	-73 / 0	0.0	0.0	0.23 (1)	7.81
G- C	0 / 111	0.0	0.0	0.24 (1)	10.00
G- F	0 / 391	-18.5	-18.5	0.38 (1)	10.00
F- E	0 / 0	-18.5	-18.5	0.32 (1)	10.00

WEBS

MEMB. FR-TO	MAX. FACTORED FORCE (LBS)	MAX CSI (LC)
B- H	0 / 189	0.04 (1)
C- F	-446 / 0	0.07 (1)

DESIGN CRITERIA

SPECIFIED LOADS:

TOP CH.	LL	=	23.3	PSF
	DL	=	6.0	PSF
BOT CH.	LL	=	0.0	PSF
	DL	=	7.4	PSF
TOTAL LOAD		=	36.7	PSF

SPACING = 24.0 IN. C/C

THIS TRUSS IS DESIGNED FOR RESIDENTIAL OR SMALL BUILDING REQUIREMENTS OF PART 9, NBCC 2015

THIS DESIGN COMPLIES WITH:
- PART 9 OF BCBC 2018 , NBC-2019AE
- PART 9 OF OBC 2012 (2019 AMENDMENT)
- CSA 086-14
- TPIC 2014

DESIGN ASSUMPTIONS
-OVERHANG NOT TO BE ALTERED OR CUT OFF.

(55 % OF 27.2 P.S.F. G.S.L. PLUS 8.4 P.S.F. RAIN LOAD) EQUALS 23.3 P.S.F. SPECIFIED ROOF LIVE LOAD

ALLOWABLE DEFL.(LL)= L/360 (0.20")
CALCULATED VERT. DEFL.(LL) = L/ 999 (0.05")
ALLOWABLE DEFL.(TL)= L/360 (0.20")
CALCULATED VERT. DEFL.(TL) = L/ 619 (0.11")

CSI: TC=0.26/1.00 (C-D:1) , BC=0.38/1.00 (F-G:1) , WB=0.07/1.00 (C-F:1) , SSI=0.18/1.00 (C-G:1)

DOL LUMBER=1.00 NAIL=1.00 LS BEND=1.10 COMP=1.10 SHEAR=1.10 TENS= 1.10

COMPANION LIVE LOAD FACTOR = 1.00

TRUSS PLATE MANUFACTURER IS NOT RESPONSIBLE FOR QUALITY CONTROL IN THE TRUSS MANUFACTURING PLANT .

NAIL VALUES

PLATE	GRIP(DRY) (PSI) MAX	MIN	SHEAR (PLI) MAX	MIN	SECTION (PLI) MAX	MIN
MT20	650	371	1747	788	1987	1873

PLATE PLACEMENT TOL. = 0.250 inches

PLATE ROTATION TOL. = 5.0 Deg.

JSI GRIP= 0.33 (C) (INPUT = 0.90)
JSI METAL= 0.17 (F) (INPUT = 0.95)

LICENSED PROFESSIONAL ENGINEER
02-28-24
H. J. G. ALVES
100009024
PROVINCE OF ONTARIO

Structural component only
DWG# T-2406392

JOB NAME	TRUSS NAME	QUANTITY	PLY	JOB DESC.	DRWG NO.
425913	C1	7	1	ROYAL PINE HOMES TRUSS DESC.	

Tamarack Roof Truss, Burlington

Version 8.630 S Aug 30 2023 MiTek Industries, Inc. Wed Feb 28 15:02:16 2024 Page 1
ID:VI_DQvi1e49Qy7axT?i10OzOYuG-rt4Sv7iznaGF7hDkvDIZ_PiDZK1C2nXB0s?qSazgawr

Scale = 1:13.5

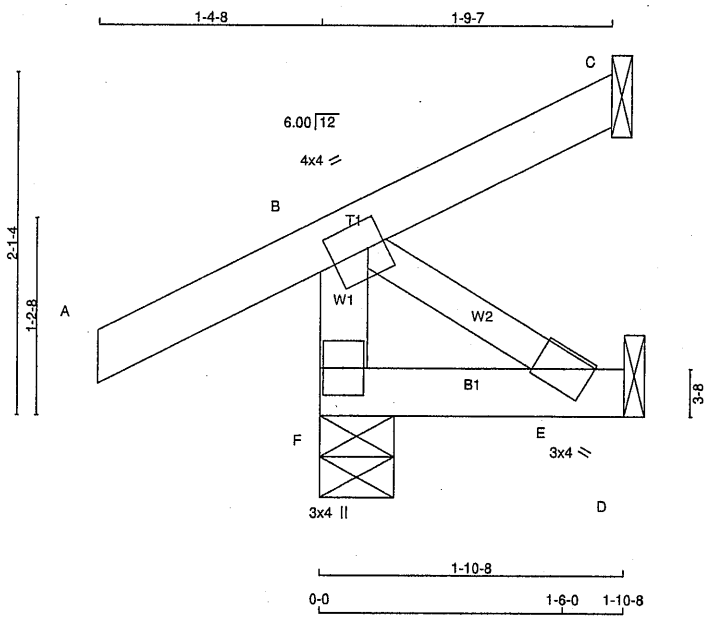

TOTAL WEIGHT = 7 X 8 = 59 lb
[M]

LUMBER
N. L. G. A. RULES

CHORDS	SIZE		LUMBER	DESCR.
F - B	2x4	DRY	No.2	SPF
A - C	2x4	DRY	No.2	SPF
F - D	2x4	DRY	No.2	SPF
ALL WEBS	2x3	DRY	No.2	SPF

DRY: SEASONED LUMBER.

PLATES (table is in inches)

JT	TYPE	PLATES	W	LEN	Y	X
B	TMVW-t	MT20	4.0	4.0	2.00	1.25
E	BMW+w	MT20	3.0	4.0		
F	BMV1+p	MT20	3.0	4.0		

NOTES- (1)
1) Lateral braces to be a minimum of 2X4 SPF #2.

DIMENSIONS, SUPPORTS AND LOADINGS SPECIFIED BY FABRICATOR TO BE VERIFIED BY BUILDING DESIGNER

BEARINGS

JT	FACTORED GROSS REACTION VERT	HORZ	MAXIMUM FACTORED GROSS REACTION DOWN	HORZ	UPLIFT	INPUT BRG IN-SX	REQRD BRG IN-SX
F	265	0	265	0	0	5-8	1-8
C	27	0	27	0	-40	1-8	1-8
D	17	0	19	0	0	1-8	1-8

SEE MITEK STANDARD DETAIL MSD2015-H FOR CONNECTION TO JOINT(S) C , D

PROVIDE ANCHORAGE AT BEARING JOINT C FOR 150 LBS FACTORED UPLIFT

UNFACTORED REACTIONS

JT	1ST LCASE COMBINED	MAX./MIN. COMPONENT REACTIONS SNOW	LIVE	PERM.LIVE	WIND	DEAD	SOIL
F	185	136 / 0	0 / 0	0 / 0	0 / 0	49 / 0	0 / 0
C	18	15 / -27	0 / 0	0 / 0	0 / 0	4 / 0	0 / 0
D	14	0 / 0	0 / 0	0 / 0	0 / 0	14 / 0	0 / 0

BEARING MATERIAL TO BE SPF NO.2 OR BETTER AT JOINT(S) F, C

BRACING
TOP CHORD TO BE SHEATHED OR MAX. PURLIN SPACING = 6.25 FT.
MAX. UNBRACED BOTTOM CHORD LENGTH = 10.00 FT OR RIGID CEILING DIRECTLY APPLIED.

ALL PITCH BREAKS AND PERIMETER CORNER JOINTS MUST BE LATERALLY RESTRAINED.

LOADING
TOTAL LOAD CASES: (5)

CHORDS

MEMB. FR-TO	MAX. FACTORED FORCE (LBS)	VERT. LOAD (PLF) FROM	TO	LC1 MAX CSI (LC)	MAX. UNBRAC LENGTH
F- B	-247 / 0	0.0	0.0	0.03 (1)	7.81
A- B	0 / 27	-84.9	-84.9	0.12 (1)	10.00
B- C	-22 / 0	-84.9	-84.9	0.12 (1)	6.25
F- E	0 / 0	-18.5	-18.5	0.02 (4)	10.00
E- D	0 / 0	-18.5	-18.5	0.01 (4)	10.00

WEBS

MEMB. FR-TO	MAX. FACTORED FORCE (LBS)	MAX CSI (LC)
B- E	0 / 0	0.00 (1)

CANTILEVER ANALYSIS HAS BEEN CONSIDERED IN THIS DESIGN

DESIGN CRITERIA

SPECIFIED LOADS:

TOP CH.	LL	=	23.3	PSF
	DL	=	6.0	PSF
BOT CH.	LL	=	0.0	PSF
	DL	=	7.4	PSF
TOTAL LOAD		=	36.7	PSF

SPACING = 24.0 IN. C/C

THIS TRUSS IS DESIGNED FOR RESIDENTIAL OR SMALL BUILDING REQUIREMENTS OF PART 9, NBCC 2015

THIS DESIGN COMPLIES WITH:
- PART 9 OF BCBC 2018 , NBC-2019AE
- PART 9 OF OBC 2012 (2019 AMENDMENT)
- CSA 086-14
- TPIC 2014

DESIGN ASSUMPTIONS
-OVERHANG NOT TO BE ALTERED OR CUT OFF.

(55 % OF 27.2 P.S.F. G.S.L. PLUS 8.4 P.S.F. RAIN LOAD) EQUALS 23.3 P.S.F. SPECIFIED ROOF LIVE LOAD

ALLOWABLE DEFL.(LL)= L/360 (0.19")
CALCULATED VERT. DEFL.(LL) = L/ 999 (0.00")
ALLOWABLE DEFL.(TL)= L/360 (0.19")
CALCULATED VERT. DEFL.(TL) = L/ 999 (0.00")

CSI: TC=0.12/1.00 (A-B:1) , BC=0.02/1.00 (E-F:4) , WB=0.00/1.00 (B-E:1) , SSI=0.09/1.00 (B-C:1)

DOL LUMBER=1.00 NAIL=1.00 LS BEND=1.10 COMP=1.10 SHEAR=1.10 TENS=1.10

COMPANION LIVE LOAD FACTOR = 1.00

AUTOSOLVE RIGHT HEEL ONLY

TRUSS PLATE MANUFACTURER IS NOT RESPONSIBLE FOR QUALITY CONTROL IN THE TRUSS MANUFACTURING PLANT .

NAIL VALUES

PLATE	GRIP(DRY) (PSI) MAX	MIN	SHEAR (PLI) MAX	MIN	SECTION (PLI) MAX	MIN
MT20	650	371	1747	788	1987	1873

PLATE PLACEMENT TOL. = 0.250 inches

PLATE ROTATION TOL. = 5.0 Deg.

JSI GRIP= 0.14 (B) (INPUT = 0.90)
JSI METAL= 0.04 (B) (INPUT = 0.95)

LICENSED PROFESSIONAL ENGINEER
02-28-24
H. J. G. ALVES
100009024
PROVINCE OF ONTARIO

Structural component only
DWG# T-2406377

JOB NAME	TRUSS NAME	QUANTITY	PLY	JOB DESC.	DRWG NO.
425913	C2	5	1	ROYAL PINE HOMES TRUSS DESC.	

Tamarack Roof Truss, Burlington

Version 8.630 S Aug 30 2023 MiTek Industries, Inc. Wed Feb 28 15:02:17 2024 Page 1
ID:VI_DQvi1e49Qy7axT?i10OzOYuG-J3eq6TibYtO6IrowSwpoWcEM1jNRnDnLFWkO_0zgawo

Scale = 1:18.7

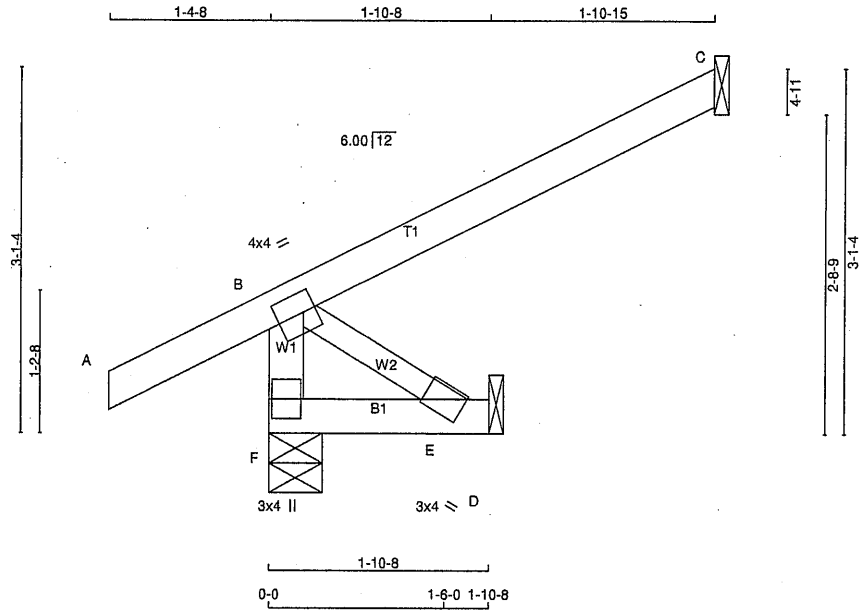

TOTAL WEIGHT = 5 X 11 = 55 lb
[M]

LUMBER
N. L. G. A. RULES

CHORDS	SIZE		LUMBER	DESCR.
F - B	2x4	DRY	No.2	SPF
A - C	2x4	DRY	No.2	SPF
F - D	2x4	DRY	No.2	SPF
ALL WEBS	2x3	DRY	No.2	SPF

DRY: SEASONED LUMBER.

PLATES (table is in inches)

JT	TYPE	PLATES	W	LEN	Y	X
B	TMVW-t	MT20	4.0	4.0	2.00	1.25
E	BMW+w	MT20	3.0	4.0		
F	BMV1+p	MT20	3.0	4.0		

NOTES- (1)
1) Lateral braces to be a minimum of 2X4 SPF #2.

DIMENSIONS, SUPPORTS AND LOADINGS SPECIFIED BY FABRICATOR TO BE VERIFIED BY BUILDING DESIGNER

BEARINGS

JT	FACTORED GROSS REACTION VERT	HORZ	MAXIMUM FACTORED GROSS REACTION DOWN	HORZ	UPLIFT	INPUT BRG IN-SX	REQRD BRG IN-SX
F	300	0	300	0	0	5-8	1-8
C	161	0	161	0	0	1-8	1-8
D	17	0	19	0	0	1-8	1-8

SEE MITEK STANDARD DETAIL MSD2015-H FOR CONNECTION TO JOINT(S) C , D

UNFACTORED REACTIONS

JT	1ST LCASE COMBINED	MAX./MIN. COMPONENT REACTIONS SNOW	LIVE	PERM.LIVE	WIND	DEAD	SOIL
F	209	155 / 0	0 / 0	0 / 0	0 / 0	54 / 0	0 / 0
C	111	88 / 0	0 / 0	0 / 0	0 / 0	23 / 0	0 / 0
D	14	0 / 0	0 / 0	0 / 0	0 / 0	14 / 0	0 / 0

BEARING MATERIAL TO BE SPF NO.2 OR BETTER AT JOINT(S) F

BRACING
TOP CHORD TO BE SHEATHED OR MAX. PURLIN SPACING = 10.00 FT.
MAX. UNBRACED BOTTOM CHORD LENGTH = 10.00 FT OR RIGID CEILING DIRECTLY APPLIED.

ALL PITCH BREAKS AND PERIMETER CORNER JOINTS MUST BE LATERALLY RESTRAINED.

LOADING
TOTAL LOAD CASES: (5)

CHORDS

MEMB. FR-TO	MAX. FACTORED FORCE (LBS)	FACTORED VERT. LOAD LC1 (PLF) FROM	TO	MAX CSI (LC)	MAX. UNBRAC LENGTH
F- B	-283 / 0	0.0	0.0	0.03 (1)	7.81
A- B	0 / 27	-84.9	-84.9	0.13 (5)	10.00
B- C	0 / 0	-84.9	-84.9	0.21 (1)	10.00
F- E	0 / 0	-18.5	-18.5	0.02 (4)	10.00
E- D	0 / 0	-18.5	-18.5	0.01 (4)	10.00

WEBS

MEMB. FR-TO	MAX. FACTORED FORCE (LBS)	MAX CSI (LC)
B- E	0 / 0	0.00 (1)

CANTILEVER ANALYSIS HAS BEEN CONSIDERED IN THIS DESIGN

DESIGN CRITERIA

SPECIFIED LOADS:

TOP CH.	LL	=	23.3	PSF
	DL	=	6.0	PSF
BOT CH.	LL	=	0.0	PSF
	DL	=	7.4	PSF
TOTAL LOAD		=	36.7	PSF

SPACING = 24.0 IN. C/C

THIS TRUSS IS DESIGNED FOR RESIDENTIAL OR SMALL BUILDING REQUIREMENTS OF PART 9, NBCC 2015

THIS DESIGN COMPLIES WITH:
- PART 9 OF BCBC 2018 , NBC-2019AE
- PART 9 OF OBC 2012 (2019 AMENDMENT)
- CSA 086-14
- TPIC 2014

(55 % OF 27.2 P.S.F. G.S.L. PLUS 8.4 P.S.F. RAIN LOAD) EQUALS 23.3 P.S.F. SPECIFIED ROOF LIVE LOAD

ALLOWABLE DEFL.(LL)= L/360 (0.19")
CALCULATED VERT. DEFL.(LL) = L/ 999 (0.00")
ALLOWABLE DEFL.(TL)= L/360 (0.19")
CALCULATED VERT. DEFL.(TL) = L/ 999 (0.00")

CSI: TC=0.21/1.00 (B-C:1) , BC=0.02/1.00 (E-F:4) , WB=0.00/1.00 (B-E:1) , SSI=0.11/1.00 (B-C:1)

DOL LUMBER=1.00 NAIL=1.00 LS BEND=1.10 COMP=1.10 SHEAR=1.10 TENS= 1.10

COMPANION LIVE LOAD FACTOR = 1.00

AUTOSOLVE RIGHT HEEL ONLY

TRUSS PLATE MANUFACTURER IS NOT RESPONSIBLE FOR QUALITY CONTROL IN THE TRUSS MANUFACTURING PLANT .

NAIL VALUES

PLATE	GRIP(DRY) (PSI) MAX	MIN	SHEAR (PLI) MAX	MIN	SECTION (PLI) MAX	MIN
MT20	650	371	1747	788	1987	1873

PLATE PLACEMENT TOL. = 0.250 inches

PLATE ROTATION TOL. = 5.0 Deg.

JSI GRIP= 0.16 (B) (INPUT = 0.90)
JSI METAL= 0.04 (B) (INPUT = 0.95)

LICENSED PROFESSIONAL ENGINEER
02-28-24
H. J. G. ALVES
100009024
PROVINCE OF ONTARIO

Structural component only
DWG# T-2406378

JOB NAME	TRUSS NAME	QUANTITY	PLY	JOB DESC.	DRWG NO.
425913	C3	5	1	ROYAL PINE HOMES TRUSS DESC.	

Tamarack Roof Truss, Burlington

Version 8.630 S Aug 30 2023 MiTek Industries, Inc. Wed Feb 28 15:02:18 2024 Page 1
ID:sd0FDfbi38oVqvTaiRkhtSzPAoD-nGCCKpjDJBWzM?N60eL13qnY_7h2Wg1UU9UxXSzgawp

Scale = 1:13.5

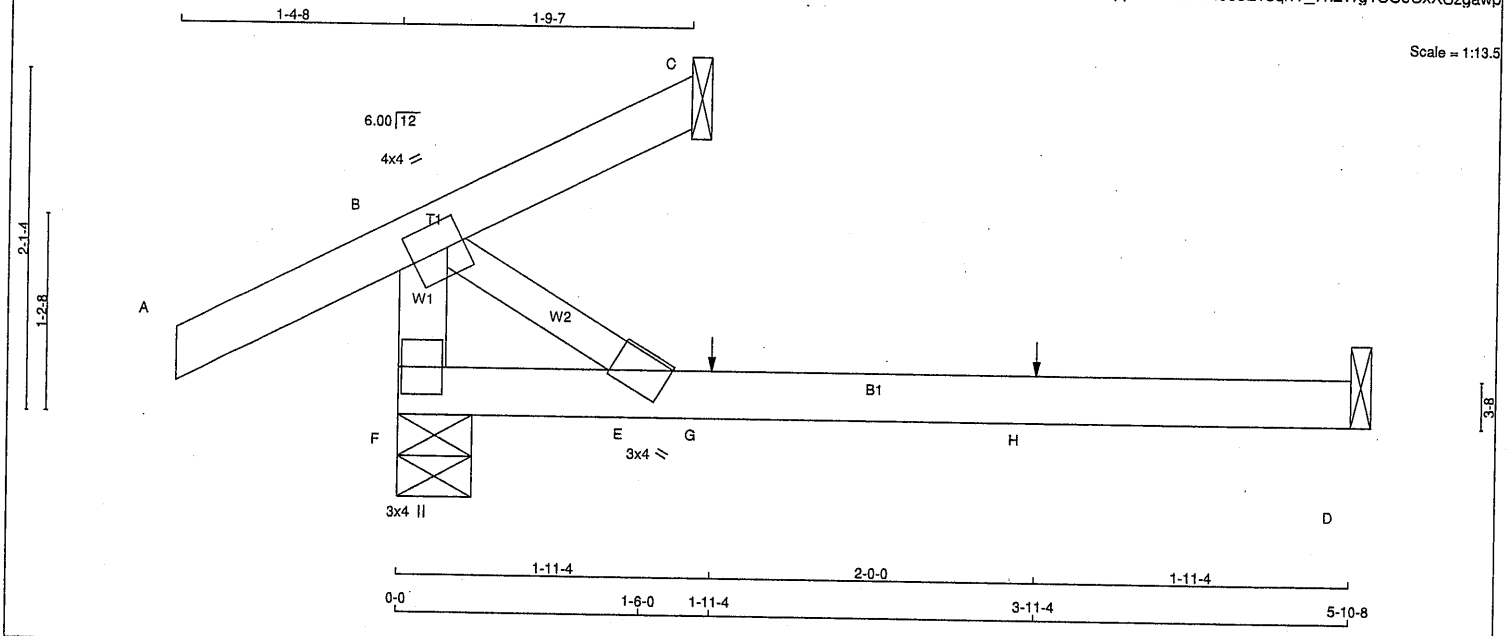

TOTAL WEIGHT = 5 X 13 = 65 lb [M]

LUMBER
N. L. G. A. RULES

CHORDS	SIZE		LUMBER	DESCR.
F - B	2x4	DRY	No.2	SPF
A - C	2x4	DRY	No.2	SPF
F - D	2x4	DRY	No.2	SPF
ALL WEBS	2x3	DRY	No.2	SPF

DRY: SEASONED LUMBER.

PLATES (table is in inches)

JT	TYPE	PLATES	W	LEN	Y	X
B	TMVW-t	MT20	4.0	4.0	2.00	1.25
E	BMW+w	MT20	3.0	4.0		
F	BMV1+p	MT20	3.0	4.0		

NOTES- (1)
1) Lateral braces to be a minimum of 2X4 SPF #2.

DIMENSIONS, SUPPORTS AND LOADINGS SPECIFIED BY FABRICATOR TO BE VERIFIED BY BUILDING DESIGNER

BEARINGS

JT	FACTORED GROSS REACTION VERT	HORZ	MAXIMUM FACTORED GROSS REACTION DOWN	HORZ	UPLIFT	INPUT BRG IN-SX	REQRD BRG IN-SX
F	302	0	302	0	0	5-8	1-8
C	27	0	27	0	0	1-8	1-8
D	54	0	61	0	0	1-8	1-8

SEE MITEK STANDARD DETAIL MSD2015-H FOR CONNECTION TO JOINT(S) C , D

UNFACTORED REACTIONS

JT	1ST LCASE COMBINED	MAX./MIN. COMPONENT REACTIONS SNOW	LIVE	PERM.LIVE	WIND	DEAD	SOIL
F	214	136 / 0	0 / 0	0 / 0	0 / 0	78 / 0	0 / 0
C	18	15 / 0	0 / 0	0 / 0	0 / 0	4 / 0	0 / 0
D	43	0 / 0	0 / 0	0 / 0	0 / 0	43 / 0	0 / 0

BEARING MATERIAL TO BE SPF NO.2 OR BETTER AT JOINT(S) F, C

BRACING
TOP CHORD TO BE SHEATHED OR MAX. PURLIN SPACING = 6.25 FT.
MAX. UNBRACED BOTTOM CHORD LENGTH = 10.00 FT OR RIGID CEILING DIRECTLY APPLIED.

ALL PITCH BREAKS AND PERIMETER CORNER JOINTS MUST BE LATERALLY RESTRAINED.

LOADING
TOTAL LOAD CASES: (4)

CHORDS

MEMB. FR-TO	MAX. FACTORED FORCE (LBS)	FACTORED VERT. LOAD LC1 (PLF) FROM	TO	MAX CSI (LC)	MAX. UNBRAC LENGTH
F- B	-247 / 0	0.0	0.0	0.03 (1)	7.81
A- B	0 / 27	-84.9	-84.9	0.13 (1)	10.00
B- C	-22 / 0	-84.9	-84.9	0.12 (1)	6.25
F- E	0 / 0	-18.5	-18.5	0.14 (4)	10.00
E- G	0 / 0	-18.5	-18.5	0.19 (4)	10.00
G- H	0 / 0	-18.5	-18.5	0.19 (4)	10.00
H- D	0 / 0	-18.5	-18.5	0.19 (4)	10.00

WEBS

MEMB. FR-TO	MAX. FACTORED FORCE (LBS)	MAX CSI (LC)
B- E	0 / 0	0.00 (1)

SPECIFIED CONCENTRATED LOADS (LBS)

JT	LOC.	LC1	MAX-	MAX+	FACE	DIR.	TYPE	HEEL	CONN.
G	1-11-4	1	1	---	BACK	VERT	TOTAL	---	C1
H	3-11-4	1	1	---	BACK	VERT	TOTAL	---	C1

CONNECTION REQUIREMENTS

1) **C1:** A SUITABLE HANGER/MECHANICAL CONNECTION IS REQUIRED.

DESIGN CRITERIA

SPECIFIED LOADS:

TOP CH.	LL	=	23.3	PSF
	DL	=	6.0	PSF
BOT CH.	LL	=	0.0	PSF
	DL	=	7.4	PSF
TOTAL LOAD		=	36.7	PSF

SPACING = 24.0 IN. C/C

THIS TRUSS IS DESIGNED FOR RESIDENTIAL OR SMALL BUILDING REQUIREMENTS OF PART 9, NBCC 2015

THIS DESIGN COMPLIES WITH:
- PART 9 OF BCBC 2018 , NBC-2019AE
- PART 9 OF OBC 2012 (2019 AMENDMENT)
- CSA 086-14
- TPIC 2014

DESIGN ASSUMPTIONS
-OVERHANG NOT TO BE ALTERED OR CUT OFF.

(55 % OF 27.2 P.S.F. G.S.L. PLUS 8.4 P.S.F. RAIN LOAD) EQUALS 23.3 P.S.F. SPECIFIED ROOF LIVE LOAD

ALLOWABLE DEFL.(LL)= L/360 (0.20")
CALCULATED VERT. DEFL.(LL) = L/ 999 (0.00")
ALLOWABLE DEFL.(TL)= L/360 (0.20")
CALCULATED VERT. DEFL.(TL) = L/ 999 (0.05")

CSI: TC=0.13/1.00 (A-B:1) , BC=0.19/1.00 (D-E:4) , WB=0.00/1.00 (B-E:1) , SSI=0.09/1.00 (B-C:1)

DOL LUMBER=0.96 NAIL=0.96 LS BEND=1.10 COMP=1.10 SHEAR=1.10 TENS= 1.10

COMPANION LIVE LOAD FACTOR = 1.00

AUTOSOLVE RIGHT HEEL ONLY

TRUSS PLATE MANUFACTURER IS NOT RESPONSIBLE FOR QUALITY CONTROL IN THE TRUSS MANUFACTURING PLANT .

NAIL VALUES

PLATE	GRIP(DRY) (PSI) MAX	MIN	SHEAR (PLI) MAX	MIN	SECTION (PLI) MAX	MIN
MT20	650	371	1747	788	1987	1873

PLATE PLACEMENT TOL. = 0.250 inches

PLATE ROTATION TOL. = 5.0 Deg.

JSI GRIP= 0.15 (B) (INPUT = 0.90)
JSI METAL= 0.04 (B) (INPUT = 0.95)

LICENSED PROFESSIONAL ENGINEER
02-28-24
H. J. G. ALVES
100009024
PROVINCE OF ONTARIO

Structural component only
DWG# T-2406379

JOB NAME	TRUSS NAME	QUANTITY	PLY	JOB DESC.	DRWG NO.
425913	C4	5	1	ROYAL PINE HOMES TRUSS DESC.	

Tamarack Roof Truss, Burlington

Version 8.630 S Aug 30 2023 MiTek Industries, Inc. Wed Feb 28 15:02:19 2024 Page 1
ID:VI_DQvi1e49Qy7axT?i10OzOYuG-FSmbX9kr4Veq_9yJaLsGc1KiXX0HF7HdipDU3vzgawc

Scale = 1:18.4

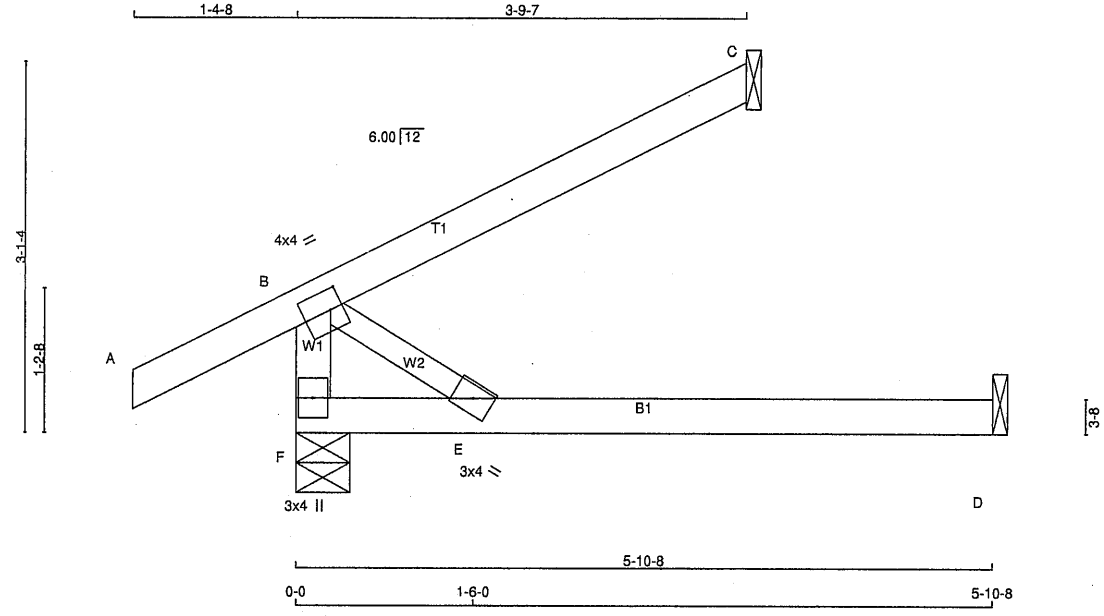

TOTAL WEIGHT = 5 X 16 = 78 lb [M]

LUMBER
N. L. G. A. RULES

CHORDS	SIZE		LUMBER	DESCR.
F - B	2x4	DRY	No.2	SPF
A - C	2x4	DRY	No.2	SPF
F - D	2x4	DRY	No.2	SPF
ALL WEBS	2x3	DRY	No.2	SPF

DRY: SEASONED LUMBER.

PLATES (table is in inches)

JT	TYPE	PLATES	W	LEN	Y	X
B	TMVW-t	MT20	4.0	4.0	2.00	1.25
E	BMW+w	MT20	3.0	4.0		
F	BMV1+p	MT20	3.0	4.0		

NOTES- (1)
1) Lateral braces to be a minimum of 2X4 SPF #2.

DIMENSIONS, SUPPORTS AND LOADINGS SPECIFIED BY FABRICATOR TO BE VERIFIED BY BUILDING DESIGNER

BEARINGS

JT	FACTORED GROSS REACTION VERT	HORZ	MAXIMUM FACTORED GROSS REACTION DOWN	HORZ	UPLIFT	INPUT BRG IN-SX	REQRD BRG IN-SX
F	337	0	337	0	0	5-8	1-8
C	161	0	161	0	0	1-8	1-8
D	54	0	61	0	0	1-8	1-8

SEE MITEK STANDARD DETAIL MSD2015-H FOR CONNECTION TO JOINT(S) C , D

UNFACTORED REACTIONS

JT	1ST LCASE COMBINED	MAX./MIN. COMPONENT REACTIONS SNOW	LIVE	PERM.LIVE	WIND	DEAD	SOIL
F	239	155 / 0	0 / 0	0 / 0	0 / 0	83 / 0	0 / 0
C	111	88 / 0	0 / 0	0 / 0	0 / 0	23 / 0	0 / 0
D	43	0 / 0	0 / 0	0 / 0	0 / 0	43 / 0	0 / 0

BEARING MATERIAL TO BE SPF NO.2 OR BETTER AT JOINT(S) F, C

BRACING
TOP CHORD TO BE SHEATHED OR MAX. PURLIN SPACING = 10.00 FT.
MAX. UNBRACED BOTTOM CHORD LENGTH = 10.00 FT OR RIGID CEILING DIRECTLY APPLIED.

ALL PITCH BREAKS AND PERIMETER CORNER JOINTS MUST BE LATERALLY RESTRAINED.

LOADING
TOTAL LOAD CASES: (4)

CHORDS

MEMB. FR-TO	MAX. FACTORED FORCE (LBS)	FACTORED VERT. LOAD (PLF) FROM	TO	LC1 MAX CSI (LC)	MAX. UNBRAC LENGTH
F- B	-283 / 0	0.0	0.0	0.03 (1)	7.81
A- B	0 / 27	-84.9	-84.9	0.12 (1)	10.00
B- C	0 / 0	-84.9	-84.9	0.21 (1)	10.00
F- E	0 / 0	-18.5	-18.5	0.14 (4)	10.00
E- D	0 / 0	-18.5	-18.5	0.19 (4)	10.00

WEBS

MEMB. FR-TO	MAX. FACTORED FORCE (LBS)	MAX CSI (LC)
B- E	0 / 0	0.00 (1)

DESIGN CRITERIA

SPECIFIED LOADS:

TOP CH.	LL	=	23.3	PSF
	DL	=	6.0	PSF
BOT CH.	LL	=	0.0	PSF
	DL	=	7.4	PSF
TOTAL LOAD		=	36.7	PSF

SPACING = 24.0 IN. C/C

THIS TRUSS IS DESIGNED FOR RESIDENTIAL OR SMALL BUILDING REQUIREMENTS OF PART 9, NBCC 2015

THIS DESIGN COMPLIES WITH:
- PART 9 OF BCBC 2018 , NBC-2019AE
- PART 9 OF OBC 2012 (2019 AMENDMENT)
- CSA 086-14
- TPIC 2014

(55 % OF 27.2 P.S.F. G.S.L. PLUS 8.4 P.S.F. RAIN LOAD) EQUALS 23.3 P.S.F. SPECIFIED ROOF LIVE LOAD

ALLOWABLE DEFL.(LL)= L/360 (0.20")
CALCULATED VERT. DEFL.(LL) = L/ 999 (0.00")
ALLOWABLE DEFL.(TL)= L/360 (0.20")
CALCULATED VERT. DEFL.(TL) = L/ 999 (0.05")

CSI: TC=0.21/1.00 (B-C:1) , BC=0.19/1.00 (D-E:4) , WB=0.00/1.00 (B-E:1) , SSI=0.11/1.00 (B-C:1)

DOL LUMBER=1.00 NAIL=1.00 LS BEND=1.10 COMP=1.10 SHEAR=1.10 TENS= 1.10

COMPANION LIVE LOAD FACTOR = 1.00

AUTOSOLVE RIGHT HEEL ONLY

TRUSS PLATE MANUFACTURER IS NOT RESPONSIBLE FOR QUALITY CONTROL IN THE TRUSS MANUFACTURING PLANT .

NAIL VALUES

PLATE	GRIP(DRY) (PSI) MAX	MIN	SHEAR (PLI) MAX	MIN	SECTION (PLI) MAX	MIN
MT20	650	371	1747	788	1987	1873

PLATE PLACEMENT TOL. = 0.250 inches

PLATE ROTATION TOL. = 5.0 Deg.

JSI GRIP= 0.16 (B) (INPUT = 0.90)
JSI METAL= 0.04 (B) (INPUT = 0.95)

LICENSED PROFESSIONAL ENGINEER
02-28-24
H. J. G. ALVES
100009024
PROVINCE OF ONTARIO

Structural component only
DWG# T-2406380

JOB NAME	TRUSS NAME	QUANTITY	PLY	JOB DESC.	DRWG NO.
425913	C5	2	1	ROYAL PINE HOMES TRUSS DESC.	

Tamarack Roof Truss, Burlington

Version 8.630 S Aug 30 2023 MiTek Industries, Inc. Wed Feb 28 15:02:20 2024 Page 1
ID:sd0FDfbi38oVqvTaiRkhtSzPAoD-jeKzkVlTromhcJXV82NV8FsuIxNR_aXnxTz2bLzgawn

Scale = 1:13.5

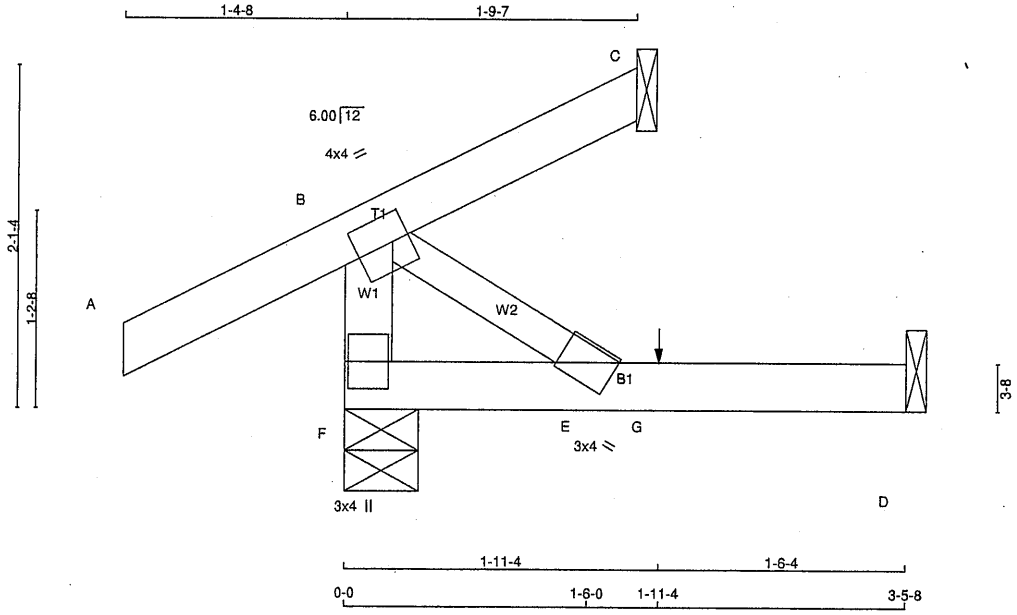

TOTAL WEIGHT = 2 X 10 = 21 lb [M]

LUMBER
N. L. G. A. RULES

CHORDS	SIZE		LUMBER	DESCR.
F - B	2x4	DRY	No.2	SPF
A - C	2x4	DRY	No.2	SPF
F - D	2x4	DRY	No.2	SPF
ALL WEBS	2x3	DRY	No.2	SPF

DRY: SEASONED LUMBER.

PLATES (table is in inches)

JT	TYPE	PLATES	W	LEN	Y	X
B	TMVW-t	MT20	4.0	4.0	2.00	1.25
E	BMW+w	MT20	3.0	4.0		
F	BMV1+p	MT20	3.0	4.0		

NOTES- (1)
1) Lateral braces to be a minimum of 2X4 SPF #2.

DIMENSIONS, SUPPORTS AND LOADINGS SPECIFIED BY FABRICATOR TO BE VERIFIED BY BUILDING DESIGNER

BEARINGS

JT	FACTORED GROSS REACTION VERT	HORZ	MAXIMUM FACTORED GROSS REACTION DOWN	HORZ	UPLIFT	INPUT BRG IN-SX	REQRD BRG IN-SX
F	279	0	279	0	0	5-8	1-8
C	27	0	27	0	-40	1-8	1-8
D	32	0	36	0	0	1-8	1-8

SEE MITEK STANDARD DETAIL MSD2015-H FOR CONNECTION TO JOINT(S) C , D

PROVIDE ANCHORAGE AT BEARING JOINT C FOR 150 LBS FACTORED UPLIFT

UNFACTORED REACTIONS

JT	1ST LCASE COMBINED	MAX./MIN. COMPONENT REACTIONS SNOW	LIVE	PERM.LIVE	WIND	DEAD	SOIL
F	196	136 / 0	0 / 0	0 / 0	0 / 0	61 / 0	0 / 0
C	18	15 / -27	0 / 0	0 / 0	0 / 0	4 / 0	0 / 0
D	26	0 / 0	0 / 0	0 / 0	0 / 0	26 / 0	0 / 0

BEARING MATERIAL TO BE SPF NO.2 OR BETTER AT JOINT(S) F, C

BRACING
TOP CHORD TO BE SHEATHED OR MAX. PURLIN SPACING = 6.25 FT.
MAX. UNBRACED BOTTOM CHORD LENGTH = 10.00 FT OR RIGID CEILING DIRECTLY APPLIED.

ALL PITCH BREAKS AND PERIMETER CORNER JOINTS MUST BE LATERALLY RESTRAINED.

LOADING
TOTAL LOAD CASES: (5)

CHORDS

MEMB. FR-TO	MAX. FACTORED FORCE (LBS)	FACTORED VERT. LOAD (PLF) FROM	TO	LC1	MAX CSI (LC)	MAX. UNBRAC LENGTH
F- B	-247 / 0	0.0	0.0	0.03 (1)	7.81	
A- B	0 / 27	-84.9	-84.9	0.14 (5)	10.00	
B- C	-22 / 0	-84.9	-84.9	0.14 (5)	6.25	
F- E	0 / 0	-18.5	-18.5	0.06 (4)	10.00	
E- G	0 / 0	-18.5	-18.5	0.06 (4)	10.00	
G- D	0 / 0	-18.5	-18.5	0.06 (4)	10.00	

WEBS

MEMB. FR-TO	MAX. FACTORED FORCE (LBS)	MAX CSI (LC)
B- E	0 / 0	0.00 (1)

SPECIFIED CONCENTRATED LOADS (LBS)

JT	LOC.	LC1	MAX-	MAX+	FACE	DIR.	TYPE	HEEL	CONN.
G	1-11-4	1	1	---	FRONT	VERT	TOTAL	---	C1

CONNECTION REQUIREMENTS

1) C1: A SUITABLE HANGER/MECHANICAL CONNECTION IS REQUIRED.

CANTILEVER ANALYSIS HAS BEEN CONSIDERED IN THIS DESIGN

DESIGN CRITERIA

SPECIFIED LOADS:

TOP CH.	LL	=	23.3	PSF
	DL	=	6.0	PSF
BOT CH.	LL	=	0.0	PSF
	DL	=	7.4	PSF
TOTAL LOAD		=	36.7	PSF

SPACING = 24.0 IN. C/C

THIS TRUSS IS DESIGNED FOR RESIDENTIAL OR SMALL BUILDING REQUIREMENTS OF PART 9, NBCC 2015

THIS DESIGN COMPLIES WITH:
- PART 9 OF BCBC 2018 , NBC-2019AE
- PART 9 OF OBC 2012 (2019 AMENDMENT)
- CSA 086-14
- TPIC 2014

DESIGN ASSUMPTIONS
-OVERHANG NOT TO BE ALTERED OR CUT OFF.

(55 % OF 27.2 P.S.F. G.S.L. PLUS 8.4 P.S.F. RAIN LOAD) EQUALS 23.3 P.S.F. SPECIFIED ROOF LIVE LOAD

ALLOWABLE DEFL.(LL)= L/360 (0.19")
CALCULATED VERT. DEFL.(LL) = L/ 999 (0.00")
ALLOWABLE DEFL.(TL)= L/360 (0.19")
CALCULATED VERT. DEFL.(TL) = L/ 999 (0.01")

CSI: TC=0.14/1.00 (A-B:5) , BC=0.06/1.00 (D-E:4) , WB=0.00/1.00 (B-E:1) , SSI=0.10/1.00 (A-B:5)

DOL LUMBER=1.00 NAIL=1.00 LS BEND=1.10 COMP=1.10 SHEAR=1.10 TENS= 1.10

COMPANION LIVE LOAD FACTOR = 1.00

AUTOSOLVE RIGHT HEEL ONLY

TRUSS PLATE MANUFACTURER IS NOT RESPONSIBLE FOR QUALITY CONTROL IN THE TRUSS MANUFACTURING PLANT .

NAIL VALUES

PLATE	GRIP(DRY) (PSI) MAX	MIN	SHEAR (PLI) MAX	MIN	SECTION (PLI) MAX	MIN
MT20	650	371	1747	788	1987	1873

PLATE PLACEMENT TOL. = 0.250 inches

PLATE ROTATION TOL. = 5.0 Deg.

JSI GRIP= 0.14 (B) (INPUT = 0.90)
JSI METAL= 0.04 (B) (INPUT = 0.95)

LICENSED PROFESSIONAL ENGINEER
02-28-24
H. J. G. ALVES
100009024
PROVINCE OF ONTARIO

Structural component only
DWG# T-2406381

Alves Engineering Services Inc.
5208 Easton road
Burlington, Ontario L7L 6N6
(289) 259 5455

LICENSED PROFESSIONAL ENGINEER
H.J.G. ALVES
PROVINCE OF ONTARIO

RESPONSABILITIES

1-Alves Engineering Services Inc. is responsible for the design of trusses as individual components

2-It is the responsibility of others to ascertain that the design loads utilized on this drawing meet or exceed the actual dead load imposed by the structure and the live load imposed by the local building code or the authorities having jurisdictions.

3- All dimensions are to be verified by owner, contractor, architect or other authority before manufacture.

4- Alves Engineering Services Inc. bears no responsibility for the erection of the trusses. Persons erecting trusses are cautioned to seek professional advice regarding temporary and permanent bracing system. Bracing shown on Alves Engineering Services Inc. drawings is specified for the truss as a single component and forms an integral part of the truss design, but is not meant to represent the only required bracing for that truss when trusses are installed in a series of trusses forming a roof truss system.

5- It is the manufactures responsibility to ensure that the trusses are manufactured in conformance with Alves Engineering Services Inc. specifications outlined below.

SPECIFICATIONS

1-Truss components sealed by Alves Engineering Services Inc. conform to the relevant sections of the current Building Code of Ontario and Canada (part 4 or part 9) or the current Canadian code for Farm Buildings in accordance with the application specified on the sealed truss component drawing. All truss component design procedures must conform to the current design standard issued by the truss plate institute of Canada (TPIC). All lumber and nailing stresses to conform to the current CSA wood design standard identified on the current Building Code and TPIC.

2- Lumber is to be the sizes and grade specified on the truss drawing.

3- Moist content of lumber is not to exceed 19% in service unless otherwise specified.

4- Plates shall be applied to both faces of the each truss joint and shall be positioned as shown on the truss drawings

5- Lumber used on manufacture of trusses is not to be treated with chemicals unless otherwise specified on the truss drawings.

6- The top chord is assumed to be continuously laterally braced by the roof sheathing or purlins at intervals specified on the truss drawing but not exceeding 24" c/c for (part 9) and not exceeding 48" for (part 4 or farm design)

7- When rigid ceiling is not attached directly to the bottom chord, lateral bracing is required and it should not exceed more than 3m or 10' intervals.

8-Refer to Mitek sheet MII7473C REV.10-08 attached for information on symbols, numbering system and General Safety notes.

T-1800213 Feb 09, 2018

BEARING ANCHORAGE BY TOE-NAILS FOR LATERAL CAPACITY

B97791H1

NAIL TYPE	LENGTH (IN)	DIAMETER (IN)	NAIL LATERAL CAPACITY (LB)	
			S-P-F	D. FIR
COMMON WIRE	3.00	0.144	132	147
	3.25	0.144	132	147
	3.50	0.160	159	177
COMMON SPIRAL	3.00	0.122	97	108
	3.25	0.122	97	108
	3.50	0.152	145	162

NOTES:

1. Rafter and ceiling members may be anchored to top and bottom chords of girder truss by toe-nailing rafter and ceiling members to girder chords provided the reaction does not exceed the lateral capacities in the table. Hangers (specified by others) are required for reactions higher than the maximum toe-nail capacity. Reactions are based on factored loads.
2. Toe nail capacities shown in the table are for **one** toe-nail. For additional toe-nails multiply values in table by the number of toe-nails used. Toe-nail capacities take into account toe-nailing factor J_A in CSA O86-14, section 12.9.4.1.
3. For 9- 3/4 gauge 3.25" common wire gun nails (diameter = 0.120") use 3" common spiral nail values.
4. Maximum number of toe-nails allowed depends on the lumber size & species to be toe-nailed to supporting member and nail diameter, as shown in tables below.
5. Nail values in table are based on the following relative lumber densities: G = 0.42 (SPF), G = 0.49 (D. Fir).
6. Toe-nails shall be driven at approximately 1/3 the nail length from the edge of the joist/truss chord and driven at an angle of 30° to the grain of the member (See next page for nailing on bearing plate).
7. For loads due to **wind** the nail lateral capacity in this table may be multiplied by 1.15 (K_D factor).
8. Lumber must be dry (< 19% moisture content) at the time of nail installation.
9. Nail values in this table comply with CSA O86-14, section 12.9.4
10. This design is not valid after April 30, 2021.

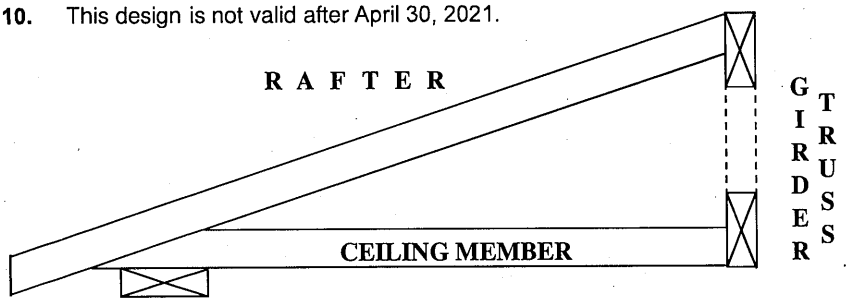

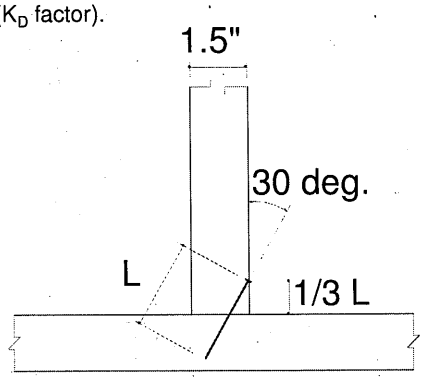

TOE-NAIL INSTALLATION

Nail type	Common wire	Common spiral	Common wire	Common spiral
Nail dia. (in)	0.160	0.152	0.144	0.122
	(3.5" nail)		(3" and 3.25" nail)	
LUMBER SIZE	MAXIMUM NUMBER OF TOE-NAILS			
2X4 SPF	2	2	3	3
2X4 D. Fir	2	2	2	2
2X6 SPF	4	4	4	5
2X6 D. Fir	3	3	3	4

PEO
Certificate No. 10889485

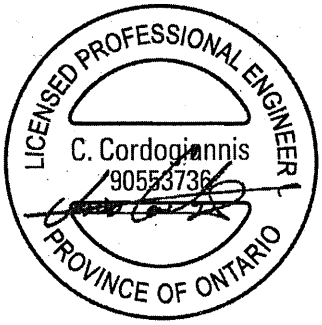

MiTek®
MiTek Canada Inc
100 Industrial Rd.
Bradford, Ontario L3Z 3G7

April 2, 2020

BEARING ANCHORAGE BY TOE-NAILS FOR WIND LOADING

B97791H2

NAIL TYPE	LENGTH (IN)	DIAMETER (IN)	NAIL WITHDRAWAL CAPACITY (LB)	
			S-P-F	D. FIR
COMMON WIRE	3.00	0.144	30	42
	3.25	0.144	32	45
	3.50	0.160	38	52
COMMON SPIRAL	3.00	0.122	26	36
	3.25	0.122	28	40
	3.50	0.152	36	50

Note: If using truss with D. Fir lumber and S-P-F bearing plate, use values in table for S-P-F.

NOTES:

1. Truss chord, rafter, or ceiling members may be anchored to bearing plate by toe-nails, provided that the actual factored uplift force due to **wind** or **earthquake** load does not exceed the withdrawal capacities in the table. Hangers (specified by others) are required for uplift forces that are higher than the maximum toe-nail withdrawal capacity.
2. Toe nail capacities shown in the table are for **one** toe-nail. For additional toe-nails multiply values in table by the number of toe-nails used. Toe-nail capacities take into account toe-nailing factor J_A in CSA O86-14, section 12.9.5.2.
3. For 9- 3/4 gauge 3.25" common wire gun nails (diameter = 0.120") use 3" common spiral nail values.
4. Maximum number of toe-nails allowed depends on the lumber size & species to be toe-nailed to supporting member and nail diameter, as shown in table above.
5. Nail values in table are based on the following relative lumber densities: G = 0.42(SPF), G = 0.49(D. Fir).
6. Toe-nails shall be driven at approximately 1/3 the nail length from the edge of the joist/truss chord and driven at an angle of 30° to the grain of the member (See drawing on detail B37579H1).
7. Lumber must be dry (< 19% moisture content) at the time of nail installation.
8. Nail values in this table comply with CSA O86-14, section 12.9.5
9. This design is not valid after April 30, 2021.

Toe-nailing on 2x6 Bearing Plate

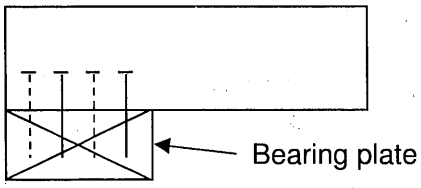

Elevation view

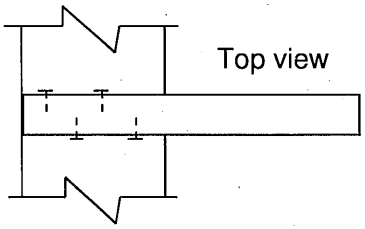

Top view

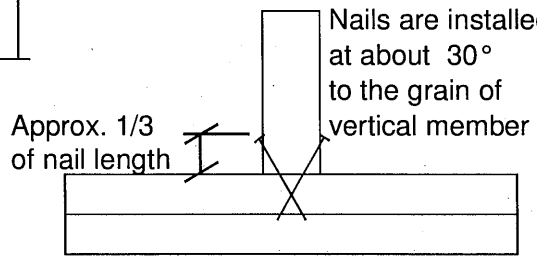

Toe-nailing viewed from end of joist or truss

Toe-nailing on 2x4 Bearing Plate

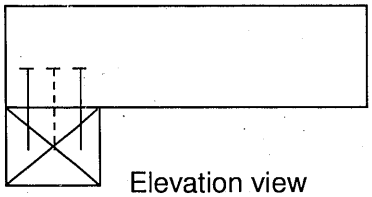

Elevation view

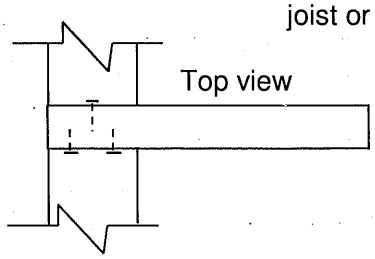

Top view

PEO
Certificate No. 10889485

LICENSED PROFESSIONAL ENGINEER
C. Cordogiannis
90553736
PROVINCE OF ONTARIO

MiTek®
MiTek Canada Inc
100 Industrial Rd.
Bradford, Ontario L3Z 3G7

April 2, 2020

MiTek®

STANDARD DETAIL MSD2015-P

Issued: **APRIL 27, 2022**
Expiry: **APRIL 30, 2024**

ALTERNATIVE WEB BRACING SOLUTIONS

The scab brace detail shown on this page provides an alternative method of bracing compression webs of single ply trusses. Where the original design calls for web bracing, the scab-brace is an acceptable alternative provided that the factored axial force in the web member does not exceed the tabulated values shown below. This detail applies to web lengths of 4.0 ft. to 10.0 ft. only. For intermediate web lengths, do not interpolate, use the tabulated value of the longer length. (ex. For a 6.25 ft. web, use the tabulated values for a 6.5 ft. web)

	Maximum factored web force, lbs (1-Ply Truss)					
WEB LENGTH (Ft.)	Web size	2x3	2x4	2x5	2x6	2x8+
4.0		4331	6064	7796	9529	12561
4.5		3794	5312	6829	8347	11003
5.0		3285	4599	5913	7227	9527
5.5		2823	3952	5081	6210	8186
6.0		2415	3381	4347	5313	7003
6.5		2063	2888	3713	4538	5982
7.0		1763	2468	3174	3879	5113
7.5		1510	2114	2718	3322	4379
8.0		1297	1816	2335	2854	3762
8.5		1117	1564	2011	2458	3240
9.0		966	1353	1740	2126	2803
9.5		840	1176	1512	1848	2436
10.0		733	1027	1320	1614	2127

SCAB BRACE DETAIL
1-PLY TRUSS

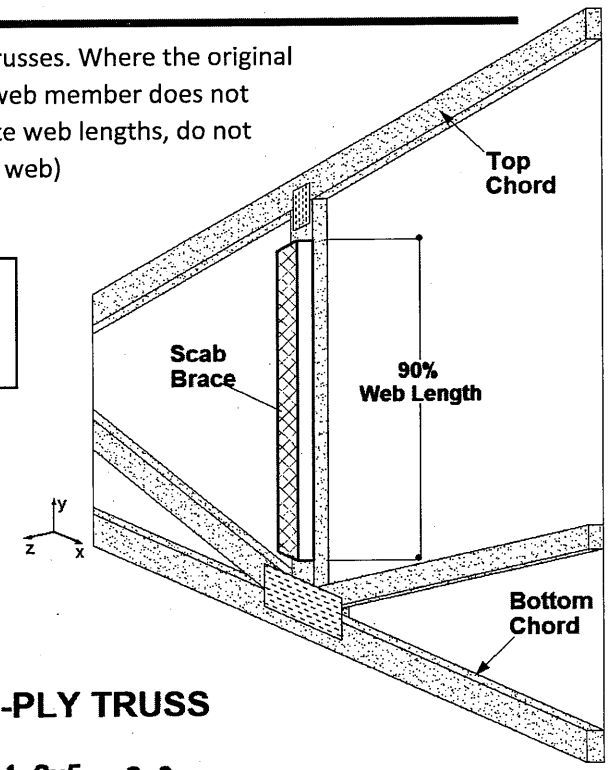

SCAB CONNECTION: 1-PLY TRUSS

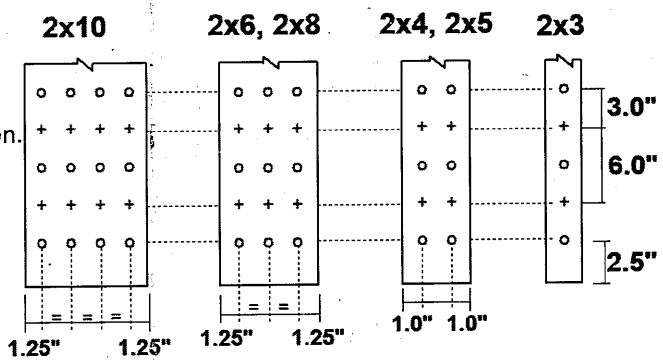

+ 0.122" dia. x 3.0" nail driven from front face
o 0.122" dia. x 3.0" nail driven from back face

Note: Connect scabs to truss along their entire length.

NOTES:

1. This detail **CANNOT** be used to repair damaged webs.
2. Scab and web sizes must be equal (i.e. use a 2x6 scab on a 2x6 web, etc.).
3. Scab & web lumber must be DRY (≤ 19% moisture content) at time of installation.
4. Scab must cover minimum 90% of the entire length of web.
5. For 2x12 webs use 2x10 nail pattern, but with 5 rows of nails instead of 4 rows.
6. This detail is for webs loaded axially only (not for axial/bending members).
7. Web and scab lumber shall be SPF No. 2 (or better) grade.
8. Tabulated resistances are for standard load duration only (K_D=1.0) and DRY service conditions (K_S =1.0). Do not use detail for WET service applications.
9. This detail shall be used only in conjunction with sealed MiTek truss drawings.

PEO
Certificate No. 10889485

LICENSED PROFESSIONAL ENGINEER
2022-05-03
C. Cordogiannis
90553736
PROVINCE OF ONTARIO

©2021 MiTek Canada Inc., 240 Stirling Crescent, Bradford, Ontario, L3Z 4L5 | (800) 268-3434, www.mitek.ca

MiTek®

STANDARD DETAIL MSD2015-P

Issued: **APRIL 27, 2022**
Expiry: **APRIL 30, 2024**

ALTERNATIVE WEB BRACING SOLUTIONS

The scab brace detail shown on this page provides an alternative method of bracing compression webs of 2-PLY trusses. Where the original design calls for web bracing, the scab-brace is an acceptable alternative provided that the maximum factored axial force in the web member does not exceed the tabulated values shown below. This detail applies to web lengths of 4.0 Ft. to 10.0 Ft. only. For intermediate web lengths, do not interpolate, use the tabulated value of the longer length. (ex. For a 6.25 ft. web, use the tabulated values for a 6.5 ft. web)

WEB LENGTH (Ft.)	Maximum factored web force, lbs (2-Ply Truss)				
Web size	2x3	2x4	2x5	2x6	2x8+
4.0	8663	12128	15593	19058	25122
4.5	7588	10623	13659	16694	22006
5.0	6570	9198	11826	14455	19054
5.5	5645	7903	10162	12420	16371
6.0	4830	6762	8694	10626	14007
6.5	4126	5776	7426	9077	11965
7.0	3526	4937	6347	7758	10226
7.5	3020	4228	5436	6644	8758
8.0	2594	3632	4670	5708	7524
8.5	2235	3128	4022	4916	6480
9.0	1933	2706	3479	4253	5606
9.5	1680	2352	3024	3696	4872
10.0	1467	2054	2640	3227	4254

SCAB BRACE DETAIL
2-PLY TRUSS

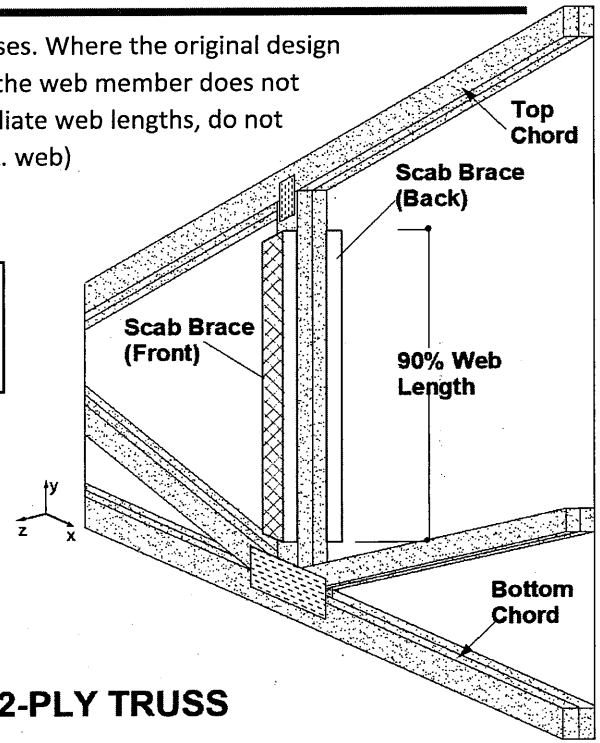

SCAB CONNECTION: 2-PLY TRUSS

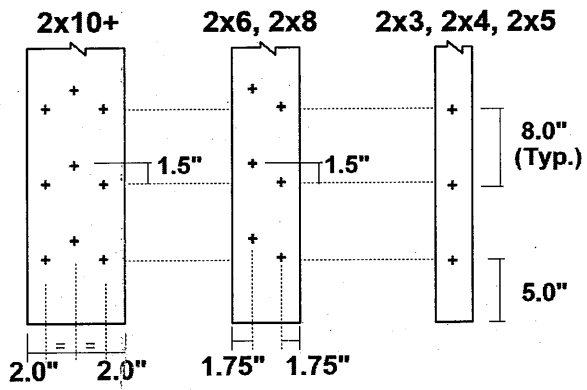

+ MITEK MIFLK006 Screw @ 8 in. cc
Note: Connect scabs to truss along their entire length.

NOTES:

1. This detail **CANNOT** be used to repair damaged webs.
2. Scab sizes must be equal to web size (i.e. use a 2x6 scab on a 2x6 web, etc.).
3. Scabs &web lumber must be DRY (≤ 19% moisture content) at time of installation.
4. Scabs must cover 90% of the entire length of web and installed on both faces.
5. This detail shall NOT apply to vertical webs used for girder load transfer.
6. Web & scab lumber to be SPF No. 2 (or better) grade.
7. This detail is for webs loaded axially only (not for axial/bending members).
8. Ensure scabs will not interfere with incoming trusses, prior to using this detail.
9. Tabulated resistances are for standard load duration only (K_D=1.0) and DRY service conditions (K_S =1.0). Do not use detail for WET service applications.
10. This detail shall be used only in conjunction with sealed MiTek truss drawings.

PEO
Certificate No. 10889485

LICENSED PROFESSIONAL ENGINEER
2022-05-03
C. Cordogiannis
90553736
PROVINCE OF ONTARIO

©2021 MiTek Canada Inc., 240 Stirling Crescent, Bradford, Ontario, L3Z 4L5 | (800) 268-3434, www.mitek.ca

TECHNICAL BULLETIN

LUS — Double-Shear Joist Hangers

SIMPSON Strong-Tie

All LUS hangers have double-shear nailing. This patented innovation distributes the load through two points on each joist nail for greater strength. It also allows the use of fewer nails, faster installation and the use of common nails for all connections.

Material: 18 gauge

Finish: G90 galvanized

Design:

- Factored resistances are in accordance with CSA O86-14 and CSA O86:19.
- Uplift resistances have been increased 15%. No further increase is permitted.
- Wood shear is not considered in the factored resistances given. The specifier must ensure that the joist and header capacities are capable of withstanding these loads.

Installation:

- Use all specified fasteners
- Nails: 16d = 0.162" dia. x 3½" long common wire, 10d = 0.148" x 3" long common wire
- Double-shear nails must be driven at an angle through the joist or truss into the header to achieve the table loads
- Not designed for welded or nailer applications

Options:

- These hangers cannot be modified

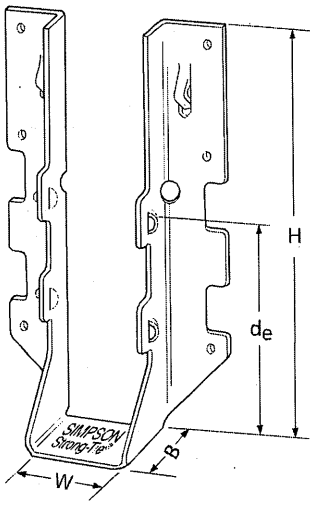

LUS28

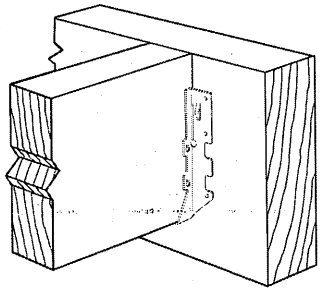

Typical LUS Installation

Model No.	Ga.	Dimensions (in.)				Fasteners		Factored Resistance (lb.)			
								D.Fir–L		S-P-F	
		W	H	B	d_e[1]	Face	Joist	Uplift (K_D=1.15)	Normal (K_D=1.00)	Uplift (K_D=1.15)	Normal (K_D=1.00)
LUS24	18	1 9/16	3 1/8	1 3/4	1 15/16	(4) 10d	(2) 10d	710	1630	645	1155
LUS24-2	18	3 1/8	3 1/8	2	1 13/16	(4) 16d	(2) 16d	835	2020	590	1435
LUS26	18	1 9/16	4 3/4	1 3/4	3 5/8	(4) 10d	(4) 10d	1420	2170	1290	1630
LUS26-2	18	3 1/8	4 7/8	2	4	(4) 16d	(4) 16d	1720	2595	1545	1920
LUS26-3	18	4 5/8	4 3/16	2	3 1/4	(4) 16d	(4) 16d	1720	2595	1545	2340
LUS28	18	1 9/16	6 5/8	1 3/4	3 3/4	(6) 10d	(6) 10d	1420	2520	1290	1790
LUS28-2	18	3 1/8	7	2	4	(6) 16d	(4) 16d	1720	3325	1545	2575
LUS28-3	18	4 5/8	6 1/4	2	3 1/4	(6) 16d	(4) 16d	1720	3325	1545	2375
LUS210	18	1 9/16	7 13/16	1 3/4	3 7/8	(8) 10d	(4) 10d	1420	2785	1290	2210
LUS210-2	18	3 1/8	9	2	6	(8) 16d	(6) 16d	2580	4500	2320	3195
LUS210-3	18	4 5/8	8 3/16	2	5 1/4	(8) 16d	(6) 16d	2580	3345	2320	2375

1. d_e is the distance from the seat of the hanger to the highest joist nail.

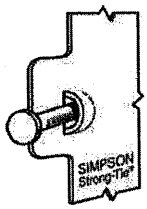

Dome double-shear nailing prevents tabs breaking off (available on some models).

US Patent 5,603,580

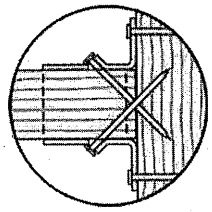

Double-shear nailing top view.

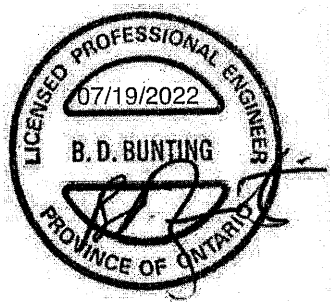

This technical bulletin is effective until December 31, 2024, and reflects information available as of July 1, 2022. This information is updated periodically and should not be relied upon after December 31, 2024. Contact Simpson Strong-Tie for current information and limited warranty or see strongtie.com.

© 2022 Simpson Strong-Tie Company Inc. • P.O. Box 10789, Pleasanton, CA 94588

T-SPECLUS22 7/22 exp. 12/24

(800) 999-5099
strongtie.com

TECHNICAL BULLETIN

HUS/LJS — Double-Shear Joist Hangers

SIMPSON Strong-Tie

All hangers have double-shear nailing. This patented innovation distributes the load through two points on each joist nail for greater strength. It also allows the use of fewer nails, faster installation and the use of common nails for all connections. Do not bend or remove tabs.

Material: See table

Finish: G90 galvanized

Design:

- Factored resistances are in accordance with CSA O86-14 and CSA O86:19.
- Uplift resistances have been increased 15%. No further increase is permitted.
- Wood shear is not considered in the factored resistances given. The specifier must ensure that the joist and header capacities are capable of withstanding these loads.

Installation:

- Use all specified fasteners
- Nails: 16d = 0.162" dia. x 3½" long common wire
- Double-shear nails must be driven at an angle through the joist or truss into the header to achieve the table loads
- Not designed for welded or nailer applications

Options:

- See current catalogue for options

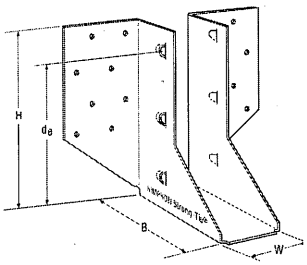

LJS26DS

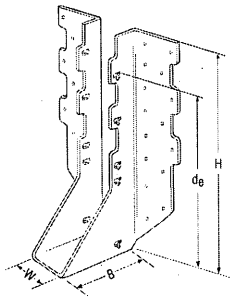

HUS210
(HUS26, HUS28, similar)

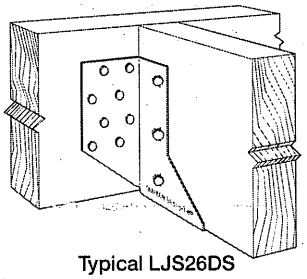

Typical LJS26DS Installation

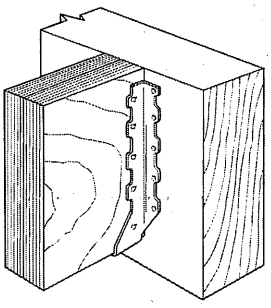

Typical HUS Installation

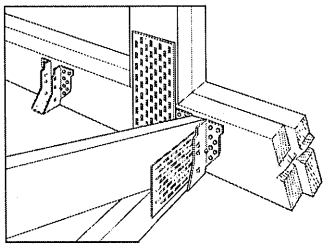

Typical HUS Installation
(Truss designer to provide fastener quantity for connecting multiple members together)

Model No.	Ga.	Dimensions (in.)				Fasteners		Factored Resistance (lb.)			
								D.Fir–L		S-P-F	
		W	H	B	d_e[1]	Face	Joist	Uplift (K_D=1.15) lb.	Normal (K_D=1.00) lb.	Uplift (K_D=1.15) lb.	Normal (K_D=1.00) lb.
LJS26DS	18	1 9/16	5	3½	4⅝	(16) 16d	(6) 16d	2055	4265	1460	4115
HUS26	16	1⅝	5⅜	3	3 15/16	(14) 16d	(6) 16d	2705	4940	2065	3875
HUS28	16	1⅝	7 3/32	3	6 3/32	(22) 16d	(8) 16d	3605	5365	2675	4345
HUS210	16	1⅝	9 3/32	3	7 31/32	(30) 16d	(10) 16d	4505	5795	4010	4740
HUS1.81/10	16	1 13/16	9	3	8	(30) 16d	(10) 16d	4505	6450	4010	5200

1. d_e is the distance from the seat of the hanger to the highest joist nail.

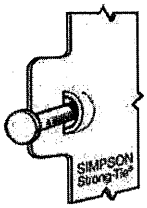

Dome double-shear nailing prevents tabs breaking off (available on some models).

US Patent 5,603,580

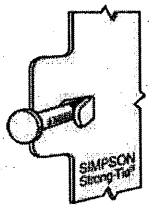

Double-shear nailing side view. Do not bend tab back.

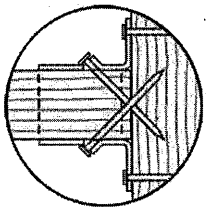

Double-shear nailing top view.

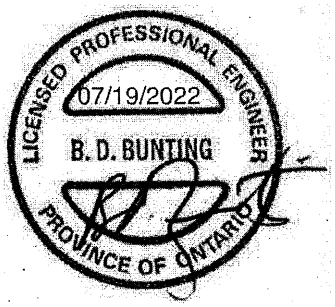

This technical bulletin is effective until December 31, 2024, and reflects information available as of July 1, 2022. This information is updated periodically and should not be relied upon after December 31, 2024. Contact Simpson Strong-Tie for current information and limited warranty or see strongtie.com.

© 2022 Simpson Strong-Tie Company Inc. • P.O. Box 10789, Pleasanton, CA 94588

T-SPECHUS22 7/22 exp. 12/24

(800) 999-5099
strongtie.com

TECHNICAL BULLETIN

HGUS — Double-Shear Joist Hangers

SIMPSON Strong-Tie

All HGUS hangers have double-shear nailing. This patented innovation distributes the load through two points on each joist nail for greater strength. It also allows the use of fewer nails, faster installation and the use of common nails for all connections. Do not bend or remove tabs.

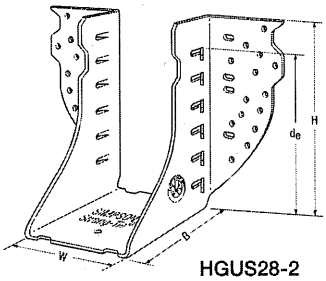

HGUS28-2

Material: 12 gauge

Finish: G90 galvanized

Design:

- Factored resistances are in accordance with CSA O86-14 and CSA O86:19.
- Uplift resistances have been increased 15%. No further increase is permitted.
- Wood shear is not considered in the factored resistances given. The specifier must ensure that the joist and header capacities are capable of withstanding these loads.

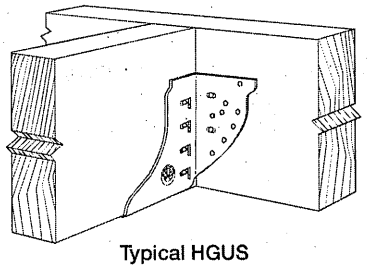
Typical HGUS Installation

Installation:

- Use all specified fasteners
- Nails: 16d = 0.162" dia x 3½" long common wire
- Double-shear nails must be driven at an angle through the joist or truss into the header to achieve the table loads
- Not designed for welded or nailer applications

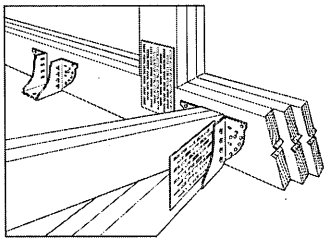
Typical HGUS Installation
(Truss designer to provide fastener quantity for connecting multiple members together)

Options:

- See current catalogue for options

Model No.	Ga.	Dimensions (in.)				Fasteners		Factored Resistance (lb.)			
								D.Fir–L		S-P-F	
		W	H	B	d_e[1]	Face	Joist	Uplift (K_D=1.15)	Normal (K_D=1.00)	Uplift (K_D=1.15)	Normal (K_D=1.00)
HGUS26	12	1⅝	5⅜	5	4 5/32	(20) 16d	(8) 16d	2685	6625	2685	5700
HGUS26-2	12	3 5/16	5 7/16	4	4⅛	(20) 16d	(8) 16d	4385	8950	3100	6355
HGUS26-3	12	4 15/16	5½	4	4⅛	(20) 16d	(8) 16d	4385	8950	3100	6355
HGUS26-4	12	6 9/16	5 7/16	4	4⅛	(20) 16d	(8) 16d	4385	8950	3100	6355
HGUS28	12	1⅝	7⅛	5	6⅛	(36) 16d	(12) 16d	3310	7675	3100	6900
HGUS28-2	12	3 5/16	7 3/16	4	6⅛	(36) 16d	(12) 16d	6070	12980	4310	9215
HGUS28-3	12	4 15/16	7¼	4	6⅜	(36) 16d	(12) 16d	6070	12980	4310	9215
HGUS28-4	12	6 9/16	7 3/16	4	6⅛	(36) 16d	(12) 16d	6070	12980	4310	9215
HGUS210-2	12	3 5/16	9 3/16	4	8⅛	(46) 16d	(16) 16d	6840	14015	4855	10270
HGUS210-3	12	4 15/16	9¼	4	8⅜	(46) 16d	(16) 16d	6840	14645	4855	10400
HGUS210-4	12	6 9/16	9 3/16	4	8⅛	(46) 16d	(16) 16d	6840	14645	4855	10400
HGUS212-4	12	6 9/16	10⅝	4	10⅛	(56) 16d	(20) 16d	7640	14995	5425	10645
HGUS214-4	12	6 9/16	12⅝	4	11⅛	(66) 16d	(22) 16d	10130	16400	7195	11645

1. d_e is the distance from the seat of the hanger to the highest joist nail.

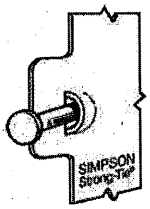

Dome double-shear nailing prevents tabs breaking off (available on some models).

US Patent 5,603,580

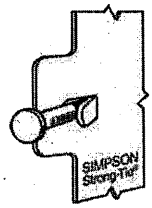

Double-shear nailing side view. Do not bend tab back.

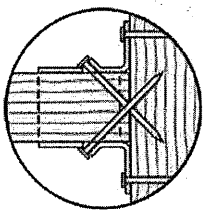
Double-shear nailing top view.

This technical bulletin is effective until December 31, 2024, and reflects information available as of July 1, 2022. This information is updated periodically and should not be relied upon after December 31, 2024. Contact Simpson Strong-Tie for current information and limited warranty or see strongtie.com.

© 2022 Simpson Strong-Tie Company Inc. • P.O. Box 10789, Pleasanton, CA 94588

T-SPECHGUS22 7/22 exp. 12/24

(800) 999-5099
strongtie.com

TECHNICAL BULLETIN

HGUS — Double-Shear Joist Hangers

SIMPSON Strong-Tie

All HGUS hangers have double-shear nailing. This patented innovation distributes the load through two points on each joist nail for greater strength. It also allows the use of fewer nails, faster installation and the use of common nails for all connections. Do not bend or remove tabs.

Material: 12 gauge

Finish: G90 galvanized

Design:

- Factored resistances are in accordance with CSA O86-14 and CSA O86:19.
- Uplift resistances have been increased 15%. No further increase is permitted.
- Wood shear is not considered in the factored resistances given. The specifier must ensure that the joist and header capacities are capable of withstanding these loads.

Installation:

- Use all specified fasteners
- Nails: 16d = 0.162" dia x 3½" long common wire
- Double-shear nails must be driven at an angle through the joist or truss into the header to achieve the table loads
- Not designed for welded or nailer applications

Options:

- See current catalogue for options

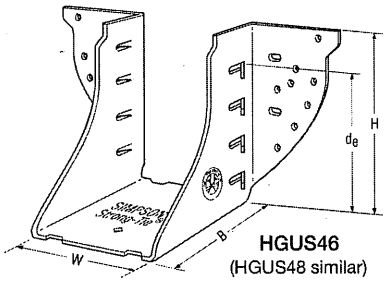

HGUS46
(HGUS48 similar)

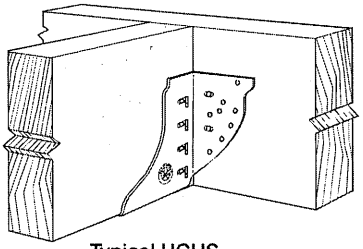

Typical HGUS Installation

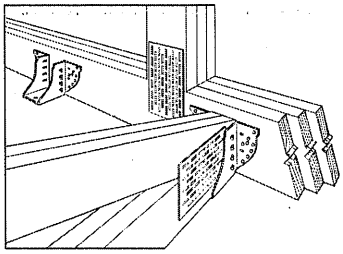

Typical HGUS Installation
(Truss designer to provide fastener quantity for connecting multiple members together)

Model No.	Ga.	Dimensions (in.)				Fasteners		Factored Resistance (lb.)			
								D.Fir–L		S-P-F	
		W	H	B	d_e[1]	Face	Joist	Uplift (K_D=1.15)	Normal (K_D=1.00)	Uplift (K_D=1.15)	Normal (K_D=1.00)
HGUS48	12	3⅝	7⅛	4	6 1/16	(36) 16d	(12) 16d	6070	12980	4310	9215
HGUS410	12	3⅝	9	4	8 1/16	(46) 16d	(16) 16d	6840	14015	4855	10270
HGUS412	12	3⅝	10 7/16	4	10 1/16	(56) 16d	(20) 16d	7640	14995	5425	10645
HGUS414	12	3⅝	12 7/16	4	11 1/16	(66) 16d	(22) 16d	10130	16400	7195	11645
HGUS5.50/8	12	5½	6 15/16	4	6⅛	(36) 16d	(12) 16d	6070	12980	4310	9215
HGUS5.50/10	12	5½	8 15/16	4	8⅛	(46) 16d	(16) 16d	6840	14645	4855	10400
HGUS5.50/12	12	5½	10½	4	10⅛	(56) 16d	(20) 16d	7640	14995	5425	10645
HGUS5.50/14	12	5½	12½	4	11⅛	(66) 16d	(22) 16d	10130	16400	7195	11645
HGUS7.25/8	12	7¼	7 7/32	4	6 13/32	(36) 16d	(12) 16d	6070	12980	4310	9215
HGUS7.25/10	12	7¼	8⅝	4	8¼	(46) 16d	(16) 16d	6840	15760	4855	11190
HGUS7.25/12	12	7¼	10⅝	4	10¼	(56) 16d	(20) 16d	7640	16110	5425	11435
HGUS7.25/14	12	7¼	12⅝	4	11¼	(66) 16d	(22) 16d	10130	18200	7195	12920

1. d_e is the distance from the seat of the hanger to the highest joist nail.

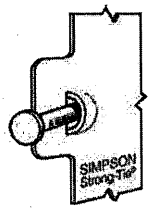

Dome double-shear nailing prevents tabs breaking off (available on some models).

US Patent 5,603,580

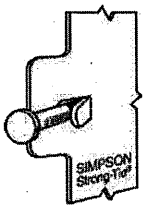

Double-shear nailing side view. Do not bend tab back.

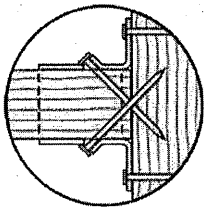

Double-shear nailing top view.

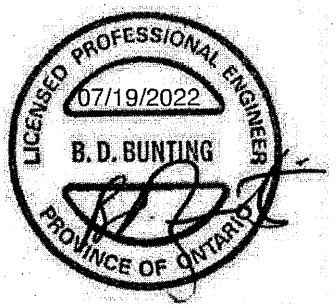

This technical bulletin is effective until December 31, 2024, and reflects information available as of July 1, 2022. This information is updated periodically and should not be relied upon after December 31, 2024. Contact Simpson Strong-Tie for current information and limited warranty or see strongtie.com.

© 2022 Simpson Strong-Tie Company Inc. • P.O. Box 10789, Pleasanton, CA 94588 T-SPECDSHGUS22 7/22 exp. 12/24

(800) 999-5099
strongtie.com

TECHNICAL BULLETIN

H — Seismic and Hurricane Ties

SIMPSON Strong-Tie

The H connector series provides wind and seismic ties for trusses and rafters.

Material: 18 gauge

Finish: G90 galvanized

Design:
- Factored resistances are in accordance with CSA O86-14 and CSA O86:19.
- Factored resistances have been increased 15%. No further increase is permitted.

Installation:
- Use all specified fasteners
- Nails: 8d = 0.131" dia. x 2½" long common wire, 8d x 1½" = 0.131" x 1½ long, 10d x 1½" = 0.146" x 1½" long
- H1 can be installed with flanges facing outwards
- Hurricane ties do not replace solid blocking

Factored resistances for more than one direction for a single connection cannot be added together. A factored load which can be divided into components in the directions given must be evaluated as follows: Factored Shear/Resisting Shear + Factored Tension/Resisting Tension ≤ 1.0.

Hurricane Tie Installations to Achieve Twice the Load (Top View)

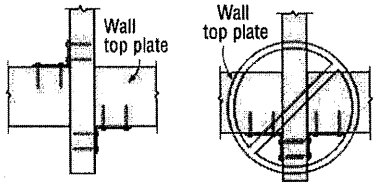

Install diagonally across from each other for minimum 2x truss.

Nailing into both sides of a single ply 2x truss may cause the wood to split.

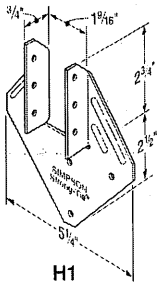

H1

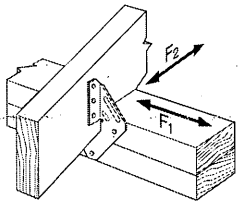

H1 Installation

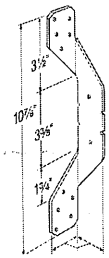

H2A

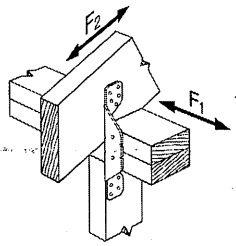

H2A Installation

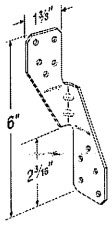

H2.5A

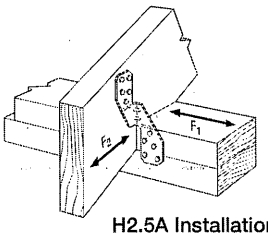

H2.5A Installation

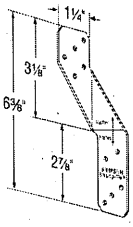

H2.5T

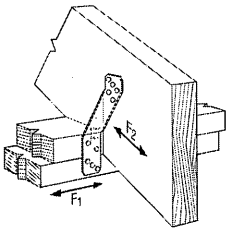

H2.5T Installation (Nails into both top plates)

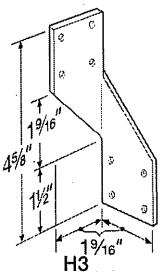

H3

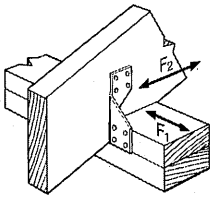

H3 Installation

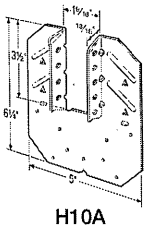

H10A

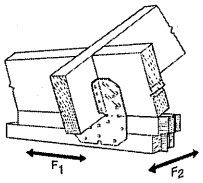

H10A Installation

Model No.	Ga.	Fasteners			Factored Resistance (lb.)					
					D.Fir-L			S-P-F		
					Uplift	Normal		Uplift	Normal	
		To Rafter	To Plates	To Studs		F_1	F_2		F_1	F_2
					(K_D=1.15)			(K_D=1.15)		
H1	18	(6) 8d x 1½"	(4) 8d	—	740	685	300	680	485	215
H2A	18	(5) 8d x 1½"	(2) 8d x 1½"	(5) 8d x 1½"	830	220	75	590	155	55
H2.5A	18	(5) 8d	(5) 8d	—	805	160	160	755	160	160
H2.5T	18	(5) 8d	(5) 8d	—	835	175	240	740	160	210
H3	18	(4) 8d	(4) 8d	—	740	180	265	615	125	190
H10A	18	(9) 10d x 1½"	(9) 10d x 1½"	—	1735	795	410	1505	565	290

1. Factored resistances have been increased 15% for earthquake or wind loading with no further increase allowed.
2. Factored resistances are for one anchor. A minimum rafter thickness of 2½" must be used when framing anchors are installed on each side of the joist and on the same side of the plate.
3. When cross-grain bending or cross-grain tension cannot be avoided, mechanical reinforcement to resist such forces should be considered.
4. Hurricane ties are shown installed on the outside of the wall for clarity. Installation on the inside of the wall is acceptable. For a Continuous Load Path, connections must be on same side of the wall.

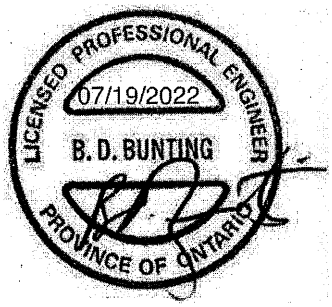

This technical bulletin is effective until December 31, 2024, and reflects information available as of July 1, 2022. This information is updated periodically and should not be relied upon after December 31, 2024. Contact Simpson Strong-Tie for current information and limited warranty or see strongtie.com.

© 2022 Simpson Strong-Tie Company Inc. • P.O. Box 10789, Pleasanton, CA 94588

(800) 999-5099
strongtie.com

Symbols

PLATE LOCATION AND ORIENTATION

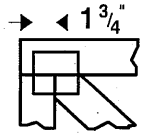

Center plate on joint unless x, y offsets are indicated. Dimensions are in ft-in-sixteenths or mm. Apply plates to both sides of truss and fully embed teeth.

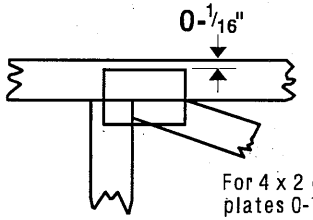

For 4 x 2 orientation, locate plates 0-1/16" from outside edge of truss.

This symbol indicates the required direction of slots in connector plates.

*Plate location details available in MiTek software or upon request.

PLATE SIZE

4 x 4

The first dimension is the plate width measured perpendicular to slots. Second dimension is the length parallel to slots.

LATERAL BRACING LOCATION

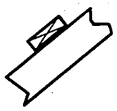

Indicated by symbol shown and/or by text in the bracing section of the output. Use T, I or Eliminator bracing if indicated.

BEARING

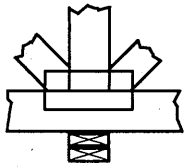

Indicates location where bearings (supports) occur. Icons vary but reaction section indicates joint number where bearings occur.

Industry Standards:

TPIC: Truss Design Procedures and Specifications for Light Metal Plate Connected Wood Trusses
DSB-89: Design Standard for Bracing.
BCSI: Building Component Safety Information, Guide to Good Practice for Handling, Installing & Bracing of Metal Plate Connected Wood Trusses.

Numbering System

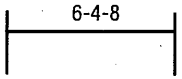

dimensions shown in ft-in-sixteenths or mm (Drawings not to scale)

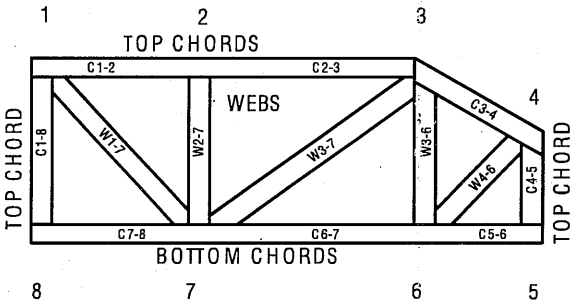

JOINTS ARE GENERALLY NUMBERED/LETTERED CLOCKWISE AROUND THE TRUSS STARTING AT THE JOINT FARTHEST TO THE LEFT.

CHORDS AND WEBS ARE IDENTIFIED BY END JOINT NUMBERS/LETTERS.

PRODUCT CODE APPROVALS

CCMC Reports:

11996-L, 10319-L, 13270-L, 12691-R

© 2007 MiTek® All Rights Reserved

MiTek®
POWER TO PERFORM.™

General Safety Notes

Failure to Follow Could Cause Property Damage or Personal Injury

1. Additional stability bracing for truss system, e.g. diagonal or X-bracing, is always required. See BCSI.
2. Truss bracing must be designed by an engineer. For wide truss spacing, individual lateral braces themselves may require bracing, or alternative T, I, or Eliminator bracing should be considered.
3. Never exceed the design loading shown and never stack materials on inadequately braced trusses.
4. Provide copies of this truss design to the building designer, erection supervisor, property owner and all other interested parties.
5. Cut members to bear tightly against each other.
6. Place plates on each face of truss at each joint and embed fully. Knots and wane at joint locations are regulated by TPIC.
7. Design assumes trusses will be suitably protected from the environment in accord with TPIC.
8. Unless otherwise noted, moisture content of lumber shall not exceed 19% at time of fabrication.
9. Unless expressly noted, this design is not applicable for use with fire retardant, preservative treated, or green lumber.
10. Camber is a non-structural consideration and is the responsibility of truss fabricator. General practice is to camber for dead load deflection.
11. Plate type, size, orientation and location dimensions indicated are minimum plating requirements.
12. Lumber used shall be of the species and size, and in all respects, equal to or better than that specified.
13. Top chords must be sheathed or purlins provided at spacing indicated on design.
14. Bottom chords require lateral bracing at 10 ft. spacing, or less, if no ceiling is installed, unless otherwise noted.
15. Connections not shown are the responsibility of others.
16. Do not cut or alter truss member or plate without prior approval of an engineer.
17. Install and load vertically unless indicated otherwise.
18. Use of green or treated lumber may pose unacceptable environmental, health or performance risks. Consult with project engineer before use.
19. Review all portions of this design (front, back, words and pictures) before use. Reviewing pictures alone is not sufficient.
20. Design assumes manufacture in accordance with TPIC Quality Criteria.