DocuSign Envelope ID: 3587JAF04-9C14-4D1F-B5B2-C8DAF9D0EE01

* INTERIOR COLOUR SCHEME *

Purchaser	Decor Consultant	Model and Elevation	Telephone Res. / Bus	Project	Closing Date	Property
GIUSEPPE LAMANNA	Laura Di Pede	PALMER Elev B	/	Grovetrail Developments Inc.	28/02/2023	48 Block 50

Flooring

	Description
Master Ensuite	13X13 CINQ GREY (STD)
Main Bathroom	13X13 CINQ GREY (STD)
Powder Room	13X13 CINQ GREY (STD)
Kitchen/Dinette	13X13 CINQ GREY (STD)
Laundry-2nd flr	13X13 CINQ GREY (STD)
Foyer	13X13 CINQ GREY (STD)
Main Hall	Highland Watson Natural Oak EE-H-292 (STD)
Great Room	Highland Watson Natural Oak EE-H-292 (STD)
DEN	Highland Watson Nat-OAK EE-H-292(Std)
Upper Hall	Highland Watson Natural Oak EE-H-292 (UPGD)
Master Bedroom	Highland Watson Natural Oak EE-H-292 (UPGD)
Bedroom 2	Highland Watson Natural Oak EE-H-292 (UPGD)
Bedroom 3	Highland Watson Natural Oak EE-H-292 (UPGD)

Wall Tile

	Main	Accent/Insert	Border / Listello	Pattern
Master Ensuite	8X10 CINQ GREY (STD)	N/A	NA/	N/A
Main Bathroom	8X10 CINQ GREY (STD)			
Powder Room	N/A	N/A	N/A	N/A
Kitchen/Dinette	3X6 C&D White Glossy Stacked (STD)	N/A	NA/	N/A
Laundry-2nd flr	N/A	N/A	N/A	N/A

CLARIFICATION: FEB 2 | 23

Plumbing

WHITE
WHITE
WHITE
See Notes
STD

Railings and Stairs

Railings	(STD) Mirage DRIFTWOOD	Landing - Upper	Watson Natural Oak EE-H-292(Std
Pickets	(STANDARD)	Landing - Lower	13X13 CINQ GREY (STD)
Posts	(STD) Mirage DRIFTWOOD	Ledge - Upper	N/A
Stringers	(STD) Mirage DRIFTWOOD	Ledge - Lower	N/A
Treads	(STD) Mirage DRIFTWOOD		
Risers	(STD) Mirage DRIFTWOOD		
Runner	N/A		

Cornice Moulding / Medalion

Foyer	NO
Living Room	NO
Dining Room	NO
Family Room	NO
Main Hall	NO
Kitchen	NO
2nd Floor Hall	NO

Trim

Baseboard & Casing	STD- Step Bevel Modern	Knobs	STANDARD
Front Door Glass	STANDARD	Hinges	STANDARD
Interior Doors	STD- CARRARA SMOOTH	Grip Set	STANDARD

Notes

MASTER ENSUITE- 2X2 GREY SHOWER FLOOR MOSAIC AND WHITE QUARTZ CURB TOP **KITCHEN- INSTALL THE Blanco Quatrus R15 U2 Model #401519

Consultant: Laura Di Pede

Purchaser: DocuSigned by: Joe Lamanna GIUSEPPE LAMANNA

Vendor: Grovetrail Developments Inc.

Printed Dec 20, 2022 10:35 am

DocuSign Envelope ID: 56C97A77-4876-4B4F-909F-5B63396FC3E4

PE 8449-1

Additional

PURCHASER'S EXTRAS QUOTATION

Oak Ridge Meadows - Phase 1 Grovetrail Dev. Inc.

PURCHASER: GIUSEPPE LAMANNA

TEL:

LOT NUMBER	PHASE	HOUSE TYPE
48 Block 50	1	PALMER Elev B

ITEM	EXTRA / CHANGE	QTY	UNIT PRICE	EXTENDED
1 220678	DEN- Install a standard height Single French Door with regular glass 1 Lite (one full glass) for the Den entrance (See Sketch) ***Steve C has applied a 50% discount***	1	[redacted]	
*2 13386 220679	PURCHASER AWARE AND ACCEPTS THAT ANY CHANGES MADE TO UPGRADES AFTER SIGNING THIS PURCHASERS EXTRA FORM ARE SUBJECT TO A MINIMUM ADMINISTRATION FEE OF $1000 PLUS A 10% HOLDBACK FEE.	1	[redacted]	

[redacted]	Sub Total HST Total

1. In the event the work on the house has progressed beyond the point where the items covered by this extra cannot be installed without entailing any unusual expense, then this order is to be cancelled and any deposit paid in connection with the same is to be refunded to the Purchaser
2. The Vendor will undertake to incorporate the work covered by the sales extra in the construction of the house but will not be liable to the purchaser in any way, if for any reason the work covered by the extra is not carried out. In that event, any monies paid in connection with the same shall be returned to the Purchaser.
3. It is understood and agreed that if for any reason whatsoever the transaction of Purchase and Sale is not completed, the total cost of extras ordered are not refundable to the Purchaser(s).
4. Extras or changes will not be processed unless signed by the Vendor.
5. These extras may not be amended without the written consent of Grovetrail Developments Inc..
6. The Purchaser(s) and the Vendor acknowledge and agree that this form shall not be deemed to be part of the Agreement of Purchase and Sale entered into between them, nor an addendum thereto.
7. No Estimates or orders will be accepted once construction has commenced.
8. Prices are estimates only and guaranteed for a period of 5 days only.
9. Any cancellations to this order, providing they can be cancelled, are subject to a $500 minimum administration charge and a 10% cancellation charge for the total amount being cancelled.
10. For Visa, Mastercard and Debit paments, transactions are identified on you statement as "SHERWAY CONSTRUCTION LTD", an Authorized Visa /Mastercard/Debit Merchant and authorized Royal Pine Homes company.

Payment Summary

Paid By	Amount
Amendment	[redacted]
Total Payment:	

Bonus Summary

Bonus Package offering (includes taxes) from Royal Pine Homes Décor Centre is being applied to this order.

Any remaining balance(s) will be applied accordingly to extras purchased.

Bonus Package Offering

Invoice Number	Date	Amount
8448	23-Jan-23	[redacted]
8423	11-Jan-23	
8423	11-Jan-23	
Total Bonus Used:		
Remaining Balance:		

PURCHASER: DocuSigned by: Joe Lamanna C42D7FDE6B5439... GIUSEPPE LAMANNA

25-Jan-23 DATE

VENDOR: PER: Grovetrail Developments Inc.

TAX#:1

PREPARED BY: Laura Di Pede
PRINTED: 25-Jan-23 at 2:47 pm
RoyInvoiceSQL.rpt 07aug20

CONSTRUCTION SCHEDULING APPROVAL

PER: _____

DATE: _____

SITE COPY

CONSTRUCTION SUMMARY

Grovetrail Developments Inc.

PURCHASER: GIUSEPPE LAMANNA **TEL:**

LOT NUMBER	PHASE	HOUSE TYPE	CLOSING DATE	
48 Block 50	1	PALMER Elev B	28-Feb-23	

Offer Worksheet	BONUS PACKAGE FOR TOWNHOUSE: PURCHASER TO RECEIVE $7,500.00 (INCLUSIVE OF TAXES) WORTH OF UPGRADES AT DECOR CENTRE AT TIME OF COLOUR CHART Note:

Offer Worksheet	BONUS PACKAGE FOR TOWNHOUSE: 5 APPLIANCES TO INCLUDE FRIDGE, STOVE, DISHWASHER WITH STAINLESS STEEL FINISH AND WHITE WASHER AND DRYER AS PER VENDORS SAMPLES. Note:

SITE COPY

CONSTRUCTION SUMMARY

Grovetrail Developments Inc.

PURCHASER: GIUSEPPE LAMANNA **TEL:**

LOT NUMBER	PHASE	HOUSE TYPE	CLOSING DATE	
48 Block 50	1	PALMER Elev B	28-Feb-23	

Date Added: 27-Jan-23 **Invoice Number: 8449**

1 - DEN- Install a standard height Single French Door with regular glass 1 Lite (one full glass) for the Den entrance (See Sketch)
Note: **Steve C has applied a 50% discount**

1 - PURCHASER AWARE AND ACCEPTS THAT ANY CHANGES MADE TO UPGRADES AFTER SIGNING THIS PURCHASERS EXTRA FORM ARE SUBJECT TO A MINIMUM ADMINISTRATION FEE OF $1000 PLUS A 10% HOLDBACK FEE.
Note:

Date Added: 23-Jan-23 **Invoice Number: 8448**

1 - MASTER ENSUITE- Delete the builders standard toilet, and Install the FOREMOST Intelligent Toilet Model #ITL-5001-EW in the Master Ensuite ONLY
Note: **Priced As per Steve C

1 - MASTER ENSUITE- Install an electrical GFCI plug next to the toilet to accommodate the FOREMOST Intelligent Toilet
Note: **Priced As Per Steve C

1 - PURCHASER AWARE AND ACCEPTS THAT ANY CHANGES MADE TO UPGRADES AFTER SIGNING THIS PURCHASERS EXTRA FORM ARE SUBJECT TO A MINIMUM ADMINISTRATION FEE OF $1,000 PLUS A 10% HOLDBACK FEE.
Note:

1 - BONUS PACKAGE - PURCHASER HAS APPLIED THE REMAINING $1,117.22 OF THEIR BONUS PACKAGE TOWARDS THE PURCHASE PURCHASE OF UPGRADES IN THIS AGREEMENT.
Note:

Date Added: 11-Jan-23 **Invoice Number: 8423**

1 - Standard Cable and Telephpne rough in (See Sketch)
Note: **PLEASE NOTE** Purchaser's request to have Fonzie C locate the standard cable and telephone outlets

1 - BASEMENT- Install TWO (X2) larger basement window, 36"x24", in lieu of the standard (See Sketch)
Note: As per Fonzie

1 - Purchaser to receive TEN (X10) Potlights on Main floor as per their Standard Features and Finishes List
SEE BELOW
Note: **PLEASE NOTE**- Purchaser's request to have Fonzie locate all builders standard pot lightson behalf of the purchaser

1 - EXTERIOR- Install exterior pot lights and outlet, as per Fonzie
Note: As per Fonzie

1 - FRONT EXTERIOR- Install Extended height Single front and applicable side lights (See Sketch)
Note: As per Fonzie

1 - MASTER ENSUITE- install a shower niche for the Master Ensuite shower stall, Install a 18'x24" niche (See Sketch)
Note: As Per Fonzie

1 - EXTERIOR COACH LIGHT- In addition to the builders standard coach light, Install ONE (x1) additional coach light at front door
Note: As Per Fonzie

1 - KITCHEN & BATHROOMS - Purchaser has DECLINED All Upgrades offered during decor appointment at the decor centre for kitchen & bathroom cabinetry. Standard Kitchen Layout & Standard Bathroom Vanities to be installed as per standard plan. (See Sketch)
Note:

SITE COPY

CONSTRUCTION SUMMARY

Grovetrail Developments Inc.

PURCHASER: GIUSEPPE LAMANNA **TEL:**

LOT NUMBER	PHASE	HOUSE TYPE	CLOSING DATE	
48 Block 50	1	PALMER Elev B	28-Feb-23	

Date Added: 11-Jan-23 **Invoice Number: 8423**

1 - APPLIANCE PACKAGE- Install the Standard Appliance Package throughout the home, where applicable.
Note:

1 - KITCHEN- Install builders standard counter top, Emmerstone MAPLE WHITE
Note:

1 - KITCHEN-Install an upgraded "L" Edge throughout the kitchen ONLY, in lieu of the builders standard edge.
Note:

1 - KITCHEN- Install an upgraded undermount kitchen sink for the kitchen, in lieu of the builders standard. Install the Blanco Quatrus R15 U2 Model #401519
Note: Install standard single hole faucet

1 - POWDER ROOM-Install builders standard counter top, Emmerstone MAPLE WHITE with standard "A" Edge
Note:

1 - POWDER ROOM- Install an upgarde faucet for the powder room- Install the Moen CIA Single Handle Lav Faucet with Lift Rod Drain in Matte Black Model # 6221 BL
Note:

1 - MASTER ENSUITE- Install builders standard counter top, Emmerstone PURE GRAY with standard "A" Edge
Note:

1 - MAIN BATH- Install builders standard counter top, Emmerstone PURE GRAY with standard "A" Edge
Note:

1 - CLARIFICATION- Install the builders standard Plumbing Fixtures throughout all bathrooms, where applicable.
Note:

1 - COUNTER TOPS

Purchaser accepts & acknowledges that the Stone slabs vary in size & all seams are visible & the fabricator reserves the right to position the seams as necessary.
Note:

1 - CLARIFICATION- Install the Standard 3" Splash throughout all bathroom vanity counter tops, where applicable.
Note:

1 - STAIRCASE VS FLOORING
WOOD SPECIES DIFFERENCE:
STAIRCASE - The purchaser was advised and therefore accepts and acknowledges that the wood species of the staircase and flooring chosen do not match. This difference may result in a stain colour variance.
Note: The purchaser agrees that the vendor is to be exempt from any and all claims by the purchaser regarding this colour variance.

1 - STAIRCASE VS FLOORING
STAINING DIFFERENCE:
STAIRCASE - The purchaser was advised and therefore accepts and acknowledges that the stain of the staircase and flooring chosen do not match. This difference might result in an undesirable colour variance.
Note: The purchaser agrees that the vendor is to be exempt from any and all claims by the purchaser regarding this colour variance.

1 - SECOND FLOOR- Install Laminate upgrade flooring throughout the 2nd floor, in lieu of the builders standard carpet. Install the HIghland Watson Natural Oak EE-H-292, throughout the Upper Hall, Master Bedroom, Bedroom #2, and #3
Note:

SITE COPY

CONSTRUCTION SUMMARY

Grovetrail Developments Inc.

PURCHASER: GIUSEPPE LAMANNA **TEL:**

LOT NUMBER	PHASE	HOUSE TYPE	CLOSING DATE	
48 Block 50	1	PALMER Elev B	28-Feb-23	

Date Added: 11-Jan-23 **Invoice Number: 8423**

1 - MASTER ENSUITE- Install 8x10 Cinq Grey wall tile on the ceiling of the Master Ensuite shower stall
Note:

1 - MAIN BATH- Install 8x10 Cinq Grey wall tile on the ceiling of the Main Bath shower stall
Note:

1 - MASTER ENSUITE- Install Frameless glass enclosure for the Master Ensuite shower stall, in lieu of the builders standard framed glass panels.
Note:

1 - Purchaser has received a further discount of $5,648.47 (50%) on the Sub-Total
Note:

1 - PURCHASER HAS ATTENDED A COLOUR CHART APPOINTMENT AT THE DESIGN STUDIO AND HAS DECLINED ANY ADDITIONAL UPGRADES
Note:

1 - PURCHASER AWARE AND ACCEPTS THAT ANY CHANGES MADE TO UPGRADES AFTER SIGNING THIS PURCHASERS EXTRA FORM ARE SUBJECT TO A MINIMUM ADMINISTRATION FEE OF $1,000
Note:

1 - BONUS PACKAGE-PURCHASER TO RECEIVE $7,500 (INCLUSIVE OF TAXES) WORTH OF UPGRADES AT THE DESIGN STUDIO AT TIME OF COLOUR CHART
Note:

This Document is Extremely Time Sensitive - Printed 31 Jan 23 at 13:24

DocuSign Envelope ID: 59873AF6-F9C1-4D1F-B5B2-C6DAF9D0EE01

* INTERIOR COLOUR SCHEME *

Purchaser	Decor Consultant	Model and Elevation	Telephone Res. / Bus	Project	Closing Date	Property
GIUSEPPE LAMANNA	Laura Di Pede	PALMER Elev B	/	Grovetrail Developments Inc.	28/02/2023	48 Block 50

Interior Paint

	Description
Master Ensuite	(STD) SILVER BIRCH
Main Bathroom	(STD) SILVER BIRCH
Powder Room	(STD) SILVER BIRCH
Kitchen/Dinette	(STD) SILVER BIRCH
Laundry- 2nd Flr	(STD) SILVER BIRCH
Foyer	(STD) SILVER BIRCH
Great Room	(STD) SILVER BIRCH
Upper Hall	(STD) SILVER BIRCH
Master Bedroom	(STD) SILVER BIRCH
Bedroom 2	(STD) SILVER BIRCH
Bedroom 3	(STD) SILVER BIRCH

Cabinet

Style	Countertop	Counter Edge	Handle / Knob
EURO RUSTICA LARICE BIANCO (STD)	Emmerstone PURE GRAY (STD)	"A" EDGE (STD)	930396BSN
EURO RUSTICA LARICE BIANCO (STD)	Emmerstone PURE GRAY (STD)	"A" EDGE (STD)	930396BSN
EURO RUSTICA ROVER CHIOSTRO R-U03 (STD)	Emmerstone MAPLE WHITE (STD)	"A" EDGE (STD)	930396DBK
EURO RUSTICA LARICE BIANCO (STD)	Emmerstone MAPLE WHITE (STD)	"L" EDGE (UPGD)	930396DBK

Appliance Opening/Dimension

Fridge Size	STANDARD	Range	STANDARD
Built-Ins	None	Microwave	None
Hood Fan	Std 30in	Exhaust Opening	● 6" ○ 8"
Dishwasher Cabinet	Std 24in Opening		

Notes

STANDARD APPLIANCES

Fireplace

Fireplace	N/A	Fireplace	N/A
Location Flooring	N/A	Location Flooring	N/A
Style	N/A	Style	N/A
Finish	N/A	Finish	N/A
Marble	N/A	Marble	N/A
Hearth	N/A	Hearth	N/A

Decor Consultant: Laura Di Pede

Purchaser: DocuSigned by: Joe Lamanna GIUSEPPE LAMANNA 0A2C7F8D0365435...

Vendor: Grovetrail Developments Inc.

Lot: 48 Block 50 Project: Grovetrail Developments Inc. Model: PALMER Elev B

Printed Dec 20, 2022 10:35 am

TOWN | THE PALMER (20-11) CORNER

BLK. 50 LOT 48

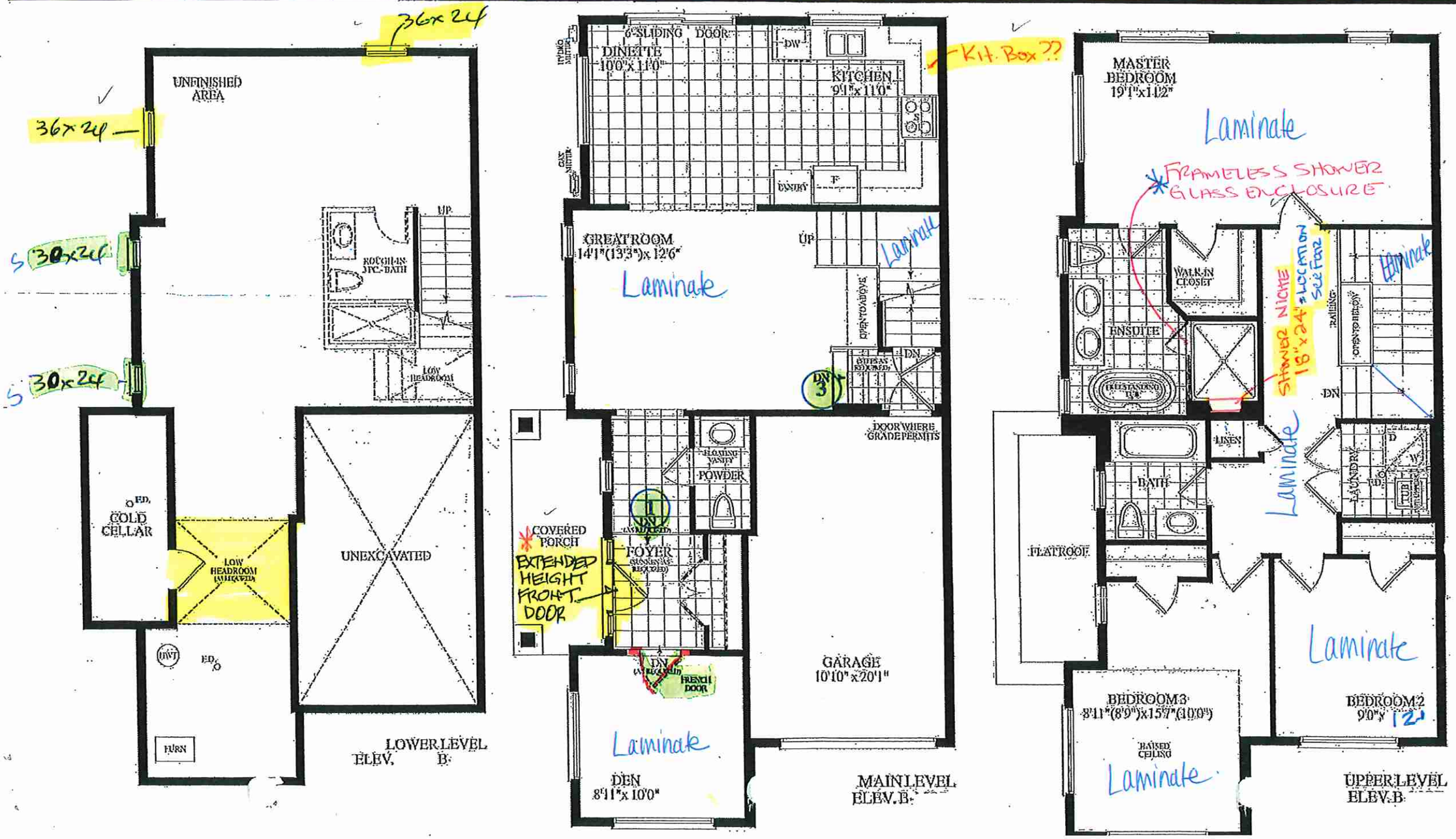

BLK. 50 TH 48 - 20-11 CRN. - PALMER EL. B

Villa
KITCHENS & FINE CABINETRY LTD

8111 Jane St. Unit 10
Concord, Ontario L4K 4L7
Tel. (905) 669- 7028
Fax. (905) 669 - 7903
email: designstudio@villakitchens.ca
www.villakitchens.ca

CLIENT: ROYAL PINE HOMES

PROJECT: RP-CE-BLK 50- TH48

MODEL: PALMER -2011 CORNER ELEVATION B

KITCHEN

DOOR STYLE: EURO MELAMINE
TRIM: NO
COLOUR: RU-05 LARICE BIANCO
INTERIOR COLOUR: WHITE MELAMINE
DRAWER BOX:STANDRAD - NO SOFT CLOSE
HINGES: STANDARD - NO SOFT CLOSE
LIGHT VALANCE: NO
CROWN MOULDING: SQUARE CROWN
PAN MOULDING: NO
COUNTERTOP: BY OTHERS
INSTALL HEIGHT: 95 5/8"
HEIGHT TO UNDERSIDE OF BULKHEAD: 98 5/8" AFF
DECORATIVE HARDWARE:
MARATHON - BRUSHED NICKEL FIN.
#9603 -96-DBK- 6 1/4" L OVERALL

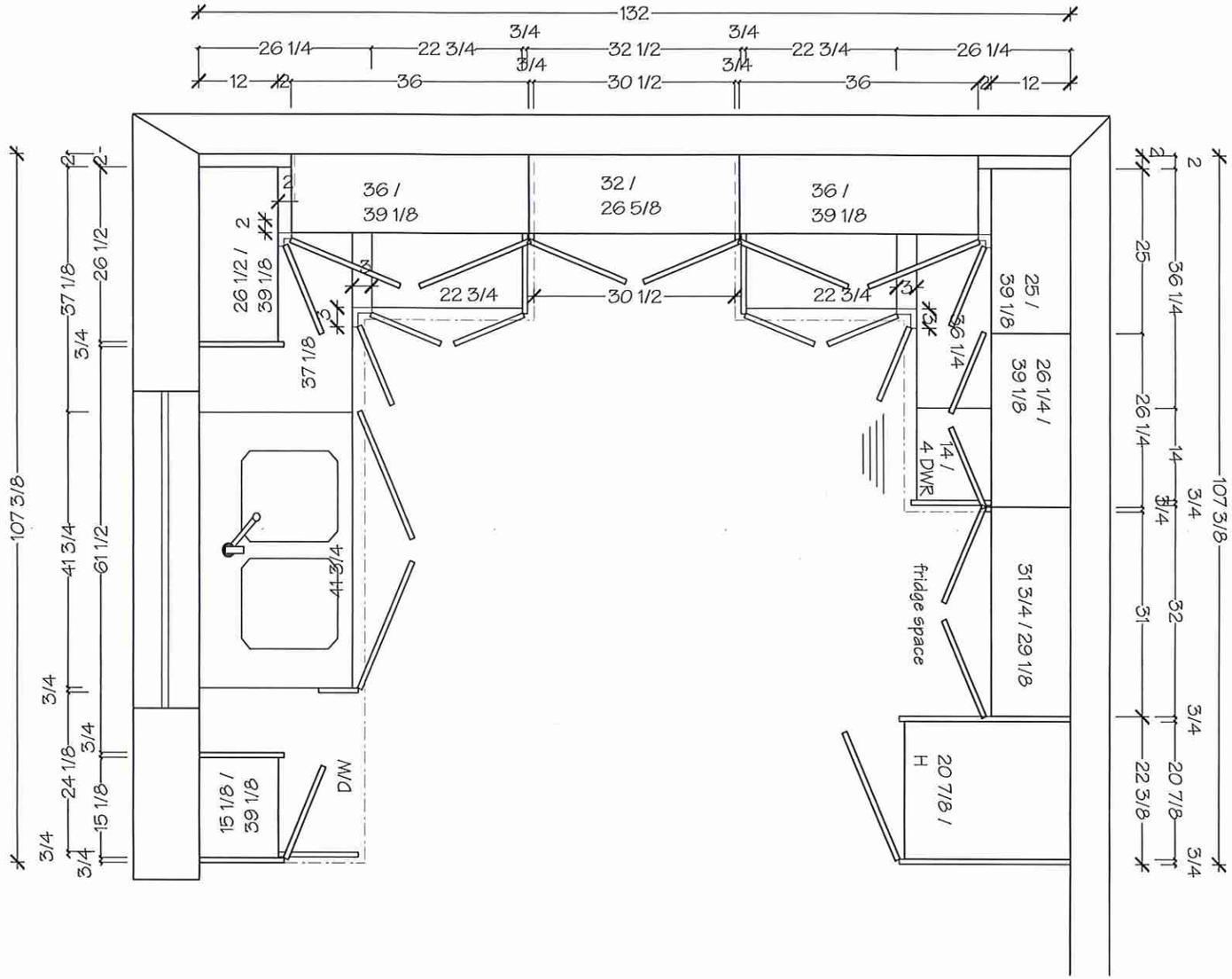

DRAWN BY: Lai-Yee
DATE: JANUARY 26, 2023
REVISED:
PAGE: 1 OF 7

KITCHENS & FINE CABINETRY LTD

8111 Jane St. Unit 10
Concord, Ontario L4K 4L7
Tel. (905) 669- 7028
Fax. (905) 669 - 7903
email: designstudio@villakitchens.ca
www.villakitchens.ca

CLIENT: ROYAL PINE HOMES

PROJECT: RP-CE-BLK 50- TH48

MODEL: PALMER -2011 CORNER ELEVATION B

KITCHEN

DOOR STYLE: EURO MELAMINE
TRIM: NO
COLOUR: RU-05 LARICE BIANCO
INTERIOR COLOUR: WHITE MELAMINE
DRAWER BOX:STANDRAD - NO SOFT CLOSE
HINGES: STANDARD - NO SOFT CLOSE
LIGHT VALANCE: NO
CROWN MOULDING: SQUARE CROWN
PAN MOULDING: NO
COUNTERTOP: BY OTHERS
INSTALL HEIGHT: 95 5/8"
HEIGHT TO UNDERSIDE OF BULKHEAD: 98 5/8" AFF
DECORATIVE HARDWARE:
MARATHON - BRUSHED NICKEL FIN.
#9603 -96-DBK- 6 1/4" L OVERALL

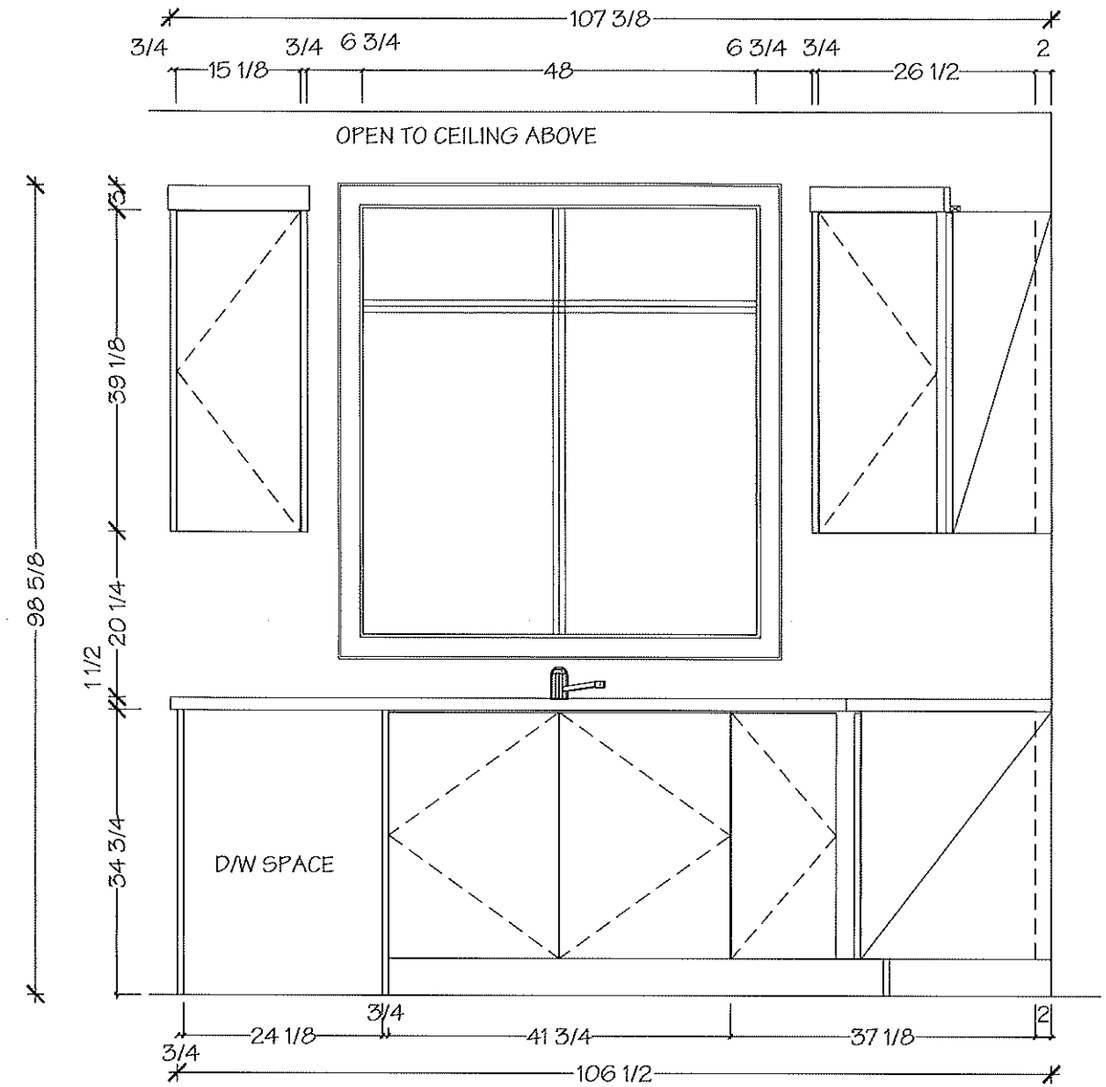

DRAWN BY: Lai-Yee
DATE: JANUARY 26, 2023
REVISED:
PAGE: 2 OF 7

KITCHENS & FINE CABINETRY LTD

8111 Jane St. Unit 10
Concord, Ontario L4K 4L7
Tel. (905) 669- 7028
Fax. (905) 669 - 7903
email: designstudio@villakitchens.ca
www.villakitchens.ca

CLIENT: ROYAL PINE HOMES

PROJECT: RP-CE-BLK 50- TH48

MODEL.: PALMER -2011 CORNER ELEVATION B

KITCHEN

DOOR STYLE: EURO MELAMINE
TRIM: NO
COLOUR: RU-05 LARICE BIANCO
INTERIOR COLOUR: WHITE MELAMINE
DRAWER BOX:STANDRAD - NO SOFT CLOSE
HINGES: STANDARD - NO SOFT CLOSE
LIGHT VALANCE: NO
CROWN MOULDING: SQUARE CROWN
PAN MOULDING: NO
COUNTERTOP: BY OTHERS
INSTALL HEIGHT: 95 5/8"
HEIGHT TO UNDERSIDE OF BULKHEAD: 98 5/8" AFF
DECORATIVE HARDWARE:
MARATHON - BRUSHED NICKEL FIN.
#9603 -96-DBK- 6 1/4" L OVERALL

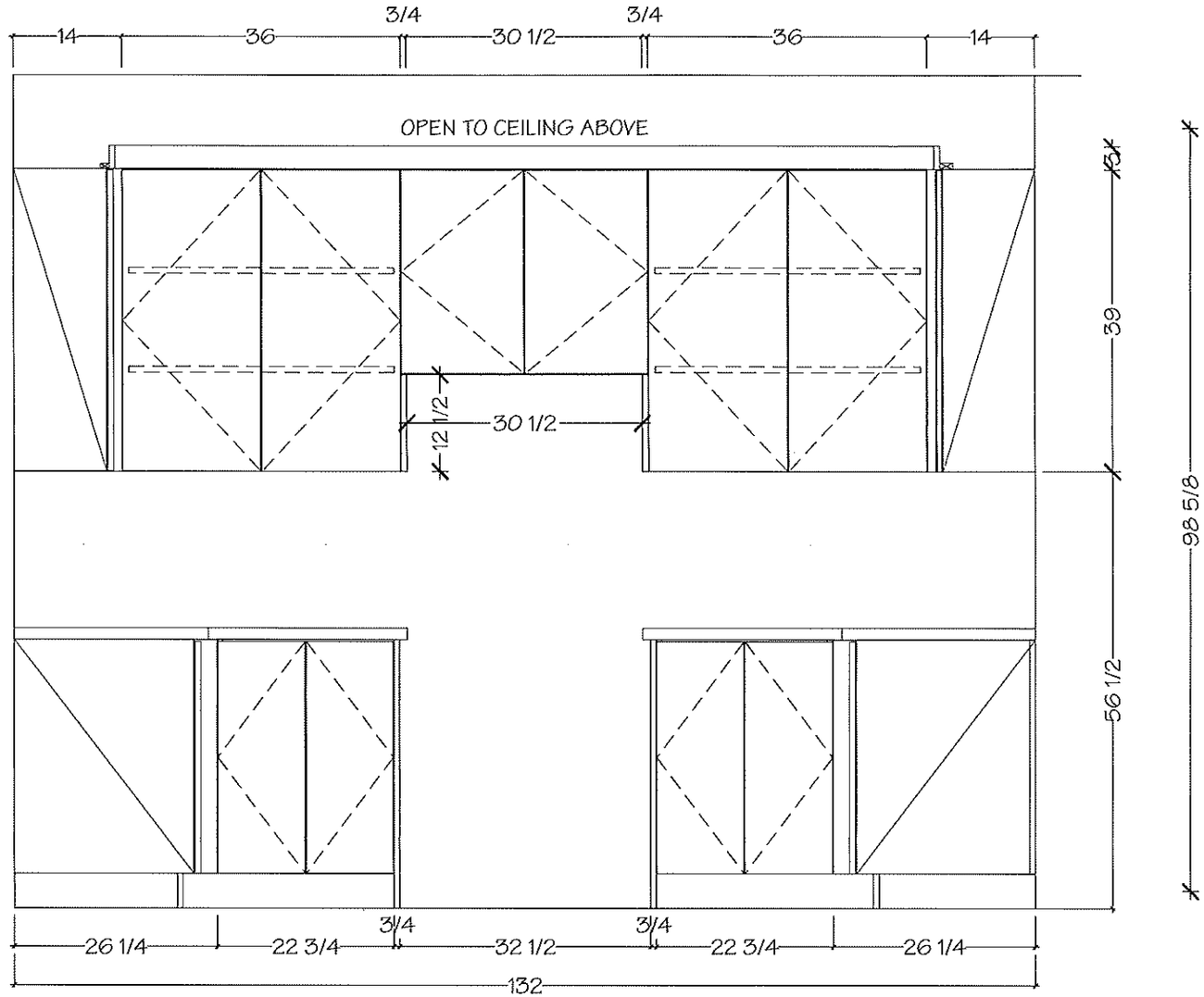

DRAWN BY: Lai-Yee
DATE: JANUARY 26, 2023
REVISED:
PAGE: 3 OF 7

KITCHENS & FINE CABINETRY LTD

8111 Jane St. Unit 10
Concord, Ontario L4K 4L7
Tel. (905) 669- 7028
Fax. (905) 669 - 7903
email: designstudio@villakitchens.ca
www.villakitchens.ca

CLIENT: ROYAL PINE HOMES

PROJECT: RP-CE-BLK 50- TH48

MODEL: PALMER -2011 CORNER ELEVATION B

KITCHEN

DOOR STYLE: EURO MELAMINE
TRIM: NO
COLOUR: RU-05 LARICE BIANCO
INTERIOR COLOUR: WHITE MELAMINE
DRAWER BOX:STANDRAD - NO SOFT CLOSE
HINGES: STANDARD - NO SOFT CLOSE
LIGHT VALANCE: NO
CROWN MOULDING: SQUARE CROWN
PAN MOULDING: NO
COUNTERTOP: BY OTHERS
INSTALL HEIGHT: 95 5/8"
HEIGHT TO UNDERSIDE OF BULKHEAD: 98 5/8" AFF
DECORATIVE HARDWARE:
MARATHON - BRUSHED NICKEL FIN.
#9603 -96-DBK- 6 1/4" L OVERALL

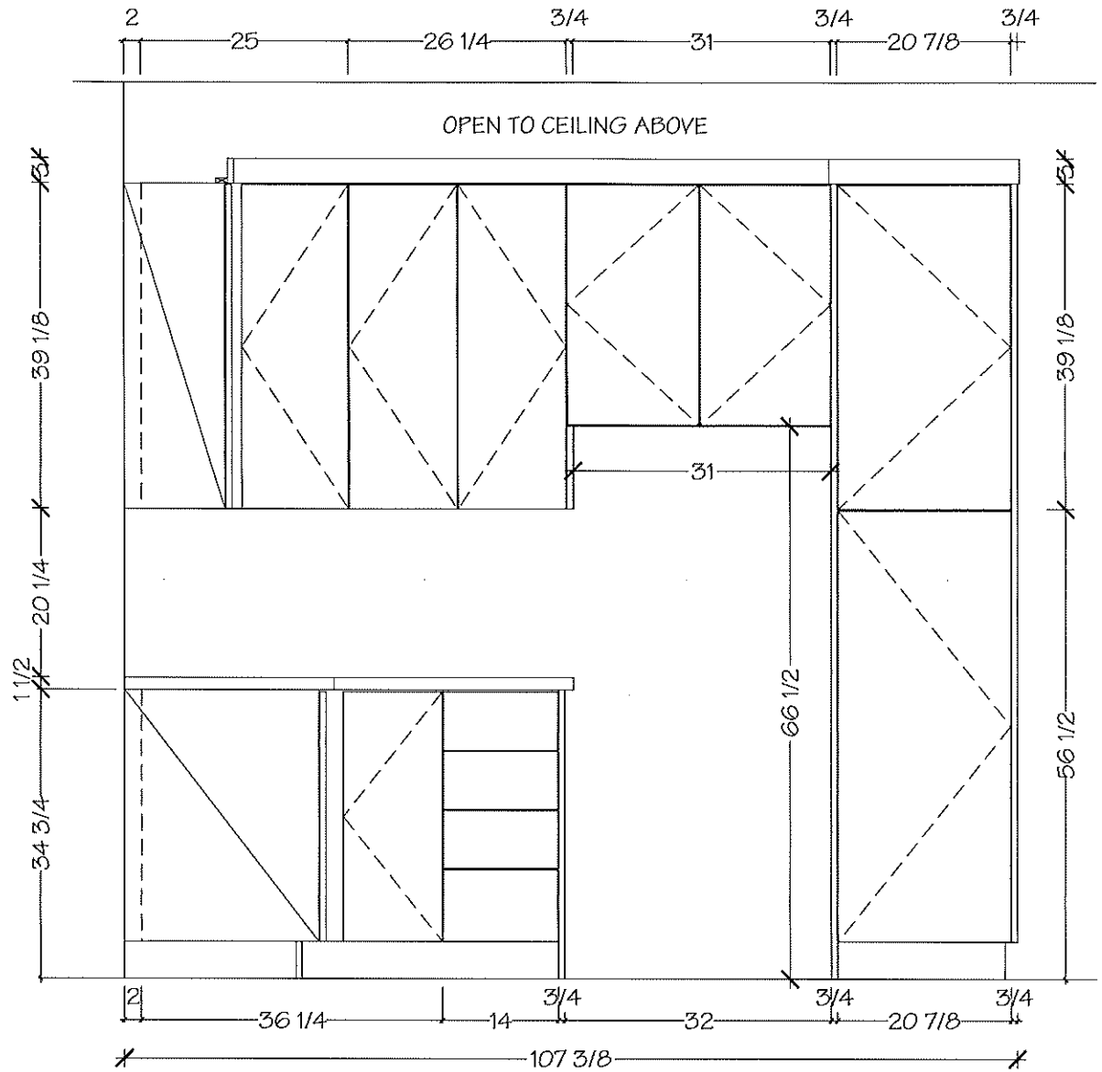

DRAWN BY: Lai-Yee
DATE: JANUARY 26, 2023
REVISED:
PAGE: 4 OF 7

Villa
KITCHENS & FINE CABINETRY LTD

111 Jane St. Unit 10
oncord, Ontario L4K 4L7
el. (905) 669- 7028
ax. (905) 669 - 7903
mail: designstudio@villakitchens.ca
ww.villakitchens.ca

CLIENT: ROYAL PINE HOMES

PROJECT: RP-CE-BLK 50- TH48

MODEL: PALMER -2011 CORNER
ELEVATION B

POWDER ROOM

DOOR STYLE: EURO MELAMINE
TRIM: NO
COLOUR:RUSTICA ROVERE CHIOSTRO RU-03
INTERIOR COLOUR: WHITE MELAMINE
DRAWER BOX: N/A
HINGES: STANDARD- NO SOFT CLOSE
COUNTERTOP: BY OTHERS
INSTALL HEIGHT: 33 1/4 + C/T
DECORATIVE HARDWARE: 9303-96 DBK

TH48 BLK50

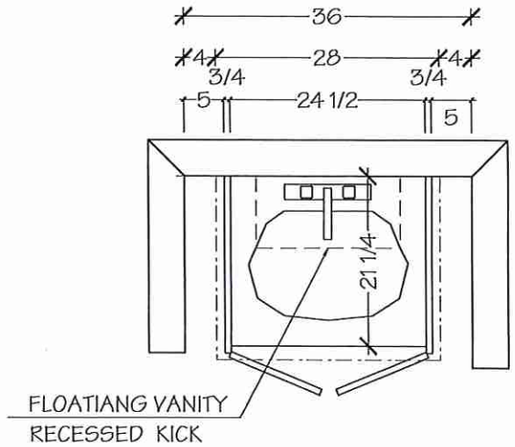

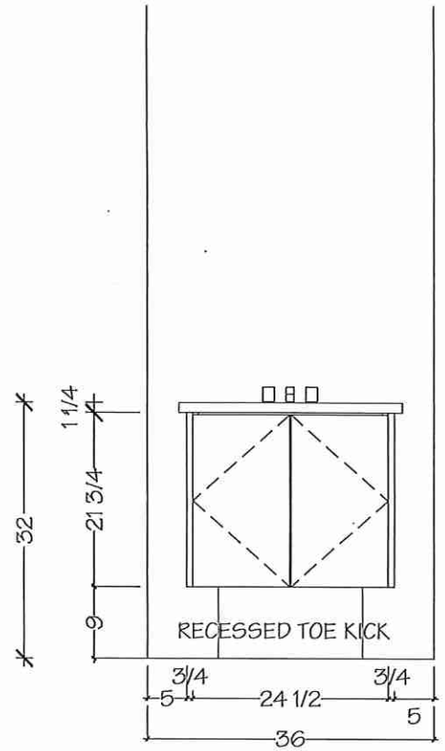

DRAWN BY: Lai-Yee
REVISED: JANUARY 25, 2023
REVISED:
PAGE: 7 OF 7

Villa
KITCHENS & FINE CABINETRY LTD

8111 Jane St. Unit 10
Concord, Ontario L4K 4L7
Tel. (905) 669- 7028
Fax. (905) 669 - 7903
email: designstudio@villakitchens.ca
www.villakitchens.ca

CLIENT: ROYAL PINE HOMES

PROJECT: RP-CE-BLK 50- TH48

MODEL: PALMER -2011 CORNER ELEVATION B

MASTER ENSUITE

DOOR STYLE: EURO MELAMINE
TRIM: NO
COLOUR: RU-05 LARICE BIANCO

INTERIOR COLOUR: WHITE MELAMINE
DRAWER BOX: STANDARD- NO SOFT CLOSE
HINGES: STANDARD- NO SOFT CLOSE
COUNTERTOP: BY OTHERS
INSTALL HEIGHT: 30 3/4" + C/T
DECORATIVE HARDWARE: 9303-96 BSN

TH 48 BLK50

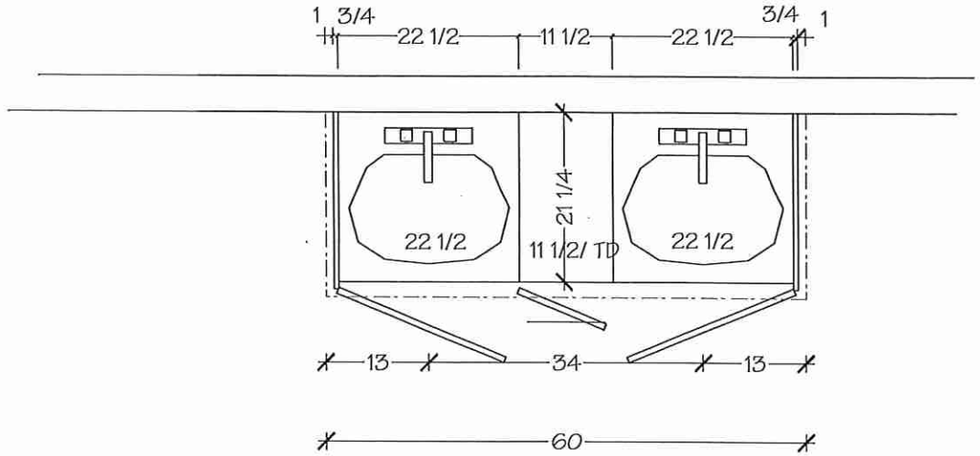

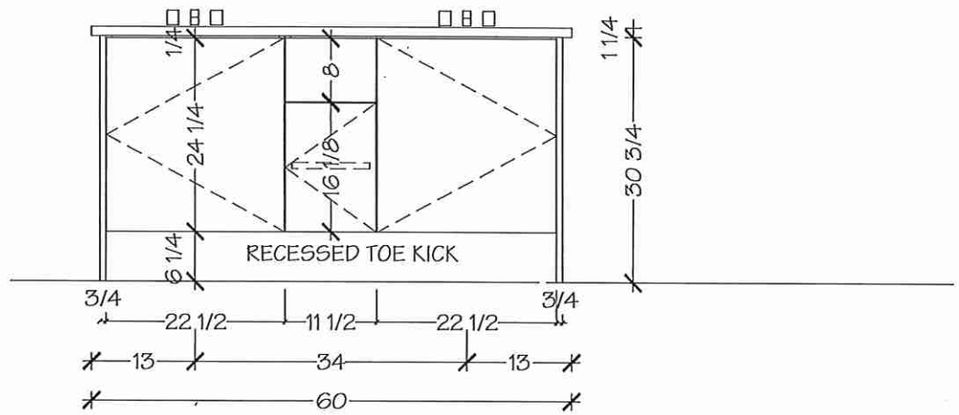

DRAWN BY: Lai-Yee
REVISED: JANUARY 25, 2023
REVISED:
PAGE: 6 OF 7

Villa
KITCHENS & FINE CABINETRY LTD

8111 Jane St. Unit 10
Concord, Ontario L4K 4L7
Tel. (905) 669- 7028
Fax. (905) 669 - 7903
email: designstudio@villakitchens.ca
www.villakitchens.ca

CLIENT: ROYAL PINE HOMES

PROJECT: RP-CE-BLK 50- TH48

MODEL: PALMER -2011 CORNER ELEVATION B

MAIN BATH

DOOR STYLE: EURO MELAMINE
TRIM: NO
COLOUR: RU-05 LARICE BIANCO

INTERIOR COLOUR: WHITE MELAMINE
DRAWER BOX: STANDARD- NO SOFT CLOSE
HINGES: STANDARD- NO SOFT CLOSE
COUNTERTOP: BY OTHERS
INSTALL HEIGHT: 30 3/4" + C/T
DECORATIVE HARDWARE: 9303-96 BSN

TH 48 BLK50

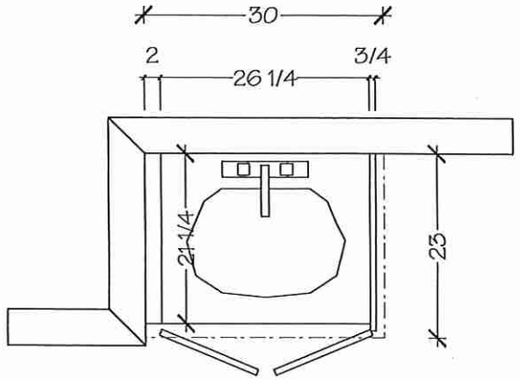

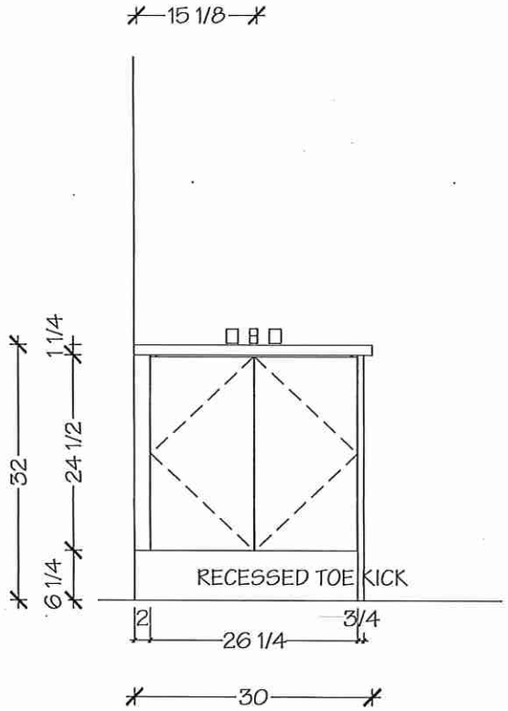

DRAWN BY: Lai-Yee
REVISED: JANUARY 25, 2023
REVISED:
PAGE: 5 OF 7

TH48 BLK 50

EDGE DETAILS

004

A.

STRAIGHT EDGE
(STANDARD - 3/4")

* Powder Room
* Master Ensuite
* Main Bath

**L.

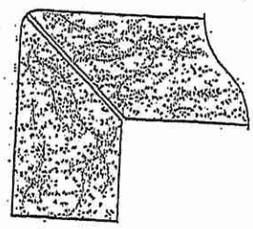

MITER WITH SKIRT EDGE
(MEDIUM - 1 1/2")

* Kitchen

~~M.~~

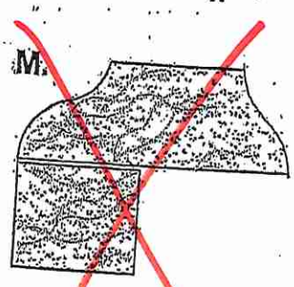

~~OGEE - SQUARE EDGE~~
~~(MED./HIGH - 1 1/2")~~

EDGING UP-GRADE OPTIONS

RECEIVED
OCT 5 '17

BLANCO

TH 48 BLK 50

Sink Specifications

QUATRUS R15 U 2
Stainless steel brushed finish

Colour	SKU
brushed finish	401519

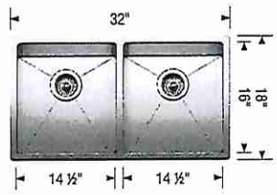

Design and planning tips

- Min cabinet size: 36 in (915 mm)
- Bowl Depth: 9 in (230.0 mm)

Specifications:
3 ½" (90 mm) stainless steel strainer(s)
Installation instructions
Cut-out template
Mounting clips
Limited lifetime warranty

Depending on cabinet construction, a different cabinet size may be required. Consult the cabinet manufacturer.
Cubed weight: 80 lbs.

Install Standard Faucet

~~Optional Accessories~~

~~Ash Cutting Board~~	~~406345~~
~~CapFlow Strainer Cover~~	~~517666~~
~~Sink Grid~~	~~406454~~

Warranty
Limited lifetime warranty on all sinks and faucets. One-year warranty on all accessories and soap dispensers.

Code/Standards Compliance
BLANCO sinks and faucets are third-party tested and certified to CSA, cUPC, ANSI/ASME, IAPMO and NSF standards and listed by applicable certification bodies. For more information on individual product listings, contact our office or listing organization.

Need support? Learn more by watching our sink & faucet How-to videos:
https://www.blanco.com/ca-en/support/how-to-videos/how-to-videos-for-sinks/

BLANCO Canada Inc
100 Corporation Drive
Brampton ON L6S 6B5

Tel & Fax
Tel: 905-494-2400 Toll free: 1-877-425-2626
Fax: 905-494-2425 Toll free: 1-877-825-2626

While BLANCO strives to provide accurate information, all images and dimensions in this document are intended for reference only and are subject to change at any time without notice. This document is not intended for use as an installation guide. For technical installation details, refer to installation instructions provided with the product. BLANCO assumes no responsibility for the use of superseded or voided specifications.

TH 48 BLK 50

Cia™

* Powder Room *

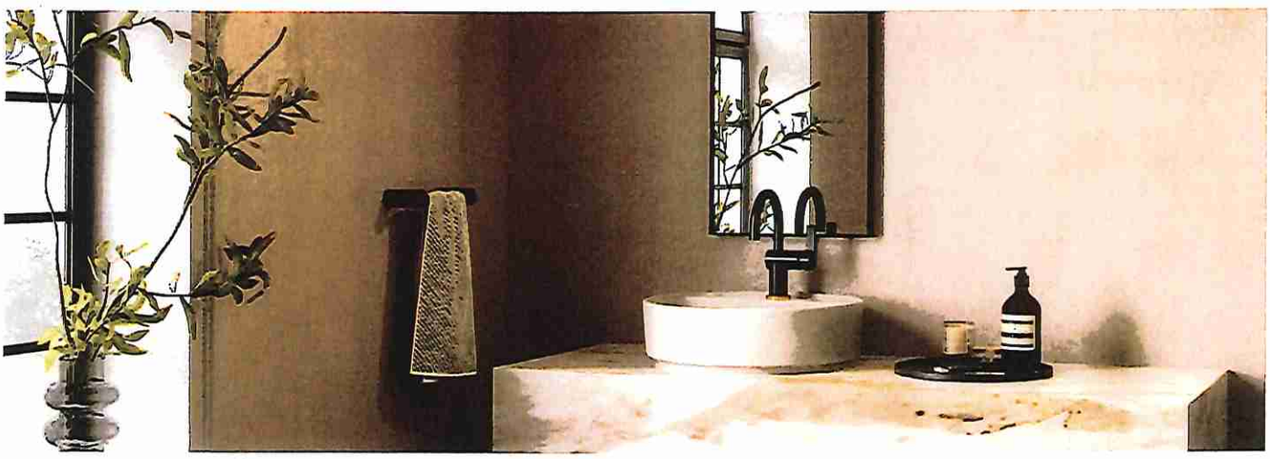

LAVATORY FAUCETS

MotionSense Wave™ Single Handle Lav Faucet

6221EW

Chrome $1,102.89

Other $1,651.78

Single hole installation only

Single Handle Lav Faucet with Lift Rod Drain

6221

~~Chrome $449.14~~

~~Other $666.95~~

Single hole installation only

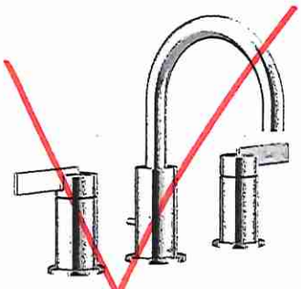

Two Handle Adjustable Widespread (8" - 16") Lav Faucet with Lift Rod Drain

T6222 / 69000

Chrome $698.32

Other $907.46

CIA FINISH OPTIONS

Chrome, LifeShine® Brushed Nickel (BN), LifeShine® Brushed Gold (BG), Matte Black (BL)

To order, combine the model number with one of these finish letter(s): LifeShine® Brushed Nickel (BN), LifeShine® Brushed Gold (BG) &Matte Black (BL). To order Chrome (C) model, use model number only.

FGI

[redacted]

TH 48 BLOCK 50 *Master Ensuite*

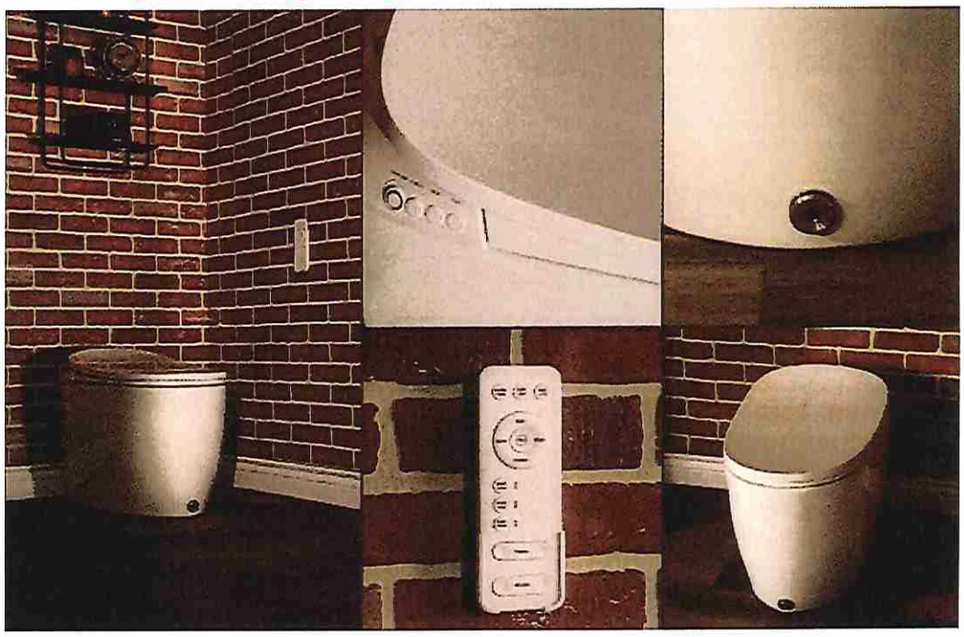

INTELLIGENT TOILET

ITL-5001-EW

centon sales corporation

centon sales corporation

Compact, concealed one piece toilet with integrated personal cleaning
Low profile, modern tankless design offers a direct powerful flush action
Automatic flush system for touchless convenience
1.28Gpf (4.8Lpf) single flush high efficiency
16" Height elongated bowl
Rimless design provides a more effective hygienic and easy to clean bowl
Pre-rinsing before each use
Additional foot flush control for convenience
Illuminated night light
Stainless spray nozzle provides adjustable spray, positi and water temperature options
Adjustable warm air drying
Slow close heated seat with adjustable temperature controls for added comfort
Ultraviolet sterilization to sanitize the spray nozzle
Easy to operate remote control
26 ¾" L x 16" W x 20 3/8" H

COMPLIANCE STANDARDS

- ASME A112.19.2/CSA B45.1
- ASME A112.4.2/CSA B45.16
- WaterSense Specification
- UL 1951, CSA C22.2 No.64 and CSA C22.2 No.68

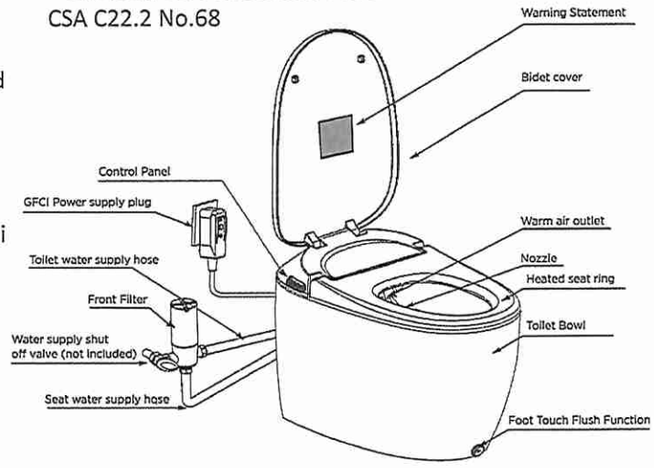

FOREMOST®
INTELLIGENT TOILET

foremostbath.com
foremostcanada.com

TH48 BLOCK 50

DIMENSIONS

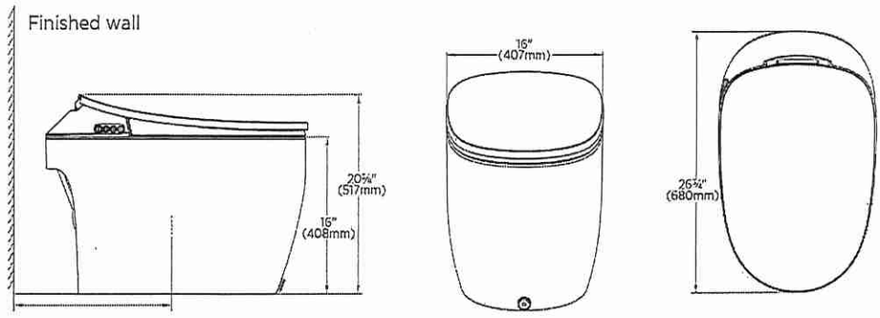

Distance of 12" Rough-In (305mm)

※We reserve the right to change the dimension marked in the figure at any time without prior notice.

PARTS

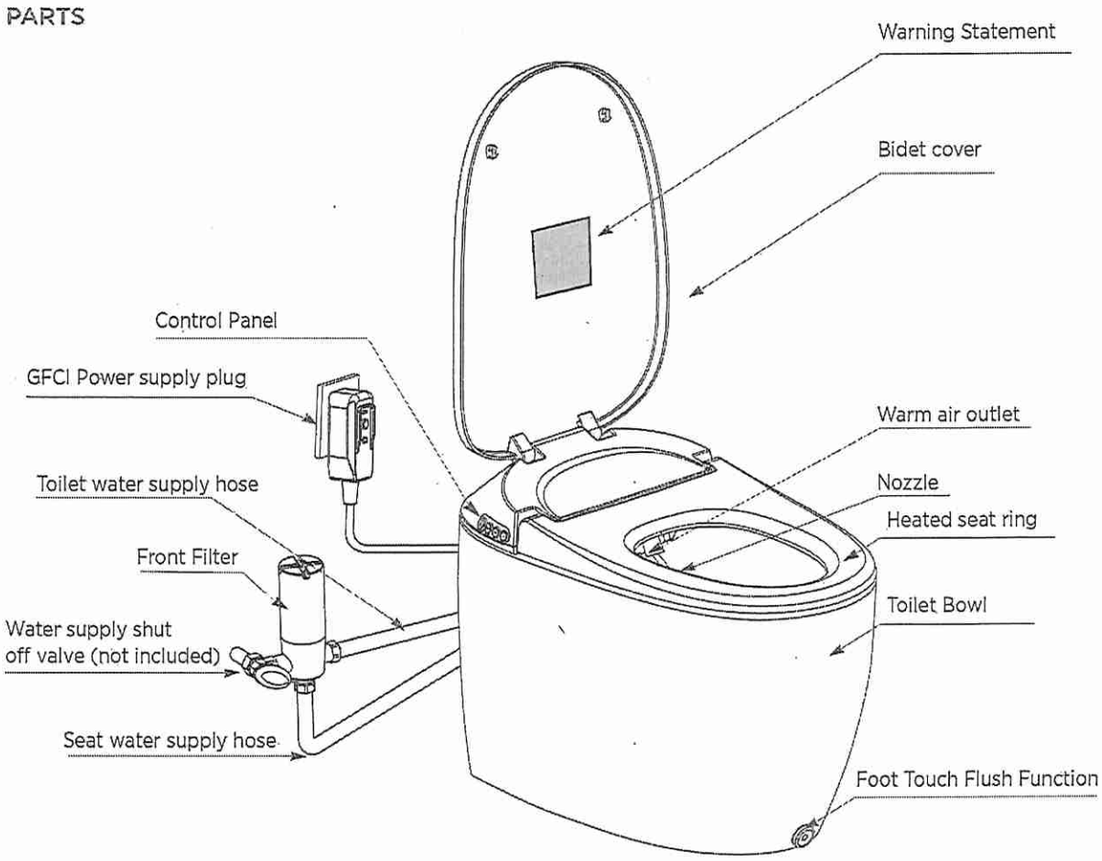

FOREMOST®
INTELLIGENT TOILET

foremostbath.com
foremostcanada.com

#48 BLK 50

SPECIFICATIONS

Rated Voltage		110V
Rated frequency		60Hz
Rated consumption power		Water intake temperature 15°C , water outlet temperature 39°C, flowrate 3.4gal/min power 1200W
Temperature of operating environment		4°C - 40°C
Water intake temperature		4°C - 35°C
Range of water intake pressure for use	Min. necessary water pressure	35 psi (over 20 gal /min when water is running)
	Max. water pressure	80 psi (in resting state)
Closet	Rough-in	12 in
Wash	Heating method	Instantaneous heating
	Water outlet quantity for posterior wash	About 0.14~0.18gal/min (adjustment of 3 levels) when water pressure is 0.05
	Water outlet quantity for Bidet wash	About 0.14~0.18gal/min(adjustment of 3 levels) when water pressure is 0.05
	Temperature of warm water	Off /about 30°C ~40°C
	Safety unit	Butterfly temperature controller, temperature fuse and flow rate test unit
Warm air	Warm air temperature	Off /about 35°C ~55°C (adjustment of 4 levels)
	Wind speed	About 4m/s
	Safety unit	Double metal plate temperature controller, temperature fuse
Seat ring	Seat ring temperature	Off /about 28°C ~40°C (adjustment of 4 levels)
	Safety unit	Temperature fuse
Remote control	Dimension	7 in L × 2½ in W × ¾ in H
	Power supply	AAA (not included)
Water-proof grade		IPX4
Length of power cable		About 47¼ in
Dimension of the product		26¾ in L × 16 in W × 20⅜ in H