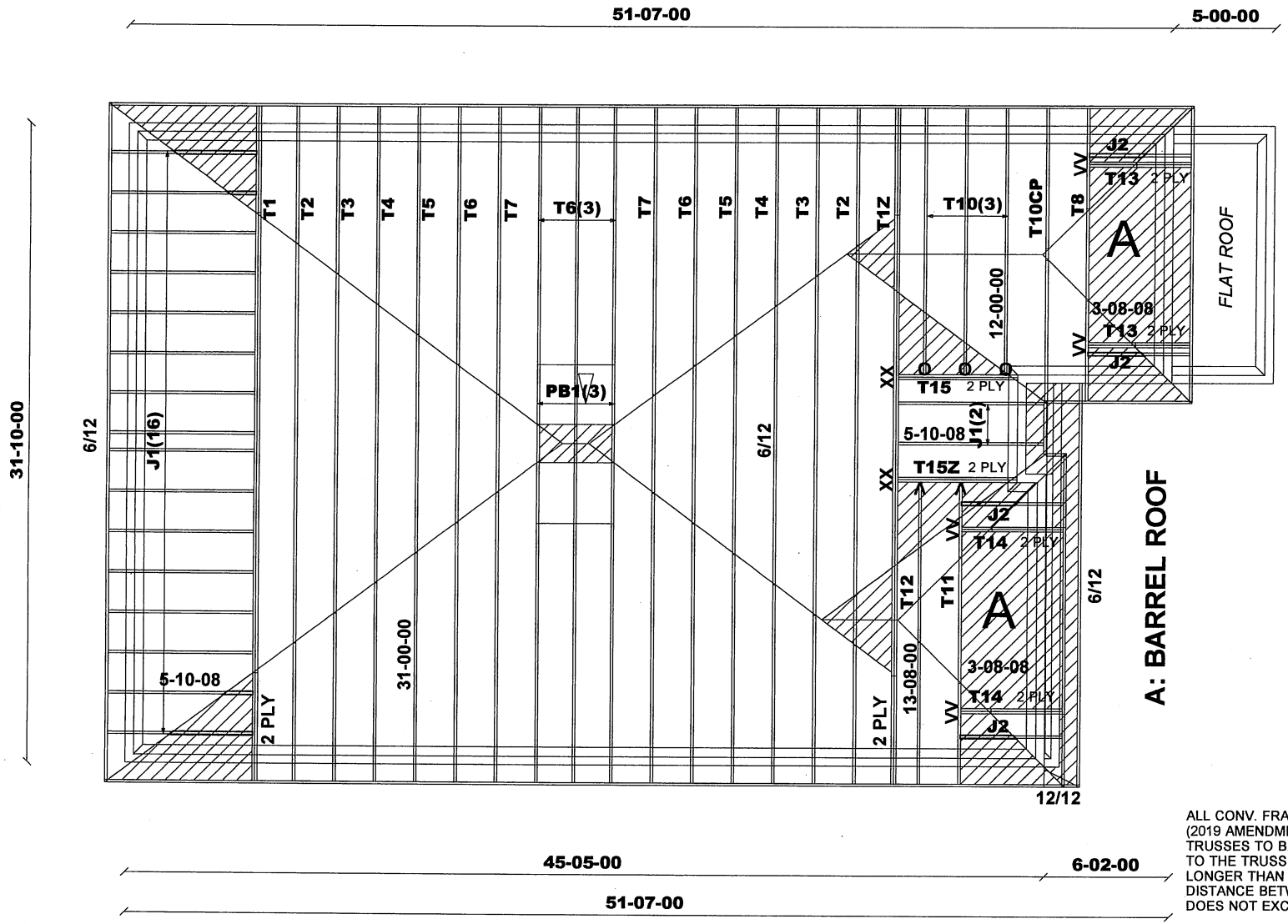

ALL ROOF PITCHES ARE 8/12 UNLESS OTHERWISE NOTED

ASPHALT SHINGLES
12" FINISHED OH.
R.T.M.C.
2X6 EXTERIOR WALLS
2X6 FASCIA BOARD

HARDWARE:
LUS24 - (O)
LJS26DS - (V)
LUS26-2 - (VV)
HGUS26-2 - (XX)

DENOTES CONV. FRAMING

DESIGN CONFORMS WITH OBC 2012 (2019 AMENDMENT)
OCCUPANCY: RESIDENTIAL
PART: 9
Ss = 31.3 psf Sr = 8.4 psf

DESIGN LOADS:
TCSL = 25.6 psf
TCDL = 6.0 psf
BCLL = 0.0 psf
BCDL = 7.4 psf

ALL CONV. FRAMING TO CONFORM WITH PART 9 OF O.B.C.2012 (2019 AMENDMENT) ROOF RAFTERS THAT CROSS MEET OVER TRUSSES TO BE 2X4 SPF @ 24"O.C. WITH A 2X4 VERT. POST TO THE TRUSS UNDER NEATH AT EACH CROSS PT. VERT. POST LONGER THAN 6" TO HAVE LATERAL BRACING SO THAT THE DISTANCE BETWEEN END PT. & BETWEEN ROWS OF BRACING DOES NOT EXCEED 6"

M13460

TAMARACK ROOF TRUSSES INC.	Job Track: **51012**	Builder / Location: **ROYAL PINE HOMES / RICHMOND HILL**	Model / Elevation: **38-11 / A** Belvedere
	Plan Log: **201982**	Project: **CENTREFIELD**	
	Layout ID: **406513**	Date: **2020-10-14** Sales: Mario DiCano Designer: LC	

THESE DRAWINGS CONSTITUTE THE PROPERTY OF TAMARACK ROOF TRUSSES INC., SHALL NOT BE REPRODUCED, PUBLISHED, OR REDISTRIBUTED IN ANY MANNER OR UTILIZED FOR ANY PURPOSE OTHER THAN THE MANUFACTURE OF TRUSSES BY TAMARACK ROOF TRUSSES INC AND WILL BE RETRACTED BY TAMARACK ROOF TRUSSES INC IF UTLILZED FOR ANY OTHER PURPOSE.

Mitek ver 8.3.3.247

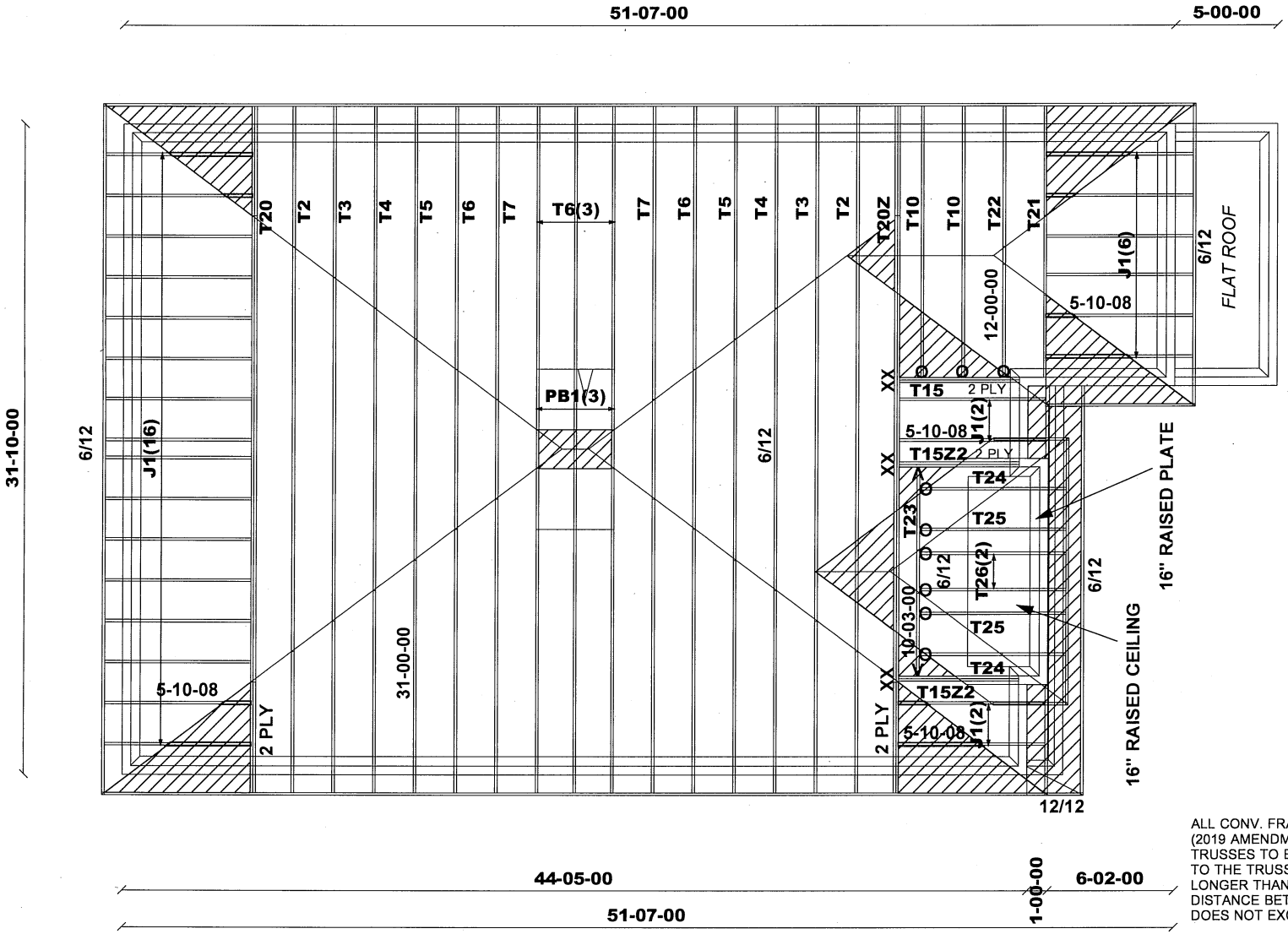

ALL ROOF PITCHES ARE 8/12
UNLESS OTHERWISE NOTED

12-10-00
3-06-08
11-01-00
4-04-08
31-10-00

ASPHALT SHINGLES
12" FINISHED OH.
R.T.M.C.
2X6 EXTERIOR WALLS
2X6 FASCIA BOARD

HARDWARE:
LUS24 - (O)
LJS26DS - (V)
HGUS26-2 - (XX)

DENOTES CONV. FRAMING

DESIGN CONFORMS WITH
OBC 2012
(2019 AMENDMENT)
OCCUPANCY: RESIDENTIAL
PART: 9
Ss = 31.3 psf Sr = 8.4 psf

DESIGN LOADS:
TCSL = 25.6 psf
TCDL = 6.0 psf
BCLL = 0.0 psf
BCDL = 7.4 psf

ALL CONV. FRAMING TO CONFORM WITH PART 9 OF O.B.C.2012 (2019 AMENDMENT) ROOF RAFTERS THAT CROSS MEET OVER TRUSSES TO BE 2X4 SPF @ 24"O.C. WITH A 2X4 VERT. POST TO THE TRUSS UNDER NEATH AT EACH CROSS PT. VERT. POST LONGER THAN 6" TO HAVE LATERAL BRACING SO THAT THE DISTANCE BETWEEN END PT. & BETWEEN ROWS OF BRACING DOES NOT EXCEED 6"

M13460

TAMARACK ROOF TRUSSES INC.	Job Track: **51012**	Builder / Location: **ROYAL PINE HOMES / RICHMOND HILL**	Model / Elevation: **38-11 / B** Belvedere
	Plan Log: **201982**	Project: **CENTREFIELD**	THESE DRAWINGS CONSTITUTE THE PROPERTY OF TAMARACK ROOF TRUSSES INC., SHALL NOT BE REPRODUCED, PUBLISHED, OR REDISTRIBUTED IN ANY MANNER OR UTILIZED FOR ANY PURPOSE OTHER THAN THE MANUFACTURE OF TRUSSES BY TAMARACK ROOF TRUSSES INC AND WILL BE RETRACTED BY TAMARACK ROOF TRUSSES INC IF UTLILZED FOR ANY OTHER PURPOSE.
	Layout ID: **406514**	Date: **2021-06-04** Sales: Mario DiCano Designer: LC	Mitek ver 8.4.2.286

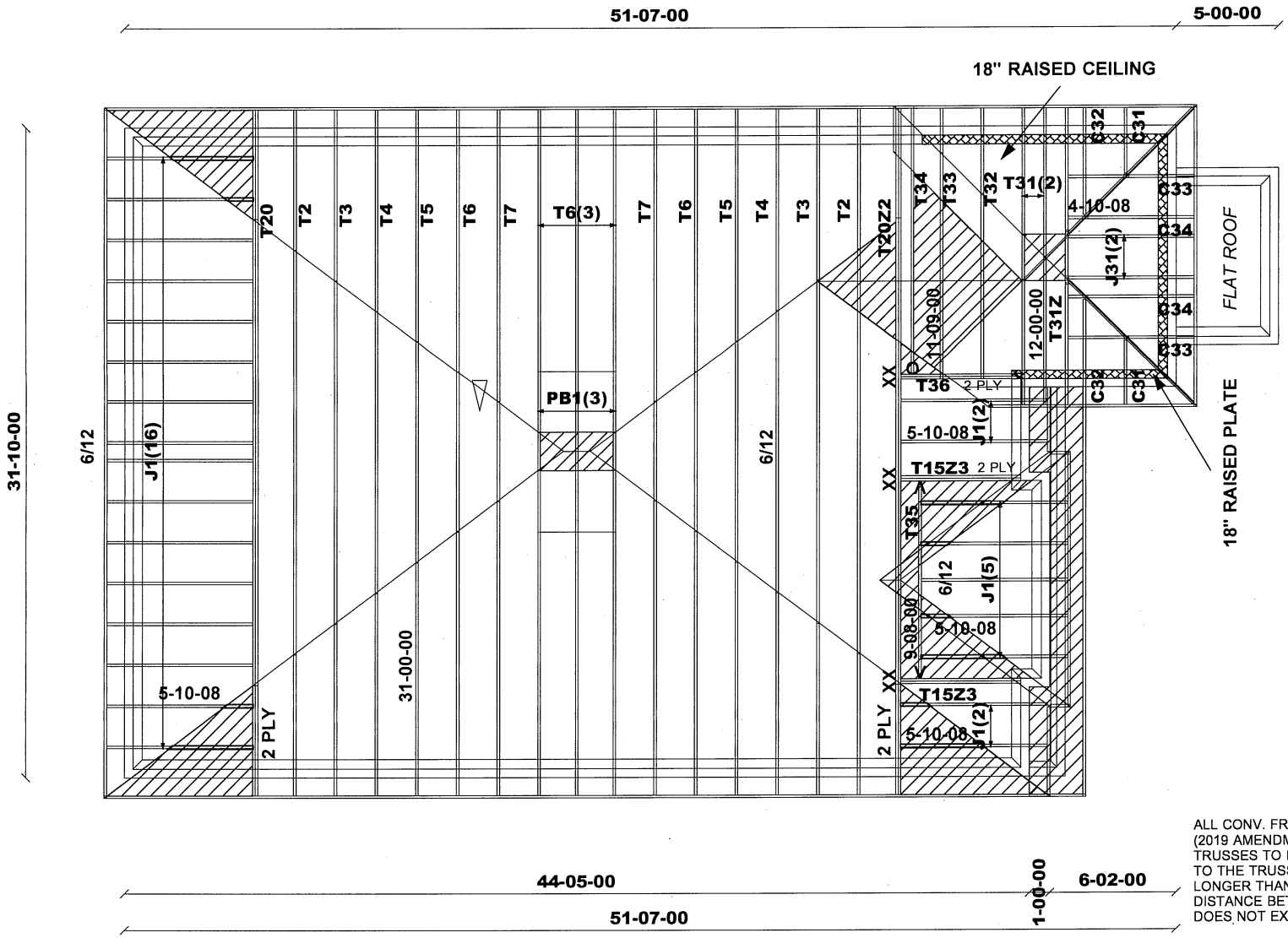

ALL ROOF PITCHES ARE 8/12
UNLESS OTHERWISE NOTED

ASPHALT SHINGLES
12" FINISHED OH.
R.T.M.C.
2X6 EXTERIOR WALLS
2X6 FASCIA BOARD

HARDWARE:
LUS24 - (O)
LJS26DS - (V)
HGUS26-2 - (XX)

DENOTES CONV. FRAMING

DESIGN CONFORMS WITH
OBC 2012
(2019 AMENDMENT)
OCCUPANCY: RESIDENTIAL
PART: 9
Ss = 31.3 psf Sr = 8.4 psf

DESIGN LOADS:
TCSL = 25.6 psf
TCDL = 6.0 psf
BCLL = 0.0 psf
BCDL = 7.4 psf

ALL CONV. FRAMING TO CONFORM WITH PART 9 OF O.B.C.2012 (2019 AMENDMENT) ROOF RAFTERS THAT CROSS MEET OVER TRUSSES TO BE 2X4 SPF @ 24"O.C. WITH A 2X4 VERT. POST TO THE TRUSS UNDER NEATH AT EACH CROSS PT. VERT. POST LONGER THAN 6" TO HAVE LATERAL BRACING SO THAT THE DISTANCE BETWEEN END PT. & BETWEEN ROWS OF BRACING DOES NOT EXCEED 6"

M13460

TAMARACK ROOF TRUSSES INC.	Job Track: **51012**	Builder / Location: **ROYAL PINE HOMES / RICHMOND HILL**	Model / Elevation: **38-11 / C** Belvedere
	Plan Log: **201982**	Project: **CENTREFIELD**	
	Layout ID: **413426**	Date: **2021-06-04** Sales: Mario DiCano Designer: LC	

THESE DRAWINGS CONSTITUTE THE PROPERTY OF TAMARACK ROOF TRUSSES INC., SHALL NOT BE REPRODUCED, PUBLISHED, OR REDISTRIBUTED IN ANY MANNER OR UTILIZED FOR ANY PURPOSE OTHER THAN THE MANUFACTURE OF TRUSSES BY TAMARACK ROOF TRUSSES INC AND WILL BE RETRACTED BY TAMARACK ROOF TRUSSES INC IF UTLILZED FOR ANY OTHER PURPOSE.

Mitek ver 8.4.2.286

DELIVERY SHIPLIST

TAMARACK ROOF TRUSSES INC.
ALPA LUMBER GROUP

Lumber Yard:	TAMARACK LUMBER	Job Track:	51012
Builder:	ROYAL PINE HOMES	PlanLog:	201982
Project:	CENTREFIELD	Layout ID:	406513
Location:	RICHMOND HILL	Ref #	
Model:	38-11	Page:	1 of 2
Lot #:		Date:	10-14-2020
Elevation:	A	Designer:	Leo Chen
		Sales Rep:	Mario DiCano

Roof Trusses

PROFILE	QTY PLY	MARK TYPE	PITCH	SPAN	HEIGHT	LUMBER	OVERHANG LEFT RIGHT	HEEL HEIGHT LEFT RIGHT	LBS. BFT.	BUNDLE # STACK #	LOAD BY REMARKS
	1 **2-ply**	**T1** **Hip Girder**	8 /12	**31-00-00**	4-01-04	2 x 4 2 x 6	1-03-08 1-03-08	1-04-13 1-04-13	294.04 181.33		
	1 **2-ply**	**T1Z** **Hip Girder**	8 /12	**31-00-00**	4-01-04	2 x 4 2 x 6	1-03-08 1-03-08	1-04-13 1-04-13	294.04 181.33		
	2	**T2** **Hip**	8 /12	**31-00-00**	5-01-04	2 x 4	1-03-08 1-03-08	1-04-13 1-04-13	255.62 161.00		
	2	**T3** **Hip**	8 /12	**31-00-00**	6-01-04	2 x 4	1-03-08 1-03-08	1-04-13 1-04-13	269.73 168.67		
	2	**T4** **Hip**	8 /12	**31-00-00**	7-01-04	2 x 4	1-03-08 1-03-08	1-04-13 1-04-13	267.35 169.67		
	2	**T5** **Hip**	8 /12	**31-00-00**	8-01-04	2 x 4	1-03-08 1-03-08	1-04-13 1-04-13	279.9 175.33		
	5	**T6** **Hip**	8 /12	**31-00-00**	9-01-04	2 x 4	1-03-08 1-03-08	1-04-13 1-04-13	699.7 436.67		
	2	**T7** **Hip**	8 /12	**31-00-00**	10-01-04	2 x 4	1-03-08 1-03-08	1-04-13 1-04-13	285.16 178.67		
	1	**T8** **Hip Girder**	8 /12	**12-00-00**	3-10-10	2 x 6	1-03-08 1-03-08	1-04-13 1-04-13	69.24 43.00		
	3	**T10** **Common**	8 /12	**12-00-00**	5-04-13	2 x 4	1-03-08	1-04-13 1-04-13	142.96 87.50		
	1	**T10CP** **Hip**	8 /12	**12-00-00**	5-02-08	2 x 4	1-03-08 1-03-08	1-04-13 1-04-13	49.18 29.83		
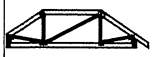	**1**	**T11** **Hip Girder**	8 /12	**13-08-00**	3-10-10	2 x 6	1-03-08	1-04-13 1-04-13	73.59 45.50		
	1	**T12** **Hip**	8 /12	**13-08-00**	5-02-08	2 x 4	1-03-08	1-04-13 1-04-13	58.72 37.50		
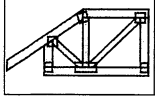	**2** **2-ply**	**T13** **Half Hip**	8 /12	**3-08-08**	2-03-13	2 x 4	1-03-08	1-04-13 2-03-13	73.9 51.33		

TAMARACK
ROOF TRUSSES INC.
ALPA LUMBER GROUP

DELIVERY SHIPLIST

Lumber Yard:	TAMARACK LUMBER	Job Track:	51012
Builder:	ROYAL PINE HOMES	PlanLog:	201982
Project:	CENTREFIELD	Layout ID:	406513
Location:	RICHMOND HILL	Ref #	
Model:	38-11	Page:	2 of 2
Lot #:		Date:	10-14-2020
Elevation:	A	Designer:	Leo Chen
		Sales Rep:	Mario DiCano

Roof Trusses

PROFILE	QTY PLY	MARK TYPE	PITCH	SPAN	HEIGHT	LUMBER	OVERHANG LEFT RIGHT	HEEL HEIGHT LEFT RIGHT	LBS. BFT.	BUNDLE # STACK #	LOAD BY REMARKS
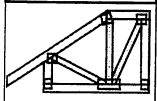	**2** **2-ply**	**T14** **Half Hip**	8 /12	**3-08-08**	2-10-08	2 x 4	1-03-08	1-04-13 2-10-08	81.2 58.00		
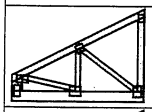	**1** **2-ply**	**T15** **Monopitch** **Girder**	6 /12	**5-10-08**	4-01-04	2 x 4 2 x 6		1-02-00 4-01-04	58.39 37.67		
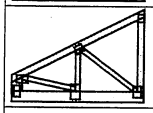	**1** **2-ply**	**T15Z** **Monopitch** **Girder**	6 /12	**5-10-08**	4-01-04	2 x 4 2 x 6		1-02-00 4-01-04	58.39 37.67		
	3	**PB1** **Piggyback**	8 /12	**7-10-11**	2-00-00	2 x 4			64.14 43.00		
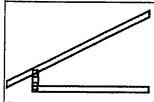	**18**	**J1** **Jack-Open**	6 /12	**5-10-08**	4-01-04	2 x 4	1-03-08	1-02-00 4-01-04	302.3 192.00		
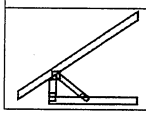	**4**	**J2** **Jack-Open**	8 /12	**3-08-08**	3-10-08	2 x 4	1-03-08	1-04-13 3-10-08	55 36.00		

TOTAL # TRUSS= **63** TOTAL BFT OF ALL TRUSSES= **2351.67** BFT. TOTAL WEIGHT OF ALL TRSSES **3732.54** LBS

HARDWARE

QTY	TYPE	MODEL	LENGTH
2	Hardware	HGUS26-2	
2	Hardware	LJS26DS	
3	Hardware	LUS24	
4	Hardware	LUS26-2	

TOTAL NUMBER OF ITEMS= **11**

TAMARACK
ROOF TRUSSES INC.
ALPA LUMBER GROUP

DELIVERY SHIPLIST

Lumber Yard:	TAMARACK LUMBER	Job Track:	51012
Builder:	ROYAL PINE HOMES	PlanLog:	201982
Project:	CENTREFIELD	Layout ID:	406514
Location:	RICHMOND HILL	Ref #	
Model:	38-11	Page:	1 of 2
Lot #:		Date:	10-14-2020
Elevation:	B	Designer:	Leo Chen
		Sales Rep:	Mario DiCano

Roof Trusses

PROFILE	QTY PLY	MARK TYPE	PITCH	SPAN	HEIGHT	LUMBER	OVERHANG LEFT RIGHT	HEEL HEIGHT LEFT RIGHT	LBS. BFT.	BUNDLE # STACK #	LOAD BY REMARKS
	2	T2 Hip	8 /12	**31-00-00**	5-01-04	2 x 4	1-03-08 1-03-08	1-04-13 1-04-13	255.62 161.00		
	2	T3 Hip	8 /12	**31-00-00**	6-01-04	2 x 4	1-03-08 1-03-08	1-04-13 1-04-13	269.73 168.67		
	2	T4 Hip	8 /12	**31-00-00**	7-01-04	2 x 4	1-03-08 1-03-08	1-04-13 1-04-13	267.35 169.67		
	2	T5 Hip	8 /12	**31-00-00**	8-01-04	2 x 4	1-03-08 1-03-08	1-04-13 1-04-13	279.9 175.33		
	5	T6 Hip	8 /12	**31-00-00**	9-01-04	2 x 4	1-03-08 1-03-08	1-04-13 1-04-13	699.7 436.67		
	2	T7 Hip	8 /12	**31-00-00**	10-01-04	2 x 4	1-03-08 1-03-08	1-04-13 1-04-13	285.16 178.67		
	2	T10 Common	8 /12	**12-00-00**	5-04-13	2 x 4	1-03-08	1-04-13 1-04-13	95.3 58.33		
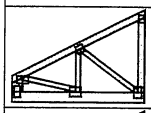	1 2-ply	T15 Monopitch Girder	6 /12	**5-10-08**	4-01-04	2 x 4 2 x 6		1-02-00 4-01-04	58.39 37.67		
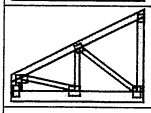	2 2-ply	T15Z2 Monopitch Girder	6 /12	**5-10-08**	4-01-04	2 x 4 2 x 6		1-02-00 4-01-04	116.79 75.33		
	1 2-ply	T20 Hip Girder	8 /12	**31-00-00**	4-01-04	2 x 4 2 x 6	1-03-08 1-03-08	1-04-13 1-04-13	302.41 191.33		
	1 2-ply	T20Z Hip Girder	8 /12	**31-00-00**	4-01-04	2 x 4 2 x 6	1-03-08 1-03-08	1-04-13 1-04-13	302.41 191.33		
	1	T21 Hip Girder	8 /12	**12-00-00**	4-01-04	2 x 4	1-03-08	1-04-13 1-04-13	51.14 33.83		
	1	T22 Hip	8 /12	**12-00-00**	5-01-04	2 x 4	1-03-08	1-04-13 1-04-13	54.15 34.50		
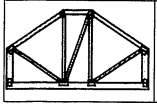	1	T23 Hip Girder	8 /12	**10-03-00**	5-07-04	2 x 4 2 x 6		2-10-13 2-10-13	60.1 41.00		

TAMARACK
ROOF TRUSSES INC.
ALPA LUMBER GROUP

DELIVERY SHIPLIST

Lumber Yard:	TAMARACK LUMBER	Job Track:	51012
Builder:	ROYAL PINE HOMES	PlanLog:	201982
Project:	CENTREFIELD	Layout ID:	406514
Location:	RICHMOND HILL	Ref #	
Model:	38-11	Page:	2 of 2
Lot #:		Date:	10-14-2020
Elevation:	B	Designer:	Leo Chen
		Sales Rep:	Mario DiCano

Roof Trusses

PROFILE	QTY PLY	MARK TYPE	PITCH	SPAN	HEIGHT	LUMBER	OVERHANG LEFT RIGHT	HEEL HEIGHT LEFT RIGHT	LBS. BFT.	BUNDLE # STACK #	LOAD BY REMARKS
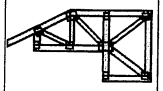	2	T24 Half Hip	6 /12	5-10-08	3-06-13	2 x 4	1-03-08	1-02-00 3-06-13	63.8 44.67		
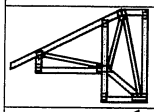	2	T25 Half Hip	6 /12	5-10-08	4-10-13	2 x 4	1-03-08	1-02-00 4-10-13	74.51 50.67		
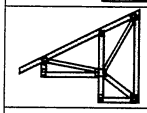	2	T26 Monopitch	6 /12	5-10-08	5-07-04	2 x 4	1-03-08	1-02-00 5-07-04	70.83 46.67		
	3	PB1 Piggyback	8 /12	7-10-11	2-00-00	2 x 4			64.14 43.00		
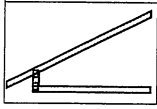	26	J1 Jack-Open	6 /12	5-10-08	4-01-04	2 x 4	1-03-08	1-02-00 4-01-04	436.66 277.33		

TOTAL # TRUSS= **65** TOTAL BFT OF ALL TRUSSES= **2415.67** BFT. TOTAL WEIGHT OF ALL TRSSES **3808.09** LBS

HARDWARE

QTY	TYPE	MODEL	LENGTH
3	Hardware	HGUS26-2	
2	Hardware	LJS26DS	
9	Hardware	LUS24	

TOTAL NUMBER OF ITEMS= **14**

TAMARACK
ROOF TRUSSES INC.
ALPA LUMBER GROUP

DELIVERY SHIPLIST

Lumber Yard:	TAMARACK LUMBER	Job Track:	51012
Builder:	ROYAL PINE HOMES	PlanLog:	201982
Project:	CENTREFIELD	Layout ID:	413426
Location:	RICHMOND HILL	Ref #	
Model:	38-11	Page:	1 of 2
Lot #:		Date:	10-14-2020
Elevation:	C	Designer:	Leo Chen
		Sales Rep:	Mario DiCano

Roof Trusses

PROFILE	QTY PLY	MARK TYPE	PITCH	SPAN	HEIGHT	LUMBER	OVERHANG LEFT RIGHT	HEEL HEIGHT LEFT RIGHT	LBS. BFT.	BUNDLE # STACK #	LOAD BY REMARKS
	2	T2 Hip	8 /12	**31-00-00**	5-01-04	2 x 4	1-03-08 1-03-08	1-04-13 1-04-13	255.62 161.00		
	2	T3 Hip	8 /12	**31-00-00**	6-01-04	2 x 4	1-03-08 1-03-08	1-04-13 1-04-13	269.73 168.67		
	2	T4 Hip	8 /12	**31-00-00**	7-01-04	2 x 4	1-03-08 1-03-08	1-04-13 1-04-13	267.35 169.67		
	2	T5 Hip	8 /12	**31-00-00**	8-01-04	2 x 4	1-03-08 1-03-08	1-04-13 1-04-13	279.9 175.33		
	5	T6 Hip	8 /12	**31-00-00**	9-01-04	2 x 4	1-03-08 1-03-08	1-04-13 1-04-13	699.7 436.67		
	2	T7 Hip	8 /12	**31-00-00**	10-01-04	2 x 4	1-03-08 1-03-08	1-04-13 1-04-13	285.16 178.67		
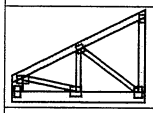	2 2-ply	T15Z3 Monopitch Girder	6 /12	**5-10-08**	4-01-04	2 x 4 2 x 6		1-02-00 4-01-04	116.79 75.33		
	1 2-ply	T20 Hip Girder	8 /12	**31-00-00**	4-01-04	2 x 4 2 x 6	1-03-08 1-03-08	1-04-13 1-04-13	302.41 191.33		
	1 2-ply	T20Z2 Hip Girder	8 /12	**31-00-00**	4-01-04	2 x 4 2 x 6	1-03-08 1-03-08	1-04-13 1-04-13	302.41 191.33		
	2	T31 Hip	8 /12	**12-00-00**	4-07-13	2 x 4	1-03-08 1-03-08	1-04-13 1-04-13	107.31 69.00		
	1	T31Z Hip Girder	8 /12	**12-00-00**	4-07-13	2 x 4	1-03-08 1-03-08	1-04-13 1-04-13	53.65 34.50		
	1	T32 Hip	8 /12	**12-00-00**	3-03-13	2 x 4	1-03-08 1-03-08	1-04-13 1-04-13	49.04 31.50		
	1	T33 Hip	8 /12	**12-00-00**	1-11-13	2 x 4	1-03-08 1-03-08	1-04-13 1-04-13	45.92 29.67		
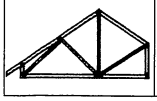	1	T34 Common	8 /12	**11-09-00**	6-02-05	2 x 4	1-03-08	1-04-13 3-01-13	52.02 32.50		

DELIVERY SHIPLIST

TAMARACK ROOF TRUSSES INC.
ALPA LUMBER GROUP

Lumber Yard:	TAMARACK LUMBER	Job Track:	51012
Builder:	ROYAL PINE HOMES	PlanLog:	201982
Project:	CENTREFIELD	Layout ID:	413426
Location:	RICHMOND HILL	Ref #	
Model:	38-11	Page:	2 of 2
Lot #:		Date:	10-14-2020
Elevation:	C	Designer:	Leo Chen
		Sales Rep:	Mario DiCano

Roof Trusses

PROFILE	QTY PLY	MARK TYPE	PITCH	SPAN	HEIGHT	LUMBER	OVERHANG LEFT RIGHT	HEEL HEIGHT LEFT RIGHT	LBS. BFT.	BUNDLE # STACK #	LOAD BY REMARKS
	1	**T35 Hip Girder**	8 /12	**9-08-00**	4-01-04	2 x 4		1-04-13 1-04-13	43.03 30.00		
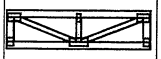	**1 2-ply**	**T36 Monopitch Girder**	0 /12	**5-10-08**	1-07-00	2 x 4		1-07-00 1-07-00	41.89 25.67		
	3	**PB1 Piggyback**	8 /12	**7-10-11**	2-00-00	2 x 4			64.14 43.00		
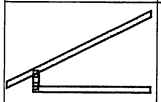	**25**	**J1 Jack-Open**	6 /12	**5-10-08**	4-01-04	2 x 4	1-03-08	1-02-00 4-01-04	419.86 266.67		
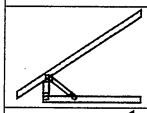	**2**	**J31 Jack-Open**	8 /12	**4-10-08**	4-07-13	2 x 4	1-03-08	1-04-13 4-07-13	33.36 20.67		
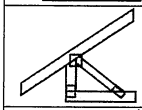	**2**	**C31 Jack-Open**	8 /12	**1-10-15**	2-08-02	2 x 4	1-03-08 1-01	1-04-13 2-08-02	18.68 12.67		
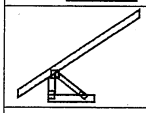	**2**	**C32 Jack-Open**	8 /12	**2-00-00**	4-00-02	2 x 4	1-03-08 1-10-15	1-04-13 2-08-13	24.16 15.33		
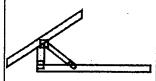	**2**	**C33 Jack-Open**	8 /12	**1-10-15**	2-08-02	2 x 4	1-03-08 2-11-09	1-04-13 2-08-02	25.24 16.67		
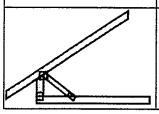	**2**	**C34 Jack-Open**	8 /12	**3-10-15**	4-00-02	2 x 4	1-03-08 11-09	1-04-13 4-00-02	30.72 19.33		

TOTAL # TRUSS= **70** TOTAL BFT OF ALL TRUSSES= **2395.18** BFT. TOTAL WEIGHT OF ALL TRSSES **3788.08** LBS

HARDWARE

QTY	TYPE	MODEL	LENGTH
3	Hardware	HGUS26-2	
2	Hardware	LJS26DS	
1	Hardware	LUS24	

TOTAL NUMBER OF ITEMS= **6**

JOB NAME	TRUSS NAME	QUANTITY	PLY	JOB DESC.	DRWG NO.
406513	T1	1	2	ROYAL PINE HOMES TRUSS DESC.	

Tamarack Roof Truss, Burlington

Version 8.330 S May 6 2020 MiTek Industries, Inc. Wed Oct 14 10:41:38 2020 Page 1

ID:8ITcKsuAqJzVBsZ1WqSCayyOHpK-p0rbHwTO7?1?o_cKU7IGEdjZIlvHKZHLDVgbQtyTXhR

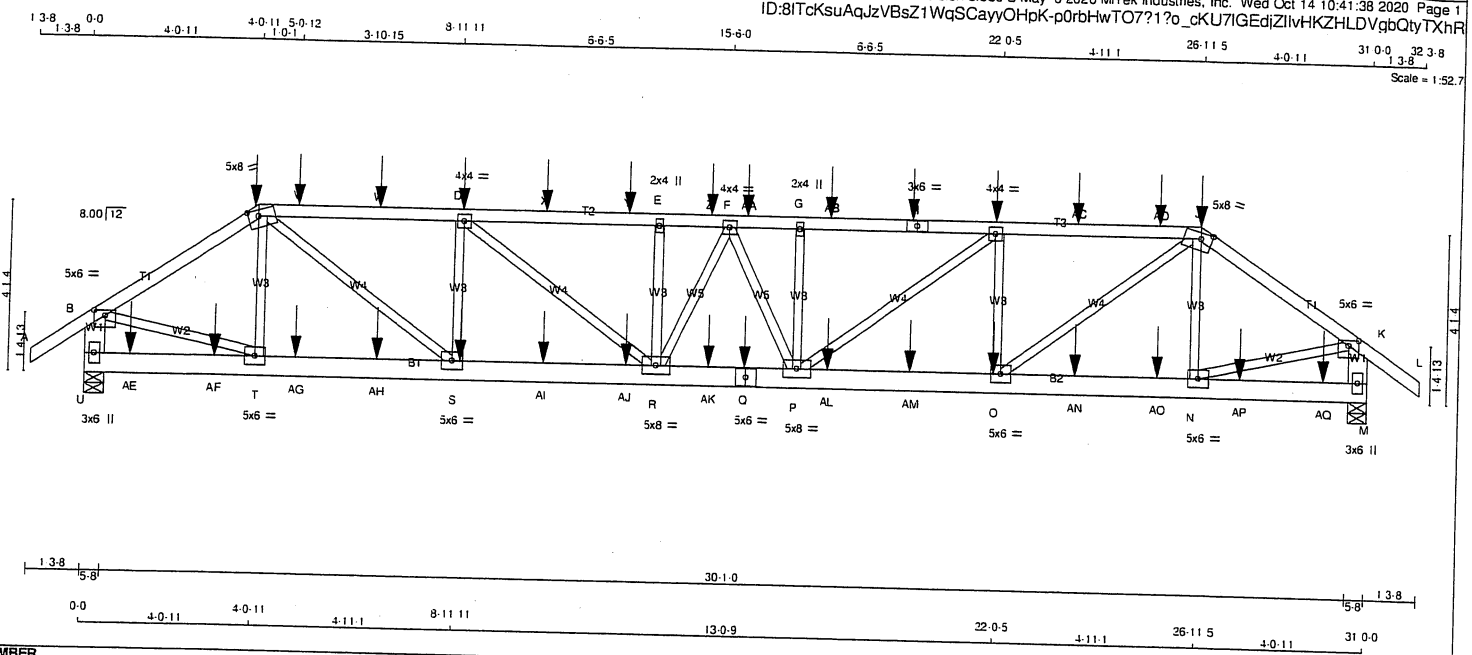

LUMBER

N. L. G. A. RULES

CHORDS	SIZE		LUMBER	DESCR.
A - C	2x4	DRY	No.2	SPF
C - H	2x4	DRY	No.2	SPF
H - J	2x4	DRY	No.2	SPF
J - L	2x4	DRY	No.2	SPF
U - B	2x6	DRY	No.2	SPF
M - K	2x6	DRY	No.2	SPF
U - Q	2x6	DRY	No.2	SPF
Q - M	2x6	DRY	No.2	SPF
ALL WEBS EXCEPT	2x3	DRY	No.2	SPF

DRY: SEASONED LUMBER.

DESIGN CONSISTS OF 2 TRUSSES BUILT SEPARATELY THEN FASTENED TOGETHER AS FOLLOWS:

CHORDS	#ROWS	SURFACE SPACING (IN)	LOAD(PLF)
TOP CHORDS : (0.122"X3") SPIRAL NAILS			
A- C	1	12	SIDE(61.0)
C- H	1	12	SIDE(61.0)
H- J	1	12	SIDE(61.0)
J- L	1	12	SIDE(61.0)
U- B	2	12	TOP
M- K	2	12	TOP
BOTTOM CHORDS : (0.122"X3") SPIRAL NAILS			
U- Q	2	12	SIDE(183.1)
Q- M	2	12	SIDE(183.1)
WEBS : (0.122"X3") SPIRAL NAILS			
2x3	1	6	

NAILS TO BE DRIVEN FROM ONE SIDE ONLY.

GIRDER NAILING ASSUMES NAILED HANGERS ARE FASTENED WITH MIN. 3-0 INCH NAILS.

TOP - COMPONENTS ARE LOADED FROM THE TOP AND MUST BE PLACED ON TOP EDGE OF ALL PLIES FOR THE LOAD TO BE TRANSFERRED TO EACH PLY.

LICENSED PROFESSIONAL ENGINEER
10/14/20
H. J. G. ALVES
100009024
PROVINCE OF ONTARIO

Structural component only
DWG# T-2022153 1/2

DIMENSIONS, SUPPORTS AND LOADINGS SPECIFIED BY FABRICATOR TO BE VERIFIED BY BUILDING DESIGNER

TOTAL WEIGHT = 2 X 147 = 294 lb [M]

BEARINGS

JT	FACTORED GROSS REACTION VERT	HORZ	MAXIMUM FACTORED GROSS REACTION DOWN	HORZ	UPLIFT	INPUT BRG IN-SX	REQRD BRG IN-SX
U	3011	0	3011	0	0	5-8	5-8
M	3012	0	3012	0	0	5-8	5-8

UNFACTORED REACTIONS

JT	1ST LCASE COMBINED	MAX./MIN. COMPONENT REACTIONS SNOW	LIVE	PERM.LIVE	WIND	DEAD	SOIL
U	2129	1401 / 0	0 / 0	0 / 0	0 / 0	727 / 0	0 / 0
M	2129	1402 / 0	0 / 0	0 / 0	0 / 0	728 / 0	0 / 0

BEARING MATERIAL TO BE SPF NO.2 OR BETTER AT JOINT(S) U, M

BRACING

TOP CHORD TO BE SHEATHED OR MAX. PURLIN SPACING = 3.58 FT.
MAX. UNBRACED BOTTOM CHORD LENGTH = 10.00 FT OR RIGID CEILING DIRECTLY APPLIED.

ALL PITCH BREAKS AND PERIMETER CORNER JOINTS MUST BE LATERALLY RESTRAINED.

LOADING

TOTAL LOAD CASES: (4)

CHORDS

MEMB. FR-TO	MAX. FACTORED FORCE (LBS)	FACTORED VERT. LOAD LC1 (PLF) FROM	TO	MAX CSI (LC)	MAX. UNBRAC LENGTH
A- B	0 / 35	-91.8	-91.8	0.07 (1)	10.00
B- C	-3503 / 0	-91.8	-91.8	0.20 (1)	4.83
C- V	-5127 / 0	-91.8	-91.8	0.41 (1)	3.90
V- W	-5127 / 0	-91.8	-91.8	0.41 (1)	3.90
W- D	-5127 / 0	-91.8	-91.8	0.41 (1)	3.90
D- X	-6052 / 0	-91.8	-91.8	0.46 (1)	3.58
X- Y	-6052 / 0	-91.8	-91.8	0.46 (1)	3.58
Y- E	-6052 / 0	-91.8	-91.8	0.46 (1)	3.58
E- Z	-6052 / 0	-91.8	-91.8	0.24 (1)	3.78
Z- F	-6052 / 0	-91.8	-91.8	0.24 (1)	3.78
F-AA	-6051 / 0	-91.8	-91.8	0.24 (1)	3.78
AA- G	-6051 / 0	-91.8	-91.8	0.24 (1)	3.78
G-AB	-6051 / 0	-91.8	-91.8	0.46 (1)	3.58
AB- H	-6051 / 0	-91.8	-91.8	0.46 (1)	3.58
H- I	-6051 / 0	-91.8	-91.8	0.46 (1)	3.58
I-AC	-5128 / 0	-91.8	-91.8	0.41 (1)	3.90
AC-AD	-5128 / 0	-91.8	-91.8	0.41 (1)	3.90
AD- J	-5128 / 0	-91.8	-91.8	0.41 (1)	3.90
J- K	-3504 / 0	-91.8	-91.8	0.20 (1)	4.83
K- L	0 / 35	-91.8	-91.8	0.07 (1)	10.00
U- B	-2960 / 0	0.0	0.0	0.11 (1)	7.81
M- K	-2961 / 0	0.0	0.0	0.11 (1)	7.81
U-AE	0 / 0	-18.5	-18.5	0.04 (4)	10.00
AE-AF	0 / 0	-18.5	-18.5	0.04 (4)	10.00
AF- T	0 / 0	-18.5	-18.5	0.04 (4)	10.00
T-AG	0 / 2895	-18.5	-18.5	0.22 (1)	10.00
AG-AH	0 / 2895	-18.5	-18.5	0.22 (1)	10.00
AH- S	0 / 2895	-18.5	-18.5	0.22 (1)	10.00
S-AI	0 / 5127	-18.5	-18.5	0.39 (1)	10.00
AI-AJ	0 / 5127	-18.5	-18.5	0.39 (1)	10.00
AJ- R	0 / 5127	-18.5	-18.5	0.39 (1)	10.00
R-AK	0 / 6082	-18.5	-18.5	0.44 (1)	10.00
AK- Q	0 / 6082	-18.5	-18.5	0.44 (1)	10.00
Q- P	0 / 6082	-18.5	-18.5	0.44 (1)	10.00
P-AL	0 / 5129	-18.5	-18.5	0.39 (1)	10.00
AL-AM	0 / 5129	-18.5	-18.5	0.39 (1)	10.00
AM- O	0 / 5129	-18.5	-18.5	0.39 (1)	10.00
O-AN	0 / 2896	-18.5	-18.5	0.22 (1)	10.00
AN-AO	0 / 2896	-18.5	-18.5	0.22 (1)	10.00
AO- N	0 / 2896	-18.5	-18.5	0.22 (1)	10.00
N-AP	0 / 0	-18.5	-18.5	0.04 (4)	10.00

WEBS

MEMB. FR-TO	MAX. FACTORED FORCE (LBS)	MAX CSI (LC)
T- C	-524 / 0	0.07 (1)
R- E	-523 / 0	0.07 (1)
P- G	-519 / 0	0.07 (1)
N- J	-524 / 0	0.07 (1)
B- T	0 / 2993	0.37 (1)
N- K	0 / 2993	0.37 (1)
D- R	0 / 1170	0.14 (1)
C- S	0 / 2796	0.35 (1)
S- D	-1540 / 0	0.20 (1)
O- J	0 / 2797	0.35 (1)
P- I	0 / 1167	0.14 (1)
O- I	-1541 / 0	0.20 (1)
R- F	-72 / 0	0.01 (1)
F- P	-73 / 0	0.01 (1)

DESIGN CRITERIA

*** SPECIAL LOADS ANALYSIS ***
GEOMETRY AND/OR BASIC LOADS CHANGED BY USER.
LOADS WERE DERIVED FROM USER INPUT
NO FURTHER MODIFICATIONS WERE MADE

SPECIFIED LOADS:

TOP CH.	LL	=	25.6	PSF
	DL	=	6.0	PSF
BOT CH.	LL	=	0.0	PSF
	DL	=	7.4	PSF
TOTAL LOAD		=	39.0	PSF

SPACING = 24.0 IN. C/C

LOADING IN FLAT SECTION BASED ON A SLOPE OF 6.00/12

*** NON STANDARD GIRDER ***
ADDT'L USER-DEFINED LOADS APPLIED TO ALL LOAD CASES.

THIS TRUSS IS DESIGNED FOR RESIDENTIAL OR SMALL BUILDING REQUIREMENTS OF PART 9, NBCC 2010, NBCC 2015

THIS DESIGN COMPLIES WITH:
- PART 9 OF BCBC 2018 , OBC 2012 , ABC 2019
- PART 9 OF OBC 2012 (2019 AMENDMENT)
- CSA 086-09, CSA 086-14
- TPIC 2011, TPIC 2014

(55 % OF 31.3 P.S.F. G.S.L. PLUS 8.4 P.S.F. RAIN LOAD) EQUALS 25.6 P.S.F. SPECIFIED ROOF LIVE LOAD

ALLOWABLE DEFL.(LL)= L/360 (1.03")
CALCULATED VERT. DEFL.(LL) = L/ 999 (0.15")
ALLOWABLE DEFL.(TL)= L/360 (1.03")
CALCULATED VERT. DEFL.(TL) = L/ 999 (0.28")

CSI: TC=0.46/1.00 (G-I:1) , BC=0.44/1.00 (P-R:1) , WB=0.37/1.00 (K-N:1) , SSI=0.17/1.00 (I-J:1)

DOL LUMBER=1.00 NAIL=1.00 LS BEND=1.00 COMP=1.00 SHEAR=1.00 TENS= 1.00

COMPANION LIVE LOAD FACTOR = 1.00

AUTOSOLVE HEELS OFF

TRUSS PLATE MANUFACTURER IS NOT RESPONSIBLE FOR QUALITY CONTROL IN THE TRUSS MANUFACTURING PLANT

NAIL VALUES

PLATE	GRIP(DRY) (PSI) MAX	MIN	SHEAR (PLI) MAX	MIN	SECTION (PLI) MAX	MIN
MT20	618	354	1667	788	1987	1656

PLATE PLACEMENT TOL. = 0.250 inches

PLATE ROTATION TOL. = 5.0 Deg.

JSI GRIP= 0.84 (C) (INPUT = 0.90)
JSI METAL= 0.58 (Q) (INPUT = 1.00)

CONTINUED ON PAGE 2

JOB NAME	TRUSS NAME	QUANTITY	PLY	JOB DESC.	DRWG NO.
406513	T1	1	2	ROYAL PINE HOMES TRUSS DESC.	

Tamarack Roof Truss, Burlington

ID:8lTcKsuAqJzVBsZ1WqSCayyOHpK-p0rbHwTO7?1?o_cKU7lGEdjZIlvHKZHLDVgbQtyTXhR

PLATES (table is in inches)

JT	TYPE	PLATES	W	LEN	Y	X
B	TMVW-p	MT20	5.0	6.0	1.50	3.00
C	TTWW-m	MT20	5.0	8.0	1.75	3.00
D, F, I						
D	TMWW-t	MT20	4.0	4.0		
E	TMW+w	MT20	2.0	4.0		
G	TMW+w	MT20	2.0	4.0		
H	TS-t	MT20	3.0	6.0		
J	TTWW-m	MT20	5.0	8.0	1.75	3.00
K	TMVW-p	MT20	5.0	6.0	1.50	3.00
M	BMV1+p	MT20	3.0	6.0		
N, O, S, T						
N	BMWW-t	MT20	5.0	6.0		
P	BMWWW-t	MT20	5.0	8.0		
Q	BS-t	MT20	5.0	6.0		
R	BMWWW-t	MT20	5.0	8.0		
U	BMV1+p	MT20	3.0	6.0		

LOADING

TOTAL LOAD CASES: (4)

CHORDS

MEMB. FR-TO	MAX. FACTORED FORCE (LBS)	FACTORED VERT. LOAD (PLF) FROM	TO	LC1	MAX CSI (LC)	MAX. UNBRAC LENGTH
AP-AQ	0 0	-18.5	-18.5	0.04	(4)	10.00
AQ- M	0 0	-18.5	-18.5	0.04	(4)	10.00

WEBS

MEMB. FR-TO	MAX. FACTORED FORCE (LBS)	MAX CSI (LC)

SPECIFIED CONCENTRATED LOADS (LBS)

JT	LOC.	LC1	MAX-	MAX+	FACE	DIR.	TYPE	HEEL	CONN.
C	4-0-11	-40	-40	---	FRONT	VERT	DEAD	---	C1
C	4-0-11	-169	-169	---	FRONT	VERT	SNOW	---	C1
D	9-0-12	-76	-76	---	FRONT	VERT	TOTAL	---	C1
H	19-11-4	-76	-76	---	FRONT	VERT	TOTAL	---	C1
I	21-11-4	-76	-76	---	FRONT	VERT	TOTAL	---	C1
J	26-11-5	-40	-40	---	FRONT	VERT	DEAD	---	C1
J	26-11-5	-169	-169	---	FRONT	VERT	SNOW	---	C1
O	21-11-4	-21	-21	---	FRONT	VERT	TOTAL	---	C1
Q	15-11-4	-21	-21	---	FRONT	VERT	TOTAL	---	C1
S	9-0-12	-21	-21	---	FRONT	VERT	TOTAL	---	C1
V	5-0-12	-76	-76	---	FRONT	VERT	TOTAL	---	C1
W	7-0-12	-76	-76	---	FRONT	VERT	TOTAL	---	C1
X	11-0-12	-76	-76	---	FRONT	VERT	TOTAL	---	C1
Y	13-0-12	-76	-76	---	FRONT	VERT	TOTAL	---	C1
Z	15-0-12	-76	-76	---	FRONT	VERT	TOTAL	---	C1
AA	15-11-4	-76	-76	---	FRONT	VERT	TOTAL	---	C1
AB	17-11-4	-76	-76	---	FRONT	VERT	TOTAL	---	C1
AC	23-11-4	-76	-76	---	FRONT	VERT	TOTAL	---	C1
AD	25-11-4	-76	-76	---	FRONT	VERT	TOTAL	---	C1
AE	1-0-12	-21	-21	---	FRONT	VERT	TOTAL	---	C1
AF	3-0-12	-21	-21	---	FRONT	VERT	TOTAL	---	C1
AG	5-0-12	-21	-21	---	FRONT	VERT	TOTAL	---	C1
AH	7-0-12	-21	-21	---	FRONT	VERT	TOTAL	---	C1
AI	11-0-12	-21	-21	---	FRONT	VERT	TOTAL	---	C1
AJ	13-0-12	-21	-21	---	FRONT	VERT	TOTAL	---	C1
AK	15-0-12	-21	-21	---	FRONT	VERT	TOTAL	---	C1
AL	17-11-4	-21	-21	---	FRONT	VERT	TOTAL	---	C1
AM	19-11-4	-21	-21	---	FRONT	VERT	TOTAL	---	C1
AN	23-11-4	-21	-21	---	FRONT	VERT	TOTAL	---	C1
AO	25-11-4	-21	-21	---	FRONT	VERT	TOTAL	---	C1
AP	27-11-4	-21	-21	---	FRONT	VERT	TOTAL	---	C1
AQ	29-11-4	-21	-21	---	FRONT	VERT	TOTAL	---	C1

CONNECTION REQUIREMENTS

1) **C1:** A SUITABLE HANGER/MECHANICAL CONNECTION IS REQUIRED.

LICENSED PROFESSIONAL ENGINEER
10/14/20
H. J. G. ALVES
100009024
PROVINCE OF ONTARIO

Structural component only
DWG# T-2022153 2/2

JOB NAME	TRUSS NAME	QUANTITY	PLY	JOB DESC.	DRWG NO.
406513	T1Z	1	2	ROYAL PINE HOMES TRUSS DESC.	

Tamarack Roof Truss, Burlington

Version 8.330 S May 6 2020 MiTek Industries, Inc. Wed Oct 14 10:41:39 2020 Page 1
ID:8ITcKsuAqJzVBsZ1WqSCayyOHpK-HCP_UGT0uJ9sQ8BW2qpVmrGi999f3zeVS9P8zJyTXhQ

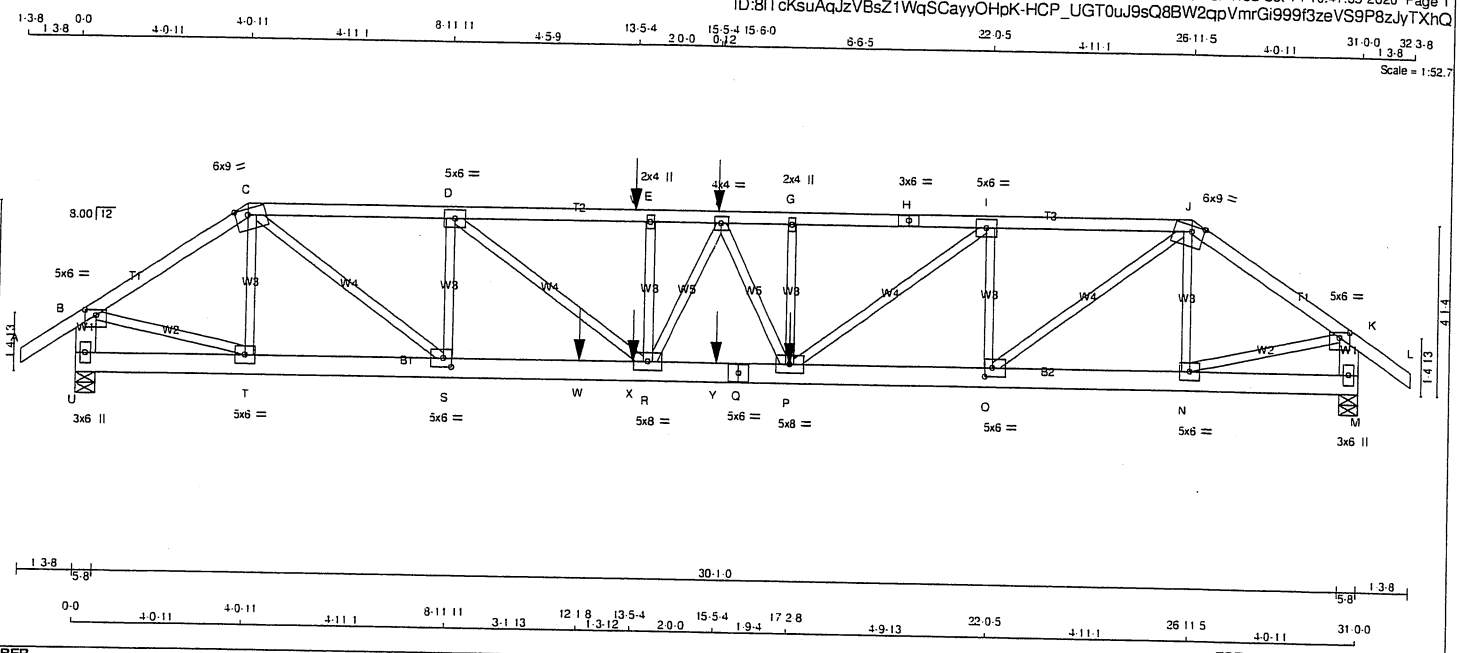

TOTAL WEIGHT = 2 X 147 = 294 lb

LUMBER

N. L. G. A. RULES

CHORDS	SIZE		LUMBER	DESCR.
A - C	2x4	DRY	No.2	SPF
C - H	2x4	DRY	No.2	SPF
H - J	2x4	DRY	No.2	SPF
J - L	2x4	DRY	No.2	SPF
U - B	2x6	DRY	No.2	SPF
M - K	2x6	DRY	No.2	SPF
U - Q	2x6	DRY	No.2	SPF
Q - M	2x6	DRY	No.2	SPF
ALL WEBS EXCEPT	2x3	DRY	No.2	SPF

DRY: SEASONED LUMBER.

DESIGN CONSISTS OF 2 TRUSSES BUILT SEPARATELY THEN FASTENED TOGETHER AS FOLLOWS:

CHORDS	#ROWS	SURFACE SPACING (IN)	LOAD(PLF)
TOP CHORDS : (0.122"X3") SPIRAL NAILS			
A- C	1	12	TOP
C- H	1	12	SIDE(61.0)
H- J	1	12	TOP
J- L	1	12	TOP
U- B	2	12	TOP
M- K	2	12	TOP
BOTTOM CHORDS : (0.122"X3") SPIRAL NAILS			
U- Q	2	12	SIDE(183.1)
Q- M	2	12	SIDE(183.1)
WEBS : (0.122"X3") SPIRAL NAILS			
G- P	1	6	SIDE(277.4)
2x3	1	6	

NAILS TO BE DRIVEN FROM ONE SIDE ONLY

GIRDER NAILING ASSUMES NAILED HANGERS ARE FASTENED WITH MIN. 3-0 INCH NAILS.

TOP - COMPONENTS ARE LOADED FROM THE TOP AND MUST BE PLACED ON TOP EDGE OF ALL PLIES FOR THE LOAD TO BE TRANSFERRED TO EACH PLY.

LICENSED PROFESSIONAL ENGINEER
10/14/20
H. J. G. ALVES
100009024
PROVINCE OF ONTARIO

Structural component only
DWG# T-2022154 1/2

DIMENSIONS, SUPPORTS AND LOADINGS SPECIFIED BY FABRICATOR TO BE VERIFIED BY BUILDING DESIGNER

BEARINGS

JT	FACTORED GROSS REACTION VERT	HORZ	MAXIMUM FACTORED GROSS REACTION DOWN	HORZ	UPLIFT	INPUT BRG IN-SX	REQRD BRG IN-SX
U	3473	0	3473	0	0	5-8	5-8
M	3397	0	3397	0	0	5-8	5-8

UNFACTORED REACTIONS

JT	1ST LCASE COMBINED	MAX./MIN. COMPONENT REACTIONS SNOW	LIVE	PERM.LIVE	WIND	DEAD	SOIL
U	2450	1643 0	0 0	0 0	0 0	807 0	0 0
M	2396	1606 0	0 0	0 0	0 0	790 0	0 0

BEARING MATERIAL TO BE SPF NO.2 OR BETTER AT JOINT(S) U, M

BRACING

TOP CHORD TO BE SHEATHED OR MAX. PURLIN SPACING = 2.87 FT.
MAX. UNBRACED BOTTOM CHORD LENGTH = 10.00 FT OR RIGID CEILING DIRECTLY APPLIED.

ALL PITCH BREAKS AND PERIMETER CORNER JOINTS MUST BE LATERALLY RESTRAINED.

LOADING

TOTAL LOAD CASES: (4)

CHORDS

MEMB. FR-TO	MAX. FACTORED FORCE (LBS)	FACTORED VERT. LOAD LC1 (PLF) FROM	TO	MAX CSI (LC)	MAX. UNBRAC LENGTH
A- B	0 35	-91.8	-91.8	0.07 (1)	10.00
B- C	-4125 0	-91.8	-91.8	0.22 (1)	4.50
C- D	-6985 0	-91.8	-91.8	0.41 (1)	3.44
D- V	-9156 0	-91.8	-91.8	0.58 (1)	2.88
V- E	-9156 0	-91.8	-91.8	0.58 (1)	2.88
E- F	-9156 0	-91.8	-91.8	0.35 (1)	3.03
F- G	-9206 0	-91.8	-91.8	0.33 (1)	3.05
G- H	-9206 0	-91.8	-91.8	0.58 (1)	2.87
H- I	-9206 0	-91.8	-91.8	0.58 (1)	2.87
I- J	-6736 0	-91.8	-91.8	0.40 (1)	3.50
J- K	-4043 0	-91.8	-91.8	0.22 (1)	4.53
K- L	0 35	-91.8	-91.8	0.07 (1)	10.00
U- B	-3430 0	0.0	0.0	0.12 (1)	7.54
M- K	-3368 0	0.0	0.0	0.12 (1)	7.58
U- T	0 0	-18.5	-18.5	0.02 (4)	10.00
T- S	0 3404	-18.5	-18.5	0.31 (1)	10.00
S- W	0 6985	-18.5	-18.5	0.82 (1)	10.00
W- X	0 6985	-18.5	-18.5	0.82 (1)	10.00
X- R	0 6985	-18.5	-18.5	0.82 (1)	10.00
R- Y	0 9222	-18.5	-18.5	0.74 (1)	10.00
Y- Q	0 9222	-18.5	-18.5	0.74 (1)	10.00
Q- P	0 9222	-18.5	-18.5	0.74 (1)	10.00
P- O	0 6736	-18.5	-18.5	0.56 (1)	10.00
O- N	0 3338	-18.5	-18.5	0.23 (1)	10.00
N- M	0 0	-18.5	-18.5	0.02 (4)	10.00

WEBS

MEMB. FR-TO	MAX. FACTORED FORCE (LBS)	MAX CSI (LC)
T- C	-795 0	0.10 (1)
R- E	-425 0	0.05 (1)
P- G	-298 0	0.04 (1)
N- J	-702 0	0.09 (1)
B- T	0 3523	0.44 (1)
N- K	0 3453	0.43 (1)
D- R	0 2746	0.34 (1)
C- S	0 4487	0.56 (1)
S- D	-2189 0	0.28 (1)
O- J	0 4257	0.53 (1)
P- I	0 3123	0.39 (1)
O- I	-2419 0	0.31 (1)
R- F	-158 0	0.02 (1)
F- P	-39 0	0.01 (1)

SPECIFIED CONCENTRATED LOADS (LBS)

JT	LOC.	LC1	MAX-	MAX+	FACE	DIR.	TYPE	HEEL	CONN.
F	15-5-4	-76	-76	---	BACK	VERT	TOTAL	---	C1
P	17-2-8	-1244	-1244	---	BACK	VERT	TOTAL	---	C1
V	13-5-4	-76	-76	---	BACK	VERT	TOTAL	---	C1
W	12-1-8	-817	-817	---	BACK	VERT	TOTAL	---	C1
X	13-5-4	-21	-21	---	BACK	VERT	TOTAL	---	C1
Y	15-5-4	-21	-21	---	BACK	VERT	TOTAL	---	C1

CONNECTION REQUIREMENTS

1) **C1:** A SUITABLE HANGER/MECHANICAL CONNECTION IS REQUIRED.

DESIGN CRITERIA

SPECIFIED LOADS:

TOP CH.	LL	=	25.6	PSF
	DL	=	6.0	PSF
BOT CH.	LL	=	0.0	PSF
	DL	=	7.4	PSF
TOTAL LOAD		=	39.0	PSF

SPACING = 24.0 IN. C/C

LOADING IN FLAT SECTION BASED ON A SLOPE OF 6.00/12

THIS TRUSS IS DESIGNED FOR RESIDENTIAL OR SMALL BUILDING REQUIREMENTS OF PART 9, NBCC 2010, NBCC 2015

THIS DESIGN COMPLIES WITH:
- PART 9 OF BCBC 2018 , OBC 2012 . ABC 2019
- PART 9 OF OBC 2012 (2019 AMENDMENT)
- CSA 086-09, CSA 086-14
- TPIC 2011, TPIC 2014

(55 % OF 31.3 P.S.F. G.S.L. PLUS 8.4 P.S.F. RAIN LOAD) EQUALS 25.6 P.S.F. SPECIFIED ROOF LIVE LOAD

ALLOWABLE DEFL.(LL)= L/360 (1.03")
CALCULATED VERT. DEFL.(LL) = L/ 999 (0.23")
ALLOWABLE DEFL.(TL)= L/360 (1.03")
CALCULATED VERT. DEFL.(TL) = L/ 898 (0.41")

CSI: TC=0.58/1.00 (G-I:1) , BC=0.82/1.00 (R-S:1) . WB=0.56/1.00 (C-S:1) , SSI=0.28/1.00 (R-S:1)

DOL LUMBER=1.00 NAIL=1.00 LS BEND=1.00 COMP=1.00 SHEAR=1.00 TENS= 1.00

COMPANION LIVE LOAD FACTOR = 1.00

AUTOSOLVE HEELS OFF

TRUSS PLATE MANUFACTURER IS NOT RESPONSIBLE FOR QUALITY CONTROL IN THE TRUSS MANUFACTURING PLANT .

NAIL VALUES

PLATE	GRIP(DRY) (PSI) MAX	MIN	SHEAR (PLI) MAX	MIN	SECTION (PLI) MAX	MIN
MT20	618	354	1667	788	1987	1656

PLATE PLACEMENT TOL. = 0.250 inches

PLATE ROTATION TOL. = 5.0 Deg.

JSI GRIP= 0.88 (T) (INPUT = 0.90)
JSI METAL= 0.83 (Q) (INPUT = 1.00)

CONTINUED ON PAGE 2

JOB NAME	TRUSS NAME	QUANTITY	PLY	JOB DESC. ROYAL PINE HOMES	DRWG NO.
406513	T1Z	1	2	TRUSS DESC.	

Tamarack Roof Truss, Burlington

PLATES (table is in inches)

JT	TYPE	PLATES	W	LEN	Y	X
B	TMVW-p	MT20	5.0	6.0	1.50	3.00
C	TTWW-m	MT20	6.0	9.0	1.75	3.75
D	TMWW-t	MT20	5.0	6.0		
E	TMW+w	MT20	2.0	4.0		
F	TMWW-t	MT20	4.0	4.0		
G	TMW+w	MT20	2.0	4.0		
H	TS-t	MT20	3.0	6.0		
I	TMWW-t	MT20	5.0	6.0		
J	TTWW-m	MT20	6.0	9.0	1.75	3.75
K	TMVW-p	MT20	5.0	6.0	1.50	3.00
M	BMV1+p	MT20	3.0	6.0		
N	BMWW-t	MT20	5.0	6.0		
O	BMWW-t	MT20	5.0	6.0	2.50	2.25
P	BMWWW-t	MT20	5.0	8.0		
Q	BS-t	MT20	5.0	6.0		
R	BMWWW-t	MT20	5.0	8.0		
S	BMWW-t	MT20	5.0	6.0	2.50	2.25
T	BMWW-t	MT20	5.0	6.0		
U	BMV1+p	MT20	3.0	6.0		

LICENSED PROFESSIONAL ENGINEER
10/14/20
H. J. G. ALVES
100009024
PROVINCE OF ONTARIO

Structural component only
DWG# T-2022154

JOB NAME	TRUSS NAME	QUANTITY	PLY	JOB DESC.	DRWG NO.
406513	T2	2	1	ROYAL PINE HOMES TRUSS DESC.	

Tamarack Roof Truss, Burlington

Version 8.330 S May 6 2020 MiTek Industries, Inc. Wed Oct 14 10:41:40 2020 Page 1
ID:8ITcKsuAqJzVBsZ1WqSCayyOHpK-lOzMhcUefcHi2ImjbYKkJ2psmZZQoTieho9hVlyTXhP

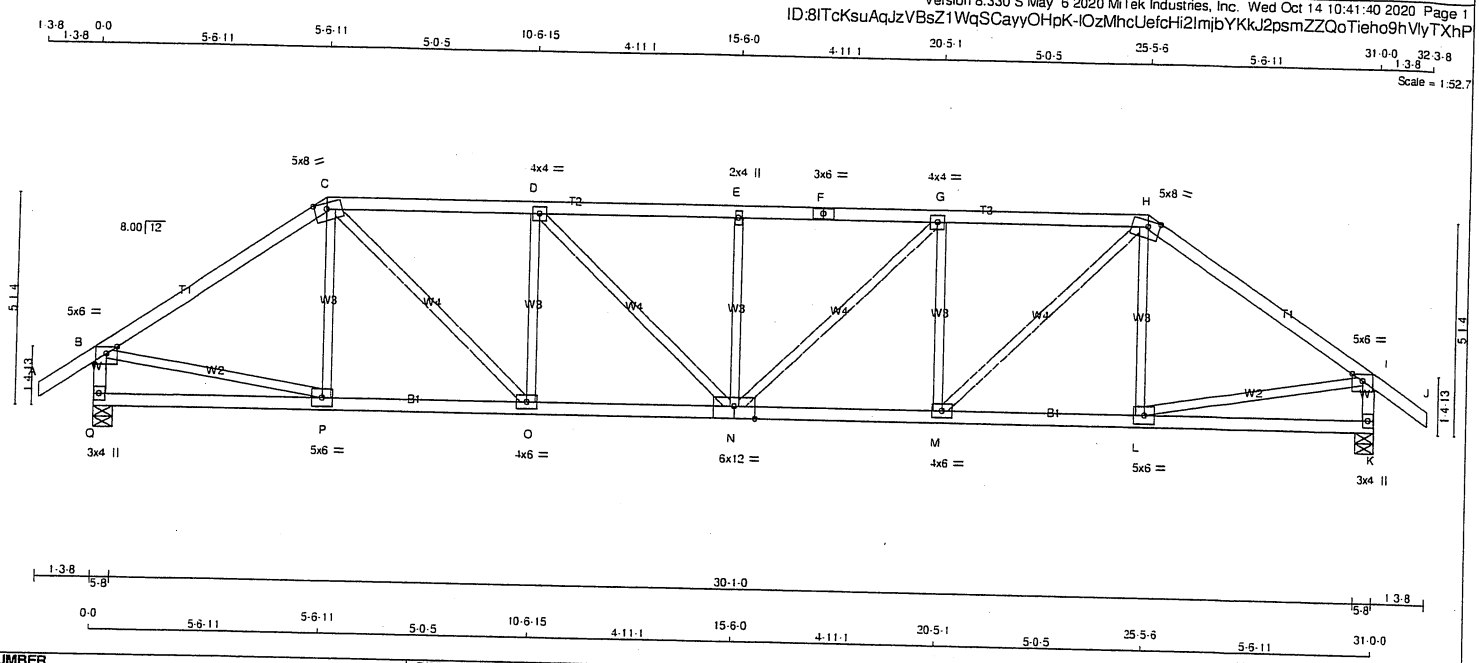

TOTAL WEIGHT = 2 X 128 = 256 lb [M]

LUMBER

N. L. G. A. RULES

CHORDS	SIZE		LUMBER	DESCR.
A - C	2x4	DRY	No.2	SPF
C - F	2x4	DRY	No.2	SPF
F - H	2x4	DRY	No.2	SPF
H - J	2x4	DRY	No.2	SPF
Q - B	2x4	DRY	No.2	SPF
K - I	2x4	DRY	No.2	SPF
Q - N	2x4	DRY	No.2	SPF
N - K	2x4	DRY	No.2	SPF
ALL WEBS EXCEPT	2x3	DRY	No.2	SPF

DRY: SEASONED LUMBER.

PLATES (table is in inches)

JT	TYPE	PLATES	W	LEN	Y	X
B	TMVW-p	MT20	5.0	6.0	Edge	
C	TTWW-m	MT20	5.0	8.0	1.75	3.50
D	TMWW-t	MT20	4.0	4.0		
E	TMW+w	MT20	2.0	4.0		
F	TS-t	MT20	3.0	6.0		
G	TMWW-t	MT20	4.0	4.0		
H	TTWW-m	MT20	5.0	8.0	1.75	3.50
I	TMVW-p	MT20	5.0	6.0	Edge	
K	BMV1+p	MT20	3.0	4.0		
L	BMWW-t	MT20	5.0	6.0		
M	BMWW-t	MT20	4.0	6.0		
N	BSWWW-t	MT20	6.0	12.0	Edge	6.00
O	BMWW-t	MT20	4.0	6.0		
P	BMWW-t	MT20	5.0	6.0		
Q	BMV1+p	MT20	3.0	4.0		

Edge - INDICATES REFERENCE CORNER OF PLATE TOUCHES EDGE OF CHORD.

DIMENSIONS, SUPPORTS AND LOADINGS SPECIFIED BY FABRICATOR TO BE VERIFIED BY BUILDING DESIGNER

BEARINGS

JT	FACTORED GROSS REACTION VERT	HORZ	MAXIMUM FACTORED GROSS REACTION DOWN	HORZ	UPLIFT	INPUT BRG IN-SX	REQRD BRG IN-SX
Q	1835	0	1835	0	0	5-8	5-8
K	1835	0	1835	0	0	5-8	5-8

UNFACTORED REACTIONS

JT	1ST LCASE COMBINED	MAX./MIN. COMPONENT REACTIONS SNOW	LIVE	PERM.LIVE	WIND	DEAD	SOIL
Q	1295	863 / 0	0 / 0	0 / 0	0 / 0	432 / 0	0 / 0
K	1295	863 / 0	0 / 0	0 / 0	0 / 0	432 / 0	0 / 0

BEARING MATERIAL TO BE SPF NO.2 OR BETTER AT JOINT(S) Q, K

BRACING

TOP CHORD TO BE SHEATHED OR MAX. PURLIN SPACING = 3.72 FT.
MAX. UNBRACED BOTTOM CHORD LENGTH = 10.00 FT OR RIGID CEILING DIRECTLY APPLIED.

ALL PITCH BREAKS AND PERIMETER CORNER JOINTS MUST BE LATERALLY RESTRAINED.

LOADING

TOTAL LOAD CASES: (4)

CHORDS

MEMB. FR-TO	MAX. FACTORED FORCE (LBS)	FACTORED VERT. LOAD LC1 (PLF) FROM	TO	MAX CSI (LC)	MAX. UNBRAC LENGTH
A- B	0 / 35	-91.8	-91.8	0.12 (1)	10.00
B- C	-1974 / 0	-91.8	-91.8	0.66 (1)	4.07
C- D	-2528 / 0	-91.8	-91.8	0.45 (1)	3.91
D- E	-2782 / 0	-91.8	-91.8	0.47 (1)	3.72
E- F	-2782 / 0	-91.8	-91.8	0.47 (1)	3.72
F- G	-2782 / 0	-91.8	-91.8	0.47 (1)	3.72
G- H	-2528 / 0	-91.8	-91.8	0.45 (1)	3.91
H- I	-1974 / 0	-91.8	-91.8	0.66 (1)	4.07
I- J	0 / 35	-91.8	-91.8	0.12 (1)	10.00
Q- B	-1791 / 0	0.0	0.0	0.18 (1)	6.24
K- I	-1791 / 0	0.0	0.0	0.18 (1)	6.24
Q- P	0 / 0	-18.5	-18.5	0.13 (4)	10.00
P- O	0 / 1636	-18.5	-18.5	0.33 (1)	10.00
O- N	0 / 2529	-18.5	-18.5	0.46 (1)	10.00
N- M	0 / 2529	-18.5	-18.5	0.46 (1)	10.00
M- L	0 / 1636	-18.5	-18.5	0.33 (1)	10.00
L- K	0 / 0	-18.5	-18.5	0.13 (4)	10.00

WEBS

MEMB. FR-TO	MAX. FACTORED FORCE (LBS)	MAX CSI (LC)
P- C	-202 / 16	0.08 (1)
L- H	-202 / 16	0.08 (1)
B- P	0 / 1670	0.38 (1)
L- I	0 / 1670	0.38 (1)
M- H	0 / 1234	0.28 (1)
C- O	0 / 1234	0.28 (1)
M- G	-760 / 0	0.29 (1)
O- D	-760 / 0	0.29 (1)
N- G	0 / 354	0.08 (1)
D- N	0 / 354	0.08 (1)
N- E	-416 / 0	0.16 (1)

DESIGN CRITERIA

SPECIFIED LOADS:

TOP CH.	LL	=	25.6	PSF
	DL	=	6.0	PSF
BOT CH.	LL	=	0.0	PSF
	DL	=	7.4	PSF
TOTAL LOAD		=	39.0	PSF

SPACING = 24.0 IN. C/C

LOADING IN FLAT SECTION BASED ON A SLOPE OF 6.00/12

THIS TRUSS IS DESIGNED FOR RESIDENTIAL OR SMALL BUILDING REQUIREMENTS OF PART 9, NBCC 2010, NBCC 2015

THIS DESIGN COMPLIES WITH:
- PART 9 OF BCBC 2018 , OBC 2012 , ABC 2019
- PART 9 OF OBC 2012 (2019 AMENDMENT)
- CSA 086-09, CSA 086-14
- TPIC 2011, TPIC 2014

(55 % OF 31.3 P.S.F. G.S.L. PLUS 8.4 P.S.F. RAIN LOAD) EQUALS 25.6 P.S.F. SPECIFIED ROOF LIVE LOAD

ALLOWABLE DEFL.(LL)= L/360 (1.03")
CALCULATED VERT. DEFL.(LL) = L/ 999 (0.13")
ALLOWABLE DEFL.(TL)= L/360 (1.03")
CALCULATED VERT. DEFL.(TL) = L/ 999 (0.25")

CSI: TC=0.66/1.00 (B-C:1) , BC=0.46/1.00 (M-N:1) , WB=0.38/1.00 (B-P:1) , SSI=0.22/1.00 (G-H:1)

DOL LUMBER=1.00 NAIL=1.00 LS BEND=1.10 COMP=1.10 SHEAR=1.10 TENS= 1.10

COMPANION LIVE LOAD FACTOR = 1.00

TRUSS PLATE MANUFACTURER IS NOT RESPONSIBLE FOR QUALITY CONTROL IN THE TRUSS MANUFACTURING PLANT .

NAIL VALUES

PLATE	GRIP(DRY) (PSI) MAX	MIN	SHEAR (PLI) MAX	MIN	SECTION (PLI) MAX	MIN
MT20	618	354	1667	788	1987	1656

PLATE PLACEMENT TOL. = 0.250 inches

PLATE ROTATION TOL. = 5.0 Deg.

JSI GRIP= 0.88 (B) (INPUT = 0.90)
JSI METAL= 0.47 (N) (INPUT = 1.00)

LICENSED PROFESSIONAL ENGINEER
10/14/20
H. J. G. ALVES
100009024
PROVINCE OF ONTARIO

Structural component only
DWG# T-2022155

JOB NAME	TRUSS NAME	QUANTITY	PLY	JOB DESC.	DRWG NO.
406513	T3	2	1	ROYAL PINE HOMES TRUSS DESC.	

Tamarack Roof Truss, Burlington

Version 8.330 S May 6 2020 MiTek Industries, Inc. Wed Oct 14 10:41:41 2020 Page 1
ID:8ITcKsuAqJzVBsZ1WqSCayyOHpK-DbWkvyVGQwPZfSLv9FszsGL2ZzwMXsNnwSuF1ByTXhO

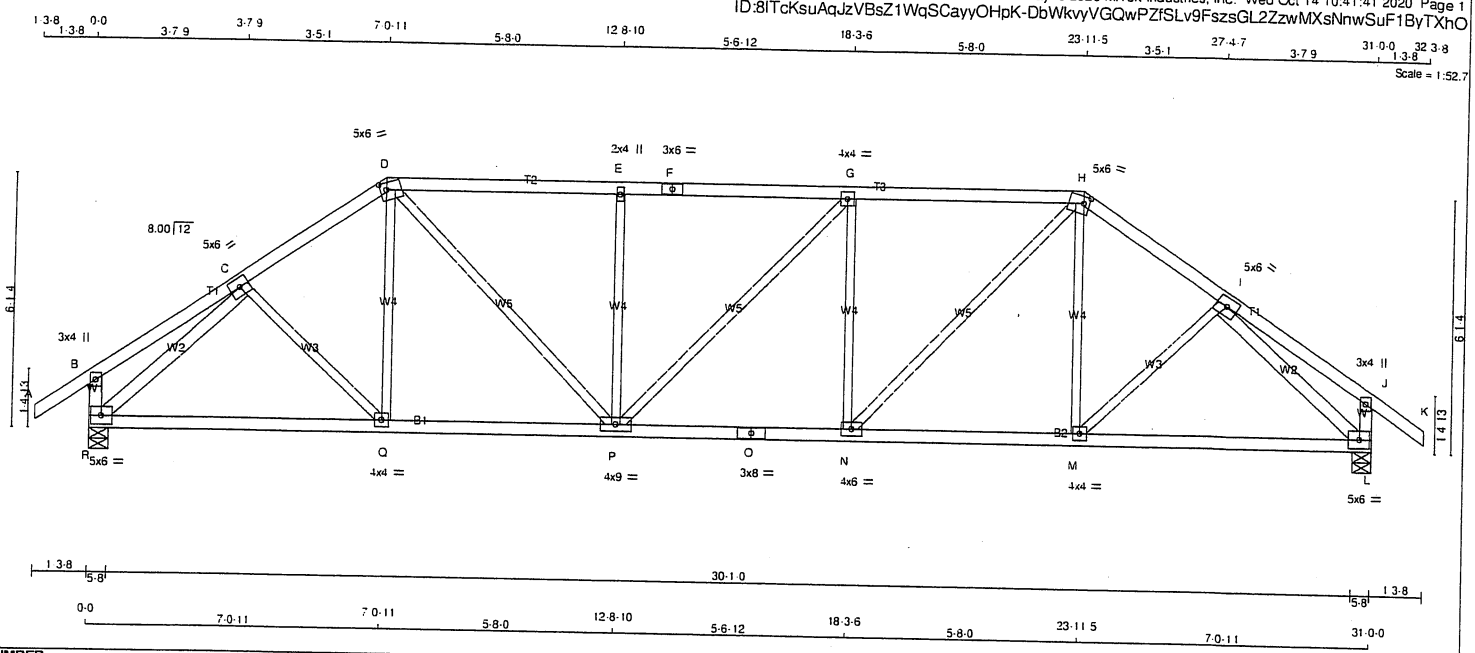

TOTAL WEIGHT = 2 X 135 = 270 lb [M]

LUMBER

N. L. G. A. RULES

CHORDS	SIZE		LUMBER	DESCR.
A - D	2x4	DRY	No.2	SPF
D - F	2x4	DRY	No.2	SPF
F - H	2x4	DRY	No.2	SPF
H - K	2x4	DRY	No.2	SPF
R - B	2x4	DRY	No.2	SPF
L - J	2x4	DRY	No.2	SPF
R - O	2x4	DRY	No.2	SPF
O - L	2x4	DRY	No.2	SPF
ALL WEBS EXCEPT	2x3	DRY	No.2	SPF
R - C	2x4	DRY	No.2	SPF
I - L	2x4	DRY	No.2	SPF

DRY: SEASONED LUMBER.

PLATES (table is in inches)

JT	TYPE	PLATES	W	LEN	Y	X
B	TMV+p	MT20	3.0	4.0		
C	TMWW-t	MT20	5.0	6.0		
D	TTWW-m	MT20	5.0	6.0	2.00	1.75
E	TMW+w	MT20	2.0	4.0		
F	TS-t	MT20	3.0	6.0		
G	TMWW-t	MT20	4.0	4.0		
H	TTWW-m	MT20	5.0	6.0	2.00	1.75
I	TMWW-t	MT20	5.0	6.0		
J	TMV+p	MT20	3.0	4.0		
L	BMVW1-t	MT20	5.0	6.0		
M	BMWW-t	MT20	4.0	4.0		
N	BMWW-t	MT20	4.0	6.0		
O	BS-t	MT20	3.0	8.0		
P	BMWWW-t	MT20	4.0	9.0		
Q	BMWW-t	MT20	4.0	4.0		
R	BMVW1-t	MT20	5.0	6.0		

DIMENSIONS, SUPPORTS AND LOADINGS SPECIFIED BY FABRICATOR TO BE VERIFIED BY BUILDING DESIGNER

BEARINGS

JT	FACTORED GROSS REACTION VERT	HORZ	MAXIMUM FACTORED GROSS REACTION DOWN	HORZ	UPLIFT	INPUT BRG IN-SX	REQRD BRG IN-SX
R	1835	0	1835	0	0	5-8	5-8
L	1835	0	1835	0	0	5-8	5-8

UNFACTORED REACTIONS

JT	1ST LCASE COMBINED	MAX./MIN. COMPONENT REACTIONS SNOW	LIVE	PERM.LIVE	WIND	DEAD	SOIL
R	1295	863 / 0	0 / 0	0 / 0	0 / 0	432 / 0	0 / 0
L	1295	863 / 0	0 / 0	0 / 0	0 / 0	432 / 0	0 / 0

BEARING MATERIAL TO BE SPF NO.2 OR BETTER AT JOINT(S) R, L

BRACING

TOP CHORD TO BE SHEATHED OR MAX. PURLIN SPACING = 4.01 FT.
MAX. UNBRACED BOTTOM CHORD LENGTH = 10.00 FT OR RIGID CEILING DIRECTLY APPLIED.

ALL PITCH BREAKS AND PERIMETER CORNER JOINTS MUST BE LATERALLY RESTRAINED.

LOADING

TOTAL LOAD CASES: (4)

CHORDS

MEMB. FR-TO	MAX. FACTORED FORCE (LBS)	FACTORED VERT. LOAD LC1 (PLF) FROM	TO	MAX CSI (LC)	MAX. UNBRAC LENGTH
A- B	0 / 35	-91.8	-91.8	0.12 (1)	10.00
B- C	0 / 19	-91.8	-91.8	0.17 (1)	10.00
C- D	-1970 / 0	-91.8	-91.8	0.22 (1)	4.60
D- E	-2257 / 0	-91.8	-91.8	0.52 (1)	4.02
E- F	-2258 / 0	-91.8	-91.8	0.52 (1)	4.01
F- G	-2258 / 0	-91.8	-91.8	0.52 (1)	4.01
G- H	-2259 / 0	-91.8	-91.8	0.53 (1)	4.01
H- I	-1970 / 0	-91.8	-91.8	0.22 (1)	4.60
I- J	0 / 19	-91.8	-91.8	0.17 (1)	10.00
J- K	0 / 35	-91.8	-91.8	0.12 (1)	10.00
R- B	-253 / 0	0.0	0.0	0.03 (1)	7.81
L- J	-253 / 0	0.0	0.0	0.03 (1)	7.81
R- Q	0 / 1569	-18.5	-18.5	0.37 (1)	10.00
Q- P	0 / 1622	-18.5	-18.5	0.37 (1)	10.00
P- O	0 / 2259	-18.5	-18.5	0.42 (1)	10.00
O- N	0 / 2259	-18.5	-18.5	0.42 (1)	10.00
N- M	0 / 1622	-18.5	-18.5	0.37 (1)	10.00
M- L	0 / 1568	-18.5	-18.5	0.37 (1)	10.00

WEBS

MEMB. FR-TO	MAX. FACTORED FORCE (LBS)	MAX CSI (LC)
C- Q	0 / 72	0.02 (4)
Q- D	0 / 106	0.04 (4)
D- P	0 / 910	0.20 (1)
P- E	-557 / 0	0.33 (1)
P- G	-2 / 0	0.00 (1)
N- G	-558 / 0	0.33 (1)
N- H	0 / 912	0.21 (1)
M- H	0 / 106	0.04 (4)
M- I	0 / 72	0.02 (4)
R- C	-2189 / 0	0.60 (1)
I- L	-2189 / 0	0.60 (1)

DESIGN CRITERIA

SPECIFIED LOADS:

TOP CH.	LL	=	25.6	PSF
	DL	=	6.0	PSF
BOT CH.	LL	=	0.0	PSF
	DL	=	7.4	PSF
TOTAL LOAD		=	39.0	PSF

SPACING = 24.0 IN. C/C

LOADING IN FLAT SECTION BASED ON A SLOPE OF 6.00/12

THIS TRUSS IS DESIGNED FOR RESIDENTIAL OR SMALL BUILDING REQUIREMENTS OF PART 9, NBCC 2010. NBCC 2015

THIS DESIGN COMPLIES WITH:
- PART 9 OF BCBC 2018 , OBC 2012 , ABC 2019
- PART 9 OF OBC 2012 (2019 AMENDMENT)
- CSA 086-09, CSA 086-14
- TPIC 2011, TPIC 2014

(55 % OF 31.3 P.S.F. G.S.L. PLUS 8.4 P.S.F. RAIN LOAD) EQUALS 25.6 P.S.F. SPECIFIED ROOF LIVE LOAD

ALLOWABLE DEFL.(LL)= L/360 (1.03")
CALCULATED VERT. DEFL.(LL) = L/ 999 (0.10")
ALLOWABLE DEFL.(TL)= L/360 (1.03")
CALCULATED VERT. DEFL.(TL) = L/ 999 (0.19")

CSI: TC=0.53/1.00 (G-H:1) , BC=0.42/1.00 (N-P:1) . WB=0.60/1.00 (C-R:1) . SSI=0.24/1.00 (G-H:1)

DOL LUMBER=1.00 NAIL=1.00 LS BEND=1.10 COMP=1.10 SHEAR=1.10 TENS= 1.10

COMPANION LIVE LOAD FACTOR = 1.00

AUTOSOLVE HEELS OFF

TRUSS PLATE MANUFACTURER IS NOT RESPONSIBLE FOR QUALITY CONTROL IN THE TRUSS MANUFACTURING PLANT .

NAIL VALUES

PLATE	GRIP(DRY) (PSI) MAX	MIN	SHEAR (PLI) MAX	MIN	SECTION (PLI) MAX	MIN
MT20	618	354	1667	788	1987	1656

PLATE PLACEMENT TOL. = 0.250 inches

PLATE ROTATION TOL. = 5.0 Deg.

JSI GRIP= 0.85 (C) (INPUT = 0.90)
JSI METAL= 0.74 (O) (INPUT = 1.00)

LICENSED PROFESSIONAL ENGINEER
10/14/20
H. J. G. ALVES
100009024
PROVINCE OF ONTARIO

Structural component only
DWG# T-2022156

JOB NAME	TRUSS NAME	QUANTITY	PLY	JOB DESC.	DRWG NO.
406513	T4	2	1	ROYAL PINE HOMES TRUSS DESC.	

Tamarack Roof Truss, Burlington

Version 8.330 S May 6 2020 MiTek Industries, Inc. Wed Oct 14 10:41:41 2020 Page 1

ID:8ITcKsuAqJzVBsZ1WqSCayyOHpK-DbWkvyVGQwPZfSLv9FszsGL0Xzx6Xr6nwSuF1ByTXhO

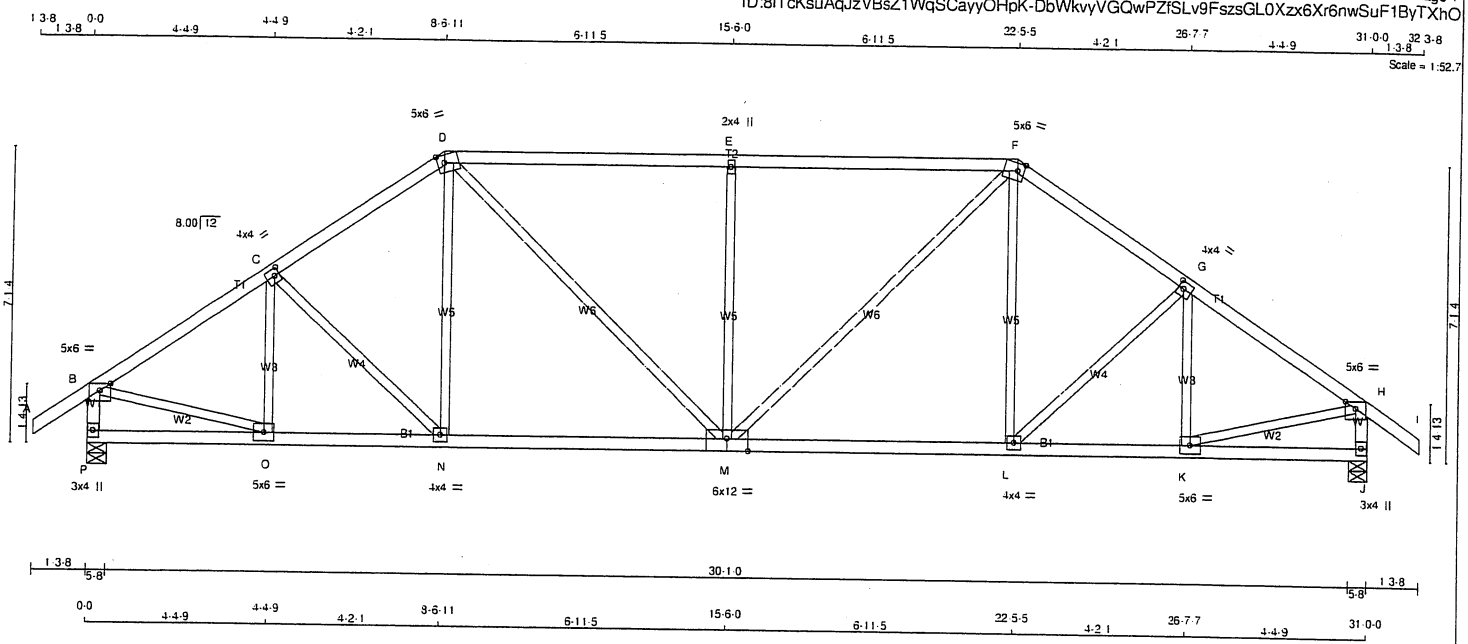

TOTAL WEIGHT = 2 X 134 = 267 lb

[M][F]

LUMBER

N. L. G. A. RULES

CHORDS	SIZE		LUMBER	DESCR.
A - D	2x4	DRY	No.2	SPF
D - F	2x4	DRY	No.2	SPF
F - I	2x4	DRY	No.2	SPF
P - B	2x4	DRY	No.2	SPF
J - H	2x4	DRY	No.2	SPF
P - M	2x4	DRY	No.2	SPF
M - J	2x4	DRY	No.2	SPF
ALL WEBS EXCEPT	2x3	DRY	No.2	SPF

DRY: SEASONED LUMBER.

PLATES (table is in inches)

JT	TYPE	PLATES	W	LEN	Y	X
B	TMVW-p	MT20	5.0	6.0	Edge	
C	TMWW-t	MT20	4.0	4.0	2.00	1.50
D	TTWW-m	MT20	5.0	6.0	2.25	2.00
E	TMW+w	MT20	2.0	4.0		
F	TTWW-m	MT20	5.0	6.0	2.25	2.00
G	TMWW-t	MT20	4.0	4.0	2.00	1.50
H	TMVW-p	MT20	5.0	6.0	Edge	
J	BMV1+p	MT20	3.0	4.0		
K	BMWW-t	MT20	5.0	6.0		
L	BMWW-t	MT20	4.0	4.0		
M	BSWWW-l	MT20	6.0	12.0	Edge	6.00
N	BMWW-t	MT20	4.0	4.0		
O	BMWW-t	MT20	5.0	6.0		
P	BMV1+p	MT20	3.0	4.0		

Edge - INDICATES REFERENCE CORNER OF PLATE TOUCHES EDGE OF CHORD.

DIMENSIONS, SUPPORTS AND LOADINGS SPECIFIED BY FABRICATOR TO BE VERIFIED BY BUILDING DESIGNER

BEARINGS

JT	FACTORED GROSS REACTION VERT	HORZ	MAXIMUM FACTORED GROSS REACTION DOWN	HORZ	UPLIFT	INPUT BRG IN-SX	REQRD BRG IN-SX
P	1835	0	1835	0	0	5-8	5-8
J	1835	0	1835	0	0	5-8	5-8

UNFACTORED REACTIONS

JT	1ST LCASE COMBINED	MAX./MIN. COMPONENT REACTIONS SNOW	LIVE	PERM.LIVE	WIND	DEAD	SOIL
P	1295	863 / 0	0 / 0	0 / 0	0 / 0	432 / 0	0 / 0
J	1295	863 / 0	0 / 0	0 / 0	0 / 0	432 / 0	0 / 0

BEARING MATERIAL TO BE SPF NO.2 OR BETTER AT JOINT(S) P, J

BRACING

TOP CHORD TO BE SHEATHED OR MAX. PURLIN SPACING = 3.96 FT.
MAX. UNBRACED BOTTOM CHORD LENGTH = 10.00 FT OR RIGID CEILING DIRECTLY APPLIED.

ALL PITCH BREAKS AND PERIMETER CORNER JOINTS MUST BE LATERALLY RESTRAINED.

LOADING

TOTAL LOAD CASES: (4)

CHORDS

MEMB. FR-TO	MAX. FACTORED FORCE (LBS)		FACTORED VERT. LOAD LC1 (PLF) FROM	TO	MAX CSI (LC)	MAX. UNBRAC LENGTH
A- B	0	35	-91.8	-91.8	0.12 (1)	10.00
B- C	-1966	0	-91.8	-91.8	0.26 (1)	4.58
C- D	-1911	0	-91.8	-91.8	0.25 (1)	4.64
D- E	-2023	0	-91.8	-91.8	0.66 (1)	3.96
E- F	-2023	0	-91.8	-91.8	0.66 (1)	3.96
F- G	-1911	0	-91.8	-91.8	0.25 (1)	4.64
G- H	-1966	0	-91.8	-91.8	0.26 (1)	4.58
H- I	0	35	-91.8	-91.8	0.12 (1)	10.00
P- B	-1796	0	0.0	0.0	0.18 (1)	6.24
J- H	-1796	0	0.0	0.0	0.18 (1)	6.24
P- O	0	0	-18.5	-18.5	0.08 (4)	10.00
O- N	0	1656	-18.5	-18.5	0.37 (1)	10.00
N- M	0	1570	-18.5	-18.5	0.36 (1)	10.00
M- L	0	1570	-18.5	-18.5	0.36 (1)	10.00
L- K	0	1656	-18.5	-18.5	0.37 (1)	10.00
K- J	0	0	-18.5	-18.5	0.08 (4)	10.00

WEBS

MEMB. FR-TO	MAX. FACTORED FORCE (LBS)		MAX CSI (LC)
O- C	-344	0	0.10 (1)
C- N	-123	0	0.07 (1)
N- D	0	215	0.06 (4)
D- M	0	634	0.14 (1)
M- E	-784	0	0.68 (1)
M- F	0	634	0.14 (1)
L- F	0	215	0.06 (4)
L- G	-123	0	0.07 (1)
K- G	-344	0	0.10 (1)
B- O	0	1706	0.38 (1)
K- H	0	1706	0.38 (1)

DESIGN CRITERIA

SPECIFIED LOADS:

TOP CH.	LL	=	25.6	PSF
	DL	=	6.0	PSF
BOT CH.	LL	=	0.0	PSF
	DL	=	7.4	PSF
TOTAL LOAD		=	39.0	PSF

SPACING = 24.0 IN. C/C

LOADING IN FLAT SECTION BASED ON A SLOPE OF 6.00/12

THIS TRUSS IS DESIGNED FOR RESIDENTIAL OR SMALL BUILDING REQUIREMENTS OF PART 9, NBCC 2010, NBCC 2015

THIS DESIGN COMPLIES WITH:
- PART 9 OF BCBC 2018 , OBC 2012 , ABC 2019
- PART 9 OF OBC 2012 (2019 AMENDMENT)
- CSA 086-09, CSA 086-14
- TPIC 2011, TPIC 2014

(55 % OF 31.3 P.S.F. G.S.L. PLUS 8.4 P.S.F. RAIN LOAD) EQUALS 25.6 P.S.F. SPECIFIED ROOF LIVE LOAD

ALLOWABLE DEFL.(LL)= L/360 (1.03")
CALCULATED VERT. DEFL.(LL) = L/ 999 (0.08")
ALLOWABLE DEFL.(TL)= L/360 (1.03")
CALCULATED VERT. DEFL.(TL) = L/ 999 (0.20")

CSI: TC=0.66/1.00 (D-E:1) , BC=0.37/1.00 (N-O:1) , WB=0.68/1.00 (E-M:1) , SSI=0.31/1.00 (D-E:1)

DOL LUMBER=1.00 NAIL=1.00 LS BEND=1.10 COMP=1.10 SHEAR=1.10 TENS= 1.10

COMPANION LIVE LOAD FACTOR = 1.00

TRUSS PLATE MANUFACTURER IS NOT RESPONSIBLE FOR QUALITY CONTROL IN THE TRUSS MANUFACTURING PLANT .

NAIL VALUES

PLATE	GRIP(DRY) (PSI) MAX	MIN	SHEAR (PLI) MAX	MIN	SECTION (PLI) MAX	MIN
MT20	618	354	1667	788	1987	1656

PLATE PLACEMENT TOL. = 0.250 inches

PLATE ROTATION TOL. = 5.0 Deg.

JSI GRIP= 0.88 (H) (INPUT = 0.90)
JSI METAL= 0.41 (K) (INPUT = 1.00)

LICENSED PROFESSIONAL ENGINEER
10/14/20
H. J. G. ALVES
100009024
PROVINCE OF ONTARIO

Structural component only
DWG# T-2022157

JOB NAME	TRUSS NAME	QUANTITY	PLY	JOB DESC.	DRWG NO.
406513	T5	2	1	ROYAL PINE HOMES TRUSS DESC.	

Tamarack Roof Truss, Burlington

Version 8.330 S May 6 2020 MiTek Industries, Inc. Wed Oct 14 10:41:42 2020 Page 1
ID:8ITcKsuAqJzVBsZ1WqSCayyOHpK-hn466IWvBEXQHcv5jzNCOTuFTNHpGG_x86eoaeyTXhN

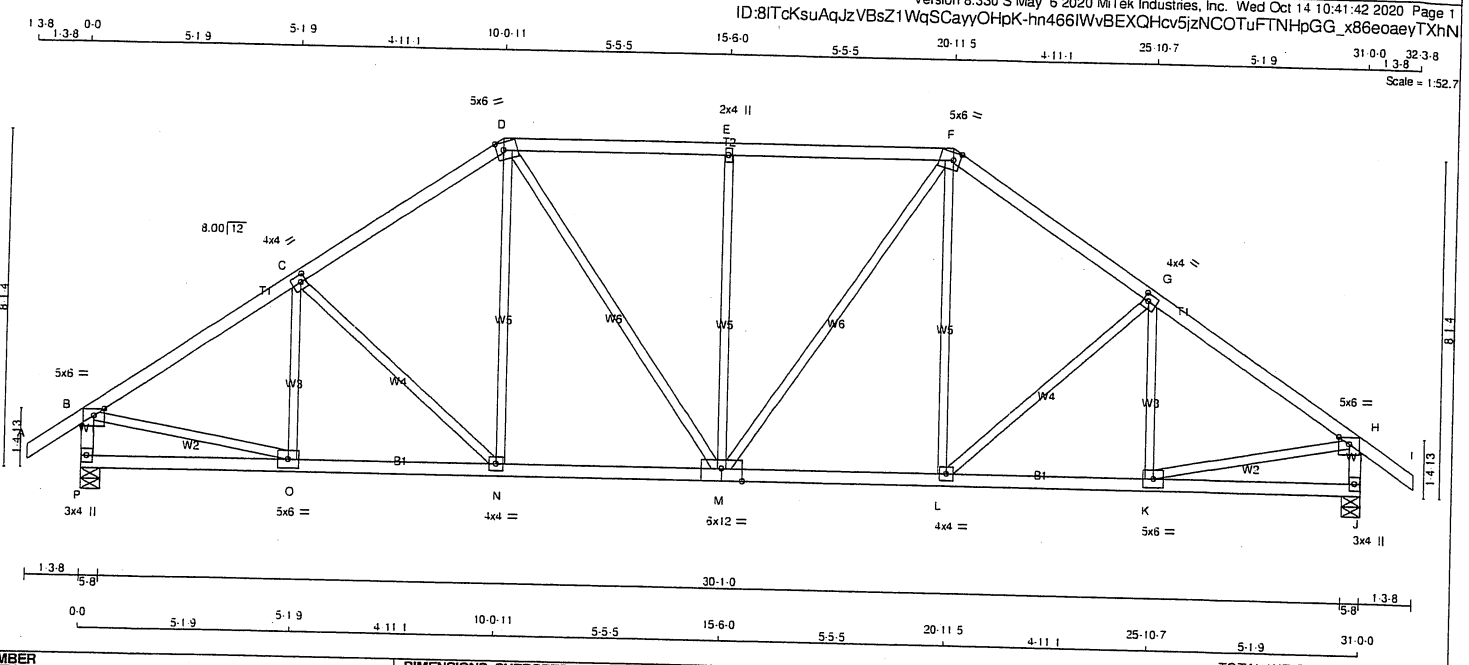

TOTAL WEIGHT = 2 X 140 = 280 lb
[M][F]

LUMBER

N. L. G. A. RULES

CHORDS	SIZE		LUMBER	DESCR.
A - D	2x4	DRY	No.2	SPF
D - F	2x4	DRY	No.2	SPF
F - I	2x4	DRY	No.2	SPF
P - B	2x4	DRY	No.2	SPF
J - H	2x4	DRY	No.2	SPF
P - M	2x4	DRY	No.2	SPF
M - J	2x4	DRY	No.2	SPF
ALL WEBS EXCEPT	2x3	DRY	No.2	SPF

DRY: SEASONED LUMBER.

PLATES (table is in inches)

JT	TYPE	PLATES	W	LEN	Y	X
B	TMVW-p	MT20	5.0	6.0	Edge	
C	TMWW-t	MT20	4.0	4.0	2.00	1.50
D	TTWW-m	MT20	5.0	6.0	2.25	2.00
E	TMW+w	MT20	2.0	4.0		
F	TTWW-m	MT20	5.0	6.0	2.25	2.00
G	TMWW-t	MT20	4.0	4.0	2.00	1.50
H	TMVW-p	MT20	5.0	6.0	Edge	
J	BMV1+p	MT20	3.0	4.0		
K	BMWW-t	MT20	5.0	6.0		
L	BMWW-t	MT20	4.0	4.0		
M	BSWWW-l	MT20	6.0	12.0	Edge	6.00
N	BMWW-t	MT20	4.0	4.0		
O	BMWW-t	MT20	5.0	6.0		
P	BMV1+p	MT20	3.0	4.0		

Edge - INDICATES REFERENCE CORNER OF PLATE TOUCHES EDGE OF CHORD.

DIMENSIONS, SUPPORTS AND LOADINGS SPECIFIED BY FABRICATOR TO BE VERIFIED BY BUILDING DESIGNER

BEARINGS

JT	FACTORED GROSS REACTION VERT	HORZ	MAXIMUM FACTORED GROSS REACTION DOWN	HORZ	UPLIFT	INPUT BRG IN-SX	REQRD BRG IN-SX
P	1835	0	1835	0	0	5-8	5-8
J	1835	0	1835	0	0	5-8	5-8

UNFACTORED REACTIONS

JT	1ST LCASE COMBINED	MAX.:MIN. COMPONENT REACTIONS SNOW	LIVE	PERM.LIVE	WIND	DEAD	SOIL
P	1295	863 0	0 0	0 0	0 0	432 0	0 0
J	1295	863 0	0 0	0 0	0 0	432 0	0 0

BEARING MATERIAL TO BE SPF NO.2 OR BETTER AT JOINT(S) P, J

BRACING

TOP CHORD TO BE SHEATHED OR MAX. PURLIN SPACING = 4.44 FT.
MAX. UNBRACED BOTTOM CHORD LENGTH = 10.00 FT OR RIGID CEILING DIRECTLY APPLIED.

ALL PITCH BREAKS AND PERIMETER CORNER JOINTS MUST BE LATERALLY RESTRAINED.

LOADING

TOTAL LOAD CASES: (4)

CHORDS

MEMB. FR-TO	MAX. FACTORED FORCE (LBS)		FACTORED VERT. LOAD LC1 (PLF) FROM	TO	MAX CSI (LC)	MAX. UNBRAC LENGTH
A- B	0	35	-91.8	-91.8	0.12 (1)	10.00
B- C	-2005	0	-91.8	-91.8	0.36 (1)	4.44
C- D	-1827	0	-91.8	-91.8	0.34 (1)	4.62
D- E	-1737	0	-91.8	-91.8	0.39 (1)	4.64
E- F	-1737	0	-91.8	-91.8	0.39 (1)	4.64
F- G	-1827	0	-91.8	-91.8	0.34 (1)	4.62
G- H	-2005	0	-91.8	-91.8	0.36 (1)	4.44
H- I	0	35	-91.8	-91.8	0.12 (1)	10.00
P- B	-1793	0	0.0	0.0	0.18 (1)	6.24
J- H	-1793	0	0.0	0.0	0.18 (1)	6.24
P- O	0	0	-18.5	-18.5	0.10 (4)	10.00
O- N	0	1693	-18.5	-18.5	0.34 (1)	10.00
N- M	0	1496	-18.5	-18.5	0.31 (1)	10.00
M- L	0	1496	-18.5	-18.5	0.31 (1)	10.00
L- K	0	1693	-18.5	-18.5	0.34 (1)	10.00
K- J	0	0	-18.5	-18.5	0.10 (4)	10.00

WEBS

MEMB. FR-TO	MAX. FACTORED FORCE (LBS)		MAX CSI (LC)
O- C	-261	0	0.09 (1)
C- N	-270	0	0.23 (1)
N- D	0	290	0.07 (1)
D- M	0	421	0.09 (1)
M- E	-610	0	0.77 (1)
M- F	0	421	0.09 (1)
L- F	0	290	0.07 (1)
L- G	-270	0	0.23 (1)
K- G	-261	0	0.09 (1)
B- O	0	1730	0.39 (1)
K- H	0	1730	0.39 (1)

DESIGN CRITERIA

SPECIFIED LOADS:

TOP CH.	LL	=	25.6	PSF
	DL	=	6.0	PSF
BOT CH.	LL	=	0.0	PSF
	DL	=	7.4	PSF
TOTAL LOAD		=	39.0	PSF

SPACING = 24.0 IN. C/C

LOADING IN FLAT SECTION BASED ON A SLOPE OF 6.00/12

THIS TRUSS IS DESIGNED FOR RESIDENTIAL OR SMALL BUILDING REQUIREMENTS OF PART 9, NBCC 2010, NBCC 2015

THIS DESIGN COMPLIES WITH:
- PART 9 OF BCBC 2018 , OBC 2012 , ABC 2019
- PART 9 OF OBC 2012 (2019 AMENDMENT)
- CSA 086-09, CSA 086-14
- TPIC 2011, TPIC 2014

(55 % OF 31.3 P.S.F. G.S.L. PLUS 8.4 P.S.F. RAIN LOAD) EQUALS 25.6 P.S.F. SPECIFIED ROOF LIVE LOAD

ALLOWABLE DEFL.(LL)= L/360 (1.03")
CALCULATED VERT. DEFL.(LL) = L/ 999 (0.07")
ALLOWABLE DEFL.(TL)= L/360 (1.03")
CALCULATED VERT. DEFL.(TL) = L/ 999 (0.15")

CSI: TC=0.39/1.00 (D-E:1) , BC=0.34/1.00 (K-L:1) , WB=0.77/1.00 (E-M:1) , SSI=0.24/1.00 (D-E:1)

DOL LUMBER=1.00 NAIL=1.00 LS BEND=1.10 COMP=1.10 SHEAR=1.10 TENS= 1.10

COMPANION LIVE LOAD FACTOR = 1.00

TRUSS PLATE MANUFACTURER IS NOT RESPONSIBLE FOR QUALITY CONTROL IN THE TRUSS MANUFACTURING PLANT .

NAIL VALUES

PLATE	GRIP(DRY) (PSI) MAX	MIN	SHEAR (PLI) MAX	MIN	SECTION (PLI) MAX	MIN
MT20	618	354	1667	788	1987	1656

PLATE PLACEMENT TOL. = 0.250 inches

PLATE ROTATION TOL. = 5.0 Deg.

JSI GRIP= 0.88 (H) (INPUT = 0.90)
JSI METAL= 0.42 (O) (INPUT = 1.00)

LICENSED PROFESSIONAL ENGINEER
10/14/20
H. J. G. ALVES
100009024
PROVINCE OF ONTARIO

Structural component only
DWG# T-2022158

JOB NAME	TRUSS NAME	QUANTITY	PLY	JOB DESC.	DRWG NO.
406513	T6	5	1	ROYAL PINE HOMES TRUSS DESC.	

Tamarack Roof Truss, Burlington

Version 8.330 S May 6 2020 MiTek Industries, Inc. Wed Oct 14 10:41:43 2020 Page 1

ID:8lTcKsuAqJzVBsZ1WqSCayyOHpK-9zeUKeWXyXfHvlUIHguRxhRPgmdU?o34NmNL64yTXhM

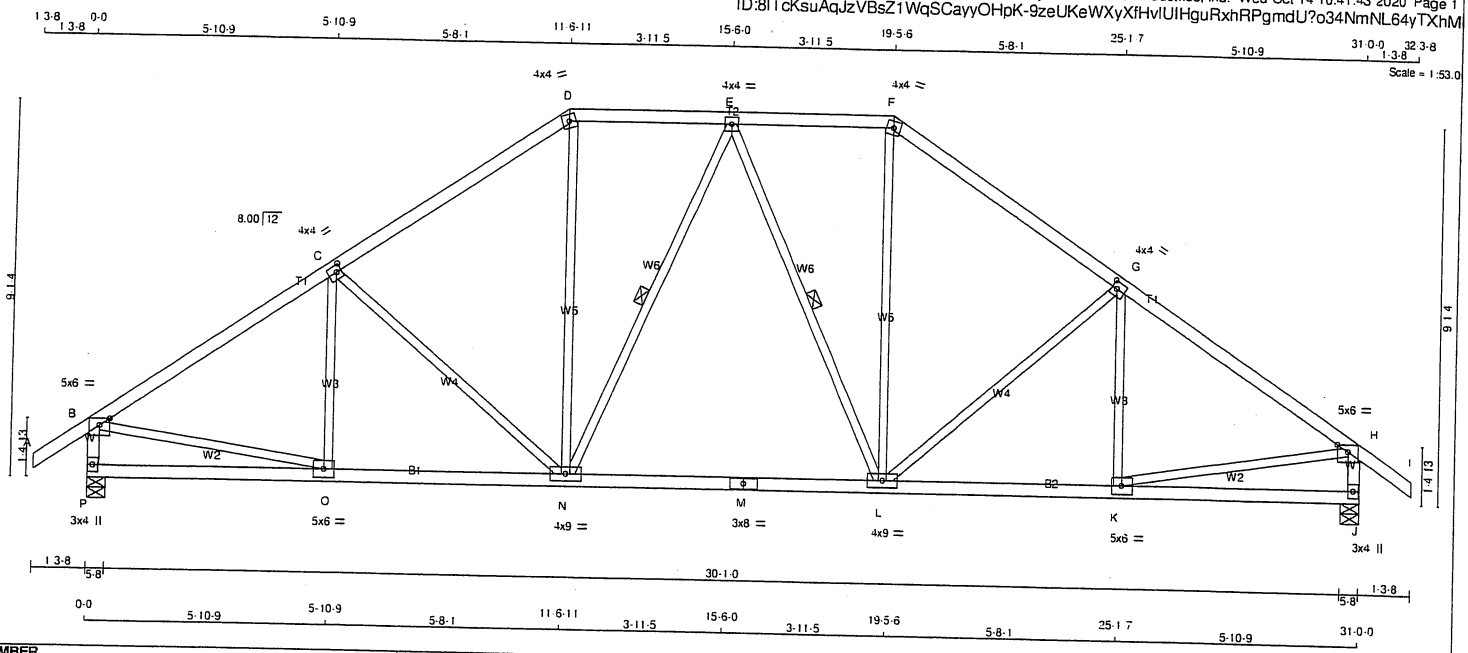

TOTAL WEIGHT = 5 X 140 = 700 lb

[M][F]

LUMBER

N. L. G. A. RULES

CHORDS	SIZE		LUMBER	DESCR.
A - D	2x4	DRY	No.2	SPF
D - F	2x4	DRY	No.2	SPF
F - I	2x4	DRY	No.2	SPF
P - B	2x4	DRY	No.2	SPF
J - H	2x4	DRY	No.2	SPF
P - M	2x4	DRY	No.2	SPF
M - J	2x4	DRY	No.2	SPF
ALL WEBS EXCEPT	2x3	DRY	No.2	SPF

DRY: SEASONED LUMBER.

PLATES (table is in inches)

JT	TYPE	PLATES	W	LEN	Y	X
B	TMVW-p	MT20	5.0	6.0	Edge	
C	TMWW-t	MT20	4.0	4.0	2.00	1.50
D	TTW-m	MT20	4.0	4.0		
E	TMWW-t	MT20	4.0	4.0		
F	TTW-m	MT20	4.0	4.0		
G	TMWW-t	MT20	4.0	4.0	2.00	1.50
H	TMVW-p	MT20	5.0	6.0	Edge	
J	BMV1+p	MT20	3.0	4.0		
K	BMWW-t	MT20	5.0	6.0		
L	BMWWW-t	MT20	4.0	9.0		
M	BS-t	MT20	3.0	8.0		
N	BMWWW-t	MT20	4.0	9.0		
O	BMWW-t	MT20	5.0	6.0		
P	BMV1+p	MT20	3.0	4.0		

Edge - INDICATES REFERENCE CORNER OF PLATE TOUCHES EDGE OF CHORD.

DIMENSIONS, SUPPORTS AND LOADINGS SPECIFIED BY FABRICATOR TO BE VERIFIED BY BUILDING DESIGNER

BEARINGS

JT	FACTORED GROSS REACTION VERT	HORZ	MAXIMUM FACTORED GROSS REACTION DOWN	HORZ	UPLIFT	INPUT BRG IN-SX	REQRD BRG IN-SX
P	1835	0	1835	0	0	5-8	5-8
J	1835	0	1835	0	0	5-8	5-8

UNFACTORED REACTIONS

JT	1ST LCASE COMBINED	MAX./MIN. COMPONENT REACTIONS SNOW	LIVE	PERM.LIVE	WIND	DEAD	SOIL
P	1295	863 / 0	0 / 0	0 / 0	0 / 0	432 / 0	0 / 0
J	1295	863 / 0	0 / 0	0 / 0	0 / 0	432 / 0	0 / 0

BEARING MATERIAL TO BE SPF NO.2 OR BETTER AT JOINT(S) P, J

BRACING

TOP CHORD TO BE SHEATHED OR MAX. PURLIN SPACING = 4.27 FT.
MAX. UNBRACED BOTTOM CHORD LENGTH = 10.00 FT OR RIGID CEILING DIRECTLY APPLIED.

ALL PITCH BREAKS AND PERIMETER CORNER JOINTS MUST BE LATERALLY RESTRAINED.

1 LATERAL BRACE(S) AT 1/ 2 LENGTH OF E-N, E-L.

END VERTICAL(S) MUST BE SHEATHED OR HAVE BRACES AS INDICATED IN THE MAX. UNBRACED LENGTH COLUMN OF THE TABLE BELOW

LOADING

TOTAL LOAD CASES: (4)

CHORDS

MEMB. FR-TO	MAX. FACTORED FORCE (LBS)	FACTORED VERT. LOAD LC1 (PLF) FROM	TO	MAX CSI (LC)	MAX. UNBRAC LENGTH
A- B	0 / 35	-91.8	-91.8	0.12 (1)	10.00
B- C	-2021 / 0	-91.8	-91.8	0.49 (1)	4.27
C- D	-1736 / 0	-91.8	-91.8	0.45 (1)	4.58
D- E	-1420 / 0	-91.8	-91.8	0.19 (1)	5.29
E- F	-1420 / 0	-91.8	-91.8	0.19 (1)	5.29
F- G	-1736 / 0	-91.8	-91.8	0.45 (1)	4.58
G- H	-2021 / 0	-91.8	-91.8	0.49 (1)	4.27
H- I	0 / 35	-91.8	-91.8	0.12 (1)	10.00
P- B	-1788 / 0	0.0	0.0	0.18 (1)	6.25
J- H	-1788 / 0	0.0	0.0	0.18 (1)	6.25
P- O	0 / 0	-18.5	-18.5	0.13 (4)	10.00
O- N	0 / 1710	-18.5	-18.5	0.38 (1)	10.00
N- M	0 / 1514	-18.5	-18.5	0.35 (1)	10.00
M- L	0 / 1514	-18.5	-18.5	0.35 (1)	10.00
L- K	0 / 1710	-18.5	-18.5	0.38 (1)	10.00
K- J	0 / 0	-18.5	-18.5	0.13 (4)	10.00

WEBS

MEMB. FR-TO	MAX. FACTORED FORCE (LBS)	MAX CSI (LC)
O- C	-205 / 21	0.09 (1)
C- N	-394 / 0	0.46 (1)
N- D	0 / 604	0.14 (1)
L- F	0 / 604	0.14 (1)
L- G	-394 / 0	0.46 (1)
K- G	-205 / 21	0.09 (1)
B- O	0 / 1739	0.39 (1)
K- H	0 / 1739	0.39 (1)
N- E	-236 / 0	0.16 (1)
E- L	-236 / 0	0.16 (1)

DESIGN CRITERIA

SPECIFIED LOADS:

TOP CH.	LL	=	25.6	PSF
	DL	=	6.0	PSF
BOT CH.	LL	=	0.0	PSF
	DL	=	7.4	PSF
TOTAL LOAD		=	39.0	PSF

SPACING = 24.0 IN. C/C

LOADING IN FLAT SECTION BASED ON A SLOPE OF 6.00/12

THIS TRUSS IS DESIGNED FOR RESIDENTIAL OR SMALL BUILDING REQUIREMENTS OF PART 9, NBCC 2010, NBCC 2015

THIS DESIGN COMPLIES WITH:
- PART 9 OF BCBC 2018 , OBC 2012 , ABC 2019
- PART 9 OF OBC 2012 (2019 AMENDMENT)
- CSA 086-09, CSA 086-14
- TPIC 2011, TPIC 2014

(55 % OF 31.3 P.S.F. G.S.L. PLUS 8.4 P.S.F. RAIN LOAD) EQUALS 25.6 P.S.F. SPECIFIED ROOF LIVE LOAD

ALLOWABLE DEFL.(LL)= L/360 (1.03")
CALCULATED VERT. DEFL.(LL) = L/ 999 (0.07")
ALLOWABLE DEFL.(TL)= L/360 (1.03")
CALCULATED VERT. DEFL.(TL) = L/ 999 (0.18")

CSI: TC=0.49/1.00 (B-C:1) , BC=0.38/1.00 (N-O:1) , WB=0.46/1.00 (C-N:1) , SSI=0.22/1.00 (B-C:1)

DOL LUMBER=1.00 NAIL=1.00 LS BEND=1.10 COMP=1.10 SHEAR=1.10 TENS= 1.10

COMPANION LIVE LOAD FACTOR = 1.00

TRUSS PLATE MANUFACTURER IS NOT RESPONSIBLE FOR QUALITY CONTROL IN THE TRUSS MANUFACTURING PLANT .

NAIL VALUES

PLATE	GRIP(DRY) (PSI) MAX	MIN	SHEAR (PLI) MAX	MIN	SECTION (PLI) MAX	MIN
MT20	618	354	1667	788	1987	1656

PLATE PLACEMENT TOL. = 0.250 inches

PLATE ROTATION TOL. = 5.0 Deg.

JSI GRIP= 0.88 (H) (INPUT = 0.90)
JSI METAL= 0.58 (M) (INPUT = 1.00)

LICENSED PROFESSIONAL ENGINEER
10/14/20
H. J. G. ALVES
100009024
PROVINCE OF ONTARIO

Structural component only
DWG# T-2022159

JOB NAME	TRUSS NAME	QUANTITY	PLY	JOB DESC.	DRWG NO.
406513	T7	2	1	ROYAL PINE HOMES TRUSS DESC.	

Tamarack Roof Truss, Burlington

Version 8.330 S May 6 2020 MiTek Industries, Inc. Wed Oct 14 10:41:44 2020 Page 1
ID:8ITcKsuAqJzVBsZ1WqSCayyOHpK-dACtX_X9jrn8Wv3UqOPgTuzXzAzkkGQEcQ7veWyTXhL

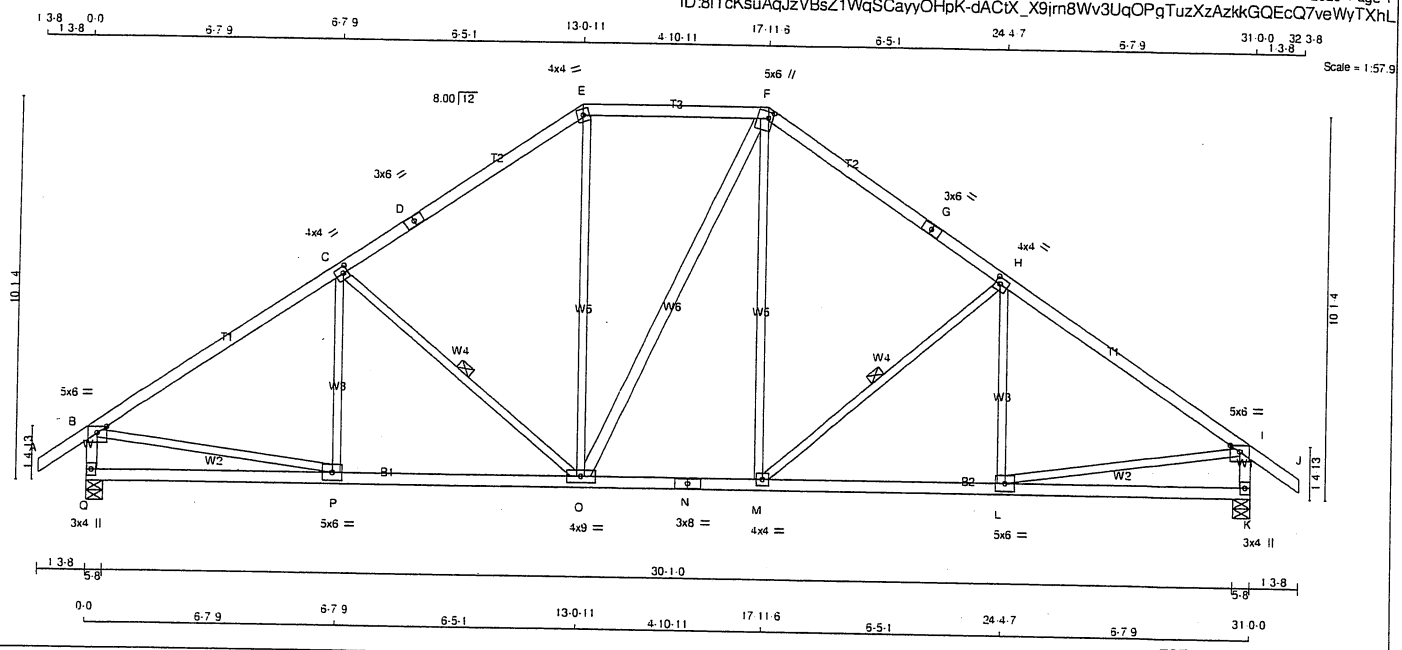

TOTAL WEIGHT = 2 X 143 = 285 lb
[M][F]

LUMBER
N. L. G. A. RULES

CHORDS	SIZE		LUMBER	DESCR.
A - D	2x4	DRY	No.2	SPF
D - E	2x4	DRY	No.2	SPF
E - F	2x4	DRY	No.2	SPF
F - G	2x4	DRY	No.2	SPF
G - J	2x4	DRY	No.2	SPF
Q - B	2x4	DRY	No.2	SPF
K - I	2x4	DRY	No.2	SPF
Q - N	2x4	DRY	No.2	SPF
N - K	2x4	DRY	No.2	SPF
ALL WEBS	2x3	DRY	No.2	SPF
EXCEPT				
O - F	2x4	DRY	No.2	SPF

DRY: SEASONED LUMBER.

PLATES (table is in inches)

JT	TYPE	PLATES	W	LEN	Y	X
B	TMVW-p	MT20	5.0	6.0	Edge	
C	TMWW-t	MT20	4.0	4.0	2.00	1.50
D	TS-t	MT20	3.0	6.0		
E	TTW-m	MT20	4.0	4.0		
F	TTWW+m	MT20	5.0	6.0	2.00	1.50
G	TS-t	MT20	3.0	6.0		
H	TMWW-t	MT20	4.0	4.0	2.00	1.50
I	TMVW-p	MT20	5.0	6.0	Edge	
K	BMV1+p	MT20	3.0	4.0		
L	BMWW-t	MT20	5.0	6.0		
M	BMWW-t	MT20	4.0	4.0		
N	BS-t	MT20	3.0	8.0		
O	BMWWW-t	MT20	4.0	9.0		
P	BMWW-t	MT20	5.0	6.0		
Q	BMV1+p	MT20	3.0	4.0		

Edge - INDICATES REFERENCE CORNER OF PLATE TOUCHES EDGE OF CHORD.

DIMENSIONS, SUPPORTS AND LOADINGS SPECIFIED BY FABRICATOR TO BE VERIFIED BY BUILDING DESIGNER

BEARINGS

JT	FACTORED GROSS REACTION VERT	HORZ	MAXIMUM FACTORED GROSS REACTION DOWN	HORZ	UPLIFT	INPUT BRG IN-SX	REQRD BRG IN-SX
Q	1835	0	1835	0	0	5-8	5-8
K	1835	0	1835	0	0	5-8	5-8

UNFACTORED REACTIONS

JT	1ST LCASE COMBINED	MAX./MIN. COMPONENT REACTIONS SNOW	LIVE	PERM.LIVE	WIND	DEAD	SOIL
Q	1295	863 / 0	0 / 0	0 / 0	0 / 0	432 / 0	0 / 0
K	1295	863 / 0	0 / 0	0 / 0	0 / 0	432 / 0	0 / 0

BEARING MATERIAL TO BE SPF NO.2 OR BETTER AT JOINT(S) Q, K

BRACING
TOP CHORD TO BE SHEATHED OR MAX. PURLIN SPACING = 4.05 FT.
MAX. UNBRACED BOTTOM CHORD LENGTH = 10.00 FT OR RIGID CEILING DIRECTLY APPLIED.

ALL PITCH BREAKS AND PERIMETER CORNER JOINTS MUST BE LATERALLY RESTRAINED.

1 LATERAL BRACE(S) AT 1/ 2 LENGTH OF C-O, H-M.

END VERTICAL(S) MUST BE SHEATHED OR HAVE BRACES AS INDICATED IN THE MAX. UNBRACED LENGTH COLUMN OF THE TABLE BELOW

LOADING
TOTAL LOAD CASES: (4)

CHORDS

MEMB. FR-TO	MAX. FACTORED FORCE (LBS)		FACTORED VERT. LOAD LC1 (PLF) FROM	TO	MAX CSI (LC)	MAX. UNBRAC LENGTH
A- B	0	35	-91.8	-91.8	0.12 (1)	10.00
B- C	-2026	0	-91.8	-91.8	0.64 (1)	4.05
C- D	-1628	0	-91.8	-91.8	0.58 (1)	4.50
D- E	-1628	0	-91.8	-91.8	0.58 (1)	4.50
E- F	-1323	0	-91.8	-91.8	0.30 (1)	5.28
F- G	-1627	0	-91.8	-91.8	0.58 (1)	4.50
G- H	-1627	0	-91.8	-91.8	0.58 (1)	4.50
H- I	-2027	0	-91.8	-91.8	0.64 (1)	4.05
I- J	0	35	-91.8	-91.8	0.12 (1)	10.00
Q- B	-1784	0	0.0	0.0	0.18 (1)	6.26
K- I	-1785	0	0.0	0.0	0.18 (1)	6.26
Q- P	0	0	-18.5	-18.5	0.20 (4)	10.00
P- O	0	1719	-18.5	-18.5	0.37 (1)	10.00
O- N	0	1323	-18.5	-18.5	0.28 (1)	10.00
N- M	0	1323	-18.5	-18.5	0.28 (1)	10.00
M- L	0	1720	-18.5	-18.5	0.38 (1)	10.00
L- K	0	0	-18.5	-18.5	0.20 (4)	10.00

WEBS

MEMB. FR-TO	MAX. FACTORED FORCE (LBS)		MAX CSI (LC)
P- C	-144	62	0.08 (1)
C- O	-524	0	0.26 (1)
O- E	0	437	0.10 (1)
O- F	0	2	0.00 (1)
M- F	0	436	0.10 (1)
M- H	-525	0	0.26 (1)
L- H	-142	63	0.07 (1)
B- P	0	1742	0.39 (1)
L- I	0	1742	0.39 (1)

DESIGN CRITERIA

SPECIFIED LOADS:

TOP CH.	LL	=	25.6	PSF
	DL	=	6.0	PSF
BOT CH.	LL	=	0.0	PSF
	DL	=	7.4	PSF
TOTAL LOAD		=	39.0	PSF

SPACING = 24.0 IN. C/C

LOADING IN FLAT SECTION BASED ON A SLOPE OF 6.00/12

THIS TRUSS IS DESIGNED FOR RESIDENTIAL OR SMALL BUILDING REQUIREMENTS OF PART 9, NBCC 2010, NBCC 2015

THIS DESIGN COMPLIES WITH:
- PART 9 OF BCBC 2018 , OBC 2012 , ABC 2019
- PART 9 OF OBC 2012 (2019 AMENDMENT)
- CSA 086-09, CSA 086-14
- TPIC 2011, TPIC 2014

(55 % OF 31.3 P.S.F. G.S.L. PLUS 8.4 P.S.F. RAIN LOAD) EQUALS 25.6 P.S.F. SPECIFIED ROOF LIVE LOAD

ALLOWABLE DEFL.(LL)= L/360 (1.03")
CALCULATED VERT. DEFL.(LL) = L/ 999 (0.07")
ALLOWABLE DEFL.(TL)= L/360 (1.03")
CALCULATED VERT. DEFL.(TL) = L/ 999 (0.15")

CSI: TC=0.64/1.00 (H-I:1) , BC=0.38/1.00 (L-M:1) , WB=0.39/1.00 (I-L:1) , SSI=0.24/1.00 (B-C:1)

DOL LUMBER=1.00 NAIL=1.00 LS BEND=1.10 COMP=1.10 SHEAR=1.10 TENS= 1.10

COMPANION LIVE LOAD FACTOR = 1.00

TRUSS PLATE MANUFACTURER IS NOT RESPONSIBLE FOR QUALITY CONTROL IN THE TRUSS MANUFACTURING PLANT

NAIL VALUES

PLATE	GRIP(DRY) (PSI) MAX	MIN	SHEAR (PLI) MAX	MIN	SECTION (PLI) MAX	MIN
MT20	618	354	1667	788	1987	1656

PLATE PLACEMENT TOL. = 0.250 inches

PLATE ROTATION TOL. = 5.0 Deg.

JSI GRIP= 0.88 (I) (INPUT = 0.90)
JSI METAL= 0.43 (L) (INPUT = 1.00)

LICENSED PROFESSIONAL ENGINEER
10/14/20
H. J. G. ALVES
100009024
PROVINCE OF ONTARIO

Structural component only
DWG# T-2022160

JOB NAME	TRUSS NAME	QUANTITY	PLY	JOB DESC.	DRWG NO.
406513	T8	1	1	ROYAL PINE HOMES TRUSS DESC.	

Tamarack Roof Truss, Burlington

Version 8.330 S May 6 2020 MiTek Industries, Inc. Wed Oct 14 10:41:45 2020 Page 1
ID:8ITcKsuAqJzVBsZ1WqSCayyOHpK-5MmFlKYnT9v?83egO5wv06Wp?aJRTmqNq4sSAzyTXhK

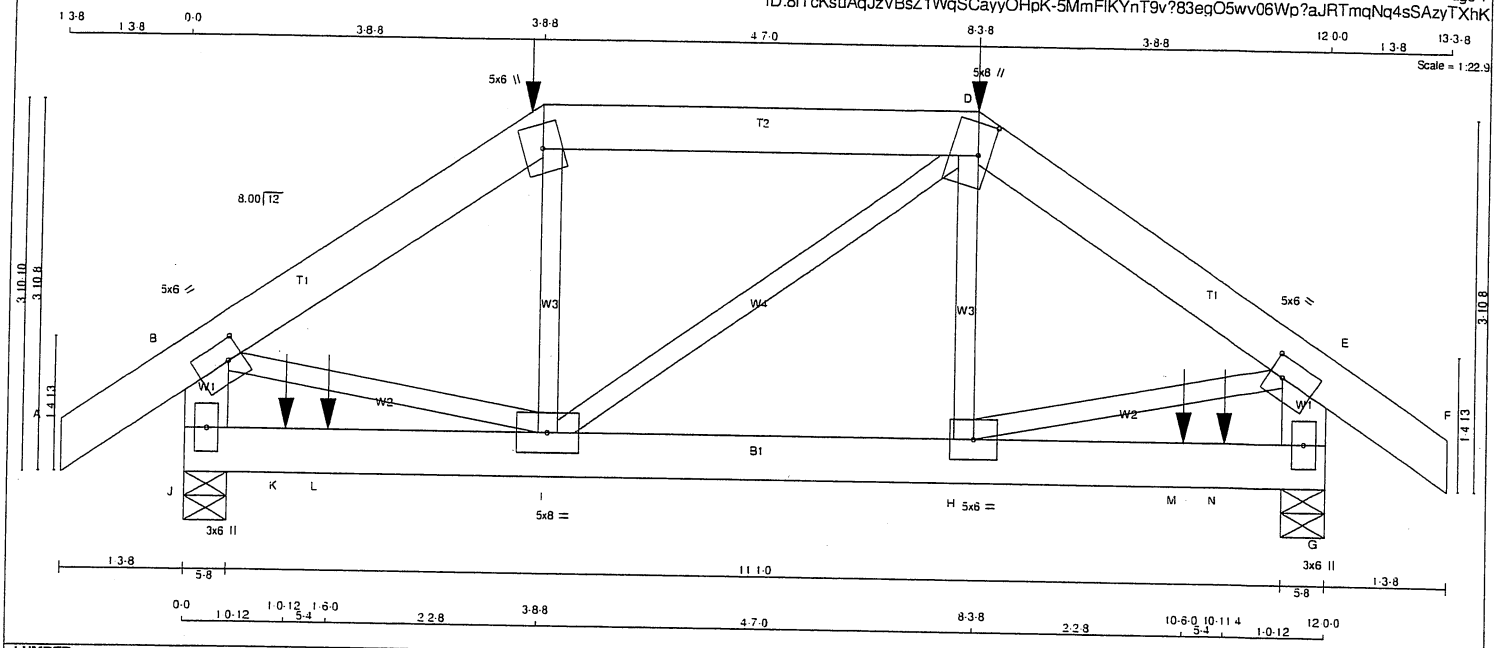

TOTAL WEIGHT = 69 lb
[M]

LUMBER
N. L. G. A. RULES

CHORDS	SIZE		LUMBER	DESCR.
A - C	2x6	DRY	No.2	SPF
C - D	2x6	DRY	No.2	SPF
D - F	2x6	DRY	No.2	SPF
J - B	2x6	DRY	No.2	SPF
G - E	2x6	DRY	No.2	SPF
J - G	2x6	DRY	No.2	SPF
ALL WEBS EXCEPT	2x3	DRY	No.2	SPF

DRY: SEASONED LUMBER.

PLATES (table is in inches)

JT	TYPE	PLATES	W	LEN	Y	X
B	TMVW-t	MT20	5.0	6.0	2.50	1.75
C	TTW+m	MT20	5.0	6.0		
D	TTWW+m	MT20	5.0	8.0	4.00	1.50
E	TMVW-t	MT20	5.0	6.0	2.50	1.75
G	BMV1+p	MT20	3.0	6.0		
H	BMWW-t	MT20	5.0	6.0		
I	BMWWW-t	MT20	5.0	8.0		
J	BMV1+p	MT20	3.0	6.0		

DIMENSIONS, SUPPORTS AND LOADINGS SPECIFIED BY FABRICATOR TO BE VERIFIED BY BUILDING DESIGNER

BEARINGS

JT	FACTORED GROSS REACTION VERT	HORZ	MAXIMUM FACTORED GROSS REACTION DOWN	HORZ	UPLIFT	INPUT BRG IN-SX	REQRD BRG IN-SX
J	1542	0	1542	0	0	5-8	5-8
G	1542	0	1542	0	0	5-8	5-8

UNFACTORED REACTIONS

JT	1ST LCASE COMBINED	MAX./MIN. COMPONENT REACTIONS SNOW	LIVE	PERM.LIVE	WIND	DEAD	SOIL
J	1088	724 / 0	0 / 0	0 / 0	0 / 0	364 / 0	0 / 0
G	1088	724 / 0	0 / 0	0 / 0	0 / 0	364 / 0	0 / 0

BEARING MATERIAL TO BE SPF NO.2 OR BETTER AT JOINT(S) J, G

BRACING
TOP CHORD TO BE SHEATHED OR MAX. PURLIN SPACING = 6.25 FT.
MAX. UNBRACED BOTTOM CHORD LENGTH = 10.00 FT OR RIGID CEILING DIRECTLY APPLIED.

ALL PITCH BREAKS AND PERIMETER CORNER JOINTS MUST BE LATERALLY RESTRAINED.

LOADING
TOTAL LOAD CASES: (4)

CHORDS

MEMB. FR-TO	MAX. FACTORED FORCE (LBS)	FACTORED VERT. LOAD LC1 (PLF) FROM	TO	MAX CSI (LC)	MAX. UNBRAC LENGTH
A- B	0 / 36	-91.8	-91.8	0.07 (1)	10.00
B- C	-1208 / 0	-91.8	-91.8	0.13 (1)	6.25
C- D	-1008 / 0	-120.4	-120.4	0.24 (1)	6.25
D- E	-1206 / 0	-91.8	-91.8	0.12 (1)	6.25
E- F	0 / 36	-91.8	-91.8	0.07 (1)	10.00
J- B	-1205 / 0	0.0	0.0	0.09 (1)	7.81
G- E	-1209 / 0	0.0	0.0	0.09 (1)	7.81
J- K	0 / 0	-24.3	-24.3	0.35 (1)	10.00
K- L	0 / 0	-24.3	-24.3	0.35 (1)	10.00
L- I	0 / 0	-24.3	-24.3	0.35 (1)	10.00
I- H	0 / 1004	-24.3	-24.3	0.23 (1)	10.00
H- M	0 / 0	-24.3	-24.3	0.34 (1)	10.00
M- N	0 / 0	-24.3	-24.3	0.34 (1)	10.00
N- G	0 / 0	-24.3	-24.3	0.34 (1)	10.00

WEBS

MEMB. FR-TO	MAX. FACTORED FORCE (LBS)	MAX CSI (LC)
I- C	0 / 123	0.05 (4)
I- D	0 / 5	0.00 (4)
H- D	0 / 120	0.05 (4)
B- I	0 / 1028	0.25 (1)
H- E	0 / 1028	0.25 (1)

SPECIFIED CONCENTRATED LOADS (LBS)

JT	LOC.	LC1	MAX-	MAX+	FACE	DIR.	TYPE	HEEL	CONN.
C	3-8-8	-86	-86	---	FRONT	VERT	TOTAL	--	C1
D	8-3-8	-86	-86	---	FRONT	VERT	TOTAL	--	C1
K	1-0-12	-13	-13	---	BACK	VERT	TOTAL	---	C1
L	1-6-0	-359	-359	---	BACK	VERT	TOTAL	---	C1
M	10-6-0	-359	-359	---	BACK	VERT	TOTAL	---	C1
N	10-11-4	-13	-13	---	BACK	VERT	TOTAL	---	C1

CONNECTION REQUIREMENTS

1) **C1:** A SUITABLE HANGER/MECHANICAL CONNECTION IS REQUIRED.

DESIGN CRITERIA

SPECIFIED LOADS:

TOP CH.	LL	=	25.6	PSF
	DL	=	6.0	PSF
BOT CH.	LL	=	0.0	PSF
	DL	=	7.4	PSF
TOTAL LOAD		=	39.0	PSF

SPACING = 24.0 IN. C/C

LOADING IN FLAT SECTION BASED ON A SLOPE OF 6.00/12

GIRDER TYPE: CPrimeHip
SIDE SETBACK = 3-8-8
END SETBACK = 3-8-8
END WALL WIDTH = 5-8
CORNER FRAMING TYPE: CONVENTIONAL
END JACK TYPE: CONVENTIONAL
APPLIED TO FRONT SIDE
- ADDT'L LOADS BASED ON 55 % OF GSL.

THIS TRUSS IS DESIGNED FOR RESIDENTIAL OR SMALL BUILDING REQUIREMENTS OF PART 9, NBCC 2010, NBCC 2015

THIS DESIGN COMPLIES WITH:
- PART 9 OF BCBC 2018 , OBC 2012 , ABC 2019
- PART 9 OF OBC 2012 (2019 AMENDMENT)
- CSA 086-09, CSA 086-14
- TPIC 2011, TPIC 2014

(55 % OF 31.3 P.S.F. G.S.L. PLUS 8.4 P.S.F. RAIN LOAD) EQUALS 25.6 P.S.F. SPECIFIED ROOF LIVE LOAD

ALLOWABLE DEFL.(LL)= L/360 (0.40")
CALCULATED VERT. DEFL.(LL) = L/ 999 (0.02")
ALLOWABLE DEFL.(TL)= L/360 (0.40")
CALCULATED VERT. DEFL.(TL) = L/ 999 (0.04")

CSI: TC=0.24/1.00 (C-D:1) , BC=0.35/1.00 (I-J:1) , WB=0.25/1.00 (B-I:1) , SSI=0.22/1.00 (I-J:1)

DOL LUMBER=1.00 NAIL=1.00 LS BEND=1.00 COMP=1.00 SHEAR=1.00 TENS= 1.00

COMPANION LIVE LOAD FACTOR = 1.00

AUTOSOLVE HEELS OFF

TRUSS PLATE MANUFACTURER IS NOT RESPONSIBLE FOR QUALITY CONTROL IN THE TRUSS MANUFACTURING PLANT

NAIL VALUES

PLATE	GRIP(DRY) (PSI) MAX	MIN	SHEAR (PLI) MAX	MIN	SECTION (PLI) MAX	MIN
MT20	618	354	1667	788	1987	1656

PLATE PLACEMENT TOL. = 0.250 inches

PLATE ROTATION TOL. = 5.0 Deg.

JSI GRIP= 0.84 (B) (INPUT = 0.90)
JSI METAL= 0.34 (B) (INPUT = 1.00)

LICENSED PROFESSIONAL ENGINEER
10/14/20
H. J. G. ALVES
100009024
PROVINCE OF ONTARIO

Structural component only
DWG# T-2022161

JOB NAME	TRUSS NAME	QUANTITY	PLY	JOB DESC.	DRWG NO.
406513	T10	3	1	ROYAL PINE HOMES TRUSS DESC.	

Tamarack Roof Truss, Burlington

Version 8.330 S May 6 2020 MiTek Industries, Inc. Wed Oct 14 10:41:46 2020 Page 1
ID:8ITcKsuAqJzVBsZ1WqSCayyOHpK-aYKdyfZPES1smDDtyoR8ZJ3xq_h7CFcX3kc0iPyTXhJ

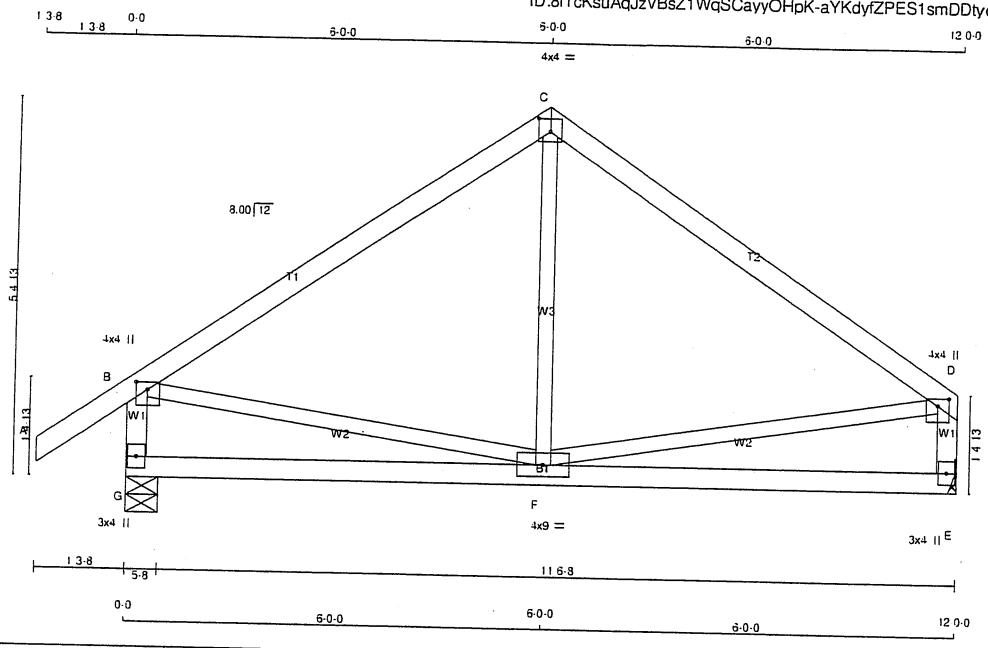

LUMBER

N. L. G. A. RULES

CHORDS	SIZE		LUMBER	DESCR.
A - C	2x4	DRY	No.2	SPF
C - D	2x4	DRY	No.2	SPF
G - B	2x4	DRY	No.2	SPF
E - D	2x4	DRY	No.2	SPF
G - E	2x4	DRY	No.2	SPF
ALL WEBS EXCEPT	2x3	DRY	No.2	SPF

DRY: SEASONED LUMBER.

PLATES (table is in inches)

JT	TYPE	PLATES	W	LEN	Y	X
B	TMVW+p	MT20	4.0	4.0	1.25	2.00
C	TTW-p	MT20	4.0	4.0	2.25	2.00
D	TMVW+p	MT20	4.0	4.0	1.25	2.00
E	BMV1+p	MT20	3.0	4.0		
F	BMWWW-t	MT20	4.0	9.0		
G	BMV1+p	MT20	3.0	4.0		

DIMENSIONS, SUPPORTS AND LOADINGS SPECIFIED BY FABRICATOR TO BE VERIFIED BY BUILDING DESIGNER

BEARINGS

JT	FACTORED GROSS REACTION VERT	HORZ	MAXIMUM FACTORED GROSS REACTION DOWN	HORZ	UPLIFT	INPUT BRG	REQRD BRG
G	787	0	787	0	0	IN-SX	IN-SX
E	662	0	662	0	0	MECHANICAL	

A SUITABLE HANGER/MECHANICAL CONNECTION IS REQUIRED AT JOINT E. MINIMUM BEARING LENGTH AT JOINT E = 1-8.

UNFACTORED REACTIONS

JT	1ST LCASE COMBINED	MAX./MIN. COMPONENT REACTIONS SNOW	LIVE	PERM.LIVE	WIND	DEAD	SOIL
G	555	377 / 0	0 / 0	0 / 0	0 0	177 0	0 0
E	468	307 / 0	0 / 0	0 / 0	0 0	161 0	0 0

BEARING MATERIAL TO BE SPF NO.2 OR BETTER AT JOINT(S) G

BRACING

TOP CHORD TO BE SHEATHED OR MAX. PURLIN SPACING = 6.25 FT.
MAX. UNBRACED BOTTOM CHORD LENGTH = 10.00 FT OR RIGID CEILING DIRECTLY APPLIED.

ALL PITCH BREAKS AND PERIMETER CORNER JOINTS MUST BE LATERALLY RESTRAINED.

LOADING

TOTAL LOAD CASES: (4)

CHORDS

MEMB. FR-TO	MAX. FACTORED FORCE (LBS)		FACTORED VERT. LOAD (PLF) FROM	TO	LC1 MAX CSI (LC)	MAX. UNBRAC LENGTH
A- B	0	35	-91.8	-91.8	0.12 (1)	10.00
B- C	-488	0	-91.8	-91.8	0.43 (1)	6.25
C- D	-488	0	-91.8	-91.8	0.43 (1)	6.25
G- B	-745	0	0.0	0.0	0.08 (1)	7.81
E- D	-619	0	0.0	0.0	0.06 (1)	7.81
G- F	0	0	-18.5	-18.5	0.19 (4)	10.00
F- E	0	0	-18.5	-18.5	0.19 (4)	10.00

WEBS

MEMB. FR-TO	MAX. FACTORED FORCE (LBS)		MAX CSI (LC)
F- C	-9	100	0.03 (4)
B- F	0	412	0.09 (1)
F- D	0	412	0.09 (1)

TOTAL WEIGHT = 3 X 48 = 143 lb
[MI][F]

DESIGN CRITERIA

SPECIFIED LOADS:

TOP CH.	LL	=	25.6	PSF
	DL	=	6.0	PSF
BOT CH.	LL	=	0.0	PSF
	DL	=	7.4	PSF
TOTAL LOAD		=	39.0	PSF

SPACING = 24.0 IN. C/C

THIS TRUSS IS DESIGNED FOR RESIDENTIAL OR SMALL BUILDING REQUIREMENTS OF PART 9, NBCC 2010, NBCC 2015

THIS DESIGN COMPLIES WITH:
- PART 9 OF BCBC 2018 , OBC 2012 , ABC 2019
- PART 9 OF OBC 2012 (2019 AMENDMENT)
- CSA 086-09, CSA 086-14
- TPIC 2011, TPIC 2014

(55 % OF 31.3 P.S.F. G.S.L. PLUS 8.4 P.S.F. RAIN LOAD) EQUALS 25.6 P.S.F. SPECIFIED ROOF LIVE LOAD

ALLOWABLE DEFL.(LL)= L/360 (0.40")
CALCULATED VERT. DEFL.(LL) = L/ 999 (0.01")
ALLOWABLE DEFL.(TL)= L/360 (0.40")
CALCULATED VERT. DEFL.(TL) = L/ 999 (0.03")

CSI: TC=0.43/1.00 (B-C:1) , BC=0.19/1.00 (E-F:4) , WB=0.09/1.00 (D-F:1) , SSI=0.18/1.00 (B-C:1)

DOL LUMBER=1.00 NAIL=1.00 LS BEND=1.10 COMP=1.10 SHEAR=1.10 TENS= 1.10

COMPANION LIVE LOAD FACTOR = 1.00

TRUSS PLATE MANUFACTURER IS NOT RESPONSIBLE FOR QUALITY CONTROL IN THE TRUSS MANUFACTURING PLANT

NAIL VALUES

PLATE	GRIP(DRY) (PSI) MAX	MIN	SHEAR (PLI) MAX	MIN	SECTION (PLI) MAX	MIN
MT20	618	354	1667	788	1987	1656

PLATE PLACEMENT TOL. = 0.250 inches

PLATE ROTATION TOL. = 5.0 Deg.

JSI GRIP= 0.57 (D) (INPUT = 0.90)
JSI METAL= 0.17 (D) (INPUT = 1.00)

LICENSED PROFESSIONAL ENGINEER
10/14/20
H. J. G. ALVES
100009024
PROVINCE OF ONTARIO

Structural component only
DWG# T-2022162

JOB NAME	TRUSS NAME	QUANTITY	PLY	JOB DESC.	DRWG NO.
406513	T10CP	1	1	ROYAL PINE HOMES TRUSS DESC.	

Tamarack Roof Truss, Burlington

Version 8.330 S May 6 2020 MiTek Industries, Inc. Wed Oct 14 10:41:46 2020 Page 1
ID:8ITcKsuAqJzVBsZ1WqSCayyOHpK-aYKdyfZPES1smDDtyoR8ZJ3xq_h7CFcX3kc0jPyTXhJ

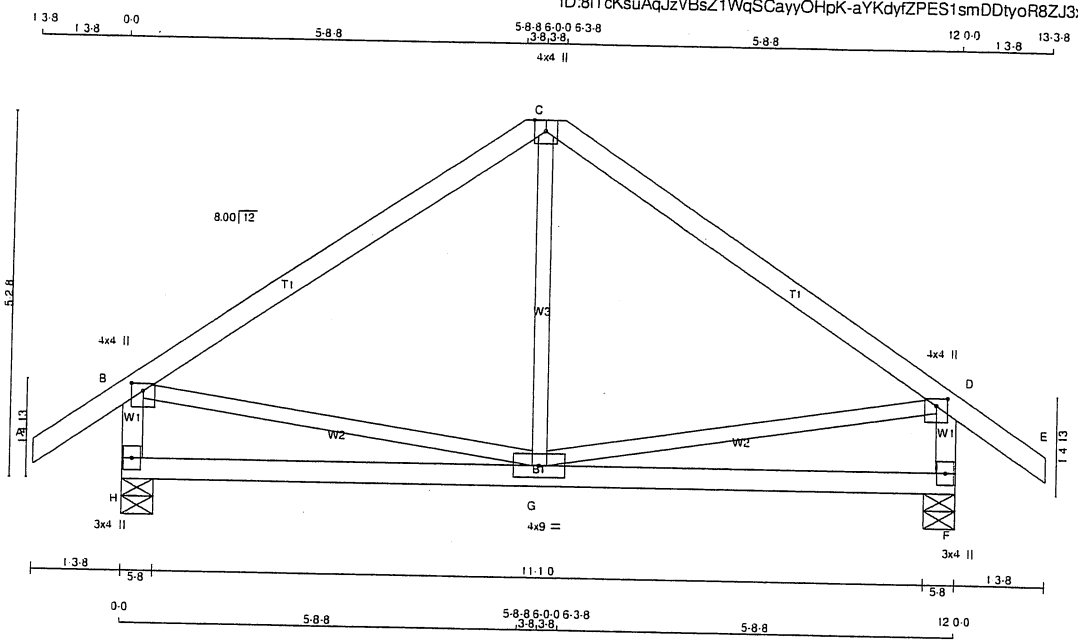

TOTAL WEIGHT = 49 lb
[M][F]

LUMBER

N. L. G. A. RULES

CHORDS	SIZE		LUMBER	DESCR.
A - C	2x4	DRY	No.2	SPF
C - E	2x4	DRY	No.2	SPF
H - B	2x4	DRY	No.2	SPF
F - D	2x4	DRY	No.2	SPF
H - F	2x4	DRY	No.2	SPF
ALL WEBS EXCEPT	2x3	DRY	No.2	SPF

DRY: SEASONED LUMBER.

PLATES (table is in inches)

JT	TYPE	PLATES	W	LEN	Y	X
B	TMVW+p	MT20	4.0	4.0	1.25	2.00
C	TMTMW+p	MT20	4.0	4.0	Edge	
D	TMVW+p	MT20	4.0	4.0	1.25	2.00
F	BMV1+p	MT20	3.0	4.0		
G	BMWWW-t	MT20	4.0	9.0		
H	BMV1+p	MT20	3.0	4.0		

Edge - INDICATES REFERENCE CORNER OF PLATE TOUCHES EDGE OF CHORD.

DIMENSIONS, SUPPORTS AND LOADINGS SPECIFIED BY FABRICATOR TO BE VERIFIED BY BUILDING DESIGNER

BEARINGS

JT	FACTORED GROSS REACTION VERT	HORZ	MAXIMUM FACTORED GROSS REACTION DOWN	HORZ	UPLIFT	INPUT BRG IN-SX	REQRD BRG IN-SX
H	787	0	787	0	0	5-8	5-8
F	787	0	787	0	0	5-8	5-8

UNFACTORED REACTIONS

JT	1ST LCASE COMBINED	MAX./MIN. COMPONENT REACTIONS SNOW	LIVE	PERM.LIVE	WIND	DEAD	SOIL
H	555	377 0	0 0	0 0	0 0	177 0	0 0
F	555	377 0	0 0	0 0	0 0	177 0	0 0

BEARING MATERIAL TO BE SPF NO.2 OR BETTER AT JOINT(S) H, F

BRACING

TOP CHORD TO BE SHEATHED OR MAX. PURLIN SPACING = 6.25 FT.
MAX. UNBRACED BOTTOM CHORD LENGTH = 10.00 FT OR RIGID CEILING DIRECTLY APPLIED.

ALL PITCH BREAKS AND PERIMETER CORNER JOINTS MUST BE LATERALLY RESTRAINED.

LOADING

TOTAL LOAD CASES: (4)

CHORDS

MEMB. FR-TO	MAX. FACTORED FORCE (LBS)		FACTORED VERT. LOAD (PLF) FROM	TO	LC1 MAX CSI (LC)	MAX. UNBRAC LENGTH
A- B	0	35	-91.8	-91.8	0.12 (1)	10.00
B- C	-488	0	-91.8	-91.8	0.43 (1)	6.25
C- D	-488	0	-91.8	-91.8	0.43 (1)	6.25
D- E	0	35	-91.8	-91.8	0.12 (1)	10.00
H- B	-745	0	0.0	0.0	0.08 (1)	7.81
F- D	-745	0	0.0	0.0	0.08 (1)	7.81
H- G	0	0	-18.5	-18.5	0.19 (4)	10.00
G- F	0	0	-18.5	-18.5	0.19 (4)	10.00

WEBS

MEMB. FR-TO	MAX. FACTORED FORCE (LBS)		MAX CSI (LC)
B- G	0	412	0.09 (1)
G- D	0	412	0.09 (1)
G- C	-9	100	0.03 (4)

DESIGN CRITERIA

SPECIFIED LOADS:

TOP CH.	LL	=	25.6	PSF
	DL	=	6.0	PSF
BOT CH.	LL	=	0.0	PSF
	DL	=	7.4	PSF
TOTAL LOAD		=	39.0	PSF

SPACING = 24.0 IN. C/C

THIS TRUSS IS DESIGNED FOR RESIDENTIAL OR SMALL BUILDING REQUIREMENTS OF PART 9, NBCC 2010, NBCC 2015

THIS DESIGN COMPLIES WITH:
- PART 9 OF BCBC 2018 , OBC 2012 , ABC 2019
- PART 9 OF OBC 2012 (2019 AMENDMENT)
- CSA 086-09, CSA 086-14
- TPIC 2011, TPIC 2014

(55 % OF 31.3 P.S.F. G.S.L. PLUS 8.4 P.S.F. RAIN LOAD) EQUALS 25.6 P.S.F. SPECIFIED ROOF LIVE LOAD

ALLOWABLE DEFL.(LL)= L/360 (0.40")
CALCULATED VERT. DEFL.(LL) = L/ 999 (0.01")
ALLOWABLE DEFL.(TL)= L/360 (0.40")
CALCULATED VERT. DEFL.(TL) = L/ 999 (0.03")

CSI: TC=0.43/1.00 (B-C:1) , BC=0.19/1.00 (G-H:4) , WB=0.09/1.00 (D-G:1) , SSI=0.18/1.00 (B-C:1)

DOL LUMBER=1.00 NAIL=1.00 LS BEND=1.10 COMP=1.10 SHEAR=1.10 TENS= 1.10

COMPANION LIVE LOAD FACTOR = 1.00

TRUSS PLATE MANUFACTURER IS NOT RESPONSIBLE FOR QUALITY CONTROL IN THE TRUSS MANUFACTURING PLANT .

NAIL VALUES

PLATE	GRIP(DRY) (PSI) MAX	MIN	SHEAR (PLI) MAX	MIN	SECTION (PLI) MAX	MIN
MT20	618	354	1667	788	1987	1656

PLATE PLACEMENT TOL. = 0.250 inches

PLATE ROTATION TOL. = 5.0 Deg.

JSI GRIP= 0.57 (B) (INPUT = 0.90)
JSI METAL= 0.17 (B) (INPUT = 1.00)

LICENSED PROFESSIONAL ENGINEER
10/14/20
H. J. G. ALVES
100009024
PROVINCE OF ONTARIO

Structural component only
DWG# T-2022163

JOB NAME	TRUSS NAME	QUANTITY	PLY	JOB DESC.	DRWG NO.
406513	T11	1	1	ROYAL PINE HOMES TRUSS DESC.	

Tamarack Roof Truss. Burlington

Version 8.330 S May 6 2020 MiTek Industries, Inc. Wed Oct 14 11:40:39 2020 Page 1
ID:8ITcKsuAqJzVBsZ1WqSCayyOHpK-dFIFSjJXDz9Z7AptQIKeFMugo9ShV2HYTvxSD7yTWq6

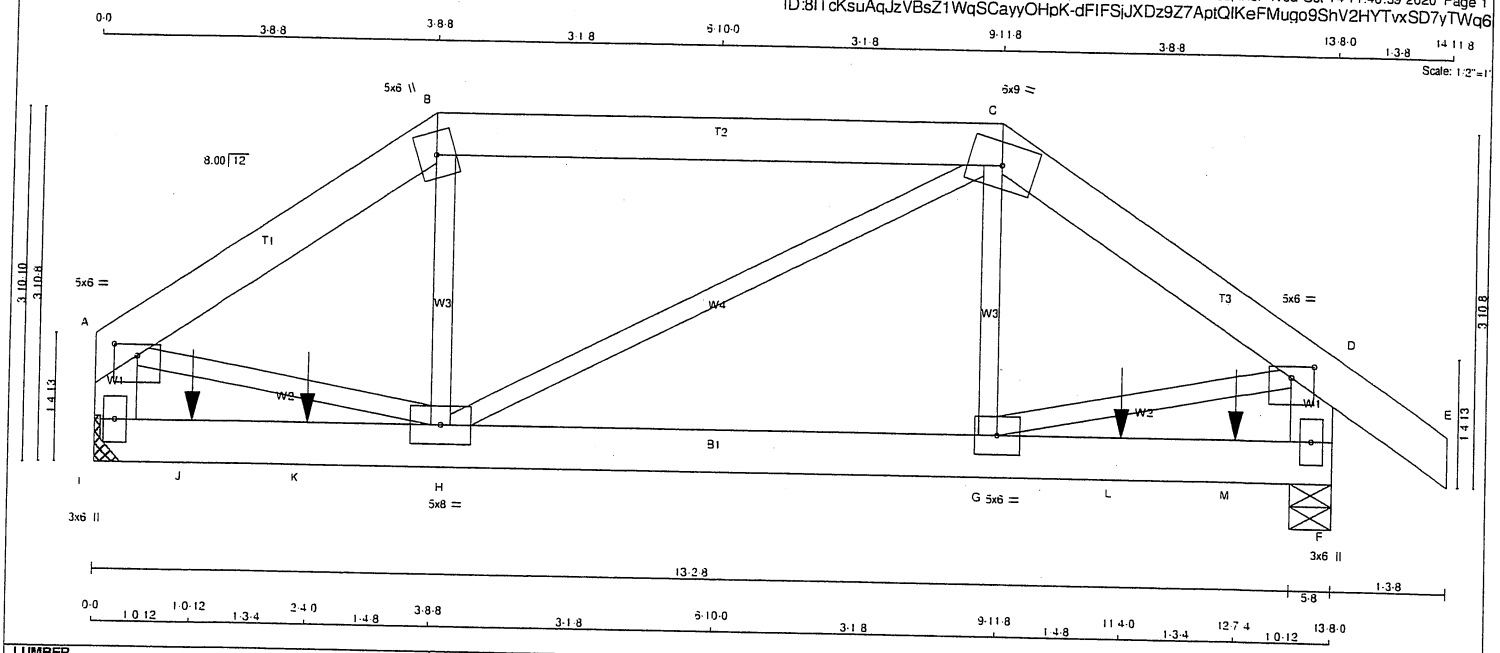

TOTAL WEIGHT = 74 lb
[M]

LUMBER
N. L. G. A. RULES

CHORDS	SIZE		LUMBER	DESCR.
A - B	2x6	DRY	No.2	SPF
B - C	2x6	DRY	No.2	SPF
C - E	2x6	DRY	No.2	SPF
I - A	2x6	DRY	No.2	SPF
F - D	2x6	DRY	No.2	SPF
I - F	2x6	DRY	No.2	SPF
ALL WEBS EXCEPT	2x3	DRY	No.2	SPF

DRY: SEASONED LUMBER.

PLATES (table is in inches)

JT	TYPE	PLATES	W	LEN	Y	X
A	TMVW-p	MT20	5.0	6.0	1.50	3.00
B	TTW+m	MT20	5.0	6.0		
C	TTWW-m	MT20	6.0	9.0		
D	TMVW-p	MT20	5.0	6.0	1.50	3.00
F	BMV1+p	MT20	3.0	6.0		
G	BMWW-t	MT20	5.0	6.0		
H	BMWWW-t	MT20	5.0	8.0		
I	BMV1+p	MT20	3.0	6.0		

DIMENSIONS, SUPPORTS AND LOADINGS SPECIFIED BY FABRICATOR TO BE VERIFIED BY BUILDING DESIGNER

BEARINGS

JT	FACTORED GROSS REACTION VERT	HORZ	MAXIMUM FACTORED GROSS REACTION DOWN	HORZ	UPLIFT	INPUT BRG IN-SX	REQRD BRG IN-SX
I	1745	0	1745	0	0	MECHANICAL	
F	1940	0	1940	0	0	5-8	5-8

A SUITABLE HANGER/MECHANICAL CONNECTION IS REQUIRED AT JOINT I. MINIMUM BEARING LENGTH AT JOINT I = 3-8.

UNFACTORED REACTIONS

JT	1ST LCASE COMBINED	MAX..MIN. COMPONENT REACTIONS SNOW	LIVE	PERM.LIVE	WIND	DEAD	SOIL
I	1233	813 0	0 0	0 0	0 0	420 0	0 0
F	1368	922 0	0 0	0 0	0 0	446 0	0 0

BEARING MATERIAL TO BE SPF NO.2 OR BETTER AT JOINT(S) F

BRACING
TOP CHORD TO BE SHEATHED OR MAX. PURLIN SPACING = 5.73 FT.
MAX. UNBRACED BOTTOM CHORD LENGTH = 10.00 FT OR RIGID CEILING DIRECTLY APPLIED.

ALL PITCH BREAKS AND PERIMETER CORNER JOINTS MUST BE LATERALLY RESTRAINED.

LOADING
TOTAL LOAD CASES: (4)

CHORDS

MEMB. FR-TO	MAX. FACTORED FORCE (LBS)		FACTORED VERT. LOAD (PLF) FROM	TO	LC1	MAX CSI (LC)	MAX. UNBRAC LENGTH
A- B	-1641	0	-137.7	-137.7	0.19 (1)	5.90	
B- C	-1376	0	-137.7	-137.7	0.52 (1)	5.73	
C- D	-1640	0	-137.7	-137.7	0.19 (1)	5.90	
D- E	0	54	-137.7	-137.7	0.11 (1)	10.00	
I- A	-1482	0	0.0	0.0	0.10 (1)	7.81	
F- D	-1686	0	0.0	0.0	0.12 (1)	7.58	
I- J	0	0	-27.7	-27.7	0.38 (1)	10.00	
J- K	0	0	-27.7	-27.7	0.38 (1)	10.00	
K- H	0	0	-27.7	-27.7	0.38 (1)	10.00	
H- G	0	1367	-27.7	-27.7	0.31 (1)	10.00	
G- L	0	0	-27.7	-27.7	0.37 (1)	10.00	
L- M	0	0	-27.7	-27.7	0.37 (1)	10.00	
M- F	0	0	-27.7	-27.7	0.37 (1)	10.00	

WEBS

MEMB. FR-TO	MAX. FACTORED FORCE (LBS)		MAX CSI (LC)
H- B	0	231	0.07 (4)
G- C	0	225	0.07 (4)
A- H	0	1396	0.35 (1)
G- D	0	1398	0.35 (1)
H- C	0	10	0.00 (4)

SPECIFIED CONCENTRATED LOADS (LBS)

JT	LOC.	LC1	MAX-	MAX+	FACE	DIR.	TYPE	HEEL	CONN.
J	1-0-12	-13	-13	---	BACK	VERT	TOTAL	---	C1
K	2-4-0	-421	-421	---	BACK	VERT	TOTAL	---	C1
L	11-4-0	-421	-421	---	BACK	VERT	TOTAL	---	C1
M	12-7-4	-13	-13	---	BACK	VERT	TOTAL	---	C1

CONNECTION REQUIREMENTS

1) **C1:** A SUITABLE HANGER/MECHANICAL CONNECTION IS REQUIRED.

DESIGN CRITERIA

*** SPECIAL LOADS ANALYSIS ***
GEOMETRY AND/OR BASIC LOADS CHANGED BY USER.
LOADS WERE DERIVED FROM USER INPUT
NO FURTHER MODIFICATIONS WERE MADE

SPECIFIED LOADS:

TOP CH.	LL	=	25.6	PSF
	DL	=	6.0	PSF
BOT CH.	LL	=	0.0	PSF
	DL	=	7.4	PSF
TOTAL LOAD		=	39.0	PSF

SPACING = 24.0 IN. C/C

LOADING IN FLAT SECTION BASED ON A SLOPE OF 6.00/12

*** NON STANDARD GIRDER ***
ADDT'L USER-DEFINED LOADS APPLIED TO ALL LOAD CASES.

THIS TRUSS IS DESIGNED FOR RESIDENTIAL OR SMALL BUILDING REQUIREMENTS OF PART 9, NBCC 2010, NBCC 2015

THIS DESIGN COMPLIES WITH:
- PART 9 OF BCBC 2018 , OBC 2012 , ABC 2019
- PART 9 OF OBC 2012 (2019 AMENDMENT)
- CSA 086-09, CSA 086-14
- TPIC 2011, TPIC 2014

(55 % OF 31.3 P.S.F. G.S.L. PLUS 8.4 P.S.F. RAIN LOAD) EQUALS 25.6 P.S.F. SPECIFIED ROOF LIVE LOAD

ALLOWABLE DEFL.(LL)= L/360 (0.46")
CALCULATED VERT. DEFL.(LL) = L/ 999 (0.03")
ALLOWABLE DEFL.(TL)= L/360 (0.46")
CALCULATED VERT. DEFL.(TL) = L/ 999 (0.05")

CSI: TC=0.52/1.00 (B-C:1) , BC=0.38/1.00 (H-I:1) , WB=0.35/1.00 (D-G:1) , SSI=0.31/1.00 (F-G:1)

DOL LUMBER=1.00 NAIL=1.00 LS BEND=1.00 COMP=1.00 SHEAR=1.00 TENS= 1.00

COMPANION LIVE LOAD FACTOR = 1.00

AUTOSOLVE HEELS OFF

TRUSS PLATE MANUFACTURER IS NOT RESPONSIBLE FOR QUALITY CONTROL IN THE TRUSS MANUFACTURING PLANT.

NAIL VALUES

PLATE	GRIP(DRY) (PSI) MAX	MIN	SHEAR (PLI) MAX	MIN	SECTION (PLI) MAX	MIN
MT20	618	354	1667	788	1987	1656

PLATE PLACEMENT TOL. = 0.250 inches

PLATE ROTATION TOL. = 5.0 Deg.

JSI GRIP= 0.74 (H) (INPUT = 0.90)
JSI METAL= 0.35 (D) (INPUT = 1.00)

LICENSED PROFESSIONAL ENGINEER
10/14/20
H. J. GALVES
100009024
PROVINCE OF ONTARIO

Structural component only
DWG# T-2022164

JOB NAME	TRUSS NAME	QUANTITY	PLY	JOB DESC.	DRWG NO.
406513	T12	1	1	ROYAL PINE HOMES TRUSS DESC.	

Tamarack Roof Truss, Burlington

Version 8.330 S May 6 2020 MiTek Industries, Inc. Wed Oct 14 10:41:48 2020 Page 1
ID:8ITcKsuAqJzVBsZ1WqSCayyOHpK-WxSNNLafm3Ia?XNF3DUcek8HvnNtg9gpX256nlyTXhH

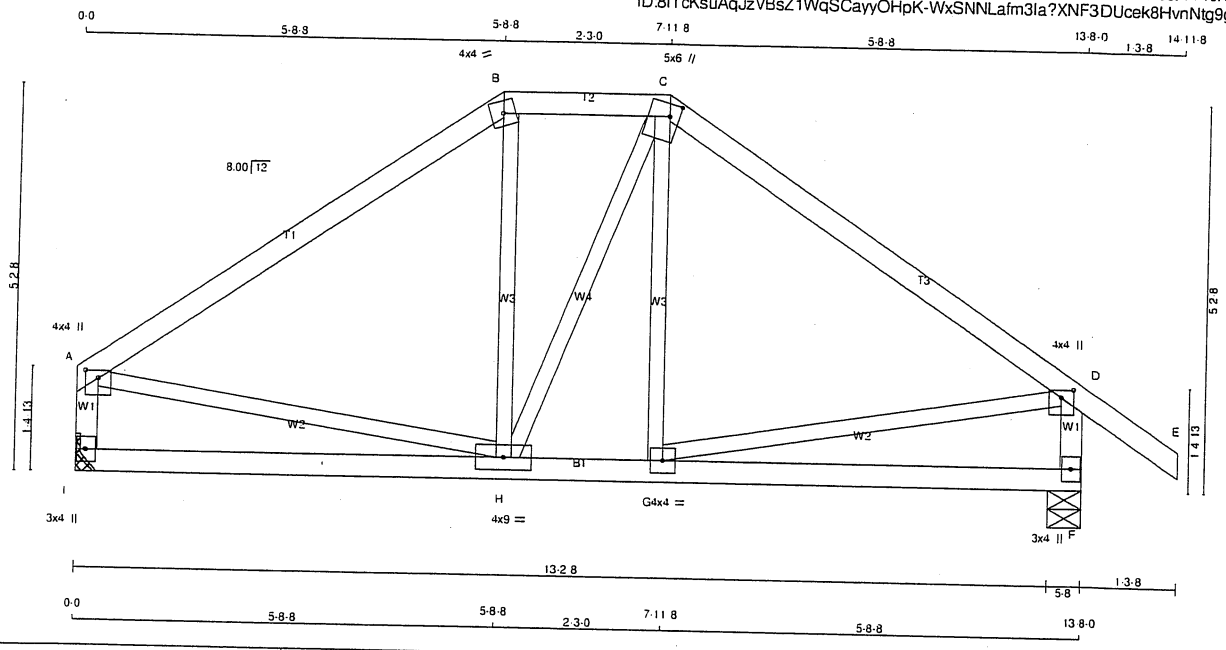

TOTAL WEIGHT = 59 lb

LUMBER

N. L. G. A. RULES

CHORDS	SIZE		LUMBER	DESCR.
A - B	2x4	DRY	No.2	SPF
B - C	2x4	DRY	No.2	SPF
C - E	2x4	DRY	No.2	SPF
I - A	2x4	DRY	No.2	SPF
F - D	2x4	DRY	No.2	SPF
I - F	2x4	DRY	No.2	SPF
ALL WEBS EXCEPT	2x3	DRY	No.2	SPF

DRY: SEASONED LUMBER.

PLATES (table is in inches)

JT	TYPE	PLATES	W	LEN	Y	X
A	TMVW+p	MT20	4.0	4.0	1.25	2.00
B	TTW-m	MT20	4.0	4.0		
C	TTWW+m	MT20	5.0	6.0	2.00	1.50
D	TMVW+p	MT20	4.0	4.0	1.25	2.00
F	BMV1+p	MT20	3.0	4.0		
G	BMWW-t	MT20	4.0	4.0		
H	BMWWW-t	MT20	4.0	9.0		
I	BMV1+p	MT20	3.0	4.0		

DIMENSIONS, SUPPORTS AND LOADINGS SPECIFIED BY FABRICATOR TO BE VERIFIED BY BUILDING DESIGNER

BEARINGS

JT	FACTORED GROSS REACTION VERT	HORZ	MAXIMUM FACTORED GROSS REACTION DOWN	HORZ	UPLIFT	INPUT BRG IN-SX	REQRD BRG IN-SX
I	753	0	753	0	0	MECHANICAL	
F	879	0	879	0	0	5-8	5-8

A SUITABLE HANGER/MECHANICAL CONNECTION IS REQUIRED AT JOINT I. MINIMUM BEARING LENGTH AT JOINT I = 3-8.

UNFACTORED REACTIONS

JT	1ST LCASE COMBINED	MAX./MIN. COMPONENT REACTIONS SNOW	LIVE	PERM.LIVE	WIND	DEAD	SOIL
I	533	350 0	0 0	0 0	0 0	183 0	0 0
F	619	420 0	0 0	0 0	0 0	200 0	0 0

BEARING MATERIAL TO BE SPF NO.2 OR BETTER AT JOINT(S) F

BRACING

TOP CHORD TO BE SHEATHED OR MAX. PURLIN SPACING = 6.25 FT.
MAX. UNBRACED BOTTOM CHORD LENGTH = 10.00 FT OR RIGID CEILING DIRECTLY APPLIED.

ALL PITCH BREAKS AND PERIMETER CORNER JOINTS MUST BE LATERALLY RESTRAINED.

LOADING

TOTAL LOAD CASES: (4)

CHORDS

MEMB. FR-TO	MAX. FACTORED FORCE (LBS)		FACTORED VERT. LOAD (PLF) FROM	TO	LC1	MAX CSI (LC)	MAX. UNBRAC LENGTH
A- B	-628	0	-91.8	-91.8	0.39 (1)		6.25
B- C	-522	0	-91.8	-91.8	0.06 (1)		6.25
C- D	-628	0	-91.8	-91.8	0.39 (1)		6.25
D- E	0	35	-91.8	-91.8	0.12 (1)		10.00
I- A	-708	0	0.0	0.0	0.07 (1)		7.81
F- D	-834	0	0.0	0.0	0.09 (1)		7.81
I- H	0	0	-18.5	-18.5	0.13 (4)		10.00
H- G	0	521	-18.5	-18.5	0.17 (4)		10.00
G- F	0	0	-18.5	-18.5	0.13 (4)		10.00

WEBS

MEMB. FR-TO	MAX. FACTORED FORCE (LBS)		MAX CSI (LC)
H- B	-16	57	0.02 (4)
H- C	0	2	0.00 (4)
G- C	-17	55	0.02 (4)
A- H	0	531	0.12 (1)
G- D	0	531	0.12 (1)

DESIGN CRITERIA [M][F]

SPECIFIED LOADS:

TOP CH.	LL	=	25.6	PSF
	DL	=	6.0	PSF
BOT CH.	LL	=	0.0	PSF
	DL	=	7.4	PSF
TOTAL LOAD		=	39.0	PSF

SPACING = 24.0 IN. C/C

LOADING IN FLAT SECTION BASED ON A SLOPE OF 6.00/12

THIS TRUSS IS DESIGNED FOR RESIDENTIAL OR SMALL BUILDING REQUIREMENTS OF PART 9. NBCC 2010, NBCC 2015

THIS DESIGN COMPLIES WITH:
- PART 9 OF BCBC 2018 , OBC 2012 , ABC 2019
- PART 9 OF OBC 2012 (2019 AMENDMENT)
- CSA 086-09, CSA 086-14
- TPIC 2011, TPIC 2014

(55 % OF 31.3 P.S.F. G.S.L. PLUS 8.4 P.S.F. RAIN LOAD) EQUALS 25.6 P.S.F. SPECIFIED ROOF LIVE LOAD

ALLOWABLE DEFL.(LL)= L/360 (0.46")
CALCULATED VERT. DEFL.(LL) = L/ 999 (0.01")
ALLOWABLE DEFL.(TL)= L/360 (0.46")
CALCULATED VERT. DEFL.(TL) = L/ 999 (0.04")

CSI: TC=0.39/1.00 (A-B:1) , BC=0.17/1.00 (G-H:4) , WB=0.12/1.00 (A-H:1) , SSI=0.17/1.00 (C-D:1)

DOL LUMBER=1.00 NAIL=1.00 LS BEND=1.10 COMP=1.10 SHEAR=1.10 TENS= 1.10

COMPANION LIVE LOAD FACTOR = 1.00

TRUSS PLATE MANUFACTURER IS NOT RESPONSIBLE FOR QUALITY CONTROL IN THE TRUSS MANUFACTURING PLANT

NAIL VALUES

PLATE	GRIP(DRY) (PSI) MAX	MIN	SHEAR (PLI) MAX	MIN	SECTION (PLI) MAX	MIN
MT20	618	354	1667	788	1987	1656

PLATE PLACEMENT TOL. = 0.250 inches

PLATE ROTATION TOL. = 5.0 Deg.

JSI GRIP= 0.67 (D) (INPUT = 0.90)
JSI METAL= 0.20 (D) (INPUT = 1.00)

LICENSED PROFESSIONAL ENGINEER
10/14/20
H. J. G. ALVES
100009024
PROVINCE OF ONTARIO

Structural component only
DWG# T-2022165

JOB NAME	TRUSS NAME	QUANTITY	PLY	JOB DESC.	DRWG NO.
406513	T13	2	2	ROYAL PINE HOMES TRUSS DESC.	

Tamarack Roof Truss, Burlington

Version 8.330 S May 6 2020 MiTek Industries, Inc. Wed Oct 14 10:41:48 2020 Page 1
ID:8ITcKsuAqJzVBsZ1WqSCayyOHpK-WxSNNLafm3Ia?XNF3DUcek8KanP4gA3pX256nlyTXhH

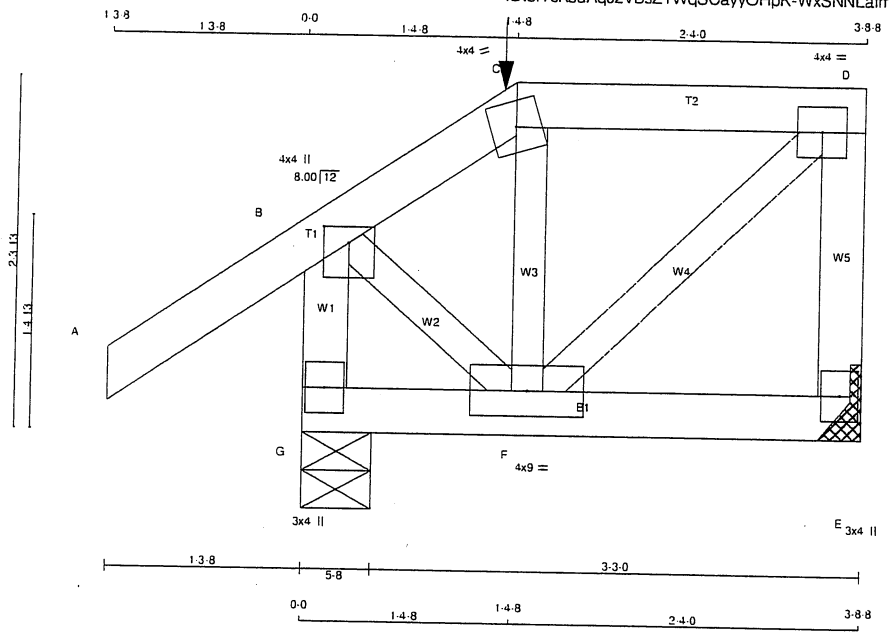

TOTAL WEIGHT = 4 X 18 = 74 lb
[M]

LUMBER
N. L. G. A. RULES

CHORDS	SIZE		LUMBER	DESCR.
A - C	2x4	DRY	No.2	SPF
C - D	2x4	DRY	No.2	SPF
E - D	2x4	DRY	No.2	SPF
G - B	2x4	DRY	No.2	SPF
G - E	2x4	DRY	No.2	SPF
ALL WEBS EXCEPT	2x3	DRY	No.2	SPF

DRY: SEASONED LUMBER.

DESIGN CONSISTS OF 2 TRUSSES BUILT SEPARATELY THEN FASTENED TOGETHER AS FOLLOWS:

CHORDS	#ROWS	SURFACE SPACING (IN)	LOAD(PLF)
TOP CHORDS : (0.122"X3") SPIRAL NAILS			
A- C	1	12	SIDE(71.9)
C- D	1	12	SIDE(86.4)
D- E	1	12	TOP
G- B	1	12	TOP
BOTTOM CHORDS : (0.122"X3") SPIRAL NAILS			
G- E	1	12	SIDE(19.6)
WEBS : (0.122"X3") SPIRAL NAILS			
2x3	1	6	

NAILS TO BE DRIVEN FROM ONE SIDE ONLY.

GIRDER NAILING ASSUMES NAILED HANGERS ARE FASTENED WITH MIN. 3-0 INCH NAILS.

TOP - COMPONENTS ARE LOADED FROM THE TOP AND MUST BE PLACED ON TOP EDGE OF ALL PLIES FOR THE LOAD TO BE TRANSFERRED TO EACH PLY.

SIDE - PLF SHOWN IS THE EQUIVALENT UDL APPLIED TO ONE SIDE THAT THE CORRESPONDING NAILING PATTERN SHALL BE CAPABLE OF TRANSFERING. REMAINING PLF MUST BE APPLIED ON THE OPPOSITE SIDE OR ON THE TOP.

PLATES (table is in inches)

JT	TYPE	PLATES	W	LEN	Y	X
B	TMVW+p	MT20	4.0	4.0	1.25	2.00

LICENSED PROFESSIONAL ENGINEER
10/14/20
H. J. G. ALVES
100009024
PROVINCE OF ONTARIO

Structural component only
DWG# T-2022166 1/2

DIMENSIONS, SUPPORTS AND LOADINGS SPECIFIED BY FABRICATOR TO BE VERIFIED BY BUILDING DESIGNER

BEARINGS

JT	FACTORED GROSS REACTION VERT	HORZ	MAXIMUM FACTORED GROSS REACTION DOWN	HORZ	UPLIFT	INPUT BRG IN-SX	REQRD BRG IN-SX
E	527	0	527	0	0	MECHANICAL	
G	1028	0	1028	0	0	5-8	5-8

A SUITABLE HANGER/MECHANICAL CONNECTION IS REQUIRED AT JOINT E. MINIMUM BEARING LENGTH AT JOINT E = 3-8.

UNFACTORED REACTIONS

1ST LCASE — MAX./MIN. COMPONENT REACTIONS

JT	COMBINED	SNOW	LIVE	PERM.LIVE	WIND	DEAD	SOIL
E	374	238 -37	0 0	0 0	0 0	136 0	0 0
G	719	517 0	0 0	0 0	0 0	202 0	0 0

BEARING MATERIAL TO BE SPF NO.2 OR BETTER AT JOINT(S) G

BRACING
TOP CHORD TO BE SHEATHED OR MAX. PURLIN SPACING = 6.25 FT.
MAX. UNBRACED BOTTOM CHORD LENGTH = 10.00 FT OR RIGID CEILING DIRECTLY APPLIED.

ALL PITCH BREAKS AND PERIMETER CORNER JOINTS MUST BE LATERALLY RESTRAINED.

LOADING
TOTAL LOAD CASES: (5)

CHORDS

MEMB. FR-TO	MAX. FACTORED FORCE (LBS)		FACTORED VERT. LOAD (PLF) FROM	TO	MAX CSI (LC)	MAX. UNBRAC LENGTH
A- B	0	101	-264.5	-264.5	0.22 (5)	10.00
B- C	-333	0	-264.5	-264.5	0.21 (5)	6.25
C- D	-181	11	-264.5	-264.5	0.13 (1)	6.25
E- D	-472	0	0.0	0.0	0.03 (1)	7.81
G- B	-996	0	0.0	0.0	0.06 (1)	7.81
G- F	0	0	-53.5	-53.5	0.03 (4)	10.00
F- E	0	0	-53.5	-53.5	0.03 (4)	10.00

WEBS

MEMB. FR-TO	MAX. FACTORED FORCE (LBS)		MAX CSI (LC)
F- C	-193	111	0.02 (1)
F- D	-14	245	0.03 (1)
B- F	-20	237	0.03 (1)

SPECIFIED CONCENTRATED LOADS (LBS)

JT	LOC.	LC1	MAX-	MAX+	FACE	DIR.	TYPE	HEEL	CONN.
C	1-4-8	-2	-2	---	FRONT	VERT	DEAD	--	C1
C	1-4-8	-7	-7	---	FRONT	VERT	SNOW	--	C1

CONNECTION REQUIREMENTS

1) **C1:** A SUITABLE HANGER/MECHANICAL CONNECTION IS REQUIRED.

CANTILEVER ANALYSIS HAS BEEN CONSIDERED IN THIS DESIGN

DESIGN CRITERIA

*** SPECIAL LOADS ANALYSIS ***
GEOMETRY AND/OR BASIC LOADS CHANGED BY USER.
LOADS WERE DERIVED FROM USER INPUT
NO FURTHER MODIFICATIONS WERE MADE

SPECIFIED LOADS:

TOP CH.	LL	=	25.6	PSF
	DL	=	6.0	PSF
BOT CH.	LL	=	0.0	PSF
	DL	=	7.4	PSF
TOTAL LOAD		=	39.0	PSF

SPACING = 24.0 IN. C/C

LOADING IN FLAT SECTION BASED ON A SLOPE OF 6.00/12

*** NON STANDARD GIRDER ***
ADDT'L USER-DEFINED LOADS APPLIED TO ALL LOAD CASES.

THIS TRUSS IS DESIGNED FOR RESIDENTIAL OR SMALL BUILDING REQUIREMENTS OF PART 9, NBCC 2010, NBCC 2015

THIS DESIGN COMPLIES WITH:
- PART 9 OF BCBC 2018 , OBC 2012 , ABC 2019
- PART 9 OF OBC 2012 (2019 AMENDMENT)
- CSA 086-09, CSA 086-14
- TPIC 2011. TPIC 2014

DESIGN ASSUMPTIONS
-OVERHANG NOT TO BE ALTERED OR CUT OFF

(55 % OF 31.3 P.S.F. G.S.L. PLUS 8.4 P.S.F. RAIN LOAD) EQUALS 25.6 P.S.F. SPECIFIED ROOF LIVE LOAD

ALLOWABLE DEFL.(LL)= L/360 (0.19")
CALCULATED VERT. DEFL.(LL) = L 999 (0.00")
ALLOWABLE DEFL.(TL)= L/360 (0.19")
CALCULATED VERT. DEFL.(TL) = L 999 (0.00")

CSI: TC=0.22/1.00 (A-B:5) , BC=0.03/1.00 (E-F:4) , WB=0.03/1.00 (D-F:1) , SSI=0.15/1.00 (A-B:5)

DOL LUMBER=1.00 NAIL=1.00 LS BEND=1.00 COMP=1.00 SHEAR=1.00 TENS= 1.00

COMPANION LIVE LOAD FACTOR = 1.00

TRUSS PLATE MANUFACTURER IS NOT RESPONSIBLE FOR QUALITY CONTROL IN THE TRUSS MANUFACTURING PLANT .

NAIL VALUES

PLATE	GRIP(DRY) (PSI) MAX	MIN	SHEAR (PLI) MAX	MIN	SECTION (PLI) MAX	MIN
MT20	618	354	1667	788	1987	1656

PLATE PLACEMENT TOL. = 0.250 inches

PLATE ROTATION TOL. = 5.0 Deg.

CONTINUED ON PAGE 2

JOB NAME	TRUSS NAME	QUANTITY	PLY	JOB DESC. ROYAL PINE HOMES	DRWG NO.
406513	T13	2	2	TRUSS DESC.	

Tamarack Roof Truss, Burlington

ID:8ITcKsuAqJzVBsZ1WqSCayyOHpK-WxSNNLafm3Ia?XNF3DUcek8KanP4gA3pX256nlyTXhH

PLATES (table is in inches)

JT	TYPE	PLATES	W	LEN	Y	X
C	TTW-m	MT20	4.0	4.0		
D	TMVW-t	MT20	4.0	4.0		
E	BMV1+p	MT20	3.0	4.0		
F	BMWWW-t	MT20	4.0	9.0		
G	BMV1+p	MT20	3.0	4.0		

JSI GRIP= 0.35 (B) (INPUT = 0.90)
JSI METAL= 0.10 (B) (INPUT = 1.00)

LICENSED PROFESSIONAL ENGINEER
10/14/20
H. J. G. ALVES
100009024
PROVINCE OF ONTARIO

Structural component only
DWG# T-2022166 2/2

JOB NAME	TRUSS NAME	QUANTITY	PLY	JOB DESC.	DRWG NO.
406513	T14	2	2	ROYAL PINE HOMES TRUSS DESC.	

Tamarack Roof Truss, Burlington

Version 8.330 S May 6 2020 MiTek Industries, Inc. Wed Oct 14 10:41:49 2020 Page 1
ID:8ITcKsuAqJzVBsZ1WqSCayyOHpK-_7?mahbIXNQRdgyRdx?rAyhVKBIGPdxzliqgJkyTXhG

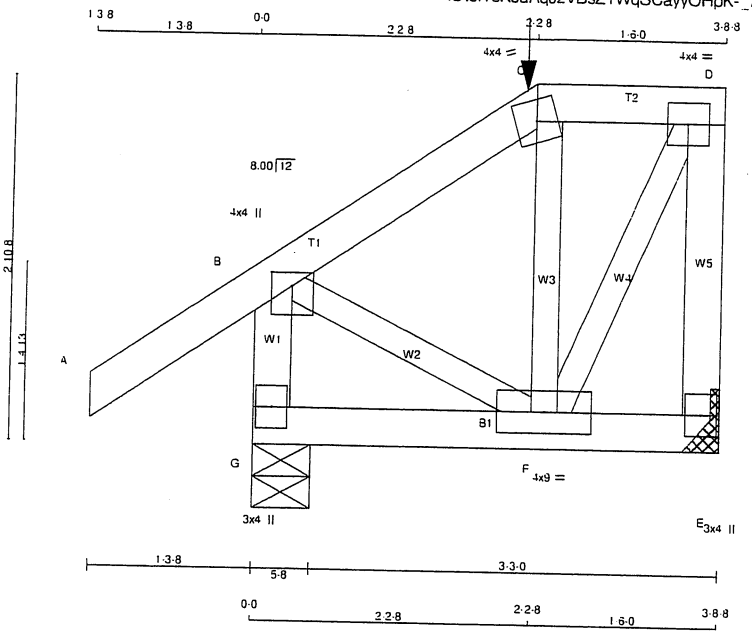

Scale = 1:17.3

TOTAL WEIGHT = 4 X 20 = 81 lb

[M]

LUMBER

N. L. G. A. RULES

CHORDS	SIZE		LUMBER	DESCR.
A - C	2x4	DRY	No.2	SPF
C - D	2x4	DRY	No.2	SPF
E - D	2x4	DRY	No.2	SPF
G - B	2x4	DRY	No.2	SPF
G - E	2x4	DRY	No.2	SPF
ALL WEBS EXCEPT	2x3	DRY	No.2	SPF

DRY: SEASONED LUMBER.

DESIGN CONSISTS OF 2 TRUSSES BUILT SEPARATELY THEN FASTENED TOGETHER AS FOLLOWS:

CHORDS	#ROWS	SURFACE SPACING (IN)	LOAD(PLF)
TOP CHORDS : (0.122"X3") SPIRAL NAILS			
A- C	1	12	SIDE(71.9)
C- D	1	12	SIDE(86.4)
D- E	1	12	TOP
G- B	1	12	TOP
BOTTOM CHORDS : (0.122"X3") SPIRAL NAILS			
G- E	1	12	SIDE(19.6)
WEBS : (0.122"X3") SPIRAL NAILS			
F- C	1	6	SIDE(2.3)
2x3	1	6	

NAILS TO BE DRIVEN FROM ONE SIDE ONLY.

GIRDER NAILING ASSUMES NAILED HANGERS ARE FASTENED WITH MIN. 3-0 INCH NAILS.

TOP - COMPONENTS ARE LOADED FROM THE TOP AND MUST BE PLACED ON TOP EDGE OF ALL PLIES FOR THE LOAD TO BE TRANSFERRED TO EACH PLY.

SIDE - PLF SHOWN IS THE EQUIVALENT UDL APPLIED TO ONE SIDE THAT THE CORRESPONDING NAILING PATTERN SHALL BE CAPABLE OF TRANSFERING. REMAINING PLF MUST BE APPLIED ON THE OPPOSITE SIDE OR ON THE TOP.

LICENSED PROFESSIONAL ENGINEER
10/14/20
H. J. G. ALVES
100009024
PROVINCE OF ONTARIO

Structural component only
DWG# T-2022167 1/2

DIMENSIONS, SUPPORTS AND LOADINGS SPECIFIED BY FABRICATOR TO BE VERIFIED BY BUILDING DESIGNER

BEARINGS

JT	FACTORED GROSS REACTION VERT	HORZ	MAXIMUM FACTORED GROSS REACTION DOWN	HORZ	UPLIFT	INPUT BRG IN-SX	REQRD BRG IN-SX
E	617	0	617	0	0	MECHANICAL	
G	971	0	971	0	0	5-8	5-8

A SUITABLE HANGER/MECHANICAL CONNECTION IS REQUIRED AT JOINT E. MINIMUM BEARING LENGTH AT JOINT E = 3-8.

UNFACTORED REACTIONS

JT	1ST LCASE COMBINED	MAX.,MIN. COMPONENT REACTIONS SNOW	LIVE	PERM.LIVE	WIND	DEAD	SOIL
E	436	288 / 0	0 / 0	0 / 0	0 / 0	148 / 0	0 / 0
G	680	485 / 0	0 / 0	0 / 0	0 / 0	195 / 0	0 / 0

BEARING MATERIAL TO BE SPF NO.2 OR BETTER AT JOINT(S) G

BRACING

TOP CHORD TO BE SHEATHED OR MAX. PURLIN SPACING = 6.25 FT.
MAX. UNBRACED BOTTOM CHORD LENGTH = 10.00 FT OR RIGID CEILING DIRECTLY APPLIED.

ALL PITCH BREAKS AND PERIMETER CORNER JOINTS MUST BE LATERALLY RESTRAINED.

LOADING

TOTAL LOAD CASES: (5)

CHORDS

MEMB. FR-TO	MAX. FACTORED FORCE (LBS)	FROM	TO	FACTORED VERT. LOAD LC1 (PLF)	MAX CSI (LC)	MAX. UNBRAC LENGTH
A- B	0 / 101	-264.5	-264.5	0.22 (5)	10.00	
B- C	-272 / 0	-264.5	-264.5	0.12 (1)	6.25	
C- D	-210 / 0	-264.5	-264.5	0.06 (1)	6.25	
E- D	-585 / 0	0.0	0.0	0.05 (1)	7.81	
G- B	-913 / 0	0.0	0.0	0.05 (1)	7.81	
G- F	0 / 0	-53.5	-53.5	0.03 (4)	10.00	
F- E	0 / 0	-53.5	-53.5	0.03 (4)	10.00	

WEBS

MEMB. FR-TO	MAX. FACTORED FORCE (LBS)	MAX CSI (LC)
F- C	-387 / 0	0.04 (1)
F- D	0 / 442	0.05 (1)
B- F	0 / 249	0.03 (1)

SPECIFIED CONCENTRATED LOADS (LBS)

JT	LOC.	LC1	MAX-	MAX+	FACE	DIR.	TYPE	HEEL	CONN.
C	2-2-8	-6	-6	---	FRONT	VERT	DEAD	--	C1
C	2-2-8	-26	-26	---	FRONT	VERT	SNOW	--	C1

CONNECTION REQUIREMENTS

1) C1: A SUITABLE HANGER/MECHANICAL CONNECTION IS REQUIRED.

CANTILEVER ANALYSIS HAS BEEN CONSIDERED IN THIS DESIGN

DESIGN CRITERIA

*** SPECIAL LOADS ANALYSIS ***
GEOMETRY AND/OR BASIC LOADS CHANGED BY USER.
LOADS WERE DERIVED FROM USER INPUT
NO FURTHER MODIFICATIONS WERE MADE

SPECIFIED LOADS:

TOP CH.	LL	=	25.6	PSF
	DL	=	6.0	PSF
BOT CH.	LL	=	0.0	PSF
	DL	=	7.4	PSF
TOTAL LOAD		=	39.0	PSF

SPACING = 24.0 IN. C/C

LOADING IN FLAT SECTION BASED ON A SLOPE OF 6.00/12

*** NON STANDARD GIRDER ***
ADDT'L USER-DEFINED LOADS APPLIED TO ALL LOAD CASES.

THIS TRUSS IS DESIGNED FOR RESIDENTIAL OR SMALL BUILDING REQUIREMENTS OF PART 9, NBCC 2010, NBCC 2015

THIS DESIGN COMPLIES WITH:
- PART 9 OF BCBC 2018 , OBC 2012 , ABC 2019
- PART 9 OF OBC 2012 (2019 AMENDMENT)
- CSA 086-09, CSA 086-14
- TPIC 2011, TPIC 2014

(55 % OF 31.3 P.S.F. G.S.L. PLUS 8.4 P.S.F. RAIN LOAD) EQUALS 25.6 P.S.F. SPECIFIED ROOF LIVE LOAD

ALLOWABLE DEFL.(LL)= L/360 (0.19")
CALCULATED VERT. DEFL.(LL) = L/ 999 (0.00")
ALLOWABLE DEFL.(TL)= L/360 (0.19")
CALCULATED VERT. DEFL.(TL) = L/ 999 (0.00")

CSI: TC=0.22/1.00 (A-B:5) , BC=0.03/1.00 (F-G:4) , WB=0.05/1.00 (D-F:1) , SSI=0.15/1.00 (A-B:5)

DOL LUMBER=1.00 NAIL=1.00 LS BEND=1.00 COMP=1.00 SHEAR=1.00 TENS= 1.00

COMPANION LIVE LOAD FACTOR = 1.00

TRUSS PLATE MANUFACTURER IS NOT RESPONSIBLE FOR QUALITY CONTROL IN THE TRUSS MANUFACTURING PLANT .

NAIL VALUES

PLATE	GRIP(DRY) (PSI) MAX	MIN	SHEAR (PLI) MAX	MIN	SECTION (PLI) MAX	MIN
MT20	618	354	1667	788	1987	1656

PLATE PLACEMENT TOL. = 0.250 inches

PLATE ROTATION TOL. = 5.0 Deg.

JSI GRIP= 0.32 (B) (INPUT = 0.90)
JSI METAL= 0.09 (B) (INPUT = 1.00)

CONTINUED ON PAGE 2

JOB NAME	TRUSS NAME	QUANTITY	PLY	JOB DESC. ROYAL PINE HOMES	DRWG NO.
406513	T14	2	2	TRUSS DESC.	

Tamarack Roof Truss, Burlington

ID:8ITcKsuAqJzVBsZ1WqSCayyOHpK- 7?mahbIXNQRdqyRdx?rAyhVKBIGPdxzliqgJkyTXhG

PLATES (table is in inches)

JT	TYPE	PLATES	W	LEN	Y	X
B	TMVW+p	MT20	4.0	4.0	1.25	2.00
C	TTW-m	MT20	4.0	4.0		
D	TMVW-t	MT20	4.0	4.0		
E	BMV1+p	MT20	3.0	4.0		
F	BMWWW-t	MT20	4.0	9.0		
G	BMV1+p	MT20	3.0	4.0		

LICENSED PROFESSIONAL ENGINEER
10/14/20
H. J. G. ALVES
100009024
PROVINCE OF ONTARIO

Structural component only
DWG# T-2022167 MV

JOB NAME	TRUSS NAME	QUANTITY	PLY	JOB DESC.	DRWG NO.
406513	T15	1	2	ROYAL PINE HOMES TRUSS DESC.	

Tamarack Roof Truss, Burlington

Version 8.330 S May 6 2020 MiTek Industries, Inc. Wed Oct 14 10:41:50 2020 Page 1
ID:8ITcKsuAqJzVBsZ1WqSCayyOHpK-SKZ8o1cwIhYIEqXeBeW4j9DjYb2p82j6_MaDsAyTXhF

Scale = 1:23.7

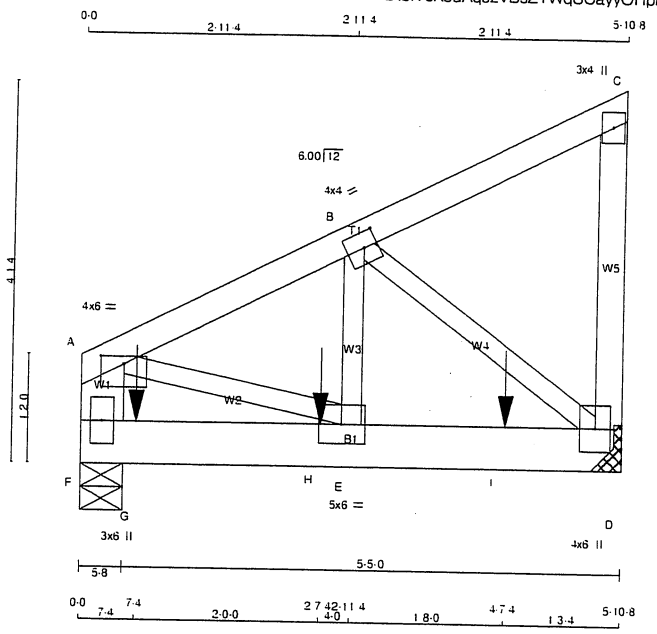

TOTAL WEIGHT = 2 X 29 = 58 lb [M]

LUMBER

N. L. G. A. RULES

CHORDS	SIZE		LUMBER	DESCR.
A - C	2x4	DRY	No.2	SPF
D - C	2x4	DRY	No.2	SPF
F - A	2x6	DRY	No.2	SPF
F - D	2x6	DRY	No.2	SPF
ALL WEBS EXCEPT	2x3	DRY	No.2	SPF

DRY: SEASONED LUMBER.

DESIGN CONSISTS OF 2 TRUSSES BUILT SEPARATELY THEN FASTENED TOGETHER AS FOLLOWS:

CHORDS	#ROWS	SURFACE SPACING (IN)	LOAD(PLF)
TOP CHORDS : (0.122"X3") SPIRAL NAILS			
A- C	1	12	TOP
C- D	1	12	TOP
F- A	2	12	TOP
BOTTOM CHORDS : (0.122"X3") SPIRAL NAILS			
F- D	2	12	SIDE(183.1)
WEBS : (0.122"X3") SPIRAL NAILS			
2x3	1	6	

NAILS TO BE DRIVEN FROM ONE SIDE ONLY.

GIRDER NAILING ASSUMES NAILED HANGERS ARE FASTENED WITH MIN. 3-0 INCH NAILS.

TOP - COMPONENTS ARE LOADED FROM THE TOP AND MUST BE PLACED ON TOP EDGE OF ALL PLIES FOR THE LOAD TO BE TRANSFERRED TO EACH PLY.

SIDE - PLF SHOWN IS THE EQUIVALENT UDL APPLIED TO ONE SIDE THAT THE CORRESPONDING NAILING PATTERN SHALL BE CAPABLE OF TRANSFERING. REMAINING PLF MUST BE APPLIED ON THE OPPOSITE SIDE OR ON THE TOP.

PLATES (table is in inches)

JT	TYPE	PLATES	W	LEN	Y	X
A	TMVW-p	MT20	4.0	6.0	1.00	3.00
B	TMWW-t	MT20	4.0	4.0	2.00	1.75
C	TMV+p	MT20	3.0	4.0		

LICENSED PROFESSIONAL ENGINEER
10/14/20
H. J. G. ALVES
100009024
PROVINCE OF ONTARIO

Structural component only
DWG# T-2022168 1/2

DIMENSIONS, SUPPORTS AND LOADINGS SPECIFIED BY FABRICATOR TO BE VERIFIED BY BUILDING DESIGNER

BEARINGS

JT	FACTORED GROSS REACTION VERT	HORZ	MAXIMUM FACTORED GROSS REACTION DOWN	HORZ	UPLIFT	INPUT BRG IN-SX	REQRD BRG IN-SX
D	1179	0	1179	0	0	MECHANICAL	
F	1401	0	1401	0	0	5-8	5-8

A SUITABLE HANGER/MECHANICAL CONNECTION IS REQUIRED AT JOINT D. MINIMUM BEARING LENGTH AT JOINT D = 4-0.

UNFACTORED REACTIONS

JT	1ST LCASE COMBINED	MAX./MIN. COMPONENT REACTIONS SNOW	LIVE	PERM.LIVE	WIND	DEAD	SOIL
D	832	559 0	0 0	0 0	0 0	273 0	0 0
F	988	663 0	0 0	0 0	0 0	325 0	0 0

BEARING MATERIAL TO BE SPF NO.2 OR BETTER AT JOINT(S) F

BRACING

TOP CHORD TO BE SHEATHED OR MAX. PURLIN SPACING = 6.25 FT.
MAX. UNBRACED BOTTOM CHORD LENGTH = 10.00 FT OR RIGID CEILING DIRECTLY APPLIED.

ALL PITCH BREAKS AND PERIMETER CORNER JOINTS MUST BE LATERALLY RESTRAINED.

LOADING

TOTAL LOAD CASES: (4)

CHORDS

MEMB. FR-TO	MAX. FORCE (LBS)	FACTORED VERT. LOAD (PLF) FROM	TO	LC1	MAX CSI (LC)	MAX. UNBRAC LENGTH
A- B	-1095 0	-91.8	-91.8	0.06 (1)	6.25	
B- C	-12 0	-91.8	-91.8	0.06 (1)	6.25	
D- C	-109 0	0.0	0.0	0.01 (1)	7.81	
F- A	-865 0	0.0	0.0	0.03 (1)	7.81	
F- G	0 0	-18.5	-18.5	0.12 (1)	10.00	
G- H	0 0	-18.5	-18.5	0.12 (1)	10.00	
H- E	0 0	-18.5	-18.5	0.12 (1)	10.00	
E- I	0 990	-18.5	-18.5	0.21 (1)	10.00	
I- D	0 990	-18.5	-18.5	0.21 (1)	10.00	

WEBS

MEMB. FR-TO	MAX. FORCE (LBS)	MAX CSI (LC)
E- B	0 930	0.12 (1)
B- D	-1246 0	0.15 (1)
A- E	0 1024	0.13 (1)

SPECIFIED CONCENTRATED LOADS (LBS)

JT	LOC.	LC1	MAX-	MAX+	FACE	DIR.	TYPE	HEEL	CONN.
G	7-4	-456	-456	---	FRONT	VERT	TOTAL	---	C1
H	2-7-4	-453	-453	---	FRONT	VERT	TOTAL	---	C1
I	4-7-4	-453	-453	---	FRONT	VERT	TOTAL	---	C1

CONNECTION REQUIREMENTS

1) **C1:** A SUITABLE HANGER/MECHANICAL CONNECTION IS REQUIRED

DESIGN CRITERIA

SPECIFIED LOADS:

TOP CH.	LL	=	25.6	PSF
	DL	=	6.0	PSF
BOT CH.	LL	=	0.0	PSF
	DL	=	7.4	PSF
TOTAL LOAD		=	39.0	PSF

SPACING = 24.0 IN. C/C

THIS TRUSS IS DESIGNED FOR RESIDENTIAL OR SMALL BUILDING REQUIREMENTS OF PART 9, NBCC 2010, NBCC 2015

THIS DESIGN COMPLIES WITH:
- PART 9 OF BCBC 2018 , OBC 2012 , ABC 2019
- PART 9 OF OBC 2012 (2019 AMENDMENT)
- CSA 086-09, CSA 086-14
- TPIC 2011, TPIC 2014

(55 % OF 31.3 P.S.F. G.S.L. PLUS 8.4 P.S.F. RAIN LOAD) EQUALS 25.6 P.S.F. SPECIFIED ROOF LIVE LOAD

ALLOWABLE DEFL.(LL)= L/360 (0.20")
CALCULATED VERT. DEFL.(LL) = L/ 999 (0.01")
ALLOWABLE DEFL.(TL)= L/360 (0.20")
CALCULATED VERT. DEFL.(TL) = L/ 999 (0.01")

CSI: TC=0.06/1.00 (A-B:1) , BC=0.21/1.00 (D-E:1) , WB=0.15/1.00 (B-D:1) , SSI=0.27/1.00 (E-F:1)

DOL LUMBER=1.00 NAIL=1.00 LS BEND=1.00 COMP=1.00 SHEAR=1.00 TENS= 1.00

COMPANION LIVE LOAD FACTOR = 1.00

AUTOSOLVE RIGHT HEEL ONLY

TRUSS PLATE MANUFACTURER IS NOT RESPONSIBLE FOR QUALITY CONTROL IN THE TRUSS MANUFACTURING PLANT .

NAIL VALUES

PLATE	GRIP(DRY) (PSI) MAX	MIN	SHEAR (PLI) MAX	MIN	SECTION (PLI) MAX	MIN
MT20	618	354	1667	788	1987	1656

PLATE PLACEMENT TOL. = 0.250 inches

PLATE ROTATION TOL. = 5.0 Deg.

JSI GRIP= 0.64 (B) (INPUT = 0.90)
JSI METAL= 0.22 (D) (INPUT = 1.00)

CONTINUED ON PAGE 2

JOB NAME	TRUSS NAME	QUANTITY	PLY	JOB DESC. ROYAL PINE HOMES	DRWG NO.
406513	T15	1	2	TRUSS DESC.	

Tamarack Roof Truss, Burlington

ID:8lTcKsuAqJzVBsZ1WqSCayyOHpK-SKZ8o1cwIhYIEqXeBeW4j9DjYb2p82j6_MaDsAyTXhF

PLATES (table is in inches)

JT	TYPE	PLATES	W	LEN	Y	X
D	BMVW1+p	MT20	4.0	6.0		
E	BMWW-t	MT20	5.0	6.0		
F	BMV1+p	MT20	3.0	6.0		

LICENSED PROFESSIONAL ENGINEER
10/14/20
H. J. G. ALVES
100009024
PROVINCE OF ONTARIO

Structural component only
DWG# T-2022168 3/2

JOB NAME	TRUSS NAME	QUANTITY	PLY	JOB DESC. ROYAL PINE HOMES	DRWG NO.
406513	T15Z	1	2	TRUSS DESC.	

Tamarack Roof Truss, Burlington

Version 8.330 S May 6 2020 MiTek Industries, Inc. Wed Oct 14 10:41:51 2020 Page 1
ID:8ITcKsuAqJzVBsZ1WqSCayyOHpK-wW7W?NdY3_g9s_6qIM1JFNmuG?NctUhGD0JnOcyTXhE

Scale = 1:23.7

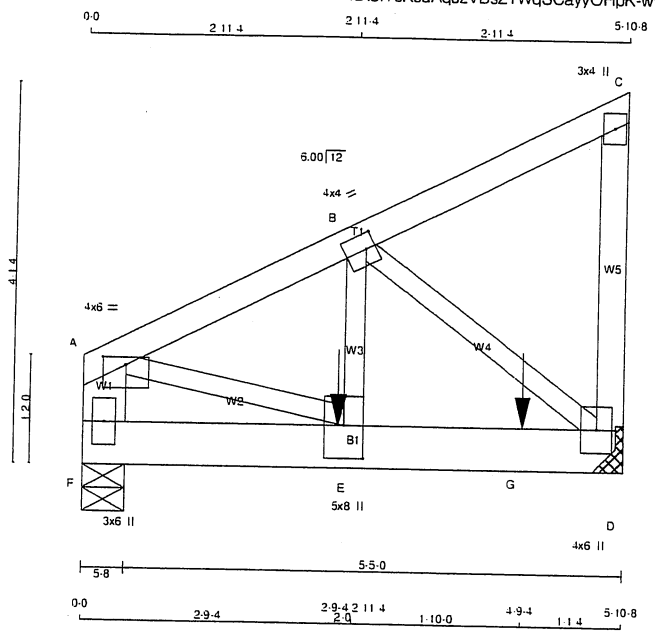

TOTAL WEIGHT = 2 X 29 = 58 lb [M]

LUMBER

N. L. G. A. RULES

CHORDS	SIZE		LUMBER	DESCR.
A - C	2x4	DRY	No.2	SPF
D - C	2x4	DRY	No.2	SPF
F - A	2x6	DRY	No.2	SPF
F - D	2x6	DRY	No.2	SPF
ALL WEBS EXCEPT	2x3	DRY	No.2	SPF

DRY: SEASONED LUMBER.

DESIGN CONSISTS OF 2 TRUSSES BUILT SEPARATELY THEN FASTENED TOGETHER AS FOLLOWS:

CHORDS	#ROWS	SURFACE SPACING (IN)	LOAD(PLF)
TOP CHORDS : (0.122"X3") SPIRAL NAILS			
A- C	1	12	TOP
C- D	1	12	TOP
F- A	2	12	TOP
BOTTOM CHORDS : (0.122"X3") SPIRAL NAILS			
F- D	2	12	SIDE(183.1)
WEBS : (0.122"X3") SPIRAL NAILS			
B- E	1	3	SIDE(267.3)
2x3	1	6	

NAILS TO BE DRIVEN FROM ONE SIDE ONLY.

GIRDER NAILING ASSUMES NAILED HANGERS ARE FASTENED WITH MIN. 3-0 INCH NAILS.

TOP - COMPONENTS ARE LOADED FROM THE TOP AND MUST BE PLACED ON TOP EDGE OF ALL PLIES FOR THE LOAD TO BE TRANSFERRED TO EACH PLY.

SIDE - PLF SHOWN IS THE EQUIVALENT UDL APPLIED TO ONE SIDE THAT THE CORRESPONDING NAILING PATTERN SHALL BE CAPABLE OF TRANSFERING. REMAINING PLF MUST BE APPLIED ON THE OPPOSITE SIDE OR ON THE TOP.

PLATES (table is in inches)

JT	TYPE	PLATES	W	LEN	Y	X
A	TMVW-p	MT20	4.0	6.0	1.00	3.00
B	TMWW-t	MT20	4.0	4.0	2.00	1.25

LICENSED PROFESSIONAL ENGINEER
10/14/20
H. J. G. ALVES
100009024
PROVINCE OF ONTARIO

Structural component only
DWG# T-2022169

DIMENSIONS, SUPPORTS AND LOADINGS SPECIFIED BY FABRICATOR TO BE VERIFIED BY BUILDING DESIGNER

BEARINGS

JT	FACTORED GROSS REACTION VERT	HORZ	MAXIMUM FACTORED GROSS REACTION DOWN	HORZ	UPLIFT	INPUT BRG IN-SX	REQRD BRG IN-SX
D	1784	0	1784	0	0	MECHANICAL	
F	1325	0	1325	0	0	5-8	5-8

A SUITABLE HANGER/MECHANICAL CONNECTION IS REQUIRED AT JOINT D. MINIMUM BEARING LENGTH AT JOINT D = 4-0.

UNFACTORED REACTIONS

1ST LCASE MAX./MIN. COMPONENT REACTIONS

JT	COMBINED	SNOW	LIVE	PERM.LIVE	WIND	DEAD	SOIL
D	1259	841 / 0	0 / 0	0 / 0	0 / 0	418 0	0 0
F	936	622 / 0	0 / 0	0 / 0	0 0	313 0	0 0

BEARING MATERIAL TO BE SPF NO.2 OR BETTER AT JOINT(S) F

BRACING

TOP CHORD TO BE SHEATHED OR MAX. PURLIN SPACING = 6.25 FT.
MAX. UNBRACED BOTTOM CHORD LENGTH = 10.00 FT OR RIGID CEILING DIRECTLY APPLIED.

ALL PITCH BREAKS AND PERIMETER CORNER JOINTS MUST BE LATERALLY RESTRAINED.

LOADING

TOTAL LOAD CASES: (4)

CHORDS

MEMB. FR-TO	MAX. FACTORED FORCE (LBS)		FACTORED VERT. LOAD LC1 (PLF) FROM	TO	MAX CSI (LC)	MAX. UNBRAC LENGTH
A- B	-1710	0	-91.8	-91.8	0.06 (1)	6.25
B- C	-10	0	-91.8	-91.8	0.05 (1)	10.00
D- C	-113	0	0.0	0.0	0.01 (1)	7.81
F- A	-1288	0	0.0	0.0	0.05 (1)	7.81
F- E	0	0	-18.5	-18.5	0.01 (1)	10.00
E- G	0	1538	-18.5	-18.5	0.30 (1)	10.00
G- D	0	1538	-18.5	-18.5	0.30 (1)	10.00

WEBS

MEMB. FR-TO	MAX. FACTORED FORCE (LBS)		MAX CSI (LC)
E- B	0	1631	0.20 (1)
B- D	-1935	0	0.23 (1)
A- E	0	1591	0.20 (1)

SPECIFIED CONCENTRATED LOADS (LBS)

JT	LOC.	LC1	MAX-	MAX+	FACE	DIR.	TYPE	HEEL	CONN.
E	2-9-4	-1219	-1219	---	BACK	VERT	TOTAL	--	C1
G	4-9-4	-518	-518	---	BACK	VERT	TOTAL	--	C1

CONNECTION REQUIREMENTS

1) **C1:** A SUITABLE HANGER/MECHANICAL CONNECTION IS REQUIRED.

DESIGN CRITERIA

SPECIFIED LOADS:

TOP CH.	LL	=	25.6	PSF
	DL	=	6.0	PSF
BOT CH.	LL	=	0.0	PSF
	DL	=	7.4	PSF
TOTAL LOAD		=	39.0	PSF

SPACING = 24.0 IN. C/C

THIS TRUSS IS DESIGNED FOR RESIDENTIAL OR SMALL BUILDING REQUIREMENTS OF PART 9, NBCC 2010, NBCC 2015

THIS DESIGN COMPLIES WITH:
- PART 9 OF BCBC 2018 , OBC 2012 , ABC 2019
- PART 9 OF OBC 2012 (2019 AMENDMENT)
- CSA 086-09, CSA 086-14
- TPIC 2011, TPIC 2014

(55 % OF 31.3 P.S.F. G.S.L. PLUS 8.4 P.S.F. RAIN LOAD) EQUALS 25.6 P.S.F. SPECIFIED ROOF LIVE LOAD

ALLOWABLE DEFL.(LL)= L/360 (0.20")
CALCULATED VERT. DEFL.(LL) = L/ 999 (0.01")
ALLOWABLE DEFL.(TL)= L/360 (0.20")
CALCULATED VERT. DEFL.(TL) = L/ 999 (0.02")

CSI: TC=0.06/1.00 (A-B:1) , BC=0.30/1.00 (D-E:1) , WB=0.23/1.00 (B-D:1) , SSI=0.16/1.00 (D-E:1)

DOL LUMBER=1.00 NAIL=1.00 LS BEND=1.00 COMP=1.00 SHEAR=1.00 TENS= 1.00

COMPANION LIVE LOAD FACTOR = 1.00

AUTOSOLVE RIGHT HEEL ONLY

TRUSS PLATE MANUFACTURER IS NOT RESPONSIBLE FOR QUALITY CONTROL IN THE TRUSS MANUFACTURING PLANT .

NAIL VALUES

PLATE	GRIP(DRY) (PSI) MAX	MIN	SHEAR (PLI) MAX	MIN	SECTION (PLI) MAX	MIN
MT20	618	354	1667	788	1987	1656

PLATE PLACEMENT TOL. = 0.250 inches

PLATE ROTATION TOL. = 5.0 Deg.

JSI GRIP= 0.82 (B) (INPUT = 0.90)
JSI METAL= 0.35 (D) (INPUT = 1.00)

CONTINUED ON PAGE 2

JOB NAME	TRUSS NAME	QUANTITY	PLY	JOB DESC. ROYAL PINE HOMES	DRWG NO.
406513	T15Z	1	2	TRUSS DESC.	

Tamarack Roof Truss, Burlington

ID:8ITcKsuAqJzVBsZ1WqSCayyOHpK-wW7W?NdY3_g9s_6qIM1JFNmuG?NctUhGD0JnOcyTXhE

PLATES (table is in inches)

JT	TYPE	PLATES	W	LEN	Y	X
C	TMV+p	MT20	3.0	4.0		
D	BMVW1+p	MT20	4.0	6.0		
E	BMWW+t	MT20	5.0	8.0	4.25	2.50
F	BMV1+p	MT20	3.0	6.0		

LICENSED PROFESSIONAL ENGINEER
10/14/20
H. J. G. ALVES
100009024
PROVINCE OF ONTARIO

Structural component only
DWG# T-2022169 2/2

JOB NAME	TRUSS NAME	QUANTITY	PLY	JOB DESC. ROYAL PINE HOMES	DRWG NO.
406514	T15Z2	2	2	TRUSS DESC.	

Tamarack Roof Truss, Burlington

Version 8.330 S May 6 2020 MiTek Industries, Inc. Wed Oct 14 10:59:55 2020 Page 1
ID:8ITcKsuAqJzVBsZ1WqSCayyOHpK-B3dJW1kVn2ELvazAF0UWBzf7hzKDsm6pUgv7RnyTXQI

Scale = 1:23.7

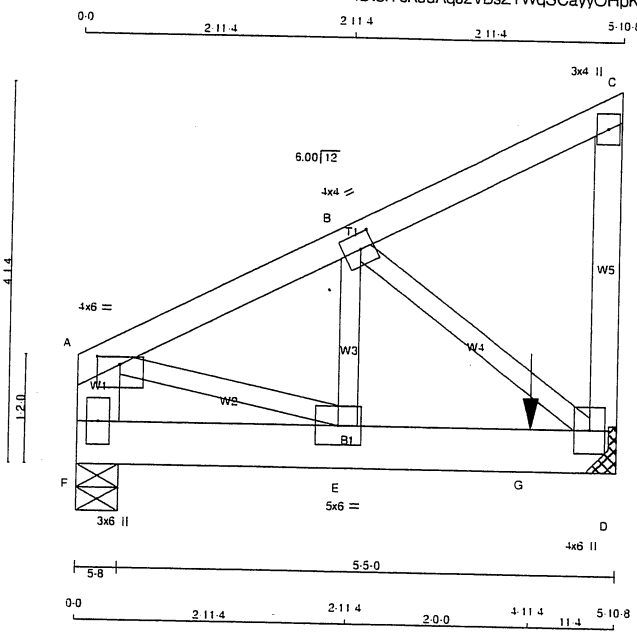

TOTAL WEIGHT = 4 X 29 = 117 lb

LUMBER

N. L. G. A. RULES

CHORDS	SIZE		LUMBER	DESCR.
A - C	2x4	DRY	No.2	SPF
D - C	2x4	DRY	No.2	SPF
F - A	2x6	DRY	No.2	SPF
F - D	2x6	DRY	No.2	SPF
ALL WEBS EXCEPT	2x3	DRY	No.2	SPF

DRY: SEASONED LUMBER.

DESIGN CONSISTS OF 2 TRUSSES BUILT SEPARATELY THEN FASTENED TOGETHER AS FOLLOWS:

CHORDS	#ROWS	SURFACE SPACING (IN)	LOAD(PLF)
TOP CHORDS : (0.122"X3") SPIRAL NAILS			
A- C	1	12	TOP
C- D	1	12	TOP
F- A	2	12	TOP
BOTTOM CHORDS : (0.122"X3") SPIRAL NAILS			
F- D	2	12	SIDE(0.0)
WEBS : (0.122"X3") SPIRAL NAILS			
2x3	1	6	

NAILS TO BE DRIVEN FROM ONE SIDE ONLY.

GIRDER NAILING ASSUMES NAILED HANGERS ARE FASTENED WITH MIN. 3-0 INCH NAILS.

TOP - COMPONENTS ARE LOADED FROM THE TOP AND MUST BE PLACED ON TOP EDGE OF ALL PLIES FOR THE LOAD TO BE TRANSFERRED TO EACH PLY.

SIDE - PLF SHOWN IS THE EQUIVALENT UDL APPLIED TO ONE SIDE THAT THE CORRESPONDING NAILING PATTERN SHALL BE CAPABLE OF TRANSFERING. REMAINING PLF MUST BE APPLIED ON THE OPPOSITE SIDE OR ON THE TOP.

PLATES (table is in inches)

JT	TYPE	PLATES	W	LEN	Y	X
A	TMVW-p	MT20	4.0	6.0	1.00	3.00
B	TMWW-t	MT20	4.0	4.0	2.00	1.75
C	TMV+p	MT20	3.0	4.0		

Structural component only
DWG# T-2022170 1/2

DIMENSIONS, SUPPORTS AND LOADINGS SPECIFIED BY FABRICATOR TO BE VERIFIED BY BUILDING DESIGNER

BEARINGS

JT	FACTORED GROSS REACTION VERT	HORZ	MAXIMUM FACTORED GROSS REACTION DOWN	HORZ	UPLIFT	INPUT BRG IN-SX	REQRD BRG IN-SX
D	1541	0	1541	0	0	MECHANICAL	
F	555	0	555	0	0	5-8	5-8

A SUITABLE HANGER/MECHANICAL CONNECTION IS REQUIRED AT JOINT D. MINIMUM BEARING LENGTH AT JOINT D = 4-0.

UNFACTORED REACTIONS

JT	1ST LCASE COMBINED	MAX.:MIN. COMPONENT REACTIONS SNOW	LIVE	PERM.LIVE	WIND	DEAD	SOIL
D	1085	743 : 0	0 : 0	0 : 0	0 : 0	342 : 0	0 : 0
F	392	263 : 0	0 : 0	0 : 0	0 : 0	129 : 0	0 : 0

BEARING MATERIAL TO BE SPF NO.2 OR BETTER AT JOINT(S) F

BRACING

TOP CHORD TO BE SHEATHED OR MAX. PURLIN SPACING = 6.25 FT.
MAX. UNBRACED BOTTOM CHORD LENGTH = 10.00 FT OR RIGID CEILING DIRECTLY APPLIED.

ALL PITCH BREAKS AND PERIMETER CORNER JOINTS MUST BE LATERALLY RESTRAINED.

LOADING

TOTAL LOAD CASES: (4)

CHORDS

MEMB. FR-TO	MAX. FACTORED FORCE (LBS)		FACTORED VERT. LOAD (PLF) FROM	TO	LC1 MAX CSI (LC)	MAX. UNBRAC LENGTH
A- B	-721	0	-91.8	-91.8	0.06 (1)	6.25
B- C	-13	0	-91.8	-91.8	0.06 (1)	6.25
D- C	-106	0	0.0	0.0	0.01 (1)	7.81
F- A	-608	0	0.0	0.0	0.02 (1)	7.81
F- E	0	0	-18.5	-18.5	0.09 (1)	10.00
E- G	0	657	-18.5	-18.5	0.36 (1)	10.00
G- D	0	657	-18.5	-18.5	0.36 (1)	10.00

WEBS

MEMB. FR-TO	MAX. FACTORED FORCE (LBS)		MAX CSI (LC)
E- B	0	503	0.06 (1)
B- D	-826	0	0.10 (1)
A- E	0	679	0.08 (1)

SPECIFIED CONCENTRATED LOADS (LBS)

JT	LOC.	LC1	MAX-	MAX+	FACE	DIR.	TYPE	HEEL	CONN.
G	4-11-4	-1018	-1018	---	BACK	VERT	TOTAL	---	C1

CONNECTION REQUIREMENTS

1) **C1:** A SUITABLE HANGER/MECHANICAL CONNECTION IS REQUIRED.

DESIGN CRITERIA [M]

SPECIFIED LOADS:

TOP CH.	LL	=	25.6	PSF
	DL	=	6.0	PSF
BOT CH.	LL	=	0.0	PSF
	DL	=	7.4	PSF
TOTAL LOAD		=	39.0	PSF

SPACING = 24.0 IN. C/C

THIS TRUSS IS DESIGNED FOR RESIDENTIAL OR SMALL BUILDING REQUIREMENTS OF PART 9. NBCC 2010, NBCC 2015

THIS DESIGN COMPLIES WITH:
- PART 9 OF BCBC 2018 . OBC 2012 , ABC 2019
- PART 9 OF OBC 2012 (2019 AMENDMENT)
- CSA 086-09, CSA 086-14
- TPIC 2011. TPIC 2014

(55 % OF 31.3 P.S.F. G.S.L. PLUS 8.4 P.S.F. RAIN LOAD) EQUALS 25.6 P.S.F. SPECIFIED ROOF LIVE LOAD

ALLOWABLE DEFL.(LL)= L/360 (0.20")
CALCULATED VERT. DEFL.(LL) = L/ 999 (0.01")
ALLOWABLE DEFL.(TL)= L/360 (0.20")
CALCULATED VERT. DEFL.(TL) = L/ 999 (0.02")

CSI: TC=0.06/1.00 (A-B:1) , BC=0.36/1.00 (D-E:1) . WB=0.10/1.00 (B-D:1) . SSI=0.31/1.00 (D-E:1)

DOL LUMBER=1.00 NAIL=1.00 LS BEND=1.00 COMP=1.00 SHEAR=1.00 TENS= 1.00

COMPANION LIVE LOAD FACTOR = 1.00

AUTOSOLVE RIGHT HEEL ONLY

TRUSS PLATE MANUFACTURER IS NOT RESPONSIBLE FOR QUALITY CONTROL IN THE TRUSS MANUFACTURING PLANT

NAIL VALUES

PLATE	GRIP(DRY) (PSI) MAX	MIN	SHEAR (PLI) MAX	MIN	SECTION (PLI) MAX	MIN
MT20	618	354	1667	788	1987	1656

PLATE PLACEMENT TOL. = 0.250 inches

PLATE ROTATION TOL. = 5.0 Deg.

JSI GRIP= 0.34 (B) (INPUT = 0.90)
JSI METAL= 0.15 (D) (INPUT = 1.00)

CONTINUED ON PAGE 2

JOB NAME	TRUSS NAME	QUANTITY	PLY	JOB DESC. ROYAL PINE HOMES	DRWG NO.
406514	T15Z2	2	2	TRUSS DESC.	

Tamarack Roof Truss, Burlington

ID:8ITcKsuAqJzVBsZ1WqSCayyOHpK-B3dJW1kVn2ELvazAF0UWBzf7hzKDsm6pUgv7RnyTXQI

PLATES (table is in inches)

JT	TYPE	PLATES	W	LEN	Y	X
D	BMVW1+p	MT20	4.0	6.0		
E	BMWW-t	MT20	5.0	6.0		
F	BMV1+p	MT20	3.0	6.0		

LICENSED PROFESSIONAL ENGINEER
10/14/20
H. J. G. ALVES
100009024
PROVINCE OF ONTARIO

Structural component only
DWG# T-2022170 3/2

JOB NAME	TRUSS NAME	QUANTITY	PLY	JOB DESC.	DRWG NO.
413426	T15Z3	2	2	ROYAL PINE HOMES TRUSS DESC.	

Tamarack Roof Truss, Burlington

Version 8.330 S May 6 2020 MiTek Industries, Inc. Wed Oct 14 11:24:28 2020 Page 1
ID:8ITcKsuAqJzVBsZ1WqSCayyOHpK-ZR7AfiZSudqL7x4G1tPxObArwk4eUz5dCKDaevyTX3H

Scale = 1:23.7

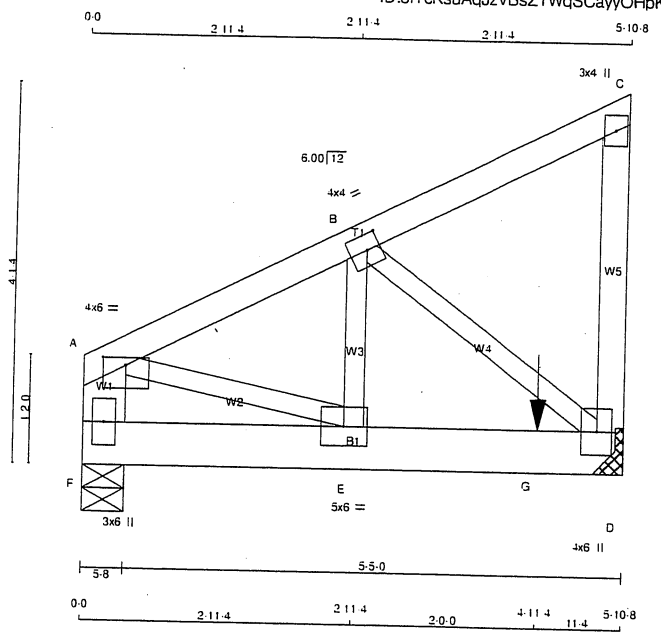

TOTAL WEIGHT = 4 X 29 = 117 lb [M]

LUMBER

N. L. G. A. RULES

CHORDS	SIZE		LUMBER	DESCR.
A - C	2x4	DRY	No.2	SPF
D - C	2x4	DRY	No.2	SPF
F - A	2x6	DRY	No.2	SPF
F - D	2x6	DRY	No.2	SPF
ALL WEBS EXCEPT	2x3	DRY	No.2	SPF

DRY: SEASONED LUMBER.

DESIGN CONSISTS OF 2 TRUSSES BUILT SEPARATELY THEN FASTENED TOGETHER AS FOLLOWS:

CHORDS	#ROWS	SURFACE SPACING (IN)	LOAD(PLF)
TOP CHORDS : (0.122"X3") SPIRAL NAILS			
A- C	1	12	TOP
C- D	1	12	TOP
F- A	2	12	TOP
BOTTOM CHORDS : (0.122"X3") SPIRAL NAILS			
F- D	2	12	SIDE(0.0)
WEBS : (0.122"X3") SPIRAL NAILS			
2x3	1	6	

NAILS TO BE DRIVEN FROM ONE SIDE ONLY.

GIRDER NAILING ASSUMES NAILED HANGERS ARE FASTENED WITH MIN. 3-0 INCH NAILS.

TOP - COMPONENTS ARE LOADED FROM THE TOP AND MUST BE PLACED ON TOP EDGE OF ALL PLIES FOR THE LOAD TO BE TRANSFERRED TO EACH PLY.

SIDE - PLF SHOWN IS THE EQUIVALENT UDL APPLIED TO ONE SIDE THAT THE CORRESPONDING NAILING PATTERN SHALL BE CAPABLE OF TRANSFERING. REMAINING PLF MUST BE APPLIED ON THE OPPOSITE SIDE OR ON THE TOP.

PLATES (table is in inches)

JT	TYPE	PLATES	W	LEN	Y	X
A	TMVW-p	MT20	4.0	6.0	1.00	3.00
B	TMWW-t	MT20	4.0	4.0	2.00	1.75
C	TMV+p	MT20	3.0	4.0		

LICENSED PROFESSIONAL ENGINEER
10/14/20
H. J. G. ALVES
100009024
PROVINCE OF ONTARIO

Structural component only
DWG# T-2022184 1/2

DIMENSIONS, SUPPORTS AND LOADINGS SPECIFIED BY FABRICATOR TO BE VERIFIED BY BUILDING DESIGNER

BEARINGS

JT	FACTORED GROSS REACTION VERT	HORZ	MAXIMUM FACTORED GROSS REACTION DOWN	HORZ	UPLIFT	INPUT BRG IN-SX	REQRD BRG IN-SX
D	1125	0	1125	0	0	MECHANICAL	
F	476	0	476	0	0	5-8	5-8

A SUITABLE HANGER/MECHANICAL CONNECTION IS REQUIRED AT JOINT D. MINIMUM BEARING LENGTH AT JOINT D = 4-0.

UNFACTORED REACTIONS

JT	1ST LCASE COMBINED	MAX./MIN. COMPONENT REACTIONS SNOW	LIVE	PERM.LIVE	WIND	DEAD	SOIL
D	793	533 0	0 0	0 0	0 0	261 0	0 0
F	336	223 0	0 0	0 0	0 0	113 0	0 0

BEARING MATERIAL TO BE SPF NO.2 OR BETTER AT JOINT(S) F

BRACING

TOP CHORD TO BE SHEATHED OR MAX. PURLIN SPACING = 6.25 FT.
MAX. UNBRACED BOTTOM CHORD LENGTH = 10.00 FT OR RIGID CEILING DIRECTLY APPLIED.

ALL PITCH BREAKS AND PERIMETER CORNER JOINTS MUST BE LATERALLY RESTRAINED.

LOADING

TOTAL LOAD CASES: (4)

CHORDS

MEMB. FR-TO	MAX. FACTORED FORCE (LBS)		FACTORED VERT. LOAD (PLF) FROM	TO	LC1 MAX CSI (LC)	MAX. UNBRAC LENGTH
A- B	-565	0	-91.8	-91.8	0.07 (1)	6.25
B- C	-13	0	-91.8	-91.8	0.06 (1)	6.25
D- C	-105	0	0.0	0.0	0.01 (1)	7.81
F- A	-500	0	0.0	0.0	0.02 (1)	7.81
F- E	0	0	-18.5	-18.5	0.06 (1)	10.00
E- G	0	517	-18.5	-18.5	0.25 (1)	10.00
G- D	0	517	-18.5	-18.5	0.25 (1)	10.00

WEBS

MEMB. FR-TO	MAX. FACTORED FORCE (LBS)		MAX CSI (LC)
E- B	0	325	0.04 (1)
B- D	-651	0	0.08 (1)
A- E	0	535	0.07 (1)

SPECIFIED CONCENTRATED LOADS (LBS)

JT	LOC.	LC1	MAX-	MAX+	FACE	DIR.	TYPE	HEEL	CONN.
G	4-11-4	-671	-671	---	BACK	VERT	TOTAL	---	C1

CONNECTION REQUIREMENTS

1) C1: A SUITABLE HANGER/MECHANICAL CONNECTION IS REQUIRED.

DESIGN CRITERIA

SPECIFIED LOADS:

TOP CH.	LL	=	25.6	PSF
	DL	=	6.0	PSF
BOT CH.	LL	=	0.0	PSF
	DL	=	7.4	PSF
TOTAL LOAD		=	39.0	PSF

SPACING = 24.0 IN. C/C

THIS TRUSS IS DESIGNED FOR RESIDENTIAL OR SMALL BUILDING REQUIREMENTS OF PART 9, NBCC 2010, NBCC 2015

THIS DESIGN COMPLIES WITH:
- PART 9 OF BCBC 2018 , OBC 2012 , ABC 2019
- PART 9 OF OBC 2012 (2019 AMENDMENT)
- CSA 086-09, CSA 086-14
- TPIC 2011, TPIC 2014

(55 % OF 31.3 P.S.F. G.S.L. PLUS 8.4 P.S.F. RAIN LOAD) EQUALS 25.6 P.S.F. SPECIFIED ROOF LIVE LOAD

ALLOWABLE DEFL.(LL)= L/360 (0.20")
CALCULATED VERT. DEFL.(LL) = L/ 999 (0.01")
ALLOWABLE DEFL.(TL)= L/360 (0.20")
CALCULATED VERT. DEFL.(TL) = L/ 999 (0.01")

CSI: TC=0.07/1.00 (A-B:1) , BC=0.25/1.00 (D-E:1) , WB=0.08/1.00 (B-D:1) , SSI=0.21/1.00 (D-E:1)

DOL LUMBER=1.00 NAIL=1.00 LS BEND=1.00 COMP=1.00 SHEAR=1.00 TENS= 1.00

COMPANION LIVE LOAD FACTOR = 1.00

AUTOSOLVE RIGHT HEEL ONLY

TRUSS PLATE MANUFACTURER IS NOT RESPONSIBLE FOR QUALITY CONTROL IN THE TRUSS MANUFACTURING PLANT

NAIL VALUES

PLATE	GRIP(DRY) (PSI) MAX	MIN	SHEAR (PLI) MAX	MIN	SECTION (PLI) MAX	MIN
MT20	618	354	1667	788	1987	1656

PLATE PLACEMENT TOL. = 0.250 inches

PLATE ROTATION TOL. = 5.0 Deg.

JSI GRIP= 0.26 (D) (INPUT = 0.90)
JSI METAL= 0.12 (D) (INPUT = 1.00)

CONTINUED ON PAGE 2

JOB NAME	TRUSS NAME	QUANTITY	PLY	JOB DESC. ROYAL PINE HOMES	DRWG NO.
413426	T15Z3	2	2	TRUSS DESC.	

Tamarack Roof Truss, Burlington

ID:8lTcKsuAqJzVBsZ1WqSCayyOHpK-ZR7AfiZSudqL7x4G1tPxObArwk4eUz5dCKDaevyTX3H

PLATES (table is in inches)

JT	TYPE	PLATES	W	LEN	Y	X
D	BMVW1+p	MT20	4.0	6.0		
E	BMWW-t	MT20	5.0	6.0		
F	BMV1+p	MT20	3.0	6.0		

LICENSED PROFESSIONAL ENGINEER
10/14/20
H. J. G. ALVES
100009024
PROVINCE OF ONTARIO

Structural component only
DWG# T-2022184 2/2

JOB NAME	TRUSS NAME	QUANTITY	PLY	JOB DESC.	DRWG NO.
406514	T20	1	2	ROYAL PINE HOMES TRUSS DESC.	

Tamarack Roof Truss, Burlington

Version 8.330 S May 6 2020 MiTek Industries, Inc. Wed Oct 14 10:59:57 2020 Page 1
ID:8ITcKsuAqJzVBsZ1WqSCayyOHpK-7Rl3xjmlJgU38t7YMRW_GOIPum_MKcM6xzOEVgyTXQG

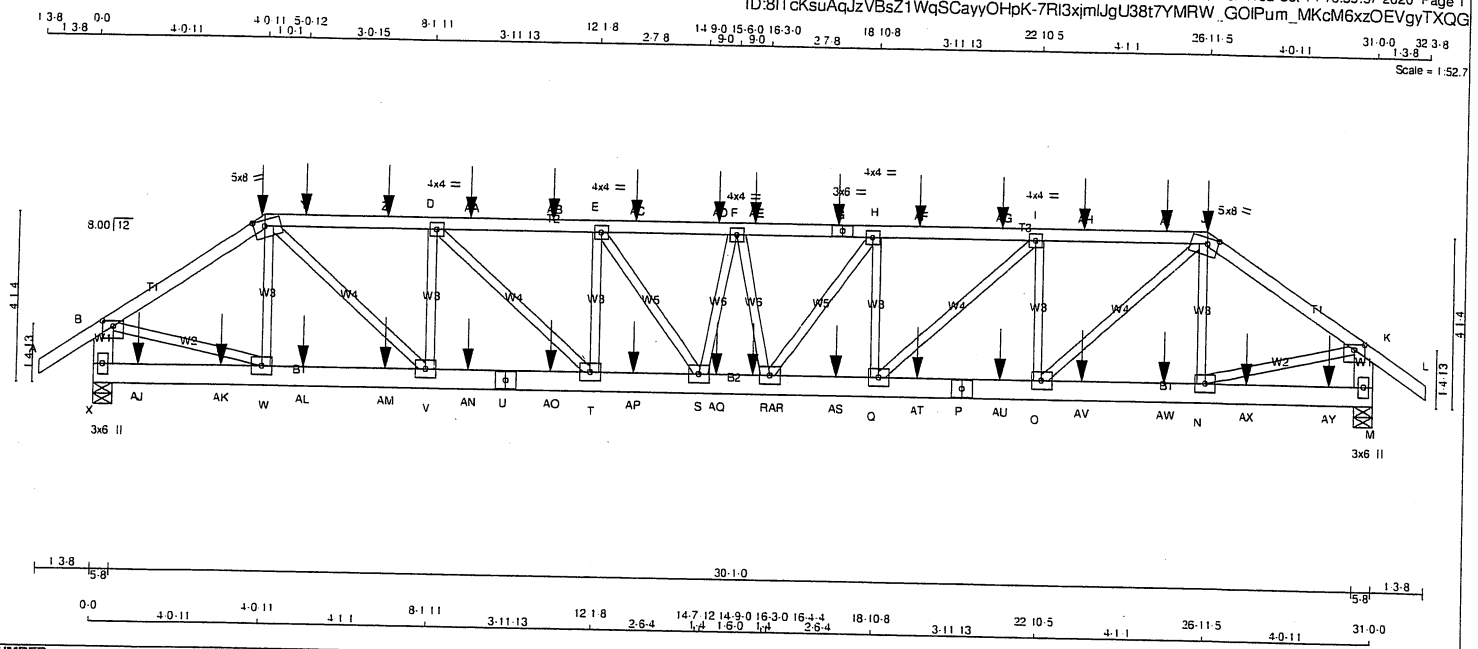

LUMBER

N. L. G. A. RULES

CHORDS	SIZE		LUMBER	DESCR.
A - C	2x4	DRY	No.2	SPF
C - G	2x4	DRY	No.2	SPF
G - J	2x4	DRY	No.2	SPF
J - L	2x4	DRY	No.2	SPF
X - B	2x6	DRY	No.2	SPF
M - K	2x6	DRY	No.2	SPF
X - U	2x6	DRY	No.2	SPF
U - P	2x6	DRY	No.2	SPF
P - M	2x6	DRY	No.2	SPF
ALL WEBS EXCEPT	2x3	DRY	No.2	SPF

DRY: SEASONED LUMBER.

DESIGN CONSISTS OF 2 TRUSSES BUILT SEPARATELY THEN FASTENED TOGETHER AS FOLLOWS:

CHORDS	#ROWS	SURFACE SPACING (IN)	LOAD(PLF)
TOP CHORDS : (0.122"X3") SPIRAL NAILS			
A- C	1	12	SIDE(61.0)
C- G	1	12	SIDE(61.0)
G- J	1	12	SIDE(61.0)
J- L	1	12	SIDE(61.0)
X- B	2	12	TOP
M- K	2	12	TOP
BOTTOM CHORDS : (0.122"X3") SPIRAL NAILS			
X- U	2	12	SIDE(0.0)
U- P	2	12	SIDE(0.0)
P- M	2	12	SIDE(0.0)
WEBS : (0.122"X3") SPIRAL NAILS			
2x3	1	6	

NAILS TO BE DRIVEN FROM ONE SIDE ONLY.

GIRDER NAILING ASSUMES NAILED HANGERS ARE FASTENED WITH MIN. 3-0 INCH NAILS.

TOP - COMPONENTS ARE LOADED FROM THE TOP AND MUST BE PLACED ON TOP EDGE OF ALL PLIES FOR THE LOAD TO BE TRANSFERRED TO EACH PLY.

LICENSED PROFESSIONAL ENGINEER
10/14/20
H. J. G. ALVES
100009024
PROVINCE OF ONTARIO

Structural component only
DWG# T-2022171

DIMENSIONS, SUPPORTS AND LOADINGS SPECIFIED BY FABRICATOR TO BE VERIFIED BY BUILDING DESIGNER

BEARINGS

JT	FACTORED GROSS REACTION VERT	HORZ	MAXIMUM FACTORED GROSS REACTION DOWN	HORZ	UPLIFT	INPUT BRG IN-SX	REQRD BRG IN-SX
X	3011	0	3011	0	0	5-8	5-8
M	3012	0	3012	0	0	5-8	5-8

UNFACTORED REACTIONS

JT	1ST LCASE COMBINED	MAX./MIN. COMPONENT REACTIONS SNOW	LIVE	PERM.LIVE	WIND	DEAD	SOIL
X	2129	1401 0	0 0	0 0	0 0	727 0	0 0
M	2129	1402 0	0 0	0 0	0 0	728 0	0 0

BEARING MATERIAL TO BE SPF NO.2 OR BETTER AT JOINT(S) X, M

BRACING

TOP CHORD TO BE SHEATHED OR MAX. PURLIN SPACING = 3.76 FT.
MAX. UNBRACED BOTTOM CHORD LENGTH = 10.00 FT OR RIGID CEILING DIRECTLY APPLIED.

ALL PITCH BREAKS AND PERIMETER CORNER JOINTS MUST BE LATERALLY RESTRAINED.

LOADING

TOTAL LOAD CASES: (4)

CHORDS

MEMB. FR-TO	MAX. FACTORED FORCE (LBS)		FACTORED VERT. LOAD LC1 (PLF) FROM	TO	MAX CSI (LC)	MAX. UNBRAC LENGTH
A- B	0	35	-91.8	-91.8	0.07 (1)	10.00
B- C	-3497	0	-91.8	-91.8	0.20 (1)	4.83
C- Y	-4805	0	-91.8	-91.8	0.29 (1)	4.14
Y- Z	-4805	0	-91.8	-91.8	0.29 (1)	4.14
Z- D	-4805	0	-91.8	-91.8	0.29 (1)	4.14
D-AA	-5832	0	-91.8	-91.8	0.34 (1)	3.76
AA-AB	-5832	0	-91.8	-91.8	0.34 (1)	3.76
AB- E	-5832	0	-91.8	-91.8	0.34 (1)	3.76
E-AC	-6060	0	-91.8	-91.8	0.25 (1)	3.80
AC-AD	-6060	0	-91.8	-91.8	0.25 (1)	3.80
AD- F	-6060	0	-91.8	-91.8	0.25 (1)	3.80
F-AE	-6060	0	-91.8	-91.8	0.24 (1)	3.80
AE- G	-6060	0	-91.8	-91.8	0.24 (1)	3.80
G- H	-6060	0	-91.8	-91.8	0.24 (1)	3.80
H-AF	-5834	0	-91.8	-91.8	0.34 (1)	3.76
AF-AG	-5834	0	-91.8	-91.8	0.34 (1)	3.76
AG- I	-5834	0	-91.8	-91.8	0.34 (1)	3.76
I-AH	-4807	0	-91.8	-91.8	0.29 (1)	4.14
AH-AI	-4807	0	-91.8	-91.8	0.29 (1)	4.14
AI- J	-4807	0	-91.8	-91.8	0.29 (1)	4.14
J- K	-3498	0	-91.8	-91.8	0.20 (1)	4.83
K- L	0	35	-91.8	-91.8	0.07 (1)	10.00
X- B	-2955	0	0.0	0.0	0.11 (1)	7.81
M- K	-2956	0	0.0	0.0	0.11 (1)	7.81
X-AJ	0	0	-18.5	-18.5	0.03 (4)	10.00
AJ-AK	0	0	-18.5	-18.5	0.03 (4)	10.00
AK- W	0	0	-18.5	-18.5	0.03 (4)	10.00
W-AL	0	2890	-18.5	-18.5	0.21 (1)	10.00
AL-AM	0	2890	-18.5	-18.5	0.21 (1)	10.00
AM- V	0	2890	-18.5	-18.5	0.21 (1)	10.00
V-AN	0	4806	-18.5	-18.5	0.35 (1)	10.00
AN- U	0	4806	-18.5	-18.5	0.35 (1)	10.00
U-AO	0	4806	-18.5	-18.5	0.35 (1)	10.00
AO- T	0	4806	-18.5	-18.5	0.35 (1)	10.00
T-AP	0	5832	-18.5	-18.5	0.42 (1)	10.00
AP- S	0	5832	-18.5	-18.5	0.42 (1)	10.00
S-AQ	0	6118	-18.5	-18.5	0.45 (1)	10.00
AQ-AR	0	6118	-18.5	-18.5	0.45 (1)	10.00
AR- R	0	6118	-18.5	-18.5	0.45 (1)	10.00
R-AS	0	5834	-18.5	-18.5	0.42 (1)	10.00
AS- Q	0	5834	-18.5	-18.5	0.42 (1)	10.00

WEBS

MEMB. FR-TO	MAX. FACTORED FORCE (LBS)		MAX CSI (LC)
W- C	-540	0	0.07 (1)
N- J	-541	0	0.07 (1)
B- W	0	2987	0.37 (1)
N- K	0	2988	0.37 (1)
E- S	0	399	0.05 (1)
R- H	0	397	0.05 (1)
T- E	-846	0	0.11 (1)
Q- H	-846	0	0.11 (1)
S- F	-280	0	0.04 (1)
F- R	-278	0	0.04 (1)
D- T	0	1407	0.17 (1)
C- V	0	2589	0.32 (1)
V- D	-1626	0	0.21 (1)
O- J	0	2590	0.32 (1)
Q- I	0	1407	0.17 (1)
O- I	-1626	0	0.21 (1)

DESIGN CRITERIA

*** SPECIAL LOADS ANALYSIS ***
GEOMETRY AND/OR BASIC LOADS CHANGED BY USER.
LOADS WERE DERIVED FROM USER INPUT
NO FURTHER MODIFICATIONS WERE MADE

SPECIFIED LOADS:

TOP CH.	LL	=	25.6	PSF
	DL	=	6.0	PSF
BOT CH.	LL	=	0.0	PSF
	DL	=	7.4	PSF
TOTAL LOAD		=	39.0	PSF

SPACING = 24.0 IN. C/C

LOADING IN FLAT SECTION BASED ON A SLOPE OF 6.00/12

*** NON STANDARD GIRDER ***
ADDT'L USER-DEFINED LOADS APPLIED TO ALL LOAD CASES.

THIS TRUSS IS DESIGNED FOR RESIDENTIAL OR SMALL BUILDING REQUIREMENTS OF PART 9, NBCC 2010, NBCC 2015

THIS DESIGN COMPLIES WITH:
- PART 9 OF BCBC 2018 , OBC 2012 . ABC 2019
- PART 9 OF OBC 2012 (2019 AMENDMENT)
- CSA 086-09, CSA 086-14
- TPIC 2011, TPIC 2014

(55 % OF 31.3 P.S.F. G.S.L. PLUS 8.4 P.S.F. RAIN LOAD) EQUALS 25.6 P.S.F. SPECIFIED ROOF LIVE LOAD

ALLOWABLE DEFL.(LL)= L/360 (1.03")
CALCULATED VERT. DEFL.(LL) = L/999 (0.15")
ALLOWABLE DEFL.(TL)= L/360 (1.03")
CALCULATED VERT. DEFL.(TL) = L/999 (0.28")

CSI: TC=0.34/1.00 (H-I:1) . BC=0.45/1.00 (R-S:1) . WB=0.37/1.00 (K-N:1) . SSI=0.15/1.00 (I-J:1)

DOL LUMBER=1.00 NAIL=1.00 LS BEND=1.00 COMP=1.00 SHEAR=1.00 TENS= 1.00

COMPANION LIVE LOAD FACTOR = 1.00

AUTOSOLVE HEELS OFF

TRUSS PLATE MANUFACTURER IS NOT RESPONSIBLE FOR QUALITY CONTROL IN THE TRUSS MANUFACTURING PLANT.

NAIL VALUES

PLATE	GRIP(DRY) (PSI) MAX	MIN	SHEAR (PLI) MAX	MIN	SECTION (PLI) MAX	MIN
MT20	618	354	1667	788	1987	1656

PLATE PLACEMENT TOL. = 0.250 inches

PLATE ROTATION TOL. = 5.0 Deg.

JSI GRIP= 0.85 (C) (INPUT = 0.90)
JSI METAL= 0.46 (P) (INPUT = 1.00)

CONTINUED ON PAGE 2

JOB NAME	TRUSS NAME	QUANTITY	PLY	JOB DESC.	DRWG NO.
406514	T20	1	2	ROYAL PINE HOMES TRUSS DESC.	

Tamarack Roof Truss, Burlington

ID:8ITcKsuAqJzVBsZ1WqSCayyOHpK-7RI3xjmIJqU38t7YMRW_GOIPum_MKcM6xzOEVgyTXQG

PLATES (table is in inches)

JT	TYPE	PLATES	W	LEN	Y	X
B	TMVW-p	MT20	5.0	6.0	1.50	3.00
C	TTWW-m	MT20	5.0	8.0	1.75	3.25
D, E, F, H, I						
D	TMWW-t	MT20	4.0	4.0		
G	TS-t	MT20	3.0	6.0		
J	TTWW-m	MT20	5.0	8.0	1.75	3.25
K	TMVW-p	MT20	5.0	6.0	1.50	3.00
M	BMV1+p	MT20	3.0	6.0		
N, O, Q, R, S, T, V, W						
N	BMWW-t	MT20	5.0	6.0		
P	BS-t	MT20	5.0	6.0		
U	BS-t	MT20	5.0	6.0		
X	BMV1+p	MT20	3.0	6.0		

LOADING

TOTAL LOAD CASES: (4)

CHORDS

MEMB. FR-TO	MAX. FACTORED FORCE (LBS)	FACTORED VERT. LOAD LC1 (PLF) FROM	TO	MAX CSI (LC)	MAX. UNBRAC LENGTH
Q-AT	0 / 4807	-18.5	-18.5	0.35 (1)	10.00
AT- P	0 / 4807	-18.5	-18.5	0.35 (1)	10.00
P-AU	0 / 4807	-18.5	-18.5	0.35 (1)	10.00
AU- O	0 / 4807	-18.5	-18.5	0.35 (1)	10.00
O-AV	0 / 2890	-18.5	-18.5	0.21 (1)	10.00
AV-AW	0 / 2890	-18.5	-18.5	0.21 (1)	10.00
AW- N	0 / 2890	-18.5	-18.5	0.21 (1)	10.00
N-AX	0 / 0	-18.5	-18.5	0.03 (4)	10.00
AX-AY	0 / 0	-18.5	-18.5	0.03 (4)	10.00
AY- M	0 / 0	-18.5	-18.5	0.03 (4)	10.00

WEBS

MEMB. FR-TO	MAX. FACTORED FORCE (LBS)	MAX CSI (LC)

SPECIFIED CONCENTRATED LOADS (LBS)

JT	LOC.	LC1	MAX-	MAX+	FACE	DIR.	TYPE	HEEL	CONN.
C	4-0-11	-40	-40	---	FRONT	VERT	DEAD	---	C1
C	4-0-11	-169	-169	---	FRONT	VERT	SNOW	---	C1
G	17-11-4	-76	-76	---	FRONT	VERT	TOTAL	---	C1
J	26-11-5	-40	-40	---	FRONT	VERT	DEAD	---	C1
J	26-11-5	-169	-169	---	FRONT	VERT	SNOW	---	C1
Y	5-0-12	-76	-76	---	FRONT	VERT	TOTAL	---	C1
Z	7-0-12	-76	-76	---	FRONT	VERT	TOTAL	---	C1
AA	9-0-12	-76	-76	---	FRONT	VERT	TOTAL	---	C1
AB	11-0-12	-76	-76	---	FRONT	VERT	TOTAL	---	C1
AC	13-0-12	-76	-76	---	FRONT	VERT	TOTAL	---	C1
AD	15-0-12	-76	-76	---	FRONT	VERT	TOTAL	---	C1
AE	15-11-4	-76	-76	---	FRONT	VERT	TOTAL	---	C1
AF	19-11-4	-76	-76	---	FRONT	VERT	TOTAL	---	C1
AG	21-11-4	-76	-76	---	FRONT	VERT	TOTAL	---	C1
AH	23-11-4	-76	-76	---	FRONT	VERT	TOTAL	---	C1
AI	25-11-4	-76	-76	---	FRONT	VERT	TOTAL	---	C1
AJ	1-0-12	-21	-21	---	FRONT	VERT	TOTAL	---	C1
AK	3-0-12	-21	-21	---	FRONT	VERT	TOTAL	---	C1
AL	5-0-12	-21	-21	---	FRONT	VERT	TOTAL	---	C1
AM	7-0-12	-21	-21	---	FRONT	VERT	TOTAL	---	C1
AN	9-0-12	-21	-21	---	FRONT	VERT	TOTAL	---	C1
AO	11-0-12	-21	-21	---	FRONT	VERT	TOTAL	---	C1
AP	13-0-12	-21	-21	---	FRONT	VERT	TOTAL	---	C1
AQ	15-0-12	-21	-21	---	FRONT	VERT	TOTAL	---	C1
AR	15-11-4	-21	-21	---	FRONT	VERT	TOTAL	---	C1
AS	17-11-4	-21	-21	---	FRONT	VERT	TOTAL	---	C1
AT	19-11-4	-21	-21	---	FRONT	VERT	TOTAL	---	C1
AU	21-11-4	-21	-21	---	FRONT	VERT	TOTAL	---	C1
AV	23-11-4	-21	-21	---	FRONT	VERT	TOTAL	---	C1
AW	25-11-4	-21	-21	---	FRONT	VERT	TOTAL	---	C1
AX	27-11-4	-21	-21	---	FRONT	VERT	TOTAL	---	C1
AY	29-11-4	-21	-21	---	FRONT	VERT	TOTAL	---	C1

CONNECTION REQUIREMENTS

1) C1: A SUITABLE HANGER/MECHANICAL CONNECTION IS REQUIRED.

LICENSED PROFESSIONAL ENGINEER
10/14/20
H. J. G. ALVES
100009024
PROVINCE OF ONTARIO

Structural component only
DWG# T-2022171 3/2

JOB NAME	TRUSS NAME	QUANTITY	PLY	JOB DESC. ROYAL PINE HOMES	DRWG NO.
406514	T20Z	1	2	TRUSS DESC.	

Tamarack Roof Truss, Burlington

Version 8.330 S May 6 2020 MiTek Industries, Inc. Wed Oct 14 10:59:58 2020 Page 1
ID:8ITcKsuAqJzVBsZ1WqSCayyOHpK-beJS83nN4zdwm1ikw81DpbHXKAEQ3?aFAd7n26yTXQF

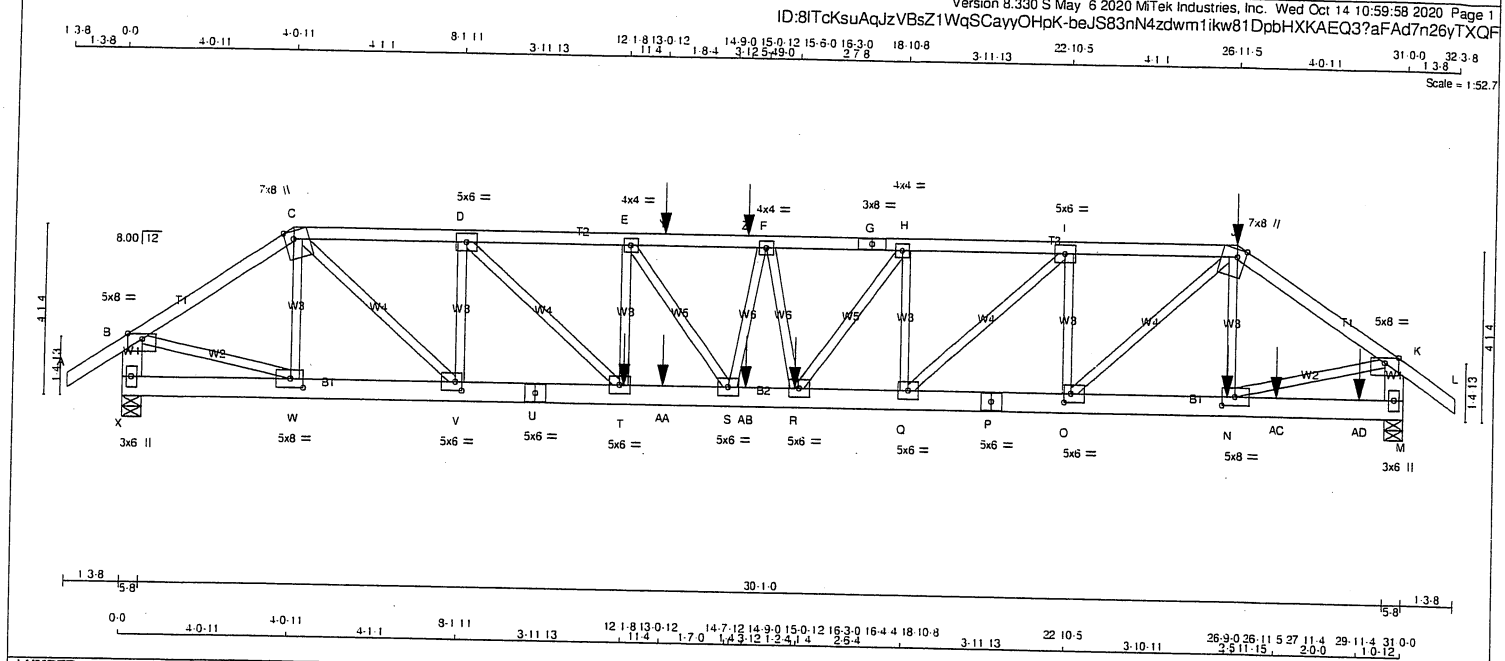

LUMBER

N. L. G. A. RULES

CHORDS	SIZE		LUMBER	DESCR.
A - C	2x4	DRY	No.2	SPF
C - G	2x4	DRY	No.2	SPF
G - J	2x4	DRY	No.2	SPF
J - L	2x4	DRY	No.2	SPF
X - B	2x6	DRY	No.2	SPF
M - K	2x6	DRY	No.2	SPF
X - U	2x6	DRY	No.2	SPF
U - P	2x6	DRY	No.2	SPF
P - M	2x6	DRY	No.2	SPF
ALL WEBS EXCEPT	2x3	DRY	No.2	SPF

DRY: SEASONED LUMBER.

DESIGN CONSISTS OF 2 TRUSSES BUILT SEPARATELY THEN FASTENED TOGETHER AS FOLLOWS:

CHORDS	#ROWS	SURFACE SPACING (IN)	LOAD(PLF)
TOP CHORDS : (0.122"X3") SPIRAL NAILS			
A- C	1	12	TOP
C- G	1	12	SIDE(0.0)
G- J	1	12	SIDE(61.0)
J- L	1	12	SIDE(61.0)
X- B	2	12	TOP
M- K	2	12	TOP
BOTTOM CHORDS : (0.122"X3") SPIRAL NAILS			
X- U	2	12	TOP
U- P	2	12	SIDE(183.1)
P- M	2	12	SIDE(183.1)
WEBS : (0.122"X3") SPIRAL NAILS			
N- J	1	6	SIDE(214.2)
E- T	1	6	SIDE(138.8)
2x3	1	6	

NAILS TO BE DRIVEN FROM ONE SIDE ONLY.

GIRDER NAILING ASSUMES NAILED HANGERS ARE FASTENED WITH MIN. 3-0 INCH NAILS.

TOP - COMPONENTS ARE LOADED FROM THE TOP AND MUST BE PLACED ON TOP EDGE OF ALL PLIES FOR THE LOAD TO BE TRANSFERRED TO EACH PLY.

LICENSED PROFESSIONAL ENGINEER
10/14/20
H. J. G. ALVES
100009024
PROVINCE OF ONTARIO

Structural component only
DWG# T-2022172

DIMENSIONS, SUPPORTS AND LOADINGS SPECIFIED BY FABRICATOR TO BE VERIFIED BY BUILDING DESIGNER

BEARINGS

JT	FACTORED GROSS REACTION VERT	HORZ	MAXIMUM FACTORED GROSS REACTION DOWN	HORZ	UPLIFT	INPUT BRG IN-SX	REQRD BRG IN-SX
X	3706	0	3706	0	0	5-8	5-8
M	4876	0	4876	0	0	5-8	5-8

UNFACTORED REACTIONS

JT	1ST LCASE COMBINED	MAX./MIN. COMPONENT REACTIONS SNOW	LIVE	PERM.LIVE	WIND	DEAD	SOIL
X	2611	1766 0	0 0	0 0	0 0	845 0	0 0
M	3434	2334 0	0 0	0 0	0 0	1101 0	0 0

BEARING MATERIAL TO BE SPF NO.2 OR BETTER AT JOINT(S) X, M

BRACING

TOP CHORD TO BE SHEATHED OR MAX. PURLIN SPACING = 2.79 FT.
MAX. UNBRACED BOTTOM CHORD LENGTH = 10.00 FT OR RIGID CEILING DIRECTLY APPLIED.

ALL PITCH BREAKS AND PERIMETER CORNER JOINTS MUST BE LATERALLY RESTRAINED.

LOADING

TOTAL LOAD CASES: (4)

CHORDS

MEMB. FR-TO	MAX. FACTORED FORCE (LBS)	FACTORED VERT. LOAD (PLF) FROM	TO	LC1 MAX CSI (LC)	MAX. UNBRAC LENGTH
A- B	0 35	-91.8	-91.8	0.07 (1)	10.00
B- C	-4448 0	-91.8	-91.8	0.24 (1)	4.35
C- D	-6859 0	-91.8	-91.8	0.30 (1)	3.55
D- E	-9429 0	-91.8	-91.8	0.46 (1)	2.92
E- Y	-9954 0	-91.8	-91.8	0.49 (1)	2.79
Y- Z	-9954 0	-91.8	-91.8	0.49 (1)	2.79
Z- F	-9954 0	-91.8	-91.8	0.49 (1)	2.79
F- G	-10076 0	-91.8	-91.8	0.45 (1)	2.82
G- H	-10076 0	-91.8	-91.8	0.45 (1)	2.82
H- I	-9200 0	-91.8	-91.8	0.46 (1)	2.96
I- J	-7366 0	-91.8	-91.8	0.33 (1)	3.41
J- K	-5931 0	-91.8	-91.8	0.30 (1)	3.78
K- L	0 35	-91.8	-91.8	0.07 (1)	10.00
X- B	-3674 0	0.0	0.0	0.13 (1)	7.34
M- K	-4795 0	0.0	0.0	0.17 (1)	6.61
X- W	0 0	-18.5	-18.5	0.02 (4)	10.00
W- V	0 3673	-18.5	-18.5	0.26 (1)	10.00
V- U	0 6859	-18.5	-18.5	0.52 (1)	10.00
U- T	0 6859	-18.5	-18.5	0.52 (1)	10.00
T-AA	0 9429	-18.5	-18.5	0.69 (1)	10.00
AA- S	0 9429	-18.5	-18.5	0.69 (1)	10.00
S-AB	0 10062	-18.5	-18.5	0.78 (1)	10.00
AB- R	0 10062	-18.5	-18.5	0.78 (1)	10.00
R- Q	0 9200	-18.5	-18.5	0.72 (1)	10.00
Q- P	0 7366	-18.5	-18.5	0.52 (1)	10.00
P- O	0 7366	-18.5	-18.5	0.52 (1)	10.00
O- N	0 4939	-18.5	-18.5	0.36 (1)	10.00
N-AC	0 0	-18.5	-18.5	0.04 (1)	10.00
AC-AD	0 0	-18.5	-18.5	0.04 (1)	10.00
AD- M	0 0	-18.5	-18.5	0.04 (1)	10.00

WEBS

MEMB. FR-TO	MAX. FACTORED FORCE (LBS)	MAX CSI (LC)
W- C	-787 0	0.10 (1)
N- J	0 423	0.05 (1)
B- W	0 3799	0.47 (1)
N- K	0 5066	0.63 (1)
E- S	0 922	0.11 (1)
R- H	0 1539	0.19 (1)
T- E	-1179 0	0.15 (1)
Q- H	-1571 0	0.20 (1)
S- F	-521 0	0.07 (1)
F- R	0 67	0.01 (1)
D- T	0 3521	0.44 (1)
C- V	0 4305	0.53 (1)
V- D	-2794 0	0.35 (1)
O- J	0 3280	0.41 (1)
Q- I	0 2513	0.31 (1)
O- I	-2117 0	0.27 (1)

SPECIFIED CONCENTRATED LOADS (LBS)

JT	LOC.	LC1	MAX-	MAX+	FACE	DIR.	TYPE	HEEL	CONN.
J	26-11-5	-40	-40	---	FRONT	VERT	DEAD	---	C1
J	26-11-5	-171	-171	---	FRONT	VERT	SNOW	---	C1
N	26-9-0	-1070	-1070	---	BACK	VERT	TOTAL	---	C1
R	16-3-0	-1070	-1070	---	BACK	VERT	TOTAL	---	C1
T	12-1-8	-868	-868	---	BACK	VERT	TOTAL	---	C1
Y	13-0-12	-76	-76	---	BACK	VERT	TOTAL	---	C1
Z	15-0-12	-76	-76	---	BACK	VERT	TOTAL	---	C1
AA	13-0-12	-21	-21	---	BACK	VERT	TOTAL	---	C1

TOTAL WEIGHT = 2 X 151 = 302 lb [M]

DESIGN CRITERIA

*** SPECIAL LOADS ANALYSIS ***
GEOMETRY AND/OR BASIC LOADS CHANGED BY USER.
LOADS WERE DERIVED FROM USER INPUT
NO FURTHER MODIFICATIONS WERE MADE

SPECIFIED LOADS:

TOP CH.	LL	=	25.6	PSF
	DL	=	6.0	PSF
BOT CH.	LL	=	0.0	PSF
	DL	=	7.4	PSF
TOTAL LOAD		=	39.0	PSF

SPACING = 24.0 IN. C/C

LOADING IN FLAT SECTION BASED ON A SLOPE OF 6.00/12

*** NON STANDARD GIRDER ***
ADDT'L USER-DEFINED LOADS APPLIED TO ALL LOAD CASES.

THIS TRUSS IS DESIGNED FOR RESIDENTIAL OR SMALL BUILDING REQUIREMENTS OF PART 9, NBCC 2010, NBCC 2015

THIS DESIGN COMPLIES WITH:
- PART 9 OF BCBC 2018 , OBC 2012 , ABC 2019
- PART 9 OF OBC 2012 (2019 AMENDMENT)
- CSA 086-09, CSA 086-14
- TPIC 2011, TPIC 2014

(55 % OF 31.3 P.S.F. G.S.L. PLUS 8.4 P.S.F. RAIN LOAD) EQUALS 25.6 P.S.F. SPECIFIED ROOF LIVE LOAD

ALLOWABLE DEFL.(LL)= L/360 (1.03")
CALCULATED VERT. DEFL.(LL) = L/ 999 (0.24")
ALLOWABLE DEFL.(TL)= L/360 (1.03")
CALCULATED VERT. DEFL.(TL) = L/ 845 (0.44")

CSI: TC=0.49/1.00 (E-F:1) , BC=0.78/1.00 (R-S:1) , WB=0.63/1.00 (K-N:1) , SSI=0.12/1.00 (E-F:1)

DOL LUMBER=1.00 NAIL=1.00 LS BEND=1.00 COMP=1.00 SHEAR=1.00 TENS= 1.00

COMPANION LIVE LOAD FACTOR = 1.00

AUTOSOLVE HEELS OFF

TRUSS PLATE MANUFACTURER IS NOT RESPONSIBLE FOR QUALITY CONTROL IN THE TRUSS MANUFACTURING PLANT .

NAIL VALUES

PLATE	GRIP(DRY) (PSI) MAX	MIN	SHEAR (PLI) MAX	MIN	SECTION (PLI) MAX	MIN
MT20	618	354	1667	788	1987	1656

PLATE PLACEMENT TOL. = 0.250 inches

PLATE ROTATION TOL. = 5.0 Deg.

JSI GRIP= 0.90 (V) (INPUT = 0.90)
JSI METAL= 0.67 (P) (INPUT = 1.00)

CONTINUED ON PAGE 2

JOB NAME	TRUSS NAME	QUANTITY	PLY	JOB DESC. ROYAL PINE HOMES	DRWG NO.
406514	T20Z	1	2	TRUSS DESC.	

Tamarack Roof Truss, Burlington

ID:8ITcKsuAqJzVBsZ1WqSCayyOHpK-beJS83nN4zdwm1ikw81DpbHXKAEQ3?aFAd7n26yTXQF

PLATES (table is in inches)

JT	TYPE	PLATES	W	LEN	Y	X
B	TMVW-p	MT20	5.0	8.0	Edge	
C	TTWW+m	MT20	7.0	8.0	Edge	2.50
D	TMWW-t	MT20	5.0	6.0		
E, F, H						
E	TMWW-t	MT20	4.0	4.0		
G	TS-t	MT20	3.0	8.0		
I	TMWW-t	MT20	5.0	6.0		
J	TTWW+m	MT20	7.0	8.0	Edge	2.50
K	TMVW-p	MT20	5.0	8.0	Edge	
M	BMV1+p	MT20	3.0	6.0		
N	BMWW-t	MT20	5.0	8.0	2.50	3.75
O	BMWW-t	MT20	5.0	6.0	2.50	2.00
P	BS-t	MT20	5.0	6.0		
Q, R, S, T						
Q	BMWW-t	MT20	5.0	6.0		
U	BS-t	MT20	5.0	6.0		
V	BMWW-t	MT20	5.0	6.0	2.50	2.00
W	BMWW-t	MT20	5.0	8.0	2.50	3.75
X	BMV1+p	MT20	3.0	6.0		

Edge - INDICATES REFERENCE CORNER OF PLATE TOUCHES EDGE OF CHORD.

SPECIFIED CONCENTRATED LOADS (LBS)

JT	LOC.	LC1	MAX-	MAX+	FACE	DIR.	TYPE	HEEL	CONN.
AB	15-0-12	-21	-21	---	BACK	VERT	TOTAL	---	C1
AC	27-11-4	-21	-21	---	BACK	VERT	TOTAL	---	C1
AD	29-11-4	-21	-21	---	BACK	VERT	TOTAL	---	C1

CONNECTION REQUIREMENTS

1) **C1:** A SUITABLE HANGER/MECHANICAL CONNECTION IS REQUIRED.

LICENSED PROFESSIONAL ENGINEER
10/14/20
H. J. G. ALVES
100009024
PROVINCE OF ONTARIO

Structural component only
DWG# T-2022172 2/2

JOB NAME	TRUSS NAME	QUANTITY	PLY	JOB DESC.	DRWG NO.
413426	T20Z2	1	2	ROYAL PINE HOMES TRUSS DESC.	

Tamarack Roof Truss, Burlington

Version 8.330 S May 6 2020 MiTek Industries, Inc. Wed Oct 14 11:24:29 2020 Page 1

ID:8ITcKsuAqJzVBsZ1WqSCayyOHpK-1dhYt2a5fxyCl5fSbawAxoixk8lpDJgnQ_z7ALyTX3G

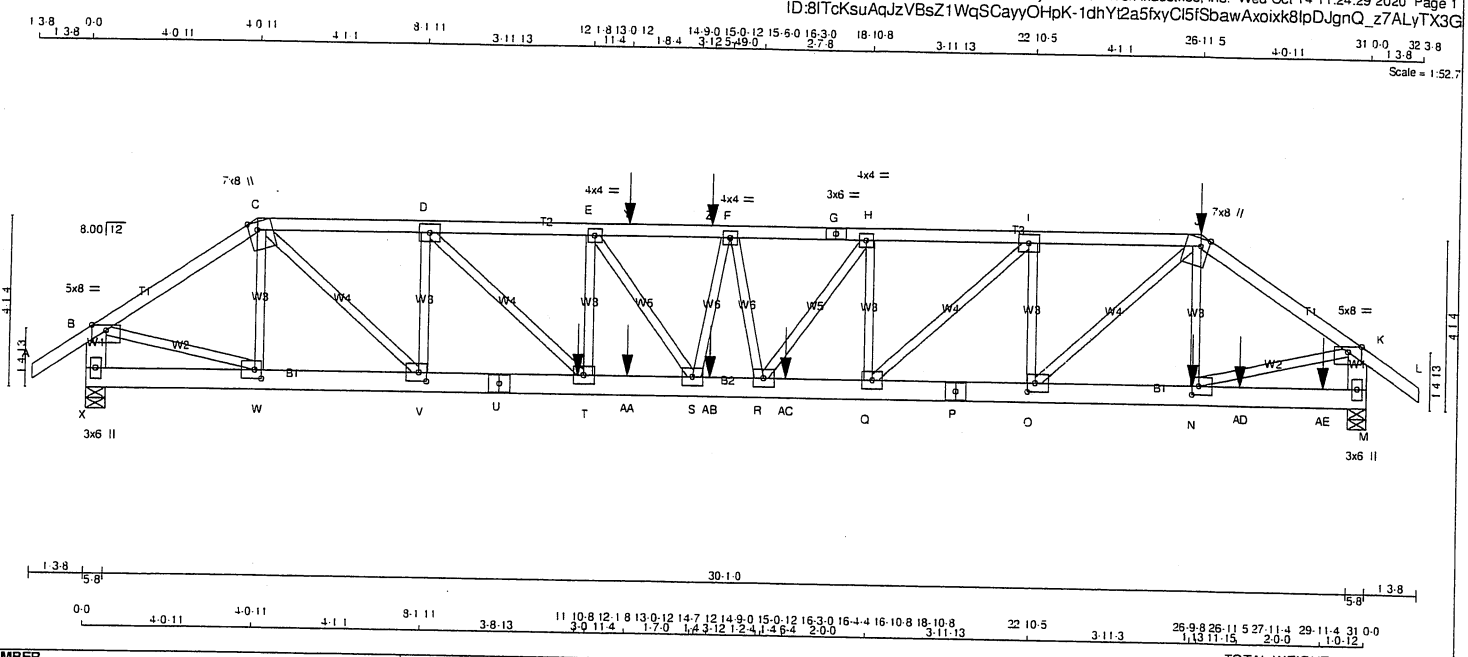

LUMBER

N. L. G. A. RULES

CHORDS	SIZE		LUMBER	DESCR.
A - C	2x4	DRY	No.2	SPF
C - G	2x4	DRY	No.2	SPF
G - J	2x4	DRY	No.2	SPF
J - L	2x4	DRY	No.2	SPF
X - B	2x6	DRY	No.2	SPF
M - K	2x6	DRY	No.2	SPF
X - U	2x6	DRY	No.2	SPF
U - P	2x6	DRY	No.2	SPF
P - M	2x6	DRY	No.2	SPF
ALL WEBS EXCEPT	2x3	DRY	No.2	SPF

DRY: SEASONED LUMBER.

DESIGN CONSISTS OF 2 TRUSSES BUILT SEPARATELY THEN FASTENED TOGETHER AS FOLLOWS:

CHORDS	#ROWS	SURFACE SPACING (IN)	LOAD(PLF)
TOP CHORDS : (0.122"X3") SPIRAL NAILS			
A- C	1	12	TOP
C- G	1	12	SIDE(0.0)
G- J	1	12	SIDE(61.0)
J- L	1	12	SIDE(61.0)
X- B	2	12	TOP
M- K	2	12	TOP
BOTTOM CHORDS : (0.122"X3") SPIRAL NAILS			
X- U	2	12	TOP
U- P	2	12	SIDE(183.1)
P- M	2	12	SIDE(183.1)
WEBS : (0.122"X3") SPIRAL NAILS			
N- J	1	6	SIDE(105.5)
E- T	1	6	SIDE(224.9)
2x3	1	6	

NAILS TO BE DRIVEN FROM ONE SIDE ONLY.

GIRDER NAILING ASSUMES NAILED HANGERS ARE FASTENED WITH MIN. 3-0 INCH NAILS.

TOP - COMPONENTS ARE LOADED FROM THE TOP AND MUST BE PLACED ON TOP EDGE OF ALL PLIES FOR THE LOAD TO BE TRANSFERRED TO EACH PLY.

LICENSED PROFESSIONAL ENGINEER
10/14/20
H. J. G. ALVES
100009024
PROVINCE OF ONTARIO

Structural component only
DWG# T-2022185

DIMENSIONS, SUPPORTS AND LOADINGS SPECIFIED BY FABRICATOR TO BE VERIFIED BY BUILDING DESIGNER

BEARINGS

JT	FACTORED GROSS REACTION VERT	HORZ	MAXIMUM FACTORED GROSS REACTION DOWN	HORZ	UPLIFT	INPUT BRG IN-SX	REQRD BRG IN-SX
X	3633	0	3633	0	0	5-8	5-8
M	4446	0	4446	0	0	5-8	5-8

UNFACTORED REACTIONS

JT	1ST LCASE COMBINED	MAX..MIN. COMPONENT REACTIONS SNOW	LIVE	PERM.LIVE	WIND	DEAD	SOIL
X	2562	1720 0	0 0	0 0	0 0	842 0	0 0
M	3135	2110 0	0 0	0 0	0 0	1025 0	0 0

BEARING MATERIAL TO BE SPF NO.2 OR BETTER AT JOINT(S) X, M

BRACING

TOP CHORD TO BE SHEATHED OR MAX. PURLIN SPACING = 2.91 FT.
MAX. UNBRACED BOTTOM CHORD LENGTH = 10.00 FT OR RIGID CEILING DIRECTLY APPLIED.

ALL PITCH BREAKS AND PERIMETER CORNER JOINTS MUST BE LATERALLY RESTRAINED.

LOADING

TOTAL LOAD CASES: (4)

CHORDS

MEMB. FR-TO	MAX. FACTORED FORCE (LBS)		FACTORED VERT. LOAD (PLF) FROM	TO	LC1 MAX CSI (LC)	MAX. UNBRAC LENGTH
A- B	0	35	-91.8	-91.8	0.07 (1)	10.00
B- C	-4351	0	-91.8	-91.8	0.23 (1)	4.39
C- D	-6701	0	-91.8	-91.8	0.29 (1)	3.59
D- E	-9186	0	-91.8	-91.8	0.45 (1)	2.97
E- Y	-9431	0	-91.8	-91.8	0.45 (1)	2.91
Y- Z	-9431	0	-91.8	-91.8	0.45 (1)	2.91
Z- F	-9431	0	-91.8	-91.8	0.45 (1)	2.91
F- G	-9474	0	-91.8	-91.8	0.41 (1)	2.95
G- H	-9474	0	-91.8	-91.8	0.41 (1)	2.95
H- I	-8709	0	-91.8	-91.8	0.42 (1)	3.07
I- J	-6869	0	-91.8	-91.8	0.31 (1)	3.55
J- K	-5372	0	-91.8	-91.8	0.28 (1)	3.98
K- L	0	35	-91.8	-91.8	0.07 (1)	10.00
X- B	-3601	0	0.0	0.0	0.13 (1)	7.40
M- K	-4373	0	0.0	0.0	0.16 (1)	6.87
X- W	0	0	-18.5	-18.5	0.02 (4)	10.00
W- V	0	3592	-18.5	-18.5	0.25 (1)	10.00
V- U	0	6701	-18.5	-18.5	0.52 (1)	10.00
U- T	0	6701	-18.5	-18.5	0.52 (1)	10.00
T-AA	0	9186	-18.5	-18.5	0.68 (1)	10.00
AA- S	0	9186	-18.5	-18.5	0.68 (1)	10.00
S-AB	0	9500	-18.5	-18.5	0.67 (1)	10.00
AB- R	0	9500	-18.5	-18.5	0.67 (1)	10.00
R-AC	0	8709	-18.5	-18.5	0.76 (1)	10.00
AC- Q	0	8709	-18.5	-18.5	0.76 (1)	10.00
Q- P	0	6869	-18.5	-18.5	0.48 (1)	10.00
P- O	0	6869	-18.5	-18.5	0.48 (1)	10.00
O- N	0	4466	-18.5	-18.5	0.32 (1)	10.00
N-AD	0	0	-18.5	-18.5	0.04 (4)	10.00
AD-AE	0	0	-18.5	-18.5	0.04 (4)	10.00
AE- M	0	0	-18.5	-18.5	0.04 (4)	10.00

WEBS

MEMB. FR-TO	MAX. FACTORED FORCE (LBS)		MAX CSI (LC)
W- C	-770	0	0.10 (1)
N- J	0	137	0.02 (4)
B- W	0	3716	0.46 (1)
N- K	0	4589	0.57 (1)
E- S	0	430	0.05 (1)
R- H	0	1344	0.17 (1)
T- E	-771	0	0.10 (1)
Q- H	-1408	0	0.18 (1)
S- F	-331	0	0.04 (1)
F- R	-128	0	0.02 (1)
D- T	0	3405	0.42 (1)
C- V	0	4200	0.52 (1)
V- D	-2716	0	0.34 (1)
O- J	0	3246	0.40 (1)
Q- I	0	2521	0.31 (1)
O- I	-2125	0	0.27 (1)

SPECIFIED CONCENTRATED LOADS (LBS)

JT	LOC.	LC1	MAX-	MAX+	FACE	DIR.	TYPE	HEEL	CONN.
J	26-11-5	-40	-40	---	FRONT	VERT	DEAD	---	C1
J	26-11-5	-171	-171	---	FRONT	VERT	SNOW	---	C1
N	26-9-8	-778	-778	---	BACK	VERT	TOTAL	---	C1
T	11-10-8	-1102	-1102	---	BACK	VERT	TOTAL	---	C1
Y	13-0-12	-76	-76	---	BACK	VERT	TOTAL	---	C1
Z	15-0-12	-76	-76	---	BACK	VERT	TOTAL	---	C1
AA	13-0-12	-21	-21	---	BACK	VERT	TOTAL	---	C1

TOTAL WEIGHT = 2 X 151 = 302 lb [M]

DESIGN CRITERIA

*** SPECIAL LOADS ANALYSIS ***
GEOMETRY AND/OR BASIC LOADS CHANGED BY USER.
LOADS WERE DERIVED FROM USER INPUT
NO FURTHER MODIFICATIONS WERE MADE

SPECIFIED LOADS:

TOP CH.	LL	=	25.6	PSF
	DL	=	6.0	PSF
BOT CH.	LL	=	0.0	PSF
	DL	=	7.4	PSF
TOTAL LOAD		=	39.0	PSF

SPACING = 24.0 IN. C/C

LOADING IN FLAT SECTION BASED ON A SLOPE OF 6.00/12

*** NON STANDARD GIRDER ***
ADDT'L USER-DEFINED LOADS APPLIED TO ALL LOAD CASES.

THIS TRUSS IS DESIGNED FOR RESIDENTIAL OR SMALL BUILDING REQUIREMENTS OF PART 9, NBCC 2010, NBCC 2015

THIS DESIGN COMPLIES WITH:
- PART 9 OF BCBC 2018 , OBC 2012 , ABC 2019
- PART 9 OF OBC 2012 (2019 AMENDMENT)
- CSA 086-09, CSA 086-14
- TPIC 2011, TPIC 2014

(55 % OF 31.3 P.S.F. G.S.L. PLUS 8.4 P.S.F. RAIN LOAD) EQUALS 25.6 P.S.F. SPECIFIED ROOF LIVE LOAD

ALLOWABLE DEFL.(LL)= L/360 (1.03")
CALCULATED VERT. DEFL.(LL) = L/ 999 (0.23")
ALLOWABLE DEFL.(TL)= L/360 (1.03")
CALCULATED VERT. DEFL.(TL) = L/ 893 (0.42")

CSI: TC=0.45/1.00 (D-E:1) , BC=0.76/1.00 (Q-R:1) , WB=0.57/1.00 (K-N:1) , SSI=0.29/1.00 (Q-R:1)

DOL LUMBER=1.00 NAIL=1.00 LS BEND=1.00 COMP=1.00 SHEAR=1.00 TENS= 1.00

COMPANION LIVE LOAD FACTOR = 1.00

AUTOSOLVE HEELS OFF

TRUSS PLATE MANUFACTURER IS NOT RESPONSIBLE FOR QUALITY CONTROL IN THE TRUSS MANUFACTURING PLANT.

NAIL VALUES

PLATE	GRIP(DRY) (PSI) MAX	MIN	SHEAR (PLI) MAX	MIN	SECTION (PLI) MAX	MIN
MT20	618	354	1667	788	1987	1656

PLATE PLACEMENT TOL. = 0.250 inches

PLATE ROTATION TOL. = 5.0 Deg.

JSI GRIP= 0.90 (G) (INPUT = 0.90)
JSI METAL= 0.64 (P) (INPUT = 1.00)

CONTINUED ON PAGE 2

JOB NAME	TRUSS NAME	QUANTITY	PLY	JOB DESC. ROYAL PINE HOMES	DRWG NO.
413426	T20Z2	1	2	TRUSS DESC.	

Tamarack Roof Truss, Burlington

ID:8ITcKsuAqJzVBsZ1WqSCayyOHpK-1dhYt2a5fxyCI5fSbawAxoixk8IpDJgnQ_z7ALyTX3G

PLATES (table is in inches)

JT	TYPE	PLATES	W	LEN	Y	X
B	TMVW-p	MT20	5.0	8.0	Edge	
C	TTWW+m	MT20	7.0	8.0	Edge	2.50
D	TMWW-t	MT20	5.0	6.0		
E, F, H						
E	TMWW-t	MT20	4.0	4.0		
G	TS-t	MT20	3.0	6.0		
I	TMWW-t	MT20	5.0	6.0		
J	TTWW+m	MT20	7.0	8.0	Edge	2.50
K	TMVW-p	MT20	5.0	8.0	Edge	
M	BMV1+p	MT20	3.0	6.0		
N	BMWW-t	MT20	5.0	6.0	2.50	2.00
O	BMWW-t	MT20	5.0	6.0	2.50	2.25
P	BS-t	MT20	5.0	6.0		
Q, R, S, T						
Q	BMWW-t	MT20	5.0	6.0		
U	BS-t	MT20	5.0	6.0		
V	BMWW-t	MT20	5.0	6.0	2.50	2.25
W	BMWW-t	MT20	5.0	6.0	2.50	2.00
X	BMV1+p	MT20	3.0	6.0		

Edge - INDICATES REFERENCE CORNER OF PLATE TOUCHES EDGE OF CHORD.

SPECIFIED CONCENTRATED LOADS (LBS)

JT	LOC.	LC1	MAX-	MAX+	FACE	DIR.	TYPE	HEEL	CONN.
AB	15-0-12	-21	-21	---	BACK	VERT	TOTAL	---	C1
AC	16-10-8	-778	-778	---	BACK	VERT	TOTAL	---	C1
AD	27-11-4	-21	-21	---	BACK	VERT	TOTAL	---	C1
AE	29-11-4	-21	-21	---	BACK	VERT	TOTAL	---	C1

CONNECTION REQUIREMENTS

1) **C1:** A SUITABLE HANGER/MECHANICAL CONNECTION IS REQUIRED.

LICENSED PROFESSIONAL ENGINEER
10/14/20
H. J. G. ALVES
100009024
PROVINCE OF ONTARIO

Structural component only
DWG# T-2022185 3/2

JOB NAME	TRUSS NAME	QUANTITY	PLY	JOB DESC.	DRWG NO.
406514	T21	1	1	ROYAL PINE HOMES TRUSS DESC.	

Tamarack Roof Truss, Burlington

Version 8.330 S May 6 2020 MiTek Industries, Inc. Wed Oct 14 10:59:59 2020 Page 1

ID:8ITcKsuAqJzVBsZ1WqSCayyOHpK-3qtqLPn0rHlnOBHxUsYSMpqicaj3oYhPPHtKaYyTXQE

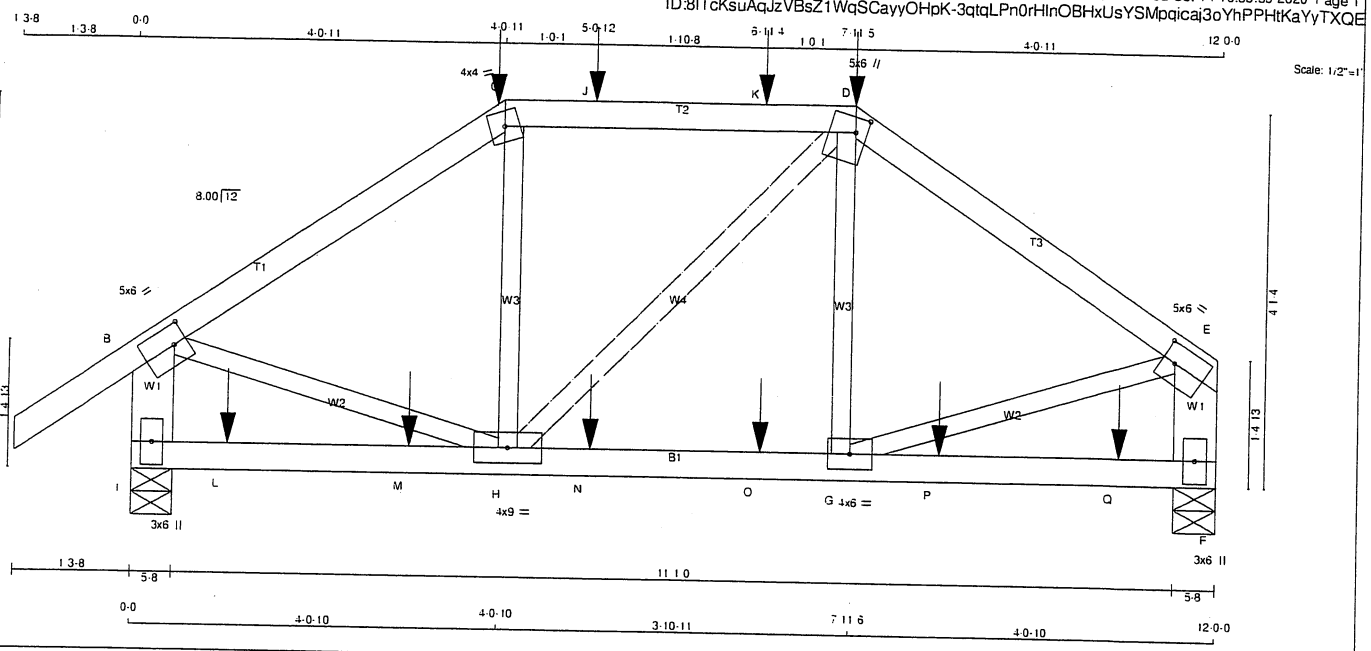

TOTAL WEIGHT = 51 lb [M]

LUMBER

N. L. G. A. RULES

CHORDS	SIZE		LUMBER	DESCR.
A - C	2x4	DRY	No.2	SPF
C - D	2x4	DRY	No.2	SPF
D - E	2x4	DRY	No.2	SPF
I - B	2x6	DRY	No.2	SPF
F - E	2x6	DRY	No.2	SPF
I - F	2x4	DRY	No.2	SPF
ALL WEBS EXCEPT	2x3	DRY	No.2	SPF

DRY: SEASONED LUMBER.

PLATES (table is in inches)

JT	TYPE	PLATES	W	LEN	Y	X
B	TMVW-t	MT20	5.0	6.0	2.50	1.75
C	TTW-m	MT20	4.0	4.0		
D	TTWW+m	MT20	5.0	6.0	2.00	1.50
E	TMVW-t	MT20	5.0	6.0	2.50	1.75
F	BMV1+p	MT20	3.0	6.0		
G	BMWW-t	MT20	4.0	6.0		
H	BMWWW-t	MT20	4.0	9.0		
I	BMV1+p	MT20	3.0	6.0		

DIMENSIONS, SUPPORTS AND LOADINGS SPECIFIED BY FABRICATOR TO BE VERIFIED BY BUILDING DESIGNER

BEARINGS

JT	FACTORED GROSS REACTION VERT	HORZ	MAXIMUM FACTORED GROSS REACTION DOWN	HORZ	UPLIFT	INPUT BRG IN-SX	REQRD BRG IN-SX
I	1284	0	1284	0	0	5-8	5-8
F	1158	0	1158	0	0	5-8	5-8

UNFACTORED REACTIONS

JT	1ST LCASE COMBINED	MAX./MIN. COMPONENT REACTIONS SNOW	LIVE	PERM.LIVE	WIND	DEAD	SOIL
I	905	610 0	0 0	0 0	0 0	295 0	0 0
F	818	540 0	0 0	0 0	0 0	279 0	0 0

BEARING MATERIAL TO BE SPF NO.2 OR BETTER AT JOINT(S) I, F

BRACING

TOP CHORD TO BE SHEATHED OR MAX. PURLIN SPACING = 5.43 FT.
MAX. UNBRACED BOTTOM CHORD LENGTH = 10.00 FT OR RIGID CEILING DIRECTLY APPLIED.

ALL PITCH BREAKS AND PERIMETER CORNER JOINTS MUST BE LATERALLY RESTRAINED.

LOADING

TOTAL LOAD CASES: (4)

CHORDS

MEMB. FR-TO	MAX. FACTORED FORCE (LBS)		FACTORED VERT. LOAD LC1 (PLF) FROM	TO	MAX CSI (LC)	MAX. UNBRAC LENGTH
A- B	0	35	-91.8	-91.8	0.14 (1)	10.00
B- C	-1187	0	-91.8	-91.8	0.32 (1)	5.43
C- J	-982	0	-91.8	-91.8	0.45 (1)	5.57
J- K	-982	0	-91.8	-91.8	0.45 (1)	5.57
K- D	-982	0	-91.8	-91.8	0.45 (1)	5.57
D- E	-1187	0	-91.8	-91.8	0.32 (1)	5.43
I- B	-1229	0	0.0	0.0	0.09 (1)	7.81
F- E	-1103	0	0.0	0.0	0.08 (1)	7.81
I- L	0	0	-18.5	-18.5	0.13 (4)	10.00
L- M	0	0	-18.5	-18.5	0.13 (4)	10.00
M- H	0	0	-18.5	-18.5	0.13 (4)	10.00
H- N	0	983	-18.5	-18.5	0.24 (1)	10.00
N- O	0	983	-18.5	-18.5	0.24 (1)	10.00
O- G	0	983	-18.5	-18.5	0.24 (1)	10.00
G- P	0	0	-18.5	-18.5	0.13 (4)	10.00
P- Q	0	0	-18.5	-18.5	0.13 (4)	10.00
Q- F	0	0	-18.5	-18.5	0.13 (4)	10.00

WEBS

MEMB. FR-TO	MAX. FACTORED FORCE (LBS)		MAX CSI (LC)
H- C	-121	71	0.03 (1)
H- D	0	0	0.00 (1)
G- D	-120	71	0.03 (1)
B- H	0	1018	0.25 (1)
G- E	0	1019	0.25 (1)

SPECIFIED CONCENTRATED LOADS (LBS)

JT	LOC.	LC1	MAX-	MAX+	FACE	DIR.	TYPE	HEEL	CONN.
C	4-0-11	-40	-40	---	FRONT	VERT	DEAD	---	C1
C	4-0-11	-171	-171	---	FRONT	VERT	SNOW	---	C1
D	7-11-5	-40	-40	---	FRONT	VERT	DEAD	---	C1
D	7-11-5	-171	-171	---	FRONT	VERT	SNOW	---	C1
J	5-0-12	-76	-76	---	BACK	VERT	TOTAL	---	C1
K	6-11-4	-76	-76	---	BACK	VERT	TOTAL	---	C1
L	1-0-12	-21	-21	---	BACK	VERT	TOTAL	---	C1
M	3-0-12	-21	-21	---	BACK	VERT	TOTAL	---	C1
N	5-0-12	-21	-21	---	BACK	VERT	TOTAL	---	C1
O	6-11-4	-21	-21	---	BACK	VERT	TOTAL	---	C1
P	8-11-4	-21	-21	---	BACK	VERT	TOTAL	---	C1
Q	10-11-4	-21	-21	---	BACK	VERT	TOTAL	---	C1

CONNECTION REQUIREMENTS

1) C1: A SUITABLE HANGER/MECHANICAL CONNECTION IS REQUIRED.

DESIGN CRITERIA

*** SPECIAL LOADS ANALYSIS ***
GEOMETRY AND/OR BASIC LOADS CHANGED BY USER.
LOADS WERE DERIVED FROM USER INPUT
NO FURTHER MODIFICATIONS WERE MADE

SPECIFIED LOADS:

TOP CH.	LL	=	25.6	PSF
	DL	=	6.0	PSF
BOT CH.	LL	=	0.0	PSF
	DL	=	7.4	PSF
TOTAL LOAD		=	39.0	PSF

SPACING = 24.0 IN. C/C

LOADING IN FLAT SECTION BASED ON A SLOPE OF 6.00/12

*** NON STANDARD GIRDER ***
ADDT'L USER-DEFINED LOADS APPLIED TO ALL LOAD CASES.

THIS TRUSS IS DESIGNED FOR RESIDENTIAL OR SMALL BUILDING REQUIREMENTS OF PART 9, NBCC 2010, NBCC 2015

THIS DESIGN COMPLIES WITH:
- PART 9 OF BCBC 2018 , OBC 2012 , ABC 2019
- PART 9 OF OBC 2012 (2019 AMENDMENT)
- CSA 086-09, CSA 086-14
- TPIC 2011, TPIC 2014

(55 % OF 31.3 P.S.F. G.S.L. PLUS 8.4 P.S.F. RAIN LOAD) EQUALS 25.6 P.S.F. SPECIFIED ROOF LIVE LOAD

ALLOWABLE DEFL.(LL)= L/360 (0.40")
CALCULATED VERT. DEFL.(LL) = L/999 (0.02")
ALLOWABLE DEFL.(TL)= L/360 (0.40")
CALCULATED VERT. DEFL.(TL) = L/999 (0.03")

CSI: TC=0.45/1.00 (C-D:1) , BC=0.24/1.00 (G-H:1) , WB=0.25/1.00 (E-G:1) , SSI=0.25/1.00 (C-D:1)

DOL LUMBER=1.00 NAIL=1.00 LS BEND=1.00 COMP=1.00 SHEAR=1.00 TENS= 1.00

COMPANION LIVE LOAD FACTOR = 1.00

AUTOSOLVE HEELS OFF

TRUSS PLATE MANUFACTURER IS NOT RESPONSIBLE FOR QUALITY CONTROL IN THE TRUSS MANUFACTURING PLANT .

NAIL VALUES

PLATE	GRIP(DRY) (PSI) MAX	MIN	SHEAR (PLI) MAX	MIN	SECTION (PLI) MAX	MIN
MT20	618	354	1667	788	1987	1656

PLATE PLACEMENT TOL. = 0.250 inches

PLATE ROTATION TOL. = 5.0 Deg.

JSI GRIP= 0.79 (E) (INPUT = 0.90)
JSI METAL= 0.34 (B) (INPUT = 1.00)

LICENSED PROFESSIONAL ENGINEER
10/14/20
H. J. G. ALVES
100009024
PROVINCE OF ONTARIO

Structural component only
DWG# T-2022173

JOB NAME	TRUSS NAME	QUANTITY	PLY	JOB DESC. ROYAL PINE HOMES	DRWG NO.
406514	T22	1	1	TRUSS DESC.	

Tamarack Roof Truss, Burlington

Version 8.330 S May 6 2020 MiTek Industries, Inc. Wed Oct 14 11:00:00 2020 Page 1
ID:8ITcKsuAqJzVBsZ1WqSCayyOHpK-X0QCZkoecbte0Ls71Z3hu0Mvi_4PX1MYdxcu6?yTXQD

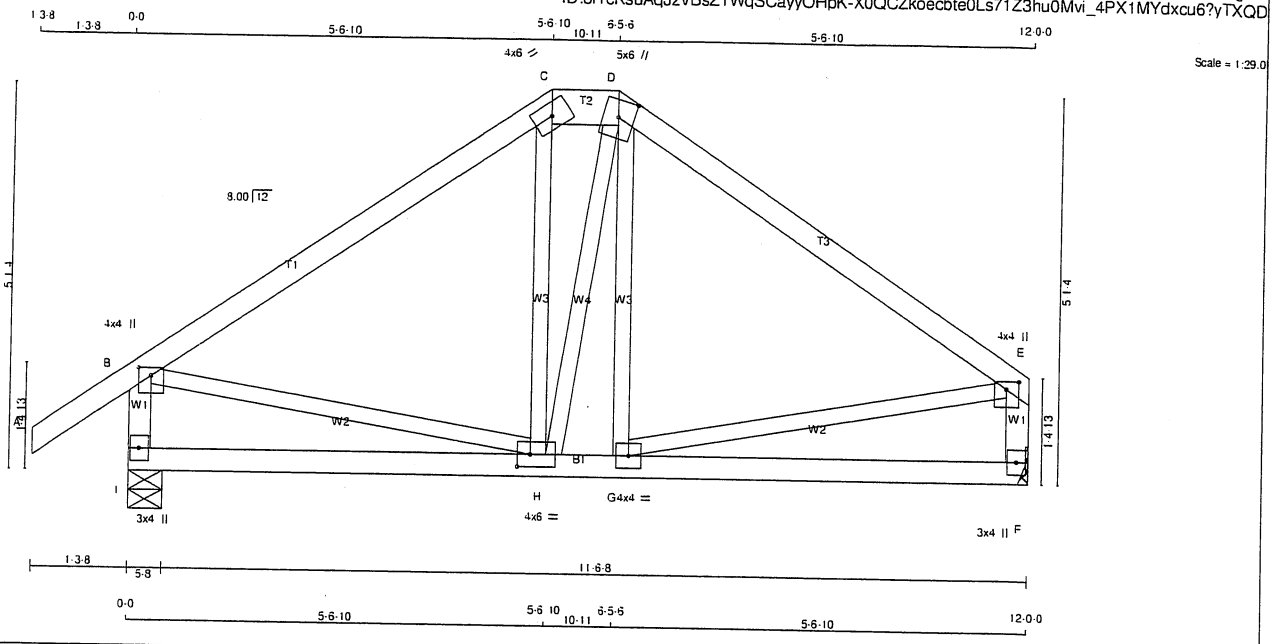

TOTAL WEIGHT = 54 lb
[M][F]

LUMBER
N. L. G. A. RULES

CHORDS	SIZE		LUMBER	DESCR.
A - C	2x4	DRY	No.2	SPF
C - D	2x6	DRY	No.2	SPF
D - E	2x4	DRY	No.2	SPF
I - B	2x4	DRY	No.2	SPF
F - E	2x4	DRY	No.2	SPF
I - F	2x4	DRY	No.2	SPF
ALL WEBS EXCEPT	2x3	DRY	No.2	SPF

DRY: SEASONED LUMBER.

PLATES (table is in inches)

JT	TYPE	PLATES	W	LEN	Y	X
B	TMVW+p	MT20	4.0	4.0	1.25	2.00
C	TTW-h	MT20	4.0	6.0		
D	TTWW+m	MT20	5.0	6.0	2.75	2.50
E	TMVW+p	MT20	4.0	4.0	1.25	2.00
F	BMV1+p	MT20	3.0	4.0		
G	BMWW-t	MT20	4.0	4.0		
H	BMWWW-t	MT20	4.0	6.0	2.00	2.00
I	BMV1+p	MT20	3.0	4.0		

DIMENSIONS, SUPPORTS AND LOADINGS SPECIFIED BY FABRICATOR TO BE VERIFIED BY BUILDING DESIGNER

BEARINGS

JT	FACTORED GROSS REACTION VERT	HORZ	MAXIMUM FACTORED GROSS REACTION DOWN	HORZ	UPLIFT	INPUT BRG IN-SX	REQRD BRG IN-SX
I	787	0	787	0	0	5-8	5-8
F	662	0	662	0	0	MECHANICAL	

A SUITABLE HANGER/MECHANICAL CONNECTION IS REQUIRED AT JOINT F. MINIMUM BEARING LENGTH AT JOINT F = 1-8.

UNFACTORED REACTIONS

JT	1ST LCASE COMBINED	MAX./MIN. COMPONENT REACTIONS SNOW	LIVE	PERM.LIVE	WIND	DEAD	SOIL
I	555	377 / 0	0 / 0	0 0	0 0	177 0	0 0
F	468	307 / 0	0 / 0	0 0	0 0	161 0	0 0

BEARING MATERIAL TO BE SPF NO.2 OR BETTER AT JOINT(S) I

BRACING
TOP CHORD TO BE SHEATHED OR MAX. PURLIN SPACING = 6.25 FT.
MAX. UNBRACED BOTTOM CHORD LENGTH = 10.00 FT OR RIGID CEILING DIRECTLY APPLIED.

ALL PITCH BREAKS AND PERIMETER CORNER JOINTS MUST BE LATERALLY RESTRAINED.

LOADING
TOTAL LOAD CASES: (4)

CHORDS

MEMB. FR-TO	MAX. FACTORED FORCE (LBS)	FACTORED VERT. LOAD LC1 (PLF) FROM	TO	MAX CSI (LC)	MAX. UNBRAC LENGTH
A- B	0 / 35	-91.8	-91.8	0.12 (1)	10.00
B- C	-510 0	-91.8	-91.8	0.37 (1)	6.25
C- D	-426 0	-91.8	-91.8	0.01 (1)	6.25
D- E	-509 0	-91.8	-91.8	0.37 (1)	6.25
I- B	-745 0	0.0	0.0	0.08 (1)	7.81
F- E	-620 0	0.0	0.0	0.06 (1)	7.81
I- H	0 0	-18.5	-18.5	0.13 (4)	10.00
H- G	0 425	-18.5	-18.5	0.17 (4)	10.00
G- F	0 0	-18.5	-18.5	0.12 (4)	10.00

WEBS

MEMB. FR-TO	MAX. FACTORED FORCE (LBS)	MAX CSI (LC)
H- C	-14 48	0.02 (4)
H- D	0 6	0.00 (4)
G- D	-17 42	0.01 (4)
B- H	0 434	0.10 (1)
G- E	0 433	0.10 (1)

DESIGN CRITERIA

SPECIFIED LOADS:

TOP CH.	LL	=	25.6	PSF
	DL	=	6.0	PSF
BOT CH.	LL	=	0.0	PSF
	DL	=	7.4	PSF
TOTAL LOAD		=	39.0	PSF

SPACING = 24.0 IN. C/C

LOADING IN FLAT SECTION BASED ON A SLOPE OF 6.00/12

THIS TRUSS IS DESIGNED FOR RESIDENTIAL OR SMALL BUILDING REQUIREMENTS OF PART 9, NBCC 2010, NBCC 2015

THIS DESIGN COMPLIES WITH:
- PART 9 OF BCBC 2018 , OBC 2012 , ABC 2019
- PART 9 OF OBC 2012 (2019 AMENDMENT)
- CSA 086-09, CSA 086-14
- TPIC 2011, TPIC 2014

(55 % OF 31.3 P.S.F. G.S.L. PLUS 8.4 P.S.F. RAIN LOAD) EQUALS 25.6 P.S.F. SPECIFIED ROOF LIVE LOAD

ALLOWABLE DEFL.(LL)= L/360 (0.40")
CALCULATED VERT. DEFL.(LL) = L/ 999 (0.01")
ALLOWABLE DEFL.(TL)= L/360 (0.40")
CALCULATED VERT. DEFL.(TL) = L/ 999 (0.03")

CSI: TC=0.37/1.00 (B-C:1) , BC=0.17/1.00 (G-H:4) , WB=0.10/1.00 (B-H:1) , SSI=0.17/1.00 (B-C:1)

DOL LUMBER=1.00 NAIL=1.00 LS BEND=1.10 COMP=1.10 SHEAR=1.10 TENS= 1.10

COMPANION LIVE LOAD FACTOR = 1.00

TRUSS PLATE MANUFACTURER IS NOT RESPONSIBLE FOR QUALITY CONTROL IN THE TRUSS MANUFACTURING PLANT .

NAIL VALUES

PLATE	GRIP(DRY) (PSI) MAX	MIN	SHEAR (PLI) MAX	MIN	SECTION (PLI) MAX	MIN
MT20	618	354	1667	788	1987	1656

PLATE PLACEMENT TOL. = 0.250 inches

PLATE ROTATION TOL. = 5.0 Deg.

JSI GRIP= 0.58 (B) (INPUT = 0.90)
JSI METAL= 0.17 (B) (INPUT = 1.00)

LICENSED PROFESSIONAL ENGINEER
10/14/20
H. J. G. ALVES
100009024
PROVINCE OF ONTARIO

Structural component only
DWG# T-2022174

JOB NAME	TRUSS NAME	QUANTITY	PLY	JOB DESC.	DRWG NO.
406514	T23	1	1	ROYAL PINE HOMES TRUSS DESC.	

Tamarack Roof Truss, Burlington

Version 8.420 S Jan 21 2021 MiTek Industries, Inc. Mon Jun 7 08:34:05 2021 Page 1
ID:8ITcKsuAqJzVBsZ1WqSCayyOHpK-CQ4I2QTxXqizPPFY27vuI0OhD_IQWMIRLdE9haz8kr0

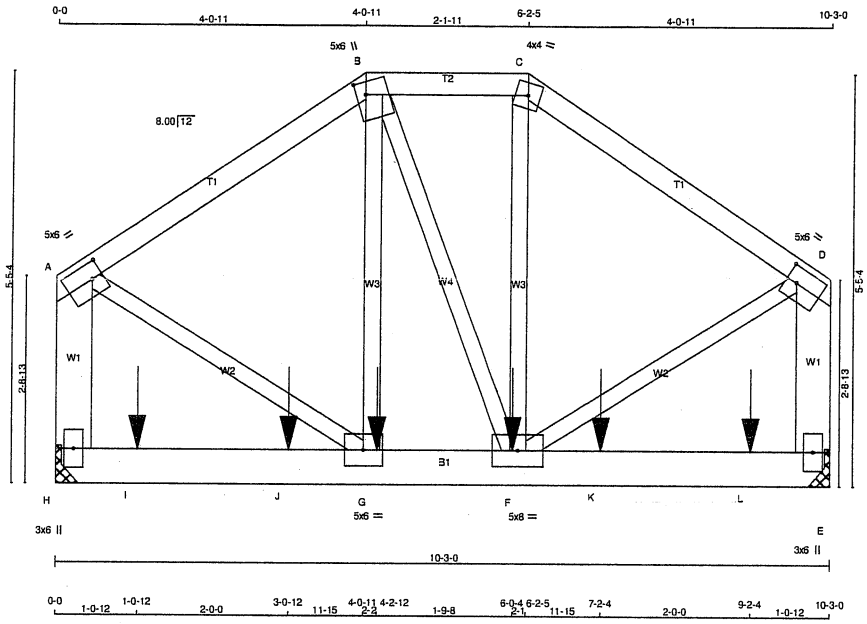

TOTAL WEIGHT = 59 lb

LUMBER

N. L. G. A. RULES

CHORDS	SIZE		LUMBER	DESCR.
A - B	2x4	DRY	No.2	SPF
B - C	2x4	DRY	No.2	SPF
C - D	2x4	DRY	No.2	SPF
H - A	2x6	DRY	No.2	SPF
E - D	2x6	DRY	No.2	SPF
H - E	2x6	DRY	No.2	SPF
ALL WEBS EXCEPT	2x3	DRY	No.2	SPF

DRY: SEASONED LUMBER.

PLATES (table is in inches)

JT	TYPE	PLATES	W	LEN	Y	X
A	TMVW-t	MT20	5.0	6.0	2.50	1.75
B	TTWW+m	MT20	5.0	6.0	2.00	1.50
C	TTW-m	MT20	4.0	4.0		
D	TMVW-t	MT20	5.0	6.0	2.50	1.75
E	BMV1+p	MT20	3.0	6.0		
F	BMWWW-t	MT20	5.0	8.0		
G	BMWW-t	MT20	5.0	6.0		
H	BMV1+p	MT20	3.0	6.0		

DIMENSIONS, SUPPORTS AND LOADINGS SPECIFIED BY FABRICATOR TO BE VERIFIED BY BUILDING DESIGNER

BEARINGS

JT	FACTORED GROSS REACTION VERT	HORZ	MAXIMUM FACTORED GROSS REACTION DOWN	HORZ	UPLIFT	INPUT BRG IN-SX	REQRD BRG IN-SX
H	1467	0	1467	0	0	MECHANICAL	
E	1467	0	1467	0	0	MECHANICAL	

A SUITABLE HANGER/MECHANICAL CONNECTION IS REQUIRED AT JOINT H, E. MINIMUM BEARING LENGTH AT JOINT H = 3-8, JOINT E = 3-8.

UNFACTORED REACTIONS

JT	1ST LCASE COMBINED	MAX./MIN. COMPONENT REACTIONS SNOW	LIVE	PERM.LIVE	WIND	DEAD	SOIL
H	1032	705 / 0	0 / 0	0 / 0	0 / 0	327 / 0	0 / 0
E	1032	705 / 0	0 / 0	0 / 0	0 / 0	327 / 0	0 / 0

BRACING

TOP CHORD TO BE SHEATHED OR MAX. PURLIN SPACING = 5.87 FT.
MAX. UNBRACED BOTTOM CHORD LENGTH = 10.00 FT OR RIGID CEILING DIRECTLY APPLIED.

ALL PITCH BREAKS AND PERIMETER CORNER JOINTS MUST BE LATERALLY RESTRAINED.

LOADING

TOTAL LOAD CASES: (4)

CHORDS

MEMB. FR-TO	MAX. FACTORED FORCE (LBS)	FACTORED VERT. LOAD (PLF) FROM	TO	LC1	MAX CSI (LC)	MAX. UNBRAC LENGTH
A- B	-968 / 0	-91.8	-91.8	0.31 (1)	5.88	
B- C	-814 / 0	-91.8	-91.8	0.09 (1)	6.25	
C- D	-974 / 0	-91.8	-91.8	0.31 (1)	5.87	
H- A	-1176 / 0	0.0	0.0	0.11 (1)	7.81	
E- D	-1181 / 0	0.0	0.0	0.11 (1)	7.81	
H- I	0 / 0	-18.5	-18.5	0.22 (1)	10.00	
I- J	0 / 0	-18.5	-18.5	0.22 (1)	10.00	
J- G	0 / 0	-18.5	-18.5	0.22 (1)	10.00	
G- F	0 / 809	-18.5	-18.5	0.26 (1)	10.00	
F- K	0 / 0	-18.5	-18.5	0.22 (1)	10.00	
K- L	0 / 0	-18.5	-18.5	0.22 (1)	10.00	
L- E	0 / 0	-18.5	-18.5	0.22 (1)	10.00	

WEBS

MEMB. FR-TO	MAX. FACTORED FORCE (LBS)	MAX CSI (LC)
G- B	0 / 242	0.06 (1)
B- F	0 / 14	0.00 (1)
F- C	0 / 258	0.06 (1)
A- G	0 / 922	0.23 (1)
F- D	0 / 927	0.23 (1)

SPECIFIED CONCENTRATED LOADS (LBS)

JT	LOC.	LC1	MAX-	MAX+	FACE	DIR.	TYPE	HEEL	CONN.
F	6-0-4	-214	-214	---	BACK	VERT	TOTAL	---	C1
G	4-2-12	-214	-214	---	BACK	VERT	TOTAL	---	C1
I	1-0-12	-204	-204	---	BACK	VERT	TOTAL	---	C1
J	3-0-12	-214	-214	---	BACK	VERT	TOTAL	---	C1
K	7-2-4	-214	-214	---	BACK	VERT	TOTAL	---	C1
L	9-2-4	-204	-204	---	BACK	VERT	TOTAL	---	C1

CONNECTION REQUIREMENTS

1) **C1:** A SUITABLE HANGER/MECHANICAL CONNECTION IS REQUIRED.

DESIGN CRITERIA

SPECIFIED LOADS:

TOP CH.	LL	=	25.6	PSF
	DL	=	6.0	PSF
BOT CH.	LL	=	0.0	PSF
	DL	=	7.4	PSF
TOTAL LOAD		=	39.0	PSF

SPACING = 24.0 IN. C/C

LOADING IN FLAT SECTION BASED ON A SLOPE OF 6.00/12

THIS TRUSS IS DESIGNED FOR RESIDENTIAL OR SMALL BUILDING REQUIREMENTS OF PART 9, NBCC 2015

THIS DESIGN COMPLIES WITH:
- PART 9 OF BCBC 2018 , ABC 2019
- PART 9 OF OBC 2012 (2019 AMENDMENT)
- CSA 086-14
- TPIC 2014

(55 % OF 31.3 P.S.F. G.S.L. PLUS 8.4 P.S.F. RAIN LOAD) EQUALS 25.6 P.S.F. SPECIFIED ROOF LIVE LOAD

ALLOWABLE DEFL.(LL)= L/360 (0.34")
CALCULATED VERT. DEFL.(LL) = L/ 999 (0.02")
ALLOWABLE DEFL.(TL)= L/360 (0.34")
CALCULATED VERT. DEFL.(TL) = L/ 999 (0.04")

CSI: TC=0.31/1.00 (C-D:1) , BC=0.26/1.00 (F-G:1) , WB=0.23/1.00 (D-F:1) , SSI=0.26/1.00 (E-F:1)

DOL LUMBER=1.00 NAIL=1.00 LS BEND=1.00 COMP=1.00 SHEAR=1.00 TENS= 1.00

COMPANION LIVE LOAD FACTOR = 1.00

AUTOSOLVE HEELS OFF

TRUSS PLATE MANUFACTURER IS NOT RESPONSIBLE FOR QUALITY CONTROL IN THE TRUSS MANUFACTURING PLANT .

NAIL VALUES

PLATE	GRIP(DRY) (PSI) MAX	MIN	SHEAR (PLI) MAX	MIN	SECTION (PLI) MAX	MIN
MT20	650	371	1747	788	1987	1873

PLATE PLACEMENT TOL. = 0.250 inches

PLATE ROTATION TOL. = 5.0 Deg.

JSI GRIP= 0.62 (D) (INPUT = 0.90)
JSI METAL= 0.24 (D) (INPUT = 1.00)

LICENSED PROFESSIONAL ENGINEER
06/07/21
H. J. G. ALVES
100009024
PROVINCE OF ONTARIO

Structural component only
DWG# T-2117970

JOB NAME	TRUSS NAME	QUANTITY	PLY	JOB DESC.	DRWG NO.
406514	T24	2	1	ROYAL PINE HOMES TRUSS DESC.	

Tamarack Roof Truss, Burlington

Version 8.420 S Jan 21 2021 MiTek Industries, Inc. Mon Jun 7 08:34:06 2021 Page 1
ID:8ITcKsuAqJzVBsZ1WqSCayyOHpK-hcdgGmTZI7qq0ZqkbrQ7rDwvyOi5Fr0bZHziD1z8kr?

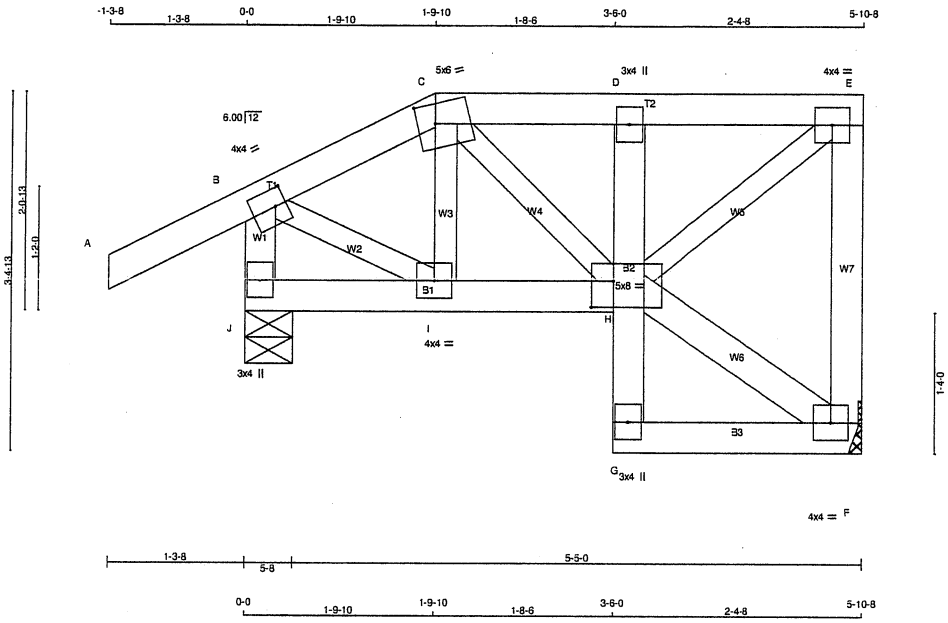

TOTAL WEIGHT = 2 X 31 = 63 lb

LUMBER

N. L. G. A. RULES

CHORDS	SIZE		LUMBER	DESCR.
A - C	2x4	DRY	No.2	SPF
C - E	2x4	DRY	No.2	SPF
F - E	2x4	DRY	No.2	SPF
J - B	2x4	DRY	No.2	SPF
J - H	2x4	DRY	No.2	SPF
G - D	2x4	DRY	No.2	SPF
G - F	2x4	DRY	No.2	SPF
ALL WEBS	2x3	DRY	No.2	SPF
EXCEPT				
H - F	2x4	DRY	No.2	SPF

DRY: SEASONED LUMBER.

PLATES (table is in inches)

JT	TYPE	PLATES	W	LEN	Y	X
B	TMVW-t	MT20	4.0	4.0	2.00	1.25
C	TTWW-m	MT20	5.0	6.0	2.25	2.00
D	TMV+p	MT20	3.0	4.0		
E	TMVW-t	MT20	4.0	4.0		
F	BMVW1-t	MT20	4.0	4.0		
G	BMV+p	MT20	3.0	4.0		
H	BVMWWW-l	MT20	5.0	8.0	3.00	2.50
I	BMWW-t	MT20	4.0	4.0		
J	BMV1+p	MT20	3.0	4.0		

DIMENSIONS, SUPPORTS AND LOADINGS SPECIFIED BY FABRICATOR TO BE VERIFIED BY BUILDING DESIGNER

BEARINGS

JT	FACTORED GROSS REACTION VERT	HORZ	MAXIMUM FACTORED GROSS REACTION DOWN	HORZ	UPLIFT	INPUT BRG IN-SX	REQRD BRG IN-SX
F	309	0	309	0	0	MECHANICAL	
J	463	0	463	0	0	5-8	5-8

A SUITABLE HANGER/MECHANICAL CONNECTION IS REQUIRED AT JOINT F. MINIMUM BEARING LENGTH AT JOINT F = 1-8.

UNFACTORED REACTIONS

JT	1ST LCASE COMBINED	MAX./MIN. COMPONENT REACTIONS SNOW	LIVE	PERM.LIVE	WIND	DEAD	SOIL
F	219	142 / 0	0 / 0	0 / 0	0 / 0	77 / 0	0 / 0
J	325	228 / 0	0 / 0	0 / 0	0 / 0	97 / 0	0 / 0

BEARING MATERIAL TO BE SPF NO.2 OR BETTER AT JOINT(S) J

BRACING

TOP CHORD TO BE SHEATHED OR MAX. PURLIN SPACING = 6.25 FT.
MAX. UNBRACED BOTTOM CHORD LENGTH = 7.81 FT OR RIGID CEILING DIRECTLY APPLIED.

ALL PITCH BREAKS AND PERIMETER CORNER JOINTS MUST BE LATERALLY RESTRAINED.

LOADING

TOTAL LOAD CASES: (4)

CHORDS

MEMB. FR-TO	MAX. FACTORED FORCE (LBS)	FACTORED VERT. LOAD (PLF) FROM	TO	LC1	MAX CSI (LC)	MAX. UNBRAC LENGTH
A- B	0 / 28	-91.8	-91.8	0.12 (1)	10.00	
B- C	-247 / 0	-91.8	-91.8	0.12 (1)	6.25	
C- D	-255 / 0	-91.8	-91.8	0.05 (1)	6.25	
D- E	-249 / 0	-91.8	-91.8	0.05 (1)	6.25	
F- E	-284 / 0	0.0	0.0	0.05 (1)	7.81	
J- B	-447 / 0	0.0	0.0	0.05 (1)	7.81	
J- I	0 / 0	-18.5	-18.5	0.01 (4)	10.00	
I- H	0 / 199	-18.5	-18.5	0.04 (1)	10.00	
G- H	0 / 23	0.0	0.0	0.02 (1)	10.00	
H- D	-223 / 0	0.0	0.0	0.02 (1)	7.81	
G- F	0 / 8	-18.5	-18.5	0.03 (4)	10.00	

WEBS

MEMB. FR-TO	MAX. FACTORED FORCE (LBS)	MAX CSI (LC)
I- C	-54 / 11	0.01 (1)
C- H	0 / 79	0.02 (1)
B- I	0 / 221	0.05 (1)
H- F	-10 / 0	0.00 (1)
H- E	0 / 319	0.07 (1)

DESIGN CRITERIA

SPECIFIED LOADS:

TOP CH.	LL	=	25.6	PSF
	DL	=	6.0	PSF
BOT CH.	LL	=	0.0	PSF
	DL	=	7.4	PSF
TOTAL LOAD		=	39.0	PSF

SPACING = 24.0 IN. C/C

LOADING IN FLAT SECTION BASED ON A SLOPE OF 6.00/12

THIS TRUSS IS DESIGNED FOR RESIDENTIAL OR SMALL BUILDING REQUIREMENTS OF PART 9, NBCC 2015

THIS DESIGN COMPLIES WITH:
- PART 9 OF BCBC 2018 , ABC 2019
- PART 9 OF OBC 2012 (2019 AMENDMENT)
- CSA 086-14
- TPIC 2014

DESIGN ASSUMPTIONS
-OVERHANG NOT TO BE ALTERED OR CUT OFF.

(55 % OF 31.3 P.S.F. G.S.L. PLUS 8.4 P.S.F. RAIN LOAD) EQUALS 25.6 P.S.F. SPECIFIED ROOF LIVE LOAD

ALLOWABLE DEFL.(LL)= L/360 (0.20")
CALCULATED VERT. DEFL.(LL) = L/ 999 (0.00")
ALLOWABLE DEFL.(TL)= L/360 (0.20")
CALCULATED VERT. DEFL.(TL) = L/ 999 (0.01")

CSI: TC=0.12/1.00 (A-B:1) , BC=0.04/1.00 (H-I:1) , WB=0.07/1.00 (E-H:1) , SSI=0.09/1.00 (D-E:1)

DOL LUMBER=1.00 NAIL=1.00 LS BEND=1.10 COMP=1.10 SHEAR=1.10 TENS= 1.10

COMPANION LIVE LOAD FACTOR = 1.00

TRUSS PLATE MANUFACTURER IS NOT RESPONSIBLE FOR QUALITY CONTROL IN THE TRUSS MANUFACTURING PLANT .

NAIL VALUES

PLATE	GRIP(DRY) (PSI) MAX	MIN	SHEAR (PLI) MAX	MIN	SECTION (PLI) MAX	MIN
MT20	650	371	1747	788	1987	1873

PLATE PLACEMENT TOL. = 0.250 inches

PLATE ROTATION TOL. = 5.0 Deg.

JSI GRIP= 0.42 (H) (INPUT = 0.90)
JSI METAL= 0.12 (B) (INPUT = 1.00)

LICENSED PROFESSIONAL ENGINEER
06/07/21
H. J. G. ALVES
100009024
PROVINCE OF ONTARIO

Structural component only
DWG# T-2117971

JOB NAME	TRUSS NAME	QUANTITY	PLY	JOB DESC.	DRWG NO.
406514	T25	2	1	ROYAL PINE HOMES TRUSS DESC.	

Tamarack Roof Truss, Burlington

Version 8.420 S Jan 21 2021 MiTek Industries, Inc. Mon Jun 7 08:34:07 2021 Page 1
ID:8ITcKsuAqJzVBsZ1WqSCayyOHpK-9pB2T6UB3RyhejPx9YxMNRT3On1p_IukoxjGlTz8kr_

Scale = 1:27.3

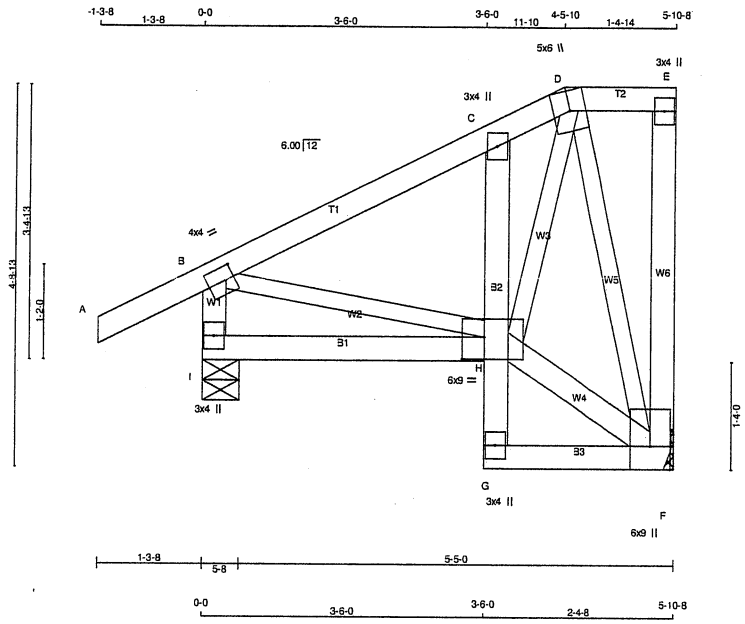

TOTAL WEIGHT = 2 X 37 = 73 lb

[M]

LUMBER

N. L. G. A. RULES

CHORDS	SIZE		LUMBER	DESCR.
A - D	2x4	DRY	No.2	SPF
D - E	2x4	DRY	No.2	SPF
F - E	2x4	DRY	No.2	SPF
I - B	2x4	DRY	No.2	SPF
I - H	2x4	DRY	No.2	SPF
G - C	2x4	DRY	No.2	SPF
G - F	2x4	DRY	No.2	SPF
ALL WEBS EXCEPT	2x3	DRY	No.2	SPF
H - F	2x4	DRY	No.2	SPF

DRY: SEASONED LUMBER.

PLATES (table is in inches)

JT	TYPE	PLATES	W	LEN	Y	X
B	TMVW-t	MT20	4.0	4.0	2.00	1.25
C	TMV+p	MT20	3.0	4.0		
D	TTWW+m	MT20	5.0	6.0		
E	TMV+p	MT20	3.0	4.0		
F	BMVWW1+p	MT20	6.0	9.0	Edge	
G	BMV+p	MT20	3.0	4.0		
H	BVMWWW-l	MT20	6.0	9.0	3.25	3.25
I	BMV1+p	MT20	3.0	4.0		

Edge - INDICATES REFERENCE CORNER OF PLATE TOUCHES EDGE OF CHORD.

DIMENSIONS, SUPPORTS AND LOADINGS SPECIFIED BY FABRICATOR TO BE VERIFIED BY BUILDING DESIGNER

BEARINGS

JT	FACTORED GROSS REACTION VERT	HORZ	MAXIMUM FACTORED GROSS REACTION DOWN	HORZ	UPLIFT	INPUT BRG IN-SX	REQRD BRG IN-SX
F	324	0	324	0	0	MECHANICAL	
I	448	0	448	0	0	5-8	5-8

A SUITABLE HANGER/MECHANICAL CONNECTION IS REQUIRED AT JOINT F. MINIMUM BEARING LENGTH AT JOINT F = 1-8.

UNFACTORED REACTIONS

JT	1ST LCASE COMBINED	MAX./MIN. COMPONENT REACTIONS SNOW	LIVE	PERM.LIVE	WIND	DEAD	SOIL
F	229	150 / 0	0 / 0	0 / 0	0 / 0	79 / 0	0 / 0
I	315	220 / 0	0 / 0	0 / 0	0 / 0	95 / 0	0 / 0

BEARING MATERIAL TO BE SPF NO.2 OR BETTER AT JOINT(S) I

BRACING

TOP CHORD TO BE SHEATHED OR MAX. PURLIN SPACING = 6.25 FT.
MAX. UNBRACED BOTTOM CHORD LENGTH = 7.81 FT OR RIGID CEILING DIRECTLY APPLIED.

ALL PITCH BREAKS AND PERIMETER CORNER JOINTS MUST BE LATERALLY RESTRAINED.

LOADING

TOTAL LOAD CASES: (4)

CHORDS

MEMB. FR-TO	MAX. FACTORED FORCE (LBS)	FACTORED VERT. LOAD LC1 (PLF) FROM	TO	MAX CSI (LC)	MAX. UNBRAC LENGTH
A- B	0 / 28	-91.8	-91.8	0.12 (1)	10.00
B- C	-221 / 0	-91.8	-91.8	0.14 (1)	6.25
C- D	-266 / 0	-91.8	-91.8	0.14 (1)	6.25
D- E	0 / 0	-91.8	-91.8	0.03 (1)	10.00
F- E	-63 / 0	0.0	0.0	0.02 (1)	7.81
I- B	-415 / 0	0.0	0.0	0.04 (1)	7.81
I- H	0 / 0	-18.5	-18.5	0.07 (4)	10.00
G- H	0 / 23	0.0	0.0	0.03 (1)	10.00
H- C	-336 / 0	0.0	0.0	0.03 (1)	7.81
G- F	0 / 12	-18.5	-18.5	0.03 (4)	10.00

WEBS

MEMB. FR-TO	MAX. FACTORED FORCE (LBS)	MAX CSI (LC)
B- H	0 / 215	0.05 (1)
H- F	0 / 89	0.01 (1)
H- D	0 / 401	0.09 (1)
D- F	-299 / 0	0.10 (1)

DESIGN CRITERIA

SPECIFIED LOADS:

TOP CH.	LL	=	25.6	PSF
	DL	=	6.0	PSF
BOT CH.	LL	=	0.0	PSF
	DL	=	7.4	PSF
TOTAL LOAD		=	39.0	PSF

SPACING = 24.0 IN. C/C

LOADING IN FLAT SECTION BASED ON A SLOPE OF 6.00/12

THIS TRUSS IS DESIGNED FOR RESIDENTIAL OR SMALL BUILDING REQUIREMENTS OF PART 9, NBCC 2015

THIS DESIGN COMPLIES WITH:
- PART 9 OF BCBC 2018 , ABC 2019
- PART 9 OF OBC 2012 (2019 AMENDMENT)
- CSA 086-14
- TPIC 2014

(55 % OF 31.3 P.S.F. G.S.L. PLUS 8.4 P.S.F. RAIN LOAD) EQUALS 25.6 P.S.F. SPECIFIED ROOF LIVE LOAD

ALLOWABLE DEFL.(LL)= L/360 (0.20")
CALCULATED VERT. DEFL.(LL) = L/ 999 (0.00")
ALLOWABLE DEFL.(TL)= L/360 (0.20")
CALCULATED VERT. DEFL.(TL) = L/ 999 (0.01")

CSI: TC=0.14/1.00 (B-C:1) , BC=0.07/1.00 (H-I:4) , WB=0.10/1.00 (D-F:1) , SSI=0.13/1.00 (B-C:1)

DOL LUMBER=1.00 NAIL=1.00 LS BEND=1.10 COMP=1.10 SHEAR=1.10 TENS= 1.10

COMPANION LIVE LOAD FACTOR = 1.00

AUTOSOLVE RIGHT HEEL ONLY

TRUSS PLATE MANUFACTURER IS NOT RESPONSIBLE FOR QUALITY CONTROL IN THE TRUSS MANUFACTURING PLANT .

NAIL VALUES

PLATE	GRIP(DRY) (PSI) MAX	MIN	SHEAR (PLI) MAX	MIN	SECTION (PLI) MAX	MIN
MT20	650	371	1747	788	1987	1873

PLATE PLACEMENT TOL. = 0.250 inches

PLATE ROTATION TOL. = 5.0 Deg.

JSI GRIP= 0.35 (B) (INPUT = 0.90)
JSI METAL= 0.12 (B) (INPUT = 1.00)

LICENSED PROFESSIONAL ENGINEER
H. J. G. ALVES
100009024
PROVINCE OF ONTARIO

Structural component only
DWG# T-2117972

JOB NAME	TRUSS NAME	QUANTITY	PLY	JOB DESC.	DRWG NO.
406514	T26	2	1	ROYAL PINE HOMES TRUSS DESC.	

Tamarack Roof Truss, Burlington

Version 8.420 S Jan 21 2021 MiTek Industries, Inc. Mon Jun 7 08:34:08 2021 Page 1
ID:8lTcKsuAqJzVBsZ1WqSCayyOHpK-d?lQhSVqql4XGtz7jGSbwe0ExBN2jlGu1bSpGvz8kqz

Scale = 1:29.8

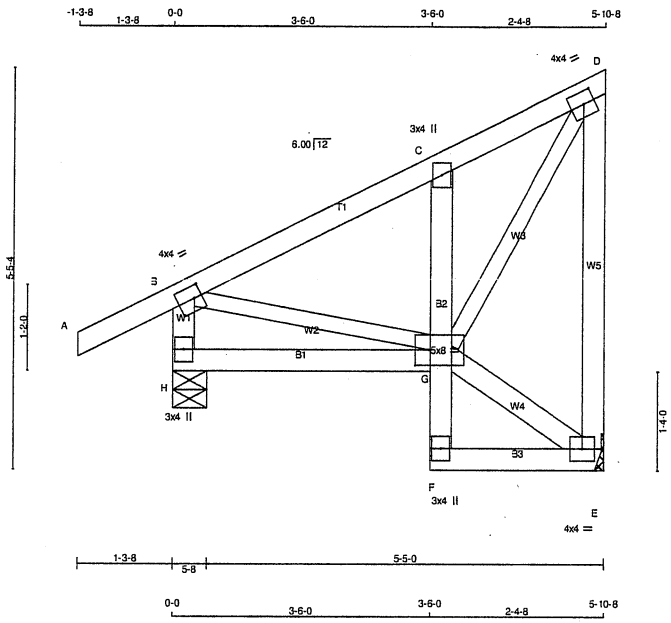

TOTAL WEIGHT = 2 X 35 = 70 lb

[M]

LUMBER

N. L. G. A. RULES

CHORDS	SIZE		LUMBER	DESCR.
A - D	2x4	DRY	No.2	SPF
E - D	2x4	DRY	No.2	SPF
H - B	2x4	DRY	No.2	SPF
H - G	2x4	DRY	No.2	SPF
F - C	2x4	DRY	No.2	SPF
F - E	2x4	DRY	No.2	SPF
ALL WEBS EXCEPT	2x3	DRY	No.2	SPF
G - E	2x4	DRY	No.2	SPF

DRY: SEASONED LUMBER.

PLATES (table is in inches)

JT	TYPE	PLATES	W	LEN	Y	X
B	TMVW-t	MT20	4.0	4.0	2.00	1.25
C	TMV+p	MT20	3.0	4.0		
D	TMVW-t	MT20	4.0	4.0	2.00	1.75
E	BMVW1-t	MT20	4.0	4.0		
F	BMV+p	MT20	3.0	4.0		
G	BVMWWW-l	MT20	5.0	8.0	2.50	2.50
H	BMV1+p	MT20	3.0	4.0		

DIMENSIONS, SUPPORTS AND LOADINGS SPECIFIED BY FABRICATOR TO BE VERIFIED BY BUILDING DESIGNER

BEARINGS

JT	FACTORED GROSS REACTION VERT	HORZ	MAXIMUM FACTORED GROSS REACTION DOWN	HORZ	UPLIFT	INPUT BRG IN-SX	REQRD BRG IN-SX
E	324	0	324	0	0	MECHANICAL	
H	448	0	448	0	0	5-8	5-8

A SUITABLE HANGER/MECHANICAL CONNECTION IS REQUIRED AT JOINT E. MINIMUM BEARING LENGTH AT JOINT E = 1-8.

UNFACTORED REACTIONS

JT	1ST LCASE COMBINED	MAX./MIN. COMPONENT REACTIONS SNOW	LIVE	PERM.LIVE	WIND	DEAD	SOIL
E	229	150 / 0	0 / 0	0 / 0	0 / 0	79 / 0	0 / 0
H	315	220 / 0	0 / 0	0 / 0	0 / 0	95 / 0	0 / 0

BEARING MATERIAL TO BE SPF NO.2 OR BETTER AT JOINT(S) H

BRACING

TOP CHORD TO BE SHEATHED OR MAX. PURLIN SPACING = 6.25 FT.
MAX. UNBRACED BOTTOM CHORD LENGTH = 7.81 FT OR RIGID CEILING DIRECTLY APPLIED.

ALL PITCH BREAKS AND PERIMETER CORNER JOINTS MUST BE LATERALLY RESTRAINED.

LOADING

TOTAL LOAD CASES: (4)

CHORDS

MEMB. FR-TO	MAX. FACTORED FORCE (LBS)	FACTORED VERT. LOAD LC1 (PLF) FROM	TO	MAX CSI (LC)	MAX. UNBRAC LENGTH
A- B	0 / 28	-91.8	-91.8	0.12 (1)	10.00
B- C	-222 / 0	-91.8	-91.8	0.14 (1)	6.25
C- D	-239 / 0	-91.8	-91.8	0.14 (1)	6.25
E- D	-297 / 0	0.0	0.0	0.15 (1)	7.81
H- B	-415 / 0	0.0	0.0	0.04 (1)	7.81
H- G	0 / 0	-18.5	-18.5	0.07 (4)	10.00
F- G	0 / 23	0.0	0.0	0.02 (1)	10.00
G- C	-336 / 0	0.0	0.0	0.02 (1)	7.81
F- E	0 / 11	-18.5	-18.5	0.03 (4)	10.00

WEBS

MEMB. FR-TO	MAX. FACTORED FORCE (LBS)	MAX CSI (LC)
B- G	0 / 216	0.05 (1)
G- E	-13 / 0	0.00 (1)
G- D	0 / 387	0.09 (1)

DESIGN CRITERIA

SPECIFIED LOADS:

TOP CH.	LL	=	25.6	PSF
	DL	=	6.0	PSF
BOT CH.	LL	=	0.0	PSF
	DL	=	7.4	PSF
TOTAL LOAD		=	39.0	PSF

SPACING = 24.0 IN. C/C

THIS TRUSS IS DESIGNED FOR RESIDENTIAL OR SMALL BUILDING REQUIREMENTS OF PART 9, NBCC 2015

THIS DESIGN COMPLIES WITH:
- PART 9 OF BCBC 2018 , ABC 2019
- PART 9 OF OBC 2012 (2019 AMENDMENT)
- CSA 086-14
- TPIC 2014

(55 % OF 31.3 P.S.F. G.S.L. PLUS 8.4 P.S.F. RAIN LOAD) EQUALS 25.6 P.S.F. SPECIFIED ROOF LIVE LOAD

ALLOWABLE DEFL.(LL)= L/360 (0.20")
CALCULATED VERT. DEFL.(LL) = L/ 999 (0.00")
ALLOWABLE DEFL.(TL)= L/360 (0.20")
CALCULATED VERT. DEFL.(TL) = L/ 999 (0.01")

CSI: TC=0.15/1.00 (D-E:1) , BC=0.07/1.00 (G-H:4) , WB=0.09/1.00 (D-G:1) , SSI=0.13/1.00 (B-C:1)

DOL LUMBER=1.00 NAIL=1.00 LS BEND=1.10 COMP=1.10 SHEAR=1.10 TENS= 1.10

COMPANION LIVE LOAD FACTOR = 1.00

AUTOSOLVE RIGHT HEEL ONLY

TRUSS PLATE MANUFACTURER IS NOT RESPONSIBLE FOR QUALITY CONTROL IN THE TRUSS MANUFACTURING PLANT .

NAIL VALUES

PLATE	GRIP(DRY) (PSI) MAX	MIN	SHEAR (PLI) MAX	MIN	SECTION (PLI) MAX	MIN
MT20	650	371	1747	788	1987	1873

PLATE PLACEMENT TOL. = 0.250 inches

PLATE ROTATION TOL. = 5.0 Deg.

JSI GRIP= 0.42 (G) (INPUT = 0.90)
JSI METAL= 0.13 (G) (INPUT = 1.00)

LICENSED PROFESSIONAL ENGINEER
H. J. G. ALVES
100009024
PROVINCE OF ONTARIO

Structural component only
DWG# T-2117973

JOB NAME	TRUSS NAME	QUANTITY	PLY	JOB DESC. ROYAL PINE HOMES	DRWG NO.
413426	T31	2	1	TRUSS DESC.	

Tamarack Roof Truss. Burlington

Version 8.330 S May 6 2020 MiTek Industries, Inc. Wed Oct 14 11:24:30 2020 Page 1

ID:8lTcKsuAqJzVBsZ1WqSCayyOHpK-VqFw4ObjQF43MFEe9lRPT0F80YnxytAwfeihioyTX3F

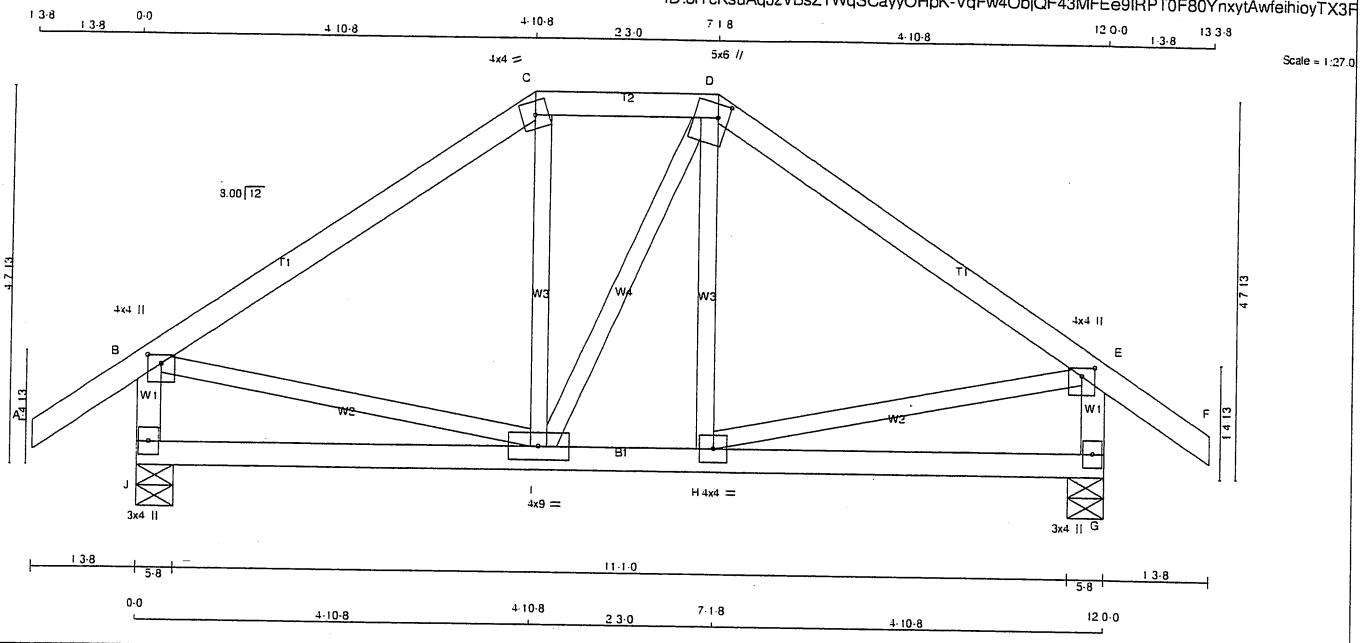

TOTAL WEIGHT = 2 X 54 = 107 lb

[M][F]

LUMBER

N. L. G. A. RULES

CHORDS	SIZE		LUMBER	DESCR.
A - C	2x4	DRY	No.2	SPF
C - D	2x4	DRY	No.2	SPF
D - F	2x4	DRY	No.2	SPF
J - B	2x4	DRY	No.2	SPF
G - E	2x4	DRY	No.2	SPF
J - G	2x4	DRY	No.2	SPF
ALL WEBS EXCEPT	2x3	DRY	No.2	SPF

DRY: SEASONED LUMBER.

PLATES (table is in inches)

JT	TYPE	PLATES	W	LEN	Y	X
B	TMVW+p	MT20	4.0	4.0	1.25	2.00
C	TTW-m	MT20	4.0	4.0		
D	TTWW+m	MT20	5.0	6.0	2.00	1.50
E	TMVW+p	MT20	4.0	4.0	1.25	2.00
G	BMV1+p	MT20	3.0	4.0		
H	BMWW-t	MT20	4.0	4.0		
I	BMWWW-t	MT20	4.0	9.0		
J	BMV1+p	MT20	3.0	4.0		

DIMENSIONS, SUPPORTS AND LOADINGS SPECIFIED BY FABRICATOR TO BE VERIFIED BY BUILDING DESIGNER

BEARINGS

JT	FACTORED GROSS REACTION VERT	HORZ	MAXIMUM FACTORED GROSS REACTION DOWN	HORZ	UPLIFT	INPUT BRG IN-SX	REQRD BRG IN-SX
J	787	0	787	0	0	5-8	5-8
G	787	0	787	0	0	5-8	5-8

UNFACTORED REACTIONS

JT	1ST LCASE COMBINED	MAX./MIN. COMPONENT REACTIONS SNOW	LIVE	PERM.LIVE	WIND	DEAD	SOIL
J	555	377 0	0 0	0 0	0 0	177 0	0 0
G	555	377 0	0 0	0 0	0 0	177 0	0 0

BEARING MATERIAL TO BE SPF NO.2 OR BETTER AT JOINT(S) J, G

BRACING

TOP CHORD TO BE SHEATHED OR MAX. PURLIN SPACING = 6.25 FT.
MAX. UNBRACED BOTTOM CHORD LENGTH = 10.00 FT OR RIGID CEILING DIRECTLY APPLIED.

ALL PITCH BREAKS AND PERIMETER CORNER JOINTS MUST BE LATERALLY RESTRAINED.

LOADING

TOTAL LOAD CASES: (4)

CHORDS

MEMB. FR-TO	MAX. FACTORED FORCE (LBS)	FACTORED VERT. LOAD (PLF) FROM	TO	LC1 MAX CSI (LC)	MAX. UNBRAC LENGTH
A- B	0 35	-91.8	-91.8	0.12 (1)	10.00
B- C	-542 0	-91.8	-91.8	0.28 (1)	6.25
C- D	-449 0	-91.8	-91.8	0.06 (1)	6.25
D- E	-541 0	-91.8	-91.8	0.28 (1)	6.25
E- F	0 35	-91.8	-91.8	0.12 (1)	10.00
J- B	-748 0	0.0	0.0	0.08 (1)	7.81
G- E	-748 0	0.0	0.0	0.08 (1)	7.81
J- I	0 0	-18.5	-18.5	0.10 (4)	10.00
I- H	0 449	-18.5	-18.5	0.13 (4)	10.00
H- G	0 0	-18.5	-18.5	0.10 (4)	10.00

WEBS

MEMB. FR-TO	MAX. FACTORED FORCE (LBS)	MAX CSI (LC)
I- C	-25 47	0.02 (4)
I- D	0 2	0.00 (4)
H- D	-27 45	0.02 (4)
B- I	0 460	0.10 (1)
H- E	0 460	0.10 (1)

DESIGN CRITERIA

SPECIFIED LOADS:

TOP CH.	LL	=	25.6	PSF
	DL	=	6.0	PSF
BOT CH.	LL	=	0.0	PSF
	DL	=	7.4	PSF
TOTAL LOAD		=	39.0	PSF

SPACING = 24.0 IN. C/C

LOADING IN FLAT SECTION BASED ON A SLOPE OF 6.00/12

THIS TRUSS IS DESIGNED FOR RESIDENTIAL OR SMALL BUILDING REQUIREMENTS OF PART 9. NBCC 2010, NBCC 2015

THIS DESIGN COMPLIES WITH:
- PART 9 OF BCBC 2018 , OBC 2012 , ABC 2019
- PART 9 OF OBC 2012 (2019 AMENDMENT)
- CSA 086-09, CSA 086-14
- TPIC 2011, TPIC 2014

(55 % OF 31.3 P.S.F. G.S.L. PLUS 8.4 P.S.F. RAIN LOAD) EQUALS 25.6 P.S.F. SPECIFIED ROOF LIVE LOAD

ALLOWABLE DEFL.(LL)= L/360 (0.40")
CALCULATED VERT. DEFL.(LL) = L/ 999 (0.01")
ALLOWABLE DEFL.(TL)= L/360 (0.40")
CALCULATED VERT. DEFL.(TL) = L/ 999 (0.03")

CSI: TC=0.28/1.00 (B-C:1) , BC=0.13/1.00 (H-I:4) , WB=0.10/1.00 (B-I:1) , SSI=0.15/1.00 (D-E:1)

DOL LUMBER=1.00 NAIL=1.00 LS BEND=1.10 COMP=1.10 SHEAR=1.10 TENS= 1.10

COMPANION LIVE LOAD FACTOR = 1.00

TRUSS PLATE MANUFACTURER IS NOT RESPONSIBLE FOR QUALITY CONTROL IN THE TRUSS MANUFACTURING PLANT .

NAIL VALUES

PLATE	GRIP(DRY) (PSI) MAX	MIN	SHEAR (PLI) MAX	MIN	SECTION (PLI) MAX	MIN
MT20	618	354	1667	788	1987	1656

PLATE PLACEMENT TOL. = 0.250 inches

PLATE ROTATION TOL. = 5.0 Deg.

JSI GRIP= 0.58 (B) (INPUT = 0.90)
JSI METAL= 0.17 (B) (INPUT = 1.00)

LICENSED PROFESSIONAL ENGINEER
10/14/20
H. J. G. ALVES
100009024
PROVINCE OF ONTARIO

Structural component only
DWG# T-2022186

JOB NAME	TRUSS NAME	QUANTITY	PLY	JOB DESC. ROYAL PINE HOMES	DRWG NO.
413426	T31Z	1	1	TRUSS DESC.	

Tamarack Roof Truss, Burlington

Version 8.330 S May 6 2020 MiTek Industries, Inc. Wed Oct 14 11:24:31 2020 Page 1
ID:8ITcKsuAqJzVBsZ1WqSCayyOHpK-z0pIIjbLAYCw_Pprj?ye0DoGny52hGv3uISEEEyTX3E

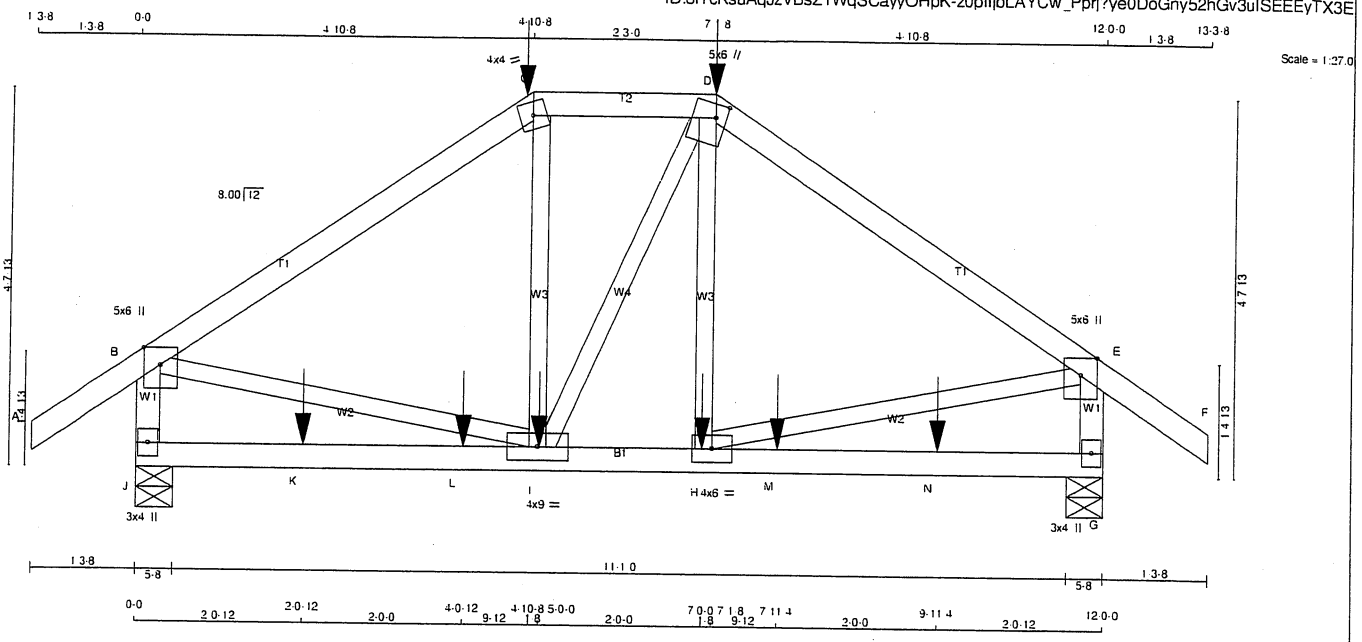

TOTAL WEIGHT = 54 lb [M]

LUMBER

N. L. G. A. RULES

CHORDS	SIZE		LUMBER	DESCR.
A - C	2x4	DRY	No.2	SPF
C - D	2x4	DRY	No.2	SPF
D - F	2x4	DRY	No.2	SPF
J - B	2x4	DRY	No.2	SPF
G - E	2x4	DRY	No.2	SPF
J - G	2x4	DRY	No.2	SPF
ALL WEBS EXCEPT	2x3	DRY	No.2	SPF

DRY: SEASONED LUMBER.

PLATES (table is in inches)

JT	TYPE	PLATES	W	LEN	Y	X
B	TMVW+p	MT20	5.0	6.0	Edge	
C	TTW-m	MT20	4.0	4.0		
D	TTWW+m	MT20	5.0	6.0	2.00	1.50
E	TMVW+p	MT20	5.0	6.0	Edge	
G	BMV1+p	MT20	3.0	4.0		
H	BMWW-t	MT20	4.0	6.0		
I	BMWWW-t	MT20	4.0	9.0		
J	BMV1+p	MT20	3.0	4.0		

Edge - INDICATES REFERENCE CORNER OF PLATE TOUCHES EDGE OF CHORD.

DIMENSIONS, SUPPORTS AND LOADINGS SPECIFIED BY FABRICATOR TO BE VERIFIED BY BUILDING DESIGNER

BEARINGS

JT	FACTORED GROSS REACTION VERT	HORZ	MAXIMUM FACTORED GROSS REACTION DOWN	HORZ	UPLIFT	INPUT BRG IN-SX	REQRD BRG IN-SX
J	1331	0	1331	0	0	5-8	5-8
G	1332	0	1332	0	0	5-8	5-8

UNFACTORED REACTIONS

JT	1ST LCASE COMBINED	MAX./MIN. COMPONENT REACTIONS SNOW	LIVE	PERM.LIVE	WIND	DEAD	SOIL
J	939	632 0	0 0	0 0	0 0	307 0	0 0
G	939	632 0	0 0	0 0	0 0	307 0	0 0

BEARING MATERIAL TO BE SPF NO.2 OR BETTER AT JOINT(S) J, G

BRACING

TOP CHORD TO BE SHEATHED OR MAX. PURLIN SPACING = 5.08 FT.
MAX. UNBRACED BOTTOM CHORD LENGTH = 10.00 FT OR RIGID CEILING DIRECTLY APPLIED.

ALL PITCH BREAKS AND PERIMETER CORNER JOINTS MUST BE LATERALLY RESTRAINED.

LOADING

TOTAL LOAD CASES: (4)

CHORDS

MEMB. FR-TO	MAX. FACTORED FORCE (LBS)		FACTORED VERT. LOAD (PLF) FROM	TO	LC1	MAX CSI (LC)	MAX. UNBRAC LENGTH
A- B	0	35	-91.8	-91.8	0.14 (1)	10.00	
B- C	-1258	0	-91.8	-91.8	0.47 (1)	5.08	
C- D	-1042	0	-91.8	-91.8	0.10 (1)	6.02	
D- E	-1256	0	-91.8	-91.8	0.47 (1)	5.08	
E- F	0	35	-91.8	-91.8	0.14 (1)	10.00	
J- B	-1274	0	0.0	0.0	0.14 (1)	7.10	
G- E	-1275	0	0.0	0.0	0.14 (1)	7.10	
J- K	0	0	-18.5	-18.5	0.19 (4)	10.00	
K- L	0	0	-18.5	-18.5	0.19 (4)	10.00	
L- I	0	0	-18.5	-18.5	0.19 (4)	10.00	
I- H	0	1041	-18.5	-18.5	0.26 (1)	10.00	
H- M	0	0	-18.5	-18.5	0.19 (4)	10.00	
M- N	0	0	-18.5	-18.5	0.19 (4)	10.00	
N- G	0	0	-18.5	-18.5	0.19 (4)	10.00	

WEBS

MEMB. FR-TO	MAX. FACTORED FORCE (LBS)		MAX CSI (LC)
I- C	-90	79	0.03 (4)
I- D	0	3	0.00 (4)
H- D	-92	76	0.03 (1)
B- I	0	1069	0.26 (1)
H- E	0	1068	0.26 (1)

SPECIFIED CONCENTRATED LOADS (LBS)

JT	LOC.	LC1	MAX-	MAX+	FACE	DIR.	TYPE	HEEL	CONN.
C	4-10-8	-319	-319	---	BACK	VERT	TOTAL	---	C1
D	7-1-8	-319	-319	---	BACK	VERT	TOTAL	---	C1
H	7-0-0	-21	-21	---	BACK	VERT	TOTAL	---	C1
I	5-0-0	-21	-21	---	BACK	VERT	TOTAL	---	C1
K	2-0-12	-22	-22	---	BACK	VERT	TOTAL	---	C1
L	4-0-12	-21	-21	---	BACK	VERT	TOTAL	---	C1
M	7-11-4	-21	-21	---	BACK	VERT	TOTAL	---	C1
N	9-11-4	-22	-22	---	BACK	VERT	TOTAL	---	C1

CONNECTION REQUIREMENTS

1) **C1:** A SUITABLE HANGER/MECHANICAL CONNECTION IS REQUIRED.

DESIGN CRITERIA

SPECIFIED LOADS:

TOP CH.	LL	=	25.6	PSF
	DL	=	6.0	PSF
BOT CH.	LL	=	0.0	PSF
	DL	=	7.4	PSF
TOTAL LOAD		=	39.0	PSF

SPACING = 24.0 IN. C/C

LOADING IN FLAT SECTION BASED ON A SLOPE OF 6.00/12

THIS TRUSS IS DESIGNED FOR RESIDENTIAL OR SMALL BUILDING REQUIREMENTS OF PART 9, NBCC 2010, NBCC 2015

THIS DESIGN COMPLIES WITH:
- PART 9 OF BCBC 2018 , OBC 2012 , ABC 2019
- PART 9 OF OBC 2012 (2019 AMENDMENT)
- CSA 086-09, CSA 086-14
- TPIC 2011, TPIC 2014

(55 % OF 31.3 P.S.F. G.S.L. PLUS 8.4 P.S.F. RAIN LOAD) EQUALS 25.6 P.S.F. SPECIFIED ROOF LIVE LOAD

ALLOWABLE DEFL.(LL)= L/360 (0.40")
CALCULATED VERT. DEFL.(LL) = L/ 999 (0.02")
ALLOWABLE DEFL.(TL)= L/360 (0.40")
CALCULATED VERT. DEFL.(TL) = L/ 999 (0.05")

CSI: TC=0.47/1.00 (B-C:1) , BC=0.26/1.00 (H-I:1) , WB=0.26/1.00 (B-I:1) , SSI=0.16/1.00 (D-E:1)

DOL LUMBER=1.00 NAIL=1.00 LS BEND=1.00 COMP=1.00 SHEAR=1.00 TENS= 1.00

COMPANION LIVE LOAD FACTOR = 1.00

TRUSS PLATE MANUFACTURER IS NOT RESPONSIBLE FOR QUALITY CONTROL IN THE TRUSS MANUFACTURING PLANT .

NAIL VALUES

PLATE	GRIP(DRY) (PSI) MAX	MIN	SHEAR (PLI) MAX	MIN	SECTION (PLI) MAX	MIN
MT20	618	354	1667	788	1987	1656

PLATE PLACEMENT TOL. = 0.250 inches

PLATE ROTATION TOL. = 5.0 Deg.

JSI GRIP= 0.78 (B) (INPUT = 0.90)
JSI METAL= 0.53 (B) (INPUT = 1.00)

LICENSED PROFESSIONAL ENGINEER
10/14/20
H. J. G. ALVES
100009024
PROVINCE OF ONTARIO

Structural component only
DWG# T-2022187

JOB NAME	TRUSS NAME	QUANTITY	PLY	JOB DESC. ROYAL PINE HOMES	DRWG NO.
413426	T32	1	1	TRUSS DESC.	

Tamarack Roof Truss, Burlington

Version 8.330 S May 6 2020 MiTek Industries, Inc. Wed Oct 14 11:24:31 2020 Page 1
ID:8lTcKsuAqJzVBsZ1WqSCayyOHpK-z0pIIjbLAYCw_Pprj?ye0DoEFy7ohJA3uISEEEyTX3E

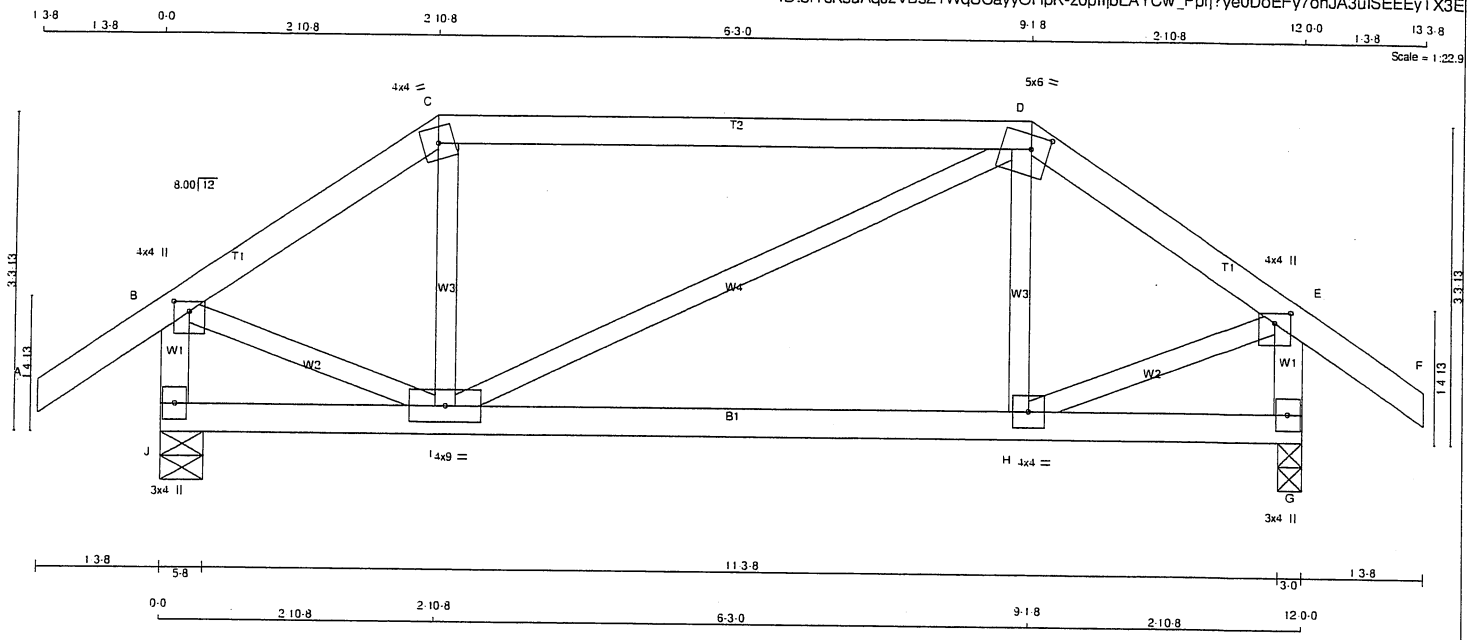

TOTAL WEIGHT = 49 lb

LUMBER

N. L. G. A. RULES

CHORDS	SIZE		LUMBER	DESCR.
A - C	2x4	DRY	No.2	SPF
C - D	2x4	DRY	No.2	SPF
D - F	2x4	DRY	No.2	SPF
J - B	2x4	DRY	No.2	SPF
G - E	2x4	DRY	No.2	SPF
J - G	2x4	DRY	No.2	SPF
ALL WEBS EXCEPT	2x3	DRY	No.2	SPF

DRY: SEASONED LUMBER.

PLATES (table is in inches)

JT	TYPE	PLATES	W	LEN	Y	X
B	TMVW+p	MT20	4.0	4.0	1.25	2.00
C	TTW-m	MT20	4.0	4.0		
D	TTWW-m	MT20	5.0	6.0	1.75	2.25
E	TMVW+p	MT20	4.0	4.0	1.25	2.00
G	BMV1+p	MT20	3.0	4.0		
H	BMWW-t	MT20	4.0	4.0		
I	BMWWW-t	MT20	4.0	9.0		
J	BMV1+p	MT20	3.0	4.0		

DIMENSIONS, SUPPORTS AND LOADINGS SPECIFIED BY FABRICATOR TO BE VERIFIED BY BUILDING DESIGNER

BEARINGS

JT	FACTORED GROSS REACTION VERT	HORZ	MAXIMUM FACTORED GROSS REACTION DOWN	HORZ	UPLIFT	INPUT BRG IN-SX	REQRD BRG IN-SX
J	787	0	787	0	0	5-8	5-8
G	787	0	787	0	0	3-0	3-0

UNFACTORED REACTIONS

JT	1ST LCASE COMBINED	MAX./MIN. COMPONENT REACTIONS SNOW	LIVE	PERM.LIVE	WIND	DEAD	SOIL
J	555	377 0	0 0	0 0	0 0	177 0	0 0
G	555	377 0	0 0	0 0	0 0	177 0	0 0

BEARING MATERIAL TO BE SPF NO.2 OR BETTER AT JOINT(S) J, G

BRACING

TOP CHORD TO BE SHEATHED OR MAX. PURLIN SPACING = 6.25 FT.
MAX. UNBRACED BOTTOM CHORD LENGTH = 10.00 FT OR RIGID CEILING DIRECTLY APPLIED.

ALL PITCH BREAKS AND PERIMETER CORNER JOINTS MUST BE LATERALLY RESTRAINED.

LOADING

TOTAL LOAD CASES: (4)

CHORDS

MEMB. FR-TO	MAX. FACTORED FORCE (LBS)		FACTORED VERT. LOAD LC1 (PLF) FROM	TO	MAX CSI (LC)	MAX. UNBRAC LENGTH
A- B	0	35	-91.8	-91.8	0.12 (1)	10.00
B- C	-601	0	-91.8	-91.8	0.13 (1)	6.25
C- D	-496	0	-91.8	-91.8	0.64 (1)	6.25
D- E	-601	0	-91.8	-91.8	0.13 (1)	6.25
E- F	0	35	-91.8	-91.8	0.12 (1)	10.00
J- B	-774	0	0.0	0.0	0.08 (1)	7.81
G- E	-774	0	0.0	0.0	0.08 (1)	7.81
J- I	0	0	-18.5	-18.5	0.11 (4)	10.00
I- H	0	496	-18.5	-18.5	0.15 (4)	10.00
H- G	0	0	-18.5	-18.5	0.11 (4)	10.00

WEBS

MEMB. FR-TO	MAX. FACTORED FORCE (LBS)		MAX CSI (LC)
I- C	-83	45	0.02 (1)
I- D	0	0	0.00 (1)
H- D	-83	45	0.02 (1)
B- I	0	531	0.12 (1)
H- E	0	531	0.12 (1)

DESIGN CRITERIA

SPECIFIED LOADS:

TOP CH.	LL	=	25.6	PSF
	DL	=	6.0	PSF
BOT CH.	LL	=	0.0	PSF
	DL	=	7.4	PSF
TOTAL LOAD		=	39.0	PSF

SPACING = 24.0 IN. C/C

LOADING IN FLAT SECTION BASED ON A SLOPE OF 6.00/12

THIS TRUSS IS DESIGNED FOR RESIDENTIAL OR SMALL BUILDING REQUIREMENTS OF PART 9, NBCC 2010, NBCC 2015

THIS DESIGN COMPLIES WITH:
- PART 9 OF BCBC 2018 , OBC 2012 , ABC 2019
- PART 9 OF OBC 2012 (2019 AMENDMENT)
- CSA 086-09, CSA 086-14
- TPIC 2011, TPIC 2014

(55 % OF 31.3 P.S.F. G.S.L. PLUS 8.4 P.S.F. RAIN LOAD) EQUALS 25.6 P.S.F. SPECIFIED ROOF LIVE LOAD

ALLOWABLE DEFL.(LL)= L/360 (0.40")
CALCULATED VERT. DEFL.(LL) = L/ 999 (0.01")
ALLOWABLE DEFL.(TL)= L/360 (0.40")
CALCULATED VERT. DEFL.(TL) = L/ 999 (0.04")

CSI: TC=0.64/1.00 (C-D:1) , BC=0.15/1.00 (H-I:4) , WB=0.12/1.00 (E-H:1) , SSI=0.22/1.00 (C-D:1)

DOL LUMBER=1.00 NAIL=1.00 LS BEND=1.10 COMP=1.10 SHEAR=1.10 TENS= 1.10

COMPANION LIVE LOAD FACTOR = 1.00

TRUSS PLATE MANUFACTURER IS NOT RESPONSIBLE FOR QUALITY CONTROL IN THE TRUSS MANUFACTURING PLANT

NAIL VALUES

PLATE	GRIP(DRY) (PSI) MAX	MIN	SHEAR (PLI) MAX	MIN	SECTION (PLI) MAX	MIN
MT20	618	354	1667	788	1987	1656

PLATE PLACEMENT TOL. = 0.250 inches

PLATE ROTATION TOL. = 5.0 Deg.

JSI GRIP= 0.64 (H) (INPUT = 0.90)
JSI METAL= 0.19 (H) (INPUT = 1.00)

LICENSED PROFESSIONAL ENGINEER
10/14/20
H. J. G. ALVES
100009024
PROVINCE OF ONTARIO

Structural component only
DWG# T-2022188

JOB NAME	TRUSS NAME	QUANTITY	PLY	JOB DESC. ROYAL PINE HOMES	DRWG NO.
413426	T33	1	1	TRUSS DESC.	

Tamarack Roof Truss, Burlington

Version 8.330 S May 6 2020 MiTek Industries, Inc. Wed Oct 14 11:24:32 2020 Page 1
ID:8ITcKsuAqJzVBsZ1WqSCayyOHpK-RCNgV3czxsKmcZO1GiUtYRKSkMSPQkQD6yBnngyTX3D

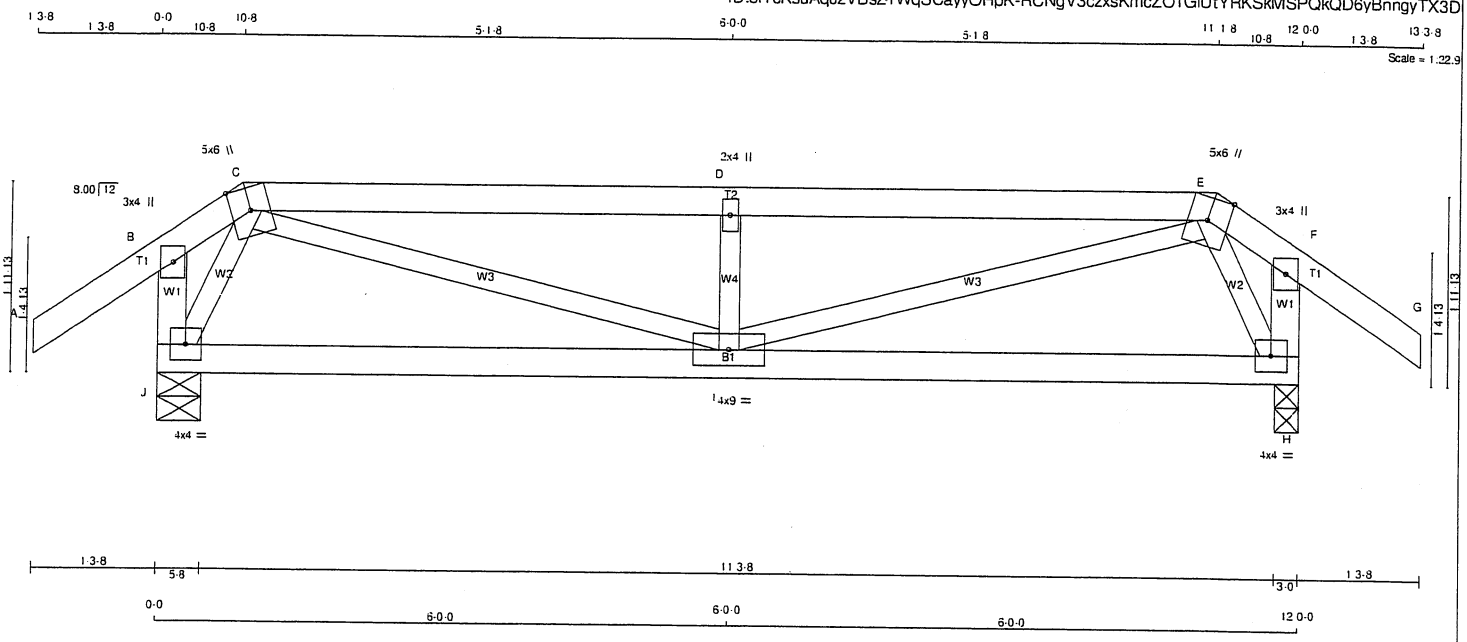

TOTAL WEIGHT = 46 lb

LUMBER

N. L. G. A. RULES

CHORDS	SIZE		LUMBER	DESCR.
A - C	2x4	DRY	No.2	SPF
C - E	2x4	DRY	No.2	SPF
E - G	2x4	DRY	No.2	SPF
J - B	2x4	DRY	No.2	SPF
H - F	2x4	DRY	No.2	SPF
J - H	2x4	DRY	No.2	SPF
ALL WEBS EXCEPT	2x3	DRY	No.2	SPF

DRY: SEASONED LUMBER.

PLATES (table is in inches)

JT	TYPE	PLATES	W	LEN	Y	X
B	TMV+p	MT20	3.0	4.0		
C	TTWW+m	MT20	5.0	6.0	Edge	
D	TMW+w	MT20	2.0	4.0		
E	TTWW+m	MT20	5.0	6.0	Edge	
F	TMV+p	MT20	3.0	4.0		
H	BMVW1-t	MT20	4.0	4.0		
I	BMWWW-t	MT20	4.0	9.0		
J	BMVW1-t	MT20	4.0	4.0		

Edge - INDICATES REFERENCE CORNER OF PLATE TOUCHES EDGE OF CHORD.

DIMENSIONS, SUPPORTS AND LOADINGS SPECIFIED BY FABRICATOR TO BE VERIFIED BY BUILDING DESIGNER

BEARINGS

JT	FACTORED GROSS REACTION VERT	HORZ	MAXIMUM FACTORED GROSS REACTION DOWN	HORZ	UPLIFT	INPUT BRG IN-SX	REQRD BRG IN-SX
J	787	0	787	0	0	5-8	5-8
H	787	0	787	0	0	3-0	3-0

UNFACTORED REACTIONS

JT	1ST LCASE COMBINED	MAX./MIN. COMPONENT REACTIONS SNOW	LIVE	PERM.LIVE	WIND	DEAD	SOIL
J	555	377 0	0 0	0 0	0 0	177 0	0 0
H	555	377 0	0 0	0 0	0 0	177 0	0 0

BEARING MATERIAL TO BE SPF NO.2 OR BETTER AT JOINT(S) J, H

BRACING

TOP CHORD TO BE SHEATHED OR MAX. PURLIN SPACING = 5.15 FT.
MAX. UNBRACED BOTTOM CHORD LENGTH = 10.00 FT OR RIGID CEILING DIRECTLY APPLIED.

ALL PITCH BREAKS AND PERIMETER CORNER JOINTS MUST BE LATERALLY RESTRAINED.

LOADING

TOTAL LOAD CASES: (4)

CHORDS

MEMB. FR-TO	MAX. FACTORED FORCE (LBS)		FACTORED VERT. LOAD (PLF) FROM	TO	LC1 CSI (LC)	MAX UNBRAC LENGTH
A- B	0	35	-91.8	-91.8	0.12 (1)	10.00
B- C	-52	0	-91.8	-91.8	0.12 (1)	6.25
C- D	-1304	0	-91.8	-91.8	0.40 (1)	5.15
D- E	-1304	0	-91.8	-91.8	0.40 (1)	5.15
E- F	-52	0	-91.8	-91.8	0.12 (1)	6.25
F- G	0	35	-91.8	-91.8	0.12 (1)	10.00
J- B	-262	0	0.0	0.0	0.03 (1)	7.81
H- F	-262	0	0.0	0.0	0.03 (1)	7.81
J- I	0	260	-18.5	-18.5	0.19 (4)	10.00
I- H	0	260	-18.5	-18.5	0.19 (4)	10.00

WEBS

MEMB. FR-TO	MAX. FACTORED FORCE (LBS)		MAX CSI (LC)
I- D	-567	0	0.08 (1)
J- C	-545	0	0.08 (1)
C- I	0	1101	0.25 (1)
E- H	-545	0	0.08 (1)
I- E	0	1101	0.25 (1)

DESIGN CRITERIA [M]

SPECIFIED LOADS:

TOP CH.	LL	=	25.6	PSF
	DL	=	6.0	PSF
BOT CH.	LL	=	0.0	PSF
	DL	=	7.4	PSF
TOTAL LOAD		=	39.0	PSF

SPACING = 24.0 IN. C/C

LOADING IN FLAT SECTION BASED ON A SLOPE OF 6.00/12

THIS TRUSS IS DESIGNED FOR RESIDENTIAL OR SMALL BUILDING REQUIREMENTS OF PART 9, NBCC 2010, NBCC 2015

THIS DESIGN COMPLIES WITH:
- PART 9 OF BCBC 2018 , OBC 2012 , ABC 2019
- PART 9 OF OBC 2012 (2019 AMENDMENT)
- CSA 086-09, CSA 086-14
- TPIC 2011, TPIC 2014

DESIGN ASSUMPTIONS
-OVERHANG NOT TO BE ALTERED OR CUT OFF.

(55 % OF 31.3 P.S.F. G.S.L. PLUS 8.4 P.S.F. RAIN LOAD) EQUALS 25.6 P.S.F. SPECIFIED ROOF LIVE LOAD .

ALLOWABLE DEFL.(LL)= L/360 (0.40")
CALCULATED VERT. DEFL.(LL) = L/ 999 (0.04")
ALLOWABLE DEFL.(TL)= L/360 (0.40")
CALCULATED VERT. DEFL.(TL) = L/ 999 (0.08")

CSI: TC=0.40/1.00 (C-D:1) , BC=0.19/1.00 (H-I:4) , WB=0.25/1.00 (C-I:1) , SSI=0.22/1.00 (D-E:1)

DOL LUMBER=1.00 NAIL=1.00 LS BEND=1.10 COMP=1.10 SHEAR=1.10 TENS= 1.10

COMPANION LIVE LOAD FACTOR = 1.00

AUTOSOLVE HEELS OFF

TRUSS PLATE MANUFACTURER IS NOT RESPONSIBLE FOR QUALITY CONTROL IN THE TRUSS MANUFACTURING PLANT .

NAIL VALUES

PLATE	GRIP(DRY) (PSI) MAX	MIN	SHEAR (PLI) MAX	MIN	SECTION (PLI) MAX	MIN
MT20	618	354	1667	788	1987	1656

PLATE PLACEMENT TOL. = 0.250 inches

PLATE ROTATION TOL. = 5.0 Deg.

JSI GRIP= 0.84 (E) (INPUT = 0.90)
JSI METAL= 0.32 (E) (INPUT = 1.00)

LICENSED PROFESSIONAL ENGINEER
10/14/20
H. J. G. ALVES
100009024
PROVINCE OF ONTARIO

Structural component only
DWG# T-2022189

JOB NAME	TRUSS NAME	QUANTITY	PLY	JOB DESC.	DRWG NO.
413426	T34	1	1	ROYAL PINE HOMES TRUSS DESC.	

Tamarack Roof Truss, Burlington

Version 8.420 S Jan 21 2021 MiTek Industries, Inc. Mon Jun 7 08:37:36 2021 Page 1
ID:8lTcKsuAqJzVBsZ1WqSCayyOHpK-X0K3La0IrfH1Drt5vxBNLWdmt1K2Sn?Vsyrqasz8knj

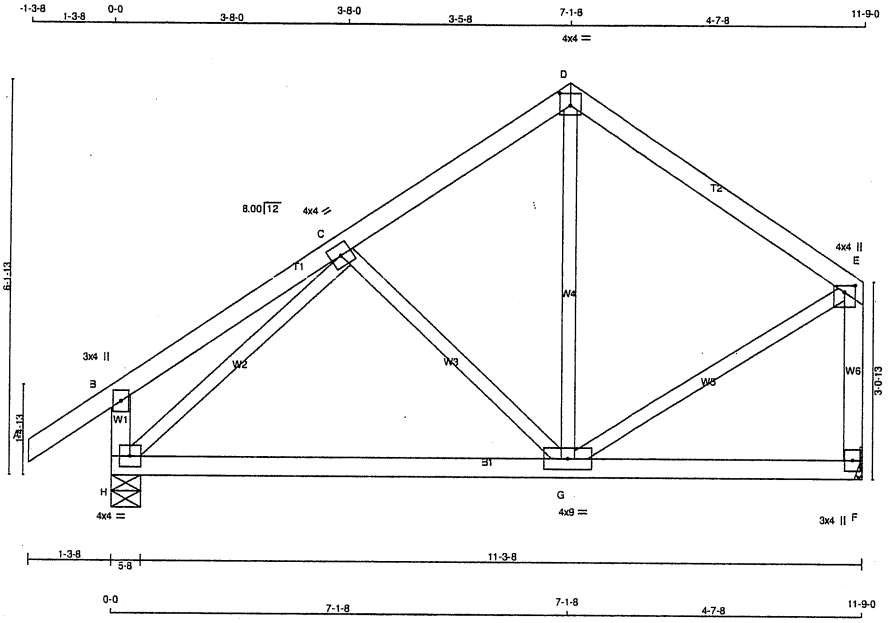

TOTAL WEIGHT = 52 lb

LUMBER
N. L. G. A. RULES

CHORDS	SIZE		LUMBER	DESCR.
A - D	2x4	DRY	No.2	SPF
D - E	2x4	DRY	No.2	SPF
H - B	2x4	DRY	No.2	SPF
F - E	2x4	DRY	No.2	SPF
H - F	2x4	DRY	No.2	SPF
ALL WEBS EXCEPT	2x3	DRY	No.2	SPF

DRY: SEASONED LUMBER.

PLATES (table is in inches)

JT	TYPE	PLATES	W	LEN	Y	X
B	TMV+p	MT20	3.0	4.0		
C	TMWW-t	MT20	4.0	4.0		
D	TTW-p	MT20	4.0	4.0	2.25	2.00
E	TMVW+p	MT20	4.0	4.0	1.25	2.00
F	BMV1+p	MT20	3.0	4.0		
G	BMWWW-t	MT20	4.0	9.0		
H	BMVW1-t	MT20	4.0	4.0		

DIMENSIONS, SUPPORTS AND LOADINGS SPECIFIED BY FABRICATOR TO BE VERIFIED BY BUILDING DESIGNER

BEARINGS

JT	FACTORED GROSS REACTION VERT	HORZ	MAXIMUM FACTORED GROSS REACTION DOWN	HORZ	UPLIFT	INPUT BRG IN-SX	REQRD BRG IN-SX
F	648	0	648	0	0	MECHANICAL	
H	774	0	774	0	0	5-8	5-8

A SUITABLE HANGER/MECHANICAL CONNECTION IS REQUIRED AT JOINT F. MINIMUM BEARING LENGTH AT JOINT F = 1-8.

UNFACTORED REACTIONS

JT	1ST LCASE COMBINED	MAX./MIN. COMPONENT REACTIONS SNOW	LIVE	PERM.LIVE	WIND	DEAD	SOIL
F	458	301 / 0	0 / 0	0 / 0	0 / 0	157 / 0	0 / 0
H	545	371 / 0	0 / 0	0 / 0	0 / 0	174 / 0	0 / 0

BEARING MATERIAL TO BE SPF NO.2 OR BETTER AT JOINT(S) H

BRACING
TOP CHORD TO BE SHEATHED OR MAX. PURLIN SPACING = 6.25 FT.
MAX. UNBRACED BOTTOM CHORD LENGTH = 10.00 FT OR RIGID CEILING DIRECTLY APPLIED.

ALL PITCH BREAKS AND PERIMETER CORNER JOINTS MUST BE LATERALLY RESTRAINED.

LOADING
TOTAL LOAD CASES: (4)

CHORDS

MEMB. FR-TO	MAX. FACTORED FORCE (LBS)	FACTORED VERT. LOAD LC1 (PLF) FROM	TO	MAX CSI (LC)	MAX. UNBRAC LENGTH
A- B	0 / 35	-91.8	-91.8	0.12 (1)	10.00
B- C	0 / 21	-91.8	-91.8	0.19 (1)	10.00
C- D	-413 / 0	-91.8	-91.8	0.14 (1)	6.25
D- E	-392 / 0	-91.8	-91.8	0.25 (1)	6.25
H- B	-251 / 0	0.0	0.0	0.03 (1)	7.81
F- E	-623 / 0	0.0	0.0	0.10 (1)	7.81
H- G	0 / 483	-18.5	-18.5	0.24 (4)	10.00
G- F	0 / 0	-18.5	-18.5	0.21 (4)	10.00

WEBS

MEMB. FR-TO	MAX. FACTORED FORCE (LBS)	MAX CSI (LC)
C- G	-218 / 0	0.09 (1)
G- D	0 / 102	0.04 (4)
H- C	-673 / 0	0.26 (1)
G- E	0 / 379	0.09 (1)

DESIGN CRITERIA [M][F]

SPECIFIED LOADS:

TOP	CH.	LL	=	25.6	PSF
		DL	=	6.0	PSF
BOT	CH.	LL	=	0.0	PSF
		DL	=	7.4	PSF
TOTAL	LOAD		=	39.0	PSF

SPACING = 24.0 IN. C/C

THIS TRUSS IS DESIGNED FOR RESIDENTIAL OR SMALL BUILDING REQUIREMENTS OF PART 9, NBCC 2015

THIS DESIGN COMPLIES WITH:
- PART 9 OF BCBC 2018 , ABC 2019
- PART 9 OF OBC 2012 (2019 AMENDMENT)
- CSA 086-14
- TPIC 2014

(55 % OF 31.3 P.S.F. G.S.L. PLUS 8.4 P.S.F. RAIN LOAD) EQUALS 25.6 P.S.F. SPECIFIED ROOF LIVE LOAD

ALLOWABLE DEFL.(LL)= L/360 (0.39")
CALCULATED VERT. DEFL.(LL) = L/ 999 (0.01")
ALLOWABLE DEFL.(TL)= L/360 (0.39")
CALCULATED VERT. DEFL.(TL) = L/ 999 (0.07")

CSI: TC=0.25/1.00 (D-E:1) , BC=0.24/1.00 (G-H:4) , WB=0.26/1.00 (C-H:1) , SSI=0.14/1.00 (D-E:1)

DOL LUMBER=1.00 NAIL=1.00 LS BEND=1.10 COMP=1.10 SHEAR=1.10 TENS= 1.10

COMPANION LIVE LOAD FACTOR = 1.00

TRUSS PLATE MANUFACTURER IS NOT RESPONSIBLE FOR QUALITY CONTROL IN THE TRUSS MANUFACTURING PLANT .

NAIL VALUES

PLATE	GRIP(DRY) (PSI) MAX	MIN	SHEAR (PLI) MAX	MIN	SECTION (PLI) MAX	MIN
MT20	650	371	1747	788	1987	1873

PLATE PLACEMENT TOL. = 0.250 inches

PLATE ROTATION TOL. = 5.0 Deg.

JSI GRIP= 0.54 (H) (INPUT = 0.90)
JSI METAL= 0.21 (C) (INPUT = 1.00)

LICENSED PROFESSIONAL ENGINEER
06/07/21
H. J. G. ALVES
100009024
PROVINCE OF ONTARIO

Structural component only
DWG# T-2117974

JOB NAME	TRUSS NAME	QUANTITY	PLY	JOB DESC.	DRWG NO.
413426	T35	1	1	ROYAL PINE HOMES TRUSS DESC.	

Tamarack Roof Truss, Burlington

Version 8.330 S May 6 2020 MiTek Industries, Inc. Wed Oct 14 11:24:34 2020 Page 1
ID:8ITcKsuAqJzVBsZ1WqSCayyOHpK-NbVRwIeDTTaUrsXQO7WLesQqd98luefWaGgurZyTX3B

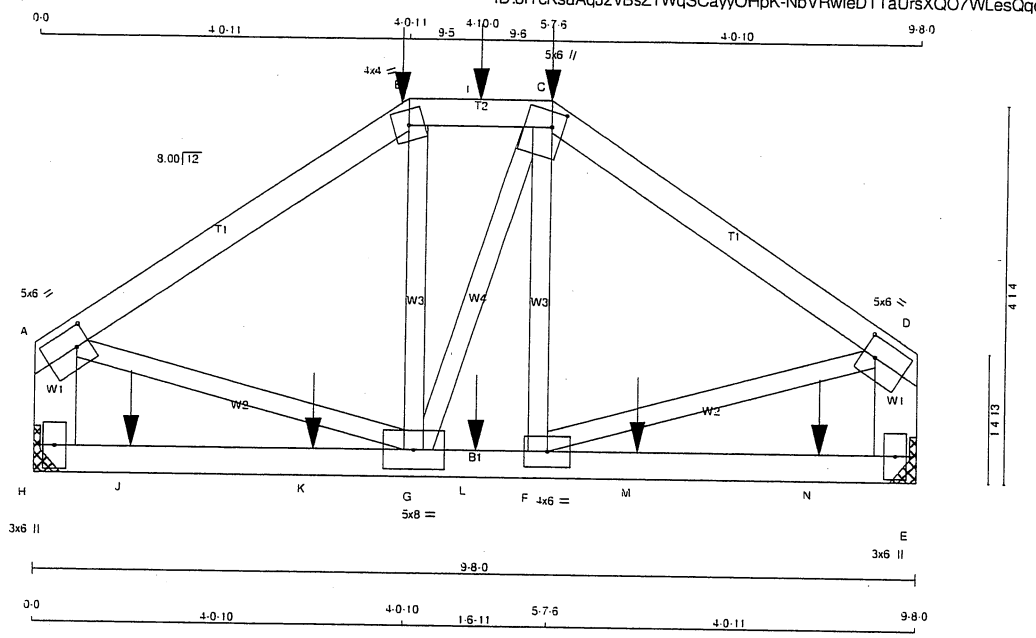

TOTAL WEIGHT = 43 lb

LUMBER

N. L. G. A. RULES

CHORDS	SIZE		LUMBER	DESCR.
A - B	2x4	DRY	No.2	SPF
B - C	2x4	DRY	No.2	SPF
C - D	2x4	DRY	No.2	SPF
H - A	2x6	DRY	No.2	SPF
E - D	2x6	DRY	No.2	SPF
H - E	2x4	DRY	No.2	SPF
ALL WEBS EXCEPT	2x3	DRY	No.2	SPF

DRY: SEASONED LUMBER.

PLATES (table is in inches)

JT	TYPE	PLATES	W	LEN	Y	X
A	TMVW-t	MT20	5.0	6.0	2.50	1.75
B	TTW-m	MT20	4.0	4.0		
C	TTWW+m	MT20	5.0	6.0	2.00	1.50
D	TMVW-t	MT20	5.0	6.0	2.50	1.75
E	BMV1+p	MT20	3.0	6.0		
F	BMWW-t	MT20	4.0	6.0		
G	BMWWW-t	MT20	5.0	8.0		
H	BMV1+p	MT20	3.0	6.0		

DIMENSIONS, SUPPORTS AND LOADINGS SPECIFIED BY FABRICATOR TO BE VERIFIED BY BUILDING DESIGNER

BEARINGS

JT	FACTORED GROSS REACTION VERT	HORZ	MAXIMUM FACTORED GROSS REACTION DOWN	HORZ	UPLIFT	INPUT BRG	REQRD BRG
H	971	0	971	0	0	MECHANICAL	
E	971	0	971	0	0	MECHANICAL	

A SUITABLE HANGER/MECHANICAL CONNECTION IS REQUIRED AT JOINT H, E. MINIMUM BEARING LENGTH AT JOINT H = 3-8, JOINT E = 3-8.

UNFACTORED REACTIONS

JT	1ST LCASE COMBINED	MAX.:MIN. COMPONENT REACTIONS SNOW	LIVE	PERM.LIVE	WIND	DEAD	SOIL
H	686	455 0	0 0	0 0	0 0	231 0	0 0
E	686	455 0	0 0	0 0	0 0	231 0	0 0

BRACING

TOP CHORD TO BE SHEATHED OR MAX. PURLIN SPACING = 5.93 FT.
MAX. UNBRACED BOTTOM CHORD LENGTH = 10.00 FT OR RIGID CEILING DIRECTLY APPLIED.

ALL PITCH BREAKS AND PERIMETER CORNER JOINTS MUST BE LATERALLY RESTRAINED.

LOADING

TOTAL LOAD CASES: (4)

CHORDS

MEMB. FR-TO	MAX. FACTORED FORCE (LBS)	FACTORED VERT. LOAD (PLF) FROM	TO	LC1	MAX CSI (LC)	MAX. UNBRAC LENGTH
A- B	-946 0	-91.8	-91.8	0.31 (1)	5.93	
B- I	-782 0	-91.8	-91.8	0.13 (1)	6.25	
I- C	-782 0	-91.8	-91.8	0.13 (1)	6.25	
C- D	-945 0	-91.8	-91.8	0.31 (1)	5.93	
H- A	-914 0	0.0	0.0	0.07 (1)	7.81	
E- D	-916 0	0.0	0.0	0.07 (1)	7.81	
H- J	0 0	-18.5	-18.5	0.13 (4)	10.00	
J- K	0 0	-18.5	-18.5	0.13 (4)	10.00	
K- G	0 0	-18.5	-18.5	0.13 (4)	10.00	
G- L	0 782	-18.5	-18.5	0.20 (1)	10.00	
L- F	0 782	-18.5	-18.5	0.20 (1)	10.00	
F- M	0 0	-18.5	-18.5	0.12 (4)	10.00	
M- N	0 0	-18.5	-18.5	0.12 (4)	10.00	
N- E	0 0	-18.5	-18.5	0.12 (4)	10.00	

WEBS

MEMB. FR-TO	MAX. FACTORED FORCE (LBS)	MAX CSI (LC)
G- B	-103 50	0.03 (1)
G- C	0 4	0.00 (4)
F- C	-103 46	0.03 (1)
A- G	0 811	0.20 (1)
F- D	0 811	0.20 (1)

SPECIFIED CONCENTRATED LOADS (LBS)

JT	LOC.	LC1	MAX-	MAX+	FACE	DIR.	TYPE	HEEL	CONN.
B	4-0-11	-40	-40	---	FRONT	VERT	DEAD	---	C1
B	4-0-11	-171	-171	---	FRONT	VERT	SNOW	---	C1
C	5-7-6	-40	-40	---	FRONT	VERT	DEAD	---	C1
C	5-7-6	-171	-171	---	FRONT	VERT	SNOW	---	C1
I	4-10-0	-90	-90	---	BACK	VERT	TOTAL	---	C1
J	1-0-12	-21	-21	---	BACK	VERT	TOTAL	---	C1
K	3-0-12	-21	-21	---	BACK	VERT	TOTAL	---	C1
L	4-10-0	-21	-21	---	BACK	VERT	TOTAL	---	C1
M	6-7-4	-21	-21	---	BACK	VERT	TOTAL	---	C1
N	8-7-4	-21	-21	---	BACK	VERT	TOTAL	---	C1

CONNECTION REQUIREMENTS

1) **C1:** A SUITABLE HANGER/MECHANICAL CONNECTION IS REQUIRED.

DESIGN CRITERIA

*** SPECIAL LOADS ANALYSIS ***
GEOMETRY AND/OR BASIC LOADS CHANGED BY USER.
LOADS WERE DERIVED FROM USER INPUT
NO FURTHER MODIFICATIONS WERE MADE

SPECIFIED LOADS:

TOP CH.	LL	=	25.6	PSF
	DL	=	6.0	PSF
BOT CH.	LL	=	0.0	PSF
	DL	=	7.4	PSF
TOTAL LOAD		=	39.0	PSF

SPACING = 24.0 IN. C/C

LOADING IN FLAT SECTION BASED ON A SLOPE OF 6.00/12

*** NON STANDARD GIRDER ***
ADDT'L USER-DEFINED LOADS APPLIED TO ALL LOAD CASES.

THIS TRUSS IS DESIGNED FOR RESIDENTIAL OR SMALL BUILDING REQUIREMENTS OF PART 9, NBCC 2010, NBCC 2015

THIS DESIGN COMPLIES WITH:
- PART 9 OF BCBC 2018 , OBC 2012 , ABC 2019
- PART 9 OF OBC 2012 (2019 AMENDMENT)
- CSA 086-09, CSA 086-14
- TPIC 2011, TPIC 2014

(55 % OF 31.3 P.S.F. G.S.L. PLUS 8.4 P.S.F. RAIN LOAD) EQUALS 25.6 P.S.F. SPECIFIED ROOF LIVE LOAD

ALLOWABLE DEFL.(LL)= L/360 (0.32")
CALCULATED VERT. DEFL.(LL) = L/ 999 (0.01")
ALLOWABLE DEFL.(TL)= L/360 (0.32") .
CALCULATED VERT. DEFL.(TL) = L/ 999 (0.03")

CSI: TC=0.31/1.00 (A-B:1) , BC=0.20/1.00 (F-G:1) , WB=0.20/1.00 (A-G:1) , SSI=0.13/1.00 (C-D:1)

DOL LUMBER=1.00 NAIL=1.00 LS BEND=1.00 COMP=1.00 SHEAR=1.00 TENS= 1.00

COMPANION LIVE LOAD FACTOR = 1.00

AUTOSOLVE HEELS OFF

TRUSS PLATE MANUFACTURER IS NOT RESPONSIBLE FOR QUALITY CONTROL IN THE TRUSS MANUFACTURING PLANT .

NAIL VALUES

PLATE	GRIP(DRY) (PSI) MAX	MIN	SHEAR (PLI) MAX	MIN	SECTION (PLI) MAX	MIN
MT20	618	354	1667	788	1987	1656

PLATE PLACEMENT TOL. = 0.250 inches

PLATE ROTATION TOL. = 5.0 Deg.

JSI GRIP= 0.64 (A) (INPUT = 0.90)
JSI METAL= 0.26 (A) (INPUT = 1.00)

LICENSED PROFESSIONAL ENGINEER
10/14/20
H. J. G. ALVES
100009024
PROVINCE OF ONTARIO

Structural component only
DWG# T-2022191

JOB NAME	TRUSS NAME	QUANTITY	PLY	JOB DESC.	DRWG NO.
413426	T36	1	2	ROYAL PINE HOMES TRUSS DESC.	

Tamarack Roof Truss, Burlington

Version 8.420 S Jan 21 2021 MiTek Industries, Inc. Mon Jun 7 08:37:36 2021 Page 1
ID:8lTcKsuAqJzVBsZ1WqSCayyOHpK-X0K3La0IrfH1Drt5vxBNLWdlA1KBSnnVsyrqasz8knj

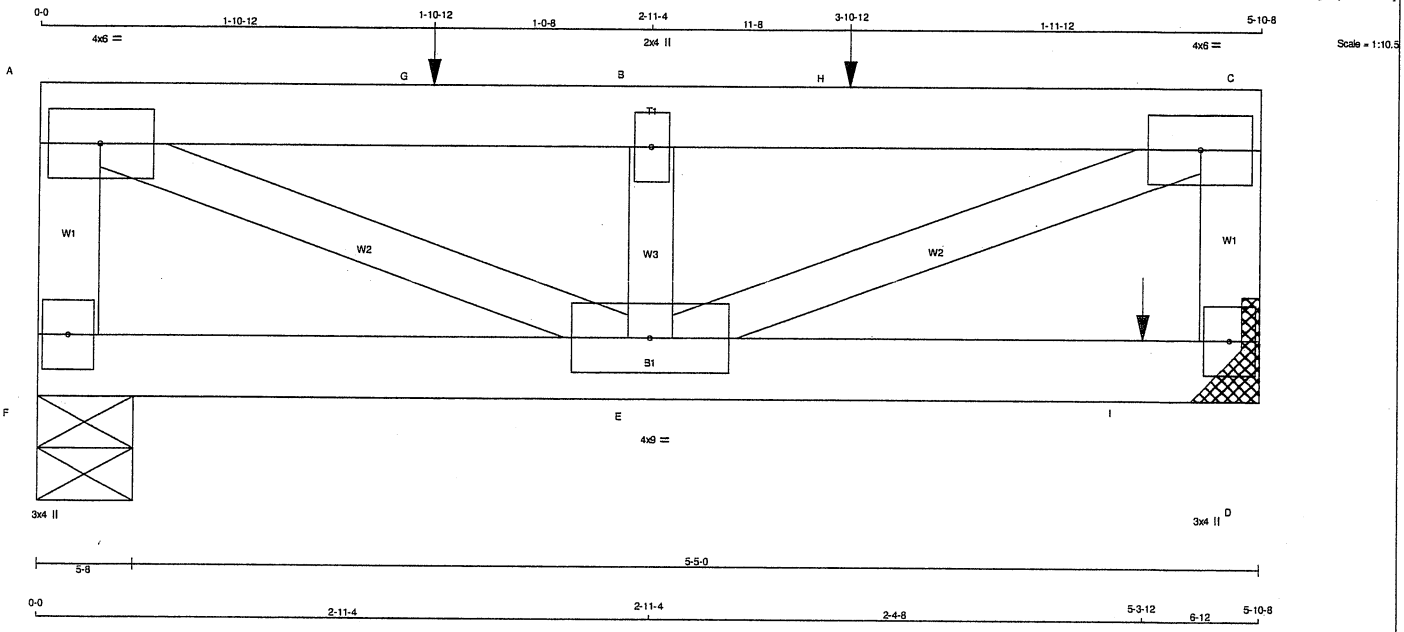

TOTAL WEIGHT = 2 X 21 = 41 lb
[M]

LUMBER
N. L. G. A. RULES

CHORDS	SIZE		LUMBER	DESCR.
F - A	2x4	DRY	No.2	SPF
A - C	2x4	DRY	No.2	SPF
D - C	2x4	DRY	No.2	SPF
F - D	2x4	DRY	No.2	SPF
ALL WEBS	2x3	DRY	No.2	SPF

DRY: SEASONED LUMBER.

DESIGN CONSISTS OF 2 TRUSSES BUILT SEPARATELY THEN FASTENED TOGETHER AS FOLLOWS:

CHORDS	#ROWS	SURFACE SPACING (IN)	LOAD(PLF)
TOP CHORDS : (0.122"X3") SPIRAL NAILS			
F- A	1	12	TOP
A- C	1	12	TOP
C- D	1	12	TOP
BOTTOM CHORDS : (0.122"X3") SPIRAL NAILS			
F- D	1	12	SIDE(14.0)
WEBS : (0.122"X3") SPIRAL NAILS			
2x3	1	6	

NAILS TO BE DRIVEN FROM ONE SIDE ONLY.

GIRDER NAILING ASSUMES NAILED HANGERS ARE FASTENED WITH MIN. 3-0 INCH NAILS.

TOP - COMPONENTS ARE LOADED FROM THE TOP AND MUST BE PLACED ON TOP EDGE OF ALL PLIES FOR THE LOAD TO BE TRANSFERRED TO EACH PLY.

SIDE - PLF SHOWN IS THE EQUIVALENT UDL APPLIED TO ONE SIDE THAT THE CORRESPONDING NAILING PATTERN SHALL BE CAPABLE OF TRANSFERING. REMAINING PLF MUST BE APPLIED ON THE OPPOSITE SIDE OR ON THE TOP.

PLATES (table is in inches)

JT	TYPE	PLATES	W	LEN	Y	X
A	TMVW-t	MT20	4.0	6.0		
B	TMW+w	MT20	2.0	4.0		
C	TMVW-t	MT20	4.0	6.0		
D	BMV1+p	MT20	3.0	4.0		
E	BMWWW-t	MT20	4.0	9.0		

LICENSED PROFESSIONAL ENGINEER
06/07/21
H. J. G. ALVES
100009024
PROVINCE OF ONTARIO

Structural component only
DWG# T-2117975

DIMENSIONS, SUPPORTS AND LOADINGS SPECIFIED BY FABRICATOR TO BE VERIFIED BY BUILDING DESIGNER

BEARINGS

JT	FACTORED GROSS REACTION VERT	HORZ	MAXIMUM FACTORED GROSS REACTION DOWN	HORZ	UPLIFT	INPUT BRG IN-SX	REQRD BRG IN-SX
F	1163	0	1163	0	0	5-8	5-8
D	1656	0	1656	0	0	MECHANICAL	

A SUITABLE HANGER/MECHANICAL CONNECTION IS REQUIRED AT JOINT D. MINIMUM BEARING LENGTH AT JOINT D = 4-0.

UNFACTORED REACTIONS

MAX./MIN. COMPONENT REACTIONS

JT	1ST LCASE COMBINED	SNOW	LIVE	PERM.LIVE	WIND	DEAD	SOIL
F	829	510 / 0	0 / 0	0 / 0	0 / 0	319 / 0	0 / 0
D	1176	744 / 0	0 / 0	0 / 0	0 / 0	432 / 0	0 / 0

BEARING MATERIAL TO BE SPF NO.2 OR BETTER AT JOINT(S) F

BRACING

TOP CHORD TO BE SHEATHED OR MAX. PURLIN SPACING = 5.73 FT.
MAX. UNBRACED BOTTOM CHORD LENGTH = 10.00 FT OR RIGID CEILING DIRECTLY APPLIED.

ALL PITCH BREAKS AND PERIMETER CORNER JOINTS MUST BE LATERALLY RESTRAINED.

LOADING

TOTAL LOAD CASES: (4)

CHORDS

MEMB. FR-TO	MAX. FACTORED FORCE (LBS)	FACTORED VERT. LOAD (PLF) FROM	TO	LC1 MAX CSI (LC)	MAX. UNBRAC LENGTH
F- A	-1109 / 0	0.0	0.0	0.06 (1)	7.81
A- G	-2077 / 0	-91.8	-91.8	0.30 (1)	5.73
G- B	-2077 / 0	-91.8	-91.8	0.30 (1)	5.73
B- H	-2077 / 0	-91.8	-91.8	0.30 (1)	5.73
H- C	-2077 / 0	-91.8	-91.8	0.30 (1)	5.73
D- C	-1089 / 0	0.0	0.0	0.06 (1)	7.81
F- E	0 / 0	-43.5	-43.5	0.05 (4)	10.00
E- I	0 / 0	-43.5	-43.5	0.23 (1)	10.00
I- D	0 / 0	-43.5	-43.5	0.23 (1)	10.00

WEBS

MEMB. FR-TO	MAX. FACTORED FORCE (LBS)	MAX CSI (LC)
A- E	0 / 2246	0.28 (1)
E- B	-1441 / 0	0.11 (1)
E- C	0 / 2246	0.28 (1)

SPECIFIED CONCENTRATED LOADS (LBS)

JT	LOC.	LC1	MAX-	MAX+	FACE	DIR.	TYPE	HEEL	CONN.
G	1-10-12	-491	-491	---	TOP	VERT	TOTAL	---	C1
H	3-10-12	-491	-491	---	TOP	VERT	TOTAL	---	C1
I	5-3-12	-447	-447	---	FRONT	VERT	TOTAL	---	C1

CONNECTION REQUIREMENTS

1) **C1:** A SUITABLE HANGER/MECHANICAL CONNECTION IS REQUIRED.

DESIGN CRITERIA

*** SPECIAL LOADS ANALYSIS ***
GEOMETRY AND/OR BASIC LOADS CHANGED BY USER.
LOADS WERE DERIVED FROM USER INPUT
NO FURTHER MODIFICATIONS WERE MADE

SPECIFIED LOADS:

TOP CH.	LL	=	25.6	PSF
	DL	=	6.0	PSF
BOT CH.	LL	=	0.0	PSF
	DL	=	7.4	PSF
TOTAL LOAD		=	39.0	PSF

SPACING = 24.0 IN. C/C

LOADING IN FLAT SECTION BASED ON A SLOPE OF 6.00/12

*** NON STANDARD GIRDER ***
ADDT'L USER-DEFINED LOADS APPLIED TO ALL LOAD CASES.

THIS TRUSS IS DESIGNED FOR RESIDENTIAL OR SMALL BUILDING REQUIREMENTS OF PART 9, NBCC 2015

THIS DESIGN COMPLIES WITH:
- PART 9 OF BCBC 2018 , ABC 2019
- PART 9 OF OBC 2012 (2019 AMENDMENT)
- CSA 086-14
- TPIC 2014

(55 % OF 31.3 P.S.F. G.S.L. PLUS 8.4 P.S.F. RAIN LOAD) EQUALS 25.6 P.S.F. SPECIFIED ROOF LIVE LOAD

ALLOWABLE DEFL.(LL)= L/360 (0.20")
CALCULATED VERT. DEFL.(LL) = L/ 999 (0.02")
ALLOWABLE DEFL.(TL)= L/360 (0.20")
CALCULATED VERT. DEFL.(TL) = L/ 999 (0.04")

CSI: TC=0.30/1.00 (A-B:1) , BC=0.23/1.00 (D-E:1) , WB=0.28/1.00 (A-E:1) , SSI=0.31/1.00 (B-C:1)

DOL LUMBER=1.00 NAIL=1.00 LS BEND=1.00 COMP=1.00 SHEAR=1.00 TENS= 1.00

COMPANION LIVE LOAD FACTOR = 1.00

TRUSS PLATE MANUFACTURER IS NOT RESPONSIBLE FOR QUALITY CONTROL IN THE TRUSS MANUFACTURING PLANT .

NAIL VALUES

PLATE	GRIP(DRY) (PSI) MAX	MIN	SHEAR (PLI) MAX	MIN	SECTION (PLI) MAX	MIN
MT20	650	371	1747	788	1987	1873

PLATE PLACEMENT TOL. = 0.250 inches

PLATE ROTATION TOL. = 5.0 Deg.

JSI GRIP= 0.66 (A) (INPUT = 0.90)
JSI METAL= 0.25 (C) (INPUT = 1.00)

CONTINUED ON PAGE 2

JOB NAME	TRUSS NAME	QUANTITY	PLY	JOB DESC. ROYAL PINE HOMES	DRWG NO.
413426	T36	1	2	TRUSS DESC.	

Tamarack Roof Truss, Burlington

Version 8.420 S Jan 21 2021 MiTek Industries, Inc. Mon Jun 7 08:37:37 2021 Page 2
ID:8lTcKsuAqJzVBsZ1WqSCayyOHpK-?CtRYv1wcyPuq?SISficujAwwRgQBE1f5cbN6Iz8kni

PLATES (table is in inches)

JT	TYPE	PLATES	W	LEN	Y	X
F	BMV1+p	MT20	3.0	4.0		

LICENSED PROFESSIONAL ENGINEER
06/07/21
H. J. G. ALVES
100009024
PROVINCE OF ONTARIO

Structural component only
DWG# T-2117975

JOB NAME	TRUSS NAME	QUANTITY	PLY	JOB DESC.	DRWG NO.
406513	PB1	3	1	ROYAL PINE HOMES TRUSS DESC.	

Tamarack Roof Truss, Burlington

Version 8.330 S May 6 2020 MiTek Industries, Inc. Wed Oct 14 10:41:36 2020 Page 1
ID:8lTcKsuAqJzVBsZ1WqSCayyOHpK-sdjrsFR8bOnHZhSyMiGo9CeKAyJssIE2mBBUM_yTXhT

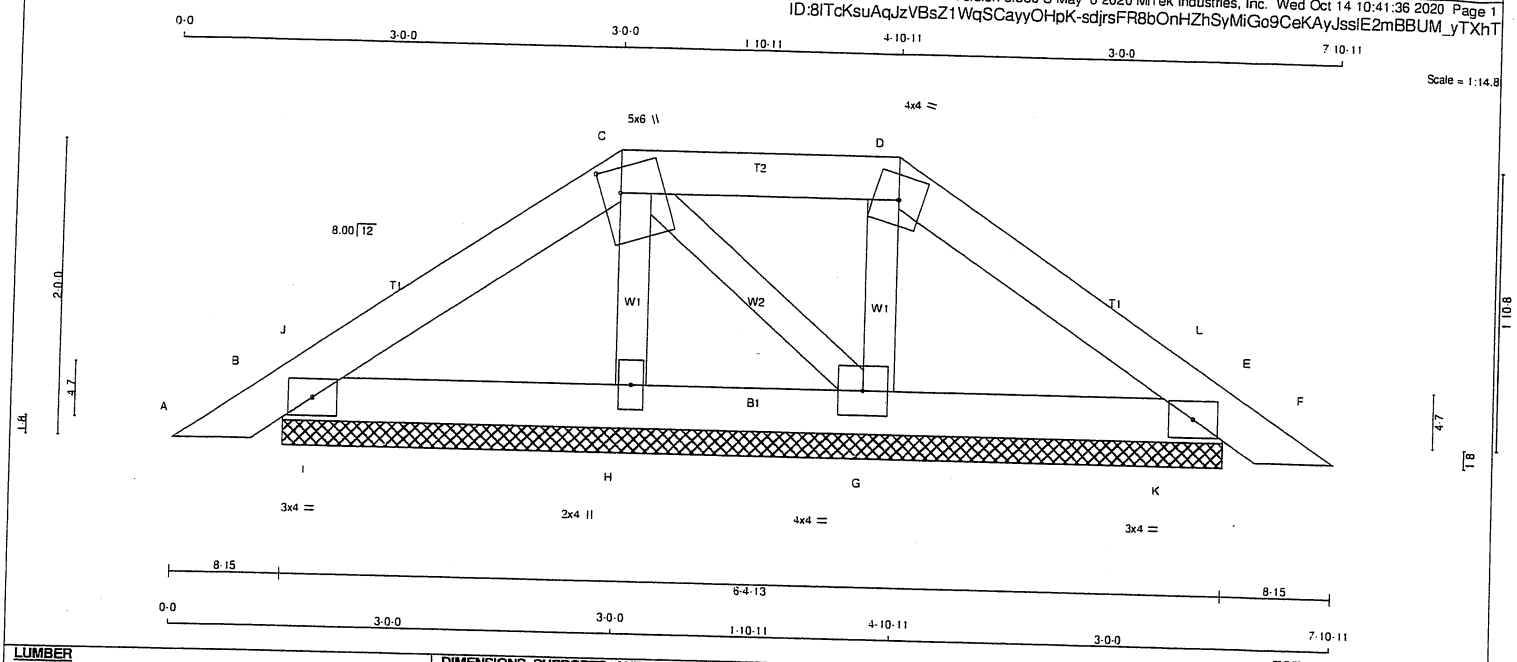

TOTAL WEIGHT = 3 X 21 = 64 lb [M]

LUMBER

N. L. G. A. RULES

CHORDS	SIZE		LUMBER	DESCR.
A - C	2x4	DRY	No.2	SPF
C - D	2x4	DRY	No.2	SPF
D - F	2x4	DRY	No.2	SPF
B - E	2x4	DRY	No.2	SPF
ALL WEBS	2x3	DRY	No.2	SPF

DRY: SEASONED LUMBER.

PLATES (table is in inches)

JT	TYPE	PLATES	W	LEN	Y	X
B	TMB1-I	MT20	3.0	4.0		
C	TTWW+m	MT20	5.0	6.0	2.00	1.50
D	TTW-m	MT20	4.0	4.0		
E	TMB1-I	MT20	3.0	4.0		
G	BMWW1-t	MT20	4.0	4.0		
H	BMW1+w	MT20	2.0	4.0		

DIMENSIONS, SUPPORTS AND LOADINGS SPECIFIED BY FABRICATOR TO BE VERIFIED BY BUILDING DESIGNER

BEARINGS

JT	FACTORED GROSS REACTION VERT	HORZ	MAXIMUM FACTORED GROSS REACTION DOWN	HORZ	UPLIFT	INPUT BRG IN-SX	REQRD BRG IN-SX
B	219	0	219	0	0	6-4-13	6-4-13
E	205	0	205	0	0	6-4-13	6-4-13
H	176	0	176	0	0	6-4-13	6-4-13
G	227	0	227	0	0	6-4-13	6-4-13

UNFACTORED REACTIONS

JT	1ST LCASE COMBINED	MAX.MIN. COMPONENT REACTIONS SNOW	LIVE	PERM.LIVE	WIND	DEAD	SOIL
B	153	111 0	0 0	0 0	0 0	43 0	0 0
E	144	103 0	0 0	0 0	0 0	41 0	0 0
H	125	77 0	0 0	0 0	0 0	49 0	0 0
G	161	105 0	0 0	0 0	0 0	56 0	0 0

BEARING MATERIAL TO BE SPF NO.2 OR BETTER AT JOINT(S) B, E, H, G

BRACING

TOP CHORD TO BE SHEATHED OR MAX. PURLIN SPACING = 6.25 FT.
MAX. UNBRACED BOTTOM CHORD LENGTH = 10.00 FT OR RIGID CEILING DIRECTLY APPLIED.

ALL PITCH BREAKS AND PERIMETER CORNER JOINTS MUST BE LATERALLY RESTRAINED.

LOADING

TOTAL LOAD CASES: (4)

CHORDS

MEMB. FR-TO	MAX. FACTORED FORCE (LBS)		FACTORED VERT. LOAD (PLF) FROM	TO	LC1 MAX CSI (LC)	MAX. UNBRAC LENGTH
A- B	0	15	-91.8	-91.8	0.03 (1)	10.00
B- J	-60	0	-91.8	-91.8	0.01 (1)	6.25
J- C	-70	0	-91.8	-91.8	0.06 (1)	6.25
C- D	-27	0	-91.8	-91.8	0.06 (1)	6.25
D- L	-47	0	-91.8	-91.8	0.06 (1)	6.25
L- E	-35	0	-91.8	-91.8	0.01 (1)	6.25
E- F	0	15	-91.8	-91.8	0.03 (1)	10.00
B- I	0	57	-18.5	-18.5	0.06 (1)	10.00
I- H	0	57	-18.5	-18.5	0.06 (1)	10.00
H- G	0	49	-18.5	-18.5	0.03 (1)	10.00
G- K	0	37	-18.5	-18.5	0.05 (1)	10.00
K- E	0	37	-18.5	-18.5	0.05 (1)	10.00

WEBS

MEMB. FR-TO	MAX. FACTORED FORCE (LBS)		MAX CSI (LC)
H- C	-116	0	0.02 (1)
C- G	-29	0	0.00 (1)
G- D	-148	0	0.02 (1)
I- J	-119	0	0.00 (1)
K- L	-121	0	0.00 (1)

DESIGN CRITERIA

SPECIFIED LOADS:

TOP	CH.	LL	=	25.6	PSF
		DL	=	6.0	PSF
BOT	CH.	LL	=	0.0	PSF
		DL	=	7.4	PSF
TOTAL LOAD			=	39.0	PSF

SPACING = 24.0 IN. C/C

LOADING IN FLAT SECTION BASED ON A SLOPE OF 6.00/12

THIS TRUSS IS DESIGNED FOR RESIDENTIAL OR SMALL BUILDING REQUIREMENTS OF PART 9, NBCC 2010, NBCC 2015

THIS DESIGN COMPLIES WITH:
- PART 9 OF BCBC 2018 , OBC 2012 , ABC 2019
- PART 9 OF OBC 2012 (2019 AMENDMENT)
- CSA 086-09, CSA 086-14
- TPIC 2011, TPIC 2014

(55 % OF 31.3 P.S.F. G.S.L. PLUS 8.4 P.S.F. RAIN LOAD) EQUALS 25.6 P.S.F. SPECIFIED ROOF LIVE LOAD

CSI: TC=0.06/1.00 (C-D:1) , BC=0.06/1.00 (B-I:1) , WB=0.02/1.00 (D-G:1) , SSI=0.09/1.00 (E-K:1)

DOL LUMBER=1.00 NAIL=1.00 LS BEND=1.10 COMP=1.10 SHEAR=1.10 TENS= 1.10

COMPANION LIVE LOAD FACTOR = 1.00

TRUSS PLATE MANUFACTURER IS NOT RESPONSIBLE FOR QUALITY CONTROL IN THE TRUSS MANUFACTURING PLANT.

NAIL VALUES

PLATE	GRIP(DRY) (PSI) MAX	MIN	SHEAR (PLI) MAX	MIN	SECTION (PLI) MAX	MIN
MT20	618	354	1667	788	1987	1656

PLATE PLACEMENT TOL. = 0.250 inches

PLATE ROTATION TOL. = 5.0 Deg.

JSI GRIP= 0.17 (B) (INPUT = 0.90)
JSI METAL= 0.04 (B) (INPUT = 1.00)

LICENSED PROFESSIONAL ENGINEER
10/14/20
H. J. G. ALVES
100009024
PROVINCE OF ONTARIO

Structural component only
DWG# T-2022152

JOB NAME	TRUSS NAME	QUANTITY	PLY	JOB DESC.	DRWG NO.
406513	J1	18	1	ROYAL PINE HOMES TRUSS DESC.	

Tamarack Roof Truss, Burlington

Version 8.330 S May 6 2020 MiTek Industries, Inc. Wed Oct 14 10:41:35 2020 Page 1
ID:8ITcKsuAqJzVBsZ1WqSCayyOHpK-OR9TevQWq4fQxXtIp?IZc?51sYxU7IJvXXRwqYyTXhU

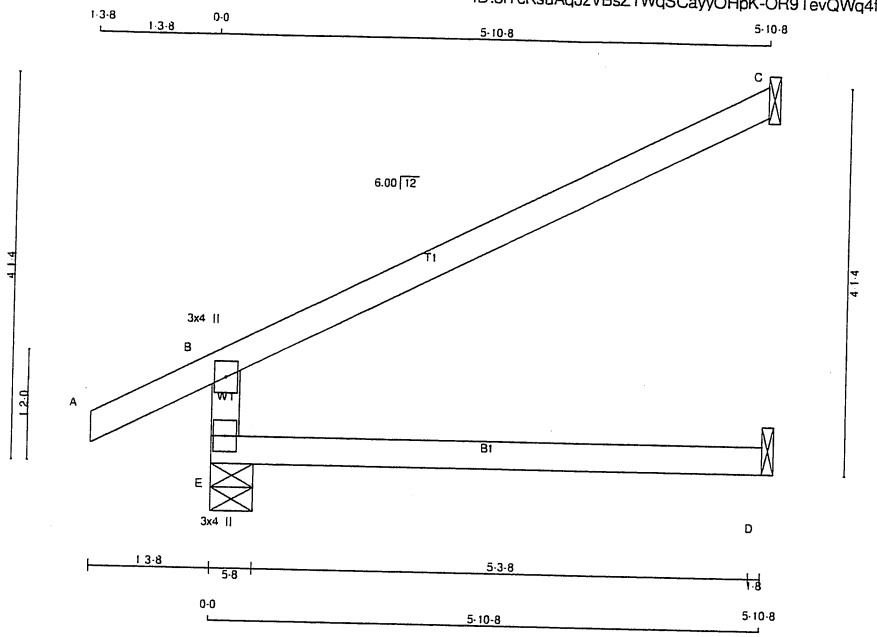

TOTAL WEIGHT = 18 X 17 = 302 lb [M]

LUMBER

N. L. G. A. RULES

CHORDS	SIZE		LUMBER	DESCR.
E - B	2x4	DRY	No.2	SPF
A - C	2x4	DRY	No.2	SPF
E - D	2x4	DRY	No.2	SPF

DRY: SEASONED LUMBER.

PLATES (table is in inches)

JT	TYPE	PLATES	W	LEN	Y	X
B	TMV+p	MT20	3.0	4.0		
E	BMV1+p	MT20	3.0	4.0		

DIMENSIONS, SUPPORTS AND LOADINGS SPECIFIED BY FABRICATOR TO BE VERIFIED BY BUILDING DESIGNER

BEARINGS

JT	FACTORED GROSS REACTION VERT	HORZ	MAXIMUM FACTORED GROSS REACTION DOWN	HORZ	UPLIFT	INPUT BRG IN-SX	REQRD BRG IN-SX
E	525	0	525	0	0	5-8	5-8
C	202	0	202	0	0	1-8	1-8
D	45	0	50	0	0	1-8	1-8

SEE MITEK STANDARD DETAIL B97791H FOR CONNECTION TO JOINT(S) C , D

UNFACTORED REACTIONS

JT	1ST LCASE COMBINED	MAX./MIN. COMPONENT REACTIONS SNOW	LIVE	PERM.LIVE	WIND	DEAD	SOIL
E	369	257 : 0	0 : 0	0 : 0	0 : 0	111 : 0	0 : 0
C	139	113 : 0	0 : 0	0 : 0	0 : 0	26 : 0	0 : 0
D	36	0 : 0	0 : 0	0 : 0	0 : 0	36 : 0	0 : 0

BEARING MATERIAL TO BE SPF NO.2 OR BETTER AT JOINT(S) E

BRACING

TOP CHORD TO BE SHEATHED OR MAX. PURLIN SPACING = 6.25 FT.
MAX. UNBRACED BOTTOM CHORD LENGTH = 10.00 FT OR RIGID CEILING DIRECTLY APPLIED.

ALL PITCH BREAKS AND PERIMETER CORNER JOINTS MUST BE LATERALLY RESTRAINED.

LOADING

TOTAL LOAD CASES: (4)

CHORDS

MEMB. FR-TO	MAX. FACTORED FORCE (LBS)	FACTORED VERT. LOAD (PLF) FROM	TO	LC1	MAX CSI (LC)	MAX. UNBRAC LENGTH
E- B	-461 : 0	0.0	0.0	0.13	(4)	7.81
A- B	0 28	-91.8	-91.8	0.12	(1)	10.00
B- C	-30 : 0	-91.8	-91.8	0.54	(1)	6.25
E- D	0 0	-18.5	-18.5	0.13	(4)	10.00

WEBS

MEMB. FR-TO	MAX. FACTORED FORCE (LBS)	MAX CSI (LC)

DESIGN CRITERIA

SPECIFIED LOADS:

TOP CH.	LL	=	25.6	PSF
	DL	=	6.0	PSF
BOT CH.	LL	=	0.0	PSF
	DL	=	7.4	PSF
TOTAL LOAD		=	39.0	PSF

SPACING = 24.0 IN. C/C

THIS TRUSS IS DESIGNED FOR RESIDENTIAL OR SMALL BUILDING REQUIREMENTS OF PART 9, NBCC 2010, NBCC 2015

THIS DESIGN COMPLIES WITH:
- PART 9 OF BCBC 2018 , OBC 2012 , ABC 2019
- PART 9 OF OBC 2012 (2019 AMENDMENT)
- CSA 086-09, CSA 086-14
- TPIC 2011, TPIC 2014

DESIGN ASSUMPTIONS
-OVERHANG NOT TO BE ALTERED OR CUT OFF.

(55 % OF 31.3 P.S.F. G.S.L. PLUS 8.4 P.S.F. RAIN LOAD) EQUALS 25.6 P.S.F. SPECIFIED ROOF LIVE LOAD

ALLOWABLE DEFL.(LL)= L/360 (0.20")
CALCULATED VERT. DEFL.(LL) = L/ 999 (0.00")
ALLOWABLE DEFL.(TL)= L/360 (0.20")
CALCULATED VERT. DEFL.(TL) = L/ 999 (0.03")

CSI: TC=0.54/1.00 (B-C:1) , BC=0.13/1.00 (D-E:4) , WB=0.00/1.00 (n/a:0) , SSI=0.24/1.00 (B-C:1)

DOL LUMBER=1.00 NAIL=1.00 LS BEND=1.10 COMP=1.10 SHEAR=1.10 TENS= 1.10

COMPANION LIVE LOAD FACTOR = 1.00

AUTOSOLVE RIGHT HEEL ONLY

TRUSS PLATE MANUFACTURER IS NOT RESPONSIBLE FOR QUALITY CONTROL IN THE TRUSS MANUFACTURING PLANT .

NAIL VALUES

PLATE	GRIP(DRY) (PSI) MAX	MIN	SHEAR (PLI) MAX	MIN	SECTION (PLI) MAX	MIN
MT20	618	354	1667	788	1987	1656

PLATE PLACEMENT TOL. = 0.250 inches

PLATE ROTATION TOL. = 5.0 Deg.

JSI GRIP= 0.19 (E) (INPUT = 0.90)
JSI METAL= 0.13 (B) (INPUT = 1.00)

LICENSED PROFESSIONAL ENGINEER
10/14/20
H. J. G. ALVES
100009024
PROVINCE OF ONTARIO

Structural component only
DWG# T-2022150

JOB NAME	TRUSS NAME	QUANTITY	PLY	JOB DESC.	DRWG NO.
406513	J2	4	1	ROYAL PINE HOMES TRUSS DESC.	

Tamarack Roof Truss, Burlington

Version 8.330 S May 6 2020 MiTek Industries, Inc. Wed Oct 14 10:41:36 2020 Page 1
ID:8ITcKsuAqJzVBsZ1WqSCayyOHpK-sdjrsFR8bOnHZhSyMiGo9CeHhyIasIZ2mBBUM_yTXhT

Scale = 1:22.4

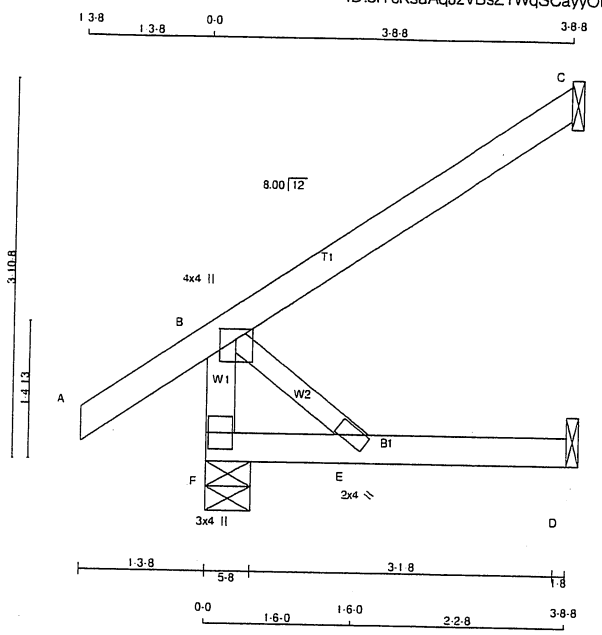

TOTAL WEIGHT = 4 X 14 = 55 lb [M]

LUMBER

N. L. G. A. RULES

CHORDS	SIZE		LUMBER	DESCR.
F - B	2x4	DRY	No.2	SPF
A - C	2x4	DRY	No.2	SPF
F - D	2x4	DRY	No.2	SPF
ALL WEBS	2x3	DRY	No.2	SPF

DRY: SEASONED LUMBER.

PLATES (table is in inches)

JT	TYPE	PLATES	W	LEN	Y	X
B	TMVW+p	MT20	4.0	4.0	1.25	2.00
E	BMW+w	MT20	2.0	4.0		
F	BMV1+p	MT20	3.0	4.0		

DIMENSIONS, SUPPORTS AND LOADINGS SPECIFIED BY FABRICATOR TO BE VERIFIED BY BUILDING DESIGNER

BEARINGS

JT	FACTORED GROSS REACTION VERT	HORZ	MAXIMUM FACTORED GROSS REACTION DOWN	HORZ	UPLIFT	INPUT BRG IN-SX	REQRD BRG IN-SX
F	330	0	330	0	0	5-8	5-8
C	170	0	170	0	0	1-8	1-8
D	34	0	38	0	0	1-8	1-8

SEE MITEK STANDARD DETAIL B97791H FOR CONNECTION TO JOINT(S) C , D

UNFACTORED REACTIONS

JT	1ST LCASE COMBINED	MAX./MIN. COMPONENT REACTIONS SNOW	LIVE	PERM.LIVE	WIND	DEAD	SOIL
F	231	165 / 0	0 / 0	0 / 0	0 / 0	66 / 0	0 / 0
C	117	95 / 0	0 / 0	0 / 0	0 / 0	22 / 0	0 / 0
D	27	0 / 0	0 / 0	0 / 0	0 / 0	27 / 0	0 / 0

BEARING MATERIAL TO BE SPF NO.2 OR BETTER AT JOINT(S) F, C

BRACING

TOP CHORD TO BE SHEATHED OR MAX. PURLIN SPACING = 10.00 FT.
MAX. UNBRACED BOTTOM CHORD LENGTH = 10.00 FT OR RIGID CEILING DIRECTLY APPLIED.

ALL PITCH BREAKS AND PERIMETER CORNER JOINTS MUST BE LATERALLY RESTRAINED.

LOADING

TOTAL LOAD CASES: (5)

CHORDS

MEMB. FR-TO	MAX. FACTORED FORCE (LBS)	FACTORED VERT. LOAD (PLF) FROM	TO	LC1 CSI (LC)	MAX UNBRAC LENGTH
F- B	-296 / 0	0.0	0.0	0.03 (1)	7.81
A- B	0 / 35	-91.8	-91.8	0.14 (5)	10.00
B- C	0 / 0	-91.8	-91.8	0.21 (1)	10.00
F- E	0 / 0	-18.5	-18.5	0.07 (4)	10.00
E- D	0 / 0	-18.5	-18.5	0.07 (4)	10.00

WEBS

MEMB. FR-TO	MAX. FACTORED FORCE (LBS)	MAX CSI (LC)
B- E	0 / 0	0.00 (1)

CANTILEVER ANALYSIS HAS BEEN CONSIDERED IN THIS DESIGN

DESIGN CRITERIA

SPECIFIED LOADS:

TOP CH.	LL	=	25.6	PSF
	DL	=	6.0	PSF
BOT CH.	LL	=	0.0	PSF
	DL	=	7.4	PSF
TOTAL LOAD		=	39.0	PSF

SPACING = 24.0 IN. C/C

THIS TRUSS IS DESIGNED FOR RESIDENTIAL OR SMALL BUILDING REQUIREMENTS OF PART 9, NBCC 2010, NBCC 2015

THIS DESIGN COMPLIES WITH:
- PART 9 OF BCBC 2018 , OBC 2012 , ABC 2019
- PART 9 OF OBC 2012 (2019 AMENDMENT)
- CSA 086-09, CSA 086-14
- TPIC 2011, TPIC 2014

(55 % OF 31.3 P.S.F. G.S.L. PLUS 8.4 P.S.F. RAIN LOAD) EQUALS 25.6 P.S.F. SPECIFIED ROOF LIVE LOAD

ALLOWABLE DEFL.(LL)= L/360 (0.19")
CALCULATED VERT. DEFL.(LL) = L/ 999 (0.00")
ALLOWABLE DEFL.(TL)= L/360 (0.19")
CALCULATED VERT. DEFL.(TL) = L/ 999 (0.01")

CSI: TC=0.21/1.00 (B-C:1) , BC=0.07/1.00 (D-E:4) , WB=0.00/1.00 (B-E:1) , SSI=0.11/1.00 (B-C:1)

DOL LUMBER=1.00 NAIL=1.00 LS BEND=1.10 COMP=1.10 SHEAR=1.10 TENS= 1.10

COMPANION LIVE LOAD FACTOR = 1.00

AUTOSOLVE RIGHT HEEL ONLY

TRUSS PLATE MANUFACTURER IS NOT RESPONSIBLE FOR QUALITY CONTROL IN THE TRUSS MANUFACTURING PLANT .

NAIL VALUES

PLATE	GRIP(DRY) (PSI) MAX	MIN	SHEAR (PLI) MAX	MIN	SECTION (PLI) MAX	MIN
MT20	618	354	1667	788	1987	1656

PLATE PLACEMENT TOL. = 0.250 inches

PLATE ROTATION TOL. = 5.0 Deg.

JSI GRIP= 0.21 (B) (INPUT = 0.90).
JSI METAL= 0.06 (B) (INPUT = 1.00)

LICENSED PROFESSIONAL ENGINEER
10/14/20
H. J. G. ALVES
100009024
PROVINCE OF ONTARIO

Structural component only
DWG# T-2022151

JOB NAME	TRUSS NAME	QUANTITY	PLY	JOB DESC.	DRWG NO.
413426	J31	2	1	ROYAL PINE HOMES TRUSS DESC.	

Tamarack Roof Truss, Burlington

Version 8.330 S May 6 2020 MiTek Industries, Inc. Wed Oct 14 11:24:27 2020 Page 1
ID:8ITcKsuAqJzVBsZ1WqSCayyOHpK-4FanSMYq7KiUVoV4U9uirNdcQLmEIX2UzgU05TyTX3I

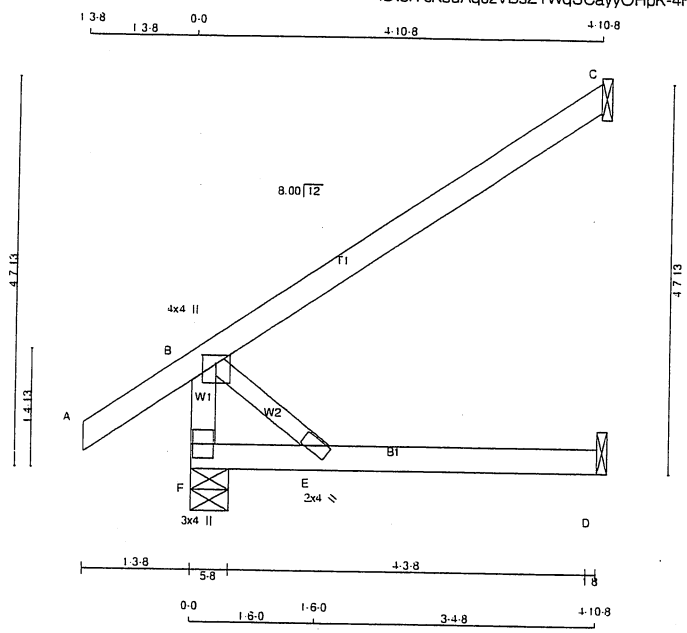

TOTAL WEIGHT = 2 X 17 = 33 lb [M]

LUMBER

N. L. G. A. RULES

CHORDS	SIZE		LUMBER	DESCR.
F - B	2x4	DRY	No.2	SPF
A - C	2x4	DRY	No.2	SPF
F - D	2x4	DRY	No.2	SPF
ALL WEBS	2x3	DRY	No.2	SPF

DRY: SEASONED LUMBER.

PLATES (table is in inches)

JT	TYPE	PLATES	W	LEN	Y	X
B	TMVW+p	MT20	4.0	4.0	1.25	2.00
E	BMW+w	MT20	2.0	4.0		
F	BMV1+p	MT20	3.0	4.0		

DIMENSIONS, SUPPORTS AND LOADINGS SPECIFIED BY FABRICATOR TO BE VERIFIED BY BUILDING DESIGNER

BEARINGS

JT	FACTORED GROSS REACTION VERT	HORZ	MAXIMUM FACTORED GROSS REACTION DOWN	HORZ	UPLIFT	INPUT BRG IN-SX	REQRD BRG IN-SX
F	395	0	395	0	0	5-8	5-8
C	224	0	224	0	0	1-8	1-8
D	45	0	51	0	0	1-8	1-8

SEE MITEK STANDARD DETAIL B97791H FOR CONNECTION TO JOINT(S) C , D

UNFACTORED REACTIONS

JT	1ST LCASE COMBINED	MAX./MIN. COMPONENT REACTIONS SNOW	LIVE	PERM.LIVE	WIND	DEAD	SOIL
F	277	195 0	0 0	0 0	0 0	82 0	0 0
C	154	125 0	0 0	0 0	0 0	29 0	0 0
D	36	0 0	0 0	0 0	0 0	36 0	0 0

BEARING MATERIAL TO BE SPF NO.2 OR BETTER AT JOINT(S) F

BRACING

TOP CHORD TO BE SHEATHED OR MAX. PURLIN SPACING = 10.00 FT.
MAX. UNBRACED BOTTOM CHORD LENGTH = 10.00 FT OR RIGID CEILING DIRECTLY APPLIED.

ALL PITCH BREAKS AND PERIMETER CORNER JOINTS MUST BE LATERALLY RESTRAINED.

LOADING

TOTAL LOAD CASES: (4)

CHORDS

MEMB. FR-TO	MAX. FACTORED FORCE (LBS)		FACTORED VERT. LOAD (PLF) FROM	TO	LC1	MAX CSI (LC)	MAX. UNBRAC LENGTH
F- B	-350	0	0.0	0.0	0.04	(1)	7.81
A- B	0	35	-91.8	-91.8	0.12	(1)	10.00
B- C	0	0	-91.8	-91.8	0.37	(1)	10.00
F- E	0	0	-18.5	-18.5	0.11	(4)	10.00
E- D	0	0	-18.5	-18.5	0.13	(4)	10.00

WEBS

MEMB. FR-TO	MAX. FACTORED FORCE (LBS)		MAX CSI (LC)
B- E	0	0	0.00 (1)

DESIGN CRITERIA

SPECIFIED LOADS:

TOP CH.	LL	=	25.6	PSF
	DL	=	6.0	PSF
BOT CH.	LL	=	0.0	PSF
	DL	=	7.4	PSF
TOTAL LOAD		=	39.0	PSF

SPACING = 24.0 IN. C/C

THIS TRUSS IS DESIGNED FOR RESIDENTIAL OR SMALL BUILDING REQUIREMENTS OF PART 9, NBCC 2010, NBCC 2015

THIS DESIGN COMPLIES WITH:
- PART 9 OF BCBC 2018 , OBC 2012 , ABC 2019
- PART 9 OF OBC 2012 (2019 AMENDMENT)
- CSA 086-09, CSA 086-14
- TPIC 2011, TPIC 2014

(55 % OF 31.3 P.S.F. G.S.L. PLUS 8.4 P.S.F. RAIN LOAD) EQUALS 25.6 P.S.F. SPECIFIED ROOF LIVE LOAD

ALLOWABLE DEFL.(LL)= L/360 (0.19")
CALCULATED VERT. DEFL.(LL) = L/ 999 (0.00")
ALLOWABLE DEFL.(TL)= L/360 (0.19")
CALCULATED VERT. DEFL.(TL) = L/ 999 (0.03")

CSI: TC=0.37/1.00 (B-C:1) , BC=0.13/1.00 (D-E:4) , WB=0.00/1.00 (B-E:1) , SSI=0.15/1.00 (B-C:1)

DOL LUMBER=1.00 NAIL=1.00 LS BEND=1.10 COMP=1.10 SHEAR=1.10 TENS= 1.10

COMPANION LIVE LOAD FACTOR = 1.00

AUTOSOLVE RIGHT HEEL ONLY

TRUSS PLATE MANUFACTURER IS NOT RESPONSIBLE FOR QUALITY CONTROL IN THE TRUSS MANUFACTURING PLANT.

NAIL VALUES

PLATE	GRIP(DRY) (PSI) MAX	MIN	SHEAR (PLI) MAX	MIN	SECTION (PLI) MAX	MIN
MT20	618	354	1667	788	1987	1656

PLATE PLACEMENT TOL. = 0.250 inches

PLATE ROTATION TOL. = 5.0 Deg.

JSI GRIP= 0.24 (B) (INPUT = 0.90)
JSI METAL= 0.07 (B) (INPUT = 1.00)

LICENSED PROFESSIONAL ENGINEER
10/14/20
H. J. G. ALVES
100009024
PROVINCE OF ONTARIO

Structural component only
DWG# T-2022183

JOB NAME	TRUSS NAME	QUANTITY	PLY	JOB DESC.	DRWG NO.
413426	C31	2	1	ROYAL PINE HOMES TRUSS DESC.	

Tamarack Roof Truss, Burlington

Version 8.330 S May 6 2020 MiTek Industries, Inc. Wed Oct 14 11:24:24 2020 Page 1
ID:8lTcKsuAqJzVBsZ1WqSCayyOHpK-ggufqKWyqPJveKmVo1K?El?917mCYAl2HjFMV8yTX3L

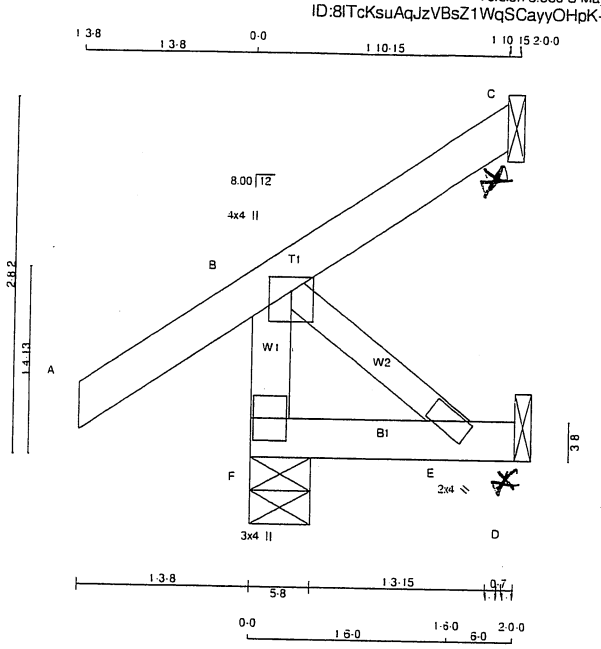

TOTAL WEIGHT = 2 X 9 = 19 lb [M]

LUMBER
N. L. G. A. RULES

CHORDS	SIZE		LUMBER	DESCR.
F - B	2x4	DRY	No.2	SPF
A - C	2x4	DRY	No.2	SPF
F - D	2x4	DRY	No.2	SPF
ALL WEBS	2x3	DRY	No.2	SPF

DRY: SEASONED LUMBER.

PLATES (table is in inches)

JT	TYPE	PLATES	W	LEN	Y	X
B	TMVW+p	MT20	4.0	4.0	1.25	2.00
E	BMW+w	MT20	2.0	4.0		
F	BMV1+p	MT20	3.0	4.0		

DIMENSIONS, SUPPORTS AND LOADINGS SPECIFIED BY FABRICATOR TO BE VERIFIED BY BUILDING DESIGNER

BEARINGS

JT	FACTORED GROSS REACTION VERT	HORZ	MAXIMUM FACTORED GROSS REACTION DOWN	HORZ	UPLIFT	INPUT BRG IN-SX	REQRD BRG IN-SX
F	277	0	277	0	0	5-8	5-8
C	42	0	42	0	-35	1-8	1-8
D	19	0	21	0	0	1-8	1-8

SEE MITEK STANDARD DETAIL B97791H FOR CONNECTION TO JOINT(S) C , D

PROVIDE ANCHORAGE AT BEARING JOINT C FOR 150 LBS FACTORED UPLIFT

UNFACTORED REACTIONS

JT	1ST LCASE COMBINED	MAX.MIN. COMPONENT REACTIONS SNOW	LIVE	PERM.LIVE	WIND	DEAD	SOIL
F	193	144 0	0 0	0 0	0 0	49 0	0 0
C	29	24 -25	0 0	0 0	0 0	6 0	0 0
D	15	0 0	0 0	0 0	0 0	15 0	0 0

BEARING MATERIAL TO BE SPF NO.2 OR BETTER AT JOINT(S) F, C

BRACING
TOP CHORD TO BE SHEATHED OR MAX. PURLIN SPACING = 6.25 FT.
MAX. UNBRACED BOTTOM CHORD LENGTH = 10.00 FT OR RIGID CEILING DIRECTLY APPLIED.

ALL PITCH BREAKS AND PERIMETER CORNER JOINTS MUST BE LATERALLY RESTRAINED.

LOADING
TOTAL LOAD CASES: (5)

CHORDS

MEMB. FR-TO	MAX. FACTORED FORCE (LBS)	FACTORED VERT. LOAD LC1 (PLF) FROM	TO	MAX CSI (LC)	MAX. UNBRAC LENGTH
F- B	-259 0	0.0	0.0	0.03 (1)	7.81
A- B	0 35	-91.8	-91.8	0.12 (1)	10.00
B- C	-25 0	-91.8	-91.8	0.12 (1)	6.25
F- E	0 0	-18.5	-18.5	0.02 (4)	10.00
E- D	0 0	-18.5	-18.5	0.02 (4)	10.00

WEBS

MEMB. FR-TO	MAX. FACTORED FORCE (LBS)	MAX CSI (LC)
B- E	0 0	0.00 (1)

CANTILEVER ANALYSIS HAS BEEN CONSIDERED IN THIS DESIGN

DESIGN CRITERIA

SPECIFIED LOADS:

TOP CH.	LL	=	25.6	PSF
	DL	=	6.0	PSF
BOT CH.	LL	=	0.0	PSF
	DL	=	7.4	PSF
TOTAL LOAD		=	39.0	PSF

SPACING = 24.0 IN. C/C

THIS TRUSS IS DESIGNED FOR RESIDENTIAL OR SMALL BUILDING REQUIREMENTS OF PART 9, NBCC 2010, NBCC 2015

THIS DESIGN COMPLIES WITH:
- PART 9 OF BCBC 2018 , OBC 2012 , ABC 2019
- PART 9 OF OBC 2012 (2019 AMENDMENT)
- CSA 086-09, CSA 086-14
- TPIC 2011, TPIC 2014

DESIGN ASSUMPTIONS
-OVERHANG NOT TO BE ALTERED OR CUT OFF.

(55 % OF 31.3 P.S.F. G.S.L. PLUS 8.4 P.S.F. RAIN LOAD) EQUALS 25.6 P.S.F. SPECIFIED ROOF LIVE LOAD

ALLOWABLE DEFL.(LL)= L/360 (0.19")
CALCULATED VERT. DEFL.(LL) = L/ 999 (0.00")
ALLOWABLE DEFL.(TL)= L/360 (0.19")
CALCULATED VERT. DEFL.(TL) = L/ 999 (0.00")

CSI: TC=0.12/1.00 (A-B:1) , BC=0.02/1.00 (E-F:4) , WB=0.00/1.00 (B-E:1) , SSI=0.09/1.00 (B-C:1)

DOL LUMBER=1.00 NAIL=1.00 LS BEND=1.10 COMP=1.10 SHEAR=1.10 TENS= 1.10

COMPANION LIVE LOAD FACTOR = 1.00

AUTOSOLVE RIGHT HEEL ONLY

TRUSS PLATE MANUFACTURER IS NOT RESPONSIBLE FOR QUALITY CONTROL IN THE TRUSS MANUFACTURING PLANT

NAIL VALUES

PLATE	GRIP(DRY) (PSI) MAX	MIN	SHEAR (PLI) MAX	MIN	SECTION (PLI) MAX	MIN
MT20	618	354	1667	788	1987	1656

PLATE PLACEMENT TOL. = 0.250 inches

PLATE ROTATION TOL. = 5.0 Deg.

JSI GRIP= 0.18 (B) (INPUT = 0.90)
JSI METAL= 0.05 (B) (INPUT = 1.00)

LICENSED PROFESSIONAL ENGINEER
10/16/20
H. J. G. ALVES
100009024
PROVINCE OF ONTARIO

Structural component only
DWG# T-2022179

JOB NAME	TRUSS NAME	QUANTITY	PLY	JOB DESC.	DRWG NO.
413426	C32	2	1	ROYAL PINE HOMES TRUSS DESC.	

Tamarack Roof Truss, Burlington

Version 8.330 S May 6 2020 MiTek Industries, Inc. Wed Oct 14 11:24:25 2020 Page 1
ID:8lTcKsuAqJzVBsZ1WqSCayyOHpK-8sS11gXabiRmGULhMksEmzYI_X6RHdYBVN?w1ayTX3K

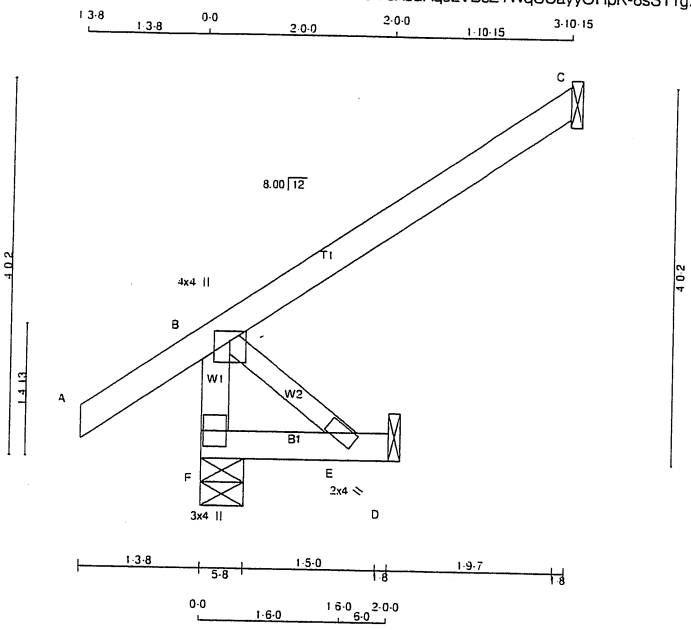

TOTAL WEIGHT = 2 X 12 = 24 lb [M]

LUMBER

N. L. G. A. RULES

CHORDS	SIZE		LUMBER	DESCR.
F - B	2x4	DRY	No.2	SPF
A - C	2x4	DRY	No.2	SPF
F - D	2x4	DRY	No.2	SPF
ALL WEBS	2x3	DRY	No.2	SPF

DRY: SEASONED LUMBER.

PLATES (table is in inches)

JT	TYPE	PLATES	W	LEN	Y	X
B	TMVW+p	MT20	4.0	4.0	1.25	2.00
E	BMW+w	MT20	2.0	4.0		
F	BMV1+p	MT20	3.0	4.0		

DIMENSIONS, SUPPORTS AND LOADINGS SPECIFIED BY FABRICATOR TO BE VERIFIED BY BUILDING DESIGNER

BEARINGS

JT	FACTORED GROSS REACTION VERT	HORZ	MAXIMUM FACTORED GROSS REACTION DOWN	HORZ	UPLIFT	INPUT BRG IN-SX	REQRD BRG IN-SX
F	324	0	324	0	0	5-8	5-8
C	179	0	179	0	0	1-8	1-8
D	18	0	21	0	0	1-8	1-8

SEE MITEK STANDARD DETAIL B97791H FOR CONNECTION TO JOINT(S) C , D

UNFACTORED REACTIONS

JT	1ST LCASE COMBINED	MAX./MIN. COMPONENT REACTIONS SNOW	LIVE	PERM.LIVE	WIND	DEAD	SOIL
F	225	170 0	0 0	0 0	0 0	55 0	0 0
C	124	100 0	0 0	0 0	0 0	23 0	0 0
D	15	0 0	0 0	0 0	0 0	15 0	0 0

BEARING MATERIAL TO BE SPF NO.2 OR BETTER AT JOINT(S) F

BRACING

TOP CHORD TO BE SHEATHED OR MAX. PURLIN SPACING = 10.00 FT.
MAX. UNBRACED BOTTOM CHORD LENGTH = 10.00 FT OR RIGID CEILING DIRECTLY APPLIED.

ALL PITCH BREAKS AND PERIMETER CORNER JOINTS MUST BE LATERALLY RESTRAINED.

LOADING

TOTAL LOAD CASES: (5)

CHORDS

MEMB. FR-TO	MAX. FACTORED FORCE (LBS)		FACTORED VERT. LOAD (PLF) FROM	TO	LC1 CSI	MAX (LC)	MAX. UNBRAC LENGTH
F- B	-305	0	0.0	0.0	0.03	(1)	7.81
A- B	0	35	-91.8	-91.8	0.13	(5)	10.00
B- C	0	0	-91.8	-91.8	0.24	(1)	10.00
F- E	0	0	-18.5	-18.5	0.02	(4)	10.00
E- D	0	0	-18.5	-18.5	0.02	(4)	10.00

WEBS

MEMB. FR-TO	MAX. FACTORED FORCE (LBS)		MAX CSI	(LC)
B- E	0	0	0.00	(1)

CANTILEVER ANALYSIS HAS BEEN CONSIDERED IN THIS DESIGN

DESIGN CRITERIA

SPECIFIED LOADS:

TOP CH.	LL	=	25.6	PSF
	DL	=	6.0	PSF
BOT CH.	LL	=	0.0	PSF
	DL	=	7.4	PSF
TOTAL LOAD		=	39.0	PSF

SPACING = 24.0 IN. C/C

THIS TRUSS IS DESIGNED FOR RESIDENTIAL OR SMALL BUILDING REQUIREMENTS OF PART 9. NBCC 2010, NBCC 2015

THIS DESIGN COMPLIES WITH:
- PART 9 OF BCBC 2018 , OBC 2012 , ABC 2019
- PART 9 OF OBC 2012 (2019 AMENDMENT)
- CSA 086-09, CSA 086-14
- TPIC 2011, TPIC 2014

(55 % OF 31.3 P.S.F. G.S.L. PLUS 8.4 P.S.F. RAIN LOAD) EQUALS 25.6 P.S.F. SPECIFIED ROOF LIVE LOAD

ALLOWABLE DEFL.(LL)= L/360 (0.19")
CALCULATED VERT. DEFL.(LL) = L/ 999 (0.00")
ALLOWABLE DEFL.(TL)= L/360 (0.19")
CALCULATED VERT. DEFL.(TL) = L/ 999 (0.00")

CSI: TC=0.24/1.00 (B-C:1) , BC=0.02/1.00 (E-F:4) , WB=0.00/1.00 (B-E:1) , SSI=0.12/1.00 (B-C:1)

DOL LUMBER=1.00 NAIL=1.00 LS BEND=1.10 COMP=1.10 SHEAR=1.10 TENS= 1.10

COMPANION LIVE LOAD FACTOR = 1.00

AUTOSOLVE RIGHT HEEL ONLY

TRUSS PLATE MANUFACTURER IS NOT RESPONSIBLE FOR QUALITY CONTROL IN THE TRUSS MANUFACTURING PLANT .

NAIL VALUES

PLATE	GRIP(DRY) (PSI) MAX	MIN	SHEAR (PLI) MAX	MIN	SECTION (PLI) MAX	MIN
MT20	618	354	1667	788	1987	1656

PLATE PLACEMENT TOL. = 0.250 inches

PLATE ROTATION TOL. = 5.0 Deg.

JSI GRIP= 0.21 (B) (INPUT = 0.90)
JSI METAL= 0.06 (B) (INPUT = 1.00)

LICENSED PROFESSIONAL ENGINEER
10/14/20
H. J. G. ALVES
100009024
PROVINCE OF ONTARIO

Structural component only
DWG# T-2022180

JOB NAME	TRUSS NAME	QUANTITY	PLY	JOB DESC.	DRWG NO.
413426	C33	2	1	ROYAL PINE HOMES TRUSS DESC.	

Tamarack Roof Truss, Burlington

Version 8.330 S May 6 2020 MiTek Industries, Inc. Wed Oct 14 11:24:25 2020 Page 1
ID:8ITcKsuAqJzVBsZ1WqSCayyOHpK-8sS11gXabiRmGULhMksEmzYKnX4kHdYBVN?w1ayTX3K

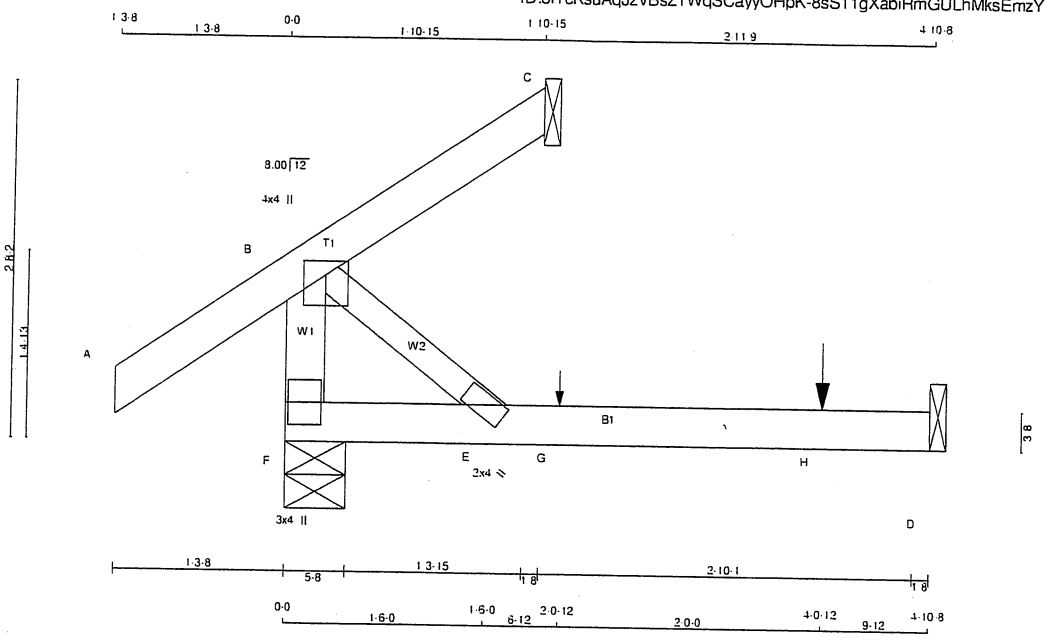

TOTAL WEIGHT = 2 X 13 = 25 lb [M]

LUMBER
N. L. G. A. RULES

CHORDS	SIZE		LUMBER	DESCR.
F - B	2x4	DRY	No.2	SPF
A - C	2x4	DRY	No.2	SPF
F - D	2x4	DRY	No.2	SPF
ALL WEBS	2x3	DRY	No.2	SPF

DRY: SEASONED LUMBER.

PLATES (table is in inches)

JT	TYPE	PLATES	W	LEN	Y	X
B	TMVW+p	MT20	4.0	4.0	1.25	2.00
E	BMW+w	MT20	2.0	4.0		
F	BMV1+p	MT20	3.0	4.0		

DIMENSIONS, SUPPORTS AND LOADINGS SPECIFIED BY FABRICATOR TO BE VERIFIED BY BUILDING DESIGNER

BEARINGS

JT	FACTORED GROSS REACTION VERT	HORZ	MAXIMUM FACTORED GROSS REACTION DOWN	HORZ	UPLIFT	INPUT BRG IN-SX	REQRD BRG IN-SX
F	304	0	304	0	0	5-8	5-8
C	42	0	42	0	0	1-8	1-8
D	47	0	52	0	0	1-8	1-8

SEE MITEK STANDARD DETAIL B97791H FOR CONNECTION TO JOINT(S) C , D

UNFACTORED REACTIONS

JT	1ST LCASE COMBINED	MAX./MIN. COMPONENT REACTIONS SNOW	LIVE	PERM.LIVE	WIND	DEAD	SOIL
F	215	144 0	0 0	0 0	0 0	70 0	0 0
C	29	24 0	0 0	0 0	0 0	6 0	0 0
D	37	0 0	0 0	0 0	0 0	37 0	0 0

BEARING MATERIAL TO BE SPF NO.2 OR BETTER AT JOINT(S) F, C

BRACING
TOP CHORD TO BE SHEATHED OR MAX. PURLIN SPACING = 6.25 FT.
MAX. UNBRACED BOTTOM CHORD LENGTH = 10.00 FT OR RIGID CEILING DIRECTLY APPLIED.

ALL PITCH BREAKS AND PERIMETER CORNER JOINTS MUST BE LATERALLY RESTRAINED.

LOADING
TOTAL LOAD CASES: (4)

CHORDS

MEMB. FR-TO	MAX. FACTORED FORCE (LBS)	FACTORED VERT. LOAD (PLF) FROM	TO	LC1 MAX CSI (LC)	MAX. UNBRAC LENGTH
F- B	-259 0	0.0	0.0	0.03 (1)	7.81
A- B	0 35	-91.8	-91.8	0.12 (1)	10.00
B- C	-25 0	-91.8	-91.8	0.12 (1)	6.25
F- E	0 0	-18.5	-18.5	0.11 (4)	10.00
E- G	0 0	-18.5	-18.5	0.13 (4)	10.00
G- H	0 0	-18.5	-18.5	0.13 (4)	10.00
H- D	0 0	-18.5	-18.5	0.13 (4)	10.00

WEBS

MEMB. FR-TO	MAX. FACTORED FORCE (LBS)	MAX CSI (LC)
B- E	0 0	0.00 (1)

SPECIFIED CONCENTRATED LOADS (LBS)

JT	LOC.	LC1	MAX-	MAX+	FACE	DIR.	TYPE	HEEL	CONN.
G	2-0-12	1	1	---	BACK	VERT	TOTAL	---	C1
H	4-0-12	-1	-1	---	BACK	VERT	TOTAL	---	C1

CONNECTION REQUIREMENTS

1) **C1:** A SUITABLE HANGER/MECHANICAL CONNECTION IS REQUIRED.

DESIGN CRITERIA

SPECIFIED LOADS:

TOP CH.	LL	=	25.6	PSF
	DL	=	6.0	PSF
BOT CH.	LL	=	0.0	PSF
	DL	=	7.4	PSF
TOTAL LOAD		=	39.0	PSF

SPACING = 24.0 IN. C/C

THIS TRUSS IS DESIGNED FOR RESIDENTIAL OR SMALL BUILDING REQUIREMENTS OF PART 9. NBCC 2010, NBCC 2015

THIS DESIGN COMPLIES WITH:
- PART 9 OF BCBC 2018 , OBC 2012 , ABC 2019
- PART 9 OF OBC 2012 (2019 AMENDMENT)
- CSA 086-09, CSA 086-14
- TPIC 2011, TPIC 2014

DESIGN ASSUMPTIONS
-OVERHANG NOT TO BE ALTERED OR CUT OFF.

(55 % OF 31.3 P.S.F. G.S.L. PLUS 8.4 P.S.F. RAIN LOAD) EQUALS 25.6 P.S.F. SPECIFIED ROOF LIVE LOAD

ALLOWABLE DEFL.(LL)= L/360 (0.19")
CALCULATED VERT. DEFL.(LL) = L/ 999 (0.00")
ALLOWABLE DEFL.(TL)= L/360 (0.19")
CALCULATED VERT. DEFL.(TL) = L/ 999 (0.03")

CSI: TC=0.12/1.00 (A-B:1) , BC=0.13/1.00 (D-E:4) , WB=0.00/1.00 (B-E:1) , SSI=0.09/1.00 (B-C:1)

DOL LUMBER=1.00 NAIL=1.00 LS BEND=1.10 COMP=1.10 SHEAR=1.10 TENS= 1.10

COMPANION LIVE LOAD FACTOR = 1.00

AUTOSOLVE RIGHT HEEL ONLY

TRUSS PLATE MANUFACTURER IS NOT RESPONSIBLE FOR QUALITY CONTROL IN THE TRUSS MANUFACTURING PLANT.

NAIL VALUES

PLATE	GRIP(DRY) (PSI) MAX	MIN	SHEAR (PLI) MAX	MIN	SECTION (PLI) MAX	MIN
MT20	618	354	1667	788	1987	1656

PLATE PLACEMENT TOL. = 0.250 inches

PLATE ROTATION TOL. = 5.0 Deg.

JSI GRIP= 0.18 (B) (INPUT = 0.90)
JSI METAL= 0.05 (B) (INPUT = 1.00)

LICENSED PROFESSIONAL ENGINEER
10/14/20
H. J. G. ALVES
100009024
PROVINCE OF ONTARIO

Structural component only
DWG# T-2022181

JOB NAME	TRUSS NAME	QUANTITY	PLY	JOB DESC.	DRWG NO.
413426	C34	2	1	ROYAL PINE HOMES TRUSS DESC.	

Tamarack Roof Truss, Burlington

Version 8.330 S May 6 2020 MiTek Industries, Inc. Wed Oct 14 11:24:26 2020 Page 1
ID:8ITcKsuAqJzVBsZ1WqSCayyOHpK-c20PE0YCM0ZduewtwSNTJA4TkxQ?04oKk0kTZ1yTX3J

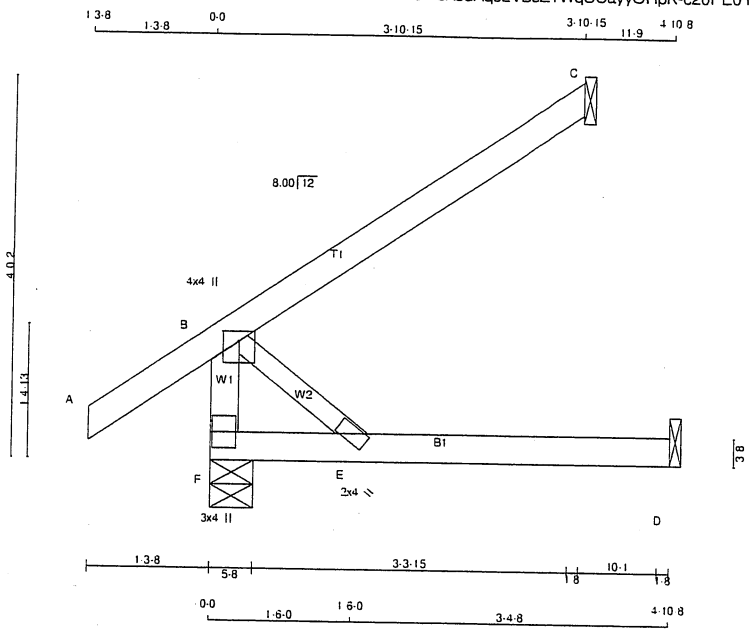

TOTAL WEIGHT = 2 X 15 = 31 lb [M]

LUMBER
N. L. G. A. RULES

CHORDS	SIZE		LUMBER	DESCR.
F - B	2x4	DRY	No.2	SPF
A - C	2x4	DRY	No.2	SPF
F - D	2x4	DRY	No.2	SPF
ALL WEBS	2x3	DRY	No.2	SPF

DRY: SEASONED LUMBER.

PLATES (table is in inches)

JT	TYPE	PLATES	W	LEN	Y	X
B	TMVW+p	MT20	4.0	4.0	1.25	2.00
E	BMW+w	MT20	2.0	4.0		
F	BMV1+p	MT20	3.0	4.0		

DIMENSIONS, SUPPORTS AND LOADINGS SPECIFIED BY FABRICATOR TO BE VERIFIED BY BUILDING DESIGNER

BEARINGS

JT	FACTORED GROSS REACTION VERT	HORZ	MAXIMUM FACTORED GROSS REACTION DOWN	HORZ	UPLIFT	INPUT BRG IN-SX	REQRD BRG IN-SX
F	350	0	350	0	0	5-8	5-8
C	179	0	179	0	0	1-8	1-8
D	45	0	51	0	0	1-8	1-8

SEE MITEK STANDARD DETAIL B97791H FOR CONNECTION TO JOINT(S) C , D

UNFACTORED REACTIONS

JT	1ST LCASE COMBINED	MAX./MIN. COMPONENT REACTIONS SNOW	LIVE	PERM.LIVE	WIND	DEAD	SOIL
F	246	170 0	0 0	0 0	0 0	76 0	0 0
C	124	100 0	0 0	0 0	0 0	23 0	0 0
D	36	0 0	0 0	0 0	0 0	36 0	0 0

BEARING MATERIAL TO BE SPF NO.2 OR BETTER AT JOINT(S) F, C

BRACING
TOP CHORD TO BE SHEATHED OR MAX. PURLIN SPACING = 10.00 FT.
MAX. UNBRACED BOTTOM CHORD LENGTH = 10.00 FT OR RIGID CEILING DIRECTLY APPLIED.

ALL PITCH BREAKS AND PERIMETER CORNER JOINTS MUST BE LATERALLY RESTRAINED.

LOADING
TOTAL LOAD CASES: (4)

CHORDS

MEMB. FR-TO	MAX. FACTORED FORCE (LBS)		FACTORED VERT. LOAD (PLF) FROM	TO	LC1	MAX CSI (LC)	MAX. UNBRAC LENGTH
F- B	-305	0	0.0	0.0	0.03	(1)	7.81
A- B	0	35	-91.8	-91.8	0.12	(1)	10.00
B- C	0	0	-91.8	-91.8	0.24	(1)	10.00
F- E	0	0	-18.5	-18.5	0.11	(4)	10.00
E- D	0	0	-18.5	-18.5	0.13	(4)	10.00

WEBS

MEMB. FR-TO	MAX. FACTORED FORCE (LBS)		MAX CSI (LC)
B- E	0	0	0.00 (1)

DESIGN CRITERIA

SPECIFIED LOADS:

TOP CH.	LL	=	25.6	PSF
	DL	=	6.0	PSF
BOT CH.	LL	=	0.0	PSF
	DL	=	7.4	PSF
TOTAL LOAD		=	39.0	PSF

SPACING = 24.0 IN. C/C

THIS TRUSS IS DESIGNED FOR RESIDENTIAL OR SMALL BUILDING REQUIREMENTS OF PART 9. NBCC 2010. NBCC 2015

THIS DESIGN COMPLIES WITH:
- PART 9 OF BCBC 2018 , OBC 2012 , ABC 2019
- PART 9 OF OBC 2012 (2019 AMENDMENT)
- CSA 086-09, CSA 086-14
- TPIC 2011, TPIC 2014

(55 % OF 31.3 P.S.F. G.S.L. PLUS 8.4 P.S.F. RAIN LOAD) EQUALS 25.6 P.S.F. SPECIFIED ROOF LIVE LOAD

ALLOWABLE DEFL.(LL)= L/360 (0.19")
CALCULATED VERT. DEFL.(LL) = L/ 999 (0.00")
ALLOWABLE DEFL.(TL)= L/360 (0.19")
CALCULATED VERT. DEFL.(TL) = L/ 999 (0.03")

CSI: TC=0.24/1.00 (B-C:1) , BC=0.13/1.00 (D-E:4) , WB=0.00/1.00 (B-E:1) , SSI=0.12/1.00 (B-C:1)

DOL LUMBER=1.00 NAIL=1.00 LS BEND=1.10 COMP=1.10 SHEAR=1.10 TENS= 1.10

COMPANION LIVE LOAD FACTOR = 1.00

AUTOSOLVE RIGHT HEEL ONLY

TRUSS PLATE MANUFACTURER IS NOT RESPONSIBLE FOR QUALITY CONTROL IN THE TRUSS MANUFACTURING PLANT .

NAIL VALUES

PLATE	GRIP(DRY) (PSI) MAX	MIN	SHEAR (PLI) MAX	MIN	SECTION (PLI) MAX	MIN
MT20	618	354	1667	788	1987	1656

PLATE PLACEMENT TOL. = 0.250 inches

PLATE ROTATION TOL. = 5.0 Deg.

JSI GRIP= 0.21 (B) (INPUT = 0.90)
JSI METAL= 0.06 (B) (INPUT = 1.00)

LICENSED PROFESSIONAL ENGINEER
10/14/20
H. J. G. ALVES
100009024
PROVINCE OF ONTARIO

Structural component only
DWG# T-2022182

Alves Engineering Services Inc.
5208 Easton road
Burlington, Ontario L7L 6N6
(289) 259 5455

LICENSED PROFESSIONAL ENGINEER
06/11/19
H.J.G. ALVES
PROVINCE OF ONTARIO

RESPONSABILITIES

1-Alves Engineering Services Inc. is responsible for the design of trusses as individual components

2-It is the responsibility of others to ascertain that the design loads utilized on this drawing meet or exceed the actual dead load imposed by the structure and the live load imposed by the local building code or the authorities having jurisdictions.

3- All dimensions are to be verified by owner, contractor, architect or other authority before manufacture.

4- Alves Engineering Services Inc. bears no responsibility for the erection of the trusses. Persons erecting trusses are cautioned to seek professional advice regarding temporary and permanent bracing system. Bracing shown on Alves Engineering Services Inc. drawings is specified for the truss as a single component and forms an integral part of the truss design, but is not meant to represent the only required bracing for that truss when trusses are installed in a series of trusses forming a roof truss system.

5- It is the manufactures responsibility to ensure that the trusses are manufactured in conformance with Alves Engineering Services Inc. specifications outlined below.

SPECIFICATIONS

1-Truss components sealed by Alves Engineering Services Inc. conform to the relevant sections of the current Building Code of Ontario and Canada (part 4 or part 9) or the current Canadian code for Farm Buildings in accordance with the application specified on the sealed truss component drawing. All truss component design procedures must conform to the current design standard issued by the truss plate institute of Canada (TPIC). All lumber and nailing stresses to conform to the current CSA wood design standard identified on the current Building Code and TPIC.

2- Lumber is to be the sizes and grade specified on the truss drawing.

3- Moist content of lumber is not to exceed 19% in service unless otherwise specified.

4- Plates shall be applied to both faces of the each truss joint and shall be positioned as shown on the truss drawings

5- Lumber used on manufacture of trusses is not to be treated with chemicals unless otherwise specified on the truss drawings.

6- The top chord is assumed to be continuously laterally braced by the roof sheathing or purlins at intervals specified on the truss drawing but not exceeding 24" c/c for (part 9) and not exceeding 48" for (part 4 or farm design)

7- When rigid ceiling is not attached directly to the bottom chord, lateral bracing is required and it should not exceed more than 3m or 10' intervals.

8-Refer to Mitek sheet MII7473C REV.10-08 attached for information on symbols, numbering system and General Safety notes.

T-1800213 Feb 09, 2018

BEARING ANCHORAGE BY TOE-NAILS FOR LATERAL CAPACITY

B97791H1

NAIL TYPE	LENGTH (IN)	DIAMETER (IN)	NAIL LATERAL CAPACITY (LB)	
			S-P-F	D. FIR
COMMON WIRE	3.00	0.144	132	147
	3.25	0.144	132	147
	3.50	0.160	159	177
COMMON SPIRAL	3.00	0.122	97	108
	3.25	0.122	97	108
	3.50	0.152	145	162

NOTES:

1. Rafter and ceiling members may be anchored to top and bottom chords of girder truss by toe-nailing rafter and ceiling members to girder chords provided the reaction does not exceed the lateral capacities in the table. Hangers (specified by others) are required for reactions higher than the maximum toe-nail capacity. Reactions are based on factored loads.
2. Toe nail capacities shown in the table are for **one** toe-nail. For additional toe-nails multiply values in table by the number of toe-nails used. Toe-nail capacities take into account toe-nailing factor J_A in CSA O86-14, section 12.9.4.1.
3. For 9- 3/4 gauge 3.25" common wire gun nails (diameter = 0.120") use 3" common spiral nail values.
4. Maximum number of toe-nails allowed depends on the lumber size & species to be toe-nailed to supporting member and nail diameter, as shown in tables below.
5. Nail values in table are based on the following relative lumber densities: G = 0.42 (SPF), G = 0.49 (D. Fir).
6. Toe-nails shall be driven at approximately 1/3 the nail length from the edge of the joist/truss chord and driven at an angle of 30° to the grain of the member (See next page for nailing on bearing plate).
7. For loads due to **wind** the nail lateral capacity in this table may be multiplied by 1.15 (K_D factor).
8. Lumber must be dry (< 19% moisture content) at the time of nail installation.
9. Nail values in this table comply with CSA O86-14, section 12.9.4
10. This design is not valid after March 31, 2021.

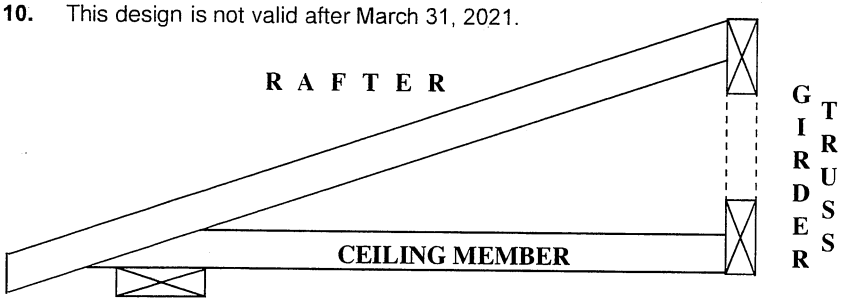

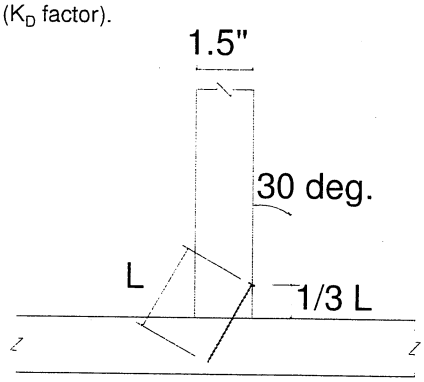

TOE-NAIL INSTALLATION

Nail type	Common wire	Common spiral	Common wire	Common spiral
Nail dia. (in)	0.160	0.152	0.144	0.122
	(3.5" nail)		**(3" and 3.25" nail)**	
LUMBER SIZE	**MAXIMUM NUMBER OF TOE-NAILS**			
2X4 SPF	2	2	3	3
2X4 D. Fir	2	2	2	2
2X6 SPF	4	4	4	5
2X6 D. Fir	3	3	3	4

PEO
Certificate No. 10889485

LICENSED PROFESSIONAL ENGINEER
C. Cordogiannis
90553736
PROVINCE OF ONTARIO

MiTek®

MiTek Canada Inc
100 Industrial Rd.
Bradford, Ontario L3Z 3G7

December 2, 2019

BEARING ANCHORAGE BY TOE-NAILS FOR WIND LOADING

B97791H2

NAIL TYPE	LENGTH (IN)	DIAMETER (IN)	NAIL WITHDRAWAL CAPACITY (LB)	
			S-P-F	D. FIR
COMMON WIRE	3.00	0.144	30	42
	3.25	0.144	32	45
	3.50	0.160	38	52
COMMON SPIRAL	3.00	0.122	26	36
	3.25	0.122	28	40
	3.50	0.152	36	50

Note: If using truss with D. Fir lumber and S-P-F bearing plate, use values in table for S-P-F.

NOTES:

1. Truss chord, rafter, or ceiling members may be anchored to bearing plate by toe-nails, provided that the actual factored uplift force due to **wind** or **earthquake** load does not exceed the withdrawal capacities in the table. Hangers (specified by others) are required for uplift forces that are higher than the maximum toe-nail withdrawal capacity.
2. Toe nail capacities shown in the table are for **one** toe-nail. For additional toe-nails multiply values in table by the number of toe-nails used. Toe-nail capacities take into account toe-nailing factor J_A in CSA O86-14, section 12.9.5.2.
3. For 9- 3/4 gauge 3.25" common wire gun nails (diameter = 0.120") use 3" common spiral nail values.
4. Maximum number of toe-nails allowed depends on the lumber size & species to be toe-nailed to supporting member and nail diameter, as shown in table above.
5. Nail values in table are based on the following relative lumber densities: G = 0.42(SPF), G = 0.49(D. Fir).
6. Toe-nails shall be driven at approximately 1/3 the nail length from the edge of the joist/truss chord and driven at an angle of 30° to the grain of the member (See drawing on detail B37579H1).
7. Lumber must be dry (< 19% moisture content) at the time of nail installation.
8. Nail values in this table comply with CSA O86-14, section 12.9.5
9. This design is not valid after March 31, 2021.

Toe-nailing on 2x6 Bearing Plate

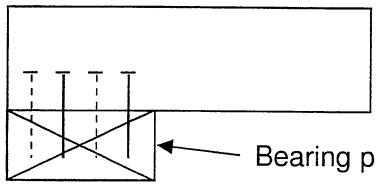

Elevation view

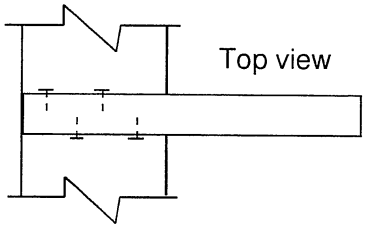

Top view

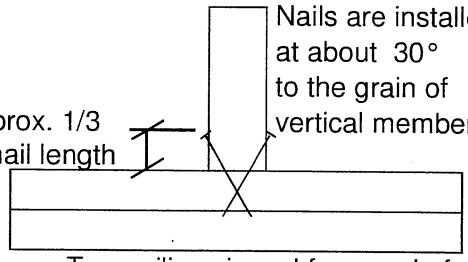

Toe-nailing viewed from end of joist or truss

Toe-nailing on 2x4 Bearing Plate

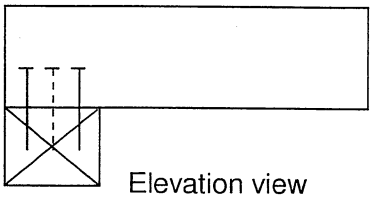

Elevation view

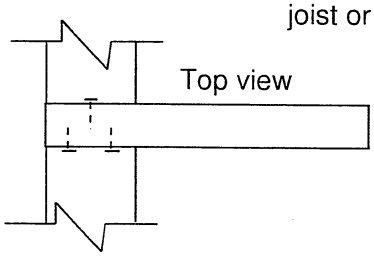

Top view

PEO
Certificate No. 10889485

LICENSED PROFESSIONAL ENGINEER
C. Cordogiannis
90553736
PROVINCE OF ONTARIO

MiTek®

MiTek Canada Inc
100 Industrial Rd.
Bradford, Ontario L3Z 3G7

December 2, 2019

TECHNICAL BULLETIN

HUS/LJS – Double Shear Joist Hangers

SIMPSON Strong-Tie®

All hangers have double shear nailing. This patented innovation distributes the load through two points on each joist nail for greater strength. It also allows the use of fewer nails, faster installation and the use of common nails for all connections. Do not bend or remove tabs.

Material: See table

Finish: G90 galvanized

Design:

- Factored resistances are in accordance with CSA O86 -14.
- Uplift resistances have been increased 15%. No further increase is permitted.
- Wood shear is not considered in the factored resistances given. The specifier must ensure that the joist and header capacities are capable of withstanding these loads.

Installation:

- Use all specified fasteners
- Nails: 16d = 0.162" dia. x 3½" long common wire
- Double shear nails must be driven at an angle through the joist or truss into the header to achieve the table loads
- Not designed for welded or nailer applications

Options:

- See current catalogue for options

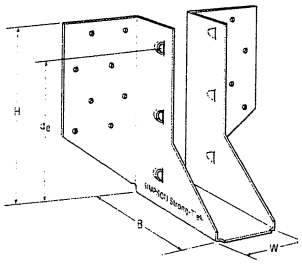

LJS26DS

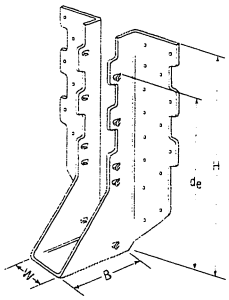

HUS210
(HUS26, HUS28, similar)

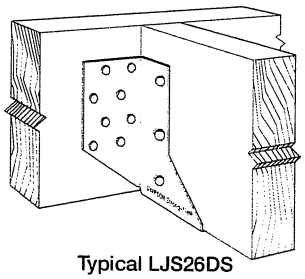

Typical LJS26DS Installation

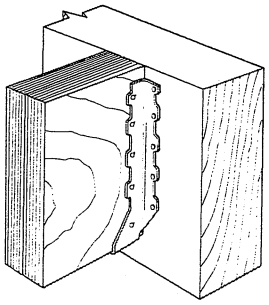

Typical HUS Installation

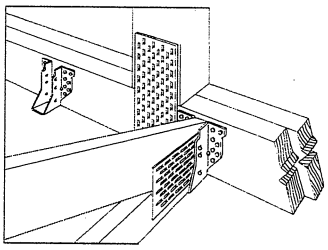

Typical HUS Installation
(Truss Designer to provide fastener quantity for connecting multiple members together)

Model No.	Ga.	Dimensions (in.)				Fasteners		Factored Resistance (lb.)			
								D.Fir-L		S-P-F	
		W	H	B	d_e[1]	Face	Joist	Uplift (K_D=1.15)	Normal (K_D=1.00)	Uplift (K_D=1.15)	Normal (K_D=1.00)
								lb.	lb.	lb.	lb.
LJS26DS	18	1 9/16	5	3½	4⅝	(16) 16d	(6) 16d	2055	4265	1460	4115
HUS26	16	1⅝	5⅜	3	3 15/16	(14) 16d	(6) 16d	2705	4940	2065	3875
HUS28	16	1⅝	7 3/32	3	6 3/32	(22) 16d	(8) 16d	3605	5365	2675	4345
HUS210	16	1⅝	9 3/32	3	7 31/32	(30) 16d	(10) 16d	4505	5795	4010	4740
HUS1.81/10	16	1 13/16	9	3	8	(30) 16d	(10) 16d	4505	6450	4010	5200

1. d_e is the distance from the seat of the hanger to the highest joist nail.

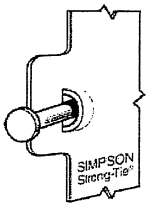

Dome Double Shear Nailing prevents tabs breaking off (available on some models).

U.S. Patent 5,603,580

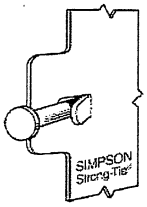

Double Shear Nailing Side View. Do not bend tab back.

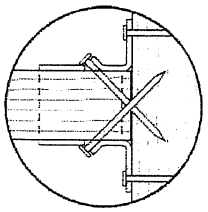

Double Shear Nailing Top View.

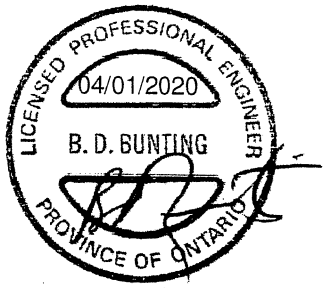

LIMIT STATES DESIGN

This technical bulletin is effective until June 30, 2022, and reflects information available as of April 1, 2020. This information is updated periodically and should not be relied upon after June 30, 2022. Contact Simpson Strong-Tie for current information and limited warranty or see strongtie.com.

© 2020 Simpson Strong-Tie Company Inc.

(800) 999-5099
strongtie.com

TECHNICAL BULLETIN

LUS – Double Shear Joist Hangers

SIMPSON Strong-Tie®

All LUS hangers have double shear nailing. This patented innovation distributes the load through two points on each joist nail for greater strength. It also allows the use of fewer nails, faster installation and the use of common nails for all connections.

Material: 18 gauge

Finish: G90 galvanized

Design:

- Factored resistances are in accordance with CSA O86-14.
- Uplift resistances have been increased 15%. No further increase is permitted.
- Wood shear is not considered in the factored resistances given. The specifier must ensure that the joist and header capacities are capable of withstanding these loads.

Installation:

- Use all specified fasteners.
- Nails: 16d = 0.162" dia. x 3½" long common wire, 10d = 0.148" x 3" long common wire.
- Double shear nails must be driven at an angle through the joist or truss into the header to achieve the table loads.
- Not designed for welded or nailer applications.

Options:

- These hangers cannot be modified

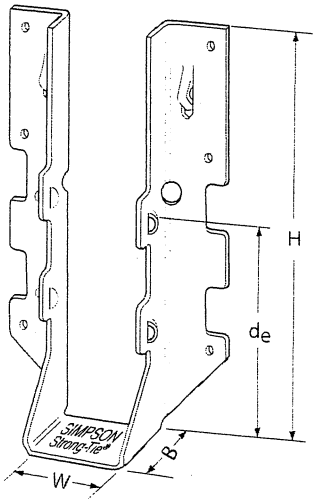

LUS28

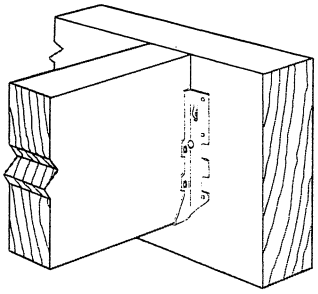

Typical LUS Installation

Model No.	Ga.	Dimensions (in.)				Fasteners		Factored Resistance (lb.)			
								D.Fir-L		S-P-F	
		W	H	B	d_e[1]	Face	Joist	Uplift (K_D=1.15)	Normal (K_D=1.00)	Uplift (K_D=1.15)	Normal (K_D=1.00)
LUS24	18	1 9/16	3 1/8	1 3/4	1 15/16	(4) 10d	(2) 10d	710	1630	645	1155
LUS24-2	18	3 1/8	3 1/8	2	1 13/16	(4) 16d	(2) 16d	835	2020	590	1435
LUS26	18	1 9/16	4 3/4	1 3/4	3 5/8	(4) 10d	(4) 10d	1420	2170	1290	1630
LUS26-2	18	3 1/8	4 7/8	2	4	(4) 16d	(4) 16d	1720	2595	1545	1920
LUS26-3	18	4 5/8	4 3/16	2	3 1/4	(4) 16d	(4) 16d	1720	2595	1545	2340
LUS28	18	1 9/16	6 5/8	1 3/4	3 3/4	(6) 10d	(6) 10d	1420	2520	1290	1790
LUS28-2	18	3 1/8	7	2	4	(6) 16d	(4) 16d	1720	3325	1545	2575
LUS28-3	18	4 5/8	6 1/4	2	3 1/4	(6) 16d	(4) 16d	1720	3325	1545	2375
LUS210	18	1 9/16	7 13/16	1 3/4	3 7/8	(8) 10d	(4) 10d	1420	2785	1290	2210
LUS210-2	18	3 1/8	9	2	6	(8) 16d	(6) 16d	2580	4500	2320	3195
LUS210-3	18	4 5/8	8 3/16	2	5 1/4	(8) 16d	(6) 16d	2580	3345	2320	2375

1. d_e is the distance from the seat of the hanger to the highest joist nail.

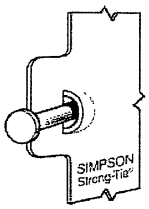

Dome Double Shear Nailing prevents tabs breaking off (available on some models).

U.S. Patent 5,603,580

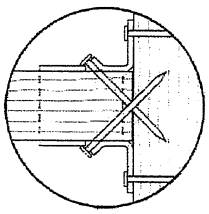

Double Shear Nailing Top View.

LICENSED PROFESSIONAL ENGINEER
04/01/2020
B. D. BUNTING
PROVINCE OF ONTARIO

LIMIT STATES DESIGN

This technical bulletin is effective until June 30, 2022, and reflects information available as of April 1, 2020. This information is updated periodically and should not be relied upon after June 30, 2022. Contact Simpson Strong-Tie for current information and limited warranty or see strongtie.com.

© 2020 Simpson Strong-Tie Company Inc.

(800) 999-5099
strongtie.com

TECHNICAL BULLETIN

HGUS – Double Shear Joist Hangers

SIMPSON Strong-Tie®

All HGUS hangers have double shear nailing. This patented innovation distributes the load through two points on each joist nail for greater strength. It also allows the use of fewer nails, faster installation and the use of common nails for all connections. Do not bend or remove tabs.

Material: 12 gauge

Finish: G90 galvanized

Design:

- Factored resistances are in accordance with CSA O86-14.
- Uplift resistances have been increased 15%. No further increase is permitted.
- Wood shear is not considered in the factored resistances given. The specifier must ensure that the joist and header capacities are capable of withstanding these loads.

Installation:

- Use all specified fasteners
- Nails: 16d = 0.162" dia x 3½" long common wire
- Double shear nails must be driven at an angle through the joist or truss into the header to achieve the table loads
- Not designed for welded or nailer applications

Options:

- See current catalogue for options

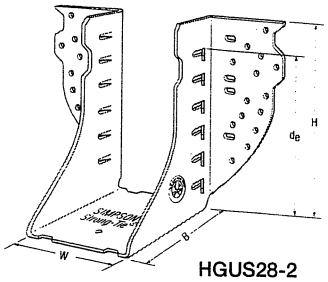

HGUS28-2

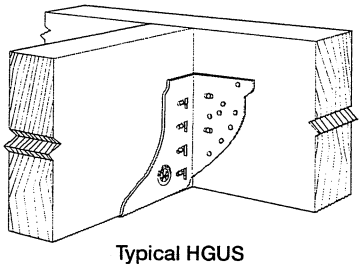

Typical HGUS Installation

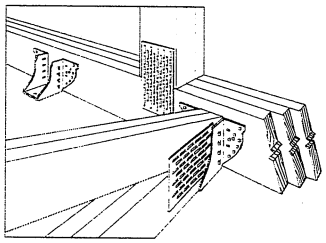

Typical HGUS Installation
(Truss Designer to provide fastener quantity for connecting multiple members together)

Model No.	Ga.	Dimensions (in.)				Fasteners		Factored Resistance (lb.)			
								D.Fir-L		S-P-F	
		W	H	B	d_e[1]	Face	Joist	Uplift (K_D=1.15)	Normal (K_D=1.00)	Uplift (K_D=1.15)	Normal (K_D=1.00)
HGUS26	12	1⅝	5⅜	5	4 5/32	(20) 16d	(8) 16d	2685	6625	2685	5700
HGUS26-2	12	3 5/16	5 7/16	4	4⅛	(20) 16d	(8) 16d	4385	8950	3100	6355
HGUS26-3	12	4 15/16	5½	4	4⅛	(20) 16d	(8) 16d	4385	8950	3100	6355
HGUS26-4	12	6 9/16	5 7/16	4	4⅛	(20) 16d	(8) 16d	4385	8950	3100	6355
HGUS28	12	1⅝	7⅛	5	6⅛	(36) 16d	(12) 16d	3310	7675	3100	6900
HGUS28-2	12	3 5/16	7 3/16	4	6⅛	(36) 16d	(12) 16d	6070	12980	4310	9215
HGUS28-3	12	4 15/16	7¼	4	6⅜	(36) 16d	(12) 16d	6070	12980	4310	9215
HGUS28-4	12	6 9/16	7 3/16	4	6⅛	(36) 16d	(12) 16d	6070	12980	4310	9215
HGUS210	12	1⅝	9⅛	5	7⅞	(46) 16d	(16) 16d	3535	11070	2510	8090
HGUS210-2	12	3 5/16	9 3/16	4	8⅛	(46) 16d	(16) 16d	6840	14015	4855	10270
HGUS210-3	12	4 15/15	9¼	4	8⅜	(46) 16d	(16) 16d	6840	14645	4855	10400
HGUS210-4	12	6 9/16	9 3/16	4	8⅛	(46) 16d	(16) 16d	6840	14645	4855	10400
HGUS212-4	12	6 9/16	10⅝	4	10⅛	(56) 16d	(20) 16d	7640	14995	5425	10645
HGUS214-4	12	6 9/16	12⅝	4	11⅛	(66) 16d	(22) 16d	10130	16400	7195	11645

1. d_e is the distance from the seat of the hanger to the highest joist nail.

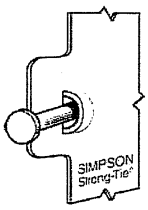

Dome Double Shear Nailing prevents tabs breaking off (available on some models).

U.S. Patent 5,603,580

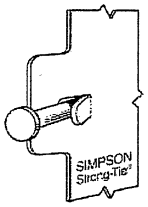

Double Shear Nailing Side View. Do not bend tab back.

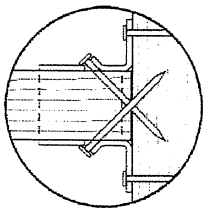

Double Shear Nailing Top View.

LIMIT STATES DESIGN

This technical bulletin is effective until June 30, 2022, and reflects information available as of April 1, 2020. This information is updated periodically and should not be relied upon after June 30, 2022. Contact Simpson Strong-Tie for current information and limited warranty or see strongtie.com.

© 2020 Simpson Strong-Tie Company Inc.

(800) 999-5099
strongtie.com

ONTARIO WOOD TRUSS
FABRICATORS ASSOCIATION

TECH-NOTES

TN 15-001
Piggyback Bracing

Overview:

Where piggybacks are connected overtop of base trusses, 2x4 purlins must be first added to the flat portion of the base truss at a spacing no more than 24" o/c. These purlins not only provide support for the piggyback trusses above, but are required to laterally support the top chord of the base truss which will not have the sheathing directly connected to the flat portion of the base truss. This ensures the top chord, most often in compression, will not buckle laterally.

Further, the purlins in the plane of the flat portion require diagonal bracing to prevent lateral displacement of the purlins themselves where under certain conditions, the trusses may in fact all buckle in the same direction if this additional bracing is not added in the plane of the purlins.

Detail:

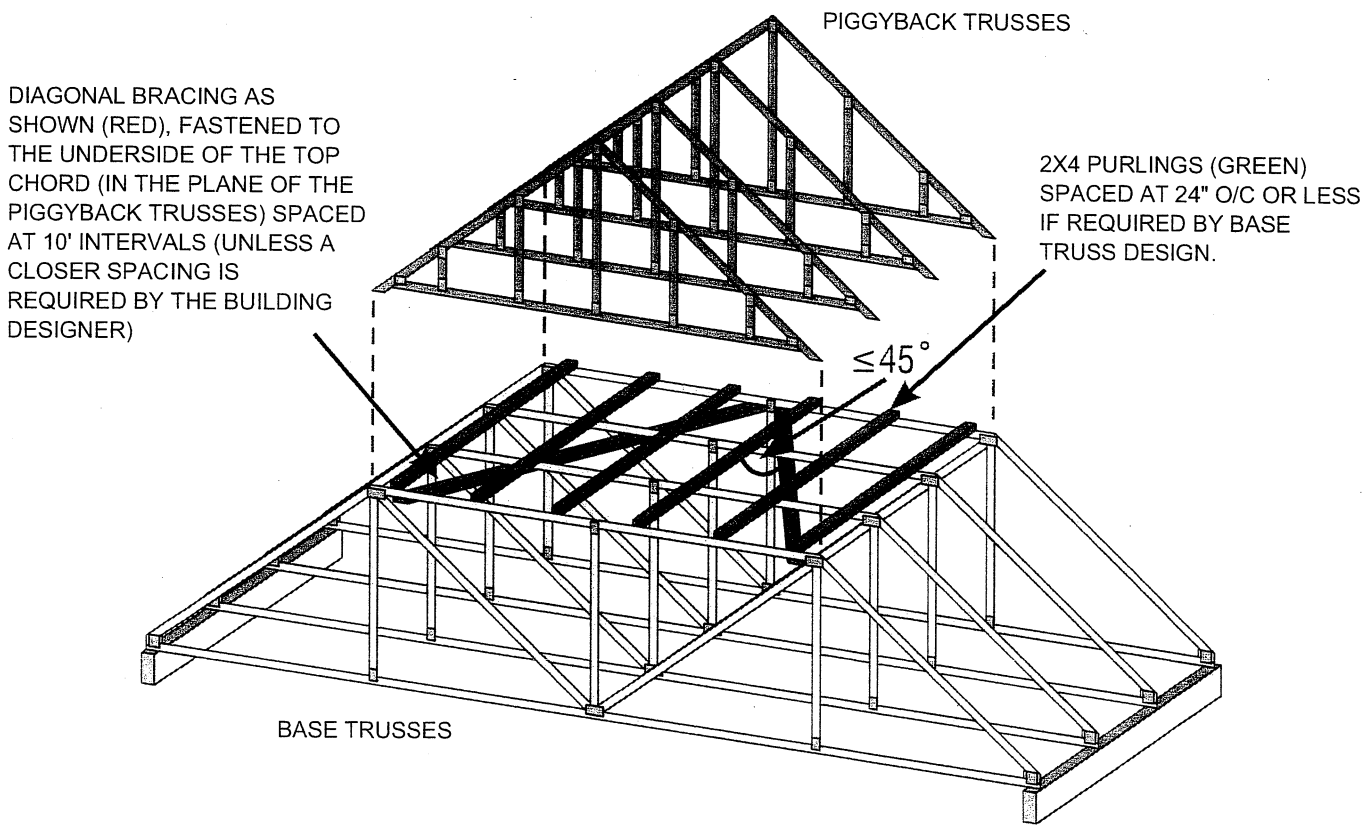

NOTE: THE SLOPED PORTION OF THE TOP CHORD OF THE BASE TRUSS AND PIGGYBACK TRUSS IN THIS SKETCH IS ASSUMED TO BE SHEATHED IN ACCORDANCE WITH THE OBC.

SKETCH FROM BCSI-CANADA 2013

Disclaimer:

OWTFA Tech Notes are intended to provide guidance to the design community both within the membership as well as to third party designers who might benefit from the information. The details have been developed by the OWTFA technical committee and although there may be professional engineers involved in development, the information contained in the tech-note are not intended to be used without having a professional engineer review the information for a specific application. The OWTFA takes no responsibility with respect to the information provided but has developed this tech-note to offer guidance where it is not currently readily available.

Symbols

PLATE LOCATION AND ORIENTATION

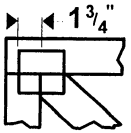

Center plate on joint unless x, y offsets are indicated. Dimensions are in ft-in-sixteenths. Apply plates to both sides of truss and fully embed teeth.

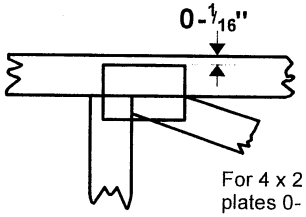

For 4 x 2 orientation, locate plates 0- 1/16" from outside edge of truss.

This symbol indicates the required direction of slots in connector plates.

*** Plate location details available in MiTek 20/20 software or upon request.**

PLATE SIZE

4 x 4

The first dimension is the plate width measured perpendicular to slots. Second dimension is the length parallel to slots.

LATERAL BRACING LOCATION

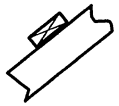

Indicated by symbol shown and/or by text in the bracing section of the output. Use T or I bracing if indicated.

BEARING

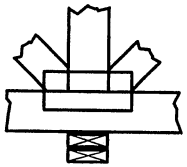

Indicates location where bearings (supports) occur. Icons vary but reaction section indicates joint number where bearings occur. Min size shown is for crushing only.

Industry Standards:

ANSI/TPI1: National Design Specification for Metal Plate Connected Wood Truss Construction.
DSB-89: Design Standard for Bracing.
BCSI: Building Component Safety Information, Guide to Good Practice for Handling, Installing & Bracing of Metal Plate Connected Wood Trusses.

Numbering System

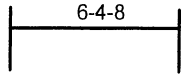

dimensions shown in ft-in-sixteenths (Drawings not to scale)

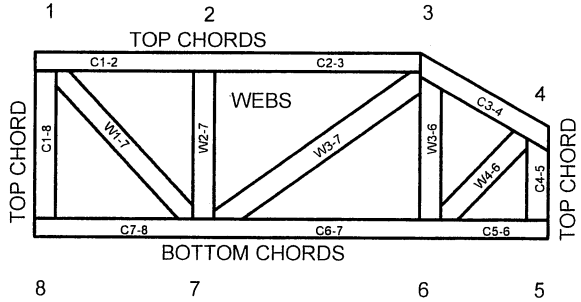

JOINTS ARE GENERALLY NUMBERED/LETTERED CLOCKWISE AROUND THE TRUSS STARTING AT THE JOINT FARTHEST TO THE LEFT.

CHORDS AND WEBS ARE IDENTIFIED BY END JOINT NUMBERS/LETTERS.

PRODUCT CODE APPROVALS

ICC-ES Reports:

ESR-1311, ESR-1352, ESR1988
ER-3907, ESR-2362, ESR-1397, ESR-3282

Trusses are designed for wind loads in the plane of the truss unless otherwise shown.

Lumber design values are in accordance with ANSI/TPI 1 section 6.3 These truss designs rely on lumber values established by others.

© 2012 MiTek® All Rights Reserved

MiTek Engineering Reference Sheet: MII-7473 rev. 10/03/2015

General Safety Notes

Failure to Follow Could Cause Property Damage or Personal Injury

1. Additional stability bracing for truss system, e.g. diagonal or X-bracing, is always required. See BCSI.
2. Truss bracing must be designed by an engineer. For wide truss spacing, individual lateral braces themselves may require bracing, or alternative Tor I bracing should be considered.
3. Never exceed the design loading shown and never stack materials on inadequately braced trusses.
4. Provide copies of this truss design to the building designer, erection supervisor, property owner and all other interested parties.
5. Cut members to bear tightly against each other.
6. Place plates on each face of truss at each joint and embed fully. Knots and wane at joint locations are regulated by ANSI/TPI 1.
7. Design assumes trusses will be suitably protected from the environment in accord with ANSI/TPI 1.
8. Unless otherwise noted, moisture content of lumber shall not exceed 19% at time of fabrication.
9. Unless expressly noted, this design is not applicable for use with fire retardant, preservative treated, or green lumber.
10. Camber is a non-structural consideration and is the responsibility of truss fabricator. General practice is to camber for dead load deflection.
11. Plate type, size, orientation and location dimensions indicated are minimum plating requirements.
12. Lumber used shall be of the species and size, and in all respects, equal to or better than that specified.
13. Top chords must be sheathed or purlins provided at spacing indicated on design.
14. Bottom chords require lateral bracing at 10 ft. spacing, or less, if no ceiling is installed, unless otherwise noted.
15. Connections not shown are the responsibility of others.
16. Do not cut or alter truss member or plate without prior approval of an engineer.
17. Install and load vertically unless indicated otherwise.
18. Use of green or treated lumber may pose unacceptable environmental, health or performance risks. Consult with project engineer before use.
19. Review all portions of this design (front, back, words and pictures) before use. Reviewing pictures alone is not sufficient.
20. Design assumes manufacture in accordance with ANSI/TPI 1 Quality Criteria.