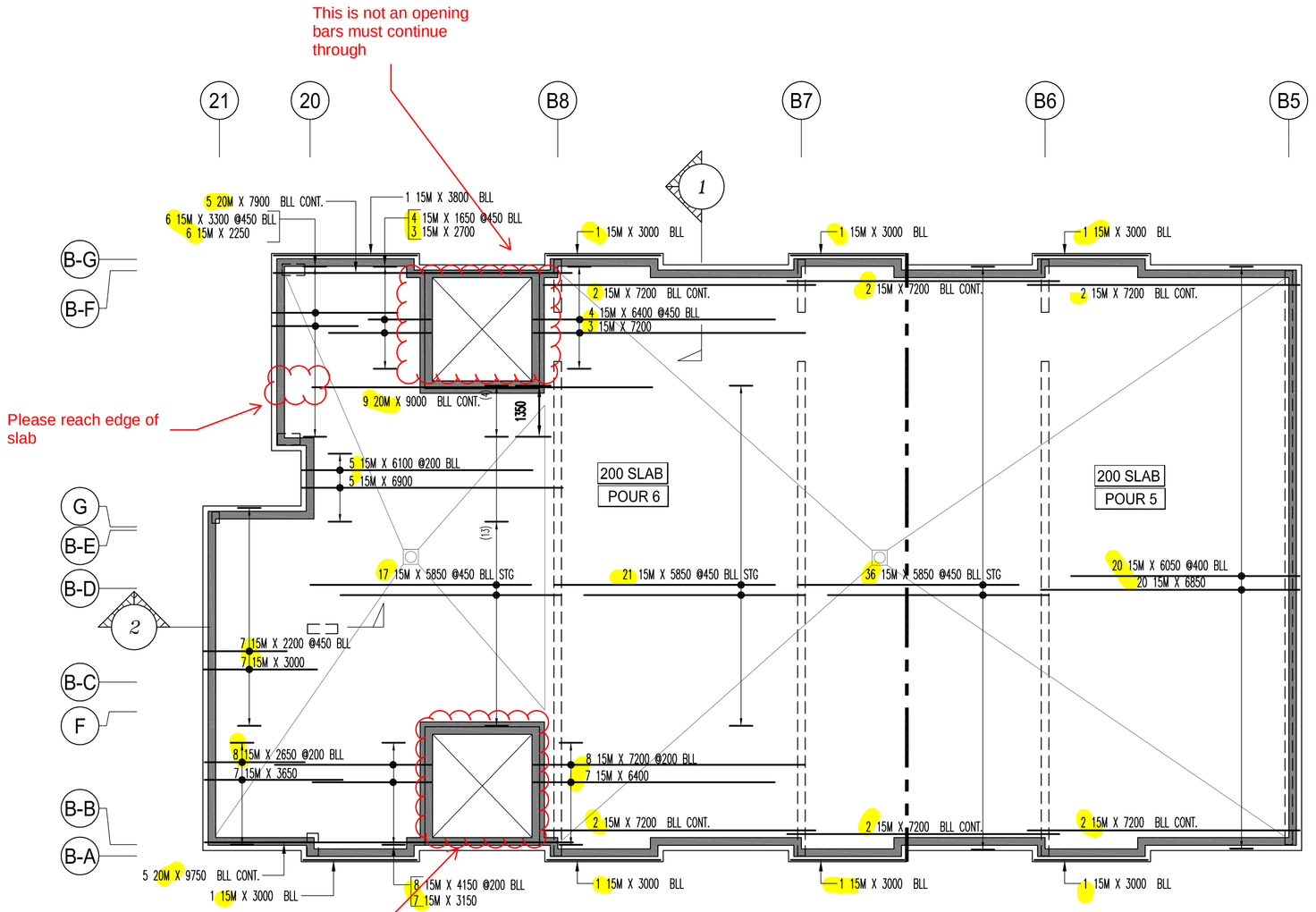

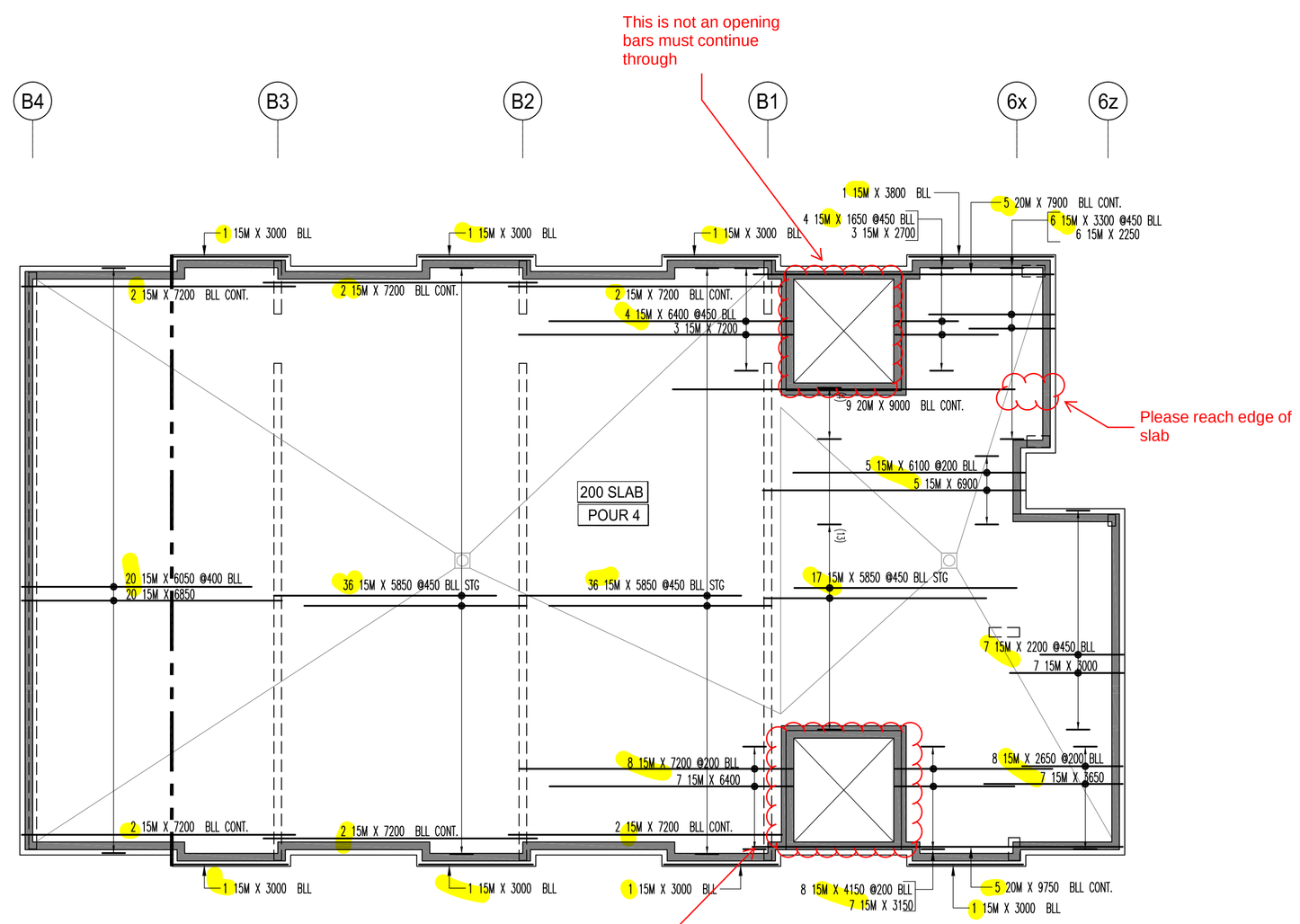

BUILDING–B ROOF FLOOR SLAB BLL

SCALE: 1:100

Release Number: R18.1A RF SL BLL P#4

BAR LIST

Bar Mark	Qty	Size	Total Length	Type	'A'	'B'	'C'	'D'	'E'	'F'	'G'	'H'	'J'	'K'	'O'	'R'
	1	15M	3800			3800										
	4	15M	1650			1650										
	3	15M	2700			2700										
	6	15M	2250			2250										
	7	15M	2200			2200										
	6	15M	3300			3300										
	8	15M	2650			2650										
	7	15M	3150			3150										
	7	15M	3650			3650										
	4	15M	7200			7200										
	5	15M	6100			6100										
	8	15M	4150			4150										
	5	15M	6900			6900										
	14	15M	3000			3000										
	11	15M	6400			6400										
	20	15M	6050			6050										
	19	15M	7200			7200										
	20	15M	6850			6850										
	89	15M	5850			5850										
	5	20M	7900			7900										
	5	20M	9750			9750										
	9	20M	9000			9000										

Length

0

Release Number: R18.1A RF SL BLL P#5

BAR LIST

Bar Mark	Qty	Size	Total Length	Type	'A'	'B'	'C'	'D'	'E'	'F'	'G'	'H'	'J'	'K'	'O'	'R'
	2	15M	3000			3000										
	8	15M	7200			7200										
	20	15M	6050			6050										
	20	15M	6850			6850										
	36	15M	5850			5850										

Length

0

Release Number: R18.1A RF SL BLL P#6

BAR LIST

Bar Mark	Qty	Size	Total Length	Type	'A'	'B'	'C'	'D'	'E'	'F'	'G'	'H'	'J'	'K'	'O'	'R'
	1	15M	3800			3800										
	4	15M	1650			1650										
	3	15M	2700			2700										
	6	15M	2250			2250										
	7	15M	2200			2200										
	6	15M	3300			3300										
	8	15M	2650			2650										
	7	15M	3150			3150										
	7	15M	3650			3650										
	4	15M	7200			7200										
	5	15M	6100			6100										
	8	15M	4150			4150										
	5	15M	6900			6900										
	12	15M	3000			3000										
	11	15M	6400			6400										
	11	15M	7200			7200										
	38	15M	5850			5850										
	5	20M	7900			7900										
	5	20M	9750			9750										
	9	20M	9000			9000										

Length

0

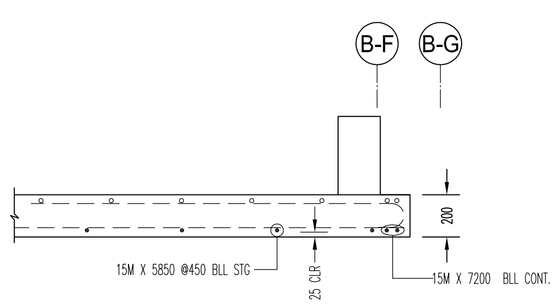

SECTION 1

SCALE: 1:20

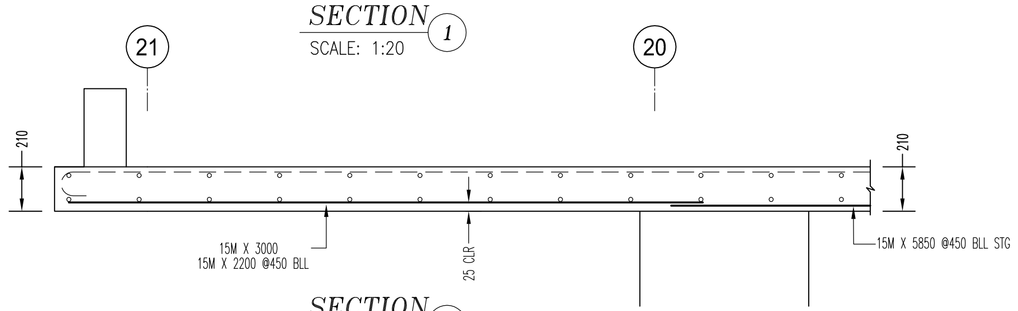

SECTION 2

SCALE: 1:20

NOTES

1. ALL STEEL TO BE GRADE 400W
2. STRENGTH OF CONCRETE
   35MPa – INTERIOR COLUMNS & WALLS
3. CONCRETE COVER:
   TIES -- 40mm
4. COMPRESSION LAP SPLICE

BAR SIZE	STANDARD LAP (mm)
10M	300
15M	440
20M	590
25M	730
30M	880
35M	1030

5. TENSION LAP SPLICE (L.S) & DEVELOPMENT LENGTH (Ld)
   (FOR WALL OR COL & Ld IN CAP OR FTG.)

BAR SIZE	fc=25		fc=30		fc=35	
	L.S	L.d	L.S	L.d	L.S	L.d
10M	490	380	450	350	420	320
15M	740	570	670	520	620	480
20M	980	750	890	690	830	640
25M	1530	1170	1390	1070	1290	990
30M	1830	1410	1670	1290	1550	1190
35M	2130	1640	1950	1500	1800	1390

DRAWING REVIEW

This review of this drawing does not in any way relieve the contractor of responsibility for its accuracy or for compliance with the contract documents.

	No comment	✓	See comment
	Amend & Resubmit		Rejected See Remarks

Submission No.
Project No. 19066
By MB
Date 01 Dec 2021

JABLONSKY, AST AND PARTNERS
Consulting Engineers
1129 Leslie Street Don Mills, Ont. M3C 2K5

- ELEVATIONS AND DIMENSIONS SHOWN ARE FOR VERIFICATION PURPOSES ONLY AND ARE NOT TO BE USED FOR CONSTRUCTION
- ALL CONFIRMS/VERIFIES WILL BE ASSUMED CORRECT AND APPROVED AS IS UNLESS COMMENTED ON THE APPROVAL DRWGS

LEGEND

ALT = ALTERNATE
BOT = BOTTOM
BIS = BEND INTO SLAB
CB = CORNER BAR
CJ = CONTROL JOINT
CTS = CUT TO SUIT SITE COND.
DWL = DOWELS
EE = EACH END
EF = EACH FACE
EJ = EXPANSION JOINT
ES = EACH SIDE
EW = EACH WAY
FF = FAR FACE
FS = FORM SAVER
GD = GROUT IN DOWELS
H = HORIZONTAL
IF = INSIDE FACE
LL = LOWER LAYER
MD = MIDDLE
MIN = MINIMUM
NF = NEAR FACE
OC = ON CENTER
OF = OUTSIDE FACE
SC = SAW CUT END
STG = STAGGER
STIR = STIRRUPS
T = TOP
THR/1= THREAD 1END
THR/2= THREAD 2ENDS
UL = UPPER LAYER
U/N = UNLESS NOTED
V = VERTICAL
TT = TEMP. TIES

STRAIGHT BARS LABEL FORMAT

7 B15M X 3600
QUANTITY GRADE LENGTH

BENT BARS LABEL FORMAT

7 B15M B1501
QUANTITY GRADE SIZE BAR MARK

GRADES OF STEEL

B = GRADE 400R
C = EPOXY COATED
D = DOWEL
G = GALVANIZED
S = STAINLESS
W = WELDABLE

ISSUE	REMARKS	DATE	BY
0	FOR APPROVAL	NOV/22/21	JU

MANSTEEL REBAR

MANSTEEL REBAR
105 Industrial Road, Richmond Hill,
Ontario L4C 2T4 Canada
Phone: 905-737-9797
Fax: 905-737-9704
Email: info@mansteelrebar.com

PROJECT
FORESTSIDE TOWNHOUSES
–BRAMPTON, ON

PART OF STRUCTURE
ROOF SLAB BLL P#4,5,6

CUSTOMER :
ROYAL PINE HOMES

Project no. 2177

SCALE: AS SHOWN

DRAWING No.
R18.1A

DETAILED BY: JU

CHECKED BY:

BAR LIST No.

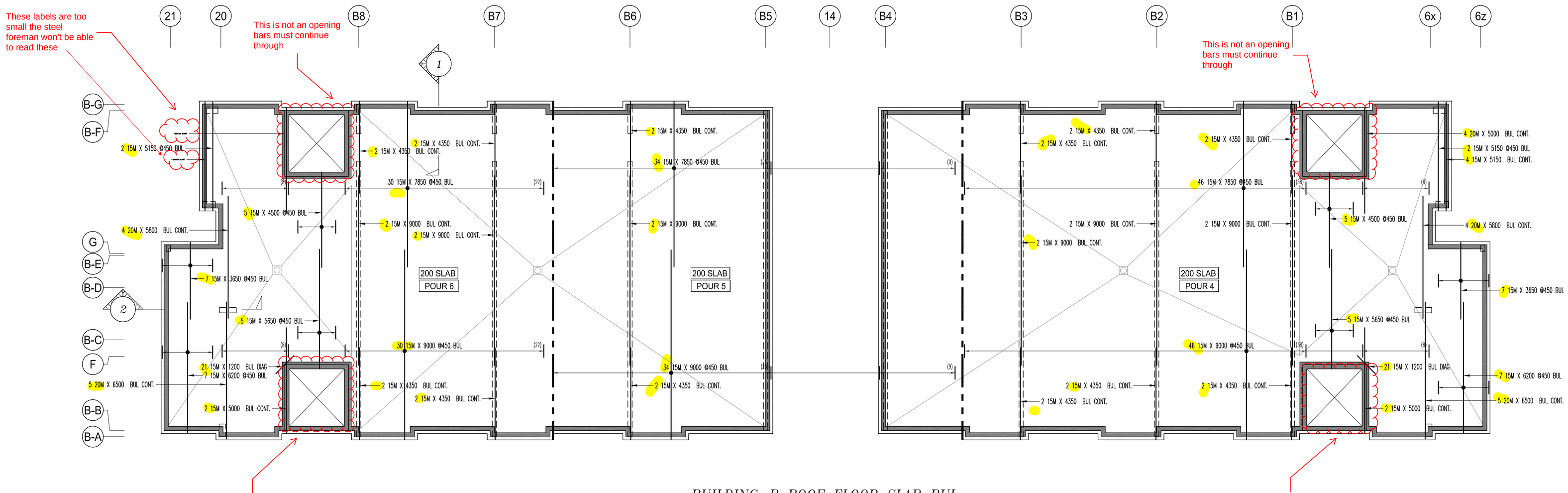

BUILDING-B ROOF FLOOR SLAB BUL

SCALE: 1:100

Release Number: R18.1B RF SL BUL P#4

BAR LIST

Bar Mark	Qty	Size	Total Length	Type	'A'	'B'	'C'	'D'	'E'	'F'	'G'	'H'	'J'	'K'	'O'	'X'
	12	15M	4350			4350										
	2	15M	5000			5000										
	6	15M	5150			5150										
	53	15M	9000			9000										
	5	15M	4500			4500										
	21	15M	1200			1200										
	7	15M	3650			3650										
	5	15M	5650			5650										
	7	15M	6200			6200										
	46	15M	7850			7850										
	4	20M	5000			5000										
	4	20M	5800			5800										
	5	20M	6500			6500										

Length

0

Release Number: R18.1B RF SL BUL P#5

BAR LIST

Bar Mark	Qty	Size	Total Length	Type	'A'	'B'	'C'	'D'	'E'	'F'	'G'	'H'	'J'	'K'	'O'	'X'
	4	15M	4350			4350										
	36	15M	9000			9000										
	34	15M	7850			7850										

Length

0

Release Number: R18.1B RF SL BUL P#6

BAR LIST

Bar Mark	Qty	Size	Total Length	Type	'A'	'B'	'C'	'D'	'E'	'F'	'G'	'H'	'J'	'K'	'O'	'X'
	8	15M	4350			4350										
	2	15M	5000			5000										
	6	15M	5150			5150										
	34	15M	9000			9000										
	5	15M	4500			4500										
	21	15M	1200			1200										
	7	15M	3650			3650										
	5	15M	5650			5650										
	7	15M	6200			6200										
	30	15M	7850			7850										
	4	20M	5000			5000										
	4	20M	5800			5800										
	5	20M	6500			6500										

Length

0

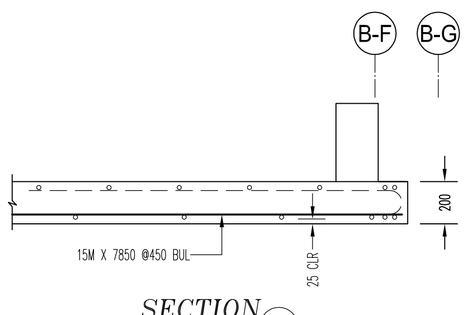

SECTION 1

SCALE: 1:20

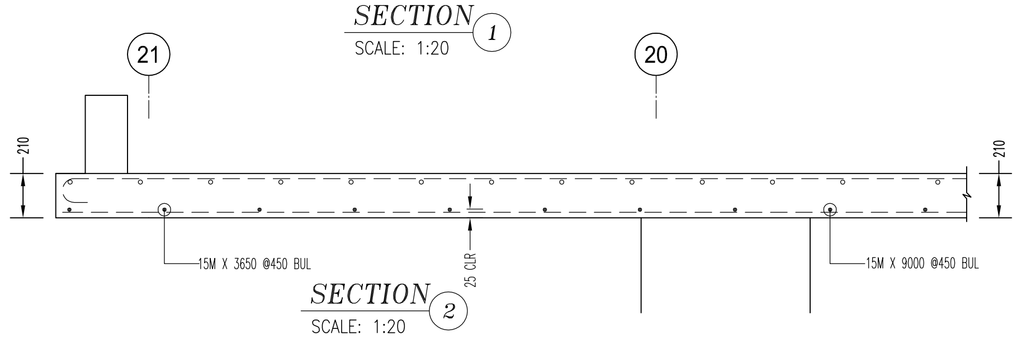

SECTION 2

SCALE: 1:20

NOTES

1. ALL STEEL TO BE GRADE 400W
2. STRENGTH OF CONCRETE
   35MPa – INTERIOR COLUMNS & WALLS
3. CONCRETE COVER:
   TIES -- 40mm
4. COMPRESSION LAP SPLICE

BAR SIZE	STANDARD LAP (mm)
10M	300
15M	440
20M	590
25M	730
30M	880
35M	1030

5. TENSION LAP SPLICE (L.S) & DEVELOPMENT LENGTH (Ld)
   (FOR WALL OR COL & Ld IN CAP OR FTG.)

BAR SIZE	fc=25		fc=30		fc=35	
	L.S	L.d	L.S	L.d	L.S	L.d
10M	490	380	450	350	420	320
15M	740	570	670	520	620	480
20M	980	750	890	690	830	640
25M	1530	1170	1390	1070	1290	990
30M	1830	1410	1670	1290	1550	1190
35M	2130	1640	1950	1500	1800	1390

DRAWING REVIEW

This review of this drawing does not in any way relieve the contractor of responsibility for its accuracy or for compliance with the contract documents.

	No comment	✓	See comment
	Amend & Resubmit		Rejected See Remarks

Submission No.
Project No. 19066
By MB
Date 01 Dec 2021

JABLONSKY, AST AND PARTNERS
Consulting Engineers
1129 Leslie Street Don Mills, Ont. M3C 2K5

* ELEVATIONS AND DIMENSIONS SHOWN ARE FOR VERIFICATION PURPOSES ONLY AND ARE NOT TO BE USED FOR CONSTRUCTION
* ALL CONFIRMS/VERIFIES WILL BE ASSUMED CORRECT AND APPROVED AS IS UNLESS COMMENTED ON THE APPROVAL DRWGS

LEGEND

ALT = ALTERNATE
BOT = BOTTOM
BIS = BEND INTO SLAB
CB = CORNER BAR
CJ = CONTROL JOINT
CTS = CUT TO SUIT SITE COND.
DWL = DOWELS
EE = EACH END
EF = EACH FACE
EJ = EXPANSION JOINT
ES = EACH SIDE
EW = EACH WAY
FF = FAR FACE
FS = FORM SAVER
GID = GROUT IN DOWELS
H = HORIZONTAL
IF = INSIDE FACE
LL = LOWER LAYER
MID = MIDDLE
MIN = MINIMUM
NF = NEAR FACE
OC = ON CENTER
OF = OUTSIDE FACE
SC = SAW CUT END
STG = STAGGER
STIR = STIRRUPS
T = TOP
THR/1= THREAD 1END
THR/2= THREAD 2ENDS
UL = UPPER LAYER
U/n = UNLESS NOTED
V = VERTICAL
TT = TEMP. TIES

STRAIGHT BARS LABEL FORMAT: 7 B15M X 3600 — QUANTITY, SPACE, LENGTH

BENT BARS LABEL FORMAT: 7 B15M B1501 — QUANTITY, SPACE, SIZE, BAR MARK

GRADES OF STEEL
R = GRADE 400R
E = EPOXY COATED
F = FAB.
G = GALVANIZED
U = UNCOATED
W = WELDABLE

ISSUE	REMARKS	DATE	BY
0	FOR APPROVAL	NOV/22/21	JJ

MANSTEEL REBAR

MANSTEEL REBAR
105 Industrial Road, Richmond Hill,
Ontario L4C 2T4 Canada
Phone: 905-737-9797
Fax: 905-737-9704
Email: info@mansteelrebar.com

PROJECT
FORESTSIDE TOWNHOUSES
-BRAMPTON, ON

PART OF STRUCTURE
ROOF SLAB BUL P#4,5,6

CUSTOMER :
ROYAL PINE HOMES

Project no. 2177
SCALE: AS SHOWN
DRAWING No.
R18.1B

DETAILED BY: JJ
CHECKED BY:
BAR LIST No.

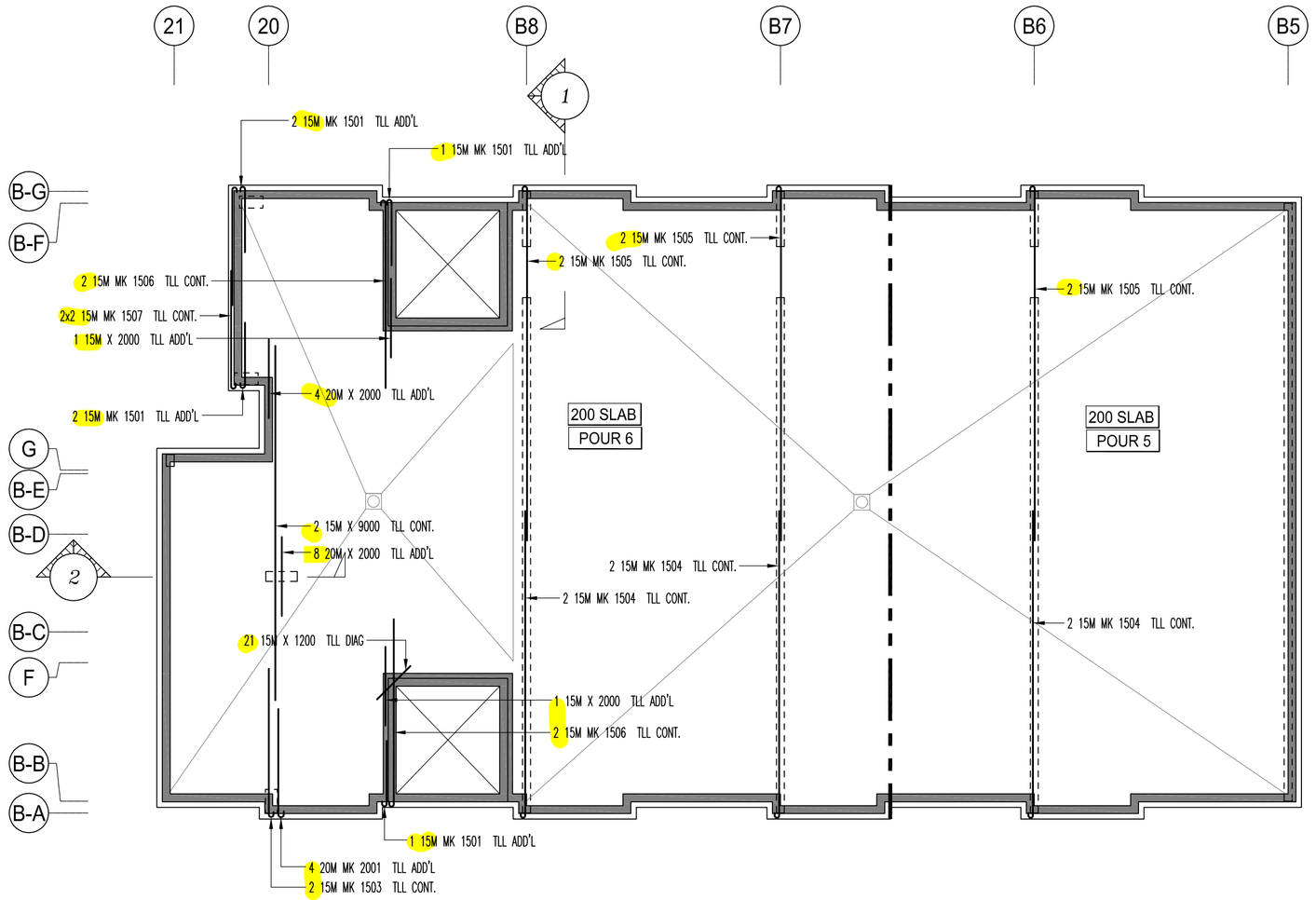

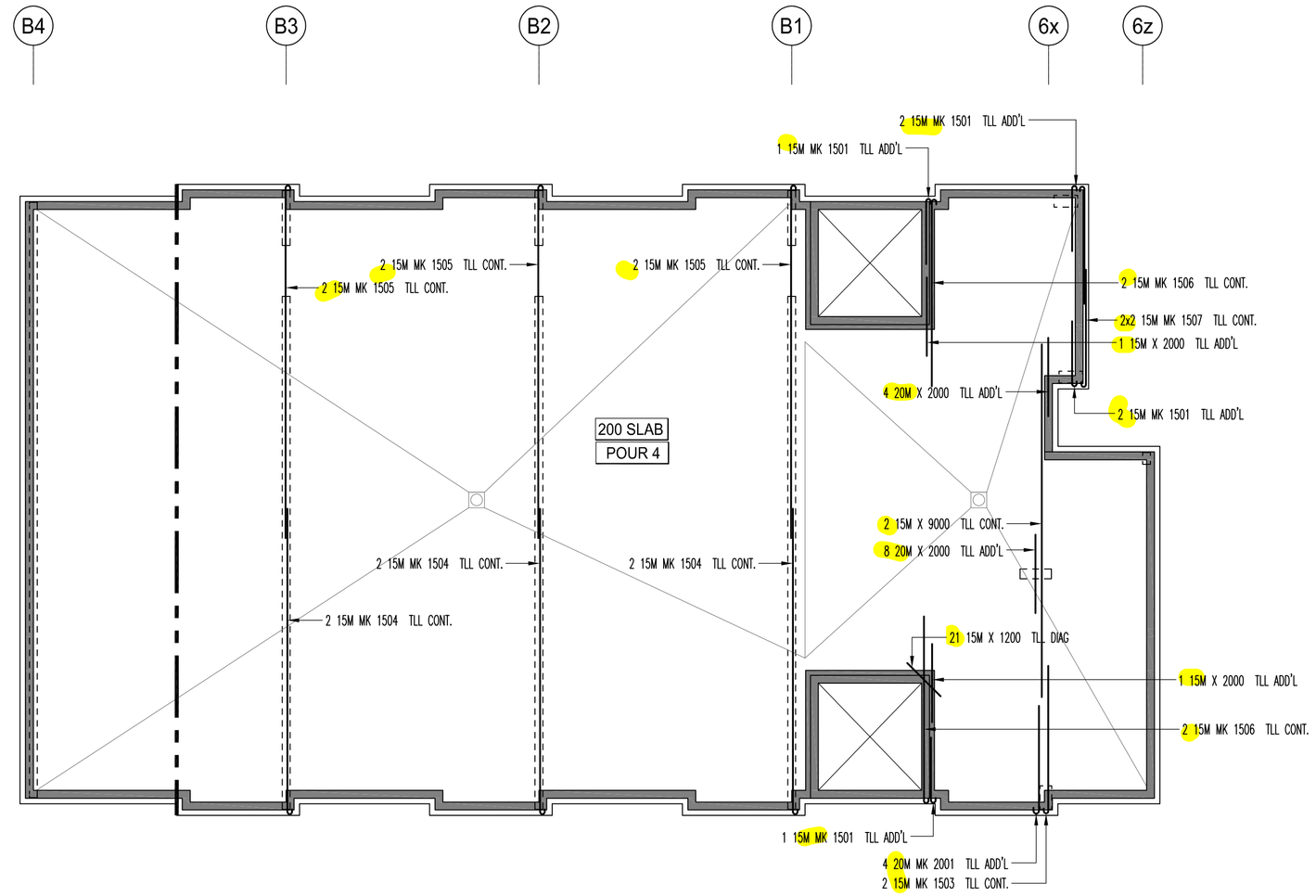

BUILDING-B ROOF FLOOR SLAB TLL

SCALE: 1:100

Release Number: R18.1C RF SL TLL P#4 — BAR LIST

Bar Mark	Qty	Size	Total Length	Type	'A'	'B'	'C'	'D'	'E'	'F'	'G'	'H'	'J'	'K'	'O'	'R'
1501	6	15M	1850	1	180	1670							130			
	2	15M	2000	0		2000										
1503	2	15M	3950	1	180	3770							130			
1506	4	15M	4950	1	180	4770							130			
1507	4	15M	3180	1	180	3000							130			
1504	6	15M	7980	1	180	7800							130			
	2	15M	9000	0		9000										
1505	6	15M	9180	1	180	9000							130			
	21	15M	1200	0		1200										
	12	20M	2000	0		2000										
2001	4	20M	2980	1	220	2760							160			

Release Number: R18.1C RF SL TLL P#5 — BAR LIST

Bar Mark	Qty	Size	Total Length	Type	'A'	'B'	'C'	'D'	'E'	'F'	'G'	'H'	'J'	'K'	'O'	'R'
1504	2	15M	7980	1	180	7800							130			
1505	2	15M	9180	1	180	9000							130			

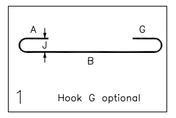

Release Number: R18.1C RF SL TLL P#6 — BAR LIST

Bar Mark	Qty	Size	Total Length	Type	'A'	'B'	'C'	'D'	'E'	'F'	'G'	'H'	'J'	'K'	'O'	'R'
1501	6	15M	1850	1	180	1670							130			
	2	15M	2000	0		2000										
1503	2	15M	3950	1	180	3770							130			
1506	4	15M	4950	1	180	4770							130			
1507	4	15M	3180	1	180	3000							130			
1504	4	15M	7980	1	180	7800							130			
	2	15M	9000	0		9000										
1505	4	15M	9180	1	180	9000							130			
	21	15M	1200	0		1200										
	12	20M	2000	0		2000										
2001	4	20M	2980	1	220	2760							160			

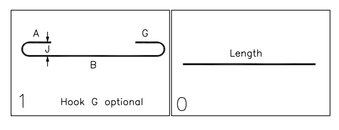

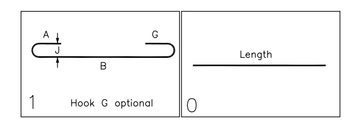

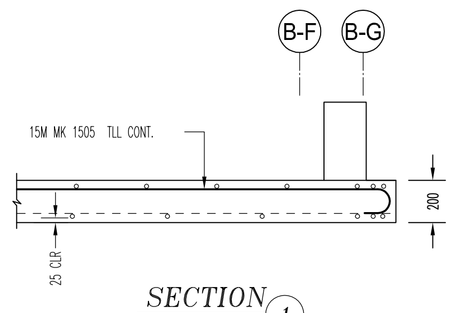

SECTION 1

SCALE: 1:20

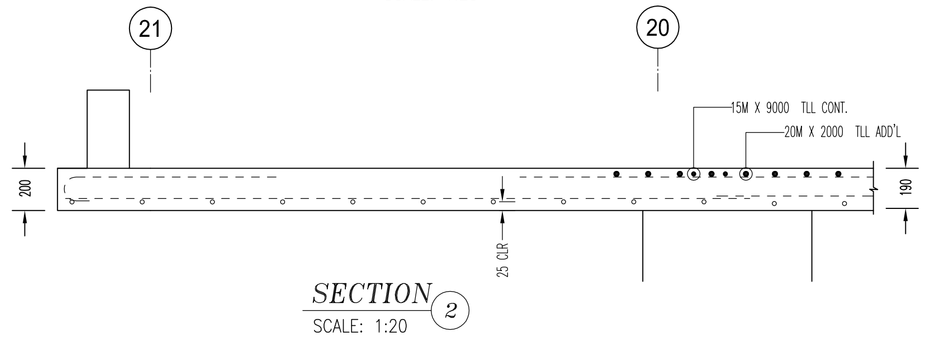

SECTION 2

SCALE: 1:20

NOTES

1. ALL STEEL TO BE GRADE 400W
2. STRENGTH OF CONCRETE
   35MPa – INTERIOR COLUMNS & WALLS
3. CONCRETE COVER:
   TIES -- 40mm
4. COMPRESSION LAP SPLICE

BAR SIZE	STANDARD LAP (mm)
10M	300
15M	440
20M	590
25M	730
30M	880
35M	1030

5. TENSION LAP SPLICE (L.S) & DEVELOPMENT LENGTH (Ld)
   (FOR WALL OR COL & Ld IN CAP OR FTG.)

BAR SIZE	fc=25		fc=30		fc=35	
	L.S	L.d	L.S	L.d	L.S	L.d
10M	490	380	450	350	420	320
15M	740	570	670	520	620	480
20M	980	750	890	690	830	640
25M	1530	1170	1390	1070	1290	990
30M	1830	1410	1670	1290	1550	1190
35M	2130	1640	1950	1500	1800	1390

DRAWING REVIEW

This review of this drawing does not in any way relieve the contractor of responsibility for its accuracy or for compliance with the contract documents.

✓	No comment		See comment
	Amend & Resubmit		Rejected See Remarks

Submission No.
Project No. 19066
By MB
Date 01 Dec 2021

JABLONSKY, AST AND PARTNERS
Consulting Engineers
1129 Leslie Street Don Mills, Ont. M3C 2K5

- ELEVATIONS AND DIMENSIONS SHOWN ARE FOR VERIFICATION PURPOSES ONLY AND ARE NOT TO BE USED FOR CONSTRUCTION
- ALL CONFIRMS/VERIFIES WILL BE ASSUMED CORRECT AND APPROVED AS IS UNLESS COMMENTED ON THE APPROVAL DRWGS

LEGEND

ALT = ALTERNATE
BOT = BOTTOM
BIS = BEND INTO SLAB
CB = CORNER BAR
CJ = CONTROL JOINT
CTS = CUT TO SUIT SITE COND.
DWL = DOWELS
EE = EACH END
EF = EACH FACE
EJ = EXPANSION JOINT
ES = EACH SIDE
EW = EACH WAY
FF = FAR FACE
FS = FORM SAVER
GID = GROUT IN DOWELS
H = HORIZONTAL
IF = INSIDE FACE
LL = LOWER LAYER
MID = MIDDLE
MIN = MINIMUM
NF = NEAR FACE
OC = ON CENTER
OF = OUTSIDE FACE
SC = SAW CUT END
STG = STAGGER
STIR = STIRRUPS
T = TOP
THR/1= THREAD 1END
THR/2= THREAD 2ENDS
UL = UPPER LAYER
u/n = UNLESS NOTED
V = VERTICAL
TT = TEMP. TIES

STRAIGHT BARS LABEL FORMAT: 7 B15M X 3600 (QUANTITY, GRADE, LENGTH)

BENT BARS LABEL FORMAT: 7 B15M B1501 (QUANTITY, GRADE, SIZE, BAR MARK)

GRADES OF STEEL: R = GRADE 400R; E = EPOXY COATED; G = GALVANIZED; S = STAINLESS; W = WELDABLE

ISSUE	REMARKS	DATE	BY
0	FOR APPROVAL	NOV/22/21	JJ

MANSTEEL REBAR
MANSTEEL REBAR
105 Industrial Road, Richmond Hill,
Ontario L4C 2T4 Canada
Phone: 905-737-9797
Fax: 905-737-9704
Email: info@mansteelrebar.com

PROJECT
FORESTSIDE TOWNHOUSES
-BRAMPTON, ON

PART OF STRUCTURE
ROOF SLAB TLL P#4,5,6

CUSTOMER :
ROYAL PINE HOMES

Project no. 2177
SCALE: AS SHOWN

DETAILED BY: JJ
CHECKED BY:
BAR LIST No.

DRAWING No.
R18.1C

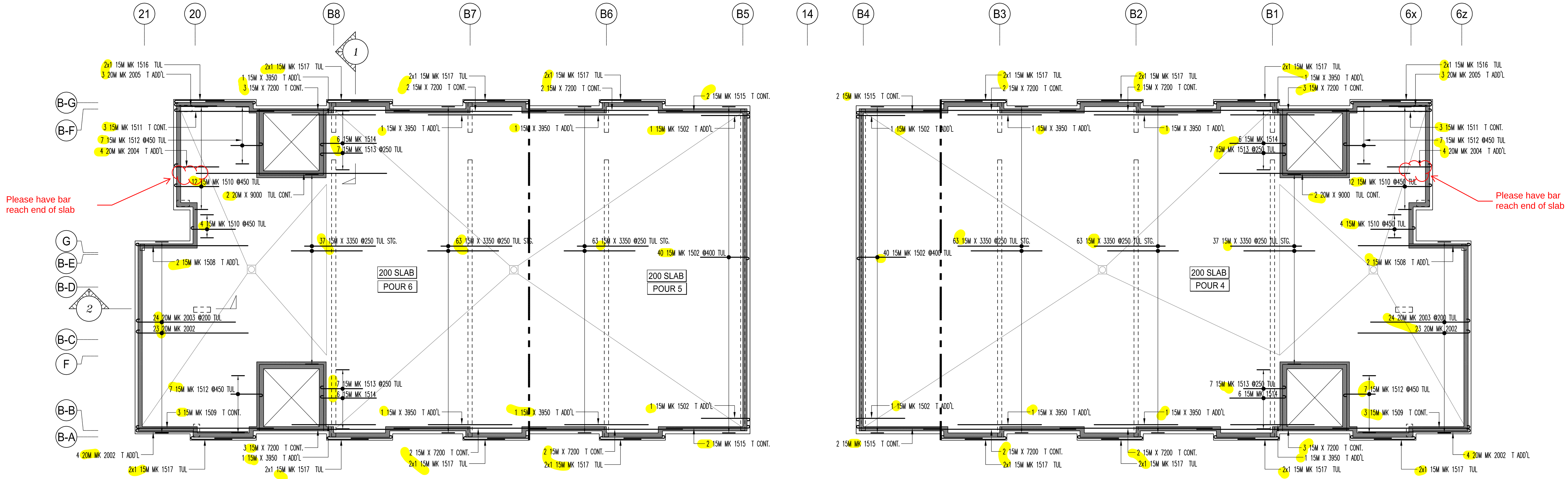

BUILDING-B ROOF FLOOR SLAB TUL

SCALE: 1:100

Release Number: R18.1D RF SL TUL P#4					BAR LIST											
Bar Mark	Qty	Size	Total Length	Type	'A'	'B'	'C'	'D'	'E'	'F'	'G'	'H'	'J'	'K'	'O'	'R'
1516	2	15M	2530	1	180	2350							130			
1508	2	15M	5480	1	180	5300							130			
1511	3	15M	4880	1	180	4700							130			
1509	3	15M	6680	1	180	6500							130			
1512	14	15M	1680	1	180	1500							130			
	6	15M	3950	0		3950										
1517	14	15M	2130	1	180	1950							130			
1513	14	15M	2180	1	180	2000							130			
1514	12	15M	2830	1	180	2650							130			
1510	16	15M	2280	1	180	2100							130			
	14	15M	7200	0		7200										
	163	15M	3350	0		3350										
2005	3	20M	2220	1	220	2000							160			
2004	4	20M	2320	1	220	2100							160			
	2	20M	9000	0		9000										
2003	24	20M	4920	1	220	4700							160			
2002	27	20M	5520	1	220	5300							160			

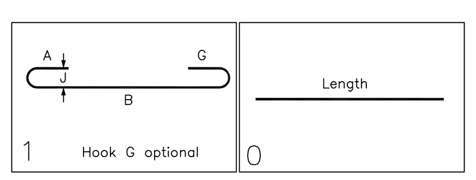

Release Number: R18.1D RF SL TUL P#5					BAR LIST											
Bar Mark	Qty	Size	Total Length	Type	'A'	'B'	'C'	'D'	'E'	'F'	'G'	'H'	'J'	'K'	'O'	'R'
	2	15M	3950	0		3950										
1517	4	15M	2130	1	180	1950							130			
1515	8	15M	4130	1	180	3950							130			
	8	15M	7200	0		7200										
1502	84	15M	2480	1	180	2300							130			
	63	15M	3350	0		3350										

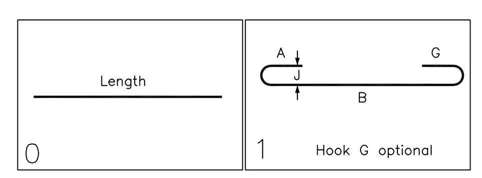

Release Number: R18.1D RF SL TUL P#6					BAR LIST											
Bar Mark	Qty	Size	Total Length	Type	'A'	'B'	'C'	'D'	'E'	'F'	'G'	'H'	'J'	'K'	'O'	'R'
1516	2	15M	2530	1	180	2350							130			
1508	2	15M	5480	1	180	5300							130			
1511	3	15M	4880	1	180	4700							130			
	4	15M	3950	0		3950										
1509	3	15M	6680	1	180	6500							130			
1517	10	15M	2130	1	180	1950							130			
1512	14	15M	1680	1	180	1500							130			
1513	14	15M	2180	1	180	2000							130			
1514	12	15M	2830	1	180	2650							130			
1510	16	15M	2280	1	180	2100							130			
	6	15M	7200	0		7200										
	100	15M	3350	0		3350										
2005	3	20M	2220	1	220	2000							160			
2004	4	20M	2320	1	220	2100							160			
	2	20M	9000	0		9000										
2003	24	20M	4920	1	220	4700							160			
2002	27	20M	5520	1	220	5300							160			

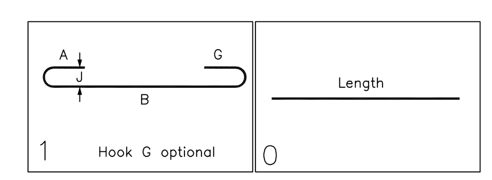

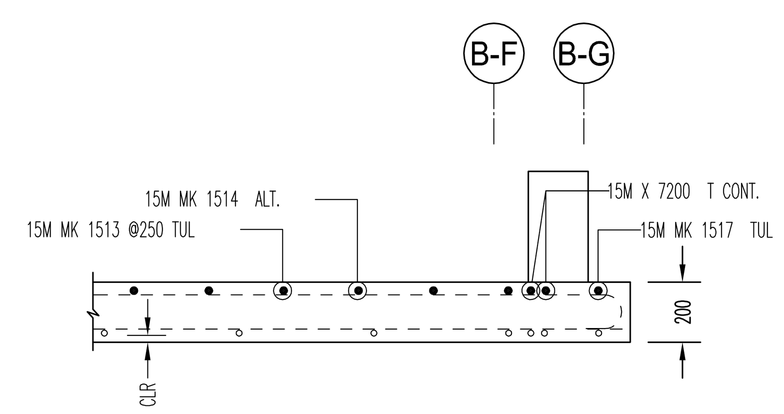

SECTION 1
SCALE: 1:20

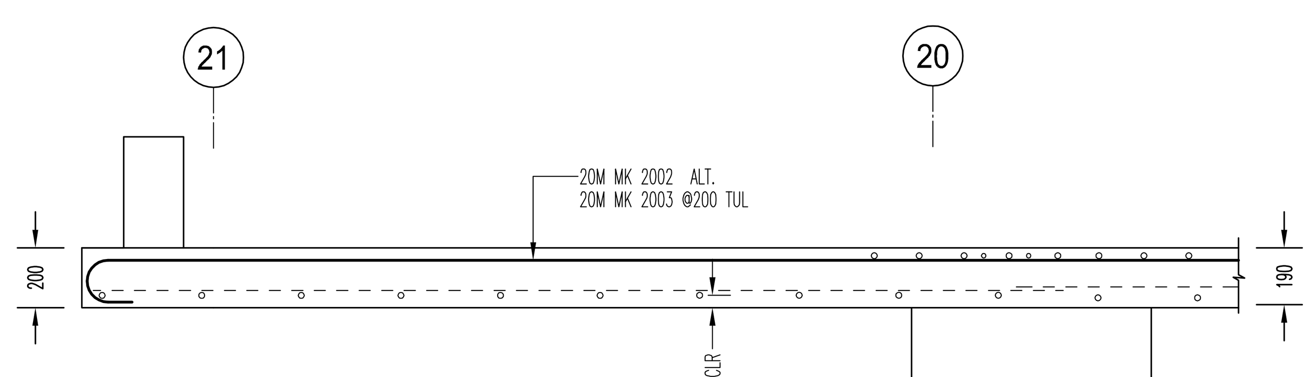

SECTION 2
SCALE: 1:20

NOTES

1. ALL STEEL TO BE GRADE 400W
2. STRENGTH OF CONCRETE
   35MPa – INTERIOR COLUMNS & WALLS
3. CONCRETE COVER:
   TIES -- 40mm

4. COMPRESSION LAP SPLICE

BAR SIZE	STANDARD LAP (mm)
10M	300
15M	440
20M	590
25M	730
30M	880
35M	1030

5. TENSION LAP SPLICE (L.S) & DEVELOPMENT LENGTH (Ld) (FOR WALL OR COL & Ld IN CAP OR FTG.)

BAR SIZE	fc=25		fc=30		fc=35	
	L.S	L.d	L.S	L.d	L.S	L.d
10M	490	380	450	350	420	320
15M	740	570	670	520	620	480
20M	980	750	890	690	830	640
25M	1530	1170	1390	1070	1290	990
30M	1830	1410	1670	1290	1550	1190
35M	2130	1640	1950	1500	1800	1390

DRAWING REVIEW

This review of this drawing does not in any way relieve the contractor of responsibility for its accuracy or for compliance with the contract documents.

	No comment	√	See comment
	Amend & Resubmit		Rejected See Remarks

Submission No.
Project No. 19066
By MB
Date 01 Dec 2021

JABLONSKY, AST AND PARTNERS
Consulting Engineers
1129 Leslie Street Don Mills, Ont. M3C 2K5

* ELEVATIONS AND DIMENSIONS SHOWN ARE FOR VERIFICATION PURPOSES ONLY AND ARE NOT TO BE USED FOR CONSTRUCTION
* ALL CONFIRMS/VERIFIES WILL BE ASSUMED CORRECT AND APPROVED AS IS UNLESS COMMENTED ON THE APPROVAL DRWGS

LEGEND

ALT = ALTERNATE	FF = FAR FACE	OF = OUTSIDE FACE
BOT = BOTTOM	FS = FORM SAVER	SC = SAW CUT END
BIS = BEND INTO SLAB	GID = GROUT IN DOWELS	STG = STAGGER
CB = CORNER BAR	H = HORIZONTAL	STIR = STIRRUPS
CJ = CONTROL JOINT	IF = INSIDE FACE	T = TOP
CTS = CUT TO SUIT SITE COND.	LL = LOWER LAYER	THR/1= THREAD 1END
DWL = DOWELS	MID = MIDDLE	THR/2= THREAD 2ENDS
EE = EACH END	MIN = MINIMUM	UL = UPPER LAYER
EF = EACH FACE	NF = NEAR FACE	u/n = UNLESS NOTED
EJ = EXPANSION JOINT	OC = ON CENTER	V = VERTICAL
ES = EACH SIDE		TT = TEMP. TIES
EW = EACH WAY		

STRAIGHT BARS LABEL FORMAT
7 B15M X 3600 (QUANTITY, GRADE, LENGTH)

BENT BARS LABEL FORMAT
7 B15M B1501 (QUANTITY, GRADE, SIZE, BAR MARK)

GRADES OF STEEL
B = GRADE 400R
C = EPOXY COATED
F = GFRP
G = GALVANIZED
S = STAINLESS
W = WELDABLE

ISSUE	REMARKS	DATE	BY
0	FOR APPROVAL	NOV/22/21	JU

MANSTEEL REBAR

MANSTEEL REBAR
105 Industrial Road, Richmond Hill,
Ontario L4C 2Y4 Canada
Phone: 905-737-9797
Fax: 905-737-9704
Email: info@mansteelrebar.com

PROJECT
FORESTSIDE TOWNHOUSES -BRAMPTON, ON

PART OF STRUCTURE
ROOF SLAB TUL P#4,5,6

CUSTOMER : ROYAL PINE HOMES
Project no. 2177
SCALE: AS SHOWN
DETAILED BY: JU
CHECKED BY:
BAR LIST No.
DRAWING No. R18.1D

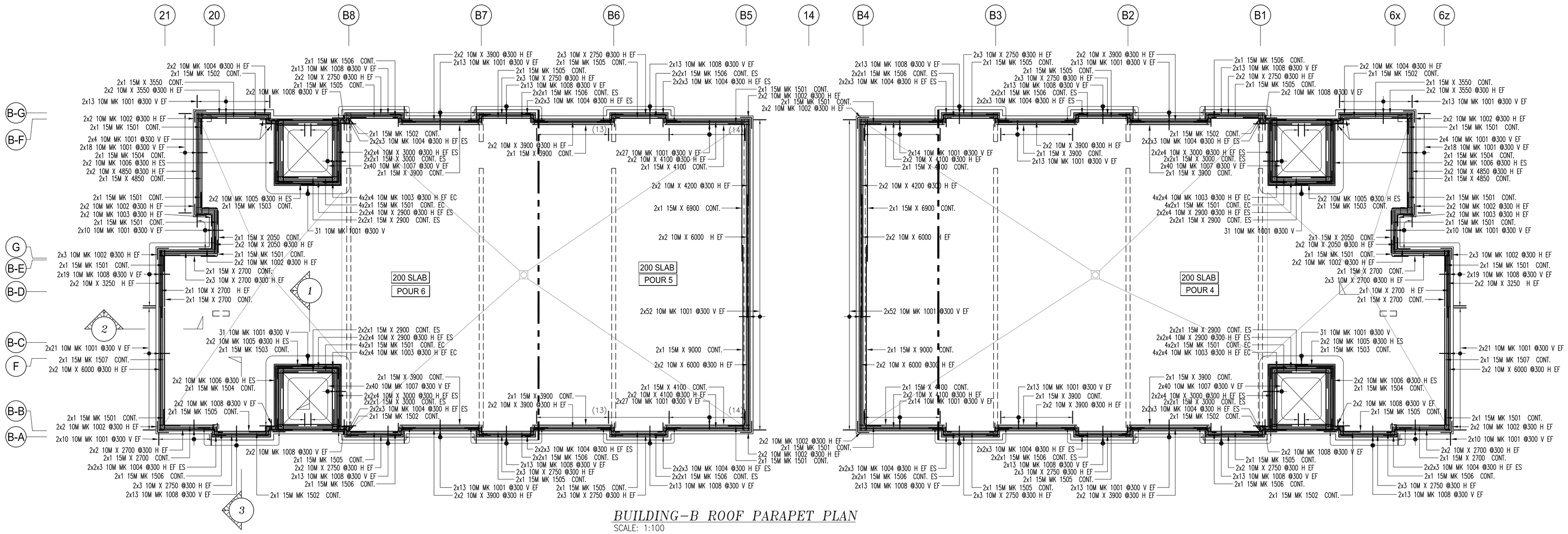

BUILDING-B ROOF PARAPET PLAN

SCALE: 1:100

Release Number: R18.1E ROOF PARAPET P#4 — BAR LIST

Bar Mark	Qty	Size	Total Length	Type	'A'	'B'	'C'	'D'	'E'	'F'	'G'	'H'	'J'	'K'	'O'	'R'
	2	15M	2050			2050										
	4	10M	2050			2050										
	6	15M	2700			2700										
	12	10M	2700			2700										
	2	15M	4850			4850										
	4	10M	4850			4850										
	4	10M	3250			3250										
	4	10M	6000			6000										
	2	15M	3550			3550										
	4	10M	3550			3550										
	38	10M	2750			2750										
	8	15M	3900			3900										
	16	10M	3900			3900										
	8	15M	3000			3000										
	32	10M	3000			3000										
	8	15M	2900			2900										
	32	10M	2900			2900										
1001	318	10M	1050	17		450	600									
1002	22	10M	1100	17		550	550									
1501	28	15M	1600	17		800	800									
1003	68	10M	1300	17		550	750									
1008	232	10M	1370	17		450	920									
1507	2	15M	6210	2	260	5950										
1506	22	15M	710	2	260	450										
1004	88	10M	1400	20		550	300	550								
1505	14	15M	3270	2	260	2750					260					
1502	8	15M	1900	20		800	300	800								
1007	160	10M	1750	17		450	1300									
1504	4	15M	3260	2	260	3000										
1006	8	10M	3200	2	180	3020										
1503	4	15M	2850	17		800	2050									
1005	8	10M	2450	17		550	1900									

Release Number: R18.1E ROOF PARAPET P#5 — BAR LIST

Bar Mark	Qty	Size	Total Length	Type	'A'	'B'	'C'	'D'	'E'	'F'	'G'	'H'	'J'	'K'	'O'	'R'
	16	10M	6000			6000										
	8	15M	4100			4100										
	16	10M	4100			4100										
	4	15M	3900			3900										
	12	10M	2750			2750										
	8	10M	3900			3900										
	4	15M	6900			6900										
	8	10M	4200			4200										
	4	15M	9000			9000										
1001	372	10M	1050	17		450	600									
1002	16	10M	1100	17		550	550									
1501	8	15M	1600	17		800	800									
1004	24	10M	1400	20		550	300	550								
1506	8	15M	710	2	260	450										
1505	4	15M	3270	2	260	2750					260					
1008	52	10M	1370	17		450	920									

Release Number: R18.1E ROOF PARAPET P#6 — BAR LIST

Bar Mark	Qty	Size	Total Length	Type	'A'	'B'	'C'	'D'	'E'	'F'	'G'	'H'	'J'	'K'	'O'	'R'
	8	15M	2900			2900										
	32	10M	2900			2900										
	26	10M	2750			2750										
	4	15M	3900			3900										
	8	10M	3900			3900										
	2	15M	3550			3550										
	4	10M	3550			3550										
	12	10M	2700			2700										
	6	15M	2700			2700										
	4	10M	6000			6000										
	4	10M	3250			3250										
	4	10M	2050			2050										
	2	15M	2050			2050										
	2	15M	4850			4850										
	4	10M	4850			4850										
	8	15M	3000			3000										
	32	10M	3000			3000										
1001	266	10M	1050	17		450	600									
1002	22	10M	1100	17		550	550									
1507	2	15M	6210	2	260	5950										
1007	160	10M	1750	17		450	1300									
1504	4	15M	3260	2	260	3000										
1006	8	10M	3200	2	180	3020										
1503	4	15M	2850	17		800	2050									
1005	8	10M	2450	17		550	1900									
1003	68	10M	1300	17		550	750									
1501	28	15M	1600	17		800	800									
1502	8	15M	1900	20		800	300	800								
1004	64	10M	1400	20		550	300	550								
1008	180	10M	1370	17		450	920									
1506	14	15M	710	2	260	450										
1505	10	15M	3270	2	260	2750					260					

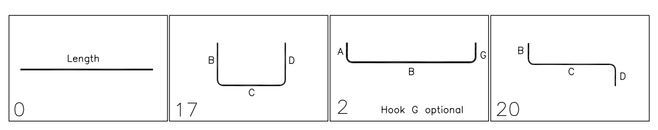

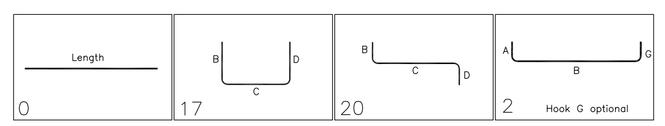

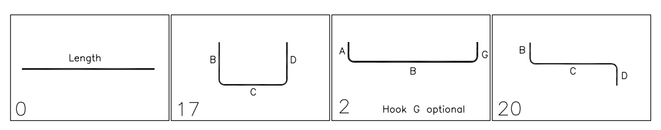

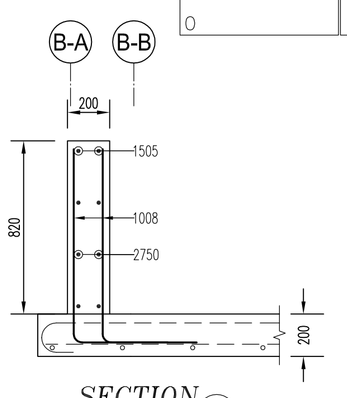

SECTION 3
SCALE: 1:20

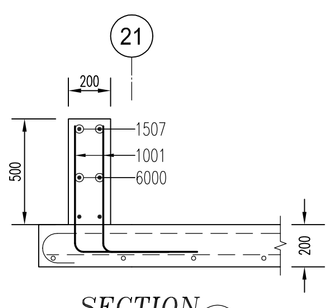

SECTION 2
SCALE: 1:20

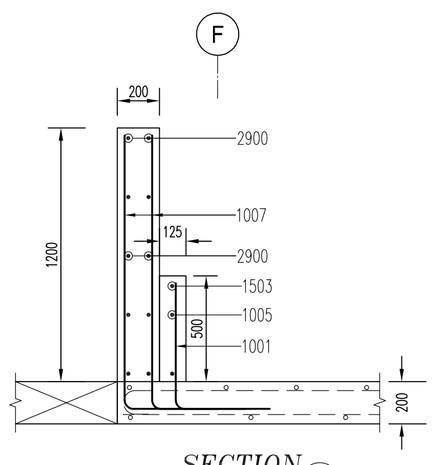

SECTION 1
SCALE: 1:20

DRAWING REVIEW

This review of this drawing does not in any way relieve the contractor of responsibility for its accuracy or for compliance with the contract documents.

✓	No comment	See comment
	Amend & Resubmit	Rejected See Remarks

Submission No.
Project No. 19066
By MB
Date 01 Dec 2021

JABLONSKY, AST AND PARTNERS
Consulting Engineers
1129 Leslie Street Don Mills, Ont. M3C 2K5

NOTES

1. ALL STEEL TO BE GRADE 400W
2. STRENGTH OF CONCRETE
   35MPa – INTERIOR COLUMNS & WALLS
3. CONCRETE COVER:
   TIES -- 40mm
4. COMPRESSION LAP SPLICE

BAR SIZE	STANDARD LAP (mm)
10M	300
15M	440
20M	590
25M	730
30M	880
35M	1030

5. TENSION LAP SPLICE (L.S) & DEVELOPMENT LENGTH (Ld) (FOR WALL OR COL & Ld IN CAP OR FTG.)

BAR SIZE	fc=25		fc=30		fc=35	
	L.S	L.d	L.S	L.d	L.S	L.d
10M	490	380	450	350	420	320
15M	740	570	670	520	620	480
20M	980	750	890	690	830	640
25M	1530	1170	1390	1070	1290	990
30M	1830	1410	1670	1290	1550	1190
35M	2130	1640	1950	1500	1800	1390

- ELEVATIONS AND DIMENSIONS SHOWN ARE FOR VERIFICATION PURPOSES ONLY AND ARE NOT TO BE USED FOR CONSTRUCTION
- ALL CONFIRMS/VERIFIES WILL BE ASSUMED CORRECT AND APPROVED AS IS UNLESS COMMENTED ON THE APPROVAL DRWGS

LEGEND

ALT = ALTERNATE	FF = FAR FACE	OF = OUTSIDE FACE	
BOT = BOTTOM	FS = FORM SAVER	SC = SAW CUT END	
BIS = BEND INTO SLAB	GID = GROUT IN DOWELS	STG = STAGGER	
CB = CORNER BAR	H = HORIZONTAL	STIR = STIRRUPS	
CJ = CONTROL JOINT	IF = INSIDE FACE	T = TOP	
CTS = CUT TO SUIT SITE COND.	LL = LOWER LAYER	THR/1= THREAD 1END	
DWL = DOWELS	MID = MIDDLE	THR/2= THREAD 2ENDS	
EE = EACH END	MIN = MINIMUM	UL = UPPER LAYER	
EF = EACH FACE	NF = NEAR FACE	u/n = UNLESS NOTED	
EJ = EXPANSION JOINT	OC = ON CENTER	V = VERTICAL	
ES = EACH SIDE		TT = TEMP. TIES	
EW = EACH WAY			

STRAIGHT BARS LABEL FORMAT: 7 B15M X 3600 (QUANTITY, GRADE, LENGTH)

BENT BARS LABEL FORMAT: 7 B15M B1501 (QUANTITY, GRADE, SIZE, BAR MARK)

GRADES OF STEEL: R = GRADE 400R; C = EPOXY COATED; G = GALVANIZED; S = STAINLESS; W = WELDABLE

ISSUE	REMARKS	DATE	BY
0	FOR APPROVAL	NOV/22/21	JJ

MANSTEEL REBAR

MANSTEEL REBAR
105 Industrial Road, Richmond Hill,
Ontario L4C 2T4 Canada
Phone: 905-737-9797
Fax: 905-737-9704
Email: info@mansteelrebar.com

PROJECT
FORESTSIDE TOWNHOUSES
-BRAMPTON, ON

PART OF STRUCTURE
ROOF PARAPET WALLS P#4,5,6

CUSTOMER : ROYAL PINE HOMES

Project no. 2177

SCALE: AS SHOWN

DETAILED BY: JJ

CHECKED BY:

BAR LIST No.

DRAWING No. R18.1E