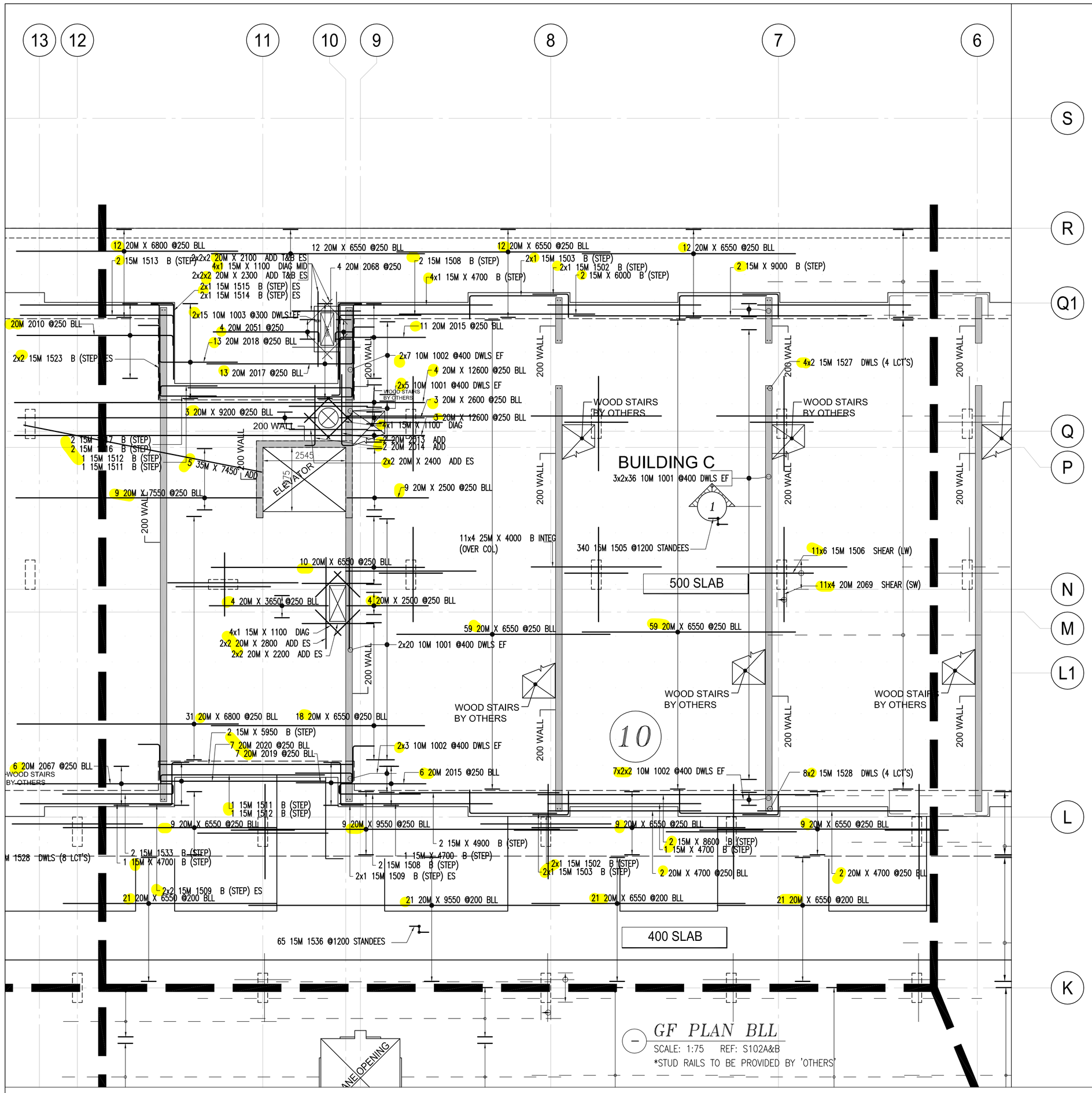

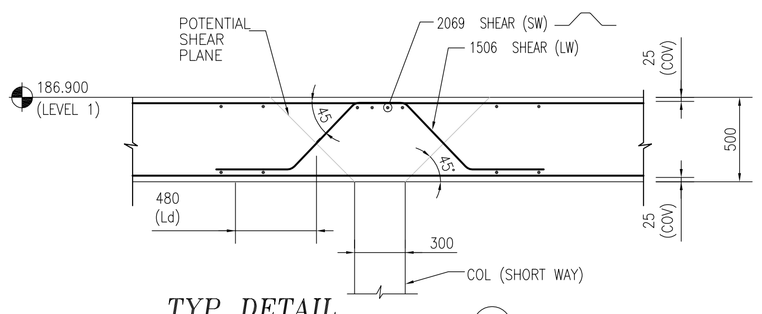

TYP DETAIL OF PICK-UP SLAB AT COL.
SCALE: 1:25

DRAWING REVIEW

This review of this drawing does not in any way relieve the contractor of responsibility for its accuracy or for compliance with the contract documents.

✓	No comment	See comment
	Amend & Resubmit	Rejected See Remarks

Submission No.
Project No. 19066
By MB
Date 14 Sep 2021

JABLONSKY, AST AND PARTNERS
Consulting Engineers
1129 Leslie Street Don Mills, Ont. M3C 2K5

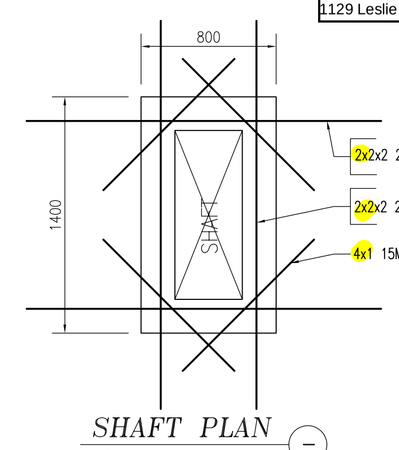

SHAFT PLAN (ADD BARS)
SCALE: 1:25

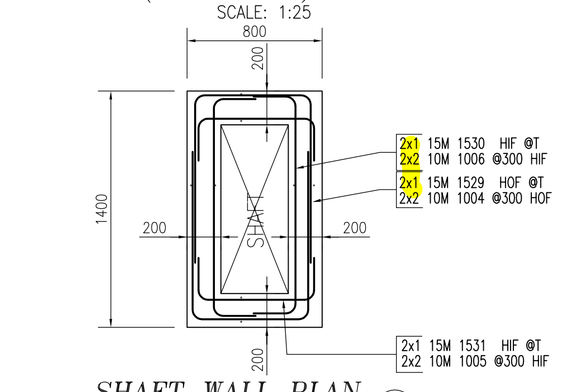

SHAFT WALL PLAN
SCALE: 1:25

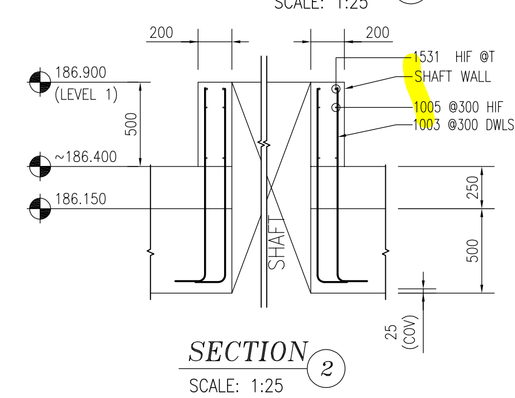

SECTION 2
SCALE: 1:25

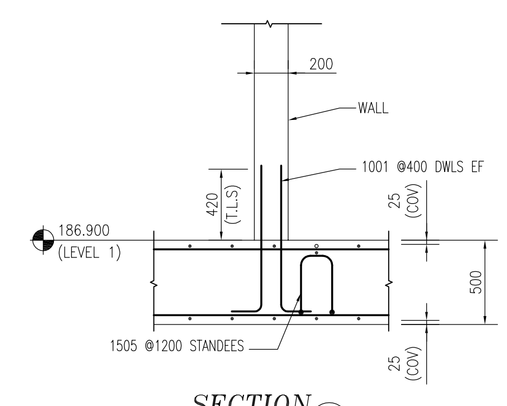

SECTION 1
SCALE: 1:25

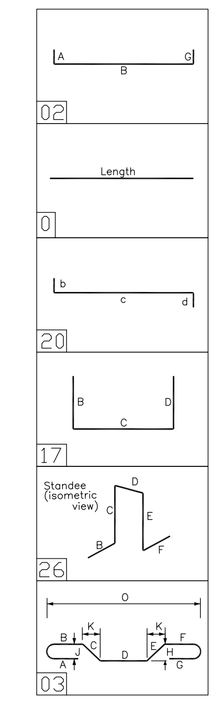

Release Code: R6.9A GF BLL P#10 BENDING DETAILS.

Bar Mark	Qty	Size	Total length	Type	'A'	'B'	'C'	'D'	'E'	'F'	'G'	'H'	'J'	'K'	'O'	'R'
	272	20M	6550			6550										
	38	20M	9550			9550										
	13	20M	2500			2500										
	4	20M	3650			3650										
	43	20M	6800			6800										
	7	20M	12600			12600										
	9	20M	7550			7550										
	3	20M	2600			2600										
	3	20M	9200			9200										
	4	20M	2200			2200										
	4	20M	2800			2800										
	12	15M	1100			1100										
	4	20M	2400			2400										
	4	20M	4700			4700										
	7	15M	4700			4700										
	2	15M	5950			5950										
	8	20M	2100			2100										
	8	20M	2300			2300										
	2	15M	4900			4900										
	2	15M	8600			8600										
	44	25M	4000			4000										
	2	15M	6000			6000										
	2	15M	9000			9000										
	5	35M	7450			7450										
1505	340	15M	1500	26		300	350	200	350	300						
1001	266	10M	1050	2	180	870										
1002	48	10M	1800	2	180	1620										
1003	30	10M	1330	2	180	1150										
1536	65	15M	1300	26		300	250	200	250	300						
1516	2	15M	5740	17		700	5040									
1523	4	15M	3960	2	260	2900										
1528	32	15M	2000	2	260	1840										
1509	6	15M	2300	20		700	1320	280								
2015	17	20M	2960	2	310	2650										
2067	6	20M	5170	2	310	4860										
2017	13	20M	6310	20		660	1150	4500								
2013	2	20M	2500	2	310	2190										
2014	2	20M	2170	2	310	1860										
2018	13	20M	4210	20		660	1150	2400								
1508	4	15M	2760	2	260	2500										
1533	2	15M	3660	2	260	3400										
2010	19	20M	5110	2	310	4800										
1502	4	15M	1820	17		1100	720									
2068	4	20M	860	2	310	550										
1511	2	15M	5300	2	260	5040										
1512	2	15M	2000	2	260	1740										
1514	2	15M	1600	2	260	1340										
1503	4	15M	3400	17		2680	720									
2019	7	20M	3560	20		660	1150	1750								
1513	2	15M	4960	2	260	4700										
2020	7	20M	6910	20		660	1150	5100								
2051	4	20M	3570	2	310	3260										
1527	8	15M	1300	2	260	1040										
2069	44	20M	3240	3		600	520	1000	520	600		390		350	2900	
1506	66	15M	2300	3		450	550	300	550	450		410		370	1940	
1515	2	15M	3040	17		700	2340									
1517	2	15M	2440	17		700	1740									

Release Code: R6.9A SHAFT P#10 BENDING DETAILS.

Bar Mark	Qty	Size	Total length	Type	'A'	'B'	'C'	'D'	'E'	'F'	'G'	'H'	'J'	'K'	'O'	'R'
	4	15M	1100			1100										
	8	20M	2100			2100										
	8	20M	2300			2300										
1005	4	10M	1060	2	180	700					180					
1004	4	10M	2500	17		900	700	900								
1006	4	10M	1660	2	180	1300					180					
1531	2	15M	1220	2	260	700					260					
1529	2	15M	2700	17		1000	700	1000								
1530	2	15M	1820	2	260	1300					260					

* ELEVATIONS AND DIMENSIONS SHOWN ARE FOR VERIFICATION PURPOSES ONLY AND ARE NOT TO BE USED FOR CONSTRUCTION
* ALL CONFIRMS/VERIFIES WILL BE ASSUMED CORRECT AND APPROVED AS IS UNLESS COMMENTED ON THE APPROVAL DRWGS

LEGEND

ALT	= ALTERNATE	FF	= FAR FACE	OF	= OUTSIDE FACE
BOT	= BOTTOM	FS	= FORM SAVER	SC	= SAW CUT END
BIS	= BEND INTO SLAB	GO	= GROUT IN DOWELS	STG	= STAGGER
CB	= CORNER BAR	H	= HORIZONTAL	STIR	= STIRRUPS
CJ	= CONTROL JOINT	IF	= INSIDE FACE	T	= TOP
CTS	= CUT TO SUIT SITE COND.	LL	= LOWER LAYER	THR/1=	THREAD 1END
DWL	= DOWELS	MID	= MIDDLE	THR/2=	THREAD 2ENDS
EE	= EACH END	MIN	= MINIMUM	UL	= UPPER LAYER
EF	= EACH FACE	NF	= NEAR FACE	u/n	= UNLESS NOTED
EJ	= EXPANSION JOINT	OC	= ON CENTER	V	= VERTICAL
ES	= EACH SIDE			TT	= TEMP. TIES
EW	= EACH WAY				

STRAIGHT BARS LABEL FORMAT: 7 B15M X 3600 (QUANTITY, GRADE, LENGTH)

BENT BARS LABEL FORMAT: 7 B15M B1501 (QUANTITY, GRADE, SIZE, BAR MARK)

GRADES OF STEEL: B = GRADE 400W; E = EPOXY COATED; G = GALVANIZED; S = STAINLESS; W = WELDABLE

ISSUE	REMARKS	DATE	BY
0	FOR APPROVAL	SEP/10/21	JU

MANSTEEL REBAR
MANSTEEL REBAR
105 Industrial Road, Richmond Hill,
Ontario L4C 2Y4 Canada
Phone: 905-737-9797
Fax: 905-737-9704
Email: info@mansteelrebar.com

PROJECT
FORESTSIDE TOWNHOUSES
-BRAMPTON, ON

PART OF STRUCTURE
G.F SLAB BLL P#10

CUSTOMER :
ROYAL PINE HOMES

Project no. 2177
SCALE: AS SHOWN
DRAWING No. R6.9A 0

DETAILED BY: JU
CHECKED BY:
BAR LIST No.

NOTES

1. ALL STEEL TO BE GRADE 400W
2. STRENGTH OF CONCRETE
   35MPa – SLAB
   35MPa – INTERIOR COLUMNS & WALLS
3. CONCRETE COVER:
   SLAB T -- 25mm
   SLAB B -- 25mm

4. COMPRESSION LAP SPLICE

BAR SIZE	STANDARD LAP (mm)
10M	300
15M	440
20M	590
25M	730
30M	880
35M	1030

5. TENSION LAP SPLICE (L.S) & DEVELOPMENT LENGTH (Ld)

BAR SIZE	fc=25		fc=30		fc=35	
	L.S	L.d	L.S	L.d	L.S	L.d
10M	490	380	450	350	420	320
15M	740	570	670	520	620	480
20M	980	750	890	690	830	640
25M	1530	1170	1390	1070	1290	990
30M	1830	1410	1670	1290	1550	1190
35M	2130	1640	1950	1500	1800	1390

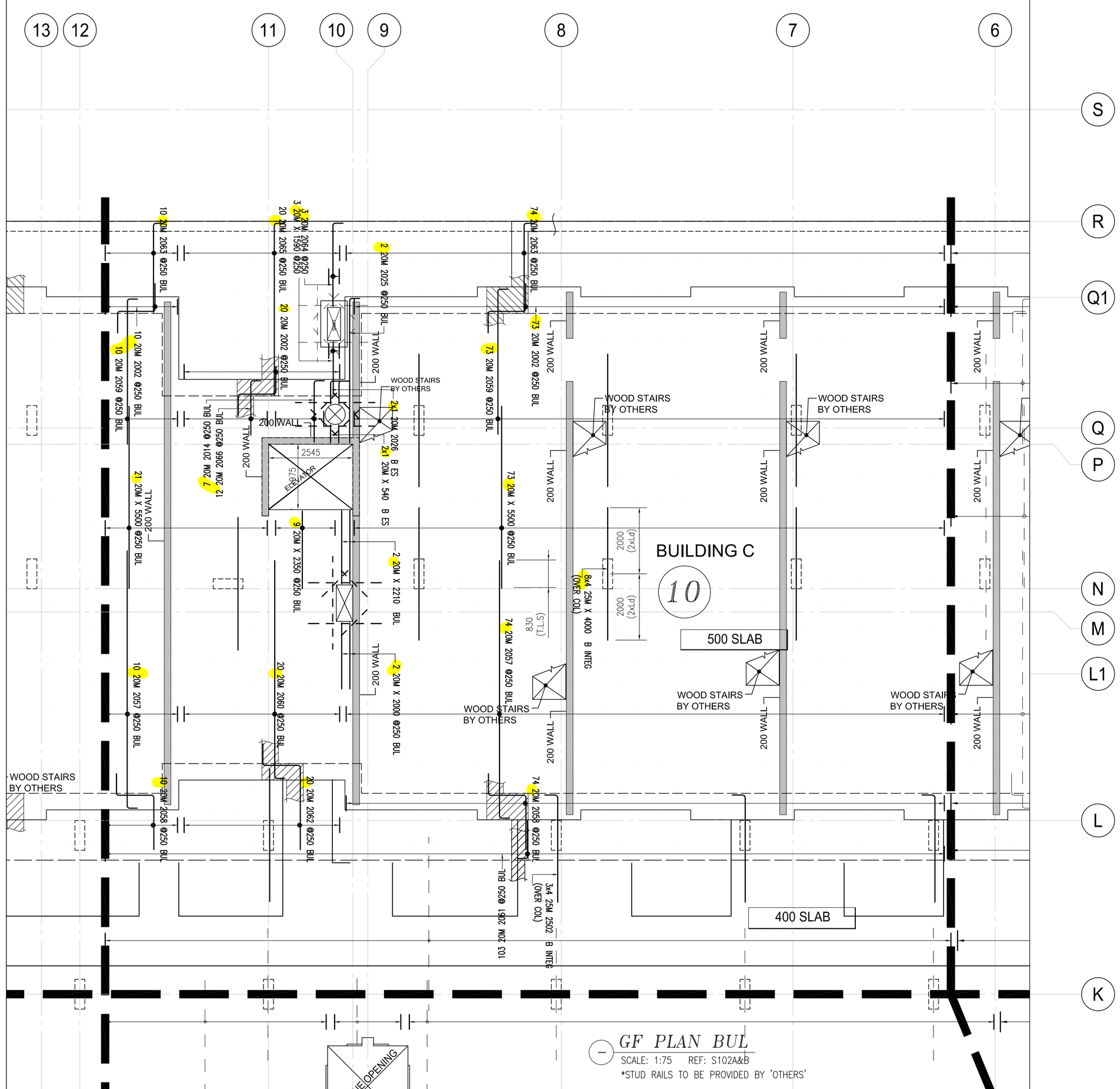

GF PLAN BUL

SCALE: 1:75 REF: S102A&B

*STUD RAILS TO BE PROVIDED BY 'OTHERS'

Release Code: R6.9B GF BUL P#10 BENDING DETAILS.

Bar Mark	Qty	Size	Total length	Type	'A'	'B'	'C'	'D'	'E'	'F'	'G'	'H'	'J'	'K'	'O'	'R'
	2	20M	2800			2800										
	2	20M	2210			2210										
	32	25M	4000			4000										
	94	20M	5500			5500										
	9	20M	2350			2350										
	3	20M	1590			1590										
	2	20M	540			540										
2002	103	20M	2660	20		660	1150	850								
2058	84	20M	3460	20		660	1150	1650								
2057	84	20M	8100	2	310	7790										
2059	83	20M	4700	2	310	4390										
2061	103	20M	1450	2	310	1140										
2063	84	20M	3010	2	310	2700										
2502	12	25M	3650	2	400	3250										
2060	20	20M	6900	2	310	6590										
2065	20	20M	5510	2	310	5200										
2066	12	20M	1960	2	310	1650										
2062	20	20M	4360	20		660	1150	2550								
2014	7	20M	2170	2	310	1860										
2064	3	20M	2830	2	310	2520										
2025	2	20M	4670	2	310	4360										
2026	2	20M	1010	2	310	700										

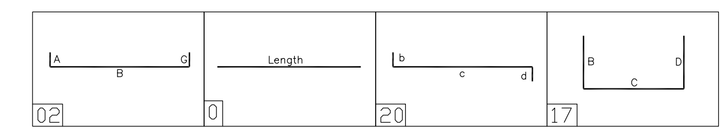

DRAWING REVIEW

This review of this drawing does not in any way relieve the contractor of responsibility for its accuracy or for compliance with the contract documents.

✓ No comment	See comment
Amend & Resubmit	Rejected See Remarks

Submission No.
Project No. 19066
By MB
Date 14 Sep 2021

JABLONSKY, AST AND PARTNERS
Consulting Engineers
1129 Leslie Street Don Mills, Ont. M3C 2K5

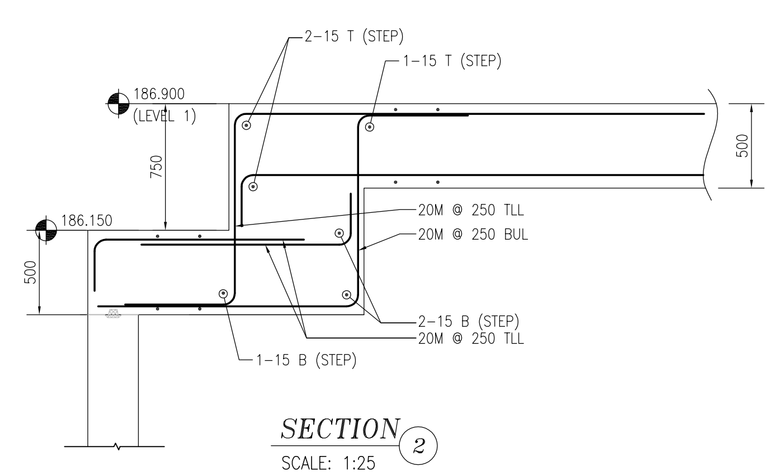

SECTION 2

SCALE: 1:25

* ELEVATIONS AND DIMENSIONS SHOWN ARE FOR VERIFICATION PURPOSES ONLY AND ARE NOT TO BE USED FOR CONSTRUCTION
* ALL CONFIRMS/VERIFIES WILL BE ASSUMED CORRECT AND APPROVED AS IS UNLESS COMMENTED ON THE APPROVAL DRWGS

LEGEND

ALT	= ALTERNATE	FF	= FAR FACE	OF	= OUTSIDE FACE
BOT	= BOTTOM	FS	= FORM SAVER	SC	= SAW CUT END
BIS	= BEND INTO SLAB	GID	= GROUT IN DOWELS	STG	= STAGGER
CB	= CORNER BAR	H	= HORIZONTAL	STIR	= STIRRUPS
CJ	= CONTROL JOINT	IF	= INSIDE FACE	T	= TOP
CTS	= CUT TO SUIT SITE COND.	LL	= LOWER LAYER	THR/1=	THREAD 1END
DWL	= DOWELS	MID	= MIDDLE	THR/2=	THREAD 2ENDS
EE	= EACH END	MIN	= MINIMUM	UL	= UPPER LAYER
EF	= EACH FACE	NF	= NEAR FACE	u/n	= UNLESS NOTED
EJ	= EXPANSION JOINT	OC	= ON CENTER	V	= VERTICAL
ES	= EACH SIDE			TT	= TEMP. TIES
EW	= EACH WAY				

STRAIGHT BARS LABEL FORMAT: 7 B15M X 3600 (QUANTITY, GRADE, LENGTH)

BENT BARS LABEL FORMAT: 7 B15M B1501 (QUANTITY, GRADE, SIZE, BAR MARK)

GRADES OF STEEL

B =	GRADE 400R
C =	EPOXY COATED
G =	300W
Z =	GALVANIZED
S =	STAINLESS
W =	WELDABLE

ISSUE	REMARKS	DATE	BY
0	FOR APPROVAL	SEP/10/21	JJ

MANSTEEL REBAR

MANSTEEL REBAR
105 Industrial Road, Richmond Hill,
Ontario L4C 2Y4 Canada
Phone: 905-737-9797
Fax: 905-737-9704
Email: info@mansteelrebar.com

PROJECT
FORESTSIDE TOWNHOUSES
-BRAMPTON, ON

PART OF STRUCTURE
G.F SLAB BUL P#10

CUSTOMER :
ROYAL PINE HOMES

Project no. 2177

SCALE: AS SHOWN

DRAWING No.
R6.9B 0

DETAILED BY: JJ

CHECKED BY:

BAR LIST No.

NOTES

1. ALL STEEL TO BE GRADE 400W
2. STRENGTH OF CONCRETE
   35MPa – SLAB
   35MPa – INTERIOR COLUMNS & WALLS
3. CONCRETE COVER:
   SLAB T -- 25mm
   SLAB B -- 25mm
4. COMPRESSION LAP SPLICE

BAR SIZE	STANDARD LAP (mm)
10M	300
15M	440
20M	590
25M	730
30M	880
35M	1030

5. TENSION LAP SPLICE (L.S) & DEVELOPMENT LENGTH (Ld)

BAR SIZE	fc=25		fc=30		fc=35	
	L.S	L.d	L.S	L.d	L.S	L.d
10M	490	380	450	350	420	320
15M	740	570	670	520	620	480
20M	980	750	890	690	830	640
25M	1530	1170	1390	1070	1290	990
30M	1830	1410	1670	1290	1550	1190
35M	2130	1640	1950	1500	1800	1390

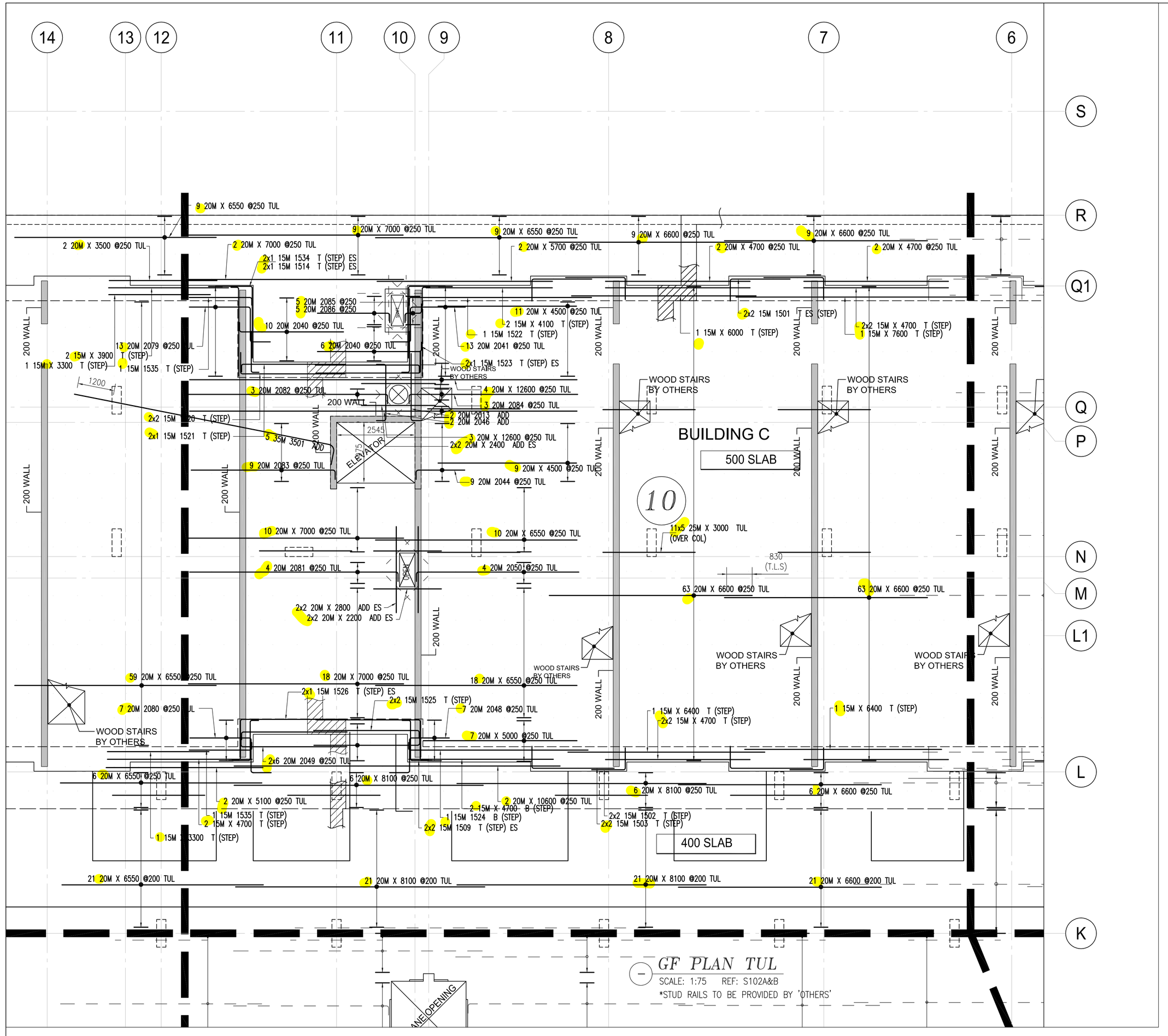

Release Code: R6.9C GF TUL P#10 BENDING DETAILS.

Bar Mark	Qty	Size	Total length	Type	'A'	'B'	'C'	'D'	'E'	'F'	'G'	'H'	'J'	'K'	'O'	'R'
	54	20M	8100			8100										
	132	20M	6550			6550										
	39	20M	7000			7000										
	20	20M	4500			4500										
	7	20M	12600			12600										
	2	20M	5700			5700										
	2	20M	3500			3500										
	2	15M	3900			3900										
	2	15M	4100			4100										
	4	20M	2200			2200										
	4	20M	2800			2800										
	4	20M	2400			2400										
	2	15M	3300			3300										
	12	15M	4700			4700										
	2	20M	10600			10600										
	2	20M	5100			5100										
	55	25M	3000			3000										
	4	20M	4700			4700										
	1	15M	6000			6000										
	1	15M	7600			7600										
	7	20M	5000			5000										
	2	15M	6400			6400										
	171	20M	6600			6600										
2013	2	20M	2500	2	310	2190										
2046	2	20M	2470	2	310	1850					310					
1524	1	15M	6100	2	260	5840										
1535	2	15M	2300	2	260	2040										
2048	7	20M	3110	20		660	1150	1300								
1502	4	15M	1820	17		1100	720									
1503	4	15M	3400	17		2680	720									
2049	12	20M	3760	2	310	3450										
2084	3	20M	5800	2	310	5490										
1509	4	15M	2300	20		700	1320	280								
1526	2	15M	5000	20		3400	1320	280								
1525	4	15M	3700	2	260	3440										
2082	3	20M	6800	2	310	6490										
2086	5	20M	2670	2	310	2360										
2085	5	20M	1170	20		310	550	310								
2040	16	20M	3700	2	310	3390										
2044	9	20M	1900	2	310	1590										
3501	5	35M	9290	2	640	8650										
2081	4	20M	7100	2	310	6790										
2080	7	20M	3810	20		660	1150	2000								
1514	2	15M	1600	2	260	1340										
1521	2	15M	3650	2	260	3390										
1534	2	15M	3540	17		1200	2340									
1520	4	15M	4090	17		700	3390									
2041	13	20M	3600	20		660	1150	1790								
1522	1	15M	6200	2	260	5940										
1523	2	15M	3160	2	260	2900										
1501	4	15M	2670	17		1950	720									
2050	4	20M	5600	2	310	5290										
2083	9	20M	5000	2	310	4690										
2079	13	20M	3800	20		660	1150	1990								

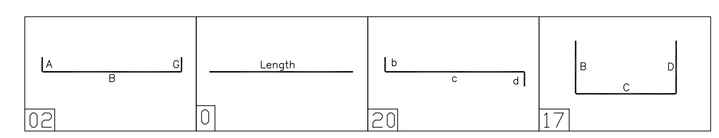

* ELEVATIONS AND DIMENSIONS SHOWN ARE FOR VERIFICATION PURPOSES ONLY AND ARE NOT TO BE USED FOR CONSTRUCTION
* ALL CONFIRMS/VERIFIES WILL BE ASSUMED CORRECT AND APPROVED AS IS UNLESS COMMENTED ON THE APPROVAL DRWGS

LEGEND

ALT	= ALTERNATE	FF	= FAR FACE	OF	= OUTSIDE FACE
BOT	= BOTTOM	FS	= FORM SAVER	SC	= SAW CUT END
BTS	= BEND INTO SLAB	GO	= GROUT IN DOWELS	STG	= STAGGER
CB	= CORNER BAR	H	= HORIZONTAL	STIR	= STIRRUPS
CJ	= CONTROL JOINT	IF	= INSIDE FACE	T	= TOP
CTS	= CUT TO SUIT SITE COND.	LL	= LOWER LAYER	THR/1=	THREAD 1END
DWL	= DOWELS	MID	= MIDDLE	THR/2=	THREAD 2ENDS
EE	= EACH END	MIN	= MINIMUM	UL	= UPPER LAYER
EF	= EACH FACE	NF	= NEAR FACE	u/n	= UNLESS NOTED
EJ	= EXPANSION JOINT	OC	= ON CENTER	V	= VERTICAL
ES	= EACH SIDE			TT	= TEMP. TIES
EW	= EACH WAY				

STRAIGHT BARS LABEL FORMAT: 7 B15M X 3600 (QUANTITY, GRADE, LENGTH)

BENT BARS LABEL FORMAT: 7 B15M B1501 (QUANTITY, GRADE, SIZE, BAR MARK)

GRADES OF STEEL: B = GRADE 400W; E = EPOXY COATED; G = GRADE 300; S = GALVANIZED; SS = STAINLESS; W = WELDABLE

DRAWING REVIEW

This review of this drawing does not in any way relieve the contractor of responsibility for its accuracy or for compliance with the contract documents.

✓	No comment		See comment
	Amend & Resubmit		Rejected See Remarks

Submission No.
Project No. 19066
By MB
Date 14 Sep 2021

JABLONSKY, AST AND PARTNERS
Consulting Engineers
1129 Leslie Street Don Mills, Ont. M3C 2K5

ISSUE	REMARKS	DATE	BY
0	FOR APPROVAL	SEP/10/21	JU

MANSTEEL REBAR
MANSTEEL REBAR
105 Industrial Road, Richmond Hill,
Ontario L4C 2Y4 Canada
Phone: 905-737-9797
Fax: 905-737-9704
Email: info@mansteelrebar.com

PROJECT
FORESTSIDE TOWNHOUSES
-BRAMPTON, ON

PART OF STRUCTURE
G.F SLAB TUL P#10

CUSTOMER : ROYAL PINE HOMES

Project no. 2177

SCALE: AS SHOWN

DRAWING No. R6.9C 0

DETAILED BY: JU

CHECKED BY:

BAR LIST No.

NOTES

1. ALL STEEL TO BE GRADE 400W
2. STRENGTH OF CONCRETE
   35MPa – SLAB
   35MPa – INTERIOR COLUMNS & WALLS
3. CONCRETE COVER:
   SLAB T -- 25mm
   SLAB B -- 25mm
4. COMPRESSION LAP SPLICE

BAR SIZE	STANDARD LAP (mm)
10M	300
15M	440
20M	590
25M	730
30M	880
35M	1030

5. TENSION LAP SPLICE (L.S) & DEVELOPMENT LENGTH (Ld)

BAR SIZE	fc=25		fc=30		fc=35	
	L.S	L.d	L.S	L.d	L.S	L.d
10M	490	380	450	350	420	320
15M	740	570	670	520	620	480
20M	980	750	890	690	830	640
25M	1530	1170	1390	1070	1290	990
30M	1830	1410	1670	1290	1550	1190
35M	2130	1640	1950	1500	1800	1390

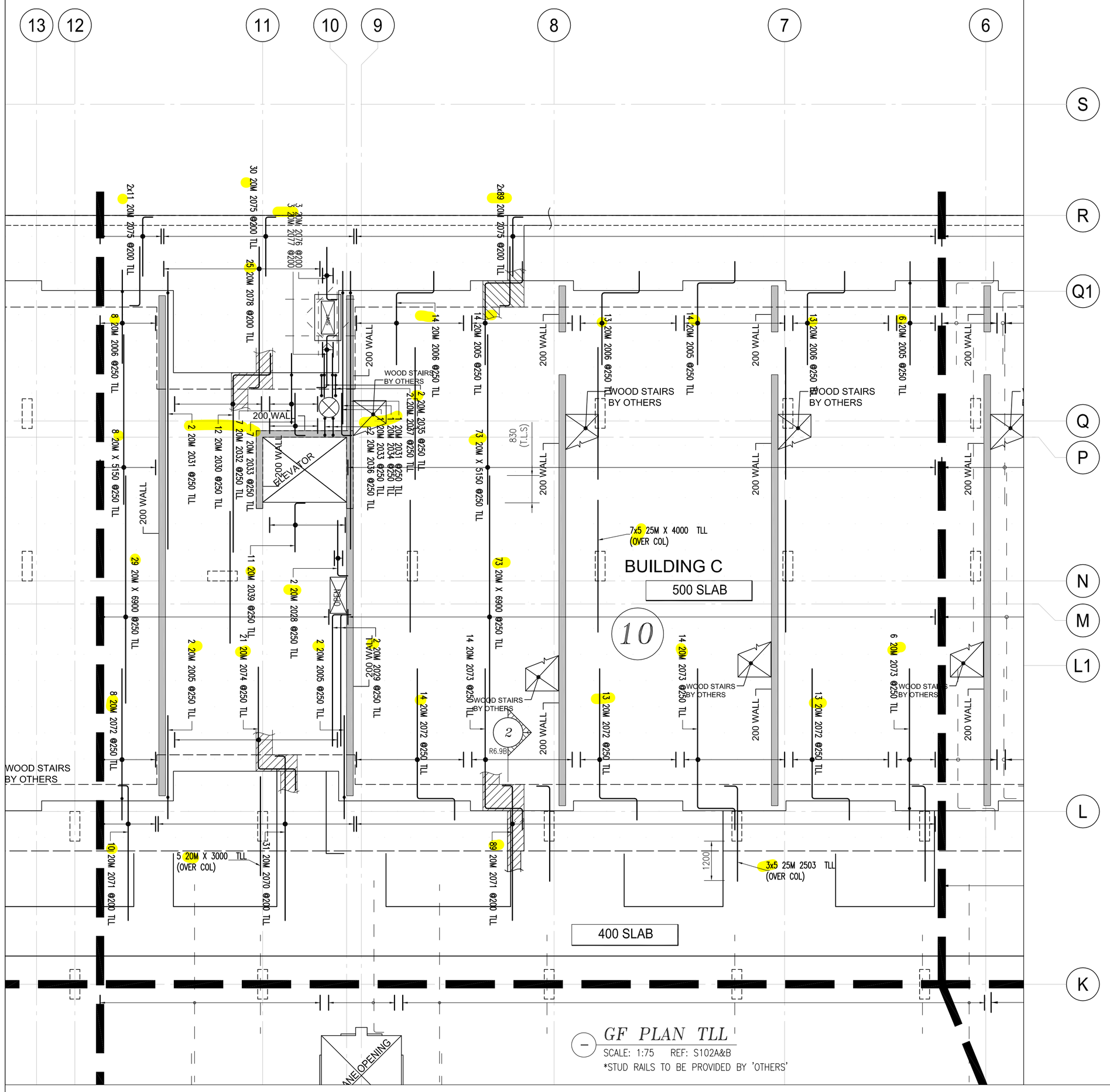

GF PLAN TLL

SCALE: 1:75 REF: S102A&B

*STUD RAILS TO BE PROVIDED BY 'OTHERS'

Release Code: R6.9D GF TLL P#10 BENDING DETAILS.															
Bar Mark	Qty	Size	Total	length	Type	'A'	'B'	'C'	'D'	'E'	'F'	'G'	'H'	'J'	'K'	'O'	'R'
	35	25M	4000				4000										
	5	20M	3000				3000										
	102	20M	6900				6900										
	81	20M	5150				5150										
2006	48	20M	4000	20			2190	1150	660								
2005	38	20M	4300	20			2490	1150	660								
2075	230	20M	2110	2		310	1800										
2036	2	20M	1150	2		310	530					310					
2503	15	25M	3300	2		400	2900										
2037	2	20M	1260	2		310	640					310					
2073	34	20M	6060	20			4250	1150	660								
2072	48	20M	5760	20			3950	1150	660								
2071	99	20M	4410	2		310	4100										
2074	21	20M	4910	20			3100	1150	660								
2070	31	20M	5310	2		310	5000										
2030	12	20M	7200	20			5390	1150	660								
2032	7	20M	3300	20			1490	1150	660								
2033	8	20M	1600	2		310	1290										
2078	25	20M	4600	2		310	4290										
2039	11	20M	1800	2		310	1490										
2028	2	20M	2000	2		310	1690										
2077	3	20M	2220	20			310	1600	310								
2076	3	20M	1910	2		310	1600										
2029	2	20M	4310	2		310	4000										
2031	3	20M	9600	20			7790	1150	660								
2034	1	20M	5800	20			3990	1150	660								
2035	2	20M	2500	20			690	1150	660								

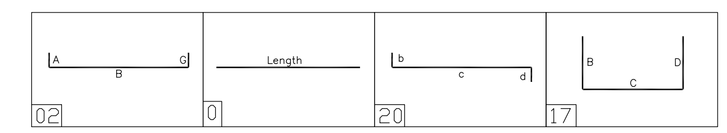

DRAWING REVIEW

This review of this drawing does not in any way relieve the contractor of responsibility for its accuracy or for compliance with the contract documents.

✓	No comment		See comment
	Amend & Resubmit		Rejected See Remarks

Submission No.
Project No. 19066
By MB
Date 14 Sep 2021

JABLONSKY, AST AND PARTNERS
Consulting Engineers
1129 Leslie Street Don Mills, Ont. M3C 2K5

* ELEVATIONS AND DIMENSIONS SHOWN ARE FOR VERIFICATION PURPOSES ONLY AND ARE NOT TO BE USED FOR CONSTRUCTION
* ALL CONFIRMS/VERIFIES WILL BE ASSUMED CORRECT AND APPROVED AS IS UNLESS COMMENTED ON THE APPROVAL DRWGS

LEGEND

ALT = ALTERNATE
BOT = BOTTOM
B/S = BEND INTO SLAB
CB = CONTROL BAR
CJ = CONTROL JOINT
CTS = CUT TO SUIT SITE COND.
DWL = DOWELS
EE = EACH END
EF = EACH FACE
EJ = EXPANSION JOINT
ES = EACH SIDE
EW = EACH WAY
FF = FAR FACE
FS = FORM SAVER
G/D = GROUT IN DOWELS
H = HORIZONTAL
IF = INSIDE FACE
LL = LOWER LAYER
MID = MIDDLE
MIN = MINIMUM
NF = NEAR FACE
OC = ON CENTER
OF = OUTSIDE FACE
SC = SAW CUT END
STG = STAGGER
STIR = STIRRUPS
T = TOP
THR/1= THREAD 1END
THR/2= THREAD 2ENDS
UL = UPPER LAYER
u/n = UNLESS NOTED
V = VERTICAL
TT = TEMP. TIES

STRAIGHT BARS LABEL FORMAT

7 B15M X 3600
GRADE
QUANTITY
LENGTH

BENT BARS LABEL FORMAT

7 B15M B1501
SIZE
BAR MARK
GRADE
QUANTITY

GRADES OF STEEL

B = GRADE 400W
E = EPOXY COATED
C = CSPB
G = GALVANIZED
S = STAINLESS
W = WELDABLE

ISSUE	REMARKS	DATE	BY
0	FOR APPROVAL	SEP/10/21	JJ

MANSTEEL REBAR

MANSTEEL REBAR
105 Industrial Road, Richmond Hill,
Ontario L4C 2Y4 Canada
Phone: 905-737-9797
Fax: 905-737-9704
Email: info@mansteelrebar.com

PROJECT
FORESTSIDE TOWNHOUSES
-BRAMPTON, ON

PART OF STRUCTURE
G.F SLAB TLL P#10

CUSTOMER :
ROYAL PINE HOMES

Project no. 2177
SCALE: AS SHOWN
DRAWING No. R6.9D 0

DETAILED BY: JJ
CHECKED BY:
BAR LIST No.

NOTES

1. ALL STEEL TO BE GRADE 400W
2. STRENGTH OF CONCRETE
   35MPa – SLAB
   35MPa – INTERIOR COLUMNS & WALLS
3. CONCRETE COVER:
   SLAB T -- 25mm
   SLAB B -- 25mm
4. COMPRESSION LAP SPLICE

BAR SIZE	STANDARD LAP (mm)
10M	300
15M	440
20M	590
25M	730
30M	880
35M	1030

5. TENSION LAP SPLICE (L.S) & DEVELOPMENT LENGTH (Ld)

BAR SIZE	fc=25		fc=30		fc=35	
	L.S	L.d	L.S	L.d	L.S	L.d
10M	490	380	450	350	420	320
15M	740	570	670	520	620	480
20M	980	750	890	690	830	640
25M	1530	1170	1390	1070	1290	990
30M	1830	1410	1670	1290	1550	1190
35M	2130	1640	1950	1500	1800	1390