2H+D

Glen Cove

#114

1,162 SQ FT *plus 168 sq. ft. of balcony area*

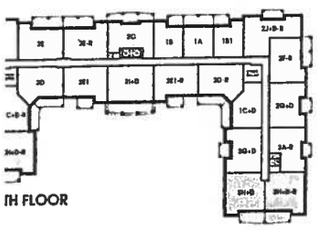

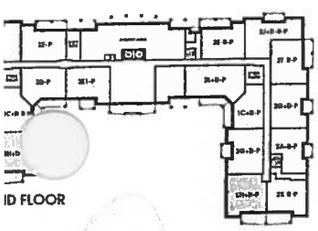

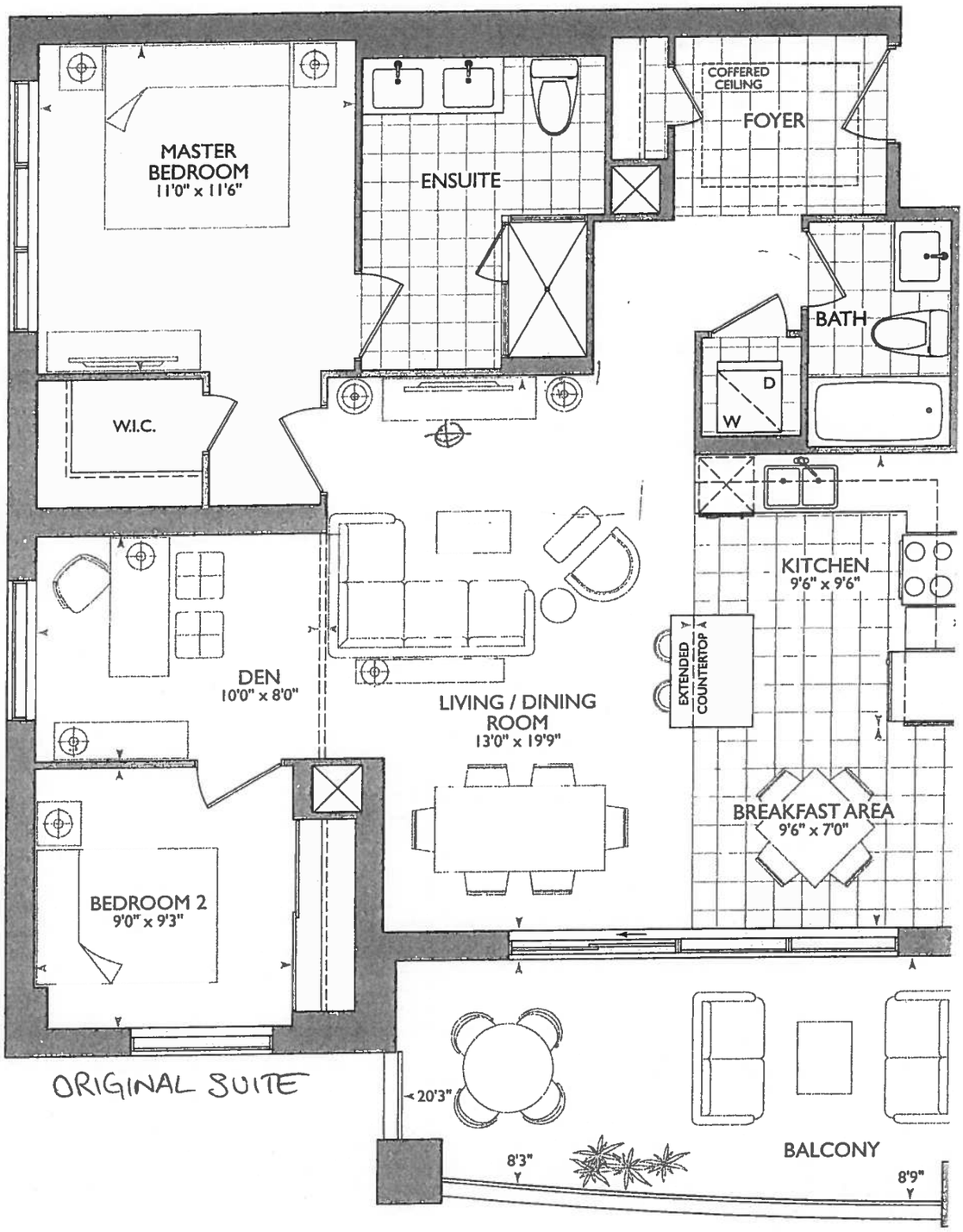

ROYAL PINE

* BARRIER FREE ACCESS SUITE
* 5 extended Height DOORS

November 9, 2017
SUITE 114

* Kitchen (see LAYOUT)
- STOVE PIPE center 60"
- SINK PIPE center 67 3/4
- P = PLUGS IN ISLAND (x2)
- KITCHEN ISLAND EXTENDED (+) SHIFTED TOWARDS FRIDGE WALL
- (8x) PUCK LIGHTS.
- (1x) = CAPPED CIELING LIGHT centered OVER ISLAND
- UPG #1 - Appliance PACKAGE
- UPG #2 = KITCHEN PACKAGE

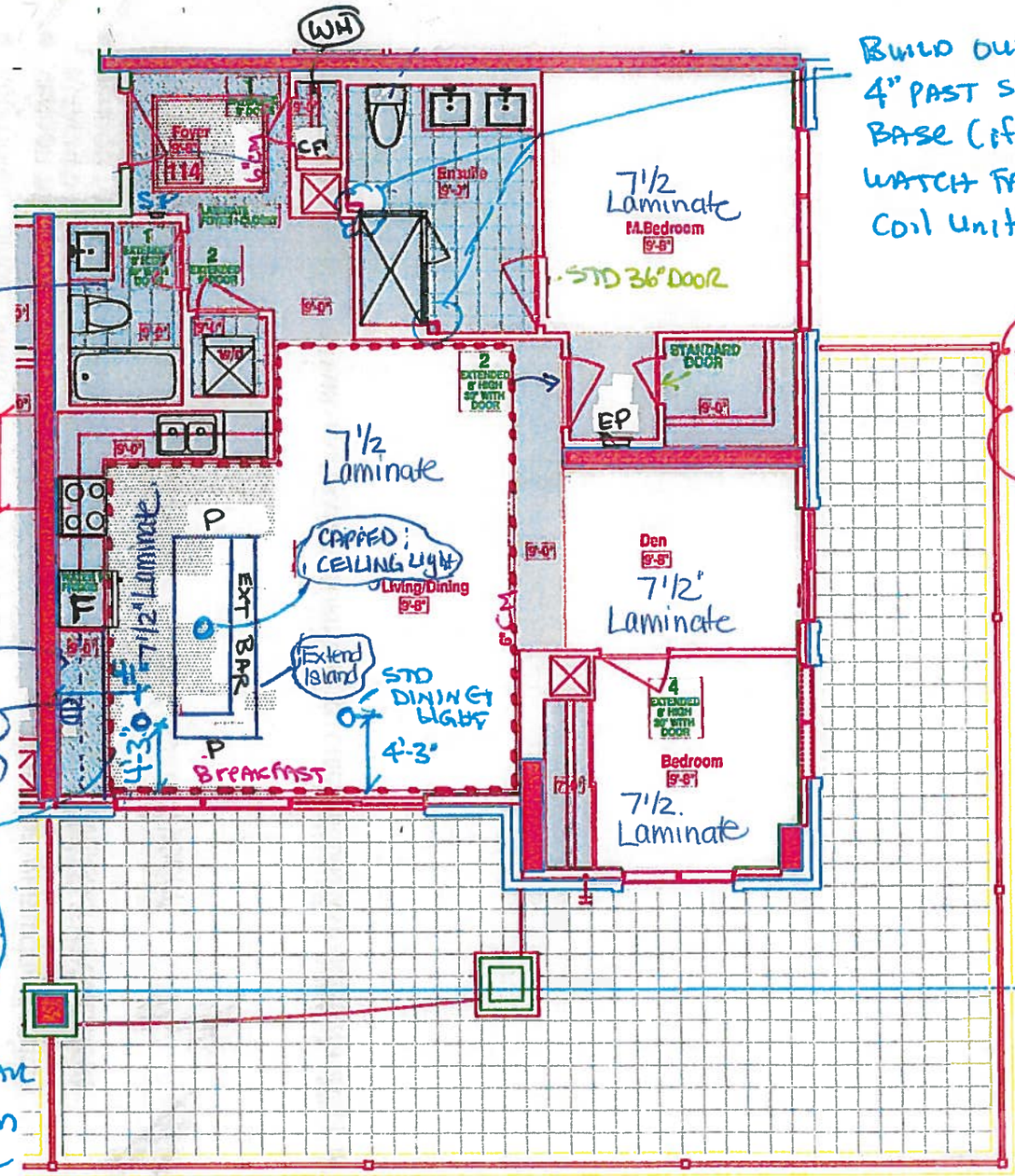

* 41" FROM FRIDGE WALL
* 4'-3" FROM EXT. WALL

* MAIN (+) ENSUITE RAISED VANITIES - 36 1/4" (+) 3" Splash

* EXTEND WALLS BY SHOWER BASE

LEGEND:
- SECURITY PANEL
- EP ELECTRICAL PANEL
- CP COMMUNICATION PANEL
- WM WATER METER
- F FRIDGE
- DROPPED AREA
- 6" CROWN MOLDING
- BARRIER FREE SUITE

RECEIVED Oct 27-17

SUITE 114 - GLEN COVE - 2H + D - P - R
HAMPTON PLACE • 25 Baker Hill Blvd, Aurora, ON • Oct 27, 2017

SITE COPY

CONSTRUCTION SUMMARY

Hampton Place

PURCHASERS: BHANU KHATRI and GOKUL KHATRI **TEL:** RES.: 905-887-9794

LOT NUMBER	PHASE	HOUSE TYPE	CLOSING DATE	
114	1	GLEN COVE(2H+D-P)	10-Sep-18	

Offer Workshee	ADDITIONAL - SINGLE PARKING UNITS SIDE BY SIDE Note:
Workshee	VENDOR TO INSTALL 36 INCH DOORS FOR POSSIBLE FUTURE USE OF WHEELCHAIR AS PER ATTACHED PLAN. Note:
Offer Workshee	VENDOR TO SUPPLY ONE SET OF STANDARD POTS AND PANS DRAWERS AS PER VENDORS STANDARD SAMPLES, IF POSSIBLE WITH STANDARD KITCHEN LAYOUT. Note:
Offer Upgrade	VENDOR TO INSTALL STANDARD LAMINATE FLOORING IN KITCHEN, BREAKFAST AREA AND FOYER IN LIEU OF STANDARD TILE. Note:
Offer Upgrade	INSTALL FIVE EXTENDED HEIGHT DOORWAYS (APPROXIMATE 8FT IN HEIGHT) ON FRONT HALL CLOSET, MAIN BATH, LAUNDRY CLOSET, MASTER BEDROOM AND BEDROOM 2. Note:
Offer Upgrade	INSTALL WATER LINE FOR FRIDGE. Note:

SITE COPY

CONSTRUCTION SUMMARY

Hampton Place

PURCHASERS: BHANU KHATRI and GOKUL KHATRI **TEL:** RES.: 905-887-9794

LOT NUMBER	PHASE	HOUSE TYPE	CLOSING DATE	
114	1	GLEN COVE(2H+D-P)	10-Sep-18	

Date Added: 17-Nov-17 **Invoice Number: 6964**

1 - INTERIOR DOORS- CLARIFICATION-
Purchaser accepts & acknowledges that FIVE (5) interior doors will be extended to 8'-0" Tall: Front Foyer Closet, Main Bath,Laundry MasterBdrm, Bdrm #2
Purchaser has declined the option to upgrade the additional extended height interior doors .
Master Ensuite and Master Bedroom WIC to be left standard height

1 - KITCHEN (ISLAND)- In addition to the builders standard ceiling light in the kitchen, Install a Capped ceiling light, Centred over the new sized island (See attached sketch)
Note:

1 - BREAKFAST AREA- In addition to the builders standard ceiling light in the kitchen, Install a Capped ceiling light, in the Breakfast area. New capped light to be in line with the Dining Room light (See attached sketch)
Note:

1 - SERVERY AREA- Install an additional plug in the new Servery area of kitchen. The plug to be installed at the standard height above the counter top of the Servery (See Sketch)
Note: Approved as per Stella

1 - KITCHEN & BATHROOM- SEE QUALITY TOPS & KITCHENS FOR ALL KITCHEN & BATHROOMS UPGRADES/LAYOUTS (See attached Upgrade Package)
Note: **PLEASE NOTE** Included in the P&SA is ONE (1) set of Pot and Pan drawers

4 - KITCHEN- Install FOUR (4) ADDITIONAL PUCK LIGHTS (Same Switch as standard Puck Lights) at kitchen. To be installed below kitchen cabinetry, where applicable (See attached QTK layout for locations)
Note: Purchaser is paying the difference for additional Puck LIghts- standard Kitchen to Receive Four (4) Puck LIghts- Upgrade Kitchen requires Eight (8) Puck Lights

CHEN- Install ADDITIONAL Standard Counter Top- ASPEN TERRA WHITE- Throughout kitchen where applicable -Includes additional counter on the island & new servery area (Does not Include Quartz backsplash)
Note: The above is based on the revised QTK layout
Priced as per Connolly

1 - KITCHEN- Install an upgraded counter top edge throughout the kitchen, where applicable.
Install the "I" egde
(Includes New Servery Area)
Note:

1 - KITCHEN- Install additional builders standard kitchen backsplash (3x6 Subway White) for the new servery area of kitchen
(See QTK sketch)
Note:

1 - KITCHEN/SERVERY- Install the 3x6 Subway "White" tile in a Brick Pattern, throughout the kitchen area and applicable servery area
Note:

1 - APPLIANCE PACKAGE- Install Upgrade Appliance Package #1 To be installed throughout the suite, where applicable (See Sketch)
Note: **See P&SA for Water line purchased by purchaser**

1 - KITCHEN- Install the builders standard undermount sink in the kitchen- Install the BLANCO HORIZON Plus U2 (8") Undermount Sink- Model # 401234

1 - KITCHEN- Install the builders standard Faucet in the kitchen- Install the DELTA Chrome Pull-Out Kitchen Faucet (Single Hole) - Model # 469LF-Chrome
Note:

1 - MAIN BATH- CLARIFICATION- Install the standard Plumbing Fixtures throughout all bathrooms, where applicable. To Include the Main Bath
Note:

1 - MASTER ENSUITE- Install an upgraded Toilet in the Master Ensuite ONLY- Contrac CALI Model # 4710 B0VU
Note: **PLEASE NOTE** Install builders standard Sink / Faucet/ and shower stall plumbing in the Master Ensuite

SITE COPY

CONSTRUCTION SUMMARY

Hampton Place

PURCHASERS: BHANU KHATRI and GOKUL KHATRI **TEL:** RES.: 905-887-9794

LOT NUMBER	PHASE	HOUSE TYPE	CLOSING DATE	
114	1	GLEN COVE(2H+D-P)	10-Sep-18	

Date Added: 17-Nov-17 **Invoice Number: 6964**

1 - CLARIFICATION:
MASTER ENSUITE & MAIN BATH-Install RAISED VANITY HEIGHT at Main Bath and Master Ensuite Vanities, where applicable (See attached Upgrade paperwork and Layouts)

1 - CLARIFICATION-
MASTER ENSUITE-
Standard Frameless glass shower to NOT reach the ceiling. To be install at 8'-0" high with applicable chrome header.
Note:

1 - CLARIFICATION-
MASTER ENSUITE / MAIN BATH- Install the Standard 3" Splash throughout all bathroom vanity counter tops, where applicable. To include the Main Bath and the Master Ensuite
Note:

1 - PURCHASER AWARE AND ACCEPTS THAT ANY CHANGES MADE TO UPGRADES AFTER SIGNING THIS PURCHASERS EXTRA FORM ARE SUBJECT TO A MINIMUM ADMINISTRATION FEE OF $1000. PLUS A 10% HOLDBACK FEE.
Note:

1 - PURCHASER HAS ATTENDED A COLOR APPOINTMENT AT THE DECOR CENTRE AND HAS DECLINED ANY ADDITIONAL UPGRADES.
Note:

This Document is Extremely Time Sensitive - Printed 22 Jan 18 at 17:07

* INTERIOR COLOUR SCHEME *

Purchasers	Decor Consultant	Model Type	Telephone Res. / Bus	Project	Closing Date	Unit
BHANU KHATRI & GOKUL KHATRI	Laura Di Pede	GLEN COVE(2H+D-P)	(905) 887-9794 /	Hampton Place	10/09/2018	114

	Flooring: Description	Wall Tile: Main	Wall Tile: Accent/Insert	Wall Tile: Pattern
MASTER ENSUITE ✓	13X13 HELLO SILVER- STD	8X10 GOLF GRIGIO- STD	N/A	N/A
MAIN BATHROOM ✓	13X13 RUSTIC CHARCOAL- STD	8X10 CARRARA MATTE- STD	N/A	N/A
	N/A	N/A	N/A	N/A
POWDER ROOM	N/A	N/A	N/A	N/A
KITCHEN ✓	71/2" TorleysForest-Cordillera 9687 P-STD	3X6 SUBWAY WHITE -Brick Pattern	NA/	N/A
FOYER ✓	71/2" TorleysForest-Cordillera 9687 P-STD	N/A	N/A	N/A
LAUNDRY ✓	8X8 BEHRAM PINK- STD	N/A	N/A	N/A
SERVERY ✓	71/2" TorleysForest-Cordillera 9687 P-STD ✓	3X6 SUBWAY WHITE -Brick Pattern	N/A	N/A
LIVING ROOM ✓	71/2" TorleysForest-Cordillera 9687 P-STD			
DINING ROOM ✓	71/2" TorleysForest-Cordillera 9687 P-STD			
DEN ✓	71/2" TorleysForest-Cordillera 9687 P-STD			
MASTER BEDROOM ✓	71/2" TorleysForest-Cordillera 9687 P-STD			
BEDROOM 2 ✓	71/2" TorleysForest-Cordillera 9687 P-STD			
BEDROOM 3	N/A			

Notes

INTERIOR EXTENDED DOORS- AS PER P&SA, INSTALL FIVE (5) EXTENDED HEIGHT DOORS-FRONT FOYER CLOSET, MAIN BATH,LAUNDRY DOOR,MASTER BEDROOM, AND BEDROOM #2
STANDARD INTERIOR DOOR HEIGHT THE FOR MASTER ENSUITE & MASTER BEDROOM WIC

Consultant: Laura Di Pede Purchaser: BHANU KHATRI Purchaser: GOKUL KHATRI Vendor: Hampton Place

Lot: 114 Project: Hampton Place Model: GLEN COVE(2H+D-P)

Printed Nov 06, 2017 10:19 am

* INTERIOR COLOUR SCHEME *

Purchasers	Decor Consultant	Model Type	Telephone Res. / Bus	Project	Closing Date	Unit
BHANU KHATRI & GOKUL KHATRI	Laura Di Pede	GLEN COVE(2H+D-P)	(905) 887-9794 /	Hampton Place	10/09/2018	114

CABINETRY, VANITIES AND COUNTERTOPS

	Style	Countertop	Counter Edge	Handle / Knob
MAIN BATHROOM	CATEGORY 1 WHITE- QT 1203- (STD) FIBREBOARD	ASPEN TRIBECA (STD)	"A" (STD)	16338 195 std
MASTER ENSUITE	CATEGORY 2 MAPLE CHESTNUT QT 2503 (STD)	ASPEN TERRA WHITE (STD)	"A" (STD)	16338 195 std
POWDER ROOM	N/A	N/A	N/A	N/A
KITCHEN / DINETTE	CATEGORY 2 MAPLE QT 2503 PISTACHIO (STD) ✓	ASPEN TERRA WHITE (STD) ✓	"I" (UPGD)	16338 195 std
LAUNDRY ROOM	N/A	N/A	N/A	N/A
SERVERY	CATEGORY 2 MAPLE QT 2503 PISTACHIO (STD)	ASPEN TERRA WHITE (STD)	"I" (UPGD)	16338 195 std

APPLIANCE PACKAGE

PACKAGE #1

Std 31in Opening

PLUMBING FIXTURES

KITCHEN

Sink Model ✓	STANDARD
Sink Faucet ✓	STANDARD

TOILETS

Master Ensuite ✓	CALI- 4710 BOVU- (UPGD)
Main Bathroom ✓	STANDARD
Powder Room ✓	STANDARD

VANITY FAUCETS

Master Ensuite ✓	STANDARD
Main Bathroom ✓	STANDARD
Powder Room	N/A

VANITY SINKS

Master Ensuite ✓	STANDARD
Main Bathroom ✓	STANDARD
Powder Room	N/A

SHOWER STALL / TUBS

Master Ensuite Shower Stall ✓	STANDARD
Master Ensuite Tub ✓	N/A
Main Bathroom Tub	STANDARD

Trim

Baseboard & Casing	STANDARD	Levers	STANDARD
Interior Doors	STANDARD	Door Height	5 Extended- P&SA **See Notes**

Cornice Moulding / Medalion

Foyer	STANDARD #CTR-611
Living Room	STANDARD #CTR-611
Dining Room	STANDARD #CTR-611
Den	N/A
KITCHEN	STANDARD #CTR-611
Bedroom 2	N/A
Bedroom 3	N/A

Fireplace

Fireplace	N/A
Location Flooring	N/A
Style	N/A
Finish	N/A
Marble	N/A
Hearth	N/A

MISC. INSTALLATIONS

Ceramic Accessories (installed by Vendor)
● Yes ○ No

Bathroom Mirrors (installed by Vendor)
● Yes ○ No

Wire Shelving - Closet (installed by Vendor)
● Yes ○ No

Paint Throughout

Walls	Trim
✓ BIRCH WHITE- STANDARD	✓ STANDARD -WHITE

Decor Consultant: Laura Di Pede Purchaser: BHANU KHATRI Purchaser: GOKUL KHATRI Vendor: Hampton Place

Lot: 114 Project: Hampton Place Model: GLEN COVE(2H+D-P)

Printed Nov 06, 2017 10:19 am

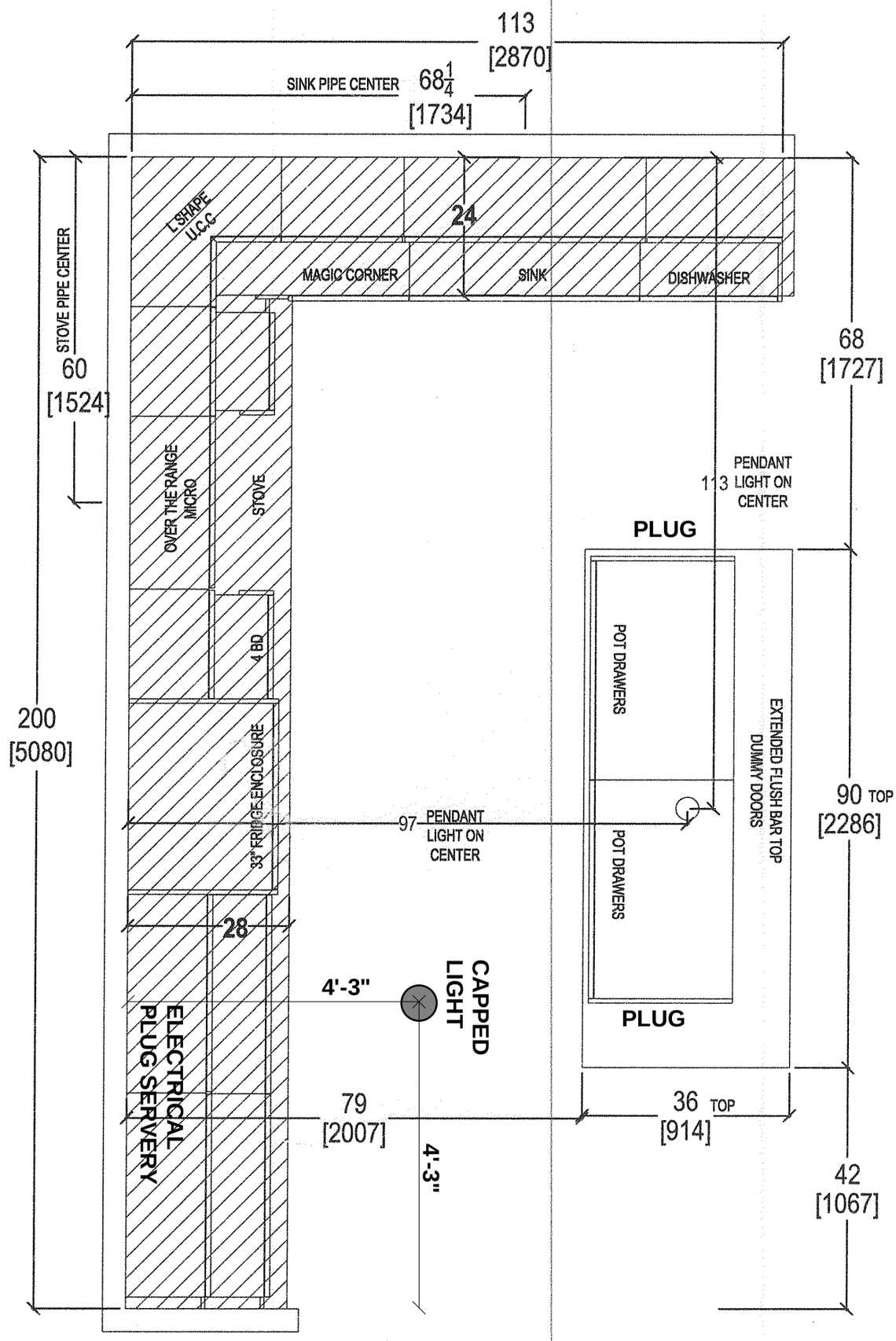

OTK your kitchen. your taste. 80 SANTE DRIVE, VAUGHAN, ON L4K 3C4, T: 416.746.1811 F:905.761.5901	CLIENT: ROYAL PINE HOMES	JOB NAME: UNIT 114 HMP	ROOM: KITCHEN BULKHEAD	DRAWN BY: __
	SITE: HAMPTON PLACE	DOOR STYLE: __	DOOR HANDLE: __	SCALE: __
	PHONE: __	FINISH: __	DRW HANDLE: __	DATE: REVISED APRIL 2, 2019
	EMAIL: __	SPECIES: __	TOP: __	PAGE: __

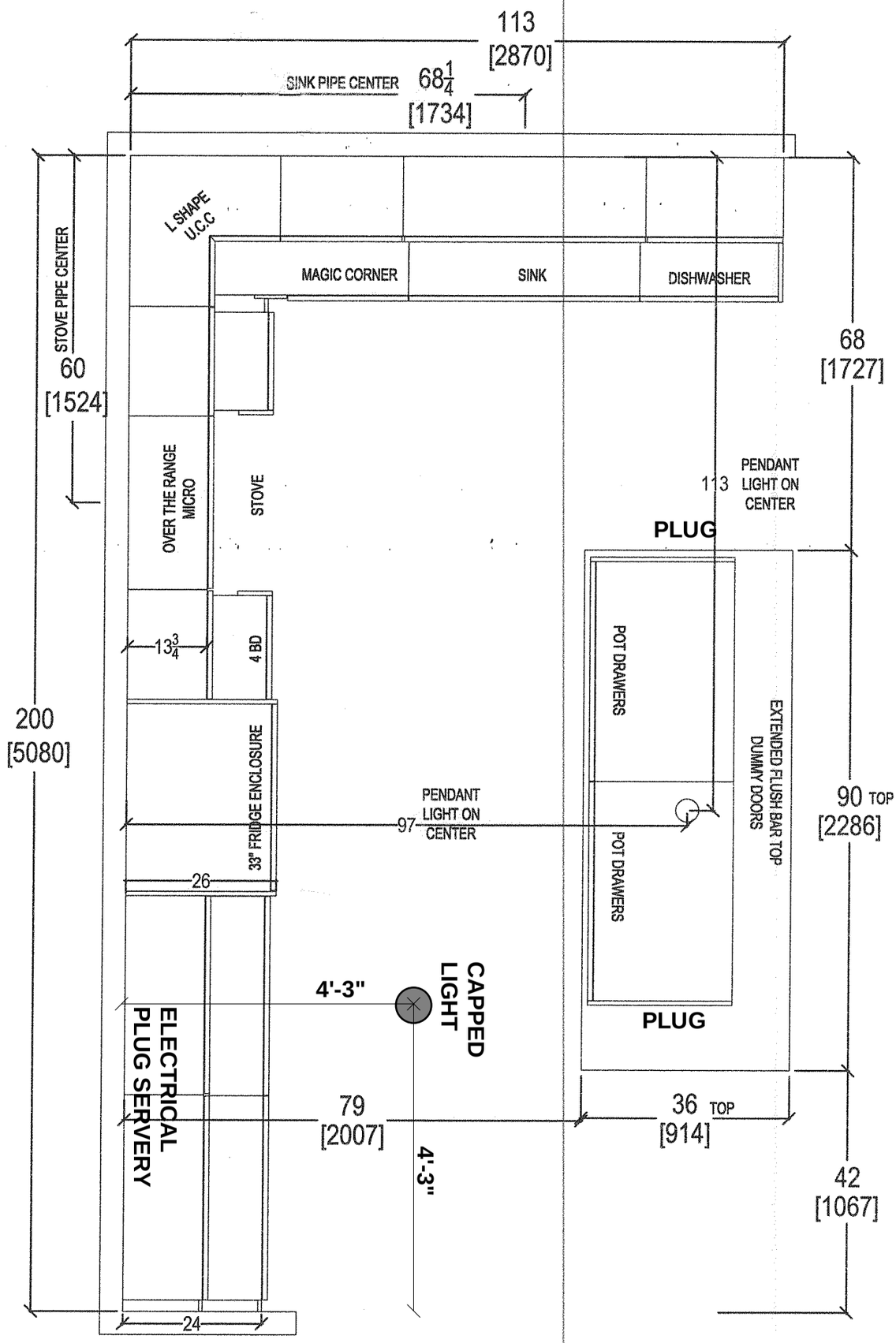

your kitchen, your taste. 80 SANTE DRIVE, VAUGHAN, ON L4K 3C4, T: 416.746.1811 F:905.761.5901	CLIENT: ROYAL PINE HOMES	JOB NAME: UNIT 114 HMP	ROOM: KITCHEN BULKHEAD	DRAWN BY: __
	SITE: HAMPTON PLACE	DOOR STYLE: __	DOOR HANDLE: __	SCALE: __
	PHONE: __	FINISH: __	DRW HANDLE: __	DATE: REVISED APRIL 2, 2019
	EMAIL: __	SPECIES: __	TOP: __	PAGE: __

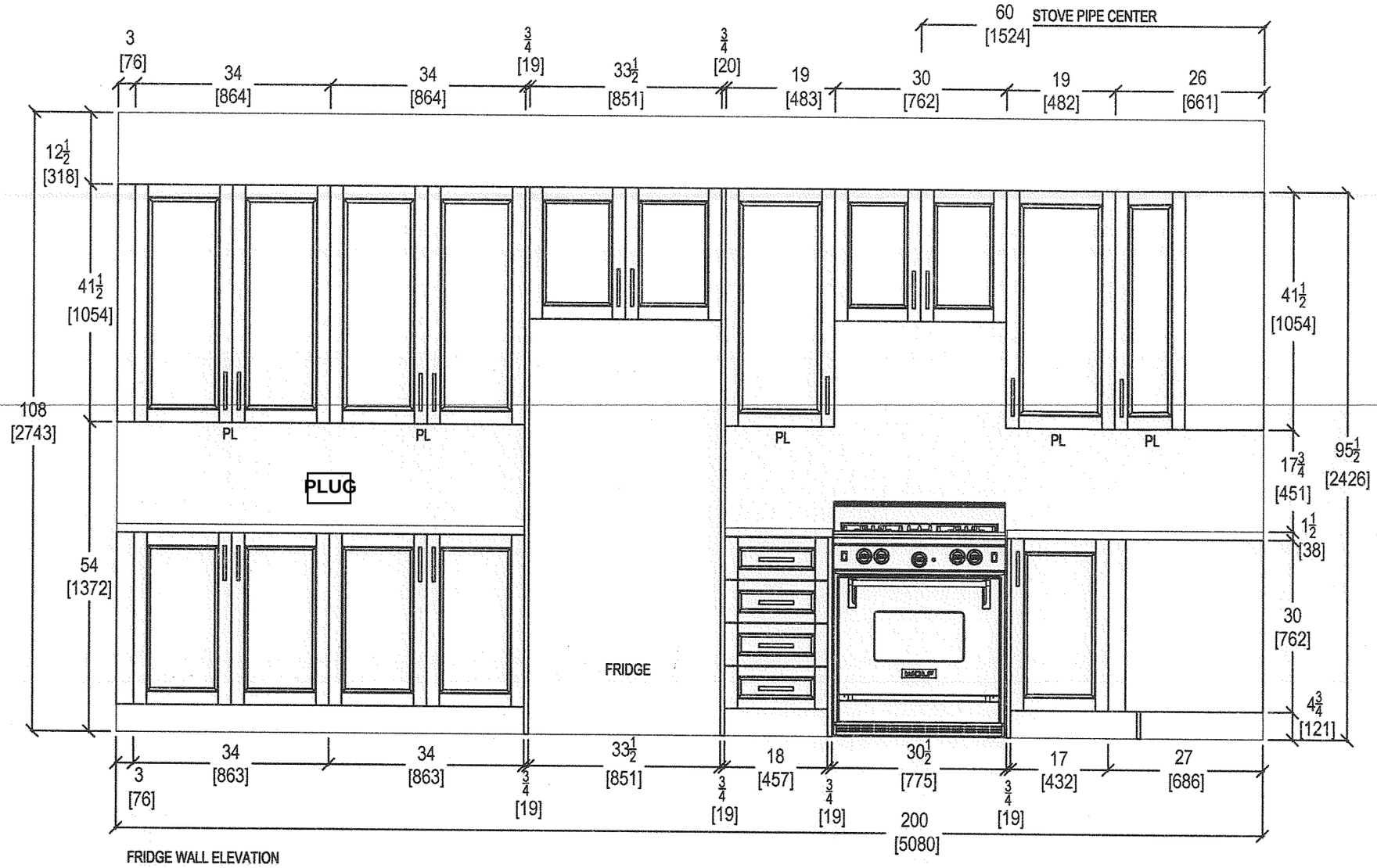

FRIDGE WALL ELEVATION

QTK
your kitchen. your taste.
80 SANTE DRIVE, VAUGHAN, ON L4K 3C4,
T: 416.746.1811 F:905.761.5901

CLIENT: ROYAL PINE HOMES	JOB NAME: UNIT 114 HMP	ROOM: KITCHEN	DRAWN BY: SK	COMMENTS:
SITE: HAMPTON PLACE	DOOR STYLE: __	DOOR HANDLE: __	SCALE: 1/2" = 1' - 0"	*PLEASE NOTE ALL DIMENSIONS ARE NOT FINAL AND ARE SUBJECT TO CHANGE UPON FINAL SITE MEASURE*
PHONE: __	FINISH: __	DRW HANDLE: __	DATE: REVISED APRIL 2, 2019	
EMAIL: __	SPECIES: __	TOP: __	PAGE: __	

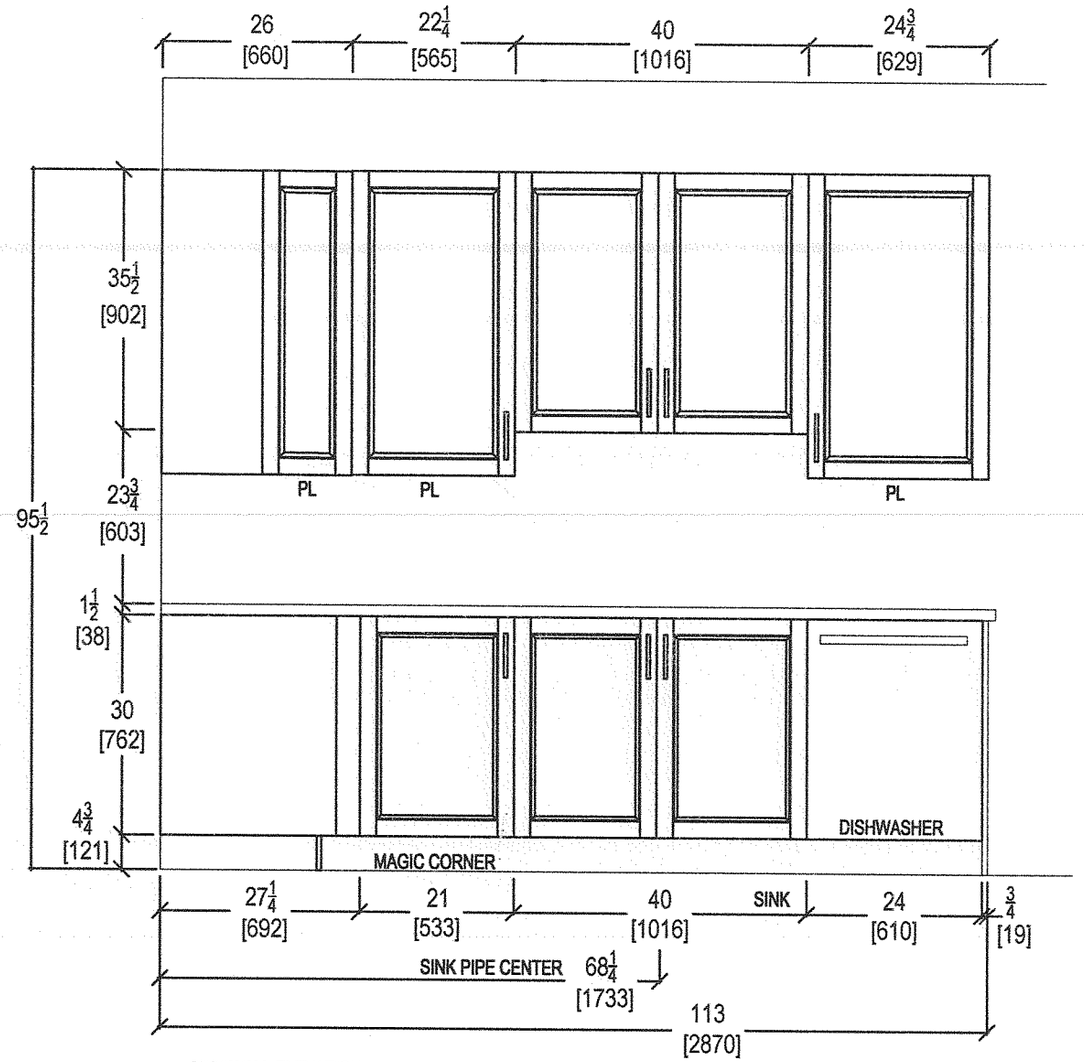

SINK WALL ELEVATION

your kitchen. your taste.
80 SANTE DRIVE, VAUGHAN, ON L4K 3C4,
T: 416.746.1811 F:905.761.5901

CLIENT: ROYAL PINE HOMES	JOB NAME: UNIT 114 HMP	ROOM: KITCHEN	DRAWN BY: SK	COMMENTS:
SITE: HAMPTON PLACE	DOOR STYLE: __	DOOR HANDLE: __	SCALE: 1/2" = 1' - 0"	*PLEASE NOTE ALL DIMENSIONS ARE NOT FINAL AND ARE SUBJECT TO CHANGE UPON FINAL SITE MEASURE*
PHONE: __	FINISH: __	DRW HANDLE: __	DATE: REVISED: APRIL 2, 2019	
EMAIL: __	SPECIES: __	TOP: __	PAGE: __	

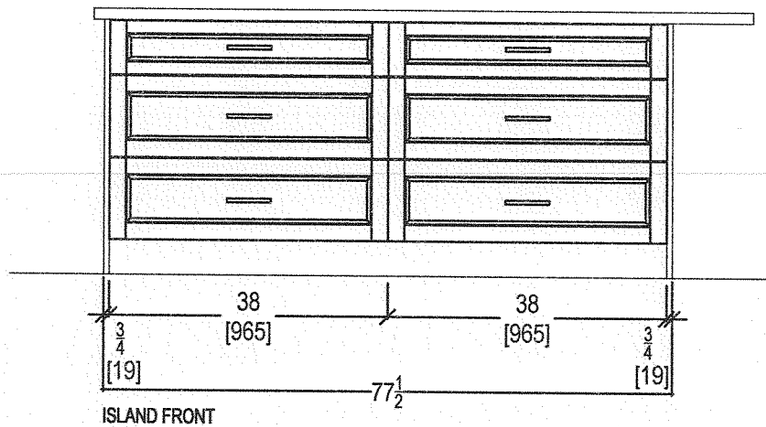

ISLAND FRONT

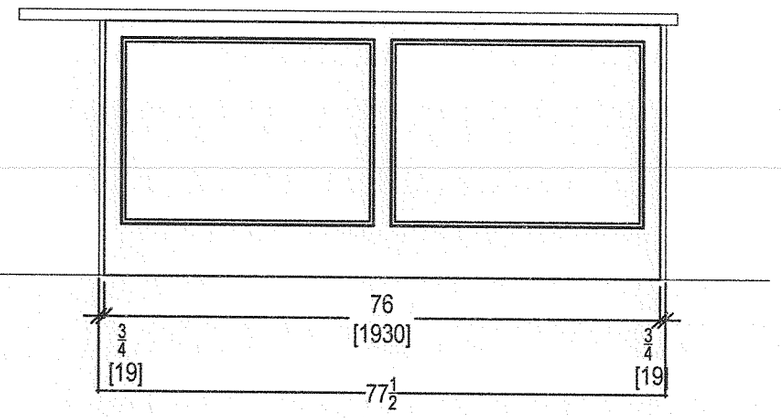

ISLAND REAR

QTK
your kitchen. your taste.
80 SANTE DRIVE, VAUGHAN, ON L4K 3C4,
T: 416.746.1811 F:905.761.5901

CLIENT: ROYAL PINE HOMES	JOB NAME: UNIT 114 HMP	ROOM: KITCHEN	DRAWN BY: SK
SITE: HAMPTON PLACE	DOOR STYLE: __	DOOR HANDLE: __	SCALE: 1/2" = 1' - 0"
PHONE: __	FINISH: __	DRW HANDLE: __	DATE: REVISED: APRIL 2, 2019
EMAIL: __	SPECIES: __	TOP: __	PAGE: __

COMMENTS:

PLEASE NOTE ALL DIMENSIONS ARE NOT FINAL AND ARE SUBJECT TO CHANGE UPON FINAL SITE MEASURE

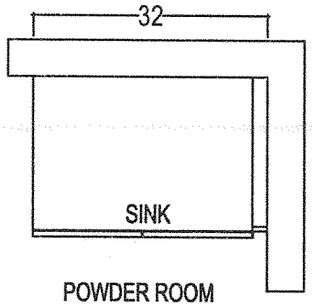

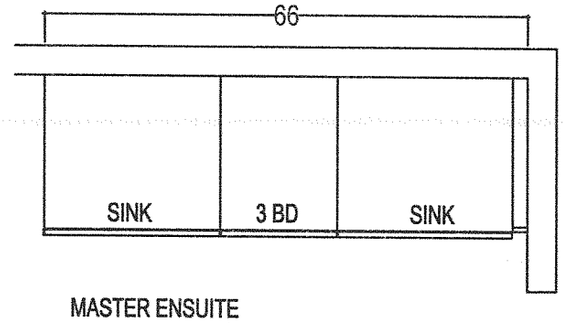

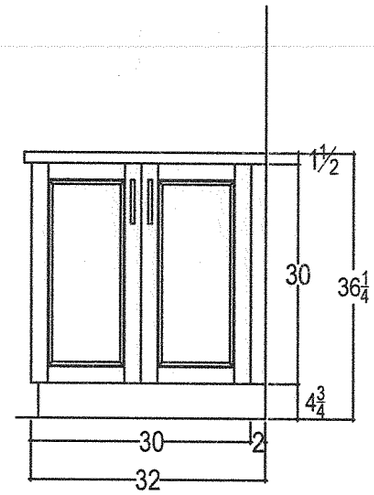

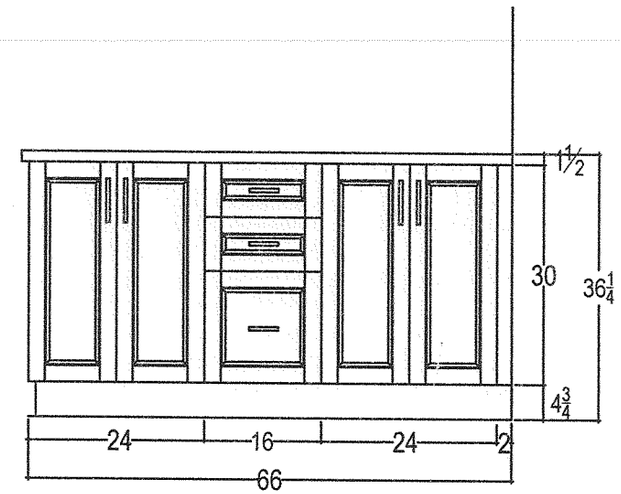

QTK
your kitchen. your taste.
80 SANTE DRIVE, VAUGHAN, ON L4K 3C4,
T: 416.746.1811 F:905.761.5901

CLIENT: ROYAL PINE HOMES	JOB NAME: UNIT 114 HMP	ROOM: VANITIES	DRAWN BY: SK	COMMENTS:
SITE: HAMPTON PLACE	DOOR STYLE: __	DOOR HANDLE: __	SCALE: 1/2" = 1' - 0"	*PLEASE NOTE ALL DIMENSIONS ARE NOT FINAL AND ARE SUBJECT TO CHANGE UPON FINAL SITE MEASURE*
PHONE: __	FINISH: __	DRW HANDLE: __	DATE: REVISED APRIL 2, 2019	
EMAIL: __	SPECIES: __	TOP: __	PAGE: __	

Countertop Edges

CONNOLLY Marble & Granite Ltd.

EDGE DETAILS

004

A.

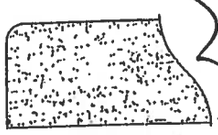

STRAIGHT EDGE
(STANDARD - 3/4")

MAIN BATH
MASTER ENSUITE

SUITE 114

I.

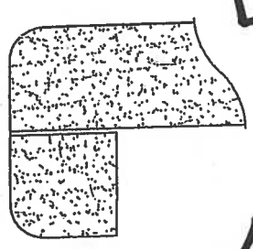

DOUBLE TOP "D" EDGE
(STANDARD - 1 1/2")

KITCHEN

~~M.~~

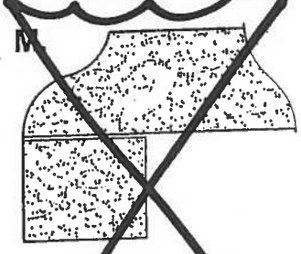

~~OGEE - SQUARE EDGE~~
~~(MED./HIGH - 1 1/2")~~

EDGING UP-GRADE OPTIONS

MK - MU -

SUITE 114
HAMPTON
MASTER ENSUITE

CALI®

4.8Lpf / 1.28Gpf 1PC 16⅞" HIGH ELONGATED

☐ **4710BOV** **Lined Tank**
☐ **4710BOVU** **Unlined Tank**

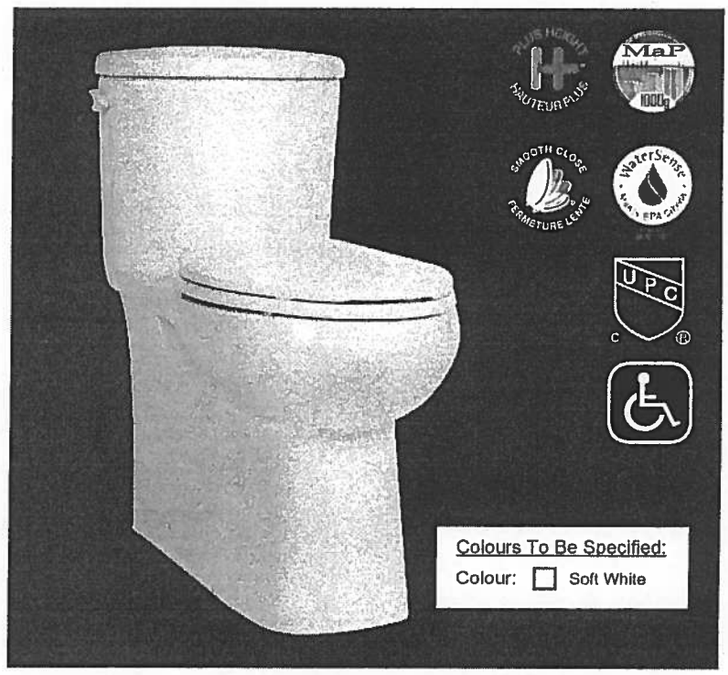

Product Specs:

- High efficiency toilet
- 4.8Lpf/1.28Gpf
- Elongated bowl with concealed skirted trapway
- Vitreous china
- 16⅞" Plus Height bowl
- Soft white tank lever
- 12" (305mm) Rough-in
- 2" Fully glazed ball pass trapway
- 3" Flapper
- Siphon jet flush action
- Water surface (240mm x 170mm) 9½" x 6⅝"
- Decorative chrome and soft white side caps included
- Smooth close toilet seat included

Overall Dimensions:

392mm (W) x 725mm (D) x 760mm (H)
15½" (W) x 28½" (D) x 29⅞" (H)

Compliance Certifications:

Meets or exceeds the following:

- IAPMO cUPC
- US EPA WaterSense
- ASME A 12.19.2 / CSA B45.1-2013
- ADA Guidelines & ANSI A117.1
- **MaP Tested 1000g**
- LEED Compliant

Shipping:

Cube	9.39
GW	92.50lbs

Notes:

This toilet is designed to rough-in at a minimum dimension of 305mm (12") from finished wall to C/L of outlet. Supply line not included with fixture and must be ordered separately.
Important: Dimensions of fixtures are nominal and may vary within the range of tolerances establishedby ASME standard A112.19.2. These measurements are subject to change or cancellation. No responsibility is assumed for use of superseded or voided pages.
Products are designed to comply ADA/ANSI A117.1 Standard. It shall be the responsibility of the installer to comply with the local disability codes and standards prior to installing the product.

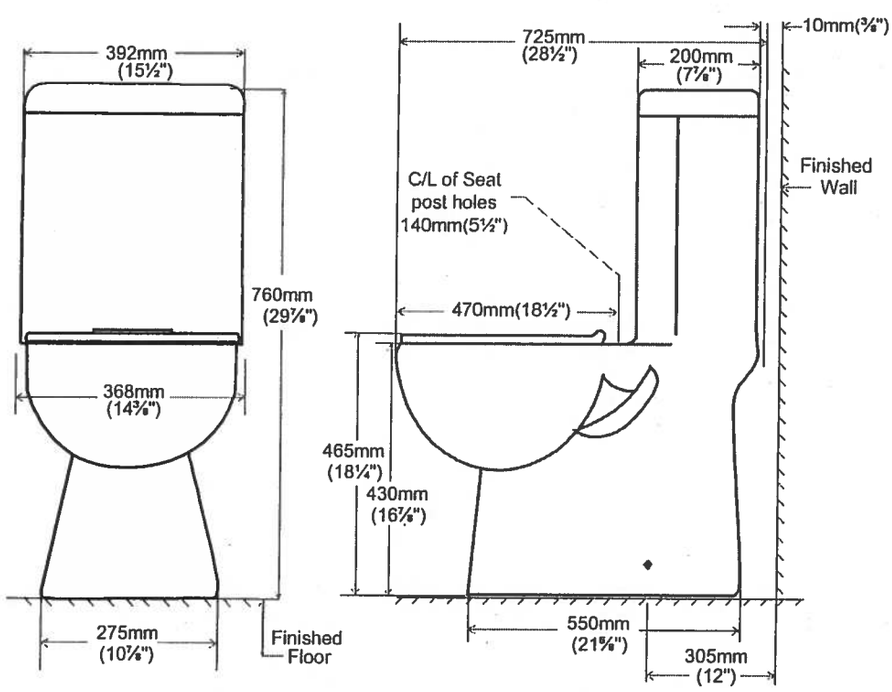

Upgrade Package I

WRB322DMBM

Whirlpool®

32-inches wide Bottom-Freezer Refrigerator with SpillGuard™ Glass Shelves - 22 cu. ft

http://www.whirlpool.com

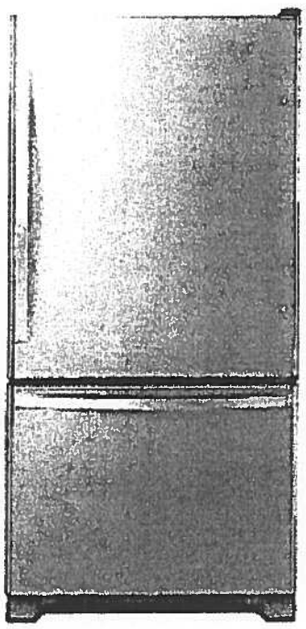

Key Features:

- SpillGuard™ Glass Shelves
- Adaptive Defrost / Factory Installed Icemaker
- FreshFlow™ Produce Preserver
- LED Interior Lighting
- ENERGY STAR® Qualified

Product Dimensions:

Height: 70

Width: 32 5/8

Depth: 33 3/8

Electrical Requirements:

15

Additional Information:

Use And Care Guide

Dimension Guide

Energy Guide

Warranty Certificate

INVESTED IN AMERICA

ENERGY STAR

®Registered trademark/™ Trademark of Whirlpool, U.S.A. © 2018 Whirlpool Corporation. All Rights Reserved. All other trademarks are owned by their respective companies.
Because Whirlpool Corporation policy includes a continuous commitment to improve our products, we reserve the right to change materials and specifications without notice. We also reserve the right to discontinue or transition products without notice.
Manufacturer's Suggested Retail Price (MSRP) and Minimum Advertised Price (MAP) provided for reference purposes only. Dealer alone determines advertised and retail prices.
Created On: Tuesday, March 14, 2017 11:30:08

Upgrade Package I

WEE745H0FS

Whirlpool®

6.4 Cu. Ft. Slide-In Electric Range with True Convection

http://www.whirlpool.com

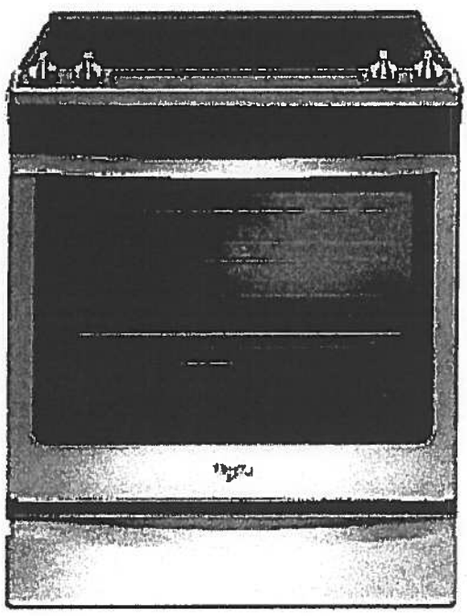

Key Features:

- Frozen Bake™ Technology
- True Convection Cooking
- FlexHeat™ Triple Radiant Element
- Convection Conversion
- AquaLift® Self-Cleaning Technology
- Temperature Sensor
- Rapid Preheat
- 6.4 Cu. Ft. Capacity
- Easy-Wipe Ceramic Glass Cooktop
- Large Oven Window
- Max Capacity Rack
- Hidden Bake Element

Product Dimensions:

Height: 36

Width: 29 7/8

Additional Information:

Use And Care Guide

Dimension Guide

Installation Guide

Warranty Certificate

INVESTED IN AMERICA

ADA Compliant

®Registered trademark/TM Trademark of Whirlpool, U.S.A. © 2016 Whirlpool Corporation. All Rights Reserved.
All other trademarks are owned by their respective companies.
Because Whirlpool Corporation policy includes a continuous commitment to improve our products, we reserve the right to change materials and specifications without notice. We also reserve the right to discontinue or transition products without notice.
Manufacturer's Suggested Retail Price (MSRP) and Minimum Advertised Price (MAP) provided for reference purposes only. Dealer alone determines advertised and retail prices.
Created On: Friday, January 27, 2017 19:46:47

Upgrade Package 1

YWMH76719CS

9 cu. ft. Microwave Hood Combination with TimeSavor™ Plus True Convection

http://www.whirlpool.com

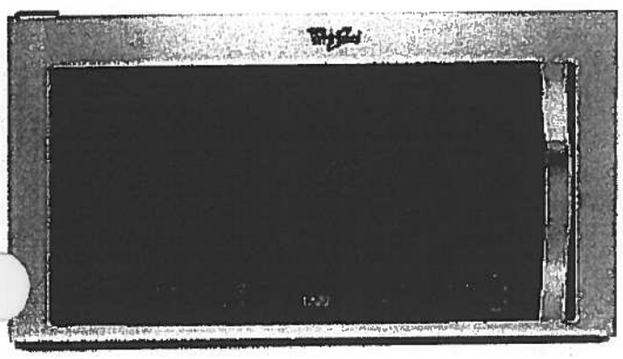

Key Features:

- TimeSavor™ Plus True Convection Cooking System
- Steam Cooking
- Sensor Cooking
- AccuPop™ Cycle
- CleanRelease® Non-Stick Interior
- SteamClean Option
- Integrated Hidden Vent and Console
- Auto Adapt Fan
- Recessed, Stoppable Glass Turntable
- Universal Microwave Steamer
- 1.9 cu. ft. Capacity
- 1,100 Watts Cooking Power

Product Dimensions:

Height: 17 1/8
Width: 29 15/16
Depth: 18 1/2

Electrical Requirements:

15 or 20. 120 V.

Additional Information:

Use And Care Guide
Installation Guide
Warranty Certificate

Available in:

Stainless Steel

ENERGY STAR

©Registered trademark/TM Trademark of Whirlpool, U S A. © 2013 Whirlpool Corporation All Rights Reserved
All other trademarks are owned by their respective companies.
Because Whirlpool Corporation policy includes a continuous commitment to improve our products, we reserve the right to change materials and specifications without notice. We also reserve the right to discontinue or transition products without notice.
Manufacturer's Suggested Retail Price (MSRP) and Minimum Advertised Price (MAP) provided for reference purposes only. Dealer alone determines advertised and retail prices.
Created On: Monday, March 14, 2016 13:16:48

Upgrade Package 1

WDTA50SAHZ

Whirlpool®

http://www.whirlpool.com

Contemporary Design. Stainless Steel Tub Dishwasher with TotalCoverage Spray Arm

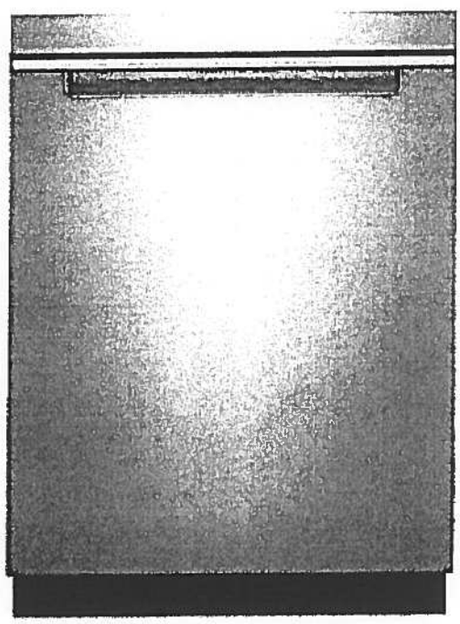

Key Features:

- Sensor Cycle
- TotalCoverage Spray Arm
- 1-Hour Wash Cycle
- Tap Touch Controls

Product Dimensions:

Height: 34 1/2
Width: 23 7/8
Depth: 24 1/2

Additional Information:

Use And Care
Dimension Guide
Installation Guide
Energy Guide
Warranty

Available in:

● Black

Fingerprint Resistant Sunset Bronze

Fingerprint Resistant Black Stainless

○ White

Fingerprint Resistant Stainless Steel

INVESTED IN AMERICA

ENERGY STAR

®Registered trademark/TM Trademark of Whirlpool, U.S.A. © 2016 Whirlpool Corporation. All Rights Reserved. All other trademarks are owned by their respective companies.

Because Whirlpool Corporation policy includes a continuous commitment to improve our products, we reserve the right to change materials and specifications without notice. We also reserve the right to discontinue or transition products without notice

Manufacturer's Suggested Retail Price (MSRP) and Minimum Advertised Price (MAP) provided for reference purposes only. Dealer alone determines advertised and retail prices

Upgrade Package 1

WFW75HEFW

5 cu. ft. Front Load Washer with Precision Dispense

http://www.whirlpool.com

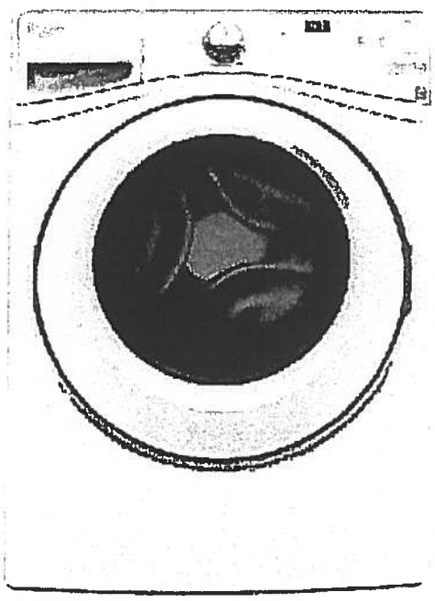

Key Features:

- Precision Dispense
- Adaptive Wash Technology
- Smooth Wave Stainless Steel Wash Basket
- 4.5 cu. ft. Capacity
- ENERGY STAR® Qualified

Product Dimensions:

Height: 39 3/4

Width: 27

Depth: 33 5/16

Electrical Requirements:

15 or 20. 120 V.

Additional Information:

Use And Care Guide

Dimension Guide

Installation Guide

Energy Guide

Warranty Certificate

INVESTED IN AMERICA

ENERGY STAR

ADA Compliant

®Registered trademark/TM Trademark of Whirlpool, U S A, ©2013 Whirlpool Corporation All Rights Reserved. All other trademarks are owned by their respective companies.
Because Whirlpool Corporation policy includes a continuous commitment to improve our products, we reserve the right to change materials and specifications without notice. We also reserve the right to discontinue or transition products without notice.
Manufacturer's Suggested Retail Price (MSRP) and Minimum Advertised Price (MAP) provided for reference purposes only. Dealer alone determines advertised and retail prices.

Created On: Wednesday, March 23, 2016 11:51:03

Upgrade Package 1

YWED75HEFW

Whirlpool®

http://www.whirlpool.com

7.5 cu. ft. Duet® High Efficiency Front Load Electric Dryer with ENERGY STAR®

MSRP: $0.00

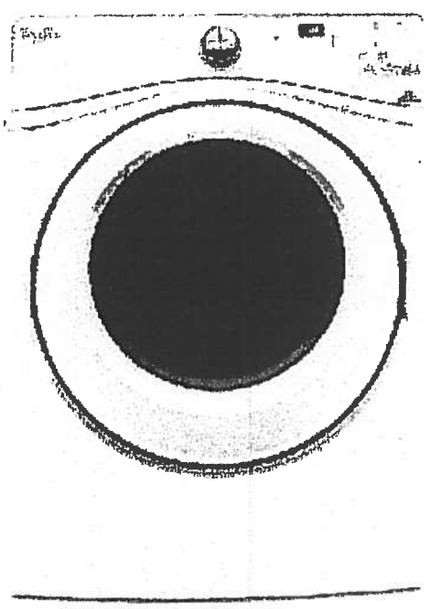

Key Features:

- Advanced Moisture Sensing System
- Quad Baffles
- Tap Touch Controls with Memory
- EcoBoost™ Option
- Wrinkle Shield™ Plus Option
- Undercounter Installation
- 7.4 Cu. Ft. Capacity
- ENERGY STAR® Qualified

Product Dimensions:

Height: 39
Width: 27
Depth: 31

Additional Information:

Use And Care
Installation Guide
Warranty

Available in:

White

INVESTED IN AMERICA

ADA Compliant

®Registered trademark/™ Trademark of Whirlpool, U.S.A. © 2016 Whirlpool Corporation. All Rights Reserved. All other trademarks are owned by their respective companies.

Because Whirlpool Corporation policy includes a continuous commitment to improve our products, we reserve the right to change materials and specifications without notice. We also reserve the right to discontinue or transition products without notice.

Manufacturer's Suggested Retail Price (MSRP) and Minimum Advertised Price (MAP) provided for reference purposes only. Dealer alone determines advertised and retail prices.