2K-P

Riverhead

#115

1,050 SQ FT *plus 168 sq. ft. of patio area*

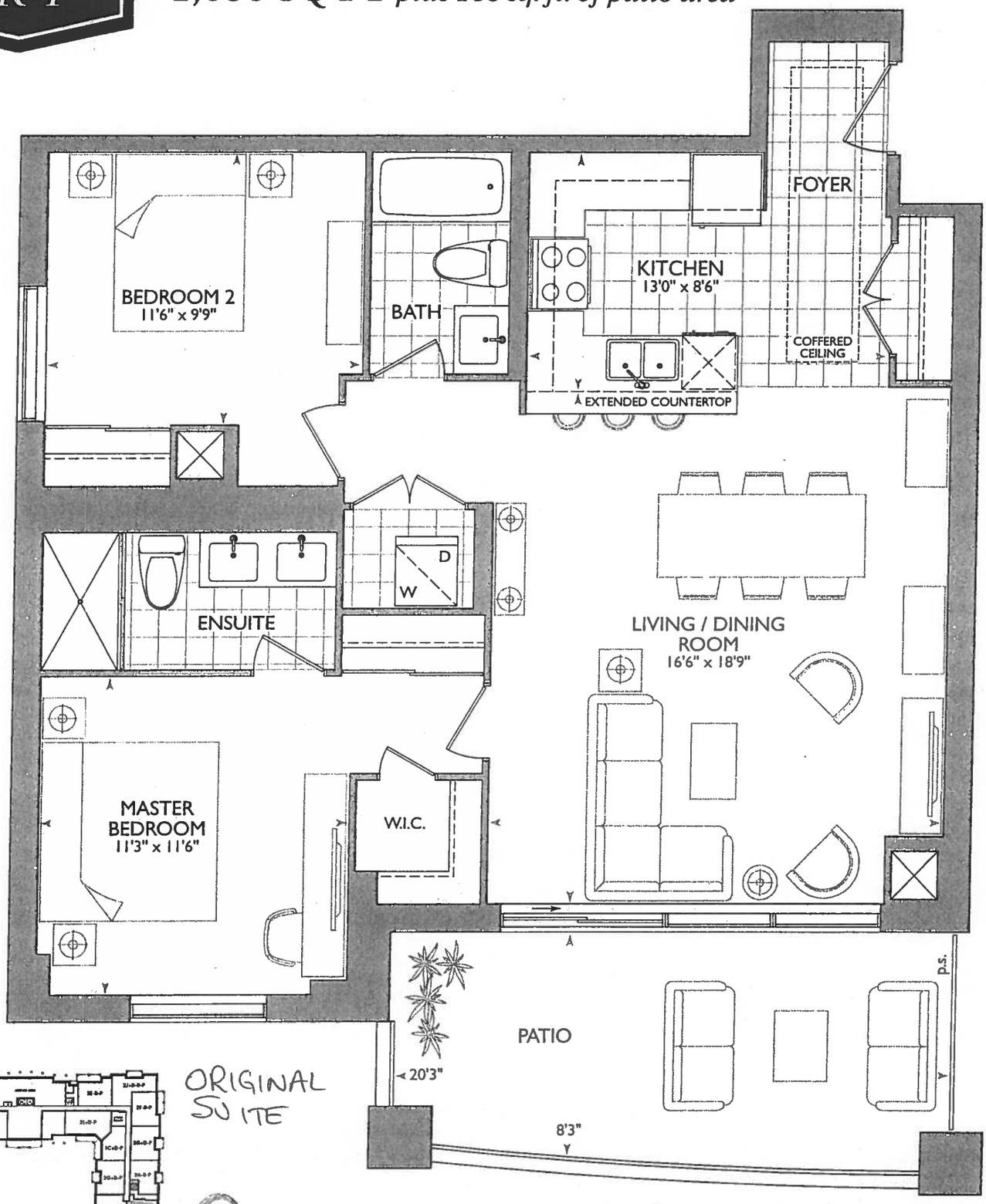

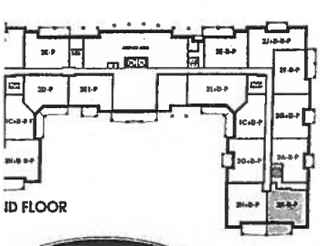

ORIGINAL SUITE

2

ROYAL PINE

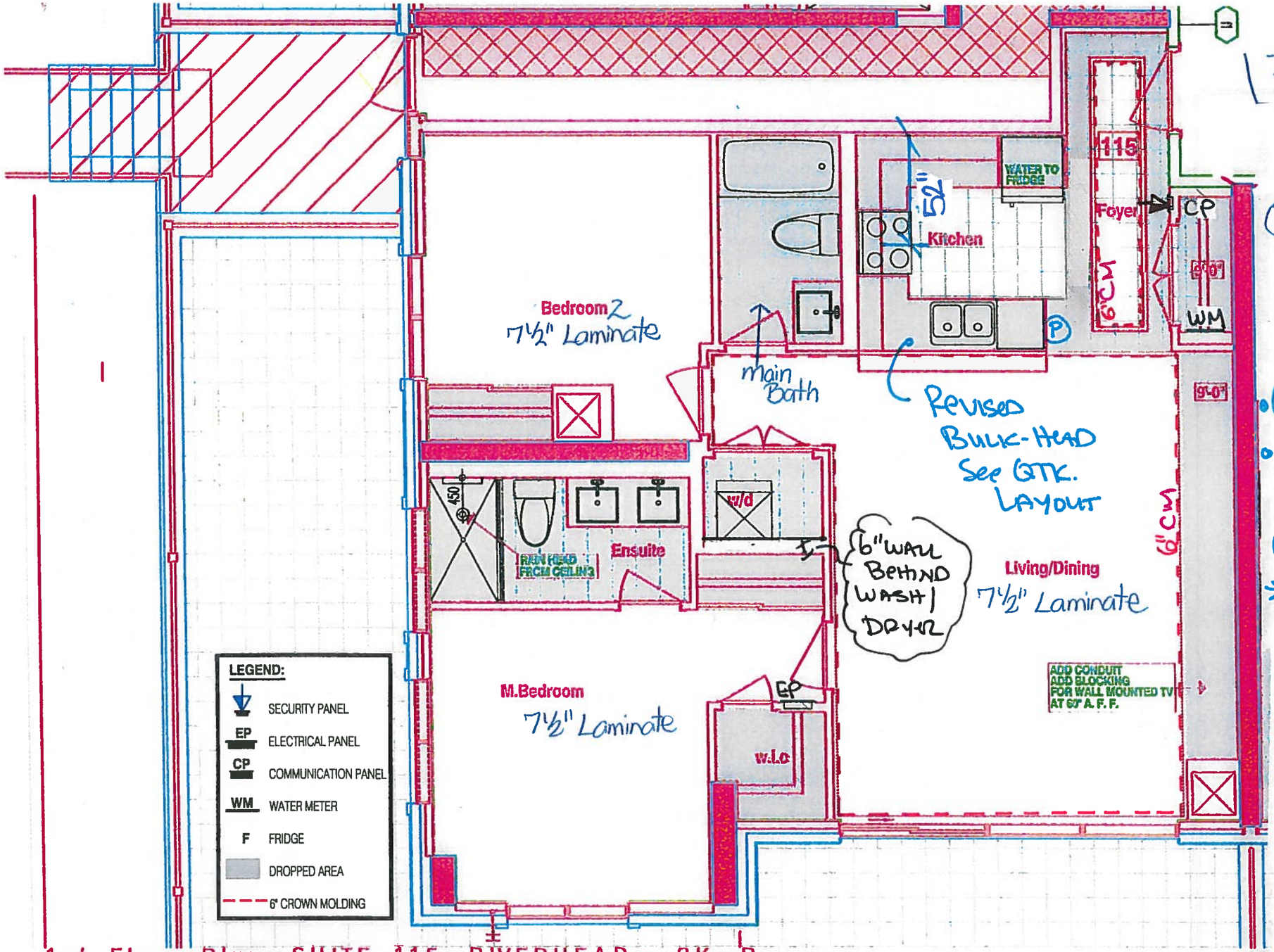

* Smooth Ceilings

October 19, 2017

KITCHEN - STD KITCHEN

- (4x) = Puck LIGHTS
- UPG#1 - Appliance PACKAGE

(P) PLUG, PENINSULA

* BULKHEAD TO INCREASE to 32" IN Depth. + check Height.
(special DRAWING)

- 52" STOVE PIPE center FROM FRIDGE WALL
- 98" SINK PIPE center FROM SINK WALL

RECEIVED Oct 19/17

1st Floor Plan - SUITE 115 - RIVERHEAD - 2K-P

HAMPTON PLACE • 25 Baker Hill Blvd • Aurora, ON • Sep 28, 2017

SITE COPY

CONSTRUCTION SUMMARY

Hampton Place

PURCHASERS: FILMORE LIWA TAN and ADELINE OACAN TAN

TEL: RES.: 647-892-2031

LOT NUMBER	PHASE	HOUSE TYPE	CLOSING DATE	
115	1	RIVERHEAD	10-Sep-18	

Offer Worksheet	PURCHASER TO RECEIVE $10,000(INCLUDES APPLICABLE TAXES) WORTH OF UPGRADES AT THE DECOR CENTER AT TIME OF COLOUR CHART. Note:
Offer Worksheet	ADDITIONAL - SINGLE PARKING UNIT Note:
Offer Worksheet	BUILDER AGREES TO PROVIDE SMOOTH CEILINGS THROUGHOUT Note:

DELETE:

PURCHASER TO RECEIVE $10000 (INCLUDES APPPLICABLE TAXES)WORTH OF UPGRADES AT THE DECOR CENTER AT TIME OF COLOUR CHART

INSERT:

- WATER LINE TO FRIDGE
- RAINHEAD FROM CEILING, FROM VENDORS SAMPLES ~~(MOEN 116651/AT2190/S176EP)~~ DELTA
- CONDUIT AND BLOCKING WALL MOUNTED TV (60 INCH ABOVE FINISHED FLOOR) IN LIVING AREA AS PER SKETCH
- PURCHASER NOW HAS $5537 INCLUDING APPLICABLE TAXES TO SPEND AT THE DECOR CENTER AT TIME OF COLOUR CHART

SITE COPY

CONSTRUCTION SUMMARY

Hampton Place

PURCHASERS: FILMORE LIWA TAN and ADELINE OACAN TAN

TEL: RES.: 647-892-2031

LOT NUMBER	PHASE	HOUSE TYPE	CLOSING DATE	
115	1	RIVERHEAD	10-Sep-18	

Date Added: 26-Oct-17 **Invoice Number: 6982**

1 - CLARIFICATION;
MASTER ENSUITE - Purchaser accepts & acknowledges the standard glass at master ensuite shower stall will NOT touch the ceiling and will receive a Standard Chrome Header. (See Sketch)

1 - PURCHASER AWARE AND ACCEPTS THAT ANY CHANGES MADE TO UPGRADES AFTER SIGNING THIS PURCHASERS EXTRA FORM ARE SUBJECT TO A MINIMUM ADMINISTRATION FEE OF $1,000 PLUS A 10% HOLDBACK FEE.
Note:

Date Added: 20-Oct-17 **Invoice Number: 6979**

1 - CLARIFICATION; REFER TO APAS;
LIVINGROOM - Standard electrical outlet to be installed at standard height beside conduit pipe Additional electrical outlet to be installed beside conduit pipe & standard cable rough-in Approx. 60" AFF (See Attached Sketch)
Note: As per Vince at Head-Office

1 - KITCHEN & BATHROOMS - Purchaser has DECLINED All Upgrades offered during decor appointment at the decor centre for kitchen & bathroom cabinetry. Standard Kitchen Layout & Standard Bathroom Vanities to be installed as per standard plan. (See Sketch)
Note:

1 - KITCHEN - CABINETRY - Install EXTENDED HEIGHT CABINETRY (49" High with E32 Crown Moulding) at kitchen. Cabinetry to Extend Up to the Underside of the Bulk-Head throughout kitchen, where applicable. (See Sketch)
Note:

1 - KITCHEN - Install Builders Standard Granite Countertop - BIANCO ANTICO - Throughout kitchen where applicable. (Does not include granite backsplash)
Note:

1 - KITCHEN - Install UPGRADE " M " EDGING - Throughout kitchen countertop, where applicable. (See Sketch)
Note:

1 - DISCLAIMER - GRANITE COUNTERTOP;
KITCHEN - Due to the many variables that can affect the pattern, colour and/or design and "pitting" of natural products, granite installed will not be identical to the samples displayed.
Note: Every effort is made to provide granite countertops as close as possible but the vendor is not responsible for results which differ from the sample displayed. All countertop surfaces may have seams, and product pattern and shade can change in areas containing seams.

1 - KITCHEN - Kitchen Backsplash - Install 1ST UPGRADE BACKSPLASH - 12x12 Mist Random Strip Glass Mosaics - Throughout kitchen, where applicable. (does not include behind the fridge or stove) (See Sketch)
Note:

1 - KITCHEN - Kitchen Sink - Install Upgrade Undermount Sink - BLANCO - Quatrus U Super Single Undermount Sink - Model # 401248 (See Sketch)
Note:

1 - KITCHEN - Kitchen Faucet - Install Standard Faucet - DELTA - Chrome Pull-Out Kitchen Faucet (Single Hole) - Model #469LF - Chrome (See Sketch)
Note:

1 - APPLIANCES - Install Upgrade Appliance Package - UPGRADE PACKAGE #1 - To be installed throughout suite, where applicable. (See Sketch)
Note:

1 - MASTER ENSUITE - Install Builders Standard Granite Countertop - BIANCO ANTICO - Throughout master ensuite vanity, where applicable. (Does not include granite backsplash)
Note:

SITE COPY

CONSTRUCTION SUMMARY

Hampton Place

PURCHASERS: FILMORE LIWA TAN and ADELINE OACAN TAN **TEL:** RES.: 647-892-2031

LOT NUMBER	PHASE	HOUSE TYPE	CLOSING DATE	
115	1	RIVERHEAD	10-Sep-18	

Date Added: 20-Oct-17 **Invoice Number: 6979**

1 - DISCLAIMER - GRANITE COUNTERTOP;
MASTER ENSUITE - Due to the many variables that can affect the pattern, colour and/or design and "pitting" of natural products, granite installed will not be identical to the samples displayed.
Every effort is made to provide granite countertops as close as possible but the vendor is not responsible for results which differ from the sample displayed. All countertop surfaces may have seams, and product pattern and shade can change in areas containing seams.

1 - CLARIFICATION;
MAIN BATH & MASTER ENSUITE - INSTALL Standard 3" Splash throughout all bathroom vanity countertops, where applicable. To Include; Main Bath and Master Ensuite (See Sketch)
Note:

1 - CLARIFICATION;
ALL BATHROOMS - DELETE Do Not Install / Supply / Credit Purhcaser for builders standard ceramic bathroom accessories (toilet paper, towel bar & soap dish) throughout all bathrooms where applicable.
Note: To Include; Main Bath & Master Ensuite (See Sketch)

1 - CLARIFICATION;
ALL BATHROOMS - Install Builders Standard Plumbing Fixtures throughout all bathrooms where applicable. To Include; Main Bath & Master Ensuite (See Sketch)
Note:

1 - CLARIFICATION - MASTER ENSUITE REFER TO APAS;
MASTER ENSUITE - Install Rain Shower Head from Ceiling at Master Ensuite shower stall - Install DELTA Shower Trim & Hansgrohe Slidebar with Handheld & Ceiling Mount Shower Head -
Note: Model # R10000 / T12020-CDN-27454002 / 27744000 / RP52382 / RP46870 / RP6025 / R11000 / T11800 - Chrome (See Attached Sketch)

1 - BONUS PACKAGE - PURCHASER HAS APPLIED $5,537.00 (Includes Taxes) WORTH OF UPGRADE PROMOTIONAL PACKAGE TOWARDS THE PURCHASE OF UPGRADES COMPLETED AT THE DECOR CENTRE.
Note:

1 - PURCHASER HAS ATTENDED A COLOR APPOINTMENT AT THE DECOR CENTRE AND HAS DECLINED ANY ADDITIONAL UPGRADES. Purchaser accepts and acknowledges that there will be no further changes/additions/deletions to be made upon signing on October 19,2017
Note:

1 - PURCHASER AWARE AND ACCEPTS THAT ANY CHANGES MADE TO UPGRADES AFTER SIGNING THIS PURCHASERS EXTRA FORM ARE SUBJECT TO A MINIMUM ADMINISTRATION FEE OF $1,000 PLUS A 10% HOLDBACK FEE.
Note:

This Document is Extremely Time Sensitive - Printed 22 Jan 18 at 17:07

* INTERIOR COLOUR SCHEME *

Purchasers	Decor Consultant	Model Type	Telephone Res. / Bus	Project	Closing Date	Unit
FILMORE LIWA TAN & ADELINE OACAN TAN	Melissa Di Marino	RIVERHEAD	(647) 892-2031 /	Hampton Place	10/09/2018	115

	Flooring: Description	Wall Tile: Main	Wall Tile: Accent/Insert	Wall Tile: Pattern
MASTER ENSUITE ✓	13x13 SEAL GREY (STD)	8x10 GOLF GRIGIO (STD)	NONE	NONE
MAIN BATHROOM ✓	13x13 SEAL GREY (STD)	8x10 GOLF GRIGIO (STD)	NONE	NONE
POWDER ROOM	N/A	N/A	N/A	N/A
KITCHEN / DINETTE ✓	20x20 CALACATA GRIS (STD) (STRAIGHT) ✓	12x12 MistRandomStrip GlassMosaic(Upg)	NONE	NONE
FOYER ✓	20x20 CALACATA GRIS (STD) (STRAIGHT)	N/A	N/A	N/A
LAUNDRY ✓	8x8 BEHRAM PINK (STD)	N/A	N/A	N/A
LIVING ROOM ✓	7 1/2" TorleysForest -NorthernCordillera 9687-P (Std)			
DINING ROOM ✓	7 1/2" TorleysForest -NorthernCordillera 9687-P (Std)			
DEN	N/A			
MASTER BEDROOM ✓	7 1/2" TorleysForest -NorthernCordillera 9687-P (Std)			
BEDROOM 2 ✓	7 1/2" TorleysForest -NorthernCordillera 9687-P (Std)			
BEDROOM 3	N/A			

Notes

Consultant: Melissa Di Marino

Purchaser: FILMORE LIWA TAN

Purchaser: ADELINE OACAN TAN

Vendor: Hampton Place

Lot: 115 Project: Hampton Place Model: RIVERHEAD

Printed Oct 19, 2017 3:37 pm

* INTERIOR COLOUR SCHEME *

Purchasers	Decor Consultant	Model Type	Telephone Res. / Bus	Project	Closing Date	Unit
FILMORE LIWA TAN & ADELINE OACAN TAN	Melissa Di Marino	RIVERHEAD	(647) 892-2031 /	Hampton Place	10/09/2018	115

CABINETRY, VANITIES AND COUNTERTOPS

	Style	Countertop	Counter Edge	Handle / Knob
MAIN BATHROOM	CATEGORY 1 - FIBERBOARD - WHITE QT 1203 (STD)	ASPEN TERRA WHITE (STD)	" A " EDGE (STD)	B603-SC
MASTER ENSUITE	CATEGORY 1 - FIBERBOARD - WHITE QT 1203 (STD)	BIANCO ANTICO GRANITE (STD)	" A " EDGE (STD)	B603-SC
POWDER ROOM	N/A	N/A	N/A	N/A
KITCHEN / DINETTE	CATEGORY 2- MAPLE - PISTACHIO QT 2503 (STD)	BIANCO ANTICO GRANITE (STD)	" M " EDGE (UPG)	B603-SC
LAUNDRY ROOM	N/A	N/A	N/A	N/A

APPLIANCE PACKAGE

Upgrade Package #1

Std 31in Opening

PLUMBING FIXTURES

KITCHEN

Sink Model	UPG - Blanco Super Single #401248
Sink Faucet	STANDARD

TOILETS

Master Ensuite	STANDARD
Main Bathroom	STANDARD
Powder Room	N/A

VANITY FAUCETS

Master Ensuite	STANDARD
Main Bathroom	STANDARD
Powder Room	N/A

VANITY SINKS

Master Ensuite	STANDARD
Main Bathroom	STANDARD
Powder Room	N/A

SHOWER STALL / TUBS

Master Ensuite Shower Stall	STANDARD
Master Ensuite Tub	N/A
Main Bathroom Tub	STANDARD

Trim

Baseboard & Casing	STANDARD	Levers	STANDARD
Interior Doors	STANDARD - CARRARA,SMOOTH	Door Height	STANDARD

Cornice Moulding / Medalion

Foyer	STANDARD - # CTR-611
Living Room	STANDARD - # CTR-611
Dining Room	STANDARD - # CTR-611
Den	N/A
Master Bedroom	NONE
Bedroom 2	NONE
Bedroom 3	N/A

Fireplace

Fireplace	N/A
Location Flooring	N/A
Style	N/A
Finish	N/A
Marble	N/A
Hearth	N/A

MISC. INSTALLATIONS

Ceramic Accessories (installed by Vendor)
○ Yes ● No

Bathroom Mirrors (installed by Vendor)
● Yes ○ No

Wire Shelving - Closet (installed by Vendor)
● Yes ○ No

Paint Throughout

Walls	Trim
STANDARD - OYSTER WHITE	STANDARD - WHITE

Page 2 of 3

Decor Consultant: Melissa Di Marino Purchaser: FILMORE LIWA TAN Purchaser: ADELINE OACAN TAN Vendor: Hampton Place

Printed Oct 19, 2017 3:37 pm

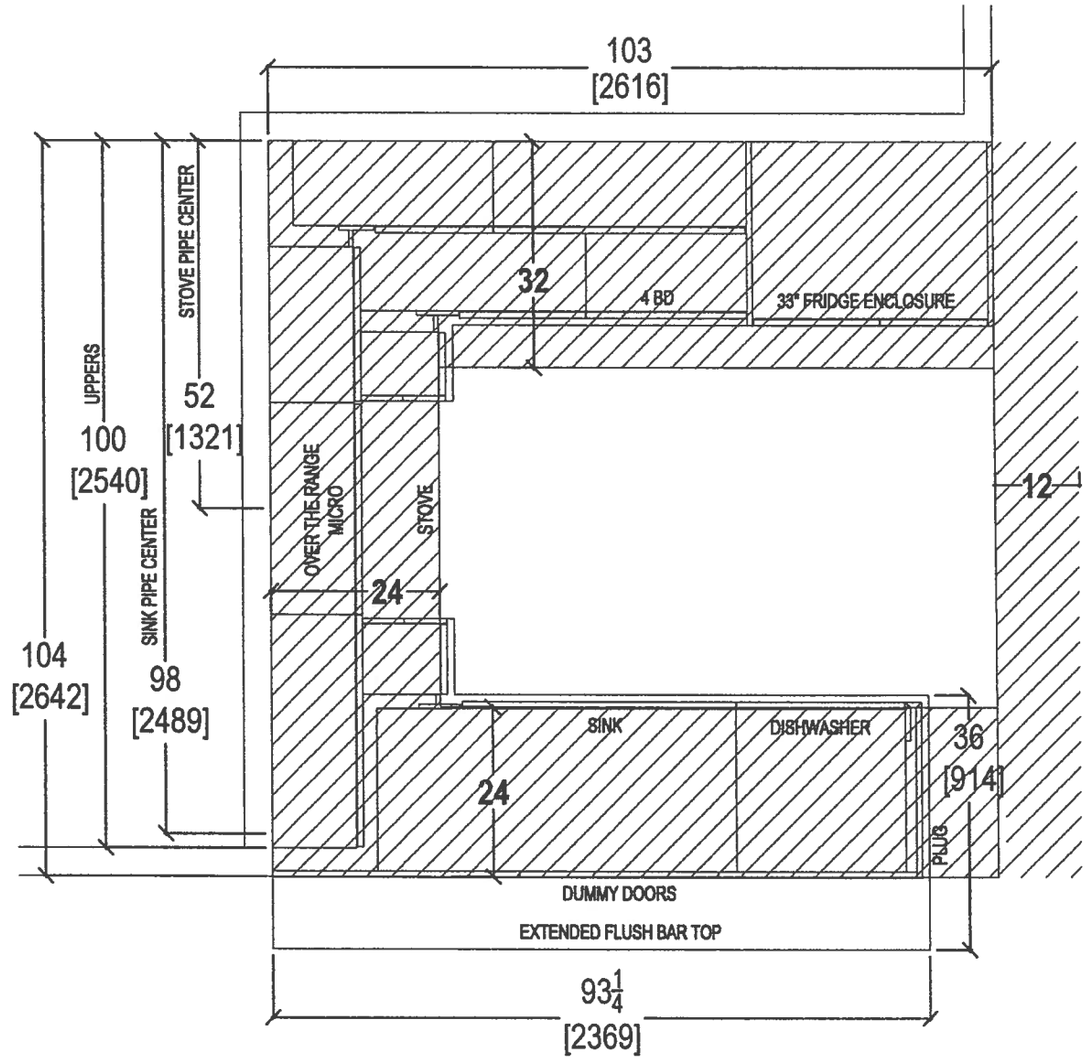

QTK

your kitchen. your taste.

80 SANTE DRIVE, VAUGHAN, ON L4K 3C4,
T: 416.746.1811 F:905.761.5901

CLIENT: ROYAL PINE HOMES	JOB NAME: UNIT 115 HMP	ROOM: KITCHEN FLOOR PLAN	DRAWN BY: SK	COMMENTS:
SITE: HAMPTON PLACE	DOOR STYLE: __	DOOR HANDLE: __	SCALE: 1/2" = 1' - 0"	*PLEASE NOTE ALL DIMENSIONS ARE NOT FINAL AND ARE SUBJECT TO CHANGE UPON FINAL SITE MEASURE*
PHONE: __	FINISH: __	DRW HANDLE: __	DATE: APRIL 21,2018	
EMAIL: __	SPECIES: __	TOP: __	PAGE: __	

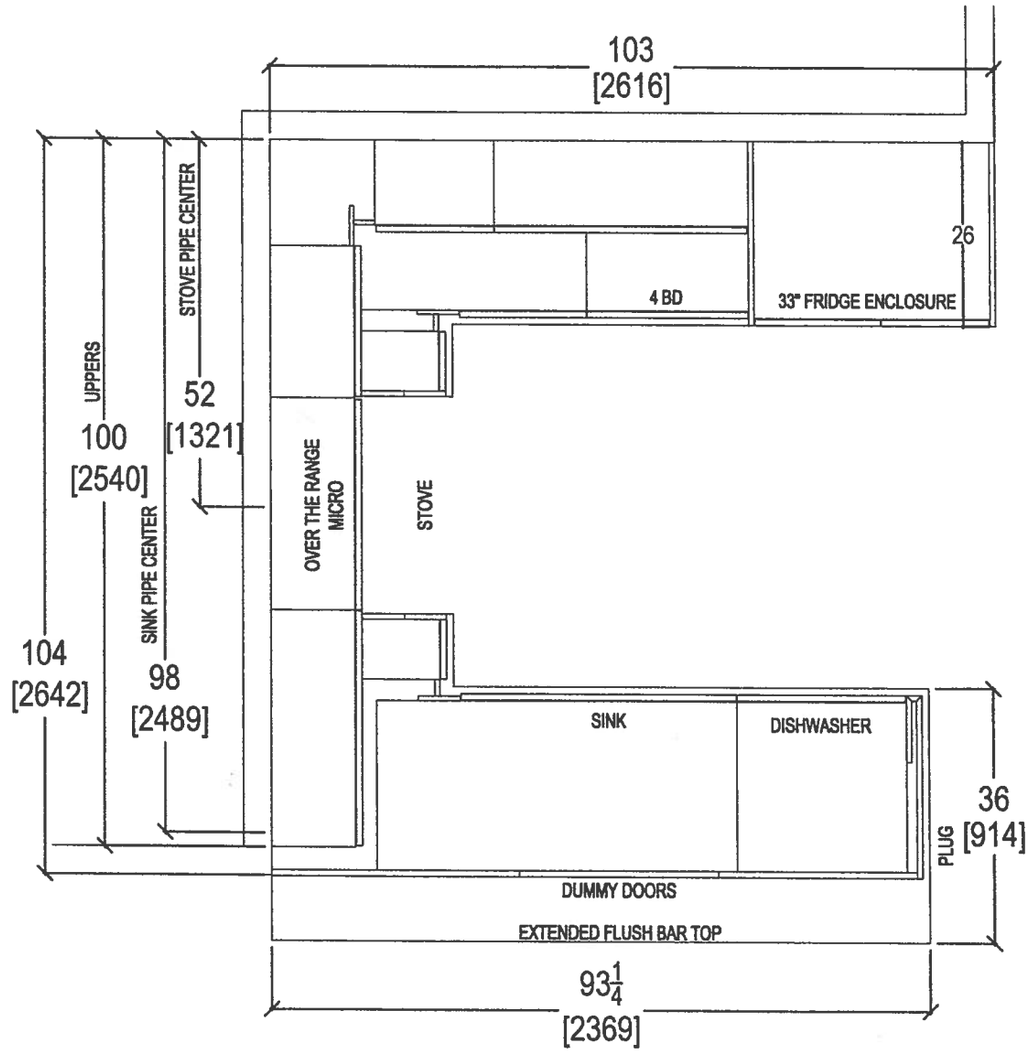

your kitchen. your taste.
80 SANTE DRIVE, VAUGHAN, ON L4K 3C4,
T: 416.746.1811 F:905.761.5901

CLIENT: ROYAL PINE HOMES	JOB NAME: UNIT 115 HMP	ROOM: KITCHEN FLOOR PLAN	DRAWN BY: SK	COMMENTS:
SITE: HAMPTON PLACE	DOOR STYLE: __	DOOR HANDLE: __	SCALE: 1/2" = 1' - 0"	*PLEASE NOTE ALL DIMENSIONS ARE NOT FINAL AND ARE SUBJECT TO CHANGE UPON FINAL SITE MEASURE*
PHONE: __	FINISH: __	DRW HANDLE: __	DATE: APRIL 21,2018	
EMAIL: __	SPECIES: __	TOP: __	PAGE: __	

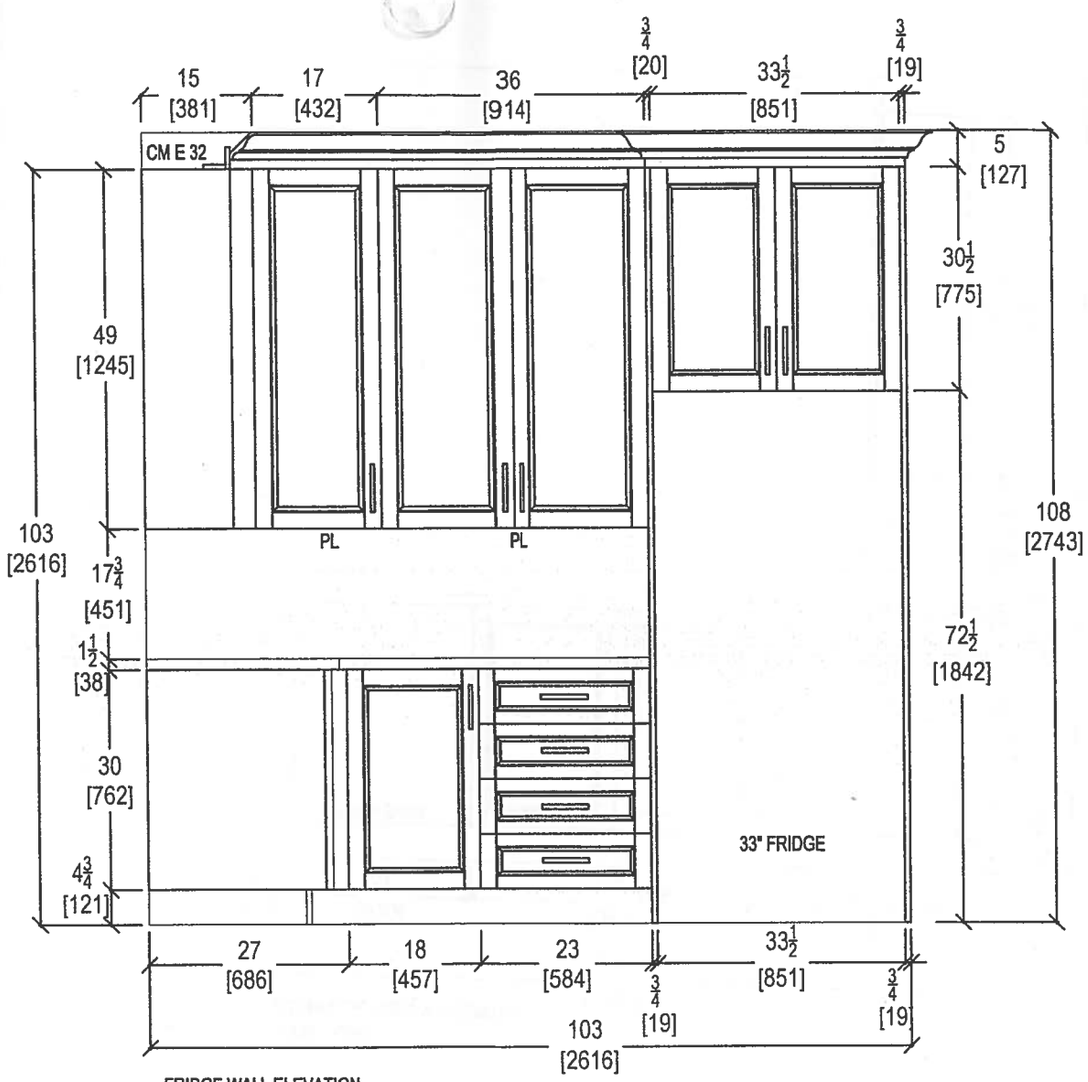

FRIDGE WALL ELEVATION

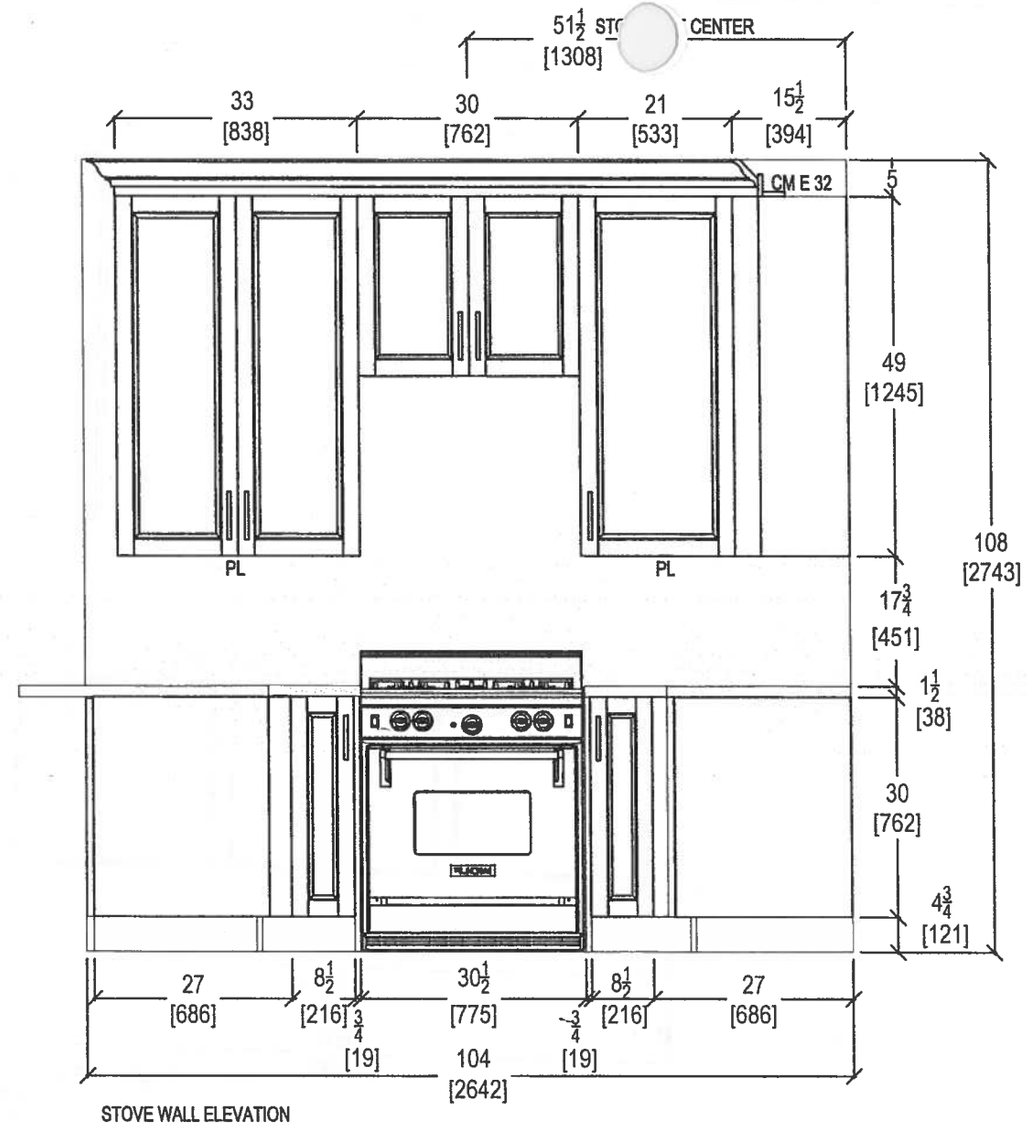

STOVE WALL ELEVATION

QTK
your kitchen. your taste.
80 SANTE DRIVE, VAUGHAN, ON L4K 3C4,
T: 416.746.1811 F:905.761.5901

CLIENT: ROYAL PINE HOMES	JOB NAME: UNIT 115 HMP	ROOM: KITCHEN	DRAWN BY: SK
SITE: HAMPTON PLACE	DOOR STYLE: __	DOOR HANDLE: __	SCALE: 1/2" = 1' - 0"
PHONE: __	FINISH: __	DRW HANDLE: __	DATE: APRIL 21,2018
EMAIL: __	SPECIES: __	TOP: __	PAGE: __

COMMENTS:

PLEASE NOTE ALL DIMENSIONS ARE NOT FINAL AND ARE SUBJECT TO CHANGE UPON FINAL SITE MEASURE

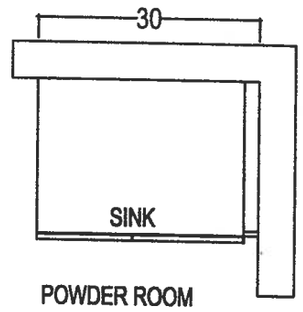

POWDER ROOM

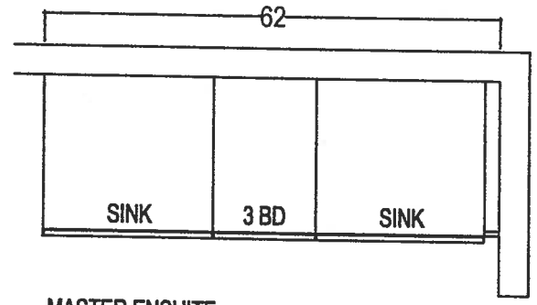

MASTER ENSUITE

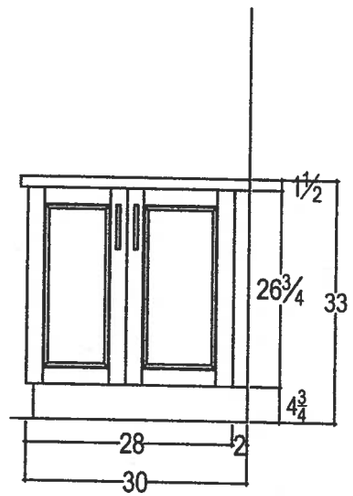

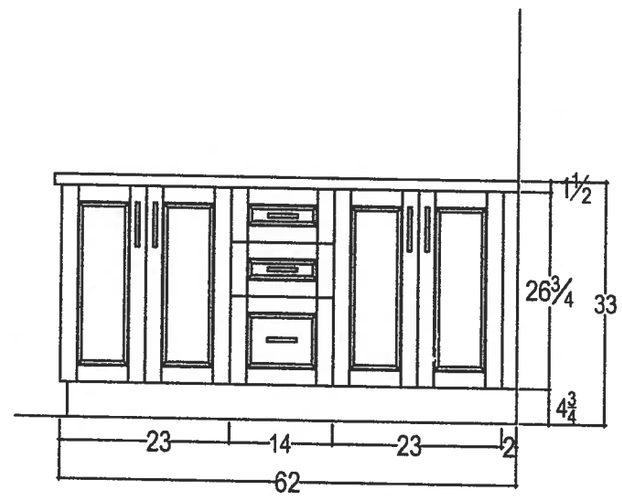

QTK
your kitchen. your taste.
80 SANTE DRIVE, VAUGHAN, ON L4K 3C4,
T: 416.746.1811 F:905.761.5901

CLIENT: ROYAL PINE HOMES	JOB NAME: UNIT 115 HMP	ROOM: VANITIES	DRAWN BY: SK	COMMENTS:
SITE: HAMPTON PLACE	DOOR STYLE: __	DOOR HANDLE: __	SCALE: 1/2" = 1' - 0"	***PLEASE NOTE ALL DIMENSIONS ARE NOT FINAL AND ARE SUBJECT TO CHANGE UPON FINAL SITE MEASURE***
PHONE: __	FINISH: __	DRW HANDLE: __	DATE: OCT 23, 2017	
EMAIL: __	SPECIES: __	TOP: __	PAGE: __	

G

Suite 115
Hampton

October 19, 2017

CONNOLLY Marble & Granite Ltd.

EDGE DETAILS

004

A.

STRAIGHT EDGE
(STANDARD - 3/4")

Standard:

Main Bath
Master Ensuite

I.

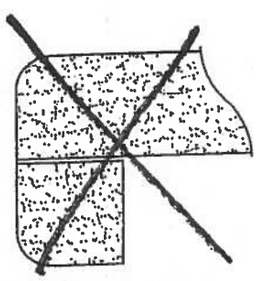

DOUBLE TOP "D" EDGE
(STANDARD - 1 1/2")

M.

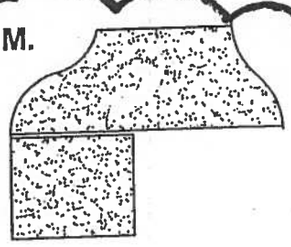

OGEE - SQUARE EDGE
(MED./HIGH - 1 1/2")

Upgrade:

Kitchen

EDGING UP-GRADE OPTIONS

Suite 115
Hampton

Living Room

CONDUIT:

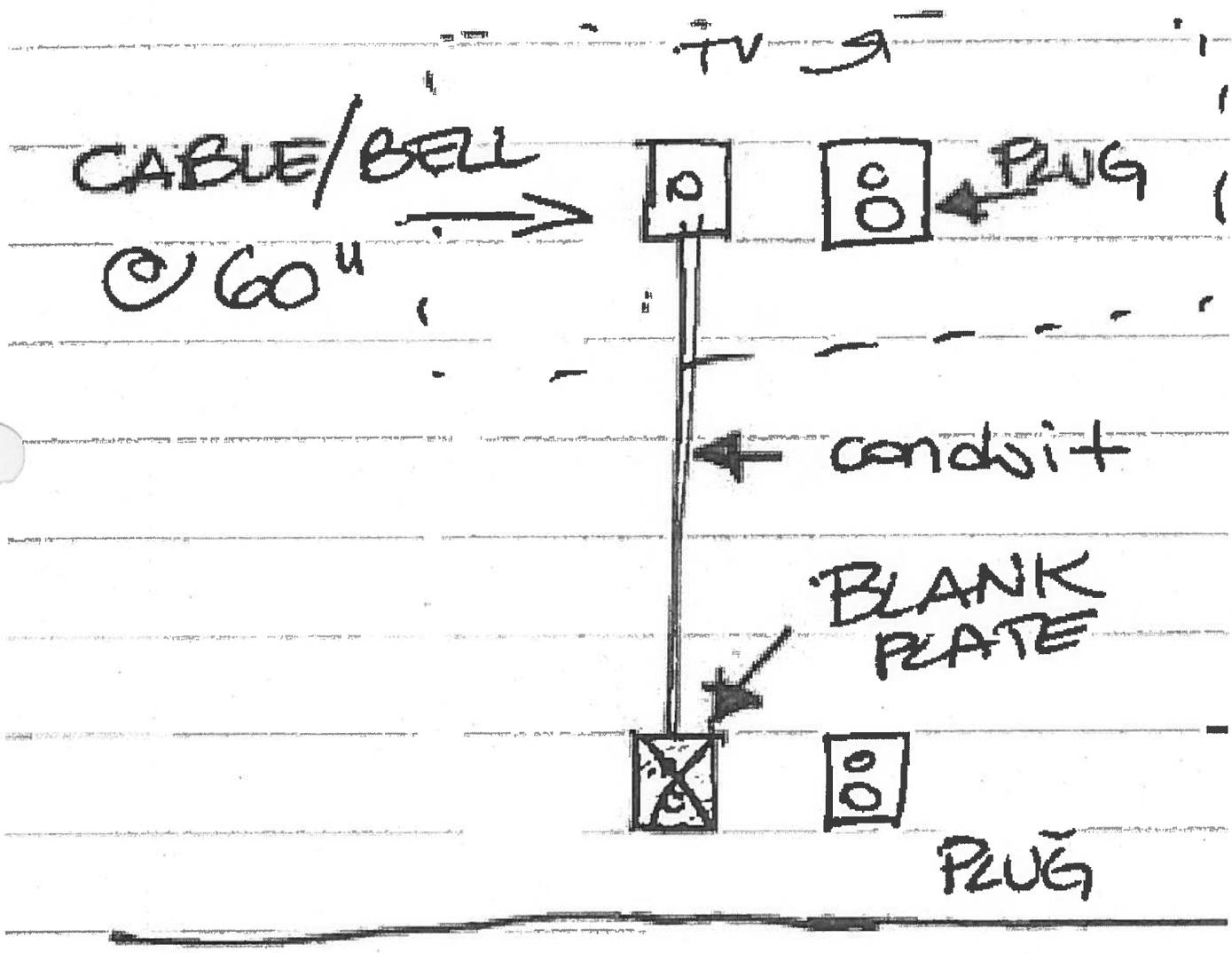

Suite 115
Hampton Kitchen

Product Specification Sheet

BLANCO QUATRUS U 1 SUPER SINGLE

Satin brushed finish

PRODUCT DIMENSIONS

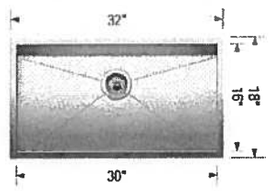

BLANCO QUATRUS U 1 SUPER SINGLE	Colour Finish	Model No.	FEATURES / SPECIFICATIONS
	Satin brushed finish	401248	• German designed and engineered • Premium 304 series, 18 gauge stainless steel • 18/10 chrome-nickel content for exceptional lustre, durability and strength • Compact sized model • Rear-positioned drain hole for maximum usable bowl and cabinet storage space • Zero-radius corners, X-pattern drain grooves • 3 1/2" (90 mm) stainless steel strainer included • Undermount clips, template included • Limited Lifetime Warranty

DESIGN AND PLANNING TIPS

Cabinet Size: 36" (915 mm)
Bowl depth: 9" (230 mm)
Depending on cabinet construction, a different cabinet size may be required. Consult the cabinet manufacturer.

WARRANTY

Limited Lifetime warranty

Code/Standards Compliance

BLANCO sinks and faucets are third-party tested and certified to CSA, cUPC, ANSI/ASME and NSF standards and listed by applicable certifcation bodies. For more information on individual product listings, contact our office or listing organization.

BLANCO CANADA
100 Corporation Drive
Brampton, ON L6S 6B5

Tel: 905 494 2400
Fax: 905 494 2425
www.blancocanada.com

Toll Free: 1 877 425 2626
Toll Free: 1 877 825 2626

© 2016 BLANCO CANADA

Suite 115
Hampton

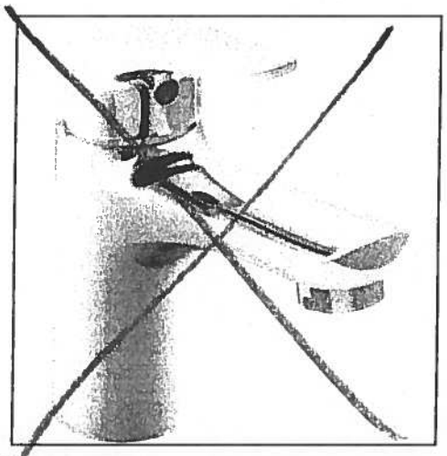

Delta Wynne Chrome Single Lever Lavatory Faucet With Pop Up #534LF

RAIN HEAD FROM CIELING

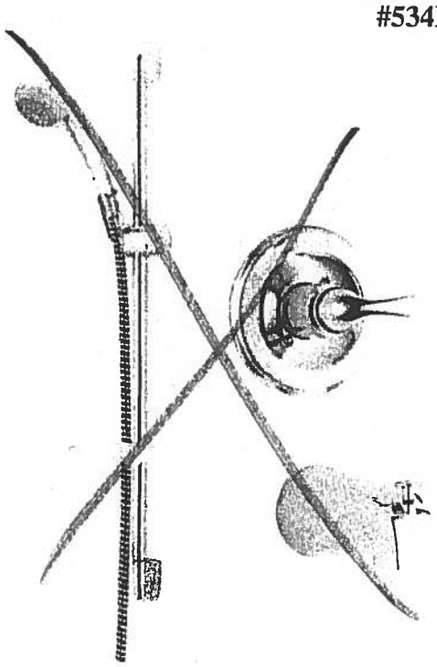

Delta Shower Trim with Tub Spout and Hansgrohe Slide Bar with Handheld #R10000/T13020-CDN/2001-TP/27454002/ 27744000

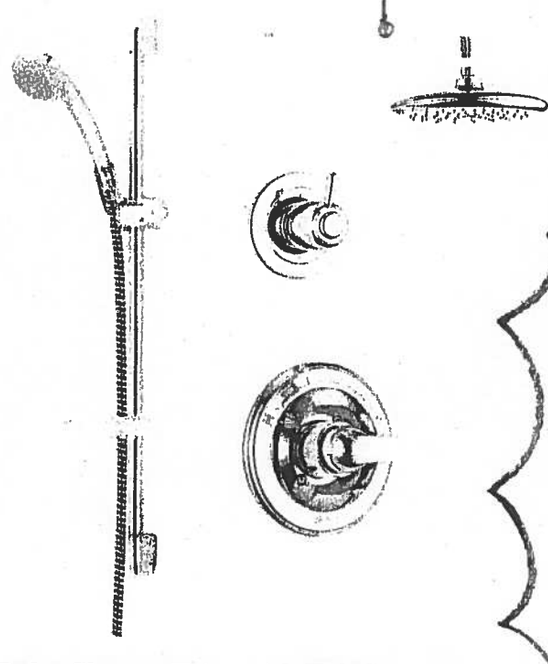

Delta Shower Trim with ~~Tub Spout~~ and Hansgrohe Slide Bar with Handheld and Ceiling ~~Wall~~ Mount Showerhead #R10000/T13020-CDN/27454002/ 27744000/RP52382/RP46870/RP6025/ R11000/T11800

Centon Sales Corp 400 Matheson Blvd Unit # 30, Mississauga, Ont 4Z 1N8 Tel: 905-629-7072 Fax: 905-629-2131

Master Ensuite
Shower stall

Suite 115
Hampton
Upgrade
Package 1

WRB322DMBM

Whirlpool®

http://www.whirlpool.com

33-inches wide Bottom-Freezer Refrigerator with SpillGuard™ Glass Shelves - 22 cu. ft

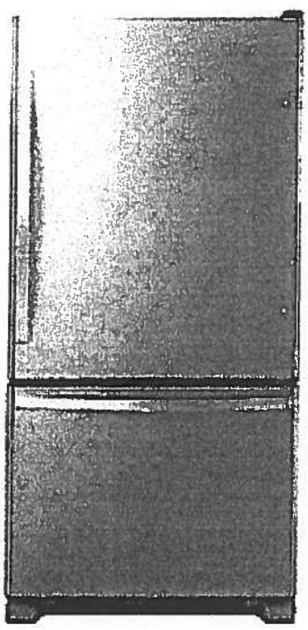

Key Features:

- SpillGuard™ Glass Shelves
- Adaptive Defrost
- FreshFlow™ Produce Preserver
- LED Interior Lighting
- ENERGY STAR® Qualified

Product Dimensions:

Height: 70
Width: 32 5/8
Depth: 33 3/8

Electrical Requirements:

15

Additional Information:

Use And Care Guide
Dimension Guide
Energy Guide
Warranty Certificate

INVESTED IN AMERICA

ENERGY STAR

®Registered trademark/™ Trademark of Whirlpool, U.S.A. © 2016 Whirlpool Corporation. All Rights Reserved.
All other trademarks are owned by their respective companies.
Because Whirlpool Corporation policy includes a continuous commitment to improve our products, we reserve the right to change materials and specifications without notice. We also reserve the right to discontinue or transition products without notice.
Manufacturer's Suggested Retail Price (MSRP) and Minimum Advertised Price (MAP) provided for reference purposes only. Dealer alone determines advertised and retail prices.
Created On: Tuesday, March 14, 2017 11:30:08

Suite 115
Hampton
Upgrade Package!

WEE745H0FS

Whirlpool®

http://www.whirlpool.com

6.4 Cu. Ft. Slide-In Electric Range with True Convection

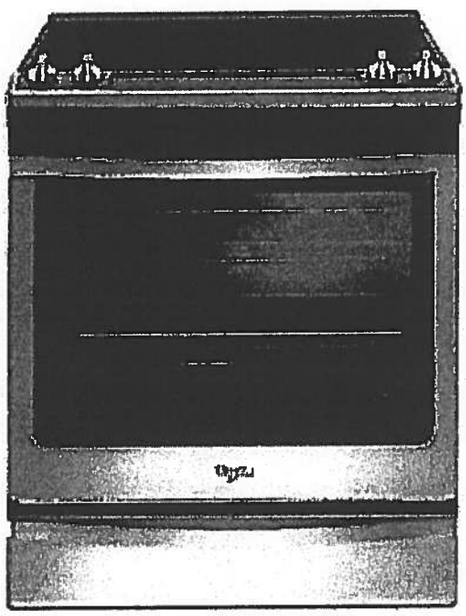

Key Features:

- Frozen Bake™ Technology
- True Convection Cooking
- FlexHeat™ Triple Radiant Element
- Convection Conversion
- AquaLift® Self-Cleaning Technology
- Temperature Sensor
- Rapid Preheat
- 6.4 Cu. Ft. Capacity
- Easy-Wipe Ceramic Glass Cooktop
- Large Oven Window
- Max Capacity Rack
- Hidden Bake Element

Product Dimensions:

Height: 36

Width: 29 7/8

Additional Information:

Use And Care Guide

Dimension Guide

Installation Guide

Warranty Certificate

INVESTED IN AMERICA

ADA Compliant

®Registered trademark/TM Trademark of Whirlpool, U.S.A. © 2016 Whirlpool Corporation. All Rights Reserved. All other trademarks are owned by their respective companies.
Because Whirlpool Corporation policy includes a continuous commitment to improve our products, we reserve the right to change materials and specifications without notice. We also reserve the right to discontinue or transition products without notice.
Manufacturer's Suggested Retail Price (MSRP) and Minimum Advertised Price (MAP) provided for reference purposes only. Dealer alone determines advertised and retail prices.
Created On: Friday, January 27, 2017 10:46:47

Suite 115
Hampton Upgrade
Package 1

YWMH76719CS

9 cu. ft. Microwave Hood Combination with TimeSavor™ Plus True Convection

http://www.whirlpool.com

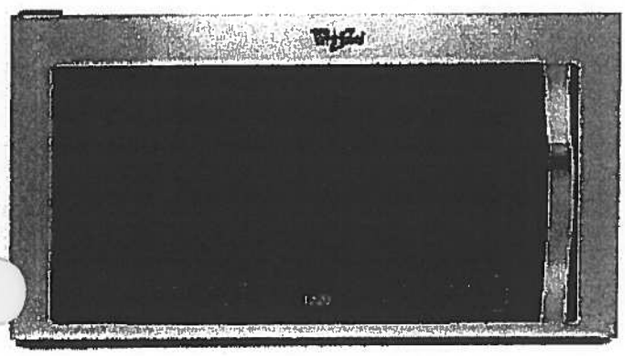

Key Features:

- TimeSavor™ Plus True Convection Cooking System
- Steam Cooking
- Sensor Cooking
- AccuPop™ Cycle
- CleanRelease® Non-Stick Interior
- SteamClean Option
- Integrated Hidden Vent and Console
- Auto Adapt Fan
- Recessed, Stoppable Glass Turntable
- Universal Microwave Steamer
- 1.9 cu. ft. Capacity
- 1,100 Watts Cooking Power

Product Dimensions:

Height: 17 1/8
Width: 29 15/16
Depth: 18 1/2

Electrical Requirements:

15 or 20. 120 V.

Additional Information:

Use And Care Guide
Installation Guide
Warranty Certificate

Available in:

Stainless Steel

ENERGY STAR

®Registered trademark/TM Trademark of Whirlpool, U S A. © 2013 Whirlpool Corporation. All Rights Reserved
All other trademarks are owned by their respective companies.
Because Whirlpool Corporation policy includes a continuous commitment to improve our products, we reserve the right to change materials and specifications without notice. We also reserve the right to discontinue or transition products without notice.
Manufacturer's Suggested Retail Price (MSRP) and Minimum Advertised Price (MAP) provided for reference purposes only. Dealer alone determines advertised and retail prices.
Created On: Monday, March 14, 2016 13:16:48

Suite 115
Hampton Upgrade Package 1

WDTA50SAHZ

Whirlpool®

http://www.whirlpool.com

Contemporary Design. Stainless Steel Tub Dishwasher with TotalCoverage Spray Arm

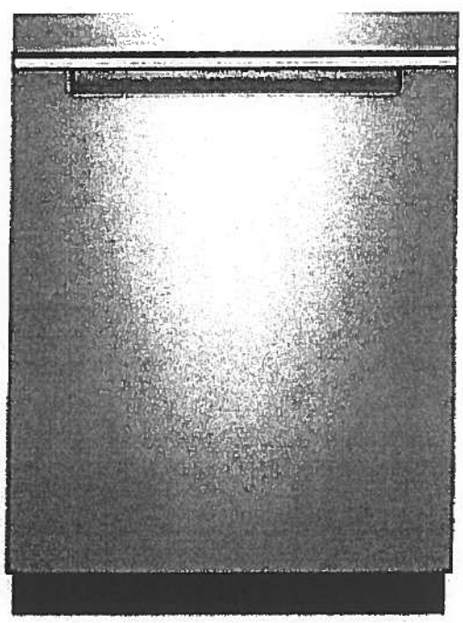

Key Features:

- Sensor Cycle
- TotalCoverage Spray Arm
- 1-Hour Wash Cycle
- Tap Touch Controls

Product Dimensions:

Height: 34 1/2
Width: 23 7/8
Depth: 24 1/2

Additional Information:

Use And Care
Dimension Guide
Installation Guide
Energy Guide
Warranty

Available in:

● Black

Fingerprint Resistant Sunset Bronze

Fingerprint Resistant Black Stainless

○ White

Fingerprint Resistant Stainless Steel

INVESTED IN AMERICA

ENERGY STAR

®Registered trademark/TM Trademark of Whirlpool, U.S.A. © 2016 Whirlpool Corporation. All Rights Reserved. All other trademarks are owned by their respective companies.

Because Whirlpool Corporation policy includes a continuous commitment to improve our products, we reserve the right to change materials and specifications without notice. We also reserve the right to discontinue or transition products without notice

Manufacturer's Suggested Retail Price (MSRP) and Minimum Advertised Price (MAP) provided for reference purposes only. Dealer alone determines advertised and retail prices

Suite 115
Hampton Upgrade
Package 1

WFW75HEFW

5 cu. ft. Front Load Washer with Precision Dispense

Whirlpool HOME APPLIANCES

http://www.whirlpool.com

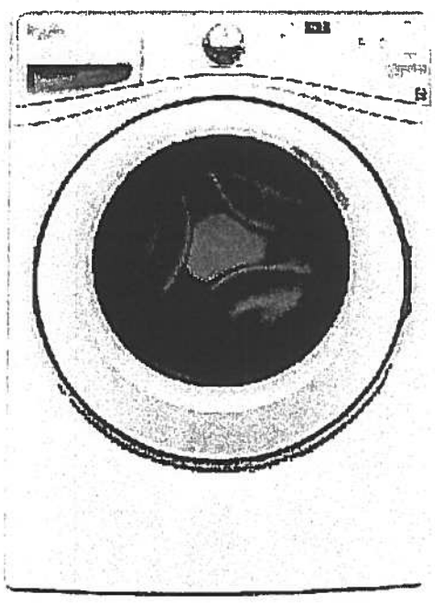

Key Features:

- Precision Dispense
- Adaptive Wash Technology
- Smooth Wave Stainless Steel Wash Basket
- 4.5 cu. ft. Capacity
- ENERGY STAR® Qualified

Product Dimensions:

Height: 39 3/4
Width: 27
Depth: 33 5/16

Electrical Requirements:

15 or 20. 120 V.

Additional Information:

Use And Care Guide
Dimension Guide
Installation Guide
Energy Guide
Warranty Certificate

INVESTED IN AMERICA

ENERGY STAR

ADA Compliant

®Registered trademark/TM Trademark of Whirlpool, U.S.A. ©2013 Whirlpool Corporation. All Rights Reserved. All other trademarks are owned by their respective companies.
Because Whirlpool Corporation policy includes a continuous commitment to improve our products, we reserve the right to change materials and specifications without notice. We also reserve the right to discontinue or transition products without notice.
Manufacturer's Suggested Retail Price (MSRP) and Minimum Advertised Price (MAP) provided for reference purposes only. Dealer alone determines advertised and retail prices.
Created On: Wednesday, March 23, 2016 11:51:03

Suite 115
Hampton Upgrade
Package 1

YWED75HEFW

Whirlpool®

http://www.whirlpool.com

8.5 cu. ft. Duet® High Efficiency Front Load Electric Dryer with ENERGY STAR®

MSRP: $0.00

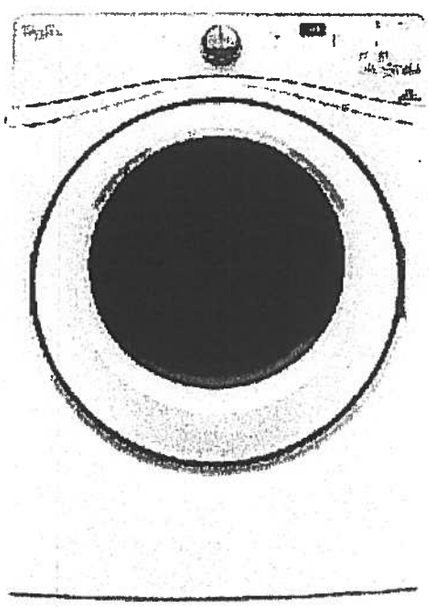

Key Features:

- Advanced Moisture Sensing System
- Quad Baffles
- Tap Touch Controls with Memory
- EcoBoost™ Option
- Wrinkle Shield™ Plus Option
- Undercounter Installation
- 7.4 Cu. Ft. Capacity
- ENERGY STAR® Qualified

Product Dimensions:

Height: 39
Width: 27
Depth: 31

Additional Information:

Use And Care
Installation Guide
Warranty

Available in:

White

INVESTED IN AMERICA

ADA Compliant

®Registered trademark/TM Trademark of Whirlpool, U.S.A. © 2016 Whirlpool Corporation. All Rights Reserved. All other trademarks are owned by their respective companies.

Because Whirlpool Corporation policy includes a continuous commitment to improve our products, we reserve the right to change materials and specifications without notice. We also reserve the right to discontinue or transition products without notice.

Manufacturer's Suggested Retail Price (MSRP) and Minimum Advertised Price (MAP) provided for reference purposes only. Dealer alone determines advertised and retail prices.