Noyac Bay

1,121 SQ FT *plus 81 sq. ft. of balcony area*

SUITE 407.
ORIGINAL LAYOUT
INVENTORY SUITE
(OLD)

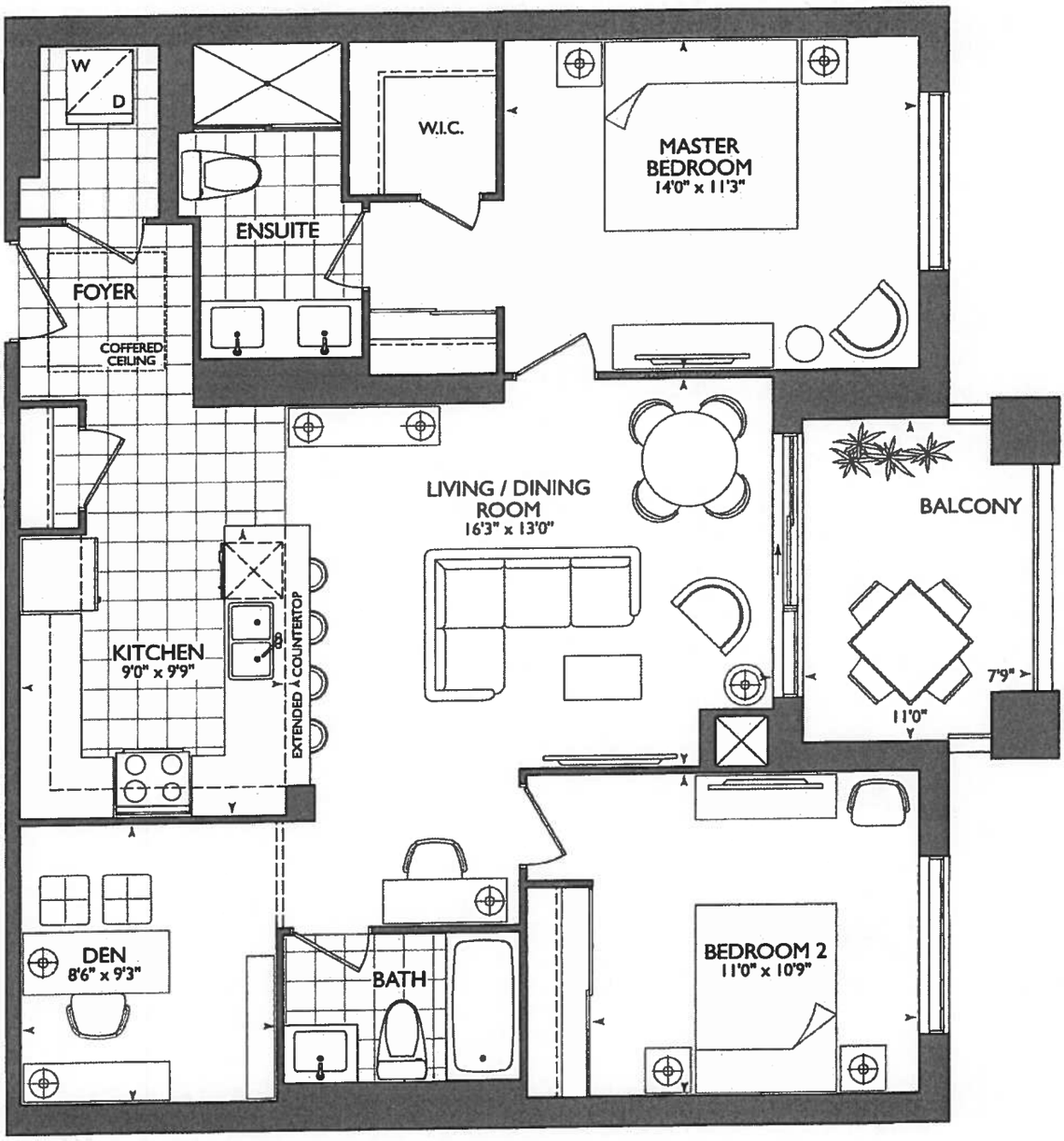

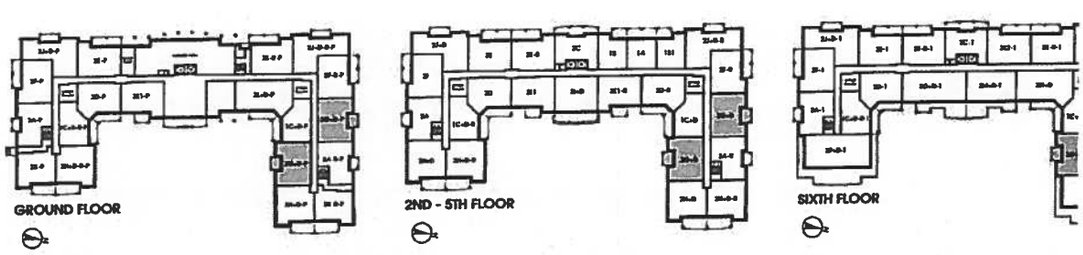

Noyac Bay

1,121 SQ FT *plus 76sq. ft. of balcony area*

SUITE 407
ORIGINAL LAYOUT
INVENTORY SUITE
(NEW).

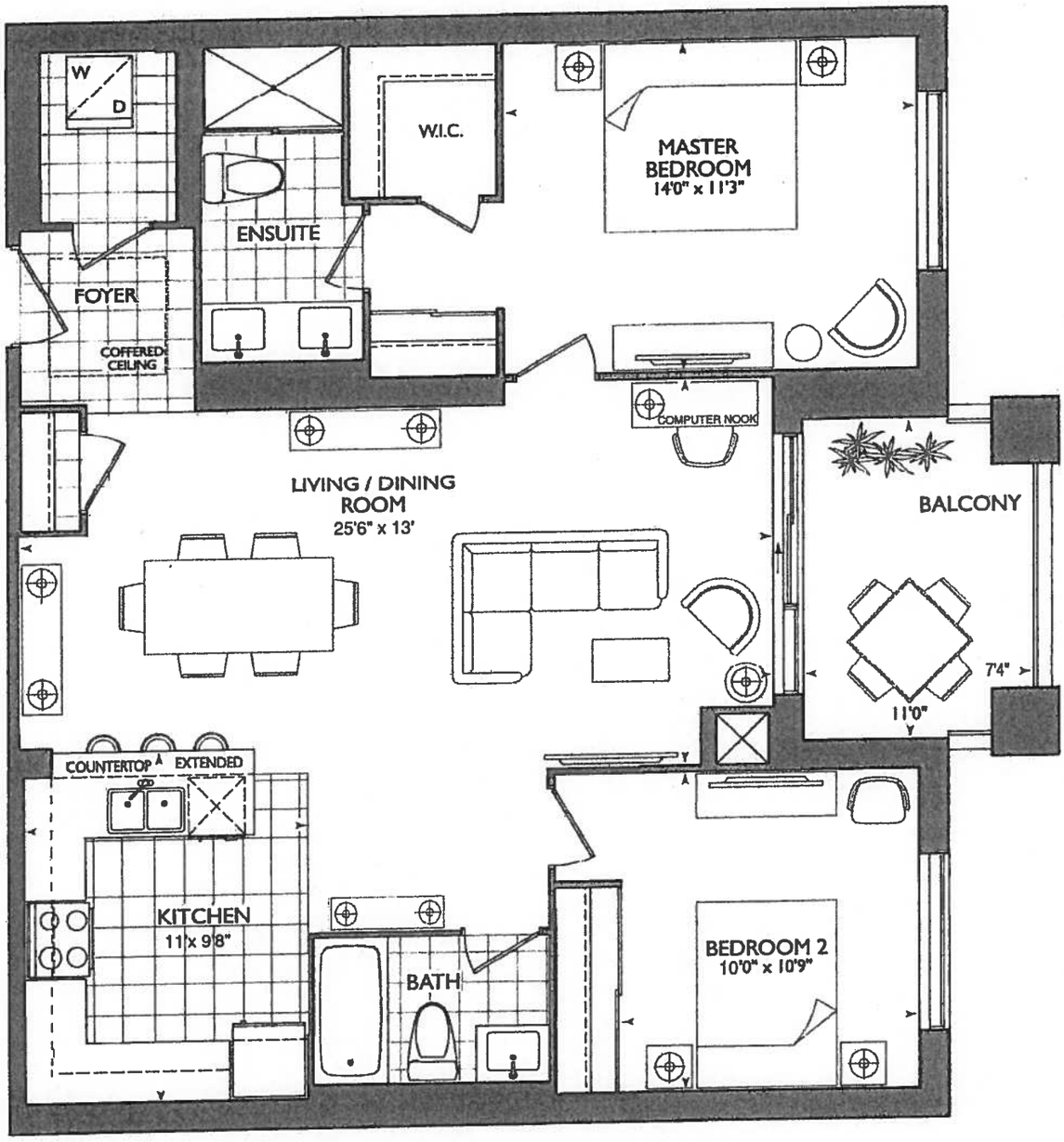

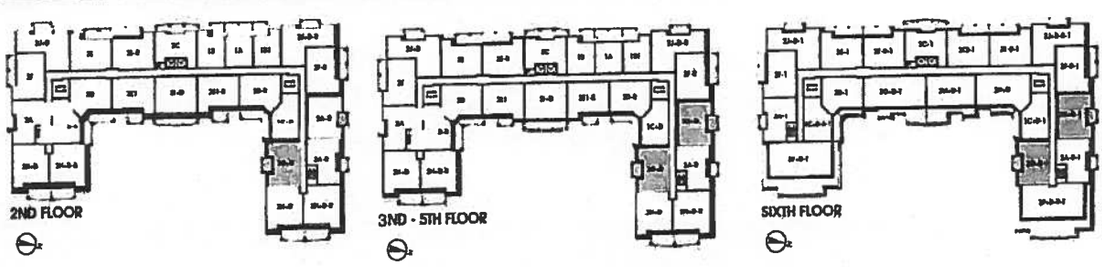

Plans and specifications are subject to change without notice Actual usable floor space may vary from the stated floor area. All renderings are artist's concept E. & O. E.

*** KITCHEN ***

CHOICE OF STD. KITCHEN LAYOUT WITH STD. APPLIANCE PACKAGE

OR

CAN UPGRADE AT DECOR CENTER

-(x2) CAPPED PENDANT
-(x1) PLUG PENINSULA
-(x) PUCK LIGHTS

*SEE ATTACHED UPG.
#1- KITCHEN LAYOUT WITH 1ST UPG. APPLIANCE PACKAGE

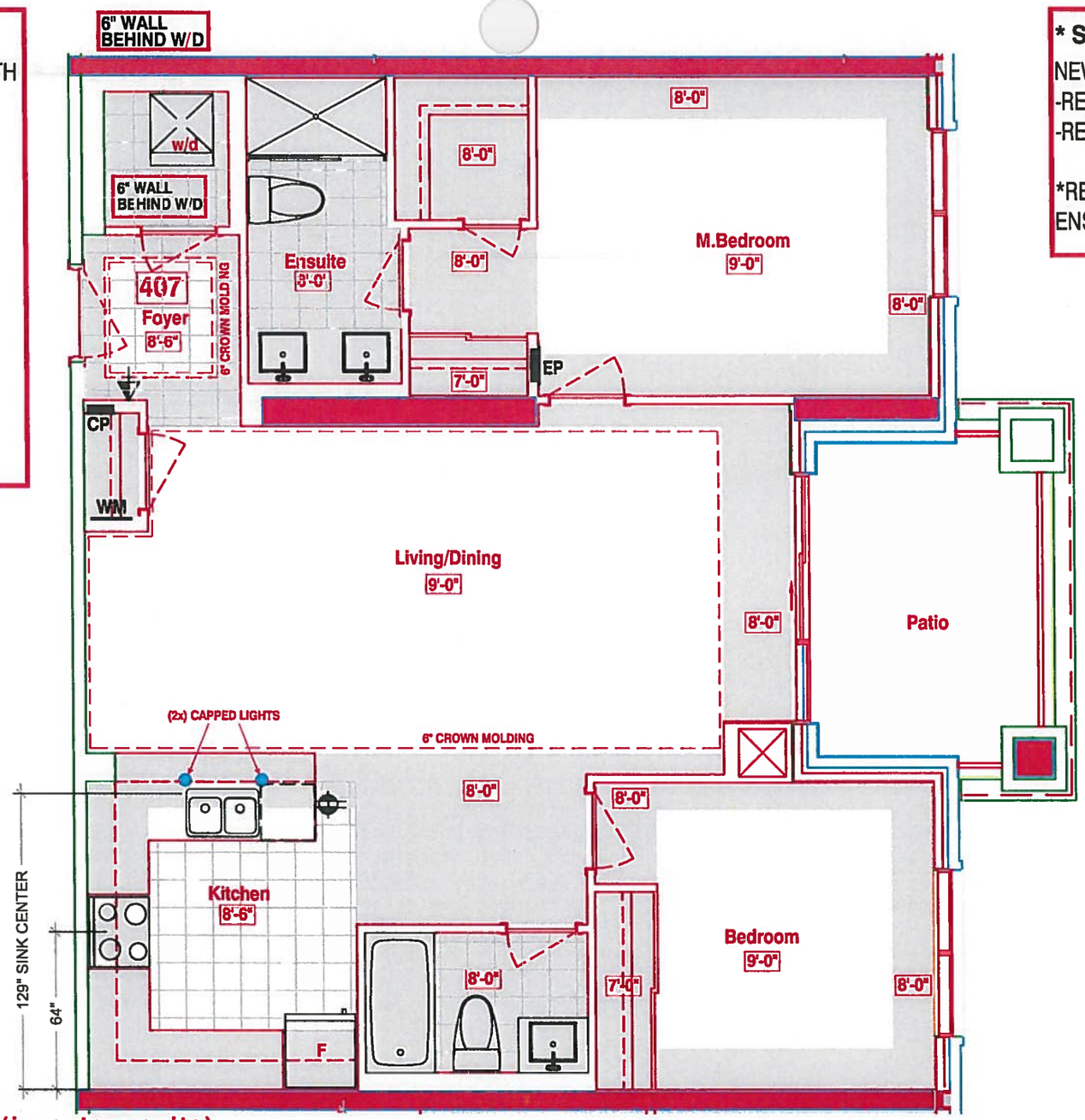

*** SUITE * (INVENTORY SUITE)**

NEW PLAN
-REMOVED DEN
-REVISED KITCHEN

*REVISED LAUNDRY DOOR SWING & ENSUITE WALL AS PER THIS BROCHURE

LEGEND:

- SECURITY PANEL
- EP — ELECTRICAL PANEL
- CP — COMMUNICATION PANEL
- WM — WATER METER
- F — FRIDGE
- DROPPED AREA
- 6" CROWN MOLDING

SUITES 407 - NOYAC BAY (inventory suite)

▪Royal Pine Homes ▪25 Baker Hill Blvd – Stouffville, ON ▪Apr 04, 2018

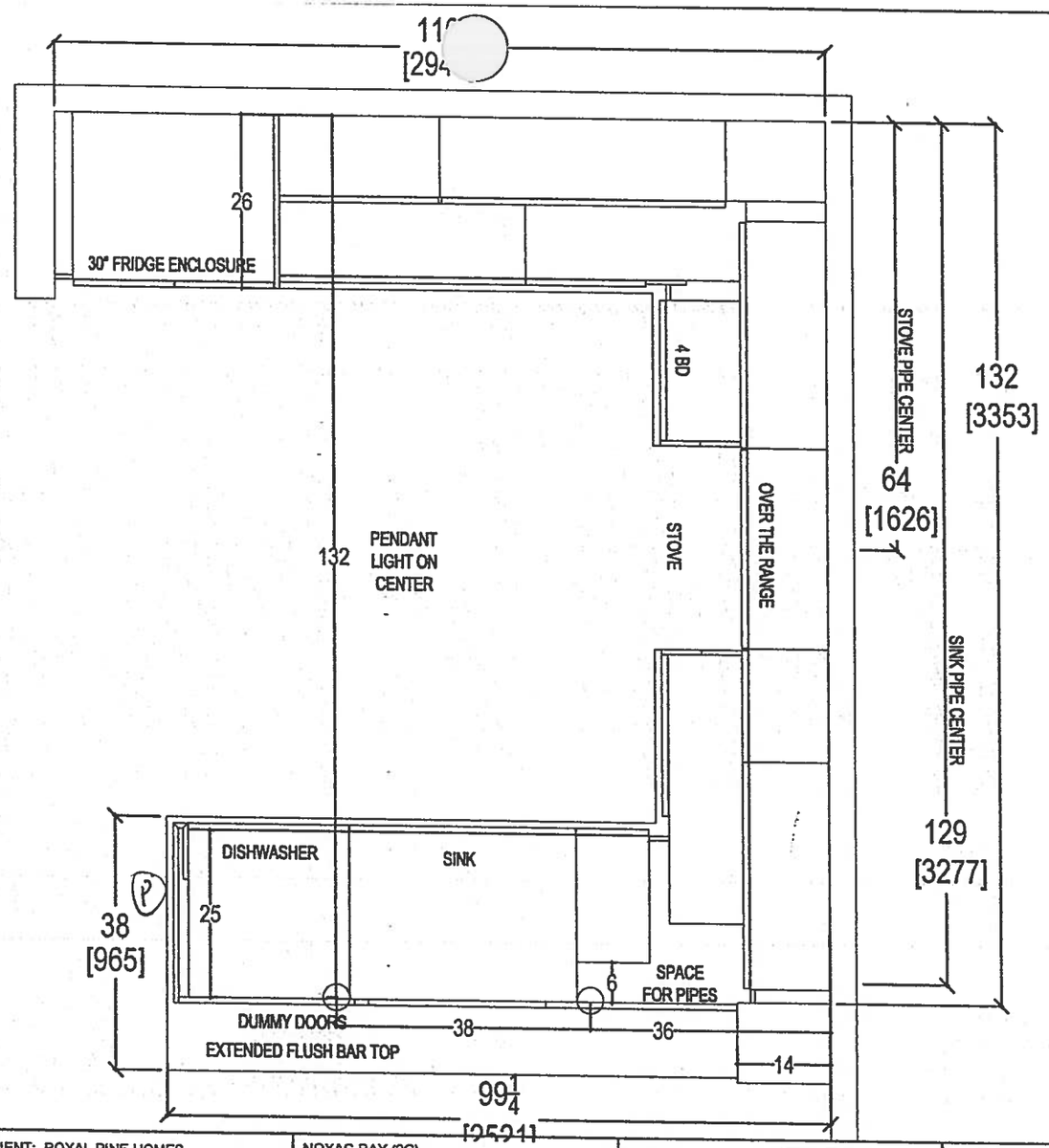

407

- STD KITCHEN LAYOUT
- STD APPLIANCE PACKAGE
- (x 5) - PUCK LIGHTS
- (x1) = PLUG PENINSULA
- (x2) - CAPPED PENDANT LIGHTS

OTK
your kitchen. your taste.
80 SANTE DRIVE, VAUGHAN, ON L4K 3C4,
T: 416.748.1811 F:905.761.5901

CLIENT: ROYAL PINE HOMES	NOYAC BAY (2G)	ROOM: KITCHEN FLOOR PLAN	DRAWN BY: SK
SITE: HAMPTON PLACE	DOOR STYLE: __	DOOR HANDLE: __	SCALE: 1/2" = 1' - 0"
PHONE: __	FINISH: __	DRW HANDLE: __	DATE: MARCH 8, 2018
EMAIL: __	SPECIES: __	TOP: __	PAGE: __

COMMENTS:

PLEASE NOTE ALL DIMENSIONS ARE NOT FINAL AND ARE SUBJECT TO CHANGE UPON FINAL SITE MEASURE

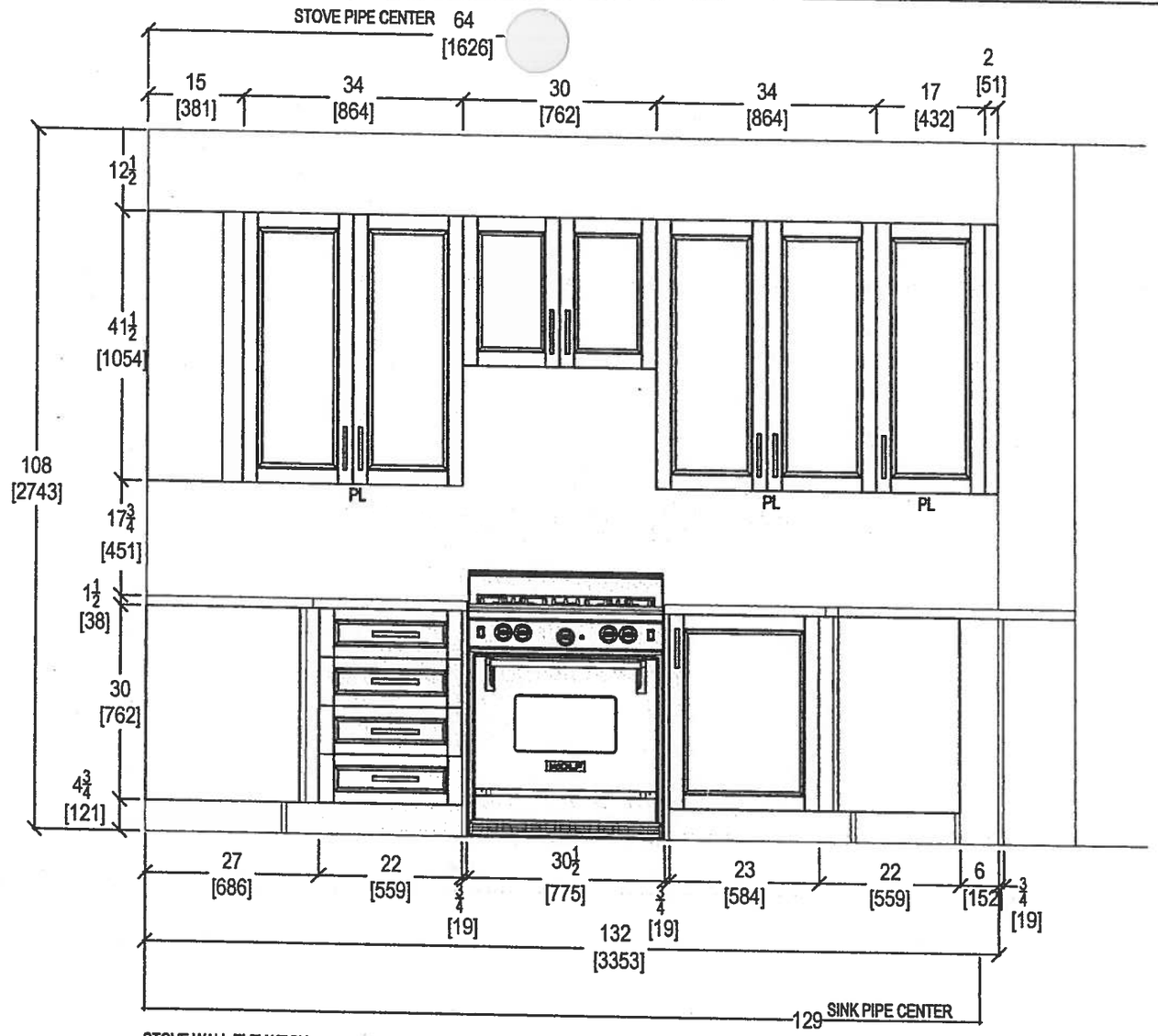

STOVE WALL ELEVATION

GTK
your kitchen. your taste.
80 SANTE DRIVE, VAUGHAN, ON L4K 3C4,
T: 416.746.1811 F:905.761.5901

CLIENT: ROYAL PINE HOMES	NOYAC BAY (2G)	ROOM: KITCHEN	DRAWN BY: SK	COMMENTS:
SITE: HAMPTON PLACE	DOOR STYLE: —	DOOR HANDLE: —	SCALE: 1/2" = 1' - 0"	*PLEASE NOTE ALL DIMENSIONS ARE NOT FINAL AND ARE SUBJECT TO CHANGE UPON FINAL SITE MEASURE*
PHONE: —	FINISH: —	DRW HANDLE: —	DATE: MARCH 8, 2018	
EMAIL: —	SPECIES: —	TOP: —	PAGE: —	

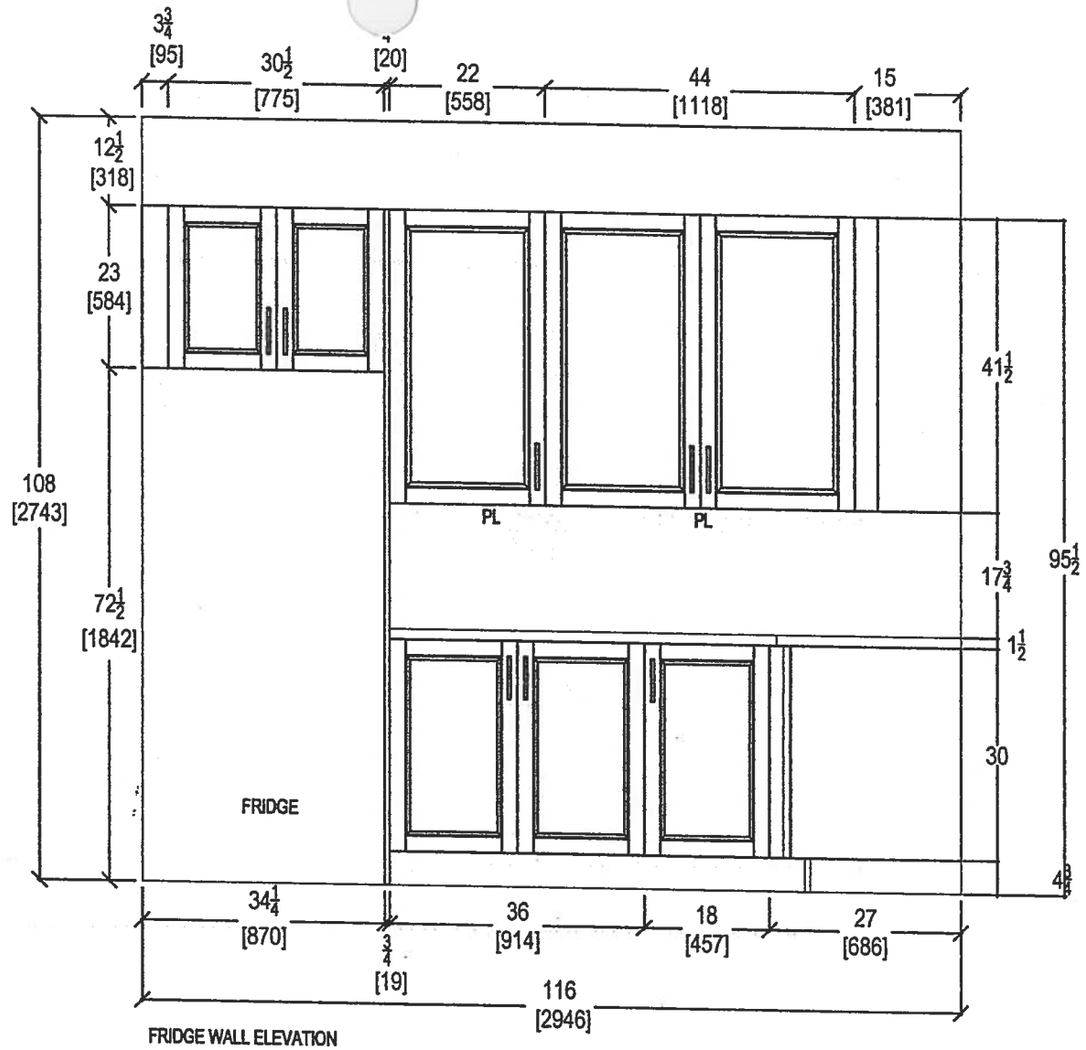

FRIDGE WALL ELEVATION

QTK
your kitchen. your taste.
80 SANTE DRIVE, VAUGHAN, ON L4K 3C4,
T: 416.746.1811 F:905.761.5901

CLIENT: ROYAL PINE HOMES	NOYAC BAY (2G)	ROOM: KITCHEN	DRAWN BY: SK	COMMENTS:
SITE: HAMPTON PLACE	DOOR STYLE: __	DOOR HANDLE: __	SCALE: 1/2" = 1' - 0"	*PLEASE NOTE ALL DIMENSIONS ARE NOT FINAL AND ARE SUBJECT TO CHANGE UPON FINAL SITE MEASURE*
PHONE: __	FINISH: __	DRW HANDLE: __	DATE: MARCH 8, 2018	
EMAIL: __	SPECIES: __	TOP: __	PAGE: __	

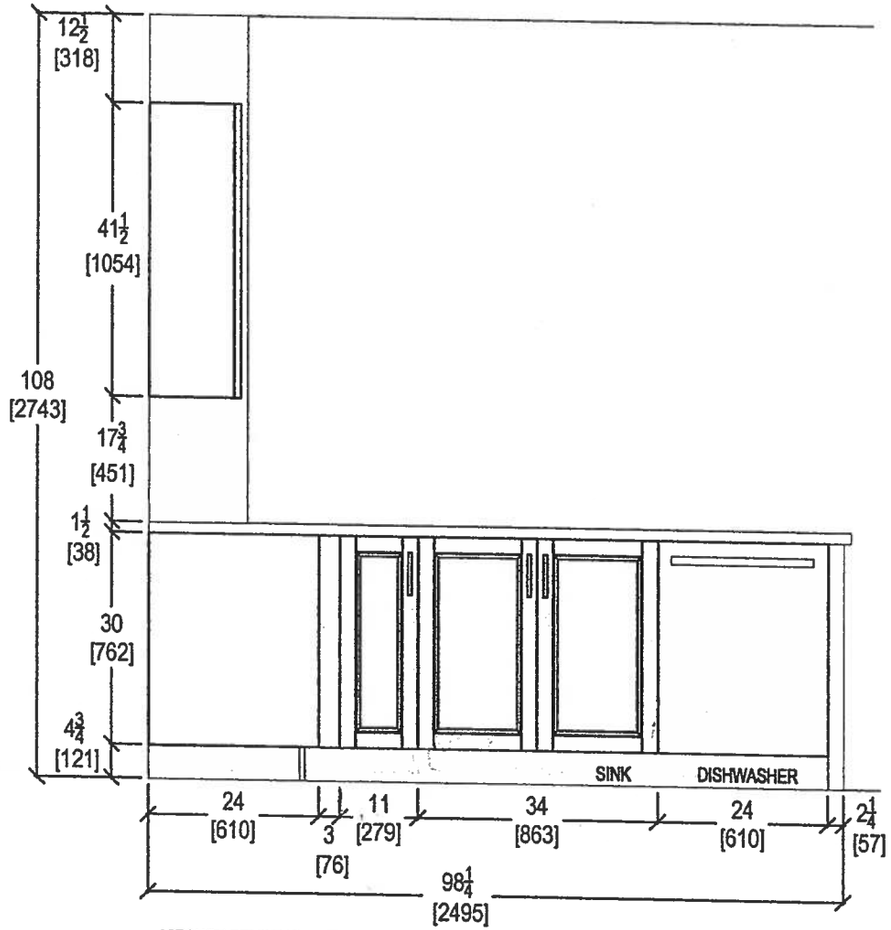

KITCHEN PENINSULA ELEVATION
FRONT VIEW

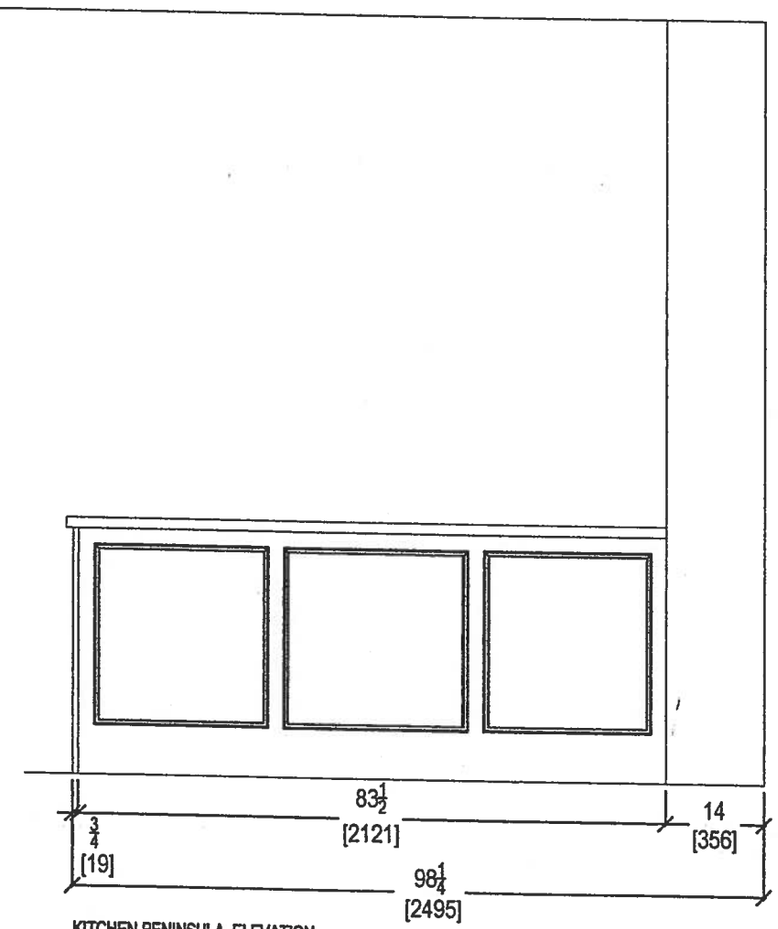

KITCHEN PENINSULA ELEVATION
REAR VIEW

your kitchen. your taste.
80 SANTE DRIVE, VAUGHAN, ON L4K 3C4,
T: 416.746.1811 F:905.761.5901

CLIENT: ROYAL PINE HOMES	NOYAC BAY (2G)	ROOM: KITCHEN	DRAWN BY: SK	COMMENTS:
SITE: HAMPTON PLACE	DOOR STYLE: __	DOOR HANDLE: __	SCALE: 1/2" = 1' - 0"	*PLEASE NOTE ALL DIMENSIONS ARE NOT FINAL AND ARE SUBJECT TO CHANGE UPON FINAL SITE MEASURE*
PHONE: __	FINISH: __	DRW HANDLE: __	DATE: MARCH 8, 2018	
EMAIL: __	SPECIES: __	TOP: __	PAGE: __	

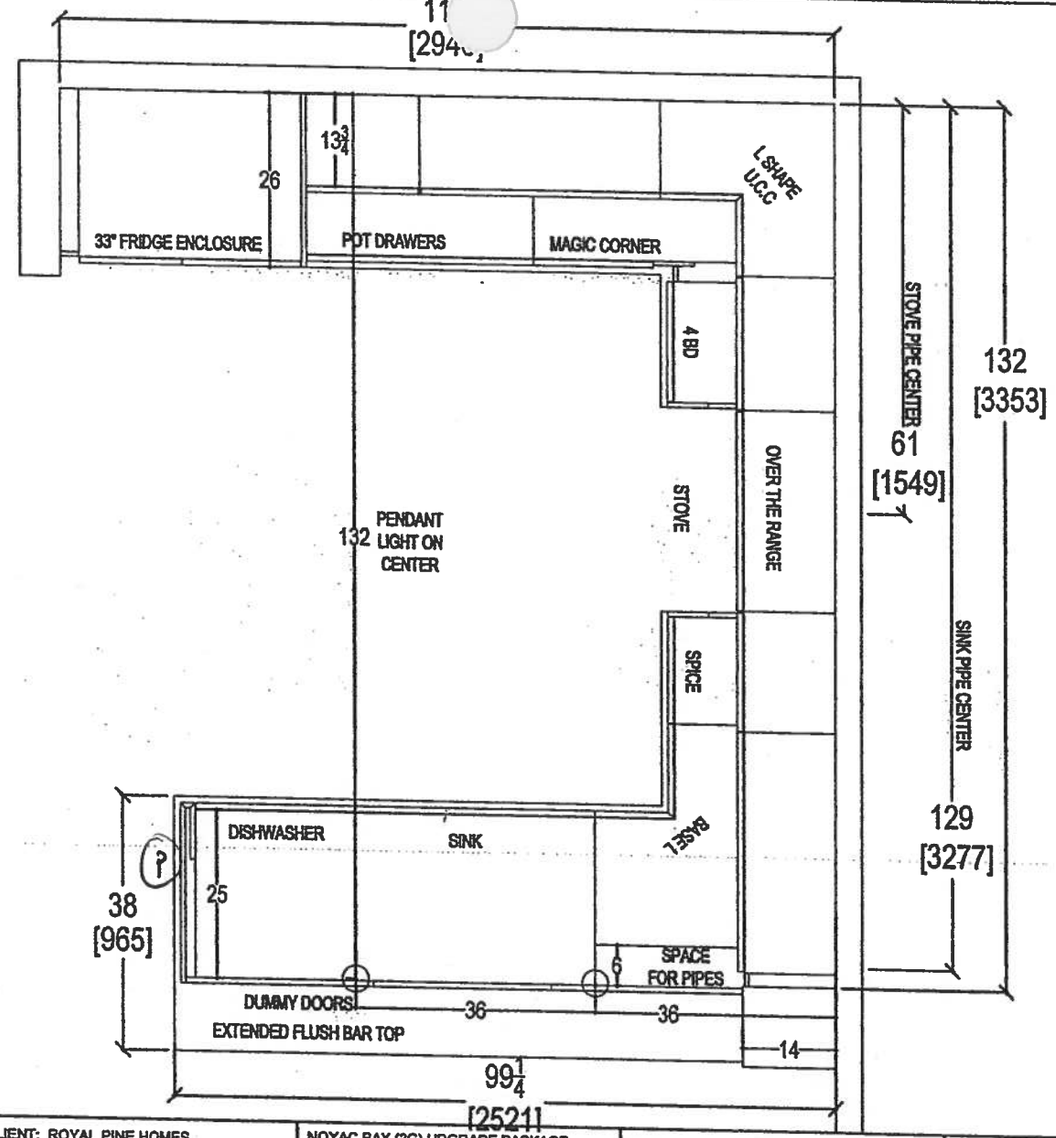

407

OPTIONAL

- 1ST UPGRADE KIT. LAYOUT
- 1ST UPG. APPLIANCE PKG
- (x1) = PLUG PENINSULA
- (x2) = CAPPED PENDANT LIGHTS
- (x7) = PUCK LIGHTS

your kitchen, your taste.
80 SANTE DRIVE, VAUGHAN, ON L4K 3C4,
T: 416.746.1811 F:905.761.5901

CLIENT: ROYAL PINE HOMES	NOYAC BAY (2G) UPGRADE PACKAGE	ROOM: KITCHEN FLOOR PLAN	DRAWN BY: SK	COMMENTS:
SITE: HAMPTON PLACE	DOOR STYLE: —	DOOR HANDLE: —	SCALE: 1/2" = 1' - 0"	*PLEASE NOTE ALL DIMENSIONS ARE NOT FINAL AND ARE SUBJECT TO CHANGE UPON FINAL SITE MEASURE*
PHONE: —	FINISH: —	DRW HANDLE: —	DATE: MARCH 8, 2018	
EMAIL: —	SPECIES: —	TOP: —	PAGE: —	

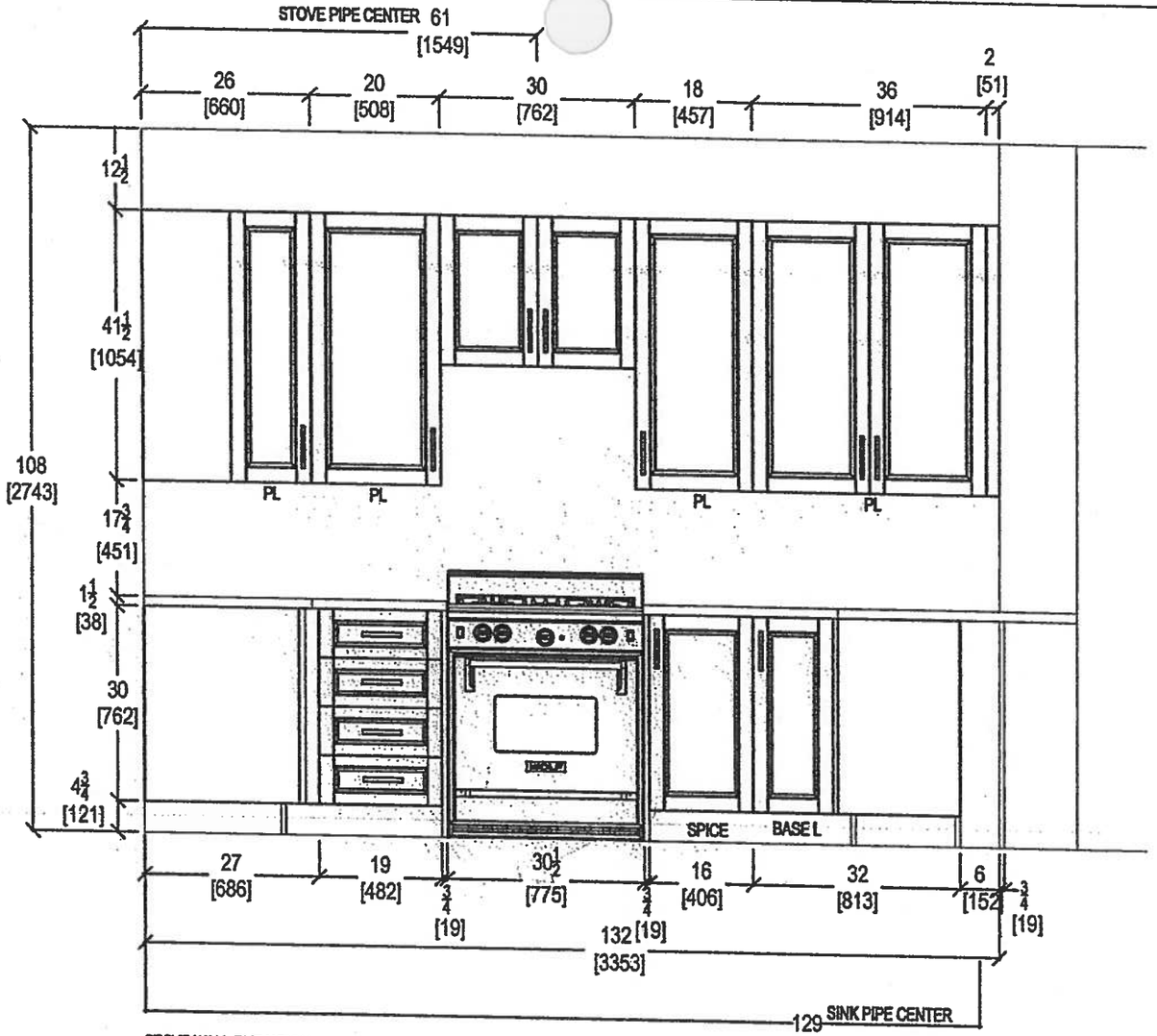

STOVE WALL ELEVATION

your kitchen. your taste.
80 SANTE DRIVE, VAUGHAN, ON L4K 3C4,
T: 416.748.1911 F:905.761.5901

CLIENT: ROYAL PINE HOMES	NOYAC BAY (2G) UPGRADE PACKAGE	ROOM: KITCHEN	DRAWN BY: SK	COMMENTS:
SITE: HAMPTON PLACE	DOOR STYLE: —	DOOR HANDLE: —	SCALE: 1/2" = 1' - 0"	*PLEASE NOTE ALL DIMENSIONS ARE NOT FINAL AND ARE SUBJECT TO CHANGE UPON FINAL SITE MEASURE*
PHONE: —	FINISH: —	DRW HANDLE: —	DATE: MARCH 8, 2018	
EMAIL: —	SPECIES: —	TOP: —	PAGE: —	

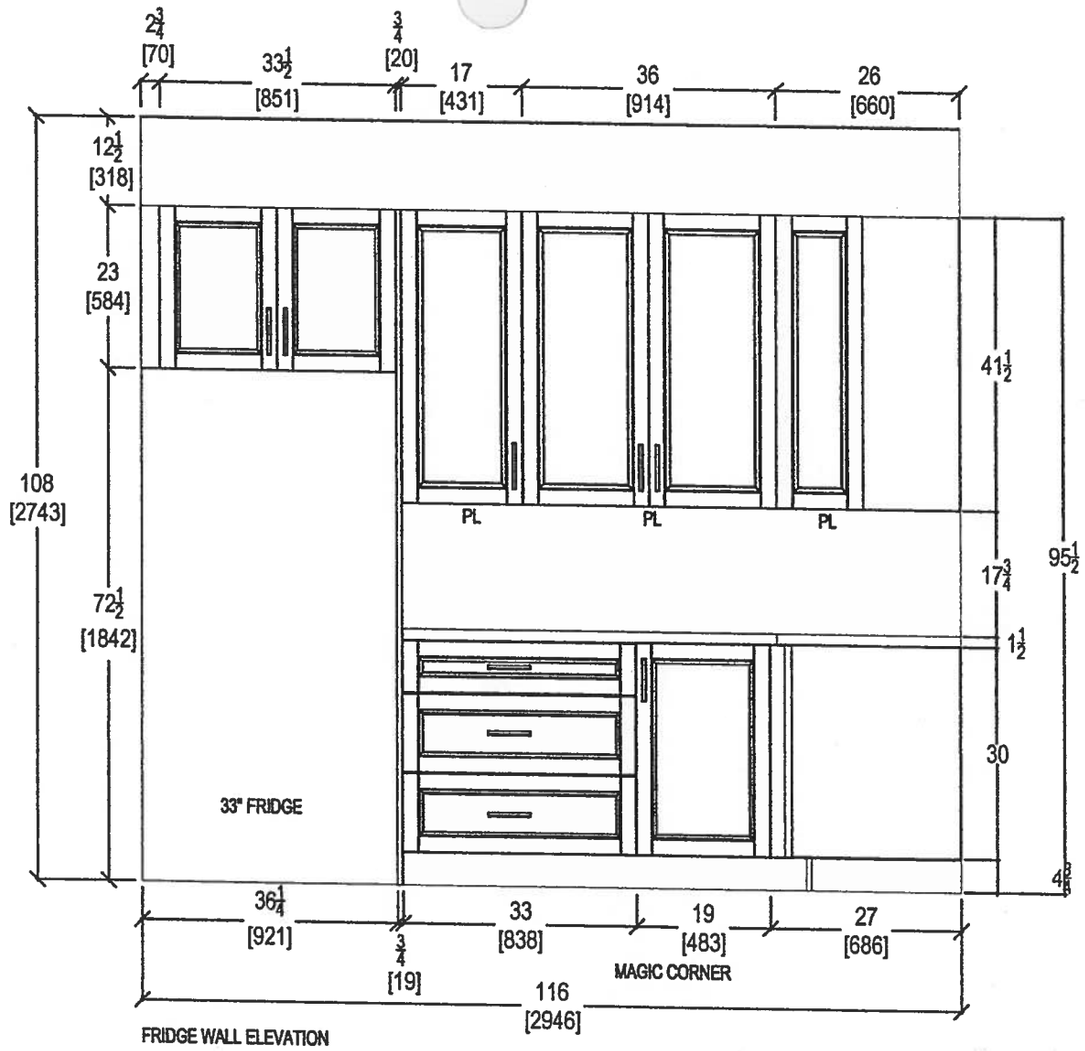

FRIDGE WALL ELEVATION

QTK
your kitchen. your taste.
80 SANTE DRIVE, VAUGHAN, ON L4K 3C4,
T: 416.746.1811 F:905.761.5901

CLIENT: ROYAL PINE HOMES	NOYAC BAY (2G) UPGRADE PACKAGE	ROOM: KITCHEN	DRAWN BY: SK	COMMENTS:
SITE: HAMPTON PLACE	DOOR STYLE: __	DOOR HANDLE: __	SCALE: 1/2" = 1' - 0"	*PLEASE NOTE ALL DIMENSIONS ARE NOT FINAL AND ARE SUBJECT TO CHANGE UPON FINAL SITE MEASURE*
PHONE: __	FINISH: __	DRW HANDLE: __	DATE: MARCH 8, 2018	
EMAIL: __	SPECIES: __	TOP: __	PAGE: __	

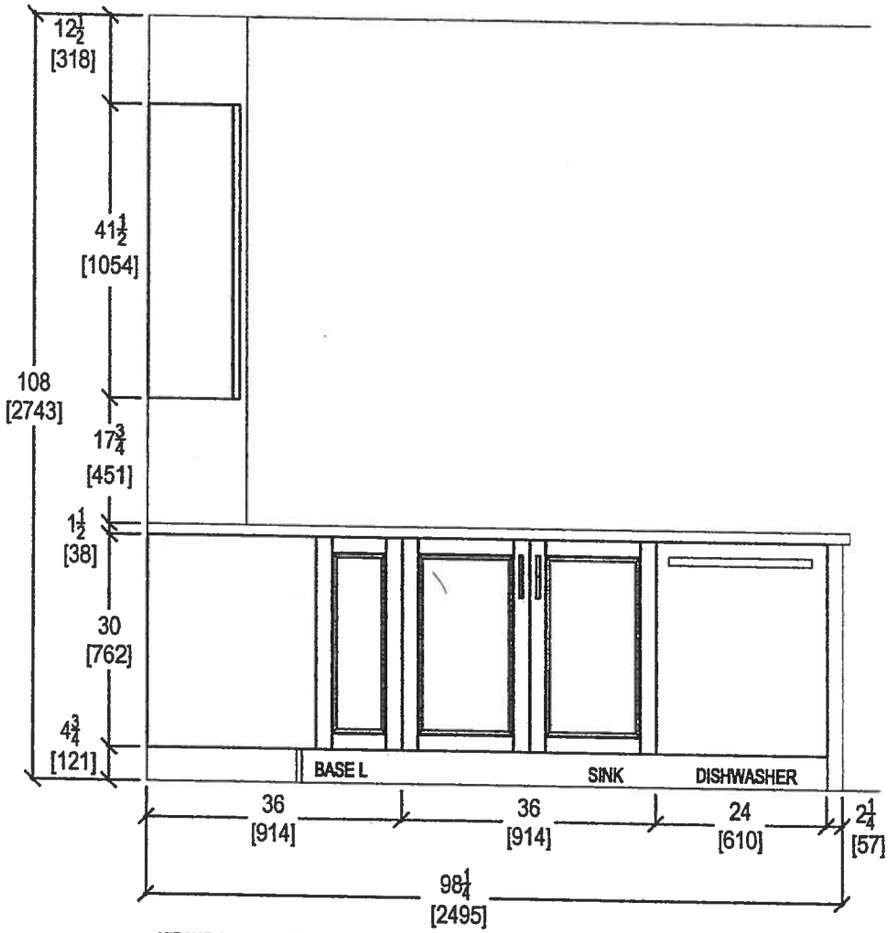

KITCHEN PENINSULA ELEVATION
FRONT VIEW

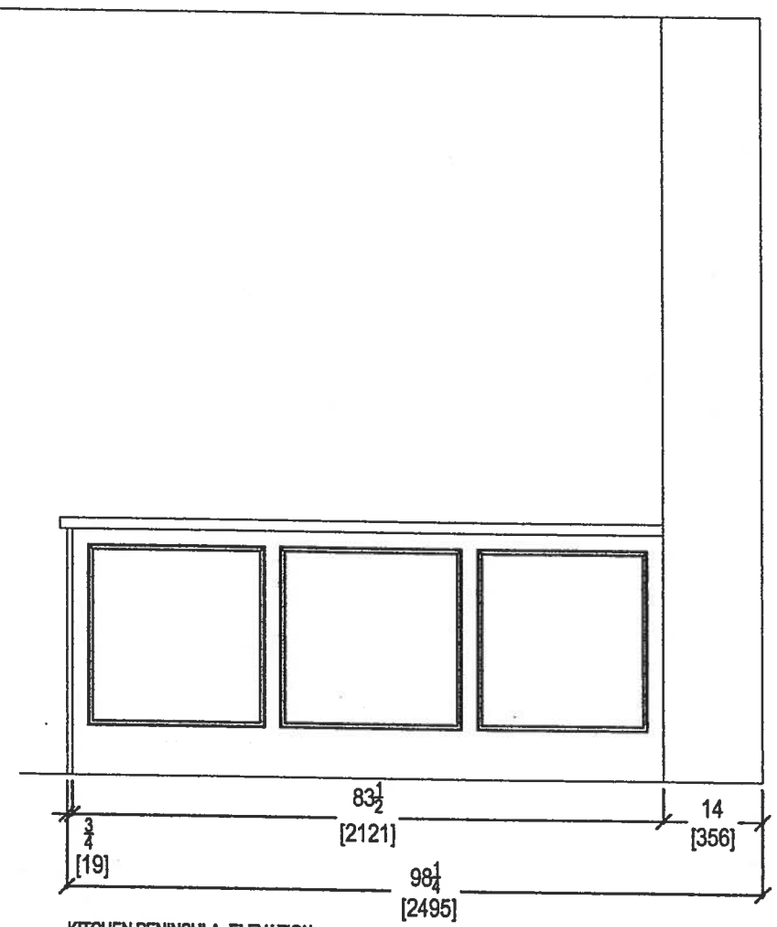

KITCHEN PENINSULA ELEVATION
REAR VIEW

your kitchen, your taste.
80 SANTE DRIVE, VAUGHAN, ON L4K 3C4,
T: 416.746.1811 F:905.761.5901

CLIENT: ROYAL PINE HOMES	NOYAC BAY (2G) UPGRADE PACKAGE	ROOM: KITCHEN	DRAWN BY: SK	COMMENTS:
SITE: HAMPTON PLACE	DOOR STYLE: __	DOOR HANDLE: __	SCALE: 1/2" = 1' - 0"	*PLEASE NOTE ALL DIMENSIONS ARE NOT FINAL AND ARE SUBJECT TO CHANGE UPON FINAL SITE MEASURE*
PHONE: __	FINISH: __	DRW HANDLE: __	DATE: MARCH 8, 2018	
EMAIL: __	SPECIES: __	TOP: __	PAGE: __	

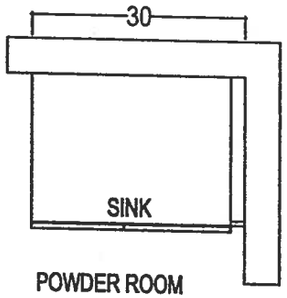

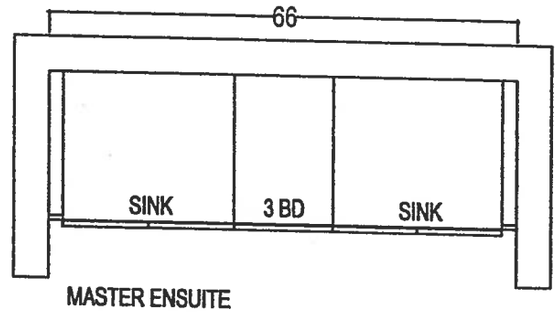

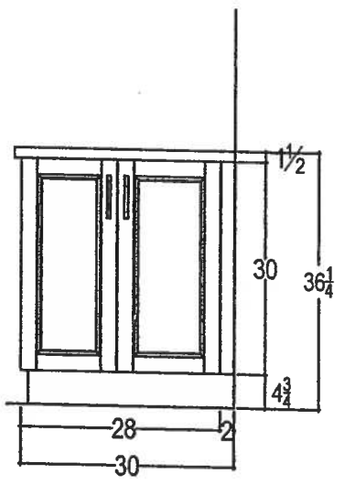

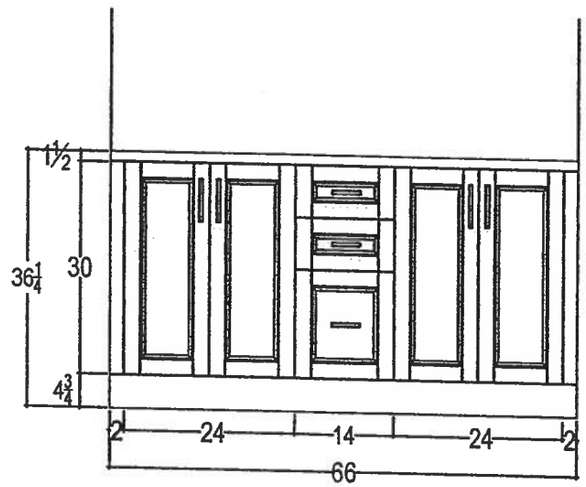

your kitchen. your taste.
80 SANTE DRIVE, VAUGHAN, ON L4K 3C4.
T: 416.746.1811 F:905.761.5901

CLIENT: ROYAL PINE HOMES	NOYAC BAY (2G) UPGRADE PACKAGE	ROOM: VANITIES	DRAWN BY: SK	COMMENTS:
SITE: HAMPTON PLACE	DOOR STYLE: __	DOOR HANDLE: __	SCALE: 1/2" = 1' - 0"	*PLEASE NOTE ALL DIMENSIONS ARE NOT FINAL AND ARE SUBJECT TO CHANGE UPON FINAL SITE MEASURE*
PHONE: __	FINISH: __	DRW HANDLE: __	DATE: MARCH 8, 2018	
EMAIL: __	SPECIES: __	TOP: __	PAGE: __	