HEATHWOOD

09-Aug-21

PRE-Sales Selection Sheet
CHECKLIST

LOT 001-5	* REVISED *	20-2329 ELEV A THE HAMPTON

PURCHASERS: DIVYA VIJAYAKUMAR CONTACT NO: 365-440-1926

VENDOR: HEATHWOOD HOMES (UPCOUNTRY) LIMITED

OPTIONAL LOWER LEVEL WITH BEDROOM 4 AND BATH

- ☐ FINISHED BASEMENT
- ☐ COLD CELLAR

UPGRADED / MODIFIED ELEVATION

- ☐ CORNER UPGRADE
- ☐ SIDE UPGRADE
- ☐ REAR UPGRADE
- ☐ WALK OUT DECK
- ☐ WALK OUT BASEMENT

CEILING UPGRADE - SMOOTH

- ☑ MAIN FLOOR *
- ☐ SECOND FLOOR
- ☐ BASEMENT

ADDITIONAL ROUGH-INS

- ☑ 200 AMP SERVICE
- ☐ WET BAR ROUGH IN
- ☐ HUMIDIFIER
- ☑ AIRCON

GAS ROUGH-IN

- ☑ STOVE *
- ☐ BBQ
- ☐ DRYER
- ☐ ADDITIONAL FIREPLACE

HOODFAN VENTING

- ☑ 6" ROUND DUCT *
- ☐ 7" ROUND DUCT

FULL BASEMENT STAIRS:	PAINT GRADE
UPPER BASEMENT STAIRS:	N/A
LOWER BASEMENT STAIRS:	N/A
STAIRS TO LOWER LEVEL:	ALL OAK
STAIRS TO UPPER LEVEL:	N/A
MAIN STAIRS:	ALL OAK
MEDIA STAIRS (if applicable):	N/A

Aug. 9/21 Signature on file
Date **Purchaser**

Aug 9/21 TINA LEFUR
Date **Décor Consultant**

Date **Purchaser**

- APPROVED -
-09- 09 2021
Date Approved

HEATHWOOD HOMES (UPCOUNTRY) LIMITED

HEATHWOOD

Interior Finishing Selection Sheet

8 OF 11

03-Aug-21

LOT 001-5

20-2329 ELEV A THE HAMPTON

PURCHASERS: DIVYA VIJAYAKUMAR CONTACT NO: 201-936-0738

VENDOR: **HEATHWOOD HOMES (UPCOUNTRY) LIMITED**

		UPG
Appliances		
6-8894	Kitchen HoodFan	☑ CYCLONE 30" CANOPY CHIMNEY HOODFAN STAINLESS STEEL SCB51430 STD PAGE 28
Cabinetry		
1-9176	Kitchen Cabinet Colour/Style	☐ TRINITY VIVA WEEKEND GETAWAY Viking III STD
3-2086	Kitchen Cabinet Hardware	☐ HARDWARE 9677 STD
25-9111	Main Bathroom Cabinet Colour/Style	☐ SIMCOE ORCHID VIKING III STD 3DL
29-2092	Main Bathroom Cabinet Hardware	☐ HARDWARE 9661 STD
28-8796	Main Bathroom Countertop	☐ Countertop PALOMA POLAR ETCHINGS FINISH 6698-46 Formica
20-9166	Master Ensuite Cabinet Colour/Style	☐ CHARLESTON ORCHID Viking III STD 3DL
22-2086	Master Ensuite Cabinet Hardware	☐ HARDWARE 9677 STD
21-8799	Master Ensuite Countertop	☐ Countertop INUKSHUK CARBON P-346 LM Arborite
359-9157	Optional Lower Level Bath Cabinet Colour/Style	☐ SIMCOE MOONLIGHT Viking III STD 3DL LOCATION - LOWER LEVEL ENSUITE
360-7672	Optional Lower Level Bath Cabinet Hardware	☐ HARDWARE 135 STD
361-8796	Optional Lower Level Bath Countertop	☐ Countertop PALOMA POLAR ETCHINGS FINISH 6698-46 Formica LOCATION - LOWER LEVEL ENSUITE
Carpet		
37-9247	Bedroom 2 Flooring	☐ Dynasty Tex 40 oz Poly SANDY BEIGE DY 16611 STD
38-9247	Bedroom 3 Flooring	☐ Dynasty Tex 40 oz Poly SANDY BEIGE DY 16611 STD
363-9247	Bedroom 4 (Optional Lower Level) Flooring	☐ Dynasty Tex 40 oz Poly SANDY BEIGE DY 16611 STD LOCATION - BEDROOM 4 OPTIONAL LOWER LEVEL
36-9247	Master Bedroom Flooring	☐ Dynasty Tex 40 oz Poly SANDY BEIGE DY 16611 STD
52-1079	Throughout Underpad	☐ Underpad 500 Series STD
Ceramics		
16-8913	Foyer Flooring	☑ Biel Bianco (White) UN.BL.BIA.1224 UPG_2 12 x 24 SEE SKETCH# 7 PAGE 18 FOR 12 X 24 TILE DIRECTION.
17-2225	Foyer Grout	☐ Grout (27) Silver STD

1. The Purchaser acknowledges these selections are subject to the terms and conditions of the applicable Agreement of Purchase and Sale.
2. The Purchaser acknowledges that the Vendor accepts no responsibility in the event the Vendor is unable to supply a selection. The Purchaser agrees to reselect from the currently available selections immediately upon request.
3. The Vendor reserves the right to substitute above materials and equipment with that of equal or better quality.
4. Purchaser acknowledges that items may not be exactly as shown. Variations from the Vendor's samples may occur in finished materials due to normal production processes. Vendor is not responsible for shade difference which may occur from different dye lots or wood grains. Variations from the Vendor's samples will occur with natural materials such as wood, marble, granite, hardwood and brick.
5. The Vendor reserves the right to select Grout & Thresholds that best suits the Tile selected.
6. Selections will not be processed unless signed by Heathwood Homes Head Office.
7. The colour selections made on the Colour Chart are final and cannot be changed once submitted.
8. The Purchaser has checked and acknowledges the accuracy of this Colour Chart.

Date	Purchaser	Date	Décor Consultant
8/03/2021		8/03/21 APPROVED -08- 09 2021	TINA LEFUR
Date	Purchaser	Date Approved	HEATHWOOD HOMES (UPCOUNTRY) LIMITED

HEATHWOOD

Interior Finishing Selection Sheet

9 of 11

03-Aug-21

LOT 001-5

20-2329 ELEV A THE HAMPTON

PURCHASERS: DIVYA VIJAYAKUMAR CONTACT NO: 201-936-0738

VENDOR: **HEATHWOOD HOMES (UPCOUNTRY) LIMITED**

Ceramics

		UPG
4-8109	Kitchen Backsplash	☑ ONTARIO HEXAGON MATTE BLACK OD.ON.BLK.02.HEX.MT UPG_2
5-2226	Kitchen Backsplash Grout	☐ Grout (00) White STD
66-9257	Laundry Room Flooring	☐ CARRARA White / Grey GE.CR.WHIT.1313.MT STD 13 x 13
67-2225	Laundry Room Grout	☐ Grout (27) Silver STD
30-9257	Main Bathroom Flooring	☐ CARRARA White / Grey GE.CR.WHIT.1313.MT STD 13 x 13
31-2225	Main Bathroom Grout	☐ Grout (27) Silver STD
112-9020	Main Bathroom Wall Tile	☐ Weave White QT.WV.WHT.0810 STD 8 x 10 INSTALL STACKED HORIZONTALLY
113-2226	Main Bathroom Wall Tile Grout	☐ Grout (00) White STD
23-5607	Master Ensuite Floor Tile	☐ Sauble Anthracite (Black) GE.SU.ATR.1313 STD 13" X 13"
24-7704	Master Ensuite Floor Tile Grout	☐ Grout (19) Pearl Gray STD
73-8661	Master Ensuite Shower Floor Tile	☐ Ontario Series Mosaic Snow White Matte OD.ON.SWT.0202.MT.N STD 2 x 2
74-2226	Master Ensuite Shower Floor Tile Grout	☐ Grout (00) White STD
147-8923	Master Ensuite Shower Jamb(s) and Sill(s)	☐ Shower Jamb / Sill Thassos White STD
104-9020	Master Ensuite Shower Wall Tile	☐ Weave White QT.WV.WHT.0810 STD 8 x 10 INSTALL STACKED HORIZONTALLY
105-2226	Master Ensuite Shower Wall Tile Grout	☐ Grout (00) White STD
350-9257	Optional Lower Level Bath Flooring	☐ CARRARA White / Grey GE.CR.WHIT.1313.MT STD 13 x 13 LOCATION - OPTIONAL LOWER LEVEL ENSUITE
351-2225	Optional Lower Level Bath Grout	☐ Grout (27) Silver STD LOCATION - LOWER LEVEL ENSUITE
352-9020	Optional Lower Level Bath Tub Wall Tile	☐ Weave White QT.WV.WHT.0810 STD 8 x 10 LOCATION - LOWER LEVEL ENSUITE TO BE INSTALLED STACKED HORIZONTALLY
353-2226	Optional Lower Level Bath Tub Wall Tile Grout	☐ Grout (00) White STD LOCATION - LOWER LEVEL ENSUITE
32-8913	Powder Room Flooring	☑ Biel Bianco (White) UN.BL.BIA.1224 UPG_2 12 x 24 SEE SKETCH # 7 PAGE 18 FOR 12 X 24 TILE DIRECTION.

1. The Purchaser acknowledges these selections are subject to the terms and conditions of the applicable Agreement of Purchase and Sale.
2. The Purchaser acknowledges that the Vendor accepts no responsibility in the event the Vendor is unable to supply a selection. The Purchaser agrees to reselect from the currently available selections immediately upon request.
3. The Vendor reserves the right to substitute above materials and equipment with that of equal or better quality.
4. Purchaser acknowledges that items may not be exactly as shown. Variations from the Vendor's samples may occur in finished materials due to normal production processes. Vendor is not responsible for shade difference which may occur from different dye lots or wood grains. Variations from the Vendor's samples will occur with natural materials such as wood, marble, granite, hardwood and brick.
5. The Vendor reserves the right to select Grout & Thresholds that best suits the Tile selected.
6. Selections will not be processed unless signed by Heathwood Homes Head Office.
7. The colour selections made on the Colour Chart are final and cannot be changed once submitted.
8. The Purchaser has checked and acknowledges the accuracy of this Colour Chart.

08/03/2021 — Date — Purchaser

8/3/21 APPROVED — Date — TINA LEFUR — Décor Consultant

-08- 09 2021

Date — Purchaser — Date Approved — HEATHWOOD HOMES (UPCOUNTRY) LIMITED

HEATHWOOD

Interior Finishing Selection Sheet

03-Aug-21

LOT 001-5

20-2329 ELEV A THE HAMPTON

PURCHASERS: DIVYA VIJAYAKUMAR

CONTACT NO: 201-936-0738

VENDOR: **HEATHWOOD HOMES (UPCOUNTRY) LIMITED**

		UPG
Ceramics		
33-2225 Powder Room Grout		☐ **Grout (27) Silver STD**
53-2232 Throughout Thresholds		☐ **Metal Thresholds STD**
53-2232 Throughout Thresholds		☐ **Metal Thresholds STD**
Electrical		
90-5796 Throughout Switches and Plug		☐ **Decora White Switches and Plugs STD**
Fireplace		
136-8891 Great Room Fireplace Mantle		☐ **Paint Grade Mantle- Cabinet (Per Plan) WHITE NF-17 STD** PAGE 21
135-8865 Great Room Fireplace Type		☐ **Dimplex FP3033HL Electric Fireplace**
Granite		
2-7887 Kitchen Countertop		☑ **Quartz- Caesarstone VANILLA NOIR # 5100 Group 6 UPG 3/4" with Mitered Edge**
Hardwood		
99-7498 Dining Room Flooring		☐ **VintagE Northern Solid Sawn Engineered Select V : Red Oak Pearl GRYPHON Red Oak Pearl 3/4" x 3 1/4"**
11-7498 Great Room Flooring		☐ **VintagE Northern Solid Sawn Engineered Select V : Red Oak Pearl GRYPHON Red Oak Pearl 3/4" x 3 1/4"**
338-7498 Kitchen Flooring		☑ **VintagE Northern Solid Sawn Engineered Select V : Red Oak Pearl GRYPHON Red Oak Pearl 3/4" x 3 1/4"**
366-7498 Optional Lower Level Hall Flooring		☑ **VintagE Northern Solid Sawn Engineered Select V : Red Oak Pearl GRYPHON Red Oak Pearl 3/4" x 3 1/4" LOCATION - OPTIONAL LOWER LEVEL HALL**
77-7498 Stair Landing to Upper Level Flooring		☐ **VintagE Northern Solid Sawn Engineered Select V : Red Oak Pearl GRYPHON Red Oak Pearl 3/4" x 3 1/4"**
46-7498 Stairs to Lower Level Colour		☐ **VintagE Northern Solid Sawn Engineered Select V : Red Oak Pearl GRYPHON Red Oak Pearl 3/4" x 3 1/4"**
40-7498 Stairs to Upper Level Colour		☐ **VintagE Northern Solid Sawn Engineered Select V : Red Oak Pearl GRYPHON Red Oak Pearl 3/4" x 3 1/4"**
35-7498 Upper Hall Flooring		☐ **VintagE Northern Solid Sawn Engineered Select V : Red Oak Pearl GRYPHON Red Oak Pearl 3/4" x 3 1/4"**
Interior Stairs		

1. The Purchaser acknowledges these selections are subject to the terms and conditions of the applicable Agreement of Purchase and Sale.
2. The Purchaser acknowledges that the Vendor accepts no responsibility in the event the Vendor is unable to supply a selection. The Purchaser agrees to reselect from the currently available selections immediately upon request.
3. The Vendor reserves the right to substitute above materials and equipment with that of equal or better quality.
4. Purchaser acknowledges that items may not be exactly as shown. Variations from the Vendor's samples may occur in finished materials due to normal production processes. Vendor is not responsible for shade difference which may occur from different dye lots or wood grains. Variations from the Vendor's samples will occur with natural materials such as wood, marble, granite, hardwood and brick.
5. The Vendor reserves the right to select Grout & Thresholds that best suits the Tile selected.
6. Selections will not be processed unless signed by Heathwood Homes Head Office.
7. The colour selections made on the Colour Chart are final and cannot be changed once submitted.
8. The Purchaser has checked and acknowledges the accuracy of this Colour Chart.

08/08/2021		8/3/21	TINA LEPUR
Date	Purchaser	Date APPROVED	Décor Consultant
		-08- 09 2021	
Date	Purchaser	Date Approved	HEATHWOOD HOMES (UPCOUNTRY) LIMITED

HEATHWOOD

Interior Finishing Selection Sheet

03-Aug-21

LOT 001-5

20-2329 ELEV A THE HAMPTON

PURCHASERS: DIVYA VIJAYAKUMAR

CONTACT NO: 201-936-0738

VENDOR: **HEATHWOOD HOMES (UPCOUNTRY) LIMITED**

UPG

Interior Stairs

116-1713 Basement Stairs Type	☐ **Paint Grade Stairs** STD	
1712 45-1714 Stairs to Lower Level Type	☐ OAK ~~Carpet Grade~~ **Stairs** STD	
39-1712 Stairs to Upper Level Type	☐ **Oak Stairs** UPG_1	

Interior Trim

91-9374 Throughout Trim Size	☐ **4 1/4" Baseboards and 2 3/4" Integrated Backbend Casings STD-Towns**

Painting

50-7761 Stairs to Lower Level Handrail/Pickets/Posts Colour	☐ **Stain handrail, stringers, treads,risers, nosing & posts. (Metal pickets) STAIN TO COMPLIMENT RED OAK PEARL** GRYPHON **~~IRONGATE~~ HARDWOOD FLOORING. STAIN MAY VARY FROM HARDWOOD FLOOR COLOUR.**
49-7761 Stairs to Lower Level Handrail/Pickets/Posts Type	☐ **Stain handrail, stringers, treads,risers, nosing & posts. (Metal pickets)**
44-7761 Stairs to Upper Level Handrail/Pickets/Posts Colour	☐ **Stain handrail, stringers, treads,risers, nosing & posts. (Metal pickets) STAIN TO COMPLIMENT RED OAK PEARL** GRYPHON **~~IRONGATE~~ HARDWOOD FLOORING. STAIN MAY VARY FROM HARDWOOD FLOOR COLOUR.**
43-7761 Stairs to Upper Level Handrail/Pickets/Posts Type	☐ **Stain handrail, stringers, treads,risers, nosing & posts. (Metal pickets)**
240-1716 Throughout Trim - Paint Colour	☐ **Trim WHITE STD**
51-1717 Throughout Walls - Paint Colour	☐ **Wall WARM GREY 22 STD**

Plumbing

266-1737 Main Bathroom Plumbing Fixture (Colour)	☐ **Plumbing Fixtures WHITE STD**
149-1737 Master Ensuite Plumbing Fixture (colour)	☐ **Plumbing Fixtures WHITE STD**
362-1737 Optional Lower Level Bath Plumbing Fixture (Colour)	☐ **Plumbing Fixtures WHITE STD LOCATION - LOWER LEVEL ENSUITE**
34-1737 Powder Room Plumbing Fixture (Colour)	☐ **Plumbing Fixtures WHITE STD**

1. The Purchaser acknowledges these selections are subject to the terms and conditions of the applicable Agreement of Purchase and Sale.
2. The Purchaser acknowledges that the Vendor accepts no responsibility in the event the Vendor is unable to supply a selection. The Purchaser agrees to reselect from the currently available selections immediately upon request.
3. The Vendor reserves the right to substitute above materials and equipment with that of equal or better quality.
4. Purchaser acknowledges that items may not be exactly as shown. Variations from the Vendor's samples may occur in finished materials due to normal production processes. Vendor is not responsible for shade difference which may occur from different dye lots or wood grains. Variations from the Vendor's samples will occur with natural materials such as wood, marble, granite, hardwood and brick.
5. The Vendor reserves the right to select Grout & Thresholds that best suits the Tile selected.
6. Selections will not be processed unless signed by Heathwood Homes Head Office.
7. The colour selections made on the Colour Chart are final and cannot be changed once submitted.
8. The Purchaser has checked and acknowledges the accuracy of this Colour Chart.

-/08/2021		8/03/21	TINA LEFUR
Date	Purchaser	Date	Décor Consultant
		APPROVED -08- 09 2021	
Date	Purchaser	Date Approved	HEATHWOOD HOMES (UPCOUNTRY) LIMITED

HEATHWOOD

Sales Selection Sheet

12 of 14

03-Aug-21

LOT 001-5 20-2329 ELEV A THE HAMPTON

PURCHASERS: DIVYA VIJAYAKUMAR CONTACT NO: 201-936-0738

VENDOR: **HEATHWOOD HOMES (UPCOUNTRY) LIMITED** **HST #**

It is herein understood and agreed between the undersigned parties hereto that the following changes shall be made to the above mentioned Agreement of Purchase and Sale in accordance with the agreement and except for such changes noted below, all other terms and conditions in the Agreement of Purchase and Sale shall remain as stated herein: It is further understood that and agreed that all changes and additions shall be installed as per builder's specifications, location and available selections. The Purchaser hereby agrees to purchase the following extras:

AMOUNT:

Appliances

790 **Cyclone 30" Wall Mount Chimney Hood SS** Qty: 1
SCB51430 Before June 1, 2021 PAGE 28

Cabinetry

475 **Optional Extras** **KITCHEN** Qty: 1
04H- 66cm deep fridge enclosure (counter depth)includes [1] 66cm deep cabinet and [1] 66cm deep gable(1-wall beside fridge) (note: this is not a zero clearance enclosure. Standard heights and widths will be used) Before June 1, 2021
SKETCH # 8 PAGE 19

583 **Optional Upgrade** **Pantry** Qty: 1
Optional Pantry Before June 1, 2021 SKETCH # 8 PAGE 19

Ceramics

493 **Optional Extras** Qty: 1
Supply and install additional backsplash due to chimney hoodfan installation
Upgrade 2

599 **Foyer Floor** Qty: 1
Upgrade 2 Tile
SEE SKETCH # 7 PAGE 18 FOR 12 X 24 TILE DIRECTION

608 **Kitchen Optional Backsplash** Qty: 1
Upgrade 2 Tile

1. This Sales Selection Sheet when properly executed forms part of our Agreement of Purchase and Sale.
2. All extras and upgrades listed above are subject to Construction Progress and Architectural and Municipal requirements.
3. In the event the Vendor is unable to incorporate the work approved above in the construction of the house for any reason whatsoever, the Vendor will not be liable to the Purchaser in any way. The monies paid for any changes or optional extras not proceeded with shall be returned to the Purchaser, without interest. The cost of options or extras is non-refundable in all other circumstances. If for any reason whatsoever the Agreement of Purchase and Sale is not completed, the total cost of work approved above will be retained by the Vendor.
4. The Vendor reserves the right to substitute above materials and equipment with that of equal or better quality.
5. Purchaser acknowledges that items may not be exactly as shown. Variations from the Vendor's samples may occur in finished materials due to normal production processes. Vendor is not responsible for shade difference which may occur from different dye lots or wood grains. Variations from the Vendor's samples will occur with natural materials such as wood, marble, granite, hardwood and brick.
6. The Vendor reserves the right to select Grout & Thresholds that best suits the Tile selected.
7. Selections will not be processed unless signed by Heathwood Homes Head Office.
8. The selections made on this schedule are final and cannot be changed once submitted.
9. The Purchaser has checked and acknowledges the accuracy of this schedule.

08/03/2021 — Date
Purchaser
8/03/21 — Date
APPROVED
TINA LEFUR — Décor Consultant

Date
Purchaser
-03- 09 2021
Date Approved
HEATHWOOD HOMES (UPCOUNTRY) LIMITED

HEATHWOOD

03-Aug-21

Sales Selection Sheet 3 of 4

LOT **001-5** 20-2329 ELEV A THE HAMPTON

PURCHASERS: DIVYA VIJAYAKUMAR CONTACT NO: 201-936-0738

VENDOR: **HEATHWOOD HOMES (UPCOUNTRY) LIMITED** **HST #**

It is herein understood and agreed between the undersigned parties hereto that the following changes shall be made to the above mentioned Agreement of Purchase and Sale in accordance with the agreement and except for such changes noted below, all other terms and conditions in the Agreement of Purchase and Sale shall remain as stated herein: It is further understood that and agreed that all changes and additions shall be installed as per builder's specifications, location and available selections. The Purchaser hereby agrees to purchase the following extras:

AMOUNT:

600 **M.Flr.Pow Floor** Qty: 1

Upgrade 2 Tile
SEE SKETCH # 7 PAGE 18 FOR 12 X 24
TILE DIRECTION

Drywall

521 **Ceiling Upgrades** Qty: 1

Smooth Ceilings Main Floor Before June 1, 2021

Electrical

282 **Décor Package** Qty: 1

Potlight Bundle - 8 x T477GR-W 4" line voltage potlights installed on main floor includes 2 switches Before June 1, 2021 SKETCH # 7 PAGE 18
4 x KITCHEN, 4 x GREAT ROOM

284 **Optional Extras** **GREAT ROOM** Qty: 1

Extra wall interior outlet on Existing Circuit (does not include kitchen outlets)
Before June 1, 2021
TO BE INSTALLED CENTERED ABOVE TH FIREPLACE 70" +/- FROM THE FLOOR. SEE SKETCH # 7 PAGE 18

281 **KITCHEN** Qty: 2

Before June 1, 2021
RELOCATE STANDARD KITCHEN LIGHTS TO BE CENTERED +/- ON THE ISLAND. SEE SKETCH# 7 PAGE 18

Fireplace

1. This Sales Selection Sheet when properly executed forms part of our Agreement of Purchase and Sale.
2. All extras and upgrades listed above are subject to Construction Progress and Architectural and Municipal requirements.
3. In the event the Vendor is unable to incorporate the work approved above in the construction of the house for any reason whatsoever, the Vendor will not be liable to the Purchaser in any way. The monies paid for any changes or optional extras not proceeded with shall be returned to the Purchaser, without interest. The cost of options or extras is non-refundable in all other circumstances. If for any reason whatsoever the Agreement of Purchase and Sale is not completed, the total cost of work approved above will be retained by the Vendor.
4. The Vendor reserves the right to substitute above materials and equipment with that of equal or better quality.
5. Purchaser acknowledges that items may not be exactly as shown. Variations from the Vendor's samples may occur in finished materials due to normal production processes. Vendor is not responsible for shade difference which may occur from different dye lots or wood grains. Variations from the Vendor's samples will occur with natural materials such as wood, marble, granite, hardwood and brick.
6. The Vendor reserves the right to select Grout & Thresholds that best suits the Tile selected.
7. Selections will not be processed unless signed by Heathwood Homes Head Office.
8. The selections made on this schedule are final and cannot be changed once submitted.
9. The Purchaser has checked and acknowledges the accuracy of this schedule.

08/03/2021 — Date
Purchaser
8/03/21 — Date
TINA LEFUR — Décor Consultant

Date
Purchaser
APPROVED -09- 09 2021
Date Approved
HEATHWOOD HOMES (UPCOUNTRY) LIMITED

HEATHWOOD

Sales Selection Sheet

03-Aug-21

LOT 001-5 20-2329 ELEV A THE HAMPTON

PURCHASERS: DIVYA VIJAYAKUMAR CONTACT NO: 201-936-0738

VENDOR: **HEATHWOOD HOMES (UPCOUNTRY) LIMITED** **HST #**

It is herein understood and agreed between the undersigned parties hereto that the following changes shall be made to the above mentioned Agreement of Purchase and Sale in accordance with the agreement and except for such changes noted below, all other terms and conditions in the Agreement of Purchase and Sale shall remain as stated herein: It is further understood that and agreed that all changes and additions shall be installed as per builder's specifications, location and available selections. The Purchaser hereby agrees to purchase the following extras:

AMOUNT

44 Qty: 1

Purchasers have been advised: heat from the FP can damage TV above a FP and items placed on mantle. Purchasers acknowledge: Heathwood Homes and its contractors will not be liable for any damage on items placed/installed above a FP after closing

Granite

541 **Optional Upgrade** **Kitchen** Qty: 1

Countertop Pricing before June 1 Upg 6

Hardwood

563 **Vintage** **KITCHEN** Qty: 1

3-1/4" before June 1, 2021

562 **Vintage** **OPT HALL/closet** Qty: 1

3-1/4" before June 1, 2021

Heating / Air

277 **Optional Extras** Qty: 1

ROUGH-IN GAS LINE FOR GAS STOVE AT MAIN FLOOR (See specs) (Hook-up not included)Leave standard 120 volt electrical outlet on a separate circuit. SKETCH # 8 PAGE 19
STOVE SPECS PAGES 30-32

Mirrors/Glass Products

527 **Shower Upgrade** **Master Ensuite** Qty: 1

Upgrade to Frameless clear glass with D-Ring Handle in chrome Before June 1, 2021

1. This Sales Selection Sheet when properly executed forms part of our Agreement of Purchase and Sale.
2. All extras and upgrades listed above are subject to Construction Progress and Architectural and Municipal requirements.
3. In the event the Vendor is unable to incorporate the work approved above in the construction of the house for any reason whatsoever, the Vendor will not be liable to the Purchaser in any way. The monies paid for any changes or optional extras not proceeded with shall be returned to the Purchaser, without interest. The cost of options or extras is non-refundable in all other circumstances. If for any reason whatsoever the Agreement of Purchase and Sale is not completed, the total cost of work approved above will be retained by the Vendor.
4. The Vendor reserves the right to substitute above materials and equipment with that of equal or better quality.
5. Purchaser acknowledges that items may not be exactly as shown. Variations from the Vendor's samples may occur in finished materials due to normal production processes. Vendor is not responsible for shade difference which may occur from different dye lots or wood grains. Variations from the Vendor's samples will occur with natural materials such as wood, marble, granite, hardwood and brick.
6. The Vendor reserves the right to select Grout & Thresholds that best suits the Tile selected.
7. Selections will not be processed unless signed by Heathwood Homes Head Office.
8. The selections made on this schedule are final and cannot be changed once submitted.
9. The Purchaser has checked and acknowledges the accuracy of this schedule.

8/03/2021 8/03/21 TINA LEFUR

Date Purchaser Date Décor Consultant

APPROVED -03- 09 2021

Date Purchaser Date Approved HEATHWOOD HOMES (UPCOUNTRY) LIMITED

HEATHWOOD

Sales Selection Sheet

15 of 41

03-Aug-21

LOT **001-5** 20-2329 ELEV A THE HAMPTON

PURCHASERS: DIVYA VIJAYAKUMAR CONTACT NO: 201-936-0738

VENDOR: **HEATHWOOD HOMES (UPCOUNTRY) LIMITED** **HST #**

It is herein understood and agreed between the undersigned parties hereto that the following changes shall be made to the above mentioned Agreement of Purchase and Sale in accordance with the agreement and except for such changes noted below, all other terms and conditions in the Agreement of Purchase and Sale shall remain as stated herein: It is further understood that and agreed that all changes and additions shall be installed as per builder's specifications, location and available selections. The Purchaser hereby agrees to purchase the following extras:

				AMOUNT
226	**STANDARD Kitchen Sink Option** KINDRED Kitchen Sink Collection - Reginox NS1930U/9 Stainless Kitchen Single Bowl Undermount Sink (or equivalent) PAGE 22	**KITCHEN**	Qty: 1	

1. This Sales Selection Sheet when properly executed forms part of our Agreement of Purchase and Sale.
2. All extras and upgrades listed above are subject to Construction Progress and Architectural and Municipal requirements.
3. In the event the Vendor is unable to incorporate the work approved above in the construction of the house for any reason whatsoever, the Vendor will not be liable to the Purchaser in any way. The monies paid for any changes or optional extras not proceeded with shall be returned to the Purchaser, without interest. The cost of options or extras is non-refundable in all other circumstances. If for any reason whatsoever the Agreement of Purchase and Sale is not completed, the total cost of work approved above will be retained by the Vendor.
4. The Vendor reserves the right to substitute above materials and equipment with that of equal or better quality.
5. Purchaser acknowledges that items may not be exactly as shown. Variations from the Vendor's samples may occur in finished materials due to normal production processes. Vendor is not responsible for shade difference which may occur from different dye lots or wood grains. Variations from the Vendor's samples will occur with natural materials such as wood, marble, granite, hardwood and brick.
6. The Vendor reserves the right to select Grout & Thresholds that best suits the Tile selected.
7. Selections will not be processed unless signed by Heathwood Homes Head Office.
8. The selections made on this schedule are final and cannot be changed once submitted.
9. The Purchaser has checked and acknowledges the accuracy of this schedule.

08/03/2021		8/03/21	
Date	Purchaser	Date	Décor Consultant
		APPROVED	
Date	Purchaser	Date Approved	HEATHWOOD HOMES (UPCOUNTRY) LIMITED

CU UPCOUNTRY
LOT 1-5
20-2329 ELEV A
THE HAMPTON

16 of 41

The Hampton

20-2329 ELEV. A

ELEVATION A: 2,329 SQ FT

Sketch #5

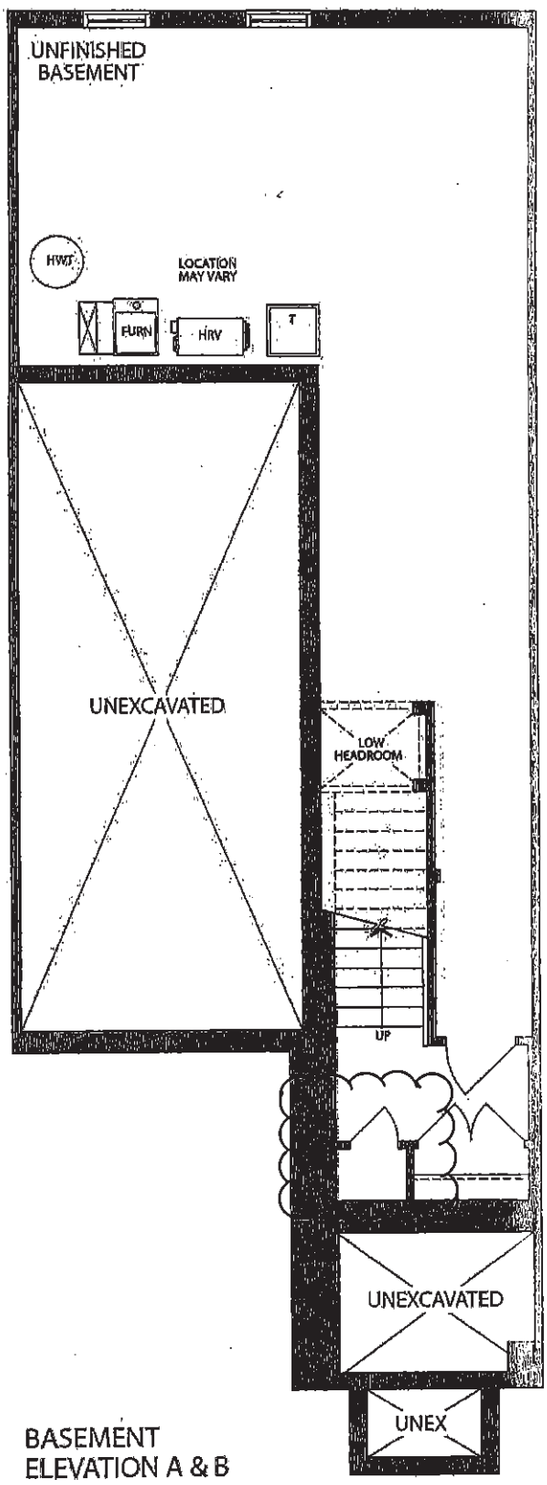

BASEMENT
ELEVATION A & B

Legal Plan: July 22, 2020

CU UPCOUNTRY
LOT 1-5
20-2329 ELEV A
THE HAMPTON

The Hampton

20-2329 ELEV. A

ELEVATION A: 2,329 SQ FT

Sketch # 6

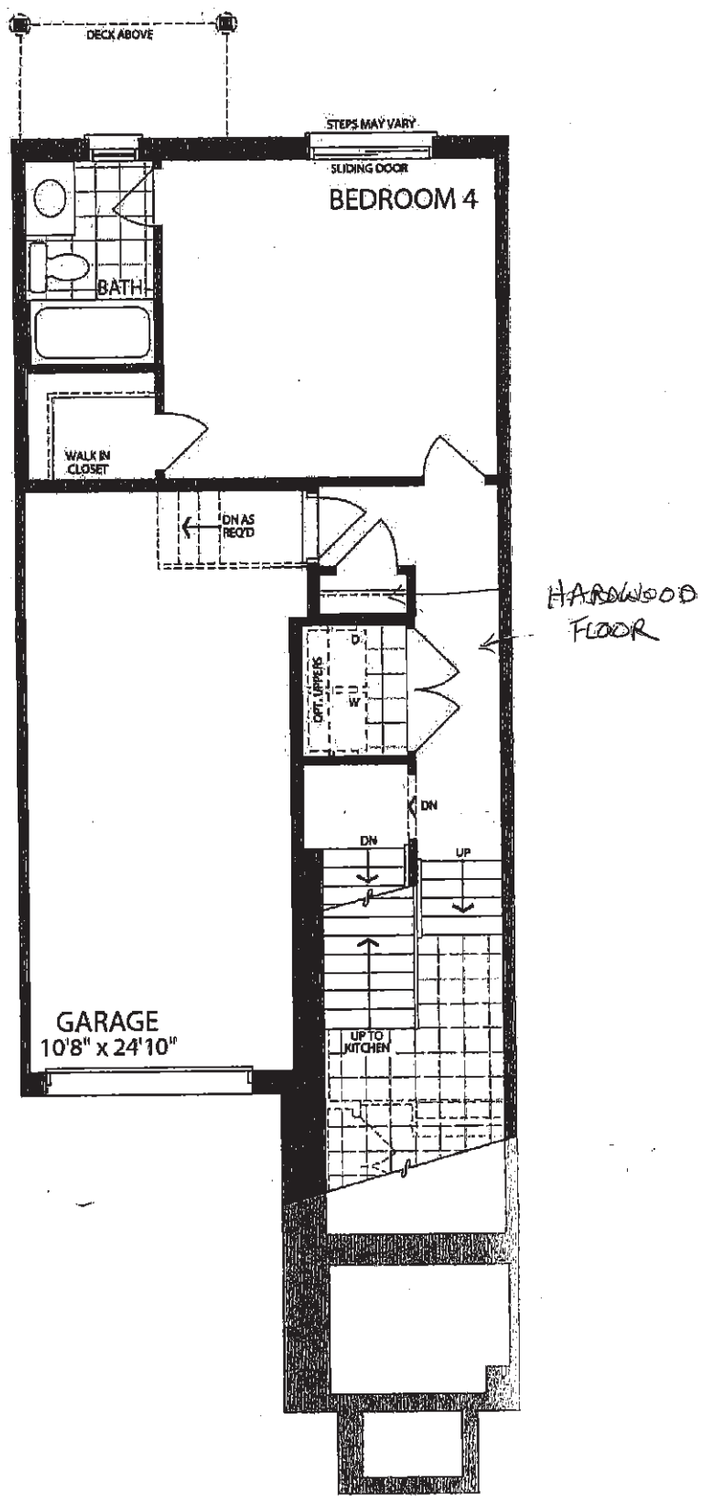

LOWER LEVEL WITH
OPTIONAL BEDROOM AND BATH
ELEVATION 'A'&'B'

Legal Plan: July 22, 2020

CU UPCOUNTRY
LOT 1-5
20-2329 ELEV A
THE HAMPTON

18 of 41

The Hampton

20-2329 ELEV. A

ELEVATION A: 2,329 SQ FT

Sketch #7

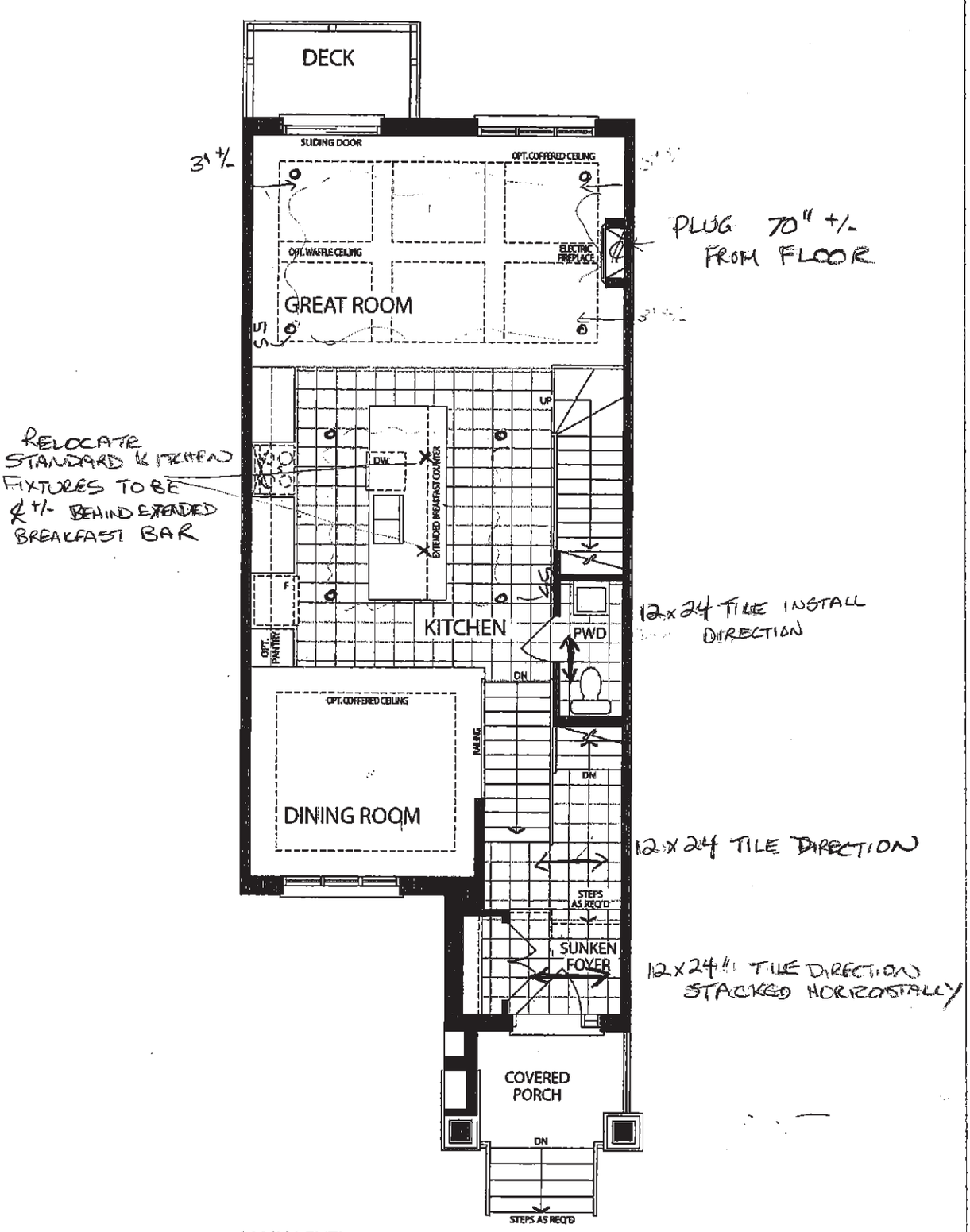

MAIN LEVEL
ELEVATION A

Legal Plan: July 22, 2020

STANDARD KITCHEN

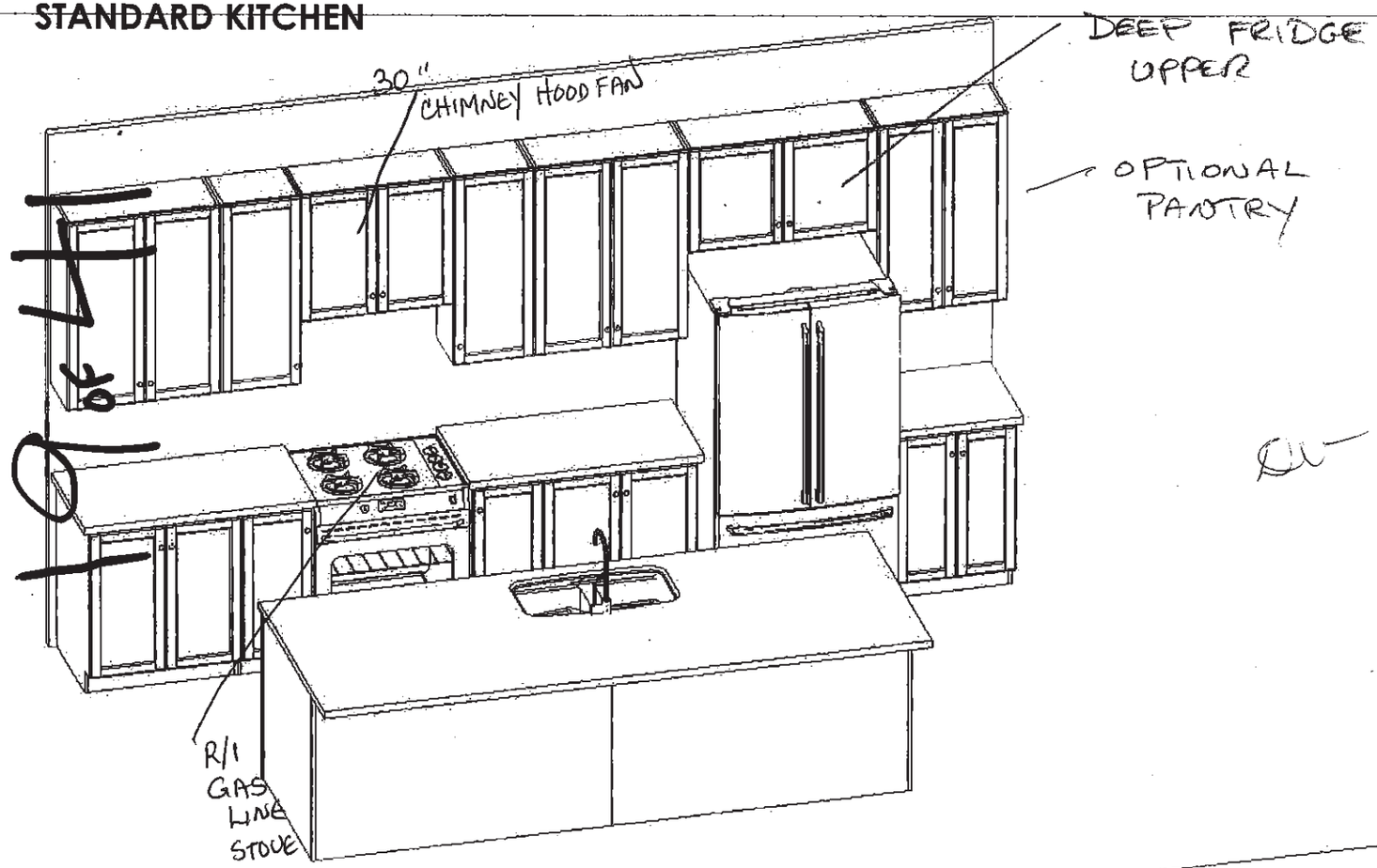

Sketch #8

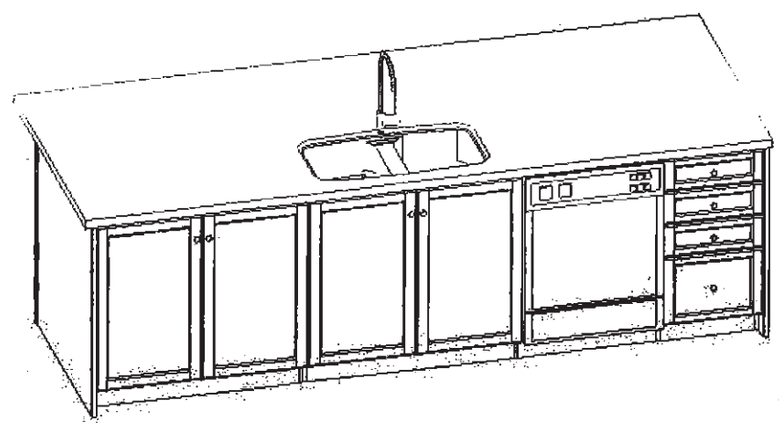

FRENDEL KITCHENS LIMITED
1350 Shawson Drive, Mississauga, ON L4W 1C5

HEATHWOOD HOMES
COUNTRY LANE, WHITBY
MODEL: 20-2329 (2004)

STANDARD CONTRACT INCLUDES:

Appliance Openings
- Hood Opening: 30"W builder hood
- Fridge Opening: 37 3/8 "W X 73 3/8"
- Fridge cabinet: 30cm deep
- Stove Opening: 30" Freestanding
- Dishwasher Opening: 24"

Standard Kitchens Scope:
- 100cm H wall cabinets
- Std. Blum Hinges- **not soft close**
- Std. Metabox Drawers- **not soft close**
- Min 40cm W drawer
- Backing on all cabinets
- Countertop by others
- Upgrade applied paneled fridge & dishwashers supply only (appliance hardware by others)

Classic Collection
Optional Upgrade to Includes:
- Top Drawer Construction (In lieu of Standard bank of drawers)
- Tandem Box **Soft Close Drawers**
- Blumotion **Soft Close Hinges for Doors**
- Crown Moulding
- Deep Fridge Upper w/Deep Panel
- Tall upper Cabinets

CU UPCOUNTRY
LOT 1-5
20-2329 ELEV A
THE HAMPTON

/2021

THIS DRAWING IS FOR DESIGN PURPOSES ONLY.
IT IS NOT AN EXACT RENDITION.

CU UPCOUNTRY
LOT 1-5
20-2329 ELEV A
THE HAMPTON

The Hampton

20-2329 ELEV. A

ELEVATION A: 2,329 SQ FT

Sketch #9

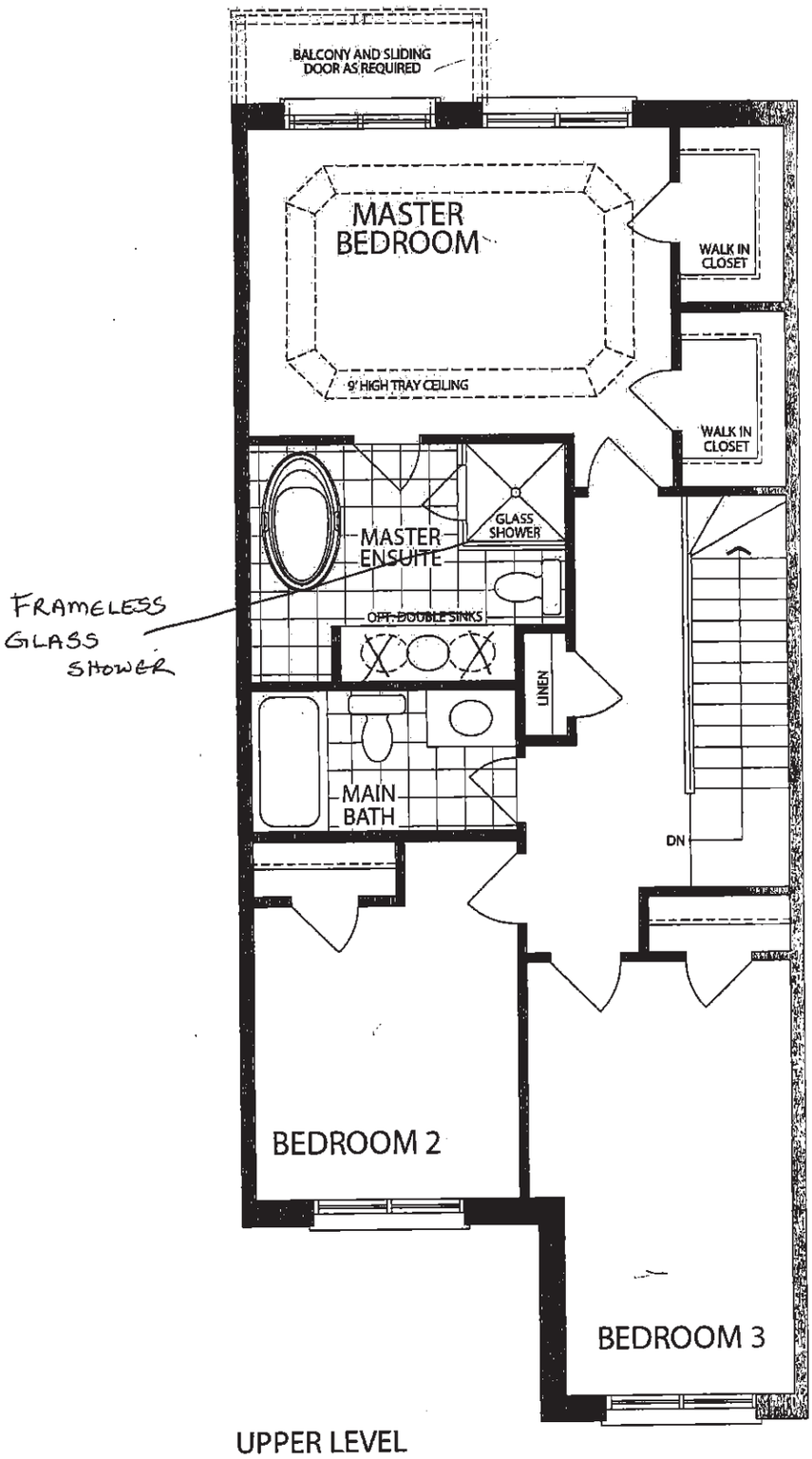

UPPER LEVEL
ELEVATION A

Legal Plan: July 22, 2020

CU UPCOUNTRY
LOT 1-5
20-2329 ELEV A
THE HAMPTON

NATIONAL
FIREPLACES & AIR SYSTEMS

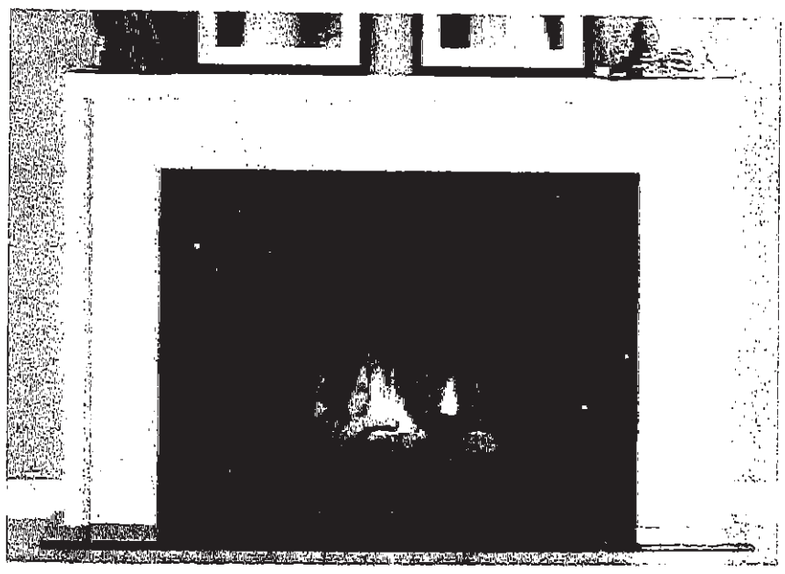

'CABINET'

NFAS NF17 Mantel

CU UPCOUNTRY
LOT 1-5
20-2329 ELEV A
THE HAMPTON

22 of 41

Stainless Steel | 122.0264.716

FAMILY : **Sinks** | SERIES : **Reginox** | MODEL : **NS1930U/9** | FINISH : **Stainless Steel** | INSTALLATION TYPE : **Undermount**

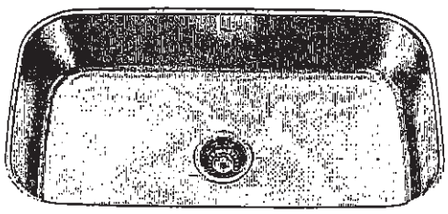

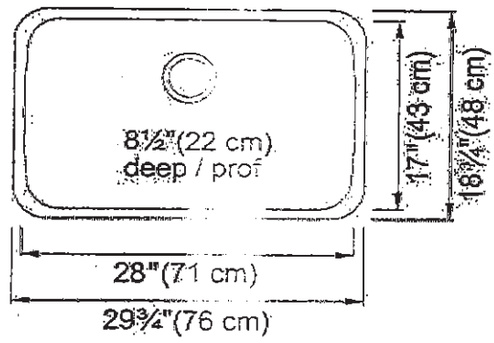

TECHNICAL DATA	
Width overall	18 3/4"
Length overall	29 3/4"
Width of large bowl	17"
Length of large bowl	28"
Depth of large bowl	8 1/2"
Cabinet Size	36"
Number of Bowls	1
Waste Outlet Diameter	3 1/2"
Cut-Out Template	Yes
Faucet Hole	None
Type of Material	18 Gauge Stainless Steel
Surface Finish	SILK
Special feature	Rear Drain Waste Hole Location
Waste Kit Included	YES

CU UPCOUNTRY
LOT 1-5
20-2329 ELEV A
THE HAMPTON

STANDARD KITCHEN FAUCET

Align

Modern

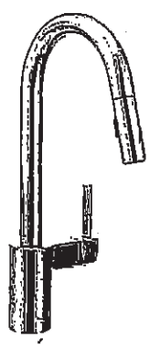

Single Handle Pull-Down Kitchen Faucet‡

Model 7565†

American Standard

BOULEVARD® PEDESTAL SINK
VITREOUS CHINA

BOULEVARD® PEDESTAL SINK

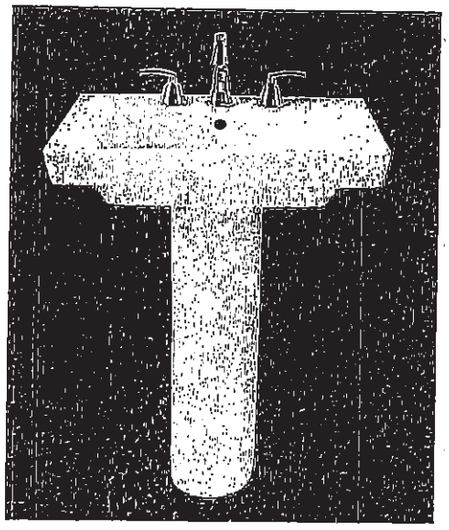

- ☐ **0641.800** Faucet holes on 8" (203mm) centers (Illustrated)
- * ☐ **0641.400** Faucet holes on 4" (102mm) centers
- ☐ **0641.100** Center hole only
  - Classic styled rectangular pedestal lavatory
  - Vitreous china
  - Rear overflow
  - Supplied with mounting kit
  - Right Height® for greater comfort during use
  - Faucet ledge with large deck area (faucet not included)
  - **Design coordinates with Boulevard® Toilet**
  - Basin has flat bottom to also allow use as an **above counter** sink or a **drop-in** sink (with u-shaped cut out)

Nominal Dimensions:
24" x 19" x 35-1/2"
(610 x 483 x 902mm)

- ☐ **0641.008** Pedestal top-8" (203mm) centers
- ☐ **0641.004** Pedestal top-4" (102mm) centers
- ☐ **0641.001** Pedestal top-center hole only
- ☐ **0010.000** Pedestal only

SEE REVERSE FOR ROUGHING-IN DIMENSIONS

Bowl sizes:
17" (432mm) wide,
12-1/2" (318mm) front to back,
5" (127mm) deep

Compliance Certifications -
Meets or Exceeds the Following Specifications:
- ASME A112.19.2 - 2008/CSA B45.1-08

To Be Specified:
- ☐ Color: ☐ White ☐ Linen
- ☐ Faucet Finish:
- ☐ Supplies:
- ☐ 1-1/4" Trap:
- ☐ Nipple:

* See faucet section for additional models available

© 2014 AS America Inc.

CU UPCOUNTRY
LOT 1-5
20-2329 ELEV A
THE HAMPTON

25 of 44

COLONY™ COUNTERTOP SINK

VITREOUS CHINA

COLONY COUNTERTOP SINK

- Vitreous china
- Self-rimming
- Front overflow
- Supplied with template
- Faucet deck
  (Faucet shown not included)

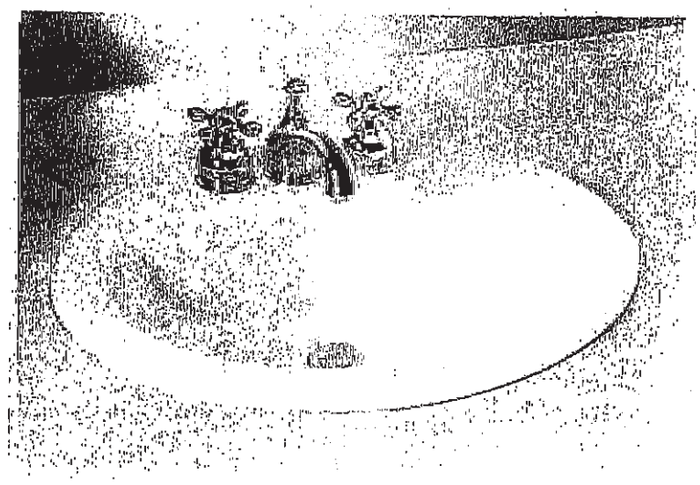

☑ **0346 803**
Faucet holes on 203mm (8") centres

☐ **0346 403** (Illustrated)
Faucet holes on 102mm (4") centres

☐ **0346 001**
Centre hole only

Nominal Dimensions:
521 x 448mm (20-1/2" x 17-5/8")

Bowl sizes:
422mm (16-5/8") wide, 279mm (11") front to back, 143mm (5-5/8") deep

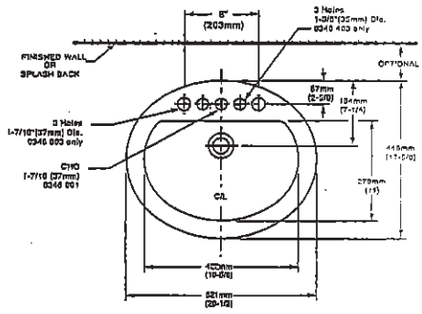

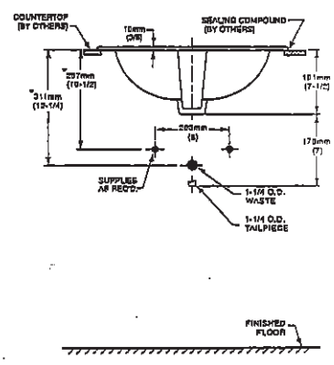

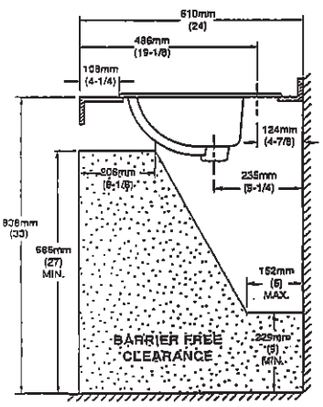

COMPLIANCE CERTIFICATIONS –
Meets or exceeds the following Specifications:
- ASME A112.19.2M for Vitreous China Fixtures.
- CAN/CSA B45 Series.

To Be Specified

☐ Colour: ☑ White ☐ Bone ☐ Silver Gray ☐ Linen

☐ Faucet*:

☐ Faucet Finish:

☐ Supplies & Stops:

☐ Trap 1-1/4" (32 mm):

NOTES:
* DIMENSIONS SHOWN FOR LOCATION OF SUPPLIES AND "P" TRAP ARE SUGGESTED. FOR COUNTERTOP CUTOUT AND INSTALLATION INSTRUCTIONS USE TEMPLATE SUPPLIED WITH SINK.
FAUCETS NOT INCLUDED AND MUST BE ORDERED SEPARATELY.
IMPORTANT: Dimensions of fixtures are nominal and may vary within the range of tolerances established by ANSI Standard A112.19.2.
These measurements are subject to change or cancellation. No responsibility is assumed for use of superseded or voided pages.

* See faucet section for additional models available

© 2000 American Standard Inc.

CU UPCOUNTRY
LOT 1-5
20-2329 ELEV A
THE HAMPTON

Demi CF2007

CU UPCOUNTRY
LOT 1-5
20-2329 ELEV A
THE HAMPTON

Chateau

Transitional

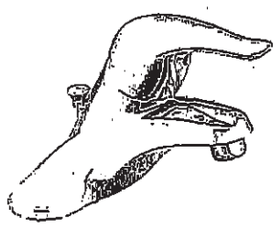

Lavatory Faucet with Pop-Up Drain
Model L4621†

VANITY SINKS AND PEDESTAL

Posi-Temp® Pressure Balancing Tub/Shower
Model 62320 / TL183†
OR
Posi-Temp Valve and Tub/Shower Trim with Eco-Performance Easy Clean® XL
Model 62320 / TL183EP†
(TL183EP not available in BC)

SHOWER AND 5' TUB FAUCETS

2 Handle Roman Tub with 9" Spout
Model 4796 / T990†.

FREESTANDING TUB FAUCETS

CU UPCOUNTRY
LOT 1-5
20-2329 ELEV A
THE HAMPTON

Cyclone®

SCB51430 Canopy Hood

Alito Collection

Makes a statement of strength and power as the stainless steel frame gleams under your kitchen lights. It features baffle filters, tow bright LED lights in each corner, a three speed control panel, and a quiet, powerful motor. The bold design and strong stainless steel frame encasing the fan will make this machine the focus of your kitchen. Fitted with time-delay "OFF" options up to nine minutes.

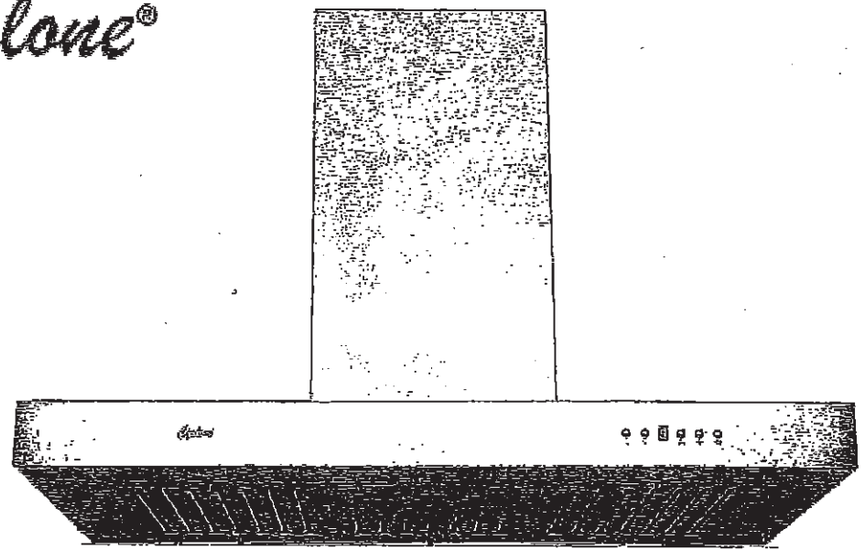

Specifications

Air Flow Volume:	550 CFM
Colours:	Stainless Steel
Dimensions:	W:30" H:44.5" D:19.5"
Electrical Connection:	120V/60Hz
Electrical Consumption:	200 watts
Fan Speed:	1254 RPM
Sones:	Min. at 2 and Max at 6
Venting:	6" Round (Top Only)

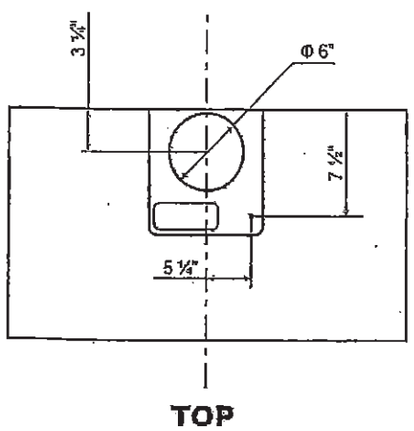

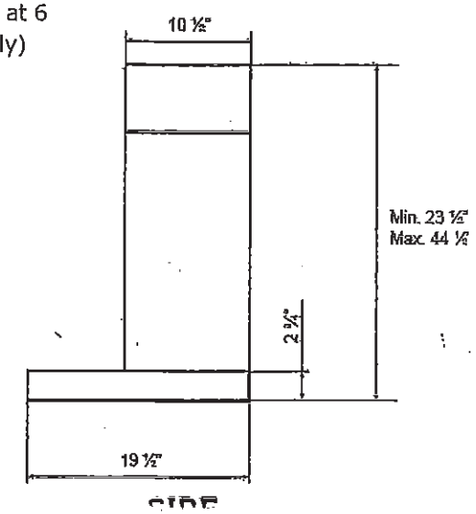

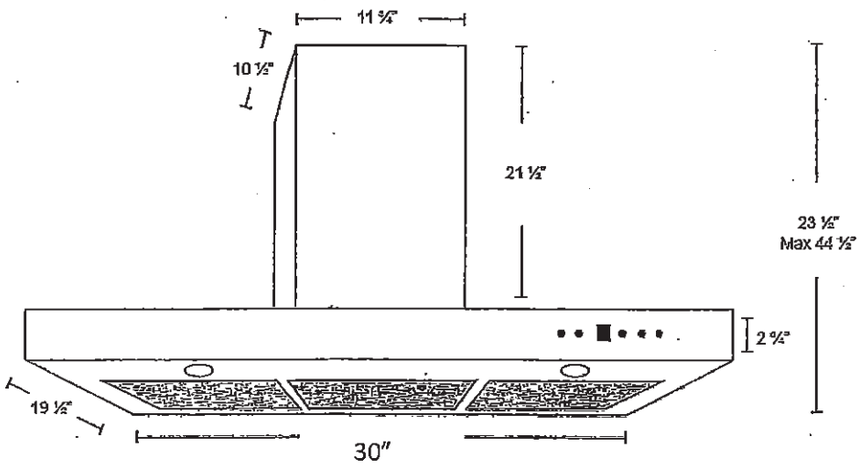

28 of 41

CU UPCOUNTRY
LOT 1-5
20-2329 ELEV A
THE HAMPTON

29 of 41

Whirlpool® Bottom Mount Refrigerator

PRODUCT MODEL NUMBERS

WRF532SMB
WRF535SMB
~~WRF535SWB~~
WRF540CWB

Electrical: A 115-volt, 60-Hz, AC-only, 15- or 20-amp fused, grounded electrical supply is required. It is recommended that a separate circuit serving only your refrigerator be provided. Use an outlet that cannot be turned off by a switch. Do not use an extension cord.

NOTE: Before performing any type of installation, cleaning, or removing a light bulb, turn the control (Thermostat, Refrigerator or Freezer Control depending on the model) to OFF and then disconnect the refrigerator from the electrical source. When you are finished, reconnect the refrigerator to the electrical source and reset the control (Thermostat, Refrigerator or Freezer Control depending on the model) to the desired setting. See "Using the Controls."

Water: A cold water supply with water pressure between 30 and 120 psi (207 and 827 kPa) is required to operate the ice maker and water dispenser. If you have questions about your water pressure, call a licensed, qualified plumber.

IMPORTANT: The pressure of the water coming out of a reverse osmosis system going to the water inlet valve of the refrigerator needs to be between 35 and 120 psi (241 and 827 kPa).

Reverse Osmosis Water Supply: If a reverse osmosis water filtration system is connected to your cold water supply, the water pressure to the reverse osmosis system needs to be a minimum of 40 to 60 psi (276 to 414 kPa).

PRODUCT DIMENSIONS

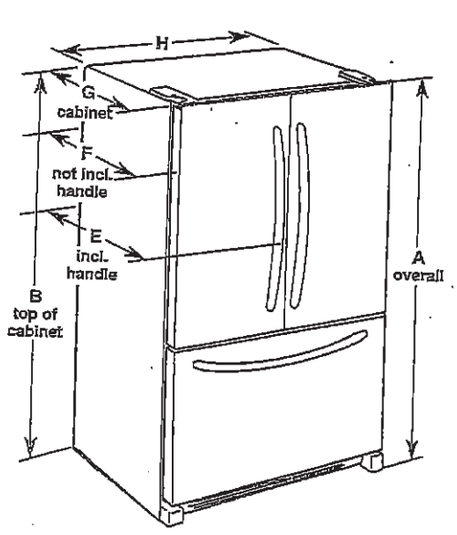

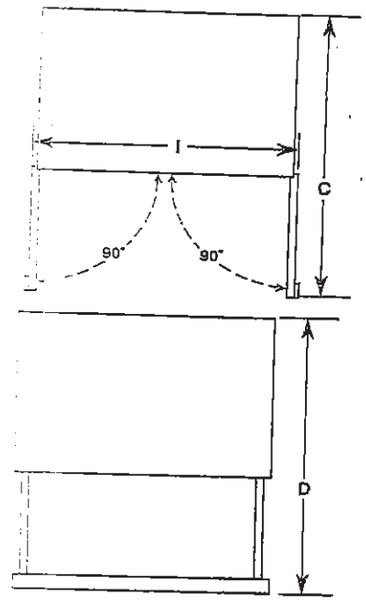

Model Number/ Size	Height - Overall "A"	Height - Top of Cabinet "B"	Depth - Doors Open 90° "C"	Depth - Drawer Open "D"	Depth - With Handles "E"	Depth - Without Handles "F"	Depth - Cabinet Only "G"	Width - Cabinet "H"	Width - Door Open 90° "I"
WRF535SWB 25.2 cu. ft.	70½" (178.1 cm)	68 9/16" (174.8 cm)	48 1/16" (122.1 cm)	53¼" (135 cm)	35½" (90 cm)	32 15/16" (83.7 cm)	29½" (74 cm)	35¾" (90.5 cm)	43⅜" (110.2 cm)
WRF535SMB 25.2 cu. ft.	70½" (178.1 cm)	68 9/16" (174.8 cm)	48 1/16" (122.1 cm)	53¼" (135 cm)	35½" (90 cm)	32 15/16" (83.7 cm)	29½" (74 cm)	35¾" (90.5 cm)	43⅜" (110.2 cm)
WRF532SMB 22.1 cu. ft.	70½" (178.1 cm)	68 9/16" (174.8 cm)	47 1/16" (119.5 cm)	52⅛" (132.4 cm)	34⅜" (87.5 cm)	31 9/16" (80.1 cm)	28½" (71.4 cm)	32⅝" (82.9 cm)	42⅜" (107.6 cm)
WRF540CWB 20 cu. ft.	70½" (178.1 cm)	68 9/16" (174.8 cm)	48" (121.9 cm)	44½" (113.0 cm)	29⅜" (74.6 cm)	28" (71.1 cm)	24⅛" (61.3 cm)	35¾" (90.5 cm)	39⅜" (100.0 cm)

LOCATION REQUIREMENTS

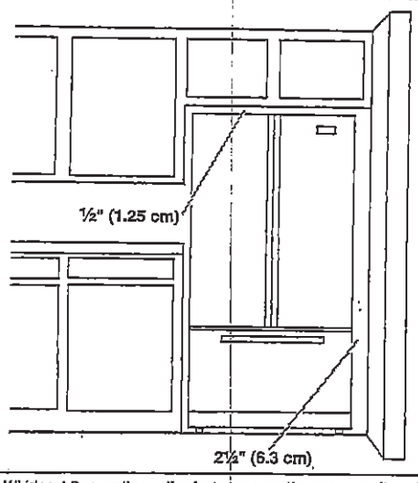

To ensure proper ventilation for your refrigerator, allow for a ½" (1.25 cm) space on each side and at the top. Allow for 1" (2.54 cm) of space behind the refrigerator. If your refrigerator has an ice maker, make sure you leave some extra space at the back for the water line connections.

If you are installing your refrigerator next to a fixed wall, leave 2½" (6.3 cm) minimum on the hinge side (some models require more) to allow for the door to swing open.

NOTE: This refrigerator is intended for use in a location where the temperature ranges from a minimum of 55°F (13°C) to a maximum of 110°F (43°C). The preferred room temperature range for optimum performance, which reduces electricity usage and provides superior cooling, is between 60°F (15°C) and 90°F (32°C). It is recommended that you do not install the refrigerator near a heat source, such as an oven or radiator.

Because Whirlpool Corporation policy includes a continuous commitment to improve our products, we reserve the right to change materials and specifications without notice.

Dimensions are for planning purposes only. For complete details, see Installation Instructions packed with product. Specifications subject to change without notice.

Ref. W10597594B
10/1/14

CU UPCOUNTRY
LOT 1-5
20-2329 ELEV A
THE HAMPTON

30 OF 41

Whirlpool

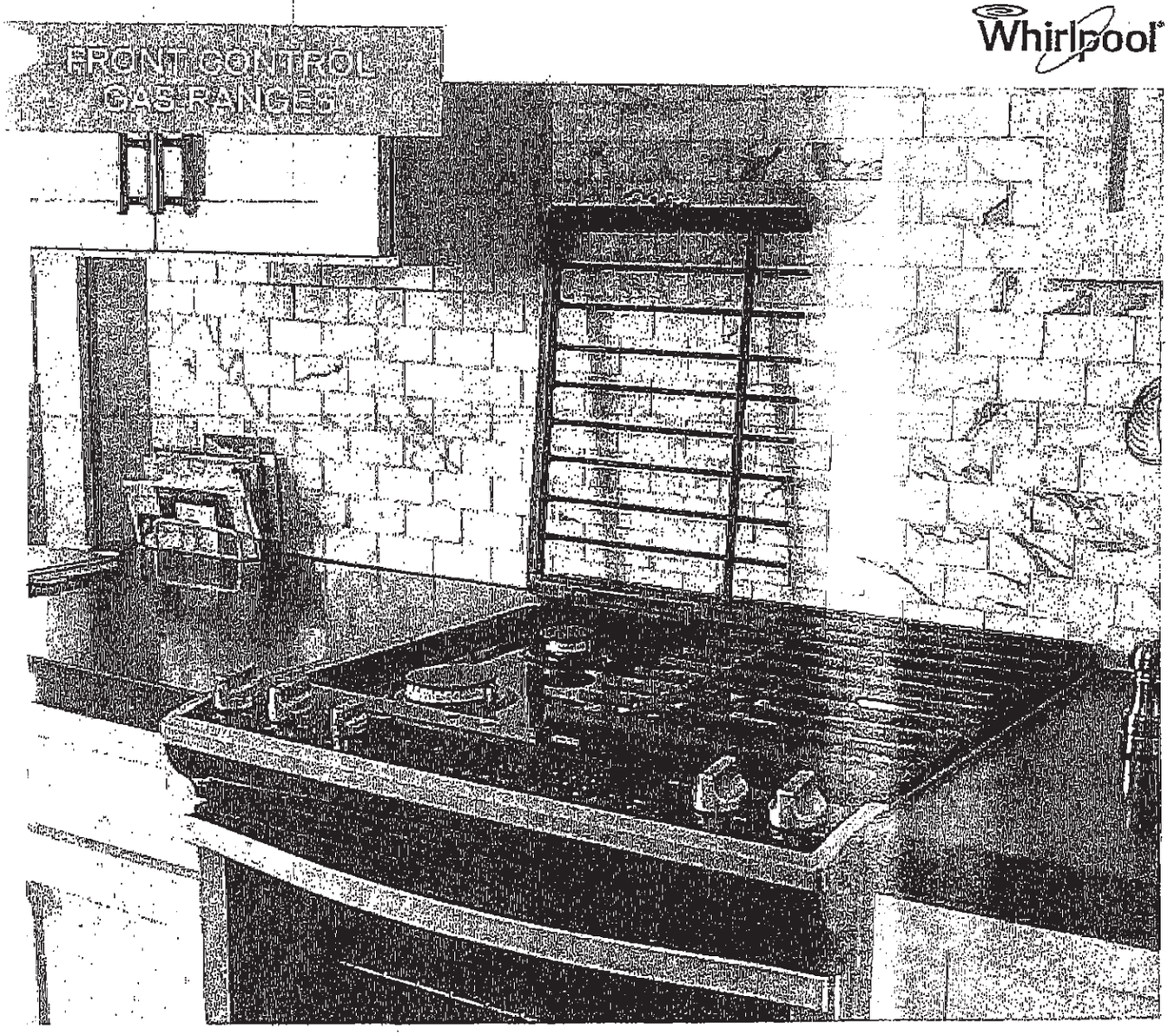

FEATURING

TimeSavor™ system
The TimeSavor™ system's Frozen Bake Technology allows you to skip preheating for favorites like pizza, lasagna, chicken nuggets, fries or pies so you can cook frozen foods faster.*

HeatRight™ system
The HeatRight™ system's True convection helps you to cook food faster* with a rear fan and third heating element to circulate hot air over, under, and around food.

CompleteClean™ system
The CompleteClean™ system's EZ-2-Lift™ hinged grates give you quick access to spills on the cooktop. The industry first hinged design allows you to wipe up under them without removing them entirely. For a more thorough clean, the grates are also dishwasher-safe.

Every day, care.

From the #1 Selling Appliance brand in the USA†

CU UPCOUNTRY
LOT 1-5
20-2329 ELEV A
THE HAMPTON

Front Control Gas Ranges

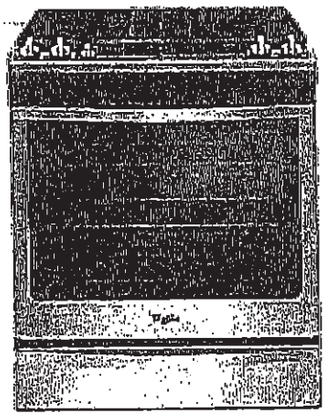

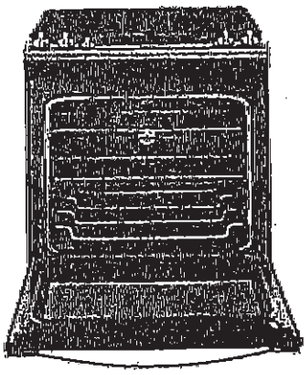

WEG745H0F

30" Freestanding Range - 5.8 cu. ft.

TimeSavor™ system
- Frozen Bake™ Technology

HeatRight™ system
- True Convection
- Convection Conversion
- AccuSimmer® burner
- Center Oval burner
- Temperature Sensor

CompleteClean System
- EZ-2-Lift™ Hinged Grates
- AccuClean® Self-cleaning Technology
- Dishwasher-safe knobs

ReadySet™ system
- (2) SpeedHeat™ burners
- Rapid Preheat
- Keep Warm
- Delay Cook

Available colors

S
Stainless Steel

H
White

B
Black

PRODUCT DIMENSIONS

This range comes in several models. Your model may appear different from the model shown. Dimensions given are nominal and are not rated at material.

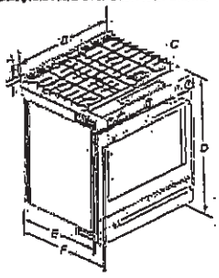

A. 15 1/4" (38.7 cm) height from cooktop to top of vent
B. 29 1/2" (75.0 cm)
C. 4 positions number plate located behind the oven door on the left-hand side of the oven cavity
D. 30" (76.2 cm) range height to top of cooktop when leveling legs screwed all the way in
E. 29 7/8" (75.9 cm) depth from front of cooktop to back of range
F. 29 1/2" (75.0 cm) depth, front to back of range.

IMPORTANT: Range must be level after installation. Follow the instructions in the "Level Range" section. Using the cooktop as a reference for leveling the range is not recommended.
* Range can be adjusted approximately 1" (2.5 cm) by adjusting the leveling legs

Type of Gas

Natural gas
- This range is factory set for use with natural gas. See "Gas Connections" section. The model/serial rating plate located behind the oven door at the bottom on the right side of gas that can be used. If the type of gas listed do not match the type of gas available, check with the local gas supplier.

LP gas conversion

Converter must be done by a qualified service technician. No attempt shall be made to convert the appliance from the gas specified on the model/serial rating plate for use with a different gas without consulting the serving gas supplier. See "Gas Conversion" section.

CABINET OPENING DIMENSIONS

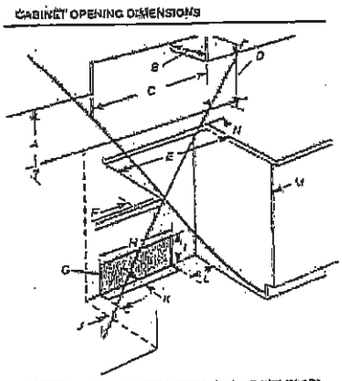

IMPORTANT: When installing a range made of microwave-heat sensitive plastic above the range, follow the range heat of microwave-heat sensitive plastic installation instructions for dimensional clearances below the cooking surface.

Range may be installed next to cabinets as low as zero clearance.

NOTE: Wall cabinet is optional. The bottom of oven shelf may protrude beyond the base cabinet.

A. 18" (45.7 cm) above base cabinet to cooktop
B. 13" (33 cm) above cabinet shelf
C. 30" (76.2 cm) min. opening width
D. Recommended clearance to top of cabinet: see NOTE*.
E. 30 1/16" (76.4 cm) min. opening width
F. 3" (7.6 cm) min. clearance from both sides of range to side wall or other combustible material.
G. The shaded area is recommended for vent duct on right side of oven and of laundry outlet
H. 13 1/4" (33.7 cm)
I. 7" (17.8 cm)
J. 4" (10.2 cm)
K. 3 1/4" (8.3 cm) or measurement of 3/4 overhead in drawer
L. 12" (30.5 cm)
M. Cabinet door or drawer should not extend into the cutout.
N. Permanently counter shelf should not exceed 2 1/2" (6.7 cm)

*NOTE: 24" (61.0 cm) minimum when cabinet of wood or metal cabinet of thickness not less than 1/2" (1.3 cm). Same requirement applied covered with not less than No. 28 MSG sheet steel, 0.016" (0.4 mm) stainless steel, 0.020" (0.5 mm) aluminum or 0.020" (0.5 mm) copper.

ACCESSORIES & REPLACEMENT PARTS
- Part number 8273888A Anti-Tip Kit for Range
- Part number [illegible] Brick Baking Stone
- Part number [illegible] Porcelain Broiler Pan & Grid
- Part number W10[illegible]240 Premium Broil Pan & Roasting Rack
- Part number 8000[illegible] Appliance Light Bulb - 40 Watt

Whirlpool®

*Compared to a traditional preheat and bake cycle for pizza, nuggets/fries, pies and lasagna. **Compared to thermal-bake cycle on the same model. †Based on 12-month average of unit sales, Refrigeration, Cooking, Dishwashers, and Laundry appliances. Tracfone, 2014.

© [illegible] Whirlpool. All rights reserved. 5/15. Form No. [illegible]

CU UPCOUNTRY
LOT 1-5
20-2329 ELEV A
THE HAMPTON

32 of 41

Whirlpool® 30" (76.2 cm) Slide-in Gas Range

PRODUCT MODEL NUMBERS

WEG730H0D WEG760H0D WEG745H0F

GAS SUPPLY REQUIREMENTS

Gas supply line:

- Provide a gas supply line of ¾" (1.9 cm) rigid pipe to the range location. A smaller size pipe on longer runs may result in insufficient gas supply. With LP gas, piping or tubing size can be ½" (1.3 cm) minimum. Usually, LP gas suppliers determine the size and materials used in the system.
  NOTE: Pipe-joint compounds that resist the action of LP gas must be used. Do not use TEFLON® tape.

Flexible metal appliance connector:

- If local codes permit, a new CSA design-certified, 4 to 5 ft (122 to 152.4 cm) long, ½" (1.3 cm) or ¾" (1.9 cm) I.D., flexible metal appliance connector may be used for connecting range to the gas supply line.

- A ½" (1.3 cm) male pipe thread is needed for connection to the female pipe threads of the inlet to the appliance pressure regulator.
- Do not kink or damage the flexible metal tubing when moving the range.
- Must include a shutoff valve:
  The supply line must be equipped with a manual shutoff valve. This valve should be located in the same room but external to the range opening, such as an adjacent cabinet. It should be in a location that allows ease of opening and closing. Do not block access to shutoff valve. The valve is for turning on or shutting off gas to the range.

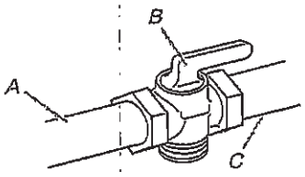

A. Gas supply line
B. Shutoff valve "open" position
C. To range

Gas Pressure Regulator

The gas pressure regulator supplied with this range must be used. The inlet pressure to the regulator should be as follows for proper operation:

Natural gas:
Minimum pressure: 5" WCP
Maximum pressure: 14" WCP

LP gas:
Minimum pressure: 11" WCP
Maximum pressure: 14" WCP

Contact local gas supplier if you are not sure about the inlet pressure.

PRODUCT DIMENSIONS

This manual covers several models. Your model may appear different from the models depicted. Dimensions given are maximum dimensions across all models.

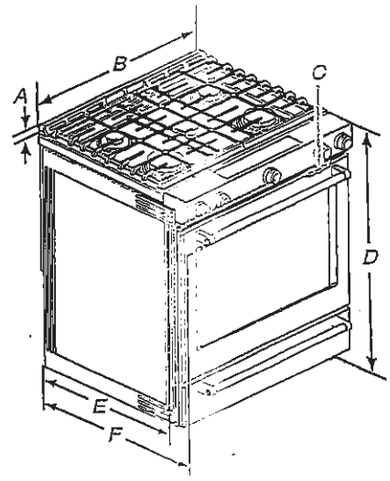

A. 1 3/16" (3.0 cm) height from cooktop to top of vent
B. 29 7/8" (75.9 cm)
C. Model/serial number plate (located behind the oven door on the top right-hand side of the oven frame)
*D. 36" (91.4 cm) height to top of cooktop edge with leveling legs screwed all the way in**
E. 28 5/16" (71.9 cm) max. depth from front of console to back of range.
F. 28 7/8" (73.3 cm) max. depth from handle to back of range.

IMPORTANT: Range must be level after installation. Follow the instructions in the "Level Range" section. Using the cooktop as a reference for leveling the range is not recommended.

* Range can be raised approximately 1" (2.5 cm) by adjusting the leveling legs.

Type of Gas

Natural gas:

- This range is factory set for use with natural gas. See "Gas Conversions" section. The model/serial rating plate located behind the control panel has information on the types of gas that can be used. If the types of gas listed do not include the type of gas available, check with the local gas supplier.

LP gas conversion:

Conversion must be done by a qualified service technician. No attempt shall be made to convert the appliance from the gas specified on the model/serial rating plate for use with a different gas without consulting the serving gas supplier. See "Gas Conversions" section.

®TEFLON is a registered trademark of Dupont.

Because Whirlpool Corporation policy includes a continuous commitment to improve our products, we reserve the right to change materials and specifications without notice.

Dimensions are for planning purposes only. For complete data see Installation Instructions packed with product. Specifications subject to change without notice.

Ref. W10665256E
5/16

CU UPCOUNTRY
LOT 1-5
20-2329 ELEV A
THE HAMPTON

33 of 41

Whirlpool® Dishwasher with ENERGY STAR® qualification

Whirlpool

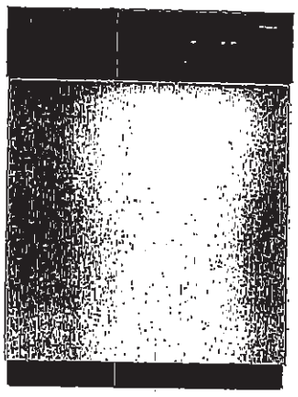

WDF310PAAS
Black-on-Stainless

OTHER AVAILABLE COLORS

- Black — Model: WDF310PAAB
- Biscuit-on-Biscuit — Model: WDF310PAAT
- White — Model: WDF310PAAW
- Universal Silver — Model: WDF310PAAD

ENERGY STAR

DIMENSIONS	
Maximum Height	34 1/2 Inches
Minimum Height	33 1/2 Inches
Height	34 1/2 Inches
Depth	24 1/2 Inches
Width	23 7/8 Inches

Dimensions shown are for planning purposes only. For complete information, see installation instructions packaged with product.

ELECTRICAL

15 Amps Amps. 60 Hz. 120 V. 15,

Before purchasing this appliance, read important information about its estimated annual energy consumption or energy efficiency rating that is available from your dealer.

KEY FEATURES

- ENERGY STAR® Qualified
- No One Has Fewer Repairs 17 Years In A Row
- Resource - Efficient Wash System
- CEE Tier 1 qualified
- Tall Tub Design
- White Plastic Interior
- Quiet Partner(TM) I Sound Package
- Auto Soil Sensor
- Electronic Controls
- 3 Automatic Cycles
- 1-Hour Wash Cycle
- Heavy Wash Cycle
- Normal Cycle
- 4 Options
- High Temperature Wash System
- Heated Dry Option
- 4 Hour Delay Wash Option
- 4-Tier SheerClean Direct Feed Wash System
- Control Lock
- Vinyl Racks
- In-Rack Silverware Basket

CU UPCOUNTRY
LOT 1-5
20-2329 ELEV A
THE HAMPTON

34 of 41

Whirlpool® Undercounter Dishwasher

PRODUCT MODEL NUMBERS

WDF110PAB	WDF310PLA	WDF530PSY
WDF111PAB	WDF320PAD	WDF540PAD
WDF120PAF	~~WDF510PAY~~	WDF730PAY
WDF121PAF	WDF520PAD	WDT710PAY
WDF310PAA	WDF530PAY	WDT720PAD
WDF310PCA	WDF530PLY	WDT770PAY

Electrical Requirements: 120-volt, 60-Hz, AC only, 15- or 20-amp. fused electrical supply. Copper wire only. A time delay fuse or circuit breaker and separate circuit is recommended.

If direct wiring dishwasher: Use flexible, armored, or nonmetallic, sheathed copper wire with grounding wire that meets the wiring requirements for your home and local codes and ordinances. Use a UL listed or CSA approved conduit connector.

If connecting dishwasher with a power supply cord: Use Power Supply Cord Kit (Part No. 4317824) marked for use with dishwashers. Follow the kit instructions for installing the power supply cord. Power supply cord must plug into a grounded 3 prong, outlet, located in the cabinet next to the dishwasher opening. Outlet must meet all local codes and ordinances.

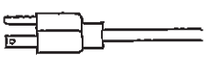

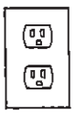

Water Supply Requirements: A hot water line with 20 to 120 psi (138 to 862 kPa) water pressure. Water temperature must be 120°F (49°C) water at dishwasher. Use ⅜" O.D. copper tubing with compression fitting or flexible braided water supply line (½" minimum plastic tubing is not recommended). Use a 90° elbow with ¾" N.P.T. external pipe threads on one end. Do not solder within 6" (15.2 cm) from water inlet valve.

Drain Requirements: A new drain hose is supplied with your dishwasher. If this is not long enough, use a new drain hose with a maximum length of 12' (3.7 m) (Part No. 3385556) that meets all current AHAM/IAPMO test standards, is resistant to heat and detergent, and fits the 1" (2.5 cm) drain connector of the dishwasher.

Make sure to connect the drain hose to waste tee or disposer inlet above drain trap in house plumbing and 20" (50.8 cm) minimum above the floor. It is recommended that the drain hose either be looped up and securely fastened to the underside of the counter or be connected to an air gap.

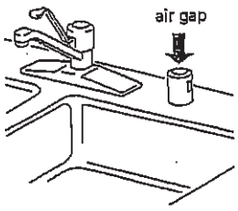

Make sure to use an air gap if the drain hose is connected to house plumbing lower than 20" (50.8 cm) above subfloor or floor.

Use ½" (1.3 cm) minimum I.D. drain line fittings.

If required, the air gap should be installed in accordance with the air gap installation instructions. When connecting the air gap, a rubber hose (not provided) will be needed to connect to the waste tee or disposer inlet.

PRODUCT DIMENSIONS

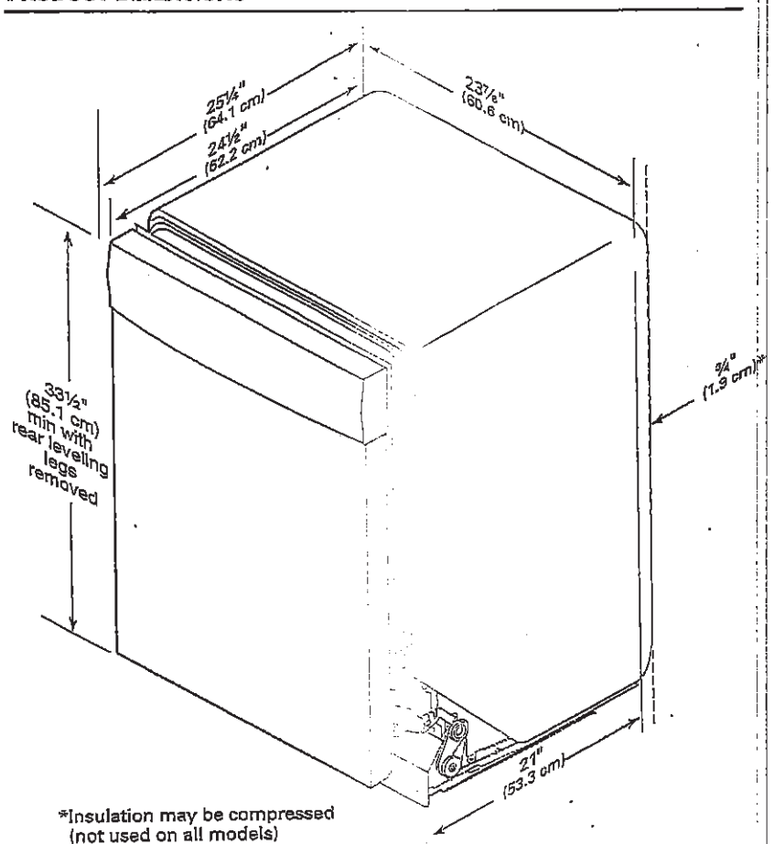

*Insulation may be compressed (not used on all models)

Because Whirlpool Corporation policy includes a continuous commitment to improve our products, we reserve the right to change materials and specifications without notice.

Dimensions are for planning purposes only. For complete details, see Installation Instructions packed with product. Specifications subject to change without notice.

W10435040C-D-WH
5/1/16

CU UPCOUNTRY
LOT 1-5
20-2329 ELEV A
THE HAMPTON

35 OF 41

CABINET CUTOUT DIMENSIONS

WDE320PAD

NOTE: Shaded areas of cabinet walls show where utility connections may be installed.

*Measure from the lowest point on the underside of the countertop. May be reduced to 33½" (85.1 cm) by removing the rear leveling legs from dishwasher.

**Minimum, measured from narrowest point of opening.

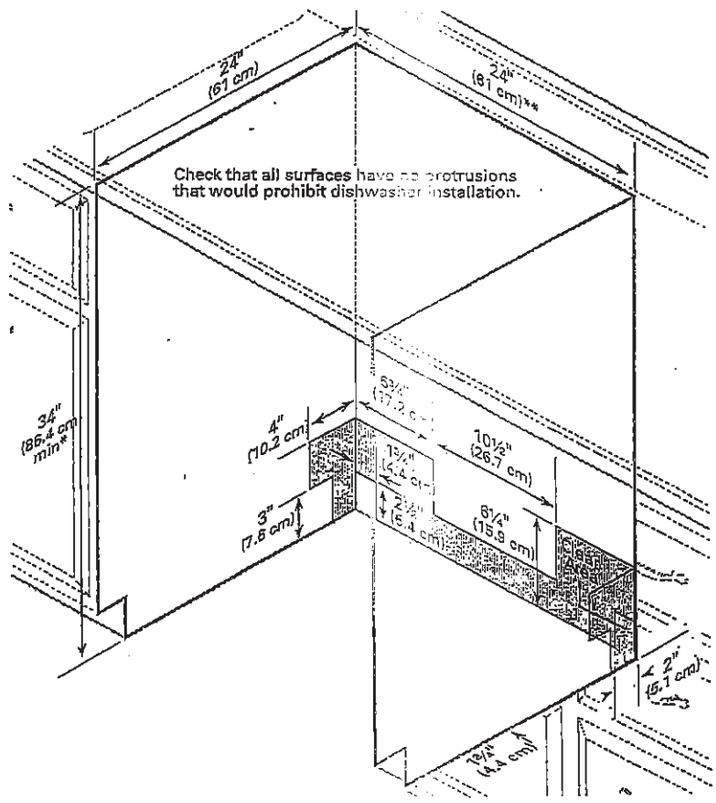

Because Whirlpool Corporation policy includes a continuous commitment to improve our products, we reserve the right to change materials and specifications without notice.

Dimensions are for planning purposes only. For correct installation details, see Installation Instructions packed with product. Specifications subject to change without notice.

W10435040C-D-WH
5/1/16

CU UPCOUNTRY
LOT 1-5
20-2329 ELEV A
THE HAMPTON

36 of 41

WHIRLPOOL WASHER Model #: WFW5620HW

Whirlpool Brand Canada English | Washer and Dryers | Washers | Front Load Washers | WFW5620HW

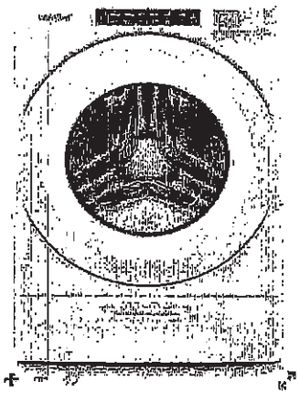

5.2 cu. ft. I.E.C. Closet-Depth Front Load Washer with Load & Go™ Dispenser

Whirlpool **5.2 cu. ft. I.E.C. Closet-Depth Front Load Washer with Load & Go™ Dispenser**

Model #: WFW5620HW

Dimensions

Depth	80.17 cm, 31-9/16 in
Depth With Door Open 90 Degree	143.51 cm, 56-1/2 in
Minimum Height	98.11 cm, 38-5/8 in
Width	68.58 cm, 27.0 in

Appearance

LCD Touch Screen	No
Window	Yes

Details

Drum Material	Stainless Steel

Cycles and Options

Number of Wash Cycles	37

Electrical

Hz	60
Power Cord Included	Yes

CU UPCOUNTRY
LOT 1-5
20-2329 ELEV A
THE HAMPTON

37 OF 41

WHIRLPOOL WASHER Model #: WFW5620HW

LOCATION REQUIREMENTS

Proper installation is your responsibility.

You will need:

- A water heater set to 120°F (49°C).
- A grounded electrical outlet located within 6 ft (1.8 m) of power cord on back of washer.
- Hot and cold water faucets located within 4 ft (1.2 m) of hot and cold water fill valves on washer, and water pressure of 20–100 psi (137.9–689.6 kPa).
- A level floor with maximum slope of 1" (25 mm) under entire washer. Installing on carpet or surfaces with foam backing is not recommended.
- Floor must support washer's total weight (with water and load) of 315 lbs (143 kgs).

IMPORTANT: Do not install, store, or operate washer where it will be exposed to weather or in temperatures below 32°F (0°C). Water remaining in washer after use may cause damage in low temperatures. See "Washer Care" in your Use and Care Guide for winterizing information.

Whirlpool Models*

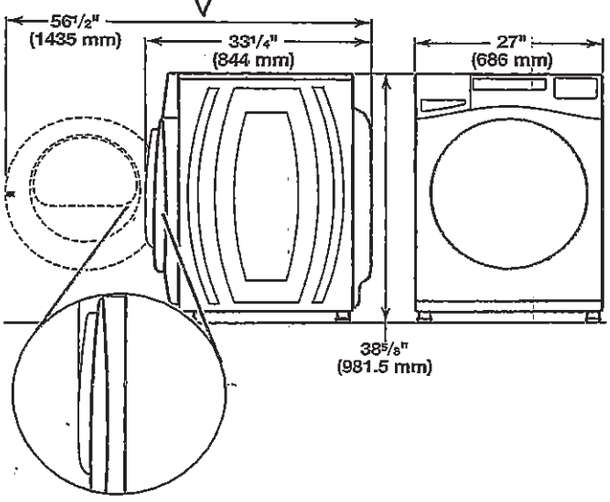

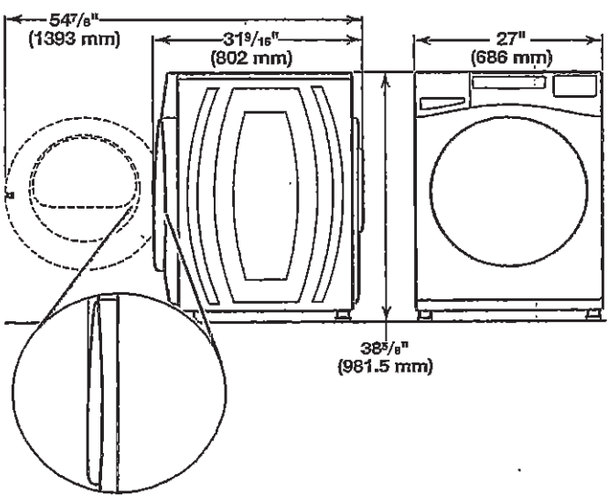

*For additional details (or information) specific to your model, refer to the 'Dimensions' listed for your model at **www.whirlpool.com.**

Maytag Models

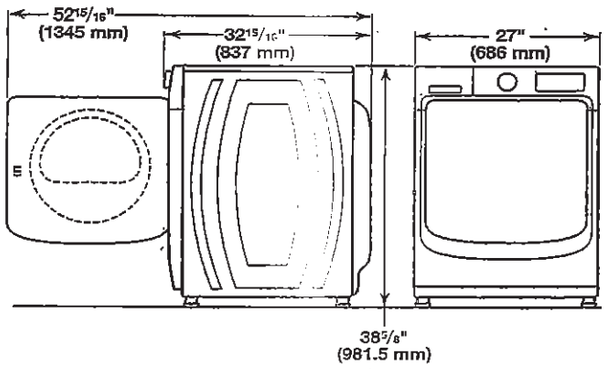

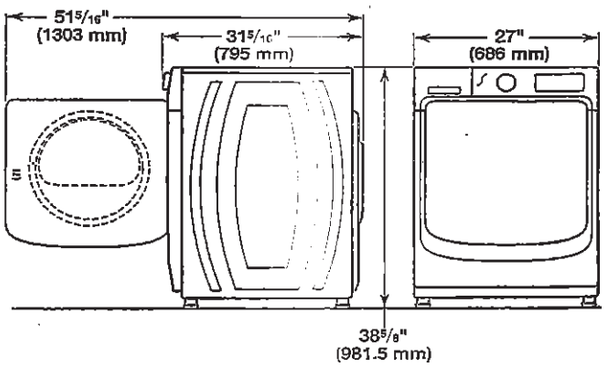

All dimensions show minimum spacing allowed.
For each arrangement, consider allowing more space for ease of installation and servicing, and spacing for companion appliances and clearances for walls, doors, and floor moldings.

Space must be large enough to allow door to fully open. Add spacing of 1" (25 mm) on all sides of washer to reduce noise transfer. If a closet door or louvered door is installed, top and bottom air openings in door are required.

Recessed area or closet installation (stacked washer and dryer):

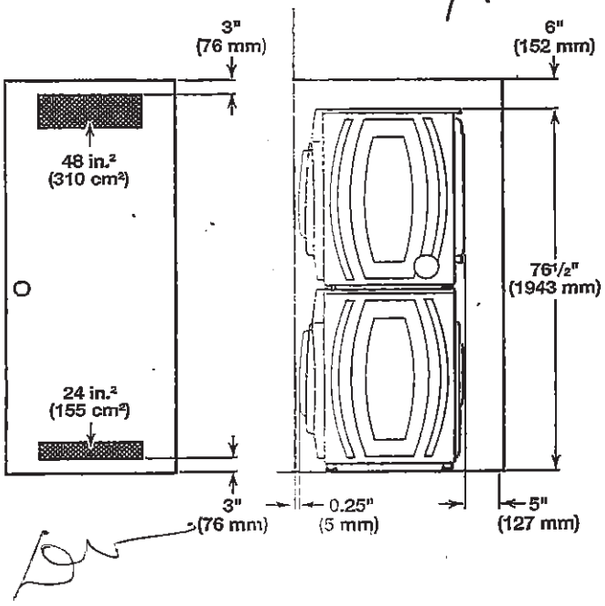

CU UPCOUNTRY
LOT 1-5
20-2329 ELEV A
THE HAMPTON

38 of 41

WHIRLPOOL WASHER Model #: WFW5620HW

Custom under-counter installation: X

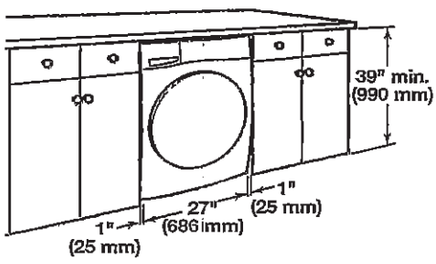

Recessed area or closet installation: X

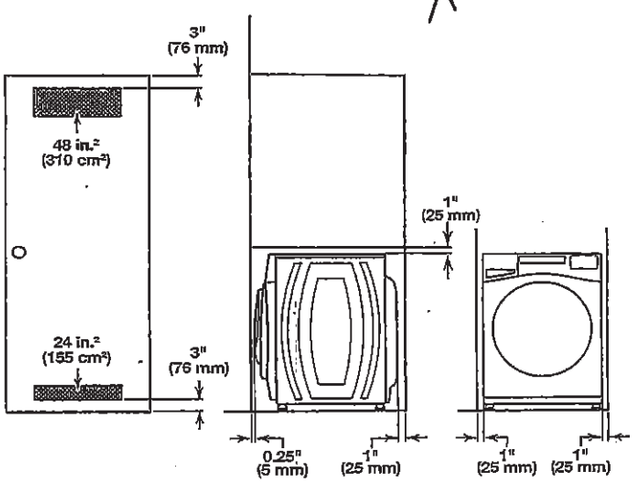

Custom cabinet installation: X

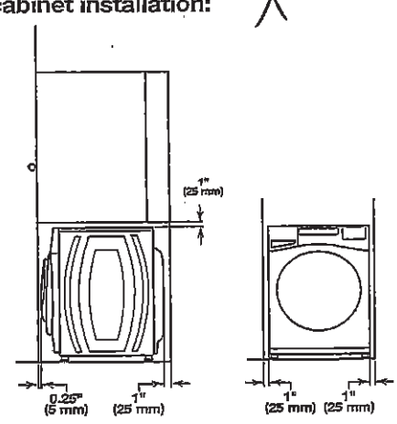

DRAIN SYSTEM

The drain system can be installed using a floor drain, wall standpipe, floor standpipe, or laundry tub. Select the method you need.

IMPORTANT: To avoid siphoning, only 4.5" (114 mm) of drain hose should be inside standpipe. Always secure drain hose with cable tie.

Floor standpipe drain system

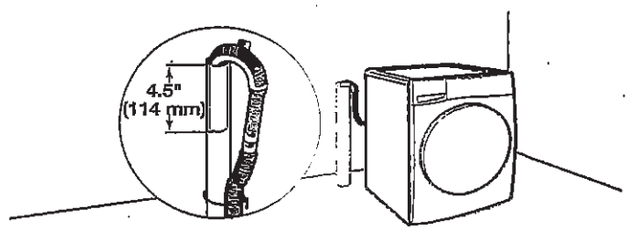

Minimum diameter for a standpipe drain: 2" (51 mm). Minimum carry-away capacity: 17 gal. (64 L) per minute. A 1/4" (6 mm) diameter to 1" (25 mm) diameter Standpipe Adapter Kit is available (Part Number 3363920). Top of standpipe must be at least 30" (762 mm) high; install no higher than 96" (2.44 m) from bottom of washer. If you have an overhead sewer and need to pump higher than 96" (2.44 m), a sump pump and associated hardware are needed. See "Alternate parts."

Wall standpipe drain system

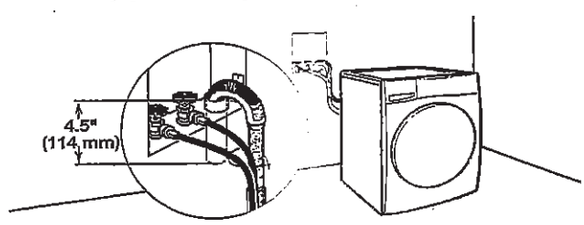

See requirements for floor standpipe drain system.

Laundry tub drain system

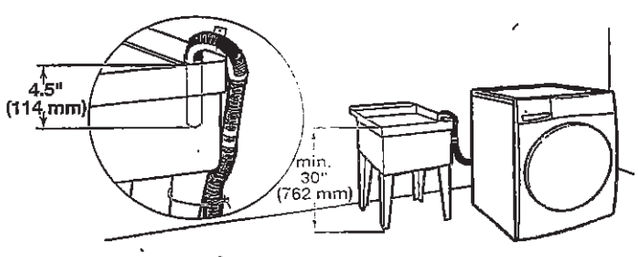

Minimum capacity: 20 gal. (76 L). Top of laundry tub must be at least 30" (762 mm) above floor; install no higher than 96" (2.44 m) from bottom of washer.

CU UPCOUNTRY
LOT 1-5
20-2329 ELEV A
THE HAMPTON

WHIRLPOOL DRYER Model #: YWED5620HW

Whirlpool Brand Canada English | Washer and Dryers | Dryers | Electric Dryers | YWED5620HW

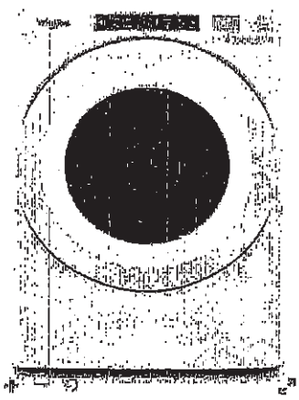

Define Your Style

7.4 cu. ft. Front Load Electric Dryer with Intuitive Touch Controls

Whirlpool **7.4 cu. ft. Front Load Electric Dryer with Intuitive Touch Controls**

Model #: YWED5620HW

Dimensions

Depth	78.74 cm, 31.0 in
Depth With Door Open 90 Degree	138.43 cm, 54-1/2 in
Height	98.42 cm, 38-3/4 in
Width	68.58 cm, 27.0 in

Configuration and Overview

Fuel Type	Electric

Cycles and Options

Cycle Time Remaining	Yes
Lint Filter Indicator	No
Number of Dryer Cycles	36
Number of Dryness Levels	3

Ventilation System

Long Vent	No
Maximum Vent Length	64
Venting Direction	Left, Right, Bottom, Rear

Electrical

Hz	60
Power Cord Included	Yes

CU UPCOUNTRY
LOT 1-5
20-2329 ELEV A
THE HAMPTON

40 of 41

WHIRLPOOL DRYER Model #: YWED5620HW

Back view:

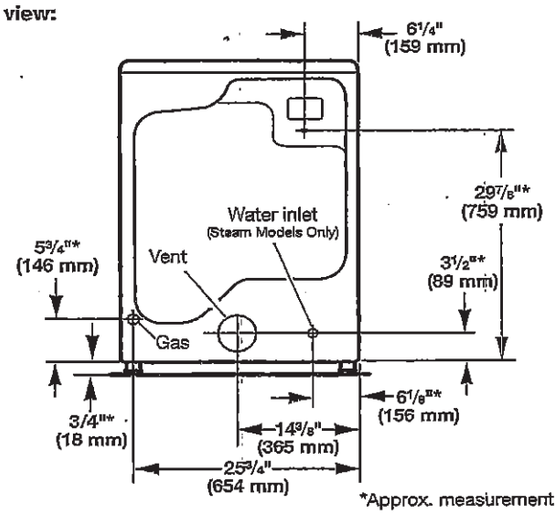

NOTE: Most installations require a minimum of 5" (127 mm) clearance behind dryer for exhaust vent with elbow. See "Venting Requirements."

Installation Clearances

For each arrangement, consider allowing more space for ease of installation and servicing, spacing for companion appliances, and clearances for walls, doors, and floor moldings. Space must be large enough to allow door to fully open. Add spacing on all sides of dryer to reduce noise transfer. If a closet door or louvered door is installed, top and bottom air openings in door are required.

Check code requirements. Some codes limit, or do not permit, installation of the dryer in garages, closets, mobile homes, or sleeping quarters. Contact your local building inspector.

NOTE: No other fuel-burning appliance can be installed in the same closet as a dryer.

Installation spacing for recessed area or closet installation

All dimensions show recommended and minimum spacing allowed.

- Additional spacing should be considered for ease of installation and servicing.
- Additional clearances might be required for wall, door, floor moldings, dryer venting, and gas line.
- Additional spacing should be considered on all sides of the dryer to reduce noise transfer.
- For closet installation with a door, minimum ventilation openings in the top and bottom of the door are required. Louvered doors with equivalent ventilation openings are acceptable.
- Companion appliance spacing should also be considered.

Recommended installation clearances (dryer only):

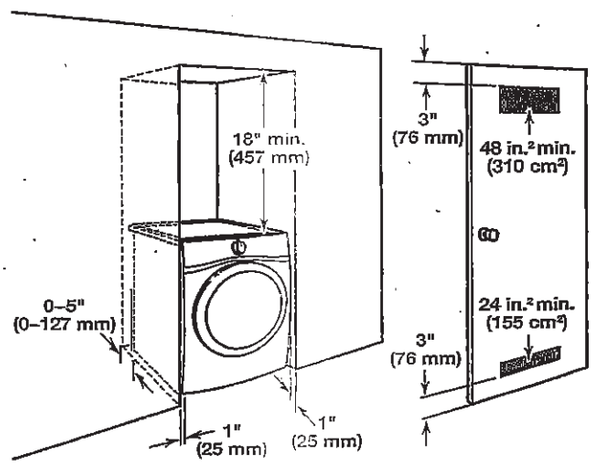

0" (0 mm) rear spacing is allowed for straight back venting only. For steam models only, inlet hose must not be kinked.

Custom under-counter installation: X

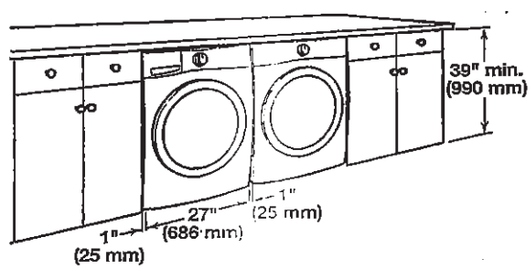

Mobile home – Additional installation requirements:

This dryer is suitable for mobile home installations. The installation must conform to the Manufactured Home Construction and Safety Standard, Title 24 CFR, Part 3280 (formerly the Federal Standard for Mobile home construction and Safety, Title 24, HUD Part 280) or Standard CAN/CSA-Z240 MH.

Mobile home installations require:

- Metal exhaust system hardware, available for purchase from your dealer. For further information, see "Assistance or Service" in your Use and Care Guide.
- Special provisions must be made in mobile homes to introduce outside air into dryer. Openings (such as a nearby window) should be at least twice as large as dryer exhaust opening.

For mobile home installation of gas dryers:

- Mobile Home Installation Hold-down Kit Part Number 346764 is available to order. For further information, see "Assistance or Service" in your Use and Care Guide.

CU UPCOUNTRY
LOT 1-5
20-2329 ELEV A
THE HAMPTON

41 OF 41

WHIRLPOOL DRYER Model #: YWED5620HW

Additional parts may be required, depending on your installation. Check local codes. Check existing electrical supply and venting. Read "Electrical Requirements" and "Venting Requirements" before purchasing parts.

If using a power supply cord:

Use a UL Listed power supply cord kit marked for use with clothes dryers. The kit should contain:

- A UL Listed 30 amp power supply cord, rated 120/240 volt minimum. The cord should be type SRD or SRDT and be at least 4 ft. (1.22 m) long. The wires that connect to the dryer must end in ring terminals or spade terminals with upturned ends.
- A UL Listed strain relief.

Optional Equipment (not supplied with dryer):

Refer to your Use and Care Guide for information about accessories available for your dryer.

LOCATION REQUIREMENTS

Check code requirements. Some codes limit, or do not permit, installing dryer in garages, closets, mobile homes, or sleeping quarters. Contact your local building inspector.

⚠WARNING

Explosion Hazard

Keep flammable materials and vapors, such as gasoline, away from dryer.

Place dryer at least 18 inches (460 mm) above the floor for a garage installation.

Failure to do so can result in death, explosion, or fire.

You will need:

- A location allowing for proper exhaust installation. See "Venting Requirements."
- A separate 15 or 20 amp circuit for a gas dryer or 30 amp circuit for an electric dryer.
- If using power supply cord, a grounded electrical outlet located within 2 ft. (610 mm) of either side of dryer. See "Electrical Requirements."
- Floor must support dryer weight of 200 lbs. (90.7 kg). Also consider weight of companion appliance.
- Cold water faucets located within 4 ft. (1.2 m) of the water fill valves, and water pressure of 20–120 psi (138–827 kPa). You may use your washer's water supply by purchasing the necessary parts noted in "Parts needed."
- Level floor with maximum slope of 1" (25 mm) under entire dryer. If slope is greater than 1" (25 mm), install Extended Dryer Feet Kit, Part Number 279810. If not level, clothes may not tumble properly and automatic sensor cycles may not operate correctly.
- For garage installation, place dryer at least 18" (460 mm) above floor. If using a pedestal, you will need 18" (460 mm) to bottom of dryer.
- The dryer must not be installed or stored in an area where it will be exposed to water and/or weather.

IMPORTANT: Do not operate, install, or store dryer where it will be exposed to water, weather, or at temperatures below 40°F (4°C). Lower temperatures may cause dryer not to shut off at end of automatic sensor cycles, resulting in longer drying times.

DRYER DIMENSIONS

Front view:

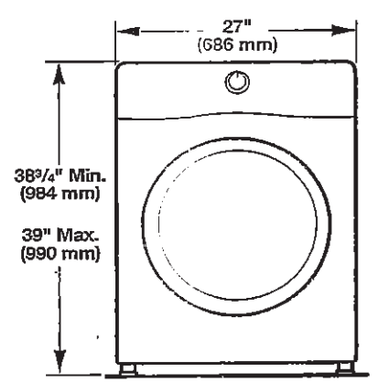

Side view:

Whirlpool Models

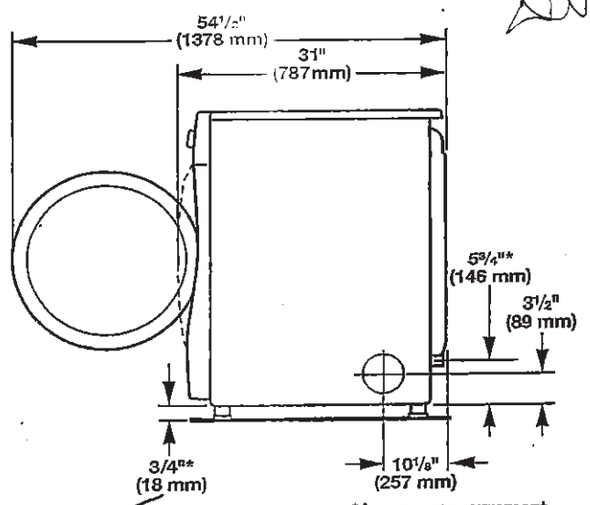

*Approx. measurement

Maytag Models

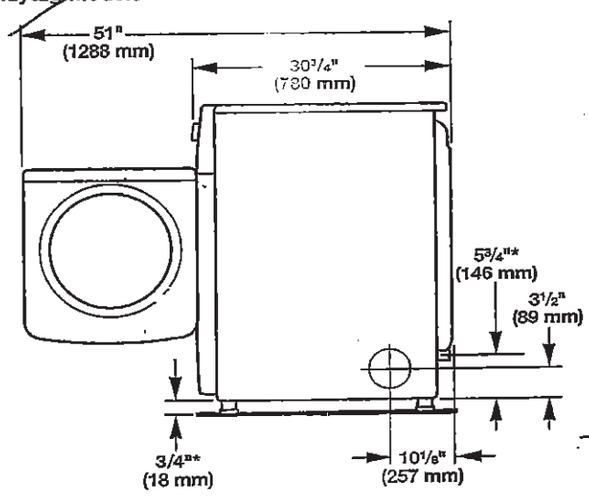

*Approx. measurement