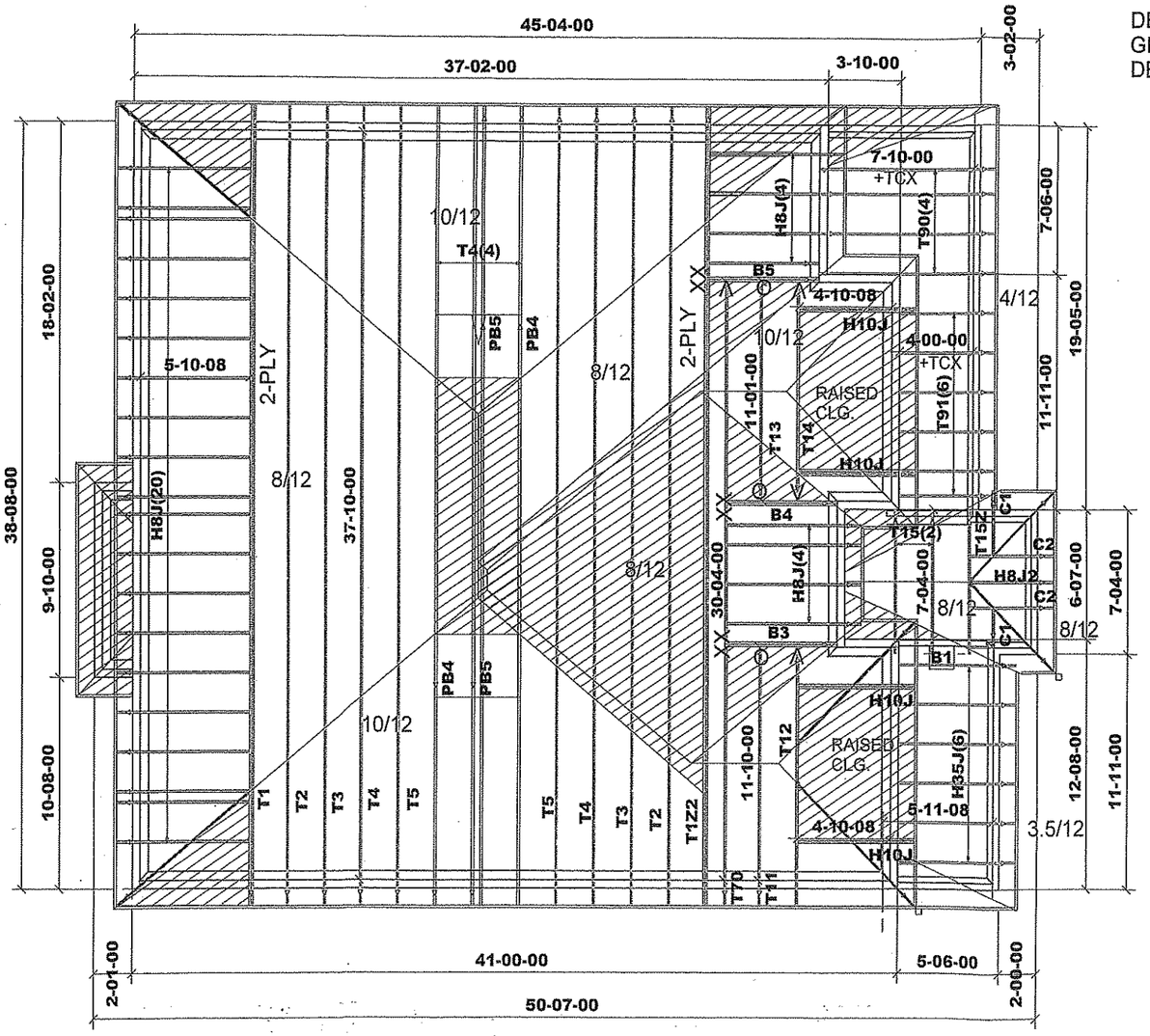

DESIGN CONFORMS WITH OBC 2012 PART 9
GROUND SNOW LOAD Ss=31.3lb Sr=8.4lb
DESIGN LOADS
TCDL (3)
BCLL (10.5)
BCDL (7)

ASPHALT SHINGLES
12" FINISHED OH
5" CLADDING ALLOWANCE
R.T.M.CANTILEVER
2x6 EXTERIOR WALLS
2x6 FASCIA BOARD

HARDWARE:
LJS26DS (V)
LUS24 (O)
HGUS26-2 (XX)

B3=B4=B5= 2-2X10SPF #2
B1= DROPPED A.P.P

DENOTES CONVENTIONAL FRAMING

T-170371

DATE: 5/22/17
BCIN:26064; FIRM:BCIN #29991
ENGINEERING ONLY-DIMENSIONS TO BE VERIFIED ON SITE

SUPPORTING STRUCTURE TO BE REVIEWED AND VERIFIED BY QUALIFIED BUILDING DESIGNER
ALL CONVENTIONAL FRAMING TO BE SPECIFIED, REVIEWED, AND CONFIRMED BY BUILDING DESIGNER PRIOR TO TRUSS INSTALLATION. ALL NOTES DESIGNATING PER PLAN WORK DO NOT REPRESENT A PART OF THE SCOPE OF THIS SEAL. THIS WORK IS DELEGATED TO A QUALIFIED BUILDING DESIGNER HAVING RESPONSIBILITY FOR THIS PROJECT.
ALL BEAMS NOT ADDRESSED IN THIS DESCRIPTION AND LABELLED ON THIS LAYOUT ARE BEAMS SPECIFIED BY THE BUILDING DESIGNER AND/OR
PROJECT ENGINEER AND ARE TO BE REVIEWED AND CONFIRMED BY THE SAME DESIGNERS PRIOR TO FABRICATION TO ENSURE ADEQUATE LOAD CAPACITY WITH RESPECT TO THE ROOF TRUSS COMPONENTS REVIEWED IN THIS SUBMISSION.

LOT SPECIFIC SCHEDULE 1 REQUIRED FOR EACH INDIVIDUAL LOT.

DWG #TAM 25473 THROUGH DWG #TAM 25489, INCLUSIVE, DATED ; 5-22-17

STRUCTURAL COMPONENTS ONLY); THIS LAYOUT MUST BE READ TOGETHER WITH REFERENCED TRUSS COMPONENT DRAWINGS ANDSEALED HARDWARE DRAWINGS. HANGERS AND HARDWARE SPECIFIED ON THIS LAYOUT ONLY.
REFER TO ATTACHED SEALED REFERENCED DRAWINGS FOR ADDITIONAL BRACING REQUIREMENTS:
(IF BRACING IS SHOWN TO BE REQUIRED PROVIDE THE FOLLOWING BRACING):

PROVIDE 1 ROW OF 2 X 4 #2 SPF CONTINUOUS LATERAL BRACES ALONG WEB MEMBERS SPECIFIED ON REFERENCED SEALED TRUSS COMPONENT DRAWINGS USING 2 - 3-1/4" COMMON WIRE NAILS PER WEB MEMBER. THEN PROVIDE 2 X 4 #2 SPF "X-BRACING" ALONG THESE SAME WEB MEMBERS AT LOCATIONS INDICATED (*) USING THE SAME NAILING. PROVIDE BLOCKING IF REQUIRED (DO NOT ARCH BRACING).
PROVIDE 2 X 4 #2 SPF T-BRACE ALONG FULL LENGTH OF LATERALLY BRACED WEB MEMBERS OF 1 PLY TRUSSES COMPONENTS REQUIRING "T-BRACE" USING 1 ROW OF 3-1/4" COMMON WIRE NAILS AT 6" O/C. SIMILARLY PROVIDE 2 X 6 BRACE WITH 2 ROWS OF NAILING FOR 2 PLY TRUSS COMPONENTS AND 2 X 8 BRACE WITH 3 ROWS OF NAILING FOR 3 PLY TRUSS COMPONENTS.

(1) 2 X 6 #2 SPF ON FLAT OVER PLYWOOD SHEATHING.
(2) 2 X 6 #2 SPF RIDGE BEAM SUPPORTED AT EACH END OVER BASE TRUSS COMPONENTS AND AT LOCATIONS MARKED BY "X".
(3) 2 X 6 #2 SPF ROOF RAFTERS AT 24" O/C WITH MAXIMUM SUPPORT SPAN 6'-0" (ADD 2 X 4 VERTICAL SUPPORTS TO TRUSS BASE BELOW WHERE NECESSARY.

ALL CONVENTIONAL FRAMING TO BE DISTRIBUTED UNIFORMLY ALONG BASE TRUSS COMPONENTS. PROVIDE 2 X 4 KNEE-WALLS WHERE NECESSARY WITH STUDS AT24" O/C.

ALL CONVENTIONAL FRAMING TO CONFORM TO ONTARIO BUILDING CODE (CURRENT EDITION).

I REVIEWED AND TAKE RESPONSIBILITY FOR THE DESIGN WORK ON BEHALF OF A FIRM REGISTERED UNDER SUBSECTION 3.2.5 OF THE ONTARIO BUILDING CODE. I AM QUALIFIED AND THE FIRM IS REGISTERED, IN THE APPROPRIATE CLASSES AND/OR CATEGORIES.
REGISTERED FIRM: MICRO CITY ENGINEERING SERVICES INC.

LICENSED PROFESSIONAL ENGINEER
5/22/17
S. KATSOULAKOS
PROVINCE OF ONTARIO

DWG #TAM 25490-17
BCIN: 26064
FIRM: 29991
SEALED STRUCTURAL COMPONENTS ONLY

MAY 22, 2017
THE FOLLOWING DRAWING NUMBERS REPRESENT THE IDENTIFIERS OF THE SEALED DRAWINGS OF THE TRUSS COMPONENTS IDENTIFIED ON THIS LAYOUT:
(LAYOUT:44269/282179)
DWG #TAM25473-17 THROUGH DWG #TAM25489-17, INCLUSIVE, AND ALL DATED 5-22-17;
DWG #TAM6305-14 DATED 3-05-14 (CONVENTIONAL FRAMED VALLEY STANDARD)
(STRUCTURAL COMPONENTS ONLY)

M10,684

C:\MITEK\CA742A\JOBS\B13000000000

TAMARACK LUMBER INC.	Job Track: 44269	Builder :: GREEN YORK HOMES	Location BRAMPTON	Model : AUBURN 2 EL:1	Elevation
	Layout ID: 282179	Project: OSTIENSE	THESE DRAWINGS CONSTITUTE THE PROPERTY OF TAMARACK ROOF TRUSSES INC., SHALL NOT BE REPRODUCED, PUBLISHED, OR REDISTRIBUTED IN ANY MANNER OR UTILIZED FOR ANY PURPOSE OTHER THAN THE MANUFACTURE OF TRUSSES BY TAMARACK ROOF TRUSSES INC AND WILL BE RETRACTED BY TAMARACK ROOF TRUSSES INC IF UTLILZED FOR ANY OTHER PURPOSE.		
	Plan Log: 92456	Date: 5/16/2017 Designer: HERC			

MiTek ver 7.5.0

TAMARACK LUMBER INC.
ALPA LUMBER GROUP

Delivery Shiplist

DATE	05/18/17
SALES REP	Rick

JOB TRACK: 44269 LAYOUT ID: 282179 LOCATION: BRAMPTON
BUILDER: GREEN YORK HOMES SUB-BUILDER:
MODEL: AUBURN 2 ELEVATION: 1

ROOF TRUSSES

ROOF TRUSS SPACING: 24.0 IN. O.C. (TYP.)

PROFILE	QTY / PLY	MARK / TYPE	PITCH TC / BC	SPAN	TRUSS HEIGHT	LUMBER TOP	LUMBER BOT	OVERHANG LEFT / RIGHT	HEEL HEIGHT LEFT / RIGHT	LBS. / BFT.	BUNDLE # / STACK #	LOAD BY: / REMARKS
	1 / 2 Ply	T1 HIP GIRDER	10.00 / 0.00	37-10-00	05-03-13	2 X 6	2 X 6	01-03-08 / 01-03-08	01-07-10 / 01-07-10	428.82 / 261.00		
	1 / 2 Ply	T1Z2 HIP GIRDER	10.00 / 0.00	37-10-00	05-03-13	2 X 6	2 X 6	01-03-08 / 01-03-08	01-07-10 / 01-07-10	428.82 / 261.00		
	2	T2 HIP	10.00 / 0.00	37-10-00	06-07-13	2 X 4	2 X 6	01-03-08 / 01-03-08	01-07-10 / 01-07-10	369.70 / 223.34		
	2	T3 HIP	10.00 / 0.00	37-10-00	07-11-13	2 X 4	2 X 6	01-03-08 / 01-03-08	01-07-10 / 01-07-10	398.40 / 244.00		
	6	T4 HIP	10.00 / 0.00	37-10-00	09-03-13	2 X 4	2 X 6	01-03-08 / 01-03-08	01-07-10 / 01-07-10	1282.80 / 777.96		
	2	T5 HIP	10.00 / 0.00	37-10-00	10-07-13	2 X 4	2 X 6	01-03-08 / 01-03-08	01-07-10 / 01-07-10	450.52 / 277.34		
	1	T70 HIP GIRDER	10.00 / 0.00	30-04-00	05-03-13	2 X 6	2 X 6	01-03-08 / 00-00-00	01-07-10 / 01-07-10	184.33 / 112.66		
	1	T11 COMMON	10.00 / 0.00	11-10-00	06-06-13	2 X 4	2 X 4	01-03-08 / 01-03-08	01-07-10 / 01-07-10	52.21 / 33.00		
	1	T12 HIP GIRDER	10.00 / 0.00	11-10-00	05-08-06	2 X 4	2 X 6	01-03-08 / 01-03-08	01-07-10 / 01-07-10	64.79 / 41.67		
	1	T13 COMMON	10.00 / 0.00	11-01-00	06-03-01	2 X 4	2 X 4	00-00-00 / 00-00-00	01-07-10 / 01-07-10	45.56 / 30.33		
	1	T14 HIP GIRDER	10.00 / 0.00	11-01-00	05-08-06	2 X 4	2 X 6	00-00-00 / 00-00-00	01-07-10 / 01-07-10	58.59 / 38.33		
	2	T15 COMMON	8.00 / 0.00	07-04-00	03-00-05	2 X 4	2 X 6	00-00-00 / 00-00-00	00-07-00 / 00-07-00	52.86 / 35.00		
	1	T15Z COMMON	8.00 / 0.00	07-04-00	03-00-05	2 X 4	2 X 6	00-00-00 / 00-00-00	00-07-00 / 00-07-00	26.43 / 17.50		
	4	T90 MONOPITCH	4.00 / 0.00	07-10-00	03-09-08	2 X 4	2 X 4	01-02-08 / 00-00-00	00-10-13 / 03-06-02	141.20 / 94.68		
	6	T91 MONOPITCH	4.00 / 0.00	04-00-00	02-06-02	2 X 4	2 X 4	01-02-08 / 00-00-00	00-10-13 / 02-02-13	111.30 / 73.98		
	2	PB4 PIGGYBACK	10.00 / 0.00	18-01-11	02-06-08	2 X 4	2 X 4	00-00-00 / 00-00-00	00-04-13 / 00-04-13	120.74 / 76.00		
	2	PB5 PIGGYBACK	10.00 / 0.00	18-01-11	03-10-08	2 X 4	2 X 4	00-00-00 / 00-00-00	00-04-13 / 00-04-13	126.72 / 81.34		
	28	H8J JACK-OPEN	8.00 / 0.00	05-10-08	05-03-13	2 X 4	2 X 4	01-03-08 / 00-00-00	01-04-13 / 05-03-13	499.24 / 298.76		

TAMARACK LUMBER INC.
ALPA LUMBER GROUP

Delivery Shiplist

DATE	05/18/17
SALES REP	Rick

JOB TRACK: 44269 LAYOUT ID: 282179 LOCATION: BRAMPTON
BUILDER: GREEN YORK HOMES SUB-BUILDER:
MODEL: AUBURN 2 ELEVATION: 1

ROOF TRUSSES

ROOF TRUSS SPACING: 24.0 IN. O.C. (TYP.)

PROFILE	QTY / PLY	MARK TYPE	PITCH TC / BC	SPAN	TRUSS HEIGHT	LUMBER TOP	LUMBER BOT	OVERHANG LEFT / RIGHT	HEEL HEIGHT LEFT / RIGHT	LBS. / BFT.	BUNDLE # / STACK #	LOAD BY: / REMARKS
	1	H8J2 JACK-OPEN	8.00 / 0.00	03-03-08	02-11-09	2 X 4	2 X 4	01-02-08 / 00-00-00	00-09-04 / 02-11-09	10.51 / 7.33		
	4 / 2 Ply	H10J JACK-OPEN	10.00 / 0.00	04-10-08	05-08-06	2 X 4	2 X 4	01-03-08 / -03-01-01	01-07-10 / 05-08-06	130.96 / 85.36		
	2	C1 JACK-OPEN	8.00 / 0.00	01-11-08	02-00-03	2 X 4	2 X 4	01-03-08 / -00-01-01	00-09-04 / 00-03-08	14.32 / 9.34		
	2	C2 JACK-OPEN	8.00 / 0.00	03-03-08	02-00-03	2 X 4	2 X 4	01-02-08 / -01-05-01	00-09-04 / 02-07-06	17.12 / 12.00		
	6	H35J MONOPITCH	3.50 / 0.00	05-11-08	02-00-13	2 X 4	2 X 4	01-02-08 / 00-00-00	00-03-15 / 02-00-13	92.46 / 55.98		

TOTAL # TRUSS= **85.00** TOTAL BFT OF ALL TRUSSES= **3147.90** BFT. TOTAL WEIGHT OF ALL TRUSSES= **5108.40** LBS.

HARDWARE

QTY	ITEM TYPE	MODEL	LENGTH FT-IN-16
3	Hangers	LUS24	
4	Hangers	LJS26DS	
3	Hangers	HGUS26-2	

TOTAL # ITEMS= **10.00**

Schedule 1: Designer Information

Use one form for each individual who reviews and takes responsibility for design activities with respect to the project.

A. Project Information			Application number:
Building number, street name		Unit no.	Lot/con.
Municipality CITY OF BRAMPTON	Postal code	Plan number/ other description	

B. Individual who reviews and takes responsibility for design activities			
Name **SAM KATSOULAKOS, P. ENG.**		Firm **MICRO CITY ENGINEERING SERVICES INC.**	
Street address **R.R #1, PO BOX 61**		Unit no.	Lot/con.
Municipality **GLENCOE**	Postal code **N0L 1M0**	Province **ONTARIO**	E-mail
Telephone number **(519) 287-2242 Business**	Fax number **(519) 287-5750**		Cell number

C. Design activities undertaken by individual identified in Section B. [Building Code Table 3.5.2.1. of Division C]

☐ House	☐ HVAC – House	☒ Building Structural
☐ Small Buildings	☐ Building Services	☐ Plumbing – House
☐ Large Buildings	☐ Detection, Lighting and Power	☐ Plumbing – All Buildings
☐ Complex Buildings	☐ Fire Protection	☐ On-site Sewage Systems

Description of designer's work **GREEN YORK HOMES – OSTIENSE – MODEL: AUBURN 2 – ELEV. 1**
(SCHEDULE IS NOT ISSUED AS LOT SPECIFIC)
REVIEW PRE-ENGINEERED ROOF SYSTEM COMPONENT DRAWINGS AND LAYOUT PLACEMENT PLAN SUPPLIED BY TAMARACK ROOF TRUSSES INC. (SEE DWG #TAM25490-17 DATED 5-22-17).
SUPPORTING STRUCTURE TO BE REVIEWED AND VERIFED BY QUALIFIED BUILDING DESIGNER.

D. Declaration of Designer

I, SAM KATSOULAKOS, P. ENG declare that (choose one as appropriate):
(print name)

☒ I review and take responsibility for the design work on behalf of a firm registered under subsection 3.2.4.of Division C, of the Building Code. I am qualified, and the firm is registered, in the appropriate classes/categories.

Individual BCIN: 26064

Firm BCIN: 29991

☐ I review and take responsibility for the design and am qualified in the appropriate category as an "other designer" under subsection 3.2.5.of Division C, of the Building Code.
Individual BCIN: _____

Basis for exemption from registration: _____

☐ The design work is exempt from the registration and qualification requirements of the Building Code.
Basis for exemption from registration and qualification: _____

I certify that:

1. The information contained in this schedule is true to the best of my knowledge.
2. I have submitted this application with the knowledge and consent of the firm.

Date 5-22-17 Signature of Designer

NOTE:

1. For the purposes of this form, "individual" means the "person" referred to in Clause 3.2.4.7(1) d).of Division C, Article 3.2.5.1. of Division C, and all other persons who are exempt from qualification under Subsections 3.2.4. and 3.2.5. of Division C.
2. Schedule 1 is not required to be completed by a holder of a license, temporary license, or a certificate of authorization, issued by the Ontario Association of Architects. Schedule 1 is also not required to be completed by a holder of a license to practise, a limited license to practise, or a certificate of authorization, issued by the Association of Professional Engineers of Ontario.

DWG#TAM25490-17-S 5-22-17
DWG#TAM25491-17-S

JOB NAME	TRUSS NAME	QUANTITY	PLY	JOB DESC. 44269	DRWG NO.
282179	T1	1	2	TRUSS DESC.	

Tamarack Roof Truss, Burlington

Version 8.030 S Oct 5 2016 MiTek Industries, Inc. Thu May 18 13:59:56 2017 Page 1

ID:lwUx8pNrcNFORm7Ep9cJZmzFzsk-7MOkZgALgzNBnqsA3V81AP5vEp?1XHui5I2aYNzFFxX

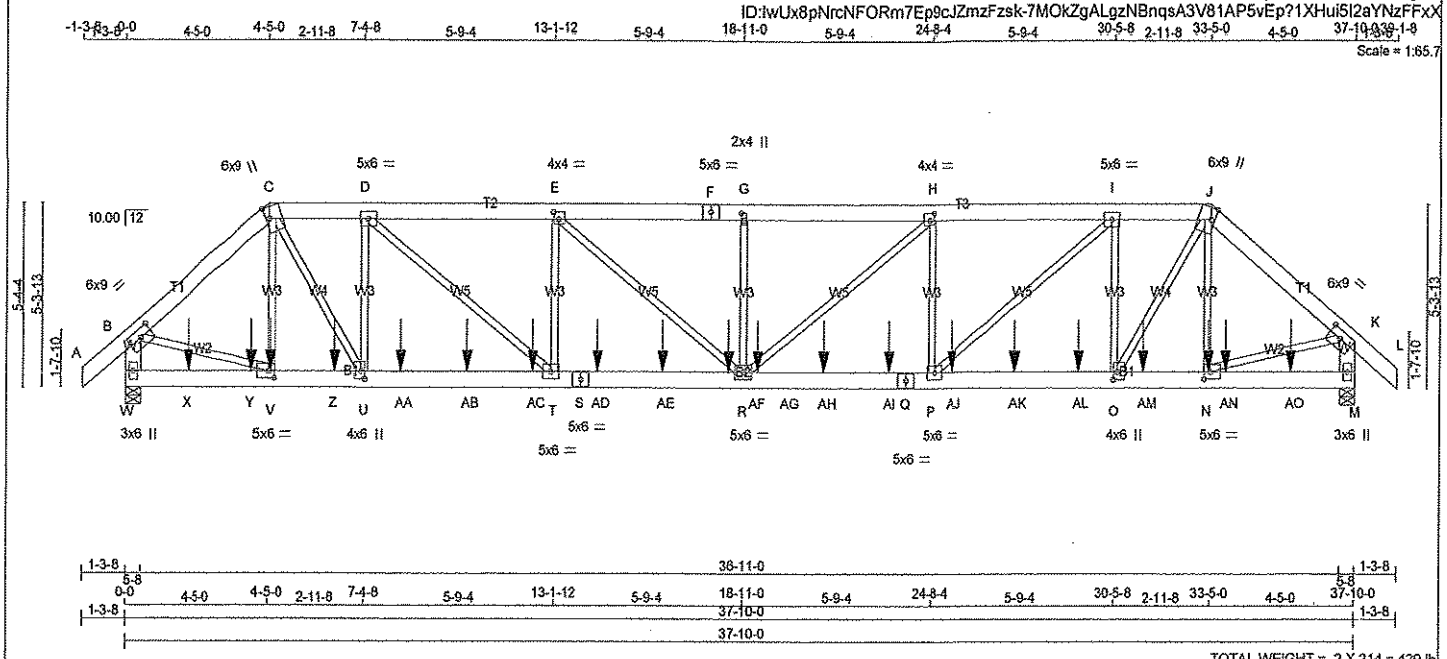

TOTAL WEIGHT = 2 X 214 = 429 lb [M]

LUMBER

N. L. G. A. RULES

CHORDS	SIZE		LUMBER	DESCR.
A - C	2x6	DRY	No.2	SPF
C - F	2x6	DRY	No.2	SPF
F - J	2x6	DRY	No.2	SPF
J - L	2x6	DRY	No.2	SPF
W - B	2x6	DRY	No.2	SPF
M - K	2x6	DRY	No.2	SPF
W - S	2x6	DRY	No.2	SPF
S - Q	2x6	DRY	No.2	SPF
Q - M	2x6	DRY	No.2	SPF
ALL WEBS EXCEPT	2x3	DRY	No.2	SPF

DRY: SEASONED LUMBER.

DESIGN CONSISTS OF 2 TRUSSES BUILT SEPARATELY THEN FASTENED TOGETHER AS FOLLOWS:

CHORDS	#ROWS	SURFACE SPACING (IN)	LOAD(PLF)
TOP CHORDS : (0.122"X3") SPIRAL NAILS			
A- C	2	12	TOP
F- C	2	12	TOP
F- J	2	12	TOP
J- L	2	12	TOP
W- B	2	12	TOP
M- K	2	12	TOP
BOTTOM CHORDS : (0.122"X3") SPIRAL NAILS			
W- S	2	12	SIDE(183.1)
S- Q	2	12	SIDE(0.0)
Q- M	2	12	SIDE(183.1)
WEBS : (0.122"X3") SPIRAL NAILS			
2x3	1	6	

NAILS TO BE DRIVEN FROM ONE SIDE ONLY.

GIRDER NAILING ASSUMES NAILED HANGERS ARE FASTENED WITH MIN. 3-0 INCH NAILS.

TOP - COMPONENTS ARE LOADED FROM THE TOP AND MUST BE PLACED ON TOP EDGE OF ALL PLIES FOR THE LOAD TO BE TRANSFERRED TO EACH PLY.

SIDE - PLF SHOWN IS THE EQUIVALENT UDL APPLIED TO ONE SIDE THAT THE CORRESPONDING NAILING PATTERN SHALL BE CAPABLE OF TRANSFERING. REMAINING PLF MUST BE APPLIED ON THE OPPOSITE SIDE OR ON THE TOP.

PLATES (table is in inches)

JT	TYPE	PLATES	W	LEN	Y	X
B	TMWW-t	MT20	6.0	9.0	2.75	4.25
C	TTWW+m	MT20	6.0	9.0	4.00	1.25
D	TMWW-t	MT20	5.0	6.0		
E	TMWW-t	MT20	4.0	4.0	2.50	1.75
F	TS-t	MT20	5.0	6.0		
G	TMW+w	MT20	2.0	4.0	2.50	1.00
H	TMWW-t	MT20	4.0	4.0	2.50	1.75
I	TMWW-t	MT20	5.0	6.0		
J	TTWW+m	MT20	6.0	9.0	4.00	1.25
K	TMWW-t	MT20	6.0	9.0	2.75	4.25
M	BMV1+p	MT20	3.0	6.0		
N	BMWW-t	MT20	5.0	6.0	2.50	2.25
O	BMWW+t	MT20	4.0	6.0	2.75	1.50
P	BMWW-t	MT20	5.0	6.0		
Q	BS-t	MT20	5.0	6.0		
R	BMWWW-t	MT20	5.0	6.0		
S	BS-t	MT20	5.0	6.0		

DIMENSIONS, SUPPORTS AND LOADINGS SPECIFIED BY FABRICATOR TO BE VERIFIED BY BUILDING DESIGNER

BEARINGS

JT	FACTORED GROSS REACTION VERT	HORZ	MAXIMUM FACTORED GROSS REACTION DOWN	HORZ	UPLIFT	INPUT BRG IN-SX	REQRD BRG IN-SX
W	5262	0	5262	0	0	5-8	5-8
M	5262	0	5262	0	0	5-8	5-8

UNFACTORED REACTIONS

JT	1ST LCASE COMBINED	MAX./MIN. COMPONENT REACTIONS SNOW	LIVE	PERM.LIVE	WIND	DEAD	SOIL
W	4183	2545 / 0	804 / 0	0 / 0	0 / 0	834 / 0	0 / 0
M	4183	2545 / 0	804 / 0	0 / 0	0 / 0	834 / 0	0 / 0

BEARING MATERIAL TO BE SPF NO.2 OR BETTER AT JOINT(S) W, M

BRACING

TOP CHORD TO BE SHEATHED OR MAX. PURLIN SPACING = 3.67 FT.
MAX. UNBRACED BOTTOM CHORD LENGTH = 10.00 FT. OR RIGID CEILING DIRECTLY APPLIED.

ALL PITCH BREAKS AND PERIMETER CORNER JOINTS MUST BE LATERALLY RESTRAINED.

LOADING

TOTAL LOAD CASES: (4)

CHORDS

MEMB. FR-TO	MAX. FACTORED FORCE (LBS)	FROM	TO	FACTORED VERT. LOAD LC1 (PLF)	MAX CSI (LC)	MAX. UNBRAC LENGTH
A- B	0 / 39	-84.3	-84.3	0.03 (1)	10.00	
B- C	-5700 / 0	-84.3	-84.3	0.13 (1)	4.85	
C- D	-6474 / 0	-84.3	-84.3	0.10 (1)	4.64	
D- E	-9317 / 0	-84.3	-84.3	0.26 (1)	3.86	
E- F	-10298 / 0	-84.3	-84.3	0.29 (1)	3.67	
F- G	-10298 / 0	-84.3	-84.3	0.29 (1)	3.67	
G- H	-10298 / 0	-84.3	-84.3	0.29 (1)	3.67	
H- I	-9317 / 0	-84.3	-84.3	0.26 (1)	3.86	
I- J	-6474 / 0	-84.3	-84.3	0.10 (1)	4.64	
J- K	-5699 / 0	-84.3	-84.3	0.13 (1)	4.85	
K- L	0 / 39	-84.3	-84.3	0.03 (1)	10.00	
W- B	-5047 / 0	0.0	0.0	0.18 (1)	6.48	
M- K	-5047 / 0	0.0	0.0	0.18 (1)	6.48	
W- X	0 / 0	-28.0	-28.0	0.13 (1)	10.00	
X- Y	0 / 0	-28.0	-28.0	0.13 (1)	10.00	
Y- V	0 / 0	-28.0	-28.0	0.13 (1)	10.00	
V- Z	0 / 4359	-28.0	-28.0	0.40 (1)	10.00	
Z- U	0 / 4359	-28.0	-28.0	0.40 (1)	10.00	
U-AA	0 / 6474	-28.0	-28.0	0.58 (1)	10.00	
AA-AB	0 / 6474	-28.0	-28.0	0.58 (1)	10.00	
AB-AC	0 / 6474	-28.0	-28.0	0.58 (1)	10.00	
AC- T	0 / 6474	-28.0	-28.0	0.58 (1)	10.00	
T- S	0 / 9317	-28.0	-28.0	0.77 (1)	10.00	
S-AD	0 / 9317	-28.0	-28.0	0.77 (1)	10.00	
AD-AE	0 / 9317	-28.0	-28.0	0.77 (1)	10.00	
AE-AF	0 / 9317	-28.0	-28.0	0.77 (1)	10.00	
AF- R	0 / 9317	-28.0	-28.0	0.77 (1)	10.00	
R-AG	0 / 9317	-28.0	-28.0	0.77 (1)	10.00	
AG-AH	0 / 9317	-28.0	-28.0	0.77 (1)	10.00	
AH-AI	0 / 9317	-28.0	-28.0	0.77 (1)	10.00	
AI- Q	0 / 9317	-28.0	-28.0	0.77 (1)	10.00	
Q- P	0 / 9317	-28.0	-28.0	0.77 (1)	10.00	
P-AJ	0 / 6474	-28.0	-28.0	0.58 (1)	10.00	
AJ-AK	0 / 6474	-28.0	-28.0	0.58 (1)	10.00	
AK-AL	0 / 6474	-28.0	-28.0	0.58 (1)	10.00	
AL- O	0 / 6474	-28.0	-28.0	0.58 (1)	10.00	
O-AM	0 / 4359	-28.0	-28.0	0.40 (1)	10.00	
AM- N	0 / 4359	-28.0	-28.0	0.40 (1)	10.00	
N-AN	0 / 0	-28.0	-28.0	0.13 (1)	10.00	

WEBS

MEMB. FR-TO	MAX. FACTORED FORCE (LBS)	MAX CSI (LC)
V- C	-139 / 42	0.03 (1)
C- U	0 / 4046	0.50 (1)
U- D	-2703 / 0	0.51 (1)
D- T	0 / 3717	0.46 (1)
T- E	-1330 / 0	0.25 (1)
E- R	0 / 1282	0.16 (1)
R- G	-472 / 0	0.09 (1)
R- H	0 / 1282	0.16 (1)
P- H	-1330 / 0	0.25 (1)
P- I	0 / 3717	0.46 (1)
O- I	-2703 / 0	0.51 (1)
O- J	0 / 4046	0.50 (1)
N- J	-139 / 42	0.03 (1)
B- V	0 / 4491	0.56 (1)
N- K	0 / 4491	0.56 (1)

DESIGN CRITERIA

SPECIFIED LOADS:

TOP CH.	LL	=	25.6	PSF
	DL	=	3.0	PSF
BOT CH.	LL	=	10.5	PSF
	DL	=	7.0	PSF
TOTAL LOAD		=	46.1	PSF

SPACING = 24.0 IN. C/C

LOADING IN FLAT SECTION BASED ON A SLOPE OF 6.00/12

THIS TRUSS IS DESIGNED FOR RESIDENTIAL OR SMALL BUILDING REQUIREMENTS OF PART 9, NBCC 2010

THIS DESIGN COMPLIES WITH:
- PART 9 OF OBC 2012 , BCBC 2012 , ABC 2014
- CSA 086-09
- TPIC 2011

(55 % OF 31.3 P.S.F. G.S.L. PLUS 8.4 P.S.F. RAIN LOAD) EQUALS 25.6 P.S.F. SPECIFIED ROOF LIVE LOAD

ALLOWABLE DEFL.(LL)= L/360 (1.26")
CALCULATED VERT. DEFL.(LL) = L/ 999 (0.28")
ALLOWABLE DEFL.(TL)= L/360 (1.26")
CALCULATED VERT. DEFL.(TL) = L/ 999 (0.44")

CSI: TC=0.29 (G-H:1) , BC=0.77 (R-T:1) , WB=0.56 (B-V:1) , SSI=0.20 (P-R:1)

DOL LUMBER=1.00 NAIL=1.00 LS BEND=1.00 COMP=1.00 SHEAR=1.00 TENS= 1.00

COMPANION LIVE LOAD FACTOR = 0.50

AUTOSOLVE HEELS OFF

TRUSS PLATE MANUFACTURER IS NOT RESPONSIBLE FOR QUALITY CONTROL IN THE TRUSS MANUFACTURING PLANT .

NAIL VALUES

PLATE	GRIP(DRY) (PSI) MAX	MIN	SHEAR (PLI) MAX	MIN	SECTION (PLI) MAX	MIN
MT20	618	354	1667	822	2284	1656

PLATE PLACEMENT TOL. = 0.250 inches

PLATE ROTATION TOL. = 5.0 Deg.

TSI GRIP= 0.90 (I) (INPUT = 0.90)
TSI METAL= 0.71 (S) (INPUT = 1.00)

LICENSED PROFESSIONAL ENGINEER
S-1217
S. KATSOULAKOS
PROVINCE OF ONTARIO

DWG NO. TAM25473-17
STRUCTURAL
COMPONENT ONLY

CONTINUED ON PAGE 2

JOB NAME	TRUSS NAME	QUANTITY	PLY	JOB DESC. 44269	DRWG NO.
282179	T1	1	2	TRUSS DESC.	

PLATES (table is in inches)

JT	TYPE	PLATES	W	LEN	Y	X
T	BMWW-t	MT20	5.0	6.0		
U	BMWW+t	MT20	4.0	6.0	2.75	1.50
V	BMWW-t	MT20	5.0	6.0	2.50	2.25
W	BMV1+p	MT20	3.0	6.0		

HANGERS NOTES

1) SPECIAL HANGER(S) OR CONNECTION(S) REQUIRED TO SUPPORT CONCENTRATED LOAD(S) 301.7 lbs FACTORED DOWN AT 1-11-4, 301.7 lbs FACTORED DOWN AT 3-11-4, 301.7 lbs FACTORED DOWN AT 4-5-12, 301.7 lbs FACTORED DOWN AT 6-5-12, 301.7 lbs FACTORED DOWN AT 8-5-12, 301.7 lbs FACTORED DOWN AT 10-5-12, 301.7 lbs FACTORED DOWN AT 12-5-12, 301.7 lbs FACTORED DOWN AT 14-5-12, 301.7 lbs FACTORED DOWN AT 16-5-12, 301.7 lbs FACTORED DOWN AT 18-5-12, 301.7 lbs FACTORED DOWN AT 19-4-4, 301.7 lbs FACTORED DOWN AT 21-4-4, 301.7 lbs FACTORED DOWN AT 23-4-4, 301.7 lbs FACTORED DOWN AT 25-4-4, 301.7 lbs FACTORED DOWN AT 27-4-4, 301.7 lbs FACTORED DOWN AT 29-4-4, 301.7 lbs FACTORED DOWN AT 31-4-4, 301.7 lbs FACTORED DOWN AT 33-4-4, AND 301.7 lbs FACTORED DOWN AT 33-10-12, AND 301.7 lbs FACTORED DOWN AT 35-10-12 ON BOTTOM CHORD. DESIGN FOR UNSPECIFIED CONNECTION(S) IS DELEGATED TO THE BUILDING DESIGNER.

LOADING

TOTAL LOAD CASES: (4)

CHORDS

MEMB. FR-TO	MAX. FACTORED FORCE (LBS)	FACTORED VERT. LOAD (PLF) FROM	TO	LC1	MAX CSI (LC)	MAX. UNBRAC LENGTH FR-TO
AN-AO	0 / 0	-28.0	-28.0	0.13	(1)	10.00
AO- M	0 / 0	-28.0	-28.0	0.13	(1)	10.00

WEBS

MEMB.	MAX. FACTORED FORCE (LBS)	MAX CSI (LC)

FACTORED CONCENTRATED LOADS (LBS)

JT	LOC.	LC1	MAX-	MAX+	FACE	DIR.	TYPE
N	33-4-4	-302	-302	---	BACK	VERT	TOTAL
V	4-5-12	-302	-302	---	BACK	VERT	TOTAL
X	1-11-4	-302	-302	---	BACK	VERT	TOTAL
Y	3-11-4	-302	-302	---	BACK	VERT	TOTAL
Z	6-5-12	-302	-302	---	BACK	VERT	TOTAL
AA	8-5-12	-302	-302	---	BACK	VERT	TOTAL
AB	10-5-12	-302	-302	---	BACK	VERT	TOTAL
AC	12-5-12	-302	-302	---	BACK	VERT	TOTAL
AD	14-5-12	-302	-302	---	BACK	VERT	TOTAL
AE	16-5-12	-302	-302	---	BACK	VERT	TOTAL
AF	18-5-12	-302	-302	---	BACK	VERT	TOTAL
AG	19-4-4	-302	-302	---	BACK	VERT	TOTAL
AH	21-4-4	-302	-302	---	BACK	VERT	TOTAL
AI	23-4-4	-302	-302	---	BACK	VERT	TOTAL
AJ	25-4-4	-302	-302	---	BACK	VERT	TOTAL
AK	27-4-4	-302	-302	---	BACK	VERT	TOTAL
AL	29-4-4	-302	-302	---	BACK	VERT	TOTAL
AM	31-4-4	-302	-302	---	BACK	VERT	TOTAL
AN	33-10-12	-302	-302	---	BACK	VERT	TOTAL
AO	35-10-12	-302	-302	---	BACK	VERT	TOTAL

LICENSED PROFESSIONAL ENGINEER
S. KATSOULAKOS
PROVINCE OF ONTARIO

DWG NO. TAM25473-17
STRUCTURAL
COMPONENT ONLY

JOB NAME	TRUSS NAME	QUANTITY	PLY	JOB DESC. 44269	DRWG NO.
282179	T1Z2	1	2	TRUSS DESC.	

Tamarack Roof Truss, Burlington

Version 8.030 S Oct 5 2016 MiTek Industries, Inc. Thu May 18 13:59:57 2017 Page 1

ID:lwUx8pNrcNFORm7Ep9cJZmzFzsk-bYy6m?BzRGV2P_RNdCfGjde5YDM3GhPrKxn74qzFFxW

Scale = 1:65.7

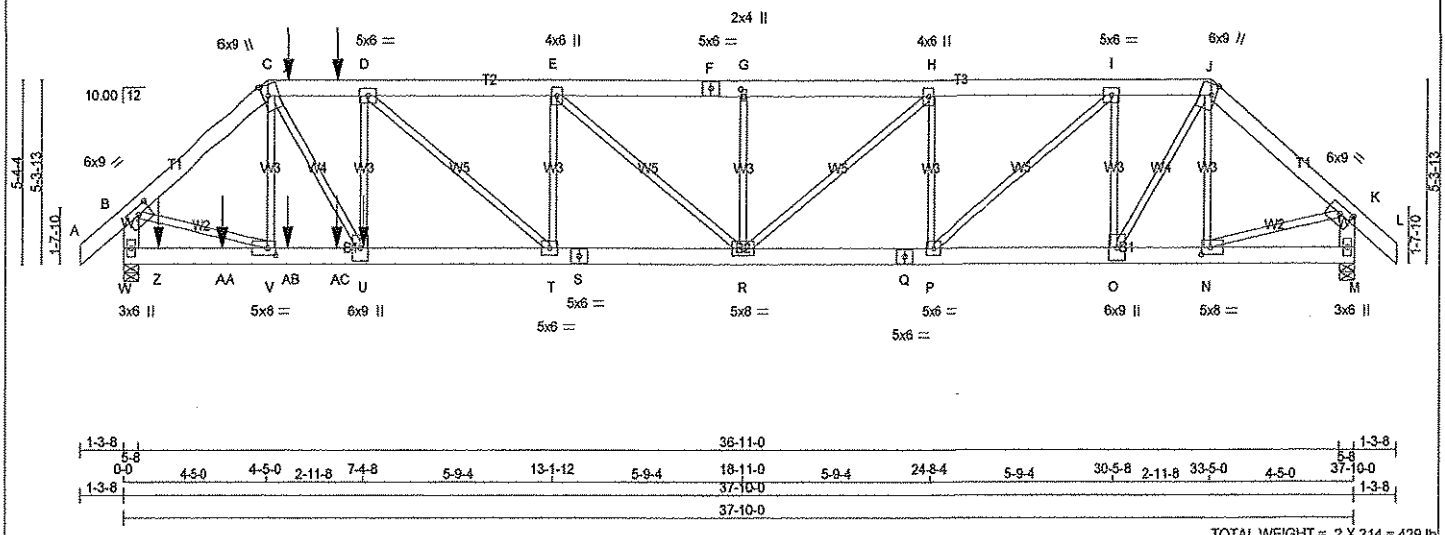

TOTAL WEIGHT = 2 X 214 = 429 lb [M]

LUMBER

N. L. G. A. RULES

CHORDS	SIZE		LUMBER	DESCR.
A - C	2x6	DRY	No.2	SPF
C - F	2x6	DRY	No.2	SPF
F - J	2x6	DRY	No.2	SPF
J - L	2x6	DRY	No.2	SPF
W - B	2x6	DRY	No.2	SPF
M - K	2x6	DRY	No.2	SPF
W - S	2x6	DRY	No.2	SPF
S - Q	2x6	DRY	No.2	SPF
Q - M	2x6	DRY	No.2	SPF
ALL WEBS EXCEPT	2x3	DRY	No.2	SPF

DRY: SEASONED LUMBER.

DESIGN CONSISTS OF 2 TRUSSES BUILT SEPARATELY THEN FASTENED TOGETHER AS FOLLOWS:

CHORDS	#ROWS	SURFACE SPACING (IN)	LOAD(PLF)
TOP CHORDS : (0.122"X3") SPIRAL NAILS			
A- C	2	12	TOP
F- C	2	12	SIDE(0.0)
F- J	2	12	TOP
J- L	2	12	TOP
W- B	2	12	TOP
M- K	2	12	TOP
BOTTOM CHORDS : (0.122"X3") SPIRAL NAILS			
W- S	2	12	SIDE(183.1)
S- Q	2	12	TOP
Q- M	2	12	TOP
WEBS : (0.122"X3") SPIRAL NAILS			
D- U	1	2	SIDE(1035.6)
2x3	1	6	
I- O	1	2	

NAILS TO BE DRIVEN FROM ONE SIDE ONLY.

GIRDER NAILING ASSUMES NAILED HANGERS ARE FASTENED WITH MIN. 3-0 INCH NAILS.

TOP - COMPONENTS ARE LOADED FROM THE TOP AND MUST BE PLACED ON TOP EDGE OF ALL PLIES FOR THE LOAD TO BE TRANSFERRED TO EACH PLY.

SIDE - PLF SHOWN IS THE EQUIVALENT UDL APPLIED TO ONE SIDE THAT THE CORRESPONDING NAILING PATTERN SHALL BE CAPABLE OF TRANSFERING. REMAINING PLF MUST BE APPLIED ON THE OPPOSITE SIDE OR ON THE TOP.

PLATES (table is in inches)

JT	TYPE	PLATES	W	LEN	Y	X
B	TMVW-t	MT20	6.0	9.0	2.50	4.50
C	TTWW+m	MT20	6.0	9.0	3.75	1.75
D	TMWW-t	MT20	5.0	6.0		
E	TMWW+t	MT20	4.0	6.0		
F	TS-t	MT20	5.0	6.0		
G	TMW+w	MT20	2.0	4.0	2.50	1.00
H	TMWW+t	MT20	4.0	6.0		
I	TMWW-t	MT20	5.0	6.0		
J	TTWW+m	MT20	6.0	9.0	3.75	1.75
K	TMVW-t	MT20	6.0	9.0	2.50	4.50
M	BMV1+p	MT20	3.0	6.0		
N	BMWW-t	MT20	5.0	8.0	2.50	3.25
O	BMWW+t	MT20	6.0	9.0		
P	BMWW-t	MT20	5.0	6.0		
Q	BS-t	MT20	5.0	6.0		

DIMENSIONS, SUPPORTS AND LOADINGS SPECIFIED BY FABRICATOR TO BE VERIFIED BY BUILDING DESIGNER

BEARINGS

JT	FACTORED GROSS REACTION VERT	HORZ	MAXIMUM FACTORED GROSS REACTION DOWN	HORZ	UPLIFT	INPUT BRG IN-SX	REQRD BRG IN-SX
W	6337	0	6337	0	0	5-8	5-8
M	3208	0	3208	0	0	5-8	5-8

UNFACTORED REACTIONS

JT	1ST LCASE COMBINED	MAX./MIN. COMPONENT REACTIONS SNOW	LIVE	PERM.LIVE	WIND	DEAD	SOIL
W	5077	3022 / 0	1019 / 0	0 / 0	0 / 0	1036 / 0	0 / 0
M	2582	1514 / 0	534 / 0	0 / 0	0 / 0	534 / 0	0 / 0

BEARING MATERIAL TO BE SPF NO.2 OR BETTER AT JOINT(S) W, M

BRACING

TOP CHORD TO BE SHEATHED OR MAX. PURLIN SPACING = 3.98 FT.
MAX. UNBRACED BOTTOM CHORD LENGTH = 10.00 FT. OR RIGID CEILING DIRECTLY APPLIED.

ALL PITCH BREAKS AND PERIMETER CORNER JOINTS MUST BE LATERALLY RESTRAINED.

LOADING

TOTAL LOAD CASES: (4)

CHORDS

MEMB. FR-TO	MAX. FACTORED FORCE (LBS)	FACTORED VERT. LOAD (PLF) FROM	TO	LC1	MAX CSI (LC)	MAX. UNBRAC LENGTH
A- B	0 / 39	-84.3	-84.3	0.03 (1)	10.00	
B- C	-7175 / 0	-84.3	-84.3	0.16 (1)	4.39	
C- X	-8558 / 0	-84.3	-84.3	0.20 (1)	4.04	
X- Y	-8558 / 0	-84.3	-84.3	0.20 (1)	4.04	
Y- D	-8558 / 0	-84.3	-84.3	0.20 (1)	4.04	
D- E	-8687 / 0	-84.3	-84.3	0.25 (1)	3.98	
E- F	-7898 / 0	-84.3	-84.3	0.20 (1)	4.19	
F- G	-7898 / 0	-84.3	-84.3	0.20 (1)	4.19	
G- H	-7898 / 0	-84.3	-84.3	0.19 (1)	4.21	
H- I	-6390 / 0	-84.3	-84.3	0.15 (1)	4.62	
I- J	-4086 / 0	-84.3	-84.3	0.08 (1)	5.58	
J- K	-3429 / 0	-84.3	-84.3	0.10 (1)	5.94	
K- L	0 / 39	-84.3	-84.3	0.03 (1)	10.00	
W- B	-6274 / 0	0.0	0.0	0.23 (1)	5.92	
M- K	-3159 / 0	0.0	0.0	0.11 (1)	7.77	
W- Z	0 / 0	-28.0	-28.0	0.08 (2)	10.00	
Z-AA	0 / 0	-28.0	-28.0	0.08 (2)	10.00	
AA- V	0 / 0	-28.0	-28.0	0.08 (2)	10.00	
V-AB	0 / 5470	-28.0	-28.0	0.44 (1)	10.00	
AB-AC	0 / 5470	-28.0	-28.0	0.44 (1)	10.00	
AC- U	0 / 5470	-28.0	-28.0	0.44 (1)	10.00	
U- T	0 / 8557	-28.0	-28.0	0.65 (1)	10.00	
T- S	0 / 8687	-28.0	-28.0	0.60 (1)	10.00	
S- R	0 / 8687	-28.0	-28.0	0.60 (1)	10.00	
R- Q	0 / 6390	-28.0	-28.0	0.46 (1)	10.00	
Q- P	0 / 6390	-28.0	-28.0	0.46 (1)	10.00	
P- O	0 / 4086	-28.0	-28.0	0.30 (1)	10.00	
O- N	0 / 2613	-28.0	-28.0	0.20 (1)	10.00	
N- M	0 / 0	-28.0	-28.0	0.03 (2)	10.00	

WEBS

MEMB. FR-TO	MAX. FACTORED FORCE (LBS)	MAX CSI (LC)
V- C	-962 / 0	0.18 (1)
U- D	0 / 5905	0.73 (1)
D- T	-413 / 0	0.08 (1)
T- E	0 / 234	0.03 (2)
E- R	0 / 180	0.02 (2)
R- G	-1031 / 0	0.57 (1)
R- H	-465 / 0	0.09 (1)
P- H	0 / 1972	0.24 (1)
P- I	-1774 / 0	0.34 (1)
O- I	0 / 3012	0.37 (1)
O- J	-2293 / 0	0.44 (1)
N- J	0 / 2817	0.35 (1)
B- V	-510 / 0	0.10 (1)
N- K	0 / 5654	0.70 (1)
	0 / 2702	0.33 (1)

FACTORED CONCENTRATED LOADS (LBS)

JT	LOC.	LC1	MAX-	MAX+	FACE	DIR.	TYPE
U	7-4-8	-4672	-4672	---	BACK	VERT	TOTAL
X	5-0-12	-116	-116	---	BACK	VERT	TOTAL
Y	6-6-12	-101	-101	---	BACK	VERT	TOTAL
Z	1-0-12	-41	-72	---	BACK	VERT	TOTAL
AA	3-0-12	-41	-72	---	BACK	VERT	TOTAL
AB	5-0-12	-41	-72	---	BACK	VERT	TOTAL
AC	6-6-12	-41	-72	---	BACK	VERT	TOTAL

DESIGN CRITERIA

SPECIFIED LOADS:

TOP CH.	LL	=	25.6	PSF
	DL	=	3.0	PSF
BOT CH.	LL	=	10.5	PSF
	DL	=	7.0	PSF
TOTAL LOAD		=	46.1	PSF

SPACING = 24.0 IN. C/C

LOADING IN FLAT SECTION BASED ON A SLOPE OF 6.00/12

THIS TRUSS IS DESIGNED FOR RESIDENTIAL OR SMALL BUILDING REQUIREMENTS OF PART 9, NBCC 2010

THIS DESIGN COMPLIES WITH:
- PART 9 OF OBC 2012 , BCBC 2012 , ABC 2014
- CSA 086-09
- TPIC 2011

(55 % OF 31.3 P.S.F. G.S.L. PLUS 8.4 P.S.F. RAIN LOAD) EQUALS 25.6 P.S.F. SPECIFIED ROOF LIVE LOAD

ALLOWABLE DEFL.(LL)= L/360 (1.26")
CALCULATED VERT. DEFL.(LL) = L/ 999 (0.22")
ALLOWABLE DEFL.(TL)= L/360 (1.26")
CALCULATED VERT. DEFL.(TL) = L/ 999 (0.34")

CSI: TC=0.25 (D-E:1) , BC=0.65 (T-U:1) , WB=0.73 (C-U:1) , SSI=0.10 (D-E:1)

DOL LUMBER=1.00 NAIL=1.00 LS BEND=1.00 COMP=1.00 SHEAR=1.00 TENS= 1.00

COMPANION LIVE LOAD FACTOR = 0.50

AUTOSOLVE HEELS OFF

TRUSS PLATE MANUFACTURER IS NOT RESPONSIBLE FOR QUALITY CONTROL IN THE TRUSS MANUFACTURING PLANT .

NAIL VALUES

PLATE	GRIP(DRY) (PSI) MAX	MIN	SHEAR (PLI) MAX	MIN	SECTION (PLI) MAX	MIN
MT20	618	354	1667	822	2284	1656

PLATE PLACEMENT TOL. = 0.250 inches

PLATE ROTATION TOL. = 5.0 Deg.

JSI GRIP= 0.90 (N) (INPUT = 0.90)
JSI METAL= 0.64 (S) (INPUT = 1.00)

LICENSED PROFESSIONAL ENGINEER
5217
S. KATSOULAKOS
PROVINCE OF ONTARIO

DWG NO. TAM 25474-17
STRUCTURAL COMPONENT ONLY

CONTINUED ON PAGE 2

PLATES (table is in inches)

JT	TYPE	PLATES	W	LEN	Y	X
R	BMWWW-t	MT20	5.0	8.0		
S	BS-t	MT20	5.0	6.0		
T	BMWW-t	MT20	5.0	6.0		
U	BMWW+t	MT20	6.0	9.0		
V	BMWW-t	MT20	5.0	8.0	2.50	3.25
W	BMV1+p	MT20	3.0	6.0		

HANGERS NOTES

1) SPECIAL HANGER(S) OR CONNECTION(S) REQUIRED TO SUPPORT CONCENTRATED LOAD(S) 116.3 lbs FACTORED DOWN AT 5-0-12, AND 101.4 lbs FACTORED DOWN AT 6-6-12 ON TOP CHORD, AND 71.7 lbs FACTORED DOWN AT 1-0-12, 71.7 lbs FACTORED DOWN AT 3-0-12, 71.7 lbs FACTORED DOWN AT 5-0-12, AND 71.7 lbs FACTORED DOWN AT 6-6-12, AND 4671.7 lbs FACTORED DOWN AT 7-4-8 ON BOTTOM CHORD. DESIGN FOR UNSPECIFIED CONNECTION(S) IS DELEGATED TO THE BUILDING DESIGNER.

LICENSED PROFESSIONAL ENGINEER
S. KATSOULAKOS
PROVINCE OF ONTARIO

DWG NO. TAM25474-17
STRUCTURAL
COMPONENT ONLY

JOB NAME	TRUSS NAME	QUANTITY	PLY	JOB DESC. 44269	DRWG NO.
282179	T2	2	1	TRUSS DESC.	

Tamarack Roof Truss, Burlington

Version 8.030 S Oct 5 2016 MiTek Industries, Inc. Thu May 18 13:59:57 2017 Page 1

ID:IwUx8pNrcNFORm7Ep9cJZmzFzsk-bYy6m?BzRGV2P_RNdCfGjdexaDQuGijrKxn74qzFFxW

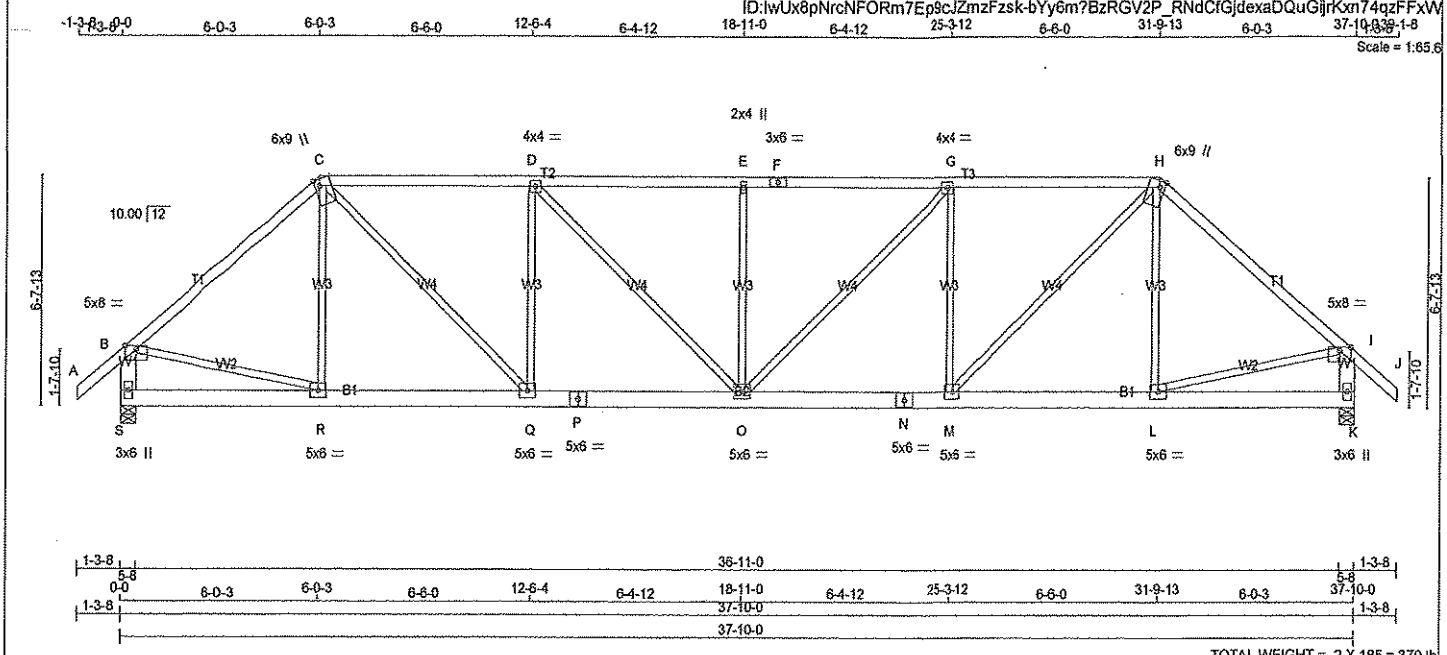

LUMBER
N. L. G. A. RULES

CHORDS	SIZE		LUMBER	DESCR.
A - C	2x4	DRY	No.2	SPF
C - F	2x4	DRY	No.2	SPF
F - H	2x4	DRY	No.2	SPF
H - J	2x4	DRY	No.2	SPF
S - B	2x6	DRY	No.2	SPF
K - I	2x6	DRY	No.2	SPF
S - P	2x6	DRY	No.2	SPF
P - N	2x6	DRY	No.2	SPF
N - K	2x6	DRY	No.2	SPF
ALL WEBS EXCEPT	2x3	DRY	No.2	SPF

DRY: SEASONED LUMBER.

PLATES (table is in inches)

JT	TYPE	PLATES	W	LEN	Y	X
B	TMVW-p	MT20	5.0	8.0	Edge	
C	TTWW+m	MT20	6.0	9.0	Edge	1.75
D	TMWW-t	MT20	4.0	4.0		
E	TMW+w	MT20	2.0	4.0		
F	TS-t	MT20	3.0	6.0		
G	TMWW-t	MT20	4.0	4.0		
H	TTWW+m	MT20	6.0	9.0	Edge	1.75
I	TMVW-p	MT20	5.0	8.0	Edge	
K	BMV1+p	MT20	3.0	6.0		
L, M, Q, R						
L	BMWW-t	MT20	5.0	6.0		
N	BS-t	MT20	5.0	6.0		
O	BMWWW-t	MT20	5.0	6.0		
P	BS-t	MT20	5.0	6.0		
S	BMV1+p	MT20	3.0	6.0		

Edge - INDICATES REFERENCE CORNER OF PLATE TOUCHES EDGE OF CHORD.

DIMENSIONS, SUPPORTS AND LOADINGS SPECIFIED BY FABRICATOR TO BE VERIFIED BY BUILDING DESIGNER

BEARINGS

JT	FACTORED GROSS REACTION VERT	HORZ	MAXIMUM FACTORED GROSS REACTION DOWN	HORZ	UPLIFT	INPUT BRG IN-SX	REQRD BRG IN-SX
S	2240	0	2240	0	0	5-8	5-8
K	2240	0	2240	0	0	5-8	5-8

UNFACTORED REACTIONS

JT	1ST LCASE COMBINED	MAX./MIN. COMPONENT REACTIONS SNOW	LIVE	PERM.LIVE	WIND	DEAD	SOIL
S	1823	1039 / 0	397 / 0	0 / 0	0 / 0	387 / 0	0 / 0
K	1823	1039 / 0	397 / 0	0 / 0	0 / 0	387 / 0	0 / 0

BEARING MATERIAL TO BE SPF NO.2 OR BETTER AT JOINT(S) S, K

BRACING
TOP CHORD TO BE SHEATHED OR MAX. PURLIN SPACING = 3.09 FT.
MAX. UNBRACED BOTTOM CHORD LENGTH = 10.00 FT. OR RIGID CEILING DIRECTLY APPLIED.

ALL PITCH BREAKS AND PERIMETER CORNER JOINTS MUST BE LATERALLY RESTRAINED.

LOADING
TOTAL LOAD CASES: (4)

CHORDS

MEMB. FR-TO	MAX. FACTORED FORCE (LBS)	FACTORED VERT. LOAD (PLF) FROM	TO	LC1 CSI (LC)	MAX UNBRAC LENGTH
A- B	0 / 37	-84.3	-84.3	0.12 (1)	10.00
B- C	-2267 / 0	-84.3	-84.3	0.85 (1)	3.73
C- D	-2902 / 0	-84.3	-84.3	0.83 (1)	3.30
D- E	-3242 / 0	-84.3	-84.3	0.89 (1)	3.09
E- F	-3242 / 0	-84.3	-84.3	0.89 (1)	3.09
F- G	-3242 / 0	-84.3	-84.3	0.89 (1)	3.09
G- H	-2902 / 0	-84.3	-84.3	0.83 (1)	3.30
H- I	-2267 / 0	-84.3	-84.3	0.85 (1)	3.73
I- J	0 / 37	-84.3	-84.3	0.12 (1)	10.00
S- B	-2171 / 0	0.0	0.0	0.15 (1)	6.91
K- I	-2171 / 0	0.0	0.0	0.15 (1)	6.91
S- R	0 / 0	-28.0	-28.0	0.13 (3)	10.00
R- Q	0 / 1736	-28.0	-28.0	0.28 (2)	10.00
Q- P	0 / 2903	-28.0	-28.0	0.41 (1)	10.00
P- O	0 / 2903	-28.0	-28.0	0.41 (1)	10.00
O- N	0 / 2903	-28.0	-28.0	0.41 (1)	10.00
N- M	0 / 2903	-28.0	-28.0	0.41 (1)	10.00
M- L	0 / 1736	-28.0	-28.0	0.28 (2)	10.00
L- K	0 / 0	-28.0	-28.0	0.13 (3)	10.00

WEBS

MEMB. FR-TO	MAX. FACTORED FORCE (LBS)	MAX CSI (LC)
R- C	-147 / 166	0.10 (1)
C- Q	0 / 1618	0.36 (1)
Q- D	-945 / 0	0.65 (1)
D- O	0 / 476	0.11 (1)
O- E	-496 / 0	0.34 (1)
O- G	0 / 476	0.11 (1)
M- G	-945 / 0	0.65 (1)
M- H	0 / 1618	0.36 (1)
L- H	-147 / 166	0.10 (1)
B- R	0 / 1773	0.40 (1)
L- I	0 / 1773	0.40 (1)

DESIGN CRITERIA

SPECIFIED LOADS:

TOP CH.	LL	=	25.6	PSF
	DL	=	3.0	PSF
BOT CH.	LL	=	10.5	PSF
	DL	=	7.0	PSF
TOTAL LOAD		=	46.1	PSF

SPACING = 24.0 IN. C/C

LOADING IN FLAT SECTION BASED ON A SLOPE OF 6.00/12

THIS TRUSS IS DESIGNED FOR RESIDENTIAL OR SMALL BUILDING REQUIREMENTS OF PART 9, NBCC 2010

THIS DESIGN COMPLIES WITH:
- PART 9 OF OBC 2012 , BCBC 2012 , ABC 2014
- CSA 086-09
- TPIC 2011

(55 % OF 31.3 P.S.F. G.S.L. PLUS 8.4 P.S.F. RAIN LOAD) EQUALS 25.6 P.S.F. SPECIFIED ROOF LIVE LOAD

ALLOWABLE DEFL.(LL)= L/360 (1.26")
CALCULATED VERT. DEFL.(LL) = L/ 999 (0.20")
ALLOWABLE DEFL.(TL)= L/360 (1.26")
CALCULATED VERT. DEFL.(TL) = L/ 999 (0.32")

CSI: TC=0.89 (D-E:1) , BC=0.41 (M-O:1) , WB=0.65 (G-M:1) , SSI=0.26 (C-D:1)

DOL LUMBER=1.00 NAIL=1.00 LS BEND=1.10 COMP=1.10 SHEAR=1.10 TENS= 1.10

COMPANION LIVE LOAD FACTOR = 0.50

AUTOSOLVE HEELS OFF

TRUSS PLATE MANUFACTURER IS NOT RESPONSIBLE FOR QUALITY CONTROL IN THE TRUSS MANUFACTURING PLANT .

NAIL VALUES

PLATE	GRIP(DRY) (PSI) MAX	MIN	SHEAR (PLI) MAX	MIN	SECTION (PLI) MAX	MIN
MT20	618	354	1667	822	2284	1656

PLATE PLACEMENT TOL. = 0.250 inches

PLATE ROTATION TOL. = 5.0 Deg.

JSI GRIP= 0.86 (R) (INPUT = 0.90)
JSI METAL= 0.46 (P) (INPUT = 1.00)

LICENSED PROFESSIONAL ENGINEER
5217
S. KATSOULAKOS
PROVINCE OF ONTARIO

DWG NO. TAM25475-17
STRUCTURAL
COMPONENT ONLY

JOB NAME	TRUSS NAME	QUANTITY	PLY	JOB DESC. 44269	DRWG NO.
282179	T3	2	1	TRUSS DESC.	

Tamarack Roof Truss, Burlington

Version 8.030 S Oct 5 2016 MiTek Industries, Inc. Thu May 18 13:59:57 2017 Page 1

ID:lwUx8pNrcNFORm7Ep9cJZmzFzsk-bYy6m?BzRGV2P_RNdCfGjde?MDRHGgarKxn74qzFFxW

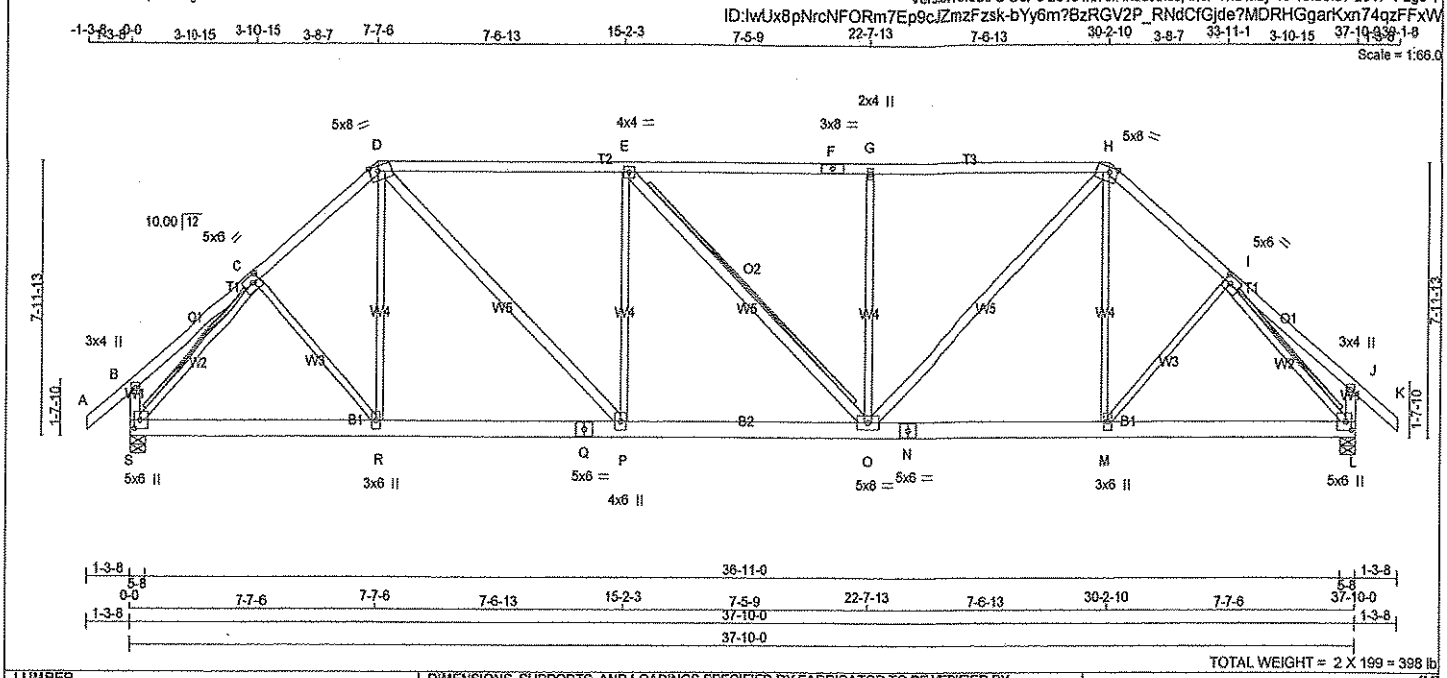

LUMBER

N. L. G. A. RULES

CHORDS	SIZE		LUMBER	DESCR.
A - D	2x4	DRY	No.2	SPF
D - F	2x4	DRY	2100F 1.8E	SPF
F - H	2x4	DRY	2100F 1.8E	SPF
H - K	2x4	DRY	No.2	SPF
S - B	2x4	DRY	No.2	SPF
L - J	2x4	DRY	No.2	SPF
S - Q	2x6	DRY	No.2	SPF
Q - N	2x6	DRY	No.2	SPF
N - L	2x6	DRY	No.2	SPF
ALL WEBS	2x3	DRY	No.2	SPF
EXCEPT				
D - P	2x4	DRY	No.2	SPF
E - O	2x4	DRY	No.2	SPF
O - H	2x4	DRY	No.2	SPF

DRY: SEASONED LUMBER.

PLATES (table is in inches)

JT	TYPE	PLATES	W	LEN	Y	X
B	TMV+p	MT20	3.0	4.0		
C	TMWW-t	MT20	5.0	6.0	2.50	2.25
D	TTWW-m	MT20	5.0	8.0	Edge	3.00
E	TMWW-t	MT20	4.0	4.0		
F	TS-t	MT20	3.0	8.0		
G	TMW+w	MT20	2.0	4.0		
H	TTWW-m	MT20	5.0	8.0	Edge	3.00
I	TMWW-t	MT20	5.0	6.0	2.50	2.25
J	TMV+p	MT20	3.0	4.0		
L	BMVW1+p	MT20	5.0	6.0	3.00	2.00
M	BMWW+t	MT20	3.0	6.0		
N	BS-t	MT20	5.0	6.0		
O	BMWWW-t	MT20	5.0	8.0		
P	BMWW+t	MT20	4.0	6.0		
Q	BS-t	MT20	5.0	6.0		
R	BMWW+t	MT20	3.0	6.0		
S	BMVW1+p	MT20	5.0	6.0	3.00	2.00

Edge - INDICATES REFERENCE CORNER OF PLATE TOUCHES EDGE OF CHORD.

DIMENSIONS, SUPPORTS AND LOADINGS SPECIFIED BY FABRICATOR TO BE VERIFIED BY BUILDING DESIGNER

BEARINGS

JT	FACTORED GROSS REACTION VERT	HORZ	MAXIMUM FACTORED GROSS REACTION DOWN	HORZ	UPLIFT	INPUT BRG IN-SX	REQRD BRG IN-SX
S	2240	0	2240	0	0	5-8	5-8
L	2240	0	2240	0	0	5-8	5-8

UNFACTORED REACTIONS

JT	1ST LCASE COMBINED	MAX./MIN. COMPONENT REACTIONS SNOW	LIVE	PERM.LIVE	WIND	DEAD	SOIL
S	1623	1039 / 0	397 / 0	0 / 0	0 / 0	387 / 0	0 / 0
L	1623	1039 / 0	397 / 0	0 / 0	0 / 0	387 / 0	0 / 0

BEARING MATERIAL TO BE SPF NO.2 OR BETTER AT JOINT(S) S, L

BRACING

TOP CHORD TO BE SHEATHED OR MAX. PURLIN SPACING = 4.31 FT.
MAX. UNBRACED BOTTOM CHORD LENGTH = 10.00 FT. OR RIGID CEILING DIRECTLY APPLIED.

ALL PITCH BREAKS AND PERIMETER CORNER JOINTS MUST BE LATERALLY RESTRAINED.

2x4 DRY SPF No.2 T-BRACE AT E-O, C-S, I-L

FASTEN T AND I-BRACES TO NARROW EDGE OF WEB WITH ONE ROW PER PLY OF 3" COMMON WIRE NAILS @ 6" O.C. WITH 3" MINIMUM END DISTANCE. BRACE MUST COVER 90% OF WEB LENGTH.

END VERTICAL(S) MUST BE SHEATHED OR HAVE BRACES AS INDICATED IN THE MAX. UNBRACED LENGTH COLUMN OF THE TABLE BELOW

LOADING

TOTAL LOAD CASES: (4)

CHORDS

MEMB. FR-TO	MAX. FACTORED FORCE (LBS)	FACTORED VERT. LOAD LC1 (PLF) FROM	TO	MAX CSI (LC)	MAX. UNBRAC LENGTH
A- B	0 / 37	-84.3	-84.3	0.12 (1)	10.00
B- C	0 / 22	-84.3	-84.3	0.18 (1)	10.00
C- D	-2268 / 0	-84.3	-84.3	0.27 (1)	4.31
D- E	-2612 / 0	-84.3	-84.3	0.58 (1)	4.55
E- F	-2609 / 0	-84.3	-84.3	0.58 (1)	4.56
F- G	-2609 / 0	-84.3	-84.3	0.58 (1)	4.56
G- H	-2609 / 0	-84.3	-84.3	0.58 (1)	4.57
H- I	-2269 / 0	-84.3	-84.3	0.27 (1)	4.31
I- J	0 / 22	-84.3	-84.3	0.18 (1)	10.00
J- K	0 / 37	-84.3	-84.3	0.12 (1)	10.00
S- B	-242 / 0	0.0	0.0	0.03 (1)	7.81
L- J	-242 / 0	0.0	0.0	0.03 (1)	7.81
S- R	0 / 1652	-28.0	-28.0	0.32 (2)	10.00
R- Q	0 / 1723	-28.0	-28.0	0.34 (2)	10.00
Q- P	0 / 1723	-28.0	-28.0	0.34 (2)	10.00
P- O	0 / 2613	-28.0	-28.0	0.38 (1)	10.00
O- N	0 / 1724	-28.0	-28.0	0.34 (2)	10.00
N- M	0 / 1724	-28.0	-28.0	0.34 (2)	10.00
M- L	0 / 1653	-28.0	-28.0	0.33 (2)	10.00

WEBS

MEMB. FR-TO	MAX. FACTORED FORCE (LBS)	MAX CSI (LC)
C- R	0 / 169	0.04 (2)
R- D	0 / 296	0.07 (3)
D- P	0 / 1259	0.20 (1)
P- E	-685 / 0	0.78 (1)
E- O	-4 / 0	0.00 (1)
O- G	-686 / 0	0.78 (1)
O- H	0 / 1254	0.20 (1)
M- H	0 / 296	0.07 (3)
M- I	0 / 169	0.04 (2)
S- C	-2525 / 0	0.64 (1)
I- L	-2526 / 0	0.64 (1)

DESIGN CRITERIA

SPECIFIED LOADS:

TOP CH.	LL	=	25.6	PSF
	DL	=	3.0	PSF
BOT CH.	LL	=	10.5	PSF
	DL	=	7.0	PSF
TOTAL LOAD		=	46.1	PSF

SPACING = 24.0 IN. C/C

LOADING IN FLAT SECTION BASED ON A SLOPE OF 6.00/12

THIS TRUSS IS DESIGNED FOR RESIDENTIAL OR SMALL BUILDING REQUIREMENTS OF PART 9, NBCC 2010

THIS DESIGN COMPLIES WITH:
- PART 9 OF OBC 2012 , BCBC 2012 , ABC 2014
- CSA 086-09
- TPIC 2011

(55 % OF 31.3 P.S.F. G.S.L. PLUS 8.4 P.S.F. RAIN LOAD) EQUALS 25.6 P.S.F. SPECIFIED ROOF LIVE LOAD

ALLOWABLE DEFL.(LL)= L/360 (1.26")
CALCULATED VERT. DEFL.(LL) = L/ 999 (0.13")
ALLOWABLE DEFL.(TL)= L/360 (1.26")
CALCULATED VERT. DEFL.(TL) = L/ 999 (0.22")

CSI: TC=0.58 (D-E:1) , BC=0.38 (O-P:1) , WB=0.78 (G-O:1) , SSI=0.30 (D-E:1)

DOL LUMBER=1.00 NAIL=1.00 LS BEND=1.10 COMP=1.10 SHEAR=1.10 TENS= 1.10

COMPANION LIVE LOAD FACTOR = 0.50

TRUSS PLATE MANUFACTURER IS NOT RESPONSIBLE FOR QUALITY CONTROL IN THE TRUSS MANUFACTURING PLANT .

NAIL VALUES

PLATE	GRIP(DRY) (PSI) MAX	MIN	SHEAR (PLI) MAX	MIN	SECTION (PLI) MAX	MIN
MT20	618	354	1667	822	2284	1656

PLATE PLACEMENT TOL. = 0.250 inches

PLATE ROTATION TOL. = 5.0 Deg.

JSI GRIP= 0.88 (L) (INPUT = 0.90)
JSI METAL= 0.62 (I) (INPUT = 1.00)

LICENSED PROFESSIONAL ENGINEER
5277
S. KATSOULAKOS
PROVINCE OF ONTARIO

DWG NO. TAM25476-17
STRUCTURAL
COMPONENT ONLY

JOB NAME	TRUSS NAME	QUANTITY	PLY	JOB DESC. 44269	DRWG NO.
282179	T4	6	1	TRUSS DESC.	

Tamarack Roof Truss, Burlington

Version 8.030 S Oct 5 2016 MiTek Industries, Inc. Thu May 18 13:59:57 2017 Page 1

ID:lwUx8pNrcNFORm7Ep9cJZmzFzsk-bYy6m?BzRGV2P_RNdCfGjde_wDRBGmUrKxn74qzFFxW

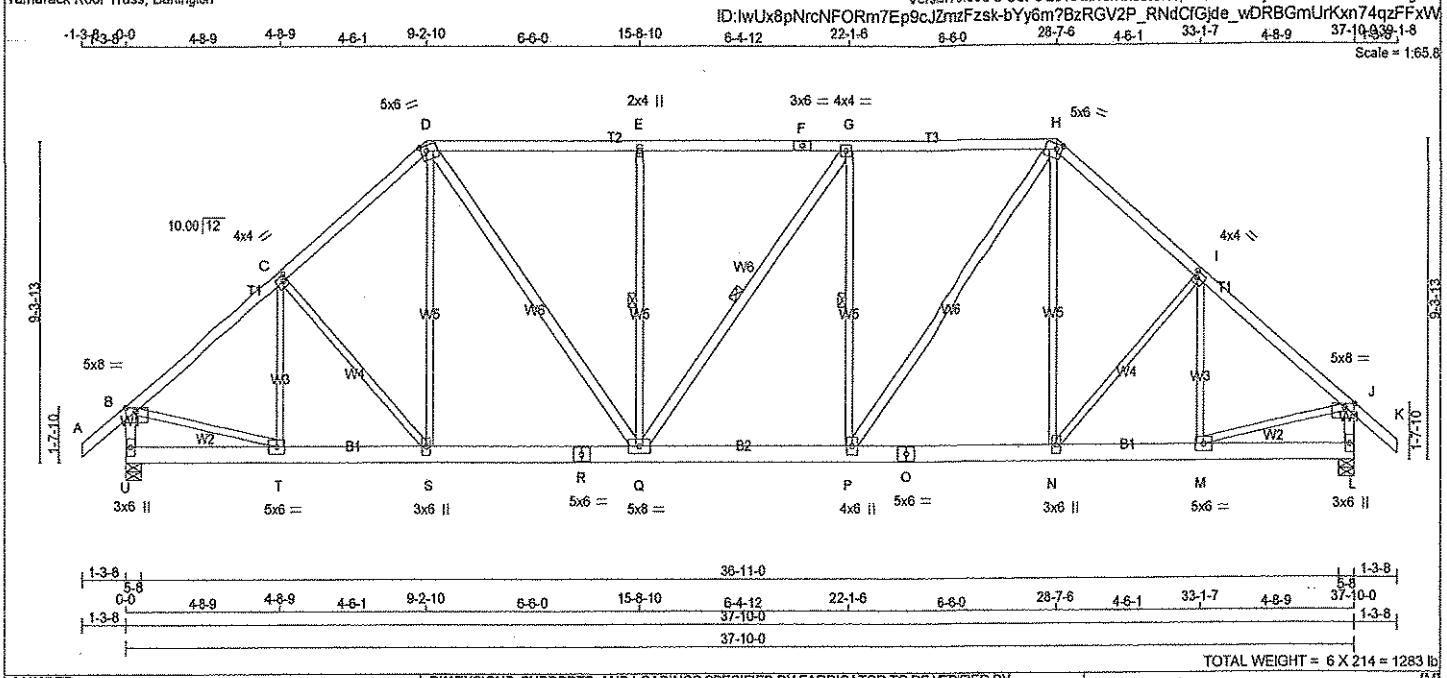

LUMBER

N. L. G. A. RULES

CHORDS	SIZE		LUMBER	DESCR.
A - D	2x4	DRY	No.2	SPF
D - F	2x4	DRY	No.2	SPF
F - H	2x4	DRY	No.2	SPF
H - K	2x4	DRY	No.2	SPF
U - B	2x4	DRY	No.2	SPF
L - J	2x4	DRY	No.2	SPF
U - R	2x6	DRY	No.2	SPF
R - O	2x6	DRY	No.2	SPF
O - L	2x6	DRY	No.2	SPF
ALL WEBS	2x3	DRY	No.2	SPF
EXCEPT				
D - Q	2x4	DRY	No.2	SPF
Q - G	2x4	DRY	No.2	SPF
P - H	2x4	DRY	No.2	SPF

DRY: SEASONED LUMBER.

PLATES (table is in inches)

JT	TYPE	PLATES	W	LEN	Y	X
B	TMVW-p	MT20	5.0	8.0	1.25	3.50
C	TMWW-t	MT20	4.0	4.0	2.00	1.25
D	TTWW-m	MT20	5.0	6.0	1.75	2.00
E	TMW+w	MT20	2.0	4.0		
F	TS-t	MT20	3.0	6.0		
G	TMWW-t	MT20	4.0	4.0		
H	TTWW-m	MT20	5.0	6.0	1.75	2.00
I	TMWW-t	MT20	4.0	4.0	2.00	1.25
J	TMVW-p	MT20	5.0	8.0	1.25	3.50
L	BMV1+p	MT20	3.0	6.0		
M	BMWW-t	MT20	5.0	6.0		
N	BMWW+t	MT20	3.0	6.0		
O	BS-t	MT20	5.0	6.0		
P	BMWW+t	MT20	4.0	6.0		
Q	BMWWW-t	MT20	5.0	8.0		
R	BS-t	MT20	5.0	6.0		
S	BMWW+t	MT20	3.0	6.0		
T	BMWW-t	MT20	5.0	6.0		
U	BMV1+p	MT20	3.0	6.0		

DIMENSIONS, SUPPORTS AND LOADINGS SPECIFIED BY FABRICATOR TO BE VERIFIED BY BUILDING DESIGNER

BEARINGS

JT	FACTORED GROSS REACTION VERT	HORZ	MAXIMUM FACTORED GROSS REACTION DOWN	HORZ	UPLIFT	INPUT BRG IN-SX	REQRD BRG IN-SX
U	2240	0	2240	0	0	5-8	5-8
L	2240	0	2240	0	0	5-8	5-8

UNFACTORED REACTIONS

JT	1ST LCASE COMBINED	MAX./MIN. COMPONENT REACTIONS SNOW	LIVE	PERM.LIVE	WIND	DEAD	SOIL
U	1823	1039 / 0	397 / 0	0 / 0	0 / 0	387 / 0	0 / 0
L	1823	1039 / 0	397 / 0	0 / 0	0 / 0	387 / 0	0 / 0

BEARING MATERIAL TO BE SPF NO.2 OR BETTER AT JOINT(S) U, L

BRACING

TOP CHORD TO BE SHEATHED OR MAX. PURLIN SPACING = 3.86 FT.
MAX. UNBRACED BOTTOM CHORD LENGTH = 10.00 FT. OR RIGID CEILING DIRECTLY APPLIED.

ALL PITCH BREAKS AND PERIMETER CORNER JOINTS MUST BE LATERALLY RESTRAINED.

1 LATERAL BRACE(S) AT 1/ 2 LENGTH OF E-Q, G-Q, G-P.

END VERTICAL(S) MUST BE SHEATHED OR HAVE BRACES AS INDICATED IN THE MAX. UNBRACED LENGTH COLUMN OF THE TABLE BELOW

LOADING

TOTAL LOAD CASES: (4)

CHORDS

MEMB. FR-TO	MAX. FACTORED FORCE (LBS)	FACTORED VERT. LOAD (PLF) FROM	TO	LC1 MAX CSI (LC)	MAX. UNBRAC LENGTH
A- B	0 / 37	-84.3	-84.3	0.12 (1)	10.00
B- C	-2239 / 0	-84.3	-84.3	0.43 (1)	4.18
C- D	-2205 / 0	-84.3	-84.3	0.41 (1)	4.21
D- E	-2227 / 0	-84.3	-84.3	0.66 (1)	3.88
E- F	-2227 / 0	-84.3	-84.3	0.67 (1)	3.86
F- G	-2227 / 0	-84.3	-84.3	0.67 (1)	3.86
G- H	-2230 / 0	-84.3	-84.3	0.68 (1)	3.86
H- I	-2204 / 0	-84.3	-84.3	0.41 (1)	4.21
I- J	-2240 / 0	-84.3	-84.3	0.43 (1)	4.18
J- K	0 / 37	-84.3	-84.3	0.12 (1)	10.00
U- B	-2173 / 0	0.0	0.0	0.23 (1)	5.76
L- J	-2173 / 0	0.0	0.0	0.23 (1)	5.76
U- T	0 / 0	-28.0	-28.0	0.07 (2)	10.00
T- S	0 / 1742	-28.0	-28.0	0.26 (1)	10.00
S- R	0 / 1670	-28.0	-28.0	0.25 (1)	10.00
R- Q	0 / 1670	-28.0	-28.0	0.25 (1)	10.00
Q- P	0 / 2230	-28.0	-28.0	0.32 (1)	10.00
P- O	0 / 1669	-28.0	-28.0	0.26 (1)	10.00
O- N	0 / 1669	-28.0	-28.0	0.26 (1)	10.00
N- M	0 / 1743	-28.0	-28.0	0.26 (1)	10.00
M- L	0 / 0	-28.0	-28.0	0.07 (2)	10.00

WEBS

MEMB. FR-TO	MAX. FACTORED FORCE (LBS)	MAX CSI (LC)
T- C	-341 / 4	0.15 (1)
C- S	-113 / 0	0.10 (1)
S- D	0 / 333	0.07 (2)
D- Q	0 / 945	0.15 (1)
Q- E	-587 / 0	0.32 (1)
Q- G	-6 / 0	0.00 (1)
P- G	-585 / 0	0.32 (1)
P- H	0 / 953	0.15 (1)
N- H	0 / 330	0.07 (2)
N- I	-115 / 0	0.10 (1)
M- I	-338 / 4	0.15 (1)
B- T	0 / 1800	0.40 (1)
M- J	0 / 1800	0.41 (1)

DESIGN CRITERIA

SPECIFIED LOADS:

TOP CH.	LL	=	25.6	PSF
	DL	=	3.0	PSF
BOT CH.	LL	=	10.5	PSF
	DL	=	7.0	PSF
TOTAL LOAD		=	46.1	PSF

SPACING = 24.0 IN. C/C

LOADING IN FLAT SECTION BASED ON A SLOPE OF 6.00/12

THIS TRUSS IS DESIGNED FOR RESIDENTIAL OR SMALL BUILDING REQUIREMENTS OF PART 9, NBCC 2010

THIS DESIGN COMPLIES WITH:
- PART 9 OF OBC 2012 , BCBC 2012 , ABC 2014
- CSA 086-09
- TPIC 2011

(55 % OF 31.3 P.S.F. G.S.L. PLUS 8.4 P.S.F. RAIN LOAD) EQUALS 25.6 P.S.F. SPECIFIED ROOF LIVE LOAD

ALLOWABLE DEFL.(LL)= L/360 (1.26")
CALCULATED VERT. DEFL.(LL) = L/ 999 (0.12")
ALLOWABLE DEFL.(TL)= L/360 (1.26")
CALCULATED VERT. DEFL.(TL) = L/ 999 (0.19")

CSI: TC=0.68 (G-H:1) , BC=0.32 (P-Q:1) , WB=0.41 (J-M:1) , SSI=0.26 (G-H:1)

DOL LUMBER=1.00 NAIL=1.00 LS BEND=1.10 COMP=1.10 SHEAR=1.10 TENS= 1.10

COMPANION LIVE LOAD FACTOR = 0.50

TRUSS PLATE MANUFACTURER IS NOT RESPONSIBLE FOR QUALITY CONTROL IN THE TRUSS MANUFACTURING PLANT .

NAIL VALUES

PLATE	GRIP(DRY) (PSI) MAX	MIN	SHEAR (PLI) MAX	MIN	SECTION (PLI) MAX	MIN
MT20	618	354	1667	822	2284	1656

PLATE PLACEMENT TOL. = 0.250 inches

PLATE ROTATION TOL. = 5.0 Deg.

JSI GRIP= 0.90 (M) (INPUT = 0.90)
JSI METAL= 0.44 (J) (INPUT = 1.00)

LICENSED PROFESSIONAL ENGINEER
S. KATSOULAKOS
PROVINCE OF ONTARIO

DWG NO. TAM25477-17
STRUCTURAL
COMPONENT ONLY

JOB NAME	TRUSS NAME	QUANTITY	PLY	JOB DESC. 44269	DRWG NO.
282179	T5	2	1	TRUSS DESC.	

Tamarack Roof Truss, Burlington

Version 8.030 S Oct 5 2016 MiTek Industries, Inc. Thu May 18 13:59:58 2017 Page 1

ID:lwUx8pNrcNFORm7Ep9cJZmzFzsk-3lWU_LCbCaev180ZBwAVFqBDIdnB?Dg?YbXgcGzFFxV

Scale = 1:67.2

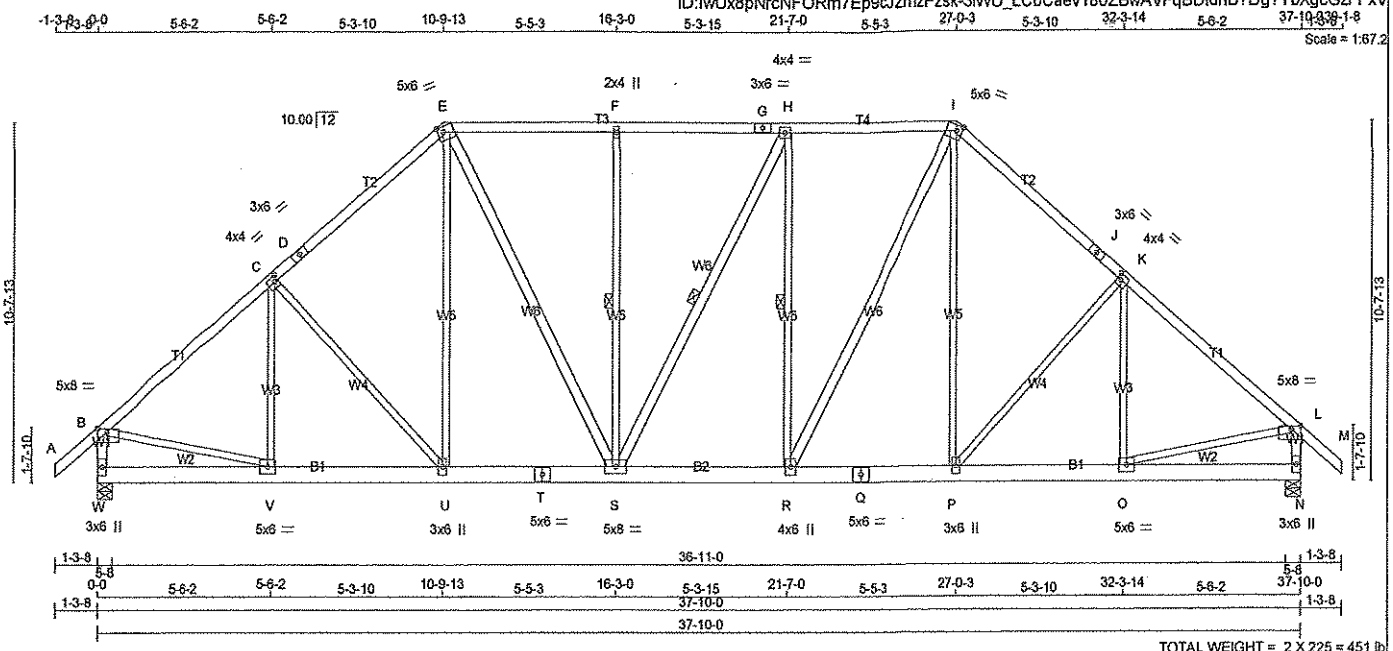

TOTAL WEIGHT = 2 X 225 = 451 lb

[M][F]

LUMBER

N. L. G. A. RULES

CHORDS	SIZE		LUMBER	DESCR.
A - D	2x4	DRY	No.2	SPF
D - E	2x4	DRY	No.2	SPF
E - G	2x4	DRY	No.2	SPF
G - I	2x4	DRY	No.2	SPF
I - J	2x4	DRY	No.2	SPF
J - M	2x4	DRY	No.2	SPF
W - B	2x4	DRY	No.2	SPF
N - L	2x4	DRY	No.2	SPF
W - T	2x6	DRY	No.2	SPF
T - Q	2x6	DRY	No.2	SPF
Q - N	2x6	DRY	No.2	SPF
ALL WEBS	2x3	DRY	No.2	SPF
EXCEPT				
E - S	2x4	DRY	No.2	SPF
S - H	2x4	DRY	No.2	SPF
R - I	2x4	DRY	No.2	SPF

DRY: SEASONED LUMBER.

PLATES (table is in inches)

JT	TYPE	PLATES	W	LEN	Y	X
B	TMVW-p	MT20	5.0	8.0	1.25	3.50
C	TMWW-t	MT20	4.0	4.0	2.00	1.25
D, G, J						
D	TS-t	MT20	3.0	6.0		
E	TTWW-m	MT20	5.0	6.0	2.00	2.00
F	TMW+w	MT20	2.0	4.0		
H	TMWW-t	MT20	4.0	4.0		
I	TTWW-m	MT20	5.0	6.0	2.00	2.00
K	TMWW-t	MT20	4.0	4.0	2.00	1.25
L	TMVW-p	MT20	5.0	8.0	1.25	3.50
N	BMV1+p	MT20	3.0	6.0		
O	BMWW-t	MT20	5.0	6.0		
P	BMWW+t	MT20	3.0	6.0		
Q	BS-t	MT20	5.0	6.0		
R	BMWW+t	MT20	4.0	6.0		
S	BMWWW-t	MT20	5.0	8.0		
T	BS-t	MT20	5.0	6.0		
U	BMWW+t	MT20	3.0	6.0		
V	BMWW-t	MT20	5.0	6.0		
W	BMV1+p	MT20	3.0	6.0		

DIMENSIONS, SUPPORTS AND LOADINGS SPECIFIED BY FABRICATOR TO BE VERIFIED BY BUILDING DESIGNER

BEARINGS

JT	FACTORED GROSS REACTION VERT	HORZ	MAXIMUM FACTORED GROSS REACTION DOWN	HORZ	UPLIFT	INPUT BRG IN-SX	REQRD BRG IN-SX
W	2240	0	2240	0	0	5-8	5-8
N	2240	0	2240	0	0	5-8	5-8

UNFACTORED REACTIONS

JT	1ST LCASE COMBINED	MAX./MIN. COMPONENT REACTIONS SNOW	LIVE	PERM.LIVE	WIND	DEAD	SOIL
W	1823	1039 / 0	397 / 0	0 / 0	0 / 0	387 / 0	0 / 0
N	1823	1039 / 0	397 / 0	0 / 0	0 / 0	387 / 0	0 / 0

BEARING MATERIAL TO BE SPF NO.2 OR BETTER AT JOINT(S) W, N

BRACING

TOP CHORD TO BE SHEATHED OR MAX. PURLIN SPACING = 4.15 FT.
MAX. UNBRACED BOTTOM CHORD LENGTH = 10.00 FT. OR RIGID CEILING DIRECTLY APPLIED.

ALL PITCH BREAKS AND PERIMETER CORNER JOINTS MUST BE LATERALLY RESTRAINED.

1 LATERAL BRACE(S) AT 1/ 2 LENGTH OF F-S, H-S, H-R.

END VERTICAL(S) MUST BE SHEATHED OR HAVE BRACES AS INDICATED IN THE MAX. UNBRACED LENGTH COLUMN OF THE TABLE BELOW

LOADING

TOTAL LOAD CASES: (4)

CHORDS

MEMB. FR-TO	MAX. FACTORED FORCE (LBS)	FACTORED VERT. LOAD (PLF) FROM	TO	LC1	MAX CSI (LC)	MAX. UNBRAC LENGTH
A- B	0 / 37	-84.3	-84.3	0.12 (1)	10.00	
B- C	-2278 / 0	-84.3	-84.3	0.44 (1)	4.15	
C- D	-2128 / 0	-84.3	-84.3	0.41 (1)	4.29	
D- E	-2128 / 0	-84.3	-84.3	0.41 (1)	4.29	
E- F	-1941 / 0	-84.3	-84.3	0.33 (1)	4.52	
F- G	-1942 / 0	-84.3	-84.3	0.31 (1)	4.55	
G- H	-1942 / 0	-84.3	-84.3	0.31 (1)	4.55	
H- I	-1945 / 0	-84.3	-84.3	0.33 (1)	4.52	
I- J	-2127 / 0	-84.3	-84.3	0.41 (1)	4.29	
J- K	-2127 / 0	-84.3	-84.3	0.41 (1)	4.29	
K- L	-2279 / 0	-84.3	-84.3	0.44 (1)	4.15	
L- M	0 / 37	-84.3	-84.3	0.12 (1)	10.00	
W- B	-2168 / 0	0.0	0.0	0.23 (1)	5.77	
N- L	-2168 / 0	0.0	0.0	0.23 (1)	5.77	
W- V	0 / 0	-28.0	-28.0	0.09 (2)	10.00	
V- U	0 / 1777	-28.0	-28.0	0.26 (1)	10.00	
U- T	0 / 1607	-28.0	-28.0	0.24 (1)	10.00	
T- S	0 / 1607	-28.0	-28.0	0.24 (1)	10.00	
S- R	0 / 1946	-28.0	-28.0	0.27 (1)	10.00	
R- Q	0 / 1606	-28.0	-28.0	0.23 (1)	10.00	
Q- P	0 / 1606	-28.0	-28.0	0.23 (1)	10.00	
P- O	0 / 1777	-28.0	-28.0	0.25 (1)	10.00	
O- N	0 / 0	-28.0	-28.0	0.09 (2)	10.00	

WEBS

MEMB. FR-TO	MAX. FACTORED FORCE (LBS)	MAX CSI (LC)
V- C	-242 / 96	0.14 (1)
C- U	-254 / 0	0.33 (1)
U- E	0 / 393	0.09 (2)
E- S	0 / 714	0.11 (1)
S- F	-487 / 0	0.37 (1)
S- H	-6 / 0	0.01 (1)
R- H	-484 / 0	0.37 (1)
R- I	0 / 724	0.12 (1)
P- I	0 / 389	0.09 (2)
P- K	-256 / 0	0.33 (1)
O- K	-240 / 96	0.14 (1)
B- V	0 / 1820	0.41 (1)
O- L	0 / 1820	0.41 (1)

DESIGN CRITERIA

SPECIFIED LOADS:

TOP CH.	LL	=	25.6	PSF
	DL	=	3.0	PSF
BOT CH.	LL	=	10.5	PSF
	DL	=	7.0	PSF
TOTAL LOAD		=	46.1	PSF

SPACING = 24.0 IN. C/C

LOADING IN FLAT SECTION BASED ON A SLOPE OF 6.00/12

THIS TRUSS IS DESIGNED FOR RESIDENTIAL OR SMALL BUILDING REQUIREMENTS OF PART 9, NBCC 2010

THIS DESIGN COMPLIES WITH:
- PART 9 OF OBC 2012 , BCBC 2012 , ABC 2014
- CSA 086-09
- TPIC 2011

(55 % OF 31.3 P.S.F. G.S.L. PLUS 8.4 P.S.F. RAIN LOAD) EQUALS 25.6 P.S.F. SPECIFIED ROOF LIVE LOAD

ALLOWABLE DEFL.(LL)= L/360 (1.26")
CALCULATED VERT. DEFL.(LL) = L/ 999 (0.10")
ALLOWABLE DEFL.(TL)= L/360 (1.26")
CALCULATED VERT. DEFL.(TL) = L/ 999 (0.16")

CSI: TC=0.44 (K-L:1) , BC=0.27 (R-S:1) , WB=0.41 (L-O:1) , SSI=0.21 (H-I:1)

DOL LUMBER=1.00 NAIL=1.00 LS BEND=1.10 COMP=1.10 SHEAR=1.10 TENS= 1.10

COMPANION LIVE LOAD FACTOR = 0.50

TRUSS PLATE MANUFACTURER IS NOT RESPONSIBLE FOR QUALITY CONTROL IN THE TRUSS MANUFACTURING PLANT .

NAIL VALUES

PLATE	GRIP(DRY) (PSI) MAX	MIN	SHEAR (PLI) MAX	MIN	SECTION (PLI) MAX	MIN
MT20	618	354	1667	822	2284	1656

PLATE PLACEMENT TOL. = 0.250 inches

PLATE ROTATION TOL. = 5.0 Deg.

JSI GRIP= 0.87 (O) (INPUT = 0.90)
JSI METAL= 0.45 (L) (INPUT = 1.00)

LICENSED PROFESSIONAL ENGINEER
S. KATSOULAKOS
PROVINCE OF ONTARIO

DWG NO. TAM25478-17
STRUCTURAL
COMPONENT ONLY

JOB NAME	TRUSS NAME	QUANTITY	PLY	JOB DESC. 44269	DRWG NO.
282179	T70	1	1	TRUSS DESC.	

Tamarack Roof Truss, Burlington

Version 8.030 S Oct 5 2016 MiTek Industries, Inc. Thu May 18 14:00:00 2017 Page 1

ID:lwUx8pNrcNFORm7Ep9cJZmzFzsk-07eEP1DrkBudGR9xlLCzLFGRkQKVT1aI0v0nh9zFFxT

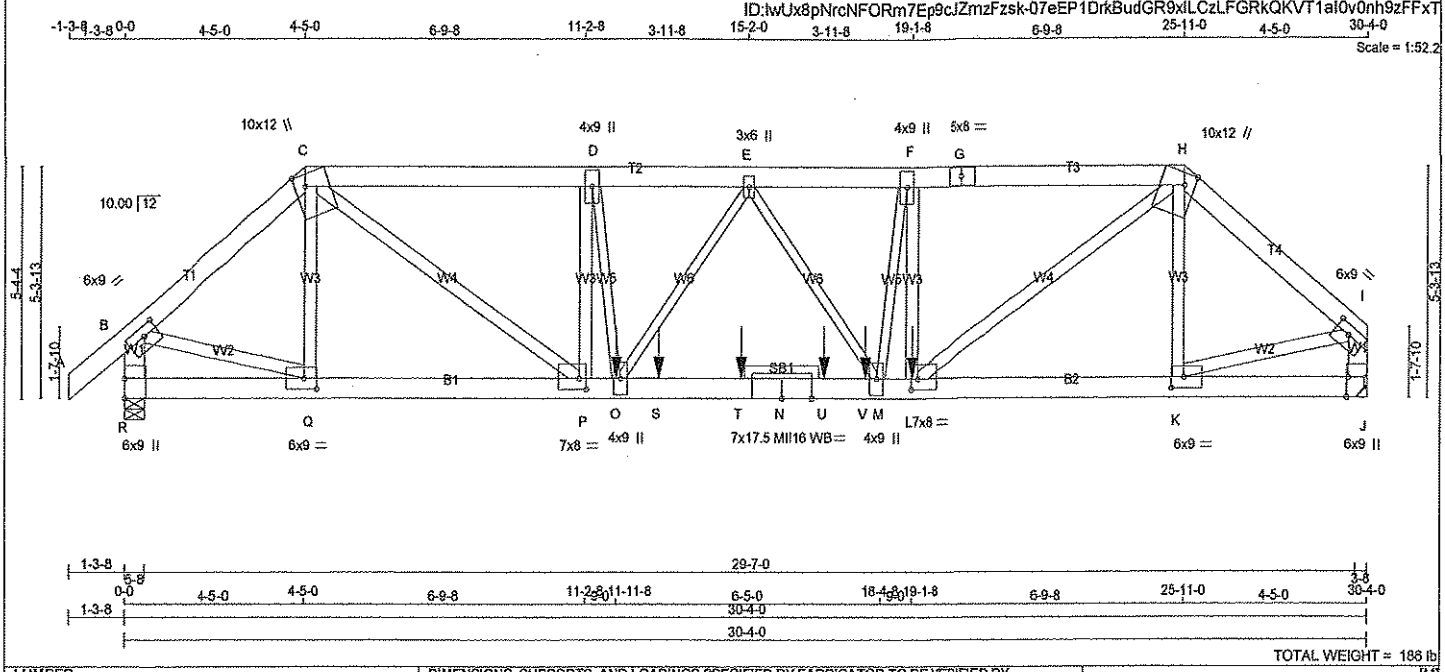

[M]

LUMBER

N. L. G. A. RULES

CHORDS	SIZE		LUMBER	DESCR.
A - C	2x6	DRY	No.2	SPF
C - G	2x6	DRY	No.2	SPF
G - H	2x6	DRY	No.2	SPF
H - I	2x6	DRY	No.2	SPF
R - B	2x6	DRY	No.2	SPF
J - I	2x6	DRY	No.2	SPF
R - N	2x6	DRY	2100F 1.8E	SPF
N - J	2x6	DRY	2100F 1.8E	SPF
ALL WEBS	2x4	DRY	No.2	SPF
EXCEPT				
C - P	2x4	DRY	1650F 1.5E	SPF
D - O	2x3	DRY	No.2	SPF
O - E	2x3	DRY	No.2	SPF
E - M	2x3	DRY	No.2	SPF
M - F	2x3	DRY	No.2	SPF
L - H	2x4	DRY	1650F 1.5E	SPF

DRY: SEASONED LUMBER.

PLATES (table is in inches)

JT	TYPE	PLATES	W	LEN	Y	X
B	TMVW-t	MT20	6.0	9.0	2.50	4.00
C	TTWW+m	MT20	10.0	12.0	3.25	3.00
D	TMWW+t	MT20	4.0	9.0		
E	TMWW+t	MT20	3.0	6.0		
F	TMWW+t	MT20	4.0	9.0		
G	TS-t	MT20	5.0	8.0		
H	TTWW+m	MT20	10.0	12.0	3.25	3.00
I	TMVW-t	MT20	6.0	9.0	2.50	4.00
J	BMV1+t	MT20	6.0	9.0	Edge	0.50
K	BMWW-t	MT20	6.0	9.0	3.00	3.75
L	BMWW-t	MT20	7.0	8.0	3.00	2.00
M	BMWW+t	MT20	4.0	9.0		
N	BS-t	MII16	7.0	17.5		
O	BMWW+t	MT20	4.0	9.0		
P	BMWW-t	MT20	7.0	8.0	3.00	2.00
Q	BMWW-t	MT20	6.0	9.0	3.00	3.75
R	BMV1+t	MT20	6.0	9.0	5.50	

Edge - INDICATES REFERENCE CORNER OF PLATE TOUCHES EDGE OF CHORD.

WB - INDICATES BLOCKING REQUIRED

HANGERS NOTES

1) SPECIAL HANGER(S) OR CONNECTION(S) REQUIRED TO SUPPORT CONCENTRATED LOAD(S) 1418.5 lbs FACTORED DOWN AT 11-11-8, 301.7 lbs FACTORED DOWN AT 13-0-0, 301.7 lbs FACTORED DOWN AT 15-0-0, 301.7 lbs FACTORED DOWN AT 17-0-0, AND 301.7 lbs FACTORED DOWN AT 19-1-8 ON BOTTOM CHORD. DESIGN FOR UNSPECIFIED CONNECTION(S) IS DELEGATED TO THE BUILDING DESIGNER.

DIMENSIONS, SUPPORTS AND LOADINGS SPECIFIED BY FABRICATOR TO BE VERIFIED BY BUILDING DESIGNER

BEARINGS

JT	FACTORED GROSS REACTION VERT	HORZ	MAXIMUM FACTORED GROSS REACTION DOWN	HORZ	UPLIFT	INPUT BRG IN-SX	REQRD BRG IN-SX
R	4612	0	4612	0	0	5-8	5-8
J	4562	0	4562	0	0	HANGER BY OTHERS	
						MIN. SEAT SIZE: 3-8	

UNFACTORED REACTIONS

MAX./MIN. COMPONENT REACTIONS

JT	1ST LCASE COMBINED	SNOW	LIVE	PERM.LIVE	WIND	DEAD	SOIL
R	3584	2315 / 0	596 / 0	0 / 0	0 / 0	673 / 0	0 / 0
J	3561	2273 / 0	611 / 0	0 / 0	0 / 0	678 / 0	0 / 0

BEARING MATERIAL TO BE SPF NO.2 OR BETTER AT JOINT(S) R

BRACING

TOP CHORD TO BE SHEATHED OR MAX. PURLIN SPACING = 2.06 FT.
MAX. UNBRACED BOTTOM CHORD LENGTH = 10.00 FT. OR RIGID CEILING DIRECTLY APPLIED.

ALL PITCH BREAKS AND PERIMETER CORNER JOINTS MUST BE LATERALLY RESTRAINED.

LOADING

TOTAL LOAD CASES: (4)

CHORDS

MEMB. FR-TO	MAX. FACTORED FORCE (LBS)	FACTORED VERT. LOAD (PLF) FROM	TO	LC1	MAX CSI (LC)	MAX. UNBRAC LENGTH
A- B	0 / 39	-84.3	-84.3	0.07 (1)		10.00
B- C	-5118 / 0	-84.3	-84.3	0.32 (1)		3.60
C- D	-9037 / 0	-84.3	-84.3	0.96 (1)		2.19
D- E	-9421 / 0	-323.3	-323.3	0.83 (1)		2.12
E- F	-9429 / 0	-323.3	-323.3	0.86 (1)		2.06
F- G	-9175 / 0	-84.3	-84.3	0.92 (1)		2.21
G- H	-9175 / 0	-84.3	-84.3	0.92 (1)		2.21
H- I	-5216 / 0	-84.3	-84.3	0.33 (1)		3.56
R- B	-4554 / 0	0.0	0.0	0.33 (1)		5.00
J- I	-4514 / 0	0.0	0.0	0.32 (1)		5.02
R- Q	0 / 0	-28.0	-28.0	0.05 (3)		10.00
Q- P	0 / 3891	-28.0	-28.0	0.35 (1)		10.00
P- O	0 / 9179	-28.0	-28.0	0.63 (1)		10.00
O- S	0 / 9821	-28.0	-28.0	0.86 (1)		10.00
S- T	0 / 9821	-28.0	-28.0	0.86 (1)		10.00
T- N	0 / 9821	-28.0	-28.0	0.86 (1)		10.00
N- U	0 / 9821	-28.0	-28.0	0.86 (1)		10.00
U- V	0 / 9821	-28.0	-28.0	0.86 (1)		10.00
V- M	0 / 9821	-28.0	-28.0	0.86 (1)		10.00
M- L	0 / 9174	-28.0	-28.0	0.61 (1)		10.00
L- K	0 / 3967	-28.0	-28.0	0.29 (1)		10.00
K- J	0 / 0	-28.0	-28.0	0.06 (3)		10.00

WEBS

MEMB. FR-TO	MAX. FACTORED FORCE (LBS)	MAX CSI (LC)
Q- C	-840 / 0	0.23 (1)
C- P	0 / 6312	0.81 (1)
P- D	-3068 / 0	0.83 (1)
D- O	0 / 2154	0.53 (1)
O- E	-730 / 0	0.41 (1)
E- M	-717 / 0	0.41 (1)
M- F	0 / 1614	0.40 (1)
L- F	-2527 / 0	0.68 (1)
L- H	0 / 6388	0.82 (1)
K- H	-818 / 0	0.22 (1)
B- Q	0 / 4031	0.71 (1)
K- I	0 / 4108	0.73 (1)

FACTORED CONCENTRATED LOADS (LBS)

JT	LOC.	LC1	MAX-	MAX+	FACE	DIR.	TYPE
L	19-1-8	-1183	-1183	---	FRONT	VERT	TOTAL
O	11-11-8	-1418	-1418	---	FRONT	VERT	TOTAL
S	13-0-0	-302	-302	---	FRONT	VERT	TOTAL
T	15-0-0	-302	-302	---	FRONT	VERT	TOTAL
U	17-0-0	-302	-302	---	FRONT	VERT	TOTAL
V	18-0-0	-302	-302	---	FRONT	VERT	TOTAL

LICENSED PROFESSIONAL ENGINEER
S 2217
S. KATSOULAKOS
PROVINCE OF ONTARIO

DWG NO. TAM 25479-17
STRUCTURAL
COMPONENT ONLY

DESIGN CRITERIA

*** SPECIAL LOADS ANALYSIS ***
GEOMETRY AND/OR BASIC LOADS CHANGED BY USER.
LOADS WERE DERIVED FROM USER INPUT
NO FURTHER MODIFICATIONS WERE MADE

SPECIFIED LOADS:

TOP CH.	LL	=	25.6	PSF
	DL	=	3.0	PSF
BOT CH.	LL	=	10.5	PSF
	DL	=	7.0	PSF
TOTAL LOAD		=	45.1	PSF

SPACING = 24.0 IN. C/C

LOADING IN FLAT SECTION BASED ON A SLOPE OF 6.00/12

*** NON STANDARD GIRDER ***
ADDT'L USER-DEFINED LOADS APPLIED TO ALL LOAD CASES.

THIS TRUSS IS DESIGNED FOR RESIDENTIAL OR SMALL BUILDING REQUIREMENTS OF PART 9, NBCC 2010

THIS DESIGN COMPLIES WITH:
- PART 9 OF OBC 2012 , BCBC 2012 , ABC 2014
- CSA 086-09
- TPIC 2011

(55 % OF 31.3 P.S.F. G.S.L. PLUS 8.4 P.S.F. RAIN LOAD) EQUALS 25.6 P.S.F. SPECIFIED ROOF LIVE LOAD

ALLOWABLE DEFL.(LL)= L/360 (1.01")
CALCULATED VERT. DEFL.(LL) = L/ 852 (0.43")
ALLOWABLE DEFL.(TL)= L/360 (1.01")
CALCULATED VERT. DEFL.(TL) = L/ 549 (0.66")

CSI: TC=0.96 (C-D:1) , BC=0.86 (M-O:1) , WB=0.83 (D-P:1) , SSI=0.56 (M-O:1)

DOL LUMBER=1.00 NAIL=1.00 LS BEND=1.00 COMP=1.00 SHEAR=1.00 TENS= 1.00

COMPANION LIVE LOAD FACTOR = 0.50

AUTOSOLVE HEELS OFF

TRUSS PLATE MANUFACTURER IS NOT RESPONSIBLE FOR QUALITY CONTROL IN THE TRUSS MANUFACTURING PLANT .

NAIL VALUES

PLATE	GRIP(DRY) (PSI) MAX	MIN	SHEAR (PLI) MAX	MIN	SECTION (PLI) MAX	MIN
MT20	618	354	1667	822	2284	1656
MII16	473	276	2341	1245	4454	1656

PLATE PLACEMENT TOL. = 0.250 inches

PLATE ROTATION TOL. = 5.0 Deg.

JSI GRIP= 0.90 (C) (INPUT = 0.90)
JSI METAL= 0.99 (P) (INPUT = 1.00)

JOB NAME	TRUSS NAME	QUANTITY	PLY	JOB DESC. 44269	DRWG NO.
282179	T11	1	1	TRUSS DESC.	

Tamarack Roof Truss, Burlington

Version 8.030 S Oct 5 2016 MiTek Industries, Inc. Thu May 18 13:59:58 2017 Page 1

ID:lwUx8pNrcNFORm7Ep9cJZmzFzsk-3lWU_LCbCaev180ZBwAVFqBEFdn_?lt?YbXgcGzFFxV

Scale = 1:39.6

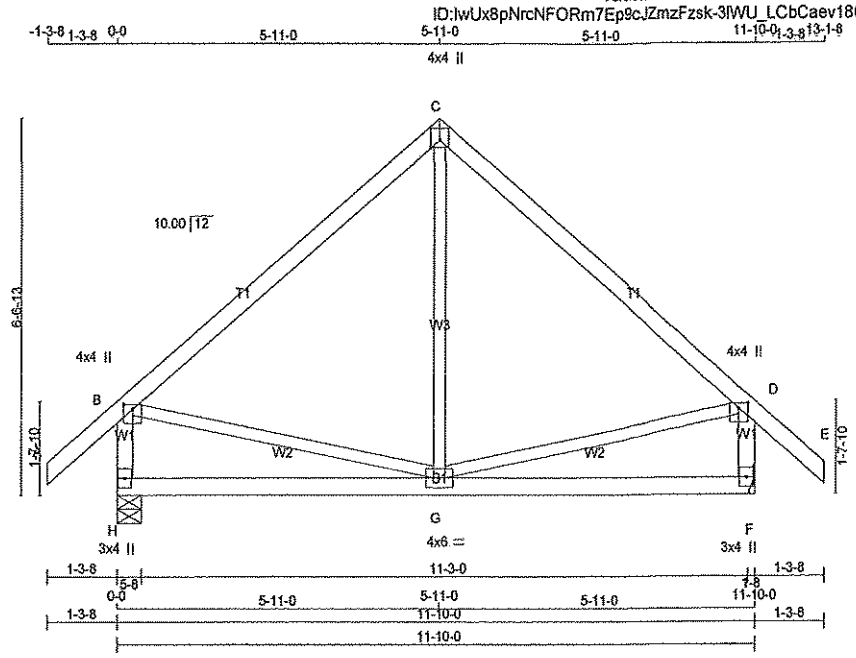

TOTAL WEIGHT = 52 lb

[M][F]

LUMBER

N. L. G. A. RULES

CHORDS	SIZE		LUMBER	DESCR.
A - C	2x4	DRY	No.2	SPF
C - E	2x4	DRY	No.2	SPF
H - B	2x4	DRY	No.2	SPF
F - D	2x4	DRY	No.2	SPF
H - F	2x4	DRY	No.2	SPF
ALL WEBS EXCEPT	2x3	DRY	No.2	SPF

DRY: SEASONED LUMBER.

PLATES (table is in inches)

JT	TYPE	PLATES	W	LEN	Y	X
B	TMVW+p	MT20	4.0	4.0	1.00	2.00
C	TTW+p	MT20	4.0	4.0	1.50	2.00
D	TMVW+p	MT20	4.0	4.0	1.00	2.00
F	BMV1+p	MT20	3.0	4.0		
G	BMWWW-t	MT20	4.0	6.0		
H	BMV1+p	MT20	3.0	4.0		

DIMENSIONS, SUPPORTS AND LOADINGS SPECIFIED BY FABRICATOR TO BE VERIFIED BY BUILDING DESIGNER

BEARINGS

JT	FACTORED GROSS REACTION VERT	HORZ	MAXIMUM FACTORED GROSS REACTION DOWN	HORZ	UPLIFT	INPUT BRG	REQRD BRG
H	781	0	781	0	0	IN-SX	IN-SX
F	781	0	781	0	0	5-8	5-8
						HANGER BY OTHERS	
						MIN. SEAT SIZE: 1-8	

UNFACTORED REACTIONS

JT	1ST LCASE COMBINED	MAX./MIN. COMPONENT REACTIONS SNOW	LIVE	PERM.LIVE	WIND	DEAD	SOIL
H	625	374 / 0	124 / 0	0 / 0	0 / 0	127 / 0	0 / 0
F	625	374 / 0	124 / 0	0 / 0	0 / 0	127 / 0	0 / 0

BEARING MATERIAL TO BE SPF NO.2 OR BETTER AT JOINT(S) H

BRACING

TOP CHORD TO BE SHEATHED OR MAX. PURLIN SPACING = 6.25 FT.
MAX. UNBRACED BOTTOM CHORD LENGTH = 10.00 FT. OR RIGID CEILING DIRECTLY APPLIED.

ALL PITCH BREAKS AND PERIMETER CORNER JOINTS MUST BE LATERALLY RESTRAINED.

LOADING

TOTAL LOAD CASES: (4)

CHORDS

MEMB. FR-TO	MAX. FACTORED FORCE (LBS)	FACTORED VERT. LOAD (PLF) FROM	TO	LC1	MAX CSI (LC)	MAX. UNBRAC LENGTH
A- B	0 / 37	-84.3	-84.3	0.12 (1)		10.00
B- C	-435 / 0	-84.3	-84.3	0.38 (1)		6.25
C- D	-435 / 0	-84.3	-84.3	0.38 (1)		6.25
D- E	0 / 37	-84.3	-84.3	0.12 (1)		10.00
H- B	-718 / 0	0.0	0.0	0.08 (1)		7.81
F- D	-718 / 0	0.0	0.0	0.08 (1)		7.81
H- G	0 / 0	-28.0	-28.0	0.29 (3)		10.00
G- F	0 / 0	-28.0	-28.0	0.29 (3)		10.00

WEBS

MEMB. FR-TO	MAX. FACTORED FORCE (LBS)	MAX CSI (LC)
G- C	0 / 276	0.06 (3)
B- G	0 / 342	0.08 (1)
G- D	0 / 342	0.08 (1)

DESIGN CRITERIA

SPECIFIED LOADS:

TOP CH.	LL	=	25.6	PSF
	DL	=	3.0	PSF
BOT CH.	LL	=	10.5	PSF
	DL	=	7.0	PSF
TOTAL LOAD		=	46.1	PSF

SPACING = 24.0 IN. C/C

THIS TRUSS IS DESIGNED FOR RESIDENTIAL OR SMALL BUILDING REQUIREMENTS OF PART 9, NBCC 2010

THIS DESIGN COMPLIES WITH:
- PART 9 OF OBC 2012 , BCBC 2012 , ABC 2014
- CSA 086-09
- TPIC 2011

(55 % OF 31.3 P.S.F. G.S.L. PLUS 8.4 P.S.F. RAIN LOAD) EQUALS 25.6 P.S.F. SPECIFIED ROOF LIVE LOAD

ALLOWABLE DEFL.(LL)= L/360 (0.39")
CALCULATED VERT. DEFL.(LL) = L/ 999 (0.04")
ALLOWABLE DEFL.(TL)= L/360 (0.39")
CALCULATED VERT. DEFL.(TL) = L/ 999 (0.06")

CSI: TC=0.38 (B-C:1) , BC=0.29 (G-H:3) , WB=0.08 (D-G:1) , SSI=0.15 (B-C:1)

DOL LUMBER=1.00 NAIL=1.00 LS BEND=1.10 COMP=1.10 SHEAR=1.10 TENS= 1.10

COMPANION LIVE LOAD FACTOR = 0.50

TRUSS PLATE MANUFACTURER IS NOT RESPONSIBLE FOR QUALITY CONTROL IN THE TRUSS MANUFACTURING PLANT .

NAIL VALUES

PLATE	GRIP(DRY) (PSI) MAX	MIN	SHEAR (PLI) MAX	MIN	SECTION (PLI) MAX	MIN
MT20	618	354	1667	822	2284	1656

PLATE PLACEMENT TOL. = 0.250 inches

PLATE ROTATION TOL. = 5.0 Deg.

JSI GRIP= 0.74 (C) (INPUT = 0.90)
JSI METAL= 0.18 (D) (INPUT = 1.00)

LICENSED PROFESSIONAL ENGINEER
S. KATSOULAKOS
PROVINCE OF ONTARIO

DWG NO. TAM2548017
STRUCTURAL
COMPONENT ONLY

JOB NAME	TRUSS NAME	QUANTITY	PLY	JOB DESC. 44269	DRWG NO.
282179	T12	1	1	TRUSS DESC.	

Tamarack Roof Truss, Burlington

Version 8.030 S Oct 5 2016 MiTek Industries, Inc. Thu May 18 13:59:58 2017 Page 1

ID:IwUx8pNrcNFORm7Ep9cJZmzFzsk-3IWU_LCbCaev180ZBwAVFqBC8dm7?G4?YbXgcGzFFxV

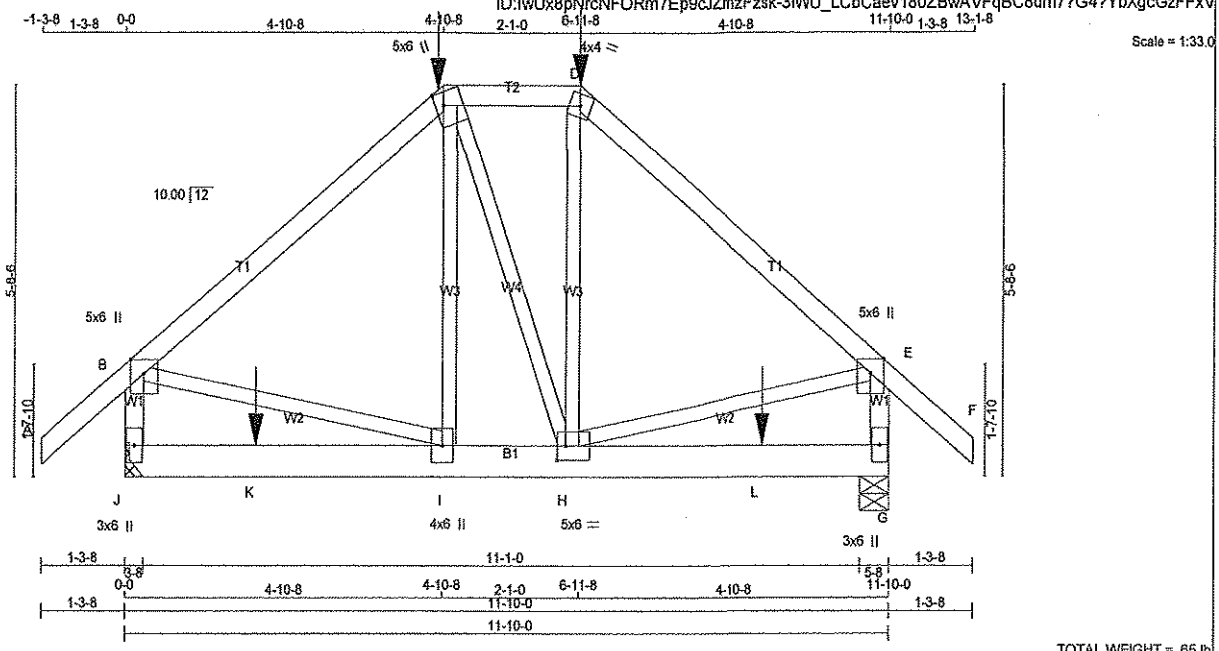

TOTAL WEIGHT = 65 lb

LUMBER

N. L. G. A. RULES

CHORDS	SIZE		LUMBER	DESCR.
A - C	2x4	DRY	No.2	SPF
C - D	2x4	DRY	No.2	SPF
D - F	2x4	DRY	No.2	SPF
J - B	2x4	DRY	No.2	SPF
G - E	2x4	DRY	No.2	SPF
J - G	2x6	DRY	No.2	SPF
ALL WEBS EXCEPT	2x3	DRY	No.2	SPF

DRY: SEASONED LUMBER.

PLATES (table is in inches)

JT	TYPE	PLATES	W	LEN	Y	X
B	TMVW+p	MT20	5.0	6.0	Edge	
C	TTWW+m	MT20	5.0	6.0	2.25	1.50
D	TTW-m	MT20	4.0	4.0		
E	TMVW+p	MT20	5.0	6.0	Edge	
G	BMV1+p	MT20	3.0	6.0		
H	BMWWW-t	MT20	5.0	6.0	2.50	1.50
I	BMWW+t	MT20	4.0	6.0		
J	BMV1+p	MT20	3.0	6.0		

Edge - INDICATES REFERENCE CORNER OF PLATE TOUCHES EDGE OF CHORD.

HANGERS NOTES

1) SPECIAL HANGER(S) OR CONNECTION(S) REQUIRED TO SUPPORT CONCENTRATED LOAD(S) 158.7 lbs FACTORED DOWN AT 4-10-8, 158.7 lbs FACTORED DOWN AT 6-11-8, AND 231.0 lbs FACTORED DOWN AT 6-11-8, AND 231.0 lbs FACTORED DOWN AT 4-10-8 ON TOP CHORD, AND 332.7 lbs FACTORED DOWN AT 2-0-0, AND 332.7 lbs FACTORED DOWN AT 9-10-0 ON BOTTOM CHORD. DESIGN FOR UNSPECIFIED CONNECTION(S) IS DELEGATED TO THE BUILDING DESIGNER.

DIMENSIONS, SUPPORTS AND LOADINGS SPECIFIED BY FABRICATOR TO BE VERIFIED BY BUILDING DESIGNER

BEARINGS

JT	FACTORED GROSS REACTION VERT	HORZ	MAXIMUM FACTORED GROSS REACTION DOWN	HORZ	UPLIFT	INPUT BRG IN-SX	REQRD BRG IN-SX
J	1678	0	1678	0	0	HANGER BY OTHERS MIN. SEAT SIZE: 3-8	
G	1678	0	1678	0	0	5-8	5-8

UNFACTORED REACTIONS

JT	1ST LCASE COMBINED	MAX./MIN. COMPONENT REACTIONS SNOW	LIVE	PERM.LIVE	WIND	DEAD	SOIL
J	1359	785 / 0	289 / 0	0 / 0	0 / 0	285 / 0	0 / 0
G	1359	785 / 0	289 / 0	0 / 0	0 / 0	285 / 0	0 / 0

BEARING MATERIAL TO BE SPF NO.2 OR BETTER AT JOINT(S) G

BRACING

TOP CHORD TO BE SHEATHED OR MAX. PURLIN SPACING = 5.05 FT.
MAX. UNBRACED BOTTOM CHORD LENGTH = 10.00 FT. OR RIGID CEILING DIRECTLY APPLIED.

ALL PITCH BREAKS AND PERIMETER CORNER JOINTS MUST BE LATERALLY RESTRAINED.

LOADING

TOTAL LOAD CASES: (4)

CHORDS

MEMB. FR-TO	MAX. FACTORED FORCE (LBS)	FACTORED VERT. LOAD (PLF) FROM	TO	LC1	MAX CSI (LC)	MAX. UNBRAC LENGTH
A- B	0 / 37	-84.3	-84.3	0.13 (1)		10.00
B- C	-1308 / 0	-84.3	-84.3	0.45 (1)		5.06
C- D	-1007 / 0	-142.2	-142.2	0.13 (1)		6.05
D- E	-1310 / 0	-84.3	-84.3	0.45 (1)		5.05
E- F	0 / 37	-84.3	-84.3	0.13 (1)		10.00
J- B	-1407 / 0	0.0	0.0	0.16 (1)		6.84
G- E	-1406 / 0	0.0	0.0	0.16 (1)		6.84
J- K	0 / 0	-47.3	-47.3	0.34 (2)		10.00
K- I	0 / 0	-47.3	-47.3	0.34 (2)		10.00
I- H	0 / 1004	-47.3	-47.3	0.32 (2)		10.00
H- L	0 / 0	-47.3	-47.3	0.34 (2)		10.00
L- G	0 / 0	-47.3	-47.3	0.34 (2)		10.00

WEBS

MEMB. FR-TO	MAX. FACTORED FORCE (LBS)	MAX CSI (LC)
I- C	0 / 285	0.07 (3)
C- H	0 / 23	0.01 (3)
H- D	0 / 310	0.08 (3)
B- I	0 / 1032	0.26 (1)
H- E	0 / 1033	0.26 (1)

FACTORED CONCENTRATED LOADS (LBS)

JT	LOC.	LC1	MAX-	MAX+	FACE	DIR.	TYPE
C	4-10-8	-159	-159	---	BACK	VERT	TOTAL
C	4-10-8	-231	-231	---	FRONT	VERT	TOTAL
D	6-11-8	-159	-159	---	BACK	VERT	TOTAL
D	6-11-8	-231	-231	---	FRONT	VERT	TOTAL
K	2-0-0	-333	-333	---	BACK	VERT	TOTAL
L	9-10-0	-333	-333	---	BACK	VERT	TOTAL

[M]

DESIGN CRITERIA

SPECIFIED LOADS:

TOP CH.	LL	=	25.6	PSF
	DL	=	3.0	PSF
BOT CH.	LL	=	10.5	PSF
	DL	=	7.0	PSF
TOTAL LOAD		=	46.1	PSF

SPACING = 24.0 IN. C/C

LOADING IN FLAT SECTION BASED ON A SLOPE OF 6.00/12

GIRDER TYPE: CPrimeHip
SIDE SETBACK = 4-10-8
END SETBACK = 4-10-8
END WALL WIDTH = 1-8
CORNER FRAMING TYPE: CONVENTIONAL
END JACK TYPE: CONVENTIONAL
APPLIED TO FRONT SIDE
- ADDT'L LOADS BASED ON 55 % OF GSL.

THIS TRUSS IS DESIGNED FOR RESIDENTIAL OR SMALL BUILDING REQUIREMENTS OF PART 9, NBCC 2010

THIS DESIGN COMPLIES WITH:
- PART 9 OF OBC 2012 , BCBC 2012 , ABC 2014
- CSA 086-09
- TPIC 2011

(55 % OF 31.3 P.S.F. G.S.L. PLUS 8.4 P.S.F. RAIN LOAD) EQUALS 25.6 P.S.F. SPECIFIED ROOF LIVE LOAD

ALLOWABLE DEFL.(LL)= L/360 (0.39")
CALCULATED VERT. DEFL.(LL) = L/ 999 (0.03")
ALLOWABLE DEFL.(TL)= L/360 (0.39")
CALCULATED VERT. DEFL.(TL) = L/ 999 (0.06")

CSI: TC=0.45 (D-E:1) , BC=0.34 (I-J:2) , WB=0.26 (E-H:1) , SSI=0.25 (G-H:2)

DOL LUMBER=1.00 NAIL=1.00 LS BEND=1.00 COMP=1.00 SHEAR=1.00 TENS= 1.00

COMPANION LIVE LOAD FACTOR = 0.50

TRUSS PLATE MANUFACTURER IS NOT RESPONSIBLE FOR QUALITY CONTROL IN THE TRUSS MANUFACTURING PLANT .

NAIL VALUES

PLATE	GRIP(DRY) (PSI) MAX	MIN	SHEAR (PLI) MAX	MIN	SECTION (PLI) MAX	MIN
MT20	618	354	1667	822	2284	1656

PLATE PLACEMENT TOL. = 0.250 inches

PLATE ROTATION TOL. = 5.0 Deg.

USI GRIP= 0.87 (i) (INPUT = 0.90)
USI METAL= 0.33 (i) (INPUT = 1.00)

LICENSED PROFESSIONAL ENGINEER
S. KATSOULAKOS
PROVINCE OF ONTARIO

DWG NO. TAM25481-17
STRUCTURAL
COMPONENT ONLY

JOB NAME	TRUSS NAME	QUANTITY	PLY	JOB DESC. 44269	DRWG NO.
282179	T13	1	1	TRUSS DESC.	

Tamarack Roof Truss, Burlington

Version 8.030 S Oct 5 2016 MiTek Industries, Inc. Thu May 18 13:59:59 2017 Page 1

ID:lwUx8pNrcNFORm7Ep9cJZmzFzsk-Yx4sBhCDzummeHaIdhko2jPI08nkIC8nFGE8lzFFxU

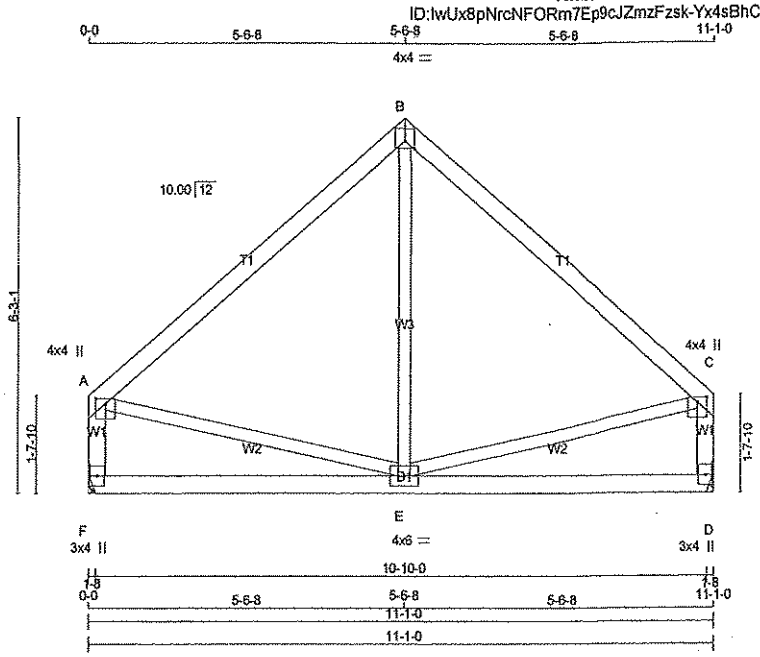

TOTAL WEIGHT = 46 lb

[M][F]

LUMBER

N. L. G. A. RULES

CHORDS	SIZE		LUMBER	DESCR.
A - B	2x4	DRY	No.2	SPF
B - C	2x4	DRY	No.2	SPF
F - A	2x4	DRY	No.2	SPF
D - C	2x4	DRY	No.2	SPF
F - D	2x4	DRY	No.2	SPF
ALL WEBS EXCEPT	2x3	DRY	No.2	SPF

DRY: SEASONED LUMBER.

PLATES (table is in inches)

JT	TYPE	PLATES	W	LEN	Y	X
A	TMVW+p	MT20	4.0	4.0	1.00	2.00
B	TTW-p	MT20	4.0	4.0	1.50	2.00
C	TMVW+p	MT20	4.0	4.0	1.00	2.00
D	BMV1+p	MT20	3.0	4.0		
E	BMWWW-t	MT20	4.0	6.0		
F	BMV1+p	MT20	3.0	4.0		

DIMENSIONS, SUPPORTS AND LOADINGS SPECIFIED BY FABRICATOR TO BE VERIFIED BY BUILDING DESIGNER

BEARINGS

JT	FACTORED GROSS REACTION VERT	HORZ	MAXIMUM FACTORED GROSS REACTION DOWN	HORZ	UPLIFT	INPUT BRG IN-SX	REQRD BRG IN-SX
F	622	0	622	0	0	HANGER BY OTHERS MIN. SEAT SIZE: 1-8	
D	622	0	622	0	0	HANGER BY OTHERS MIN. SEAT SIZE: 1-8	

UNFACTORED REACTIONS

JT	1ST LCASE COMBINED	MAX./MIN. COMPONENT REACTIONS SNOW	LIVE	PERM.LIVE	WIND	DEAD	SOIL
F	511	284 / 0	116 / 0	0 / 0	0 / 0	111 / 0	0 / 0
D	511	284 / 0	116 / 0	0 / 0	0 / 0	111 / 0	0 / 0

BRACING

TOP CHORD TO BE SHEATHED OR MAX. PURLIN SPACING = 6.25 FT.
MAX. UNBRACED BOTTOM CHORD LENGTH = 10.00 FT. OR RIGID CEILING DIRECTLY APPLIED.

ALL PITCH BREAKS AND PERIMETER CORNER JOINTS MUST BE LATERALLY RESTRAINED.

LOADING

TOTAL LOAD CASES: (4)

CHORDS

MEMB. FR-TO	MAX. FACTORED FORCE (LBS)	FACTORED VERT. LOAD (PLF) FROM	TO	LC1	MAX CSI (LC)	MAX. UNBRAC LENGTH
A- B	-402 / 0	-84.3	-84.3	0.33 (1)	6.25	
B- C	-402 / 0	-84.3	-84.3	0.33 (1)	6.25	
F- A	-563 / 0	0.0	0.0	0.06 (1)	7.81	
D- C	-563 / 0	0.0	0.0	0.06 (1)	7.81	
F- E	0 / 0	-28.0	-28.0	0.25 (3)	10.00	
E- D	0 / 0	-28.0	-28.0	0.25 (3)	10.00	

WEBS

MEMB. FR-TO	MAX. FACTORED FORCE (LBS)	MAX CSI (LC)
E- B	0 / 255	0.06 (3)
A- E	0 / 317	0.07 (1)
E- C	0 / 317	0.07 (1)

DESIGN CRITERIA

SPECIFIED LOADS:

TOP CH.	LL	=	25.6	PSF
	DL	=	3.0	PSF
BOT CH.	LL	=	10.5	PSF
	DL	=	7.0	PSF
TOTAL LOAD		=	46.1	PSF

SPACING = 24.0 IN. C/C

THIS TRUSS IS DESIGNED FOR RESIDENTIAL OR SMALL BUILDING REQUIREMENTS OF PART 9, NBCC 2010

THIS DESIGN COMPLIES WITH:
- PART 9 OF OBC 2012 , BCBC 2012 , ABC 2014
- CSA 086-09
- TPIC 2011

(55 % OF 31.3 P.S.F. G.S.L. PLUS 8.4 P.S.F. RAIN LOAD) EQUALS 25.6 P.S.F. SPECIFIED ROOF LIVE LOAD

ALLOWABLE DEFL.(LL)= L/360 (0.37")
CALCULATED VERT. DEFL.(LL) = L/ 999 (0.03")
ALLOWABLE DEFL.(TL)= L/360 (0.37")
CALCULATED VERT. DEFL.(TL) = L/ 999 (0.05")

CSI: TC=0.33 (B-C:1) , BC=0.25 (E-F:3) , WB=0.07 (A-E:1) , SSI=0.14 (B-C:1)

DOL LUMBER=1.00 NAIL=1.00 LS BEND=1.10 COMP=1.10 SHEAR=1.10 TENS= 1.10

COMPANION LIVE LOAD FACTOR = 0.50

TRUSS PLATE MANUFACTURER IS NOT RESPONSIBLE FOR QUALITY CONTROL IN THE TRUSS MANUFACTURING PLANT .

NAIL VALUES

PLATE	GRIP(DRY) (PSI) MAX	MIN	SHEAR (PLI) MAX	MIN	SECTION (PLI) MAX	MIN
MT20	618	354	1667	822	2284	1656

PLATE PLACEMENT TOL. = 0.250 inches

PLATE ROTATION TOL. = 5.0 Deg.

JSI GRIP= 0.84 (B) (INPUT = 0.90)
JSI METAL= 0.15 (C) (INPUT = 1.00)

LICENSED PROFESSIONAL ENGINEER
S. KATSOULAKOS
PROVINCE OF ONTARIO

DWG NO. TAM25462-17
STRUCTURAL
COMPONENT ONLY

JOB NAME	TRUSS NAME	QUANTITY	PLY	JOB DESC. 44269	DRWG NO.
282179	T14	1	1	TRUSS DESC.	

Tamarack Roof Truss, Burlington

Version 8.030 S Oct 5 2016 MiTek Industries, Inc. Thu May 18 13:59:59 2017 Page 1

ID:lwUx8pNrcNFORm7Ep9cJZmzFzsk-Yx4sBhCDzummeHalldhko2jOJ07okkK8nFGE8lzFFxU

Scale = 1:33.0

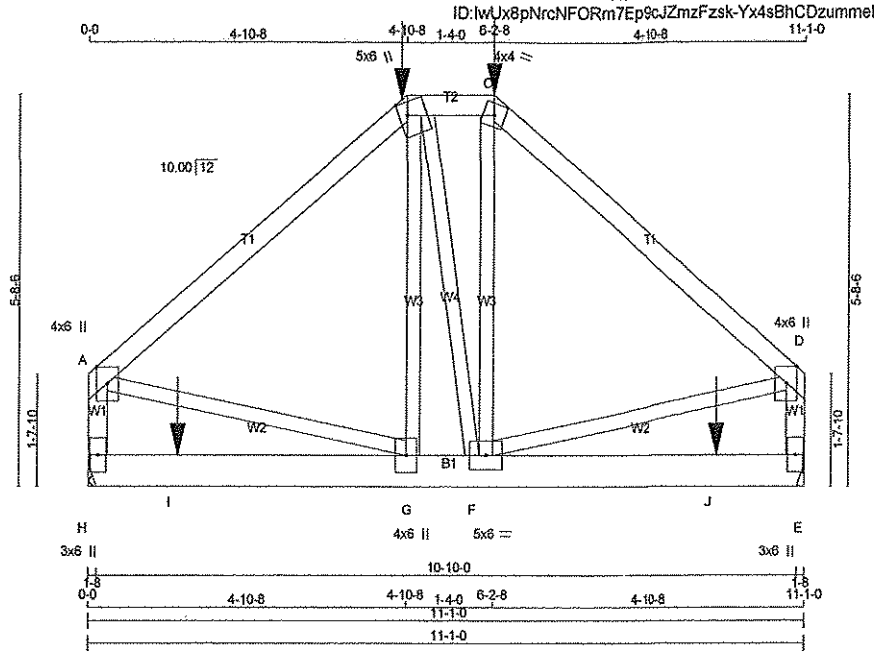

TOTAL WEIGHT = 59 lb

LUMBER

N. L. G. A. RULES

CHORDS	SIZE		LUMBER	DESCR.
A - B	2x4	DRY	No.2	SPF
B - C	2x4	DRY	No.2	SPF
C - D	2x4	DRY	No.2	SPF
H - A	2x4	DRY	No.2	SPF
E - D	2x4	DRY	No.2	SPF
H - E	2x6	DRY	No.2	SPF
ALL WEBS EXCEPT	2x3	DRY	No.2	SPF

DRY: SEASONED LUMBER.

PLATES (table is in inches)

JT	TYPE	PLATES	W	LEN	Y	X
A	TMVW+p	MT20	4.0	6.0	Edge	
B	TTWW+m	MT20	5.0	6.0	2.25	1.50
C	TTW-m	MT20	4.0	4.0		
D	TMVW+p	MT20	4.0	6.0	Edge	
E	BMV1+p	MT20	3.0	6.0		
F	BMWWW-t	MT20	5.0	6.0		
G	BMWW+t	MT20	4.0	6.0		
H	BMV1+p	MT20	3.0	6.0		

Edge - INDICATES REFERENCE CORNER OF PLATE TOUCHES EDGE OF CHORD.

HANGERS NOTES

1) SPECIAL HANGER(S) OR CONNECTION(S) REQUIRED TO SUPPORT CONCENTRATED LOAD(S) 231.0 lbs FACTORED DOWN AT 6-2-8, AND 231.0 lbs FACTORED DOWN AT 4-10-8 ON TOP CHORD, AND 332.7 lbs FACTORED DOWN AT 1-4-8, AND 332.7 lbs FACTORED DOWN AT 9-8-8 ON BOTTOM CHORD. DESIGN FOR UNSPECIFIED CONNECTION(S) IS DELEGATED TO THE BUILDING DESIGNER.

DIMENSIONS, SUPPORTS AND LOADINGS SPECIFIED BY FABRICATOR TO BE VERIFIED BY BUILDING DESIGNER

BEARINGS

JT	FACTORED GROSS REACTION VERT	HORZ	MAXIMUM FACTORED GROSS REACTION DOWN	HORZ	UPLIFT	INPUT BRG IN-SX	REQRD BRG IN-SX
H	1331	0	1331	0	0	HANGER BY OTHERS MIN. SEAT SIZE: 1-8	
E	1331	0	1331	0	0	HANGER BY OTHERS MIN. SEAT SIZE: 1-8	

UNFACTORED REACTIONS

JT	1ST LCASE COMBINED	MAX./MIN. COMPONENT REACTIONS SNOW	LIVE	PERM.LIVE	WIND	DEAD	SOIL
H	1113	585 / 0	276 / 0	0 / 0	0 / 0	253 / 0	0 / 0
E	1113	585 / 0	276 / 0	0 / 0	0 / 0	253 / 0	0 / 0

BRACING

TOP CHORD TO BE SHEATHED OR MAX. PURLIN SPACING = 5.68 FT.
MAX. UNBRACED BOTTOM CHORD LENGTH = 10.00 FT. OR RIGID CEILING DIRECTLY APPLIED.

ALL PITCH BREAKS AND PERIMETER CORNER JOINTS MUST BE LATERALLY RESTRAINED.

LOADING

TOTAL LOAD CASES: (4)

CHORDS

MEMB. FR-TO	MAX. FACTORED FORCE (LBS)	FACTORED VERT. LOAD (PLF) FROM	TO	LC1 CSI (LC)	MAX	MAX. UNBRAC LENGTH
A- B	-980 / 0	-84.3	-84.3	0.43 (1)		5.68
B- C	-758 / 0	-142.2	-142.2	0.05 (1)		6.25
C- D	-983 / 0	-84.3	-84.3	0.43 (1)		5.68
H- A	-1019 / 0	0.0	0.0	0.12 (1)		7.74
E- D	-1017 / 0	0.0	0.0	0.12 (1)		7.74
H- I	0 / 0	-47.3	-47.3	0.29 (2)		10.00
I- G	0 / 0	-47.3	-47.3	0.29 (2)		10.00
G- F	0 / 753	-47.3	-47.3	0.31 (2)		10.00
F- J	0 / 0	-47.3	-47.3	0.29 (2)		10.00
J- E	0 / 0	-47.3	-47.3	0.29 (2)		10.00

WEBS

MEMB. FR-TO	MAX. FACTORED FORCE (LBS)	MAX CSI (LC)
G- B	0 / 218	0.05 (3)
B- F	0 / 51	0.01 (3)
F- C	0 / 272	0.07 (3)
A- G	0 / 774	0.19 (1)
F- D	0 / 775	0.19 (1)

FACTORED CONCENTRATED LOADS (LBS)

JT	LOC.	LC1	MAX-	MAX+	FACE	DIR.	TYPE
B	4-10-8	-231	-231	---	FRONT	VERT	TOTAL
C	6-2-8	-231	-231	---	FRONT	VERT	TOTAL
I	1-4-8	-333	-333	---	FRONT	VERT	TOTAL
J	9-8-8	-333	-333	---	FRONT	VERT	TOTAL

DESIGN CRITERIA

SPECIFIED LOADS:

TOP CH.	LL	=	25.6	PSF
	DL	=	3.0	PSF
BOT CH.	LL	=	10.5	PSF
	DL	=	7.0	PSF
TOTAL LOAD		=	46.1	PSF

SPACING = 24.0 IN. C/C

LOADING IN FLAT SECTION BASED ON A SLOPE OF 6.00/12

GIRDER TYPE: CPrimeHip
SIDE SETBACK = 4-10-8
END SETBACK = 4-10-8
END WALL WIDTH = 1-8
CORNER FRAMING TYPE: CONVENTIONAL
END JACK TYPE: CONVENTIONAL
APPLIED TO FRONT SIDE
- ADDT'L LOADS BASED ON 55 % OF GSL.

THIS TRUSS IS DESIGNED FOR RESIDENTIAL OR SMALL BUILDING REQUIREMENTS OF PART 9, NBCC 2010

THIS DESIGN COMPLIES WITH:
- PART 9 OF OBC 2012 , BCBC 2012 , ABC 2014
- CSA 086-09
- TPIC 2011

(55 % OF 31.3 P.S.F. G.S.L. PLUS 8.4 P.S.F. RAIN LOAD) EQUALS 25.6 P.S.F. SPECIFIED ROOF LIVE LOAD

ALLOWABLE DEFL.(LL)= L/360 (0.37")
CALCULATED VERT. DEFL.(LL) = L/ 999 (0.03")
ALLOWABLE DEFL.(TL)= L/360 (0.37")
CALCULATED VERT. DEFL.(TL) = L/ 999 (0.05")

CSI: TC=0.43 (C-D:1) , BC=0.31 (F-G:2) , WB=0.19 (D-F:1) , SSI=0.23 (E-F:2)

DOL LUMBER=1.00 NAIL=1.00 LS BEND=1.00 COMP=1.00 SHEAR=1.00 TENS= 1.00

COMPANION LIVE LOAD FACTOR = 0.50

TRUSS PLATE MANUFACTURER IS NOT RESPONSIBLE FOR QUALITY CONTROL IN THE TRUSS MANUFACTURING PLANT .

NAIL VALUES

PLATE	GRIP(DRY) (PSI) MAX	MIN	SHEAR (PLI) MAX	MIN	SECTION (PLI) MAX	MIN
MT20	618	354	1667	822	2284	1656

PLATE PLACEMENT TOL. = 0.250 inches

PLATE ROTATION TOL. = 5.0 Deg.

JSI GRIP= 0.81 (D) (INPUT = 0.90)
JSI METAL= 0.25 (G) (INPUT = 1.00)

LICENSED PROFESSIONAL ENGINEER
S 2217
S. KATSOULAKOS
PROVINCE OF ONTARIO

DWG NO. TAM2548317
STRUCTURAL
COMPONENT ONLY

JOB NAME	TRUSS NAME	QUANTITY	PLY	JOB DESC. 44269	DRWG NO.
282179	T15	2	1	TRUSS DESC.	

Tamarack Roof Truss, Burlington

Version 8.030 S Oct 5 2016 MiTek Industries, Inc. Thu May 18 13:59:59 2017 Page 1

ID:lwUx8pNrcNFORm7Ep9cJZmzFzsk-Yx4sBhCDzummeHalldhko2jTX0A2kmX8nFGE8zFFxU

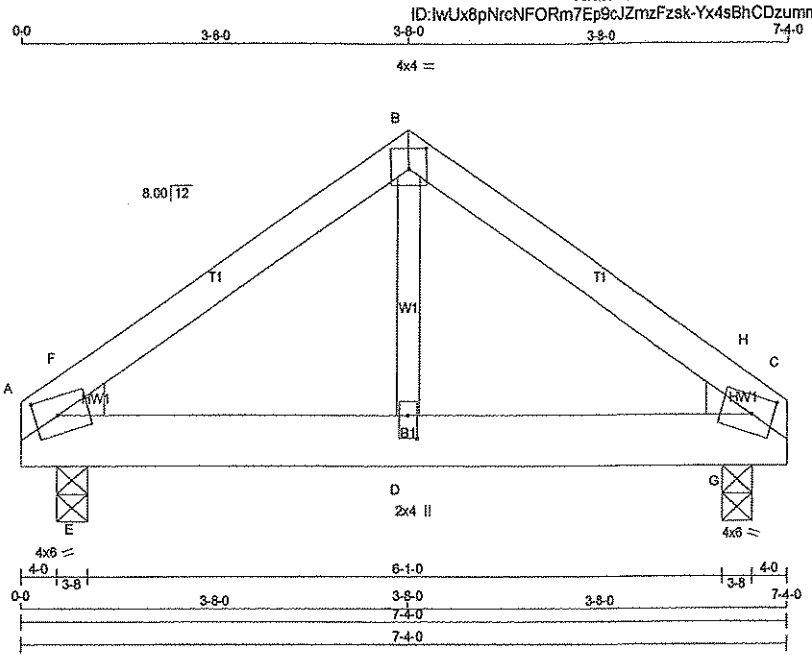

TOTAL WEIGHT = 2 X 26 = 53 lb

[M][F]

LUMBER

N. L. G. A. RULES

CHORDS	SIZE		LUMBER	DESCR.
A - B	2x4	DRY	No.2	SPF
B - C	2x4	DRY	No.2	SPF
A - C	2x6	DRY	No.2	SPF
ALL WEBS	2x3	DRY	No.2	SPF

DRY: SEASONED LUMBER.

PLATES (table is in inches)

JT	TYPE	PLATES	W	LEN	Y	X
A	TMBH1-m	MT20	4.0	6.0	2.00	2.50
B	TTW-p	MT20	4.0	4.0	2.25	2.00
C	TMBH1-m	MT20	4.0	6.0	2.00	2.50
D	BMW+w	MT20	2.0	4.0	2.50	1.00

DIMENSIONS, SUPPORTS AND LOADINGS SPECIFIED BY FABRICATOR TO BE VERIFIED BY BUILDING DESIGNER

BEARINGS

JT	FACTORED GROSS REACTION VERT	HORZ	MAXIMUM FACTORED GROSS REACTION DOWN	HORZ	UPLIFT	INPUT BRG IN-SX	REQRD BRG IN-SX	HEEL WEDGE
A	412	0	412	0	0	3-8	3-8	2x4 L
C	412	0	412	0	0	3-8	3-8	2x4 R

UNFACTORED REACTIONS

JT	1ST LCASE COMBINED	MAX./MIN. COMPONENT REACTIONS SNOW	LIVE	PERM.LIVE	WIND	DEAD	SOIL
A	338	188 / 0	77 / 0	0 / 0	0 / 0	73 / 0	0 / 0
C	338	188 / 0	77 / 0	0 / 0	0 / 0	73 / 0	0 / 0

BEARING MATERIAL TO BE SPF NO.2 OR BETTER AT JOINT(S) A, C

BRACING

TOP CHORD TO BE SHEATHED OR MAX. PURLIN SPACING = 6.25 FT.
MAX. UNBRACED BOTTOM CHORD LENGTH = 10.00 FT. OR RIGID CEILING DIRECTLY APPLIED.

ALL PITCH BREAKS AND PERIMETER CORNER JOINTS MUST BE LATERALLY RESTRAINED.

LOADING

TOTAL LOAD CASES: (4)

CHORDS

MEMB. FR-TO	MAX. FACTORED FORCE (LBS)	FACTORED VERT. LOAD (PLF) FROM	TO	LC1 CSI (LC)	MAX	MAX. UNBRAC LENGTH
A- F	-369 / 0	-84.3	-84.3	0.06 (1)		6.25
F- B	-391 / 0	-84.3	-84.3	0.09 (1)		6.25
B- H	-391 / 0	-84.3	-84.3	0.09 (1)		6.25
H- C	-369 / 0	-84.3	-84.3	0.06 (1)		6.25
A- E	0 / 317	-28.0	-28.0	0.11 (1)		10.00
E- D	0 / 317	-28.0	-28.0	0.11 (1)		10.00
D- G	0 / 317	-28.0	-28.0	0.11 (1)		10.00
G- C	0 / 317	-28.0	-28.0	0.11 (1)		10.00

WEBS

MEMB. FR-TO	MAX. FACTORED FORCE (LBS)	MAX CSI (LC)
D- B	0 / 226	0.05 (2)
E- F	-181 / 40	0.00 (1)
G- H	-181 / 40	0.00 (1)

DESIGN CRITERIA

SPECIFIED LOADS:

TOP CH.	LL	=	25.6	PSF
	DL	=	3.0	PSF
BOT CH.	LL	=	10.5	PSF
	DL	=	7.0	PSF
TOTAL LOAD		=	46.1	PSF

SPACING = 24.0 IN. C/C

THIS TRUSS IS DESIGNED FOR RESIDENTIAL OR SMALL BUILDING REQUIREMENTS OF PART 9, NBCC 2010

THIS DESIGN COMPLIES WITH:
- PART 9 OF OBC 2012 , BCBC 2012 , ABC 2014
- CSA 086-09
- TPIC 2011

(55 % OF 31.3 P.S.F. G.S.L. PLUS 8.4 P.S.F. RAIN LOAD) EQUALS 25.6 P.S.F. SPECIFIED ROOF LIVE LOAD

ALLOWABLE DEFL.(LL)= L/360 (0.24")
CALCULATED VERT. DEFL.(LL) = L/ 999 (0.00")
ALLOWABLE DEFL.(TL)= L/360 (0.24")
CALCULATED VERT. DEFL.(TL) = L/ 999 (0.01")

CSI: TC=0.09 (B-F:1) , BC=0.11 (D-G:1) , WB=0.05 (B-D:2) , SSI=0.11 (C-G:1)

DOL LUMBER=1.00 NAIL=1.00 LS BEND=1.10 COMP=1.10 SHEAR=1.10 TENS= 1.10

COMPANION LIVE LOAD FACTOR = 0.50

AUTOSOLVE HEELS OFF

TRUSS PLATE MANUFACTURER IS NOT RESPONSIBLE FOR QUALITY CONTROL IN THE TRUSS MANUFACTURING PLANT .

NAIL VALUES

PLATE	GRIP(DRY) (PSI) MAX	MIN	SHEAR (PLI) MAX	MIN	SECTION (PLI) MAX	MIN
MT20	618	354	1667	822	2284	1656

PLATE PLACEMENT TOL. = 0.250 inches

PLATE ROTATION TOL. = 5.0 Deg.

JSI GRIP= 0.38 (B) (INPUT = 0.90)
JSI METAL= 0.10 (C) (INPUT = 1.00)

LICENSED PROFESSIONAL ENGINEER
5277
S. KATSOULAKOS
PROVINCE OF ONTARIO

DWG NO. TAM25484-17
STRUCTURAL
COMPONENT ONLY

JOB NAME	TRUSS NAME	QUANTITY	PLY	JOB DESC. 44269	DRWG NO.
282179	T15Z	1	1	TRUSS DESC.	

Tamarack Roof Truss, Burlington

Version 8.030 S Oct 5 2016 MiTek Industries, Inc. Thu May 18 13:59:59 2017 Page 1

ID:lwUx8pNrcNFORm7Ep9cJZmzFzsk-Yx4sBhCDzummeHalldhko2jTC0Ankll8nFGE8izFFxU

Scale = 1:20.4

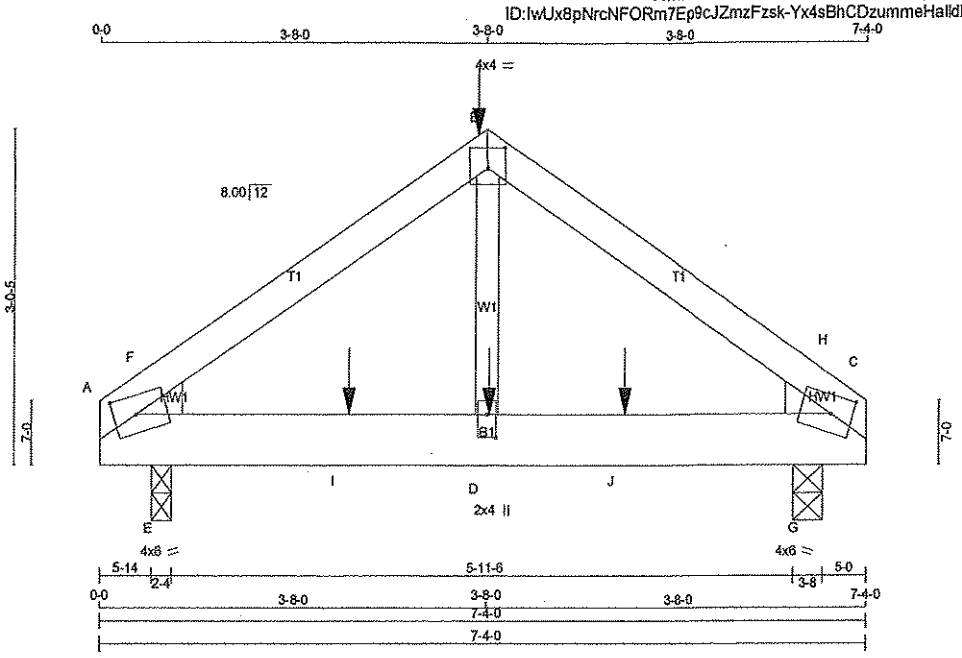

TOTAL WEIGHT = 26 lb

[M]

LUMBER

N. L. G. A. RULES

CHORDS	SIZE		LUMBER	DESCR.
A - B	2x4	DRY	No.2	SPF
B - C	2x4	DRY	No.2	SPF
A - C	2x6	DRY	No.2	SPF
ALL WEBS	2x3	DRY	No.2	SPF

DRY: SEASONED LUMBER

PLATES (table is in inches)

JT	TYPE	PLATES	W	LEN	Y	X
A	TMBH1-m	MT20	4.0	6.0	2.00	2.50
B	TTW-p	MT20	4.0	4.0	2.25	2.00
C	TMBH1-m	MT20	4.0	6.0	2.00	2.50
D	BMW+w	MT20	2.0	4.0	2.50	1.00

HANGERS NOTES

1) SPECIAL HANGER(S) OR CONNECTION(S) REQUIRED TO SUPPORT CONCENTRATED LOAD(S) 153.6 lbs FACTORED DOWN AT 3-8-0 ON TOP CHORD, AND 22.9 lbs FACTORED DOWN AT 2-4-4, AND 21.4 lbs FACTORED DOWN AT 3-8-4, AND 22.9 lbs FACTORED DOWN AT 4-11-12 ON BOTTOM CHORD. DESIGN FOR UNSPECIFIED CONNECTION(S) IS DELEGATED TO THE BUILDING DESIGNER.

DIMENSIONS, SUPPORTS AND LOADINGS SPECIFIED BY FABRICATOR TO BE VERIFIED BY BUILDING DESIGNER

BEARINGS

JT	FACTORED GROSS REACTION VERT	HORZ	MAXIMUM FACTORED GROSS REACTION DOWN	HORZ	UPLIFT	INPUT BRG IN-SX	REQRD BRG IN-SX	HEEL WEDGE
A	504	0	504	0	0	2-4	2-4	2x4 L
C	505	0	505	0	0	3-8	3-8	2x4 R

UNFACTORED REACTIONS

JT	1ST LCASE COMBINED	MAX./MIN. COMPONENT REACTIONS SNOW	LIVE	PERM.LIVE	WIND	DEAD	SOIL
A	415	227 / 0	95 / 0	0 / 0	0 / 0	93 / 0	0 / 0
C	416	228 / 0	95 / 0	0 / 0	0 / 0	93 / 0	0 / 0

BEARING MATERIAL TO BE SPF NO.2 OR BETTER AT JOINT(S) A, C

BRACING

TOP CHORD TO BE SHEATHED OR MAX. PURLIN SPACING = 6.25 FT.
MAX. UNBRACED BOTTOM CHORD LENGTH = 10.00 FT. OR RIGID CEILING DIRECTLY APPLIED.

ALL PITCH BREAKS AND PERIMETER CORNER JOINTS MUST BE LATERALLY RESTRAINED.

LOADING

TOTAL LOAD CASES: (4)

CHORDS

MEMB. FR-TO	MAX. FACTORED FORCE (LBS)	FACTORED VERT. LOAD (PLF) FROM	TO	LC1	MAX CSI (LC)	MAX. UNBRAC LENGTH
A- F	-535 / 0	-84.3	-84.3	0.10 (1)	6.25	
F- B	-536 / 0	-84.3	-84.3	0.11 (1)	6.25	
B- H	-536 / 0	-84.3	-84.3	0.11 (1)	6.25	
H- C	-536 / 0	-84.3	-84.3	0.10 (1)	6.25	
A- E	0 / 437	-28.0	-28.0	0.12 (1)	10.00	
E- I	0 / 437	-28.0	-28.0	0.12 (1)	10.00	
I- D	0 / 437	-28.0	-28.0	0.12 (1)	10.00	
D- J	0 / 437	-28.0	-28.0	0.12 (1)	10.00	
J- G	0 / 437	-28.0	-28.0	0.12 (1)	10.00	
G- C	0 / 437	-28.0	-28.0	0.12 (1)	10.00	

WEBS

MEMB. FR-TO	MAX. FACTORED FORCE (LBS)	MAX CSI (LC)
D- B	0 / 266	0.07 (2)
E- F	-148 / 60	0.00 (1)
G- H	-147 / 60	0.00 (1)

FACTORED CONCENTRATED LOADS (LBS)

JT	LOC.	LC1	MAX-	MAX+	FACE	DIR.	TYPE
B	3-8-0	-154	-154	---	BACK	VERT	TOTAL
D	3-8-4	-12	-21	---	BACK	VERT	TOTAL
I	2-4-4	-8	-23	---	BACK	VERT	TOTAL
J	4-11-12	-12	-23	---	BACK	VERT	TOTAL

DESIGN CRITERIA

SPECIFIED LOADS:

TOP CH.	LL	=	25.6	PSF
	DL	=	3.0	PSF
BOT CH.	LL	=	10.5	PSF
	DL	=	7.0	PSF
TOTAL LOAD		=	46.1	PSF

SPACING = 24.0 IN. C/C

THIS TRUSS IS DESIGNED FOR RESIDENTIAL OR SMALL BUILDING REQUIREMENTS OF PART 9, NBCC 2010

THIS DESIGN COMPLIES WITH:
- PART 9 OF OBC 2012 , BCBC 2012 , ABC 2014
- CSA 086-09
- TPIC 2011

(55 % OF 31.3 P.S.F. G.S.L. PLUS 8.4 P.S.F. RAIN LOAD) EQUALS 25.6 P.S.F. SPECIFIED ROOF LIVE LOAD

ALLOWABLE DEFL.(LL)= L/360 (0.24")
CALCULATED VERT. DEFL.(LL) = L/ 999 (0.01")
ALLOWABLE DEFL.(TL)= L/360 (0.24")
CALCULATED VERT. DEFL.(TL) = L/ 999 (0.01")

CSI: TC=0.11 (B-H:1) , BC=0.12 (C-G:1) , WB=0.07 (B-D:2) , SSI=0.11 (C-G:1)

DOL LUMBER=1.00 NAIL=1.00 LS BEND=1.00 COMP=1.00 SHEAR=1.00 TENS= 1.00

COMPANION LIVE LOAD FACTOR = 0.50

AUTOSOLVE HEELS OFF

TRUSS PLATE MANUFACTURER IS NOT RESPONSIBLE FOR QUALITY CONTROL IN THE TRUSS MANUFACTURING PLANT .

NAIL VALUES

PLATE	GRIP(DRY) (PSI) MAX	MIN	SHEAR (PLI) MAX	MIN	SECTION (PLI) MAX	MIN
MT20	618	354	1667	822	2284	1656

PLATE PLACEMENT TOL. = 0.250 inches

PLATE ROTATION TOL. = 5.0 Deg.

JSI GRIP= 0.45 (B) (INPUT = 0.90)
JSI METAL= 0.13 (C) (INPUT = 1.00)

LICENSED PROFESSIONAL ENGINEER
S. KATSOULAKOS
PROVINCE OF ONTARIO

DWG NO. TAM25485-17
STRUCTURAL
COMPONENT ONLY

JOB NAME	TRUSS NAME	QUANTITY	PLY	JOB DESC. 44269	DRWG NO.
282179	T90	4	1	TRUSS DESC.	

Tamarack Roof Truss, Burlington

Version 8.030 S Oct 5 2016 MiTek Industries, Inc. Thu May 18 14:00:00 2017 Page 1

ID:lwUx8pNrcNFORm7Ep9cJZmzFzsk-07eEP1DrkBudGR9xlLCzLFGZgQRCT1nl0v0nh9zFFxT

Scale = 1:22.5

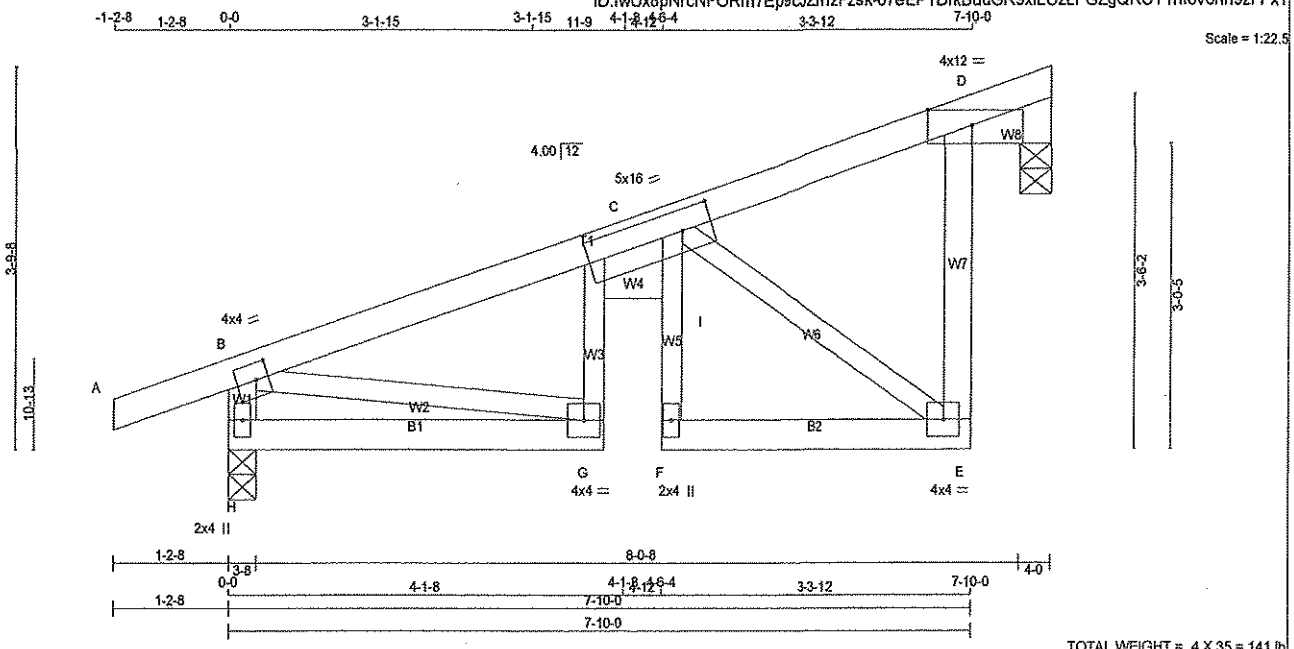

TOTAL WEIGHT = 4 X 35 = 141 lb

[M][F]

LUMBER

N. L. G. A. RULES

CHORDS	SIZE		LUMBER	DESCR.
A - D	2x4	DRY	No.2	SPF
E - D	2x4	DRY	No.2	SPF
H - G	2x4	DRY	No.2	SPF
F - E	2x4	DRY	No.2	SPF
ALL WEBS	2x3	DRY	No.2	SPF
EXCEPT				
I - C	2x8	DRY	No.2	SPF
H - B	2x4	DRY	No.2	SPF

DRY: SEASONED LUMBER.

PLATES (table is in inches)

JT	TYPE	PLATES	W	LEN	Y	X
B	TMWW-t	MT20	4.0	4.0	2.00	1.50
C	TMWQQW-t	MT20	5.0	16.0	2.50	3.75
D	TMVW1-p	MT20	4.0	12.0	Edge	5.50
E	BMVW-t	MT20	4.0	4.0		
F	BMW+w	MT20	2.0	4.0		
G	BMWW-t	MT20	4.0	4.0		
H	BMW1+w	MT20	2.0	4.0		

Edge - INDICATES REFERENCE CORNER OF PLATE TOUCHES EDGE OF CHORD.

DIMENSIONS, SUPPORTS AND LOADINGS SPECIFIED BY FABRICATOR TO BE VERIFIED BY BUILDING DESIGNER

BEARINGS

JT	FACTORED GROSS REACTION VERT	HORZ	MAXIMUM FACTORED GROSS REACTION DOWN	HORZ	UPLIFT	INPUT BRG IN-SX	REQRD BRG IN-SX
D	490	0	490	0	0	4-0	4-0
H	468	0	468	0	0	3-8	3-8

BEVELED PLATE OR SHIM REQUIRED TO PROVIDE FULL BEARING SURFACE WITH TRUSS CHORD AT JT(S): D

UNFACTORED REACTIONS

JT	1ST LCASE COMBINED	MAX./MIN. COMPONENT REACTIONS SNOW	LIVE	PERM.LIVE	WIND	DEAD	SOIL
D	395	230 / 0	83 / 0	0 / 0	0 / 0	82 / 0	0 / 0
H	365	235 / 0	62 / 0	0 / 0	0 / 0	69 / 0	0 / 0

BEARING MATERIAL TO BE SPF NO.2 OR BETTER AT JOINT(S) D, H

BRACING

TOP CHORD TO BE SHEATHED OR MAX. PURLIN SPACING = 6.25 FT.
MAX. UNBRACED BOTTOM CHORD LENGTH = 10.00 FT. OR RIGID CEILING DIRECTLY APPLIED.

ALL PITCH BREAKS AND PERIMETER CORNER JOINTS MUST BE LATERALLY RESTRAINED.

LOADING

TOTAL LOAD CASES: (4)

CHORDS

MEMB. FR-TO	MAX. FACTORED FORCE (LBS)	FACTORED VERT. LOAD LC1 (PLF) FROM	TO	MAX CSI (LC)	MAX. UNBRAC LENGTH
A- B	0 / 19	-84.3	-84.3	0.12 (1)	10.00
B- C	-239 / 0	-84.3	-84.3	0.26 (1)	6.25
C- D	0 / 78	-84.3	-84.3	0.22 (1)	10.00
E- D	0 / 292	0.0	0.0	0.39 (1)	10.00
H- G	0 / 0	-28.0	-28.0	0.11 (2)	10.00
F- E	0 / 212	-28.0	-28.0	0.43 (1)	10.00

WEBS

MEMB. FR-TO	MAX. FACTORED FORCE (LBS)	MAX CSI (LC)
G- I	0 / 101	0.82 (1)
F- I	0 / 101	0.82 (1)
I- C	0 / 101	0.82 (1)
C- E	-319 / 0	0.08 (1)
H- B	-417 / 0	0.04 (1)
B- G	0 / 227	0.05 (1)

DESIGN CRITERIA

SPECIFIED LOADS:

TOP CH.	LL	=	25.6	PSF
	DL	=	3.0	PSF
BOT CH.	LL	=	10.5	PSF
	DL	=	7.0	PSF
TOTAL LOAD		=	46.1	PSF

SPACING = 24.0 IN. C/C

THIS TRUSS IS DESIGNED FOR RESIDENTIAL OR SMALL BUILDING REQUIREMENTS OF PART 9, NBCC 2010

THIS DESIGN COMPLIES WITH:
- PART 9 OF OBC 2012 , BCBC 2012 , ABC 2014
- CSA 086-09
- TPIC 2011

(55 % OF 31.3 P.S.F. G.S.L. PLUS 8.4 P.S.F. RAIN LOAD) EQUALS 25.6 P.S.F. SPECIFIED ROOF LIVE LOAD

ALLOWABLE DEFL.(LL)= L/360 (0.26")
CALCULATED VERT. DEFL.(LL) = L/ 766 (0.12")
ALLOWABLE DEFL.(TL)= L/360 (0.26")
CALCULATED VERT. DEFL.(TL) = L/ 498 (0.19")

CSI: TC=0.39 (D-E:1) , BC=0.43 (E-F:1) , WB=0.82 (C-G:1) , SSI=0.24 (C-G:1)

DOL LUMBER=1.00 NAIL=1.00 LS BEND=1.10 COMP=1.10 SHEAR=1.10 TENS= 1.10

COMPANION LIVE LOAD FACTOR = 0.50

AUTOSOLVE LEFT HEEL ONLY

TRUSS PLATE MANUFACTURER IS NOT RESPONSIBLE FOR QUALITY CONTROL IN THE TRUSS MANUFACTURING PLANT .

NAIL VALUES

PLATE	GRIP(DRY) (PSI) MAX	MIN	SHEAR (PLI) MAX	MIN	SECTION (PLI) MAX	MIN
MT20	618	354	1667	822	2284	1656

PLATE PLACEMENT TOL. = 0.250 inches

PLATE ROTATION TOL. = 5.0 Deg.

JSI GRIP= 0.38 (B) (INPUT = 0.90)
JSI METAL= 0.14 (F) (INPUT = 1.00)

LICENSED PROFESSIONAL ENGINEER
S. KATSOULAKOS
PROVINCE OF ONTARIO

DWG NO. TAM2548617
STRUCTURAL
COMPONENT ONLY

JOB NAME	TRUSS NAME	QUANTITY	PLY	JOB DESC. 44269	DRWG NO.
282179	T91	6	1	TRUSS DESC.	

Tamarack Roof Truss, Burlington

Version 8.030 S Oct 5 2016 MiTek Industries, Inc. Thu May 18 14:00:00 2017 Page 1

ID:IwUx8pNrcNFORm7Ep9cJZmzFzsk-07eEP1DrkBudGR9xlLCzLFGc7QVqTDZI0v0nh9zFFxT

Scale = 1:15.6

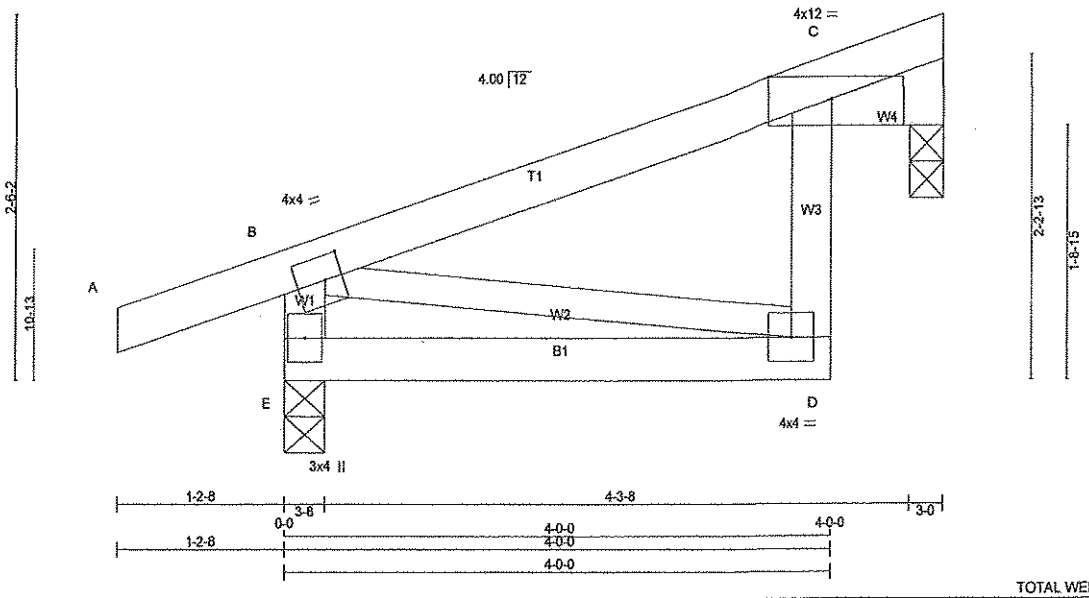

TOTAL WEIGHT = 6 X 19 = 111 lb

[M]

LUMBER

N. L. G. A. RULES

CHORDS	SIZE		LUMBER	DESCR.
A - C	2x4	DRY	No.2	SPF
D - C	2x4	DRY	No.2	SPF
E - B	2x4	DRY	No.2	SPF
E - D	2x4	DRY	No.2	SPF
ALL WEBS	2x3	DRY	No.2	SPF

DRY: SEASONED LUMBER.

PLATES (table is in inches)

JT	TYPE	PLATES	W	LEN	Y	X
B	TMVW-t	MT20	4.0	4.0	2.00	1.50
C	TMVW1-p	MT20	4.0	12.0	Edge	5.50
D	BMVW-t	MT20	4.0	4.0		
E	BMV1+p	MT20	3.0	4.0		

Edge - INDICATES REFERENCE CORNER OF PLATE TOUCHES EDGE OF CHORD.

DIMENSIONS, SUPPORTS AND LOADINGS SPECIFIED BY FABRICATOR TO BE VERIFIED BY BUILDING DESIGNER

BEARINGS

JT	FACTORED GROSS REACTION VERT	HORZ	MAXIMUM FACTORED GROSS REACTION DOWN	HORZ	UPLIFT	INPUT BRG IN-SX	REQRD BRG IN-SX
C	225	0	225	0	0	3-0	3-0
E	330	0	330	0	0	3-8	3-8

BEVELED PLATE OR SHIM REQUIRED TO PROVIDE FULL BEARING SURFACE WITH TRUSS CHORD AT JT(S): C

UNFACTORED REACTIONS

JT	1ST LCASE COMBINED	MAX./MIN. COMPONENT REACTIONS SNOW	LIVE	PERM.LIVE	WIND	DEAD	SOIL
C	184	102 / 0	42 / 0	0 / 0	0 / 0	40 / 0	0 / 0
E	256	167 / 0	42 / 0	0 / 0	0 / 0	48 / 0	0 / 0

BEARING MATERIAL TO BE SPF NO.2 OR BETTER AT JOINT(S) C, E

BRACING

TOP CHORD TO BE SHEATHED OR MAX. PURLIN SPACING = 10.00 FT.
MAX. UNBRACED BOTTOM CHORD LENGTH = 10.00 FT. OR RIGID CEILING DIRECTLY APPLIED.

ALL PITCH BREAKS AND PERIMETER CORNER JOINTS MUST BE LATERALLY RESTRAINED.

LOADING

TOTAL LOAD CASES: (4)

CHORDS

MEMB. FR-TO	MAX. FACTORED FORCE (LBS)	FACTORED VERT. LOAD LC1 (PLF) FROM	TO	MAX CSI (LC)	MAX. UNBRAC LENGTH
A- B	0 / 17	-84.3	-84.3	0.09 (1)	10.00
B- C	0 / 0	-84.3	-84.3	0.23 (1)	10.00
D- C	0 / 98	0.0	0.0	0.02 (3)	10.00
E- B	-274 / 0	0.0	0.0	0.03 (1)	7.81
E- D	0 / 0	-28.0	-28.0	0.13 (3)	10.00

WEBS

MEMB. FR-TO	MAX. FACTORED FORCE (LBS)	MAX CSI (LC)
B- D	0 / 0	0.00 (1)

DESIGN CRITERIA

SPECIFIED LOADS:

TOP CH.	LL	=	25.6	PSF
	DL	=	3.0	PSF
BOT CH.	LL	=	10.5	PSF
	DL	=	7.0	PSF
TOTAL LOAD		=	46.1	PSF

SPACING = 24.0 IN. C/C

THIS TRUSS IS DESIGNED FOR RESIDENTIAL OR SMALL BUILDING REQUIREMENTS OF PART 9, NBCC 2010

THIS DESIGN COMPLIES WITH:
- PART 9 OF OBC 2012 , BCBC 2012 , ABC 2014
- CSA 086-09
- TPIC 2011

(55 % OF 31.3 P.S.F. G.S.L. PLUS 8.4 P.S.F. RAIN LOAD) EQUALS 25.6 P.S.F. SPECIFIED ROOF LIVE LOAD

ALLOWABLE DEFL.(LL)= L/360 (0.19")
CALCULATED VERT. DEFL.(LL) = L/ 999 (0.02")
ALLOWABLE DEFL.(TL)= L/360 (0.19")
CALCULATED VERT. DEFL.(TL) = L/ 999 (0.03")

CSI: TC=0.23 (B-C:1) , BC=0.13 (D-E:3) , WB=0.00 (B-D:1) , SSI=0.12 (B-C:1)

DOL LUMBER=1.00 NAIL=1.00 LS BEND=1.10 COMP=1.10 SHEAR=1.10 TENS= 1.10

COMPANION LIVE LOAD FACTOR = 0.50

AUTOSOLVE RIGHT HEEL ONLY

TRUSS PLATE MANUFACTURER IS NOT RESPONSIBLE FOR QUALITY CONTROL IN THE TRUSS MANUFACTURING PLANT .

NAIL VALUES

PLATE	GRIP(DRY) (PSI) MAX	MIN	SHEAR (PLI) MAX	MIN	SECTION (PLI) MAX	MIN
MT20	618	354	1667	822	2284	1656

PLATE PLACEMENT TOL. = 0.250 inches

PLATE ROTATION TOL. = 5.0 Deg.

JSI GRIP= 0.16 (B) (INPUT = 0.90)
JSI METAL= 0.04 (B) (INPUT = 1.00)

LICENSED PROFESSIONAL ENGINEER
S. KATSOULAKOS
PROVINCE OF ONTARIO

DWG NO. TAM25487-17
STRUCTURAL
COMPONENT ONLY

JOB NAME	TRUSS NAME	QUANTITY	PLY	JOB DESC. 44269	DRWG NO.
282179	PB4	2	1	TRUSS DESC.	

Tamarack Roof Truss, Burlington

Version 8.030 S Oct 5 2016 MiTek Industries, Inc. Thu May 18 13:59:55 2017 Page 1

ID:lwUx8pNrcNFORm7Ep9cJZmzFzsk-fAqLMK9jvfFKAgH_WocoeCZfWPmloxcYseI0?xzFFxY

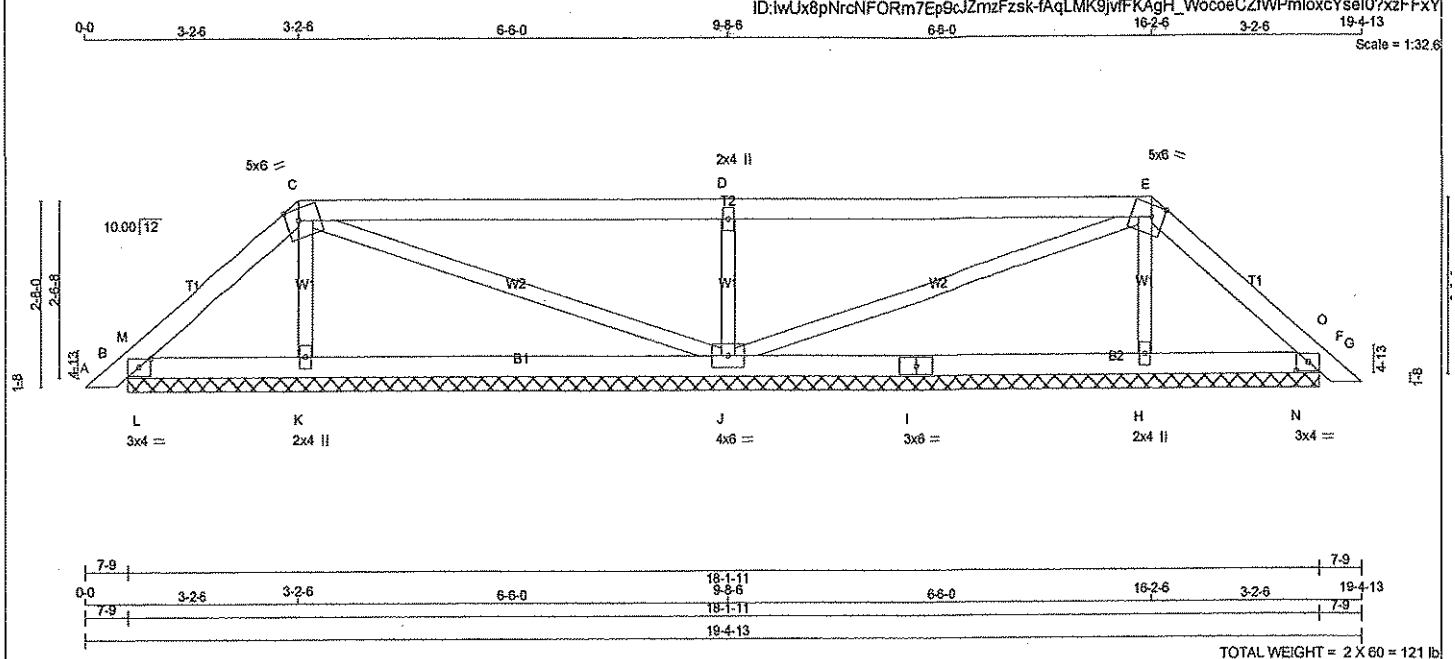

TOTAL WEIGHT = 2 X 60 = 121 lb

[M]

LUMBER

N. L. G. A. RULES

CHORDS	SIZE		LUMBER	DESCR.
A - C	2x4	DRY	No.2	SPF
C - E	2x4	DRY	No.2	SPF
E - G	2x4	DRY	No.2	SPF
B - I	2x4	DRY	No.2	SPF
I - F	2x4	DRY	No.2	SPF
ALL WEBS	2x3	DRY	No.2	SPF

DRY: SEASONED LUMBER.

PLATES (table is in inches)

JT	TYPE	PLATES	W	LEN	Y	X
B	TMB1-I	MT20	3.0	4.0	1.50	2.00
C	TTWW-m	MT20	5.0	6.0	2.00	2.25
D	TMW+w	MT20	2.0	4.0		
E	TTWW-m	MT20	5.0	6.0	2.00	2.25
F	TMB1-I	MT20	3.0	4.0	1.50	2.00
H	BMW1+w	MT20	2.0	4.0		
I	BS-t	MT20	3.0	6.0		
J	BMWWW1-t	MT20	4.0	6.0		
K	BMW1+w	MT20	2.0	4.0		

DIMENSIONS, SUPPORTS AND LOADINGS SPECIFIED BY FABRICATOR TO BE VERIFIED BY BUILDING DESIGNER

BEARINGS

JT	FACTORED GROSS REACTION VERT	HORZ	MAXIMUM FACTORED GROSS REACTION DOWN	HORZ	UPLIFT	INPUT BRG IN-SX	REQRD BRG IN-SX
B	210	0	210	0	0	18-1-11 (6-2-11B)1-11	
K	407	0	407	0	0	18-1-11 (6-2-11B)1-11	
J	892	0	892	0	0	18-1-11 (6-2-11B)1-11	
H	407	0	407	0	0	18-1-11 (6-2-11B)1-11	
F	210	0	210	0	0	18-1-11 (6-2-11B)1-11	

VALUE IN PARENTHESIS INDICATES EFFECTIVE BEARING LENGTH

UNFACTORED REACTIONS

JT	1ST LCASE COMBINED	MAX./MIN. COMPONENT REACTIONS SNOW	LIVE	PERM.LIVE	WIND	DEAD	SOIL
B	148	122 / 0	7 / 0	0 / 0	0 / 0	19 / 0	0 / 0
K	362	156 / 0	113 / 0	0 / 0	0 / 0	93 / 0	0 / 0
J	714	426 / 0	142 / 0	0 / 0	0 / 0	145 / 0	0 / 0
H	362	156 / 0	113 / 0	0 / 0	0 / 0	93 / 0	0 / 0
F	148	122 / 0	7 / 0	0 / 0	0 / 0	19 / 0	0 / 0

BEARING MATERIAL TO BE SPF NO.2 OR BETTER AT JOINT(S) B, K, J, H, F

BRACING

TOP CHORD TO BE SHEATHED OR MAX. PURLIN SPACING = 6.25 FT.
MAX. UNBRACED BOTTOM CHORD LENGTH = 10.00 FT. OR RIGID CEILING DIRECTLY APPLIED.

ALL PITCH BREAKS AND PERIMETER CORNER JOINTS MUST BE LATERALLY RESTRAINED.

LOADING

TOTAL LOAD CASES: (4)

CHORDS

MEMB. FR-TO	MAX. FACTORED FORCE (LBS)	FACTORED VERT. LOAD (PLF) FROM	TO	LC1	MAX CSI (LC)	MAX. UNBRAC LENGTH
A- B	0 / 13	-84.3	-84.3	0.02 (1)	10.00	
B- M	-3 / 30	-84.3	-84.3	0.04 (1)	10.00	
M- C	-80 / 0	-84.3	-84.3	0.06 (1)	6.25	
C- D	-14 / 1	-84.3	-84.3	0.61 (1)	6.25	
D- E	-14 / 1	-84.3	-84.3	0.61 (1)	6.25	
E- O	-80 / 0	-84.3	-84.3	0.06 (1)	6.25	
O- F	-3 / 30	-84.3	-84.3	0.04 (1)	10.00	
F- G	0 / 13	-84.3	-84.3	0.02 (1)	10.00	
B- L	0 / 56	-28.0	-28.0	0.07 (1)	10.00	
L- K	0 / 56	-28.0	-28.0	0.18 (2)	10.00	
K- J	0 / 45	-28.0	-28.0	0.26 (2)	10.00	
J- I	0 / 45	-28.0	-28.0	0.26 (2)	10.00	
I- H	0 / 45	-28.0	-28.0	0.26 (2)	10.00	
H- N	0 / 56	-28.0	-28.0	0.18 (2)	10.00	
N- F	0 / 56	-28.0	-28.0	0.07 (1)	10.00	

WEBS

MEMB. FR-TO	MAX. FACTORED FORCE (LBS)	MAX CSI (LC)
K- C	-235 / 0	0.04 (1)
C- J	-33 / 0	0.03 (1)
J- D	-684 / 0	0.11 (1)
J- E	-33 / 0	0.03 (1)
H- E	-235 / 0	0.04 (1)
L- M	-214 / 0	0.00 (1)
N- O	-214 / 0	0.00 (1)

DESIGN CRITERIA

SPECIFIED LOADS:

TOP CH.	LL	=	25.6	PSF
	DL	=	3.0	PSF
BOT CH.	LL	=	10.5	PSF
	DL	=	7.0	PSF
TOTAL LOAD		=	46.1	PSF

SPACING = 24.0 IN. C/C

LOADING IN FLAT SECTION BASED ON A SLOPE OF 6.00/12

THIS TRUSS IS DESIGNED FOR RESIDENTIAL OR SMALL BUILDING REQUIREMENTS OF PART 9, NBCC 2010

THIS DESIGN COMPLIES WITH:
- PART 9 OF OBC 2012 , BCBC 2012 , ABC 2014
- CSA 086-09
- TPIC 2011

(55 % OF 31.3 P.S.F. G.S.L. PLUS 8.4 P.S.F. RAIN LOAD) EQUALS 25.6 P.S.F. SPECIFIED ROOF LIVE LOAD

CSI: TC=0.61 (D-E:1) , BC=0.26 (H-J:2) , WB=0.11 (D-J:1) , SSI=0.27 (C-D:1)

DOL LUMBER=1.00 NAIL=1.00 LS BEND=1.10 COMP=1.10 SHEAR=1.10 TENS= 1.10

COMPANION LIVE LOAD FACTOR = 0.50

TRUSS PLATE MANUFACTURER IS NOT RESPONSIBLE FOR QUALITY CONTROL IN THE TRUSS MANUFACTURING PLANT .

NAIL VALUES

PLATE	GRIP(DRY) (PSI) MAX	MIN	SHEAR (PLI) MAX	MIN	SECTION (PLI) MAX	MIN
MT20	618	354	1667	822	2284	1656

PLATE PLACEMENT TOL. = 0.250 inches

PLATE ROTATION TOL. = 5.0 Deg.

JSI GRIP= 0.85 (C) (INPUT = 0.90)
JSI METAL= 0.21 (I) (INPUT = 1.00)

LICENSED PROFESSIONAL ENGINEER
S-2217
S. KATSOULAKOS
PROVINCE OF ONTARIO

DWG NO. TAM 2548B19

STRUCTURAL COMPONENT ONLY

JOB NAME	TRUSS NAME	QUANTITY	PLY	JOB DESC. 44269	DRWG NO.
282179	PB5	2	1	TRUSS DESC.	

Tamarack Roof Truss, Burlington

Version 8.030 S Oct 5 2016 MiTek Industries, Inc. Thu May 18 13:59:55 2017 Page 1

ID:lwUx8pNrcNFORm7Ep9cJZmzFzsk-fAqLMK9jvfFKAgH_WocoeCZjdPoGoxRYseI0?xzFFxY

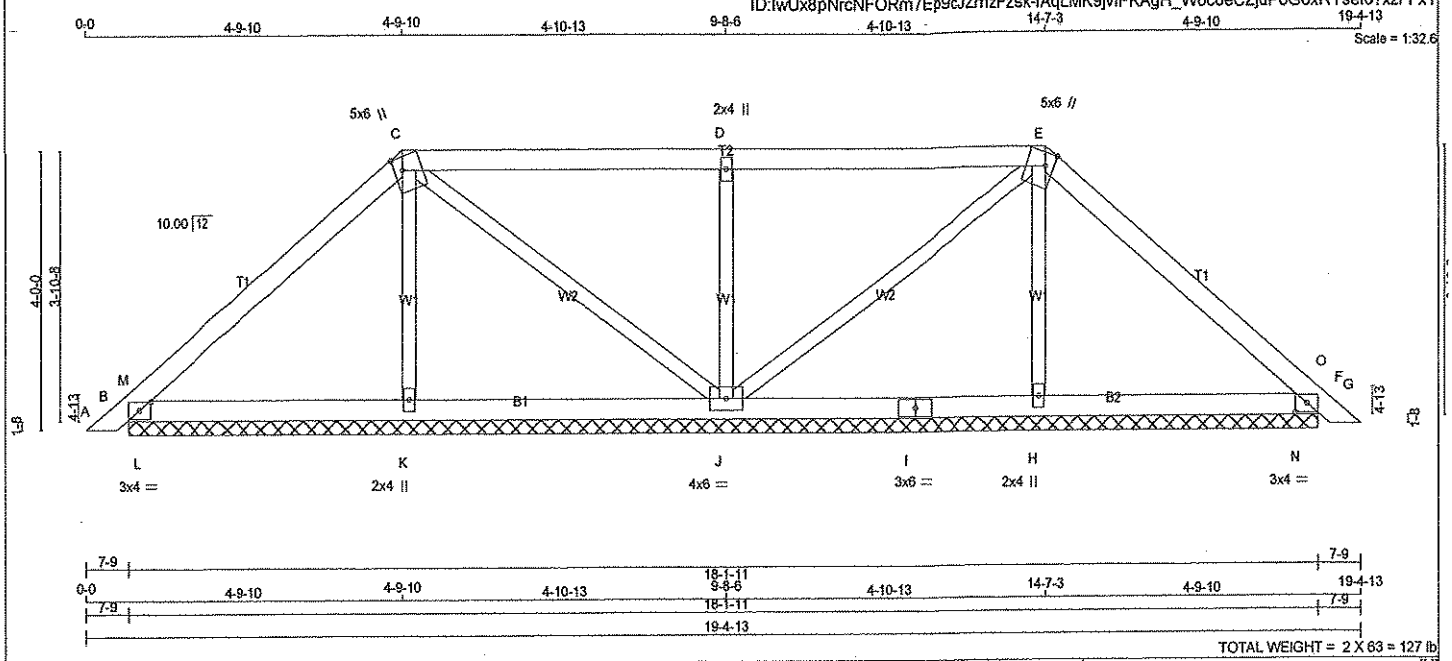

TOTAL WEIGHT = 2 X 63 = 127 lb

[M]

LUMBER

N. L. G. A. RULES

CHORDS	SIZE		LUMBER	DESCR.
A - C	2x4	DRY	No.2	SPF
C - E	2x4	DRY	No.2	SPF
E - G	2x4	DRY	No.2	SPF
B - I	2x4	DRY	No.2	SPF
I - F	2x4	DRY	No.2	SPF
ALL WEBS	2x3	DRY	No.2	SPF

DRY: SEASONED LUMBER.

PLATES (table is in inches)

JT	TYPE	PLATES	W	LEN	Y	X
B	TMB1-I	MT20	3.0	4.0	1.50	2.00
C	TTWW+m	MT20	5.0	6.0	2.25	1.50
D	TMW+w	MT20	2.0	4.0		
E	TTWW+m	MT20	5.0	6.0	2.25	1.50
F	TMB1-I	MT20	3.0	4.0	1.50	2.00
H	BMW1+w	MT20	2.0	4.0		
I	BS-t	MT20	3.0	6.0		
J	BMWWW1-t	MT20	4.0	6.0		
K	BMW1+w	MT20	2.0	4.0		

DIMENSIONS, SUPPORTS AND LOADINGS SPECIFIED BY FABRICATOR TO BE VERIFIED BY BUILDING DESIGNER

BEARINGS

JT	FACTORED GROSS REACTION VERT	HORZ	MAXIMUM FACTORED GROSS REACTION DOWN	HORZ	UPLIFT	INPUT BRG IN-SX	REQRD BRG IN-SX
B	352	0	352	0	0	18-1-11 (6-2-1fB)1-11	
K	352	0	352	0	0	18-1-11 (6-2-1fB)1-11	
J	718	0	718	0	0	18-1-11 (6-2-1fB)1-11	
H	352	0	352	0	0	18-1-11 (6-2-1fB)1-11	
F	352	0	352	0	0	18-1-11 (6-2-1fB)1-11	

VALUE IN PARENTHESIS INDICATES EFFECTIVE BEARING LENGTH

UNFACTORED REACTIONS

JT	1ST LCASE COMBINED	MAX./MIN. COMPONENT REACTIONS SNOW	LIVE	PERM.LIVE	WIND	DEAD	SOIL
B	271	180 / 0	42 / 0	0 / 0	0 / 0	49 / 0	0 / 0
K	313	134 / 0	98 / 0	0 / 0	0 / 0	81 / 0	0 / 0
J	565	354 / 0	102 / 0	0 / 0	0 / 0	109 / 0	0 / 0
H	313	134 / 0	98 / 0	0 / 0	0 / 0	81 / 0	0 / 0
F	271	180 / 0	42 / 0	0 / 0	0 / 0	49 / 0	0 / 0

BEARING MATERIAL TO BE SPF NO.2 OR BETTER AT JOINT(S) B, K, J, H, F

BRACING

TOP CHORD TO BE SHEATHED OR MAX. PURLIN SPACING = 6.25 FT.
MAX. UNBRACED BOTTOM CHORD LENGTH = 10.00 FT. OR RIGID CEILING DIRECTLY APPLIED.

ALL PITCH BREAKS AND PERIMETER CORNER JOINTS MUST BE LATERALLY RESTRAINED.

LOADING

TOTAL LOAD CASES: (4)

CHORDS

MEMB. FR-TO	MAX. FACTORED FORCE (LBS)	FACTORED VERT. LOAD (PLF) FROM	TO	LC1	MAX CSI (LC)	MAX. UNBRAC LENGTH
A- B	0 / 13	-84.3	-84.3	0.02 (1)	10.00	
B- M	-105 / 23	-84.3	-84.3	0.08 (1)	6.25	
M- C	-149 / 0	-84.3	-84.3	0.18 (1)	6.25	
C- D	-40 / 0	-84.3	-84.3	0.34 (1)	6.25	
D- E	-40 / 0	-84.3	-84.3	0.34 (1)	6.25	
E- O	-149 / 0	-84.3	-84.3	0.18 (1)	6.25	
O- F	-105 / 23	-84.3	-84.3	0.08 (1)	6.25	
F- G	0 / 13	-84.3	-84.3	0.02 (1)	10.00	
B- L	0 / 107	-28.0	-28.0	0.16 (1)	10.00	
L- K	0 / 107	-28.0	-28.0	0.16 (1)	10.00	
K- J	0 / 102	-28.0	-28.0	0.16 (2)	10.00	
J- I	0 / 102	-28.0	-28.0	0.16 (2)	10.00	
I- H	0 / 102	-28.0	-28.0	0.16 (2)	10.00	
H- N	0 / 107	-28.0	-28.0	0.16 (1)	10.00	
N- F	0 / 107	-28.0	-28.0	0.16 (1)	10.00	

WEBS

MEMB. FR-TO	MAX. FACTORED FORCE (LBS)	MAX CSI (LC)
K- C	-171 / 0	0.04 (1)
C- J	-76 / 0	0.05 (1)
J- D	-515 / 0	0.12 (1)
J- E	-76 / 0	0.05 (1)
H- E	-171 / 0	0.04 (1)
L- M	-408 / 86	0.00 (1)
N- O	-408 / 86	0.00 (1)

DESIGN CRITERIA

SPECIFIED LOADS:

TOP CH.	LL	=	25.6	PSF
	DL	=	3.0	PSF
BOT CH.	LL	=	10.5	PSF
	DL	=	7.0	PSF
TOTAL LOAD		=	46.1	PSF

SPACING = 24.0 IN. C/C

LOADING IN FLAT SECTION BASED ON A SLOPE OF 6.00/12

THIS TRUSS IS DESIGNED FOR RESIDENTIAL OR SMALL BUILDING REQUIREMENTS OF PART 9, NBCC 2010

THIS DESIGN COMPLIES WITH:
- PART 9 OF OBC 2012 , BCBC 2012 , ABC 2014
- CSA 086-09
- TPIC 2011

(55 % OF 31.3 P.S.F. G.S.L. PLUS 8.4 P.S.F. RAIN LOAD) EQUALS 25.6 P.S.F. SPECIFIED ROOF LIVE LOAD

CSI: TC=0.34 (C-D:1) , BC=0.16 (H-N:1) , WB=0.12 (D-J:1) , SSI=0.33 (F-N:1)

DOL LUMBER=1.00 NAIL=1.00 LS BEND=1.10 COMP=1.10 SHEAR=1.10 TENS= 1.10

COMPANION LIVE LOAD FACTOR = 0.50

TRUSS PLATE MANUFACTURER IS NOT RESPONSIBLE FOR QUALITY CONTROL IN THE TRUSS MANUFACTURING PLANT .

NAIL VALUES

PLATE	GRIP(DRY) (PSI) MAX	MIN	SHEAR (PLI) MAX	MIN	SECTION (PLI) MAX	MIN
MT20	618	354	1667	822	2284	1656

PLATE PLACEMENT TOL. = 0.250 inches

PLATE ROTATION TOL. = 5.0 Deg.

JSI GRIP= 0.61 (E) (INPUT = 0.90)
JSI METAL= 0.10 (I) (INPUT = 1.00)

LICENSED PROFESSIONAL ENGINEER
S. KATSOULAKOS
PROVINCE OF ONTARIO

DWG NO. TAM25469-17
STRUCTURAL
COMPONENT ONLY

TECHNICAL BULLETIN

HUS/LJS – Double Shear Joist Hangers

SIMPSON Strong-Tie®

All hangers have double shear nailing. This patented innovation distributes the load through two points on each joist nail for greater strength. It also allows the use of fewer nails, faster installation and the use of common nails for all connections. Do not bend or remove tabs.

MATERIAL: See table

FINISH: G90 galvanized

DESIGN:

- Factored resistances are in accordance with CSA O86-14
- Uplift resistances have been increased 15% No further increase is permitted
- Wood shear is not considered in the factored resistances given. The specifier must ensure that the joist and header capacities are capable of withstanding these loads.

INSTALLATION:

- Use all specified fasteners
- Nails: 16d = 0.162" dia. x 3½" long common wire
- Double shear nails must be driven at an angle through the joist or truss into the header to achieve the table loads
- Not designed for welded or nailer applications

OPTIONS:

- See current catalogue for options

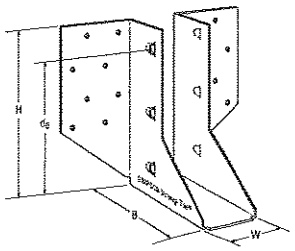

LJS26DS

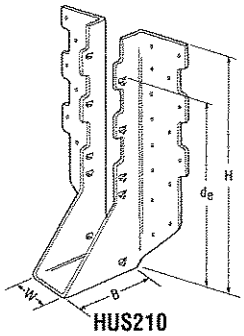

HUS210
(HUS26, HUS28, similar)

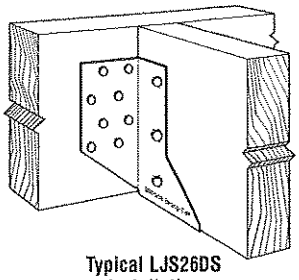

Typical LJS26DS Installation

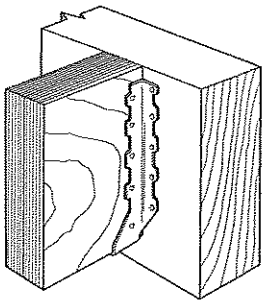

Typical HUS Installation

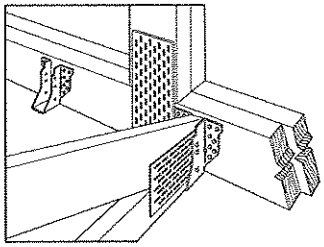

Typical HUS Installation (Truss Designer to provide fastener quantity for connecting multiple members together)

Model No.	Ga	Dimensions (in)				Fasteners		Factored Resistance (lbs)			
								D.Fir-L		S-P-F	
		W	H	B	d_e[1]	Face	Joist	Uplift (K_D=1.15)	Normal (K_D=1.00)	Uplift (K_D=1.15)	Normal (K_D=1.00)
LJS26DS	18	1 9/16	5	3½	4⅝	16-16d	6-16d	2055	4265	1460	4115
HUS26	16	1⅝	5⅜	3	3 15/16	14-16d	6-16d	2705	4940	2065	3875
HUS28	16	1⅝	7 3/32	3	6 3/32	22-16d	8-16d	3605	5365	2675	4345
HUS210	16	1⅝	9 3/32	3	7 31/32	30-16d	10-16d	4505	5795	4010	4740
HUS1.81/10	16	1 13/16	9	3	8	30-16d	10-16d	4505	6450	4010	5200

1. d_e is the distance from the seat of the hanger to the highest joist nail.

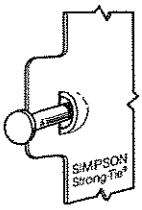

Dome Double Shear Nailing prevents tabs breaking off (available on some models).

U.S. Patent 5,603,580

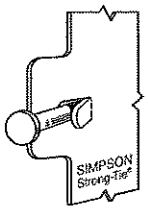

Double Shear Nailing Side View. Do not bend tab back.

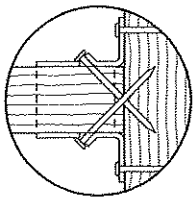

Double Shear Nailing Top View.

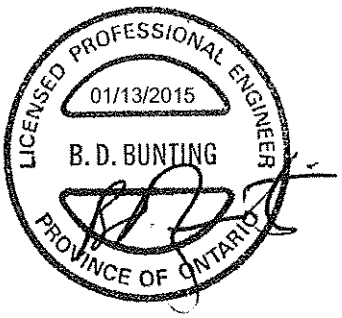

LIMIT STATES DESIGN

This technical bulletin is effective until December 31, 2016, and reflects information available as of January 1, 2015. This information is updated periodically and should not be relied upon after December 31, 2016; contact Simpson Strong-Tie for current information and limited warranty or see www.strongtie.com.

© 2015 Simpson Strong-Tie Company Inc.

800-999-5099
www.strongtie.com

TECHNICAL BULLETIN

LUS – Double Shear Joist Hangers

SIMPSON Strong-Tie®

All LUS hangers have double shear nailing. This patented innovation distributes the load through two points on each joist nail for greater strength. It also allows the use of fewer nails, faster installation and the use of common nails for all connections.

MATERIAL: 18 gauge

FINISH: G90 galvanized

DESIGN:

- Factored resistances are in accordance with CSA O86-14
- Uplift resistances have been increased 15%. No further increase is permitted.
- Wood shear is not considered in the factored resistances given. The specifier must ensure that the joist and header capacities are capable of withstanding these loads.

INSTALLATION:

- Use all specified fasteners
- Nails: 16d = 0.162" dia. x 3½" long common wire, 10d = 0.148" x 3" long common wire.
- Double shear nails must be driven at an angle through the joist or truss into the header to achieve the table loads
- Not designed for welded or nailer applications

OPTIONS:

- These hangers cannot be modified.

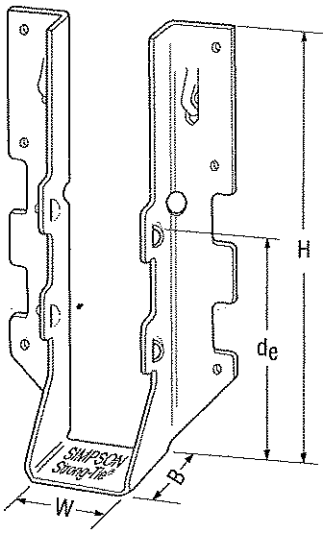

LUS28

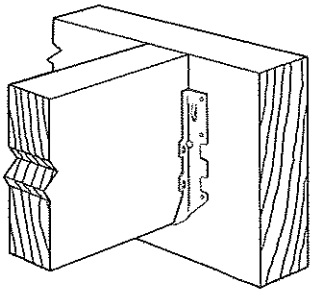

Typical LUS Installation

Model No.	Ga	Dimensions (in)				Fasteners		Factored Resistance (lbs)			
								D.Fir-L		S-P-F	
		W	H	B	d_e[1]	Face	Joist	Uplift (K_D=1.15)	Normal (K_D=1.00)	Uplift (K_D=1.15)	Normal (K_D=1.00)
LUS24	18	1 9/16	3 1/8	1 3/4	1 15/16	4-10d	2-10d	710	1630	645	1155
LUS24-2	18	3 1/8	3 1/8	2	1 13/16	4-16d	2-16d	835	2020	590	1435
LUS26	18	1 9/16	4 3/4	1 3/4	3 5/8	4-10d	4-10d	1420	2170	1290	1630
LUS26-2	18	3 1/8	4 7/8	2	4	4-16d	4-16d	1720	2595	1545	1920
LUS26-3	18	4 5/8	4 3/16	2	3 1/4	4-16d	4-16d	1720	2595	1545	2340
LUS28	18	1 9/16	6 5/8	1 3/4	3 3/4	6-10d	4-10d	1420	2520	1290	1790
LUS28-2	18	3 1/8	7	2	4	6-16d	4-16d	1720	3325	1545	2575
LUS28-3	18	4 5/8	6 1/4	2	3 1/4	6-16d	4-16d	1720	3325	1545	2375
LUS210	18	1 9/16	7 13/16	1 3/4	3 7/8	8-10d	4-10d	1420	2785	1290	2210
LUS210-2	18	3 1/8	9	2	6	8-16d	6-16d	2580	4500	2320	3195
LUS210-3	18	4 5/8	8 9/16	2	5 1/4	8-16d	6-16d	2580	3345	2320	2375

1. d_e is the distance from the seat of the hanger to the highest joist nail.

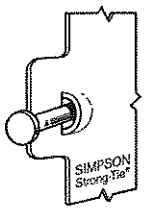

Dome Double Shear Nailing prevents tabs breaking off (available on some models).

U.S. Patent 5,603,580

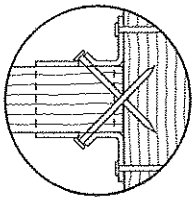

Double Shear Nailing Top View.

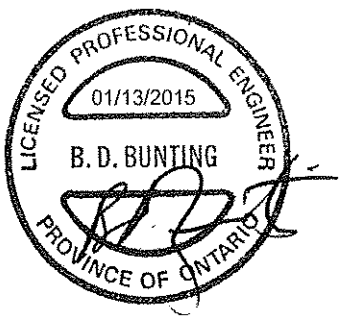

LIMIT STATES DESIGN

This technical bulletin is effective until December 31, 2016, and reflects information available as of January 1, 2015. This information is updated periodically and should not be relied upon after December 31, 2016; contact Simpson Strong-Tie for current information and limited warranty or see www.strongtie.com.

© 2015 Simpson Strong-Tie Company Inc.

800-999-5099
www.strongtie.com

TECHNICAL BULLETIN

HGUS – Double Shear Joist Hangers

SIMPSON Strong-Tie®

All HGUS hangers have double shear nailing. This patented innovation distributes the load through two points on each joist nail for greater strength. It also allows the use of fewer nails, faster installation and the use of common nails for all connections. Do not bend or remove tabs.

MATERIAL: 12 gauge

FINISH: G90 galvanized

DESIGN:

- Factored resistances are in accordance with CSA O86-14
- Uplift resistances have been increased 15%. No further increase is permitted.
- Wood shear is not considered in the factored resistances given. The specifier must ensure that the joist and header capacities are capable of withstanding these loads.

INSTALLATION:

- Use all specified fasteners
- Nails: 16d = 0.162" dia x 3½" long common wire
- Double shear nails must be driven at an angle through the joist or truss into the header to achieve the table loads
- Not designed for welded or nailer applications

OPTIONS:

- See current catalogue for options

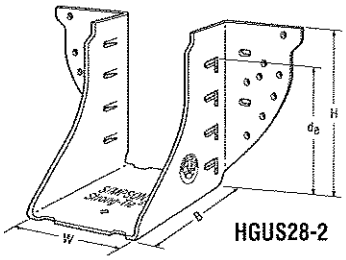

HGUS28-2

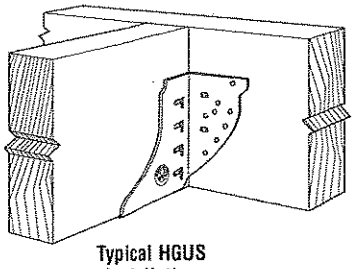

Typical HGUS Installation

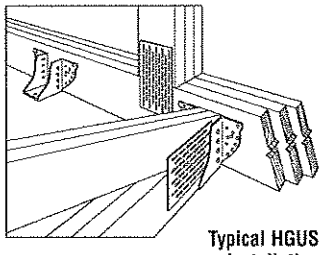

Typical HGUS Installation (Truss Designer to provide fastener quantity for connecting multiple members together)

Model No.	Ga	Dimensions (in)				Fasteners		Factored Resistance (lbs)			
								D.Fir-L		S-P-F	
		W	H	B	d_e[1]	Face	Joist	Uplift (K_D=1.15)	Normal (K_D=1.00)	Uplift (K_D=1.15)	Normal (K_D=1.00)
HGUS26	12	1⅝	5⅜	5	4 5/32	20-16d	8-16d	2685	6625	2685	5700
HGUS26-2	12	3 5/16	5 7/16	4	4⅛	20-16d	8-16d	4385	8950	3100	6355
HGUS26-3	12	4 15/16	5½	4	4⅛	20-16d	8-16d	4385	8950	3100	6355
HGUS26-4	12	6 9/16	5 7/16	4	4⅛	20-16d	8-16d	4385	8950	3100	6355
HGUS28	12	1⅝	7⅛	5	6⅛	36-16d	12-16d	3310	7675	3100	6900
HGUS28-2	12	3 5/16	7 3/16	4	6⅛	36-16d	12-16d	6070	12980	4310	9215
HGUS28-3	12	4 15/16	7¼	4	6⅜	36-16d	12-16d	6070	12980	4310	9215
HGUS28-4	12	6 9/16	7 3/16	4	6⅛	36-16d	12-16d	6070	12980	4310	9215
HGU210-2	12	3 5/16	9 3/16	4	8⅛	46-16d	16-16d	6840	14645	4855	10400
HGUS210-3	12	4 15/16	9¼	4	8⅜	46-16d	16-16d	6840	14645	4855	10400
HGUS210-4	12	6 9/16	9 3/16	4	8⅛	46-16d	16-16d	6840	14645	4855	10400
HGUS212-4	12	6 9/16	10⅝	4	10⅛	56-16d	20-16d	7640	14995	5425	10645
HGUS214-4	12	6 9/16	12⅝	4	11⅛	66-16d	22-16d	10130	16400	7195	11645

1. d_e is the distance from the seat of the hanger to the highest joist nail.

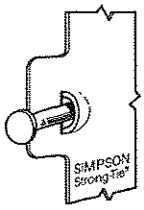

Dome Double Shear Nailing prevents tabs breaking off (available on some models).

U.S. Patent 5,603,580

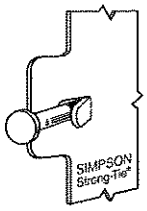

Double Shear Nailing Side View. Do not bend tab back.

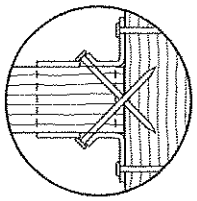

Double Shear Nailing Top View.

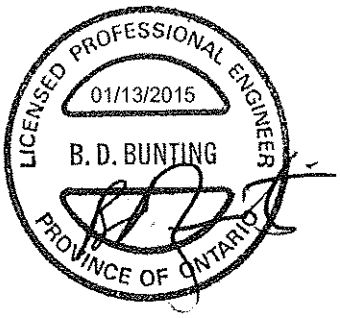

LIMIT STATES DESIGN

This technical bulletin is effective until December 31, 2016, and reflects information available as of January 1, 2015. This information is updated periodically and should not be relied upon after December 31, 2016; contact Simpson Strong-Tie for current information and limited warranty or see www.strongtie.com.

© 2015 Simpson Strong-Tie Company Inc.

800-999-5099
www.strongtie.com

ONTARIO WOOD TRUSS
FABRICATORS ASSOCIATION

TECH-NOTES

TN 15-001
Piggyback Bracing

Overview:

Where piggybacks are connected overtop of base trusses, 2x4 purlins must be first added to the flat portion of the base truss at a spacing no more than 24" o/c. These purlins not only provide support for the piggyback trusses above, but are required to laterally support the top chord of the base truss which will not have the sheathing directly connected to the flat portion of the base truss. This ensures the top chord, most often in compression, will not buckle laterally.

Further, the purlins in the plane of the flat portion require diagonal bracing to prevent lateral displacement of the purlins themselves where under certain conditions, the trusses may in fact all buckle in the same direction if this additional bracing is not added in the plane of the purlins.

Detail:

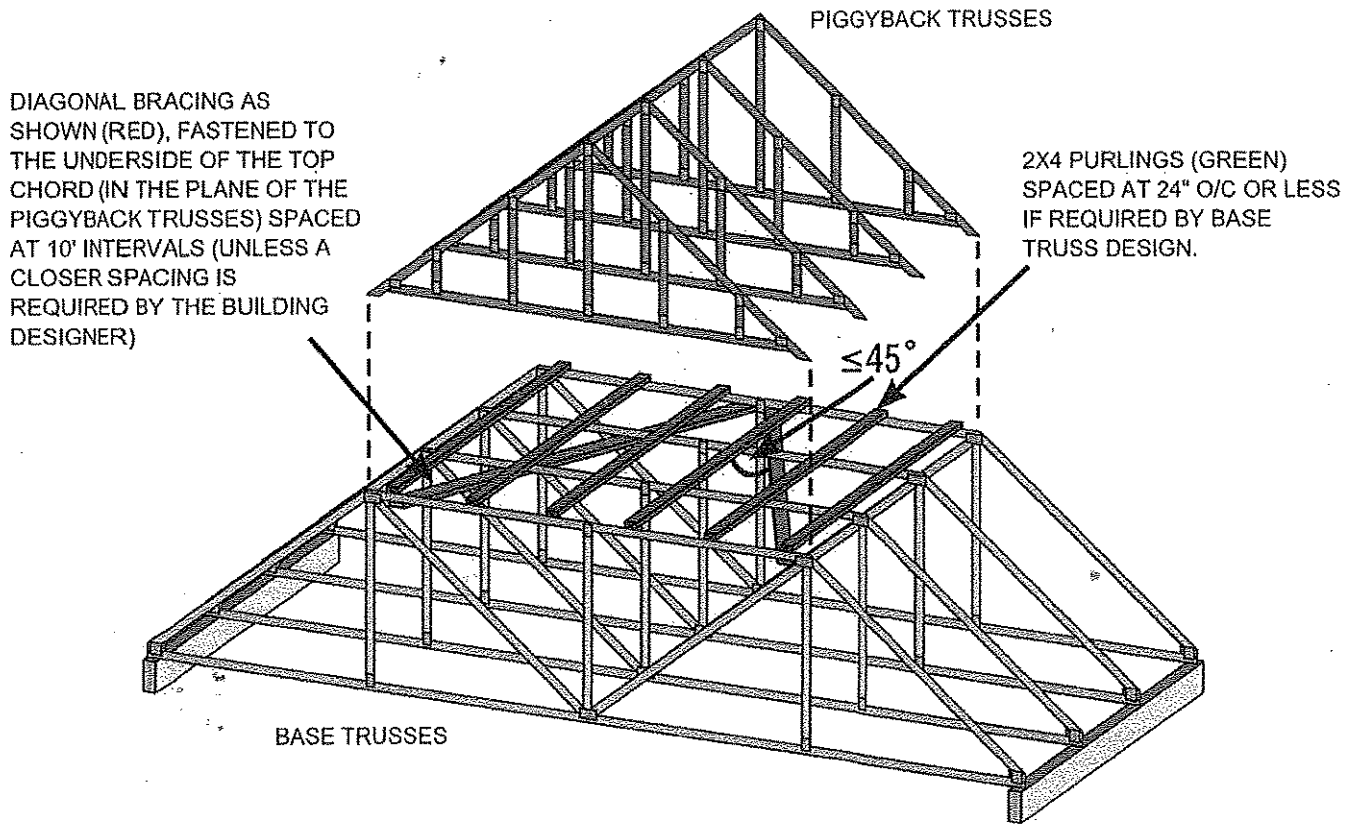

NOTE: THE SLOPED PORTION OF THE TOP CHORD OF THE BASE TRUSS AND PIGGYBACK TRUSS IN THIS SKETCH IS ASSUMED TO BE SHEATHED IN ACCORDANCE WITH THE OBC.

SKETCH FROM BCSI-CANADA 2013

Disclaimer:

OWTFA Tech Notes are intended to provide guidance to the design community both within the membership as well as to third party designers who might benefit from the information. The details have been developed by the OWTFA technical committee and although there may be professional engineers involved in development, the information contained in the tech-note are not intended to be used without having a professional engineer review the information for a specific application. The OWTFA takes no responsibility with respect to the information provided but has developed this tech-note to offer guidance where it is not currently readily available.

MICRO CITY
ENGINEERING SERVICES INC.

TEL: (519) 287 - 2242

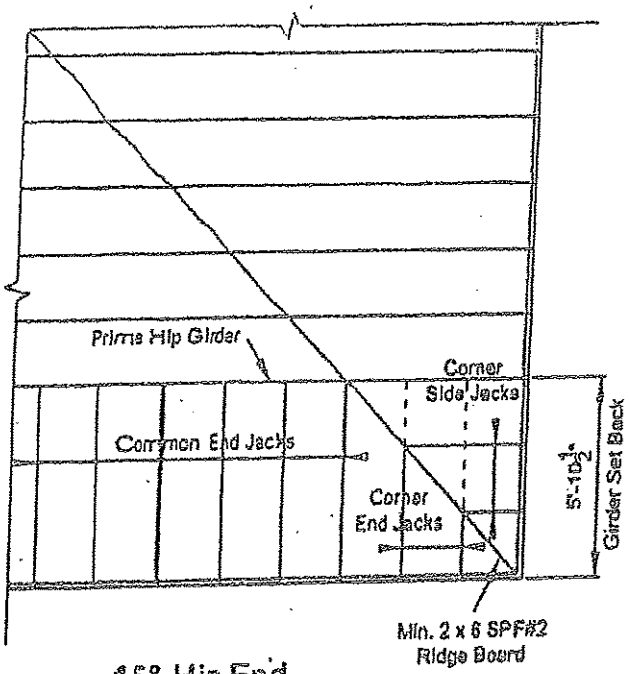

45° Hip End

LUMBER SPECIFICATION

TOP CHORD : 2 x 4 SPF#2

BOTTOM CHORD : 2 x 4 SPF#2

WEBS : 2 x 3 SPF#2

UNLESS OTHERWISE SHOWN

DESIGN LOAD:

TOP CHORD LIVE LOAD	: 34.8 P.S.F.
TOP CHORD DEAD LOAD	: 3.0 P.S.F.
BOTTOM CHORD LIVE LOAD	: 0.0 P.S.F.
BOTTOM CHORD DEAD LOAD	: 7.0 P.S.F.
TOTAL LOAD	: 44.8 P.S.F.

DWG NO TAM 3495.14 R1
STRUCTURAL
COMPONENT ONLY

LICENSED PROFESSIONAL ENGINEER
1-2-2014
S. KATSOULAKOS
PROVINCE OF ONTARIO

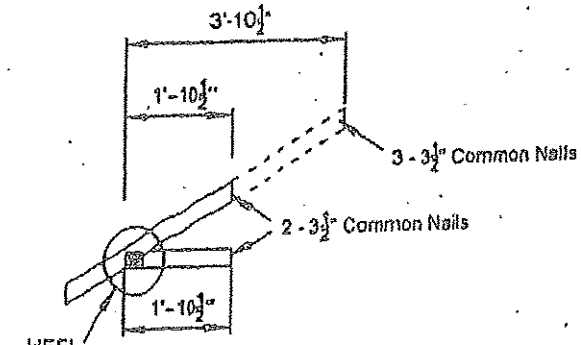

Corner Side Jacks

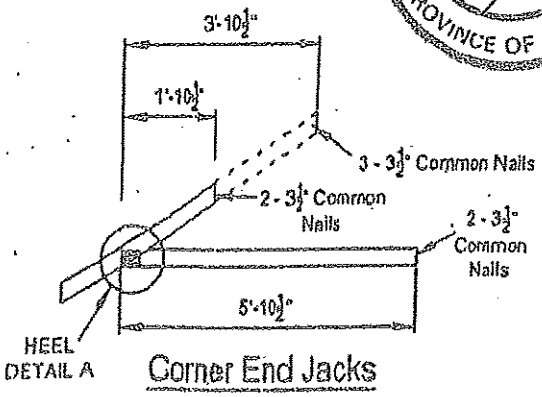

Corner End Jacks

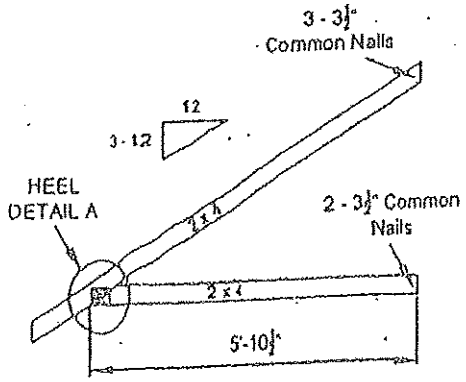

Common End Jacks

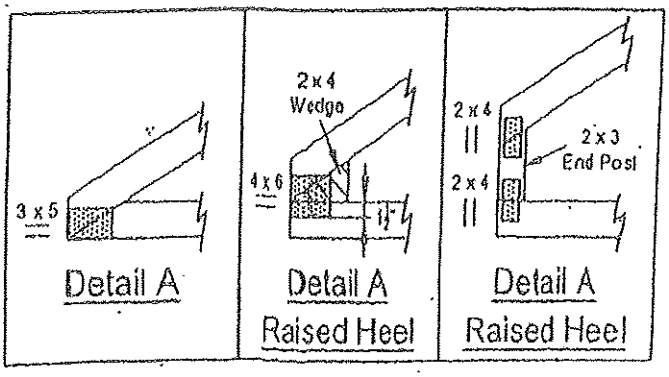

Detail A | Detail A Raised Heel | Detail A Raised Heel

NOTE: DESIGN CONFORMS TO PART 9, O.B.C. 2012 (LIMIT STATES DESIGN)
(TO BE INCLUDED AND USED AS PART OF A FULL TRUSS ENGINEERING PACKAGE)

MICRO CITY ENGINEERING SERVICES INC.

TEL: (519) 287 - 2242

R.R. #1, P.O. BOX 61, GLENCOE, ONTARIO, N0L 1M0

LUMBER SPECIFICATION

TOP CHORD : 2 x 4 SPF#2
BOTTOM CHORD : 2 x 4 SPF#2
WEBS : 2 x 3 SPF#2
UNLESS OTHERWISE SHOWN

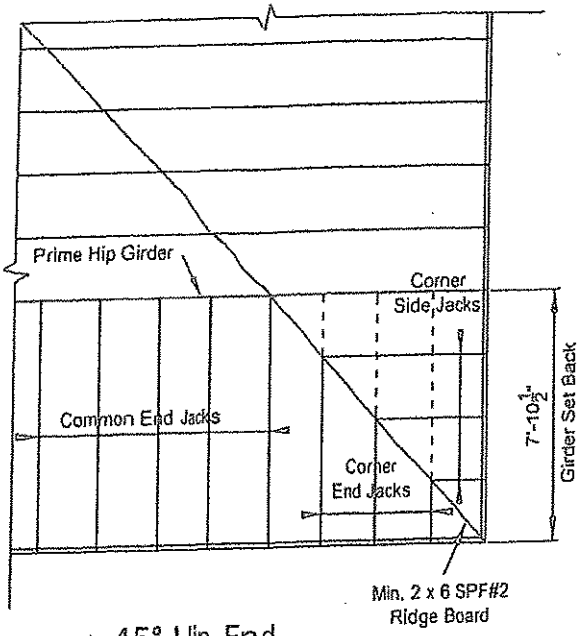

45° Hip End

DESIGN LOAD:

TOP CHORD LIVE LOAD	:	34.8 P.S.F.
TOP CHORD DEAD LOAD	:	3.0 P.S.F.
BOTTOM CHORD LIVE LOAD	:	0.0 P.S.F.
BOTTOM CHORD DEAD LOAD	:	7.0 P.S.F.
TOTAL LOAD	:	44.8 P.S.F.

DWG NO TAM 3503.14
STRUCTURAL
COMPONENT ONLY

LICENSED PROFESSIONAL ENGINEER
1-2014
S. KATSOULAKOS
PROVINCE OF ONTARIO

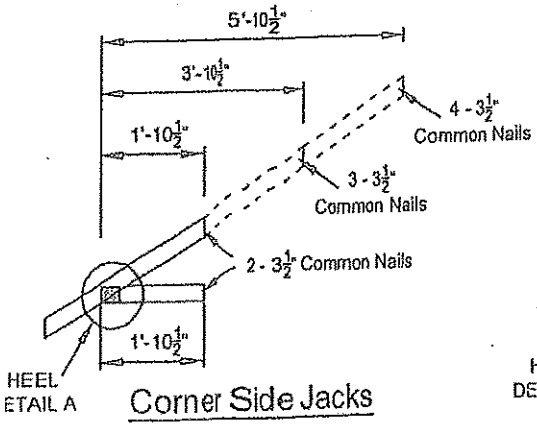

Corner Side Jacks

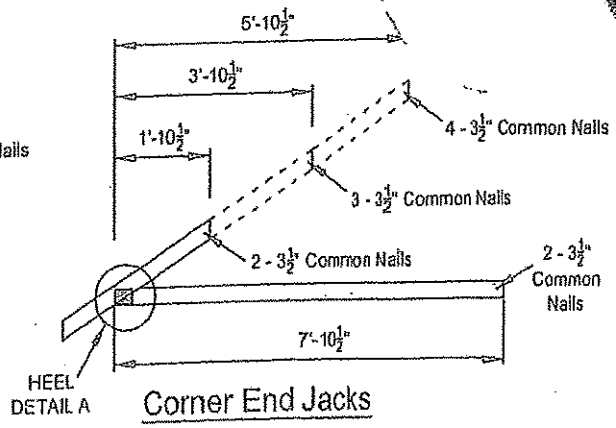

Corner End Jacks

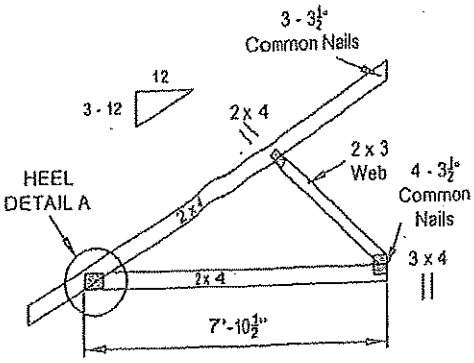

Common End Jacks

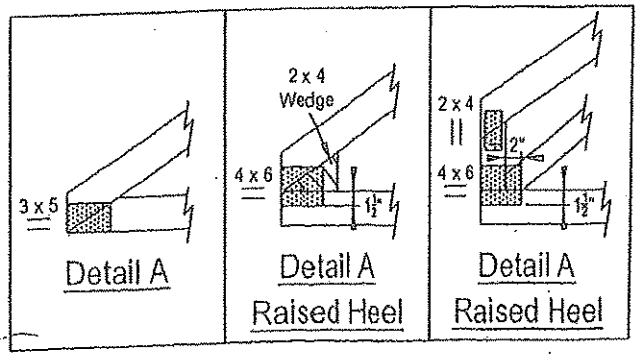

NOTE: DESIGN CONFORMS TO PART 9, O.B.C. 2012 (LIMIT STATES DESIGN)
(TO BE INCLUDED AND USED AS PART OF A FULL TRUSS ENGINEERING PACKAGE)

Symbols

PLATE LOCATION AND ORIENTATION

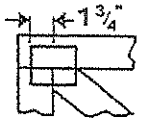

Center plate on joint unless x, y offsets are indicated. Dimensions are in ft-in-sixteenths or mm. Apply plates to both sides of truss and fully embed teeth.

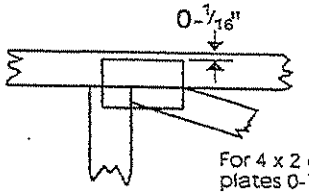

For 4 x 2 orientation, locate plates 0-1/16" from outside edge of truss.

This symbol indicates the required direction of slots in connector plates.

* Plate location details available in MiTek software or upon request.

PLATE SIZE

4 X 4

The first dimension is the plate width measured perpendicular to slots. Second dimension is the length parallel to slots.

LATERAL BRACING LOCATION

Indicated by symbol shown and/or by text in the bracing section of the output. Use T, I or Eliminator bracing if indicated.

BEARING

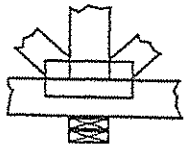

Indicates location where bearings (supports) occur. Icons vary but reaction section indicates joint number where bearings occur.

Industry Standards:

TPIC: Truss Design Procedures and Specifications for Light Metal Plate Connected Wood Trusses

DSB-89: Design Standard for Bracing.

BCSI: Building Component Safety Information, Guide to Good Practice for Handling, Installing & Bracing of Metal Plate Connected Wood Trusses.

Numbering System

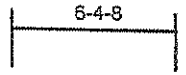

dimensions shown in ft-in-sixteenths or mm (Drawings not to scale)

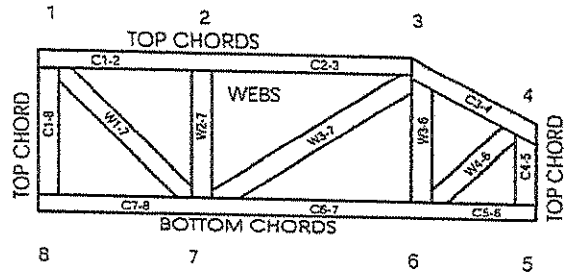

JOINTS ARE GENERALLY NUMBERED/LETTERED CLOCKWISE AROUND THE TRUSS STARTING AT THE JOINT FARTHEST TO THE LEFT.

CHORDS AND WEBS ARE IDENTIFIED BY END JOINT NUMBERS/LETTERS.

PRODUCT CODE APPROVALS

· CCMC Reports:

11996-L, 10319-L, 13270-L, 12691-R

© 2007 MiTek® All Rights Reserved

MiTek®

POWER TO PERFORM.™

MiTek Engineering Reference Sheet: MII-7473C rev. 10-'08

General Safety Notes

Failure to Follow Could Cause Property Damage or Personal Injury

1. Additional stability bracing for truss system, e.g. diagonal or X-bracing, is always required. See BCSI.
2. Truss bracing must be designed by an engineer. For wide truss spacing, individual lateral braces themselves may require bracing, or alternative T, I, or Eliminator bracing should be considered.
3. Never exceed the design loading shown and never stack materials on inadequately braced trusses.
4. Provide copies of this truss design to the building designer, erection supervisor, property owner and all other interested parties.
5. Cut members to bear tightly against each other.
6. Place plates on each face of truss at each joint and embed fully. Knots and wane at joint locations are regulated by TPIC.
7. Design assumes trusses will be suitably protected from the environment in accord with TPIC.
8. Unless otherwise noted, moisture content of lumber shall not exceed 19% at time of fabrication.
9. Unless expressly noted, this design is not applicable for use with fire retardant, preservative treated, or green lumber.
10. Camber is a non-structural consideration and is the responsibility of truss fabricator. General practice is to camber for dead load deflection.
11. Plate type, size, orientation and location dimensions indicated are minimum plating requirements.
12. Lumber used shall be of the species and size, and in all respects, equal to or better than that specified.
13. Top chords must be sheathed or purlins provided at spacing indicated on design.
14. Bottom chords require lateral bracing at 10 ft. spacing, or less, if no ceiling is installed, unless otherwise noted.
15. Connections not shown are the responsibility of others.
16. Do not cut or alter truss member or plate without prior approval of an engineer.
17. Install and load vertically unless indicated otherwise.
18. Use of green or treated lumber may pose unacceptable environmental, health or performance risks. Consult with project engineer before use.
19. Review all portions of this design (front, back, words and pictures) before use. Reviewing pictures alone is not sufficient.
20. Design assumes manufacture in accordance with TPIC Quality Criteria.

MICRO CITY ENGINEERING SERVICES INC.

TEL: (519) 287 - 2242

R.R. #1, P.O. BOX 61, GLENCOE, ONTARIO, NOL 1M0

CONVENTIONAL VALLEY FRAMING DETAIL

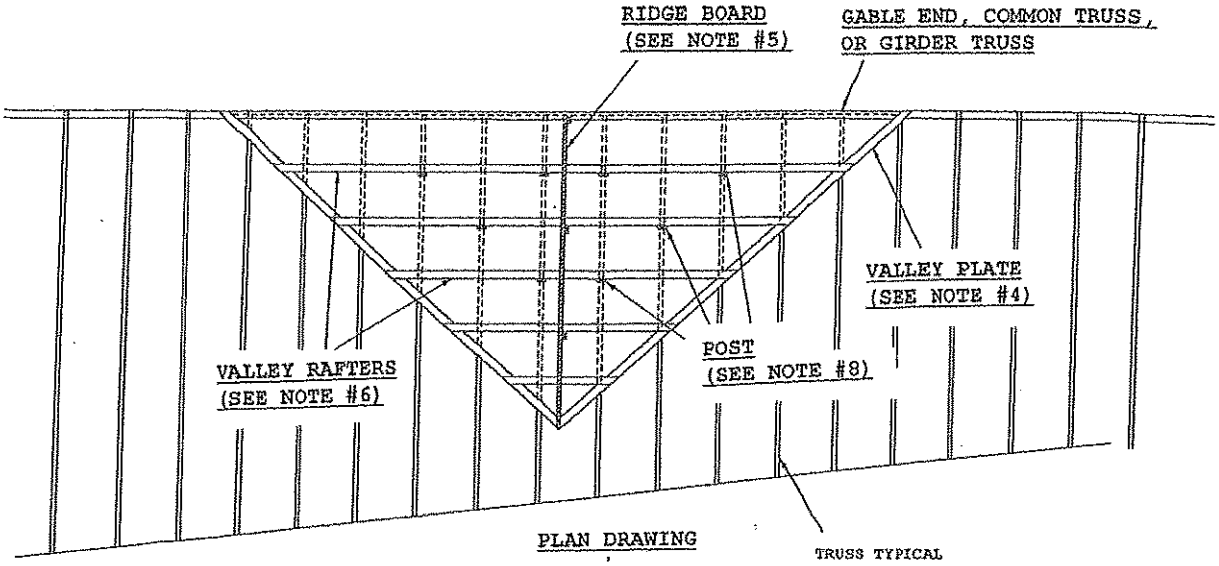

PLAN DRAWING

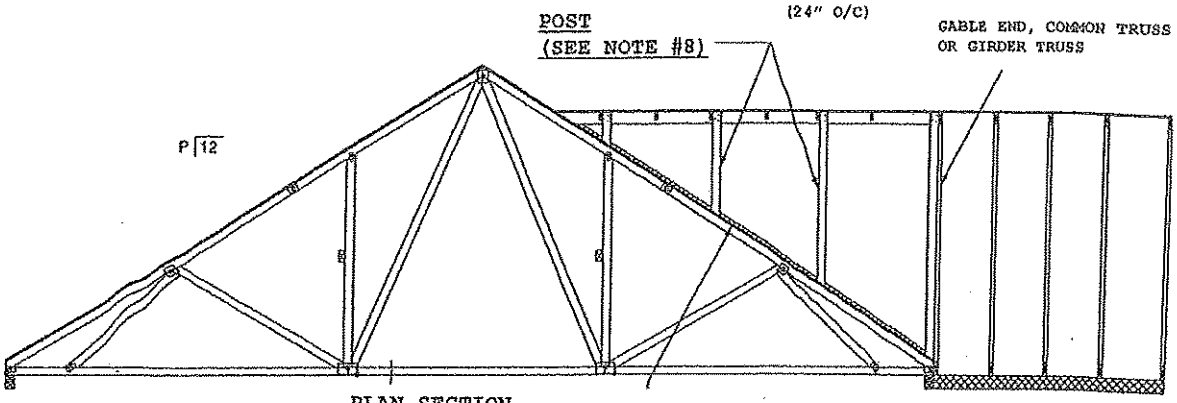

PLAN SECTION

TRUSS MUST
BE SHEATHED

GENERAL SPECIFICATIONS:

(1) WITH THE BASE TRUSSES ERECTED (INSTALLED), APPLY SHEATHING TOP CHORD OF SUPPORTING (BASE) TRUSSES.
(2) BRACE BOTTOM CHORD AND WEB MEMBERS AS PER PRE-ENGINEERED TRUSS DESIGNS.
(3) DEFINE VALLEY RIDGE BY RUNNING A LEVEL STRING FROM THE INTERSECTING RIDGE OF THE (a) GABLE END, (b) GIRDER TRUSS OR (c) COMMON TRUSS TO THE ROOF SHEATHING.
(4) INSTALL 2 X 6 VALLEY PLATES ON FLAT. FASTEN TO EACH SUPPORTING TRUSS WITH (2) 16d (3.5" X 0.131") NAILS.
(5) SET A 2 X 6 #2 RIDGE BOARD (MAX. 10'-0" RIDGE) OR 2 X 8 #2 SPF RIDGE BOARD (MAX. 20'-0" RIDGE). SUPPORT RIDGE BOARD WITH 2 X 4 POSTS SPACED 48" O/C. BEVEL BOTTOM OF POST TO SET EVENLY ON THE SHEATHING. FASTEN POST TO RIDGE WITH (4) 10d (3" X 0.131") NAILS. FASTEN POST TO ROOF SHEATHING WITH (3) 10d (3" X 0.131") TOE-NAILS.
(6) FRAME VALLEY RAFTERS FROM VALLEY PLATE TO RIDGE BOARD. MAXIMUM RAFTER SPACING IS 24" O/C. FASTEN VALLEY RAFTER TO RIDGE BEAM WITH (3) 16d (3.5" X 0.131") TOE-NAILS. FASTEN VALLEY RAFTER TO VALLEY PLATE WITH (3) 16d (3.5" X 0.131") TOE-NAILS.
(7) SUPPORT THE VALLEY RAFTERS WITH 2 X 4 POSTS AT 48" O/C (OR LESS) ALONG EACH RAFTER. INSTALL POSTS IN A STAGGERED PATTERN AS SHOWN ON PLAN DRAWING. ALIGN POSTS WITH TRUSSES BELOW. FASTEN VALLEY RAFTER TO POST WITH (4) 10d (3" X 0.131") NAILS. FASTEN POST THROUGH SHEATHING TO SUPPORTING TRUSSES WITH (2) 16d (3.5" X 0.131") NAILS.
(8) POSTS SHALL BE 2 X 4 #2 SPF OR BETTER. POSTS EXCEEDING 75" IN HEIGHT SHALL BE INCREASED TO 4 X 4 #2 SPF, OR BETTER, OR BE PRE-ASSEMBLED TWO (2) PLY 2 X 4 #2 SPF OR BETTER FASTENED TOGETHER WITH 2 ROWS OF 10d (3" X 0.131") NAILS AT 6" O/C.
(9) MAINTAIN A MINIMUM 3/4" LUMBER EDGE DISTANCE WHEN NAILING. NAIL SPACING SHOULD APPROXIMATE A MINIMUM 1-3/4" O/C OR MORE UNLESS NOTED OTHERWISE. ALL CONSTRUCTION TO CONFORM TO ONTARIO BUILDING CODE (CURRENT ADDITION) AT ALL TIMES.

NOTES:

(10) 48" O/C (MAXIMUM POST SPACING.
(11) ROOF LIVE LOAD = 34.8 PSF (MAX.)
(12) ROOF DEAD LOAD = 10.0 PSF (MAX.)
(13) PART 9 APPLICATION ONLY (ONTARIO BUILDING CODE)
(14) PART 4 APPLICATION ONLY (ONTARIO BUILDING CODE) WITH APPROVED REVIEW BY LICENSED PROFESSIONAL ENGINEER.
(15) BASE TRUSS SPACING (24" O/C MAX.)
(16) ALL PRE-ENGINEERED BASE TRUSS COMPONENTS TO BE SEALED BY LICENSED PROFESSIONAL ENGINEER AND THIS DETAIL TO BE VERIFIED AND APPROVED BY SAME WHEN RIDGE BOARD LENGTH EXCEEDS 12'-0".
(17) ALL BASE TRUSSES: P = 4 (4/12) - MINIMUM.
(18) ALL VALLEY RAFTERS: P = 4 (4/12) - MINIMUM.

LICENSED PROFESSIONAL ENGINEER
3-574
S. KATSOULAKOS
PROVINCE OF ONTARIO

DWG NO TAM 6305.14
STRUCTURAL
COMPONENT ONLY

Micro City Engineering Services Inc.
(BCIN: 26064; FIRM BCIN: 29991)
RR #1, Po Box 61
Glencoe, Ontario
N0L 1M0
(519) 287 - 2242; Fax: (519) 287 - 5750 (Call)

LICENSED PROFESSIONAL ENGINEER
1-20-14
S. KATSOULAKOS
PROVINCE OF ONTARIO

DWG NO ~~TRUS~~ 3-4-14
STRUCTURAL
COMPONENT ONLY

Responsibilities:

Micro City Engineering Services is responsible for the design of trusses as individual components.

It is the responsibilities of others to ascertain that the design loads utilized on this (these) drawing(s) meet or exceed the actual dead load imposed by the structure and the live load imposed by the local building code or the authorities having jurisdiction over such decisions.

All dimensions are to be verified by the owner, contractor, architect, or other authority having input over such decisions prior to truss component manufacture. At no time shall Micro City Engineering Services Inc. or its employees be responsible for dimension errors.

Micro City Engineering Services Inc. bears no responsibility for the erection of any truss components. Persons erecting truss components are cautioned to seek professional advice regarding temporary and permanent bracing systems and to be totally familiar with all aspects of truss erection prior to proceeding on any truss component erection job. Any bracing shown on Micro City Engineering Services Inc. or Tamarack Roof Trusses Inc. sealed or unsealed truss component drawings is specified for the single truss component in question and is identified as an integral part of the design for that particular truss component but is not meant to represent the only required bracing for that particular truss component when installed as a component in a series of truss components in a roof truss system.

It is the truss manufacturer's responsibility to ensure that trusses are manufactured in accordance with Micro City Engineering Services Inc. specifications outlined below:

SPECIFICATIONS:

Truss components sealed by Micro City Engineering Services Inc. must conform to the relevant sections of the current Building Code of Ontario and Canada (Part 4 or Part 9) or the current Farm Building Code of Canada in accordance with the application specified on the sealed truss component drawing. All truss component design procedures must conform to the current design standard issued by the Truss Plate Institute of Canada (TPIC). All unit lumber and nailing stresses identified on truss component design drawings and/or used in the design of individual truss components shall conform to the current CSA Wood Design standard identified in the current Building Code and TPIC Design Standards.

The lumber used to manufacture any truss component is to conform to the specified size and grade identified on the truss drawing.

The lumber used in the manufacture of any truss component is not to exceed 19% during its service use unless specifically noted on the truss drawing.

The lumber used in the manufacture of any truss component is not to be treated with any chemicals during its service life unless specifically noted on the truss drawing.

Connector plates shall be applied to both faces of the truss component at each joint and shall be positioned exactly as specified.

The top chord of any truss component is assumed to be continuously laterally braced by the roof sheathing or purlins at intervals specified on the sealed truss component drawing but not exceeding 24" o/c (Part 9 design) and not exceeding 48" o/c (Part 4 or Agricultural design).

When a truss component is to be installed with no rigid ceiling attached directly to the bottom chord, then the bottom chord is to be laterally braced at intervals not exceeding 3m (or 10'-0").

All sealed or unsealed truss component drawings provided by Micro City Engineering Services Inc. Or Tamarack Roof Trusses Inc. should be read in conjunction with the following:

Warning-Verify design parameters and READ NOTES ON THIS AND INCLUDED MITEK REFERENCE PAGE MII-7473C rev 10-'08 BEFORE USE. Design valid for use only with Mitek connectors. This design is based only upon parameters shown, and is for individual building component. Applicability of design parameters and proper incorporation of component is the responsibility of the building designer - not the truss designer. Bracing shown is for lateral support of individual web members only. Additional temporary bracing to insure stability during construction is the responsibility of the erector. Additional permanent bracing of the overall structure is the responsibility of the building designer. For general guidance regarding fabrication, quality control, storage, delivery, erection, and bracing, consult TPIC Appendix G - Minimum Quality Manufacturing Criteria available from www.tpic.ca and BCSI Building Component Safety Information available from the Truss Plate Institute, 781 N. Lee Street, Suite 312, Alexandria, VA, 22314.