Greenpark

RECEIVED
NOV 18 2022

CONSTRUCTION SUMMARY

Charisma Condominiums - Granerola Residences Ltd.

PURCHASER: Joaquim F. DAVID **TEL:**

Unit 13, Level 17 (1814-South)	Floor Plan C969		

CABINETRY

1 -

The Purchaser acknowledges being advised by the Vendor that the current colour selections for the kitchen, specifically surrounding the refrigerator will not be aesthetically pleasing. The Purchaser has selected a Navy Blue refrigerator and gable, but the upper cabinets above the refrigerator will be white. This will result in a blue gable abutting the white cabinets in the area of the refrigerator. The Vendor has advised against this colour combination, but the Purchaser insisted and has made his final selections as noted on the colour chart. The Purchaser shall accept the refrigerator, cabinets and gable colours as noted on the colour chart and shall not make any claims, including claims to the Tarion Warranty Corporation, in respect of the colour selections of the refrigerator, upper cabinets and gabiling. The Purchaser's selections are final.

10Nov22 Note:

3 - ALL BATHS - UPGRADE HARDWARE - 563SB
13Oct22 Note:

3 - KITCHEN - UPGRADE APPLIANCE PULLS - 563SB
13Oct22 Note: 3 APPLICANCE PULLS FOR FRIDGE TO MATCH ALL CABINET HARDWARE - 563SB

1 - KITCHEN - UPGRADE HARDWARE - ALL KITCHEN CABINETS - 563SB
13Oct22 Note:

1 - POWDER ROOM - INCREASE VANITY TO 36' HEIGHT
26Sep22 Note:

1 - ENSUITE 2 BATH - INCREASE VANITY TO 36' HEIGHT
26Sep22 Note:

1 - KITCHEN - SOFT CLOSE DOORS AND DRAWERS
26Sep22 Note:

1 - ENSUITE 2 - SONATA SATIN SNOW
26Sep22 Note:

1 - POWDER ROOM - UP 5 MISSION - 715 SIMPLY NAVY
26Sep22 Note:

1 - MASTER ENSUITE - UP 5 - MISSION - 715 SIMPLY NAVY
26Sep22 Note:

1 - MASTER ENSUITE - INCREASE VANITY HEIGHT TO 36"
26Sep22 Note: [redacted]

1 - CABINETRY - KITCHEN - LIGHT VALENCE SHIELD.
26Sep22 Note:

1 - KITCHEN - EXTENDED UPPERS - UP 5
26Sep22 Note:

1 - KITCHEN - UPGRADE 5 CABINETRY
26Sep22 Note:
INCLUDES 2 TONE KITCHEN

Greenpark

CONSTRUCTION SUMMARY

Charisma Condominiums - Granerola Residences Ltd.

PURCHASER: Joaquim F. DAVID **TEL:**

Unit 13, Level 17 (1814-South)	Floor Plan C969		

1 - FOR CONFIRMATION ONLY - 2 GLASS SHELVES IN THE GLASS DOOR UPPER ABOVE FRIDGE
10Nov22 Note: AS PER PURCHASER REQUEST

1 - KITCHEN CABINETRY - BUILT-IN FRIDGE CABINET
13Oct22 Note:

1 - CABINETRY FEE FOR FLUSH INSTALLATION - INTEGRATED FRIDGE
13Oct22 Note: APPLIANCE DOOR PANELS - PRICED SEPARATELY.

1 - KITCHEN CABINETRY ACCESSORY - GLASS SHELVES - STRAIGHT

INSTALL GLASS SHELVES AT CABINETS WITH GLASS DOORS - SEE SKETCH
26Sep22 Note: GLASS DOORS PRICED SEPARATELY

1 - KITCHEN - ADD PANEL TO DISHWASHER
26Sep22 Note:

1 - KITCHEN - ADD PANELS TO FRIDGE
26Sep22 Note:

4 - KITCHEN - ADD 4 GLASS CABINET DOORS - PRAIRIE GLK 338

***SEE SKECH FOR LOCATION.
26Sep22 Note:

CONSTRUCTION

1 - RE-DESIGN MASTER BEDROOM CLOSET -- SEE SKETCH.

**DELETE WALK-IN CLOSET AND **INSTALL STANDARD DEPTH CLOSET WITH FRAMELESS MIRROR SLIDING DOOR WITH MIRRORED FASCIA.
18Nov22 Note:

1 - DELETE MIRROR IN ALL 3 WASHROOMS
26Sep22 Note:

1 - 2 BEDROOMS - SMOOTH CEILING
26Sep22 Note:

COUNTER TOP

1 - POWDER ROOM - UPGRADE COUNTERTOP EDGE
26Sep22 Note:

1 - ENSUITE 2 - UPGRADE COUNTERTOP EDGE
26Sep22 Note:

1 - MASTER ENSUITE - UPGRADE COUNTERTOP EDGE
26Sep22 Note:

1 - POWDER ROOM - COUNTERTOP
26Sep22 Note:

1 - ENSUITE 2 - UPGRADE COUNTERTOP
26Sep22 Note:

1 - MASTER ENSUITE - UPGRADE COUNTERTOP
26Sep22 Note:

Greenpark

CONSTRUCTION SUMMARY

Charisma Condominiums - Granerola Residences Ltd.

PURCHASER: Joaquim F. DAVID **TEL:**

Unit 13, Level 17 (1814-South)	Floor Plan C969		

1 - KITCHEN - UPGRADE EDGE
26Sep22 Note:

1 - KITCHEN - UPGRADE COUNTERTOP AND BACKSPLASH
26Sep22 Note:

DOORS AND TRIM

1 - DELETE MASTER BEDROOM WALK IN CLOSET AND ADD A CLOSET WITH SLIDING MIRROR DOORS - FRAMELESS DOORS
26Sep22 Note:
*****INSTALL FRAMELESS MIRROR SLIDING DOOR WITH MIRRORED FASCIA AT MASTER BEDROOM (FOR CONFIRMATION PURPOSES)**

ELECTRICAL

1 - KITCHEN - ADD ELECTRICAL PLUG FOR FUTURE OVER THE RANGE MICROWAVE/HOOD FAN
26Sep22 Note:

2 - ADD 2 LIGHTS AT MAIN HALL AREA - SEE SKETCH
26Sep22 Note: STANDARD LIGHTS TO REMAIN ON SEPARATE SWITCHES - SEE SKETCH

1 - ADD LIGHT IN DINING ROOM
26Sep22 Note: STANDARD CAPPED LIGHT ABOVE ISLAND TO REMAIN ON A SEPARATE SWITCH.

1 - LIVING ROOM ADD A LIGHT
26Sep22 Note:

FLOORING

1 - LAMINATE - PARK LANE SERIES IN LIEU OF STANDARD
26Sep22 Note:

MIRRORS AND GLASS

1 - MASTER BEDROOM - FRAMELESS MIRROR SLIDING DOOR WITH MIRRORED FASCIA
18Nov22 Note: WALK-IN CLOSET DELETED. STANDARD DEPTH CLOSET TO BE INSTALLED WITH FRAMELESS MIRROR SLIDING DOOR WITH MIRRORED FASCIA

1 - BEDROOM 2 - CLOSET SLIDER - FRAMELESS MIRROR SLIDING DOOR WITH MIRRORED FASCIA IN LIEU OF STANDARD
26Sep22 Note:

1 - MASTER ENSUITE - SHOWER - FRAMELESS CLEAR GLASS SHOWER DOOR WITH SIDE PANEL TO CEILING FOR 5 FOOT SHOWER ? INCLUDES CHROME KNOB & HINGES
26Sep22 Note:

PLUMBING

1 - KITCHEN - WATERLINE ROUGH-IN FOR FRIDGE
26Sep22 Note:

3 - ALL BATHS - AVENAL TOILET - 4772 HNW/4771HHVU SINGLE FLUSH
26Sep22 Note:

1 - POWDER ROOM - MOEN BATHROOM ACCESSORIES - METHOD - PAPER HOLDER - CHROME #YB2408
26Sep22 Note:

1 - ENSUITE 2 - MOEN BATHROOM ACCESSORIES - METHOD - PAPER HOLDER - CHROME #YB2408
26Sep22 Note:

Greenpark

CONSTRUCTION SUMMARY

Charisma Condominiums - Granerola Residences Ltd.

PURCHASER: Joaquim F. DAVID **TEL:**

Unit 13, Level 17 (1814-South)	Floor Plan C969		

1 - MASTER ENSUITE - MOEN BATHROOM ACCESSORIES - METHOD - PAPER HOLDER - CHROME #YB2408
26Sep22 Note:

1 - POWDER ROOM - MOEN BATHROOM ACCESSORIES - METHOD - 18 INCH TOWEL BAR - CHROME #YB2418
26Sep22 Note:

1 - ENSUITE 2 - MOEN BATHROOM ACCESSORIES - METHOD - 18 INCH TOWEL BAR - CHROME #YB2418
26Sep22 Note:

1 - MASTER ENSUITE - MOEN BATHROOM ACCESSORIES - METHOD - 18 INCH TOWEL BAR - CHROME #YB2418
26Sep22 Note:

PROMOTIONAL

1 - PROMO AS PER OFFER
26Sep22 Note:

EXTRAS AS PER OFFER

1 Parking Unit - location to be selected by the Vendor at their sole discretion.
Worksheet Note:

The Purchaser acknowledges that the Purchase Price is inclusive of all credits and promotional packages available at the time of purchase.
Worksheet Note:

The Vendor agrees that notwithstanding any other term or provision in this Agreement included in the Purchase Price and in addition to those items detailed in Schedule D to the Agreement of Purchase and Sale, the Purchaser is entitled to a credit of Five
Worksheet Note:

This Document is Extremely Time Sensitive - Printed 18 Nov 22 at 13:53

Greenpark

INTERIOR COLOUR SCHEME

Purchaser: Joaquim F. DAVID
Telephone Res. / Bus: /
Decor Advisor: Ida Viola
Lock Date: 9/26/2022 11:05:00

Const. No.: Unit 13, Level 17
Municipal: 1814
Suite Type: C969
Project/Phase: Granerola Residences Ltd./South

Layout Changes: ○ Yes ● No
Sketch Attached: ● Yes ○ No

1. Kitchen and Vanities

	Style and Colour	Hardware
Kitchen	SEE BELOW	563SB
Main Bathroom	N/A	N/A
Master Ensuite Bathroom	MISSION 715 SIMPLY NAVY	563SB
Bedroom 2 Ensuite	SONATA SATIN SNOW	563SB
Powder Room	MISSION 715 SIMPLY NAVY	563SB

Built In Appliances ● Yes ○ No **Kitchen Extended Upper Cabinets** ● Yes ○ No

Comment

KITCHEN- BASE CABINETS INCLUDING D/W PANEL, ISLAND, FRIDGE&FREEZER DOOR PANELS ONLY & FRIDGE GABLE ONLY-MISSION 715 SIMPLY NAVY
KITCHEN- UPPERS CABINETS & ABOVE FRIDGE UPPER ONLY-MISSION 614 CRISP WHITE
NOTE: INTEGRATED FRIDGE PROVISION & DOOR PANELS HARDWARE #BP873304195 / DISHWASHER DOOR PANEL HARDWARE #563SB

2. Counters

	Counter	Edge
Kitchen	CALACATTA QUARTZITE	#360
Main Bathroom	N/A	N/A
Master Ensuite Bathroom	CALACATTA QUARTZITE	#360
Bedroom 2 Ensuite	CALACATTA QUARTZITE	#360
Powder Room	CALACATTA QUARTZITE	#360
Kitchen Backsplash	CALACATTA QUARTZITE	

Comment

** Refer to Construction Summary

3. Flooring

	Selection
Vestibule/Main Hall	LAMINATE-PARKLANE - VENICE OAK TL-EL3990
Kitchen	LAMINATE-PARKLANE - VENICE OAK TL-EL3990
Living Room/Dining Room	LAMINATE-PARKLANE - VENICE OAK TL-EL3990
Den/Office	N/A
Master Bedroom	LAMINATE-PARKLANE - VENICE OAK TL-EL3990
Bedroom #2	LAMINATE-PARKLANE - VENICE OAK TL-EL3990
Bedroom #3	N/A
Powder Room	TILE-CITY WHITE MATTE 12X24
Laundry Room	TILE-WHITE MATTE 8X8
Main Bath	N/A
Master Ensuite Bathroom	TILE-CITY WHITE MATTE 12X24
Bedroom 2 Ensuite	TILE-CITY WHITE MATTE 12X24

Comment

** Refer to Construction Summary - Standard Grout throughout unless specified

4. Wall Tile

	Selection	Describe
Main Bath	N/A	
Master Ensuite Bathroom	TILE-GLOSSY WHITE 8X16	
Bedroom 2 Ensuite	TILE-GLOSSY WHITE 8X16	
Kitchen Backsplash	CALACATTA QUARTZITE	

Comment

** Refer to Construction Summary - Standard Grout throughout unless specified

Initial: _____

Printed 11/10/2022 16:55:10

Greenpark

INTERIOR COLOUR SCHEME

Purchaser:	Joaquim F. DAVID	**Const. No.:**	Unit 13, Level 17
Telephone Res. / Bus:	/	**Municipal:**	1814
Decor Advisor:	Ida Viola	**Suite Type:**	C969
Lock Date:	9/26/2022 11:05:00	**Project/Phase:**	Granerola Residences Ltd./South

5. Misc

Water Line Rough-in for Fridge	● Yes	○ No
Upgrade Bathroom Accessories	● Yes	○ No

Comment

** Refer to Construction Summary

6. Wall, Trim and Door Paint - Birch White Paint Throughout unless specified below.

Entrance Vestibule		**Living Room**	
Main Hall		**Dining Room**	
Kitchen		**Den/Library**	
Laundry Room		**Master Bedroom**	
Main Bathroom		**Bedroom #2**	
Master Ensuite Bathroom		**Bedroom #3**	

Comment

** Refer to Construction Summary

7. General Comments

** Refer to Construction Summary

Disclaimers and Notes

1) Colours of all materials are as close as possible to builder's selection, but not necessarily identical due to variances in manufacturing.
2) The selection images are digital photographs of the Vendor's samples at its Decor Centre. Such images when displayed on your computer monitor may not match Decor Centre samples due to the hardware/software configuration of the computer.

   In the event of conflict between selection images and the Décor Centre samples, Décor Centre samples shall prevail.
3) Any extras listed above are null and void unless accompanied by a separate invoice/amendment. Said invoice must be paid in full.
4) The Purchaser agrees that this colour selection is final and that no changes will be permitted, unless required by the Vendor.
5) The Purchaser acknowledges reading and accepting document which contains other miscellaneous disclaimers.

Signature: _____ Date: Nov 16/2022 Signature: _____ Date: _____

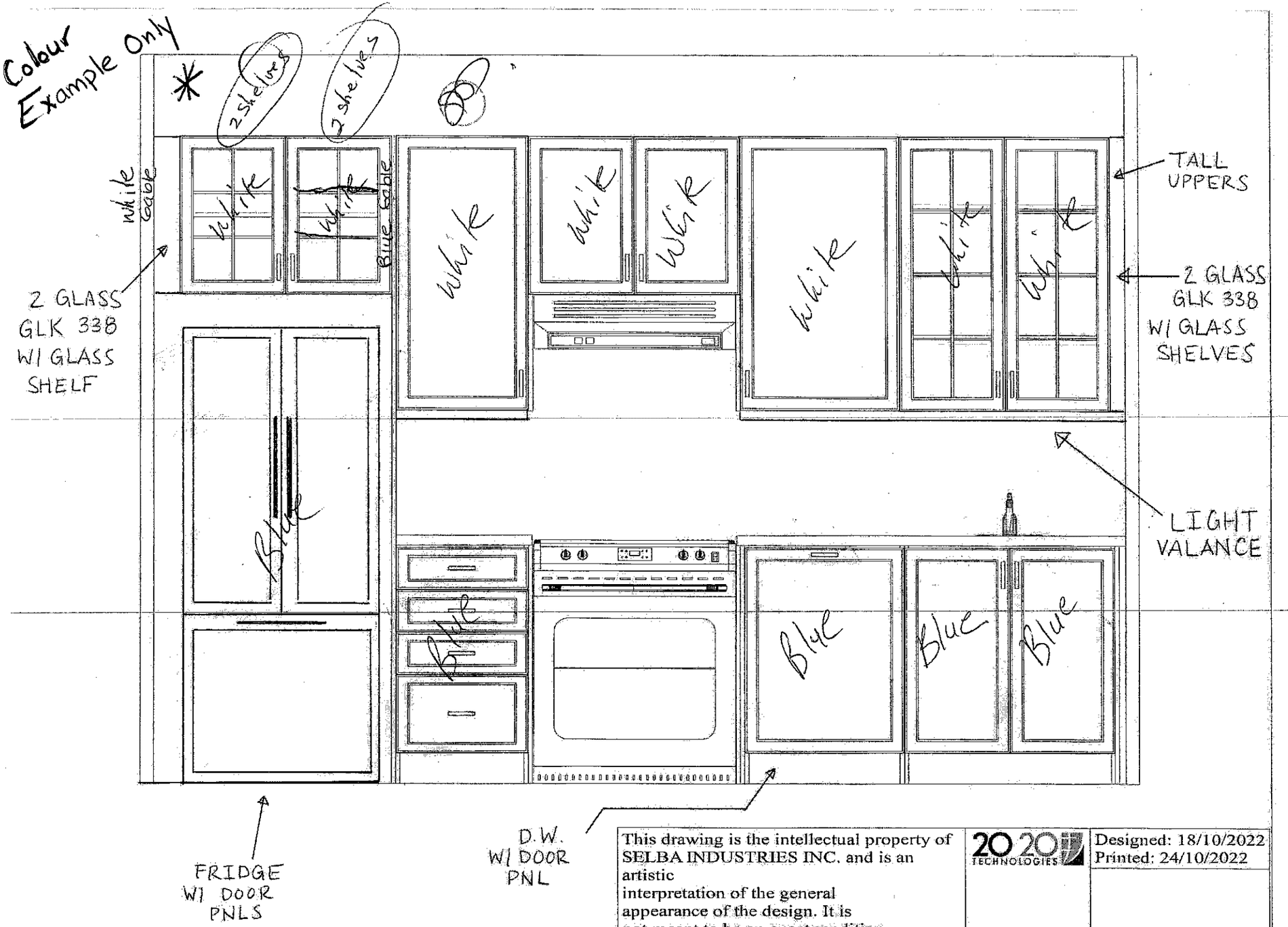

This drawing is the intellectual property of SELBA INDUSTRIES INC. and is an artistic interpretation of the general appearance of the design. It is not meant to be an exact rendition.

2020 TECHNOLOGIES

Designed: 18/10/2022
Printed: 24/10/2022

GREENPARK CHARISMA C969 LOT 1814 OCT 24 | LAYOUT | Drawing #: 1

SUITE 1814 South.

September 26, 2019

SCHEDULE 'A'

Charisma² ON THE PARK

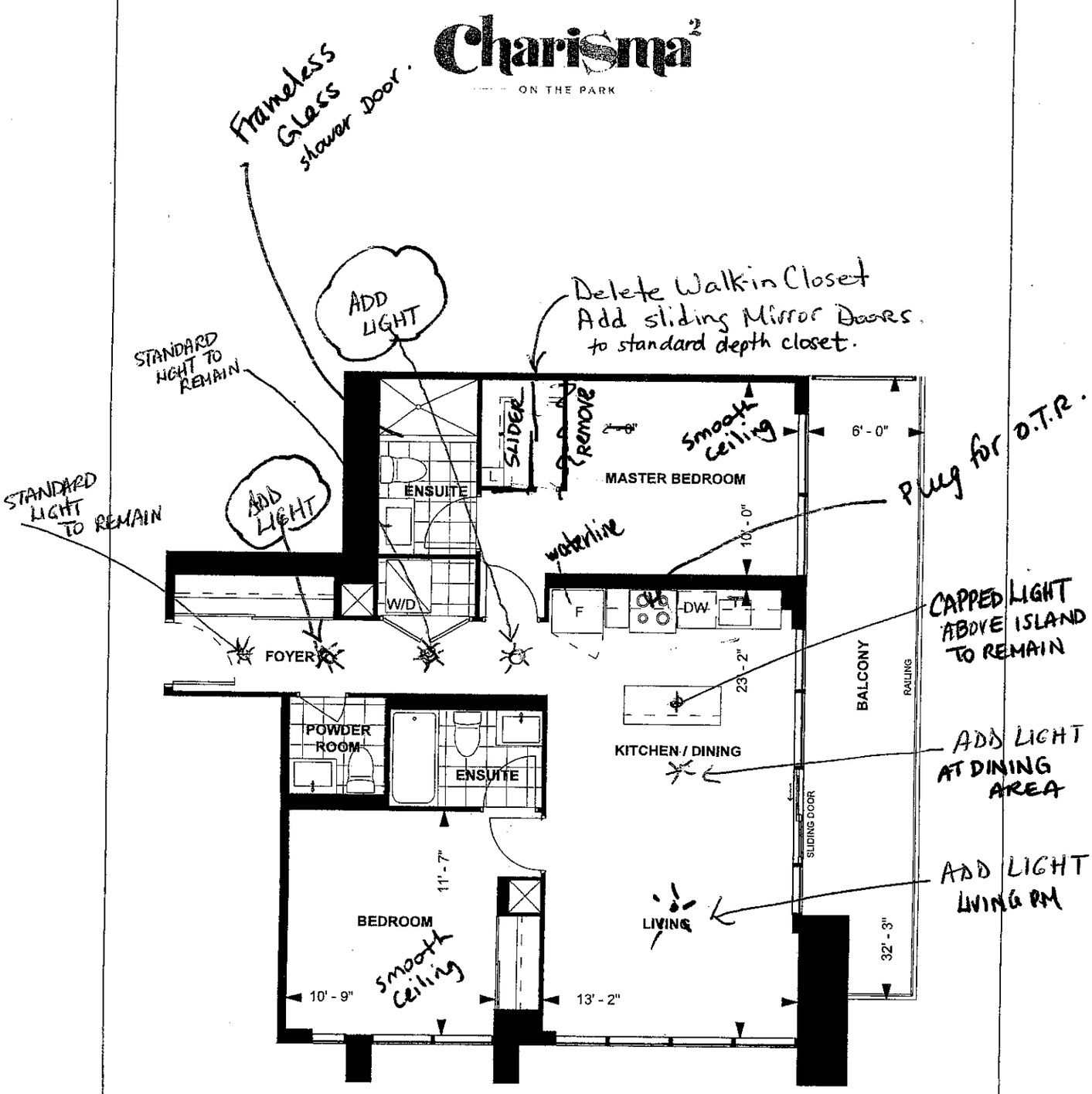

C969
TOWER SUITE
SOUTH TOWER
9' CEILING

969 sq. ft.
2-BEDROOM

LEVEL 9-23

Purchaser Initials _____ Purchaser Initials _____ Date Oct 7/19

Unit No. 13 Level No. 17 Suite No. 1814

Dimensions, specifications, layouts, location of materials and fixtures, tile floor patterns and architectural detailing (including window size and location and door size, location and swing) are approximate only and are subject to change or modifications, without notice. Actual usable floor space varies from stated floor area. Ceiling height measured from top of floor slab to underside of floor slab above and excludes finishes, bulkheads and drop ceilings. Orientation of suite may be reversed and Purchaser agrees to accept same. Balconies decks and terraces are exclusive use common elements shown for display purposes only and location and size are subject to change without notice. All illustrations are artist concept only. The provisions of the Agreement of purchase and sale apply to this Schedule. E. & O.E.

FILE NAME: GREENPARK CHARISMA LOT 1814 OCT 24 22

* 2 TONE Kitchen - See colour chart for Colour Details.
* SOFT CLOSE DOOR & DRAWERS
* LIGHT Valence Shield
* Extended Uppers.
* upgrade hardware

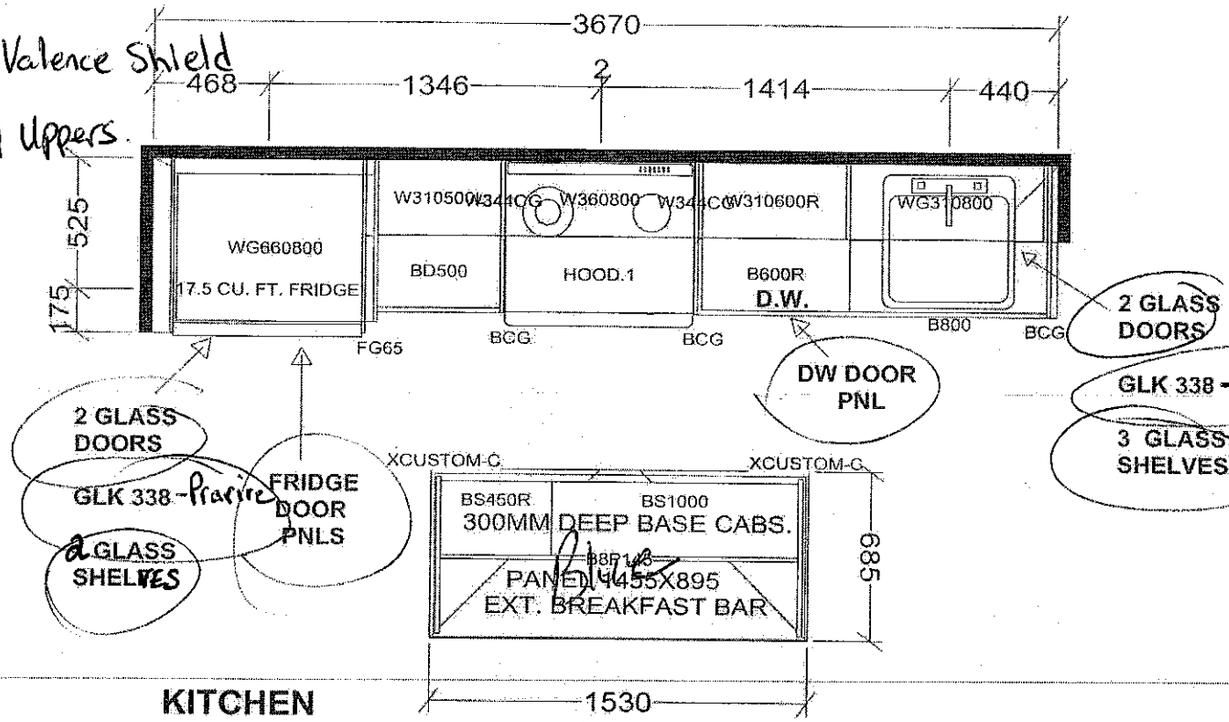

KITCHEN

PROTOTYPE

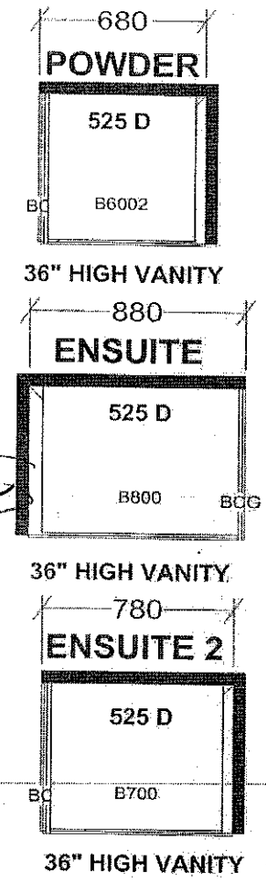

* 36" vanity height for all bathrooms

BASE & VANITY CABINETS ON ADJUSTABLE LEGS

TOWER & PODIUM SUITES
NORTH TOWER X14
SOUTH TOWER X18

Selba Industries J# _____

W WDTH_____ W HGHT_____ W CNT_____

FLOOR HGHT_____ DOOR HGHT_____

ST CENT_____ 2X4_____ VENT BOX COVER_____

This drawing is the intellectual property of SELBA INDUSTRIES INC. and is an original desigh which must not be released or copied unless applicable fee has been paid or job order placed.

DESIGNER: KS
DATE: JAN 6 22/
rev'd Sept 6 22 arch review

JOB NUMBER:
BUILDER: GREENPARK
SITE: GRANEROLA NORTH & SOUTH
MODEL: C969
LOT #: 1814

SUITE 1814

DAVID, JACK

SUITE 1814
VAUGHAN, ON TBA TBA
(416) 231-7535

COAST APPLIANCES

Contents *Page no.*

RS32A72J1 3-11
Fisher & Paykel Refrigeration

Integrated French Door Refrigerator Freezer, 32", Ice

CCHS900P2MS1 12-13
Cafe Range

SHVM63W53N 14-16
Bosch Dishwasher

300 Series Dishwasher 24"

WFW560CHW 17-20
Whirlpool Washer

4.3 cu. ft. Closet-Depth Front Load Washer with Intuitive Controls

YWED5620HW 21-27
Whirlpool Dryer

EAL330S2 28-29
Elica Ventilation

ALLASIO Under Cabinet | 30" SS LED

Coast Appliances
coastappliances.com

Andrew Haidari
Commercial Sales Representative
905-303-6909

Inv **S03562890**
Version 1.1

Fri, Sep 23, 2022
2:10 PM EDT

To ensure a smooth project it is the responsibility of the homeowner / purchaser of appliances for this project to share all the attached specifications to ensure the cabinet provider, contractor, or any other tradesperson have all the information required to complete their work accurately.

Specifications are subject to change. If any tradesperson has questions regarding the attached specifications please contact our sales associate.

enterprise.steelcod.com/sp/csta/01E68BUD

Note about page numbers:
Because the original manufacturer's documents are not altered in any way, the page numbers displayed on the page may not correspond to the page number within this package.

All specifications are intended for initial planning purposes only.
Manufacturers reserve the right to change specifications at any time without notice. Always consult the installation instructions found on the manufacturer's website or included with the appliances before installation.

Integrated French Door Refrigerator Freezer, 32", Ice

Series 7 | Integrated

Panel Ready

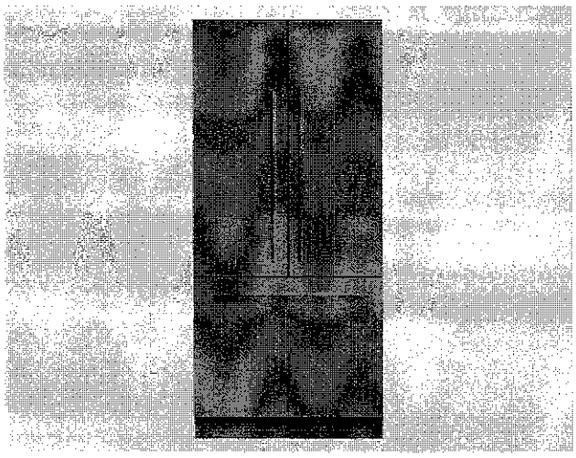

Designed to seamlessly integrate into your kitchen. With minimal gaps and no visible hinges, this model has a flush fit to suit any kitchen layout.

- ActiveSmart™ technology helps keep food fresher for longer by constantly maintaining the ideal temperature.
- Customize with your own kitchen cabinetry or purchase our stainless steel door panel accessory.
- With SmartTouch control panel for ease of use
- Spacious bottom freezer with full extension drawer and ice maker with boost function

DIMENSIONS

Height	$71\,^{7}/_{8}$ "
Width	$31\,^{1}/_{8}$ "
Depth	$23\,^{11}/_{16}$ "

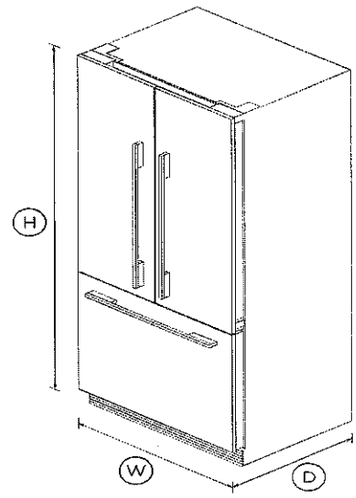

FEATURES & BENEFITS

Perfect Fit
These models fit flush and have minimal gaps, with no visible hinges. Our Integrated refrigeration can be seamlessly hidden behind your cabinetry or you can purchase our stainless steel door panel.

ActiveSmart™ Foodcare
ActiveSmart™ Foodcare learns how you live. By understanding how you use your fridge and adjusting temperature, airflow and

humidit

Flexibl
Designe
food. St
open ar
shelving

Ice mal
Fresh ic
Simply
you car

Beautif
LED ligl
enhanc
compar

Easy C
Secure,
and car

Clever
This fric
when n
compro

SPECI

Access
Conter
Conter
Matchi
Profess
Profess

Capaci
Freeze

Refrigerator	10.3cu ft

Consumption

Energy star rating	Yes
Energy usage	540kWh/year

Freezer features

Automatic ice maker	•
Bottle chill	•
Door alarm	•
Fast freeze	•
Ice Boost	•
LED lighting	•
Large plastic bin	•
Slide Out Pastry Tray	•
Small plastic bins	•

Performance

ActiveSmart™ Foodcare	•
Adaptive defrost	•
Frost free freezer	•
Humidity control system	•
Inverter controlled compressor	•
Sabbath mode	•

Power Requirements

Rated current	10A
Supply frequency	60Hz
Supply voltage	115V

Product dimensions

Depth	$23\,^{11}/_{16}$ "
Height	$71\,^{7}/_{8}$ "
Width	$31\,^{1}/_{8}$ "

Refrigerator features

Adjustable door shelves	6
Adjustable glass shelves	3
Covered door shelves	2
Door alarm	•
Fruit and vegetable bins	2
LED lighting	•
SmartTouch control panel	•
Soft close doors	•
Stackable bottle holders	4

Warranty

Parts and labor	2 years
Sealed system parts only	5 years

SKU	25619

The product dimensions and specifications in this page apply to the specific product and model. Under our policy of continuous improvement, these dimensions and specifications may change at any time. You should therefore check with Fisher & Paykel's Customer Care Centre to ensure this page correctly describes the model currently available. Â© Fisher & Paykel Appliances Ltd 2019.

Other

4 APPLIANCE AND CAVITY DIMENSIONS

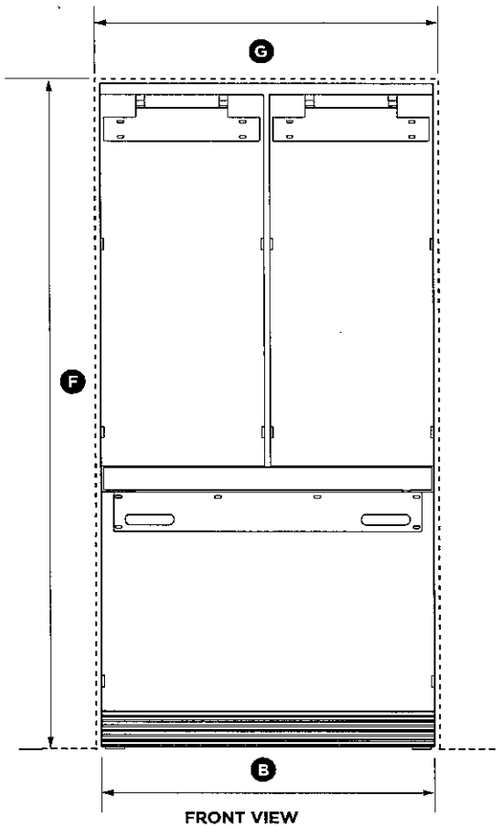

FRONT VIEW

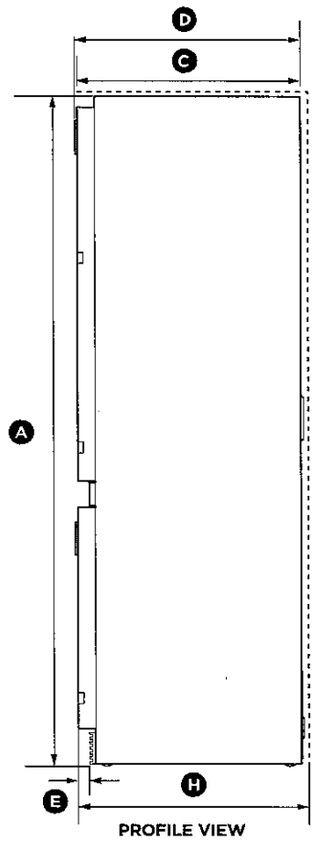

PROFILE VIEW

IMPORTANT!
For ease of installation, ensure cavit top to bottom and height is consiste

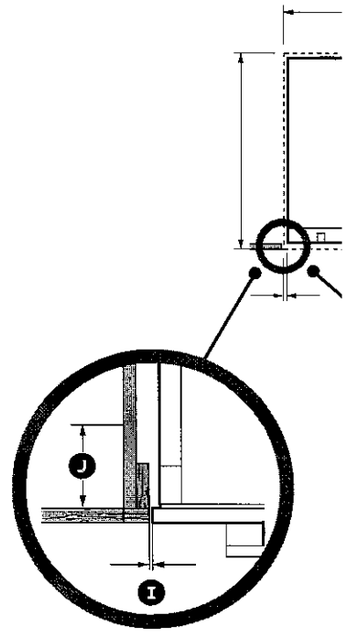

Flush install
Framed: Finished return top and sides

	RS32A		RS36A	
APPLIANCE DIMENSIONS	**in**	**mm**	**in**	**mm**
(A) Overall height of appliance*	71 7/8"	1825"	71 7/8"	1825**
(B) Overall width of appliance	31 1/8"	790	35 1/16"	890
(C) Overall depth of appliance (without door panels and hanging brackets)	23 11/16"	602	23 11/16"	602
(D) Overall depth of appliance (with hanging brackets only)	23 3/4"	604	23 3/4"	604
(E) Depth of toe kick (excluding front of door panel)	2"	50	2"	50

* Includes mounted rollers (20mm adjustment upwards)

CAVITY DIMENSIONS
(F) Overall height of cavity
(G) Overall width of cavity
(H) Overall depth of cavity
(I) Minimum cabinetry gap clearance from edge of appliance
(J) Minimum required finished return

5 of 17

FRAMELESS CABINETRY
(Aligns the appliance with the cabinetry)

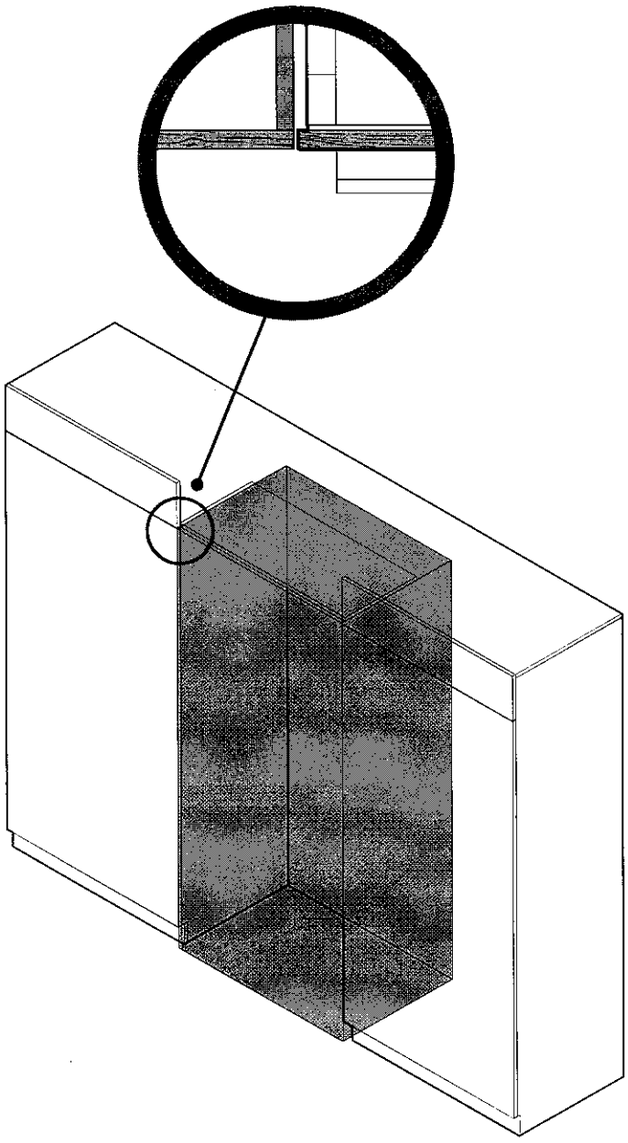

FRAI
(Aligns the appliance

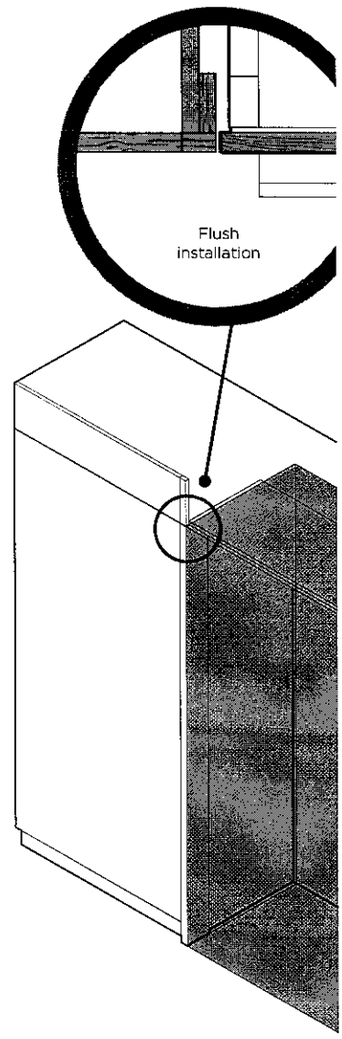

Note: Drawings are only for reference and not the actual cavity width of the cabinetry.

⑥ DOOR PANEL DIMENSIONS

IMPORTANT!

- **Custom door panels can only be used for non-Water dispensing models.**
- **Custom door panels to be manufactured and fitted by cabinetmaker.**
- **Door handle kit must be purchased separately.**

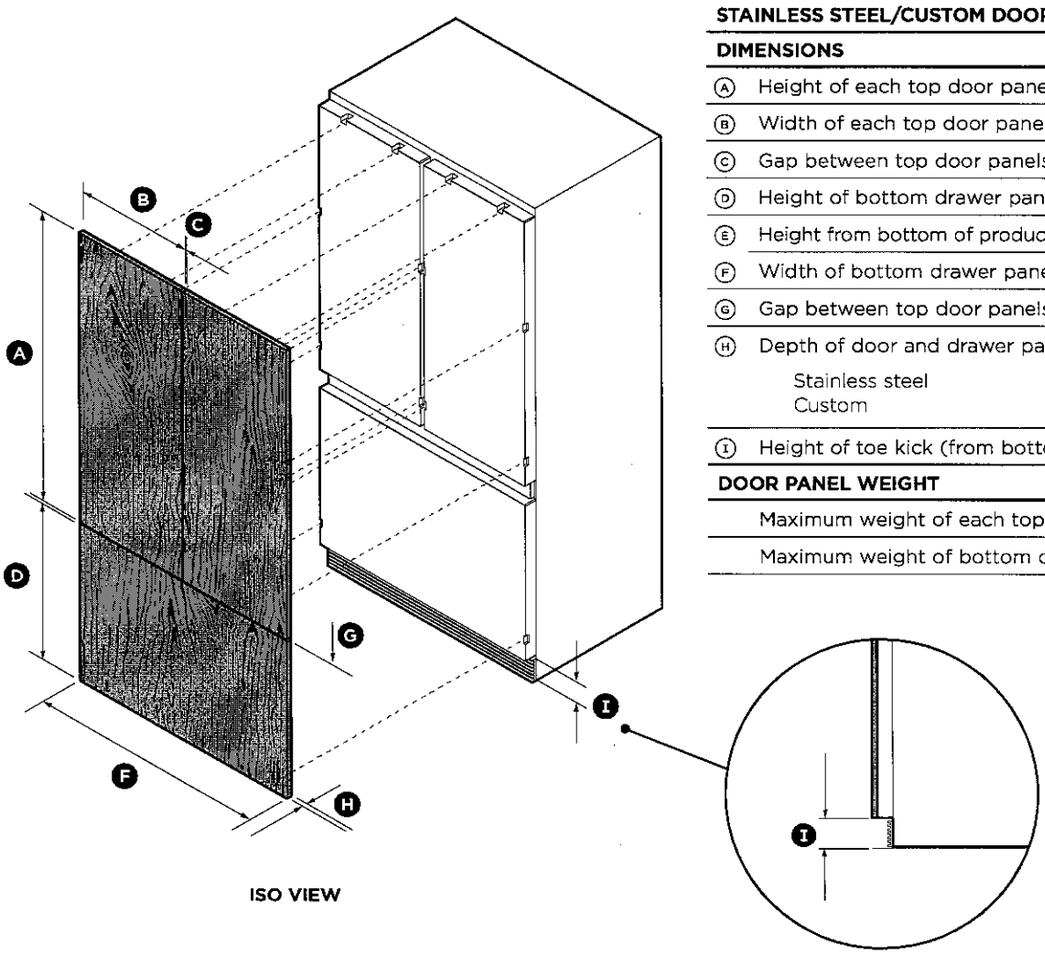

ISO VIEW

STAINLESS STEEL/CUSTOM DOOR PANELS	
DIMENSIONS	
Ⓐ Height of each top door panel	4
Ⓑ Width of each top door panel	
Ⓒ Gap between top door panels	
Ⓓ Height of bottom drawer panel	2
Ⓔ Height from bottom of product to top of drawer panel	
Ⓕ Width of bottom drawer panel	3
Ⓖ Gap between top door panels and bottom drawer panel	
Ⓗ Depth of door and drawer panels (excluding handle)	
Stainless steel	
Custom	5/8
Ⓘ Height of toe kick (from bottom of drawer to floor)	
DOOR PANEL WEIGHT	
Maximum weight of each top door panel (with handle)	
Maximum weight of bottom drawer panel (with handle)	

Dimensions apply for the preparation and installation of custom door panels. For Dwg and Dxf files of the below panel preparation downlc com/downloads/.

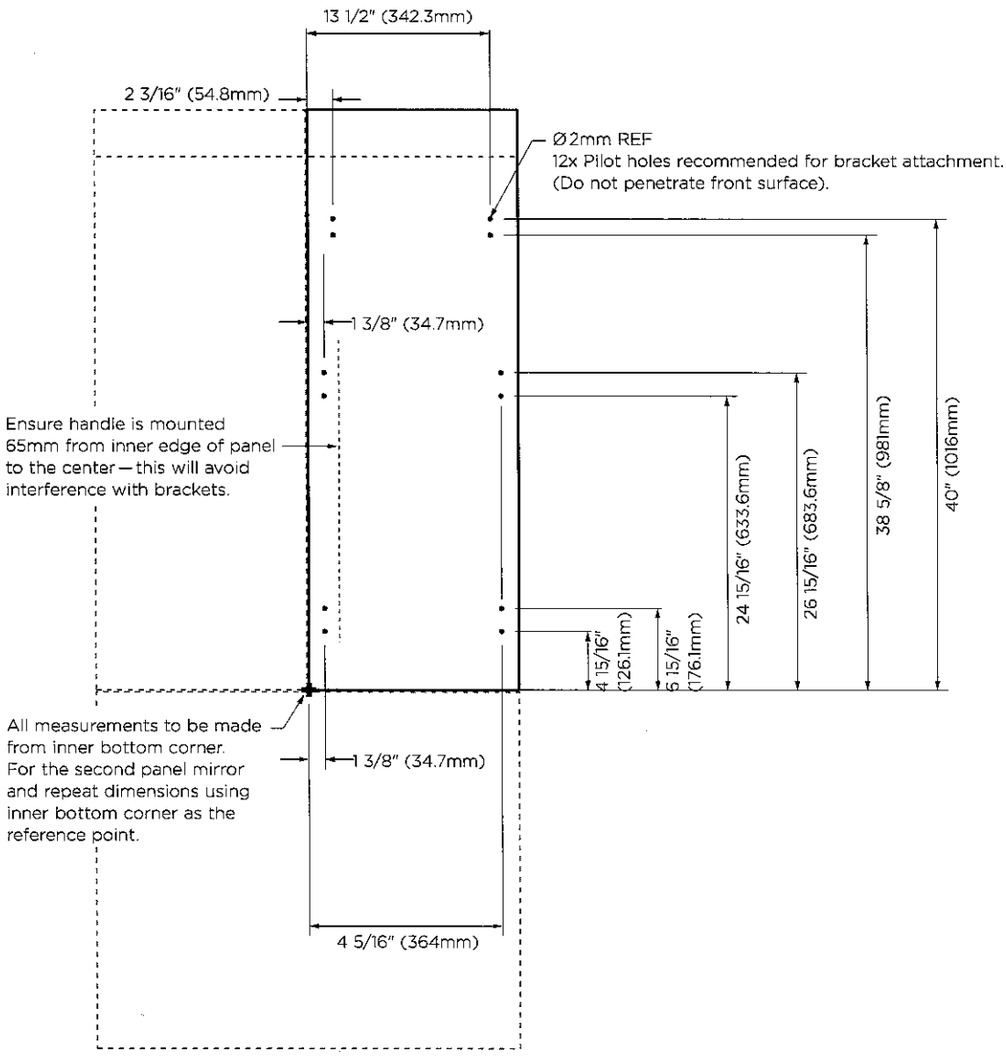

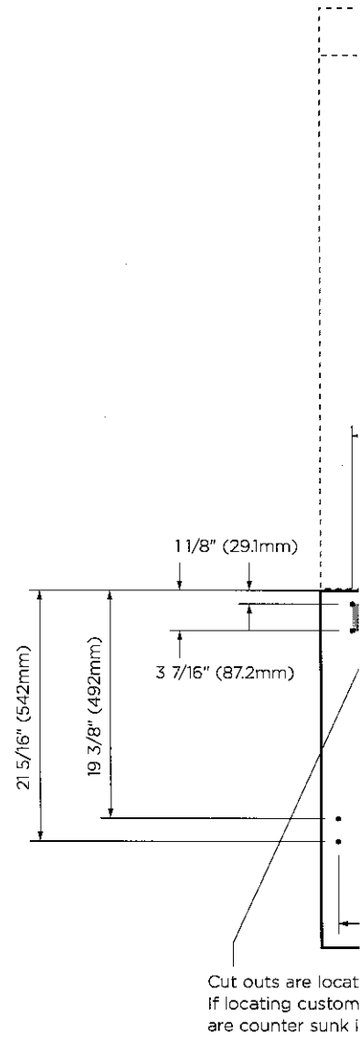

TOP PANEL—REAR VIEW

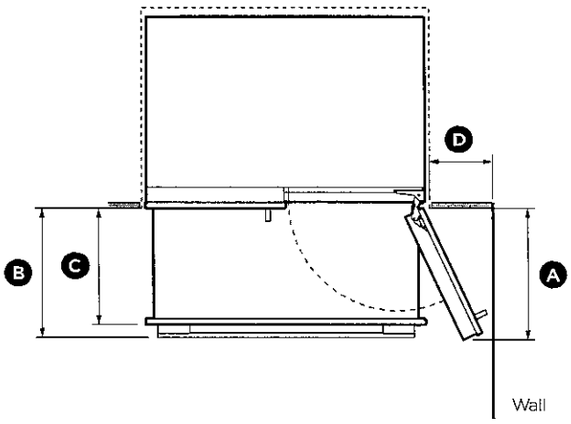

115° DOOR OPENING (FULL INTERNAL ACCESS)

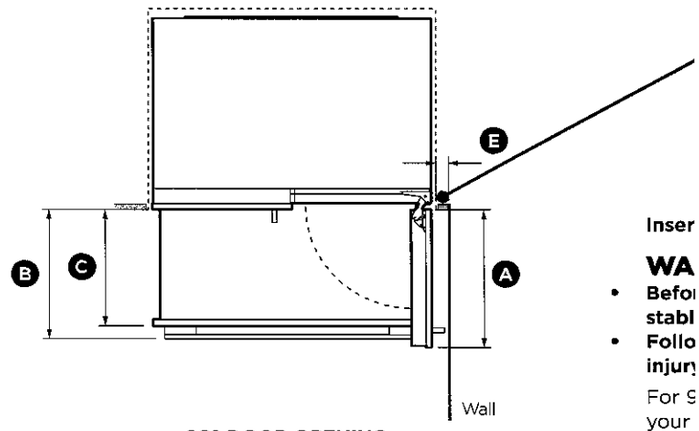

90° DOOR OPENING

Inser

WA

- **Befo stabl**
- **Follo injur**

For S your hinge

① Oper
② Inser

DIMENSIONS	RS32A72 in	m
Ⓐ Depth of door (widest opening) measured from front of door	15 9/16″	3
Ⓑ Depth of drawer (open) measured from front of drawer, including handle	15 3/4″	4
Ⓒ Depth of drawer (open) measured from front of drawer, excluding handle	14 3/16″	3
Ⓓ Minimum door clearance* to adjacent wall (115° — full internal access)	11″	2
Ⓔ Minimum door clearance* to adjacent wall (90° — reduced internal access)	3 15/16″	1

* Measured from front cabinetry edge, includes 2mm cabinetry gap.

IMPORTANT!

- **Electrical connection should be located in an adjacent cabinet to either side of the appliance or above the appliance cavity.**
- **We recommend to use an isolating switch that is easily accessible to the user after the appliance is installed.**

WARNING!

- **Electrical shock hazard. Assume all p**
- **Disconnect supply before servicing a**

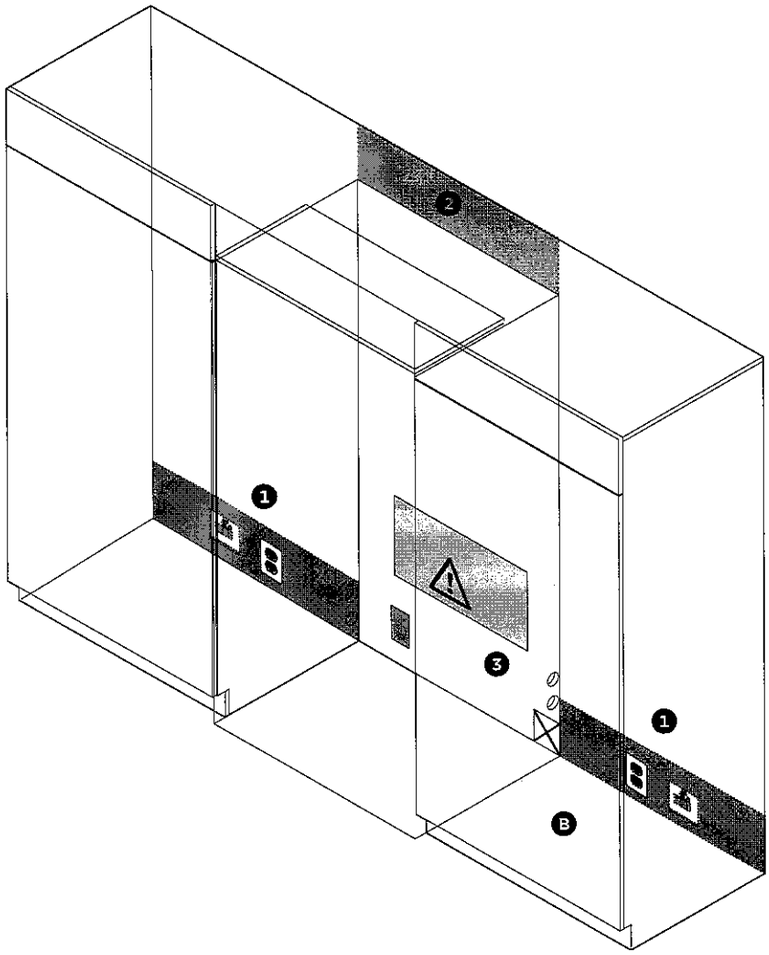

ELECTRICAL AND PLUMBING CONNECT
1 Recommended location for connect
2 Alternative location for connections
3 Alternative location for connections

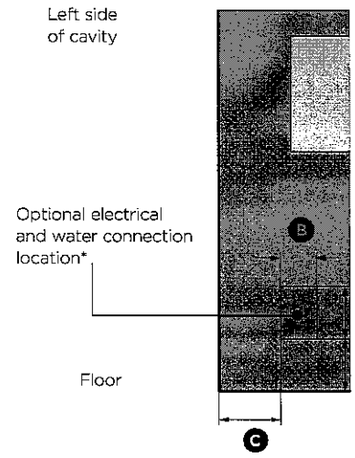

Electrical and water conn
behind the appliance ar

ELECTRICAL AND PLUMBING DIMENSIO
A Overall height of supply area
B Overall width of supply area
C Distance from left side of cavity
D Distance from the floor

Note: Dimensions are based on minimum depth of

✕ Do not locate water or electricity in this area,

⚠ CAUTION: Central area can only fit water outl

* In this location the water tap needs to be recessed
the water tube.

Maximum distance of hose and power cord

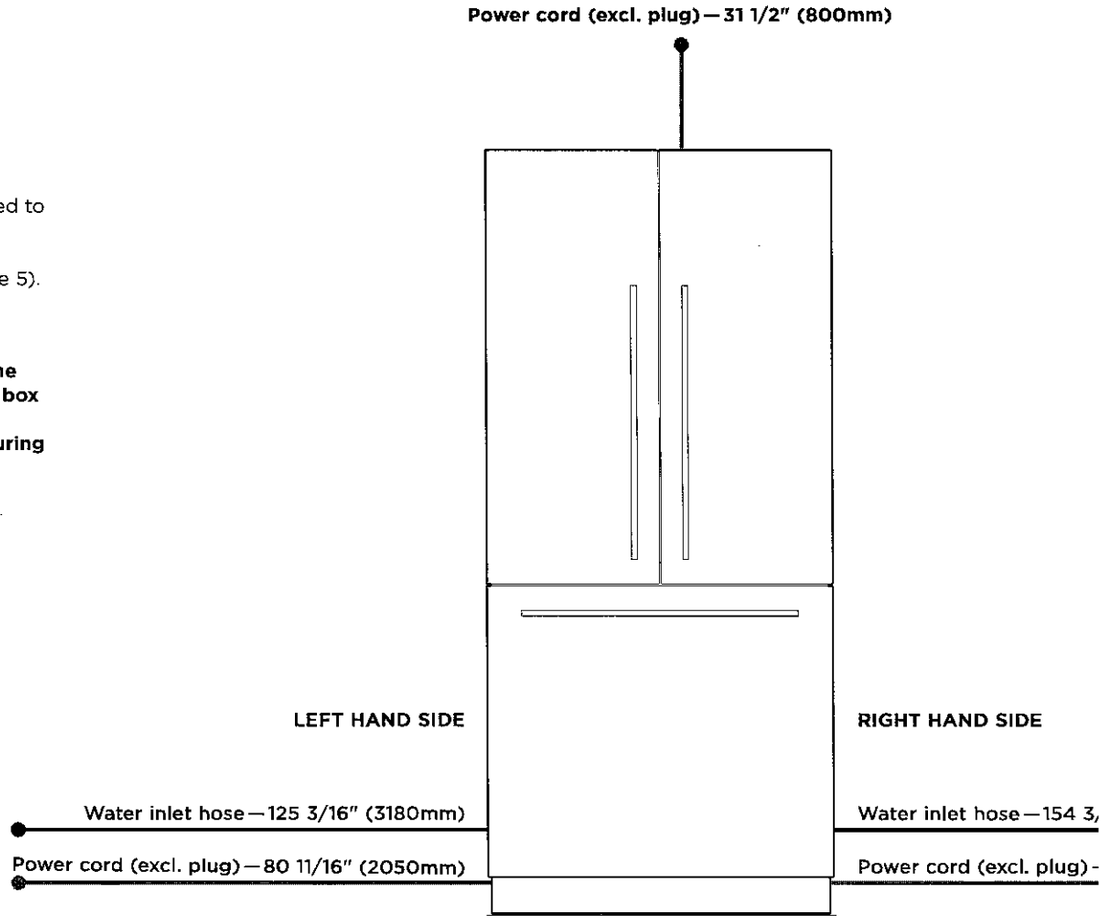

Checking your appliance

① Detach accessories box taped to back panel of appliance.

Refer to 'Components' (page 5).

IMPORTANT!

Be aware when removing the carton that the accessories box may have dislodged from the rear of the appliance during transit.

ELECTRICAL SPECIFICATIONS	
Supply	115VAC, 60Hz
Service	10 amp circuit

PLUMBING SPECIFICATIONS
Supply
Pressure

Café™ 30" Slide-In Front Control Induction and Convection Range with Warming Drawer

CCHS900P4MW2 / CCHS900P3MD1 / CCHS900P2MS1

CAFÉ

DISTINCT BY DESIGN™

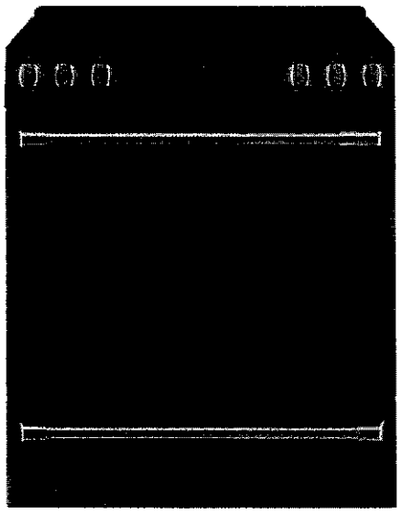

ALSO AVAILABLE IN

CCHS900P2MS1 Stainless Steel with Brushed Stainless handles and knobs

CCHS900P4MW2 Matte White with Brushed Bronze handles and knobs

ADA COMPLIANT

FEATURES & BENEFITS

Gourmet results without any guesswork - Take culinary skills to the next level with Gourmet Guided Cooking, which combines video-guided recipes from chefs with a system that automatically adjusts the time, temperature and cooking pace for perfect results

Enjoy total control in the kitchen and beyond - Control your oven with your smart device or simply your voice using WiFi Connect

An attractive appearance at all times - Every detail of your kitchen is designed to delight, thanks to a sleek backlit glass touch control panel that visually disappears when not in use and wakes up when prompted

The perfect combination of power & precision - Stun guests by showing off your 11" 3,700-watt induction element, which uses chef-preferred induction cooktop technology to deliver precise heat to cookware only. That means you can do everything from boiling a quart of water in 101 seconds to melting butter at exact temperatures with amazing efficiency

Precise control for flawless results - Delight guests with the precision of sous vide cooking or perfectly prepared fondues and delicate sauces using a precision cooking probe that is sold separately.

Ensure consistent temperatures across a large area - Evenly heat large griddles or enamel cookware across two 8" synchronized elements

Create a look that matches your personal style - Select any combination of premium finishes and hardware options to create a stunning look customized to any owner's taste

Allow your appliances to interact with one another - Create a chef-like experience with Chef Connect, which can synchronize your appliance clocks and surface lights and vent when a range burner is in use, and even your microwave and range clocks

APPEARANCE

Installation	Flush Appearance; Free-standing cut-out
Oven Door Features	Big View Oven Window; Full-Wrapped Metal Frame
Handle	Professional Style; Customizable; Consumer Removable

FEATURES

Configuration	Range with Warming Drawer
Cooking System	True European Convection with Precise Air
Cooking Technology	Convection
Oven Cleaning Type	Self-Clean with Steam Clean Option
Cooktop Burner Type	Induction
Cooktop Surface	Edge-to-Edge; Black Ceramic Glass
Control Location	Front controls
Control Type	White Backlit; Glass Touch
Oven Control Features	Audible Preheat Signal; Auto Oven Shut-Off with Override; Auto Recipe Conversion; Auto Self Clean; C° or F° Programmable; Certified Sabbath Mode; Chef Connect; Control Lock Capability; Delay Bake Option (Time Bake); Delay Clean Option; Electronic Clock & Kitchen Timer; Fast Preheat; Hi / Low Broil; Oven "ON" Light; Self-Clean Cool Down Time Display; Steam Clean; Temperature Probe
Oven Cooking Modes	Baked Goods (No Preheat); Convection Bake; Convection Roast; Frozen Pizza Multi Rack (No Preheat); Frozen Pizza Single Rack (No Preheat); Frozen Snacks Multi Rack (No Preheat); Frozen Snacks Single Rack (No Preheat); Proof; Warming
Oven Features	8-Pass Broil Element; Hidden Bake
Self-Clean Oven Door Lock	Automatic
Oven Rack Features	1 Self-Clean Heavy-Duty Roller Rack; 2 Self-Clean Heavy-Duty Oven Racks; 6 Rack Positions
Oven Interior	Black; 1 Incandescent
Connected Capabilities	Amazon Alexa; The Google Assistant; Hestan Cue; IFTTT; Nest; Drop; Innit; DiGiorno
WiFi Connect	Built-In
Element - Left Front	8" 2500W Sync Element
Element - Left Rear	8" 2500W Sync Element
Element - Right Front	11" 3700W Power Boil
Element - Right Rear	6" 1800W
Element - Center	6" 100W Warming Zone
Hot Surface Indicator Lights	1
Heating Element "ON" Indicator Light	5
Warming Drawer Features	(3) levels

CAPACITY

Total Capacity (cubic feet)	5.7 cu ft

ACCESSORIES

Trim Kit	Optional; JXFILLR1BB
Cooktop Cleaning	Included; Cream; Sponge
Probe Accessory	Optional; JXPROBE1

WEIGHTS & DIMENSIONS

Depth with Door Open	47-1/2 in
Approximate Shipping Weight	256 lb
Net Weight	236 lb
Height to Top of Rear Vent Trim	37-3/8 in
Overall Height	37-3/8 in
Height to Cooking Surface (in.)	36-1/4 +/- 1/4
Overall Width	29-7/8 in
Cabinet Width	30 in
Overall Depth	29-1/2 in
Depth Without Handle	26-7/8 in
Oven Interior Dimensions (W x H x D) (in.)	24 x 19-7/8 x 20-5/8

Café™ 30" Slide-In Front Control Induction and Convection Range with Warming Drawer

CCHS900P4MW2 / CCHS900P3MD1 / CCHS900P2MS1

CAFÉ

DISTINCT BY DESIGN™

POWER/RATINGS

Amp Rating at 208V	40
Amp Rating at 240V	40
Convection Wattage	2500W
Bake Wattage	2850W
Broiler Wattage	4000W
KW Rating at 208V	11.3
KW Rating at 240V	13.6

WARRANTY

Parts warranty	Limited 1-year entire appliance
Labor warranty	Limited 1-year entire appliance

DIMENSIONS

Receptacle Locations: Locally approved flexible service cord or conduit must be used because terminals are not accessible after range installation. See shaded area in drawing for location of electrical outlet box. Recommended outlet locations allow range to be installed directly against rear wall.

Note: This appliance has been approved for 0" spacing to adjacent surfaces above the cooktop. However, a 6" minimum spacing to surfaces less than 15" above the cooktop and adjacent cabinet is recommended to reduce exposure to steam, grease splatter and heat.

Installation Information: Before installing, consult installation instructions for current dimensional data and additional requirements.

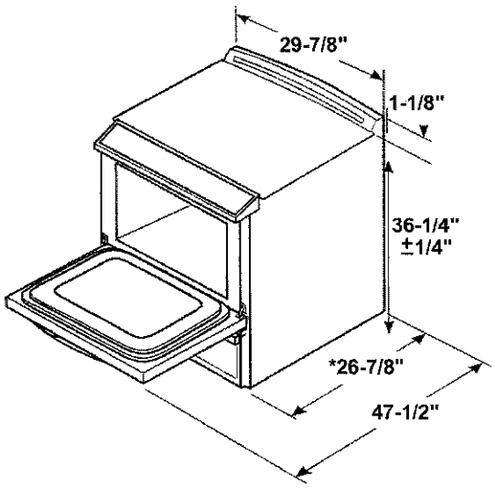

*Depth including door handle is approximately 29 1/2".

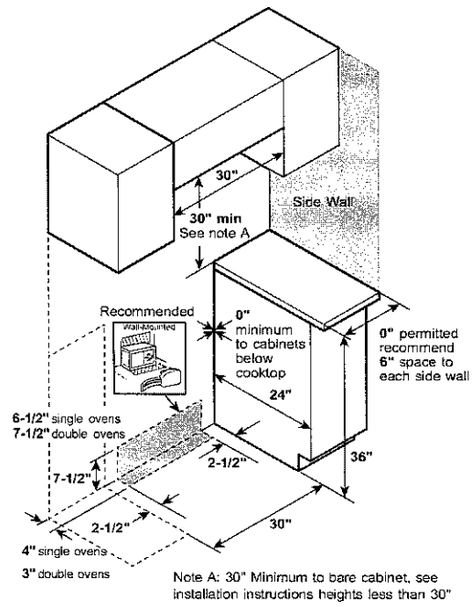

Note A: 30" Minimum to bare cabinet, see installation instructions heights less than 30"

ADDITIONAL ACCESSORIES

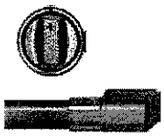

CXFCHHKPMBZ
Brushed Bronze
2 handles; 6 knobs

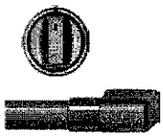

CXFCHHKPMSS
Brushed Stainless
2 handles; 6 knobs

CXFCHHKPMBT
Brushed Black
2 handles; 6 knobs

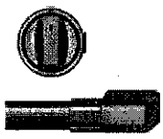

CXFCHHKPMCU
Brushed Copper
2 handles; 6 knobs

JXPROBE1
Probe Accessory

For answers to your Café™ product questions, visit our website at cafeappliances.ca.

© 2019 GE Appliances PC93682 11/19

24" Custom Panel Dishwasher

300 Series – Custom Panel SHVM63W53N

13 of 17

BOSCH
Invented for life

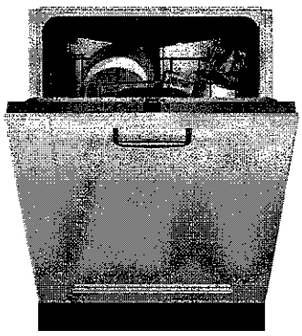

SHVM63W53N
Custom Panel

The 3rd rack provides the perfect space for silverware and large utensils while its V shape leaves room below for taller items.

Features & Benefits

44 dBA: dishwasher runs quietly so your kitchen conversations aren't interrupted.

With PrecisionWash®, intelligent sensors and precision spray arms target every item of every load, so dishes come out sparkling clean every time.

The AquaStop® leak protection system contains leaks through a precisely engineered system. If a leak occurs, the system contains it by shutting down operation and pumping out water. So you have the ultimate peace of mind whether you are away or at home.

General Properties	
Number of wash cycles	5
Number of options	4
dBA	44
Drying system	PureDry
Third rack	Standard 3rd Rack
Rack adjustability	Rackmatic®
Tub material	Stainless Steel
Control type	Buttons
Concealed water heating element	Yes
Leak protection system	24/7 AquaStop®
NSF®-certified* sanitize option	Yes
Water softener	No
Five-level wash	Yes
ChildLock	No
Special features	InfoLight®, Extra Dry Option
Efficiency	
Water usage per cycle	3.5
Energy efficiency class	Tier 1
ENERGY STAR® qualified	Yes
Total annual energy consumption (kWh)	269
Total annual water consumption (g)	623.5
Capacity	
Number of place settings	16

Technical Details	
Watts (W)	1440 W
Current (A)	12 Amps
Volts (V)	120 V
Frequency (Hz)	60 Hz
Power cord full length	67"
Power cord install length from edge of unit when facing the door (in)**	Left – 45" Right – 56"
Minimum water pressure (lb/sin)	14
Length outlet hose (in)	79"
Dimensions & Weight	
Overall appliance dimensions (HxWxD) (in)	33 7/8" x 23 9/16" x 23 1/16"
Required cutout size (HxWxD) (in)	33 7/8" x 23 5/8" x 24"
Adjustable feet	Yes
Net weight (lbs)	88 lbs
Accessories–Optional	
Junction Box	SMZPCJB1UC
Bosch Dishwasher Water Supply Hose	SMZSH002UC
Drain Hose Extension Kit	SGZ1010UC
Stainless Steel Straight Bosch Bar Handle	SMZ1007UC
Dishwasher Accessory Kit	SMZ5000
Anti-Tarnish Silverware Cassette	SMZ5002UC
Edge Protector + Power Cord Clip Install Kit	SMZEPCC1UC

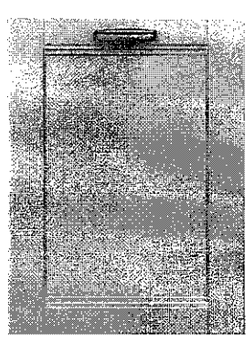

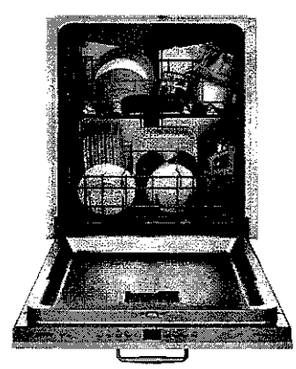

*Certification to NSF/ANSI Standard 184 for residential dishwashers

**September 2020 running production change to remove adhesive routing clips for power cord. These clips and the edge protector are now included in the dishwasher accessory kit # SMZEPCC1UC.

Accessories: To purchase Bosch accessories, cleaners & parts please visit www.bosch-home.com/us/store or call 1-800-944-2904 (Mon to Fri 5 am to 6 pm PST, Sat 6 am to 3 pm PST).

Notes: All height, width and depth dimensions are shown in inches. BSH reserves the absolute and unrestricted right to change product materials and specifications, at any time, without notice. Consult the product's installation instructions for final dimensional data and other details prior to making cutout.

Warranties: Please see Use & Care manual or Bosch website for statement of limited warranty.

For more information on our entire line of products, go to www.bosch-home.com/us or call 1-800-944-2904

© BSH Home Appliances Corporation. All rights reserved. Bosch is a registered trademark of Robert Bosch GmbH.

8/20

24" Custom Panel Dishwasher

300 Series – Custom Panel SHVM63W53N

BOSCH
Invented for life

Installation Details

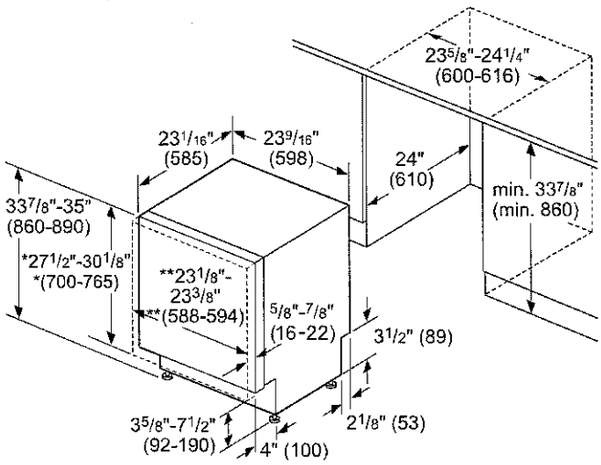

* measured from the bottom edge of the countertop panel thickness recommended 3/4" (20 mm).
This dishwasher can accept custom door panel weights ranging from 7 to 24 lbs; however, the dishwasher comes from the factory ready for custom panel door weights from 11 to 18 lbs.
If you plan on using a door panel that is not 11 to 18 lbs. please contact customer service at (800) 944-2904.

** 24" (610 mm) wide panel may be used depending on cabinet design

Note: Refer to installation template for mounting hardware locations

measurements in inches (mm)

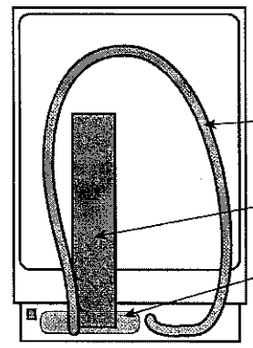

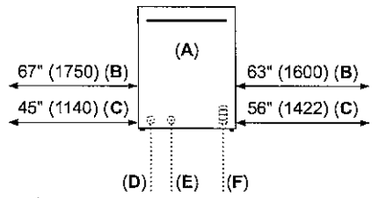

A: Front view
B: Drain hose
C: Electrical Power Cord: length shown according to Installation Instructions
D: Inlet
E: Drain
F: Electrical

All connections are at the rear of the appliance.
Extension for drain hose available as accessory.
Junction Box for hard wired connection available as an accessory.

Measurements in inches (mm)

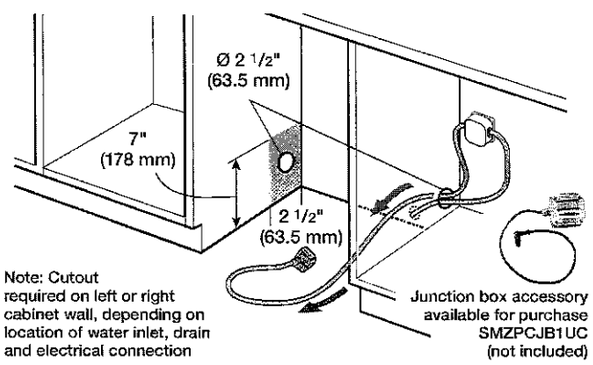

Example of Hardwire Installation

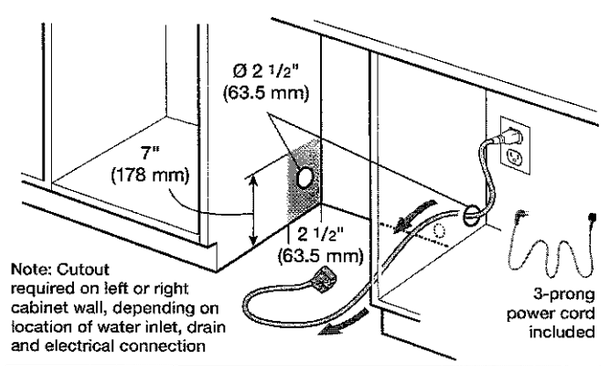

Example of an Electrical Receptacle Installation

Accessories: To purchase Bosch accessories, cleaners & parts please visit www.bosch-home.com/us/store or call 1-800-944-2904 (Mon to Fri 5 am to 6 pm PST, Sat 6 am to 3 pm PST).

Notes: All height, width and depth dimensions are shown in inches. BSH reserves the absolute and unrestricted right to change product materials and specifications, at any time, without notice. Consult the product's installation instructions for final dimensional data and other details prior to making cutout.

Warranties: Please see Use & Care manual or Bosch website for statement of limited warranty.

For more information on our entire line of products, go to www.bosch-home.com/us or call 1-800-944-2904

© BSH Home Appliances Corporation. All rights reserved. Bosch is a registered trademark of Robert Bosch GmbH.

24" Custom Panel Dishwasher

300 Series – Custom Panel SHVM63W53N

BOSCH
Invented for life

Installation Details

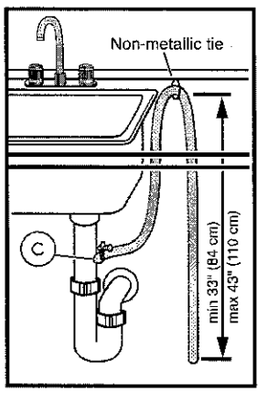

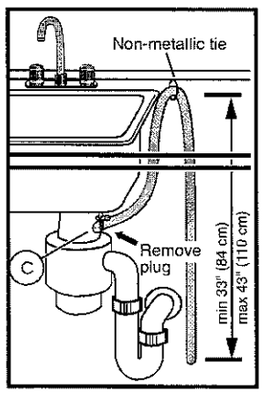

Note: Plumbing installations will vary - refer to local codes. Drain hose included is 79" (201 cm) and can be extended to a maximum of 155 3/4" (396 cm).

Always use the approved drain hose extension kit (SGZ1010UC).

Ensure a portion of the drain hose is raised between min. 33" (84 cm) and max. 43" (110 cm) above the cabinet floor.

Accessories: To purchase Bosch accessories, cleaners & parts please visit www.bosch-home.com/us/store or call 1-800-944-2904 (Mon to Fri 5 am to 6 pm PST, Sat 6 am to 3 pm PST).

Notes: All height, width and depth dimensions are shown in inches. BSH reserves the absolute and unrestricted right to change product materials and specifications, at any time, without notice. Consult the product's installation instructions for final dimensional data and other details prior to making cutout.

Warranties: Please see Use & Care manual or Bosch website for statement of limited warranty.

For more information on our entire line of products, go to www.bosch-home.com/us or call 1-800-944-2904

© BSH Home Appliances Corporation. All rights reserved. Bosch is a registered trademark of Robert Bosch GmbH.

16 of 17

ALLASIO
UNDER-CABINET

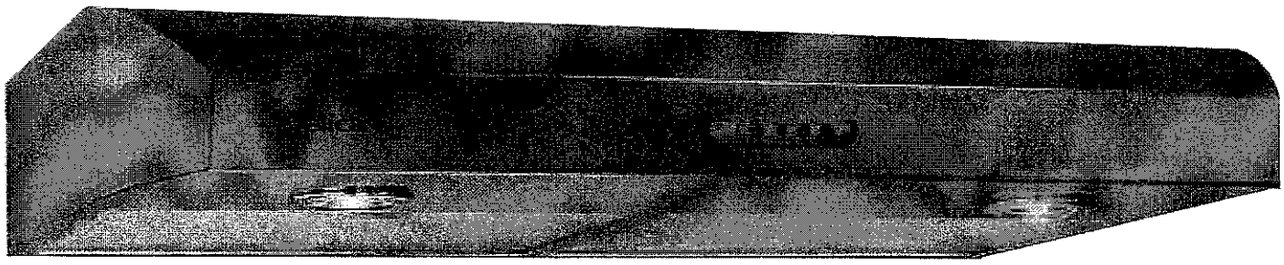

COMFORT SERIES

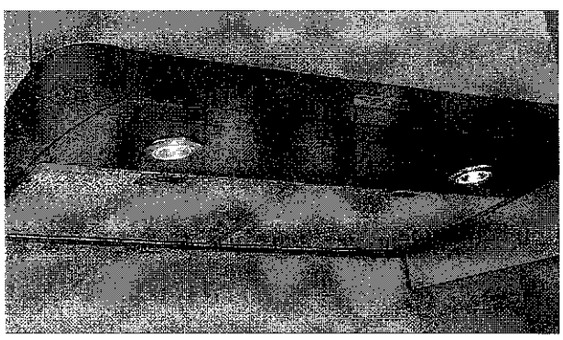

The slim Allasio with 4 3/4" height is ideal where under-cabinet space is limited, plus the contemporary styling and gleaming colors will compliment other appliances and most cabinetry. Allasio features a 3-speed, 300 CFM internal blower, which provides sufficient ventilating power for most kitchens. The attractive, electronic push button controls illuminate an elegant blue glow when activated and allows the user to manage blower speeds and dual halogen lamps.

Dishwasher-safe anodized aluminum mesh filters are easy to clean and a snap to remove and replace. Available in 30" or 36" widths, Allasio is designed for standard ducted installation, and can be installed as a recirculating system, using the Recirculating Kit.

MODELS

EAL330B2	Allasio 30" Black
EAL330W2	Allasio 30" White
EAL330S2	Allasio 30" Stainless
EAL336S2	Allasio 36" Stainless

DIMENSIONS

(30"W x 20"D x 4 3/4"H)
(36"W x 20"D x 4 3/4"H)

Halogen Lamps

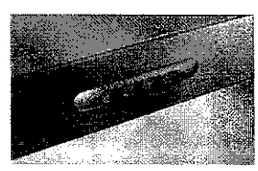

Electronic Push Button Controls

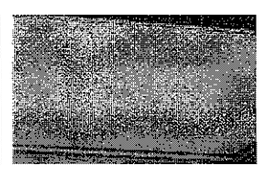

Anodized Aluminum Mesh Filters

ALLASIO
UNDER-CABINET
ELICA DESIGN CENTER

FEATURES

Size (in) & Type Finish	30" or 36" Wide Under-Cabinet Black (30" only), White (30" only), Stainless Steel (30" or 36")
Controls	Electronic Push Button
Illumination	2, 40 Watt Halogen Lamps, 1 Light Intensity (bulbs included)
Installation Type	Ducted or Recirculating Installation Recirculating Kit Sold Separately
Blower Type	300 CFM, 3-Speed Internal
Blower Performance	Speed 1, 120 CFM, 1.6 Sones Speed 2, 210 CFM, 3.5 Sones Speed 3, 300 CFM, 5.0 Sones
Filter Type	2, Dishwasher-Safe, Aluminum Mesh Grease Filters
Duct Transition	3 1/4" x 10" with Back Draft Damper (top or rear) or 7" Round (top) Sold Separately
Electrical	120V-60Hz 360 Watts at 4.3 Amps
Warranty	2 Year Parts & Labor, In-Home Service

ACCESSORIES

Optional Back Draft Damper, 7" Round

CODE: KIT02723
MODEL: EXXNRVRD

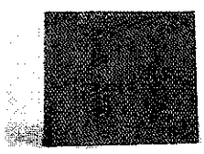

Optional Recirculating Kit for 30" & 36" Units

CODE: KIT02178 / MODEL: EBLRCK02 (30")
CODE: KIT02179 / MODEL: EBLRCK03 (36")

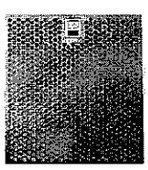

Optional Stainless Steel Mesh Grease Filter

CODE: KIT02591 / MODEL: EBLGFK30 (30")
CODE: KIT02592 / MODEL: EBLGFK36 (36")

LINE DRAWING

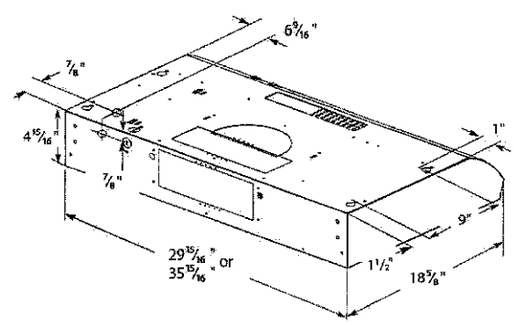

CONSUMABLE PARTS

Replacement Grease Filter (1)
CODE: GF04BA (30")
CODE: GF04BB (36")

Replacement Carbon Filter (1)
CODE: TM01FA (30")
CODE: TM01FB (36")

Replacement Light Bulb (1)
CODE: 2006DX

Consumable parts are sold in units of one (1). Order accordingly.