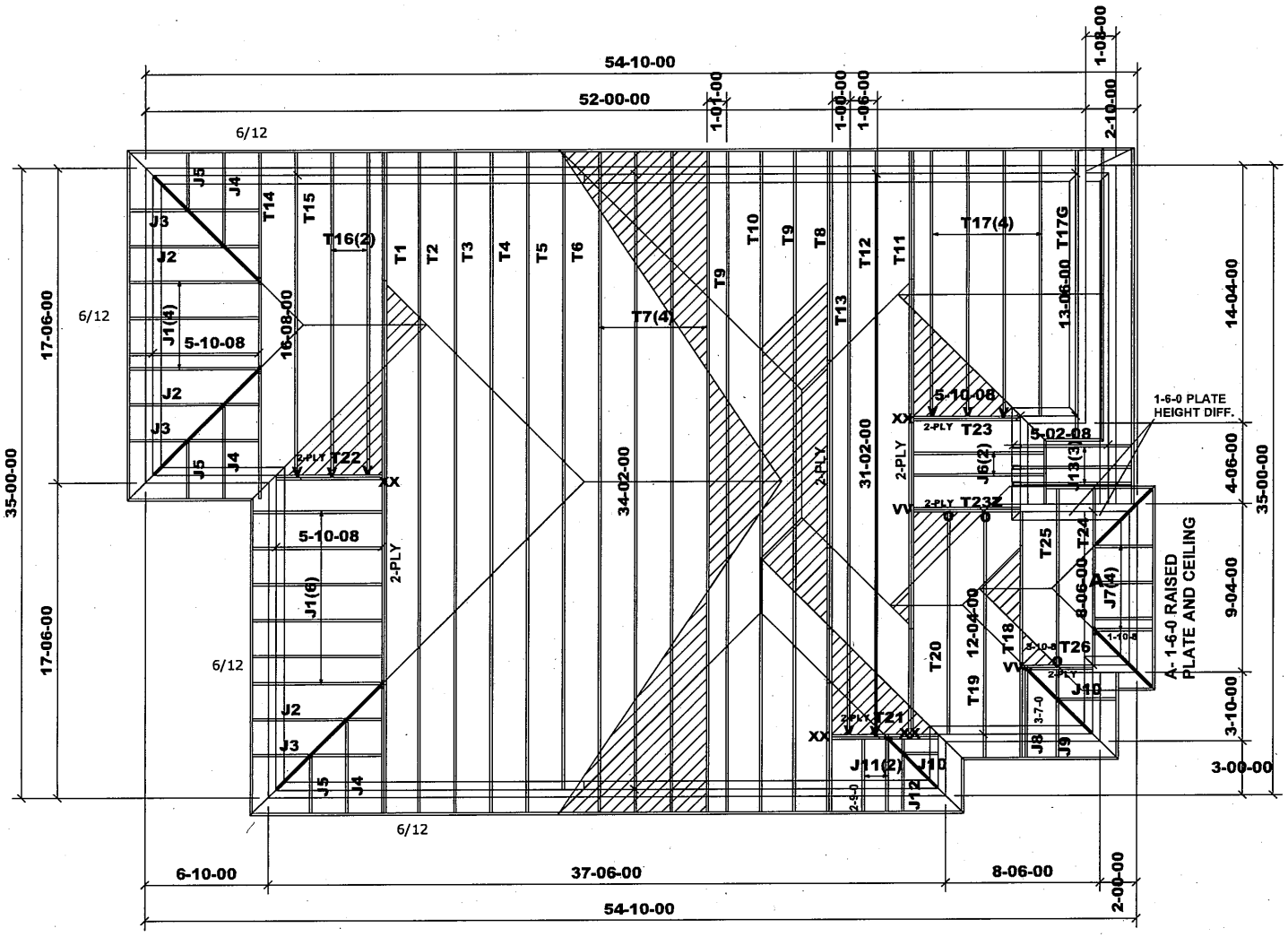

9/12 ROOF PITCH UNLESS OTHERWISE NOTED

ASPHALT SHINGLES
FINISHED OVERHANG: 12"
2x6 EXTERIOR WALLS
2x6 FASCIA BOARD
HEEL: R.T.M.C.

All conventional framing to conform with Part 9 of O.B.C. 2012 (2019 amendment). Roof rafters that cross over or meet trusses to be min. 2x4 SPF #2 @ 24" o/c with a vertical post to the truss at each cross point. Vertical posts longer than 6' to have lateral bracing so that the distance between the post end points and lateral bracing does not exceed 6'.

DESIGN CONFORMS WITH OBC 2012(2019 AMENDMENT)
OCCUPANCY: RESIDENTIAL | PART: 9
Ss = 31.3 psf | Sr = 8.4 psf

DESIGN LOADS:
TCSL = 25.6 psf
TCDL = 6.0 psf
BCLL = 0.0 psf
BCDL = 7.4 psf

HARDWARE:
LJS26DS - (V)
HGUS26-2 - (XX)
LUS24- (O)
LUS26-2- (VV)

DENOTES:
CONVENTIONAL FRAMING

TAMARACK ROOF TRUSSES INC.

Job Track: **53256**	Builder / Location: **GREEN PARK HOMES / RICHMOND HILL**		Model / Elevation: **VILLA 9 / 1**
Plan Log: **207891**	Project: **TRINIGROUP DEVELOPMENTS**		
Layout ID: **436988**	Date: 1/2/2024	Sales: Rick DiCiano	Designer: YPG

THESE DRAWINGS CONSTITUTE THE PROPERTY OF TAMARACK ROOF TRUSSES INC., SHALL NOT BE REPRODUCED, PUBLISHED, OR REDISTRIBUTED IN ANY MANNER OR UTILIZED FOR ANY PURPOSE OTHER THAN THE MANUFACTURE OF TRUSSES BY TAMARACK ROOF TRUSSES INC AND WILL BE RETRACTED BY TAMARACK ROOF TRUSSES INC IF UTLILZED FOR ANY OTHER PURPOSE.

Mitek ver 8.6.3.353

DELIVERY SHIPLIST

TAMARACK ROOF TRUSSES INC.
ALPA LUMBER GROUP

Lumber Yard:	TAMARACK LUMBER	Job Track:	53256
Builder:	GREEN PARK HOMES	PlanLog:	207891
Project:	TRINIGROUP DEVELOPMENTS	Layout ID:	436988
Location:	RICHMOND HILL	Ref #	
Model:	VILLA 9	Page:	1 of 4
Lot #:		Date:	03/04/2024
Elevation:	1	Designer:	
		Sales Rep:	Rick DiCiano

Roof Trusses

PROFILE	QTY PLY	MARK TYPE	PITCH	SPAN	HEIGHT	LUMBER	OVERHANG LEFT RIGHT	HEEL HEIGHT LEFT RIGHT	LBS. BFT.	BUNDLE # STACK #	LOAD BY REMARKS
	1 2-ply	T1 Hip Girder	6 /12	**34-02-00**	4-01-04	2 x 4 2 x 6	1-03-08 1-03-08	1-02-00 1-02-00	301.35 190.00		
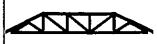	1	T2 Hip	6 /12	**34-02-00**	5-01-04	2 x 4	1-03-08 1-03-08	1-02-00 1-02-00	136.06 85.67		
	1	T3 Hip	6 /12	**34-02-00**	6-01-04	2 x 4	1-03-08 1-03-08	1-02-00 1-02-00	135.64 85.00		
	1	T4 Hip	6 /12	**34-02-00**	7-01-04	2 x 4	1-03-08 1-03-08	1-02-00 1-02-00	141.75 88.50		
	1	T5 Hip	6 /12	**34-02-00**	8-01-04	2 x 4	1-03-08 1-03-08	1-02-00 1-02-00	137.41 86.33		
	1	T6 Hip	6 /12	**34-02-00**	9-01-04	2 x 4	1-03-08 1-03-08	1-02-00 1-02-00	154.3 97.83		
	4	T7 Common	6 /12	**34-02-00**	9-08-08	2 x 4	1-03-08 1-03-08	1-02-00 1-02-00	590.47 364.00		
	1 2-ply	T8 Roof Special Girder	9 /12	**34-02-00**	9-03-10	2 x 4 2 x 6	1-03-08 1-03-08	1-06-04 1-06-04	390.29 244.33		
	2	T9 Hip	9 /12	**34-02-00**	7-05-02	2 x 4	1-03-08 1-03-08	1-06-04 1-06-04	308.79 195.33		
	1	T10 Hip	9 /12	**34-02-00**	8-09-13	2 x 4	1-03-08 1-03-08	1-06-04 1-06-04	160.95 99.83		
	1 2-ply	T11 Hip Girder	9 /12	**31-02-00**	5-11-02	2 x 4 2 x 6	1-03-08 1-03-08	1-06-04 1-06-04	310.54 195.33		
	1	T12 Hip	9 /12	**31-02-00**	7-05-02	2 x 4	1-03-08 1-03-08	1-06-04 1-06-04	142.94 89.83		
	1	T13 Hip	9 /12	**31-02-00**	8-06-10	2 x 4	1-03-08 1-03-08	1-06-04 1-06-04	143.84 90.33		
	1	T14 Hip Girder	6 /12	**16-08-00**	4-01-04	2 x 4 2 x 6	1-03-08 1-03-08	1-02-00 1-02-00	77.19 49.33		

CITY OF RICHMOND HILL
BUILDING DIVISION
05/01/2024
RECEIVED
Per: joshua.nabua

DELIVERY SHIPLIST

TAMARACK ROOF TRUSSES INC.
ALPA LUMBER GROUP

Lumber Yard:	TAMARACK LUMBER	Job Track:	53256
Builder:	GREEN PARK HOMES	PlanLog:	207891
Project:	TRINIGROUP DEVELOPMENTS	Layout ID:	436988
Location:	RICHMOND HILL	Ref #	
Model:	VILLA 9	Page:	2 of 4
Lot #:		Date:	03/04/2024
Elevation:	1	Designer:	
		Sales Rep:	Rick DiCiano

Roof Trusses

PROFILE	QTY / PLY	MARK / TYPE	PITCH	SPAN	HEIGHT	LUMBER	OVERHANG LEFT / RIGHT	HEEL HEIGHT LEFT / RIGHT	LBS. / BFT.	BUNDLE # / STACK #	LOAD BY / REMARKS
	1	T15 Hip	6 /12	**16-08-00**	5-01-04	2 x 4	1-03-08 1-03-08	1-02-00 1-02-00	68.06 43.00		
	2	T16 Common	6 /12	**16-08-00**	5-04-00	2 x 4	1-03-08 1-03-08	1-02-00 1-02-00	133.74 84.67		
	4	T17 Common	9 /12	**13-06-00**	6-07-00	2 x 4	1-03-08 1-03-08	1-06-04 1-06-04	245.21 158.67		
	1	T17G GABLE	9 /12	**13-06-00**	6-07-00	2 x 4	1-03-08 1-03-08	1-06-04 1-06-04	62.72 42.67		
	1	T18 Hip Girder	9 /12	**12-04-00**	4-05-02	2 x 4 2 x 6	1-03-08	1-06-04 3-00-04	66.73 43.83		
	1	T19 Hip	9 /12	**12-04-00**	5-11-02	2 x 4	1-03-08	1-06-04 3-00-04	59.06 39.17		
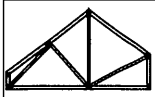	1	T20 Common	9 /12	**12-04-00**	6-10-12	2 x 4		1-06-04 3-00-04	53.83 34.83		
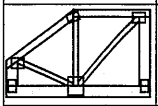	1 2-ply	T21 Half Hip Girder	9 /12	**5-10-08**	3-07-00	2 x 4 2 x 6		1-06-04 3-07-00	65.23 42.67		
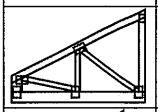	1 2-ply	T22 Jack-Closed Girder	6 /12	**5-10-08**	4-01-04	2 x 4 2 x 6		1-02-00 4-01-04	58.39 37.67		
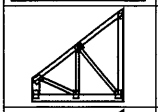	1 2-ply	T23 Jack-Closed Girder	9 /12	**5-10-08**	5-11-02	2 x 4 2 x 6		1-06-04 5-11-02	69.13 44.67		
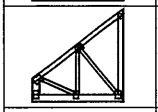	1 2-ply	T23Z Jack-Closed Girder	9 /12	**5-10-08**	5-11-02	2 x 4 2 x 6		1-06-04 5-11-02	69.13 44.67		
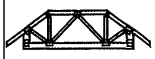	1	T24 Hip Girder	9 /12	**8-06-00**	2-11-02	2 x 4 2 x 6	1-03-08 1-03-08	1-06-04 1-06-04	45.32 33.00		
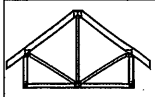	1	T25 Hip	9 /12	**8-06-00**	5-11-02	2 x 6 2 x 4	1-03-08 1-03-08	3-00-04 3-00-04	52.29 34.00		
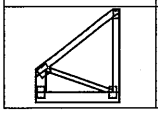	1 2-ply	T26 Half Hip Girder	9 /12	**3-10-08**	4-02-08	2 x 4 2 x 6		1-06-04 4-02-08	42.45 28.00		

CITY OF RICHMOND HILL
BUILDING DIVISION
05/01/2024
RECEIVED
Per: joshua.nabua

DELIVERY SHIPLIST

TAMARACK ROOF TRUSSES INC.
ALPA LUMBER GROUP

Lumber Yard:	TAMARACK LUMBER	Job Track:	53256
Builder:	GREEN PARK HOMES	PlanLog:	207891
Project:	TRINIGROUP DEVELOPMENTS	Layout ID:	436988
Location:	RICHMOND HILL	Ref #	
Model:	VILLA 9	Page:	3 of 4
Lot #:		Date:	03/04/2024
Elevation:	1	Designer:	
		Sales Rep:	Rick DiCiano

Roof Trusses

PROFILE	QTY PLY	MARK TYPE	PITCH	SPAN	HEIGHT	LUMBER	OVERHANG LEFT RIGHT	HEEL HEIGHT LEFT RIGHT	LBS. BFT.	BUNDLE # STACK #	LOAD BY REMARKS
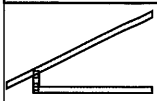	10	J1 Jack-Open	6 /12	**5-10-08**	4-01-04	2 x 4	1-03-08	1-02-00 4-01-04	167.94 106.67		
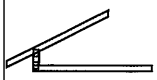	3	J2 Jack-Open	6 /12	**3-09-07**	3-00-12	2 x 4	1-03-08 2-01-01	1-02-00 3-00-12	42.4 26.00		
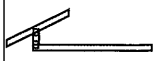	3	J3 Jack-Open	6 /12	**1-09-07**	2-00-12	2 x 4	1-03-08 4-01-01	1-02-00 2-00-12	34.75 22.00		
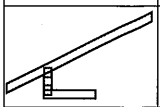	3	J4 Jack-Open	6 /12	**1-10-08**	3-00-12	2 x 4	1-03-08 1-10-15	1-02-00 2-01-04	28.71 18.00		
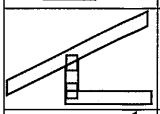	3	J5 Jack-Open	6 /12	**1-09-07**	2-00-12	2 x 4	1-03-08 1-01	1-02-00 2-00-12	21.06 14.00		
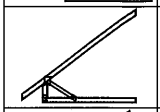	2	J6 Jack-Open	9 /12	**5-10-08**	5-11-02	2 x 4	1-03-08	1-06-04 5-11-02	40.36 27.00		
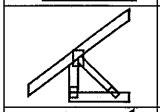	4	J7 Jack-Open	9 /12	**1-10-08**	2-11-02	2 x 4	1-03-08	1-06-04 2-11-02	37.99 28.00		
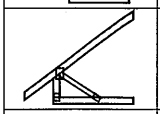	1	J8 Jack-Open	9 /12	**3-07-00**	4-02-08	2 x 4	1-03-08	1-06-04 4-02-08	14.3 10.17		
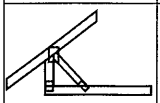	1	J9 Jack-Open	9 /12	**1-09-07**	2-10-05	2 x 4	1-03-08 1-09-09	1-06-04 2-10-05	11.26 8.33		
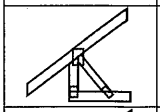	2	J10 Jack-Open	9 /12	**1-09-07**	2-10-05	2 x 4	1-03-08 1-01	1-06-04 2-10-05	18.46 14.00		
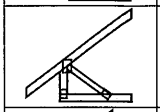	2	J11 Jack-Open	9 /12	**2-09-00**	3-07-00	2 x 4	1-03-08	1-06-04 3-07-00	24.05 17.67		
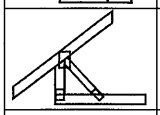	1	J12 Jack-Open	9 /12	**1-09-07**	2-10-05	2 x 4	1-03-08 11-09	1-06-04 2-10-05	10.31 7.67		
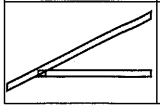	3	J13 Jack-Open	6 /12	**5-02-08**	3-06-15	2 x 4	1-03-08	4-03 2-11-07	43.18 28.00		

TOTAL # TRUSS= **82** TOTAL BFT OF ALL TRUSSES= **3000.67** BFT. TOTAL WEIGHT OF ALL TRSSES **4717.58** LBS

CITY OF RICHMOND HILL
BUILDING DIVISION
05/01/2024
RECEIVED
Per: joshua.nabua

TAMARACK ROOF TRUSSES INC.
ALPA LUMBER GROUP

DELIVERY SHIPLIST

Lumber Yard:	TAMARACK LUMBER	Job Track:	53256
Builder:	GREEN PARK HOMES	PlanLog:	207891
Project:	TRINIGROUP DEVELOPMENTS	Layout ID:	436988
Location:	RICHMOND HILL	Ref #	
Model:	VILLA 9	Page:	4 of 4
Lot #:		Date:	03/04/2024
Elevation:	1	Designer:	
		Sales Rep:	Rick DiCiano

HARDWARE

QTY	TYPE	MODEL	LENGTH
4	Hardware	HGUS26-2	
8	Hardware	LJS26DS	
3	Hardware	LUS24	
2	Hardware	LUS26-2	

TOTAL NUMBER OF ITEMS= **17**

CITY OF RICHMOND HILL
BUILDING DIVISION
05/01/2024
RECEIVED
Per: joshua.nabua

JOB NAME	TRUSS NAME	QUANTITY	PLY	JOB DESC.	DRWG NO.
436988	T1	1	2	GREEN PARK HOMES TRUSS DESC.	

Tamarack Roof Truss, Burlington

Version 8.630 S Aug 30 2023 MiTek Industries, Inc. Mon Mar 4 08:03:28 2024 Page 1
ID:1PtzEZc03lbzkDC64XoV?RygPuj-FF7OL5usCpqYyst2oh?oiWyw7d5fA78rONZB7vzeNPT

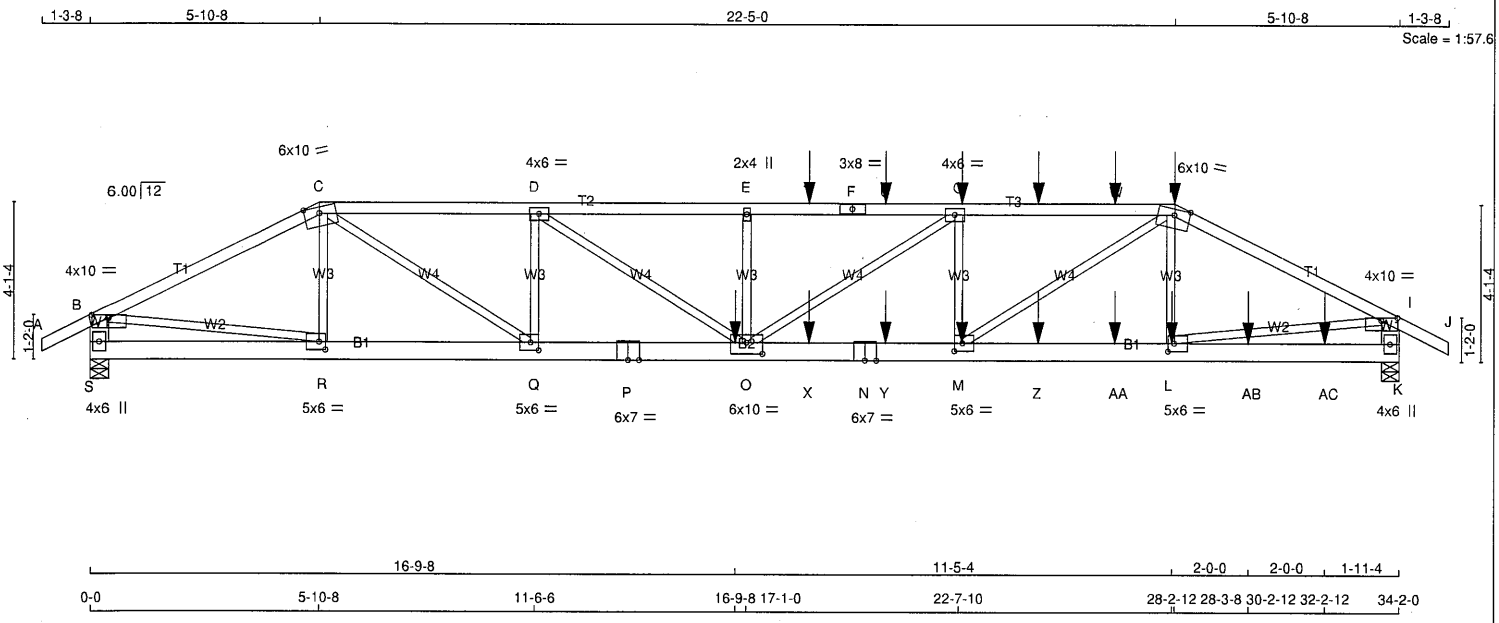

TOTAL WEIGHT = 2 X 151 = 301 lb

[M]

LUMBER

N. L. G. A. RULES

CHORDS	SIZE		LUMBER	DESCR.
A - C	2x4	DRY	No.2	SPF
C - F	2x4	DRY	2100F 1.8E	SPF
F - H	2x4	DRY	2100F 1.8E	SPF
H - J	2x4	DRY	No.2	SPF
S - B	2x6	DRY	No.2	SPF
K - I	2x6	DRY	No.2	SPF
S - P	2x6	DRY	No.2	SPF
P - N	2x6	DRY	No.2	SPF
N - K	2x6	DRY	No.2	SPF
ALL WEBS EXCEPT	2x3	DRY	No.2	SPF

DRY: SEASONED LUMBER.

DESIGN CONSISTS OF 2 TRUSSES BUILT SEPARATELY THEN FASTENED TOGETHER AS FOLLOWS:

CHORDS	#ROWS	SURFACE SPACING (IN)	LOAD(PLF)
TOP CHORDS : (0.122"X3") SPIRAL NAILS			
A- C	1	12	TOP
C- F	1	12	SIDE(0.0)
F- H	1	12	SIDE(65.9)
H- J	1	12	SIDE(61.0)
S- B	2	12	TOP
K- I	2	12	TOP
BOTTOM CHORDS : (0.122"X3") SPIRAL NAILS			
S- P	2	12	TOP
P- N	2	12	SIDE(183.1)
N- K	2	12	SIDE(183.1)
WEBS : (0.122"X3") SPIRAL NAILS			
2x3	1	6	
E- O	1	5	SIDE(313.2)

NAILS TO BE DRIVEN FROM ONE SIDE ONLY.

GIRDER NAILING ASSUMES NAILED HANGERS ARE FASTENED WITH MIN. 3-0 INCH NAILS.

TOP - COMPONENTS ARE LOADED FROM THE TOP AND MUST BE PLACED ON TOP EDGE OF ALL PLIES FOR THE LOAD TO BE TRANSFERRED TO EACH PLY.

LICENSED PROFESSIONAL ENGINEER
03-04-24
H. J. G. ALVES
100009024
PROVINCE OF ONTARIO

Structural component only
DWG# T-2406568

DIMENSIONS, SUPPORTS AND LOADINGS SPECIFIED BY FABRICATOR TO BE VERIFIED BY BUILDING DESIGNER

BEARINGS

JT	FACTORED GROSS REACTION VERT	HORZ	MAXIMUM FACTORED GROSS REACTION DOWN	HORZ	UPLIFT	INPUT BRG IN-SX	REQRD BRG IN-SX
S	3261	0	3261	0	0	5-8	1-12
K	3787	0	3787	0	0	5-8	2-1

UNFACTORED REACTIONS

JT	1ST LCASE COMBINED	MAX./MIN. COMPONENT REACTIONS SNOW	LIVE	PERM.LIVE	WIND	DEAD	SOIL
S	2300	1542 / 0	0 / 0	0 / 0	0 / 0	758 / 0	0 / 0
K	2675	1772 / 0	0 / 0	0 / 0	0 / 0	903 / 0	0 / 0

BEARING MATERIAL TO BE SPF NO.2 OR BETTER AT JOINT(S) S, K

BRACING

TOP CHORD TO BE SHEATHED OR MAX. PURLIN SPACING = 3.58 FT.
MAX. UNBRACED BOTTOM CHORD LENGTH = 10.00 FT OR RIGID CEILING DIRECTLY APPLIED.

ALL PITCH BREAKS AND PERIMETER CORNER JOINTS MUST BE LATERALLY RESTRAINED.

LOADING

TOTAL LOAD CASES: (4)

CHORDS

MEMB. FR-TO	MAX. FACTORED FORCE (LBS)	FACTORED VERT. LOAD (PLF) FROM	TO	LC1	MAX CSI (LC)	MAX. UNBRAC LENGTH
A- B	0 / 28	-91.8	-91.8	0.07 (1)	10.00	
B- C	-4985 / 0	-91.8	-91.8	0.51 (1)	3.90	
C- D	-7797 / 0	-91.8	-91.8	0.26 (1)	4.19	
D- E	-10050 / 0	-91.8	-91.8	0.34 (1)	3.71	
E- T	-10050 / 0	-91.8	-91.8	0.45 (1)	3.59	
T- F	-10050 / 0	-91.8	-91.8	0.45 (1)	3.59	
F- U	-10050 / 0	-91.8	-91.8	0.45 (1)	3.59	
U- G	-10050 / 0	-91.8	-91.8	0.45 (1)	3.59	
G- V	-8535 / 0	-91.8	-91.8	0.40 (1)	3.90	
V- W	-8535 / 0	-91.8	-91.8	0.40 (1)	3.90	
W- H	-8535 / 0	-91.8	-91.8	0.40 (1)	3.90	
H- I	-5876 / 0	-91.8	-91.8	0.59 (1)	3.58	
I- J	0 / 28	-91.8	-91.8	0.07 (1)	10.00	
S- B	-3206 / 0	0.0	0.0	0.11 (1)	7.73	
K- I	-3708 / 0	0.0	0.0	0.13 (1)	7.31	
S- R	0 / 0	-18.5	-18.5	0.04 (4)	10.00	
R- Q	0 / 4443	-18.5	-18.5	0.32 (1)	10.00	
Q- P	0 / 7797	-18.5	-18.5	0.58 (1)	10.00	
P- O	0 / 7797	-18.5	-18.5	0.58 (1)	10.00	
O- X	0 / 8535	-18.5	-18.5	0.65 (1)	10.00	
X- N	0 / 8535	-18.5	-18.5	0.65 (1)	10.00	
N- Y	0 / 8535	-18.5	-18.5	0.65 (1)	10.00	
Y- M	0 / 8535	-18.5	-18.5	0.65 (1)	10.00	
M- Z	0 / 5239	-18.5	-18.5	0.38 (1)	10.00	
Z-AA	0 / 5239	-18.5	-18.5	0.38 (1)	10.00	
AA- L	0 / 5239	-18.5	-18.5	0.38 (1)	10.00	
L-AB	0 / 0	-18.5	-18.5	0.06 (4)	10.00	
AB-AC	0 / 0	-18.5	-18.5	0.06 (4)	10.00	
AC- K	0 / 0	-18.5	-18.5	0.06 (4)	10.00	

WEBS

MEMB. FR-TO	MAX. FACTORED FORCE (LBS)	MAX CSI (LC)
R- C	-466 / 0	0.06 (1)
C- Q	0 / 4014	0.50 (1)
Q- D	-2076 / 0	0.26 (1)
D- O	0 / 2714	0.34 (1)
O- E	-563 / 0	0.07 (1)
O- G	0 / 1824	0.23 (1)
M- G	-1961 / 0	0.25 (1)
M- H	0 / 3945	0.49 (1)
L- H	-485 / 4	0.06 (1)
B- R	0 / 4494	0.56 (1)
L- I	0 / 5297	0.66 (1)

SPECIFIED CONCENTRATED LOADS (LBS)

JT	LOC.	LC1	MAX-	MAX+	FACE	DIR.	TYPE	HEEL	CONN.
G	22-8-12	-76	-76	---	FRONT	VERT	TOTAL	---	C1
H	28-3-8	-254	-254	---	FRONT	VERT	TOTAL	---	C1
L	28-2-12	-21	-21	---	FRONT	VERT	TOTAL	---	C1
M	22-8-12	-21	-21	---	FRONT	VERT	TOTAL	---	C1
O	16-9-8	-1338	-1338	---	FRONT	VERT	TOTAL	---	C1
T	18-8-12	-76	-76	---	FRONT	VERT	TOTAL	---	C1
U	20-8-12	-76	-76	---	FRONT	VERT	TOTAL	---	C1
V	24-8-12	-76	-76	---	FRONT	VERT	TOTAL	---	C1
W	26-8-12	-76	-76	---	FRONT	VERT	TOTAL	---	C1

DESIGN CRITERIA

SPECIFIED LOADS:

TOP CH.	LL	=	25.6	PSF
	DL	=	6.0	PSF
BOT CH.	LL	=	0.0	PSF
	DL	=	7.4	PSF
TOTAL LOAD		=	39.0	PSF

SPACING = 24.0 IN. C/C

LOADING IN FLAT SECTION BASED ON A SLOPE OF 6.00/12

THIS TRUSS IS DESIGNED FOR RESIDENTIAL OR SMALL BUILDING REQUIREMENTS OF PART 9, NBCC 2015

THIS DESIGN COMPLIES WITH:
- PART 9 OF BCBC 2018 , NBC-2019AE
- PART 9 OF OBC 2012 (2019 AMENDMENT)
- CSA 086-14
- TPIC 2014

(55 % OF 31.3 P.S.F. G.S.L. PLUS 8.4 P.S.F. RAIN LOAD) EQUALS 25.6 P.S.F. SPECIFIED ROOF LIVE LOAD

ALLOWABLE DEFL.(LL)= L/360 (1.14")
CALCULATED VERT. DEFL.(LL) = L/ 999 (0.26")
ALLOWABLE DEFL.(TL)= L/360 (1.14")
CALCULATED VERT. DEFL.(TL) = L/ 854 (0.48")

CSI: TC=0.59/1.00 (H-I:1) , BC=0.65/1.00 (M-O:1) , WB=0.66/1.00 (I-L:1) , SSI=0.19/1.00 (G-H:1)

DOL LUMBER=1.00 NAIL=1.00 LS BEND=1.00 COMP=1.00 SHEAR=1.00 TENS= 1.00

COMPANION LIVE LOAD FACTOR = 1.00

AUTOSOLVE HEELS OFF

TRUSS PLATE MANUFACTURER IS NOT RESPONSIBLE FOR QUALITY CONTROL IN THE TRUSS MANUFACTURING PLANT .

NAIL VALUES

PLATE	GRIP(DRY) (PSI) MAX	MIN	SHEAR (PLI) MAX	MIN	SECTION (PLI) MAX	MIN
MT20	650	371	1747	788	1987	1873

PLATE PLACEMENT TOL. = 0.250 inches

PLATE ROTATION TOL. = 5.0 Deg.

JSI GRIP= 0.79 (H) (INPUT = 0.90)
JSI METAL= 0.67 (P) (INPUT = 0.95)

CITY OF RICHMOND HILL
BUILDING DIVISION
05/01/2024
RECEIVED
Per: joshua.nabua

CONTINUED ON PAGE 2

JOB NAME	TRUSS NAME	QUANTITY	PLY	JOB DESC.	DRWG NO.
436988	T1	1	2	GREEN PARK HOMES TRUSS DESC.	

Tamarack Roof Truss, Burlington

Version 8.630 S Aug 30 2023 MiTek Industries, Inc. Mon Mar 4 08:03:28 2024 Page 2
ID:1PtzEZc03lbzkDC64XoV?RygPuj-FF7OL5usCpqYyst2oh?oiWyw7d5fA78rONZB7vzeNPT

PLATES (table is in inches)

JT	TYPE	PLATES	W	LEN	Y	X
B	TMVW-p	MT20	4.0	10.0	1.00	5.00
C	TTWW-m	MT20	6.0	10.0	2.00	4.75
D	TMWW-t	MT20	4.0	6.0		
E	TMW+w	MT20	2.0	4.0		
F	TS-t	MT20	3.0	8.0		
G	TMWW-t	MT20	4.0	6.0		
H	TTWW-m	MT20	6.0	10.0	2.00	4.75
I	TMVW-p	MT20	4.0	10.0	1.00	5.00
K	BMV1+p	MT20	4.0	6.0		
L	BMWW-t	MT20	5.0	6.0	2.50	2.00
M	BMWW-t	MT20	5.0	6.0	2.50	2.50
N	BS-t	MT20	6.0	7.0		
O	BMWWW-t	MT20	6.0	10.0	3.50	5.00
P	BS-t	MT20	6.0	7.0		
Q	BMWW-t	MT20	5.0	6.0	2.50	2.50
R	BMWW-t	MT20	5.0	6.0	2.50	2.00
S	BMV1+p	MT20	4.0	6.0		

NOTES- (1)
1) Lateral braces to be a minimum of 2X4 SPF #2.

SPECIFIED CONCENTRATED LOADS (LBS)

JT	LOC.	LC1	MAX-	MAX+	FACE	DIR.	TYPE	HEEL	CONN.
X	18-8-12	-21	-21	---	FRONT	VERT	TOTAL	---	C1
Y	20-8-12	-21	-21	---	FRONT	VERT	TOTAL	---	C1
Z	24-8-12	-21	-21	---	FRONT	VERT	TOTAL	---	C1
AA	26-8-12	-21	-21	---	FRONT	VERT	TOTAL	---	C1
AB	30-2-12	-21	-21	---	FRONT	VERT	TOTAL	---	C1
AC	32-2-12	-20	-20	---	FRONT	VERT	TOTAL	---	C1

CONNECTION REQUIREMENTS

1) **C1:** A SUITABLE HANGER/MECHANICAL CONNECTION IS REQUIRED.

LICENSED PROFESSIONAL ENGINEER
03-04-24
H. J. G. ALVES
100009024
PROVINCE OF ONTARIO

Structural component only
DWG# T-2406568

CITY OF RICHMOND HILL
BUILDING DIVISION
05/01/2024
RECEIVED
Per: joshua.nabua

JOB NAME	TRUSS NAME	QUANTITY	PLY	JOB DESC.	DRWG NO.
436988	T2	1	1	GREEN PARK HOMES TRUSS DESC.	

Tamarack Roof Truss, Burlington

Version 8.630 S Aug 30 2023 MiTek Industries, Inc. Mon Mar 4 08:03:28 2024 Page 1
ID:1PtzEZc03lbzkDC64XoV?RygPuj-FF7OL5usCpqYyst2oh?oiWyttd6HA5trONZB7vzeNPT

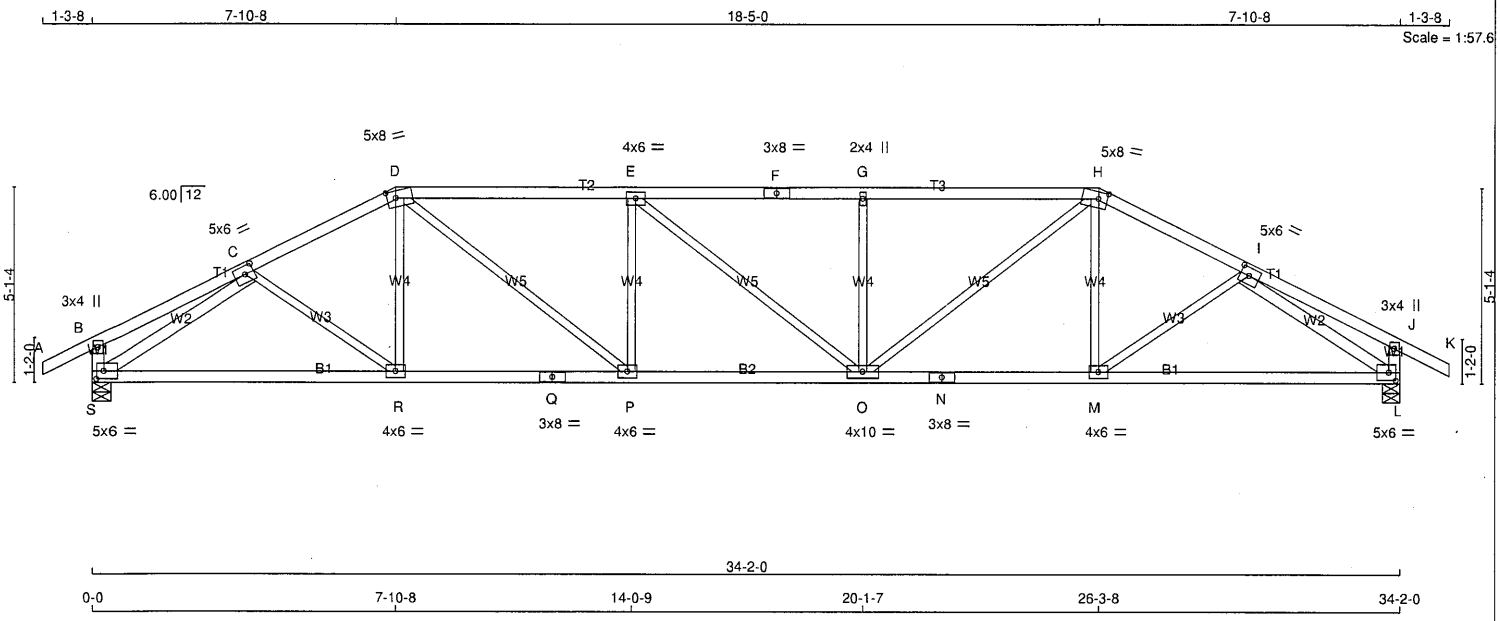

TOTAL WEIGHT = 136 lb

LUMBER
N. L. G. A. RULES

CHORDS	SIZE		LUMBER	DESCR.
A - D	2x4	DRY	No.2	SPF
D - F	2x4	DRY	No.2	SPF
F - H	2x4	DRY	No.2	SPF
H - K	2x4	DRY	No.2	SPF
S - B	2x4	DRY	No.2	SPF
L - J	2x4	DRY	No.2	SPF
S - Q	2x4	DRY	No.2	SPF
Q - N	2x4	DRY	No.2	SPF
N - L	2x4	DRY	No.2	SPF
ALL WEBS	2x3	DRY	No.2	SPF
EXCEPT				
S - C	2x4	DRY	No.2	SPF
I - L	2x4	DRY	No.2	SPF

DRY: SEASONED LUMBER.

PLATES (table is in inches)

JT	TYPE	PLATES	W	LEN	Y	X
B	TMV+p	MT20	3.0	4.0		
C	TMWW-t	MT20	5.0	6.0	2.50	2.75
D	TTWW-m	MT20	5.0	8.0	2.25	2.75
E	TMWW-t	MT20	4.0	6.0		
F	TS-t	MT20	3.0	8.0		
G	TMW+w	MT20	2.0	4.0		
H	TTWW-m	MT20	5.0	8.0	2.25	2.75
I	TMWW-t	MT20	5.0	6.0	2.50	2.75
J	TMV+p	MT20	3.0	4.0		
L	BMVW1-t	MT20	5.0	6.0	2.50	2.25
M, P, R						
M	BMWW-t	MT20	4.0	6.0		
N	BS-t	MT20	3.0	8.0		
O	BMWWW-t	MT20	4.0	10.0		
Q	BS-t	MT20	3.0	8.0		
S	BMVW1-t	MT20	5.0	6.0	2.50	2.25

NOTES- (1)
1) Lateral braces to be a minimum of 2X4 SPF #2.

DIMENSIONS, SUPPORTS AND LOADINGS SPECIFIED BY FABRICATOR TO BE VERIFIED BY BUILDING DESIGNER

BEARINGS

JT	FACTORED GROSS REACTION VERT	HORZ	MAXIMUM FACTORED GROSS REACTION DOWN	HORZ	UPLIFT	INPUT BRG IN-SX	REQRD BRG IN-SX
S	2008	0	2008	0	0	5-8	2-3
L	2008	0	2008	0	0	5-8	2-3

UNFACTORED REACTIONS

JT	1ST LCASE COMBINED	MAX./MIN. COMPONENT REACTIONS SNOW	LIVE	PERM.LIVE	WIND	DEAD	SOIL
S	1418	944 / 0	0 / 0	0 / 0	0 / 0	474 / 0	0 / 0
L	1418	944 / 0	0 / 0	0 / 0	0 / 0	474 / 0	0 / 0

BEARING MATERIAL TO BE SPF NO.2 OR BETTER AT JOINT(S) S, L

BRACING
TOP CHORD TO BE SHEATHED OR MAX. PURLIN SPACING = 3.16 FT.
MAX. UNBRACED BOTTOM CHORD LENGTH = 10.00 FT OR RIGID CEILING DIRECTLY APPLIED.

ALL PITCH BREAKS AND PERIMETER CORNER JOINTS MUST BE LATERALLY RESTRAINED.

LOADING
TOTAL LOAD CASES: (4)

CHORDS

MEMB. FR-TO	MAX. FACTORED FORCE (LBS)	FACTORED VERT. LOAD (PLF) FROM	TO	LC1	MAX CSI (LC)	MAX. UNBRAC LENGTH
A- B	0 / 28	-91.8	-91.8	0.12 (1)	10.00	
B- C	0 / 16	-91.8	-91.8	0.20 (1)	10.00	
C- D	-2697 / 0	-91.8	-91.8	0.31 (1)	3.96	
D- E	-3313 / 0	-91.8	-91.8	0.79 (1)	3.16	
E- F	-3311 / 0	-91.8	-91.8	0.78 (1)	3.16	
F- G	-3311 / 0	-91.8	-91.8	0.78 (1)	3.16	
G- H	-3311 / 0	-91.8	-91.8	0.79 (1)	3.17	
H- I	-2698 / 0	-91.8	-91.8	0.31 (1)	3.96	
I- J	0 / 16	-91.8	-91.8	0.20 (1)	10.00	
J- K	0 / 28	-91.8	-91.8	0.12 (1)	10.00	
S- B	-270 / 0	0.0	0.0	0.03 (1)	7.81	
L- J	-270 / 0	0.0	0.0	0.03 (1)	7.81	
S- R	0 / 2340	-18.5	-18.5	0.51 (1)	10.00	
R- Q	0 / 2398	-18.5	-18.5	0.52 (1)	10.00	
Q- P	0 / 2398	-18.5	-18.5	0.52 (1)	10.00	
P- O	0 / 3313	-18.5	-18.5	0.61 (1)	10.00	
O- N	0 / 2398	-18.5	-18.5	0.52 (1)	10.00	
N- M	0 / 2398	-18.5	-18.5	0.52 (1)	10.00	
M- L	0 / 2340	-18.5	-18.5	0.51 (1)	10.00	

WEBS

MEMB. FR-TO	MAX. FACTORED FORCE (LBS)	MAX CSI (LC)
C- R	0 / 87	0.03 (4)
R- D	0 / 122	0.04 (4)
D- P	0 / 1159	0.26 (1)
P- E	-610 / 0	0.23 (1)
E- O	-2 / 0	0.00 (1)
O- G	-609 / 0	0.23 (1)
O- H	0 / 1157	0.26 (1)
M- H	0 / 122	0.04 (4)
M- I	0 / 87	0.03 (4)
S- C	-2879 / 0	0.80 (1)
I- L	-2879 / 0	0.80 (1)

DESIGN CRITERIA

SPECIFIED LOADS:

TOP CH.	LL	=	25.6	PSF
	DL	=	6.0	PSF
BOT CH.	LL	=	0.0	PSF
	DL	=	7.4	PSF
TOTAL LOAD		=	39.0	PSF

SPACING = 24.0 IN. C/C

LOADING IN FLAT SECTION BASED ON A SLOPE OF 6.00/12

THIS TRUSS IS DESIGNED FOR RESIDENTIAL OR SMALL BUILDING REQUIREMENTS OF PART 9, NBCC 2015

THIS DESIGN COMPLIES WITH:
- PART 9 OF BCBC 2018 , NBC-2019AE
- PART 9 OF OBC 2012 (2019 AMENDMENT)
- CSA 086-14
- TPIC 2014

(55 % OF 31.3 P.S.F. G.S.L. PLUS 8.4 P.S.F. RAIN LOAD) EQUALS 25.6 P.S.F. SPECIFIED ROOF LIVE LOAD

ALLOWABLE DEFL.(LL)= L/360 (1.14")
CALCULATED VERT. DEFL.(LL) = L/ 999 (0.19")
ALLOWABLE DEFL.(TL)= L/360 (1.14")
CALCULATED VERT. DEFL.(TL) = L/ 999 (0.37")

CSI: TC=0.79/1.00 (D-E:1) , BC=0.61/1.00 (O-P:1) , WB=0.80/1.00 (I-L:1) , SSI=0.26/1.00 (D-E:1)

DOL LUMBER=1.00 NAIL=1.00 LS BEND=1.10 COMP=1.10 SHEAR=1.10 TENS= 1.10

COMPANION LIVE LOAD FACTOR = 1.00

AUTOSOLVE HEELS OFF

TRUSS PLATE MANUFACTURER IS NOT RESPONSIBLE FOR QUALITY CONTROL IN THE TRUSS MANUFACTURING PLANT .

NAIL VALUES

PLATE	GRIP(DRY) (PSI) MAX	MIN	SHEAR (PLI) MAX	MIN	SECTION (PLI) MAX	MIN
MT20	650	371	1747	788	1987	1873

PLATE PLACEMENT TOL. = 0.250 inches

PLATE ROTATION TOL. = 5.0 Deg.

JSI GRIP= 0.79 (I) (INPUT = 0.90)
JSI METAL= 0.73 (N) (INPUT = 0.95)

LICENSED PROFESSIONAL ENGINEER
03-04-24
H. J. G. ALVES
100009024
PROVINCE OF ONTARIO

Structural component only
DWG# T-2406569

CITY OF RICHMOND HILL
BUILDING DIVISION
05/01/2024
RECEIVED
Per: joshua.nabua

JOB NAME	TRUSS NAME	QUANTITY	PLY	JOB DESC.	DRWG NO.
436988	T3	1	1	GREEN PARK HOMES TRUSS DESC.	

Tamarack Roof Truss, Burlington

Version 8.630 S Aug 30 2023 MiTek Industries, Inc. Mon Mar 4 08:03:29 2024 Page 1
ID:1PtzEZc03lbzkDC64XoV?RygPuj-jRhmZRvUz7yPa0SFLPW1FjV2O1UQvco_d1JlgLzeNPS

1-3-8 | 9-10-8 | 14-5-0 | 9-10-8 | 1-3-8

Scale = 1:57.6

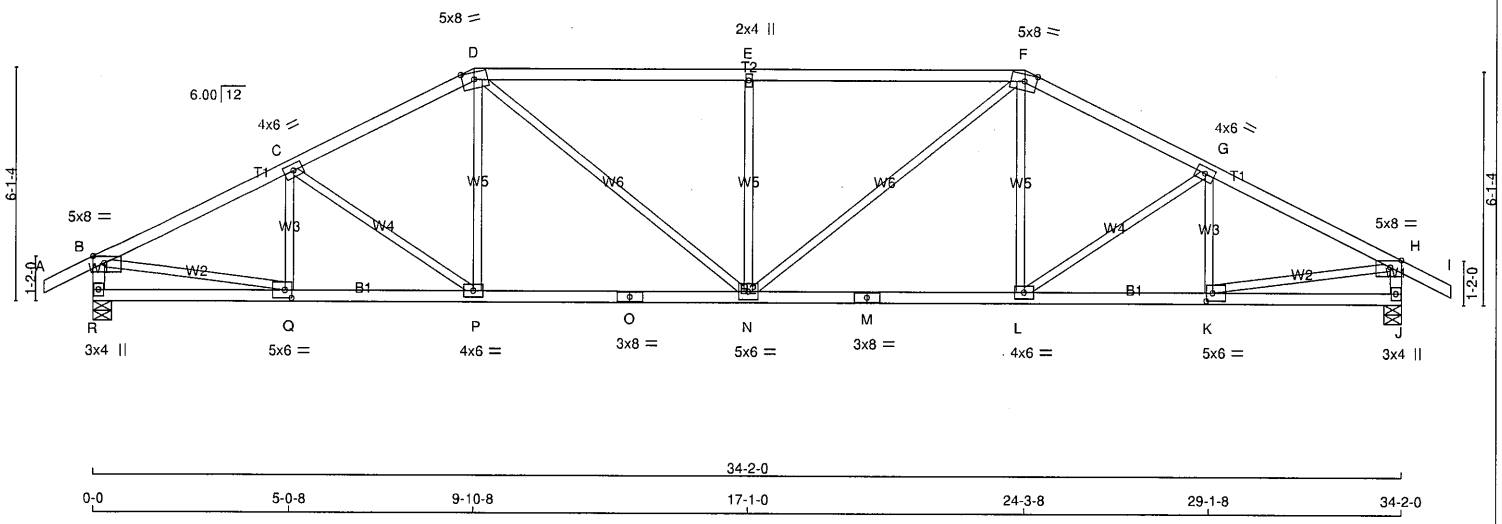

34-2-0

0-0 | 5-0-8 | 9-10-8 | 17-1-0 | 24-3-8 | 29-1-8 | 34-2-0

TOTAL WEIGHT = 136 lb
[M][F]

LUMBER
N. L. G. A. RULES

CHORDS	SIZE		LUMBER	DESCR.
A - D	2x4	DRY	No.2	SPF
D - F	2x4	DRY	No.2	SPF
F - I	2x4	DRY	No.2	SPF
R - B	2x4	DRY	No.2	SPF
J - H	2x4	DRY	No.2	SPF
R - O	2x4	DRY	No.2	SPF
O - M	2x4	DRY	No.2	SPF
M - J	2x4	DRY	No.2	SPF
ALL WEBS EXCEPT	2x3	DRY	No.2	SPF

DRY: SEASONED LUMBER.

PLATES (table is in inches)

JT	TYPE	PLATES	W	LEN	Y	X
B	TMVW-p	MT20	5.0	8.0	Edge	3.50
C	TMWW-t	MT20	4.0	6.0		
D	TTWW-m	MT20	5.0	8.0	2.25	3.75
E	TMW+w	MT20	2.0	4.0		
F	TTWW-m	MT20	5.0	8.0	2.25	3.75
G	TMWW-t	MT20	4.0	6.0		
H	TMVW-p	MT20	5.0	8.0	Edge	3.50
J	BMV1+p	MT20	3.0	4.0		
K	BMWW-t	MT20	5.0	6.0	2.50	2.00
L	BMWW-t	MT20	4.0	6.0		
M	BS-t	MT20	3.0	8.0		
N	BMWWW-t	MT20	5.0	6.0		
O	BS-t	MT20	3.0	8.0		
P	BMWW-t	MT20	4.0	6.0		
Q	BMWW-t	MT20	5.0	6.0	2.50	2.00
R	BMV1+p	MT20	3.0	4.0		

Edge - INDICATES REFERENCE CORNER OF PLATE TOUCHES EDGE OF CHORD.

NOTES- (1)
1) Lateral braces to be a minimum of 2X4 SPF #2.

Structural component only
DWG# T-2406570

DIMENSIONS, SUPPORTS AND LOADINGS SPECIFIED BY FABRICATOR TO BE VERIFIED BY BUILDING DESIGNER

BEARINGS

JT	FACTORED GROSS REACTION VERT	HORZ	MAXIMUM FACTORED GROSS REACTION DOWN	HORZ	UPLIFT	INPUT BRG IN-SX	REQRD BRG IN-SX
R	2008	0	2008	0	0	5-8	3-0
J	2008	0	2008	0	0	5-8	3-0

UNFACTORED REACTIONS

JT	1ST LCASE COMBINED	MAX./MIN. COMPONENT REACTIONS SNOW	LIVE	PERM.LIVE	WIND	DEAD	SOIL
R	1418	944 / 0	0 / 0	0 / 0	0 / 0	474 / 0	0 / 0
J	1418	944 / 0	0 / 0	0 / 0	0 / 0	474 / 0	0 / 0

BEARING MATERIAL TO BE SPF NO.2 OR BETTER AT JOINT(S) R, J

BRACING
TOP CHORD TO BE SHEATHED OR MAX. PURLIN SPACING = 3.19 FT.
MAX. UNBRACED BOTTOM CHORD LENGTH = 10.00 FT OR RIGID CEILING DIRECTLY APPLIED.

ALL PITCH BREAKS AND PERIMETER CORNER JOINTS MUST BE LATERALLY RESTRAINED.

LOADING
TOTAL LOAD CASES: (4)

CHORDS

MEMB. FR-TO	MAX. FACTORED FORCE (LBS)	FACTORED VERT. LOAD (PLF) FROM	TO	LC1	MAX CSI (LC)	MAX. UNBRAC LENGTH
A- B	0 / 28	-91.8	-91.8	0.12 (1)	10.00	
B- C	-2743 / 0	-91.8	-91.8	0.39 (1)	3.87	
C- D	-2581 / 0	-91.8	-91.8	0.36 (1)	3.99	
D- E	-2879 / 0	-91.8	-91.8	0.81 (1)	3.19	
E- F	-2879 / 0	-91.8	-91.8	0.81 (1)	3.19	
F- G	-2581 / 0	-91.8	-91.8	0.36 (1)	3.99	
G- H	-2743 / 0	-91.8	-91.8	0.39 (1)	3.87	
H- I	0 / 28	-91.8	-91.8	0.12 (1)	10.00	
R- B	-1964 / 0	0.0	0.0	0.20 (1)	6.01	
J- H	-1964 / 0	0.0	0.0	0.20 (1)	6.01	
R- Q	0 / 0	-18.5	-18.5	0.10 (4)	10.00	
Q- P	0 / 2473	-18.5	-18.5	0.48 (1)	10.00	
P- O	0 / 2290	-18.5	-18.5	0.46 (1)	10.00	
O- N	0 / 2290	-18.5	-18.5	0.46 (1)	10.00	
N- M	0 / 2290	-18.5	-18.5	0.46 (1)	10.00	
M- L	0 / 2290	-18.5	-18.5	0.46 (1)	10.00	
L- K	0 / 2473	-18.5	-18.5	0.48 (1)	10.00	
K- J	0 / 0	-18.5	-18.5	0.10 (4)	10.00	

WEBS

MEMB. FR-TO	MAX. FACTORED FORCE (LBS)	MAX CSI (LC)
Q- C	-337 / 0	0.07 (1)
C- P	-227 / 0	0.14 (1)
P- D	0 / 249	0.06 (4)
D- N	0 / 755	0.17 (1)
N- E	-814 / 0	0.48 (1)
N- F	0 / 755	0.17 (1)
L- F	0 / 249	0.06 (4)
L- G	-227 / 0	0.14 (1)
K- G	-337 / 0	0.07 (1)
B- Q	0 / 2509	0.56 (1)
K- H	0 / 2509	0.56 (1)

DESIGN CRITERIA

SPECIFIED LOADS:

TOP CH.	LL	=	25.6	PSF
	DL	=	6.0	PSF
BOT CH.	LL	=	0.0	PSF
	DL	=	7.4	PSF
TOTAL LOAD		=	39.0	PSF

SPACING = 24.0 IN. C/C

LOADING IN FLAT SECTION BASED ON A SLOPE OF 6.00/12

THIS TRUSS IS DESIGNED FOR RESIDENTIAL OR SMALL BUILDING REQUIREMENTS OF PART 9, NBCC 2015

THIS DESIGN COMPLIES WITH:
- PART 9 OF BCBC 2018 , NBC-2019AE
- PART 9 OF OBC 2012 (2019 AMENDMENT)
- CSA 086-14
- TPIC 2014

(55 % OF 31.3 P.S.F. G.S.L. PLUS 8.4 P.S.F. RAIN LOAD) EQUALS 25.6 P.S.F. SPECIFIED ROOF LIVE LOAD

ALLOWABLE DEFL.(LL)= L/360 (1.14")
CALCULATED VERT. DEFL.(LL) = L/ 999 (0.16")
ALLOWABLE DEFL.(TL)= L/360 (1.14")
CALCULATED VERT. DEFL.(TL) = L/ 999 (0.30")

CSI: TC=0.81/1.00 (E-F:1) , BC=0.48/1.00 (K-L:1) , WB=0.56/1.00 (B-Q:1) , SSI=0.32/1.00 (E-F:1)

DOL LUMBER=1.00 NAIL=1.00 LS BEND=1.10 COMP=1.10 SHEAR=1.10 TENS= 1.10

COMPANION LIVE LOAD FACTOR = 1.00

TRUSS PLATE MANUFACTURER IS NOT RESPONSIBLE FOR QUALITY CONTROL IN THE TRUSS MANUFACTURING PLANT .

NAIL VALUES

PLATE	GRIP(DRY) (PSI) MAX	MIN	SHEAR (PLI) MAX	MIN	SECTION (PLI) MAX	MIN
MT20	650	371	1747	788	1987	1873

PLATE PLACEMENT TOL. = 0.250 inches

PLATE ROTATION TOL. = 5.0 Deg.

JSI GRIP= 0.78 (J) (INPUT = 0.90)
JSI METAL= 0.77 (O) (INPUT = 0.95)

CITY OF RICHMOND HILL
BUILDING DIVISION
05/01/2024
RECEIVED
Per: joshua.nabua

JOB NAME	TRUSS NAME	QUANTITY	PLY	JOB DESC.	DRWG NO.
436988	T4	1	1	GREEN PARK HOMES TRUSS DESC.	

Tamarack Roof Truss, Burlington

Version 8.630 S Aug 30 2023 MiTek Industries, Inc. Mon Mar 4 08:03:30 2024 Page 1
ID:1PtzEZc03lbzkDC64XoV?RygPuj-BeE8mnw6kQ4GB91Rv61Gnx2HuRqse2v7rh2lCozeNPR

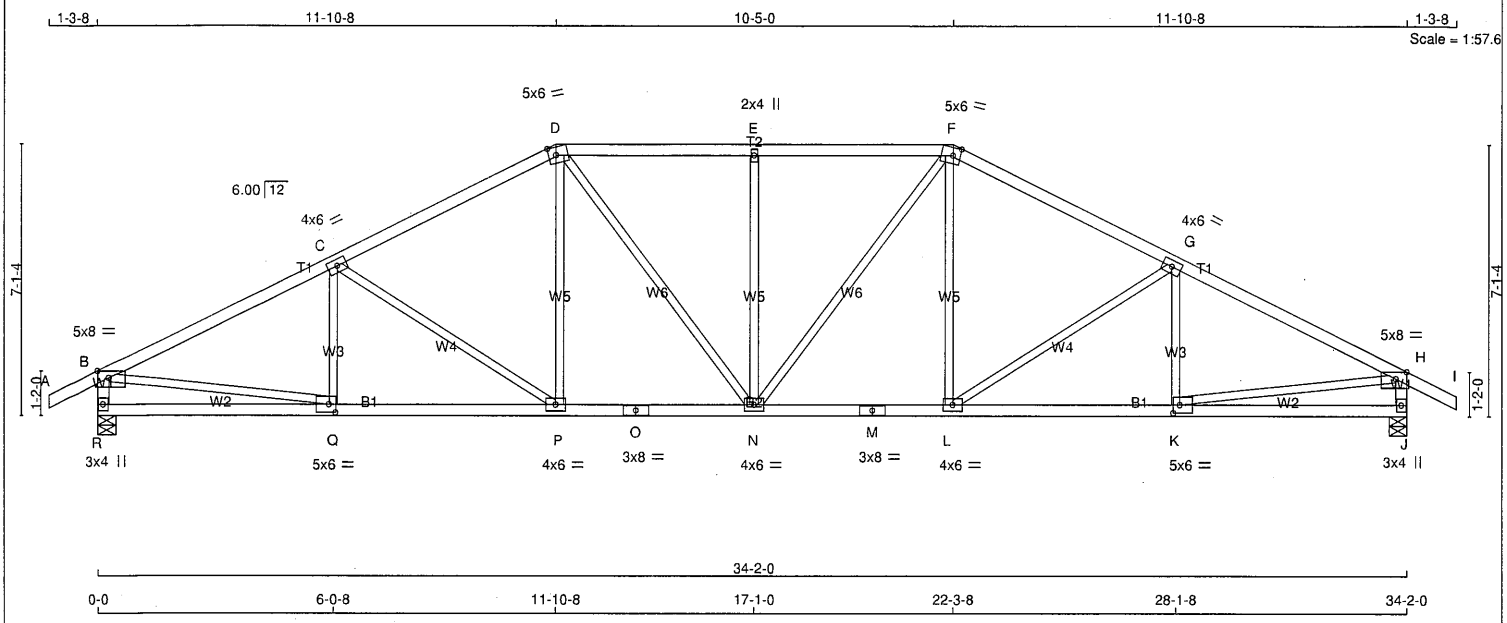

TOTAL WEIGHT = 142 lb
[M][F]

LUMBER
N. L. G. A. RULES

CHORDS	SIZE		LUMBER	DESCR.
A - D	2x4	DRY	No.2	SPF
D - F	2x4	DRY	No.2	SPF
F - I	2x4	DRY	No.2	SPF
R - B	2x4	DRY	No.2	SPF
J - H	2x4	DRY	No.2	SPF
R - O	2x4	DRY	No.2	SPF
O - M	2x4	DRY	No.2	SPF
M - J	2x4	DRY	No.2	SPF
ALL WEBS EXCEPT	2x3	DRY	No.2	SPF

DRY: SEASONED LUMBER.

PLATES (table is in inches)

JT	TYPE	PLATES	W	LEN	Y	X
B	TMVW-p	MT20	5.0	8.0	Edge	3.50
C	TMVW-t	MT20	4.0	6.0		
D	TTWW-m	MT20	5.0	6.0	2.50	2.25
E	TMW+w	MT20	2.0	4.0		
F	TTWW-m	MT20	5.0	6.0	2.50	2.25
G	TMVW-t	MT20	4.0	6.0		
H	TMVW-p	MT20	5.0	8.0	Edge	3.50
J	BMV1+p	MT20	3.0	4.0		
K	BMVW-t	MT20	5.0	6.0	2.50	2.00
L	BMVW-t	MT20	4.0	6.0		
M	BS-t	MT20	3.0	8.0		
N	BMVWW-t	MT20	4.0	6.0		
O	BS-t	MT20	3.0	8.0		
P	BMVW-t	MT20	4.0	6.0		
Q	BMVW-t	MT20	5.0	6.0	2.50	2.00
R	BMV1+p	MT20	3.0	4.0		

Edge - INDICATES REFERENCE CORNER OF PLATE TOUCHES EDGE OF CHORD.

NOTES- (1)
1) Lateral braces to be a minimum of 2X4 SPF #2.

LICENSED PROFESSIONAL ENGINEER
03-04-24
H. J. G. ALVES
100009024
PROVINCE OF ONTARIO

Structural component only
DWG# T-2406571

DIMENSIONS, SUPPORTS AND LOADINGS SPECIFIED BY FABRICATOR TO BE VERIFIED BY BUILDING DESIGNER

BEARINGS

JT	FACTORED GROSS REACTION VERT	HORZ	MAXIMUM FACTORED GROSS REACTION DOWN	HORZ	UPLIFT	INPUT BRG IN-SX	REQRD BRG IN-SX
R	2008	0	2008	0	0	5-8	3-0
J	2008	0	2008	0	0	5-8	3-0

UNFACTORED REACTIONS

JT	1ST LCASE COMBINED	MAX./MIN. COMPONENT REACTIONS SNOW	LIVE	PERM.LIVE	WIND	DEAD	SOIL
R	1418	944 / 0	0 / 0	0 / 0	0 / 0	474 / 0	0 / 0
J	1418	944 / 0	0 / 0	0 / 0	0 / 0	474 / 0	0 / 0

BEARING MATERIAL TO BE SPF NO.2 OR BETTER AT JOINT(S) R, J

BRACING
TOP CHORD TO BE SHEATHED OR MAX. PURLIN SPACING = 3.64 FT.
MAX. UNBRACED BOTTOM CHORD LENGTH = 10.00 FT OR RIGID CEILING DIRECTLY APPLIED.

ALL PITCH BREAKS AND PERIMETER CORNER JOINTS MUST BE LATERALLY RESTRAINED.

LOADING
TOTAL LOAD CASES: (4)

CHORDS

MEMB. FR-TO	MAX. FACTORED FORCE (LBS)	FACTORED VERT. LOAD LC1 FROM (PLF)	TO	MAX CSI (LC)	MAX. UNBRAC LENGTH
A- B	0 / 28	-91.8	-91.8	0.12 (1)	10.00
B- C	-2793 / 0	-91.8	-91.8	0.57 (1)	3.64
C- D	-2431 / 0	-91.8	-91.8	0.51 (1)	3.92
D- E	-2409 / 0	-91.8	-91.8	0.39 (1)	4.06
E- F	-2409 / 0	-91.8	-91.8	0.39 (1)	4.06
F- G	-2431 / 0	-91.8	-91.8	0.51 (1)	3.92
G- H	-2793 / 0	-91.8	-91.8	0.57 (1)	3.64
H- I	0 / 28	-91.8	-91.8	0.12 (1)	10.00
R- B	-1959 / 0	0.0	0.0	0.20 (1)	6.02
J- H	-1959 / 0	0.0	0.0	0.20 (1)	6.02
R- Q	0 / 0	-18.5	-18.5	0.15 (4)	10.00
Q- P	0 / 2523	-18.5	-18.5	0.47 (1)	10.00
P- O	0 / 2153	-18.5	-18.5	0.41 (1)	10.00
O- N	0 / 2153	-18.5	-18.5	0.41 (1)	10.00
N- M	0 / 2153	-18.5	-18.5	0.41 (1)	10.00
M- L	0 / 2153	-18.5	-18.5	0.41 (1)	10.00
L- K	0 / 2523	-18.5	-18.5	0.47 (1)	10.00
K- J	0 / 0	-18.5	-18.5	0.15 (4)	10.00

WEBS

MEMB. FR-TO	MAX. FACTORED FORCE (LBS)	MAX CSI (LC)
Q- C	-241 / 18	0.06 (1)
C- P	-449 / 0	0.43 (1)
P- D	0 / 353	0.08 (1)
D- N	0 / 421	0.09 (1)
N- E	-583 / 0	0.51 (1)
N- F	0 / 421	0.09 (1)
L- F	0 / 353	0.08 (1)
L- G	-449 / 0	0.43 (1)
K- G	-241 / 18	0.06 (1)
B- Q	0 / 2549	0.57 (1)
K- H	0 / 2549	0.57 (1)

DESIGN CRITERIA

SPECIFIED LOADS:

TOP CH.	LL	=	25.6	PSF
	DL	=	6.0	PSF
BOT CH.	LL	=	0.0	PSF
	DL	=	7.4	PSF
TOTAL LOAD		=	39.0	PSF

SPACING = 24.0 IN. C/C

LOADING IN FLAT SECTION BASED ON A SLOPE OF 6.00/12

THIS TRUSS IS DESIGNED FOR RESIDENTIAL OR SMALL BUILDING REQUIREMENTS OF PART 9, NBCC 2015

THIS DESIGN COMPLIES WITH:
- PART 9 OF BCBC 2018 , NBC-2019AE
- PART 9 OF OBC 2012 (2019 AMENDMENT)
- CSA 086-14
- TPIC 2014

(55 % OF 31.3 P.S.F. G.S.L. PLUS 8.4 P.S.F. RAIN LOAD) EQUALS 25.6 P.S.F. SPECIFIED ROOF LIVE LOAD

ALLOWABLE DEFL.(LL)= L/360 (1.14")
CALCULATED VERT. DEFL.(LL) = L/ 999 (0.14")
ALLOWABLE DEFL.(TL)= L/360 (1.14")
CALCULATED VERT. DEFL.(TL) = L/ 999 (0.26")

CSI: TC=0.57/1.00 (B-C:1) , BC=0.47/1.00 (P-Q:1) , WB=0.57/1.00 (B-Q:1) , SSI=0.24/1.00 (B-C:1)

DOL LUMBER=1.00 NAIL=1.00 LS BEND=1.10 COMP=1.10 SHEAR=1.10 TENS= 1.10

COMPANION LIVE LOAD FACTOR = 1.00

TRUSS PLATE MANUFACTURER IS NOT RESPONSIBLE FOR QUALITY CONTROL IN THE TRUSS MANUFACTURING PLANT .

NAIL VALUES

PLATE	GRIP(DRY) (PSI) MAX	MIN	SHEAR (PLI) MAX	MIN	SECTION (PLI) MAX	MIN
MT20	650	371	1747	788	1987	1873

PLATE PLACEMENT TOL. = 0.250 inches

PLATE ROTATION TOL. = 5.0 Deg.

JSI GRIP= 0.78 (J) (INPUT = 0.90)
JSI METAL= 0.65 (O) (INPUT = 0.95)

CITY OF RICHMOND HILL
BUILDING DIVISION
05/01/2024
RECEIVED
Per: joshua.nabua

JOB NAME	TRUSS NAME	QUANTITY	PLY	JOB DESC.	DRWG NO.
436988	T5	1	1	GREEN PARK HOMES TRUSS DESC.	

Tamarack Roof Truss, Burlington

Version 8.630 S Aug 30 2023 MiTek Industries, Inc. Mon Mar 4 08:03:31 2024 Page 1
ID:1PtzEZc03lbzkDC64XoV?RygPuj-fqoWz7xlVkC7pJbdTqZVK8aOqrAYNU6H4LorkEzeNPQ

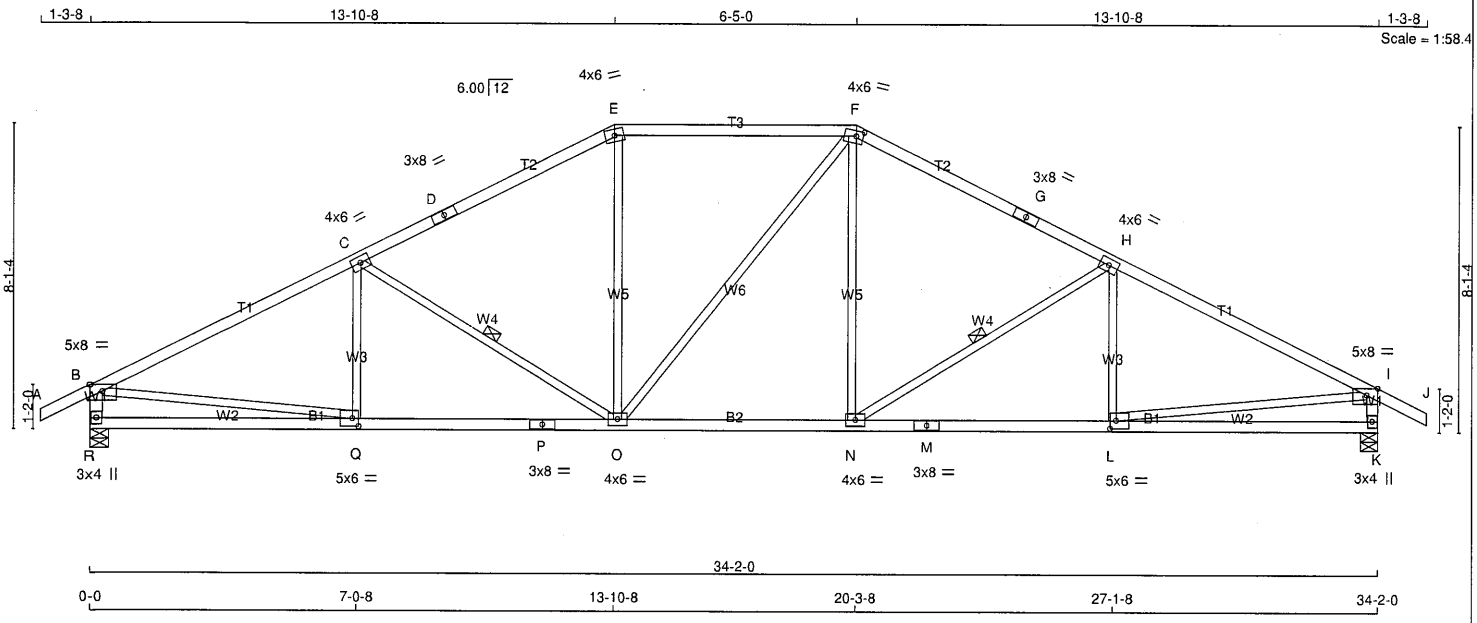

TOTAL WEIGHT = 137 lb
[M][F]

LUMBER
N. L. G. A. RULES

CHORDS	SIZE		LUMBER	DESCR.
A - D	2x4	DRY	No.2	SPF
D - E	2x4	DRY	No.2	SPF
E - F	2x4	DRY	No.2	SPF
F - G	2x4	DRY	No.2	SPF
G - J	2x4	DRY	No.2	SPF
R - B	2x4	DRY	No.2	SPF
K - I	2x4	DRY	No.2	SPF
R - P	2x4	DRY	No.2	SPF
P - M	2x4	DRY	No.2	SPF
M - K	2x4	DRY	No.2	SPF
ALL WEBS EXCEPT	2x3	DRY	No.2	SPF

DRY: SEASONED LUMBER.

PLATES (table is in inches)

JT	TYPE	PLATES	W	LEN	Y	X
B	TMVW-p	MT20	5.0	8.0	Edge	3.50
C	TMWW-t	MT20	4.0	6.0		
D	TS-t	MT20	3.0	8.0		
E	TTW-m	MT20	4.0	6.0		
F	TTWW-m	MT20	4.0	6.0	1.75	2.25
G	TS-t	MT20	3.0	8.0		
H	TMWW-t	MT20	4.0	6.0		
I	TMVW-p	MT20	5.0	8.0	Edge	3.50
K	BMV1+p	MT20	3.0	4.0		
L	BMWW-t	MT20	5.0	6.0	2.50	2.00
M	BS-t	MT20	3.0	8.0		
N	BMWW-t	MT20	4.0	6.0		
O	BMWWW-t	MT20	4.0	6.0		
P	BS-t	MT20	3.0	8.0		
Q	BMWW-t	MT20	5.0	6.0	2.50	2.00
R	BMV1+p	MT20	3.0	4.0		

Edge - INDICATES REFERENCE CORNER OF PLATE TOUCHES EDGE OF CHORD.

NOTES- (1)
1) Lateral braces to be a minimum of 2X4 SPF #2.

LICENSED PROFESSIONAL ENGINEER
03-04-24
H. J. G. ALVES
100009024
PROVINCE OF ONTARIO

Structural component only
DWG# T-2406572

DIMENSIONS, SUPPORTS AND LOADINGS SPECIFIED BY FABRICATOR TO BE VERIFIED BY BUILDING DESIGNER

BEARINGS

JT	FACTORED GROSS REACTION VERT	HORZ	MAXIMUM GROSS REACTION DOWN	HORZ	UPLIFT	FACTORED INPUT BRG IN-SX	REQRD BRG IN-SX
R	2008	0	2008	0	0	5-8	3-0
K	2008	0	2008	0	0	5-8	3-0

UNFACTORED REACTIONS

JT	1ST LCASE COMBINED	MAX./MIN. COMPONENT REACTIONS SNOW	LIVE	PERM.LIVE	WIND	DEAD	SOIL
R	1418	944 / 0	0 / 0	0 / 0	0 / 0	474 / 0	0 / 0
K	1418	944 / 0	0 / 0	0 / 0	0 / 0	474 / 0	0 / 0

BEARING MATERIAL TO BE SPF NO.2 OR BETTER AT JOINT(S) R, K

BRACING
TOP CHORD TO BE SHEATHED OR MAX. PURLIN SPACING = 3.31 FT.
MAX. UNBRACED BOTTOM CHORD LENGTH = 10.00 FT OR RIGID CEILING DIRECTLY APPLIED.

ALL PITCH BREAKS AND PERIMETER CORNER JOINTS MUST BE LATERALLY RESTRAINED.

1 LATERAL BRACE(S) AT 1/ 2 LENGTH OF C-O, H-N.

END VERTICAL(S) MUST BE SHEATHED OR HAVE BRACES AS INDICATED IN THE MAX. UNBRACED LENGTH COLUMN OF THE TABLE BELOW

LOADING
TOTAL LOAD CASES: (4)

CHORDS

MEMB. FR-TO	MAX. FACTORED FORCE (LBS)	FACTORED VERT. LOAD LC1 (PLF) FROM	TO	MAX CSI (LC)	MAX. UNBRAC LENGTH
A- B	0 / 28	-91.8	-91.8	0.12 (1)	10.00
B- C	-2808 / 0	-91.8	-91.8	0.81 (1)	3.31
C- D	-2262 / 0	-91.8	-91.8	0.71 (1)	3.75
D- E	-2262 / 0	-91.8	-91.8	0.71 (1)	3.75
E- F	-1998 / 0	-91.8	-91.8	0.56 (1)	4.14
F- G	-2262 / 0	-91.8	-91.8	0.71 (1)	3.75
G- H	-2262 / 0	-91.8	-91.8	0.71 (1)	3.75
H- I	-2809 / 0	-91.8	-91.8	0.81 (1)	3.31
I- J	0 / 28	-91.8	-91.8	0.12 (1)	10.00
R- B	-1953 / 0	0.0	0.0	0.20 (1)	6.03
K- I	-1953 / 0	0.0	0.0	0.20 (1)	6.03
R- Q	0 / 0	-18.5	-18.5	0.21 (4)	10.00
Q- P	0 / 2542	-18.5	-18.5	0.50 (1)	10.00
P- O	0 / 2542	-18.5	-18.5	0.50 (1)	10.00
O- N	0 / 1997	-18.5	-18.5	0.41 (1)	10.00
N- M	0 / 2542	-18.5	-18.5	0.51 (1)	10.00
M- L	0 / 2542	-18.5	-18.5	0.51 (1)	10.00
L- K	0 / 0	-18.5	-18.5	0.21 (4)	10.00

WEBS

MEMB. FR-TO	MAX. FACTORED FORCE (LBS)	MAX CSI (LC)
Q- C	-169 / 58	0.06 (1)
C- O	-651 / 0	0.30 (1)
O- E	0 / 468	0.11 (1)
O- F	0 / 0	0.00 (1)
N- F	0 / 467	0.11 (1)
N- H	-652 / 0	0.30 (1)
L- H	-169 / 59	0.05 (1)
B- Q	0 / 2561	0.58 (1)
L- I	0 / 2561	0.58 (1)

DESIGN CRITERIA

SPECIFIED LOADS:

TOP CH.	LL	=	25.6	PSF
	DL	=	6.0	PSF
BOT CH.	LL	=	0.0	PSF
	DL	=	7.4	PSF
TOTAL LOAD		=	39.0	PSF

SPACING = 24.0 IN. C/C

LOADING IN FLAT SECTION BASED ON A SLOPE OF 6.00/12

THIS TRUSS IS DESIGNED FOR RESIDENTIAL OR SMALL BUILDING REQUIREMENTS OF PART 9, NBCC 2015

THIS DESIGN COMPLIES WITH:
- PART 9 OF BCBC 2018 , NBC-2019AE
- PART 9 OF OBC 2012 (2019 AMENDMENT)
- CSA 086-14
- TPIC 2014

(55 % OF 31.3 P.S.F. G.S.L. PLUS 8.4 P.S.F. RAIN LOAD) EQUALS 25.6 P.S.F. SPECIFIED ROOF LIVE LOAD

ALLOWABLE DEFL.(LL)= L/360 (1.14")
CALCULATED VERT. DEFL.(LL) = L/ 999 (0.13")
ALLOWABLE DEFL.(TL)= L/360 (1.14")
CALCULATED VERT. DEFL.(TL) = L/ 999 (0.26")

CSI: TC=0.81/1.00 (H-I:1) , BC=0.51/1.00 (L-N:1) , WB=0.58/1.00 (I-L:1) , SSI=0.28/1.00 (B-C:1)

DOL LUMBER=1.00 NAIL=1.00 LS BEND=1.10 COMP=1.10 SHEAR=1.10 TENS= 1.10

COMPANION LIVE LOAD FACTOR = 1.00

TRUSS PLATE MANUFACTURER IS NOT RESPONSIBLE FOR QUALITY CONTROL IN THE TRUSS MANUFACTURING PLANT .

NAIL VALUES

PLATE	GRIP(DRY) (PSI) MAX	MIN	SHEAR (PLI) MAX	MIN	SECTION (PLI) MAX	MIN
MT20	650	371	1747	788	1987	1873

PLATE PLACEMENT TOL. = 0.250 inches

PLATE ROTATION TOL. = 5.0 Deg.

JSI GRIP= 0.78 (K) (INPUT = 0:90)
JSI METAL= 0.79 (M) (INPUT = 0.95)

CITY OF RICHMOND HILL
BUILDING DIVISION
05/01/2024
RECEIVED
Per: joshua.nabua

JOB NAME	TRUSS NAME	QUANTITY	PLY	JOB DESC.	DRWG NO.
436988	T6	1	1	GREEN PARK HOMES TRUSS DESC.	

Tamarack Roof Truss, Burlington

Version 8.630 S Aug 30 2023 MiTek Industries, Inc. Mon Mar 4 08:03:33 2024 Page 1
ID:1PtzEZc03lbzkDC64XoV?RygPuj-bDwHOpy?1LSq2dl0aEbzPZgo0ersrPnaYfHyp7zeNPO

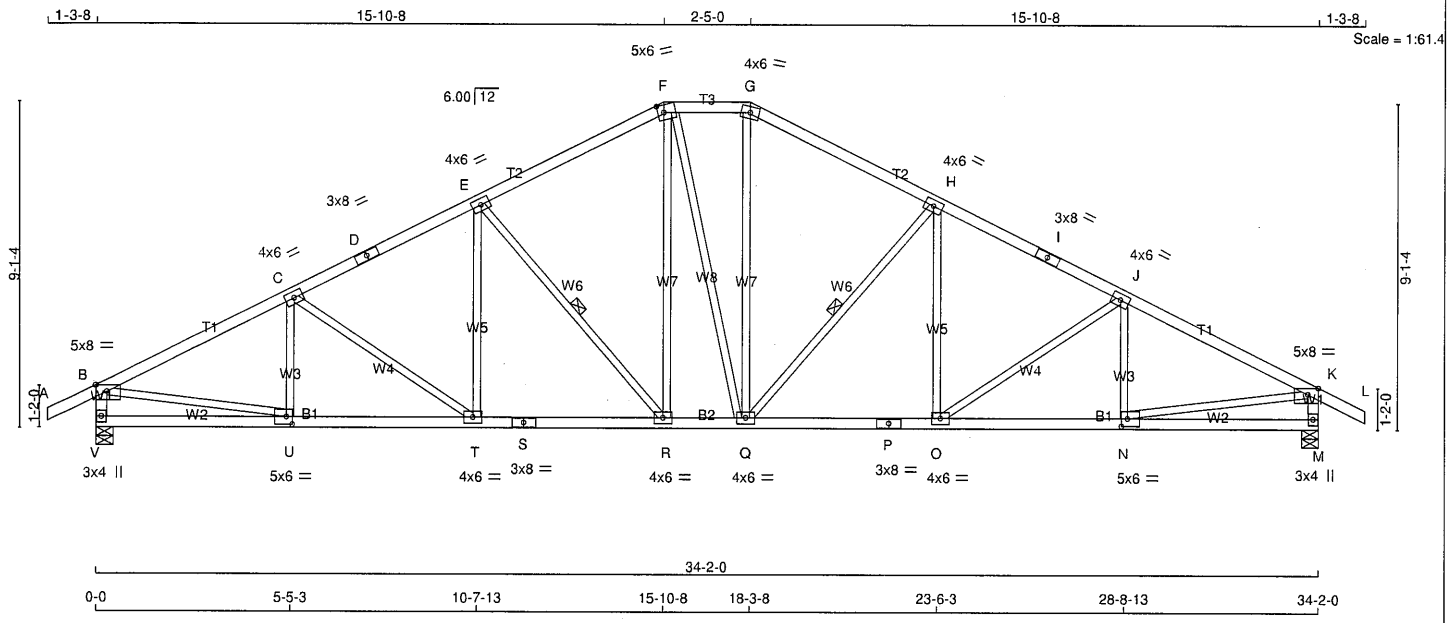

TOTAL WEIGHT = 154 lb

[M][F]

LUMBER

N. L. G. A. RULES

CHORDS	SIZE		LUMBER	DESCR.
A - D	2x4	DRY	No.2	SPF
D - F	2x4	DRY	No.2	SPF
F - G	2x4	DRY	No.2	SPF
G - I	2x4	DRY	No.2	SPF
I - L	2x4	DRY	No.2	SPF
V - B	2x4	DRY	No.2	SPF
M - K	2x4	DRY	No.2	SPF
V - S	2x4	DRY	No.2	SPF
S - P	2x4	DRY	No.2	SPF
P - M	2x4	DRY	No.2	SPF
ALL WEBS EXCEPT	2x3	DRY	No.2	SPF

DRY: SEASONED LUMBER.

PLATES (table is in inches)

JT	TYPE	PLATES	W	LEN	Y	X
B	TMVW-p	MT20	5.0	8.0	Edge	3.50
C, E, H, J						
C	TMWW-t	MT20	4.0	6.0		
D	TS-t	MT20	3.0	8.0		
F	TTWW-m	MT20	5.0	6.0	2.50	2.00
G	TTW-m	MT20	4.0	6.0		
I	TS-t	MT20	3.0	8.0		
K	TMVW-p	MT20	5.0	8.0	Edge	3.50
M	BMV1+p	MT20	3.0	4.0		
N	BMWW-t	MT20	5.0	6.0	2.50	2.00
O, R, T						
O	BMWW-t	MT20	4.0	6.0		
P	BS-t	MT20	3.0	8.0		
Q	BMWWW-t	MT20	4.0	6.0		
S	BS-t	MT20	3.0	8.0		
U	BMWW-t	MT20	5.0	6.0	2.50	2.00
V	BMV1+p	MT20	3.0	4.0		

Edge - INDICATES REFERENCE CORNER OF PLATE TOUCHES EDGE OF CHORD.

NOTES- (1)
1) Lateral braces to be a minimum of 2X4 SPF #2.

LICENSED PROFESSIONAL ENGINEER
03-04-24
H. J. G. ALVES
100009024
PROVINCE OF ONTARIO

Structural component only
DWG# T-2406573

DIMENSIONS, SUPPORTS AND LOADINGS SPECIFIED BY FABRICATOR TO BE VERIFIED BY BUILDING DESIGNER

BEARINGS

JT	FACTORED GROSS REACTION VERT	HORZ	MAXIMUM FACTORED GROSS REACTION DOWN	HORZ	UPLIFT	INPUT BRG IN-SX	REQRD BRG IN-SX
V	2008	0	2008	0	0	5-8	3-0
M	2008	0	2008	0	0	5-8	3-0

UNFACTORED REACTIONS

JT	1ST LCASE COMBINED	MAX./MIN. COMPONENT REACTIONS SNOW	LIVE	PERM.LIVE	WIND	DEAD	SOIL
V	1418	944 / 0	0 / 0	0 / 0	0 / 0	474 / 0	0 / 0
M	1418	944 / 0	0 / 0	0 / 0	0 / 0	474 / 0	0 / 0

BEARING MATERIAL TO BE SPF NO.2 OR BETTER AT JOINT(S) V, M

BRACING

TOP CHORD TO BE SHEATHED OR MAX. PURLIN SPACING = 3.81 FT.
MAX. UNBRACED BOTTOM CHORD LENGTH = 10.00 FT OR RIGID CEILING DIRECTLY APPLIED.

ALL PITCH BREAKS AND PERIMETER CORNER JOINTS MUST BE LATERALLY RESTRAINED.

1 LATERAL BRACE(S) AT 1/ 2 LENGTH OF E-R, H-Q.

END VERTICAL(S) MUST BE SHEATHED OR HAVE BRACES AS INDICATED IN THE MAX. UNBRACED LENGTH COLUMN OF THE TABLE BELOW

LOADING

TOTAL LOAD CASES: (4)

CHORDS

MEMB. FR-TO	MAX. FACTORED FORCE (LBS)	FACTORED VERT. LOAD (PLF) FROM	TO	LC1 MAX CSI (LC)	MAX. UNBRAC LENGTH
A- B	0 / 28	-91.8	-91.8	0.12 (1)	10.00
B- C	-2755 / 0	-91.8	-91.8	0.45 (1)	3.81
C- D	-2547 / 0	-91.8	-91.8	0.37 (1)	4.03
D- E	-2547 / 0	-91.8	-91.8	0.37 (1)	4.03
E- F	-2049 / 0	-91.8	-91.8	0.35 (1)	4.41
F- G	-1823 / 0	-91.8	-91.8	0.10 (1)	4.89
G- H	-2053 / 0	-91.8	-91.8	0.35 (1)	4.41
H- I	-2546 / 0	-91.8	-91.8	0.37 (1)	4.03
I- J	-2546 / 0	-91.8	-91.8	0.37 (1)	4.03
J- K	-2756 / 0	-91.8	-91.8	0.45 (1)	3.81
K- L	0 / 28	-91.8	-91.8	0.12 (1)	10.00
V- B	-1963 / 0	0.0	0.0	0.20 (1)	6.01
M- K	-1963 / 0	0.0	0.0	0.20 (1)	6.01
V- U	0 / 0	-18.5	-18.5	0.11 (4)	10.00
U- T	0 / 2482	-18.5	-18.5	0.45 (1)	10.00
T- S	0 / 2278	-18.5	-18.5	0.42 (1)	10.00
S- R	0 / 2278	-18.5	-18.5	0.42 (1)	10.00
R- Q	0 / 1821	-18.5	-18.5	0.35 (1)	10.00
Q- P	0 / 2277	-18.5	-18.5	0.42 (1)	10.00
P- O	0 / 2277	-18.5	-18.5	0.42 (1)	10.00
O- N	0 / 2482	-18.5	-18.5	0.44 (1)	10.00
N- M	0 / 0	-18.5	-18.5	0.11 (4)	10.00

WEBS

MEMB. FR-TO	MAX. FACTORED FORCE (LBS)	MAX CSI (LC)
U- C	-291 / 0	0.07 (1)
C- T	-247 / 0	0.18 (1)
T- E	0 / 243	0.06 (4)
E- R	-712 / 0	0.32 (1)
R- F	0 / 594	0.13 (1)
F- Q	0 / 11	0.00 (1)
Q- G	0 / 607	0.14 (1)
Q- H	-706 / 0	0.32 (1)
O- H	0 / 237	0.05 (4)
O- J	-249 / 0	0.18 (1)
N- J	-289 / 0	0.07 (1)
B- U	0 / 2513	0.57 (1)
N- K	0 / 2513	0.57 (1)

DESIGN CRITERIA

SPECIFIED LOADS:

TOP CH.	LL	=	25.6	PSF
	DL	=	6.0	PSF
BOT CH.	LL	=	0.0	PSF
	DL	=	7.4	PSF
TOTAL LOAD		=	39.0	PSF

SPACING = 24.0 IN. C/C

LOADING IN FLAT SECTION BASED ON A SLOPE OF 6.00/12

THIS TRUSS IS DESIGNED FOR RESIDENTIAL OR SMALL BUILDING REQUIREMENTS OF PART 9, NBCC 2015

THIS DESIGN COMPLIES WITH:
- PART 9 OF BCBC 2018 , NBC-2019AE
- PART 9 OF OBC 2012 (2019 AMENDMENT)
- CSA 086-14
- TPIC 2014

(55 % OF 31.3 P.S.F. G.S.L. PLUS 8.4 P.S.F. RAIN LOAD) EQUALS 25.6 P.S.F. SPECIFIED ROOF LIVE LOAD

ALLOWABLE DEFL.(LL)= L/360 (1.14")
CALCULATED VERT. DEFL.(LL) = L/ 999 (0.13")
ALLOWABLE DEFL.(TL)= L/360 (1.14")
CALCULATED VERT. DEFL.(TL) = L/ 999 (0.26")

CSI: TC=0.45/1.00 (J-K:1) , BC=0.45/1.00 (T-U:1) , WB=0.57/1.00 (K-N:1) , SSI=0.20/1.00 (J-K:1)

DOL LUMBER=1.00 NAIL=1.00 LS BEND=1.10 COMP=1.10 SHEAR=1.10 TENS= 1.10

COMPANION LIVE LOAD FACTOR = 1.00

TRUSS PLATE MANUFACTURER IS NOT RESPONSIBLE FOR QUALITY CONTROL IN THE TRUSS MANUFACTURING PLANT .

NAIL VALUES

PLATE	GRIP(DRY) (PSI) MAX	MIN	SHEAR (PLI) MAX	MIN	SECTION (PLI) MAX	MIN
MT20	650	371	1747	788	1987	1873

PLATE PLACEMENT TOL. = 0.250 inches

PLATE ROTATION TOL. = 5.0 Deg.

JSI GRIP= 0.78 (M) (INPUT = 0.90)
JSI METAL= 0.68 (S) (INPUT = 0.95)

CITY OF RICHMOND HILL
BUILDING DIVISION
05/01/2024
RECEIVED
Per: joshua.nabua

JOB NAME	TRUSS NAME	QUANTITY	PLY	JOB DESC.	DRWG NO.
436988	T7	4	1	GREEN PARK HOMES TRUSS DESC.	

Tamarack Roof Truss, Burlington

Version 8.630 S Aug 30 2023 MiTek Industries, Inc. Mon Mar 4 08:03:34 2024 Page 1
ID:1PtzEZc03lbzkDC64XoV?RygPuj-3PUfc9zdofahgnKC8y6CynCzh2BBaqZjmJ0VLZzeNPN

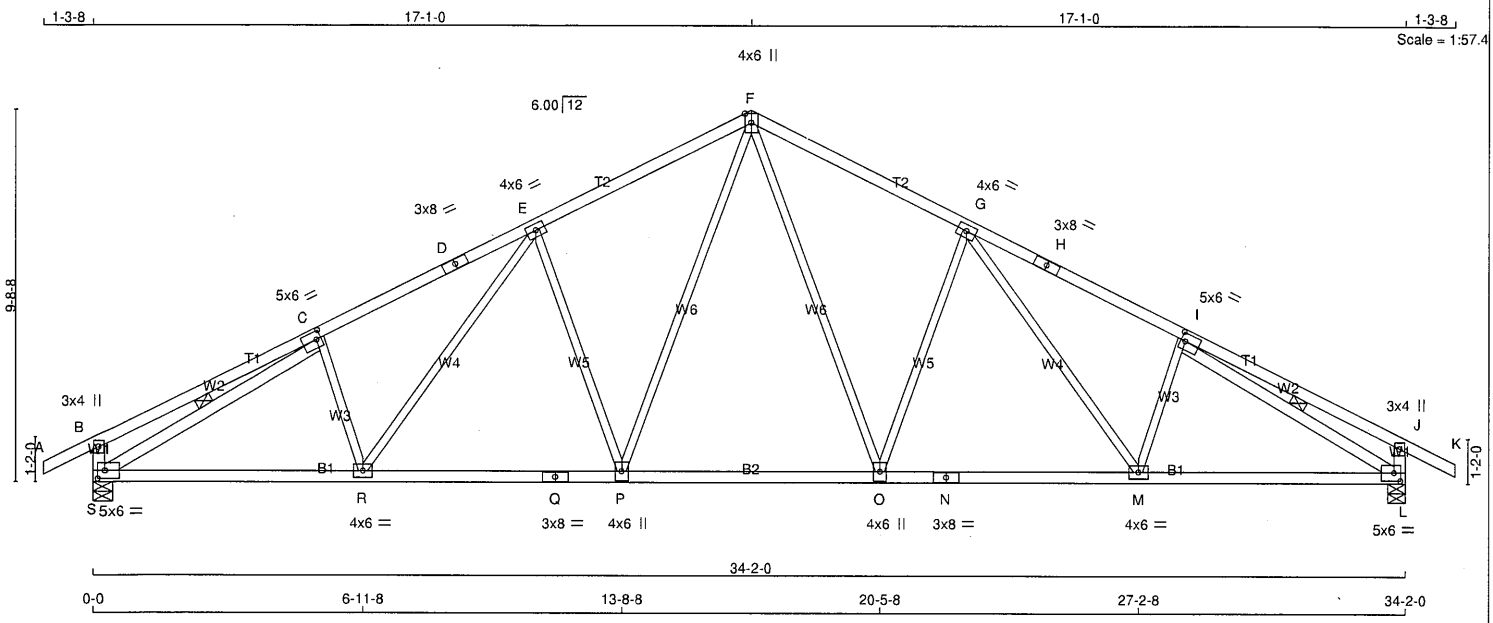

TOTAL WEIGHT = 4 X 148 = 590 lb

[M][F]

LUMBER

N. L. G. A. RULES

CHORDS	SIZE		LUMBER	DESCR.
A - D	2x4	DRY	No.2	SPF
D - F	2x4	DRY	No.2	SPF
F - H	2x4	DRY	No.2	SPF
H - K	2x4	DRY	No.2	SPF
S - B	2x4	DRY	No.2	SPF
L - J	2x4	DRY	No.2	SPF
S - Q	2x4	DRY	No.2	SPF
Q - N	2x4	DRY	No.2	SPF
N - L	2x4	DRY	No.2	SPF
ALL WEBS	2x3	DRY	No.2	SPF
EXCEPT				
S - C	2x4	DRY	No.2	SPF
I - L	2x4	DRY	No.2	SPF

DRY: SEASONED LUMBER.

PLATES (table is in inches)

JT	TYPE	PLATES	W	LEN	Y	X
B	TMV+p	MT20	3.0	4.0		
C	TMWW-t	MT20	5.0	6.0	2.50	1.50
D	TS-t	MT20	3.0	8.0		
E	TMWW-t	MT20	4.0	6.0		
F	TTWW+p	MT20	4.0	6.0	Edge	
G	TMWW-t	MT20	4.0	6.0		
H	TS-t	MT20	3.0	8.0		
I	TMWW-t	MT20	5.0	6.0	2.50	1.50
J	TMV+p	MT20	3.0	4.0		
L	BMVW1-t	MT20	5.0	6.0	2.50	2.00
M	BMWW-t	MT20	4.0	6.0		
N	BS-t	MT20	3.0	8.0		
O	BMWW+t	MT20	4.0	6.0		
P	BMWW+t	MT20	4.0	6.0		
Q	BS-t	MT20	3.0	8.0		
R	BMWW-t	MT20	4.0	6.0		
S	BMVW1-t	MT20	5.0	6.0	2.50	2.00

Edge - INDICATES REFERENCE CORNER OF PLATE TOUCHES EDGE OF CHORD.

NOTES- (1)
1)

LICENSED PROFESSIONAL ENGINEER
03-04-24
H. J. G. ALVES
100009024
PROVINCE OF ONTARIO

Structural component only
DWG# T-2406574

DIMENSIONS, SUPPORTS AND LOADINGS SPECIFIED BY FABRICATOR TO BE VERIFIED BY BUILDING DESIGNER

BEARINGS

JT	FACTORED GROSS REACTION VERT	HORZ	MAXIMUM FACTORED GROSS REACTION DOWN	HORZ	UPLIFT	INPUT BRG IN-SX	REQRD BRG IN-SX
S	2008	0	2008	0	0	5-8	2-3
L	2008	0	2008	0	0	5-8	2-3

UNFACTORED REACTIONS

JT	1ST LCASE COMBINED	MAX./MIN. COMPONENT REACTIONS SNOW	LIVE	PERM.LIVE	WIND	DEAD	SOIL
S	1418	944 / 0	0 / 0	0 / 0	0 / 0	474 / 0	0 / 0
L	1418	944 / 0	0 / 0	0 / 0	0 / 0	474 / 0	0 / 0

BEARING MATERIAL TO BE SPF NO.2 OR BETTER AT JOINT(S) S, L

BRACING

TOP CHORD TO BE SHEATHED OR MAX. PURLIN SPACING = 3.85 FT.
MAX. UNBRACED BOTTOM CHORD LENGTH = 10.00 FT OR RIGID CEILING DIRECTLY APPLIED.

ALL PITCH BREAKS AND PERIMETER CORNER JOINTS MUST BE LATERALLY RESTRAINED.

1 LATERAL BRACE(S) AT 1/ 2 LENGTH OF C-S, I-L.

END VERTICAL(S) MUST BE SHEATHED OR HAVE BRACES AS INDICATED IN THE MAX. UNBRACED LENGTH COLUMN OF THE TABLE BELOW

LOADING

TOTAL LOAD CASES: (4)

CHORDS MEMB. FR-TO	MAX. FACTORED FORCE (LBS)	FACTORED VERT. LOAD (PLF) FROM	TO	LC1 MAX CSI (LC)	MAX. UNBRAC LENGTH
A- B	0 / 28	-91.8	-91.8	0.12 (1)	10.00
B- C	0 / 22	-91.8	-91.8	0.38 (1)	10.00
C- D	-2712 / 0	-91.8	-91.8	0.45 (1)	3.85
D- E	-2712 / 0	-91.8	-91.8	0.45 (1)	3.85
E- F	-2249 / 0	-91.8	-91.8	0.43 (1)	4.16
F- G	-2249 / 0	-91.8	-91.8	0.43 (1)	4.16
G- H	-2712 / 0	-91.8	-91.8	0.45 (1)	3.85
H- I	-2712 / 0	-91.8	-91.8	0.45 (1)	3.85
I- J	0 / 22	-91.8	-91.8	0.38 (1)	10.00
J- K	0 / 28	-91.8	-91.8	0.12 (1)	10.00
S- B	-338 / 0	0.0	0.0	0.03 (1)	7.81
L- J	-338 / 0	0.0	0.0	0.03 (1)	7.81
S- R	0 / 2484	-18.5	-18.5	0.51 (1)	10.00
R- Q	0 / 2217	-18.5	-18.5	0.45 (1)	10.00
Q- P	0 / 2217	-18.5	-18.5	0.45 (1)	10.00
P- O	0 / 1707	-18.5	-18.5	0.36 (1)	10.00
O- N	0 / 2217	-18.5	-18.5	0.45 (1)	10.00
N- M	0 / 2217	-18.5	-18.5	0.45 (1)	10.00
M- L	0 / 2484	-18.5	-18.5	0.51 (1)	10.00

WEBS MEMB. FR-TO	MAX. FACTORED FORCE (LBS)	MAX CSI (LC)
F- O	0 / 838	0.19 (1)
O- G	-701 / 0	0.65 (1)
G- M	0 / 371	0.08 (1)
M- I	-179 / 20	0.05 (1)
P- F	0 / 838	0.19 (1)
E- P	-701 / 0	0.65 (1)
R- E	0 / 371	0.08 (1)
C- R	-179 / 20	0.05 (1)
S- C	-2962 / 0	0.66 (1)
I- L	-2962 / 0	0.66 (1)

DESIGN CRITERIA

SPECIFIED LOADS:

TOP CH.	LL	=	25.6	PSF
	DL	=	6.0	PSF
BOT CH.	LL	=	0.0	PSF
	DL	=	7.4	PSF
TOTAL LOAD		=	39.0	PSF

SPACING = 24.0 IN. C/C

THIS TRUSS IS DESIGNED FOR RESIDENTIAL OR SMALL BUILDING REQUIREMENTS OF PART 9, NBCC 2015

THIS DESIGN COMPLIES WITH:
- PART 9 OF BCBC 2018 , NBC-2019AE
- PART 9 OF OBC 2012 (2019 AMENDMENT)
- CSA 086-14
- TPIC 2014

(55 % OF 31.3 P.S.F. G.S.L. PLUS 8.4 P.S.F. RAIN LOAD) EQUALS 25.6 P.S.F. SPECIFIED ROOF LIVE LOAD

ALLOWABLE DEFL.(LL)= L/360 (1.14")
CALCULATED VERT. DEFL.(LL) = L/ 999 (0.13")
ALLOWABLE DEFL.(TL)= L/360 (1.14")
CALCULATED VERT. DEFL.(TL) = L/ 999 (0.26")

CSI: TC=0.45/1.00 (C-E:1) , BC=0.51/1.00 (L-M:1) , WB=0.66/1.00 (I-L:1) , SSI=0.22/1.00 (I-J:1)

DOL LUMBER=1.00 NAIL=1.00 LS BEND=1.10 COMP=1.10 SHEAR=1.10 TENS= 1.10

COMPANION LIVE LOAD FACTOR = 1.00

AUTOSOLVE HEELS OFF

TRUSS PLATE MANUFACTURER IS NOT RESPONSIBLE FOR QUALITY CONTROL IN THE TRUSS MANUFACTURING PLANT .

NAIL VALUES

PLATE	GRIP(DRY) (PSI) MAX	MIN	SHEAR (PLI) MAX	MIN	SECTION (PLI) MAX	MIN
MT20	650	371	1747	788	1987	1873

PLATE PLACEMENT TOL. = 0.250 inches

PLATE ROTATION TOL. = 5.0 Deg.

JSI GRIP= 0.79 (C) (INPUT = 0.90)
JSI METAL= 0.67 (C) (INPUT = 0.95)

CITY OF RICHMOND HILL
BUILDING DIVISION
05/01/2024
RECEIVED
Per: joshua.nabua

JOB NAME	TRUSS NAME	QUANTITY	PLY	JOB DESC.	DRWG NO.
436988	T8	1	2	GREEN PARK HOMES TRUSS DESC.	

Tamarack Roof Truss, Burlington

Version 8.630 S Aug 30 2023 MiTek Industries, Inc. Mon Mar 4 08:03:35 2024 Page 1
ID:1PtzEZc03lbzkDC64XoV?RygPuj-Yb21pV_FZziYlxvPifdRU_IB7SYoJHJs?zm3t?zeNPM

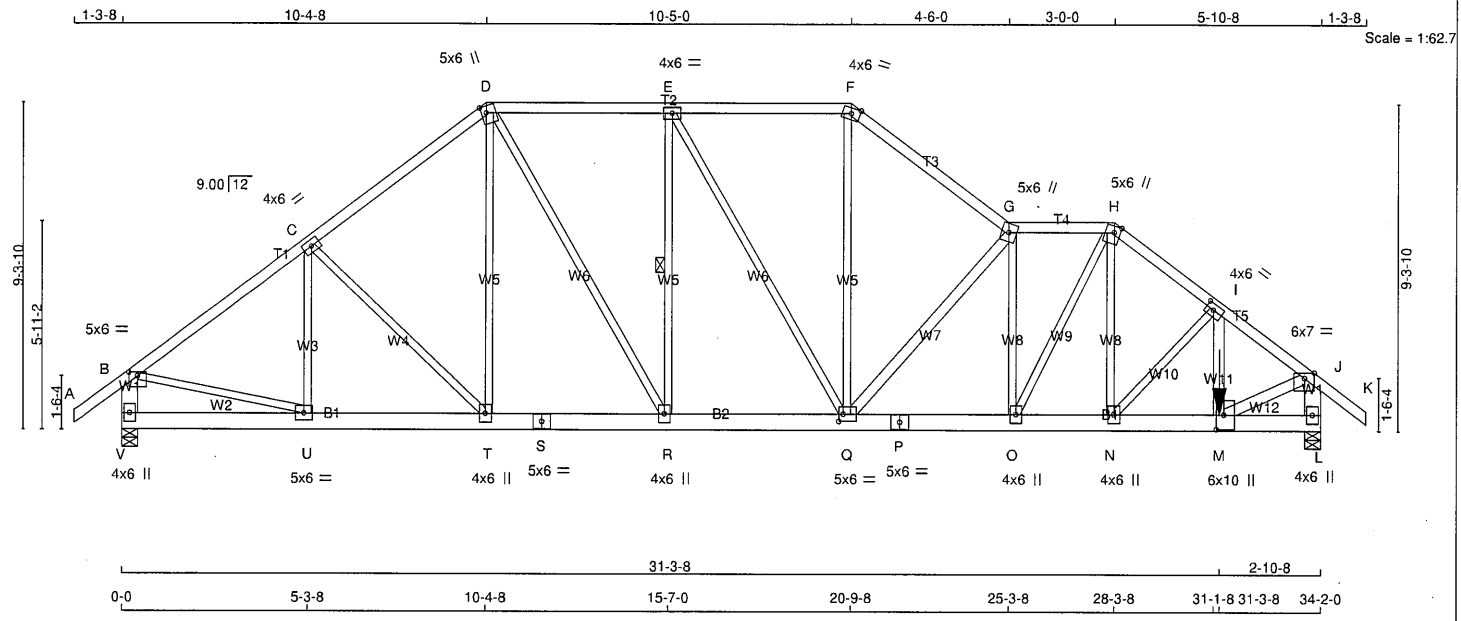

TOTAL WEIGHT = 2 X 195 = 390 lb

[M]

LUMBER

N. L. G. A. RULES

CHORDS	SIZE		LUMBER	DESCR.
A - D	2x4	DRY	No.2	SPF
D - F	2x4	DRY	No.2	SPF
F - G	2x4	DRY	No.2	SPF
G - H	2x4	DRY	No.2	SPF
H - K	2x4	DRY	No.2	SPF
V - B	2x6	DRY	No.2	SPF
L - J	2x6	DRY	No.2	SPF
V - S	2x6	DRY	No.2	SPF
S - P	2x6	DRY	No.2	SPF
P - L	2x6	DRY	No.2	SPF
ALL WEBS EXCEPT	2x3	DRY	No.2	SPF
Q - G	2x4	DRY	No.2	SPF
M - I	2x4	DRY	No.2	SPF
M - J	2x4	DRY	No.2	SPF

DRY: SEASONED LUMBER.

DESIGN CONSISTS OF 2 TRUSSES BUILT SEPARATELY THEN FASTENED TOGETHER AS FOLLOWS:

CHORDS	#ROWS	SURFACE SPACING (IN)	LOAD(PLF)
TOP CHORDS : (0.122"X3") SPIRAL NAILS			
A- D	1	12	TOP
D- F	1	12	TOP
F- G	1	12	TOP
G- H	1	12	TOP
H- K	1	12	TOP
V- B	2	12	TOP
L- J	2	12	TOP
BOTTOM CHORDS : (0.122"X3") SPIRAL NAILS			
V- S	2	12	TOP
S- P	2	12	TOP
P- L	2	12	SIDE(183.1)
WEBS : (0.122"X3") SPIRAL NAILS			
2x3	1	6	
I- M	2	3	SIDE(816.1)
2x4	1	6	

NAILS TO BE DRIVEN FROM ONE SIDE ONLY.

LICENSED PROFESSIONAL ENGINEER
03-04-24
H. J. G. ALVES
100009024
PROVINCE OF ONTARIO

Structural component only
DWG# T-2406575

DIMENSIONS, SUPPORTS AND LOADINGS SPECIFIED BY FABRICATOR TO BE VERIFIED BY BUILDING DESIGNER

BEARINGS

JT	FACTORED GROSS REACTION VERT	HORZ	MAXIMUM FACTORED GROSS REACTION DOWN	HORZ	UPLIFT	INPUT BRG IN-SX	REQRD BRG IN-SX
V	2335	0	2335	0	0	5-8	1-8
L	5516	0	5516	0	0	5-8	3-7

UNFACTORED REACTIONS

JT	1ST LCASE COMBINED	MAX./MIN. COMPONENT REACTIONS SNOW	LIVE	PERM.LIVE	WIND	DEAD	SOIL
V	1648	1100 / 0	0 / 0	0 / 0	0 / 0	548 / 0	0 / 0
L	3889	2616 / 0	0 / 0	0 / 0	0 / 0	1273 / 0	0 / 0

BEARING MATERIAL TO BE SPF NO.2 OR BETTER AT JOINT(S) V, L

BRACING

TOP CHORD TO BE SHEATHED OR MAX. PURLIN SPACING = 3.98 FT.
MAX. UNBRACED BOTTOM CHORD LENGTH = 10.00 FT OR RIGID CEILING DIRECTLY APPLIED.

ALL PITCH BREAKS AND PERIMETER CORNER JOINTS MUST BE LATERALLY RESTRAINED.

1 LATERAL BRACE(S) AT 1/ 2 LENGTH OF E-R.

END VERTICAL(S) MUST BE SHEATHED OR HAVE BRACES AS INDICATED IN THE MAX. UNBRACED LENGTH COLUMN OF THE TABLE BELOW

LOADING

TOTAL LOAD CASES: (4)

CHORDS MEMB. FR-TO	MAX. FACTORED FORCE (LBS)	FACTORED VERT. LOAD (PLF) FROM	TO	LC1 MAX CSI (LC)	MAX. UNBRAC LENGTH	WEBS MEMB. FR-TO	MAX. FACTORED FORCE (LBS)	MAX CSI (LC)
A- B	0 / 38	-91.8	-91.8	0.07 (1)	10.00	U- C	-350 / 0	0.08 (1)
B- C	-2531 / 0	-91.8	-91.8	0.28 (1)	5.40	C- T	-199 / 0	0.10 (1)
C- D	-2425 / 0	-91.8	-91.8	0.27 (1)	5.49	T- D	0 / 253	0.03 (1)
D- E	-2390 / 0	-91.8	-91.8	0.26 (1)	5.52	D- R	0 / 948	0.12 (1)
E- F	-2477 / 0	-91.8	-91.8	0.26 (1)	5.44	R- E	-724 / 0	0.20 (1)
F- G	-3076 / 0	-91.8	-91.8	0.23 (1)	5.05	E- Q	0 / 175	0.02 (1)
G- H	-3700 / 0	-91.8	-91.8	0.12 (1)	4.80	Q- F	0 / 1447	0.18 (1)
H- I	-4147 / 0	-91.8	-91.8	0.13 (1)	4.58	Q- G	-1958 / 0	0.69 (1)
I- J	-5643 / 0	-91.8	-91.8	0.17 (1)	3.98	O- G	-684 / 0	0.18 (1)
J- K	0 / 38	-91.8	-91.8	0.07 (1)	10.00	O- H	0 / 794	0.10 (1)
V- B	-2282 / 0	0.0	0.0	0.08 (1)	7.81	N- H	0 / 1531	0.19 (1)
L- J	-5369 / 0	0.0	0.0	0.19 (1)	6.32	N- I	-1777 / 0	0.30 (1)
						M- I	0 / 1895	0.17 (1)
V- U	0 / 0	-18.5	-18.5	0.03 (4)	10.00	B- U	0 / 2096	0.26 (1)
U- T	0 / 2051	-18.5	-18.5	0.15 (1)	10.00	M- J	0 / 4840	0.43 (1)
T- S	0 / 1912	-18.5	-18.5	0.14 (1)	10.00			
S- R	0 / 1912	-18.5	-18.5	0.14 (1)	10.00			
R- Q	0 / 2391	-18.5	-18.5	0.17 (1)	10.00			
Q- P	0 / 3713	-18.5	-18.5	0.27 (1)	10.00			
P- O	0 / 3713	-18.5	-18.5	0.27 (1)	10.00			
O- N	0 / 3332	-18.5	-18.5	0.25 (1)	10.00			
N- M	0 / 4520	-18.5	-18.5	0.42 (1)	10.00			
M- L	0 / 0	-18.5	-18.5	0.13 (1)	10.00			

SPECIFIED CONCENTRATED LOADS (LBS)

JT	LOC.	LC1	MAX-	MAX+	FACE	DIR.	TYPE	HEEL	CONN.
M	31-3-8	-2699	-2699	---	BACK	VERT	TOTAL	---	C1

CONNECTION REQUIREMENTS

1) **C1:** A SUITABLE HANGER/MECHANICAL CONNECTION IS REQUIRED.

DESIGN CRITERIA

SPECIFIED LOADS:

TOP CH.	LL	=	25.6	PSF
	DL	=	6.0	PSF
BOT CH.	LL	=	0.0	PSF
	DL	=	7.4	PSF
TOTAL LOAD		=	39.0	PSF

SPACING = 24.0 IN. C/C

LOADING IN ALL FLAT SECTIONS BASED ON A SLOPE OF 6.00/12

THIS TRUSS IS DESIGNED FOR RESIDENTIAL OR SMALL BUILDING REQUIREMENTS OF PART 9, NBCC 2015

THIS DESIGN COMPLIES WITH:
- PART 9 OF BCBC 2018 , NBC-2019AE
- PART 9 OF OBC 2012 (2019 AMENDMENT)
- CSA 086-14
- TPIC 2014

(55 % OF 31.3 P.S.F. G.S.L. PLUS 8.4 P.S.F. RAIN LOAD) EQUALS 25.6 P.S.F. SPECIFIED ROOF LIVE LOAD

ALLOWABLE DEFL.(LL)= L/360 (1.14")
CALCULATED VERT. DEFL.(LL) = L/ 999 (0.07")
ALLOWABLE DEFL.(TL)= L/360 (1.14")
CALCULATED VERT. DEFL.(TL) = L/ 999 (0.12")

CSI: TC=0.28/1.00 (B-C:1) , BC=0.42/1.00 (M-N:1) , WB=0.69/1.00 (G-Q:1) , SSI=0.13/1.00 (E-F:1)

DOL LUMBER=1.00 NAIL=1.00 LS BEND=1.00 COMP=1.00 SHEAR=1.00 TENS= 1.00

COMPANION LIVE LOAD FACTOR = 1.00

AUTOSOLVE HEELS OFF

TRUSS PLATE MANUFACTURER IS NOT RESPONSIBLE FOR QUALITY CONTROL IN THE TRUSS MANUFACTURING PLANT .

NAIL VALUES

PLATE	GRIP(DRY) (PSI) MAX	MIN	SHEAR (PLI) MAX	MIN	SECTION (PLI) MAX	MIN
MT20	650	371	1747	788	1987	1873

PLATE PLACEMENT TOL. = 0.250 inches

PLATE ROTATION TOL. = 5.0 Deg.

JSI GRIP= 0.77 (M) (INPUT = 0.90)
JSI METAL= 0.68 (M) (INPUT = 0.95)

CONTINUED ON PAGE 2

CITY OF RICHMOND HILL
BUILDING DIVISION
05/01/2024
RECEIVED
Per: joshua.nabua

GIRDER NAILING ASSUMES NAILED HANGERS ARE FASTENED WITH MIN. 3-0 INCH NAILS.

PLATES (table is in inches)

JT	TYPE	PLATES	W	LEN	Y	X
B	TMVW-p	MT20	5.0	6.0	1.25	3.00
C	TMWW-t	MT20	4.0	6.0		
D	TTWW+m	MT20	5.0	6.0	2.25	1.75
E	TMWW-t	MT20	4.0	6.0		
F	TTW-m	MT20	4.0	6.0	Edge	
G	TTWW+m	MT20	5.0	6.0		
H	TTWW+m	MT20	5.0	6.0	Edge	2.00
I	TMWW-t	MT20	4.0	6.0	2.00	2.75
J	TMVW-p	MT20	6.0	7.0	Edge	3.25
L	BMV1+p	MT20	4.0	6.0		
M	BMWW+t	MT20	6.0	10.0	5.00	2.50
N, O, R, T						
N	BMWW+t	MT20	4.0	6.0		
P	BS-t	MT20	5.0	6.0		
Q	BMWWW-t	MT20	5.0	6.0	2.50	1.50
S	BS-t	MT20	5.0	6.0		
U	BMWW-t	MT20	5.0	6.0		
V	BMV1+p	MT20	4.0	6.0		

Edge - INDICATES REFERENCE CORNER OF PLATE TOUCHES EDGE OF CHORD.

NOTES- (1)
1) Lateral braces to be a minimum of 2X4 SPF #2.

LICENSED PROFESSIONAL ENGINEER
03-04-24
H. J. G. ALVES
100009024
PROVINCE OF ONTARIO

Structural component only
DWG# T-2406575

CITY OF RICHMOND HILL
BUILDING DIVISION
05/01/2024
RECEIVED
Per: joshua.nabua

JOB NAME	TRUSS NAME	QUANTITY	PLY	JOB DESC.	DRWG NO.
436988	T9	2	1	GREEN PARK HOMES TRUSS DESC.	

Tamarack Roof Truss, Burlington

Version 8.630 S Aug 30 2023 MiTek Industries, Inc. Mon Mar 4 08:03:36 2024 Page 1
ID:1PtzEZc03lbzkDC64XoV?RygPuj-0ocP1q_tKGqPv4UbGN8g1ClHHru?2hW0EdVcPRzeNPL

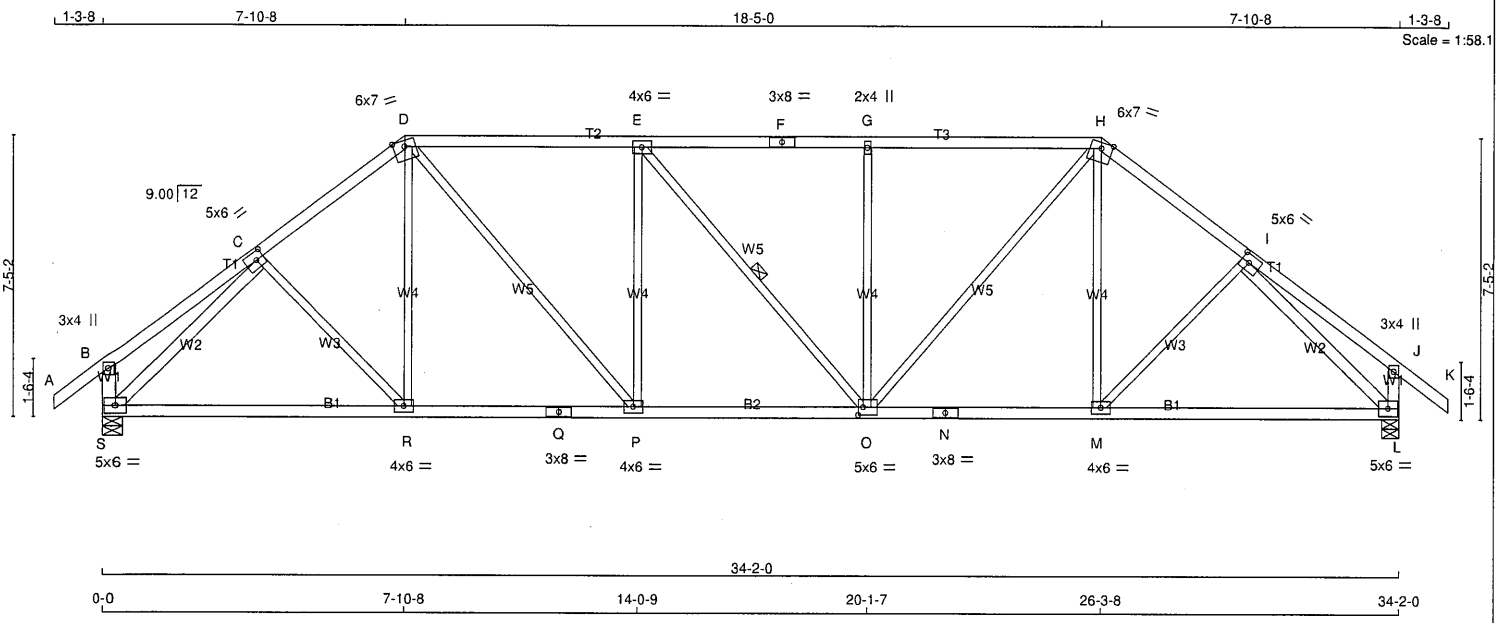

TOTAL WEIGHT = 2 X 154 = 309 lb

[M]

LUMBER

N. L. G. A. RULES

CHORDS	SIZE		LUMBER	DESCR.
A - D	2x4	DRY	No.2	SPF
D - F	2x4	DRY	No.2	SPF
F - H	2x4	DRY	No.2	SPF
H - K	2x4	DRY	No.2	SPF
S - B	2x4	DRY	No.2	SPF
L - J	2x4	DRY	No.2	SPF
S - Q	2x4	DRY	No.2	SPF
Q - N	2x4	DRY	No.2	SPF
N - L	2x4	DRY	No.2	SPF
ALL WEBS	2x3	DRY	No.2	SPF
EXCEPT				
S - C	2x4	DRY	No.2	SPF
I - L	2x4	DRY	No.2	SPF

DRY: SEASONED LUMBER.

PLATES (table is in inches)

JT	TYPE	PLATES	W	LEN	Y	X
B	TMV+p	MT20	3.0	4.0		
C	TMWW-t	MT20	5.0	6.0	2.50	2.50
D	TTWW-m	MT20	6.0	7.0	Edge	
E	TMWW-t	MT20	4.0	6.0		
F	TS-t	MT20	3.0	8.0		
G	TMW+w	MT20	2.0	4.0		
H	TTWW-m	MT20	6.0	7.0	Edge	
I	TMWW-t	MT20	5.0	6.0	2.50	2.50
J	TMV+p	MT20	3.0	4.0		
L	BMVW1-t	MT20	5.0	6.0		
M, P, R						
M	BMWW-t	MT20	4.0	6.0		
N	BS-t	MT20	3.0	8.0		
O	BMWWW-t	MT20	5.0	6.0	2.50	1.50
Q	BS-t	MT20	3.0	8.0		
S	BMVW1-t	MT20	5.0	6.0		

Edge - INDICATES REFERENCE CORNER OF PLATE TOUCHES EDGE OF CHORD.

NOTES- (1)

1) Lateral braces to be a minimum of 2X4 SPF #2.

LICENSED PROFESSIONAL ENGINEER
03-04-24
H. J. G. ALVES
100009024
PROVINCE OF ONTARIO

Structural component only
DWG# T-2406576

DIMENSIONS, SUPPORTS AND LOADINGS SPECIFIED BY FABRICATOR TO BE VERIFIED BY BUILDING DESIGNER

BEARINGS

JT	FACTORED GROSS REACTION VERT	HORZ	MAXIMUM FACTORED GROSS REACTION DOWN	HORZ	UPLIFT	INPUT BRG	REQRD BRG
S	2010	0	2010	0	0	IN-SX	IN-SX
L	2010	0	2010	0	0	5-8	2-3

UNFACTORED REACTIONS

JT	1ST LCASE COMBINED	MAX./MIN. COMPONENT REACTIONS SNOW	LIVE	PERM.LIVE	WIND	DEAD	SOIL
S	1419	945 / 0	0 / 0	0 / 0	0 / 0	474 / 0	0 / 0
L	1419	945 / 0	0 / 0	0 / 0	0 / 0	474 / 0	0 / 0

BEARING MATERIAL TO BE SPF NO.2 OR BETTER AT JOINT(S) S, L

BRACING

TOP CHORD TO BE SHEATHED OR MAX. PURLIN SPACING = 3.88 FT.
MAX. UNBRACED BOTTOM CHORD LENGTH = 10.00 FT OR RIGID CEILING DIRECTLY APPLIED.

ALL PITCH BREAKS AND PERIMETER CORNER JOINTS MUST BE LATERALLY RESTRAINED.

1 LATERAL BRACE(S) AT 1/ 2 LENGTH OF E-O.

END VERTICAL(S) MUST BE SHEATHED OR HAVE BRACES AS INDICATED IN THE MAX. UNBRACED LENGTH COLUMN OF THE TABLE BELOW

LOADING

TOTAL LOAD CASES: (4)

CHORDS MEMB. FR-TO	MAX. FACTORED FORCE (LBS)	FACTORED VERT. LOAD (PLF) FROM	TO	LC1	MAX CSI (LC)	MAX. UNBRAC LENGTH	WEBS MEMB. FR-TO	MAX. FACTORED FORCE (LBS)	MAX CSI (LC)
A- B	0 / 38	-91.8	-91.8		0.12 (1)	10.00	C- R	0 / 62	0.02 (4)
B- C	0 / 24	-91.8	-91.8		0.22 (1)	10.00	R- D	0 / 132	0.04 (4)
C- D	-2050 / 0	-91.8	-91.8		0.29 (1)	4.46	D- P	0 / 942	0.21 (1)
D- E	-2236 / 0	-91.8	-91.8		0.64 (1)	3.88	P- E	-609 / 0	0.60 (1)
E- F	-2235 / 0	-91.8	-91.8		0.63 (1)	3.88	E- O	-2 / 0	0.00 (1)
F- G	-2235 / 0	-91.8	-91.8		0.63 (1)	3.88	O- G	-608 / 0	0.60 (1)
G- H	-2235 / 0	-91.8	-91.8		0.63 (1)	3.89	O- H	0 / 939	0.21 (1)
H- I	-2050 / 0	-91.8	-91.8		0.29 (1)	4.46	M- H	0 / 133	0.04 (4)
I- J	0 / 24	-91.8	-91.8		0.22 (1)	10.00	M- I	0 / 62	0.02 (4)
J- K	0 / 38	-91.8	-91.8		0.12 (1)	10.00	S- C	-2320 / 0	0.89 (1)
S- B	-266 / 0	0.0	0.0		0.03 (1)	7.81	I- L	-2320 / 0	0.89 (1)
L- J	-266 / 0	0.0	0.0		0.03 (1)	7.81			
S- R	0 / 1596	-18.5	-18.5		0.40 (1)	10.00			
R- Q	0 / 1619	-18.5	-18.5		0.40 (1)	10.00			
Q- P	0 / 1619	-18.5	-18.5		0.40 (1)	10.00			
P- O	0 / 2236	-18.5	-18.5		0.42 (1)	10.00			
O- N	0 / 1620	-18.5	-18.5		0.40 (1)	10.00			
N- M	0 / 1620	-18.5	-18.5		0.40 (1)	10.00			
M- L	0 / 1596	-18.5	-18.5		0.40 (1)	10.00			

DESIGN CRITERIA

SPECIFIED LOADS:

TOP CH.	LL	=	25.6	PSF
	DL	=	6.0	PSF
BOT CH.	LL	=	0.0	PSF
	DL	=	7.4	PSF
TOTAL LOAD		=	39.0	PSF

SPACING = 24.0 IN. C/C

LOADING IN FLAT SECTION BASED ON A SLOPE OF 6.00/12

THIS TRUSS IS DESIGNED FOR RESIDENTIAL OR SMALL BUILDING REQUIREMENTS OF PART 9, NBCC 2015

THIS DESIGN COMPLIES WITH:
- PART 9 OF BCBC 2018 , NBC-2019AE
- PART 9 OF OBC 2012 (2019 AMENDMENT)
- CSA 086-14
- TPIC 2014

(55 % OF 31.3 P.S.F. G.S.L. PLUS 8.4 P.S.F. RAIN LOAD) EQUALS 25.6 P.S.F. SPECIFIED ROOF LIVE LOAD

ALLOWABLE DEFL.(LL)= L/360 (1.14")
CALCULATED VERT. DEFL.(LL) = L/ 999 (0.10")
ALLOWABLE DEFL.(TL)= L/360 (1.14")
CALCULATED VERT. DEFL.(TL) = L/ 999 (0.21")

CSI: TC=0.64/1.00 (D-E:1) , BC=0.42/1.00 (O-P:1) , WB=0.89/1.00 (I-L:1) , SSI=0.26/1.00 (D-E:1)

DOL LUMBER=1.00 NAIL=1.00 LS BEND=1.10 COMP=1.10 SHEAR=1.10 TENS= 1.10

COMPANION LIVE LOAD FACTOR = 1.00

AUTOSOLVE HEELS OFF

TRUSS PLATE MANUFACTURER IS NOT RESPONSIBLE FOR QUALITY CONTROL IN THE TRUSS MANUFACTURING PLANT .

NAIL VALUES

PLATE	GRIP(DRY) (PSI) MAX	MIN	SHEAR (PLI) MAX	MIN	SECTION (PLI) MAX	MIN
MT20	650	371	1747	788	1987	1873

PLATE PLACEMENT TOL. = 0.250 inches

PLATE ROTATION TOL. = 5.0 Deg.

JSI GRIP= 0.79 (L) (INPUT = 0.90)
JSI METAL= 0.52 (I) (INPUT = 0.95)

CITY OF RICHMOND HILL
BUILDING DIVISION
05/01/2024
RECEIVED
Per: joshua.nabua

JOB NAME	TRUSS NAME	QUANTITY	PLY	JOB DESC.	DRWG NO.
436988	T10	1	1	GREEN PARK HOMES TRUSS DESC.	

Tamarack Roof Truss, Burlington

Version 8.630 S Aug 30 2023 MiTek Industries, Inc. Mon Mar 4 08:03:37 2024 Page 1
ID:1PtzEZc03lbzkDC64XoV?RygPuj-U_AnEA?V5ayGXE3np4fvZPqQTFFAnF69SHFAyuzeNPK

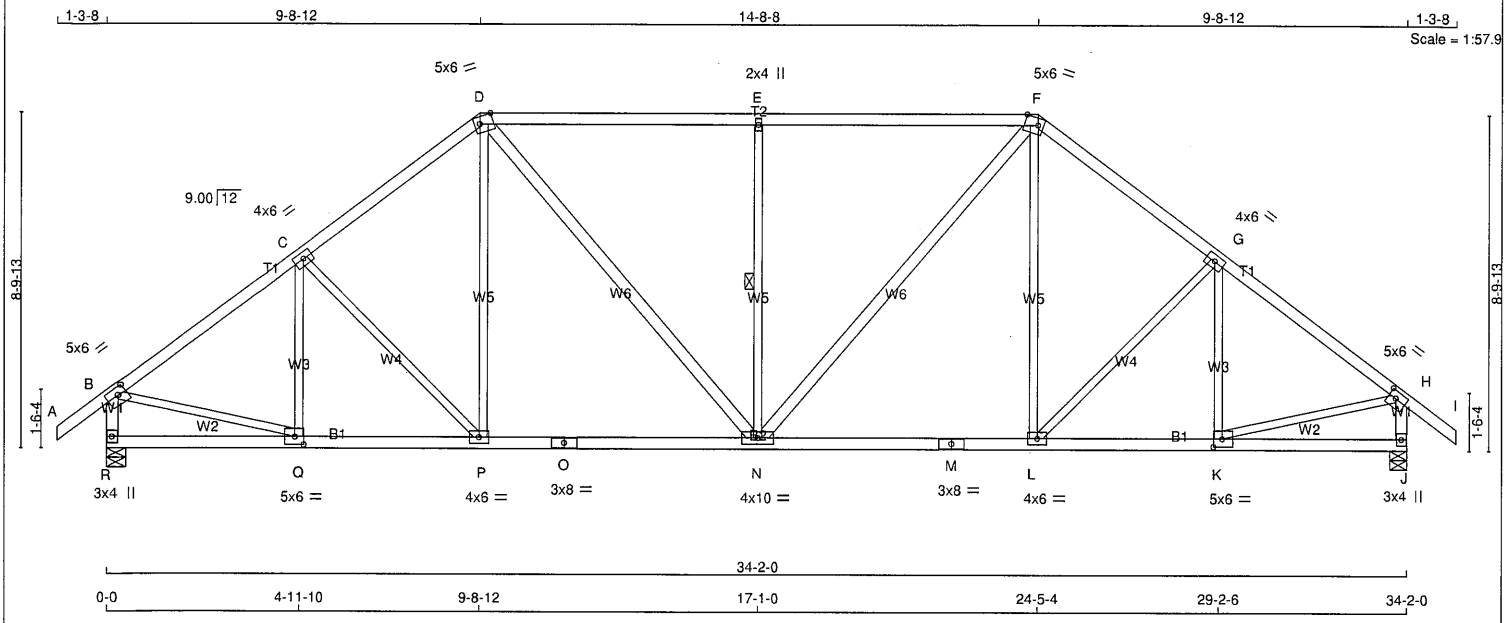

TOTAL WEIGHT = 161 lb
[M][F]

LUMBER
N. L. G. A. RULES

CHORDS	SIZE		LUMBER	DESCR.
A - D	2x4	DRY	No.2	SPF
D - F	2x4	DRY	No.2	SPF
F - I	2x4	DRY	No.2	SPF
R - B	2x4	DRY	No.2	SPF
J - H	2x4	DRY	No.2	SPF
R - O	2x4	DRY	No.2	SPF
O - M	2x4	DRY	No.2	SPF
M - J	2x4	DRY	No.2	SPF
ALL WEBS	2x3	DRY	No.2	SPF
EXCEPT				
D - N	2x4	DRY	No.2	SPF
N - F	2x4	DRY	No.2	SPF

DRY: SEASONED LUMBER.

PLATES (table is in inches)

JT	TYPE	PLATES	W	LEN	Y	X
B	TMVW-t	MT20	5.0	6.0	2.25	2.50
C	TMWW-t	MT20	4.0	6.0		
D	TTWW-m	MT20	5.0	6.0	Edge	4.25
E	TMW+w	MT20	2.0	4.0		
F	TTWW-m	MT20	5.0	6.0	Edge	4.25
G	TMWW-t	MT20	4.0	6.0		
H	TMVW-t	MT20	5.0	6.0	2.25	2.50
J	BMV1+p	MT20	3.0	4.0		
K	BMWW-t	MT20	5.0	6.0	2.50	2.75
L	BMWW-t	MT20	4.0	6.0		
M	BS-t	MT20	3.0	8.0		
N	BMWWW-t	MT20	4.0	10.0		
O	BS-t	MT20	3.0	8.0		
P	BMWW-t	MT20	4.0	6.0		
Q	BMWW-t	MT20	5.0	6.0	2.50	2.75
R	BMV1+p	MT20	3.0	4.0		

Edge - INDICATES REFERENCE CORNER OF PLATE TOUCHES EDGE OF CHORD.

NOTES- (1)
1) Lateral braces to be a minimum of 2X4 SPF #2.

LICENSED PROFESSIONAL ENGINEER
03-04-24
H. J. G. ALVES
100009024
PROVINCE OF ONTARIO

Structural component only
DWG# T-2406577

DIMENSIONS, SUPPORTS AND LOADINGS SPECIFIED BY FABRICATOR TO BE VERIFIED BY BUILDING DESIGNER

BEARINGS

JT	FACTORED GROSS REACTION VERT	HORZ	MAXIMUM FACTORED GROSS REACTION DOWN	HORZ	UPLIFT	INPUT BRG IN-SX	REQRD BRG IN-SX
R	2010	0	2010	0	0	5-8	3-1
J	2010	0	2010	0	0	5-8	3-1

UNFACTORED REACTIONS

JT	1ST LCASE COMBINED	MAX./MIN. COMPONENT REACTIONS SNOW	LIVE	PERM.LIVE	WIND	DEAD	SOIL
R	1419	945 / 0	0 / 0	0 / 0	0 / 0	474 / 0	0 / 0
J	1419	945 / 0	0 / 0	0 / 0	0 / 0	474 / 0	0 / 0

BEARING MATERIAL TO BE SPF NO.2 OR BETTER AT JOINT(S) R, J

BRACING
TOP CHORD TO BE SHEATHED OR MAX. PURLIN SPACING = 3.83 FT.
MAX. UNBRACED BOTTOM CHORD LENGTH = 10.00 FT OR RIGID CEILING DIRECTLY APPLIED.

ALL PITCH BREAKS AND PERIMETER CORNER JOINTS MUST BE LATERALLY RESTRAINED.

1 LATERAL BRACE(S) AT 1/ 2 LENGTH OF E-N.

END VERTICAL(S) MUST BE SHEATHED OR HAVE BRACES AS INDICATED IN THE MAX. UNBRACED LENGTH COLUMN OF THE TABLE BELOW

LOADING
TOTAL LOAD CASES: (4)

CHORDS

MEMB. FR-TO	MAX. FACTORED FORCE (LBS)	FACTORED VERT. LOAD LC1 (PLF) FROM	TO	MAX CSI (LC)	MAX. UNBRAC LENGTH
A- B	0 / 38	-91.8	-91.8	0.12 (1)	10.00
B- C	-2073 / 0	-91.8	-91.8	0.35 (1)	4.40
C- D	-1968 / 0	-91.8	-91.8	0.34 (1)	4.50
D- E	-1968 / 0	-91.8	-91.8	0.74 (1)	3.83
E- F	-1968 / 0	-91.8	-91.8	0.74 (1)	3.83
F- G	-1968 / 0	-91.8	-91.8	0.34 (1)	4.50
G- H	-2073 / 0	-91.8	-91.8	0.35 (1)	4.40
H- I	0 / 38	-91.8	-91.8	0.12 (1)	10.00
R- B	-1969 / 0	0.0	0.0	0.21 (1)	6.00
J- H	-1969 / 0	0.0	0.0	0.21 (1)	6.00
R- Q	0 / 0	-18.5	-18.5	0.09 (4)	10.00
Q- P	0 / 1683	-18.5	-18.5	0.35 (1)	10.00
P- O	0 / 1548	-18.5	-18.5	0.36 (1)	10.00
O- N	0 / 1548	-18.5	-18.5	0.36 (1)	10.00
N- M	0 / 1548	-18.5	-18.5	0.36 (1)	10.00
M- L	0 / 1548	-18.5	-18.5	0.36 (1)	10.00
L- K	0 / 1683	-18.5	-18.5	0.35 (1)	10.00
K- J	0 / 0	-18.5	-18.5	0.09 (4)	10.00

WEBS

MEMB. FR-TO	MAX. FACTORED FORCE (LBS)	MAX CSI (LC)
Q- C	-316 / 0	0.13 (1)
C- P	-196 / 0	0.18 (1)
P- D	0 / 255	0.06 (4)
D- N	0 / 642	0.10 (1)
N- E	-830 / 0	0.42 (1)
N- F	0 / 642	0.10 (1)
L- F	0 / 255	0.06 (4)
L- G	-196 / 0	0.18 (1)
K- G	-316 / 0	0.13 (1)
B- Q	0 / 1731	0.39 (1)
K- H	0 / 1731	0.39 (1)

DESIGN CRITERIA

SPECIFIED LOADS:

TOP CH.	LL	=	25.6	PSF
	DL	=	6.0	PSF
BOT CH.	LL	=	0.0	PSF
	DL	=	7.4	PSF
TOTAL LOAD		=	39.0	PSF

SPACING = 24.0 IN. C/C

LOADING IN FLAT SECTION BASED ON A SLOPE OF 6.00/12

THIS TRUSS IS DESIGNED FOR RESIDENTIAL OR SMALL BUILDING REQUIREMENTS OF PART 9, NBCC 2015

THIS DESIGN COMPLIES WITH:
- PART 9 OF BCBC 2018 , NBC-2019AE
- PART 9 OF OBC 2012 (2019 AMENDMENT)
- CSA 086-14
- TPIC 2014

(55 % OF 31.3 P.S.F. G.S.L. PLUS 8.4 P.S.F. RAIN LOAD) EQUALS 25.6 P.S.F. SPECIFIED ROOF LIVE LOAD

ALLOWABLE DEFL.(LL)= L/360 (1.14")
CALCULATED VERT. DEFL.(LL) = L/ 999 (0.08")
ALLOWABLE DEFL.(TL)= L/360 (1.14")
CALCULATED VERT. DEFL.(TL) = L/ 999 (0.18")

CSI: TC=0.74/1.00 (E-F:1) , BC=0.36/1.00 (L-N:1) , WB=0.42/1.00 (E-N:1) , SSI=0.33/1.00 (E-F:1)

DOL LUMBER=1.00 NAIL=1.00 LS BEND=1.10 COMP=1.10 SHEAR=1.10 TENS= 1.10

COMPANION LIVE LOAD FACTOR = 1.00

TRUSS PLATE MANUFACTURER IS NOT RESPONSIBLE FOR QUALITY CONTROL IN THE TRUSS MANUFACTURING PLANT .

NAIL VALUES

PLATE	GRIP(DRY) (PSI) MAX	MIN	SHEAR (PLI) MAX	MIN	SECTION (PLI) MAX	MIN
MT20	650	371	1747	788	1987	1873

PLATE PLACEMENT TOL. = 0.250 inches

PLATE ROTATION TOL. = 5.0 Deg.

JSI GRIP= 0.79 (B) (INPUT = 0.90)
JSI METAL= 0.52 (O) (INPUT = 0.95)

CITY OF RICHMOND HILL
BUILDING DIVISION
05/01/2024
RECEIVED
Per: joshua.nabua

JOB NAME	TRUSS NAME	QUANTITY	PLY	JOB DESC.	DRWG NO.
436988	T11	1	2	GREEN PARK HOMES TRUSS DESC.	

Tamarack Roof Truss, Burlington

Version 8.630 S Aug 30 2023 MiTek Industries, Inc. Mon Mar 4 08:03:38 2024 Page 1
ID:1PtzEZc03lbzkDC64XoV?RygPuj-yAjARW08su479OezNoB86dNfNfUiWiuJhx_jUKzeNPJ

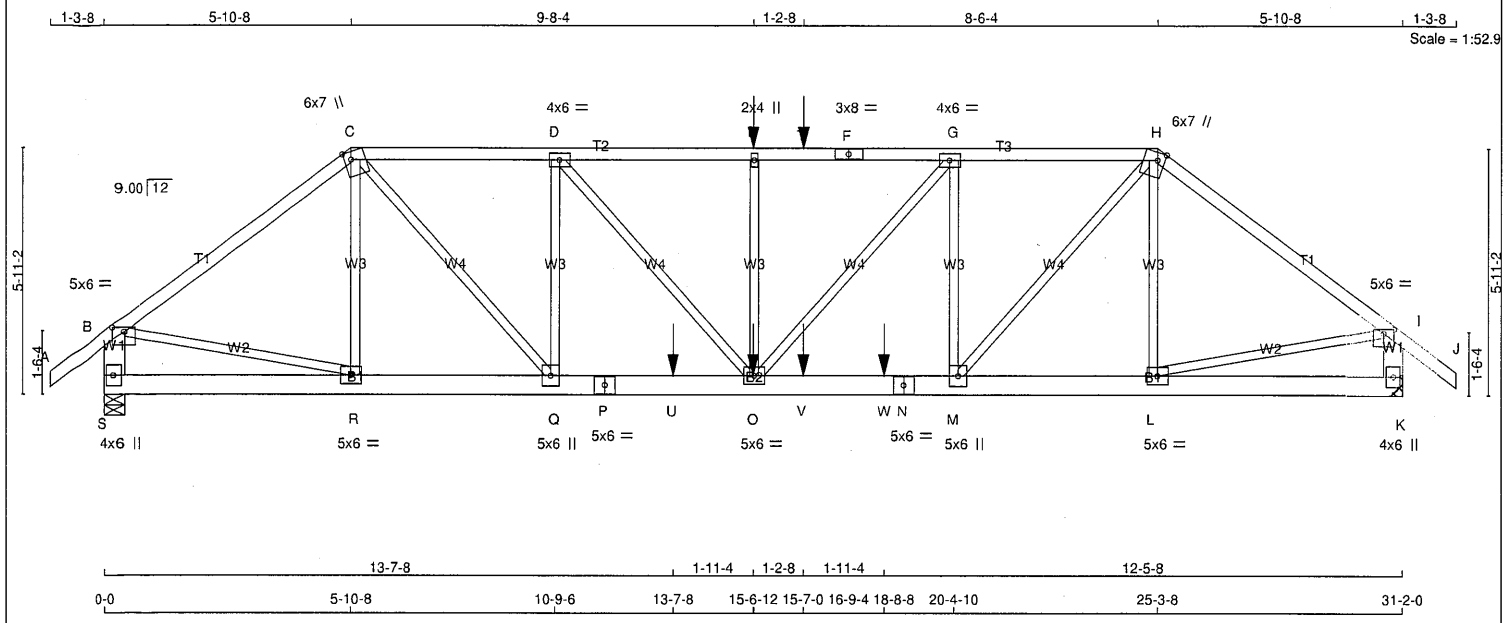

TOTAL WEIGHT = 2 X 155 = 311 lb

[M]

LUMBER

N. L. G. A. RULES

CHORDS	SIZE		LUMBER	DESCR.
A - C	2x4	DRY	No.2	SPF
C - F	2x4	DRY	No.2	SPF
F - H	2x4	DRY	No.2	SPF
H - J	2x4	DRY	No.2	SPF
S - B	2x6	DRY	No.2	SPF
K - I	2x6	DRY	No.2	SPF
S - P	2x6	DRY	No.2	SPF
P - N	2x6	DRY	No.2	SPF
N - K	2x6	DRY	No.2	SPF
ALL WEBS EXCEPT	2x3	DRY	No.2	SPF

DRY: SEASONED LUMBER.

DESIGN CONSISTS OF 2 TRUSSES BUILT SEPARATELY THEN FASTENED TOGETHER AS FOLLOWS:

CHORDS	#ROWS	SURFACE SPACING (IN)	LOAD(PLF)
TOP CHORDS : (0.122"X3") SPIRAL NAILS			
A- C	1	12	TOP
C- F	1	12	SIDE(61.0)
F- H	1	12	TOP
H- J	1	12	TOP
S- B	2	12	TOP
K- I	2	12	TOP
BOTTOM CHORDS : (0.122"X3") SPIRAL NAILS			
S- P	2	12	TOP
P- N	2	12	SIDE(183.1)
N- K	2	12	TOP
WEBS : (0.122"X3") SPIRAL NAILS			
2x3	1	6	

NAILS TO BE DRIVEN FROM ONE SIDE ONLY.

GIRDER NAILING ASSUMES NAILED HANGERS ARE FASTENED WITH MIN. 3-0 INCH NAILS.

TOP - COMPONENTS ARE LOADED FROM THE TOP AND MUST BE PLACED ON TOP EDGE OF ALL PLIES FOR THE LOAD TO BE TRANSFERRED TO EACH PLY.

LICENSED PROFESSIONAL ENGINEER
03-04-24
H. J. G. ALVES
100009024
PROVINCE OF ONTARIO

Structural component only
DWG# T-2406578

DIMENSIONS, SUPPORTS AND LOADINGS SPECIFIED BY FABRICATOR TO BE VERIFIED BY BUILDING DESIGNER

BEARINGS

JT	FACTORED GROSS REACTION VERT	HORZ	MAXIMUM FACTORED GROSS REACTION DOWN	HORZ	UPLIFT	INPUT BRG IN-SX	REQRD BRG IN-SX
S	3321	0	3321	0	0	5-8	1-13
K	3334	0	3334	0	0	MECHANICAL	

A SUITABLE HANGER/MECHANICAL CONNECTION IS REQUIRED AT JOINT K. MINIMUM BEARING LENGTH AT JOINT K = 1-13.

UNFACTORED REACTIONS

JT	1ST LCASE COMBINED	MAX./MIN. COMPONENT REACTIONS SNOW	LIVE	PERM.LIVE	WIND	DEAD	SOIL
S	2341	1582 / 0	0 / 0	0 / 0	0 / 0	759 / 0	0 / 0
K	2350	1586 / 0	0 / 0	0 / 0	0 / 0	763 / 0	0 / 0

BEARING MATERIAL TO BE SPF NO.2 OR BETTER AT JOINT(S) S

BRACING

TOP CHORD TO BE SHEATHED OR MAX. PURLIN SPACING = 3.65 FT.
MAX. UNBRACED BOTTOM CHORD LENGTH = 10.00 FT OR RIGID CEILING DIRECTLY APPLIED.

ALL PITCH BREAKS AND PERIMETER CORNER JOINTS MUST BE LATERALLY RESTRAINED.

LOADING

TOTAL LOAD CASES: (4)

CHORDS

MEMB. FR-TO	MAX. FACTORED FORCE (LBS)	FACTORED VERT. LOAD (PLF) FROM	TO	LC1 MAX CSI (LC)	MAX. UNBRAC LENGTH
A- B	0 / 38	-91.8	-91.8	0.07 (1)	10.00
B- C	-3818 / 0	-91.8	-91.8	0.47 (1)	4.43
C- D	-5161 / 0	-91.8	-91.8	0.28 (1)	4.05
D- E	-6172 / 0	-91.8	-91.8	0.33 (1)	3.70
E- T	-6172 / 0	-91.8	-91.8	0.38 (1)	3.65
T- F	-6172 / 0	-91.8	-91.8	0.38 (1)	3.65
F- G	-6172 / 0	-91.8	-91.8	0.38 (1)	3.65
G- H	-5158 / 0	-91.8	-91.8	0.33 (1)	4.00
H- I	-3844 / 0	-91.8	-91.8	0.47 (1)	4.41
I- J	0 / 38	-91.8	-91.8	0.07 (1)	10.00
S- B	-3259 / 0	0.0	0.0	0.12 (1)	7.68
K- I	-3279 / 0	0.0	0.0	0.12 (1)	7.66
S- R	0 / 0	-18.5	-18.5	0.04 (4)	10.00
R- Q	0 / 3039	-18.5	-18.5	0.35 (1)	10.00
Q- P	0 / 5161	-18.5	-18.5	0.79 (1)	10.00
P- U	0 / 5161	-18.5	-18.5	0.79 (1)	10.00
U- O	0 / 5161	-18.5	-18.5	0.79 (1)	10.00
O- V	0 / 5158	-18.5	-18.5	0.62 (1)	10.00
V- W	0 / 5158	-18.5	-18.5	0.62 (1)	10.00
W- N	0 / 5158	-18.5	-18.5	0.62 (1)	10.00
N- M	0 / 5158	-18.5	-18.5	0.62 (1)	10.00
M- L	0 / 3061	-18.5	-18.5	0.28 (1)	10.00
L- K	0 / 0	-18.5	-18.5	0.04 (4)	10.00

WEBS

MEMB. FR-TO	MAX. FACTORED FORCE (LBS)	MAX CSI (LC)
R- C	-570 / 0	0.15 (1)
C- Q	0 / 3199	0.40 (1)
Q- D	-1640 / 0	0.43 (1)
D- O	0 / 1546	0.19 (1)
O- E	-732 / 0	0.19 (1)
O- G	0 / 1551	0.19 (1)
M- G	-1709 / 0	0.45 (1)
M- H	0 / 3160	0.39 (1)
L- H	-516 / 0	0.13 (1)
B- R	0 / 3102	0.38 (1)
L- I	0 / 3123	0.39 (1)

SPECIFIED CONCENTRATED LOADS (LBS)

JT	LOC.	LC1	MAX-	MAX+	FACE	DIR.	TYPE	HEEL	CONN.
E	15-6-12	-122	-122	---	BACK	VERT	TOTAL	---	C1
O	15-6-12	-29	-29	---	BACK	VERT	TOTAL	---	C1
T	16-9-4	-122	-122	---	BACK	VERT	TOTAL	---	C1
U	13-7-8	-1104	-1104	---	BACK	VERT	TOTAL	---	C1
V	16-9-4	-29	-29	---	BACK	VERT	TOTAL	---	C1
W	18-8-8	-680	-680	---	BACK	VERT	TOTAL	---	C1

CONNECTION REQUIREMENTS

1) **C1:** A SUITABLE HANGER/MECHANICAL CONNECTION IS REQUIRED.

DESIGN CRITERIA

SPECIFIED LOADS:

TOP CH.	LL	=	25.6	PSF
	DL	=	6.0	PSF
BOT CH.	LL	=	0.0	PSF
	DL	=	7.4	PSF
TOTAL LOAD		=	39.0	PSF

SPACING = 24.0 IN. C/C

LOADING IN FLAT SECTION BASED ON A SLOPE OF 6.00/12

THIS TRUSS IS DESIGNED FOR RESIDENTIAL OR SMALL BUILDING REQUIREMENTS OF PART 9, NBCC 2015

THIS DESIGN COMPLIES WITH:
- PART 9 OF BCBC 2018 , NBC-2019AE
- PART 9 OF OBC 2012 (2019 AMENDMENT)
- CSA 086-14
- TPIC 2014

(55 % OF 31.3 P.S.F. G.S.L. PLUS 8.4 P.S.F. RAIN LOAD) EQUALS 25.6 P.S.F. SPECIFIED ROOF LIVE LOAD

ALLOWABLE DEFL.(LL)= L/360 (1.04")
CALCULATED VERT. DEFL.(LL) = L/ 999 (0.14")
ALLOWABLE DEFL.(TL)= L/360 (1.04")
CALCULATED VERT. DEFL.(TL) = L/ 999 (0.26")

CSI: TC=0.47/1.00 (H-I:1) , BC=0.79/1.00 (O-Q:1) , WB=0.45/1.00 (G-M:1) , SSI=0.35/1.00 (O-Q:1)

DOL LUMBER=1.00 NAIL=1.00 LS BEND=1.00 COMP=1.00 SHEAR=1.00 TENS= 1.00

COMPANION LIVE LOAD FACTOR = 1.00

AUTOSOLVE HEELS OFF

TRUSS PLATE MANUFACTURER IS NOT RESPONSIBLE FOR QUALITY CONTROL IN THE TRUSS MANUFACTURING PLANT .

NAIL VALUES

PLATE	GRIP(DRY) (PSI) MAX	MIN	SHEAR (PLI) MAX	MIN	SECTION (PLI) MAX	MIN
MT20	650	371	1747	788	1987	1873

PLATE PLACEMENT TOL. = 0.250 inches

PLATE ROTATION TOL. = 5.0 Deg.

JSI GRIP= 0.76 (I) (INPUT = 0.90)
JSI METAL= 0.65 (P) (INPUT = 0.95)

CITY OF RICHMOND HILL
BUILDING DIVISION
05/01/2024
RECEIVED
Per: joshua.nabua

CONTINUED ON PAGE 2

JOB NAME	TRUSS NAME	QUANTITY	PLY	JOB DESC. GREEN PARK HOMES	DRWG NO.
436988	T11	1	2	TRUSS DESC.	

PLATES (table is in inches)

JT	TYPE	PLATES	W	LEN	Y	X
B	TMVW-p	MT20	5.0	6.0	1.25	3.00
C	TTWW+m	MT20	6.0	7.0	Edge	2.00
D	TMWW-t	MT20	4.0	6.0		
E	TMW+w	MT20	2.0	4.0		
F	TS-t	MT20	3.0	8.0		
G	TMWW-t	MT20	4.0	6.0		
H	TTWW+m	MT20	6.0	7.0	Edge	2.00
I	TMVW-p	MT20	5.0	6.0	1.25	3.00
K	BMV1+p	MT20	4.0	6.0		
L	BMWW-t	MT20	5.0	6.0		
M	BMWW+t	MT20	5.0	6.0		
N	BS-t	MT20	5.0	6.0		
O	BMWWW-t	MT20	5.0	6.0		
P	BS-t	MT20	5.0	6.0		
Q	BMWW+t	MT20	5.0	6.0		
R	BMWW-t	MT20	5.0	6.0		
S	BMV1+p	MT20	4.0	6.0		

Edge - INDICATES REFERENCE CORNER OF PLATE TOUCHES EDGE OF CHORD.

NOTES- (1)
1) Lateral braces to be a minimum of 2X4 SPF #2.

CONNECTION REQUIREMENTS

1) **C1:** A SUITABLE HANGER/MECHANICAL CONNECTION IS REQUIRED.

LICENSED PROFESSIONAL ENGINEER
03-04-24
H. J. G. ALVES
100009024
PROVINCE OF ONTARIO

Structural component only
DWG# T-2406578

CITY OF RICHMOND HILL
BUILDING DIVISION
05/01/2024
RECEIVED
Per: joshua.nabua

JOB NAME	TRUSS NAME	QUANTITY	PLY	JOB DESC.	DRWG NO.
436988	T12	1	1	GREEN PARK HOMES TRUSS DESC.	

Tamarack Roof Truss, Burlington

Version 8.630 S Aug 30 2023 MiTek Industries, Inc. Mon Mar 4 08:03:39 2024 Page 1
ID:1PtzEZc03lbzkDC64XoV?RygPuj-QMHYfs1mdBD_mYDAxViNfqwlg3vyF2eSwbkG0mzeNPI

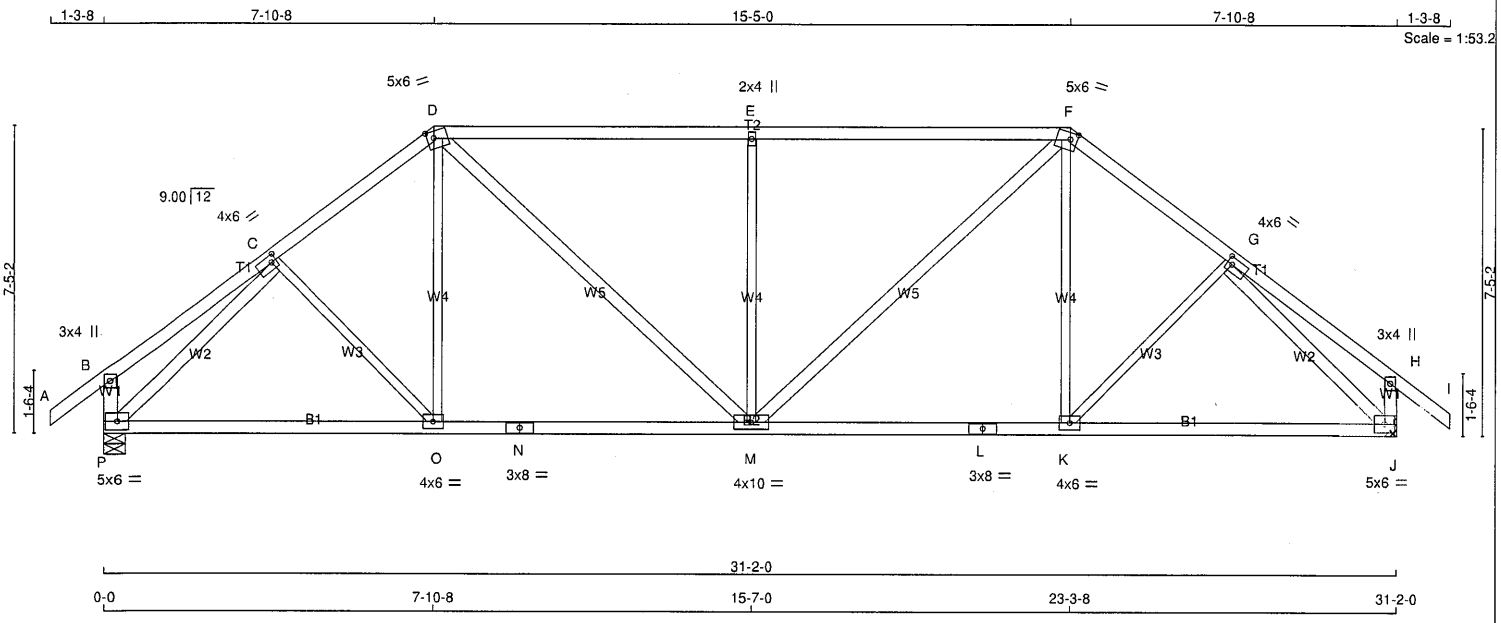

TOTAL WEIGHT = 143 lb

[M][F]

LUMBER

N. L. G. A. RULES

CHORDS	SIZE		LUMBER	DESCR.
A - D	2x4	DRY	No.2	SPF
D - F	2x4	DRY	No.2	SPF
F - I	2x4	DRY	No.2	SPF
P - B	2x4	DRY	No.2	SPF
J - H	2x4	DRY	No.2	SPF
P - N	2x4	DRY	No.2	SPF
N - L	2x4	DRY	No.2	SPF
L - J	2x4	DRY	No.2	SPF
ALL WEBS EXCEPT	2x4	DRY	No.2	SPF
C - O	2x3	DRY	No.2	SPF
O - D	2x3	DRY	No.2	SPF
M - E	2x3	DRY	No.2	SPF
K - F	2x3	DRY	No.2	SPF
K - G	2x3	DRY	No.2	SPF

DRY: SEASONED LUMBER.

PLATES (table is in inches)

JT	TYPE	PLATES	W	LEN	Y	X
B	TMV+p	MT20	3.0	4.0		
C	TMWW-t	MT20	4.0	6.0	2.00	1.50
D	TTWW-m	MT20	5.0	6.0	2.00	2.00
E	TMW+w	MT20	2.0	4.0		
F	TTWW-m	MT20	5.0	6.0	2.00	2.00
G	TMWW-t	MT20	4.0	6.0	2.00	1.50
H	TMV+p	MT20	3.0	4.0		
J	BMVW1-t	MT20	5.0	6.0		
K	BMWW-t	MT20	4.0	6.0		
L	BS-t	MT20	3.0	8.0		
M	BMWWW-t	MT20	4.0	10.0		
N	BS-t	MT20	3.0	8.0		
O	BMWW-t	MT20	4.0	6.0		
P	BMVW1-t	MT20	5.0	6.0		

NOTES- (1)
1) Lateral braces to be a minimum of 2X4 SPF #2.

DIMENSIONS, SUPPORTS AND LOADINGS SPECIFIED BY FABRICATOR TO BE VERIFIED BY BUILDING DESIGNER

BEARINGS

JT	FACTORED GROSS REACTION VERT	HORZ	MAXIMUM FACTORED GROSS REACTION DOWN	HORZ	UPLIFT	INPUT BRG IN-SX	REQRD BRG IN-SX
P	1845	0	1845	0	0	5-8	2-0
J	1845	0	1845	0	0	MECHANICAL	

A SUITABLE HANGER/MECHANICAL CONNECTION IS REQUIRED AT JOINT J. MINIMUM BEARING LENGTH AT JOINT J = 2-0.

UNFACTORED REACTIONS

JT	1ST LCASE COMBINED	MAX./MIN. COMPONENT REACTIONS SNOW	LIVE	PERM.LIVE	WIND	DEAD	SOIL
P	1302	868 / 0	0 / 0	0 / 0	0 / 0	434 / 0	0 / 0
J	1302	868 / 0	0 / 0	0 / 0	0 / 0	434 / 0	0 / 0

BEARING MATERIAL TO BE SPF NO.2 OR BETTER AT JOINT(S) P

BRACING

TOP CHORD TO BE SHEATHED OR MAX. PURLIN SPACING = 3.63 FT.
MAX. UNBRACED BOTTOM CHORD LENGTH = 10.00 FT OR RIGID CEILING DIRECTLY APPLIED.

ALL PITCH BREAKS AND PERIMETER CORNER JOINTS MUST BE LATERALLY RESTRAINED.

LOADING

TOTAL LOAD CASES: (4)

CHORDS

MEMB. FR-TO	MAX. FACTORED FORCE (LBS)	FACTORED VERT. LOAD (PLF) FROM	TO	LC1 MAX CSI (LC)	MAX. UNBRAC LENGTH
A- B	0 / 38	-91.8	-91.8	0.12 (1)	10.00
B- C	0 / 24	-91.8	-91.8	0.22 (1)	10.00
C- D	-1823 / 0	-91.8	-91.8	0.21 (1)	4.78
D- E	-1979 / 0	-91.8	-91.8	0.82 (1)	3.63
E- F	-1979 / 0	-91.8	-91.8	0.82 (1)	3.63
F- G	-1823 / 0	-91.8	-91.8	0.21 (1)	4.78
G- H	0 / 24	-91.8	-91.8	0.22 (1)	10.00
H- I	0 / 38	-91.8	-91.8	0.12 (1)	10.00
P- B	-266 / 0	0.0	0.0	0.03 (1)	7.81
J- H	-266 / 0	0.0	0.0	0.03 (1)	7.81
P- O	0 / 1441	-18.5	-18.5	0.40 (4)	10.00
O- N	0 / 1438	-18.5	-18.5	0.41 (4)	10.00
N- M	0 / 1438	-18.5	-18.5	0.41 (4)	10.00
M- L	0 / 1438	-18.5	-18.5	0.41 (4)	10.00
L- K	0 / 1438	-18.5	-18.5	0.41 (4)	10.00
K- J	0 / 1441	-18.5	-18.5	0.40 (4)	10.00

WEBS

MEMB. FR-TO	MAX. FACTORED FORCE (LBS)	MAX CSI (LC)
C- O	-8 / 49	0.02 (4)
O- D	0 / 171	0.05 (4)
D- M	0 / 736	0.12 (1)
M- E	-871 / 0	0.86 (1)
M- F	0 / 736	0.12 (1)
K- F	0 / 171	0.05 (4)
K- G	-8 / 49	0.02 (4)
P- C	-2095 / 0	0.80 (1)
G- J	-2095 / 0	0.80 (1)

DESIGN CRITERIA

SPECIFIED LOADS:

TOP CH.	LL	=	25.6	PSF
	DL	=	6.0	PSF
BOT CH.	LL	=	0.0	PSF
	DL	=	7.4	PSF
TOTAL LOAD		=	39.0	PSF

SPACING = 24.0 IN. C/C

LOADING IN FLAT SECTION BASED ON A SLOPE OF 6.00/12

THIS TRUSS IS DESIGNED FOR RESIDENTIAL OR SMALL BUILDING REQUIREMENTS OF PART 9, NBCC 2015

THIS DESIGN COMPLIES WITH:
- PART 9 OF BCBC 2018 , NBC-2019AE
- PART 9 OF OBC 2012 (2019 AMENDMENT)
- CSA 086-14
- TPIC 2014

(55 % OF 31.3 P.S.F. G.S.L. PLUS 8.4 P.S.F. RAIN LOAD) EQUALS 25.6 P.S.F. SPECIFIED ROOF LIVE LOAD

ALLOWABLE DEFL.(LL)= L/360 (1.04")
CALCULATED VERT. DEFL.(LL) = L/ 999 (0.07")
ALLOWABLE DEFL.(TL)= L/360 (1.04")
CALCULATED VERT. DEFL.(TL) = L/ 999 (0.15")

CSI: TC=0.82/1.00 (E-F:1) , BC=0.41/1.00 (K-M:4) , WB=0.86/1.00 (E-M:1) , SSI=0.34/1.00 (E-F:1)

DOL LUMBER=1.00 NAIL=1.00 LS BEND=1.10 COMP=1.10 SHEAR=1.10 TENS= 1.10

COMPANION LIVE LOAD FACTOR = 1.00

AUTOSOLVE HEELS OFF

TRUSS PLATE MANUFACTURER IS NOT RESPONSIBLE FOR QUALITY CONTROL IN THE TRUSS MANUFACTURING PLANT .

NAIL VALUES

PLATE	GRIP(DRY) (PSI) MAX	MIN	SHEAR (PLI) MAX	MIN	SECTION (PLI) MAX	MIN
MT20	650	371	1747	788	1987	1873

PLATE PLACEMENT TOL. = 0.250 inches

PLATE ROTATION TOL. = 5.0 Deg.

JSI GRIP= 0.78 (C) (INPUT = 0.90)
JSI METAL= 0.47 (C) (INPUT = 0.95)

LICENSED PROFESSIONAL ENGINEER
03-04-24
H. J. G. ALVES
100009024
PROVINCE OF ONTARIO

Structural component only
DWG# T-2406579

CITY OF RICHMOND HILL
BUILDING DIVISION
05/01/2024
RECEIVED
Per: joshua.nabua

JOB NAME	TRUSS NAME	QUANTITY	PLY	JOB DESC.	DRWG NO.
436988	T13	1	1	GREEN PARK HOMES TRUSS DESC.	

Tamarack Roof Truss, Burlington

Version 8.630 S Aug 30 2023 MiTek Industries, Inc. Mon Mar 4 08:03:40 2024 Page 1
ID:1PtzEZc03lbzkDC64XoV?RygPuj-uZrwsC2OOVLrOinMVDDcB2S?STHn_dtc9FTqZDzeNPH

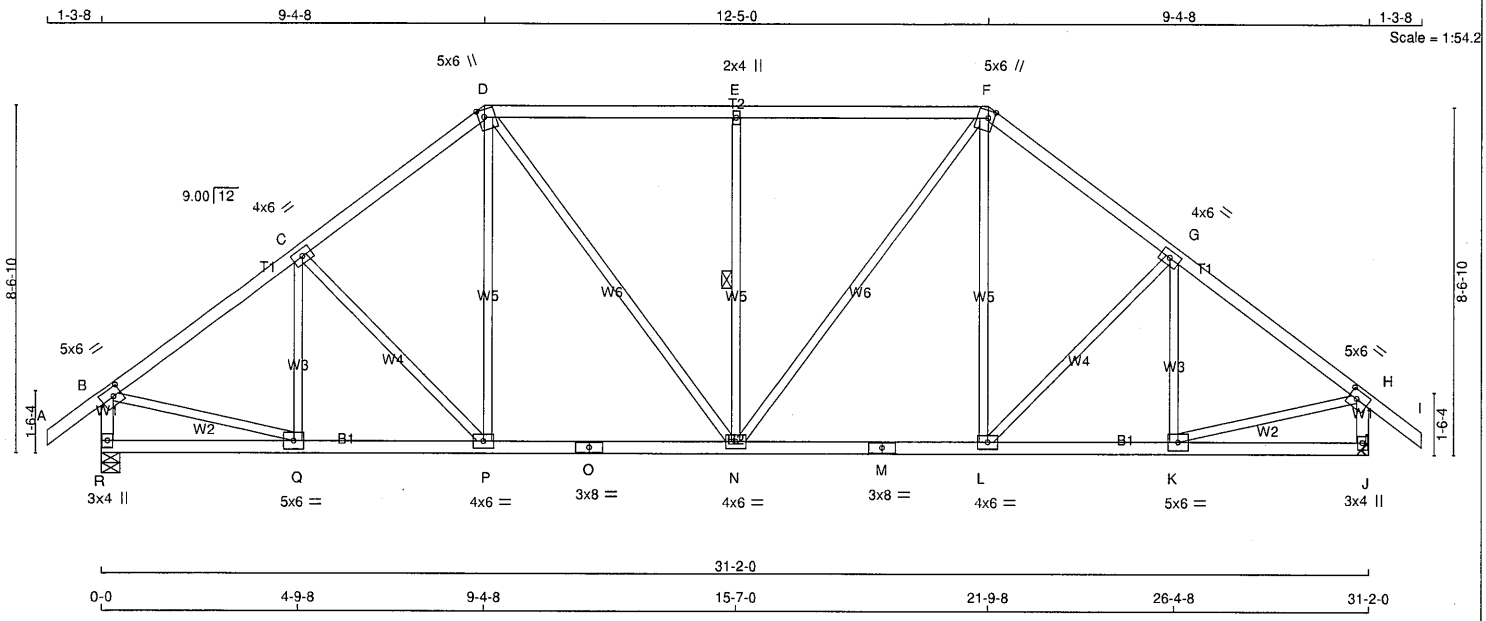

TOTAL WEIGHT = 144 lb
[M][F]

LUMBER
N. L. G. A. RULES

CHORDS	SIZE		LUMBER	DESCR.
A - D	2x4	DRY	No.2	SPF
D - F	2x4	DRY	No.2	SPF
F - I	2x4	DRY	No.2	SPF
R - B	2x4	DRY	No.2	SPF
J - H	2x4	DRY	No.2	SPF
R - O	2x4	DRY	No.2	SPF
O - M	2x4	DRY	No.2	SPF
M - J	2x4	DRY	No.2	SPF
ALL WEBS EXCEPT	2x3	DRY	No.2	SPF

DRY: SEASONED LUMBER.

PLATES (table is in inches)

JT	TYPE	PLATES	W	LEN	Y	X
B	TMVW-t	MT20	5.0	6.0	2.50	2.50
C	TMWW-t	MT20	4.0	6.0		
D	TTWW+m	MT20	5.0	6.0	2.25	1.75
E	TMW+w	MT20	2.0	4.0		
F	TTWW+m	MT20	5.0	6.0	2.25	1.75
G	TMWW-t	MT20	4.0	6.0		
H	TMVW-t	MT20	5.0	6.0	2.50	2.50
J	BMV1+p	MT20	3.0	4.0		
K	BMWW-t	MT20	5.0	6.0		
L	BMWW-t	MT20	4.0	6.0		
M	BS-t	MT20	3.0	8.0		
N	BMWWW-t	MT20	4.0	6.0		
O	BS-t	MT20	3.0	8.0		
P	BMWW-t	MT20	4.0	6.0		
Q	BMWW-t	MT20	5.0	6.0		
R	BMV1+p	MT20	3.0	4.0		

NOTES- (1)
1) Lateral braces to be a minimum of 2X4 SPF #2.

LICENSED PROFESSIONAL ENGINEER
03-04-24
H. J. G. ALVES
100009024
PROVINCE OF ONTARIO

Structural component only
DWG# T-2406580

DIMENSIONS, SUPPORTS AND LOADINGS SPECIFIED BY FABRICATOR TO BE VERIFIED BY BUILDING DESIGNER

BEARINGS

JT	FACTORED GROSS REACTION VERT	HORZ	MAXIMUM FACTORED GROSS REACTION DOWN	HORZ	UPLIFT	INPUT BRG IN-SX	REQRD BRG IN-SX
R	1845	0	1845	0	0	5-8	2-8
J	1845	0	1845	0	0	MECHANICAL	

A SUITABLE HANGER/MECHANICAL CONNECTION IS REQUIRED AT JOINT J. MINIMUM BEARING LENGTH AT JOINT J = 2-8.

UNFACTORED REACTIONS

JT	1ST LCASE COMBINED	MAX./MIN. COMPONENT REACTIONS SNOW	LIVE	PERM.LIVE	WIND	DEAD	SOIL
R	1302	868 / 0	0 / 0	0 / 0	0 / 0	434 / 0	0 / 0
J	1302	868 / 0	0 / 0	0 / 0	0 / 0	434 / 0	0 / 0

BEARING MATERIAL TO BE SPF NO.2 OR BETTER AT JOINT(S) R

BRACING
TOP CHORD TO BE SHEATHED OR MAX. PURLIN SPACING = 4.54 FT.
MAX. UNBRACED BOTTOM CHORD LENGTH = 10.00 FT OR RIGID CEILING DIRECTLY APPLIED.

ALL PITCH BREAKS AND PERIMETER CORNER JOINTS MUST BE LATERALLY RESTRAINED.

1 LATERAL BRACE(S) AT 1/ 2 LENGTH OF E-N.

END VERTICAL(S) MUST BE SHEATHED OR HAVE BRACES AS INDICATED IN THE MAX. UNBRACED LENGTH COLUMN OF THE TABLE BELOW

LOADING
TOTAL LOAD CASES: (4)

CHORDS

MEMB. FR-TO	MAX. FACTORED FORCE (LBS)	FACTORED VERT. LOAD LC1 (PLF) FROM	TO	MAX CSI (LC)	MAX. UNBRAC LENGTH
A- B	0 / 38	-91.8	-91.8	0.12 (1)	10.00
B- C	-1858 / 0	-91.8	-91.8	0.31 (1)	4.64
C- D	-1747 / 0	-91.8	-91.8	0.30 (1)	4.76
D- E	-1679 / 0	-91.8	-91.8	0.50 (1)	4.54
E- F	-1679 / 0	-91.8	-91.8	0.50 (1)	4.54
F- G	-1747 / 0	-91.8	-91.8	0.30 (1)	4.76
G- H	-1858 / 0	-91.8	-91.8	0.31 (1)	4.64
H- I	0 / 38	-91.8	-91.8	0.12 (1)	10.00
R- B	-1806 / 0	0.0	0.0	0.19 (1)	6.23
J- H	-1806 / 0	0.0	0.0	0.19 (1)	6.23
R- Q	0 / 0	-18.5	-18.5	0.09 (4)	10.00
Q- P	0 / 1510	-18.5	-18.5	0.31 (1)	10.00
P- O	0 / 1373	-18.5	-18.5	0.30 (1)	10.00
O- N	0 / 1373	-18.5	-18.5	0.30 (1)	10.00
N- M	0 / 1373	-18.5	-18.5	0.30 (1)	10.00
M- L	0 / 1373	-18.5	-18.5	0.30 (1)	10.00
L- K	0 / 1510	-18.5	-18.5	0.31 (1)	10.00
K- J	0 / 0	-18.5	-18.5	0.09 (4)	10.00

WEBS

MEMB. FR-TO	MAX. FACTORED FORCE (LBS)	MAX CSI (LC)
Q- C	-288 / 0	0.11 (1)
C- P	-201 / 0	0.17 (1)
P- D	0 / 247	0.06 (1)
D- N	0 / 509	0.11 (1)
N- E	-698 / 0	0.33 (1)
N- F	0 / 509	0.11 (1)
L- F	0 / 247	0.06 (1)
L- G	-201 / 0	0.17 (1)
K- G	-288 / 0	0.11 (1)
B- Q	0 / 1557	0.35 (1)
K- H	0 / 1557	0.35 (1)

DESIGN CRITERIA

SPECIFIED LOADS:

TOP CH.	LL	=	25.6	PSF
	DL	=	6.0	PSF
BOT CH.	LL	=	0.0	PSF
	DL	=	7.4	PSF
TOTAL LOAD		=	39.0	PSF

SPACING = 24.0 IN. C/C

LOADING IN FLAT SECTION BASED ON A SLOPE OF 6.00/12

THIS TRUSS IS DESIGNED FOR RESIDENTIAL OR SMALL BUILDING REQUIREMENTS OF PART 9, NBCC 2015

THIS DESIGN COMPLIES WITH:
- PART 9 OF BCBC 2018 , NBC-2019AE
- PART 9 OF OBC 2012 (2019 AMENDMENT)
- CSA 086-14
- TPIC 2014

(55 % OF 31.3 P.S.F. G.S.L. PLUS 8.4 P.S.F. RAIN LOAD) EQUALS 25.6 P.S.F. SPECIFIED ROOF LIVE LOAD

ALLOWABLE DEFL.(LL)= L/360 (1.04")
CALCULATED VERT. DEFL.(LL) = L/ 999 (0.07")
ALLOWABLE DEFL.(TL)= L/360 (1.04")
CALCULATED VERT. DEFL.(TL) = L/ 999 (0.13")

CSI: TC=0.50/1.00 (E-F:1) , BC=0.31/1.00 (K-L:1) , WB=0.35/1.00 (B-Q:1) , SSI=0.28/1.00 (E-F:1)

DOL LUMBER=1.00 NAIL=1.00 LS BEND=1.10 COMP=1.10 SHEAR=1.10 TENS= 1.10

COMPANION LIVE LOAD FACTOR = 1.00

TRUSS PLATE MANUFACTURER IS NOT RESPONSIBLE FOR QUALITY CONTROL IN THE TRUSS MANUFACTURING PLANT .

NAIL VALUES

PLATE	GRIP(DRY) (PSI) MAX	MIN	SHEAR (PLI) MAX	MIN	SECTION (PLI) MAX	MIN
MT20	650	371	1747	788	1987	1873

PLATE PLACEMENT TOL. = 0.250 inches

PLATE ROTATION TOL. = 5.0 Deg.

JSI GRIP= 0.78 (H) (INPUT = 0.90)
JSI METAL= 0.47 (O) (INPUT = 0.95)

CITY OF RICHMOND HILL
BUILDING DIVISION
05/01/2024
RECEIVED
Per: joshua.nabua

JOB NAME	TRUSS NAME	QUANTITY	PLY	JOB DESC.	DRWG NO.
436988	T14	1	1	GREEN PARK HOMES TRUSS DESC.	

Tamarack Roof Truss, Burlington

Version 8.630 S Aug 30 2023 MiTek Industries, Inc. Mon Mar 4 08:03:41 2024 Page 1
ID:1PtzEZc03lbzkDC64XoV?RygPuj-MIPl4Y209pTi0sMY2wkrkF?5Msd7j2NlNvDN5fzeNPG

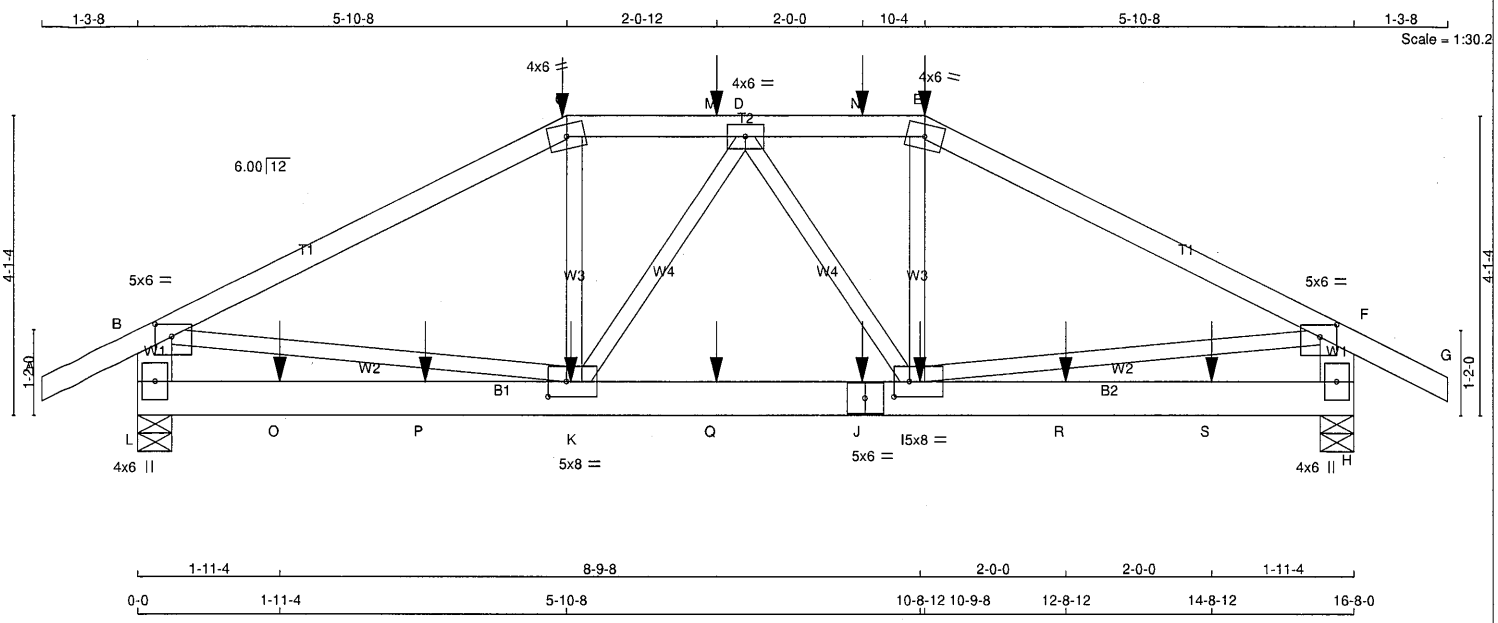

TOTAL WEIGHT = 77 lb

[M]

LUMBER

N. L. G. A. RULES

CHORDS	SIZE		LUMBER	DESCR.
A - C	2x4	DRY	No.2	SPF
C - E	2x4	DRY	No.2	SPF
E - G	2x4	DRY	No.2	SPF
L - B	2x6	DRY	No.2	SPF
H - F	2x6	DRY	No.2	SPF
L - J	2x6	DRY	No.2	SPF
J - H	2x6	DRY	No.2	SPF
ALL WEBS EXCEPT	2x3	DRY	No.2	SPF

DRY: SEASONED LUMBER.

PLATES (table is in inches)

JT	TYPE	PLATES	W	LEN	Y	X
B	TMVW-p	MT20	5.0	6.0	2.00	2.75
C	TTW-m	MT20	4.0	6.0		
D	TMWW-t	MT20	4.0	6.0		
E	TTW-m	MT20	4.0	6.0		
F	TMVW-p	MT20	5.0	6.0	2.00	2.75
H	BMV1+p	MT20	4.0	6.0		
I	BMVWW-t	MT20	5.0	8.0	2.50	2.50
J	BS-t	MT20	5.0	6.0		
K	BMWWW-t	MT20	5.0	8.0	2.50	3.00
L	BMV1+p	MT20	4.0	6.0		

NOTES- (1)
1) Lateral braces to be a minimum of 2X4 SPF #2.

DIMENSIONS, SUPPORTS AND LOADINGS SPECIFIED BY FABRICATOR TO BE VERIFIED BY BUILDING DESIGNER

BEARINGS

JT	FACTORED GROSS REACTION VERT	HORZ	MAXIMUM FACTORED GROSS REACTION DOWN	HORZ	UPLIFT	INPUT BRG IN-SX	REQRD BRG IN-SX
L	1618	0	1618	0	0	5-8	1-12
H	1639	0	1639	0	0	5-8	1-12

UNFACTORED REACTIONS

1ST LCASE MAX./MIN. COMPONENT REACTIONS

JT	COMBINED	SNOW	LIVE	PERM.LIVE	WIND	DEAD	SOIL
L	1144	752 / 0	0 / 0	0 / 0	0 / 0	392 / 0	0 / 0
H	1159	761 / 0	0 / 0	0 / 0	0 / 0	398 / 0	0 / 0

BEARING MATERIAL TO BE SPF NO.2 OR BETTER AT JOINT(S) L, H

BRACING

TOP CHORD TO BE SHEATHED OR MAX. PURLIN SPACING = 3.66 FT.
MAX. UNBRACED BOTTOM CHORD LENGTH = 10.00 FT OR RIGID CEILING DIRECTLY APPLIED.

ALL PITCH BREAKS AND PERIMETER CORNER JOINTS MUST BE LATERALLY RESTRAINED.

LOADING

TOTAL LOAD CASES: (4)

CHORDS

MEMB. FR-TO	MAX. FACTORED FORCE (LBS)	FACTORED VERT. LOAD (PLF) FROM	TO	LC1	MAX CSI (LC)	MAX. UNBRAC LENGTH
A- B	0 / 28	-91.8	-91.8	0.13 (1)	10.00	
B- C	-2037 / 0	-91.8	-91.8	0.80 (1)	3.69	
C- M	-1828 / 0	-91.8	-91.8	0.18 (1)	4.74	
M- D	-1828 / 0	-91.8	-91.8	0.18 (1)	4.74	
D- N	-1860 / 0	-91.8	-91.8	0.19 (1)	4.70	
N- E	-1860 / 0	-91.8	-91.8	0.19 (1)	4.70	
E- F	-2074 / 0	-91.8	-91.8	0.81 (1)	3.66	
F- G	0 / 28	-91.8	-91.8	0.13 (1)	10.00	
L- B	-1540 / 0	0.0	0.0	0.11 (1)	7.81	
H- F	-1561 / 0	0.0	0.0	0.11 (1)	7.80	
L- O	0 / 0	-18.5	-18.5	0.14 (4)	10.00	
O- P	0 / 0	-18.5	-18.5	0.14 (4)	10.00	
P- K	0 / 0	-18.5	-18.5	0.14 (4)	10.00	
K- Q	0 / 1974	-18.5	-18.5	0.30 (1)	10.00	
Q- J	0 / 1974	-18.5	-18.5	0.30 (1)	10.00	
J- I	0 / 1974	-18.5	-18.5	0.30 (1)	10.00	
I- R	0 / 0	-18.5	-18.5	0.14 (4)	10.00	
R- S	0 / 0	-18.5	-18.5	0.14 (4)	10.00	
S- H	0 / 0	-18.5	-18.5	0.14 (4)	10.00	

WEBS

MEMB. FR-TO	MAX. FACTORED FORCE (LBS)	MAX CSI (LC)
K- C	0 / 177	0.06 (4)
K- D	-277 / 0	0.09 (1)
D- I	-217 / 0	0.07 (1)
I- E	0 / 164	0.06 (4)
B- K	0 / 1836	0.45 (1)
I- F	0 / 1869	0.46 (1)

SPECIFIED CONCENTRATED LOADS (LBS)

JT	LOC.	LC1	MAX-	MAX+	FACE	DIR.	TYPE	HEEL	CONN.
C	5-10-8	-254	-254	---	FRONT	VERT	TOTAL	---	C1
E	10-9-8	-254	-254	---	FRONT	VERT	TOTAL	---	C1
I	10-8-12	-21	-21	---	FRONT	VERT	TOTAL	---	C1
J	9-11-4	-21	-21	---	FRONT	VERT	TOTAL	---	C1
K	5-11-4	-21	-21	---	FRONT	VERT	TOTAL	---	C1
M	7-11-4	-76	-76	---	FRONT	VERT	TOTAL	---	C1
N	9-11-4	-81	-81	---	FRONT	VERT	TOTAL	---	C1
O	1-11-4	-20	-20	---	FRONT	VERT	TOTAL	---	C1
P	3-11-4	-21	-21	---	FRONT	VERT	TOTAL	---	C1
Q	7-11-4	-21	-21	---	FRONT	VERT	TOTAL	---	C1
R	12-8-12	-21	-21	---	FRONT	VERT	TOTAL	---	C1
S	14-8-12	-20	-20	---	FRONT	VERT	TOTAL	---	C1

CONNECTION REQUIREMENTS

1) **C1:** A SUITABLE HANGER/MECHANICAL CONNECTION IS REQUIRED.

DESIGN CRITERIA

SPECIFIED LOADS:

TOP CH.	LL	=	25.6	PSF
	DL	=	6.0	PSF
BOT CH.	LL	=	0.0	PSF
	DL	=	7.4	PSF
TOTAL LOAD		=	39.0	PSF

SPACING = 24.0 IN. C/C

LOADING IN FLAT SECTION BASED ON A SLOPE OF 6.00/12

THIS TRUSS IS DESIGNED FOR RESIDENTIAL OR SMALL BUILDING REQUIREMENTS OF PART 9, NBCC 2015

THIS DESIGN COMPLIES WITH:
- PART 9 OF BCBC 2018 , NBC-2019AE
- PART 9 OF OBC 2012 (2019 AMENDMENT)
- CSA 086-14
- TPIC 2014

(55 % OF 31.3 P.S.F. G.S.L. PLUS 8.4 P.S.F. RAIN LOAD) EQUALS 25.6 P.S.F. SPECIFIED ROOF LIVE LOAD

ALLOWABLE DEFL.(LL)= L/360 (0.56")
CALCULATED VERT. DEFL.(LL) = L/ 999 (0.05")
ALLOWABLE DEFL.(TL)= L/360 (0.56")
CALCULATED VERT. DEFL.(TL) = L/ 999 (0.10")

CSI: TC=0.81/1.00 (E-F:1) , BC=0.30/1.00 (I-K:1) , WB=0.46/1.00 (F-I:1) , SSI=0.21/1.00 (C-D:1)

DOL LUMBER=1.00 NAIL=1.00 LS BEND=1.00 COMP=1.00 SHEAR=1.00 TENS= 1.00

COMPANION LIVE LOAD FACTOR = 1.00

AUTOSOLVE HEELS OFF

TRUSS PLATE MANUFACTURER IS NOT RESPONSIBLE FOR QUALITY CONTROL IN THE TRUSS MANUFACTURING PLANT .

NAIL VALUES

PLATE	GRIP(DRY) (PSI) MAX	MIN	SHEAR (PLI) MAX	MIN	SECTION (PLI) MAX	MIN
MT20	650	371	1747	788	1987	1873

PLATE PLACEMENT TOL. = 0.250 inches

PLATE ROTATION TOL. = 5.0 Deg.

JSI GRIP= 0.78 (I) (INPUT = 0.90)
JSI METAL= 0.42 (F) (INPUT = 0.95)

LICENSED PROFESSIONAL ENGINEER
03-04-24
H. J. G. ALVES
100009024
PROVINCE OF ONTARIO

Structural component only
DWG# T-2406581

CITY OF RICHMOND HILL
BUILDING DIVISION
05/01/2024
RECEIVED
Per: joshua.nabua

JOB NAME	TRUSS NAME	QUANTITY	PLY	JOB DESC.	DRWG NO.
436988	T15	1	1	GREEN PARK HOMES TRUSS DESC.	

Tamarack Roof Truss, Burlington

Version 8.630 S Aug 30 2023 MiTek Industries, Inc. Mon Mar 4 08:03:42 2024 Page 1
ID:1PtzEZc03lbzkDC64XoV?RygPuj-qxzgHu3ev6bZd?xlcdF4GTYPLGx3SVRucZyxd5zeNPF

Scale: 3/8"=1'

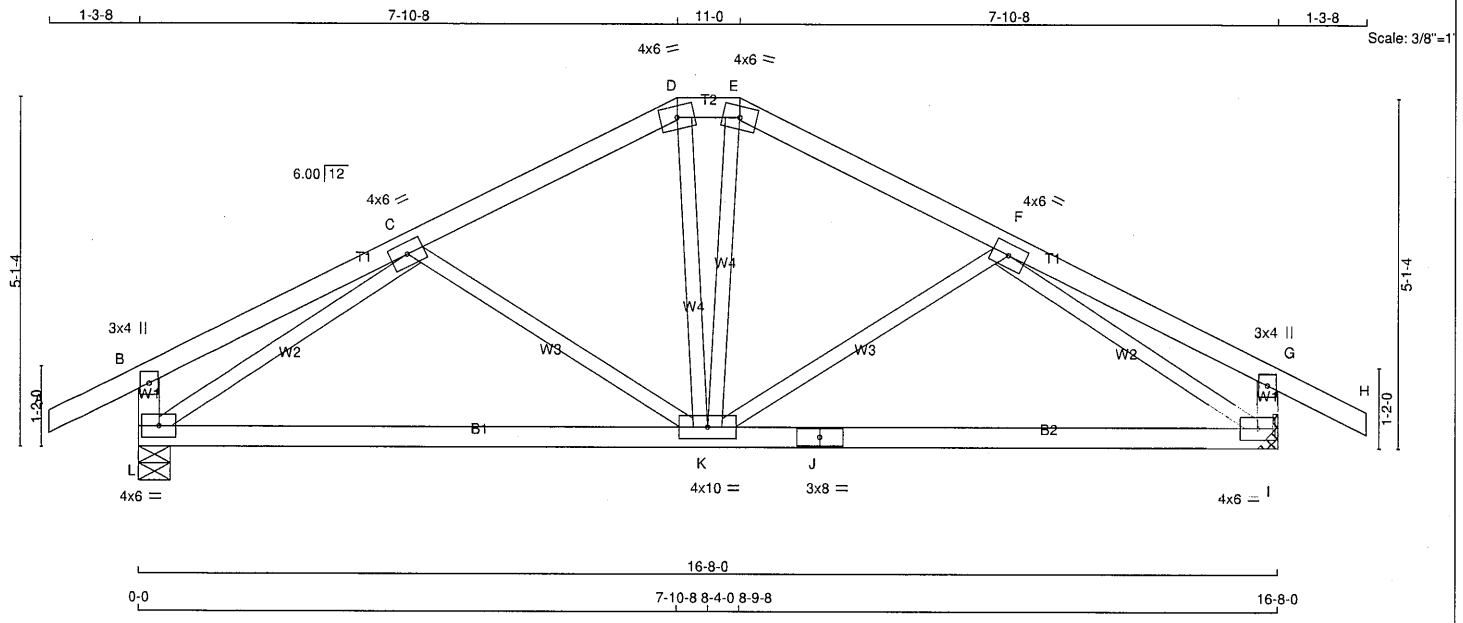

TOTAL WEIGHT = 68 lb

[M][F]

LUMBER

N. L. G. A. RULES

CHORDS	SIZE		LUMBER	DESCR.
A - D	2x4	DRY	No.2	SPF
D - E	2x4	DRY	No.2	SPF
E - H	2x4	DRY	No.2	SPF
L - B	2x4	DRY	No.2	SPF
I - G	2x4	DRY	No.2	SPF
L - J	2x4	DRY	No.2	SPF
J - I	2x4	DRY	No.2	SPF
ALL WEBS EXCEPT	2x3	DRY	No.2	SPF

DRY: SEASONED LUMBER.

PLATES (table is in inches)

JT	TYPE	PLATES	W	LEN Y	X
B	TMV+p	MT20	3.0	4.0	
C	TMWW-t	MT20	4.0	6.0	
D	TTW-m	MT20	4.0	6.0	
E	TTW-m	MT20	4.0	6.0	
F	TMWW-t	MT20	4.0	6.0	
G	TMV+p	MT20	3.0	4.0	
I	BMVW1-t	MT20	4.0	6.0	
J	BS-t	MT20	3.0	8.0	
K	BMWWWW*-I	MT20	4.0	10.0	
L	BMVW1-t	MT20	4.0	6.0	

NOTES- (1)
1) Lateral braces to be a minimum of 2X4 SPF #2.

DIMENSIONS, SUPPORTS AND LOADINGS SPECIFIED BY FABRICATOR TO BE VERIFIED BY BUILDING DESIGNER

BEARINGS

JT	FACTORED GROSS REACTION VERT	HORZ	MAXIMUM FACTORED GROSS REACTION DOWN	HORZ	UPLIFT	INPUT BRG IN-SX	REQRD BRG IN-SX
L	1043	0	1043	0	0	5-8	1-8
I	1043	0	1043	0	0	MECHANICAL	

A SUITABLE HANGER/MECHANICAL CONNECTION IS REQUIRED AT JOINT I. MINIMUM BEARING LENGTH AT JOINT I = 1-8.

UNFACTORED REACTIONS

JT	1ST LCASE COMBINED	MAX./MIN. COMPONENT REACTIONS SNOW	LIVE	PERM.LIVE	WIND	DEAD	SOIL
L	735	496 / 0	0 / 0	0 / 0	0 / 0	240 / 0	0 / 0
I	735	496 / 0	0 / 0	0 / 0	0 / 0	240 / 0	0 / 0

BEARING MATERIAL TO BE SPF NO.2 OR BETTER AT JOINT(S) L

BRACING

TOP CHORD TO BE SHEATHED OR MAX. PURLIN SPACING = 6.24 FT.
MAX. UNBRACED BOTTOM CHORD LENGTH = 10.00 FT OR RIGID CEILING DIRECTLY APPLIED.

ALL PITCH BREAKS AND PERIMETER CORNER JOINTS MUST BE LATERALLY RESTRAINED.

LOADING

TOTAL LOAD CASES: (4)

CHORDS

MEMB. FR-TO	MAX. FACTORED FORCE (LBS)	FACTORED VERT. LOAD LC1 (PLF) FROM	TO	MAX CSI (LC)	MAX. UNBRAC LENGTH
A- B	0 / 28	-91.8	-91.8	0.12 (1)	10.00
B- C	0 / 18	-91.8	-91.8	0.22 (1)	10.00
C- D	-919 / 0	-91.8	-91.8	0.18 (1)	6.24
D- E	-826 / 0	-91.8	-91.8	0.02 (1)	6.25
E- F	-919 / 0	-91.8	-91.8	0.18 (1)	6.24
F- G	0 / 18	-91.8	-91.8	0.22 (1)	10.00
G- H	0 / 28	-91.8	-91.8	0.12 (1)	10.00
L- B	-266 / 0	0.0	0.0	0.03 (1)	7.81
I- G	-266 / 0	0.0	0.0	0.03 (1)	7.81
L- K	0 / 1002	-18.5	-18.5	0.45 (4)	10.00
K- J	0 / 1002	-18.5	-18.5	0.45 (4)	10.00
J- I	0 / 1002	-18.5	-18.5	0.45 (4)	10.00

WEBS

MEMB. FR-TO	MAX. FACTORED FORCE (LBS)	MAX CSI (LC)
C- K	-235 / 0	0.11 (1)
K- F	-235 / 0	0.11 (1)
L- C	-1233 / 0	0.47 (1)
F- I	-1233 / 0	0.47 (1)
D- K	0 / 224	0.05 (1)
K- E	0 / 224	0.05 (1)

DESIGN CRITERIA

SPECIFIED LOADS:

TOP CH.	LL	=	25.6	PSF
	DL	=	6.0	PSF
BOT CH.	LL	=	0.0	PSF
	DL	=	7.4	PSF
TOTAL LOAD		=	39.0	PSF

SPACING = 24.0 IN. C/C

LOADING IN FLAT SECTION BASED ON A SLOPE OF 6.00/12

THIS TRUSS IS DESIGNED FOR RESIDENTIAL OR SMALL BUILDING REQUIREMENTS OF PART 9, NBCC 2015

THIS DESIGN COMPLIES WITH:
- PART 9 OF BCBC 2018 , NBC-2019AE
- PART 9 OF OBC 2012 (2019 AMENDMENT)
- CSA 086-14
- TPIC 2014

(55 % OF 31.3 P.S.F. G.S.L. PLUS 8.4 P.S.F. RAIN LOAD) EQUALS 25.6 P.S.F. SPECIFIED ROOF LIVE LOAD

ALLOWABLE DEFL.(LL)= L/360 (0.56")
CALCULATED VERT. DEFL.(LL) = L/ 999 (0.03")
ALLOWABLE DEFL.(TL)= L/360 (0.56")
CALCULATED VERT. DEFL.(TL) = L/ 999 (0.12")

CSI: TC=0.22/1.00 (F-G:1) , BC=0.45/1.00 (I-K:4) , WB=0.47/1.00 (F-I:1) , SSI=0.15/1.00 (F-G:1)

DOL LUMBER=1.00 NAIL=1.00 LS BEND=1.10 COMP=1.10 SHEAR=1.10 TENS= 1.10

COMPANION LIVE LOAD FACTOR = 1.00

TRUSS PLATE MANUFACTURER IS NOT RESPONSIBLE FOR QUALITY CONTROL IN THE TRUSS MANUFACTURING PLANT .

NAIL VALUES

PLATE	GRIP(DRY) (PSI) MAX	MIN	SHEAR (PLI) MAX	MIN	SECTION (PLI) MAX	MIN
MT20	650	371	1747	788	1987	1873

PLATE PLACEMENT TOL. = 0.250 inches

PLATE ROTATION TOL. = 5.0 Deg.

JSI GRIP= 0.61 (L) (INPUT = 0.90)
JSI METAL= 0.33 (J) (INPUT = 0.95)

LICENSED PROFESSIONAL ENGINEER
03-04-24
H. J. G. ALVES
100009024
PROVINCE OF ONTARIO

Structural component only
DWG# T-2406582

CITY OF RICHMOND HILL
BUILDING DIVISION
05/01/2024
RECEIVED
Per: joshua.nabua

JOB NAME	TRUSS NAME	QUANTITY	PLY	JOB DESC.	DRWG NO.
436988	T16	2	1	GREEN PARK HOMES TRUSS DESC.	

Tamarack Roof Truss, Burlington

Version 8.630 S Aug 30 2023 MiTek Industries, Inc. Mon Mar 4 08:03:43 2024 Page 1
ID:1PtzEZc03lbzkDC64XoV?RygPuj-J8X3VE4GgQjQF9WxALmJpg4aegKaBxx2rCiU9XzeNPE

Scale = 1:33.7

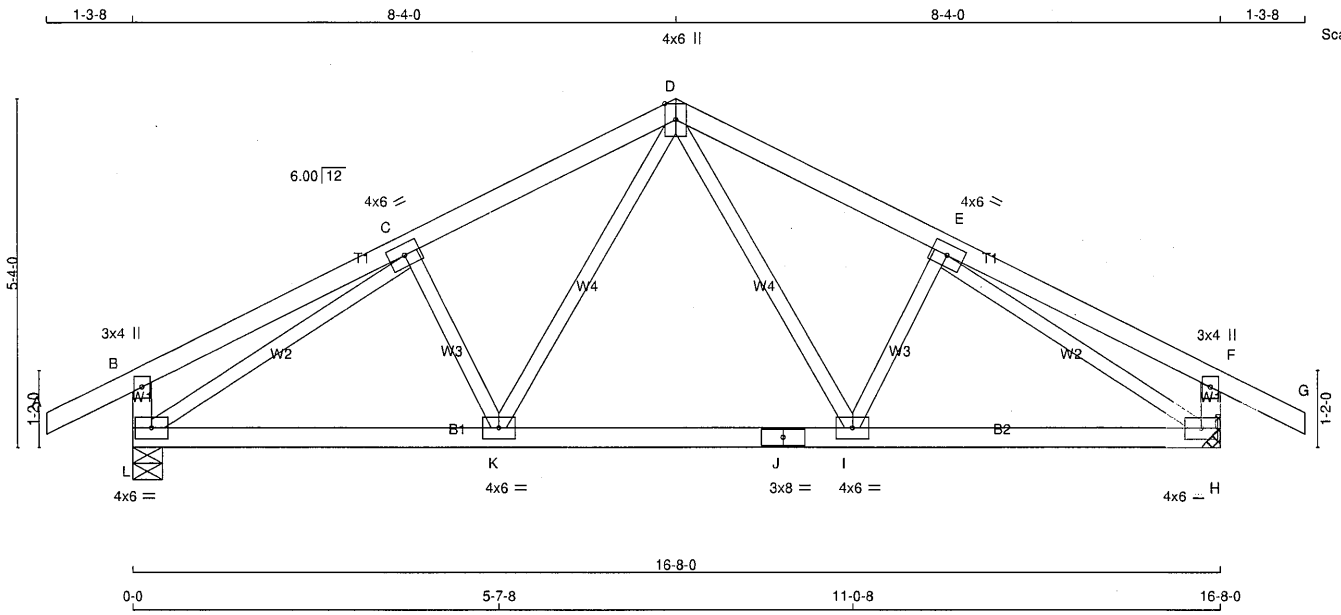

TOTAL WEIGHT = 2 X 67 = 134 lb

LUMBER
N. L. G. A. RULES

CHORDS	SIZE		LUMBER	DESCR.
A - D	2x4	DRY	No.2	SPF
D - G	2x4	DRY	No.2	SPF
L - B	2x4	DRY	No.2	SPF
H - F	2x4	DRY	No.2	SPF
L - J	2x4	DRY	No.2	SPF
J - H	2x4	DRY	No.2	SPF
ALL WEBS EXCEPT	2x3	DRY	No.2	SPF

DRY: SEASONED LUMBER.

PLATES (table is in inches)

JT	TYPE	PLATES	W	LEN	Y	X
B	TMV+p	MT20	3.0	4.0		
C	TMWW-t	MT20	4.0	6.0		
D	TTWW+p	MT20	4.0	6.0	Edge	
E	TMWW-t	MT20	4.0	6.0		
F	TMV+p	MT20	3.0	4.0		
H	BMVW1-t	MT20	4.0	6.0		
I	BMWW-t	MT20	4.0	6.0		
J	BS-t	MT20	3.0	8.0		
K	BMWW-t	MT20	4.0	6.0		
L	BMVW1-t	MT20	4.0	6.0		

Edge - INDICATES REFERENCE CORNER OF PLATE TOUCHES EDGE OF CHORD.

NOTES- (1)
1) Lateral braces to be a minimum of 2X4 SPF #2.

DIMENSIONS, SUPPORTS AND LOADINGS SPECIFIED BY FABRICATOR TO BE VERIFIED BY BUILDING DESIGNER

BEARINGS

JT	FACTORED GROSS REACTION VERT	HORZ	MAXIMUM FACTORED GROSS REACTION DOWN	HORZ	UPLIFT	INPUT BRG IN-SX	REQRD BRG IN-SX
L	1043	0	1043	0	0	5-8	1-8
H	1043	0	1043	0	0	MECHANICAL	

A SUITABLE HANGER/MECHANICAL CONNECTION IS REQUIRED AT JOINT H. MINIMUM BEARING LENGTH AT JOINT H = 1-8.

UNFACTORED REACTIONS

JT	1ST LCASE COMBINED	MAX./MIN. COMPONENT REACTIONS SNOW	LIVE	PERM.LIVE	WIND	DEAD	SOIL
L	735	496 / 0	0 / 0	0 / 0	0 / 0	240 / 0	0 / 0
H	735	496 / 0	0 / 0	0 / 0	0 / 0	240 / 0	0 / 0

BEARING MATERIAL TO BE SPF NO.2 OR BETTER AT JOINT(S) L

BRACING
TOP CHORD TO BE SHEATHED OR MAX. PURLIN SPACING = 5.90 FT.
MAX. UNBRACED BOTTOM CHORD LENGTH = 10.00 FT OR RIGID CEILING DIRECTLY APPLIED.

ALL PITCH BREAKS AND PERIMETER CORNER JOINTS MUST BE LATERALLY RESTRAINED.

LOADING
TOTAL LOAD CASES: (4)

CHORDS

MEMB. FR-TO	MAX. FACTORED FORCE (LBS)	FACTORED VERT. LOAD (PLF) FROM	TO	LC1 MAX CSI (LC)	MAX. UNBRAC LENGTH
A- B	0 / 28	-91.8	-91.8	0.12 (1)	10.00
B- C	0 / 19	-91.8	-91.8	0.25 (1)	10.00
C- D	-1057 / 0	-91.8	-91.8	0.20 (1)	5.90
D- E	-1057 / 0	-91.8	-91.8	0.20 (1)	5.90
E- F	0 / 19	-91.8	-91.8	0.25 (1)	10.00
F- G	0 / 28	-91.8	-91.8	0.12 (1)	10.00
L- B	-273 / 0	0.0	0.0	0.03 (1)	7.81
H- F	-273 / 0	0.0	0.0	0.03 (1)	7.81
L- K	0 / 1030	-18.5	-18.5	0.24 (1)	10.00
K- J	0 / 758	-18.5	-18.5	0.19 (4)	10.00
J- I	0 / 758	-18.5	-18.5	0.19 (4)	10.00
I- H	0 / 1030	-18.5	-18.5	0.24 (1)	10.00

WEBS

MEMB. FR-TO	MAX. FACTORED FORCE (LBS)	MAX CSI (LC)
D- I	0 / 359	0.08 (1)
I- E	-229 / 0	0.05 (1)
K- D	0 / 359	0.08 (1)
C- K	-229 / 0	0.05 (1)
L- C	-1260 / 0	0.52 (1)
E- H	-1260 / 0	0.52 (1)

DESIGN CRITERIA

SPECIFIED LOADS:

TOP CH.	LL	=	25.6	PSF
	DL	=	6.0	PSF
BOT CH.	LL	=	0.0	PSF
	DL	=	7.4	PSF
TOTAL LOAD		=	39.0	PSF

SPACING = 24.0 IN. C/C

THIS TRUSS IS DESIGNED FOR RESIDENTIAL OR SMALL BUILDING REQUIREMENTS OF PART 9, NBCC 2015

THIS DESIGN COMPLIES WITH:
- PART 9 OF BCBC 2018 , NBC-2019AE
- PART 9 OF OBC 2012 (2019 AMENDMENT)
- CSA 086-14
- TPIC 2014

(55 % OF 31.3 P.S.F. G.S.L. PLUS 8.4 P.S.F. RAIN LOAD) EQUALS 25.6 P.S.F. SPECIFIED ROOF LIVE LOAD

ALLOWABLE DEFL.(LL)= L/360 (0.56")
CALCULATED VERT. DEFL.(LL) = L/ 999 (0.03")
ALLOWABLE DEFL.(TL)= L/360 (0.56")
CALCULATED VERT. DEFL.(TL) = L/ 999 (0.06")

CSI: TC=0.25/1.00 (E-F:1) , BC=0.24/1.00 (H-I:1) , WB=0.52/1.00 (E-H:1) , SSI=0.16/1.00 (E-F:1)

DOL LUMBER=1.00 NAIL=1.00 LS BEND=1.10 COMP=1.10 SHEAR=1.10 TENS= 1.10

COMPANION LIVE LOAD FACTOR = 1.00

TRUSS PLATE MANUFACTURER IS NOT RESPONSIBLE FOR QUALITY CONTROL IN THE TRUSS MANUFACTURING PLANT .

NAIL VALUES

PLATE	GRIP(DRY) (PSI) MAX	MIN	SHEAR (PLI) MAX	MIN	SECTION (PLI) MAX	MIN
MT20	650	371	1747	788	1987	1873

PLATE PLACEMENT TOL. = 0.250 inches

PLATE ROTATION TOL. = 5.0 Deg.

JSI GRIP= 0.73 (E) (INPUT = 0.90)
JSI METAL= 0.28 (E) (INPUT = 0.95)

LICENSED PROFESSIONAL ENGINEER
03-04-24
H. J. G. ALVES
100009024
PROVINCE OF ONTARIO

Structural component only
DWG# T-2406583

CITY OF RICHMOND HILL
BUILDING DIVISION
05/01/2024
RECEIVED
Per: joshua.nabua

JOB NAME	TRUSS NAME	QUANTITY	PLY	JOB DESC.	DRWG NO.
436988	T17	4	1	GREEN PARK HOMES TRUSS DESC.	

Tamarack Roof Truss, Burlington

Version 8.630 S Aug 30 2023 MiTek Industries, Inc. Mon Mar 4 08:03:44 2024 Page 1
ID:1PtzEZc03lbzkDC64XoV?RygPuj-nK5Ria5uRkrHtJ57k2HYMudmh4f5wSUB3sR1i_zeNPD

Scale = 1:40.1

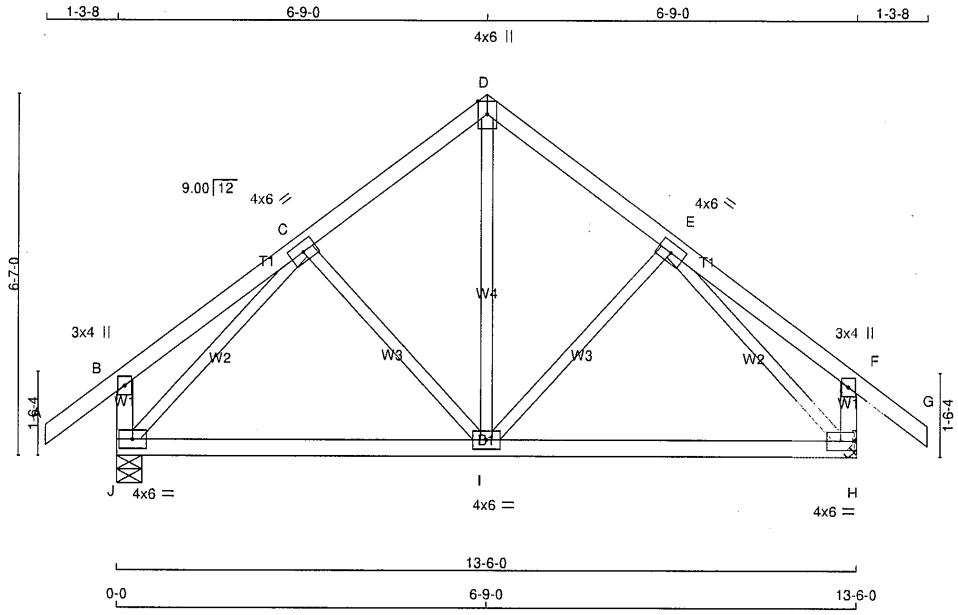

TOTAL WEIGHT = 4 X 61 = 245 lb
[M][F]

LUMBER
N. L. G. A. RULES

CHORDS	SIZE		LUMBER	DESCR.
A - D	2x4	DRY	No.2	SPF
D - G	2x4	DRY	No.2	SPF
J - B	2x4	DRY	No.2	SPF
H - F	2x4	DRY	No.2	SPF
J - H	2x4	DRY	No.2	SPF
ALL WEBS EXCEPT	2x3	DRY	No.2	SPF

DRY: SEASONED LUMBER.

PLATES (table is in inches)

JT	TYPE	PLATES	W	LEN	Y	X
B	TMV+p	MT20	3.0	4.0		
C	TMWW-t	MT20	4.0	6.0		
D	TTW+p	MT20	4.0	6.0	Edge	
E	TMWW-t	MT20	4.0	6.0		
F	TMV+p	MT20	3.0	4.0		
H	BMVW1-t	MT20	4.0	6.0		
I	BMWWW-t	MT20	4.0	6.0		
J	BMVW1-t	MT20	4.0	6.0		

Edge - INDICATES REFERENCE CORNER OF PLATE TOUCHES EDGE OF CHORD.

NOTES- (1)
1) Lateral braces to be a minimum of 2X4 SPF #2.

DIMENSIONS, SUPPORTS AND LOADINGS SPECIFIED BY FABRICATOR TO BE VERIFIED BY BUILDING DESIGNER

BEARINGS

JT	FACTORED GROSS REACTION VERT	HORZ	MAXIMUM FACTORED GROSS REACTION DOWN	HORZ	UPLIFT	INPUT BRG IN-SX	REQRD BRG IN-SX
J	871	0	871	0	0	5-8	1-8
H	871	0	871	0	0	MECHANICAL	

A SUITABLE HANGER/MECHANICAL CONNECTION IS REQUIRED AT JOINT H. MINIMUM BEARING LENGTH AT JOINT H = 1-8.

UNFACTORED REACTIONS

JT	1ST LCASE COMBINED	MAX./MIN. COMPONENT REACTIONS SNOW	LIVE	PERM.LIVE	WIND	DEAD	SOIL
J	613	416 / 0	0 / 0	0 / 0	0 / 0	197 / 0	0 / 0
H	613	416 / 0	0 / 0	0 / 0	0 / 0	197 / 0	0 / 0

BEARING MATERIAL TO BE SPF NO.2 OR BETTER AT JOINT(S) J

BRACING
TOP CHORD TO BE SHEATHED OR MAX. PURLIN SPACING = 6.25 FT.
MAX. UNBRACED BOTTOM CHORD LENGTH = 10.00 FT OR RIGID CEILING DIRECTLY APPLIED.

ALL PITCH BREAKS AND PERIMETER CORNER JOINTS MUST BE LATERALLY RESTRAINED.

LOADING
TOTAL LOAD CASES: (4)

CHORDS

MEMB. FR-TO	MAX. FACTORED FORCE (LBS)	FACTORED VERT. LOAD LC1 (PLF) FROM	TO	MAX CSI (LC)	MAX. UNBRAC LENGTH
A- B	0 / 38	-91.8	-91.8	0.12 (1)	10.00
B- C	0 / 21	-91.8	-91.8	0.16 (1)	10.00
C- D	-543 / 0	-91.8	-91.8	0.13 (1)	6.25
D- E	-543 / 0	-91.8	-91.8	0.13 (1)	6.25
E- F	0 / 21	-91.8	-91.8	0.16 (1)	10.00
F- G	0 / 38	-91.8	-91.8	0.12 (1)	10.00
J- B	-247 / 0	0.0	0.0	0.03 (1)	7.81
H- F	-247 / 0	0.0	0.0	0.03 (1)	7.81
J- I	0 / 522	-18.5	-18.5	0.28 (4)	10.00
I- H	0 / 522	-18.5	-18.5	0.28 (4)	10.00

WEBS

MEMB. FR-TO	MAX. FACTORED FORCE (LBS)	MAX CSI (LC)
I- D	0 / 387	0.09 (1)
I- E	-157 / 0	0.07 (1)
C- I	-157 / 0	0.07 (1)
J- C	-778 / 0	0.31 (1)
E- H	-778 / 0	0.31 (1)

DESIGN CRITERIA

SPECIFIED LOADS:

TOP CH.	LL	=	25.6	PSF
	DL	=	6.0	PSF
BOT CH.	LL	=	0.0	PSF
	DL	=	7.4	PSF
TOTAL LOAD		=	39.0	PSF

SPACING = 24.0 IN. C/C

THIS TRUSS IS DESIGNED FOR RESIDENTIAL OR SMALL BUILDING REQUIREMENTS OF PART 9, NBCC 2015

THIS DESIGN COMPLIES WITH:
- PART 9 OF BCBC 2018 , NBC-2019AE
- PART 9 OF OBC 2012 (2019 AMENDMENT)
- CSA 086-14
- TPIC 2014

(55 % OF 31.3 P.S.F. G.S.L. PLUS 8.4 P.S.F. RAIN LOAD) EQUALS 25.6 P.S.F. SPECIFIED ROOF LIVE LOAD

ALLOWABLE DEFL.(LL)= L/360 (0.45")
CALCULATED VERT. DEFL.(LL) = L/ 999 (0.01")
ALLOWABLE DEFL.(TL)= L/360 (0.45")
CALCULATED VERT. DEFL.(TL) = L/ 999 (0.05")

CSI: TC=0.16/1.00 (E-F:1) , BC=0.28/1.00 (I-J:4) , WB=0.31/1.00 (E-H:1) , SSI=0.12/1.00 (E-F:1)

DOL LUMBER=1.00 NAIL=1.00 LS BEND=1.10 COMP=1.10 SHEAR=1.10 TENS= 1.10

COMPANION LIVE LOAD FACTOR = 1.00

TRUSS PLATE MANUFACTURER IS NOT RESPONSIBLE FOR QUALITY CONTROL IN THE TRUSS MANUFACTURING PLANT .

NAIL VALUES

PLATE	GRIP(DRY) (PSI) MAX	MIN	SHEAR (PLI) MAX	MIN	SECTION (PLI) MAX	MIN
MT20	650	371	1747	788	1987	1873

PLATE PLACEMENT TOL. = 0.250 inches

PLATE ROTATION TOL. = 5.0 Deg.

JSI GRIP= 0.52 (E) (INPUT = 0.90)
JSI METAL= 0.17 (E) (INPUT = 0.95)

LICENSED PROFESSIONAL ENGINEER
03-04-24
H. J. G. ALVES
100009024
PROVINCE OF ONTARIO

Structural component only
DWG# T-2406584

CITY OF RICHMOND HILL
BUILDING DIVISION
05/01/2024
RECEIVED
Per: joshua.nabua

JOB NAME	TRUSS NAME	QUANTITY	PLY	JOB DESC.	DRWG NO.
436988	T17G	1	1	GREEN PARK HOMES TRUSS DESC.	

Tamarack Roof Truss, Burlington

Version 8.630 S Aug 30 2023 MiTek Industries, Inc. Mon Mar 4 08:03:45 2024 Page 1
ID:1PtzEZc03IbzkDC64XoV?RygPuj-FWfpwv5XC1z7UTgKHmpnu59y3U2UfywLIWBbEQzeNPC

Scale = 1:40.1

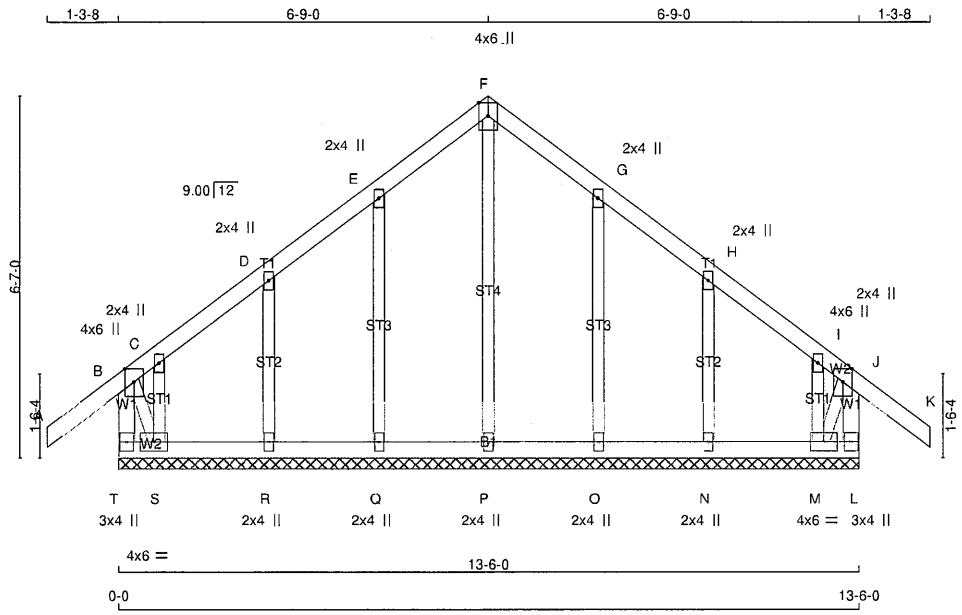

TOTAL WEIGHT = 63 lb

[M]

LUMBER

N. L. G. A. RULES

CHORDS	SIZE		LUMBER	DESCR.
T - B	2x4	DRY	No.2	SPF
A - F	2x4	DRY	No.2	SPF
F - K	2x4	DRY	No.2	SPF
L - J	2x4	DRY	No.2	SPF
T - L	2x4	DRY	No.2	SPF
ALL WEBS	2x3	DRY	No.2	SPF
ALL GABLE WEBS	2x3	DRY	No.2	SPF

DRY: SEASONED LUMBER.

GABLE STUDS SPACED AT 2-0-0 OC.

PLATES (table is in inches)

JT	TYPE	PLATES	W	LEN	Y	X
B	TMVW+p	MT20	4.0	6.0	Edge	
C, D, E, G, H, I						
C	TMW+w	MT20	2.0	4.0		
F	TTW+p	MT20	4.0	6.0	Edge	
J	TMVW+p	MT20	4.0	6.0	Edge	
L	BMV1+p	MT20	3.0	4.0		
M	BMWW1-t	MT20	4.0	6.0		
N, O, P, Q, R						
N	BMW1+w	MT20	2.0	4.0		
S	BMWW1-t	MT20	4.0	6.0		
T	BMV1+p	MT20	3.0	4.0		

Edge - INDICATES REFERENCE CORNER OF PLATE TOUCHES EDGE OF CHORD.

NOTES- (1)
1) Lateral braces to be a minimum of 2X4 SPF #2.

DIMENSIONS, SUPPORTS AND LOADINGS SPECIFIED BY FABRICATOR TO BE VERIFIED BY BUILDING DESIGNER

BEARINGS

THIS TRUSS DESIGNED FOR CONTINUOUS BEARINGS.

THIS TRUSS REQUIRES RIGID SHEATHING ON EXPOSED FACE.

BEARING MATERIAL TO BE SPF NO.2 OR BETTER AT JOINT(S)

BRACING

TOP CHORD TO BE SHEATHED OR MAX. PURLIN SPACING = 6.25 FT.
MAX. UNBRACED BOTTOM CHORD LENGTH = 10.00 FT OR RIGID CEILING DIRECTLY APPLIED.

ALL PITCH BREAKS AND PERIMETER CORNER JOINTS MUST BE LATERALLY RESTRAINED.

LOADING

TOTAL LOAD CASES: (4)

CHORDS

MEMB. FR-TO	MAX. FACTORED FORCE (LBS)	FACTORED VERT. LOAD LC1 (PLF) FROM	TO	MAX CSI (LC)	MAX. UNBRAC LENGTH
T- B	-282 / 0	0.0	0.0	0.03 (1)	7.81
A- B	0 / 38	-91.8	-91.8	0.12 (1)	10.00
B- C	-74 / 0	-91.8	-91.8	0.12 (1)	6.25
C- D	-7 / 0	-91.8	-91.8	0.04 (1)	10.00
D- E	-2 / 0	-91.8	-91.8	0.05 (1)	10.00
E- F	-11 / 0	-91.8	-91.8	0.05 (1)	6.25
F- G	-11 / 0	-91.8	-91.8	0.05 (1)	6.25
G- H	-2 / 0	-91.8	-91.8	0.05 (1)	10.00
H- I	-7 / 0	-91.8	-91.8	0.04 (1)	10.00
I- J	-74 / 0	-91.8	-91.8	0.12 (1)	6.25
J- K	0 / 38	-91.8	-91.8	0.12 (1)	10.00
L- J	-282 / 0	0.0	0.0	0.03 (1)	7.81
T- S	0 / 0	-18.5	-18.5	0.01 (4)	10.00
S- R	0 / 9	-18.5	-18.5	0.02 (4)	10.00
R- Q	0 / 4	-18.5	-18.5	0.02 (4)	10.00
Q- P	0 / 0	-18.5	-18.5	0.01 (4)	10.00
P- O	0 / 0	-18.5	-18.5	0.01 (4)	10.00
O- N	0 / 4	-18.5	-18.5	0.02 (4)	10.00
N- M	0 / 9	-18.5	-18.5	0.02 (4)	10.00
M- L	0 / 0	-18.5	-18.5	0.01 (4)	10.00

WEBS

MEMB. FR-TO	MAX. FACTORED FORCE (LBS)	MAX CSI (LC)
P- F	-154 / 0	0.11 (1)
Q- E	-208 / 0	0.08 (1)
R- D	-182 / 0	0.04 (1)
S- C	-12 / 0	0.00 (1)
O- G	-208 / 0	0.08 (1)
N- H	-182 / 0	0.04 (1)
M- I	-12 / 0	0.00 (1)
B- S	0 / 17	0.00 (1)
M- J	0 / 17	0.00 (1)

DESIGN CRITERIA

SPECIFIED LOADS:

TOP CH.	LL	=	25.6	PSF
	DL	=	6.0	PSF
BOT CH.	LL	=	0.0	PSF
	DL	=	7.4	PSF
TOTAL LOAD		=	39.0	PSF

SPACING = 24.0 IN. C/C

THIS TRUSS IS DESIGNED FOR RESIDENTIAL OR SMALL BUILDING REQUIREMENTS OF PART 9, NBCC 2015

THIS DESIGN COMPLIES WITH:
- PART 9 OF BCBC 2018 , NBC-2019AE
- PART 9 OF OBC 2012 (2019 AMENDMENT)
- CSA 086-14
- TPIC 2014

DESIGN ASSUMPTIONS
-OVERHANG NOT TO BE ALTERED OR CUT OFF.

(55 % OF 31.3 P.S.F. G.S.L. PLUS 8.4 P.S.F. RAIN LOAD) EQUALS 25.6 P.S.F. SPECIFIED ROOF LIVE LOAD

CSI: TC=0.12/1.00 (J-K:1) , BC=0.02/1.00 (M-N:4) , WB=0.11/1.00 (F-P:1) , SSI=0.08/1.00 (I-J:1)

DOL LUMBER=1.00 NAIL=1.00 LS BEND=1.10 COMP=1.10 SHEAR=1.10 TENS= 1.10

COMPANION LIVE LOAD FACTOR = 1.00

TRUSS PLATE MANUFACTURER IS NOT RESPONSIBLE FOR QUALITY CONTROL IN THE TRUSS MANUFACTURING PLANT .

NAIL VALUES

PLATE	GRIP(DRY) (PSI) MAX	MIN	SHEAR (PLI) MAX	MIN	SECTION (PLI) MAX	MIN
MT20	650	371	1747	788	1987	1873

PLATE PLACEMENT TOL. = 0.250 inches

PLATE ROTATION TOL. = 5.0 Deg.

JSI GRIP= 0.16 (J) (INPUT = 0.90)
JSI METAL= 0.11 (E) (INPUT = 0.95)

LICENSED PROFESSIONAL ENGINEER
03-04-24
H. J. G. ALVES
100009024
PROVINCE OF ONTARIO

Structural component only
DWG# T-2406585

CITY OF RICHMOND HILL
BUILDING DIVISION
05/01/2024
RECEIVED
Per: joshua.nabua

JOB NAME	TRUSS NAME	QUANTITY	PLY	JOB DESC.	DRWG NO.
436988	T18	1	1	GREEN PARK HOMES TRUSS DESC.	

Tamarack Roof Truss, Burlington

Version 8.630 S Aug 30 2023 MiTek Industries, Inc. Mon Mar 4 08:03:46 2024 Page 1
ID:1PtzEZc03lbzkDC64XoV?RygPuj-jjCB7F69zL5_6dFWrTK0RJi49tMSON1UXAw8mszeNPB

Scale = 1:26.7

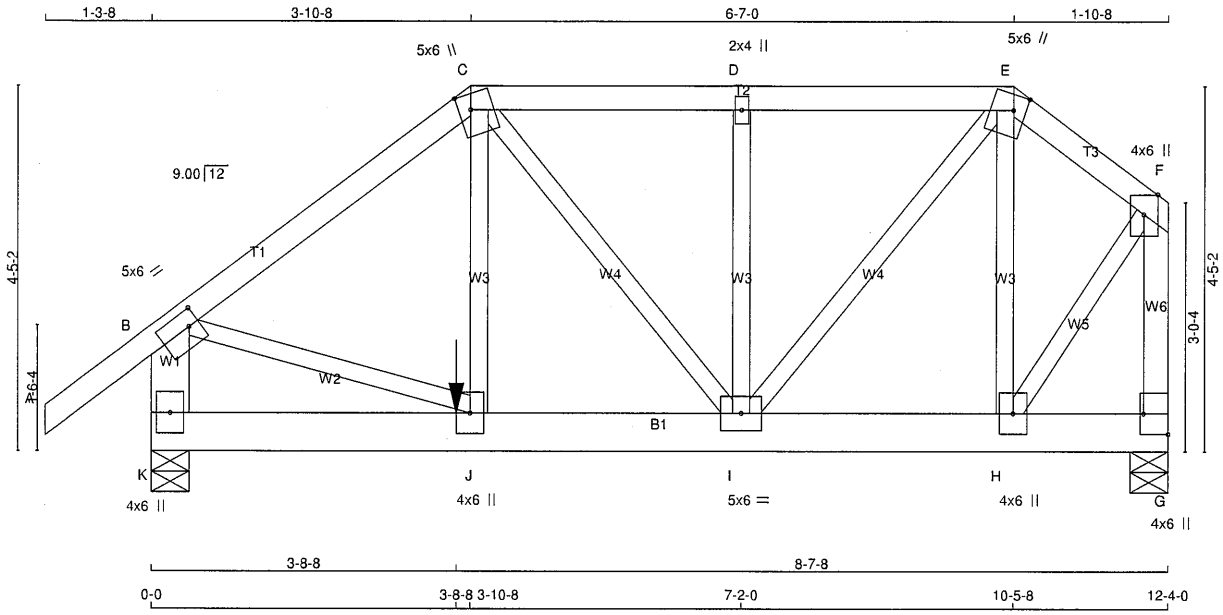

TOTAL WEIGHT = 67 lb

[M]

LUMBER

N. L. G. A. RULES

CHORDS	SIZE		LUMBER	DESCR.
A - C	2x4	DRY	No.2	SPF
C - E	2x4	DRY	No.2	SPF
E - F	2x4	DRY	No.2	SPF
K - B	2x6	DRY	No.2	SPF
G - F	2x4	DRY	No.2	SPF
K - G	2x6	DRY	No.2	SPF
ALL WEBS EXCEPT	2x3	DRY	No.2	SPF

DRY: SEASONED LUMBER.

PLATES (table is in inches)

JT	TYPE	PLATES	W	LEN	Y	X
B	TMVW-t	MT20	5.0	6.0	2.25	1.50
C	TTWW+m	MT20	5.0	6.0	2.25	1.75
D	TMW+w	MT20	2.0	4.0		
E	TTWW+m	MT20	5.0	6.0	2.25	1.75
F	TMVW+p	MT20	4.0	6.0	Edge	
G	BMV1+p	MT20	4.0	6.0	3.00	Edge
H	BMWW+t	MT20	4.0	6.0		
I	BMWWW-t	MT20	5.0	6.0		
J	BMWW+t	MT20	4.0	6.0		
K	BMV1+p	MT20	4.0	6.0		

Edge - INDICATES REFERENCE CORNER OF PLATE TOUCHES EDGE OF CHORD.

NOTES- (1)
1) Lateral braces to be a minimum of 2X4 SPF #2.

DIMENSIONS, SUPPORTS AND LOADINGS SPECIFIED BY FABRICATOR TO BE VERIFIED BY BUILDING DESIGNER

BEARINGS

JT	FACTORED GROSS REACTION VERT	HORZ	MAXIMUM FACTORED GROSS REACTION DOWN	HORZ	UPLIFT	INPUT BRG IN-SX	REQRD BRG IN-SX
K	1329	0	1329	0	0	5-8	1-8
G	929	0	929	0	0	5-8	1-8

UNFACTORED REACTIONS

JT	1ST LCASE COMBINED	MAX./MIN. COMPONENT REACTIONS SNOW	LIVE	PERM.LIVE	WIND	DEAD	SOIL
K	933	649 / 0	0 / 0	0 / 0	0 / 0	285 / 0	0 / 0
G	655	441 / 0	0 / 0	0 / 0	0 / 0	214 / 0	0 / 0

BEARING MATERIAL TO BE SPF NO.2 OR BETTER AT JOINT(S) K, G

BRACING

TOP CHORD TO BE SHEATHED OR MAX. PURLIN SPACING = 5.47 FT.
MAX. UNBRACED BOTTOM CHORD LENGTH = 10.00 FT OR RIGID CEILING DIRECTLY APPLIED.

ALL PITCH BREAKS AND PERIMETER CORNER JOINTS MUST BE LATERALLY RESTRAINED.

LOADING

TOTAL LOAD CASES: (4)

CHORDS

MEMB. FR-TO	MAX. FACTORED FORCE (LBS)	FACTORED VERT. LOAD (PLF) FROM	TO	LC1	MAX CSI (LC)	MAX. UNBRAC LENGTH
A- B	0 / 38	-91.8	-91.8	0.14 (1)	10.00	
B- C	-1186 / 0	-91.8	-91.8	0.29 (1)	5.47	
C- D	-846 / 0	-91.8	-91.8	0.18 (1)	6.25	
D- E	-846 / 0	-91.8	-91.8	0.18 (1)	6.25	
E- F	-507 / 0	-91.8	-91.8	0.06 (1)	6.25	
K- B	-1283 / 0	0.0	0.0	0.09 (1)	7.81	
G- F	-924 / 0	0.0	0.0	0.15 (1)	7.81	
K- J	0 / 0	-18.5	-18.5	0.04 (1)	10.00	
J- I	0 / 961	-18.5	-18.5	0.16 (1)	10.00	
I- H	0 / 392	-18.5	-18.5	0.07 (1)	10.00	
H- G	0 / 0	-18.5	-18.5	0.02 (1)	10.00	

WEBS

MEMB. FR-TO	MAX. FACTORED FORCE (LBS)	MAX CSI (LC)
J- C	0 / 556	0.14 (1)
C- I	-182 / 0	0.08 (1)
I- D	-360 / 0	0.10 (1)
I- E	0 / 719	0.18 (1)
H- E	-459 / 0	0.13 (1)
B- J	0 / 983	0.24 (1)
H- F	0 / 667	0.17 (1)

SPECIFIED CONCENTRATED LOADS (LBS)

JT	LOC.	LC1	MAX-	MAX+	FACE	DIR.	TYPE	HEEL	CONN.
J	3-8-8	-540	-540	---	FRONT	VERT	TOTAL	---	C1

CONNECTION REQUIREMENTS

1) **C1:** A SUITABLE HANGER/MECHANICAL CONNECTION IS REQUIRED.

DESIGN CRITERIA

SPECIFIED LOADS:

TOP CH.	LL	=	25.6	PSF
	DL	=	6.0	PSF
BOT CH.	LL	=	0.0	PSF
	DL	=	7.4	PSF
TOTAL LOAD		=	39.0	PSF

SPACING = 24.0 IN. C/C

LOADING IN FLAT SECTION BASED ON A SLOPE OF 6.00/12

THIS TRUSS IS DESIGNED FOR RESIDENTIAL OR SMALL BUILDING REQUIREMENTS OF PART 9, NBCC 2015

THIS DESIGN COMPLIES WITH:
- PART 9 OF BCBC 2018 , NBC-2019AE
- PART 9 OF OBC 2012 (2019 AMENDMENT)
- CSA 086-14
- TPIC 2014

(55 % OF 31.3 P.S.F. G.S.L. PLUS 8.4 P.S.F. RAIN LOAD) EQUALS 25.6 P.S.F. SPECIFIED ROOF LIVE LOAD

ALLOWABLE DEFL.(LL)= L/360 (0.41")
CALCULATED VERT. DEFL.(LL) = L/ 999 (0.02")
ALLOWABLE DEFL.(TL)= L/360 (0.41")
CALCULATED VERT. DEFL.(TL) = L/ 999 (0.03")

CSI: TC=0.29/1.00 (B-C:1) , BC=0.16/1.00 (I-J:1) , WB=0.24/1.00 (B-J:1) , SSI=0.16/1.00 (C-D:1)

DOL LUMBER=1.00 NAIL=1.00 LS BEND=1.00 COMP=1.00 SHEAR=1.00 TENS= 1.00

COMPANION LIVE LOAD FACTOR = 1.00

AUTOSOLVE RIGHT HEEL ONLY

TRUSS PLATE MANUFACTURER IS NOT RESPONSIBLE FOR QUALITY CONTROL IN THE TRUSS MANUFACTURING PLANT .

NAIL VALUES

PLATE	GRIP(DRY) (PSI) MAX	MIN	SHEAR (PLI) MAX	MIN	SECTION (PLI) MAX	MIN
MT20	650	371	1747	788	1987	1873

PLATE PLACEMENT TOL. = 0.250 inches

PLATE ROTATION TOL. = 5.0 Deg.

JSI GRIP= 0.79 (E) (INPUT = 0.90)
JSI METAL= 0.43 (J) (INPUT = 0.95)

LICENSED PROFESSIONAL ENGINEER
03-04-24
H. J. G. ALVES
100009024
PROVINCE OF ONTARIO

Structural component only
DWG# T-2406586

CITY OF RICHMOND HILL
BUILDING DIVISION
05/01/2024
RECEIVED
Per: joshua.nabua

JOB NAME	TRUSS NAME	QUANTITY	PLY	JOB DESC.	DRWG NO.
436988	T19	1	1	GREEN PARK HOMES TRUSS DESC.	

Tamarack Roof Truss, Burlington

Version 8.630 S Aug 30 2023 MiTek Industries, Inc. Mon Mar 4 08:03:47 2024 Page 1
ID:1PtzEZc03lbzkDC64XoV?RygPuj-BvmZKb7nkfDrknqiPBrFzWFD5HiY7sgemqgilJzeNPA

Scale = 1:35.1

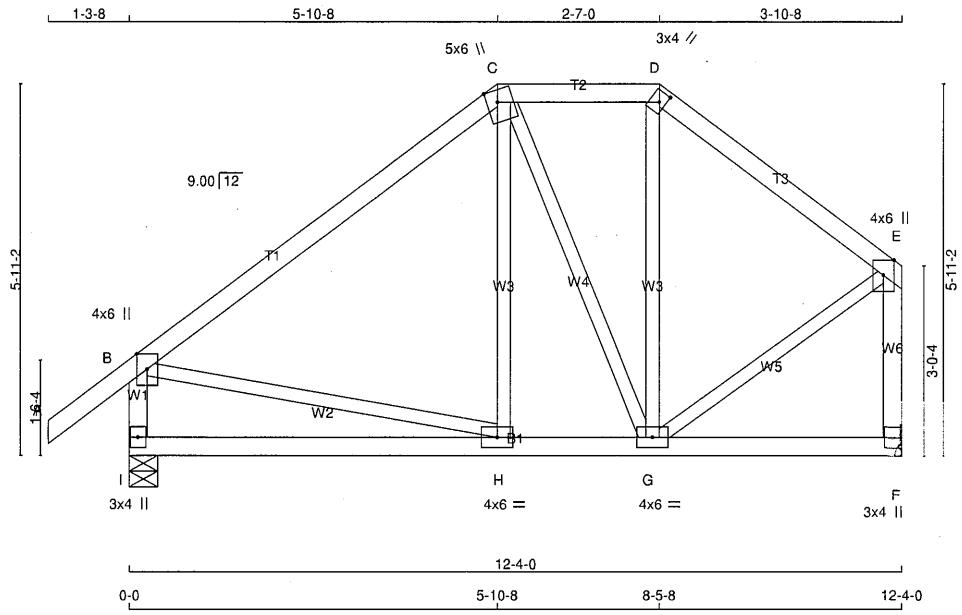

TOTAL WEIGHT = 59 lb

[M][F]

LUMBER

N. L. G. A. RULES

CHORDS	SIZE		LUMBER	DESCR.
A - C	2x4	DRY	No.2	SPF
C - D	2x4	DRY	No.2	SPF
D - E	2x4	DRY	No.2	SPF
I - B	2x4	DRY	No.2	SPF
F - E	2x4	DRY	No.2	SPF
I - F	2x4	DRY	No.2	SPF
ALL WEBS EXCEPT	2x3	DRY	No.2	SPF

DRY: SEASONED LUMBER.

PLATES (table is in inches)

JT	TYPE	PLATES	W	LEN	Y	X
B	TMVW+p	MT20	4.0	6.0	Edge	
C	TTWW+m	MT20	5.0	6.0	Edge	2.00
D	TTW+h	MT20	3.0	4.0	2.00	1.25
E	TMVW+p	MT20	4.0	6.0	Edge	
F	BMV1+p	MT20	3.0	4.0		
G	BMWWW-t	MT20	4.0	6.0		
H	BMWW-t	MT20	4.0	6.0		
I	BMV1+p	MT20	3.0	4.0		

Edge - INDICATES REFERENCE CORNER OF PLATE TOUCHES EDGE OF CHORD.

NOTES- (1)
1) Lateral braces to be a minimum of 2X4 SPF #2.

DIMENSIONS, SUPPORTS AND LOADINGS SPECIFIED BY FABRICATOR TO BE VERIFIED BY BUILDING DESIGNER

BEARINGS

JT	FACTORED GROSS REACTION VERT	HORZ	MAXIMUM FACTORED GROSS REACTION DOWN	HORZ	UPLIFT	INPUT BRG	REQRD BRG
I	806	0	806	0	0	5-8	1-8
F	680	0	680	0	0	MECHANICAL	

A SUITABLE HANGER/MECHANICAL CONNECTION IS REQUIRED AT JOINT F. MINIMUM BEARING LENGTH AT JOINT F = 1-8.

UNFACTORED REACTIONS

JT	1ST LCASE COMBINED	MAX./MIN. COMPONENT REACTIONS SNOW	LIVE	PERM.LIVE	WIND	DEAD	SOIL
I	568	386 / 0	0 / 0	0 / 0	0 / 0	182 / 0	0 / 0
F	481	316 / 0	0 / 0	0 / 0	0 / 0	165 / 0	0 / 0

BEARING MATERIAL TO BE SPF NO.2 OR BETTER AT JOINT(S) I

BRACING

TOP CHORD TO BE SHEATHED OR MAX. PURLIN SPACING = 6.25 FT.
MAX. UNBRACED BOTTOM CHORD LENGTH = 10.00 FT OR RIGID CEILING DIRECTLY APPLIED.

ALL PITCH BREAKS AND PERIMETER CORNER JOINTS MUST BE LATERALLY RESTRAINED.

LOADING

TOTAL LOAD CASES: (4)

CHORDS

MEMB. FR-TO	MAX. FACTORED FORCE (LBS)	FACTORED VERT. LOAD (PLF) FROM	TO	LC1 CSI (LC)	MAX UNBRAC LENGTH
A- B	0 / 38	-91.8	-91.8	0.12 (1)	10.00
B- C	-479 / 0	-91.8	-91.8	0.41 (1)	6.25
C- D	-327 / 0	-91.8	-91.8	0.08 (1)	6.25
D- E	-410 / 0	-91.8	-91.8	0.18 (1)	6.25
I- B	-760 / 0	0.0	0.0	0.08 (1)	7.81
F- E	-647 / 0	0.0	0.0	0.11 (1)	7.81
I- H	0 / 0	-18.5	-18.5	0.14 (4)	10.00
H- G	0 / 383	-18.5	-18.5	0.17 (4)	10.00
G- F	0 / 0	-18.5	-18.5	0.07 (4)	10.00

WEBS

MEMB. FR-TO	MAX. FACTORED FORCE (LBS)	MAX CSI (LC)
H- C	0 / 89	0.03 (4)
C- G	-139 / 0	0.09 (1)
G- D	-49 / 31	0.03 (1)
B- H	0 / 390	0.09 (1)
G- E	0 / 396	0.09 (1)

DESIGN CRITERIA

SPECIFIED LOADS:

TOP CH.	LL	=	25.6	PSF
	DL	=	6.0	PSF
BOT CH.	LL	=	0.0	PSF
	DL	=	7.4	PSF
TOTAL LOAD		=	39.0	PSF

SPACING = 24.0 IN. C/C

LOADING IN FLAT SECTION BASED ON A SLOPE OF 6.00/12

THIS TRUSS IS DESIGNED FOR RESIDENTIAL OR SMALL BUILDING REQUIREMENTS OF PART 9, NBCC 2015

THIS DESIGN COMPLIES WITH:
- PART 9 OF BCBC 2018 , NBC-2019AE
- PART 9 OF OBC 2012 (2019 AMENDMENT)
- CSA 086-14
- TPIC 2014

(55 % OF 31.3 P.S.F. G.S.L. PLUS 8.4 P.S.F. RAIN LOAD) EQUALS 25.6 P.S.F. SPECIFIED ROOF LIVE LOAD

ALLOWABLE DEFL.(LL)= L/360 (0.41")
CALCULATED VERT. DEFL.(LL) = L/ 999 (0.01")
ALLOWABLE DEFL.(TL)= L/360 (0.41")
CALCULATED VERT. DEFL.(TL) = L/ 999 (0.04")

CSI: TC=0.41/1.00 (B-C:1) , BC=0.17/1.00 (G-H:4) , WB=0.09/1.00 (C-G:1) , SSI=0.17/1.00 (B-C:1)

DOL LUMBER=1.00 NAIL=1.00 LS BEND=1.10 COMP=1.10 SHEAR=1.10 TENS= 1.10

COMPANION LIVE LOAD FACTOR = 1.00

TRUSS PLATE MANUFACTURER IS NOT RESPONSIBLE FOR QUALITY CONTROL IN THE TRUSS MANUFACTURING PLANT .

NAIL VALUES

PLATE	GRIP(DRY) (PSI) MAX	MIN	SHEAR (PLI) MAX	MIN	SECTION (PLI) MAX	MIN
MT20	650	371	1747	788	1987	1873

PLATE PLACEMENT TOL. = 0.250 inches

PLATE ROTATION TOL. = 0.5 Deg.

JSI GRIP= 0.47 (G) (INPUT = 0.90)
JSI METAL= 0.32 (B) (INPUT = 0.95)

LICENSED PROFESSIONAL ENGINEER
03-04-24
H. J. G. ALVES
100009024
PROVINCE OF ONTARIO

Structural component only
DWG# T-2406587

CITY OF RICHMOND HILL
BUILDING DIVISION
05/01/2024
RECEIVED
Per: joshua.nabua

JOB NAME	TRUSS NAME	QUANTITY	PLY	JOB DESC.	DRWG NO.
436988	T20	1	1	GREEN PARK HOMES TRUSS DESC.	

Tamarack Roof Truss, Burlington

Version 8.630 S Aug 30 2023 MiTek Industries, Inc. Mon Mar 4 08:03:48 2024 Page 1
ID:1PtzEZc03lbzkDC64XoV?RygPuj-f5KyYx8PVyLiMwPuzuMUWknPJh1VsFan_UPFrIzeNP9

Scale = 1:41.9

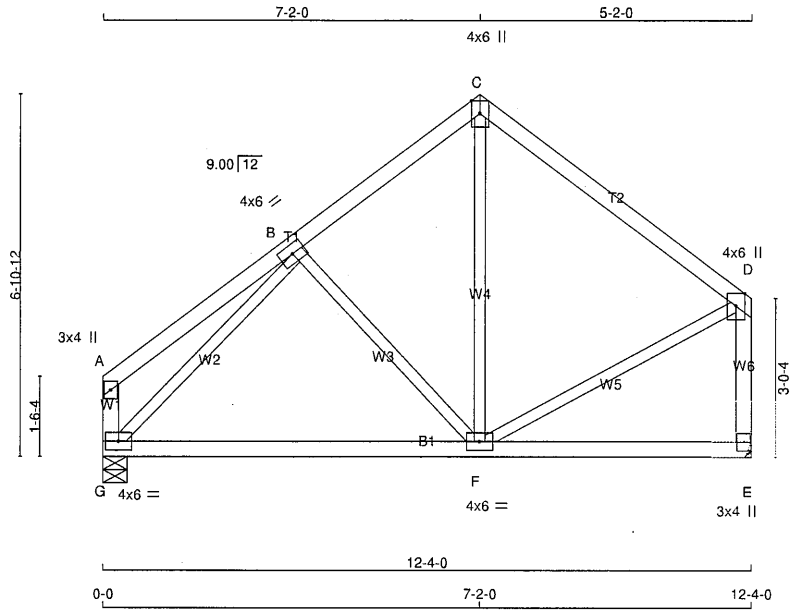

TOTAL WEIGHT = 54 lb
[M][F]

LUMBER
N. L. G. A. RULES

CHORDS	SIZE		LUMBER	DESCR.
A - C	2x4	DRY	No.2	SPF
C - D	2x4	DRY	No.2	SPF
G - A	2x4	DRY	No.2	SPF
E - D	2x4	DRY	No.2	SPF
G - E	2x4	DRY	No.2	SPF
ALL WEBS EXCEPT	2x3	DRY	No.2	SPF

DRY: SEASONED LUMBER.

PLATES (table is in inches)

JT	TYPE	PLATES	W	LEN	Y	X
A	TMV+p	MT20	3.0	4.0		
B	TMWW-t	MT20	4.0	6.0		
C	TTW+p	MT20	4.0	6.0	Edge	
D	TMVW+p	MT20	4.0	6.0	Edge	
E	BMV1+p	MT20	3.0	4.0		
F	BMWWW-t	MT20	4.0	6.0		
G	BMVW1-t	MT20	4.0	6.0		

Edge - INDICATES REFERENCE CORNER OF PLATE TOUCHES EDGE OF CHORD.

NOTES- (1)
1) Lateral braces to be a minimum of 2X4 SPF #2.

DIMENSIONS, SUPPORTS AND LOADINGS SPECIFIED BY FABRICATOR TO BE VERIFIED BY BUILDING DESIGNER

BEARINGS

JT	FACTORED GROSS REACTION VERT	HORZ	MAXIMUM FACTORED GROSS REACTION DOWN	HORZ	UPLIFT	INPUT BRG IN-SX	REQRD BRG IN-SX
E	680	0	680	0	0	MECHANICAL	
G	680	0	680	0	0	5-8	1-8

A SUITABLE HANGER/MECHANICAL CONNECTION IS REQUIRED AT JOINT E. MINIMUM BEARING LENGTH AT JOINT E = 1-8.

UNFACTORED REACTIONS

JT	1ST LCASE COMBINED	MAX./MIN. COMPONENT REACTIONS SNOW	LIVE	PERM.LIVE	WIND	DEAD	SOIL
E	481	316 / 0	0 / 0	0 / 0	0 / 0	165 / 0	0 / 0
G	481	316 / 0	0 / 0	0 / 0	0 / 0	165 / 0	0 / 0

BEARING MATERIAL TO BE SPF NO.2 OR BETTER AT JOINT(S) G

BRACING
TOP CHORD TO BE SHEATHED OR MAX. PURLIN SPACING = 6.25 FT.
MAX. UNBRACED BOTTOM CHORD LENGTH = 10.00 FT OR RIGID CEILING DIRECTLY APPLIED.

ALL PITCH BREAKS AND PERIMETER CORNER JOINTS MUST BE LATERALLY RESTRAINED.

LOADING
TOTAL LOAD CASES: (4)

CHORDS

MEMB. FR-TO	MAX. FACTORED FORCE (LBS)	FACTORED VERT. LOAD (PLF) FROM	TO	LC1 MAX CSI (LC)	MAX. UNBRAC LENGTH
A- B	0 / 23	-91.8	-91.8	0.19 (1)	10.00
B- C	-428 / 0	-91.8	-91.8	0.15 (1)	6.25
C- D	-405 / 0	-91.8	-91.8	0.32 (1)	6.25
G- A	-125 / 0	0.0	0.0	0.01 (1)	7.81
E- D	-649 / 0	0.0	0.0	0.11 (1)	7.81
G- F	0 / 462	-18.5	-18.5	0.25 (4)	10.00
F- E	0 / 0	-18.5	-18.5	0.22 (4)	10.00

WEBS

MEMB. FR-TO	MAX. FACTORED FORCE (LBS)	MAX CSI (LC)
B- F	-202 / 0	0.09 (1)
F- C	0 / 122	0.04 (4)
G- B	-682 / 0	0.30 (1)
F- D	0 / 366	0.08 (1)

DESIGN CRITERIA

SPECIFIED LOADS:

TOP CH.	LL	=	25.6	PSF
	DL	=	6.0	PSF
BOT CH.	LL	=	0.0	PSF
	DL	=	7.4	PSF
TOTAL LOAD		=	39.0	PSF

SPACING = 24.0 IN. C/C

THIS TRUSS IS DESIGNED FOR RESIDENTIAL OR SMALL BUILDING REQUIREMENTS OF PART 9, NBCC 2015

THIS DESIGN COMPLIES WITH:
- PART 9 OF BCBC 2018 , NBC-2019AE
- PART 9 OF OBC 2012 (2019 AMENDMENT)
- CSA 086-14
- TPIC 2014

(55 % OF 31.3 P.S.F. G.S.L. PLUS 8.4 P.S.F. RAIN LOAD) EQUALS 25.6 P.S.F. SPECIFIED ROOF LIVE LOAD

ALLOWABLE DEFL.(LL)= L/360 (0.41")
CALCULATED VERT. DEFL.(LL) = L/ 999 (0.01")
ALLOWABLE DEFL.(TL)= L/360 (0.41")
CALCULATED VERT. DEFL.(TL) = L/ 999 (0.07")

CSI: TC=0.32/1.00 (C-D:1) , BC=0.25/1.00 (F-G:4) , WB=0.30/1.00 (B-G:1) , SSI=0.15/1.00 (C-D:1)

DOL LUMBER=1.00 NAIL=1.00 LS BEND=1.10 COMP=1.10 SHEAR=1.10 TENS= 1.10

COMPANION LIVE LOAD FACTOR = 1.00

TRUSS PLATE MANUFACTURER IS NOT RESPONSIBLE FOR QUALITY CONTROL IN THE TRUSS MANUFACTURING PLANT .

NAIL VALUES

PLATE	GRIP(DRY) (PSI) MAX	MIN	SHEAR (PLI) MAX	MIN	SECTION (PLI) MAX	MIN
MT20	650	371	1747	788	1987	1873

PLATE PLACEMENT TOL. = 0.250 inches

PLATE ROTATION TOL. = 5.0 Deg.

JSI GRIP= 0.45 (F) (INPUT = 0.90)
JSI METAL= 0.24 (D) (INPUT = 0.95)

LICENSED PROFESSIONAL ENGINEER
03-04-24
H. J. G. ALVES
100009024
PROVINCE OF ONTARIO

Structural component only
DWG# T-2406588

CITY OF RICHMOND HILL
BUILDING DIVISION
05/01/2024
RECEIVED
Per: joshua.nabua

JOB NAME	TRUSS NAME	QUANTITY	PLY	JOB DESC.	DRWG NO.
436988	T21	1	2	GREEN PARK HOMES TRUSS DESC.	

Tamarack Roof Truss, Burlington

Version 8.630 S Aug 30 2023 MiTek Industries, Inc. Mon Mar 4 08:03:49 2024 Page 1
ID:1PtzEZc03IbzkDC64XoV?RygPuj-7luKlH81GGTZz4_5Wctj3xKcR5H6bguwD89oNBzeNP8

Scale = 1:21.7

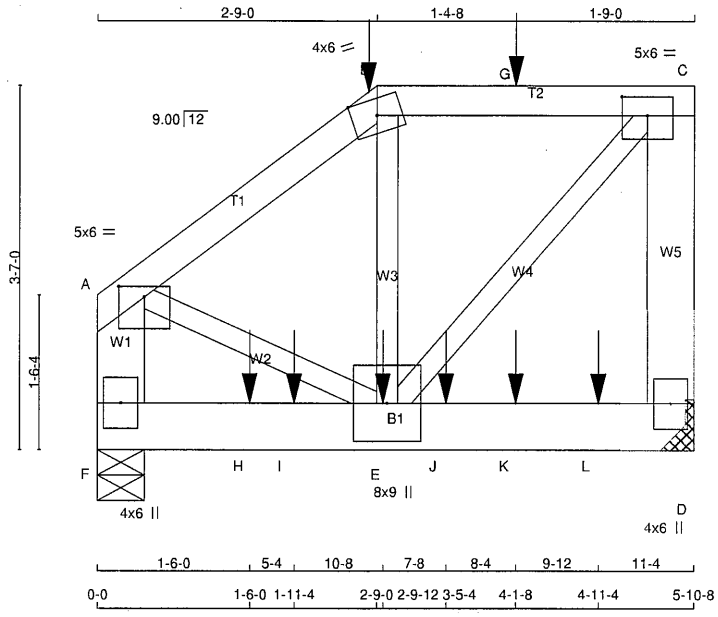

TOTAL WEIGHT = 2 X 33 = 65 lb [M]

LUMBER

N. L. G. A. RULES

CHORDS	SIZE		LUMBER	DESCR.
A - B	2x4	DRY	No.2	SPF
B - C	2x4	DRY	No.2	SPF
D - C	2x6	DRY	No.2	SPF
F - A	2x6	DRY	No.2	SPF
F - D	2x6	DRY	No.2	SPF
ALL WEBS EXCEPT	2x3	DRY	No.2	SPF

DRY: SEASONED LUMBER.

DESIGN CONSISTS OF 2 TRUSSES BUILT SEPARATELY THEN FASTENED TOGETHER AS FOLLOWS:

CHORDS	#ROWS	SURFACE SPACING (IN)	LOAD(PLF)
TOP CHORDS : (0.122"X3") SPIRAL NAILS			
A- B	1	12	SIDE(61.0)
B- C	1	12	SIDE(61.0)
C- D	2	12	TOP
F- A	2	12	TOP
BOTTOM CHORDS : (0.122"X3") SPIRAL NAILS			
F- D	2	12	SIDE(183.1)
WEBS : (0.122"X3") SPIRAL NAILS			
2x3	1	6	

NAILS TO BE DRIVEN FROM ONE SIDE ONLY.

GIRDER NAILING ASSUMES NAILED HANGERS ARE FASTENED WITH MIN. 3-0 INCH NAILS.

TOP - COMPONENTS ARE LOADED FROM THE TOP AND MUST BE PLACED ON TOP EDGE OF ALL PLIES FOR THE LOAD TO BE TRANSFERRED TO EACH PLY.

SIDE - PLF SHOWN IS THE EQUIVALENT UDL APPLIED TO ONE SIDE THAT THE CORRESPONDING NAILING PATTERN SHALL BE CAPABLE OF TRANSFERING. REMAINING PLF MUST BE APPLIED ON THE OPPOSITE SIDE OR ON THE TOP.

LICENSED PROFESSIONAL ENGINEER
03-04-24
H. J. G. ALVES
100009024
PROVINCE OF ONTARIO

Structural component only
DWG# T-2406589

DIMENSIONS, SUPPORTS AND LOADINGS SPECIFIED BY FABRICATOR TO BE VERIFIED BY BUILDING DESIGNER

BEARINGS

JT	FACTORED GROSS REACTION VERT	HORZ	MAXIMUM FACTORED GROSS REACTION DOWN	HORZ	UPLIFT	INPUT BRG	REQRD BRG
D	3849	0	3849	0	0	MECHANICAL	
F	3907	0	3907	0	0	5-8	2-2

A SUITABLE HANGER/MECHANICAL CONNECTION IS REQUIRED AT JOINT D. MINIMUM BEARING LENGTH AT JOINT D = 2-1.

UNFACTORED REACTIONS

JT	1ST LCASE COMBINED	MAX./MIN. COMPONENT REACTIONS SNOW	LIVE	PERM.LIVE	WIND	DEAD	SOIL
D	2714	1826 / 0	0 / 0	0 / 0	0 / 0	887 / 0	0 / 0
F	2754	1859 / 0	0 / 0	0 / 0	0 / 0	895 / 0	0 / 0

BEARING MATERIAL TO BE SPF NO.2 OR BETTER AT JOINT(S) F

BRACING

TOP CHORD TO BE SHEATHED OR MAX. PURLIN SPACING = 5.31 FT.
MAX. UNBRACED BOTTOM CHORD LENGTH = 10.00 FT OR RIGID CEILING DIRECTLY APPLIED.

ALL PITCH BREAKS AND PERIMETER CORNER JOINTS MUST BE LATERALLY RESTRAINED.

LOADING

TOTAL LOAD CASES: (7)

CHORDS

MEMB. FR-TO	MAX. FACTORED FORCE (LBS)	FACTORED VERT. LOAD (PLF)	LC1 FROM	LC1 TO	MAX CSI (LC)	MAX. UNBRAC LENGTH
A- B	-2911 / 0	-91.8	-91.8	-91.8	0.10 (1)	5.31
B- G	-2366 / 0	-91.8	-91.8	-91.8	0.12 (1)	5.71
G- C	-2366 / 0	-91.8	-91.8	-91.8	0.12 (1)	5.71
D- C	-2658 / 0	0.0	0.0	0.0	0.16 (1)	7.81
F- A	-2785 / 0	0.0	0.0	0.0	0.10 (1)	7.81
F- H	0 / 0	-18.5	-18.5	-18.5	0.61 (1)	10.00
H- I	0 / 0	-18.5	-18.5	-18.5	0.61 (1)	10.00
I- E	0 / 0	-18.5	-18.5	-18.5	0.61 (1)	10.00
E- J	0 / 0	-18.5	-18.5	-18.5	0.50 (1)	10.00
J- K	0 / 0	-18.5	-18.5	-18.5	0.50 (1)	10.00
K- L	0 / 0	-18.5	-18.5	-18.5	0.50 (1)	10.00
L- D	0 / 0	-18.5	-18.5	-18.5	0.50 (1)	10.00

WEBS

MEMB. FR-TO	MAX. FACTORED FORCE (LBS)	MAX CSI (LC)
E- B	0 / 1370	0.17 (1)
E- C	0 / 3452	0.43 (1)
A- E	0 / 2491	0.31 (1)

SPECIFIED CONCENTRATED LOADS (LBS)

JT	LOC.	LC1	MAX-	MAX+	FACE	DIR.	TYPE	HEEL	CONN.
B	2-9-0	-59	-59	99	BACK	VERT	TOTAL	---	C1
E	2-9-12	-6	-6	---	BACK	VERT	TOTAL	---	C1
G	4-1-8	-24	-24	---	BACK	VERT	TOTAL	---	C1
H	1-6-0	-2335	-2335	---	FRONT	VERT	TOTAL	---	C1
I	1-11-4	-6	-6	---	BACK	VERT	TOTAL	---	C1
J	3-5-4	-1287	-1287	---	FRONT	VERT	TOTAL	---	C1
K	4-1-8	-6	-6	---	BACK	VERT	TOTAL	---	C1
L	4-11-4	-1288	-1288	---	FRONT	VERT	TOTAL	---	C1

CONNECTION REQUIREMENTS

1) **C1:** A SUITABLE HANGER/MECHANICAL CONNECTION IS REQUIRED.

DESIGN CRITERIA

SPECIFIED LOADS:

TOP CH.	LL	=	25.6	PSF
	DL	=	6.0	PSF
BOT CH.	LL	=	0.0	PSF
	DL	=	7.4	PSF
TOTAL LOAD		=	39.0	PSF

SPACING = 24.0 IN. C/C

LOADING IN FLAT SECTION BASED ON A SLOPE OF 6.00/12

THIS TRUSS IS DESIGNED FOR RESIDENTIAL OR SMALL BUILDING REQUIREMENTS OF PART 9, NBCC 2015

THIS DESIGN COMPLIES WITH:
- PART 9 OF BCBC 2018 , NBC-2019AE
- PART 9 OF OBC 2012 (2019 AMENDMENT)
- CSA 086-14
- TPIC 2014

(55 % OF 31.3 P.S.F. G.S.L. PLUS 8.4 P.S.F. RAIN LOAD) EQUALS 25.6 P.S.F. SPECIFIED ROOF LIVE LOAD

ALLOWABLE DEFL.(LL)= L/360 (0.20")
CALCULATED VERT. DEFL.(LL) = L/ 999 (0.02")
ALLOWABLE DEFL.(TL)= L/360 (0.20")
CALCULATED VERT. DEFL.(TL) = L/ 999 (0.04")

CSI: TC=0.16/1.00 (C-D:1) , BC=0.61/1.00 (E-F:1) , WB=0.43/1.00 (C-E:1) , SSI=0.84/1.00 (D-E:1)

DOL LUMBER=1.00 NAIL=1.00 LS BEND=1.00 COMP=1.00 SHEAR=1.00 TENS= 1.00

COMPANION LIVE LOAD FACTOR = 1.00

AUTOSOLVE RIGHT HEEL ONLY

TRUSS PLATE MANUFACTURER IS NOT RESPONSIBLE FOR QUALITY CONTROL IN THE TRUSS MANUFACTURING PLANT .

NAIL VALUES

PLATE	GRIP(DRY) (PSI) MAX	MIN	SHEAR (PLI) MAX	MIN	SECTION (PLI) MAX	MIN
MT20	650	371	1747	788	1987	1873

PLATE PLACEMENT TOL. = 0.250 inches

PLATE ROTATION TOL. = 5.0 Deg.

JSI GRIP= 0.80 (E) (INPUT = 0.90)
JSI METAL= 0.33 (C) (INPUT = 0.95)

CONTINUED ON PAGE 2

CITY OF RICHMOND HILL
BUILDING DIVISION
05/01/2024
RECEIVED
Per: joshua.nabua

JOB NAME	TRUSS NAME	QUANTITY	PLY	JOB DESC. GREEN PARK HOMES	DRWG NO.
436988	T21	1	2	TRUSS DESC.	

Tamarack Roof Truss, Burlington

Version 8.630 S Aug 30 2023 MiTek Industries, Inc. Mon Mar 4 08:03:49 2024 Page 2
ID:1PtzEZc03lbzkDC64XoV?RygPuj-7IuKlH81GGTZz4_5Wctj3xKcR5H6bguwD89oNBzeNP8

PLATES (table is in inches)

JT	TYPE	PLATES	W	LEN	Y	X
A	TMVW-p	MT20	5.0	6.0	1.25	3.00
B	TTW-m	MT20	4.0	6.0	Edge	
C	TMVW-t	MT20	5.0	6.0	2.25	3.00
D	BMV1+p	MT20	4.0	6.0		
E	BMWWW+t	MT20	8.0	9.0		
F	BMV1+p	MT20	4.0	6.0		

Edge - INDICATES REFERENCE CORNER OF PLATE TOUCHES EDGE OF CHORD.

NOTES- (1)
1) Lateral braces to be a minimum of 2X4 SPF #2.

LICENSED PROFESSIONAL ENGINEER
03-04-24
H. J. G. ALVES
100009024
PROVINCE OF ONTARIO

Structural component only
DWG# T-2406589

CITY OF RICHMOND HILL
BUILDING DIVISION
05/01/2024
RECEIVED
Per: joshua.nabua

JOB NAME	TRUSS NAME	QUANTITY	PLY	JOB DESC.	DRWG NO.
436988	T22	1	2	GREEN PARK HOMES TRUSS DESC.	

Tamarack Roof Truss, Burlington

Version 8.630 S Aug 30 2023 MiTek Industries, Inc. Mon Mar 4 08:03:50 2024 Page 1
ID:1PtzEZc03lbzkDC64XoV?RygPuj-bUSizd9f1abQbEYH4JOyb9tpnViLKAQ4SouMvezeNP7

Scale = 1:24.5

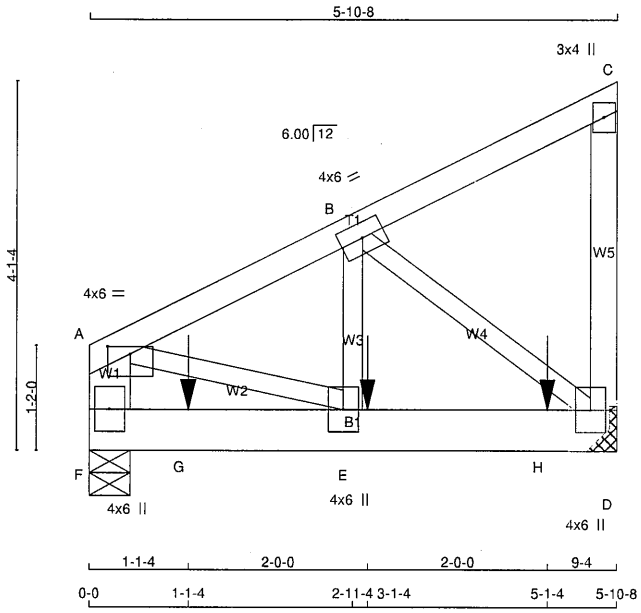

TOTAL WEIGHT = 2 X 29 = 58 lb

[M]

LUMBER

N. L. G. A. RULES

CHORDS	SIZE		LUMBER	DESCR.
F - A	2x6	DRY	No.2	SPF
A - C	2x4	DRY	No.2	SPF
D - C	2x4	DRY	No.2	SPF
F - D	2x6	DRY	No.2	SPF
ALL WEBS	2x3	DRY	No.2	SPF

DRY: SEASONED LUMBER.

DESIGN CONSISTS OF 2 TRUSSES BUILT SEPARATELY THEN FASTENED TOGETHER AS FOLLOWS:

CHORDS	#ROWS	SURFACE SPACING (IN)	LOAD(PLF)
TOP CHORDS : (0.122"X3") SPIRAL NAILS			
F- A	2	12	TOP
A- C	1	12	TOP
C- D	1	12	TOP
BOTTOM CHORDS : (0.122"X3") SPIRAL NAILS			
F- D	2	12	SIDE(183.1)
WEBS : (0.122"X3") SPIRAL NAILS			
B- E	1	6	SIDE(84.3)
2x3	1	6	

NAILS TO BE DRIVEN FROM ONE SIDE ONLY.

GIRDER NAILING ASSUMES NAILED HANGERS ARE FASTENED WITH MIN. 3-0 INCH NAILS.

TOP - COMPONENTS ARE LOADED FROM THE TOP AND MUST BE PLACED ON TOP EDGE OF ALL PLIES FOR THE LOAD TO BE TRANSFERRED TO EACH PLY.

SIDE - PLF SHOWN IS THE EQUIVALENT UDL APPLIED TO ONE SIDE THAT THE CORRESPONDING NAILING PATTERN SHALL BE CAPABLE OF TRANSFERING. REMAINING PLF MUST BE APPLIED ON THE OPPOSITE SIDE OR ON THE TOP.

PLATES (table is in inches)

JT	TYPE	PLATES	W	LEN	Y	X
A	TMVW-p	MT20	4.0	6.0	1.00	3.00
B	TMWW-t	MT20	4.0	6.0		
C	TMV+p	MT20	3.0	4.0		

LICENSED PROFESSIONAL ENGINEER
03-04-24
H. J. G. ALVES
100009024
PROVINCE OF ONTARIO

Structural component only
DWG# T-2406590

DIMENSIONS, SUPPORTS AND LOADINGS SPECIFIED BY FABRICATOR TO BE VERIFIED BY BUILDING DESIGNER

BEARINGS

JT	FACTORED GROSS REACTION VERT	HORZ	MAXIMUM FACTORED GROSS REACTION DOWN	HORZ	UPLIFT	INPUT BRG IN-SX	REQRD BRG IN-SX
F	1803	0	1803	0	0	5-8	1-8
D	1921	0	1921	0	0	MECHANICAL	

A SUITABLE HANGER/MECHANICAL CONNECTION IS REQUIRED AT JOINT D. MINIMUM BEARING LENGTH AT JOINT D = 1-8.

UNFACTORED REACTIONS

JT	1ST LCASE COMBINED	MAX./MIN. COMPONENT REACTIONS SNOW	LIVE	PERM.LIVE	WIND	DEAD	SOIL
F	1269	866 / 0	0 / 0	0 / 0	0 / 0	403 / 0	0 / 0
D	1352	922 / 0	0 / 0	0 / 0	0 / 0	430 / 0	0 / 0

BEARING MATERIAL TO BE SPF NO.2 OR BETTER AT JOINT(S) F

BRACING

TOP CHORD TO BE SHEATHED OR MAX. PURLIN SPACING = 6.25 FT.
MAX. UNBRACED BOTTOM CHORD LENGTH = 10.00 FT OR RIGID CEILING DIRECTLY APPLIED.

ALL PITCH BREAKS AND PERIMETER CORNER JOINTS MUST BE LATERALLY RESTRAINED.

LOADING

TOTAL LOAD CASES: (4)

CHORDS

MEMB. FR-TO	MAX. FACTORED FORCE (LBS)	FACTORED VERT. LOAD (PLF) FROM	TO	LC1 CSI (LC)	MAX. UNBRAC LENGTH
F- A	-1217 / 0	0.0	0.0	0.04 (1)	7.81
A- B	-1607 / 0	-91.8	-91.8	0.06 (1)	6.25
B- C	-10 / 0	-91.8	-91.8	0.05 (1)	10.00
D- C	-113 / 0	0.0	0.0	0.01 (1)	7.81
F- G	0 / 0	-18.5	-18.5	0.23 (1)	10.00
G- E	0 / 0	-18.5	-18.5	0.23 (1)	10.00
E- H	0 / 1446	-18.5	-18.5	0.29 (1)	10.00
H- D	0 / 1446	-18.5	-18.5	0.29 (1)	10.00

WEBS

MEMB. FR-TO	MAX. FACTORED FORCE (LBS)	MAX CSI (LC)
A- E	0 / 1496	0.19 (1)
E- B	0 / 1514	0.19 (1)
B- D	-1820 / 0	0.22 (1)

SPECIFIED CONCENTRATED LOADS (LBS)

JT	LOC.	LC1	MAX-	MAX+	FACE	DIR.	TYPE	HEEL	CONN.
E	3-1-4	-721	-721	---	BACK	VERT	TOTAL	---	C1
G	1-1-4	-721	-721	---	BACK	VERT	TOTAL	---	C1
H	5-1-4	-722	-722	---	BACK	VERT	TOTAL	---	C1

CONNECTION REQUIREMENTS

1) **C1:** A SUITABLE HANGER/MECHANICAL CONNECTION IS REQUIRED.

DESIGN CRITERIA

SPECIFIED LOADS:

TOP CH.	LL	=	25.6	PSF
	DL	=	6.0	PSF
BOT CH.	LL	=	0.0	PSF
	DL	=	7.4	PSF
TOTAL LOAD		=	39.0	PSF

SPACING = 24.0 IN. C/C

THIS TRUSS IS DESIGNED FOR RESIDENTIAL OR SMALL BUILDING REQUIREMENTS OF PART 9, NBCC 2015

THIS DESIGN COMPLIES WITH:
- PART 9 OF BCBC 2018 , NBC-2019AE
- PART 9 OF OBC 2012 (2019 AMENDMENT)
- CSA 086-14
- TPIC 2014

(55 % OF 31.3 P.S.F. G.S.L. PLUS 8.4 P.S.F. RAIN LOAD) EQUALS 25.6 P.S.F. SPECIFIED ROOF LIVE LOAD

ALLOWABLE DEFL.(LL)= L/360 (0.20")
CALCULATED VERT. DEFL.(LL) = L/ 999 (0.01")
ALLOWABLE DEFL.(TL)= L/360 (0.20")
CALCULATED VERT. DEFL.(TL) = L/ 999 (0.02")

CSI: TC=0.06/1.00 (A-B:1) , BC=0.29/1.00 (D-E:1) , WB=0.22/1.00 (B-D:1) , SSI=0.23/1.00 (D-E:1)

DOL LUMBER=1.00 NAIL=1.00 LS BEND=1.00 COMP=1.00 SHEAR=1.00 TENS= 1.00

COMPANION LIVE LOAD FACTOR = 1.00

TRUSS PLATE MANUFACTURER IS NOT RESPONSIBLE FOR QUALITY CONTROL IN THE TRUSS MANUFACTURING PLANT .

NAIL VALUES

PLATE	GRIP(DRY) (PSI) MAX	MIN	SHEAR (PLI) MAX	MIN	SECTION (PLI) MAX	MIN
MT20	650	371	1747	788	1987	1873

PLATE PLACEMENT TOL. = 0.250 inches

PLATE ROTATION TOL. = 5.0 Deg.

JSI GRIP= 0.69 (D) (INPUT = 0.90)
JSI METAL= 0.33 (D) (INPUT = 0.95)

CONTINUED ON PAGE 2

CITY OF RICHMOND HILL
BUILDING DIVISION
05/01/2024
RECEIVED
Per: joshua.nabua

JOB NAME	TRUSS NAME	QUANTITY	PLY	JOB DESC. GREEN PARK HOMES	DRWG NO.
436988	T22	1	2	TRUSS DESC.	

Tamarack Roof Truss, Burlington

Version 8.630 S Aug 30 2023 MiTek Industries, Inc. Mon Mar 4 08:03:50 2024 Page 2
ID:1PtzEZc03lbzkDC64XoV?RygPuj-bUSizd9f1abQbEYH4JOyb9tpnViLKAQ4SouMvezeNP7

PLATES (table is in inches)

JT	TYPE	PLATES	W	LEN	Y	X
D	BMVW1+p	MT20	4.0	6.0		
E	BMWW+t	MT20	4.0	6.0		
F	BMV1+p	MT20	4.0	6.0		

NOTES- (1)
1) Lateral braces to be a minimum of 2X4 SPF #2.

LICENSED PROFESSIONAL ENGINEER
03-04-24
H. J. G. ALVES
100009024
PROVINCE OF ONTARIO

Structural component only
DWG# T-2406590

CITY OF RICHMOND HILL
BUILDING DIVISION
05/01/2024
RECEIVED
Per: joshua.nabua

JOB NAME	TRUSS NAME	QUANTITY	PLY	JOB DESC.	DRWG NO.
436988	T23	1	2	GREEN PARK HOMES TRUSS DESC.	

Tamarack Roof Truss, Burlington

Version 8.630 S Aug 30 2023 MiTek Industries, Inc. Mon Mar 4 08:03:51 2024 Page 1
ID:1PtzEZc03IbzkDC64XoV?RygPuj-4g04AzAHotjHDO7Te0vB8MPzRu3P3dvDgSevR4zeNP6

Scale = 1:34.7

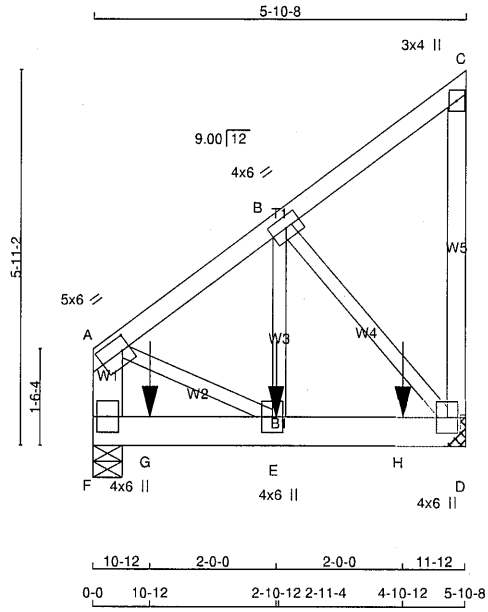

TOTAL WEIGHT = 2 X 35 = 69 lb [M]

LUMBER

N. L. G. A. RULES

CHORDS	SIZE		LUMBER	DESCR.
F - A	2x6	DRY	No.2	SPF
A - C	2x4	DRY	No.2	SPF
D - C	2x4	DRY	No.2	SPF
F - D	2x6	DRY	No.2	SPF
ALL WEBS	2x3	DRY	No.2	SPF

DRY: SEASONED LUMBER.

DESIGN CONSISTS OF 2 TRUSSES BUILT SEPARATELY THEN FASTENED TOGETHER AS FOLLOWS:

CHORDS	#ROWS	SURFACE SPACING (IN)	LOAD(PLF)
TOP CHORDS : (0.122"X3") SPIRAL NAILS			
F- A	2	12	TOP
A- C	1	12	TOP
C- D	1	12	TOP
BOTTOM CHORDS : (0.122"X3") SPIRAL NAILS			
F- D	2	12	SIDE(183.1)
WEBS : (0.122"X3") SPIRAL NAILS			
B- E	1	6	SIDE(39.2)
2x3	1	6	

NAILS TO BE DRIVEN FROM ONE SIDE ONLY.

GIRDER NAILING ASSUMES NAILED HANGERS ARE FASTENED WITH MIN. 3-0 INCH NAILS.

TOP - COMPONENTS ARE LOADED FROM THE TOP AND MUST BE PLACED ON TOP EDGE OF ALL PLIES FOR THE LOAD TO BE TRANSFERRED TO EACH PLY.

SIDE - PLF SHOWN IS THE EQUIVALENT UDL APPLIED TO ONE SIDE THAT THE CORRESPONDING NAILING PATTERN SHALL BE CAPABLE OF TRANSFERING. REMAINING PLF MUST BE APPLIED ON THE OPPOSITE SIDE OR ON THE TOP.

PLATES (table is in inches)

JT	TYPE	PLATES	W	LEN	Y	X
A	TMVW-t	MT20	5.0	6.0	2.50	1.50
B	TMWW-t	MT20	4.0	6.0		
C	TMV+p	MT20	3.0	4.0		

LICENSED PROFESSIONAL ENGINEER
03-04-24
H. J. G. ALVES
100009024
PROVINCE OF ONTARIO

Structural component only
DWG# T-2406591

DIMENSIONS, SUPPORTS AND LOADINGS SPECIFIED BY FABRICATOR TO BE VERIFIED BY BUILDING DESIGNER

BEARINGS

JT	FACTORED GROSS REACTION VERT	HORZ	MAXIMUM FACTORED GROSS REACTION DOWN	HORZ	UPLIFT	INPUT BRG IN-SX	REQRD BRG IN-SX
F	1615	0	1615	0	0	5-8	1-8
D	1591	0	1591	0	0	MECHANICAL	

A SUITABLE HANGER/MECHANICAL CONNECTION IS REQUIRED AT JOINT D. MINIMUM BEARING LENGTH AT JOINT D = 1-8.

UNFACTORED REACTIONS

JT	1ST LCASE COMBINED	MAX./MIN. COMPONENT REACTIONS SNOW	LIVE	PERM.LIVE	WIND	DEAD	SOIL
F	1136	780 / 0	0 / 0	0 / 0	0 / 0	356 / 0	0 / 0
D	1119	768 / 0	0 / 0	0 / 0	0 / 0	350 / 0	0 / 0

BEARING MATERIAL TO BE SPF NO.2 OR BETTER AT JOINT(S) F

BRACING

TOP CHORD TO BE SHEATHED OR MAX. PURLIN SPACING = 6.25 FT.
MAX. UNBRACED BOTTOM CHORD LENGTH = 10.00 FT OR RIGID CEILING DIRECTLY APPLIED.

ALL PITCH BREAKS AND PERIMETER CORNER JOINTS MUST BE LATERALLY RESTRAINED.

LOADING

TOTAL LOAD CASES: (4)

CHORDS

MEMB. FR-TO	MAX. FACTORED FORCE (LBS)	FACTORED VERT. LOAD (PLF) FROM	TO	LC1 MAX CSI (LC)	MAX. UNBRAC LENGTH
F- A	-1074 / 0	0.0	0.0	0.04 (1)	7.81
A- B	-1055 / 0	-91.8	-91.8	0.07 (1)	6.25
B- C	-17 / 0	-91.8	-91.8	0.06 (1)	6.25
D- C	-106 / 0	0.0	0.0	0.03 (1)	7.81
F- G	0 / 0	-18.5	-18.5	0.18 (1)	10.00
G- E	0 / 0	-18.5	-18.5	0.18 (1)	10.00
E- H	0 / 858	-18.5	-18.5	0.24 (1)	10.00
H- D	0 / 858	-18.5	-18.5	0.24 (1)	10.00

WEBS

MEMB. FR-TO	MAX. FACTORED FORCE (LBS)	MAX CSI (LC)
A- E	0 / 917	0.11 (1)
E- B	0 / 1284	0.16 (1)
B- D	-1293 / 0	0.20 (1)

SPECIFIED CONCENTRATED LOADS (LBS)

JT	LOC.	LC1	MAX-	MAX+	FACE	DIR.	TYPE	HEEL	CONN.
E	2-10-12	-599	-599	---	FRONT	VERT	TOTAL	---	C1
G	10-12	-599	-599	---	FRONT	VERT	TOTAL	---	C1
H	4-10-12	-599	-599	---	FRONT	VERT	TOTAL	---	C1

CONNECTION REQUIREMENTS

1) **C1:** A SUITABLE HANGER/MECHANICAL CONNECTION IS REQUIRED.

DESIGN CRITERIA

SPECIFIED LOADS:

TOP CH.	LL	=	25.6	PSF
	DL	=	6.0	PSF
BOT CH.	LL	=	0.0	PSF
	DL	=	7.4	PSF
TOTAL LOAD		=	39.0	PSF

SPACING = 24.0 IN. C/C

THIS TRUSS IS DESIGNED FOR RESIDENTIAL OR SMALL BUILDING REQUIREMENTS OF PART 9, NBCC 2015

THIS DESIGN COMPLIES WITH:
- PART 9 OF BCBC 2018 , NBC-2019AE
- PART 9 OF OBC 2012 (2019 AMENDMENT)
- CSA 086-14
- TPIC 2014

(55 % OF 31.3 P.S.F. G.S.L. PLUS 8.4 P.S.F. RAIN LOAD) EQUALS 25.6 P.S.F. SPECIFIED ROOF LIVE LOAD

ALLOWABLE DEFL.(LL)= L/360 (0.20")
CALCULATED VERT. DEFL.(LL) = L/ 999 (0.01")
ALLOWABLE DEFL.(TL)= L/360 (0.20")
CALCULATED VERT. DEFL.(TL) = L/ 999 (0.01")

CSI: TC=0.07/1.00 (A-B:1) , BC=0.24/1.00 (D-E:1) , WB=0.20/1.00 (B-D:1) , SSI=0.18/1.00 (E-F:1)

DOL LUMBER=1.00 NAIL=1.00 LS BEND=1.00 COMP=1.00 SHEAR=1.00 TENS= 1.00

COMPANION LIVE LOAD FACTOR = 1.00

TRUSS PLATE MANUFACTURER IS NOT RESPONSIBLE FOR QUALITY CONTROL IN THE TRUSS MANUFACTURING PLANT .

NAIL VALUES

PLATE	GRIP(DRY) (PSI) MAX	MIN	SHEAR (PLI) MAX	MIN	SECTION (PLI) MAX	MIN
MT20	650	371	1747	788	1987	1873

PLATE PLACEMENT TOL. = 0.250 inches

PLATE ROTATION TOL. = 5.0 Deg.

JSI GRIP= 0.56 (B) (INPUT = 0.90)
JSI METAL= 0.19 (D) (INPUT = 0.95)

CITY OF RICHMOND HILL
BUILDING DIVISION
05/01/2024
RECEIVED
Per: joshua.nabua

CONTINUED ON PAGE 2

JOB NAME	TRUSS NAME	QUANTITY	PLY	JOB DESC.	DRWG NO.
436988	T23	1	2	GREEN PARK HOMES TRUSS DESC.	

PLATES (table is in inches)

JT	TYPE	PLATES	W	LEN	Y	X
D	BMVW1+p	MT20	4.0	6.0		
E	BMWW+t	MT20	4.0	6.0		
F	BMV1+p	MT20	4.0	6.0		

NOTES- (1)
1) Lateral braces to be a minimum of 2X4 SPF #2.

LICENSED PROFESSIONAL ENGINEER
03-04-24
H. J. G. ALVES
100009024
PROVINCE OF ONTARIO

Structural component only
DWG# T-2406591

CITY OF RICHMOND HILL
BUILDING DIVISION
05/01/2024
RECEIVED
Per: joshua.nabua

JOB NAME	TRUSS NAME	QUANTITY	PLY	JOB DESC.	DRWG NO.
436988	T23Z	1	2	GREEN PARK HOMES TRUSS DESC.	

Tamarack Roof Truss, Burlington

Version 8.630 S Aug 30 2023 MiTek Industries, Inc. Mon Mar 4 08:03:52 2024 Page 1
ID:1PtzEZc03lbzkDC64XoV?RygPuj-YtaSOJBwZBr8qYigCkRQgay8AIP8o5zNv6NS_WzeNP5

Scale = 1:34.7

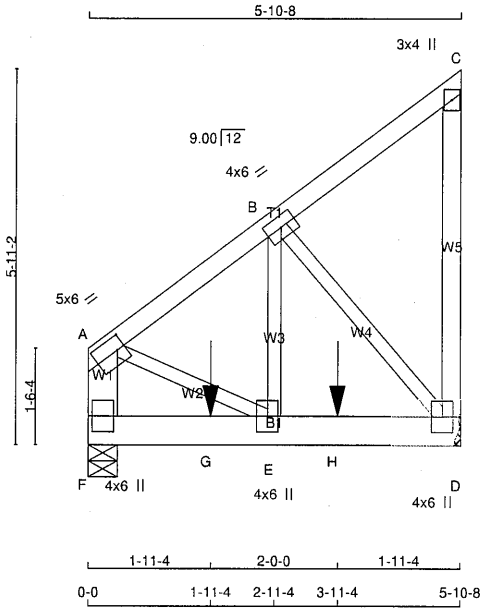

TOTAL WEIGHT = 2 X 35 = 69 lb

[M]

LUMBER

N. L. G. A. RULES

CHORDS	SIZE		LUMBER	DESCR.
F - A	2x6	DRY	No.2	SPF
A - C	2x4	DRY	No.2	SPF
D - C	2x4	DRY	No.2	SPF
F - D	2x6	DRY	No.2	SPF
ALL WEBS	2x3	DRY	No.2	SPF

DRY: SEASONED LUMBER.

DESIGN CONSISTS OF 2 TRUSSES BUILT SEPARATELY THEN FASTENED TOGETHER AS FOLLOWS:

CHORDS	#ROWS	SURFACE SPACING (IN)	LOAD(PLF)
TOP CHORDS : (0.122"X3") SPIRAL NAILS			
F- A	2	12	TOP
A- C	1	12	TOP
C- D	1	12	TOP
BOTTOM CHORDS : (0.122"X3") SPIRAL NAILS			
F- D	2	12	SIDE(0.0)
WEBS : (0.122"X3") SPIRAL NAILS			
2x3	1	6	

NAILS TO BE DRIVEN FROM ONE SIDE ONLY.

GIRDER NAILING ASSUMES NAILED HANGERS ARE FASTENED WITH MIN. 3-0 INCH NAILS.

TOP - COMPONENTS ARE LOADED FROM THE TOP AND MUST BE PLACED ON TOP EDGE OF ALL PLIES FOR THE LOAD TO BE TRANSFERRED TO EACH PLY.

SIDE - PLF SHOWN IS THE EQUIVALENT UDL APPLIED TO ONE SIDE THAT THE CORRESPONDING NAILING PATTERN SHALL BE CAPABLE OF TRANSFERING. REMAINING PLF MUST BE APPLIED ON THE OPPOSITE SIDE OR ON THE TOP.

PLATES (table is in inches)

JT	TYPE	PLATES	W	LEN	Y	X
A	TMVW-t	MT20	5.0	6.0	2.50	1.50
B	TMWW-t	MT20	4.0	6.0		
C	TMV+p	MT20	3.0	4.0		
D	BMVW1+p	MT20	4.0	6.0		

LICENSED PROFESSIONAL ENGINEER
03-04-24
H. J. G. ALVES
100009024
PROVINCE OF ONTARIO

Structural component only
DWG# T-2406592

DIMENSIONS, SUPPORTS AND LOADINGS SPECIFIED BY FABRICATOR TO BE VERIFIED BY BUILDING DESIGNER

BEARINGS

JT	FACTORED GROSS REACTION VERT	HORZ	MAXIMUM FACTORED GROSS REACTION DOWN	HORZ	UPLIFT	INPUT BRG IN-SX	REQRD BRG IN-SX
F	985	0	985	0	0	5-8	1-8
D	985	0	985	0	0	MECHANICAL	

A SUITABLE HANGER/MECHANICAL CONNECTION IS REQUIRED AT JOINT D. MINIMUM BEARING LENGTH AT JOINT D = 1-8.

UNFACTORED REACTIONS

JT	1ST LCASE COMBINED	MAX./MIN. COMPONENT REACTIONS SNOW	LIVE	PERM.LIVE	WIND	DEAD	SOIL
F	695	466 / 0	0 / 0	0 / 0	0 / 0	229 / 0	0 / 0
D	695	466 / 0	0 / 0	0 / 0	0 / 0	229 / 0	0 / 0

BEARING MATERIAL TO BE SPF NO.2 OR BETTER AT JOINT(S) F

BRACING

TOP CHORD TO BE SHEATHED OR MAX. PURLIN SPACING = 6.25 FT.
MAX. UNBRACED BOTTOM CHORD LENGTH = 10.00 FT OR RIGID CEILING DIRECTLY APPLIED.

ALL PITCH BREAKS AND PERIMETER CORNER JOINTS MUST BE LATERALLY RESTRAINED.

LOADING

TOTAL LOAD CASES: (4)

CHORDS

MEMB. FR-TO	MAX. FORCE (LBS)	FACTORED VERT. LOAD (PLF) FROM	TO	LC1 MAX CSI (LC)	MAX. UNBRAC LENGTH
F- A	-826 / 0	0.0	0.0	0.03 (1)	7.81
A- B	-782 / 0	-91.8	-91.8	0.07 (1)	6.25
B- C	-18 / 0	-91.8	-91.8	0.07 (1)	6.25
D- C	-105 / 0	0.0	0.0	0.03 (1)	7.81
F- G	0 / 0	-18.5	-18.5	0.10 (1)	10.00
G- E	0 / 0	-18.5	-18.5	0.10 (1)	10.00
E- H	0 / 640	-18.5	-18.5	0.14 (1)	10.00
H- D	0 / 640	-18.5	-18.5	0.14 (1)	10.00

WEBS

MEMB. FR-TO	MAX. FORCE (LBS)	MAX CSI (LC)
A- E	0 / 684	0.08 (1)
E- B	0 / 872	0.11 (1)
B- D	-964 / 0	0.15 (1)

SPECIFIED CONCENTRATED LOADS (LBS)

JT	LOC.	LC1	MAX-	MAX+	FACE	DIR.	TYPE	HEEL	CONN.
G	1-11-4	-466	-466	---	BACK	VERT	TOTAL	---	C1
H	3-11-4	-466	-466	---	BACK	VERT	TOTAL	---	C1

CONNECTION REQUIREMENTS

1) **C1:** A SUITABLE HANGER/MECHANICAL CONNECTION IS REQUIRED.

DESIGN CRITERIA

SPECIFIED LOADS:

TOP CH.	LL	=	25.6	PSF
	DL	=	6.0	PSF
BOT CH.	LL	=	0.0	PSF
	DL	=	7.4	PSF
TOTAL LOAD		=	39.0	PSF

SPACING = 24.0 IN. C/C

THIS TRUSS IS DESIGNED FOR RESIDENTIAL OR SMALL BUILDING REQUIREMENTS OF PART 9, NBCC 2015

THIS DESIGN COMPLIES WITH:
- PART 9 OF BCBC 2018 , NBC-2019AE
- PART 9 OF OBC 2012 (2019 AMENDMENT)
- CSA 086-14
- TPIC 2014

(55 % OF 31.3 P.S.F. G.S.L. PLUS 8.4 P.S.F. RAIN LOAD) EQUALS 25.6 P.S.F. SPECIFIED ROOF LIVE LOAD

ALLOWABLE DEFL.(LL)= L/360 (0.20")
CALCULATED VERT. DEFL.(LL) = L/ 999 (0.00")
ALLOWABLE DEFL.(TL)= L/360 (0.20")
CALCULATED VERT. DEFL.(TL) = L/ 999 (0.01")

CSI: TC=0.07/1.00 (A-B:1) , BC=0.14/1.00 (D-E:1) , WB=0.15/1.00 (B-D:1) , SSI=0.18/1.00 (D-E:1)

DOL LUMBER=1.00 NAIL=1.00 LS BEND=1.00 COMP=1.00 SHEAR=1.00 TENS= 1.00

COMPANION LIVE LOAD FACTOR = 1.00

TRUSS PLATE MANUFACTURER IS NOT RESPONSIBLE FOR QUALITY CONTROL IN THE TRUSS MANUFACTURING PLANT .

NAIL VALUES

PLATE	GRIP(DRY) (PSI) MAX	MIN	SHEAR (PLI) MAX	MIN	SECTION (PLI) MAX	MIN
MT20	650	371	1747	788	1987	1873

PLATE PLACEMENT TOL. = 0.250 inches

PLATE ROTATION TOL. = 5.0 Deg.

JSI GRIP= 0.40 (E) (INPUT = 0.90)
JSI METAL= 0.14 (D) (INPUT = 0.95)

CITY OF RICHMOND HILL
BUILDING DIVISION
05/01/2024
RECEIVED
Per: joshua.nabua

CONTINUED ON PAGE 2

JOB NAME	TRUSS NAME	QUANTITY	PLY	JOB DESC. GREEN PARK HOMES	DRWG NO.
436988	T23Z	1	2	TRUSS DESC.	

Tamarack Roof Truss, Burlington

Version 8.630 S Aug 30 2023 MiTek Industries, Inc. Mon Mar 4 08:03:52 2024 Page 2
ID:1PtzEZc03IbzkDC64XoV?RygPuj-YtaSOJBwZBr8qYigCkRQgay8AIP8o5zNv6NS_WzeNP5

PLATES (table is in inches)

JT	TYPE	PLATES	W	LEN	Y	X
E	BMWW+t	MT20	4.0	6.0		
F	BMV1+p	MT20	4.0	6.0		

NOTES- (1)
1) Lateral braces to be a minimum of 2X4 SPF #2.

LICENSED PROFESSIONAL ENGINEER
03-04-24
H. J. G. ALVES
100009024
PROVINCE OF ONTARIO

Structural component only
DWG# T-2406592

CITY OF RICHMOND HILL
BUILDING DIVISION
05/01/2024
RECEIVED
Per: joshua.nabua

JOB NAME	TRUSS NAME	QUANTITY	PLY	JOB DESC.	DRWG NO.
436988	T24	1	1	GREEN PARK HOMES TRUSS DESC.	

Tamarack Roof Truss, Burlington

Version 8.630 S Aug 30 2023 MiTek Industries, Inc. Mon Mar 4 08:03:53 2024 Page 1
ID:1PtzEZc03lbzkDC64XoV?RygPuj-037qbfCYKVz?SiHslRyfDnVlqimKXZFW8m70WyzeNP4

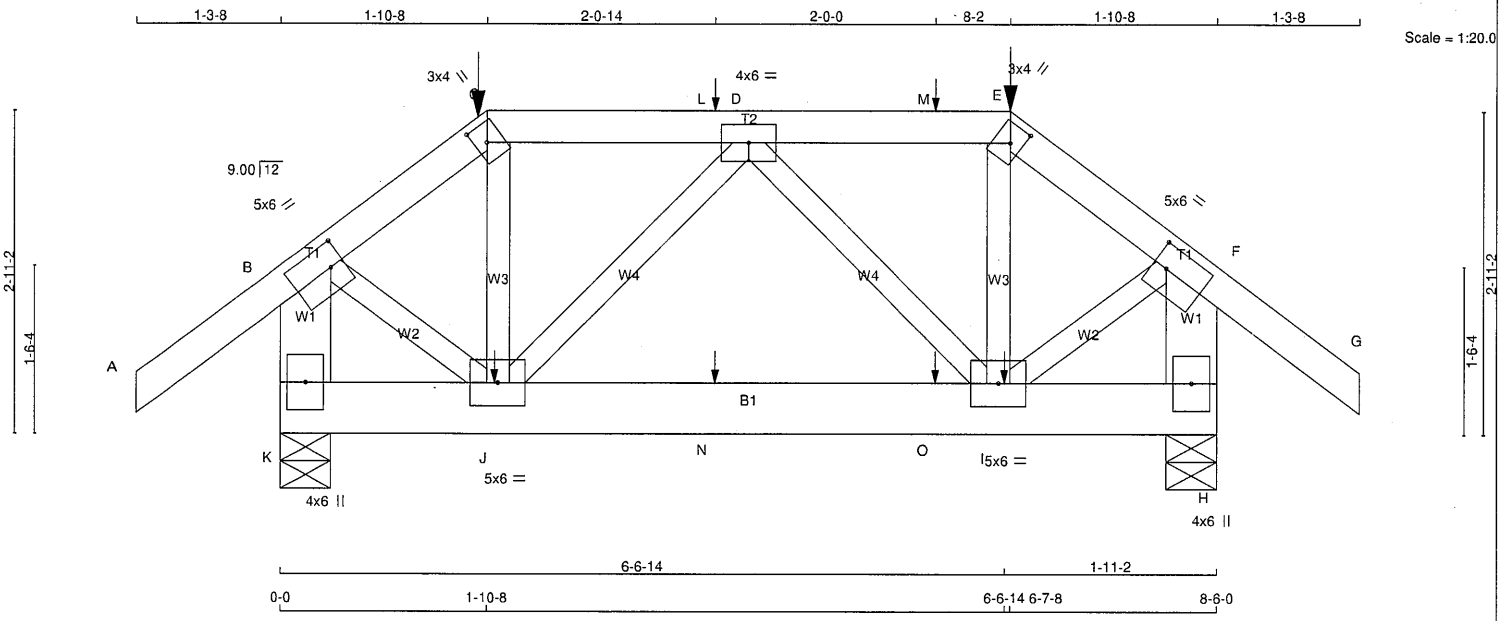

TOTAL WEIGHT = 45 lb

[M]

LUMBER
N. L. G. A. RULES

CHORDS	SIZE		LUMBER	DESCR.
A - C	2x4	DRY	No.2	SPF
C - E	2x4	DRY	No.2	SPF
E - G	2x4	DRY	No.2	SPF
K - B	2x6	DRY	No.2	SPF
H - F	2x6	DRY	No.2	SPF
K - H	2x6	DRY	No.2	SPF
ALL WEBS EXCEPT	2x3	DRY	No.2	SPF

DRY: SEASONED LUMBER.

PLATES (table is in inches)

JT	TYPE	PLATES	W	LEN	Y	X
B	TMVW-t	MT20	5.0	6.0	2.50	1.50
C	TTW+h	MT20	3.0	4.0	2.00	1.25
D	TMWW-t	MT20	4.0	6.0		
E	TTW+h	MT20	3.0	4.0	2.00	1.25
F	TMVW-t	MT20	5.0	6.0	2.50	1.50
H	BMV1+p	MT20	4.0	6.0		
I	BMWWW-t	MT20	5.0	6.0		
J	BMWWW-t	MT20	5.0	6.0		
K	BMV1+p	MT20	4.0	6.0		

NOTES- (1)
1) Lateral braces to be a minimum of 2X4 SPF #2.

DIMENSIONS, SUPPORTS AND LOADINGS SPECIFIED BY FABRICATOR TO BE VERIFIED BY BUILDING DESIGNER

BEARINGS

JT	FACTORED GROSS REACTION VERT	HORZ	MAXIMUM FACTORED GROSS REACTION DOWN	HORZ	UPLIFT	INPUT BRG IN-SX	REQRD BRG IN-SX
K	665	0	665	0	0	5-8	1-8
H	665	0	665	0	0	5-8	1-8

UNFACTORED REACTIONS

JT	1ST LCASE COMBINED	MAX./MIN. COMPONENT REACTIONS SNOW	LIVE	PERM.LIVE	WIND	DEAD	SOIL
K	467	327 / 0	0 / 0	0 / 0	0 / 0	140 / 0	0 / 0
H	467	327 / 0	0 / 0	0 / 0	0 / 0	140 / 0	0 / 0

BEARING MATERIAL TO BE SPF NO.2 OR BETTER AT JOINT(S) K, H

BRACING
TOP CHORD TO BE SHEATHED OR MAX. PURLIN SPACING = 6.25 FT.
MAX. UNBRACED BOTTOM CHORD LENGTH = 10.00 FT OR RIGID CEILING DIRECTLY APPLIED.

ALL PITCH BREAKS AND PERIMETER CORNER JOINTS MUST BE LATERALLY RESTRAINED.

LOADING
TOTAL LOAD CASES: (7)

CHORDS

MEMB. FR-TO	MAX. FACTORED FORCE (LBS)	FACTORED VERT. LOAD (PLF) FROM	TO	LC1	MAX CSI (LC)	MAX. UNBRAC LENGTH
A- B	0 / 38	-91.8	-91.8	0.14 (1)	10.00	
B- C	-402 / 0	-91.8	-91.8	0.13 (1)	6.25	
C- L	-299 / 0	-91.8	-91.8	0.09 (1)	6.25	
L- D	-299 / 0	-91.8	-91.8	0.09 (1)	6.25	
D- M	-299 / 0	-91.8	-91.8	0.09 (1)	6.25	
M- E	-299 / 0	-91.8	-91.8	0.09 (1)	6.25	
E- F	-402 / 0	-91.8	-91.8	0.13 (1)	6.25	
F- G	0 / 38	-91.8	-91.8	0.14 (1)	10.00	
K- B	-652 / 0	0.0	0.0	0.05 (1)	7.81	
H- F	-652 / 0	0.0	0.0	0.05 (1)	7.81	
K- J	0 / 0	-18.5	-18.5	0.03 (4)	10.00	
J- N	0 / 416	-18.5	-18.5	0.08 (1)	10.00	
N- O	0 / 416	-18.5	-18.5	0.08 (1)	10.00	
O- I	0 / 416	-18.5	-18.5	0.08 (1)	10.00	
I- H	0 / 0	-18.5	-18.5	0.03 (4)	10.00	

WEBS

MEMB. FR-TO	MAX. FACTORED FORCE (LBS)	MAX CSI (LC)
J- C	0 / 58	0.02 (4)
J- D	-175 / 0	0.04 (1)
D- I	-175 / 0	0.04 (1)
I- E	0 / 99	0.02 (5)
B- J	0 / 341	0.08 (1)
I- F	0 / 341	0.08 (1)

SPECIFIED CONCENTRATED LOADS (LBS)

JT	LOC.	LC1	MAX-	MAX+	FACE	DIR.	TYPE	HEEL	CONN.
C	1-10-8	-48	-48	77	BACK	VERT	TOTAL	---	C1
E	6-7-8	-48	-48	77	BACK	VERT	TOTAL	---	C1
I	6-6-14	1	1	---	BACK	VERT	TOTAL	---	C1
J	1-11-6	1	1	---	BACK	VERT	TOTAL	---	C1
L	3-11-6	1	1	77	BACK	VERT	TOTAL	---	C1
M	5-11-6	1	1	69	BACK	VERT	TOTAL	---	C1
N	3-11-6	1	1	---	BACK	VERT	TOTAL	---	C1
O	5-11-6	1	1	---	BACK	VERT	TOTAL	---	C1

CONNECTION REQUIREMENTS

1) **C1:** A SUITABLE HANGER/MECHANICAL CONNECTION IS REQUIRED.

DESIGN CRITERIA

SPECIFIED LOADS:

TOP CH.	LL	=	25.6	PSF
	DL	=	6.0	PSF
BOT CH.	LL	=	0.0	PSF
	DL	=	7.4	PSF
TOTAL LOAD		=	39.0	PSF

SPACING = 24.0 IN. C/C

LOADING IN FLAT SECTION BASED ON A SLOPE OF 6.00/12

THIS TRUSS IS DESIGNED FOR RESIDENTIAL OR SMALL BUILDING REQUIREMENTS OF PART 9, NBCC 2015

THIS DESIGN COMPLIES WITH:
- PART 9 OF BCBC 2018 , NBC-2019AE
- PART 9 OF OBC 2012 (2019 AMENDMENT)
- CSA 086-14
- TPIC 2014

DESIGN ASSUMPTIONS
-OVERHANG NOT TO BE ALTERED OR CUT OFF.

(55 % OF 31.3 P.S.F. G.S.L. PLUS 8.4 P.S.F. RAIN LOAD) EQUALS 25.6 P.S.F. SPECIFIED ROOF LIVE LOAD

ALLOWABLE DEFL.(LL)= L/360 (0.28")
CALCULATED VERT. DEFL.(LL) = L/ 999 (0.00")
ALLOWABLE DEFL.(TL)= L/360 (0.28")
CALCULATED VERT. DEFL.(TL) = L/ 999 (0.01")

CSI: TC=0.14/1.00 (A-B:1) , BC=0.08/1.00 (I-J:1) , WB=0.08/1.00 (B-J:1) , SSI=0.11/1.00 (C-D:1)

DOL LUMBER=1.00 NAIL=1.00 LS BEND=1.00 COMP=1.00 SHEAR=1.00 TENS= 1.00

COMPANION LIVE LOAD FACTOR = 1.00

AUTOSOLVE HEELS OFF

TRUSS PLATE MANUFACTURER IS NOT RESPONSIBLE FOR QUALITY CONTROL IN THE TRUSS MANUFACTURING PLANT .

NAIL VALUES

PLATE	GRIP(DRY) (PSI) MAX	MIN	SHEAR (PLI) MAX	MIN	SECTION (PLI) MAX	MIN
MT20	650	371	1747	788	1987	1873

PLATE PLACEMENT TOL. = 0.250 inches

PLATE ROTATION TOL. = 5.0 Deg.

JSI GRIP= 0.49 (C) (INPUT = 0.90)
JSI METAL= 0.12 (F) (INPUT = 0.95)

LICENSED PROFESSIONAL ENGINEER
03-04-24
H. J. G. ALVES
100009024
PROVINCE OF ONTARIO

Structural component only
DWG# T-2406593

CITY OF RICHMOND HILL
BUILDING DIVISION
05/01/2024
RECEIVED
Per: joshua.nabua

JOB NAME	TRUSS NAME	QUANTITY	PLY	JOB DESC.	DRWG NO.
436988	T25	1	1	GREEN PARK HOMES TRUSS DESC.	

Tamarack Roof Truss, Burlington

Version 8.630 S Aug 30 2023 MiTek Industries, Inc. Mon Mar 4 08:03:54 2024 Page 1
ID:1PtzEZc03IbzkDC64XoV?RygPuj-UFhDo_CA5o5s4rs2J9Tum?1U566MG0mfNQsZ2PzeNP3

Scale = 1:38.9

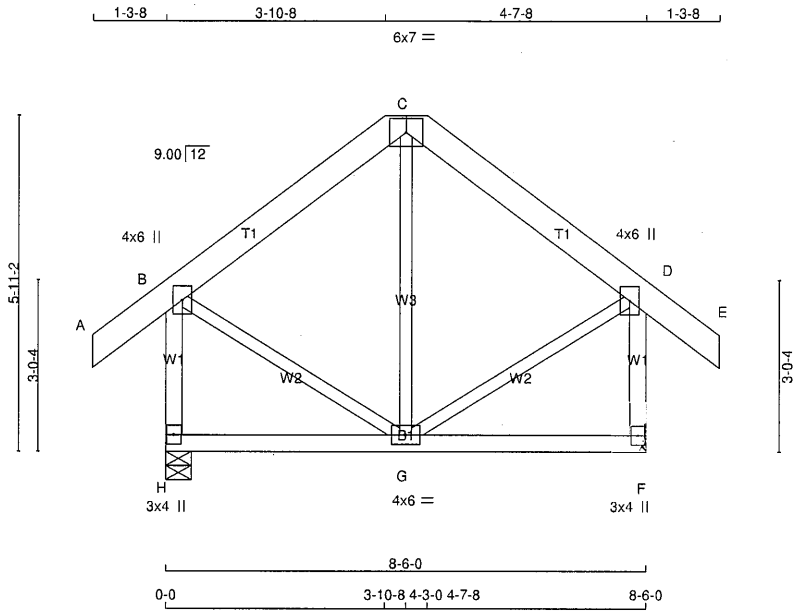

TOTAL WEIGHT = 52 lb
[M][F]

LUMBER
N. L. G. A. RULES

CHORDS	SIZE		LUMBER	DESCR.
A - C	2x6	DRY	No.2	SPF
C - E	2x6	DRY	No.2	SPF
H - B	2x4	DRY	No.2	SPF
F - D	2x4	DRY	No.2	SPF
H - F	2x4	DRY	No.2	SPF
ALL WEBS EXCEPT	2x3	DRY	No.2	SPF

DRY: SEASONED LUMBER.

PLATES (table is in inches)

JT	TYPE	PLATES	W	LEN	Y	X
B	TMVW+p	MT20	4.0	6.0		
C	TTW-p	MT20	6.0	7.0		
D	TMVW+p	MT20	4.0	6.0		
F	BMV1+p	MT20	3.0	4.0		
G	BMWWW-t	MT20	4.0	6.0		
H	BMV1+p	MT20	3.0	4.0		

NOTES- (1)
1) Lateral braces to be a minimum of 2X4 SPF #2.

DIMENSIONS, SUPPORTS AND LOADINGS SPECIFIED BY FABRICATOR TO BE VERIFIED BY BUILDING DESIGNER

BEARINGS

JT	FACTORED GROSS REACTION VERT	HORZ	MAXIMUM FACTORED GROSS REACTION DOWN	HORZ	UPLIFT	INPUT BRG IN-SX	REQRD BRG IN-SX
H	600	0	600	0	0	5-8	1-8
F	600	0	600	0	0	MECHANICAL	

A SUITABLE HANGER/MECHANICAL CONNECTION IS REQUIRED AT JOINT F. MINIMUM BEARING LENGTH AT JOINT F = 1-8.

UNFACTORED REACTIONS

JT	1ST LCASE COMBINED	MAX./MIN. COMPONENT REACTIONS SNOW	LIVE	PERM.LIVE	WIND	DEAD	SOIL
H	422	291 / 0	0 / 0	0 / 0	0 / 0	131 / 0	0 / 0
F	422	291 / 0	0 / 0	0 / 0	0 / 0	131 / 0	0 / 0

BEARING MATERIAL TO BE SPF NO.2 OR BETTER AT JOINT(S) H

BRACING
TOP CHORD TO BE SHEATHED OR MAX. PURLIN SPACING = 6.25 FT.
MAX. UNBRACED BOTTOM CHORD LENGTH = 10.00 FT OR RIGID CEILING DIRECTLY APPLIED.

ALL PITCH BREAKS AND PERIMETER CORNER JOINTS MUST BE LATERALLY RESTRAINED.

LOADING
TOTAL LOAD CASES: (4)

CHORDS

MEMB. FR-TO	MAX. FORCE (LBS)	FACTORED VERT. LOAD (PLF) FROM	TO	LC1	MAX CSI (LC)	MAX. UNBRAC LENGTH
A- B	0 / 39	-91.8	-91.8	0.07 (1)	10.00	
B- C	-224 / 0	-91.8	-91.8	0.10 (1)	6.25	
C- D	-224 / 0	-91.8	-91.8	0.10 (1)	6.25	
D- E	0 / 39	-91.8	-91.8	0.07 (1)	10.00	
H- B	-569 / 0	0.0	0.0	0.09 (1)	7.81	
F- D	-569 / 0	0.0	0.0	0.09 (1)	7.81	
H- G	0 / 0	-18.5	-18.5	0.09 (4)	10.00	
G- F	0 / 0	-18.5	-18.5	0.09 (4)	10.00	

WEBS

MEMB. FR-TO	MAX. FORCE (LBS)	MAX CSI (LC)
B- G	0 / 210	0.05 (1)
G- D	0 / 210	0.05 (1)
G- C	-121 / 28	0.07 (1)

DESIGN CRITERIA

SPECIFIED LOADS:

TOP CH.	LL	=	25.6	PSF
	DL	=	6.0	PSF
BOT CH.	LL	=	0.0	PSF
	DL	=	7.4	PSF
TOTAL LOAD		=	39.0	PSF

SPACING = 24.0 IN. C/C

THIS TRUSS IS DESIGNED FOR RESIDENTIAL OR SMALL BUILDING REQUIREMENTS OF PART 9, NBCC 2015

THIS DESIGN COMPLIES WITH:
- PART 9 OF BCBC 2018 , NBC-2019AE
- PART 9 OF OBC 2012 (2019 AMENDMENT)
- CSA 086-14
- TPIC 2014

(55 % OF 31.3 P.S.F. G.S.L. PLUS 8.4 P.S.F. RAIN LOAD) EQUALS 25.6 P.S.F. SPECIFIED ROOF LIVE LOAD

ALLOWABLE DEFL.(LL)= L/360 (0.28")
CALCULATED VERT. DEFL.(LL) = L/ 999 (0.00")
ALLOWABLE DEFL.(TL)= L/360 (0.28")
CALCULATED VERT. DEFL.(TL) = L/ 999 (0.01")

CSI: TC=0.10/1.00 (B-C:1) , BC=0.09/1.00 (G-H:4) , WB=0.07/1.00 (C-G:1) , SSI=0.09/1.00 (B-C:1)

DOL LUMBER=1.00 NAIL=1.00 LS BEND=1.10 COMP=1.10 SHEAR=1.10 TENS= 1.10

COMPANION LIVE LOAD FACTOR = 1.00

AUTOSOLVE HEELS OFF

TRUSS PLATE MANUFACTURER IS NOT RESPONSIBLE FOR QUALITY CONTROL IN THE TRUSS MANUFACTURING PLANT .

NAIL VALUES

PLATE	GRIP(DRY) (PSI) MAX	MIN	SHEAR (PLI) MAX	MIN	SECTION (PLI) MAX	MIN
MT20	650	371	1747	788	1987	1873

PLATE PLACEMENT TOL. = 0.250 inches

PLATE ROTATION TOL. = 5.0 Deg.

JSI GRIP= 0.35 (B) (INPUT = 0.90)
JSI METAL= 0.19 (D) (INPUT = 0.95)

LICENSED PROFESSIONAL ENGINEER
03-04-24
H. J. G. ALVES
100009024
PROVINCE OF ONTARIO

Structural component only
DWG# T-2406594

CITY OF RICHMOND HILL
BUILDING DIVISION
05/01/2024
RECEIVED
Per: joshua.nabua

JOB NAME	TRUSS NAME	QUANTITY	PLY	JOB DESC.	DRWG NO.
436988	T26	1	2	GREEN PARK HOMES TRUSS DESC.	

Tamarack Roof Truss, Burlington

Version 8.630 S Aug 30 2023 MiTek Industries, Inc. Mon Mar 4 08:03:55 2024 Page 1
ID:1PtzEZc03IbzkDC64XoV?RygPuj-yRFb0KDos6Ejh?RFts_7ICaeTWQY?U2pb4c7arzeNP2

Scale: 1/2"=1'

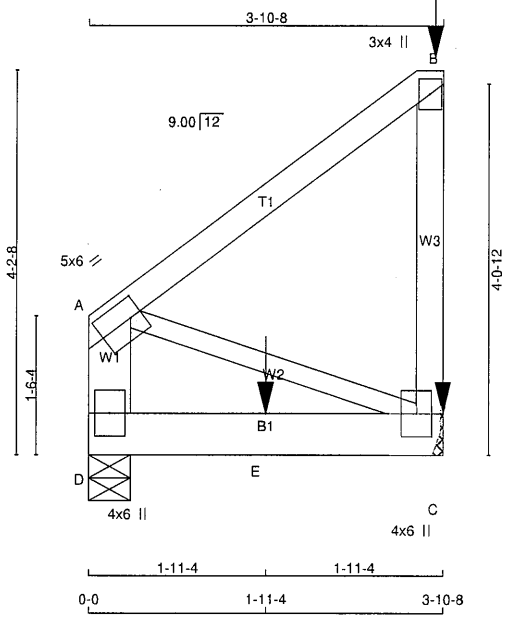

TOTAL WEIGHT = 2 X 21 = 42 lb

[M]

LUMBER

N. L. G. A. RULES

CHORDS	SIZE		LUMBER	DESCR.
A - B	2x4	DRY	No.2	SPF
C - B	2x4	DRY	No.2	SPF
D - A	2x6	DRY	No.2	SPF
D - C	2x6	DRY	No.2	SPF
ALL WEBS	2x3	DRY	No.2	SPF

DRY: SEASONED LUMBER.

DESIGN CONSISTS OF 2 TRUSSES BUILT SEPARATELY THEN FASTENED TOGETHER AS FOLLOWS:

CHORDS	#ROWS	SURFACE SPACING (IN)	LOAD(PLF)
TOP CHORDS : (0.122"X3") SPIRAL NAILS			
A- B	1	12	SIDE(61.0)
B- C	1	12	SIDE(5.9)
D- A	2	12	TOP
BOTTOM CHORDS : (0.122"X3") SPIRAL NAILS			
D- C	2	12	SIDE(0.0)
WEBS : (0.122"X3") SPIRAL NAILS			
2x3	1	6	

NAILS TO BE DRIVEN FROM ONE SIDE ONLY.

GIRDER NAILING ASSUMES NAILED HANGERS ARE FASTENED WITH MIN. 3-0 INCH NAILS.

TOP - COMPONENTS ARE LOADED FROM THE TOP AND MUST BE PLACED ON TOP EDGE OF ALL PLIES FOR THE LOAD TO BE TRANSFERRED TO EACH PLY.

SIDE - PLF SHOWN IS THE EQUIVALENT UDL APPLIED TO ONE SIDE THAT THE CORRESPONDING NAILING PATTERN SHALL BE CAPABLE OF TRANSFERING. REMAINING PLF MUST BE APPLIED ON THE OPPOSITE SIDE OR ON THE TOP.

PLATES (table is in inches)

JT	TYPE	PLATES	W	LEN	Y	X
A	TMVW-t	MT20	5.0	6.0	2.50	1.50
B	TMV+p	MT20	3.0	4.0		
C	BMVW1+p	MT20	4.0	6.0		
D	BMV1+p	MT20	4.0	6.0		

LICENSED PROFESSIONAL ENGINEER
03-04-24
H. J. G. ALVES
100009024
PROVINCE OF ONTARIO

Structural component only
DWG# T-2406595

DIMENSIONS, SUPPORTS AND LOADINGS SPECIFIED BY FABRICATOR TO BE VERIFIED BY BUILDING DESIGNER

BEARINGS

JT	FACTORED GROSS REACTION VERT	HORZ	MAXIMUM GROSS REACTION DOWN	HORZ	UPLIFT	FACTORED INPUT BRG	REQRD BRG
C	790	0	790	0	0	MECHANICAL	
D	511	0	511	0	0	5-8	1-8

A SUITABLE HANGER/MECHANICAL CONNECTION IS REQUIRED AT JOINT C. MINIMUM BEARING LENGTH AT JOINT C = 1-8.

UNFACTORED REACTIONS

JT	1ST LCASE COMBINED	MAX./MIN. COMPONENT REACTIONS SNOW	LIVE	PERM.LIVE	WIND	DEAD	SOIL
C	554	388 / 0	0 / 0	0 / 0	0 / 0	167 / 0	0 / 0
D	360	244 / 0	0 / 0	0 / 0	0 / 0	116 / 0	0 / 0

BEARING MATERIAL TO BE SPF NO.2 OR BETTER AT JOINT(S) D

BRACING

TOP CHORD TO BE SHEATHED OR MAX. PURLIN SPACING = 10.00 FT.
MAX. UNBRACED BOTTOM CHORD LENGTH = 10.00 FT OR RIGID CEILING DIRECTLY APPLIED.

ALL PITCH BREAKS AND PERIMETER CORNER JOINTS MUST BE LATERALLY RESTRAINED.

LOADING

TOTAL LOAD CASES: (4)

CHORDS

MEMB. FR-TO	MAX. FACTORED FORCE (LBS)	FACTORED VERT. LOAD (PLF) FROM	TO	LC1 MAX CSI (LC)	MAX. UNBRAC LENGTH
A- B	0 / 0	-91.8	-91.8	0.13 (1)	10.00
C- B	-434 / 0	0.0	0.0	0.06 (1)	7.81
D- A	-178 / 0	0.0	0.0	0.01 (1)	7.81
D- E	0 / 0	-18.5	-18.5	0.23 (1)	10.00
E- C	0 / 0	-18.5	-18.5	0.23 (1)	10.00

WEBS

MEMB. FR-TO	MAX. FACTORED FORCE (LBS)	MAX CSI (LC)
A- C	0 / 0	0.00 (1)

SPECIFIED CONCENTRATED LOADS (LBS)

JT	LOC.	LC1	MAX-	MAX+	FACE	DIR.	TYPE	HEEL	CONN.
B	3-10-8	-177	-177	---	BACK	VERT	TOTAL	---	C1
C	3-10-8	-17	-17	---	BACK	VERT	TOTAL	---	C1
E	1-11-4	-12	-12	---	BACK	VERT	TOTAL	---	C1
E	1-11-4	-407	-407	---	FRONT	VERT	TOTAL	---	C1

CONNECTION REQUIREMENTS

1) **C1:** A SUITABLE HANGER/MECHANICAL CONNECTION IS REQUIRED.

DESIGN CRITERIA

SPECIFIED LOADS:

TOP	CH.	LL	=	25.6	PSF
		DL	=	6.0	PSF
BOT	CH.	LL	=	0.0	PSF
		DL	=	7.4	PSF
TOTAL	LOAD		=	39.0	PSF

SPACING = 24.0 IN. C/C

THIS TRUSS IS DESIGNED FOR RESIDENTIAL OR SMALL BUILDING REQUIREMENTS OF PART 9, NBCC 2015

THIS DESIGN COMPLIES WITH:
- PART 9 OF BCBC 2018 , NBC-2019AE
- PART 9 OF OBC 2012 (2019 AMENDMENT)
- CSA 086-14
- TPIC 2014

(55 % OF 31.3 P.S.F. G.S.L. PLUS 8.4 P.S.F. RAIN LOAD) EQUALS 25.6 P.S.F. SPECIFIED ROOF LIVE LOAD

ALLOWABLE DEFL.(LL)= L/360 (0.19")
CALCULATED VERT. DEFL.(LL) = L/ 999 (0.01")
ALLOWABLE DEFL.(TL)= L/360 (0.19")
CALCULATED VERT. DEFL.(TL) = L/ 999 (0.02")

CSI: TC=0.13/1.00 (A-B:1) , BC=0.23/1.00 (C-D:1) , WB=0.00/1.00 (A-C:1) , SSI=0.11/1.00 (C-D:1)

DOL LUMBER=1.00 NAIL=1.00 LS BEND=1.00 COMP=1.00 SHEAR=1.00 TENS= 1.00

COMPANION LIVE LOAD FACTOR = 1.00

AUTOSOLVE RIGHT HEEL ONLY

TRUSS PLATE MANUFACTURER IS NOT RESPONSIBLE FOR QUALITY CONTROL IN THE TRUSS MANUFACTURING PLANT .

NAIL VALUES

PLATE	GRIP(DRY) (PSI) MAX	MIN	SHEAR (PLI) MAX	MIN	SECTION (PLI) MAX	MIN
MT20	650	371	1747	788	1987	1873

PLATE PLACEMENT TOL. = 0.250 inches

PLATE ROTATION TOL. = 5.0 Deg.

JSI GRIP= 0.09 (B) (INPUT = 0.90)
JSI METAL= 0.08 (B) (INPUT = 0.95)

CITY OF RICHMOND HILL
BUILDING DIVISION
05/01/2024
RECEIVED
Per: joshua.nabua

CONTINUED ON PAGE 2

JOB NAME	TRUSS NAME	QUANTITY	PLY	JOB DESC. GREEN PARK HOMES	DRWG NO.
436988	T26	1	2	TRUSS DESC.	

Tamarack Roof Truss, Burlington

Version 8.630 S Aug 30 2023 MiTek Industries, Inc. Mon Mar 4 08:03:55 2024 Page 2
ID:1PtzEZc03lbzkDC64XoV?RygPuj-yRFb0KDos6Ejh?RFts_7ICaeTWQY?U2pb4c7arzeNP2

NOTES- (1)
1) Lateral braces to be a minimum of 2X4 SPF #2.

LICENSED PROFESSIONAL ENGINEER
03-04-24
H. J. G. ALVES
100009024
PROVINCE OF ONTARIO

Structural component only
DWG# T-2406595

CITY OF RICHMOND HILL
BUILDING DIVISION
05/01/2024
RECEIVED
Per: joshua.nabua

JOB NAME	TRUSS NAME	QUANTITY	PLY	JOB DESC.	DRWG NO.
436988	J1	10	1	GREEN PARK HOMES TRUSS DESC.	

Tamarack Roof Truss, Burlington

Version 8.630 S Aug 30 2023 MiTek Industries, Inc. Mon Mar 4 08:03:17 2024 Page 1
ID:1PtzEZc03lbzkDC64XoV?RygPuj-38yD1LmyoRR67AXxetlDmB?2eBT85leDsAP6E2zeNPe

Scale = 1:23.3

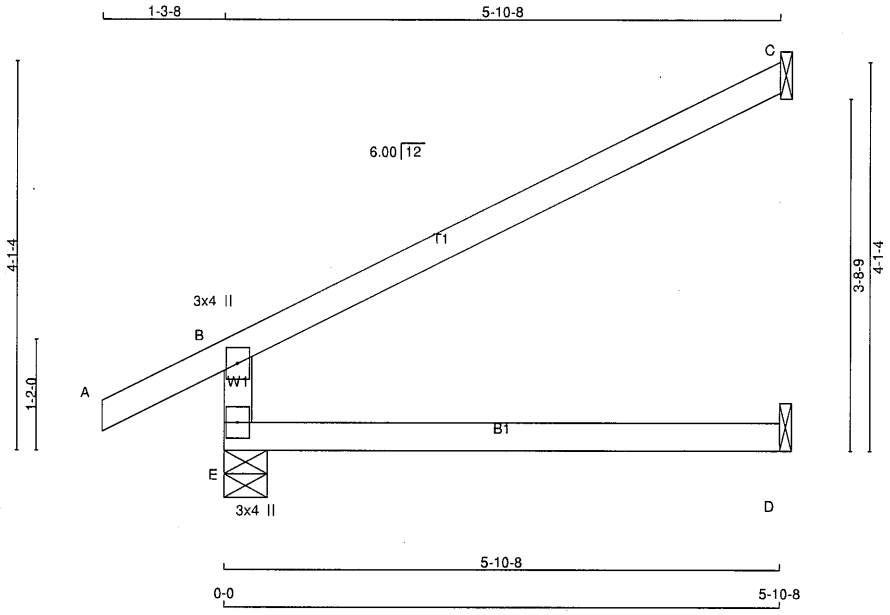

TOTAL WEIGHT = 10 X 17 = 168 lb

[M]

LUMBER
N. L. G. A. RULES

CHORDS	SIZE		LUMBER	DESCR.
E - B	2x4	DRY	No.2	SPF
A - C	2x4	DRY	No.2	SPF
E - D	2x4	DRY	No.2	SPF

DRY: SEASONED LUMBER.

PLATES (table is in inches)

JT	TYPE	PLATES	W	LEN	Y	X
B	TMV+p	MT20	3.0	4.0		
E	BMV1+p	MT20	3.0	4.0		

NOTES- (1)
1) Lateral braces to be a minimum of 2X4 SPF #2.

DIMENSIONS, SUPPORTS AND LOADINGS SPECIFIED BY FABRICATOR TO BE VERIFIED BY BUILDING DESIGNER

BEARINGS

JT	FACTORED GROSS REACTION VERT	HORZ	MAXIMUM FACTORED GROSS REACTION DOWN	HORZ	UPLIFT	INPUT BRG IN-SX	REQRD BRG IN-SX
E	525	0	525	0	0	5-8	1-8
C	202	0	202	0	0	1-8	1-8
D	45	0	50	0	0	1-8	1-8

SEE MITEK STANDARD DETAIL MSD2015-H FOR CONNECTION TO JOINT(S) C , D

UNFACTORED REACTIONS

JT	1ST LCASE COMBINED	MAX./MIN. COMPONENT REACTIONS SNOW	LIVE	PERM.LIVE	WIND	DEAD	SOIL
E	369	257 / 0	0 / 0	0 / 0	0 / 0	111 / 0	0 / 0
C	139	113 / 0	0 / 0	0 / 0	0 / 0	26 / 0	0 / 0
D	36	0 / 0	0 / 0	0 / 0	0 / 0	36 / 0	0 / 0

BEARING MATERIAL TO BE SPF NO.2 OR BETTER AT JOINT(S) E

BRACING
TOP CHORD TO BE SHEATHED OR MAX. PURLIN SPACING = 6.25 FT.
MAX. UNBRACED BOTTOM CHORD LENGTH = 10.00 FT OR RIGID CEILING DIRECTLY APPLIED.

ALL PITCH BREAKS AND PERIMETER CORNER JOINTS MUST BE LATERALLY RESTRAINED.

LOADING
TOTAL LOAD CASES: (4)

CHORDS

MEMB. FR-TO	MAX. FORCE (LBS)	FACTORED VERT. LOAD LC1 (PLF) FROM	TO	MAX CSI (LC)	MAX. UNBRAC LENGTH
E- B	-461 / 0	0.0	0.0	0.13 (4)	7.81
A- B	0 / 28	-91.8	-91.8	0.12 (1)	10.00
B- C	-30 / 0	-91.8	-91.8	0.54 (1)	6.25
E- D	0 / 0	-18.5	-18.5	0.13 (4)	10.00

WEBS

MEMB. FR-TO	MAX. FORCE (LBS)	MAX CSI (LC)

DESIGN CRITERIA

SPECIFIED LOADS:

TOP CH.	LL	=	25.6	PSF
	DL	=	6.0	PSF
BOT CH.	LL	=	0.0	PSF
	DL	=	7.4	PSF
TOTAL LOAD		=	39.0	PSF

SPACING = 24.0 IN. C/C

THIS TRUSS IS DESIGNED FOR RESIDENTIAL OR SMALL BUILDING REQUIREMENTS OF PART 9, NBCC 2015

THIS DESIGN COMPLIES WITH:
- PART 9 OF BCBC 2018 , NBC-2019AE
- PART 9 OF OBC 2012 (2019 AMENDMENT)
- CSA 086-14
- TPIC 2014

DESIGN ASSUMPTIONS
-OVERHANG NOT TO BE ALTERED OR CUT OFF.

(55 % OF 31.3 P.S.F. G.S.L. PLUS 8.4 P.S.F. RAIN LOAD) EQUALS 25.6 P.S.F. SPECIFIED ROOF LIVE LOAD

ALLOWABLE DEFL.(LL)= L/360 (0.20")
CALCULATED VERT. DEFL.(LL) = L/ 999 (0.00")
ALLOWABLE DEFL.(TL)= L/360 (0.20")
CALCULATED VERT. DEFL.(TL) = L/ 999 (0.03")

CSI: TC=0.54/1.00 (B-C:1) , BC=0.13/1.00 (D-E:4) , WB=0.00/1.00 (n/a:0) , SSI=0.24/1.00 (B-C:1)

DOL LUMBER=1.00 NAIL=1.00 LS BEND=1.10 COMP=1.10 SHEAR=1.10 TENS= 1.10

COMPANION LIVE LOAD FACTOR = 1.00

AUTOSOLVE RIGHT HEEL ONLY

TRUSS PLATE MANUFACTURER IS NOT RESPONSIBLE FOR QUALITY CONTROL IN THE TRUSS MANUFACTURING PLANT .

NAIL VALUES

PLATE	GRIP(DRY) (PSI) MAX	MIN	SHEAR (PLI) MAX	MIN	SECTION (PLI) MAX	MIN
MT20	650	371	1747	788	1987	1873

PLATE PLACEMENT TOL. = 0.250 inches

PLATE ROTATION TOL. = 5.0 Deg.

JSI GRIP= 0.18 (E) (INPUT = 0.90)
JSI METAL= 0.13 (B) (INPUT = 0.95)

LICENSED PROFESSIONAL ENGINEER
03-04-24
H. J. G. ALVES
100009024
PROVINCE OF ONTARIO

Structural component only
DWG# T-2406555

CITY OF RICHMOND HILL
BUILDING DIVISION
05/01/2024
RECEIVED
Per: joshua.nabua

JOB NAME	TRUSS NAME	QUANTITY	PLY	JOB DESC.	DRWG NO.
436988	J2	3	1	GREEN PARK HOMES TRUSS DESC.	

Tamarack Roof Truss, Burlington

Version 8.630 S Aug 30 2023 MiTek Industries, Inc. Mon Mar 4 08:03:18 2024 Page 1
ID:1PtzEZc03lbzkDC64XoV?RygPuj-XKWcFhmbZlZzlJ67CbqSIPYIKbpNqluM5q8fnUzeNPd

Scale = 1:18.2

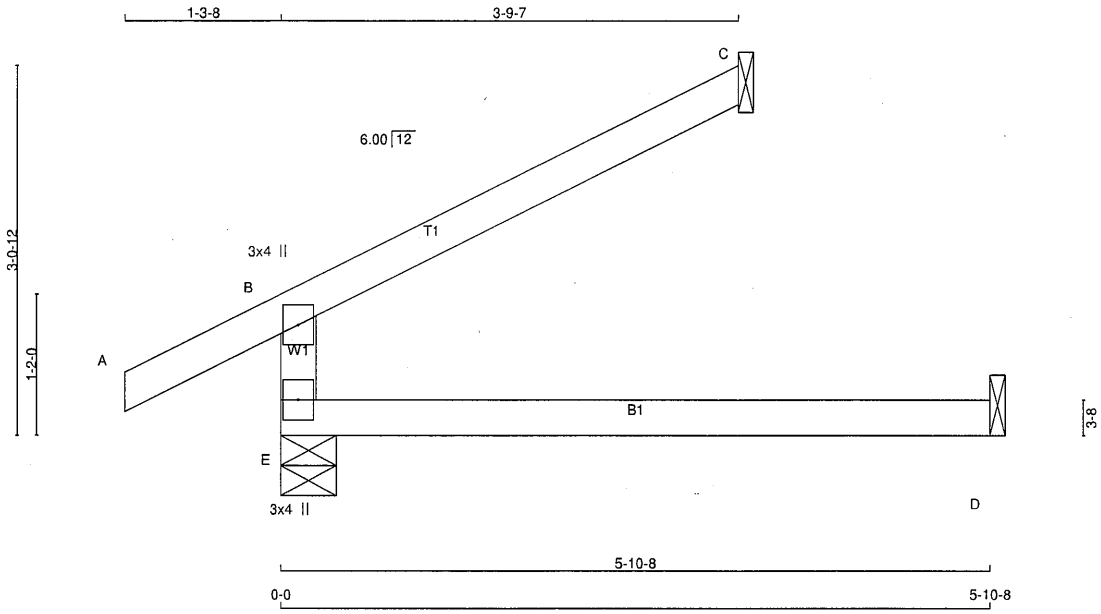

TOTAL WEIGHT = 3 X 14 = 42 lb

[M]

LUMBER
N. L. G. A. RULES

CHORDS	SIZE		LUMBER	DESCR.
E - B	2x4	DRY	No.2	SPF
A - C	2x4	DRY	No.2	SPF
E - D	2x4	DRY	No.2	SPF

DRY: SEASONED LUMBER.

PLATES (table is in inches)

JT	TYPE	PLATES	W	LEN	Y	X
B	TMV+p	MT20	3.0	4.0		
E	BMV1+p	MT20	3.0	4.0		

NOTES- (1)
1) Lateral braces to be a minimum of 2X4 SPF #2.

DIMENSIONS, SUPPORTS AND LOADINGS SPECIFIED BY FABRICATOR TO BE VERIFIED BY BUILDING DESIGNER

BEARINGS

JT	FACTORED GROSS REACTION VERT	HORZ	MAXIMUM FACTORED GROSS REACTION DOWN	HORZ	UPLIFT	INPUT BRG IN-SX	REQRD BRG IN-SX
E	405	0	405	0	0	5-8	1-8
C	130	0	130	0	0	1-8	1-8
D	45	0	50	0	0	1-8	1-8

SEE MITEK STANDARD DETAIL MSD2015-H FOR CONNECTION TO JOINT(S) C , D

UNFACTORED REACTIONS

JT	1ST LCASE COMBINED	MAX./MIN. COMPONENT REACTIONS SNOW	LIVE	PERM.LIVE	WIND	DEAD	SOIL
E	286	190 / 0	0 / 0	0 / 0	0 / 0	96 / 0	0 / 0
C	90	73 / 0	0 / 0	0 / 0	0 / 0	17 / 0	0 / 0
D	36	0 / 0	0 / 0	0 / 0	0 / 0	36 / 0	0 / 0

BEARING MATERIAL TO BE SPF NO.2 OR BETTER AT JOINT(S) E, C

BRACING
TOP CHORD TO BE SHEATHED OR MAX. PURLIN SPACING = 6.25 FT.
MAX. UNBRACED BOTTOM CHORD LENGTH = 10.00 FT OR RIGID CEILING DIRECTLY APPLIED.

ALL PITCH BREAKS AND PERIMETER CORNER JOINTS MUST BE LATERALLY RESTRAINED.

LOADING
TOTAL LOAD CASES: (4)

CHORDS

MEMB. FR-TO	MAX. FACTORED FORCE (LBS)	FACTORED VERT. LOAD (PLF) FROM	TO	LC1 MAX CSI (LC)	MAX. UNBRAC LENGTH
E- B	-342 / 0	0.0	0.0	0.13 (4)	7.81
A- B	0 / 28	-91.8	-91.8	0.12 (1)	10.00
B- C	-19 / 0	-91.8	-91.8	0.22 (1)	6.25
E- D	0 / 0	-18.5	-18.5	0.13 (4)	10.00

WEBS

MEMB. FR-TO	MAX. FACTORED FORCE (LBS)	MAX CSI (LC)

DESIGN CRITERIA

SPECIFIED LOADS:

TOP CH.	LL	=	25.6	PSF
	DL	=	6.0	PSF
BOT CH.	LL	=	0.0	PSF
	DL	=	7.4	PSF
TOTAL LOAD		=	39.0	PSF

SPACING = 24.0 IN. C/C

THIS TRUSS IS DESIGNED FOR RESIDENTIAL OR SMALL BUILDING REQUIREMENTS OF PART 9, NBCC 2015

THIS DESIGN COMPLIES WITH:
- PART 9 OF BCBC 2018 , NBC-2019AE
- PART 9 OF OBC 2012 (2019 AMENDMENT)
- CSA 086-14
- TPIC 2014

DESIGN ASSUMPTIONS
-OVERHANG NOT TO BE ALTERED OR CUT OFF.

(55 % OF 31.3 P.S.F. G.S.L. PLUS 8.4 P.S.F. RAIN LOAD) EQUALS 25.6 P.S.F. SPECIFIED ROOF LIVE LOAD

ALLOWABLE DEFL.(LL)= L/360 (0.20")
CALCULATED VERT. DEFL.(LL) = L/ 999 (0.00")
ALLOWABLE DEFL.(TL)= L/360 (0.20")
CALCULATED VERT. DEFL.(TL) = L/ 999 (0.03")

CSI: TC=0.22/1.00 (B-C:1) , BC=0.13/1.00 (D-E:4) , WB=0.00/1.00 (n/a:0) , SSI=0.15/1.00 (B-C:1)

DOL LUMBER=1.00 NAIL=1.00 LS BEND=1.10 COMP=1.10 SHEAR=1.10 TENS= 1.10

COMPANION LIVE LOAD FACTOR = 1.00

AUTOSOLVE RIGHT HEEL ONLY

TRUSS PLATE MANUFACTURER IS NOT RESPONSIBLE FOR QUALITY CONTROL IN THE TRUSS MANUFACTURING PLANT .

NAIL VALUES

PLATE	GRIP(DRY) (PSI) MAX	MIN	SHEAR (PLI) MAX	MIN	SECTION (PLI) MAX	MIN
MT20	650	371	1747	788	1987	1873

PLATE PLACEMENT TOL. = 0.250 inches

PLATE ROTATION TOL. = 5.0 Deg.

JSI GRIP= 0.14 (E) (INPUT = 0.90)
JSI METAL= 0.09 (B) (INPUT = 0.95)

LICENSED PROFESSIONAL ENGINEER
03-04-24
H. J. G. ALVES
100009024
PROVINCE OF ONTARIO

Structural component only
DWG# T-2406556

CITY OF RICHMOND HILL
BUILDING DIVISION
05/01/2024
RECEIVED
Per: joshua.nabua

JOB NAME	TRUSS NAME	QUANTITY	PLY	JOB DESC.	DRWG NO.
436988	J3	3	1	GREEN PARK HOMES TRUSS DESC.	

Tamarack Roof Truss, Burlington

Version 8.630 S Aug 30 2023 MiTek Industries, Inc. Mon Mar 4 08:03:18 2024 Page 1
ID:1PtzEZc03lbzkDC64XoV?RygPuj-XKWcFhmbZlZzlJ67CbqSIPYKxbpHqluM5q8fnUzeNPd

Scale = 1:13.3

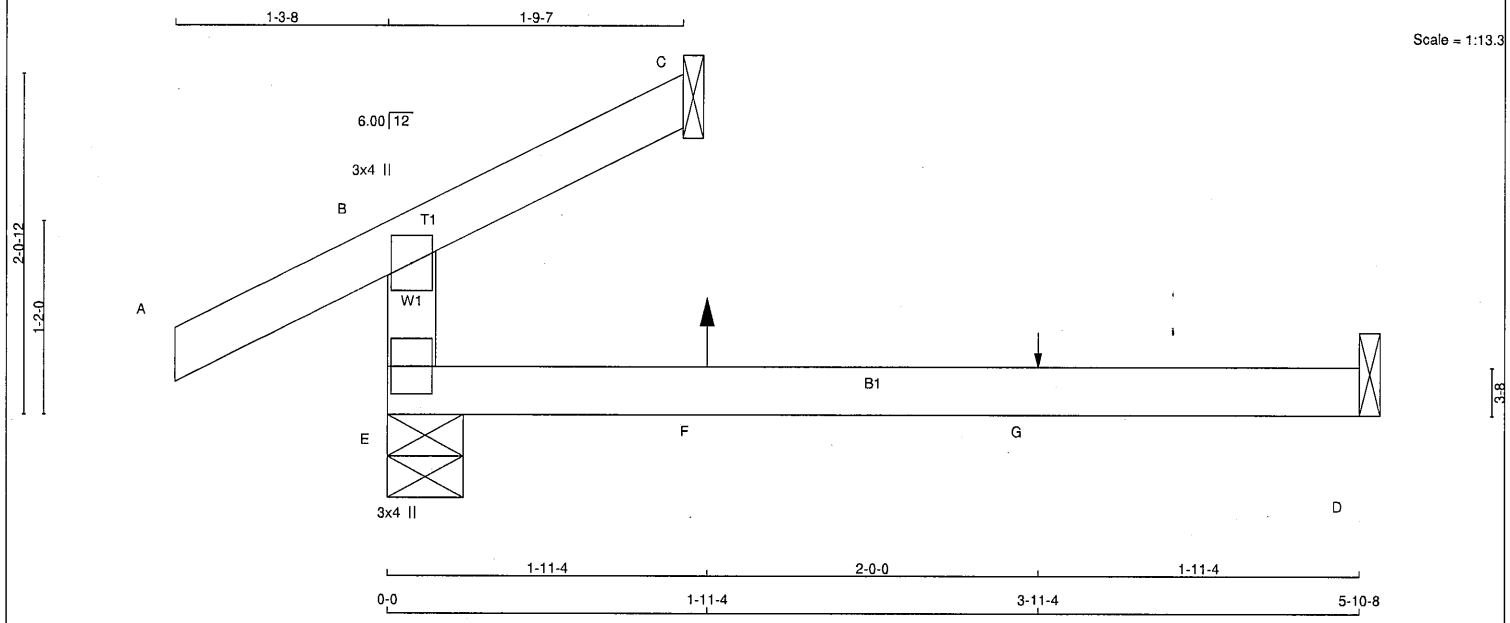

TOTAL WEIGHT = 3 X 12 = 35 lb [M]

LUMBER
N. L. G. A. RULES

CHORDS	SIZE		LUMBER	DESCR.
E - B	2x4	DRY	No.2	SPF
A - C	2x4	DRY	No.2	SPF
E - D	2x4	DRY	No.2	SPF

DRY: SEASONED LUMBER.

PLATES (table is in inches)

JT	TYPE	PLATES	W	LEN	Y	X
B	TMV+p	MT20	3.0	4.0		
E	BMV1+p	MT20	3.0	4.0		

NOTES- (1)
1) Lateral braces to be a minimum of 2X4 SPF #2.

DIMENSIONS, SUPPORTS AND LOADINGS SPECIFIED BY FABRICATOR TO BE VERIFIED BY BUILDING DESIGNER

BEARINGS

JT	FACTORED GROSS REACTION VERT	HORZ	MAXIMUM FACTORED GROSS REACTION DOWN	HORZ	UPLIFT	INPUT BRG IN-SX	REQRD BRG IN-SX
E	284	0	284	0	0	5-8	1-8
C	63	0	63	0	0	1-8	1-8
D	44	0	52	0	0	1-8	1-8

SEE MITEK STANDARD DETAIL MSD2015-H FOR CONNECTION TO JOINT(S) C , D

UNFACTORED REACTIONS

JT	1ST LCASE COMBINED	MAX./MIN. COMPONENT REACTIONS SNOW	LIVE	PERM.LIVE	WIND	DEAD	SOIL
E	200	137 / 0	0 / 0	0 / 0	0 / 0	62 / 0	0 / 0
C	46	21 / 0	0 / 0	0 / 0	0 / 0	25 / 0	0 / 0
D	35	0 / -3	0 / 0	0 / 0	0 / 0	37 / 0	0 / 0

BEARING MATERIAL TO BE SPF NO.2 OR BETTER AT JOINT(S) E, C

BRACING
TOP CHORD TO BE SHEATHED OR MAX. PURLIN SPACING = 10.00 FT.
MAX. UNBRACED BOTTOM CHORD LENGTH = 10.00 FT OR RIGID CEILING DIRECTLY APPLIED.

ALL PITCH BREAKS AND PERIMETER CORNER JOINTS MUST BE LATERALLY RESTRAINED.

LOADING
TOTAL LOAD CASES: (7)

CHORDS

MEMB. FR-TO	MAX. FACTORED FORCE (LBS)	FACTORED VERT. LOAD LC1 (PLF) FROM	TO	MAX CSI (LC)	MAX. UNBRAC LENGTH
E- B	-227 / 0	0.0	0.0	0.11 (4)	7.81
A- B	0 / 28	-91.8	-91.8	0.12 (1)	10.00
B- C	-9 / 9	-91.8	-91.8	0.08 (4)	10.00

WEBS

MEMB. FR-TO	MAX. FACTORED FORCE (LBS)	MAX CSI (LC)
E- F	0 / 0	-18.5 -18.5 0.14 (4) 10.00
F- G	0 / 0	-18.5 -18.5 0.14 (4) 10.00
G- D	0 / 0	-18.5 -18.5 0.14 (4) 10.00

SPECIFIED CONCENTRATED LOADS (LBS)

JT	LOC.	LC1	MAX-	MAX+	FACE	DIR.	TYPE	HEEL	CONN.
F	1-11-4	5	1	8	BACK	VERT	TOTAL	---	C1
G	3-11-4	1	1	---	BACK	VERT	TOTAL	---	C1

CONNECTION REQUIREMENTS

1) **C1:** A SUITABLE HANGER/MECHANICAL CONNECTION IS REQUIRED.

DESIGN CRITERIA

SPECIFIED LOADS:

TOP CH.	LL	=	25.6	PSF
	DL	=	6.0	PSF
BOT CH.	LL	=	0.0	PSF
	DL	=	7.4	PSF
TOTAL LOAD		=	39.0	PSF

SPACING = 24.0 IN. C/C

THIS TRUSS IS DESIGNED FOR RESIDENTIAL OR SMALL BUILDING REQUIREMENTS OF PART 9, NBCC 2015

THIS DESIGN COMPLIES WITH:
- PART 9 OF BCBC 2018 , NBC-2019AE
- PART 9 OF OBC 2012 (2019 AMENDMENT)
- CSA 086-14
- TPIC 2014

DESIGN ASSUMPTIONS
-OVERHANG NOT TO BE ALTERED OR CUT OFF.

(55 % OF 31.3 P.S.F. G.S.L. PLUS 8.4 P.S.F. RAIN LOAD) EQUALS 25.6 P.S.F. SPECIFIED ROOF LIVE LOAD

ALLOWABLE DEFL.(LL)= L/360 (0.20")
CALCULATED VERT. DEFL.(LL) = L/ 999 (0.01")
ALLOWABLE DEFL.(TL)= L/360 (0.20")
CALCULATED VERT. DEFL.(TL) = L/ 999 (0.04")

CSI: TC=0.12/1.00 (A-B:1) , BC=0.14/1.00 (D-E:4) , WB=0.00/1.00 (n/a:0) , SSI=0.09/1.00 (A-B:1)

DOL LUMBER=0.99 NAIL=0.99 LS BEND=1.10 COMP=1.10 SHEAR=1.10 TENS= 1.10

COMPANION LIVE LOAD FACTOR = 1.00

AUTOSOLVE RIGHT HEEL ONLY

TRUSS PLATE MANUFACTURER IS NOT RESPONSIBLE FOR QUALITY CONTROL IN THE TRUSS MANUFACTURING PLANT .

NAIL VALUES

PLATE	GRIP(DRY) (PSI) MAX	MIN	SHEAR (PLI) MAX	MIN	SECTION (PLI) MAX	MIN
MT20	650	371	1747	788	1987	1873

PLATE PLACEMENT TOL. = 0.250 inches

PLATE ROTATION TOL. = 0.5 Deg.

JSI GRIP= 0.09 (E) (INPUT = 0.90)
JSI METAL= 0.06 (B) (INPUT = 0.95)

LICENSED PROFESSIONAL ENGINEER
03-04-24
H. J. G. ALVES
100009024
PROVINCE OF ONTARIO

Structural component only
DWG# T-2406557

CITY OF RICHMOND HILL
BUILDING DIVISION
05/01/2024
RECEIVED
Per: joshua.nabua

JOB NAME	TRUSS NAME	QUANTITY	PLY	JOB DESC.	DRWG NO.
436988	J4	3	1	GREEN PARK HOMES TRUSS DESC.	

Tamarack Roof Truss, Burlington

Version 8.630 S Aug 30 2023 MiTek Industries, Inc. Mon Mar 4 08:03:19 2024 Page 1
ID:1PtzEZc03IbzkDC64XoV?RygPuj-0W4_S0nDK2hqNThKmlLhrc5T4?BPZC8WJUuDJwzeNPc

Scale = 1:18.4

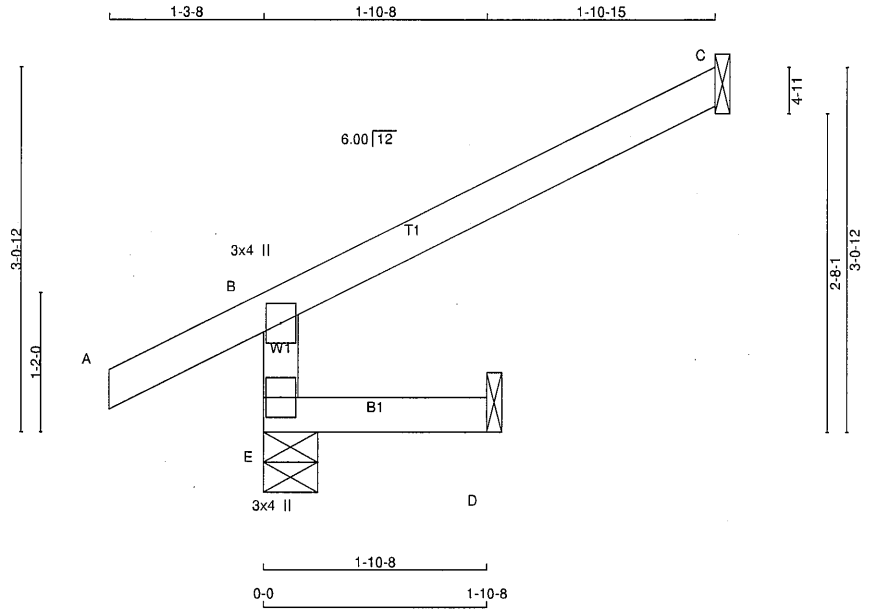

TOTAL WEIGHT = 3 X 10 = 29 lb
[M]

LUMBER
N. L. G. A. RULES

CHORDS	SIZE		LUMBER	DESCR.
E - B	2x4	DRY	No.2	SPF
A - C	2x4	DRY	No.2	SPF
E - D	2x4	DRY	No.2	SPF

DRY: SEASONED LUMBER.

PLATES (table is in inches)

JT	TYPE	PLATES	W	LEN	Y	X
B	TMV+p	MT20	3.0	4.0		
E	BMV1+p	MT20	3.0	4.0		

NOTES- (1)
1) Lateral braces to be a minimum of 2X4 SPF #2.

DIMENSIONS, SUPPORTS AND LOADINGS SPECIFIED BY FABRICATOR TO BE VERIFIED BY BUILDING DESIGNER

BEARINGS

JT	FACTORED GROSS REACTION VERT	HORZ	MAXIMUM FACTORED GROSS REACTION DOWN	HORZ	UPLIFT	INPUT BRG IN-SX	REQRD BRG IN-SX
E	361	0	361	0	0	5-8	1-8
C	130	0	130	0	0	1-8	1-8
D	16	0	17	0	0	1-8	1-8

SEE MITEK STANDARD DETAIL MSD2015-H FOR CONNECTION TO JOINT(S) C , D

UNFACTORED REACTIONS

JT	1ST LCASE COMBINED	MAX./MIN. COMPONENT REACTIONS SNOW	LIVE	PERM.LIVE	WIND	DEAD	SOIL
E	250	190 / 0	0 / 0	0 / 0	0 / 0	60 / 0	0 / 0
C	90	73 / 0	0 / 0	0 / 0	0 / 0	17 / 0	0 / 0
D	12	0 / 0	0 / 0	0 / 0	0 / 0	12 / 0	0 / 0

BEARING MATERIAL TO BE SPF NO.2 OR BETTER AT JOINT(S) E

BRACING
TOP CHORD TO BE SHEATHED OR MAX. PURLIN SPACING = 6.25 FT.
MAX. UNBRACED BOTTOM CHORD LENGTH = 10.00 FT OR RIGID CEILING DIRECTLY APPLIED.

ALL PITCH BREAKS AND PERIMETER CORNER JOINTS MUST BE LATERALLY RESTRAINED.

LOADING
TOTAL LOAD CASES: (5)

CHORDS

MEMB. FR-TO	MAX. FACTORED FORCE (LBS)	FACTORED VERT. LOAD (PLF) FROM	TO	LC1 MAX CSI (LC)	MAX. UNBRAC LENGTH
E- B	-342 / 0	0.0	0.0	0.01 (4)	7.81
A- B	0 / 28	-91.8	-91.8	0.13 (5)	10.00
B- C	-19 / 0	-91.8	-91.8	0.22 (1)	6.25
E- D	0 / 0	-18.5	-18.5	0.02 (4)	10.00

WEBS

MEMB. FR-TO	MAX. FACTORED FORCE (LBS)	MAX CSI (LC)

CANTILEVER ANALYSIS HAS BEEN CONSIDERED IN THIS DESIGN

DESIGN CRITERIA

SPECIFIED LOADS:

TOP CH.	LL	=	25.6	PSF
	DL	=	6.0	PSF
BOT CH.	LL	=	0.0	PSF
	DL	=	7.4	PSF
TOTAL LOAD		=	39.0	PSF

SPACING = 24.0 IN. C/C

THIS TRUSS IS DESIGNED FOR RESIDENTIAL OR SMALL BUILDING REQUIREMENTS OF PART 9, NBCC 2015

THIS DESIGN COMPLIES WITH:
- PART 9 OF BCBC 2018 , NBC-2019AE
- PART 9 OF OBC 2012 (2019 AMENDMENT)
- CSA 086-14
- TPIC 2014

DESIGN ASSUMPTIONS
-OVERHANG NOT TO BE ALTERED OR CUT OFF.

(55 % OF 31.3 P.S.F. G.S.L. PLUS 8.4 P.S.F. RAIN LOAD) EQUALS 25.6 P.S.F. SPECIFIED ROOF LIVE LOAD

ALLOWABLE DEFL.(LL)= L/360 (0.19")
CALCULATED VERT. DEFL.(LL) = L/ 999 (0.00")
ALLOWABLE DEFL.(TL)= L/360 (0.19")
CALCULATED VERT. DEFL.(TL) = L/ 999 (0.00")

CSI: TC=0.22/1.00 (B-C:1) , BC=0.02/1.00 (D-E:4) , WB=0.00/1.00 (n/a:0) , SSI=0.15/1.00 (B-C:1)

DOL LUMBER=1.00 NAIL=1.00 LS BEND=1.10 COMP=1.10 SHEAR=1.10 TENS= 1.10

COMPANION LIVE LOAD FACTOR = 1.00

AUTOSOLVE RIGHT HEEL ONLY

TRUSS PLATE MANUFACTURER IS NOT RESPONSIBLE FOR QUALITY CONTROL IN THE TRUSS MANUFACTURING PLANT .

NAIL VALUES

PLATE	GRIP(DRY) (PSI) MAX	MIN	SHEAR (PLI) MAX	MIN	SECTION (PLI) MAX	MIN
MT20	650	371	1747	788	1987	1873

PLATE PLACEMENT TOL. = 0.250 inches

PLATE ROTATION TOL. = 5.0 Deg.

JSI GRIP= 0.14 (E) (INPUT = 0.90)
JSI METAL= 0.09 (B) (INPUT = 0.95)

LICENSED PROFESSIONAL ENGINEER
03-04-24
H. J. G. ALVES
100009024
PROVINCE OF ONTARIO

Structural component only
DWG# T-2406558

CITY OF RICHMOND HILL
BUILDING DIVISION
05/01/2024
RECEIVED
Per: joshua.nabua

JOB NAME	TRUSS NAME	QUANTITY	PLY	JOB DESC.	DRWG NO.
436988	J5	3	1	GREEN PARK HOMES TRUSS DESC.	

Tamarack Roof Truss, Burlington

Version 8.630 S Aug 30 2023 MiTek Industries, Inc. Mon Mar 4 08:03:20 2024 Page 1
ID:1PtzEZc03lbzkDC64XoV?RygPuj-UjeMgMor5Mpg?dGWK0swNqdgRPWJIfOfY7dmrNzeNPb

Scale = 1:13.3

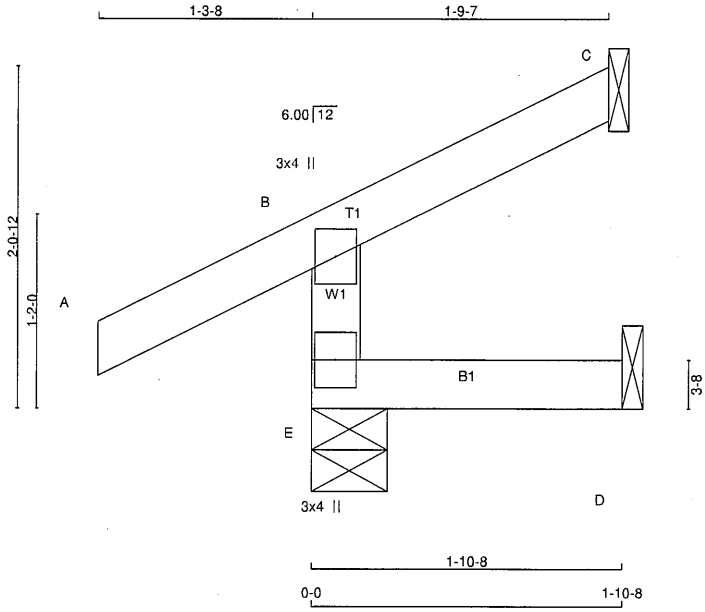

TOTAL WEIGHT = 3 X 7 = 21 lb [M]

LUMBER
N. L. G. A. RULES

CHORDS	SIZE		LUMBER	DESCR.
E - B	2x4	DRY	No.2	SPF
A - C	2x4	DRY	No.2	SPF
E - D	2x4	DRY	No.2	SPF

DRY: SEASONED LUMBER.

PLATES (table is in inches)

JT	TYPE	PLATES	W	LEN	Y	X
B	TMV+p	MT20	3.0	4.0		
E	BMV1+p	MT20	3.0	4.0		

NOTES- (1)
1) Lateral braces to be a minimum of 2X4 SPF #2.

DIMENSIONS, SUPPORTS AND LOADINGS SPECIFIED BY FABRICATOR TO BE VERIFIED BY BUILDING DESIGNER

BEARINGS

JT	FACTORED GROSS REACTION VERT	HORZ	MAXIMUM FACTORED GROSS REACTION DOWN	HORZ	UPLIFT	INPUT BRG IN-SX	REQRD BRG IN-SX
E	271	0	271	0	0	5-8	1-8
C	45	0	45	0	-23	1-8	1-8
D	8	0	17	0	-2	1-8	1-8

SEE MITEK STANDARD DETAIL MSD2015-H FOR CONNECTION TO JOINT(S) C , D

PROVIDE ANCHORAGE AT BEARING JOINT C FOR 150 LBS FACTORED UPLIFT
PROVIDE ANCHORAGE AT BEARING JOINT D FOR 150 LBS FACTORED UPLIFT

UNFACTORED REACTIONS

JT	1ST LCASE COMBINED	MAX./MIN. COMPONENT REACTIONS SNOW	LIVE	PERM.LIVE	WIND	DEAD	SOIL
E	188	141 / 0	0 / 0	0 / 0	0 / 0	47 / 0	0 / 0
C	31	24 / -18	0 / 0	0 / 0	0 / 0	7 / 0	0 / 0
D	7	0 / -8	0 / 0	0 / 0	0 / 0	12 / 0	0 / 0

BEARING MATERIAL TO BE SPF NO.2 OR BETTER AT JOINT(S) E, C

BRACING
TOP CHORD TO BE SHEATHED OR MAX. PURLIN SPACING = 6.25 FT.
MAX. UNBRACED BOTTOM CHORD LENGTH = 10.00 FT OR RIGID CEILING DIRECTLY APPLIED.

ALL PITCH BREAKS AND PERIMETER CORNER JOINTS MUST BE LATERALLY RESTRAINED.

LOADING
TOTAL LOAD CASES: (5)

CHORDS

MEMB. FR-TO	MAX. FACTORED FORCE (LBS)	FACTORED VERT. LOAD (PLF) FROM	TO	LC1 MAX CSI (LC)	MAX. UNBRAC LENGTH
E- B	-244 / 0	0.0	0.0	0.04 (5)	7.81
A- B	0 / 28	-91.8	-91.8	0.12 (1)	10.00
B- C	-17 / 0	-91.8	-91.8	0.09 (1)	6.25
E- D	0 / 0	-18.5	-18.5	0.04 (5)	10.00

WEBS

MEMB. FR-TO	MAX. FACTORED FORCE (LBS)	MAX CSI (LC)

CANTILEVER ANALYSIS HAS BEEN CONSIDERED IN THIS DESIGN

DESIGN CRITERIA

SPECIFIED LOADS:

TOP CH.	LL	=	25.6	PSF
	DL	=	6.0	PSF
BOT CH.	LL	=	0.0	PSF
	DL	=	7.4	PSF
TOTAL LOAD		=	39.0	PSF

SPACING = 24.0 IN. C/C

THIS TRUSS IS DESIGNED FOR RESIDENTIAL OR SMALL BUILDING REQUIREMENTS OF PART 9, NBCC 2015

THIS DESIGN COMPLIES WITH:
- PART 9 OF BCBC 2018 , NBC-2019AE
- PART 9 OF OBC 2012 (2019 AMENDMENT)
- CSA 086-14
- TPIC 2014

DESIGN ASSUMPTIONS
-OVERHANG NOT TO BE ALTERED OR CUT OFF.

(55 % OF 31.3 P.S.F. G.S.L. PLUS 8.4 P.S.F. RAIN LOAD) EQUALS 25.6 P.S.F. SPECIFIED ROOF LIVE LOAD

ALLOWABLE DEFL.(LL)= L/360 (0.19")
CALCULATED VERT. DEFL.(LL) = L/ 999 (0.00")
ALLOWABLE DEFL.(TL)= L/360 (0.19")
CALCULATED VERT. DEFL.(TL) = L/ 999 (0.00")

CSI: TC=0.12/1.00 (A-B:1) , BC=0.04/1.00 (D-E:5) , WB=0.00/1.00 (n/a:0) , SSI=0.09/1.00 (A-B:1)

DOL LUMBER=1.00 NAIL=1.00 LS BEND=1.10 COMP=1.10 SHEAR=1.10 TENS= 1.10

COMPANION LIVE LOAD FACTOR = 1.00

AUTOSOLVE RIGHT HEEL ONLY

TRUSS PLATE MANUFACTURER IS NOT RESPONSIBLE FOR QUALITY CONTROL IN THE TRUSS MANUFACTURING PLANT .

NAIL VALUES

PLATE	GRIP(DRY) (PSI) MAX	MIN	SHEAR (PLI) MAX	MIN	SECTION (PLI) MAX	MIN
MT20	650	371	1747	788	1987	1873

PLATE PLACEMENT TOL. = 0.250 inches

PLATE ROTATION TOL. = 5.0 Deg.

JSI GRIP= 0.10 (E) (INPUT = 0.90)
JSI METAL= 0.07 (B) (INPUT = 0.95)

LICENSED PROFESSIONAL ENGINEER
03-04-24
H. J. G. ALVES
100009024
PROVINCE OF ONTARIO

Structural component only
DWG# T-2406559

CITY OF RICHMOND HILL
BUILDING DIVISION
05/01/2024
RECEIVED
Per: joshua.nabua

JOB NAME	TRUSS NAME	QUANTITY	PLY	JOB DESC.	DRWG NO.
436988	J6	2	1	GREEN PARK HOMES TRUSS DESC.	

Tamarack Roof Truss, Burlington

Version 8.630 S Aug 30 2023 MiTek Industries, Inc. Mon Mar 4 08:03:21 2024 Page 1
ID:1PtzEZc03lbzkDC64XoV?RygPuj-yvCktipTsgxXcnritjN9w1AkepqB16epnnNJOpzeNPa

Scale = 1:33.7

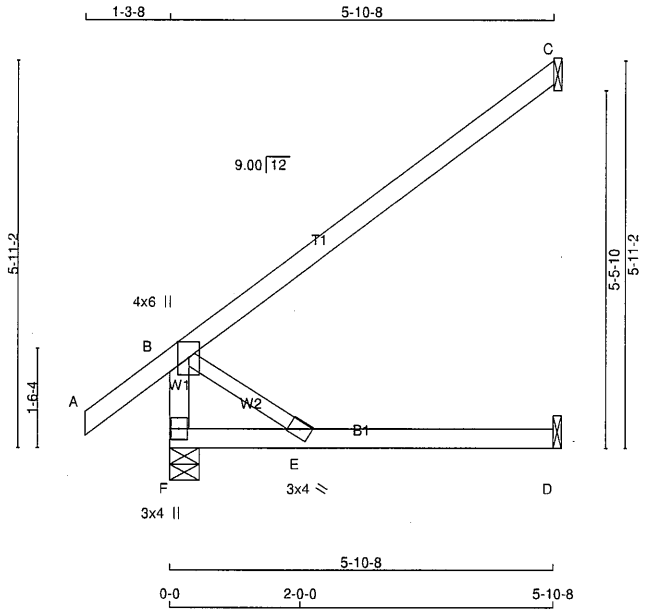

TOTAL WEIGHT = 2 X 20 = 40 lb

[M]

LUMBER
N. L. G. A. RULES

CHORDS	SIZE		LUMBER	DESCR.
F - B	2x4	DRY	No.2	SPF
A - C	2x4	DRY	No.2	SPF
F - D	2x4	DRY	No.2	SPF
ALL WEBS	2x3	DRY	No.2	SPF

DRY: SEASONED LUMBER.

PLATES (table is in inches)

JT	TYPE	PLATES	W	LEN	Y	X
B	TMVW+p	MT20	4.0	6.0	Edge	
E	BMW+w	MT20	3.0	4.0		
F	BMV1+p	MT20	3.0	4.0		

Edge - INDICATES REFERENCE CORNER OF PLATE TOUCHES EDGE OF CHORD.

NOTES- (1)
1) Lateral braces to be a minimum of 2X4 SPF #2.

DIMENSIONS, SUPPORTS AND LOADINGS SPECIFIED BY FABRICATOR TO BE VERIFIED BY BUILDING DESIGNER

BEARINGS

JT	FACTORED GROSS REACTION VERT	HORZ	MAXIMUM FACTORED GROSS REACTION DOWN	HORZ	UPLIFT	INPUT BRG IN-SX	REQRD BRG IN-SX
F	450	0	450	0	0	5-8	1-8
C	270	0	270	0	0	1-8	1-8
D	54	0	61	0	0	1-8	1-8

SEE MITEK STANDARD DETAIL MSD2015-H FOR CONNECTION TO JOINT(S) C , D

UNFACTORED REACTIONS

JT	1ST LCASE COMBINED	MAX./MIN. COMPONENT REACTIONS SNOW	LIVE	PERM.LIVE	WIND	DEAD	SOIL
F	316	221 / 0	0 / 0	0 / 0	0 / 0	95 / 0	0 / 0
C	186	150 / 0	0 / 0	0 / 0	0 / 0	35 / 0	0 / 0
D	43	0 / 0	0 / 0	0 / 0	0 / 0	43 / 0	0 / 0

BEARING MATERIAL TO BE SPF NO.2 OR BETTER AT JOINT(S) F

BRACING
TOP CHORD TO BE SHEATHED OR MAX. PURLIN SPACING = 10.00 FT.
MAX. UNBRACED BOTTOM CHORD LENGTH = 10.00 FT OR RIGID CEILING DIRECTLY APPLIED.

ALL PITCH BREAKS AND PERIMETER CORNER JOINTS MUST BE LATERALLY RESTRAINED.

LOADING
TOTAL LOAD CASES: (4)

CHORDS

MEMB. FR-TO	MAX. FACTORED FORCE (LBS)	FACTORED VERT. LOAD (PLF) FROM	TO	LC1 MAX CSI (LC)	MAX. UNBRAC LENGTH
F- B	-396 / 0	0.0	0.0	0.04 (1)	7.81
A- B	0 / 38	-91.8	-91.8	0.12 (1)	10.00
B- C	0 / 0	-91.8	-91.8	0.54 (1)	10.00
F- E	0 / 0	-18.5	-18.5	0.17 (4)	10.00
E- D	0 / 0	-18.5	-18.5	0.19 (4)	10.00

WEBS

MEMB. FR-TO	MAX. FACTORED FORCE (LBS)	MAX CSI (LC)
B- E	0 / 0	0.00 (1)

DESIGN CRITERIA

SPECIFIED LOADS:

TOP CH.	LL	=	25.6	PSF
	DL	=	6.0	PSF
BOT CH.	LL	=	0.0	PSF
	DL	=	7.4	PSF
TOTAL LOAD		=	39.0	PSF

SPACING = 24.0 IN. C/C

THIS TRUSS IS DESIGNED FOR RESIDENTIAL OR SMALL BUILDING REQUIREMENTS OF PART 9, NBCC 2015

THIS DESIGN COMPLIES WITH:
- PART 9 OF BCBC 2018 , NBC-2019AE
- PART 9 OF OBC 2012 (2019 AMENDMENT)
- CSA 086-14
- TPIC 2014

(55 % OF 31.3 P.S.F. G.S.L. PLUS 8.4 P.S.F. RAIN LOAD) EQUALS 25.6 P.S.F. SPECIFIED ROOF LIVE LOAD

ALLOWABLE DEFL.(LL)= L/360 (0.20")
CALCULATED VERT. DEFL.(LL) = L/ 999 (0.00")
ALLOWABLE DEFL.(TL)= L/360 (0.20")
CALCULATED VERT. DEFL.(TL) = L/ 999 (0.05")

CSI: TC=0.54/1.00 (B-C:1) , BC=0.19/1.00 (D-E:4) , WB=0.00/1.00 (B-E:1) , SSI=0.17/1.00 (B-C:1)

DOL LUMBER=1.00 NAIL=1.00 LS BEND=1.10 COMP=1.10 SHEAR=1.10 TENS= 1.10

COMPANION LIVE LOAD FACTOR = 1.00

AUTOSOLVE RIGHT HEEL ONLY

TRUSS PLATE MANUFACTURER IS NOT RESPONSIBLE FOR QUALITY CONTROL IN THE TRUSS MANUFACTURING PLANT .

NAIL VALUES

PLATE	GRIP(DRY) (PSI) MAX	MIN	SHEAR (PLI) MAX	MIN	SECTION (PLI) MAX	MIN
MT20	650	371	1747	788	1987	1873

PLATE PLACEMENT TOL. = 0.250 inches

PLATE ROTATION TOL. = 0.5 Deg.

JSI GRIP= 0.22 (B) (INPUT = 0.90)
JSI METAL= 0.10 (B) (INPUT = 0.95)

LICENSED PROFESSIONAL ENGINEER
03-04-24
H. J. G. ALVES
100009024
PROVINCE OF ONTARIO

Structural component only
DWG# T-2406560

CITY OF RICHMOND HILL
BUILDING DIVISION
05/01/2024
RECEIVED
Per: joshua.nabua

JOB NAME	TRUSS NAME	QUANTITY	PLY	JOB DESC.	DRWG NO.
436988	J7	4	1	GREEN PARK HOMES TRUSS DESC.	

Tamarack Roof Truss, Burlington

Version 8.630 S Aug 30 2023 MiTek Industries, Inc. Mon Mar 4 08:03:21 2024 Page 1
ID:1PtzEZc03lbzkDC64XoV?RygPuj-yvCktipTsgxXcnritjN9w1Ar6psp16epnnNJOpzeNPa

Scale = 1:17.8

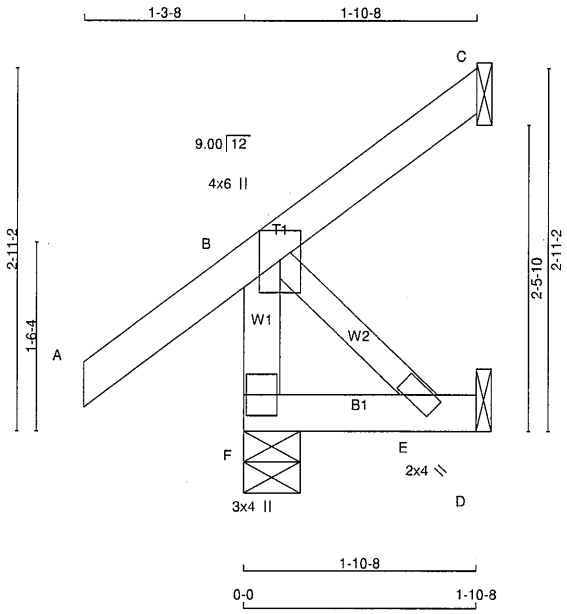

TOTAL WEIGHT = 4 X 9 = 38 lb

[M]

LUMBER
N. L. G. A. RULES

CHORDS	SIZE		LUMBER	DESCR.
F - B	2x4	DRY	No.2	SPF
A - C	2x4	DRY	No.2	SPF
F - D	2x4	DRY	No.2	SPF
ALL WEBS	2x3	DRY	No.2	SPF

DRY: SEASONED LUMBER.

PLATES (table is in inches)

JT	TYPE	PLATES	W	LEN	Y	X
B	TMVW+p	MT20	4.0	6.0	Edge	
E	BMW+w	MT20	2.0	4.0		
F	BMV1+p	MT20	3.0	4.0		

Edge - INDICATES REFERENCE CORNER OF PLATE TOUCHES EDGE OF CHORD.

NOTES- (1)
1) Lateral braces to be a minimum of 2X4 SPF #2.

DIMENSIONS, SUPPORTS AND LOADINGS SPECIFIED BY FABRICATOR TO BE VERIFIED BY BUILDING DESIGNER

BEARINGS

JT	FACTORED GROSS REACTION VERT	HORZ	MAXIMUM FACTORED GROSS REACTION DOWN	HORZ	UPLIFT	INPUT BRG IN-SX	REQRD BRG IN-SX
F	276	0	276	0	0	5-8	1-8
C	39	0	39	0	-36	1-8	1-8
D	17	0	19	0	0	1-8	1-8

SEE MITEK STANDARD DETAIL MSD2015-H FOR CONNECTION TO JOINT(S) C , D

PROVIDE ANCHORAGE AT BEARING JOINT C FOR 150 LBS FACTORED UPLIFT

UNFACTORED REACTIONS

JT	1ST LCASE COMBINED	MAX./MIN. COMPONENT REACTIONS SNOW	LIVE	PERM.LIVE	WIND	DEAD	SOIL
F	192	144 / 0	0 / 0	0 / 0	0 / 0	48 / 0	0 / 0
C	27	22 / -26	0 / 0	0 / 0	0 / 0	5 / 0	0 / 0
D	14	0 / 0	0 / 0	0 / 0	0 / 0	14 / 0	0 / 0

BEARING MATERIAL TO BE SPF NO.2 OR BETTER AT JOINT(S) F

BRACING
TOP CHORD TO BE SHEATHED OR MAX. PURLIN SPACING = 6.25 FT.
MAX. UNBRACED BOTTOM CHORD LENGTH = 10.00 FT OR RIGID CEILING DIRECTLY APPLIED.

ALL PITCH BREAKS AND PERIMETER CORNER JOINTS MUST BE LATERALLY RESTRAINED.

LOADING
TOTAL LOAD CASES: (5)

CHORDS MEMB. FR-TO	MAX. FACTORED FORCE (LBS)	FACTORED VERT. LOAD (PLF) FROM	TO	LC1 MAX CSI (LC)	MAX. UNBRAC LENGTH	WEBS MEMB. FR-TO	MAX. FACTORED FORCE (LBS)	MAX CSI (LC)
F- B	-259 / 0	0.0	0.0	0.03 (1)	7.81	B- E	0 / 0	0.00 (1)
A- B	0 / 38	-91.8	-91.8	0.12 (1)	10.00			
B- C	-28 / 0	-91.8	-91.8	0.12 (1)	6.25			
F- E	0 / 0	-18.5	-18.5	0.02 (4)	10.00			
E- D	0 / 0	-18.5	-18.5	0.01 (4)	10.00			

CANTILEVER ANALYSIS HAS BEEN CONSIDERED IN THIS DESIGN

DESIGN CRITERIA

SPECIFIED LOADS:

TOP CH.	LL	=	25.6	PSF
	DL	=	6.0	PSF
BOT CH.	LL	=	0.0	PSF
	DL	=	7.4	PSF
TOTAL LOAD		=	39.0	PSF

SPACING = 24.0 IN. C/C

THIS TRUSS IS DESIGNED FOR RESIDENTIAL OR SMALL BUILDING REQUIREMENTS OF PART 9, NBCC 2015

THIS DESIGN COMPLIES WITH:
- PART 9 OF BCBC 2018 , NBC-2019AE
- PART 9 OF OBC 2012 (2019 AMENDMENT)
- CSA 086-14
- TPIC 2014

DESIGN ASSUMPTIONS
-OVERHANG NOT TO BE ALTERED OR CUT OFF.

(55 % OF 31.3 P.S.F. G.S.L. PLUS 8.4 P.S.F. RAIN LOAD) EQUALS 25.6 P.S.F. SPECIFIED ROOF LIVE LOAD

ALLOWABLE DEFL.(LL)= L/360 (0.19")
CALCULATED VERT. DEFL.(LL) = L/ 999 (0.00")
ALLOWABLE DEFL.(TL)= L/360 (0.19")
CALCULATED VERT. DEFL.(TL) = L/ 999 (0.00")

CSI: TC=0.12/1.00 (A-B:1) , BC=0.02/1.00 (E-F:4) , WB=0.00/1.00 (B-E:1) , SSI=0.08/1.00 (B-C:1)

DOL LUMBER=1.00 NAIL=1.00 LS BEND=1.10 COMP=1.10 SHEAR=1.10 TENS= 1.10

COMPANION LIVE LOAD FACTOR = 1.00

AUTOSOLVE RIGHT HEEL ONLY

TRUSS PLATE MANUFACTURER IS NOT RESPONSIBLE FOR QUALITY CONTROL IN THE TRUSS MANUFACTURING PLANT .

NAIL VALUES

PLATE	GRIP(DRY) (PSI) MAX	MIN	SHEAR (PLI) MAX	MIN	SECTION (PLI) MAX	MIN
MT20	650	371	1747	788	1987	1873

PLATE PLACEMENT TOL. = 0.250 inches

PLATE ROTATION TOL. = 5.0 Deg.

JSI GRIP= 0.15 (B) (INPUT = 0.90)
JSI METAL= 0.07 (B) (INPUT = 0.95)

LICENSED PROFESSIONAL ENGINEER
03-04-24
H. J. G. ALVES
100009024
PROVINCE OF ONTARIO

Structural component only
DWG# T-2406561

CITY OF RICHMOND HILL
BUILDING DIVISION
05/01/2024
RECEIVED
Per: joshua.nabua

JOB NAME	TRUSS NAME	QUANTITY	PLY	JOB DESC.	DRWG NO.
436988	J8	1	1	GREEN PARK HOMES TRUSS DESC.	

Tamarack Roof Truss, Burlington

Version 8.630 S Aug 30 2023 MiTek Industries, Inc. Mon Mar 4 08:03:22 2024 Page 1
ID:1PtzEZc03IbzkDC64XoV?RygPuj-Q5m652q5dz3OExPvRRuOTFj_gCBGmZty0R6twFzeNPZ

Scale: 1/2"=1'

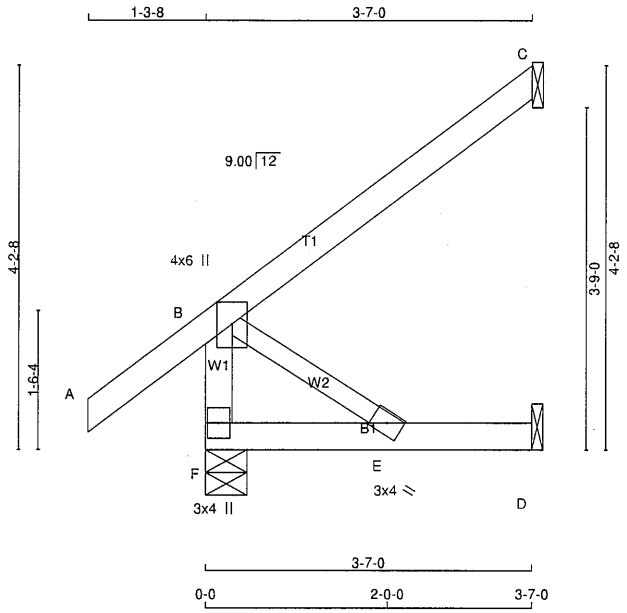

TOTAL WEIGHT = 14 lb

LUMBER
N. L. G. A. RULES

CHORDS	SIZE		LUMBER	DESCR.
F - B	2x4	DRY	No.2	SPF
A - C	2x4	DRY	No.2	SPF
F - D	2x4	DRY	No.2	SPF
ALL WEBS	2x3	DRY	No.2	SPF

DRY: SEASONED LUMBER.

PLATES (table is in inches)

JT	TYPE	PLATES	W	LEN	Y	X
B	TMVW+p	MT20	4.0	6.0	Edge	
E	BMW+w	MT20	3.0	4.0		
F	BMV1+p	MT20	3.0	4.0		

Edge - INDICATES REFERENCE CORNER OF PLATE TOUCHES EDGE OF CHORD.

NOTES- (1)
1) Lateral braces to be a minimum of 2X4 SPF #2.

DIMENSIONS, SUPPORTS AND LOADINGS SPECIFIED BY FABRICATOR TO BE VERIFIED BY BUILDING DESIGNER

BEARINGS

JT	FACTORED GROSS REACTION VERT	HORZ	MAXIMUM FACTORED GROSS REACTION DOWN	HORZ	UPLIFT	INPUT BRG IN-SX	REQRD BRG IN-SX
F	324	0	324	0	0	5-8	1-8
C	164	0	164	0	0	1-8	1-8
D	33	0	37	0	0	1-8	1-8

SEE MITEK STANDARD DETAIL MSD2015-H FOR CONNECTION TO JOINT(S) C , D

UNFACTORED REACTIONS

JT	1ST LCASE COMBINED	MAX./MIN. COMPONENT REACTIONS SNOW	LIVE	PERM.LIVE	WIND	DEAD	SOIL
F	227	162 / 0	0 / 0	0 / 0	0 / 0	65 / 0	0 / 0
C	113	92 / 0	0 / 0	0 / 0	0 / 0	21 / 0	0 / 0
D	27	0 / 0	0 / 0	0 / 0	0 / 0	27 / 0	0 / 0

BEARING MATERIAL TO BE SPF NO.2 OR BETTER AT JOINT(S) F

BRACING
TOP CHORD TO BE SHEATHED OR MAX. PURLIN SPACING = 10.00 FT.
MAX. UNBRACED BOTTOM CHORD LENGTH = 10.00 FT OR RIGID CEILING DIRECTLY APPLIED.

ALL PITCH BREAKS AND PERIMETER CORNER JOINTS MUST BE LATERALLY RESTRAINED.

LOADING
TOTAL LOAD CASES: (5)

CHORDS

MEMB. FR-TO	MAX. FACTORED FORCE (LBS)	FACTORED VERT. LOAD LC1 (PLF) FROM	TO	MAX CSI (LC)	MAX. UNBRAC LENGTH
F- B	-291 / 0	0.0	0.0	0.03 (1)	7.81
A- B	0 / 38	-91.8	-91.8	0.14 (5)	10.00
B- C	0 / 0	-91.8	-91.8	0.20 (1)	10.00
F- E	0 / 0	-18.5	-18.5	0.07 (4)	10.00
E- D	0 / 0	-18.5	-18.5	0.07 (4)	10.00

WEBS

MEMB. FR-TO	MAX. FACTORED FORCE (LBS)	MAX CSI (LC)
B- E	0 / 0	0.00 (1)

CANTILEVER ANALYSIS HAS BEEN CONSIDERED IN THIS DESIGN

DESIGN CRITERIA

SPECIFIED LOADS:

TOP CH.	LL	=	25.6	PSF
	DL	=	6.0	PSF
BOT CH.	LL	=	0.0	PSF
	DL	=	7.4	PSF
TOTAL LOAD		=	39.0	PSF

SPACING = 24.0 IN. C/C

THIS TRUSS IS DESIGNED FOR RESIDENTIAL OR SMALL BUILDING REQUIREMENTS OF PART 9, NBCC 2015

THIS DESIGN COMPLIES WITH:
- PART 9 OF BCBC 2018 , NBC-2019AE
- PART 9 OF OBC 2012 (2019 AMENDMENT)
- CSA 086-14
- TPIC 2014

(55 % OF 31.3 P.S.F. G.S.L. PLUS 8.4 P.S.F. RAIN LOAD) EQUALS 25.6 P.S.F. SPECIFIED ROOF LIVE LOAD

ALLOWABLE DEFL.(LL)= L/360 (0.19")
CALCULATED VERT. DEFL.(LL) = L/ 999 (0.00")
ALLOWABLE DEFL.(TL)= L/360 (0.19")
CALCULATED VERT. DEFL.(TL) = L/ 999 (0.01")

CSI: TC=0.20/1.00 (B-C:1) , BC=0.07/1.00 (E-F:4) , WB=0.00/1.00 (B-E:1) , SSI=0.10/1.00 (B-C:1)

DOL LUMBER=1.00 NAIL=1.00 LS BEND=1.10 COMP=1.10 SHEAR=1.10 TENS= 1.10

COMPANION LIVE LOAD FACTOR = 1.00

AUTOSOLVE RIGHT HEEL ONLY

TRUSS PLATE MANUFACTURER IS NOT RESPONSIBLE FOR QUALITY CONTROL IN THE TRUSS MANUFACTURING PLANT .

NAIL VALUES

PLATE	GRIP(DRY) (PSI) MAX	MIN	SHEAR (PLI) MAX	MIN	SECTION (PLI) MAX	MIN
MT20	650	371	1747	788	1987	1873

PLATE PLACEMENT TOL. = 0.250 inches

PLATE ROTATION TOL. = 5.0 Deg.

JSI GRIP= 0.17 (B) (INPUT = 0.90)
JSI METAL= 0.08 (B) (INPUT = 0.95)

LICENSED PROFESSIONAL ENGINEER
03-04-24
H. J. G. ALVES
100009024
PROVINCE OF ONTARIO

Structural component only
DWG# T-2406562

CITY OF RICHMOND HILL
BUILDING DIVISION
05/01/2024
RECEIVED
Per: joshua.nabua

JOB NAME	TRUSS NAME	QUANTITY	PLY	JOB DESC.	DRWG NO.
436988	J9	1	1	GREEN PARK HOMES TRUSS DESC.	

Tamarack Roof Truss, Burlington

Version 8.630 S Aug 30 2023 MiTek Industries, Inc. Mon Mar 4 08:03:23 2024 Page 1
ID:1PtzEZc03lbzkDC64XoV?RygPuj-uHJVlOqjOHBFs5_5?8Pd?SFAMcXVV075E5sQSizeNPY

Scale = 1:17.4

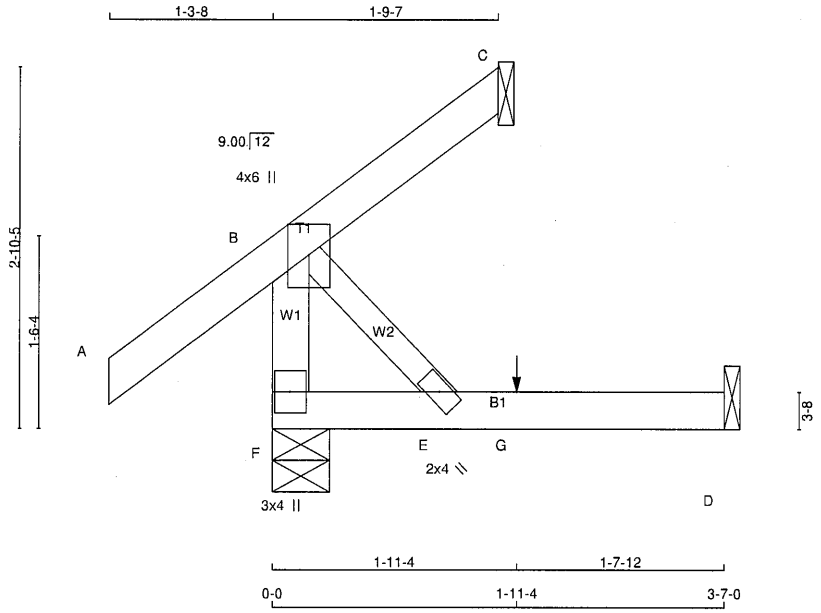

TOTAL WEIGHT = 11 lb

LUMBER
N. L. G. A. RULES

CHORDS	SIZE		LUMBER	DESCR.
F - B	2x4	DRY	No.2	SPF
A - C	2x4	DRY	No.2	SPF
F - D	2x4	DRY	No.2	SPF
ALL WEBS	2x3	DRY	No.2	SPF

DRY: SEASONED LUMBER.

PLATES (table is in inches)

JT	TYPE	PLATES	W	LEN	Y	X
B	TMVW+p	MT20	4.0	6.0	Edge	
E	BMW+w	MT20	2.0	4.0		
F	BMV1+p	MT20	3.0	4.0		

Edge - INDICATES REFERENCE CORNER OF PLATE TOUCHES EDGE OF CHORD.

NOTES- (1)
1) Lateral braces to be a minimum of 2X4 SPF #2.

DIMENSIONS, SUPPORTS AND LOADINGS SPECIFIED BY FABRICATOR TO BE VERIFIED BY BUILDING DESIGNER

BEARINGS

JT	FACTORED GROSS REACTION VERT	HORZ	MAXIMUM FACTORED GROSS REACTION DOWN	HORZ	UPLIFT	INPUT BRG IN-SX	REQRD BRG IN-SX
F	290	0	290	0	0	5-8	1-8
C	33	0	33	0	-39	1-8	1-8
D	33	0	37	0	0	1-8	1-8

SEE MITEK STANDARD DETAIL MSD2015-H FOR CONNECTION TO JOINT(S) C , D

PROVIDE ANCHORAGE AT BEARING JOINT C FOR 150 LBS FACTORED UPLIFT

UNFACTORED REACTIONS

JT	1ST LCASE COMBINED	MAX./MIN. COMPONENT REACTIONS SNOW	LIVE	PERM.LIVE	WIND	DEAD	SOIL
F	204	144 / 0	0 / 0	0 / 0	0 / 0	60 / 0	0 / 0
C	23	18 / -27	0 / 0	0 / 0	0 / 0	4 / 0	0 / 0
D	27	0 / 0	0 / 0	0 / 0	0 / 0	27 / 0	0 / 0

BEARING MATERIAL TO BE SPF NO.2 OR BETTER AT JOINT(S) F, C

BRACING
TOP CHORD TO BE SHEATHED OR MAX. PURLIN SPACING = 6.25 FT.
MAX. UNBRACED BOTTOM CHORD LENGTH = 10.00 FT OR RIGID CEILING DIRECTLY APPLIED.

ALL PITCH BREAKS AND PERIMETER CORNER JOINTS MUST BE LATERALLY RESTRAINED.

LOADING
TOTAL LOAD CASES: (5)

CHORDS

MEMB. FR-TO	MAX. FACTORED FORCE (LBS)	FACTORED VERT. LOAD (PLF) FROM	TO	LC1	MAX CSI (LC)	MAX. UNBRAC LENGTH
F- B	-257 / 0	0.0	0.0	0.03 (1)	7.81	
A- B	0 / 38	-91.8	-91.8	0.14 (5)	10.00	
B- C	-29 / 0	-91.8	-91.8	0.13 (5)	6.25	
F- E	0 / 0	-18.5	-18.5	0.06 (4)	10.00	
E- G	0 / 0	-18.5	-18.5	0.07 (4)	10.00	
G- D	0 / 0	-18.5	-18.5	0.07 (4)	10.00	

WEBS

MEMB. FR-TO	MAX. FACTORED FORCE (LBS)	MAX CSI (LC)
B- E	0 / 0	0.00 (1)

SPECIFIED CONCENTRATED LOADS (LBS)

JT	LOC.	LC1	MAX-	MAX+	FACE	DIR.	TYPE	HEEL	CONN.
G	1-11-4	1	1	---	FRONT	VERT	TOTAL	---	C1

CONNECTION REQUIREMENTS

1) **C1:** A SUITABLE HANGER/MECHANICAL CONNECTION IS REQUIRED.

CANTILEVER ANALYSIS HAS BEEN CONSIDERED IN THIS DESIGN

DESIGN CRITERIA

SPECIFIED LOADS:

TOP CH.	LL	=	25.6	PSF
	DL	=	6.0	PSF
BOT CH.	LL	=	0.0	PSF
	DL	=	7.4	PSF
TOTAL LOAD		=	39.0	PSF

SPACING = 24.0 IN. C/C

THIS TRUSS IS DESIGNED FOR RESIDENTIAL OR SMALL BUILDING REQUIREMENTS OF PART 9, NBCC 2015

THIS DESIGN COMPLIES WITH:
- PART 9 OF BCBC 2018 , NBC-2019AE
- PART 9 OF OBC 2012 (2019 AMENDMENT)
- CSA 086-14
- TPIC 2014

DESIGN ASSUMPTIONS
-OVERHANG NOT TO BE ALTERED OR CUT OFF.

(55 % OF 31.3 P.S.F. G.S.L. PLUS 8.4 P.S.F. RAIN LOAD) EQUALS 25.6 P.S.F. SPECIFIED ROOF LIVE LOAD

ALLOWABLE DEFL.(LL)= L/360 (0.19")
CALCULATED VERT. DEFL.(LL) = L/ 999 (0.00")
ALLOWABLE DEFL.(TL)= L/360 (0.19")
CALCULATED VERT. DEFL.(TL) = L/ 999 (0.01")

CSI: TC=0.14/1.00 (A-B:5) , BC=0.07/1.00 (D-E:4) , WB=0.00/1.00 (B-E:1) , SSI=0.09/1.00 (A-B:5)

DOL LUMBER=1.00 NAIL=1.00 LS BEND=1.10 COMP=1.10 SHEAR=1.10 TENS= 1.10

COMPANION LIVE LOAD FACTOR = 1.00

AUTOSOLVE RIGHT HEEL ONLY

TRUSS PLATE MANUFACTURER IS NOT RESPONSIBLE FOR QUALITY CONTROL IN THE TRUSS MANUFACTURING PLANT .

NAIL VALUES

PLATE	GRIP(DRY) (PSI) MAX	MIN	SHEAR (PLI) MAX	MIN	SECTION (PLI) MAX	MIN
MT20	650	371	1747	788	1987	1873

PLATE PLACEMENT TOL. = 0.250 inches

PLATE ROTATION TOL. = 5.0 Deg.

JSI GRIP= 0.15 (B) (INPUT = 0.90)
JSI METAL= 0.07 (B) (INPUT = 0.95)

LICENSED PROFESSIONAL ENGINEER
03-04-24
H. J. G. ALVES
100009024
PROVINCE OF ONTARIO

Structural component only
DWG# T-2406563

CITY OF RICHMOND HILL
BUILDING DIVISION
05/01/2024
RECEIVED
Per: joshua.nabua

JOB NAME	TRUSS NAME	QUANTITY	PLY	JOB DESC.	DRWG NO.
436988	J10	2	1	GREEN PARK HOMES TRUSS DESC.	

Tamarack Roof Truss, Burlington

Version 8.630 S Aug 30 2023 MiTek Industries, Inc. Mon Mar 4 08:03:24 2024 Page 1
ID:1PtzEZc03IbzkDC64XoV?RygPuj-MUttVkrM9bK6TEZHZrwsYgoMM0uVETNFTlb__8zeNPX

Scale = 1:17.4

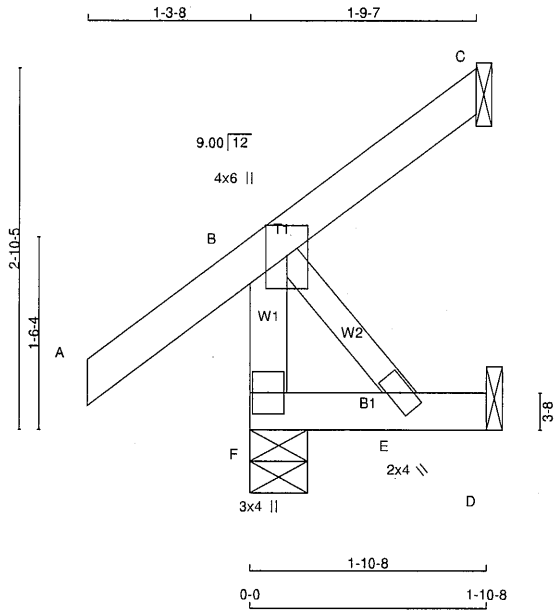

TOTAL WEIGHT = 2 X 9 = 18 lb

[M]

LUMBER
N. L. G. A. RULES

CHORDS	SIZE		LUMBER	DESCR.
F - B	2x4	DRY	No.2	SPF
A - C	2x4	DRY	No.2	SPF
F - D	2x4	DRY	No.2	SPF
ALL WEBS	2x3	DRY	No.2	SPF

DRY: SEASONED LUMBER.

PLATES (table is in inches)

JT	TYPE	PLATES	W	LEN	Y	X
B	TMVW+p	MT20	4.0	6.0	Edge	
E	BMW+w	MT20	2.0	4.0		
F	BMV1+p	MT20	3.0	4.0		

Edge - INDICATES REFERENCE CORNER OF PLATE TOUCHES EDGE OF CHORD.

NOTES- (1)
1) Lateral braces to be a minimum of 2X4 SPF #2.

DIMENSIONS, SUPPORTS AND LOADINGS SPECIFIED BY FABRICATOR TO BE VERIFIED BY BUILDING DESIGNER

BEARINGS

JT	FACTORED GROSS REACTION VERT	HORZ	MAXIMUM FACTORED GROSS REACTION DOWN	HORZ	UPLIFT	INPUT BRG IN-SX	REQRD BRG IN-SX
F	275	0	275	0	0	5-8	1-8
C	33	0	33	0	-39	1-8	1-8
D	17	0	19	0	0	1-8	1-8

SEE MITEK STANDARD DETAIL MSD2015-H FOR CONNECTION TO JOINT(S) C , D

PROVIDE ANCHORAGE AT BEARING JOINT C FOR 150 LBS FACTORED UPLIFT

UNFACTORED REACTIONS

JT	1ST LCASE COMBINED	MAX./MIN. COMPONENT REACTIONS SNOW	LIVE	PERM.LIVE	WIND	DEAD	SOIL
F	191	144 / 0	0 / 0	0 / 0	0 / 0	48 / 0	0 / 0
C	23	18 / -27	0 / 0	0 / 0	0 / 0	4 / 0	0 / 0
D	14	0 / 0	0 / 0	0 / 0	0 / 0	14 / 0	0 / 0

BEARING MATERIAL TO BE SPF NO.2 OR BETTER AT JOINT(S) F, C

BRACING
TOP CHORD TO BE SHEATHED OR MAX. PURLIN SPACING = 6.25 FT.
MAX. UNBRACED BOTTOM CHORD LENGTH = 10.00 FT OR RIGID CEILING DIRECTLY APPLIED.

ALL PITCH BREAKS AND PERIMETER CORNER JOINTS MUST BE LATERALLY RESTRAINED.

LOADING
TOTAL LOAD CASES: (5)

CHORDS

MEMB. FR-TO	FORCE (LBS)	VERT. LOAD LC1 (PLF) FROM	TO	MAX CSI (LC)	MAX. UNBRAC LENGTH
F- B	-257 / 0	0.0	0.0	0.03 (1)	7.81
A- B	0 / 38	-91.8	-91.8	0.12 (1)	10.00
B- C	-29 / 0	-91.8	-91.8	0.12 (1)	6.25
F- E	0 / 0	-18.5	-18.5	0.02 (4)	10.00
E- D	0 / 0	-18.5	-18.5	0.02 (4)	10.00

WEBS

MEMB. FR-TO	FORCE (LBS)	MAX CSI (LC)
B- E	0 / 0	0.00 (1)

CANTILEVER ANALYSIS HAS BEEN CONSIDERED IN THIS DESIGN

DESIGN CRITERIA

SPECIFIED LOADS:

TOP CH.	LL	=	25.6	PSF
	DL	=	6.0	PSF
BOT CH.	LL	=	0.0	PSF
	DL	=	7.4	PSF
TOTAL LOAD		=	39.0	PSF

SPACING = 24.0 IN. C/C

THIS TRUSS IS DESIGNED FOR RESIDENTIAL OR SMALL BUILDING REQUIREMENTS OF PART 9, NBCC 2015

THIS DESIGN COMPLIES WITH:
- PART 9 OF BCBC 2018 , NBC-2019AE
- PART 9 OF OBC 2012 (2019 AMENDMENT)
- CSA 086-14
- TPIC 2014

DESIGN ASSUMPTIONS
-OVERHANG NOT TO BE ALTERED OR CUT OFF.

(55 % OF 31.3 P.S.F. G.S.L. PLUS 8.4 P.S.F. RAIN LOAD) EQUALS 25.6 P.S.F. SPECIFIED ROOF LIVE LOAD

ALLOWABLE DEFL.(LL)= L/360 (0.19")
CALCULATED VERT. DEFL.(LL) = L/ 999 (0.00")
ALLOWABLE DEFL.(TL)= L/360 (0.19")
CALCULATED VERT. DEFL.(TL) = L/ 999 (0.00")

CSI: TC=0.12/1.00 (A-B:1) , BC=0.02/1.00 (E-F:4) , WB=0.00/1.00 (B-E:1) , SSI=0.08/1.00 (B-C:1)

DOL LUMBER=1.00 NAIL=1.00 LS BEND=1.10 COMP=1.10 SHEAR=1.10 TENS= 1.10

COMPANION LIVE LOAD FACTOR = 1.00

AUTOSOLVE RIGHT HEEL ONLY

TRUSS PLATE MANUFACTURER IS NOT RESPONSIBLE FOR QUALITY CONTROL IN THE TRUSS MANUFACTURING PLANT .

NAIL VALUES

PLATE	GRIP(DRY) (PSI) MAX	MIN	SHEAR (PLI) MAX	MIN	SECTION (PLI) MAX	MIN
MT20	650	371	1747	788	1987	1873

PLATE PLACEMENT TOL. = 0.250 inches

PLATE ROTATION TOL. = 5.0 Deg.

JSI GRIP= 0.15 (B) (INPUT = 0.90)
JSI METAL= 0.07 (B) (INPUT = 0.95)

LICENSED PROFESSIONAL ENGINEER
03-04-24
H. J. G. ALVES
100009024
PROVINCE OF ONTARIO

Structural component only
DWG# T-2406564

CITY OF RICHMOND HILL
BUILDING DIVISION
05/01/2024
RECEIVED
Per: joshua.nabua

JOB NAME	TRUSS NAME	QUANTITY	PLY	JOB DESC.	DRWG NO.
436988	J11	2	1	GREEN PARK HOMES TRUSS DESC.	

Tamarack Roof Truss, Burlington

Version 8.630 S Aug 30 2023 MiTek Industries, Inc. Mon Mar 4 08:03:25 2024 Page 1
ID:1PtzEZc03lbzkDC64XoV?RygPuj-qgRFj4s_wuSz5O8U6ZS54tKW?QEPzwdOiPLXXazeNPW

Scale = 1:21.0

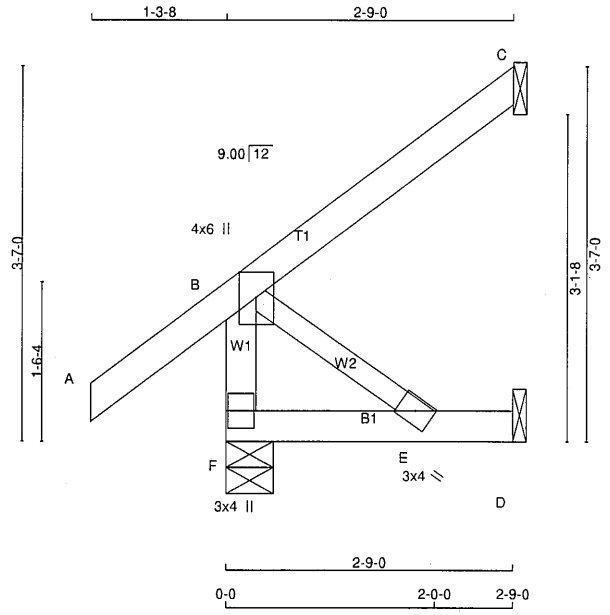

TOTAL WEIGHT = 2 X 12 = 24 lb
[M]

LUMBER
N. L. G. A. RULES

CHORDS	SIZE		LUMBER	DESCR.
F - B	2x4	DRY	No.2	SPF
A - C	2x4	DRY	No.2	SPF
F - D	2x4	DRY	No.2	SPF
ALL WEBS	2x3	DRY	No.2	SPF

DRY: SEASONED LUMBER.

PLATES (table is in inches)

JT	TYPE	PLATES	W	LEN	Y	X
B	TMVW+p	MT20	4.0	6.0	Edge	
E	BMW+w	MT20	3.0	4.0		
F	BMV1+p	MT20	3.0	4.0		

Edge - INDICATES REFERENCE CORNER OF PLATE TOUCHES EDGE OF CHORD.

NOTES- (1)
1) Lateral braces to be a minimum of 2X4 SPF #2.

DIMENSIONS, SUPPORTS AND LOADINGS SPECIFIED BY FABRICATOR TO BE VERIFIED BY BUILDING DESIGNER

BEARINGS

JT	FACTORED GROSS REACTION VERT	HORZ	MAXIMUM FACTORED GROSS REACTION DOWN	HORZ	UPLIFT	INPUT BRG IN-SX	REQRD BRG IN-SX
F	278	0	278	0	0	5-8	1-8
C	126	0	126	0	0	1-8	1-8
D	25	0	28	0	0	1-8	1-8

SEE MITEK STANDARD DETAIL MSD2015-H FOR CONNECTION TO JOINT(S) C , D

UNFACTORED REACTIONS

JT	1ST LCASE COMBINED	MAX./MIN. COMPONENT REACTIONS SNOW	LIVE	PERM.LIVE	WIND	DEAD	SOIL
F	194	141 / 0	0 / 0	0 / 0	0 / 0	53 / 0	0 / 0
C	87	70 / 0	0 / 0	0 / 0	0 / 0	17 / 0	0 / 0
D	20	0 / 0	0 / 0	0 / 0	0 / 0	20 / 0	0 / 0

BEARING MATERIAL TO BE SPF NO.2 OR BETTER AT JOINT(S) F

BRACING
TOP CHORD TO BE SHEATHED OR MAX. PURLIN SPACING = 10.00 FT.
MAX. UNBRACED BOTTOM CHORD LENGTH = 10.00 FT OR RIGID CEILING DIRECTLY APPLIED.

ALL PITCH BREAKS AND PERIMETER CORNER JOINTS MUST BE LATERALLY RESTRAINED.

LOADING
TOTAL LOAD CASES: (5)

CHORDS

MEMB. FR-TO	MAX. FACTORED FORCE (LBS)	FACTORED VERT. LOAD (PLF) FROM	TO	LC1	MAX CSI (LC)	MAX. UNBRAC LENGTH
F- B	-253 / 0	0.0	0.0	0.03 (1)	7.81	
A- B	0 / 38	-91.8	-91.8	0.13 (5)	10.00	
B- C	0 / 0	-91.8	-91.8	0.12 (1)	10.00	
F- E	0 / 0	-18.5	-18.5	0.04 (4)	10.00	
E- D	0 / 0	-18.5	-18.5	0.04 (4)	10.00	

WEBS

MEMB. FR-TO	MAX. FACTORED FORCE (LBS)	MAX CSI (LC)
B- E	0 / 0	0.00 (1)

CANTILEVER ANALYSIS HAS BEEN CONSIDERED IN THIS DESIGN

DESIGN CRITERIA

SPECIFIED LOADS:

TOP CH.	LL	=	25.6	PSF
	DL	=	6.0	PSF
BOT CH.	LL	=	0.0	PSF
	DL	=	7.4	PSF
TOTAL LOAD		=	39.0	PSF

SPACING = 24.0 IN. C/C

THIS TRUSS IS DESIGNED FOR RESIDENTIAL OR SMALL BUILDING REQUIREMENTS OF PART 9, NBCC 2015

THIS DESIGN COMPLIES WITH:
- PART 9 OF BCBC 2018 , NBC-2019AE
- PART 9 OF OBC 2012 (2019 AMENDMENT)
- CSA 086-14
- TPIC 2014

(55 % OF 31.3 P.S.F. G.S.L. PLUS 8.4 P.S.F. RAIN LOAD) EQUALS 25.6 P.S.F. SPECIFIED ROOF LIVE LOAD

ALLOWABLE DEFL.(LL)= L/360 (0.19")
CALCULATED VERT. DEFL.(LL) = L/ 999 (0.00")
ALLOWABLE DEFL.(TL)= L/360 (0.19")
CALCULATED VERT. DEFL.(TL) = L/ 999 (0.00")

CSI: TC=0.13/1.00 (A-B:5) , BC=0.04/1.00 (E-F:4) , WB=0.00/1.00 (B-E:1) , SSI=0.08/1.00 (A-B:5)

DOL LUMBER=1.00 NAIL=1.00 LS BEND=1.10 COMP=1.10 SHEAR=1.10 TENS= 1.10

COMPANION LIVE LOAD FACTOR = 1.00

AUTOSOLVE RIGHT HEEL ONLY

TRUSS PLATE MANUFACTURER IS NOT RESPONSIBLE FOR QUALITY CONTROL IN THE TRUSS MANUFACTURING PLANT .

NAIL VALUES

PLATE	GRIP(DRY) (PSI) MAX	MIN	SHEAR (PLI) MAX	MIN	SECTION (PLI) MAX	MIN
MT20	650	371	1747	788	1987	1873

PLATE PLACEMENT TOL. = 0.250 inches

PLATE ROTATION TOL. = 5.0 Deg.

JSI GRIP= 0.14 (B) (INPUT = 0.90)
JSI METAL= 0.07 (B) (INPUT = 0.95)

LICENSED PROFESSIONAL ENGINEER
03-04-24
H. J. G. ALVES
100009024
PROVINCE OF ONTARIO

Structural component only
DWG# T-2406565

CITY OF RICHMOND HILL
BUILDING DIVISION
05/01/2024
RECEIVED
Per: joshua.nabua

JOB NAME	TRUSS NAME	QUANTITY	PLY	JOB DESC.	DRWG NO.
436988	J12	1	1	GREEN PARK HOMES TRUSS DESC.	

Tamarack Roof Truss, Burlington

Version 8.630 S Aug 30 2023 MiTek Industries, Inc. Mon Mar 4 08:03:26 2024 Page 1
ID:1PtzEZc03lbzkDC64XoV?RygPuj-Is?dwQtchCaqjYjggGzKd5thfqZdiNtYx34431zeNPV

Scale = 1:17.4

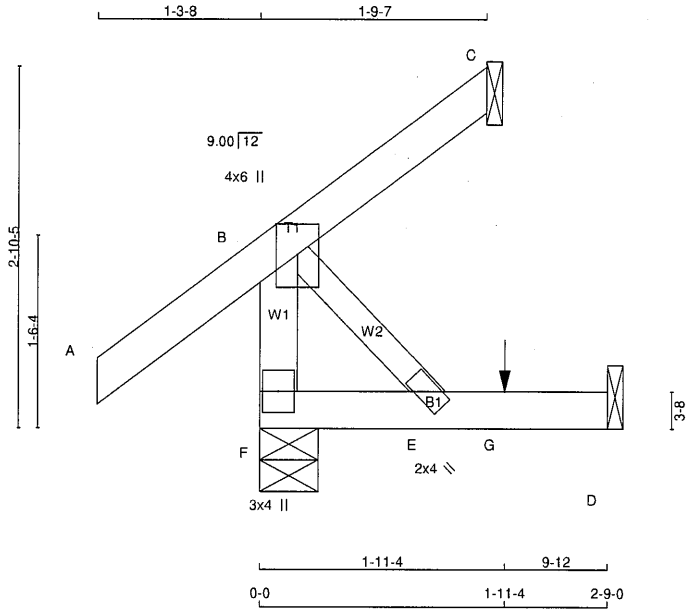

TOTAL WEIGHT = 10 lb [M]

LUMBER
N. L. G. A. RULES

CHORDS	SIZE		LUMBER	DESCR.
F - B	2x4	DRY	No.2	SPF
A - C	2x4	DRY	No.2	SPF
F - D	2x4	DRY	No.2	SPF
ALL WEBS	2x3	DRY	No.2	SPF

DRY: SEASONED LUMBER.

PLATES (table is in inches)

JT	TYPE	PLATES	W	LEN	Y	X
B	TMVW+p	MT20	4.0	6.0	Edge	
E	BMW+w	MT20	2.0	4.0		
F	BMV1+p	MT20	3.0	4.0		

Edge - INDICATES REFERENCE CORNER OF PLATE TOUCHES EDGE OF CHORD.

NOTES- (1)
1) Lateral braces to be a minimum of 2X4 SPF #2.

DIMENSIONS, SUPPORTS AND LOADINGS SPECIFIED BY FABRICATOR TO BE VERIFIED BY BUILDING DESIGNER

BEARINGS

JT	FACTORED GROSS REACTION VERT	HORZ	MAXIMUM FACTORED GROSS REACTION DOWN	HORZ	UPLIFT	INPUT BRG IN-SX	REQRD BRG IN-SX
F	283	0	283	0	0	5-8	1-8
C	33	0	33	0	-39	1-8	1-8
D	26	0	29	0	0	1-8	1-8

SEE MITEK STANDARD DETAIL MSD2015-H FOR CONNECTION TO JOINT(S) C , D

PROVIDE ANCHORAGE AT BEARING JOINT C FOR 150 LBS FACTORED UPLIFT

UNFACTORED REACTIONS

JT	1ST LCASE COMBINED	MAX./MIN. COMPONENT REACTIONS SNOW	LIVE	PERM.LIVE	WIND	DEAD	SOIL
F	198	144 / 0	0 / 0	0 / 0	0 / 0	54 / 0	0 / 0
C	23	18 / -27	0 / 0	0 / 0	0 / 0	4 / 0	0 / 0
D	21	0 / 0	0 / 0	0 / 0	0 / 0	21 / 0	0 / 0

BEARING MATERIAL TO BE SPF NO.2 OR BETTER AT JOINT(S) F, C

BRACING
TOP CHORD TO BE SHEATHED OR MAX. PURLIN SPACING = 6.25 FT.
MAX. UNBRACED BOTTOM CHORD LENGTH = 10.00 FT OR RIGID CEILING DIRECTLY APPLIED.

ALL PITCH BREAKS AND PERIMETER CORNER JOINTS MUST BE LATERALLY RESTRAINED.

LOADING
TOTAL LOAD CASES: (5)

CHORDS

MEMB. FR-TO	MAX. FACTORED FORCE (LBS)	FACTORED VERT. LOAD (PLF) FROM	TO	LC1 MAX CSI (LC)	MAX. UNBRAC LENGTH
F- B	-257 / 0	0.0	0.0	0.03 (1)	7.81
A- B	0 / 38	-91.8	-91.8	0.14 (5)	10.00
B- C	-29 / 0	-91.8	-91.8	0.13 (5)	6.25
F- E	0 / 0	-18.5	-18.5	0.04 (4)	10.00
E- G	0 / 0	-18.5	-18.5	0.04 (4)	10.00
G- D	0 / 0	-18.5	-18.5	0.04 (4)	10.00

WEBS

MEMB. FR-TO	MAX. FACTORED FORCE (LBS)	MAX CSI (LC)
B- E	0 / 0	0.00 (1)

SPECIFIED CONCENTRATED LOADS (LBS)

JT	LOC.	LC1	MAX-	MAX+	FACE	DIR.	TYPE	HEEL	CONN.
G	1-11-4	-0	-0	---	FRONT	VERT	TOTAL	---	C1

CONNECTION REQUIREMENTS

1) **C1:** A SUITABLE HANGER/MECHANICAL CONNECTION IS REQUIRED.

CANTILEVER ANALYSIS HAS BEEN CONSIDERED IN THIS DESIGN

DESIGN CRITERIA

SPECIFIED LOADS:

TOP CH.	LL	=	25.6	PSF
	DL	=	6.0	PSF
BOT CH.	LL	=	0.0	PSF
	DL	=	7.4	PSF
TOTAL LOAD		=	39.0	PSF

SPACING = 24.0 IN. C/C

THIS TRUSS IS DESIGNED FOR RESIDENTIAL OR SMALL BUILDING REQUIREMENTS OF PART 9, NBCC 2015

THIS DESIGN COMPLIES WITH:
- PART 9 OF BCBC 2018 , NBC-2019AE
- PART 9 OF OBC 2012 (2019 AMENDMENT)
- CSA 086-14
- TPIC 2014

DESIGN ASSUMPTIONS
-OVERHANG NOT TO BE ALTERED OR CUT OFF.

(55 % OF 31.3 P.S.F. G.S.L. PLUS 8.4 P.S.F. RAIN LOAD) EQUALS 25.6 P.S.F. SPECIFIED ROOF LIVE LOAD

ALLOWABLE DEFL.(LL)= L/360 (0.19")
CALCULATED VERT. DEFL.(LL) = L/ 999 (0.00")
ALLOWABLE DEFL.(TL)= L/360 (0.19")
CALCULATED VERT. DEFL.(TL) = L/ 999 (0.00")

CSI: TC=0.14/1.00 (A-B:5) , BC=0.04/1.00 (D-E:4) , WB=0.00/1.00 (B-E:1) , SSI=0.09/1.00 (A-B:5)

DOL LUMBER=1.00 NAIL=1.00 LS BEND=1.10 COMP=1.10 SHEAR=1.10 TENS= 1.10

COMPANION LIVE LOAD FACTOR = 1.00

AUTOSOLVE RIGHT HEEL ONLY

TRUSS PLATE MANUFACTURER IS NOT RESPONSIBLE FOR QUALITY CONTROL IN THE TRUSS MANUFACTURING PLANT .

NAIL VALUES

PLATE	GRIP(DRY) (PSI) MAX	MIN	SHEAR (PLI) MAX	MIN	SECTION (PLI) MAX	MIN
MT20	650	371	1747	788	1987	1873

PLATE PLACEMENT TOL. = 0.250 inches

PLATE ROTATION TOL. = 5.0 Deg.

JSI GRIP= 0.15 (B) (INPUT = 0.90)
JSI METAL= 0.07 (B) (INPUT = 0.95)

LICENSED PROFESSIONAL ENGINEER
03-04-24
H. J. G. ALVES
100009024
PROVINCE OF ONTARIO

Structural component only
DWG# T-2406566

CITY OF RICHMOND HILL
BUILDING DIVISION
05/01/2024
RECEIVED
Per: joshua.nabua

JOB NAME	TRUSS NAME	QUANTITY	PLY	JOB DESC.	DRWG NO.
436988	J13	3	1	GREEN PARK HOMES TRUSS DESC.	

Tamarack Roof Truss, Burlington

Version 8.630 S Aug 30 2023 MiTek Industries, Inc. Mon Mar 4 08:03:26 2024 Page 1
ID:1PtzEZc03lbzkDC64XoV?RygPuj-ls?dwQtchCaqjYjggGzKd5tekqWmiNtYx34431zeNPV

Scale = 1:18.1

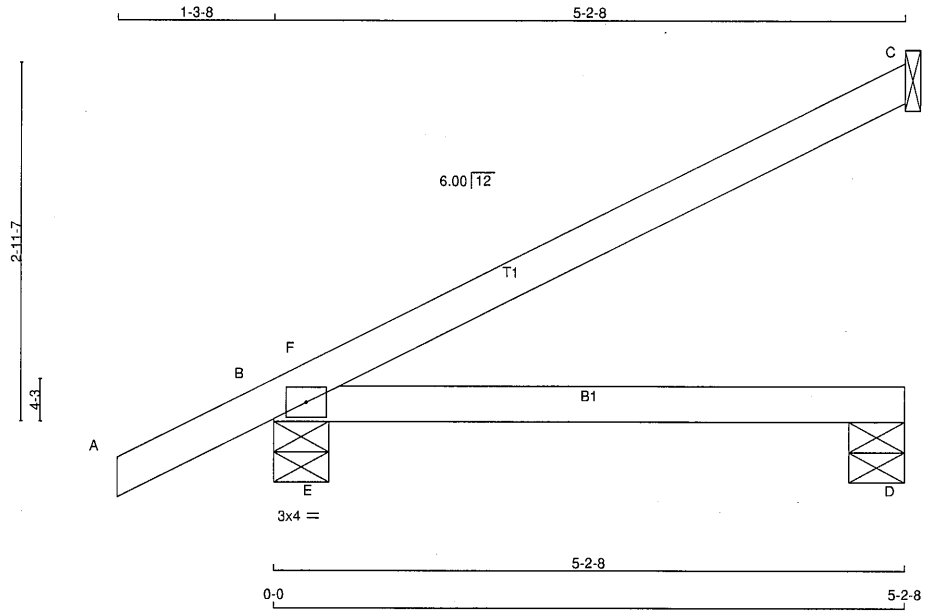

TOTAL WEIGHT = 3 X 14 = 43 lb [M]

LUMBER
N. L. G. A. RULES

CHORDS	SIZE		LUMBER	DESCR.
A - C	2x4	DRY	No.2	SPF
B - D	2x4	DRY	No.2	SPF

DRY: SEASONED LUMBER.

PLATES (table is in inches)

JT	TYPE	PLATES	W	LEN	Y	X
B	TMB1-I	MT20	3.0	4.0		

NOTES- (1)
1) Lateral braces to be a minimum of 2X4 SPF #2.

DIMENSIONS, SUPPORTS AND LOADINGS SPECIFIED BY FABRICATOR TO BE VERIFIED BY BUILDING DESIGNER

BEARINGS

JT	FACTORED GROSS REACTION VERT	HORZ	MAXIMUM FACTORED GROSS REACTION DOWN	HORZ	UPLIFT	INPUT BRG IN-SX	REQRD BRG IN-SX
C	209	0	209	0	0	1-8	1-8
B	412	0	412	0	0	5-8	1-8
D	78	0	78	0	0	5-8	1-8

SEE MITEK STANDARD DETAIL MSD2015-H FOR CONNECTION TO JOINT(S) C

UNFACTORED REACTIONS

JT	1ST LCASE COMBINED	MAX./MIN. COMPONENT REACTIONS SNOW	LIVE	PERM.LIVE	WIND	DEAD	SOIL
C	145	113 / 0	0 / 0	0 / 0	0 / 0	32 / 0	0 / 0
B	289	203 / 0	0 / 0	0 / 0	0 / 0	86 / 0	0 / 0
D	58	20 / 0	0 / 0	0 / 0	0 / 0	38 / 0	0 / 0

BEARING MATERIAL TO BE SPF NO.2 OR BETTER AT JOINT(S) C, B, D

BRACING
TOP CHORD TO BE SHEATHED OR MAX. PURLIN SPACING = 6.25 FT.
MAX. UNBRACED BOTTOM CHORD LENGTH = 10.00 FT OR RIGID CEILING DIRECTLY APPLIED.

ALL PITCH BREAKS AND PERIMETER CORNER JOINTS MUST BE LATERALLY RESTRAINED.

LOADING
TOTAL LOAD CASES: (4)

CHORDS

MEMB. FR-TO	MAX. FACTORED FORCE (LBS)	FACTORED VERT. LOAD (PLF) FROM	TO	LC1	MAX CSI (LC)	MAX. UNBRAC LENGTH
A- B	0 / 27	-91.8	-91.8	0.12 (1)	10.00	
B- F	-25 / 68	-91.8	-91.8	0.08 (1)	6.25	
F- C	-5 / 2	-91.8	-91.8	0.32 (1)	10.00	
B- E	0 / 0	-18.5	-18.5	0.22 (1)	10.00	
E- D	0 / 0	-18.5	-18.5	0.22 (1)	10.00	

WEBS

MEMB. FR-TO	MAX. FACTORED FORCE (LBS)	MAX CSI (LC)
E- F	-384 / 9	0.00 (1)

DESIGN CRITERIA

SPECIFIED LOADS:

TOP CH.	LL	=	25.6	PSF
	DL	=	6.0	PSF
BOT CH.	LL	=	0.0	PSF
	DL	=	7.4	PSF
TOTAL LOAD		=	39.0	PSF

SPACING = 24.0 IN. C/C

THIS TRUSS IS DESIGNED FOR RESIDENTIAL OR SMALL BUILDING REQUIREMENTS OF PART 9, NBCC 2015

THIS DESIGN COMPLIES WITH:
- PART 9 OF BCBC 2018 , NBC-2019AE
- PART 9 OF OBC 2012 (2019 AMENDMENT)
- CSA 086-14
- TPIC 2014

(55 % OF 31.3 P.S.F. G.S.L. PLUS 8.4 P.S.F. RAIN LOAD) EQUALS 25.6 P.S.F. SPECIFIED ROOF LIVE LOAD

ALLOWABLE DEFL.(LL)= L/360 (0.19")
CALCULATED VERT. DEFL.(LL) = L/ 999 (0.04")
ALLOWABLE DEFL.(TL)= L/360 (0.19")
CALCULATED VERT. DEFL.(TL) = L/ 705 (0.09")

CSI: TC=0.32/1.00 (C-F:1) , BC=0.22/1.00 (D-E:1) , WB=0.00/1.00 (E-F:1) , SSI=0.31/1.00 (B-E:1)

DOL LUMBER=1.00 NAIL=1.00 LS BEND=1.10 COMP=1.10 SHEAR=1.10 TENS= 1.10

COMPANION LIVE LOAD FACTOR = 1.00

TRUSS PLATE MANUFACTURER IS NOT RESPONSIBLE FOR QUALITY CONTROL IN THE TRUSS MANUFACTURING PLANT .

NAIL VALUES

PLATE	GRIP(DRY) (PSI) MAX	MIN	SHEAR (PLI) MAX	MIN	SECTION (PLI) MAX	MIN
MT20	650	371	1747	788	1987	1873

PLATE PLACEMENT TOL. = 0.250 inches

PLATE ROTATION TOL. = 5.0 Deg.

JSI GRIP= 0.33 (B) (INPUT = 0.90)
JSI METAL= 0.07 (B) (INPUT = 0.95)

LICENSED PROFESSIONAL ENGINEER
03-04-24
H. J. G. ALVES
100009024
PROVINCE OF ONTARIO

Structural component only
DWG# T-2406567

CITY OF RICHMOND HILL
BUILDING DIVISION
05/01/2024
RECEIVED
Per: joshua.nabua

Alves Engineering Services Inc.
5208 Easton road
Burlington, Ontario L7L 6N6
(289) 259 5455

LICENSED PROFESSIONAL ENGINEER
06/11/15
H.J.G. ALVES
PROVINCE OF ONTARIO

RESPONSABILITIES

1-Alves Engineering Services Inc. is responsible for the design of trusses as individual components

2-It is the responsibility of others to ascertain that the design loads utilized on this drawing meet or exceed the actual dead load imposed by the structure and the live load imposed by the local building code or the authorities having jurisdictions.

3- All dimensions are to be verified by owner, contractor, architect or other authority before manufacture.

4- Alves Engineering Services Inc. bears no responsibility for the erection of the trusses. Persons erecting trusses are cautioned to seek professional advice regarding temporary and permanent bracing system. Bracing shown on Alves Engineering Services Inc. drawings is specified for the truss as a single component and forms an integral part of the truss design, but is not meant to represent the only required bracing for that truss when trusses are installed in a series of trusses forming a roof truss system.

5- It is the manufactures responsibility to ensure that the trusses are manufactured in conformance with Alves Engineering Services Inc. specifications outlined below.

SPECIFICATIONS

1-Truss components sealed by Alves Engineering Services Inc. conform to the relevant sections of the current Building Code of Ontario and Canada (part 4 or part 9) or the current Canadian code for Farm Buildings in accordance with the application specified on the sealed truss component drawing. All truss component design procedures must conform to the current design standard issued by the truss plate institute of Canada (TPIC). All lumber and nailing stresses to conform to the current CSA wood design standard identified on the current Building Code and TPIC.

2- Lumber is to be the sizes and grade specified on the truss drawing.

3- Moist content of lumber is not to exceed 19% in service unless otherwise specified.

4- Plates shall be applied to both faces of the each truss joint and shall be positioned as shown on the truss drawings

5- Lumber used on manufacture of trusses is not to be treated with chemicals unless otherwise specified on the truss drawings.

6- The top chord is assumed to be continuously laterally braced by the roof sheathing or purlins at intervals specified on the truss drawing but not exceeding 24" c/c for (part 9) and not exceeding 48" for (part 4 or farm design)

7- When rigid ceiling is not attached directly to the bottom chord, lateral bracing is required and it should not exceed more than 3m or 10' intervals.

8-Refer to Mitek sheet MII7473C REV.10-08 attached for information on symbols, numbering system and General Safety notes.

T-19000215

Feb 09, 2018

CITY OF RICHMOND HILL
BUILDING DIVISION
05/01/2024
RECEIVED
Per: joshua.nabua

BEARING ANCHORAGE BY TOE-NAILS FOR LATERAL CAPACITY

B97791H1

NAIL TYPE	LENGTH (IN)	DIAMETER (IN)	NAIL LATERAL CAPACITY (LB)	
			S-P-F	D. FIR
COMMON WIRE	3.00	0.144	132	147
	3.25	0.144	132	147
	3.50	0.160	159	177
COMMON SPIRAL	3.00	0.122	97	108
	3.25	0.122	97	108
	3.50	0.152	145	162

NOTES:

1. Rafter and ceiling members may be anchored to top and bottom chords of girder truss by toe-nailing rafter and ceiling members to girder chords provided the reaction does not exceed the lateral capacities in the table. Hangers (specified by others) are required for reactions higher than the maximum toe-nail capacity. Reactions are based on factored loads.
2. Toe nail capacities shown in the table are for **one** toe-nail. For additional toe-nails multiply values in table by the number of toe-nails used. Toe-nail capacities take into account toe-nailing factor J_A in CSA O86-14, section 12.9.4.1.
3. For 9- 3/4 gauge 3.25" common wire gun nails (diameter = 0.120") use 3" common spiral nail values.
4. Maximum number of toe-nails allowed depends on the lumber size & species to be toe-nailed to supporting member and nail diameter, as shown in tables below.
5. Nail values in table are based on the following relative lumber densities: G = 0.42 (SPF), G = 0.49 (D. Fir).
6. Toe-nails shall be driven at approximately 1/3 the nail length from the edge of the joist/truss chord and driven at an angle of 30° to the grain of the member (See next page for nailing on bearing plate).
7. For loads due to **wind** the nail lateral capacity in this table may be multiplied by 1.15 (K_D factor).
8. Lumber must be dry (< 19% moisture content) at the time of nail installation.
9. Nail values in this table comply with CSA O86-14, section 12.9.4
10. This design is not valid after April 30, 2021.

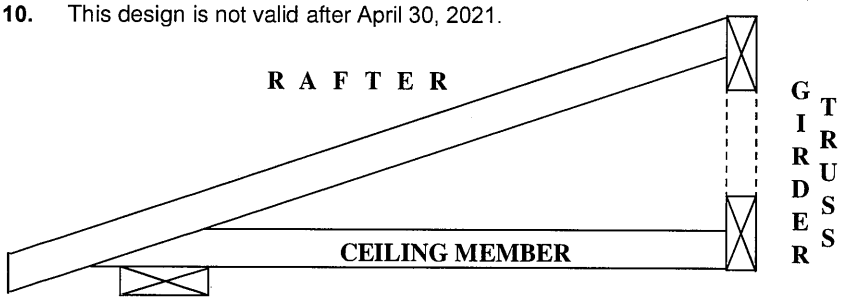

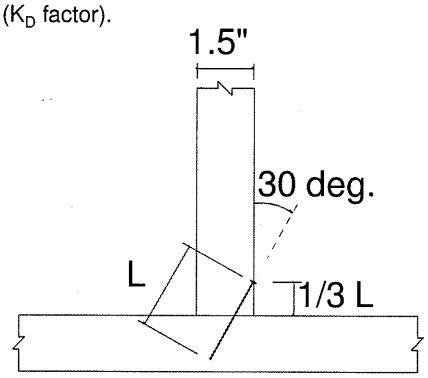

TOE-NAIL INSTALLATION

Nail type	Common wire	Common spiral	Common wire	Common spiral
Nail dia. (in)	0.160	0.152	0.144	0.122
	(3.5" nail)		(3" and 3.25" nail)	
LUMBER SIZE	**MAXIMUM NUMBER OF TOE-NAILS**			
2X4 SPF	2	2	3	3
2X4 D. Fir	2	2	2	2
2X6 SPF	4	4	4	5
2X6 D. Fir	3	3	3	4

PEO
Certificate No. 10889485

LICENSED PROFESSIONAL ENGINEER
C. Cordogiannis
90553736
PROVINCE OF ONTARIO

MiTek®
MiTek Canada Inc
100 Industrial Rd.
Bradford, Ontario L3Z 3G7

April 2, 2020

CITY OF RICHMOND HILL
BUILDING DIVISION
05/01/2024
RECEIVED
Per: joshua.nabua

BEARING ANCHORAGE BY TOE-NAILS FOR WIND LOADING

B97791H2

NAIL TYPE	LENGTH (IN)	DIAMETER (IN)	NAIL WITHDRAWAL CAPACITY (LB)	
			S-P-F	D. FIR
COMMON WIRE	3.00	0.144	30	42
	3.25	0.144	32	45
	3.50	0.160	38	52
COMMON SPIRAL	3.00	0.122	26	36
	3.25	0.122	28	40
	3.50	0.152	36	50

Note: If using truss with D. Fir lumber and S-P-F bearing plate, use values in table for S-P-F.

NOTES:

1. Truss chord, rafter, or ceiling members may be anchored to bearing plate by toe-nails, provided that the actual factored uplift force due to **wind** or **earthquake** load does not exceed the withdrawal capacities in the table. Hangers (specified by others) are required for uplift forces that are higher than the maximum toe-nail withdrawal capacity.
2. Toe nail capacities shown in the table are for **one** toe-nail. For additional toe-nails multiply values in table by the number of toe-nails used. Toe-nail capacities take into account toe-nailing factor J_A in CSA O86-14, section 12.9.5.2.
3. For 9- 3/4 gauge 3.25" common wire gun nails (diameter = 0.120") use 3" common spiral nail values.
4. Maximum number of toe-nails allowed depends on the lumber size & species to be toe-nailed to supporting member and nail diameter, as shown in table above.
5. Nail values in table are based on the following relative lumber densities: G = 0.42(SPF), G = 0.49(D. Fir).
6. Toe-nails shall be driven at approximately 1/3 the nail length from the edge of the joist/truss chord and driven at an angle of 30° to the grain of the member (See drawing on detail B37579H1).
7. Lumber must be dry (< 19% moisture content) at the time of nail installation.
8. Nail values in this table comply with CSA O86-14, section 12.9.5
9. This design is not valid after April 30, 2021.

Toe-nailing on 2x6 Bearing Plate

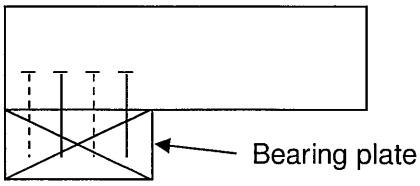

Elevation view

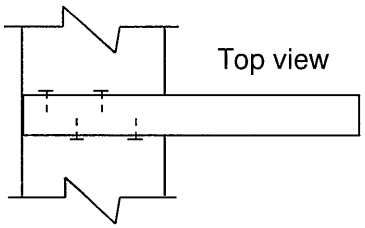

Top view

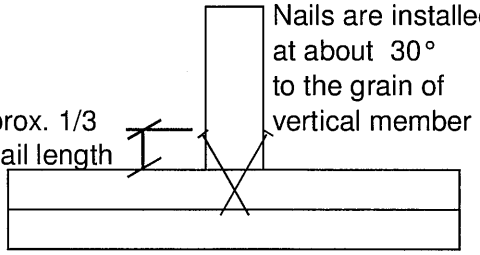

Toe-nailing viewed from end of joist or truss

Toe-nailing on 2x4 Bearing Plate

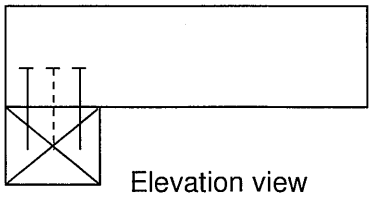

Elevation view

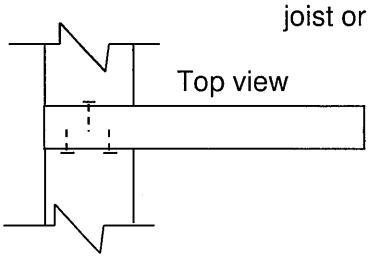

Top view

PEO
Certificate No. 10889485

LICENSED PROFESSIONAL ENGINEER
C. Cordogiannis
90553736
PROVINCE OF ONTARIO

MiTek®

MiTek Canada Inc
100 Industrial Rd.
Bradford, Ontario L3Z 3G7

April 2, 2020

CITY OF RICHMOND HILL
BUILDING DIVISION
05/01/2024
RECEIVED
Per: joshua.nabua

TECHNICAL BULLETIN

LUS — Double-Shear Joist Hangers

SIMPSON Strong-Tie

All LUS hangers have double-shear nailing. This patented innovation distributes the load through two points on each joist nail for greater strength. It also allows the use of fewer nails, faster installation and the use of common nails for all connections.

Material: 18 gauge

Finish: G90 galvanized

Design:

- Factored resistances are in accordance with CSA O86-14 and CSA O86:19.
- Uplift resistances have been increased 15%. No further increase is permitted.
- Wood shear is not considered in the factored resistances given. The specifier must ensure that the joist and header capacities are capable of withstanding these loads.

Installation:

- Use all specified fasteners
- Nails: 16d = 0.162" dia. x 3½" long common wire, 10d = 0.148" x 3" long common wire
- Double-shear nails must be driven at an angle through the joist or truss into the header to achieve the table loads
- Not designed for welded or nailer applications

Options:

- These hangers cannot be modified

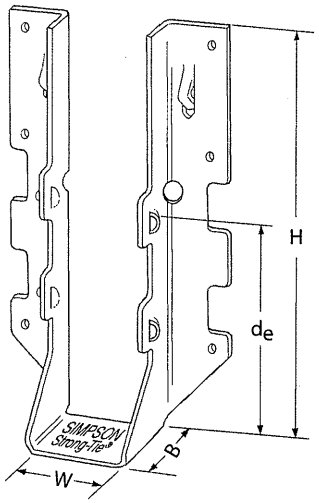

LUS28

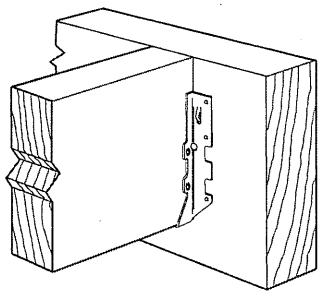

Typical LUS Installation

Model No.	Ga.	Dimensions (in.)				Fasteners		Factored Resistance (lb.)			
								D.Fir–L		S-P-F	
		W	H	B	d_e[1]	Face	Joist	Uplift (K_D=1.15)	Normal (K_D=1.00)	Uplift (K_D=1.15)	Normal (K_D=1.00)
LUS24	18	1 9/16	3 1/8	1 3/4	1 15/16	(4) 10d	(2) 10d	710	1630	645	1155
LUS24-2	18	3 1/8	3 1/8	2	1 13/16	(4) 16d	(2) 16d	835	2020	590	1435
LUS26	18	1 9/16	4 3/4	1 3/4	3 5/8	(4) 10d	(4) 10d	1420	2170	1290	1630
LUS26-2	18	3 1/8	4 7/8	2	4	(4) 16d	(4) 16d	1720	2595	1545	1920
LUS26-3	18	4 5/8	4 3/16	2	3 1/4	(4) 16d	(4) 16d	1720	2595	1545	2340
LUS28	18	1 9/16	6 5/8	1 3/4	3 3/4	(6) 10d	(6) 10d	1420	2520	1290	1790
LUS28-2	18	3 1/8	7	2	4	(6) 16d	(4) 16d	1720	3325	1545	2575
LUS28-3	18	4 5/8	6 1/4	2	3 1/4	(6) 16d	(4) 16d	1720	3325	1545	2375
LUS210	18	1 9/16	7 13/16	1 3/4	3 7/8	(8) 10d	(4) 10d	1420	2785	1290	2210
LUS210-2	18	3 1/8	9	2	6	(8) 16d	(6) 16d	2580	4500	2320	3195
LUS210-3	18	4 5/8	8 3/16	2	5 1/4	(8) 16d	(6) 16d	2580	3345	2320	2375

1. d_e is the distance from the seat of the hanger to the highest joist nail.

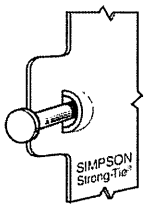

Dome double-shear nailing prevents tabs breaking off (available on some models).

US Patent 5,603,580

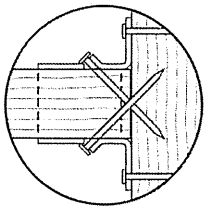

Double-shear nailing top view.

LICENSED PROFESSIONAL ENGINEER
07/19/2022
B. D. BUNTING
PROVINCE OF ONTARIO

This technical bulletin is effective until December 31, 2024, and reflects information available as of July 1, 2022.
This information is updated periodically and should not be relied upon after December 31, 2024.
Contact Simpson Strong-Tie for current information and limited warranty or see strongtie.com.

© 2022 Simpson Strong-Tie Company Inc. • P.O. Box 10789, Pleasanton, CA 94588 T-SPECLUS22 7/22 exp. 12/24

(800) 999-5099
strongtie.com

CITY OF RICHMOND HILL
BUILDING DIVISION
03/01/2024
RECEIVED
Per: joshua.nabua

TECHNICAL BULLETIN

HUS/LJS — Double-Shear Joist Hangers

SIMPSON Strong-Tie

All hangers have double-shear nailing. This patented innovation distributes the load through two points on each joist nail for greater strength. It also allows the use of fewer nails, faster installation and the use of common nails for all connections. Do not bend or remove tabs.

Material: See table

Finish: G90 galvanized

Design:

- Factored resistances are in accordance with CSA O86-14 and CSA O86:19.
- Uplift resistances have been increased 15%. No further increase is permitted.
- Wood shear is not considered in the factored resistances given. The specifier must ensure that the joist and header capacities are capable of withstanding these loads.

Installation:

- Use all specified fasteners
- Nails: 16d = 0.162" dia. x 3½" long common wire
- Double-shear nails must be driven at an angle through the joist or truss into the header to achieve the table loads
- Not designed for welded or nailer applications

Options:

- See current catalogue for options

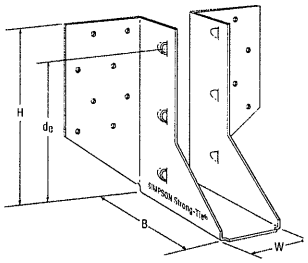

LJS26DS

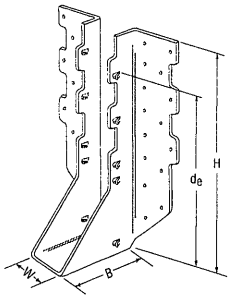

HUS210
(HUS26, HUS28, similar)

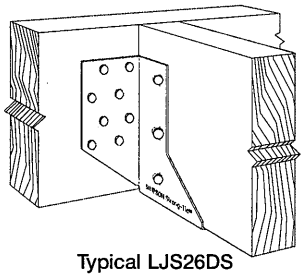

Typical LJS26DS Installation

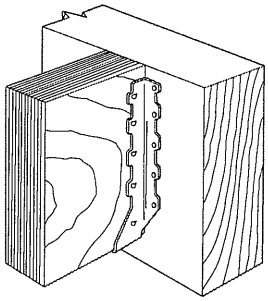

Typical HUS Installation

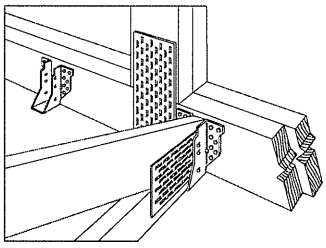

Typical HUS Installation
(Truss designer to provide fastener quantity for connecting multiple members together)

Model No.	Ga.	Dimensions (in.)				Fasteners		Factored Resistance (lb.)			
								D.Fir–L		S-P-F	
		W	H	B	d_e[1]	Face	Joist	Uplift (K_D=1.15) lb.	Normal (K_D=1.00) lb.	Uplift (K_D=1.15) lb.	Normal (K_D=1.00) lb.
LJS26DS	18	1 9/16	5	3½	4⅝	(16) 16d	(6) 16d	2055	4265	1460	4115
HUS26	16	1⅝	5⅜	3	3 15/16	(14) 16d	(6) 16d	2705	4940	2065	3875
HUS28	16	1⅝	7 3/32	3	6 3/32	(22) 16d	(8) 16d	3605	5365	2675	4345
HUS210	16	1⅝	9 3/32	3	7 31/32	(30) 16d	(10) 16d	4505	5795	4010	4740
HUS1.81/10	16	1 13/16	9	3	8	(30) 16d	(10) 16d	4505	6450	4010	5200

1. d_e is the distance from the seat of the hanger to the highest joist nail.

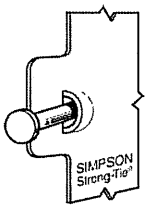

Dome double-shear nailing prevents tabs breaking off (available on some models).

US Patent 5,603,580

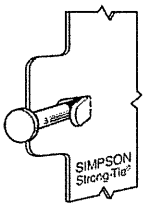

Double-shear nailing side view. Do not bend tab back.

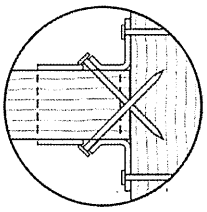

Double-shear nailing top view.

LICENSED PROFESSIONAL ENGINEER
07/19/2022
B. D. BUNTING
PROVINCE OF ONTARIO

This technical bulletin is effective until December 31, 2024, and reflects information available as of July 1, 2022.
This information is updated periodically and should not be relied upon after December 31, 2024.
Contact Simpson Strong-Tie for current information and limited warranty or see strongtie.com.

© 2022 Simpson Strong-Tie Company Inc. • P.O. Box 10789, Pleasanton, CA 94588

T-SPECHUS22 7/22 exp. 12/24

(800) 999-5099
strongtie.com

CITY OF RICHMOND HILL
BUILDING DIVISION
05/01/2024
RECEIVED
Per: joshua.nabua

TECHNICAL BULLETIN

HGUS — Double-Shear Joist Hangers

SIMPSON Strong-Tie

All HGUS hangers have double-shear nailing. This patented innovation distributes the load through two points on each joist nail for greater strength. It also allows the use of fewer nails, faster installation and the use of common nails for all connections. Do not bend or remove tabs.

Material: 12 gauge

Finish: G90 galvanized

Design:

- Factored resistances are in accordance with CSA O86-14 and CSA O86:19.
- Uplift resistances have been increased 15%. No further increase is permitted.
- Wood shear is not considered in the factored resistances given. The specifier must ensure that the joist and header capacities are capable of withstanding these loads.

Installation:

- Use all specified fasteners
- Nails: 16d = 0.162" dia x 3½" long common wire
- Double-shear nails must be driven at an angle through the joist or truss into the header to achieve the table loads
- Not designed for welded or nailer applications

Options:

- See current catalogue for options

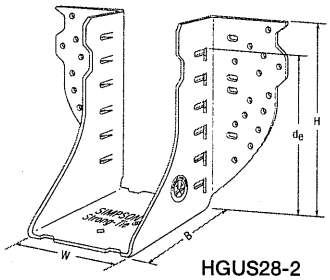

HGUS28-2

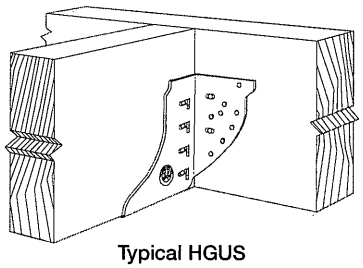

Typical HGUS Installation

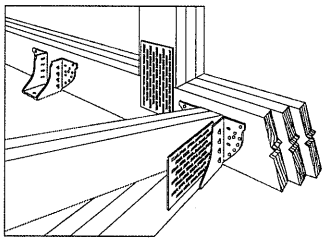

Typical HGUS Installation
(Truss designer to provide fastener quantity for connecting multiple members together)

Model No.	Ga.	Dimensions (in.)				Fasteners		Factored Resistance (lb.)			
								D.Fir–L		S-P-F	
		W	H	B	d_e[1]	Face	Joist	Uplift (K_D=1.15)	Normal (K_D=1.00)	Uplift (K_D=1.15)	Normal (K_D=1.00)
HGUS26	12	1⅝	5⅜	5	4 5/32	(20) 16d	(8) 16d	2685	6625	2685	5700
HGUS26-2	12	3 5/16	5 7/16	4	4⅛	(20) 16d	(8) 16d	4385	8950	3100	6355
HGUS26-3	12	4 15/16	5½	4	4⅛	(20) 16d	(8) 16d	4385	8950	3100	6355
HGUS26-4	12	6 9/16	5 7/16	4	4⅛	(20) 16d	(8) 16d	4385	8950	3100	6355
HGUS28	12	1⅝	7⅛	5	6⅛	(36) 16d	(12) 16d	3310	7675	3100	6900
HGUS28-2	12	3 5/16	7 9/16	4	6⅛	(36) 16d	(12) 16d	6070	12980	4310	9215
HGUS28-3	12	4 15/16	7¼	4	6⅜	(36) 16d	(12) 16d	6070	12980	4310	9215
HGUS28-4	12	6 9/16	7 9/16	4	6⅛	(36) 16d	(12) 16d	6070	12980	4310	9215
HGUS210-2	12	3 5/16	9 9/16	4	8⅛	(46) 16d	(16) 16d	6840	14015	4855	10270
HGUS210-3	12	4 15/16	9¼	4	8⅜	(46) 16d	(16) 16d	6840	14645	4855	10400
HGUS210-4	12	6 9/16	9 9/16	4	8⅛	(46) 16d	(16) 16d	6840	14645	4855	10400
HGUS212-4	12	6 9/16	10⅝	4	10⅛	(56) 16d	(20) 16d	7640	14995	5425	10645
HGUS214-4	12	6 9/16	12⅝	4	11⅛	(66) 16d	(22) 16d	10130	16400	7195	11645

1. d_e is the distance from the seat of the hanger to the highest joist nail.

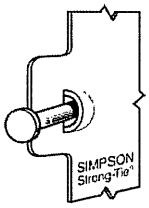

Dome double-shear nailing prevents tabs breaking off (available on some models).

US Patent 5,603,580

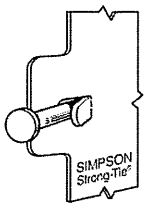

Double-shear nailing side view. Do not bend tab back.

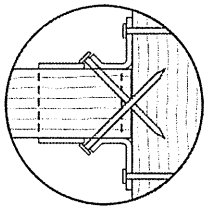

Double-shear nailing top view.

LICENSED PROFESSIONAL ENGINEER
07/19/2022
B. D. BUNTING
PROVINCE OF ONTARIO

This technical bulletin is effective until December 31, 2024, and reflects information available as of July 1, 2022.
This information is updated periodically and should not be relied upon after December 31, 2024.
Contact Simpson Strong-Tie for current information and limited warranty or see strongtie.com.

© 2022 Simpson Strong-Tie Company Inc. • P.O. Box 10789, Pleasanton, CA 94588 T-SPECHGUS22 7/22 exp. 12/24

(800) 999-5099
strongtie.com

CITY OF RICHMOND HILL
BUILDING DIVISION
03/01/2024
RECEIVED
Per: joshua.nabua

ONTARIO WOOD TRUSS
FABRICATORS ASSOCIATION

TECH-NOTES

TN 15-001
Piggyback Bracing

Overview:

Where piggybacks are connected overtop of base trusses, 2x4 purlins must be first added to the flat portion of the base truss at a spacing no more than 24" o/c. These purlins not only provide support for the piggyback trusses above, but are required to laterally support the top chord of the base truss which will not have the sheathing directly connected to the flat portion of the base truss. This ensures the top chord, most often in compression, will not buckle laterally.

Further, the purlins in the plane of the flat portion require diagonal bracing to prevent lateral displacement of the purlins themselves where under certain conditions, the trusses may in fact all buckle in the same direction if this additional bracing is not added in the plane of the purlins.

Detail:

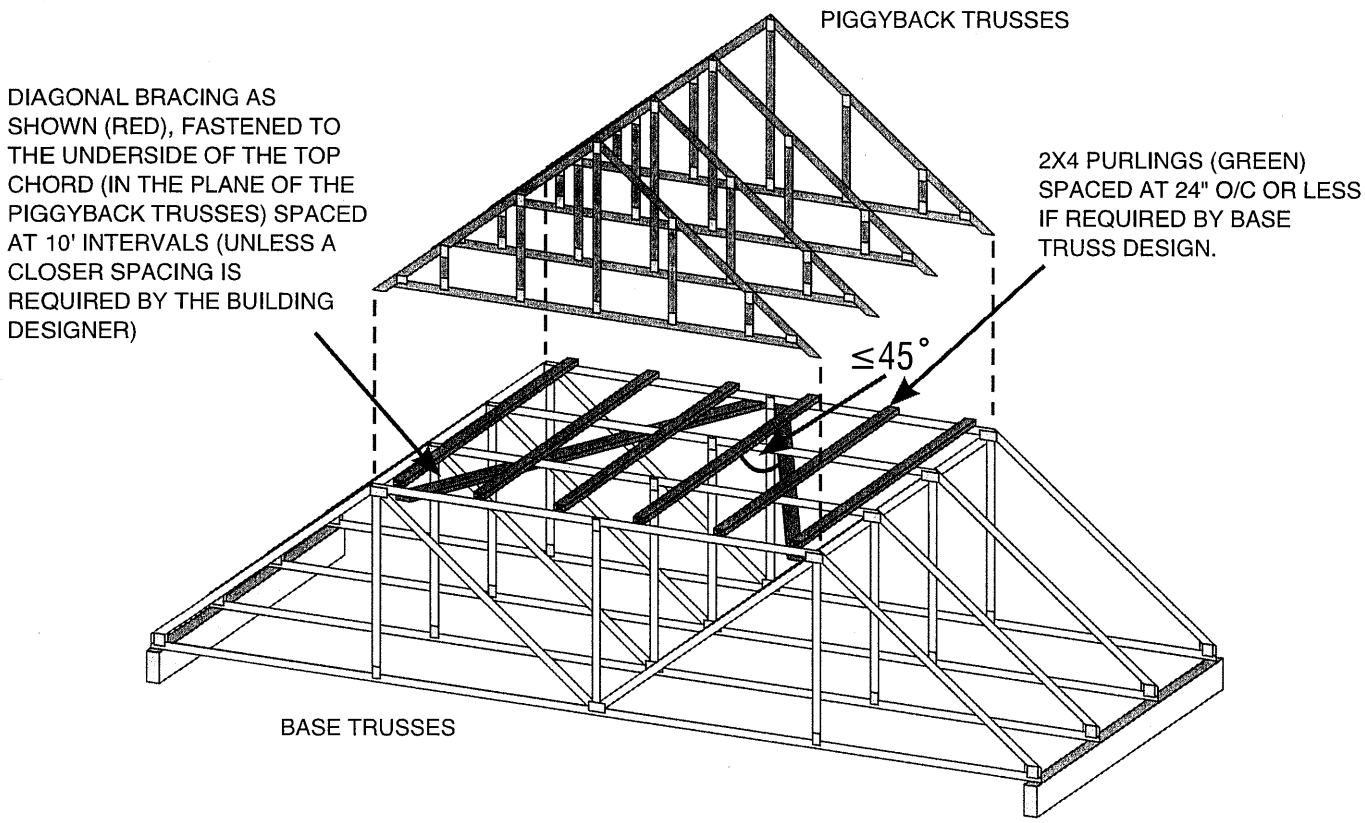

NOTE: THE SLOPED PORTION OF THE TOP CHORD OF THE BASE TRUSS AND PIGGYBACK TRUSS IN THIS SKETCH IS ASSUMED TO BE SHEATHED IN ACCORDANCE WITH THE OBC.

SKETCH FROM BCSI-CANADA 2013

Disclaimer:

OWTFA Tech Notes are intended to provide guidance to the design community both within the membership as well as to third party designers who might benefit from the information. The details have been developed by the OWTFA technical committee and although there may be professional engineers involved in development, the information contained in the tech-note are not intended to be used without having a professional engineer review the information for a specific application. The OWTFA takes no responsibility with respect to the information provided but has developed this tech-note to offer guidance where it is not currently readily available.

CITY OF RICHMOND HILL
BUILDING DIVISION
05/01/2024
RECEIVED
Per: joshua.nabua

MiTek®

STANDARD DETAIL MSD2015-P

Issued: **APRIL 27, 2022**
Expiry: **APRIL 30, 2024**

ALTERNATIVE WEB BRACING SOLUTIONS

The scab brace detail shown on this page provides an alternative method of bracing compression webs of single ply trusses. Where the original design calls for web bracing, the scab-brace is an acceptable alternative provided that the factored axial force in the web member does not exceed the tabulated values shown below. This detail applies to web lengths of 4.0 ft. to 10.0 ft. only. For intermediate web lengths, do not interpolate, use the tabulated value of the longer length. (ex. For a 6.25 ft. web, use the tabulated values for a 6.5 ft. web)

WEB LENGTH (Ft.)	Maximum factored web force, lbs (1-Ply Truss)				
Web size	2x3	2x4	2x5	2x6	2x8+
4.0	4331	6064	7796	9529	12561
4.5	3794	5312	6829	8347	11003
5.0	3285	4599	5913	7227	9527
5.5	2823	3952	5081	6210	8186
6.0	2415	3381	4347	5313	7003
6.5	2063	2888	3713	4538	5982
7.0	1763	2468	3174	3879	5113
7.5	1510	2114	2718	3322	4379
8.0	1297	1816	2335	2854	3762
8.5	1117	1564	2011	2458	3240
9.0	966	1353	1740	2126	2803
9.5	840	1176	1512	1848	2436
10.0	733	1027	1320	1614	2127

SCAB BRACE DETAIL
1-PLY TRUSS

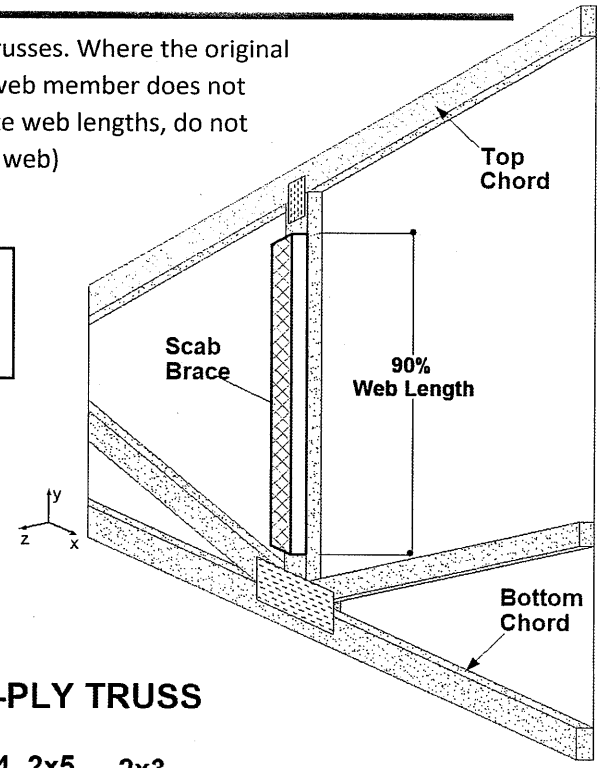

SCAB CONNECTION: 1-PLY TRUSS

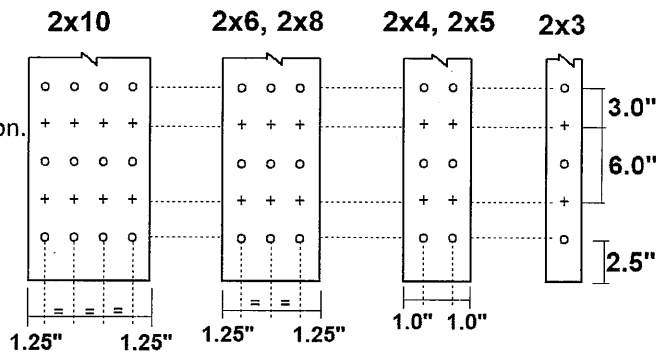

+ 0.122" dia. x 3.0" nail driven from front face
o 0.122" dia. x 3.0" nail driven from back face

Note: Connect scabs to truss along their entire length.

NOTES:

1. This detail **CANNOT** be used to repair damaged webs.
2. Scab and web sizes must be equal (i.e. use a 2x6 scab on a 2x6 web, etc.).
3. Scab & web lumber must be DRY (≤ 19% moisture content) at time of installation.
4. Scab must cover minimum 90% of the entire length of web.
5. For 2x12 webs use 2x10 nail pattern, but with 5 rows of nails instead of 4 rows.
6. This detail is for webs loaded axially only (not for axial/bending members).
7. Web and scab lumber shall be SPF No. 2 (or better) grade.
8. Tabulated resistances are for standard load duration only (K_D=1.0) and DRY service conditions (K_S =1.0). Do not use detail for WET service applications.
9. This detail shall be used only in conjunction with sealed MiTek truss drawings.

PEO
Certificate No. 10889485

LICENSED PROFESSIONAL ENGINEER
2022-05-03
C. Cordogiannis
90553736
PROVINCE OF ONTARIO

RECEIVED
05/01/2024
CITY OF RICHMOND HILL
BUILDING DIVISION
Per: joshua.nabua

©2021 MiTek Canada Inc., 240 Stirling Crescent, Bradford, Ontario, L3Z 4L5 | (800) 268-3434, www.mitek.ca

MiTek®

STANDARD DETAIL MSD2015-P

Issued: **APRIL 27, 2022**
Expiry: **APRIL 30, 2024**

ALTERNATIVE WEB BRACING SOLUTIONS

The scab brace detail shown on this page provides an alternative method of bracing compression webs of 2-PLY trusses. Where the original design calls for web bracing, the scab-brace is an acceptable alternative provided that the maximum factored axial force in the web member does not exceed the tabulated values shown below. This detail applies to web lengths of 4.0 Ft. to 10.0 Ft. only. For intermediate web lengths, do not interpolate, use the tabulated value of the longer length. (ex. For a 6.25 ft. web, use the tabulated values for a 6.5 ft. web)

WEB LENGTH (Ft.)	Maximum factored web force, lbs (2-Ply Truss)					
	Web size	2x3	2x4	2x5	2x6	2x8+
4.0		8663	12128	15593	19058	25122
4.5		7588	10623	13659	16694	22006
5.0		6570	9198	11826	14455	19054
5.5		5645	7903	10162	12420	16371
6.0		4830	6762	8694	10626	14007
6.5		4126	5776	7426	9077	11965
7.0		3526	4937	6347	7758	10226
7.5		3020	4228	5436	6644	8758
8.0		2594	3632	4670	5708	7524
8.5		2235	3128	4022	4916	6480
9.0		1933	2706	3479	4253	5606
9.5		1680	2352	3024	3696	4872
10.0		1467	2054	2640	3227	4254

SCAB BRACE DETAIL
2-PLY TRUSS

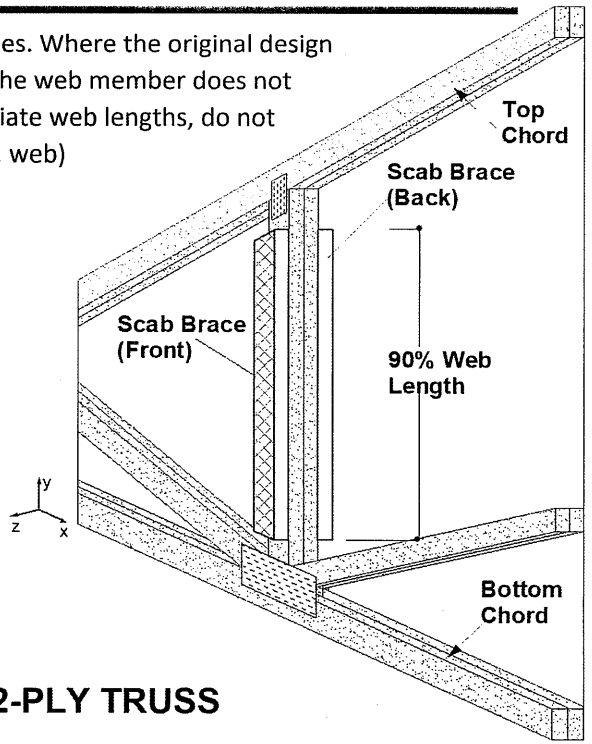

NOTES:

1. This detail **CANNOT** be used to repair damaged webs.
2. Scab sizes must be equal to web size (i.e. use a 2x6 scab on a 2x6 web, etc.).
3. Scabs &web lumber must be DRY (≤ 19% moisture content) at time of installation.
4. Scabs must cover 90% of the entire length of web and installed on both faces.
5. This detail shall NOT apply to vertical webs used for girder load transfer.
6. Web & scab lumber to be SPF No. 2 (or better) grade.
7. This detail is for webs loaded axially only (not for axial/bending members).
8. Ensure scabs will not interfere with incoming trusses, prior to using this detail.
9. Tabulated resistances are for standard load duration only (K_D=1.0) and DRY service conditions (K_S =1.0). Do not use detail for WET service applications.
10. This detail shall be used only in conjunction with sealed MiTek truss drawings.

SCAB CONNECTION: 2-PLY TRUSS

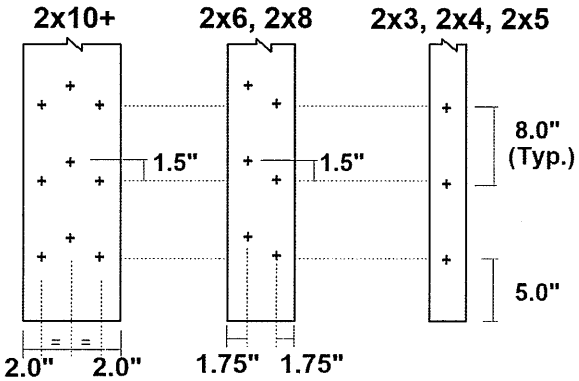

+ MITEK MIFLK006 Screw @ 8 in. cc
Note: Connect scabs to truss along their entire length.

PEO
Certificate No. 10889485

LICENSED PROFESSIONAL ENGINEER
2022-05-03
C. Cordogiannis
90553736
PROVINCE OF ONTARIO

©2021 MiTek Canada Inc., 240 Stirling Crescent, Bradford, Ontario, L3Z 4L5 | (800) 268-3434, www.mitek.ca

RECEIVED
Per: joshua.nabua
05/01/2024
CITY OF RICHMOND HILL
BUILDING DIVISION

Symbols

PLATE LOCATION AND ORIENTATION

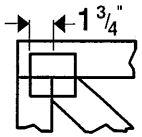

Center plate on joint unless x, y offsets are indicated. Dimensions are in ft-in-sixteenths or mm. Apply plates to both sides of truss and fully embed teeth.

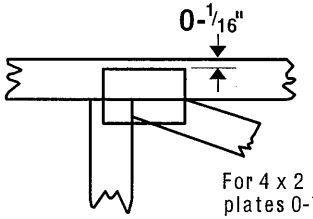

For 4 x 2 orientation, locate plates 0-1/16" from outside edge of truss.

This symbol indicates the required direction of slots in connector plates.

*Plate location details available in MiTek software or upon request.

PLATE SIZE

4 x 4

The first dimension is the plate width measured perpendicular to slots. Second dimension is the length parallel to slots.

LATERAL BRACING LOCATION

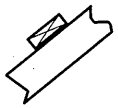

Indicated by symbol shown and/or by text in the bracing section of the output. Use T, I or Eliminator bracing if indicated.

BEARING

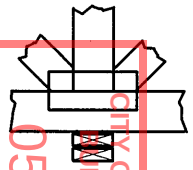

Indicates location where bearings (supports) occur. Icons vary but reaction section indicates joint number where bearings occur.

Industry Standards:

TPIC: Truss Design Procedures and Specifications for Light Metal Plate Connected Wood Trusses

DSB-89: Design Standard for Bracing.

BCSI: Building Component Safety Information, Guide to Good Practice for Handling, Installing & Bracing of Metal Plate Connected Wood Trusses.

Numbering System

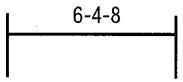

dimensions shown in ft-in-sixteenths or mm (Drawings not to scale)

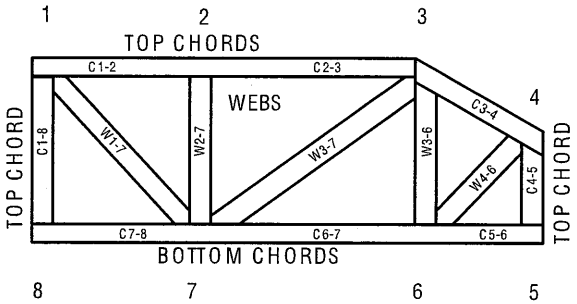

JOINTS ARE GENERALLY NUMBERED/LETTERED CLOCKWISE AROUND THE TRUSS STARTING AT THE JOINT FARTHEST TO THE LEFT.

CHORDS AND WEBS ARE IDENTIFIED BY END JOINT NUMBERS/LETTERS.

PRODUCT CODE APPROVALS

CCMC Reports:

11996-L, 10319-L, 13270-L, 12691-R

© 2007 MiTek® All Rights Reserved

MiTek®

POWER TO PERFORM.™

MiTek Engineering Reference Sheet: MII-7473C rev. 10-'08

General Safety Notes

Failure to Follow Could Cause Property Damage or Personal Injury

1. Additional stability bracing for truss system, e.g. diagonal or X-bracing, is always required. See BCSI.
2. Truss bracing must be designed by an engineer. For wide truss spacing, individual lateral braces themselves may require bracing, or alternative T, I, or Eliminator bracing should be considered.
3. Never exceed the design loading shown and never stack materials on inadequately braced trusses.
4. Provide copies of this truss design to the building designer, erection supervisor, property owner and all other interested parties.
5. Cut members to bear tightly against each other.
6. Place plates on each face of truss at each joint and embed fully. Knots and wane at joint locations are regulated by TPIC.
7. Design assumes trusses will be suitably protected from the environment in accord with TPIC.
8. Unless otherwise noted, moisture content of lumber shall not exceed 19% at time of fabrication.
9. Unless expressly noted, this design is not applicable for use with fire retardant, preservative treated, or green lumber.
10. Camber is a non-structural consideration and is the responsibility of truss fabricator. General practice is to camber for dead load deflection.
11. Plate type, size, orientation and location dimensions indicated are minimum plating requirements.
12. Lumber used shall be of the species and size, and in all respects, equal to or better than that specified.
13. Top chords must be sheathed or purlins provided at spacing indicated on design.
14. Bottom chords require lateral bracing at 10 ft. spacing, or less, if no ceiling is installed, unless otherwise noted.
15. Connections not shown are the responsibility of others.
16. Do not cut or alter truss member or plate without prior approval of an engineer.
17. Install and load vertically unless indicated otherwise.
18. Use of green or treated lumber may pose unacceptable environmental, health or performance risks. Consult with project engineer before use.
19. Review all portions of this design (front, back, words and pictures) before use. Reviewing pictures alone is not sufficient.
20. Design assumes manufacture in accordance with TPIC Quality Criteria.

RECEIVED
Per: joshua.nabua
05/01/2024
CITY OF MOUNT PLEASANT
BUILDING DIVISION