CORPORATION OF THE CITY OF OSHAWA
TRUE COPY
OF PERMIT PLANS
Nov 03 2023
PER: C Martin
CHIEF BUILDING OFFICIAL

MHP 23036

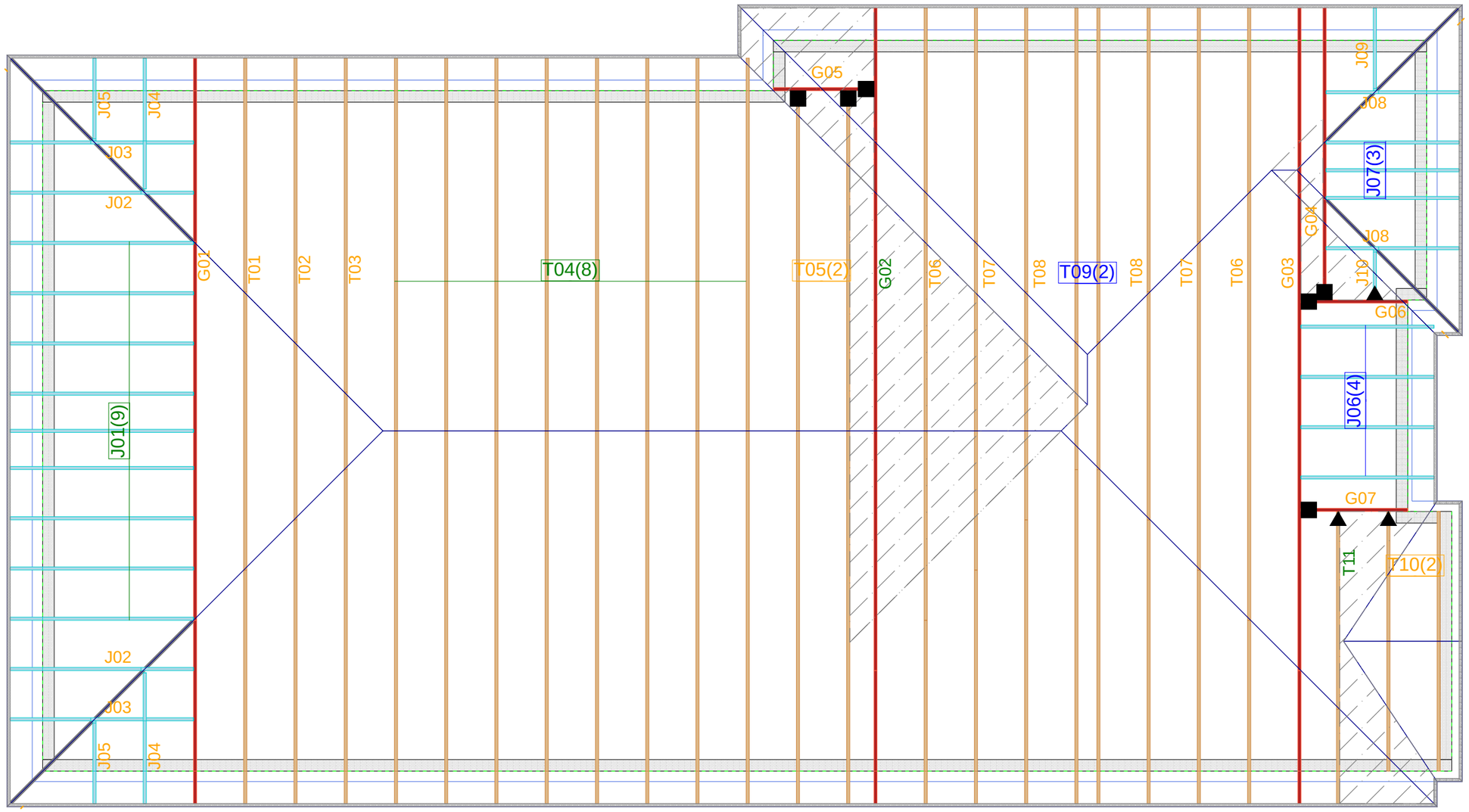

Hanger Name	Symbol	QTY
LUS24	▲	3
LJS26DS	■	6

CONVENTIONAL FRAMING BY OTHERS

ALL CONVENTIONAL FRAMING TO CONFORM WITH PART 9 OF THE OBC. ROOF RAFTERS THAT CROSS OVER TRUSSES TO BE MIN. 2x4 SPF @ 24" C/C WITH A 2x4 VERTICAL POST TO THE TRUSS BELOW. VERTICAL POSTS TO BE LATERALLY BRACED SO THAT UNBRACED LENGTH DOES NOT EXCEED 6'. DESIGN OF CONVENTIONAL FRAMING IS THE RESPONSIBILITY OF THE PROJECT ENGINEER.

JOB INFORMATION

Customer	GREENPARK HOMES
Job #	23-00112R0
Address	ZADORRA ESTATES OSHAWA,ON
Model	VILLA 5-ELEV 3
Sales Rep	RALPH MIRIGELLO
Designer	RB
Date	6/06/23
Path	C:\MITEK\CA\JOBS\GREENPARK\ZADORRA ESTATES\VILLA 5\VILLA 5-ELEV 3\VILLA 5-ELEV 3

DESIGN INFORMATION

Code	NBCC 2015
Bldg	Residential - HSB (NBCC Part 9)
TC LL	34.8 lb/ft²
TC DL	6.0 lb/ft²
BC LL	0.0 lb/ft²
BC DL	7.3 lb/ft²
Deflection	LL=L/360 TL=L/360
Spacing	24" O/C unless otherwise noted
Complies With	OBC 2012 (2019 Amendment) CSA O86-14 and TPIC 2014

IMPORTANT INFORMATION

Hangers and Fasteners to be installed as per manufacturer

Refer to truss drawings in the Truss Engineering Package for ply-to-ply attachment notes

For site-framed valleys: top chords of all roof trusses must be laterally supported using 2x4 continuous bracing @24 O/C - all bracing must be anchored at ends as per TPIC Installation Guidelines

Read all notes on this page in addition to those shown on the KOTT Truss Engineering package

Field erection, handling and bracing are not the responsibility of KOTT, or KOTT Engineering

Unless noted otherwise, hurricane ties are to be installed at the bearings of all trusses > 40 ft clear span, and any girder or beam supporting trusses with a clear span >40 ft. See hanger legend for type.

Unless noted otherwise, for Part 9 bldgs, all trusses are to be anchored to the top of supporting walls as follows: trusses with a clear span <40 ft use 3-1/4" nails @ each bearing; trusses with a clear span >40 ft use 3-1/4" nails @ each bearing in addition to the appropriate hurricane tie.

KOTT Inc.
14 Anderson Blvd.
Uxbridge, ON
905.642.4400

CORPORATION OF THE CITY OF OSHAWA
TRUE COPY
OF PERMIT PLANS
Nov 03 2023
PER:
CHIEF BUILDING OFFICIAL

MHP 23036

Engineering Notes: Trusses

KOTT

NE0723-112
GREENPARK - ZADORRA ESTATES - VILLA 5-3

PLEASE READ ALL NOTES PRIOR TO INSTALLATION OF THE COMPONENT

RESPONSIBILITIES

THE UNDERSIGNED ENGINEER IS ONLY RESPONSIBLE FOR THE STRUCTURAL INTEGRITY OF THIS BUILDING COMPONENT FOR THE CONDITIONS AND LOADS SHOWN ON CALCULATION PAGE. THE STRUCTURAL INTEGRITY OF THE BUILDING AND THE VERIFICATION OF THE DIMENSIONS AND THE DESIGN LOADS USED ARE THE RESPONSIBILITY OF THE BUILDING DESIGNER.
THE UNDERSIGNED ENGINEER DISCLAIMS ANY RESPONSIBILITY FOR DAMAGES AS A RESULT OF FAULTY OR INCORRECT INFORMATION, SPECIFICATION AND/OR DESIGNS FURNISHED TO THE ENGINEER.
IT IS THE RESPONSIBILITY OF KOTT Inc. TO ENSURE THAT TRUSSES ARE MANUFACTURED IN CONFORMANCE WITH THESE DESIGNS AND WITH THE SPECIFICATIONS OUTLINED BELOW. THE UNDERSIGNED ENGINEER IS NOT RESPONSIBLE FOR QUALITY CONTROL IN THE TRUSS MANUFACTURING PLANT.

DESIGN INFORMATION

THIS DESIGN IS FOR AN INDIVIDUAL BUILDING COMPONENT AND HAS BEEN BASED ON INFORMATION PROVIDED BY KOTT DESIGN.

1. THE BUILDING USE AND OCCUPANCY TYPE IS AS INDICATED ON THE DRAWING.
2. GEOMETRY OF THE TRUSS AND DIMENSIONS INDICATED ON THE DRAWING ARE IDENTICAL TO THOSE OF THE INSTALLED TRUSS.
3. THE TRUSS LOADING INTENSITY AND DISTRIBUTION AS WELL AS LOAD TRANSFER MECHANISM IS THAT INDICATED ON THE DRAWING. NO BUILDINGS, TREES, PARAPETS OR OTHER PROJECTIONS HIGHER THAN THE ROOF FOR WHICH THE TRUSSES ARE USED ARE LOCATED WITHIN A DISTANCE LESS THAN TEN (10) TIMES THE DIFFERENCE IN HEIGHT, OR FIVE METERS (16 FT) WHICHEVER IS GREATER, UNLESS THE DRAWING INDICATES THAT THE SNOW DRIFTING HAS BEEN TAKEN INTO ACCOUNT.
4. THE TRUSSES ARE TO BE SUPPORTED AT THE BEARING POINTS INDICATED AND ANCHORED TO THE SUPPORTS WHERE CONSIDERED NECESSARY BY THE DESIGNER OF THE OVERALL STRUCTURE. BEARING SIZES SHOWN ARE THE MINIMUM REQUIRED TO PREVENT CRUSHING OF THE TRUSS MEMBERS AND DO NOT NECESSARILY TAKE INTO ACCOUNT STABILITY OF THE OVERALL BUILDING STRUCTURE. ELEVATION OF BEARINGS MUST BE CAREFULLY CHECKED AND SHIMMED TO ALIGNMENT FOR SOLID BEARINGS. ADEQUATE WOOD TRUSS BEARING IS THE RESPONSIBILITY OF THE BUILDING DESIGNER.

CODE

TRUSSES ARE DESIGNED IN CONFORMANCE WITH THE RELEVANT SECTIONS OF THE NATIONAL BUILDING CODE OF CANADA OR THE CANADIAN CODE FOR FARM BUILDINGS, WHICHEVER APPLIES TO THE BUILDING TYPE INDICATED ON THE DRAWING, THE ONTARIO BUILDING CODE, TPIC AND CANADIAN STANDARDS ASSOCIATION GUIDELINES.

HANDLING, INSTALLATION AND BRACING

1. THE TRUSSES MUST BE HANDLED AND INSTALLED BY A QUALIFIED PROFESSIONAL AS PER THE SUPPLIED DOCUMENT TITLED INFORMATION FOR TRUSS INSTALLERS AND THE BCSI-B1 AND BCSI-B3 SUMMARY SHEETS.
2. THE COMPRESSION CHORDS ARE LATERALLY BRACED BY CONTINUOUS RIGID DIAPHRAGM SHEATHING OR AS SPECIFIED ON THE DRAWING.
3. TEMPORARY AND PERMANENT BRACING MUST BE INSTALLED AS INDICATED ON THE TRUSS DRAWING AND ACCORDING TO THE BCSI-B1 AND BCSI-B3 SUMMARY SHEETS. BRACING FOR THE LATERAL STABILITY OF THE TRUSS IS TO BE PROVIDED BY THE BUILDING DESIGNER.
4. IT IS RECOMMENDED THAT A PROFESSIONAL ENGINEER'S ADVICE BE OBTAINED FOR THE BRACING OF TRUSSES SPANNING MORE THAN 12.37M (40'-7").

CORPORATION OF THE CITY OF OSHAWA
TRUE COPY OF PERMIT PLANS
Nov 03 2023
PER
CHIEF BUILDING OFFICIAL

MHP 23036

JOB NAME	TRUSS NAME	QUANTITY	PLY	JOB DESC.	DRWG NO.
NE0723-112	G01	1	1	GREENPARK - ZADOR BAY ESTATES - VILLA 5-3 TRUSS DESC.	

Version 8.630 S Mar 22 2023 MiTek Industries, Inc. Tue Jul 18 14:41:33 2023 Page 1
ID:aX72BI6hiO7VoZWieLIJw?z93Pm-_mSHCqZSjb8wShG4LHnFypTa4_KfMV9KYTTkmuywpWW

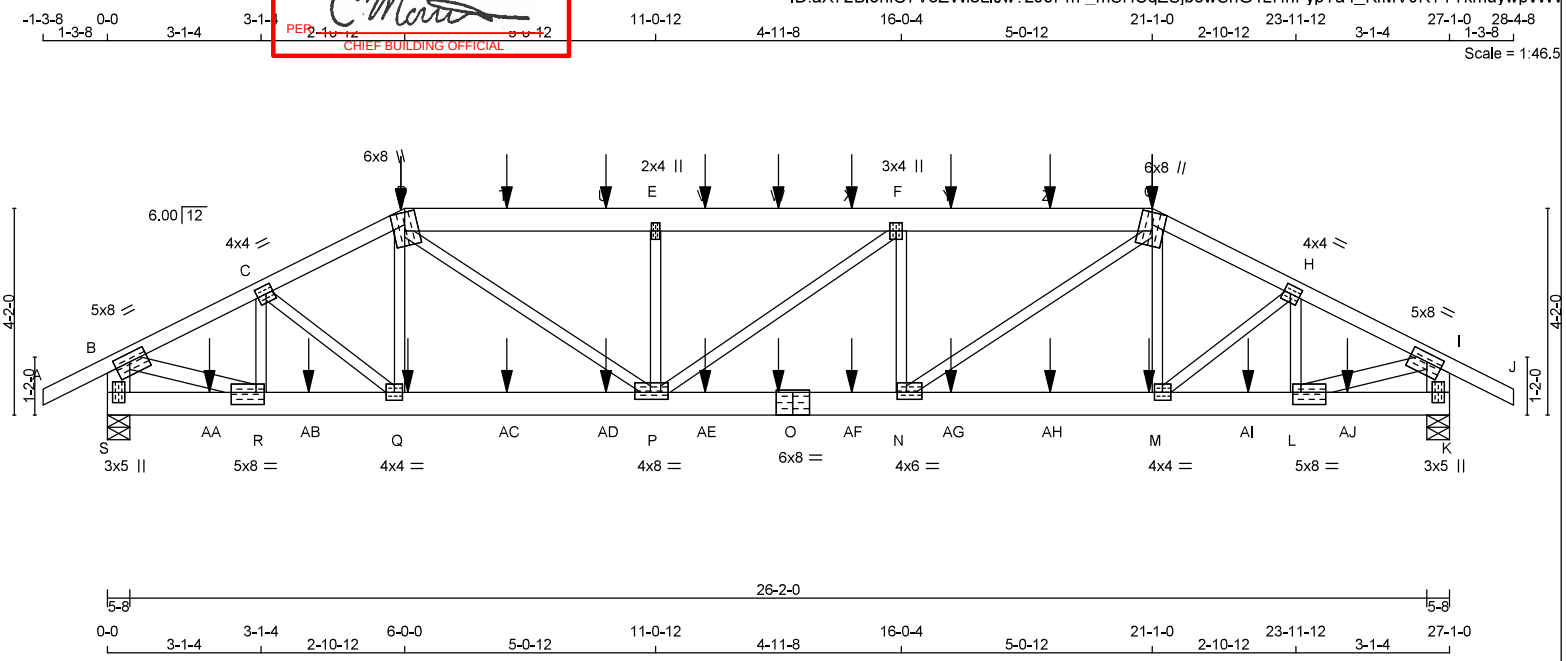

TOTAL WEIGHT = 136 lb [M]

LUMBER
N. L. G. A. RULES

CHORDS	SIZE		LUMBER	DESCR.
A - D	2x4	DRY	No.2	SPF
D - G	2x6	DRY	No.2	SPF
G - J	2x4	DRY	No.2	SPF
S - B	2x6	DRY	No.2	SPF
K - I	2x6	DRY	No.2	SPF
S - O	2x6	DRY	No.2	SPF
O - K	2x6	DRY	No.2	SPF
ALL WEBS EXCEPT	2x3	DRY	No.2	SPF
B - R	2x4	DRY	No.2	SPF
L - I	2x4	DRY	No.2	SPF

DRY: SEASONED LUMBER.

PLATES (table is in inches)

JT	TYPE	PLATES	W	LEN	Y	X
B	TMVW-t	MT20	5.0	8.0	2.00	3.75
C	TMWW-t	MT20	4.0	4.0	2.00	1.75
D	TTWW+m	MT20	6.0	8.0	Edge	
E	TMW+w	MT20	2.0	4.0		
F	TMWW+t	MT20	3.0	4.0		
G	TTWW+m	MT20	6.0	8.0	Edge	
H	TMWW-t	MT20	4.0	4.0	2.00	1.75
I	TMVW-t	MT20	5.0	8.0	2.00	3.75
K	BMV1+p	MT20	3.0	5.0		
L	BMWW-t	MT20	5.0	8.0	3.00	2.00
M	BMWW-t	MT20	4.0	4.0		
N	BMWW-t	MT20	4.0	6.0	1.75	2.25
O	BS-t	MT20	6.0	8.0		
P	BMWWW-t	MT20	4.0	8.0	1.75	3.75
Q	BMWW-t	MT20	4.0	4.0		
R	BMWW-t	MT20	5.0	8.0	3.00	2.00
S	BMV1+p	MT20	3.0	5.0		

Edge - INDICATES REFERENCE CORNER OF PLATE TOUCHES EDGE OF CHORD.

DIMENSIONS, SUPPORTS AND LOADINGS SPECIFIED BY FABRICATOR TO BE VERIFIED BY BUILDING DESIGNER

BEARINGS

JT	FACTORED GROSS REACTION VERT	HORZ	MAXIMUM FACTORED GROSS REACTION DOWN	HORZ	UPLIFT	INPUT BRG IN-SX	REQRD BRG IN-SX
S	3335	0	3335	0	0	5-8	5-5
K	3335	0	3335	0	0	5-8	5-5

UNFACTORED REACTIONS

JT	1ST LCASE COMBINED	MAX./MIN. COMPONENT REACTIONS SNOW	LIVE	PERM.LIVE	WIND	DEAD	SOIL
S	2329	1694 / 0	0 / 0	0 / 0	0 / 0	635 / 0	0 / 0
K	2329	1694 / 0	0 / 0	0 / 0	0 / 0	636 / 0	0 / 0

BEARING MATERIAL TO BE SPF NO.2 OR BETTER AT JOINT(S) S, K

BRACING
TOP CHORD TO BE SHEATHED OR MAX. PURLIN SPACING = 2.73 FT.
MAX. UNBRACED BOTTOM CHORD LENGTH = 10.00 FT OR RIGID CEILING DIRECTLY APPLIED.

ALL PITCH BREAKS AND PERIMETER CORNER JOINTS MUST BE LATERALLY RESTRAINED.

LOADING
TOTAL LOAD CASES: (4)

CHORDS

MEMB. FR-TO	MAX. FACTORED FORCE (LBS)	FACTORED VERT. LOAD (PLF) FROM	TO	LC1	MAX CSI (LC)	MAX. UNBRAC LENGTH
A- B	0 / 36	-119.4	-119.4	0.17 (1)	10.00	
B- C	-4353 / 0	-119.4	-119.4	0.43 (1)	2.96	
C- D	-4905 / 0	-119.4	-119.4	0.46 (1)	2.73	
D- T	-6108 / 0	-119.4	-119.4	0.59 (1)	2.94	
T- U	-6108 / 0	-119.4	-119.4	0.59 (1)	2.94	
U- E	-6108 / 0	-119.4	-119.4	0.59 (1)	2.94	
E- V	-6107 / 0	-119.4	-119.4	0.56 (1)	2.99	
V- W	-6107 / 0	-119.4	-119.4	0.56 (1)	2.99	
W- X	-6107 / 0	-119.4	-119.4	0.56 (1)	2.99	
X- F	-6107 / 0	-119.4	-119.4	0.56 (1)	2.99	
F- Y	-6123 / 0	-119.4	-119.4	0.58 (1)	2.95	
Y- Z	-6123 / 0	-119.4	-119.4	0.58 (1)	2.95	
Z- G	-6123 / 0	-119.4	-119.4	0.58 (1)	2.95	
G- H	-4903 / 0	-119.4	-119.4	0.46 (1)	2.74	
H- I	-4355 / 0	-119.4	-119.4	0.43 (1)	2.96	
I- J	0 / 36	-119.4	-119.4	0.17 (1)	10.00	
S- B	-3245 / 0	0.0	0.0	0.23 (1)	5.76	
K- I	-3247 / 0	0.0	0.0	0.23 (1)	5.76	
S-AA	0 / 0	-18.2	-18.2	0.12 (1)	10.00	
AA- R	0 / 0	-18.2	-18.2	0.12 (1)	10.00	
R-AB	0 / 3905	-18.2	-18.2	0.63 (1)	10.00	
AB- Q	0 / 3905	-18.2	-18.2	0.63 (1)	10.00	
Q-AC	0 / 4400	-18.2	-18.2	0.65 (1)	10.00	
AC-AD	0 / 4400	-18.2	-18.2	0.65 (1)	10.00	
AD- P	0 / 4400	-18.2	-18.2	0.65 (1)	10.00	
P-AE	0 / 6122	-18.2	-18.2	0.91 (1)	10.00	
AE- O	0 / 6122	-18.2	-18.2	0.91 (1)	10.00	
O-AF	0 / 6122	-18.2	-18.2	0.91 (1)	10.00	
AF- N	0 / 6122	-18.2	-18.2	0.91 (1)	10.00	
N-AG	0 / 4399	-18.2	-18.2	0.63 (1)	10.00	
AG-AH	0 / 4399	-18.2	-18.2	0.63 (1)	10.00	
AH- M	0 / 4399	-18.2	-18.2	0.63 (1)	10.00	
M-AI	0 / 3906	-18.2	-18.2	0.62 (1)	10.00	
AI- L	0 / 3906	-18.2	-18.2	0.62 (1)	10.00	
L-AJ	0 / 0	-18.2	-18.2	0.12 (1)	10.00	
AJ- K	0 / 0	-18.2	-18.2	0.12 (1)	10.00	

WEBS

MEMB. FR-TO	MAX. FACTORED FORCE (LBS)	MAX CSI (LC)
R- C	-1021 / 0	0.18 (1)
C- Q	0 / 638	0.16 (1)
Q- D	-171 / 75	0.04 (1)
D- P	0 / 2123	0.53 (1)
P- E	-1116 / 0	0.27 (1)
P- F	-19 / 0	0.01 (1)
N- F	-1118 / 0	0.27 (1)
N- G	0 / 2143	0.53 (1)
M- G	-179 / 74	0.05 (1)
M- H	0 / 634	0.16 (1)
L- H	-1017 / 0	0.18 (1)
B- R	0 / 4024	0.71 (1)
L- I	0 / 4026	0.71 (1)

SPECIFIED CONCENTRATED LOADS (LBS)

JT	LOC.	LC1	MAX-	MAX+	FACE	DIR.	TYPE	HEEL	CONN.
D	6-0-0	-418	-418	—	FRONT	VERT	TOTAL	—	C1
G	21-1-0	-418	-418	—	FRONT	VERT	TOTAL	—	C1
M	21-0-4	-22	-22	—	FRONT	VERT	TOTAL	—	C1
O	13-6-8	-22	-22	—	FRONT	VERT	TOTAL	—	C1
Q	6-0-12	-22	-22	—	FRONT	VERT	TOTAL	—	C1
T	8-0-12	-102	-102	—	FRONT	VERT	TOTAL	—	C1
U	10-0-12	-102	-102	—	FRONT	VERT	TOTAL	—	C1
V	12-0-12	-102	-102	—	FRONT	VERT	TOTAL	—	C1
W	13-6-8	-102	-102	—	FRONT	VERT	TOTAL	—	C1
X	15-0-4	-102	-102	—	FRONT	VERT	TOTAL	—	C1
Y	17-0-4	-102	-102	—	FRONT	VERT	TOTAL	—	C1
Z	19-0-4	-102	-102	—	FRONT	VERT	TOTAL	—	C1

DESIGN CRITERIA

*** SPECIAL LOADS ANALYSIS ***
GEOMETRY AND/OR BASIC LOADS CHANGED BY USER.
LOADS WERE DERIVED FROM USER INPUT
NO FURTHER MODIFICATIONS WERE MADE

SPECIFIED LOADS:

TOP CH.	LL	=	34.8	PSF
	DL	=	6.0	PSF
BOT CH.	LL	=	0.0	PSF
	DL	=	7.3	PSF
TOTAL LOAD		=	48.1	PSF

SPACING = 24.0 IN. C/C

LOADING IN FLAT SECTION BASED ON A SLOPE OF 2.00/12 MINIMUM

*** NON STANDARD GIRDER ***
ADDT'L USER-DEFINED LOADS APPLIED TO ALL LOAD CASES.

THIS TRUSS IS DESIGNED FOR RESIDENTIAL OR SMALL BUILDING REQUIREMENTS OF PART 9, NBCC 2015

THIS DESIGN COMPLIES WITH:
- PART 9 OF BCBC 2018 , NBC-2019AE
- PART 9 OF OBC 2012 (2019 AMENDMENT)
- CSA 086-14
- TPIC 2014

(55 % OF 48.1 P.S.F. G.S.L. PLUS 8.4 P.S.F. RAIN LOAD) EQUALS 34.8 P.S.F. SPECIFIED ROOF LIVE LOAD

ALLOWABLE DEFL.(LL)= L/360 (0.90")
CALCULATED VERT. DEFL.(LL) = L/ 999 (0.22")
ALLOWABLE DEFL.(TL)= L/360 (0.90")
CALCULATED VERT. DEFL.(TL) = L/ 842 (0.39")

CSI: TC=0.59/0.97 (D-E:1) , BC=0.91/0.97 (N-P:1) , WB=0.71/0.97 (I-L:1) , SSI=0.37/1.00 (F-G:1)

DOL LUMBER=1.00 NAIL=1.00 LS BEND=1.00 COMP=1.00 SHEAR=1.00 TENS= 1.00

COMPANION LIVE LOAD FACTOR = 1.00

AUTOSOLVE HEELS OFF

TRUSS PLATE MANUFACTURER IS NOT RESPONSIBLE FOR QUALITY CONTROL IN THE TRUSS MANUFACTURING PLANT .

NAIL VALUES

PLATE	GRIP(DRY) (PSI) MAX	MIN	SHEAR (PLI) MAX	MIN	SECTION (PLI) MAX	MIN
MT20	650	371	1747	788	1987	1873

PLATE PLACEMENT TOL. = 0.250 inches

PLATE ROTATION TOL. = 5.0 Deg.

JSI GRIP= 0.90 (L) (INPUT = 0.90)
JSI METAL= 0.97 (O) (INPUT = 1.00)

CONTINUED ON PAGE 2

LICENSED PROFESSIONAL ENGINEER
N.A. EL-MASRI
PROVINCE OF ONTARIO
Jul 18, 2023

READ ALL NOTES ON THIS PAGE AND ON THE ENGINEERING NOTES: TRUSSES. THE NOTE PAGE IS AN INTEGRAL PART OF THIS DRAWING AS IT CONTAINS SPECIFICATIONS AND CRITERIA USED IN THE DESIGN OF THIS COMPONENT.

KOTT

JOB NAME	TRUSS NAME	QUANTITY	PLY	JOB DESC.	DRWG NO.
NE0723-112	G01	1	1	GREENPARK - ZADORRA ESTATES - VILLA 5-3	
				TRUSS DESC.	

CORPORATION OF THE CITY OF OSHAWA
TRUE COPY
OF PERMIT PLANS
Nov 03 2023
PER:
CHIEF BUILDING OFFICIAL

MHP 23036

Version 8.630 S Mar 22 2023 MiTek Industries, Inc. Tue Jul 18 14:41:33 2023 Page 2
ID:aX72BI6hiO7VoZWieLIJw?z93Pm-_mSHCqZSjb8wShG4LHnFypTa4_KfMV9KYTTkmuywpWW

SPECIFIED CONCENTRATED LOADS (LBS)

JT	LOC.	LC1	MAX-	MAX+	FACE	DIR.	TYPE	HEEL	CONN.
AA	2-0-12	-22	-22	—	FRONT	VERT	TOTAL	—	C1
AB	4-0-12	-22	-22	—	FRONT	VERT	TOTAL	—	C1
AC	8-0-12	-22	-22	—	FRONT	VERT	TOTAL	—	C1
AD	10-0-12	-22	-22	—	FRONT	VERT	TOTAL	—	C1
AE	12-0-12	-22	-22	—	FRONT	VERT	TOTAL	—	C1
AF	15-0-4	-22	-22	—	FRONT	VERT	TOTAL	—	C1
AG	17-0-4	-22	-22	—	FRONT	VERT	TOTAL	—	C1
AH	19-0-4	-22	-22	—	FRONT	VERT	TOTAL	—	C1
AI	23-0-4	-22	-22	—	FRONT	VERT	TOTAL	—	C1
AJ	25-0-4	-22	-22	—	FRONT	VERT	TOTAL	—	C1

CONNECTION REQUIREMENTS

1) **C1:** A SUITABLE HANGER/MECHANICAL CONNECTION IS REQUIRED.

LICENSED PROFESSIONAL ENGINEER
N.A. EL-MASRI
PROVINCE OF ONTARIO
Jul 18, 2023

READ ALL NOTES ON THIS PAGE AND ON THE ENGINEERING NOTES: TRUSSES. THE NOTE PAGE IS AN INTEGRAL PART OF THIS DRAWING AS IT CONTAINS SPECIFICATIONS AND CRITERIA USED IN THE DESIGN OF THIS COMPONENT.

KOTT

CORPORATION OF THE CITY OF OSHAWA
TRUE COPY OF PERMIT PLANS
Nov 03 2023
PER: C Matt
CHIEF BUILDING OFFICIAL

MHP 23036

JOB NAME	TRUSS NAME	QUANTITY	PLY	JOB DESC.	DRWG NO.
NE0723-112	G02	1	1	GREENPARK - ZADOR BAY ESTATES - VILLA 5-3 (TRUSS DESC.)	

Version 8.630 S Mar 22 2023 MiTek Industries, Inc. Tue Jul 18 14:41:34 2023 Page 1
ID:aX72BI6hiO7VoZWieLIJw?z93Pm-Sy0gPAa4TuGn4rrGu?IUV0?iiOjS5yPTn7DHJLywpWV

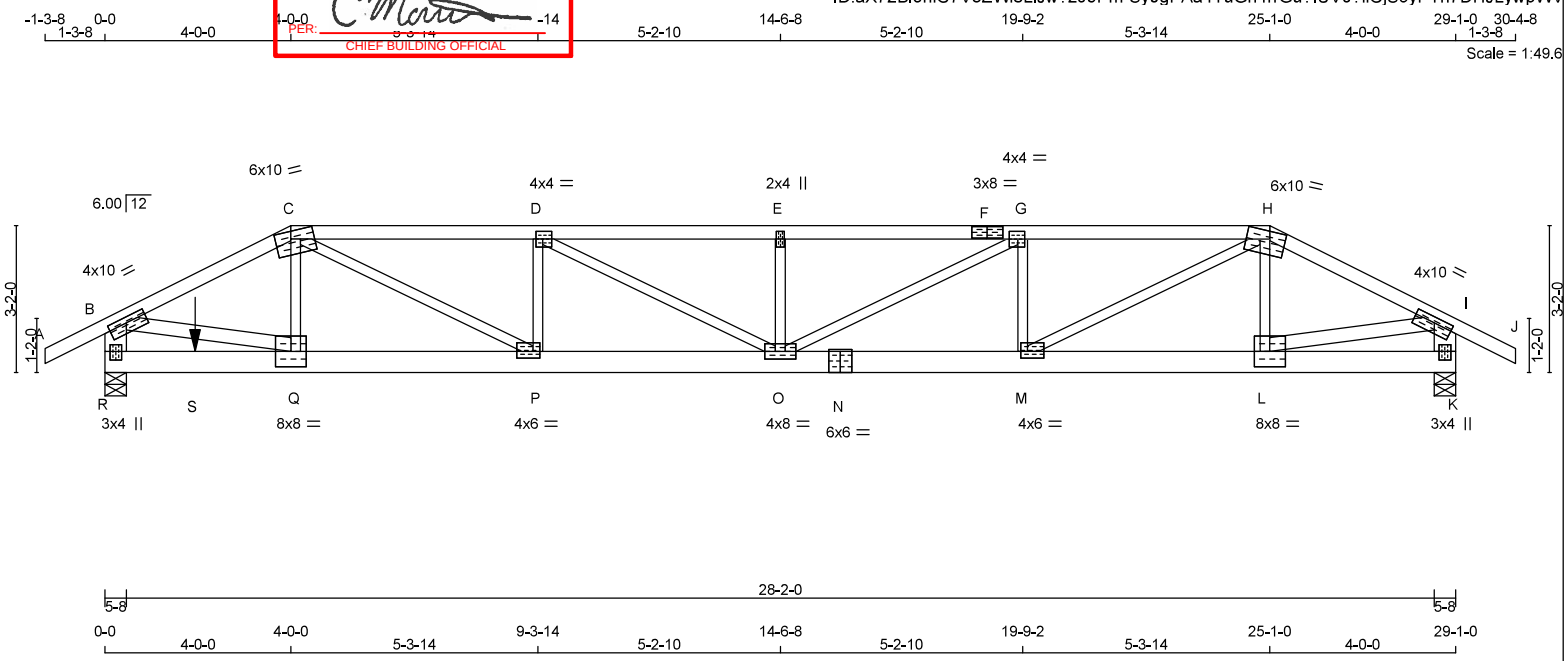

TOTAL WEIGHT = 128 lb [M]

LUMBER
N. L. G. A. RULES

CHORDS	SIZE		LUMBER	DESCR.
A - C	2x4	DRY	No.2	SPF
C - F	2x4	DRY	2100F 1.8E	SPF
F - H	2x4	DRY	2100F 1.8E	SPF
H - J	2x4	DRY	No.2	SPF
R - B	2x6	DRY	No.2	SPF
K - I	2x6	DRY	No.2	SPF
R - N	2x6	DRY	2100F 1.8E	SPF
N - K	2x6	DRY	2100F 1.8E	SPF
ALL WEBS EXCEPT	2x3	DRY	No.2	SPF
B - Q	2x4	DRY	No.2	SPF
L - I	2x4	DRY	No.2	SPF

DRY: SEASONED LUMBER.

PLATES (table is in inches)

JT	TYPE	PLATES	W	LEN	Y	X
B	TMVW-t	MT20	4.0	10.0	1.50	4.75
C	TTWW-m	MT20	6.0	10.0	2.00	4.00
D	TMWW-t	MT20	4.0	4.0	2.00	1.75
E	TMW+w	MT20	2.0	4.0		
F	TS-t	MT20	3.0	8.0		
G	TMWW-t	MT20	4.0	4.0	2.00	1.75
H	TTWW-m	MT20	6.0	10.0	2.00	4.00
I	TMVW-t	MT20	4.0	10.0	1.50	4.75
K	BMV1+p	MT20	3.0	4.0	2.25	1.50
L	BMWW-t	MT20	8.0	8.0		
M	BMWW-t	MT20	4.0	6.0	1.75	1.75
N	BS-t	MT20	6.0	6.0		
O	BMWWW-t	MT20	4.0	8.0		
P	BMWW-t	MT20	4.0	6.0	1.75	1.75
Q	BMWW-t	MT20	8.0	8.0		
R	BMV1+p	MT20	3.0	4.0	2.25	1.50

DIMENSIONS, SUPPORTS AND LOADINGS SPECIFIED BY FABRICATOR TO BE VERIFIED BY BUILDING DESIGNER

BEARINGS

JT	FACTORED GROSS REACTION VERT	HORZ	MAXIMUM FACTORED GROSS REACTION DOWN	HORZ	UPLIFT	INPUT BRG IN-SX	REQRD BRG IN-SX
R	4109	0	4109	0	0	5-8	5-6
K	2303	0	2303	0	0	5-8	2-3

UNFACTORED REACTIONS

JT	1ST LCASE COMBINED	MAX./MIN. COMPONENT REACTIONS SNOW	LIVE	PERM.LIVE	WIND	DEAD	SOIL
R	2866	2108 / 0	0 / 0	0 / 0	0 / 0	758 / 0	0 / 0
K	1607	1178 / 0	0 / 0	0 / 0	0 / 0	428 / 0	0 / 0

BEARING MATERIAL TO BE SPF NO.2 OR BETTER AT JOINT(S) R, K
BEARING SIZE FACTOR = 1.15 AT JNT(S) R, K (BASED ON SUPPORT DEPTH = 1-8)

BRACING
TOP CHORD TO BE SHEATHED OR MAX. PURLIN SPACING = 2.58 FT.
MAX. UNBRACED BOTTOM CHORD LENGTH = 10.00 FT OR RIGID CEILING DIRECTLY APPLIED.

ALL PITCH BREAKS AND PERIMETER CORNER JOINTS MUST BE LATERALLY RESTRAINED.

LOADING
TOTAL LOAD CASES: (4)

CHORDS

MEMB. FR-TO	MAX. FACTORED FORCE (LBS)	FACTORED VERT. LOAD (PLF) FROM	TO	LC1	MAX CSI (LC)	MAX. UNBRAC LENGTH
A- B	0 / 36	-119.4	-119.4	0.17 (1)	10.00	
B- C	-4426 / 0	-119.4	-119.4	0.72 (1)	2.58	
C- D	-5551 / 0	-119.4	-119.4	0.59 (1)	3.22	
D- E	-5970 / 0	-119.4	-119.4	0.63 (1)	3.08	
E- F	-5970 / 0	-119.4	-119.4	0.62 (1)	3.08	
F- G	-5970 / 0	-119.4	-119.4	0.62 (1)	3.08	
G- H	-5083 / 0	-119.4	-119.4	0.55 (1)	3.39	
H- I	-3041 / 0	-119.4	-119.4	0.54 (1)	3.36	
I- J	0 / 36	-119.4	-119.4	0.17 (1)	10.00	
R- B	-3134 / 0	0.0	0.0	0.22 (1)	5.84	
K- I	-2279 / 0	0.0	0.0	0.16 (1)	6.67	
R- S	0 / 0	-18.2	-18.2	0.74 (1)	10.00	
S- Q	0 / 0	-18.2	-18.2	0.74 (1)	10.00	
Q- P	0 / 3980	-18.2	-18.2	0.47 (1)	10.00	
P- O	0 / 5551	-18.2	-18.2	0.39 (1)	10.00	
O- N	0 / 5083	-18.2	-18.2	0.33 (1)	10.00	
N- M	0 / 5083	-18.2	-18.2	0.33 (1)	10.00	
M- L	0 / 2703	-18.2	-18.2	0.19 (1)	10.00	
L- K	0 / 0	-18.2	-18.2	0.03 (4)	10.00	

WEBS

MEMB. FR-TO	MAX. FACTORED FORCE (LBS)	MAX CSI (LC)
Q- C	0 / 660	0.16 (1)
C- P	0 / 1772	0.44 (1)
P- D	-932 / 0	0.18 (1)
D- O	0 / 476	0.12 (1)
O- E	-571 / 0	0.11 (1)
O- G	0 / 1006	0.25 (1)
M- G	-1182 / 0	0.23 (1)
M- H	0 / 2685	0.66 (1)
L- H	-384 / 0	0.07 (1)
B- Q	0 / 4025	0.71 (1)
L- I	0 / 2766	0.49 (1)

SPECIFIED CONCENTRATED LOADS (LBS)

JT	LOC.	LC1	MAX-	MAX+	FACE	DIR.	TYPE	HEEL	CONN.
S	1-11-4	-1453	-1453	—	FRONT	VERT	TOTAL	—	C1

CONNECTION REQUIREMENTS

1) **C1:** A SUITABLE HANGER/MECHANICAL CONNECTION IS REQUIRED.

DESIGN CRITERIA

*** SPECIAL LOADS ANALYSIS ***
GEOMETRY AND/OR BASIC LOADS CHANGED BY USER.
LOADS WERE DERIVED FROM USER INPUT
NO FURTHER MODIFICATIONS WERE MADE

SPECIFIED LOADS:

TOP CH.	LL	=	34.8	PSF
	DL	=	6.0	PSF
BOT CH.	LL	=	0.0	PSF
	DL	=	7.3	PSF
TOTAL LOAD		=	48.1	PSF

SPACING = 24.0 IN. C/C

LOADING IN FLAT SECTION BASED ON A SLOPE OF 2.00/12 MINIMUM

*** NON STANDARD GIRDER ***
ADDT'L USER-DEFINED LOADS APPLIED TO ALL LOAD CASES.

THIS TRUSS IS DESIGNED FOR RESIDENTIAL OR SMALL BUILDING REQUIREMENTS OF PART 9, NBCC 2015

THIS DESIGN COMPLIES WITH:
- PART 9 OF BCBC 2018 , NBC-2019AE
- PART 9 OF OBC 2012 (2019 AMENDMENT)
- CSA 086-14
- TPIC 2014

(55 % OF 48.1 P.S.F. G.S.L. PLUS 8.4 P.S.F. RAIN LOAD) EQUALS 34.8 P.S.F. SPECIFIED ROOF LIVE LOAD

ALLOWABLE DEFL.(LL)= L/360 (0.97")
CALCULATED VERT. DEFL.(LL) = L/ 999 (0.30")
ALLOWABLE DEFL.(TL)= L/360 (0.97")
CALCULATED VERT. DEFL.(TL) = L/ 670 (0.52")

CSI: TC=0.72/0.97 (B-C:1) , BC=0.74/0.97 (Q-R:1) , WB=0.71/0.97 (B-Q:1) , SSI=0.78/1.00 (Q-R:1)

DOL LUMBER=1.00 NAIL=1.00 LS BEND=1.00 COMP=1.00 SHEAR=1.00 TENS= 1.00

COMPANION LIVE LOAD FACTOR = 1.00

AUTOSOLVE HEELS OFF

TRUSS PLATE MANUFACTURER IS NOT RESPONSIBLE FOR QUALITY CONTROL IN THE TRUSS MANUFACTURING PLANT .

NAIL VALUES

PLATE	GRIP(DRY) (PSI) MAX	MIN	SHEAR (PLI) MAX	MIN	SECTION (PLI) MAX	MIN
MT20	650	371	1747	788	1987	1873

PLATE PLACEMENT TOL. = 0.250 inches

PLATE ROTATION TOL. = 5.0 Deg.

JSI GRIP= 0.90 (P) (INPUT = 0.90)
JSI METAL= 0.91 (N) (INPUT = 1.00)

LICENSED PROFESSIONAL ENGINEER
N.A. EL-MASRI
PROVINCE OF ONTARIO
Jul 18, 2023

READ ALL NOTES ON THIS PAGE AND ON THE ENGINEERING NOTES: TRUSSES. THE NOTE PAGE IS AN INTEGRAL PART OF THIS DRAWING AS IT CONTAINS SPECIFICATIONS AND CRITERIA USED IN THE DESIGN OF THIS COMPONENT.

KOTT

CORPORATION OF THE CITY OF OSHAWA
TRUE COPY OF PERMIT PLANS
Nov 03 2023
PER:
CHIEF BUILDING OFFICIAL

MHP 23036

JOB NAME	TRUSS NAME	QUANTITY	PLY	JOB DESC.	DRWG NO.
NE0723-112	G03	1	1	GREENPARK - ZADOR BAY ESTATES - VILLA 5-3	
				TRUSS DESC.	

Version 8.630 S Mar 22 2023 MiTek Industries, Inc. Tue Jul 18 14:41:35 2023 Page 1
ID:aX72Bl6hiO7VoZWieLIJw?z93Pm-x8a2cWaiECOdi_QTSiqj1EYsho41qMWd?nyrrnywpWU

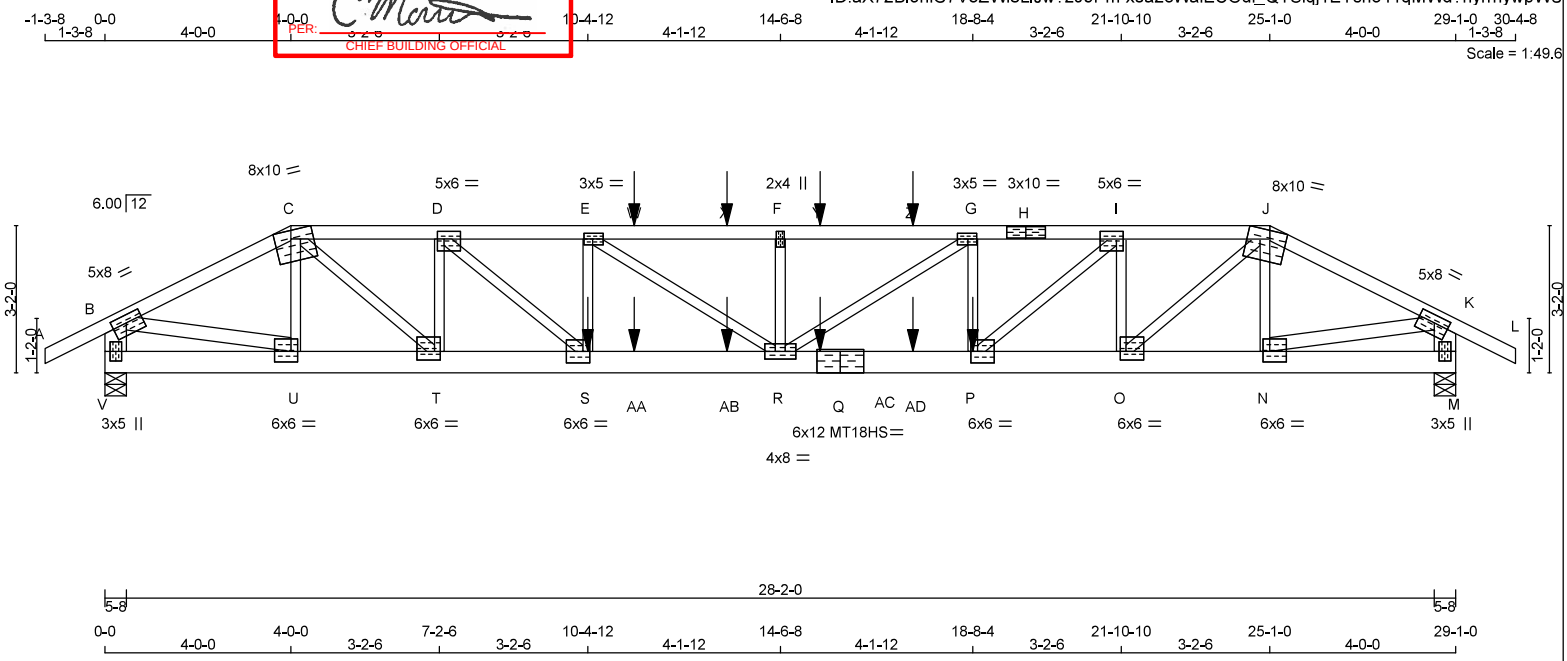

TOTAL WEIGHT = 134 lb
[M]

LUMBER
N. L. G. A. RULES

CHORDS	SIZE		LUMBER	DESCR.
A - C	2x4	DRY	No.2	SPF
C - H	2x4	DRY	2100F 1.8E	SPF
H - J	2x4	DRY	2100F 1.8E	SPF
J - L	2x4	DRY	No.2	SPF
V - B	2x6	DRY	No.2	SPF
M - K	2x6	DRY	No.2	SPF
V - Q	2x6	DRY	2100F 1.8E	SPF
Q - M	2x6	DRY	2100F 1.8E	SPF
ALL WEBS	2x3	DRY	No.2	SPF
EXCEPT				
B - U	2x4	DRY	No.2	SPF
N - K	2x4	DRY	No.2	SPF

DRY: SEASONED LUMBER.

PLATES (table is in inches)

JT	TYPE	PLATES	W	LEN	Y	X
B	TMVW-t	MT20	5.0	8.0	2.00	3.75
C	TTWW-m	MT20	8.0	10.0	Edge	4.25
D	TMWW-t	MT20	5.0	6.0	2.00	1.75
E	TMWW-t	MT20	3.0	5.0	1.50	2.25
F	TMW+w	MT20	2.0	4.0		
G	TMWW-t	MT20	3.0	5.0	1.50	2.25
H	TS-t	MT20	3.0	10.0		
I	TMWW-t	MT20	5.0	6.0	2.00	1.75
J	TTWW-m	MT20	8.0	10.0	Edge	4.25
K	TMVW-t	MT20	5.0	8.0	2.00	3.75
M	BMV1+p	MT20	3.0	5.0		
N	BMWW-t	MT20	6.0	6.0	2.75	1.75
O	BMWW-t	MT20	6.0	6.0	2.25	1.50
P	BMWW-t	MT20	6.0	6.0	3.00	1.75
Q	BS-t	MT18HS	6.0	12.0		
R	BMWWW-t	MT20	4.0	8.0		
S	BMWW-t	MT20	6.0	6.0	3.00	1.75
T	BMWW-t	MT20	6.0	6.0	2.25	1.50
U	BMWW-t	MT20	6.0	6.0	2.75	1.75
V	BMV1+p	MT20	3.0	5.0		

Edge - INDICATES REFERENCE CORNER OF PLATE TOUCHES EDGE OF CHORD.

DIMENSIONS, SUPPORTS AND LOADINGS SPECIFIED BY FABRICATOR TO BE VERIFIED BY BUILDING DESIGNER

BEARINGS

JT	FACTORED GROSS REACTION VERT	HORZ	MAXIMUM FACTORED GROSS REACTION DOWN	HORZ	UPLIFT	INPUT BRG IN-SX	REQRD BRG IN-SX
V	3367	0	3367	0	0	5-8	3-7
M	3284	0	3284	0	0	5-8	3-3

UNFACTORED REACTIONS

JT	1ST LCASE COMBINED	MAX./MIN. COMPONENT REACTIONS SNOW	LIVE	PERM.LIVE	WIND	DEAD	SOIL
V	2347	1733 / 0	0 / 0	0 / 0	0 / 0	615 / 0	0 / 0
M	2290	1689 / 0	0 / 0	0 / 0	0 / 0	601 / 0	0 / 0

BEARING MATERIAL TO BE SPF NO.2 OR BETTER AT JOINT(S) V, M
BEARING SIZE FACTOR = 1.15 AT JNT(S) V, M (BASED ON SUPPORT DEPTH = 1-8)

BRACING
TOP CHORD TO BE SHEATHED OR MAX. PURLIN SPACING = 2.25 FT.
MAX. UNBRACED BOTTOM CHORD LENGTH = 10.00 FT OR RIGID CEILING DIRECTLY APPLIED.

ALL PITCH BREAKS AND PERIMETER CORNER JOINTS MUST BE LATERALLY RESTRAINED.

LOADING
TOTAL LOAD CASES: (4)

CHORDS

MEMB. FR-TO	MAX. FACTORED FORCE (LBS)	FACTORED VERT. LOAD (PLF) FROM	TO	LC1	MAX CSI (LC)	MAX. UNBRAC LENGTH
A- B	0 / 36	-119.4	-119.4	0.17 (1)	10.00	
B- C	-4732 / 0	-119.4	-119.4	0.77 (1)	2.42	
C- D	-6978 / 0	-119.4	-119.4	0.37 (1)	3.06	
D- E	-9226 / 0	-119.4	-119.4	0.54 (1)	2.50	
E- W	-9669 / 0	-119.4	-119.4	0.75 (1)	2.25	
W- X	-9669 / 0	-119.4	-119.4	0.75 (1)	2.25	
X- F	-9669 / 0	-119.4	-119.4	0.75 (1)	2.25	
F- Y	-9669 / 0	-119.4	-119.4	0.75 (1)	2.25	
Y- Z	-9669 / 0	-119.4	-119.4	0.75 (1)	2.25	
Z- G	-9669 / 0	-119.4	-119.4	0.75 (1)	2.25	
G- H	-8931 / 0	-119.4	-119.4	0.52 (1)	2.57	
H- I	-8931 / 0	-119.4	-119.4	0.52 (1)	2.57	
I- J	-6764 / 0	-119.4	-119.4	0.35 (1)	3.13	
J- K	-4598 / 0	-119.4	-119.4	0.75 (1)	2.49	
K- L	0 / 36	-119.4	-119.4	0.17 (1)	10.00	
V- B	-3322 / 0	0.0	0.0	0.23 (1)	5.70	
M- K	-3240 / 0	0.0	0.0	0.23 (1)	5.77	
V- U	0 / 0	-18.2	-18.2	0.02 (4)	10.00	
U- T	0 / 4202	-18.2	-18.2	0.26 (1)	10.00	
T- S	0 / 6978	-18.2	-18.2	0.46 (1)	10.00	
S-AA	0 / 9226	-18.2	-18.2	0.59 (1)	10.00	
AA-AB	0 / 9226	-18.2	-18.2	0.59 (1)	10.00	
AB- R	0 / 9226	-18.2	-18.2	0.59 (1)	10.00	
R-AC	0 / 8931	-18.2	-18.2	0.57 (1)	10.00	
AC- Q	0 / 8931	-18.2	-18.2	0.57 (1)	10.00	
Q-AD	0 / 8931	-18.2	-18.2	0.57 (1)	10.00	
AD- P	0 / 8931	-18.2	-18.2	0.57 (1)	10.00	
P- O	0 / 6764	-18.2	-18.2	0.43 (1)	10.00	
O- N	0 / 4083	-18.2	-18.2	0.25 (1)	10.00	
N- M	0 / 0	-18.2	-18.2	0.02 (4)	10.00	

WEBS

MEMB. FR-TO	MAX. FACTORED FORCE (LBS)	MAX CSI (LC)
U- C	-722 / 0	0.14 (1)
C- T	0 / 3681	0.91 (1)
T- D	-2333 / 0	0.45 (1)
D- S	0 / 2984	0.74 (1)
S- E	-802 / 0	0.15 (1)
E- R	0 / 533	0.13 (1)
R- F	-683 / 0	0.13 (1)
R- G	0 / 890	0.22 (1)
P- G	-993 / 0	0.19 (1)
P- I	0 / 2876	0.71 (1)
O- I	-2262 / 0	0.43 (1)
O- J	0 / 3554	0.88 (1)
N- J	-697 / 0	0.13 (1)
B- U	0 / 4303	0.76 (1)
N- K	0 / 4182	0.74 (1)

SPECIFIED CONCENTRATED LOADS (LBS)

JT	LOC.	LC1	MAX-	MAX+	FACE	DIR.	TYPE	HEEL	CONN.
P	18-8-4	-592	-592	—	BACK	VERT	TOTAL	—	C1
S	10-4-12	-785	-785	—	BACK	VERT	TOTAL	—	C1
W	11-4-12	-49	-49	—	BACK	VERT	TOTAL	—	C1
X	13-4-12	-49	-49	—	BACK	VERT	TOTAL	—	C1
Y	15-4-12	-49	-49	—	BACK	VERT	TOTAL	—	C1
Z	17-4-12	-49	-49	—	BACK	VERT	TOTAL	—	C1
AA	11-4-12	-11	-11	—	BACK	VERT	TOTAL	—	C1
AB	13-4-12	-11	-11	—	BACK	VERT	TOTAL	—	C1
AC	15-4-12	-11	-11	—	BACK	VERT	TOTAL	—	C1
AD	17-4-12	-11	-11	—	BACK	VERT	TOTAL	—	C1

CONNECTION REQUIREMENTS

1) **C1:** A SUITABLE HANGER/MECHANICAL CONNECTION IS REQUIRED.

DESIGN CRITERIA

*** SPECIAL LOADS ANALYSIS ***
GEOMETRY AND/OR BASIC LOADS CHANGED BY USER.
LOADS WERE DERIVED FROM USER INPUT
NO FURTHER MODIFICATIONS WERE MADE

SPECIFIED LOADS:

TOP CH.	LL	=	34.8	PSF
	DL	=	6.0	PSF
BOT CH.	LL	=	0.0	PSF
	DL	=	7.3	PSF
TOTAL LOAD		=	48.1	PSF

SPACING = 24.0 IN. C/C

LOADING IN FLAT SECTION BASED ON A SLOPE OF 2.00/12 MINIMUM

*** NON STANDARD GIRDER ***
ADDT'L USER-DEFINED LOADS APPLIED TO ALL LOAD CASES.

THIS TRUSS IS DESIGNED FOR RESIDENTIAL OR SMALL BUILDING REQUIREMENTS OF PART 9, NBCC 2015

THIS DESIGN COMPLIES WITH:
- PART 9 OF BCBC 2018 , NBC-2019AE
- PART 9 OF OBC 2012 (2019 AMENDMENT)
- CSA 086-14
- TPIC 2014

(55 % OF 48.1 P.S.F. G.S.L. PLUS 8.4 P.S.F. RAIN LOAD) EQUALS 34.8 P.S.F. SPECIFIED ROOF LIVE LOAD

ALLOWABLE DEFL.(LL)= L/360 (0.97")
CALCULATED VERT. DEFL.(LL) = L/ 769 (0.45")
ALLOWABLE DEFL.(TL)= L/360 (0.97")
CALCULATED VERT. DEFL.(TL) = L/ 454 (0.77")

CSI: TC=0.77/0.97 (B-C:1) , BC=0.59/0.97 (R-S:1) , WB=0.91/0.97 (C-T:1) , SSI=0.30/1.00 (F-G:1)

DOL LUMBER=1.00 NAIL=1.00 LS BEND=1.00 COMP=1.00 SHEAR=1.00 TENS= 1.00

COMPANION LIVE LOAD FACTOR = 1.00

AUTOSOLVE HEELS OFF

TRUSS PLATE MANUFACTURER IS NOT RESPONSIBLE FOR QUALITY CONTROL IN THE TRUSS MANUFACTURING PLANT .

NAIL VALUES

PLATE	GRIP(DRY) (PSI) MAX	MIN	SHEAR (PLI) MAX	MIN	SECTION (PLI) MAX	MIN
MT20	650	371	1747	788	1987	1873
MT18HS	586	403	2455	1382	3163	3004

PLATE PLACEMENT TOL. = 0.250 inches

PLATE ROTATION TOL. = 5.0 Deg.

JSI GRIP= 0.90 (K) (INPUT = 0.90)
JSI METAL= 0.98 (Q) (INPUT = 1.00)

LICENSED PROFESSIONAL ENGINEER
N.A. EL-MASRI
PROVINCE OF ONTARIO
Jul 18, 2023

READ ALL NOTES ON THIS PAGE AND ON THE ENGINEERING NOTES: TRUSSES. THE NOTE PAGE IS AN INTEGRAL PART OF THIS DRAWING AS IT CONTAINS SPECIFICATIONS AND CRITERIA USED IN THE DESIGN OF THIS COMPONENT.

KOTT

CORPORATION OF THE CITY OF OSHAWA
TRUE COPY OF PERMIT PLANS
Nov 03 2023
PER:
CHIEF BUILDING OFFICIAL

MHP 23036

JOB NAME	TRUSS NAME	QUANTITY	PLY	JOB DESC.	DRWG NO.
NE0723-112	G04	1	1	GREENPARK - ZADOR BAY ESTATES - VILLA 5-3 (TRUSS DESC.)	

Version 8.630 S Mar 22 2023 MiTek Industries, Inc. Tue Jul 18 14:41:35 2023 Page 1
ID:aX72BI6hiO7VoZWieLIJw?z93Pm-x8a2cWaiECOdi_QTSiqj1EYyYoApqWMd?nyrrnywpWU

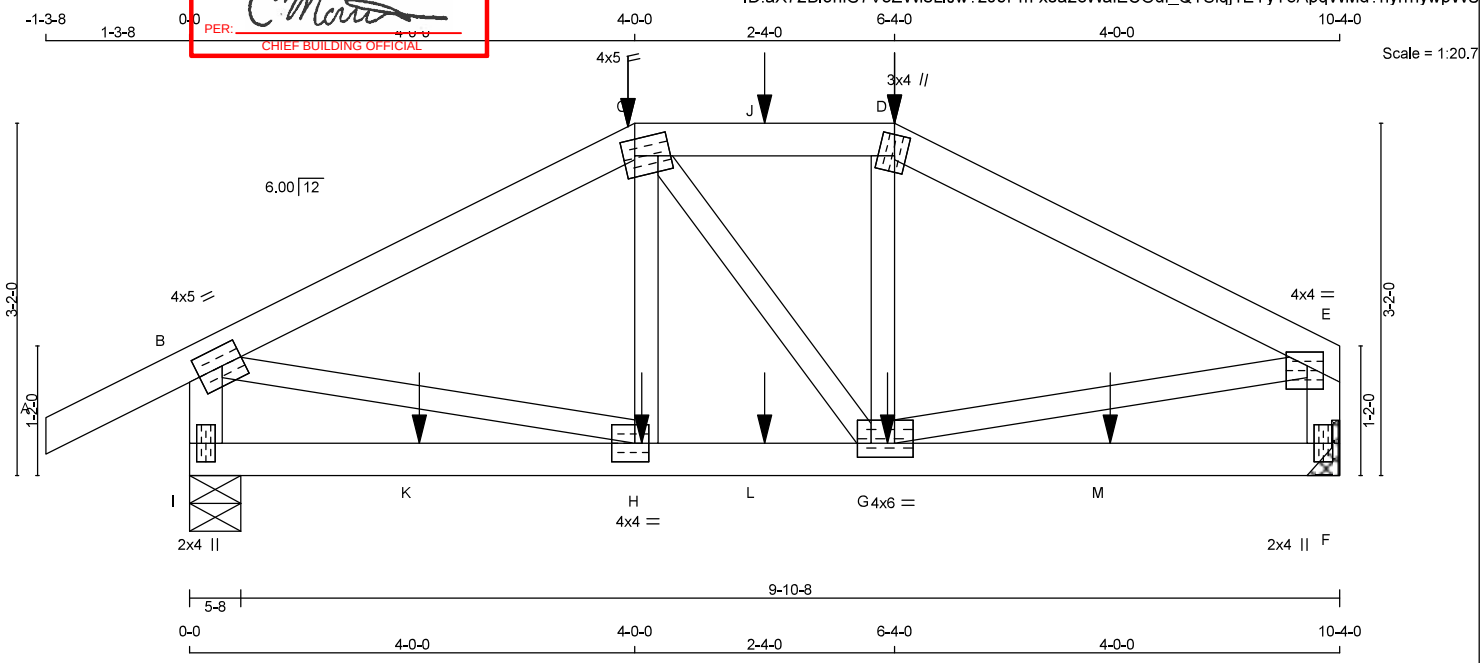

TOTAL WEIGHT = 41 lb
[M]

LUMBER
N. L. G. A. RULES

CHORDS	SIZE		LUMBER	DESCR.
A - C	2x4	DRY	No.2	SPF
C - D	2x4	DRY	No.2	SPF
D - E	2x4	DRY	No.2	SPF
I - B	2x4	DRY	No.2	SPF
F - E	2x4	DRY	No.2	SPF
I - F	2x4	DRY	No.2	SPF
ALL WEBS EXCEPT	2x3	DRY	No.2	SPF

DRY: SEASONED LUMBER.

PLATES (table is in inches)

JT	TYPE	PLATES	W	LEN	Y	X
B	TMVW-t	MT20	4.0	5.0	2.00	2.25
C	TTWW-m	MT20	4.0	5.0	1.75	1.25
D	TTW+m	MT20	3.0	4.0	2.25	1.25
E	TMVW-p	MT20	4.0	4.0	1.50	1.75
F	BMV1+p	MT20	2.0	4.0		
G	BMWWW-t	MT20	4.0	6.0	1.50	1.50
H	BMWW-t	MT20	4.0	4.0	2.00	1.50
I	BMV1+p	MT20	2.0	4.0		

DIMENSIONS, SUPPORTS AND LOADINGS SPECIFIED BY FABRICATOR TO BE VERIFIED BY BUILDING DESIGNER

BEARINGS

JT	FACTORED GROSS REACTION VERT	HORZ	MAXIMUM FACTORED GROSS REACTION DOWN	HORZ	UPLIFT	INPUT BRG IN-SX	REQRD BRG IN-SX
I	1233	0	1233	0	0	5-8	1-8
F	1070	0	1070	0	0	MECHANICAL	

A SUITABLE HANGER/MECHANICAL CONNECTION IS REQUIRED AT JOINT F. MINIMUM BEARING LENGTH AT JOINT F = 1-8.

UNFACTORED REACTIONS

JT	1ST LCASE COMBINED	MAX./MIN. COMPONENT REACTIONS SNOW	LIVE	PERM.LIVE	WIND	DEAD	SOIL
I	858	641 / 0	0 / 0	0 / 0	0 / 0	217 / 0	0 / 0
F	747	547 / 0	0 / 0	0 / 0	0 / 0	200 / 0	0 / 0

BEARING MATERIAL TO BE SPF NO.2 OR BETTER AT JOINT(S) I

BRACING
TOP CHORD TO BE SHEATHED OR MAX. PURLIN SPACING = 5.14 FT.
MAX. UNBRACED BOTTOM CHORD LENGTH = 10.00 FT OR RIGID CEILING DIRECTLY APPLIED.

ALL PITCH BREAKS AND PERIMETER CORNER JOINTS MUST BE LATERALLY RESTRAINED.

LOADING
TOTAL LOAD CASES: (4)

CHORDS

MEMB. FR-TO	MAX. FACTORED FORCE (LBS)	VERT. LOAD (PLF) FROM	TO	LC1	MAX CSI (LC)	MAX. UNBRAC LENGTH
A- B	0 / 36	-119.4	-119.4	0.17 (1)	10.00	
B- C	-1244 / 0	-119.4	-119.4	0.40 (1)	5.15	
C- J	-1107 / 0	-119.4	-119.4	0.19 (1)	5.71	
J- D	-1107 / 0	-119.4	-119.4	0.19 (1)	5.71	
D- E	-1248 / 0	-119.4	-119.4	0.40 (1)	5.14	
I- B	-1192 / 0	0.0	0.0	0.13 (1)	7.20	
F- E	-1029 / 0	0.0	0.0	0.11 (1)	7.61	
I- K	0 / 0	-18.2	-18.2	0.10 (4)	10.00	
K- H	0 / 0	-18.2	-18.2	0.10 (4)	10.00	
H- L	0 / 1107	-18.2	-18.2	0.22 (1)	10.00	
L- G	0 / 1107	-18.2	-18.2	0.22 (1)	10.00	
G- M	0 / 0	-18.2	-18.2	0.10 (4)	10.00	
M- F	0 / 0	-18.2	-18.2	0.10 (4)	10.00	

WEBS

MEMB. FR-TO	MAX. FACTORED FORCE (LBS)	MAX CSI (LC)
H- C	-145 / 37	0.03 (1)
C- G	0 / 2	0.00 (4)
G- D	-143 / 40	0.03 (1)
B- H	0 / 1136	0.28 (1)
G- E	0 / 1139	0.28 (1)

SPECIFIED CONCENTRATED LOADS (LBS)

JT	LOC.	LC1	MAX-	MAX+	FACE	DIR.	TYPE	HEEL	CONN.
C	4-0-0	-202	-202	—	BACK	VERT	TOTAL	—	C1
D	6-4-0	-202	-202	—	BACK	VERT	TOTAL	—	C1
G	6-3-4	-10	-10	—	BACK	VERT	TOTAL	—	C1
H	4-0-12	-10	-10	—	BACK	VERT	TOTAL	—	C1
J	5-2-0	-41	-41	—	BACK	VERT	TOTAL	—	C1
K	2-0-12	-12	-12	—	BACK	VERT	TOTAL	—	C1
L	5-2-0	-10	-10	—	BACK	VERT	TOTAL	—	C1
M	8-3-4	-12	-12	—	BACK	VERT	TOTAL	—	C1

CONNECTION REQUIREMENTS

1) **C1:** A SUITABLE HANGER/MECHANICAL CONNECTION IS REQUIRED.

DESIGN CRITERIA

*** SPECIAL LOADS ANALYSIS ***
GEOMETRY AND/OR BASIC LOADS CHANGED BY USER.
LOADS WERE DERIVED FROM USER INPUT
NO FURTHER MODIFICATIONS WERE MADE

SPECIFIED LOADS:

TOP CH.	LL	=	34.8	PSF
	DL	=	6.0	PSF
BOT CH.	LL	=	0.0	PSF
	DL	=	7.3	PSF
TOTAL LOAD		=	48.1	PSF

SPACING = 24.0 IN. C/C

LOADING IN FLAT SECTION BASED ON A SLOPE OF 2.00/12 MINIMUM

*** NON STANDARD GIRDER ***
ADDT'L USER-DEFINED LOADS APPLIED TO ALL LOAD CASES.

THIS TRUSS IS DESIGNED FOR RESIDENTIAL OR SMALL BUILDING REQUIREMENTS OF PART 9, NBCC 2015

THIS DESIGN COMPLIES WITH:
- PART 9 OF BCBC 2018 , NBC-2019AE
- PART 9 OF OBC 2012 (2019 AMENDMENT)
- CSA 086-14
- TPIC 2014

(55 % OF 48.1 P.S.F. G.S.L. PLUS 8.4 P.S.F. RAIN LOAD)
EQUALS 34.8 P.S.F. SPECIFIED ROOF LIVE LOAD

ALLOWABLE DEFL.(LL)= L/360 (0.34")
CALCULATED VERT. DEFL.(LL) = L/ 999 (0.02")
ALLOWABLE DEFL.(TL)= L/360 (0.34")
CALCULATED VERT. DEFL.(TL) = L/ 999 (0.03")

CSI: TC=0.40/0.97 (D-E:1) , BC=0.22/0.97 (G-H:1) , WB=0.28/0.97 (E-G:1) , SSI=0.18/1.00 (B-C:1)

DOL LUMBER=1.00 NAIL=1.00 LS BEND=1.00 COMP=1.00 SHEAR=1.00 TENS= 1.00

COMPANION LIVE LOAD FACTOR = 1.00

TRUSS PLATE MANUFACTURER IS NOT RESPONSIBLE FOR QUALITY CONTROL IN THE TRUSS MANUFACTURING PLANT .

NAIL VALUES

PLATE	GRIP(DRY) (PSI) MAX	MIN	SHEAR (PLI) MAX	MIN	SECTION (PLI) MAX	MIN
MT20	650	371	1747	788	1987	1873

PLATE PLACEMENT TOL. = 0.250 inches

PLATE ROTATION TOL. = 5.0 Deg.

JSI GRIP= 0.88 (H) (INPUT = 0.90)
JSI METAL= 0.39 (B) (INPUT = 1.00)

LICENSED PROFESSIONAL ENGINEER
N.A. EL-MASRI
PROVINCE OF ONTARIO
Jul 18, 2023

READ ALL NOTES ON THIS PAGE AND ON THE ENGINEERING NOTES: TRUSSES. THE NOTE PAGE IS AN INTEGRAL PART OF THIS DRAWING AS IT CONTAINS SPECIFICATIONS AND CRITERIA USED IN THE DESIGN OF THIS COMPONENT.

KOTT

CORPORATION OF THE CITY OF OSHAWA
TRUE COPY OF PERMIT PLANS
Nov 03 2023
PER:
CHIEF BUILDING OFFICIAL

MHP 23036

JOB NAME	TRUSS NAME	QUANTITY	PLY	JOB DESC.	DRWG NO.
NE0723-112	G05	1	1	GREENPARK - ZADOR BAY ESTATES - VILLA 5-3 (TRUSS DESC.)	

Version 8.630 S Mar 22 2023 MiTek Industries, Inc. Tue Jul 18 14:41:36 2023 Page 1
ID:aX72BI6hiO7VoZWieLIJw?z93Pm-PL8QqsbK?WWUJ8?f0PLyaR5B8COpZxOmERiONDywpWT

Scale = 1:13.4

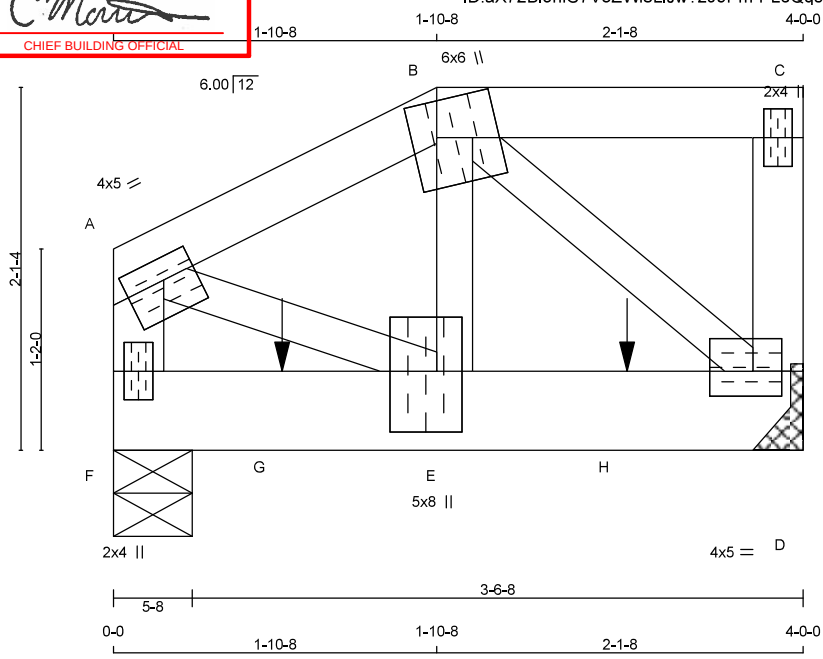

TOTAL WEIGHT = 18 lb
[M]

LUMBER
N. L. G. A. RULES

CHORDS	SIZE		LUMBER	DESCR.
A - B	2x4	DRY	No.2	SPF
B - C	2x4	DRY	No.2	SPF
D - C	2x4	DRY	No.2	SPF
F - A	2x4	DRY	No.2	SPF
F - D	2x6	DRY	No.2	SPF
ALL WEBS EXCEPT	2x3	DRY	No.2	SPF

DRY: SEASONED LUMBER.

PLATES (table is in inches)

JT	TYPE	PLATES	W	LEN	Y	X
A	TMVW+t	MT20	4.0	5.0	1.50	2.25
B	TTWW+m	MT20	6.0	6.0	2.50	1.75
C	TMV+p	MT20	2.0	4.0		
D	BMVW1+t	MT20	4.0	5.0	1.75	2.00
E	BMWW+t	MT20	5.0	8.0	4.25	1.75
F	BMV1+p	MT20	2.0	4.0		

DIMENSIONS, SUPPORTS AND LOADINGS SPECIFIED BY FABRICATOR TO BE VERIFIED BY BUILDING DESIGNER

BEARINGS

JT	FACTORED GROSS REACTION VERT	HORZ	MAXIMUM FACTORED GROSS REACTION DOWN	HORZ	UPLIFT	INPUT BRG IN-SX	REQRD BRG IN-SX
D	2102	0	2102	0	0	MECHANICAL	
F	2141	0	2141	0	0	5-8	3-7

A SUITABLE HANGER/MECHANICAL CONNECTION IS REQUIRED AT JOINT D. MINIMUM BEARING LENGTH AT JOINT D = 2-4.

UNFACTORED REACTIONS

JT	1ST LCASE COMBINED	SNOW	MAX./MIN. COMPONENT REACTIONS LIVE	PERM.LIVE	WIND	DEAD	SOIL
D	1467	1072 / 0	0 / 0	0 / 0	0 / 0	395 / 0	0 / 0
F	1494	1092 / 0	0 / 0	0 / 0	0 / 0	403 / 0	0 / 0

BEARING MATERIAL TO BE SPF NO.2 OR BETTER AT JOINT(S) F

BRACING
TOP CHORD TO BE SHEATHED OR MAX. PURLIN SPACING = 5.08 FT.
MAX. UNBRACED BOTTOM CHORD LENGTH = 10.00 FT OR RIGID CEILING DIRECTLY APPLIED.

ALL PITCH BREAKS AND PERIMETER CORNER JOINTS MUST BE LATERALLY RESTRAINED.

LOADING
TOTAL LOAD CASES: (4)

CHORDS

MEMB. FR-TO	MAX. FACTORED FORCE (LBS)	FROM	VERT. LOAD (PLF) TO	LC1	MAX CSI (LC)	MAX UNBRAC LENGTH
A- B	-1586 / 0	-119.4	-119.4	0.11 (1)	5.08	
B- C	0 / 0	-119.4	-119.4	0.10 (1)	10.00	
D- C	-127 / 0	0.0	0.0	0.02 (1)	7.81	
F- A	-1381 / 0	0.0	0.0	0.15 (1)	6.81	
F- G	0 / 0	-18.2	-18.2	0.54 (1)	10.00	
G- E	0 / 0	-18.2	-18.2	0.54 (1)	10.00	
E- H	0 / 1520	-18.2	-18.2	0.75 (1)	10.00	
H- D	0 / 1520	-18.2	-18.2	0.75 (1)	10.00	

WEBS

MEMB. FR-TO	MAX. FACTORED FORCE (LBS)	MAX CSI (LC)
E- B	0 / 1709	0.42 (1)
B- D	-1955 / 0	0.35 (1)
A- E	0 / 1521	0.38 (1)

SPECIFIED CONCENTRATED LOADS (LBS)

JT	LOC.	LC1	MAX-	MAX+	FACE	DIR.	TYPE	HEEL	CONN.
G	11-12	-1289	-1289	—	FRONT	VERT	TOTAL	—	C1
H	2-11-12	-1288	-1288	—	FRONT	VERT	TOTAL	—	C1

CONNECTION REQUIREMENTS

1) **C1:** A SUITABLE HANGER/MECHANICAL CONNECTION IS REQUIRED.

DESIGN CRITERIA

*** SPECIAL LOADS ANALYSIS ***
GEOMETRY AND/OR BASIC LOADS CHANGED BY USER.
LOADS WERE DERIVED FROM USER INPUT
NO FURTHER MODIFICATIONS WERE MADE

SPECIFIED LOADS:

TOP CH.	LL	=	34.8	PSF
	DL	=	6.0	PSF
BOT CH.	LL	=	0.0	PSF
	DL	=	7.3	PSF
TOTAL LOAD		=	48.1	PSF

SPACING = 24.0 IN. C/C

LOADING IN FLAT SECTION BASED ON A SLOPE OF 2.00/12 MINIMUM

*** NON STANDARD GIRDER ***
ADDT'L USER-DEFINED LOADS APPLIED TO ALL LOAD CASES.

THIS TRUSS IS DESIGNED FOR RESIDENTIAL OR SMALL BUILDING REQUIREMENTS OF PART 9, NBCC 2015

THIS DESIGN COMPLIES WITH:
- PART 9 OF BCBC 2018 , NBC-2019AE
- PART 9 OF OBC 2012 (2019 AMENDMENT)
- CSA 086-14
- TPIC 2014

(55 % OF 48.1 P.S.F. G.S.L. PLUS 8.4 P.S.F. RAIN LOAD) EQUALS 34.8 P.S.F. SPECIFIED ROOF LIVE LOAD

ALLOWABLE DEFL.(LL)= L/360 (0.19")
CALCULATED VERT. DEFL.(LL) = L/ 999 (0.01")
ALLOWABLE DEFL.(TL)= L/360 (0.19")
CALCULATED VERT. DEFL.(TL) = L/ 999 (0.02")

CSI: TC=0.15/0.97 (A-F:1) , BC=0.75/0.97 (D-E:1) , WB=0.42/0.97 (B-E:1) , SSI=0.75/1.00 (D-E:1)

DOL LUMBER=1.00 NAIL=1.00 LS BEND=1.00 COMP=1.00 SHEAR=1.00 TENS= 1.00

COMPANION LIVE LOAD FACTOR = 1.00

TRUSS PLATE MANUFACTURER IS NOT RESPONSIBLE FOR QUALITY CONTROL IN THE TRUSS MANUFACTURING PLANT .

NAIL VALUES

PLATE	GRIP(DRY) (PSI) MAX	MIN	SHEAR (PLI) MAX	MIN	SECTION (PLI) MAX	MIN
MT20	650	371	1747	788	1987	1873

PLATE PLACEMENT TOL. = 0.250 inches

PLATE ROTATION TOL. = 5.0 Deg.

JSI GRIP= 0.88 (E) (INPUT = 0.90)
JSI METAL= 0.55 (E) (INPUT = 1.00)

LICENSED PROFESSIONAL ENGINEER
N.A. EL-MASRI
PROVINCE OF ONTARIO
Jul 18, 2023

READ ALL NOTES ON THIS PAGE AND ON THE ENGINEERING NOTES: TRUSSES. THE NOTE PAGE IS AN INTEGRAL PART OF THIS DRAWING AS IT CONTAINS SPECIFICATIONS AND CRITERIA USED IN THE DESIGN OF THIS COMPONENT.

KOTT

CORPORATION OF THE CITY OF OSHAWA
TRUE COPY OF PERMIT PLANS
Nov 03 2023
PER: ( )
CHIEF BUILDING OFFICIAL

MHP 23036

JOB NAME	TRUSS NAME	QUANTITY	PLY	JOB DESC.	DRWG NO.
NE0723-112	G06	1	1	GREENPARK - ZADOR BAY ESTATES - VILLA 5-3	
				TRUSS DESC.	

Version 8.630 S Mar 22 2023 MiTek Industries, Inc. Tue Jul 18 14:41:36 2023 Page 1
ID:aX72BI6hiO7VoZWieLIJw?z93Pm-PL8QqsbK?WWUJ8?f0PLyaR57DCQzZ1?mERiONDywpWT

Scale = 1:18.8

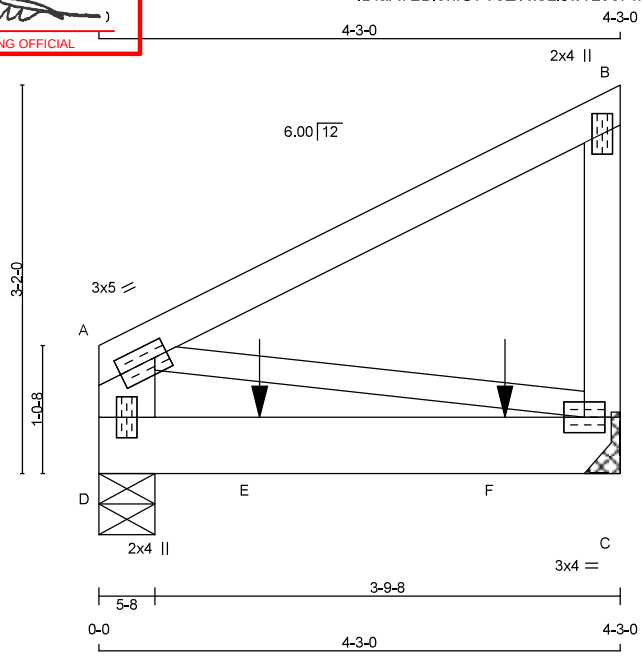

TOTAL WEIGHT = 20 lb
[M]

LUMBER
N. L. G. A. RULES

CHORDS	SIZE		LUMBER	DESCR.
A - B	2x4	DRY	No.2	SPF
C - B	2x4	DRY	No.2	SPF
D - A	2x6	DRY	No.2	SPF
D - C	2x6	DRY	No.2	SPF
ALL WEBS	2x3	DRY	No.2	SPF

DRY: SEASONED LUMBER.

PLATES (table is in inches)

JT	TYPE	PLATES	W	LEN	Y	X
A	TMVW-t	MT20	3.0	5.0	1.50	1.25
B	TMV+p	MT20	2.0	4.0		
C	BMVW1-t	MT20	3.0	4.0		
D	BMV1+p	MT20	2.0	4.0		

DIMENSIONS, SUPPORTS AND LOADINGS SPECIFIED BY FABRICATOR TO BE VERIFIED BY BUILDING DESIGNER

BEARINGS

JT	FACTORED GROSS REACTION VERT	HORZ	MAXIMUM FACTORED GROSS REACTION DOWN	HORZ	UPLIFT	INPUT BRG IN-SX	REQRD BRG IN-SX
C	1149	0	1149	0	0	MECHANICAL	
D	605	0	605	0	0	5-8	1-8

A SUITABLE HANGER/MECHANICAL CONNECTION IS REQUIRED AT JOINT C. MINIMUM BEARING LENGTH AT JOINT C = 1-8.

UNFACTORED REACTIONS

JT	1ST LCASE COMBINED	MAX./MIN. COMPONENT REACTIONS SNOW	LIVE	PERM.LIVE	WIND	DEAD	SOIL
C	800	595 / 0	0 / 0	0 / 0	0 / 0	205 / 0	0 / 0
D	421	315 / 0	0 / 0	0 / 0	0 / 0	106 / 0	0 / 0

BEARING MATERIAL TO BE SPF NO.2 OR BETTER AT JOINT(S) D

BRACING
TOP CHORD TO BE SHEATHED OR MAX. PURLIN SPACING = 10.00 FT.
MAX. UNBRACED BOTTOM CHORD LENGTH = 10.00 FT OR RIGID CEILING DIRECTLY APPLIED.

ALL PITCH BREAKS AND PERIMETER CORNER JOINTS MUST BE LATERALLY RESTRAINED.

LOADING
TOTAL LOAD CASES: (4)

CHORDS

MEMB. FR-TO	MAX. FORCE (LBS)	FACTORED VERT. LOAD (PLF) FROM	TO	LC1	MAX CSI (LC)
A- B	0 / 0	-119.4	-119.4	0.40 (1)	
C- B	-254 / 0	0.0	0.0	0.04 (1)	
D- A	-254 / 0	0.0	0.0	0.02 (1)	
D- E	0 / 0	-18.2	-18.2	0.61 (1)	
E- F	0 / 0	-18.2	-18.2	0.61 (1)	
F- C	0 / 0	-18.2	-18.2	0.61 (1)	

WEBS

MEMB. FR-TO	MAX. FORCE (LBS)	MAX CSI (LC)
A- C	0 / 0	0.00 (1)

MAX. UNBRAC LENGTH
10.00
7.81
7.81
10.00
10.00
10.00

SPECIFIED CONCENTRATED LOADS (LBS)

JT	LOC.	LC1	MAX-	MAX+	FACE	DIR.	TYPE	HEEL	CONN.
E	1-3-12	-79	-79	—	FRONT	VERT	TOTAL	—	C1
F	3-3-12	-733	-733	—	FRONT	VERT	TOTAL	—	C1

CONNECTION REQUIREMENTS

1) **C1:** A SUITABLE HANGER/MECHANICAL CONNECTION IS REQUIRED.

DESIGN CRITERIA

*** SPECIAL LOADS ANALYSIS ***
GEOMETRY AND/OR BASIC LOADS CHANGED BY USER.
LOADS WERE DERIVED FROM USER INPUT
NO FURTHER MODIFICATIONS WERE MADE

SPECIFIED LOADS:

TOP CH.	LL	=	34.8	PSF
	DL	=	6.0	PSF
BOT CH.	LL	=	0.0	PSF
	DL	=	7.3	PSF
TOTAL LOAD		=	48.1	PSF

SPACING = 24.0 IN. C/C

*** NON STANDARD GIRDER ***
ADDT'L USER-DEFINED LOADS APPLIED TO ALL LOAD CASES.

THIS TRUSS IS DESIGNED FOR RESIDENTIAL OR SMALL BUILDING REQUIREMENTS OF PART 9, NBCC 2015

THIS DESIGN COMPLIES WITH:
- PART 9 OF BCBC 2018 , NBC-2019AE
- PART 9 OF OBC 2012 (2019 AMENDMENT)
- CSA 086-14
- TPIC 2014

(55 % OF 48.1 P.S.F. G.S.L. PLUS 8.4 P.S.F. RAIN LOAD) EQUALS 34.8 P.S.F. SPECIFIED ROOF LIVE LOAD

ALLOWABLE DEFL.(LL)= L/360 (0.19")
CALCULATED VERT. DEFL.(LL) = L/ 999 (0.04")
ALLOWABLE DEFL.(TL)= L/360 (0.19")
CALCULATED VERT. DEFL.(TL) = L/ 762 (0.07")

CSI: TC=0.40/0.97 (A-B:1) , BC=0.61/0.97 (C-D:1) , WB=0.00/0.97 (A-C:1) , SSI=0.59/1.00 (C-D:1)

DOL LUMBER=1.00 NAIL=1.00 LS BEND=1.00 COMP=1.00 SHEAR=1.00 TENS= 1.00

COMPANION LIVE LOAD FACTOR = 1.00

AUTOSOLVE RIGHT HEEL ONLY

TRUSS PLATE MANUFACTURER IS NOT RESPONSIBLE FOR QUALITY CONTROL IN THE TRUSS MANUFACTURING PLANT .

NAIL VALUES

PLATE	GRIP(DRY) (PSI) MAX	MIN	SHEAR (PLI) MAX	MIN	SECTION (PLI) MAX	MIN
MT20	650	371	1747	788	1987	1873

PLATE PLACEMENT TOL. = 0.250 inches

PLATE ROTATION TOL. = 5.0 Deg.

JSI GRIP= 0.24 (C) (INPUT = 0.90)
JSI METAL= 0.11 (B) (INPUT = 1.00)

LICENSED PROFESSIONAL ENGINEER
N.A. EL-MASRI
PROVINCE OF ONTARIO
Jul 18, 2023

READ ALL NOTES ON THIS PAGE AND ON THE ENGINEERING NOTES: TRUSSES. THE NOTE PAGE IS AN INTEGRAL PART OF THIS DRAWING AS IT CONTAINS SPECIFICATIONS AND CRITERIA USED IN THE DESIGN OF THIS COMPONENT.

KOTT

CORPORATION OF THE CITY OF OSHAWA
TRUE COPY OF PERMIT PLANS
Nov 03 2023
PER: C Matt
CHIEF BUILDING OFFICIAL

MHP 23036

JOB NAME	TRUSS NAME	QUANTITY	PLY	JOB DESC.	DRWG NO.
NE0723-112	G07	1	1	GREENPARK - ZADOR BAY ESTATES - VILLA 5-3 (TRUSS DESC.)	

Version 8.630 S Mar 22 2023 MiTek Industries, Inc. Tue Jul 18 14:41:37 2023 Page 1
ID:aX72Bl6hiO7VoZWieLIJw?z93Pm-tXio1BcympeLxIara7sB6fdIzclVIUFwT5RxvgywpWS

Scale = 1:18.8

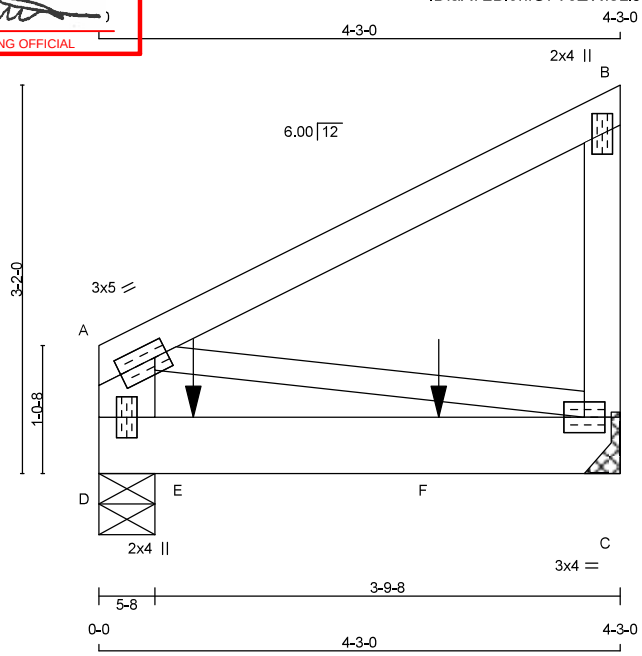

TOTAL WEIGHT = 20 lb [M]

LUMBER
N. L. G. A. RULES

CHORDS	SIZE		LUMBER	DESCR.
A - B	2x4	DRY	No.2	SPF
C - B	2x4	DRY	No.2	SPF
D - A	2x6	DRY	No.2	SPF
D - C	2x6	DRY	No.2	SPF
ALL WEBS	2x3	DRY	No.2	SPF

DRY: SEASONED LUMBER.

PLATES (table is in inches)

JT	TYPE	PLATES	W	LEN	Y	X
A	TMVW-t	MT20	3.0	5.0	1.50	1.25
B	TMV+p	MT20	2.0	4.0		
C	BMVW1-t	MT20	3.0	4.0		
D	BMV1+p	MT20	2.0	4.0		

DIMENSIONS, SUPPORTS AND LOADINGS SPECIFIED BY FABRICATOR TO BE VERIFIED BY BUILDING DESIGNER

BEARINGS

JT	FACTORED GROSS REACTION VERT	HORZ	MAXIMUM FACTORED GROSS REACTION DOWN	HORZ	UPLIFT	INPUT BRG IN-SX	REQRD BRG IN-SX
C	871	0	871	0	0	MECHANICAL	
D	1103	0	1103	0	0	5-8	1-8

A SUITABLE HANGER/MECHANICAL CONNECTION IS REQUIRED AT JOINT C. MINIMUM BEARING LENGTH AT JOINT C = 1-8.

UNFACTORED REACTIONS

JT	1ST LCASE COMBINED	MAX./MIN. COMPONENT REACTIONS SNOW	LIVE	PERM.LIVE	WIND	DEAD	SOIL
C	607	448 / 0	0 / 0	0 / 0	0 / 0	159 / 0	0 / 0
D	769	568 / 0	0 / 0	0 / 0	0 / 0	201 / 0	0 / 0

BEARING MATERIAL TO BE SPF NO.2 OR BETTER AT JOINT(S) D

BRACING
TOP CHORD TO BE SHEATHED OR MAX. PURLIN SPACING = 10.00 FT.
MAX. UNBRACED BOTTOM CHORD LENGTH = 10.00 FT OR RIGID CEILING DIRECTLY APPLIED.

ALL PITCH BREAKS AND PERIMETER CORNER JOINTS MUST BE LATERALLY RESTRAINED.

LOADING
TOTAL LOAD CASES: (4)

CHORDS

MEMB. FR-TO	MAX. FORCE (LBS)	FACTORED VERT. LOAD (PLF) FROM	TO	LC1	MAX CSI (LC)	MAX. UNBRAC LENGTH
A- B	0 / 0	-119.4	-119.4	0.40 (1)	10.00	
C- B	-254 / 0	0.0	0.0	0.04 (1)	7.81	
D- A	-254 / 0	0.0	0.0	0.02 (1)	7.81	
D- E	0 / 0	-18.2	-18.2	0.66 (1)	10.00	
E- F	0 / 0	-18.2	-18.2	0.66 (1)	10.00	
F- C	0 / 0	-18.2	-18.2	0.66 (1)	10.00	

WEBS

MEMB. FR-TO	MAX. FORCE (LBS)	MAX CSI (LC)
A- C	0 / 0	0.00 (1)

SPECIFIED CONCENTRATED LOADS (LBS)

JT	LOC.	LC1	MAX-	MAX+	FACE	DIR.	TYPE	HEEL	CONN.
E	9-4	-484	-484	—	BACK	VERT	TOTAL	—	C1
F	2-9-4	-483	-483	—	BACK	VERT	TOTAL	—	C1

CONNECTION REQUIREMENTS

1) **C1:** A SUITABLE HANGER/MECHANICAL CONNECTION IS REQUIRED.

DESIGN CRITERIA

*** SPECIAL LOADS ANALYSIS ***
GEOMETRY AND/OR BASIC LOADS CHANGED BY USER.
LOADS WERE DERIVED FROM USER INPUT
NO FURTHER MODIFICATIONS WERE MADE

SPECIFIED LOADS:

TOP CH.	LL	=	34.8	PSF
	DL	=	6.0	PSF
BOT CH.	LL	=	0.0	PSF
	DL	=	7.3	PSF
TOTAL LOAD		=	48.1	PSF

SPACING = 24.0 IN. C/C

*** NON STANDARD GIRDER ***
ADDT'L USER-DEFINED LOADS APPLIED TO ALL LOAD CASES.

THIS TRUSS IS DESIGNED FOR RESIDENTIAL OR SMALL BUILDING REQUIREMENTS OF PART 9, NBCC 2015

THIS DESIGN COMPLIES WITH:
- PART 9 OF BCBC 2018 , NBC-2019AE
- PART 9 OF OBC 2012 (2019 AMENDMENT)
- CSA 086-14
- TPIC 2014

(55 % OF 48.1 P.S.F. G.S.L. PLUS 8.4 P.S.F. RAIN LOAD) EQUALS 34.8 P.S.F. SPECIFIED ROOF LIVE LOAD

ALLOWABLE DEFL.(LL)= L/360 (0.19")
CALCULATED VERT. DEFL.(LL) = L/ 999 (0.05")
ALLOWABLE DEFL.(TL)= L/360 (0.19")
CALCULATED VERT. DEFL.(TL) = L/ 601 (0.08")

CSI: TC=0.40/0.97 (A-B:1) , BC=0.66/0.97 (C-D:1) , WB=0.00/0.97 (A-C:1) , SSI=0.56/1.00 (C-D:1)

DOL LUMBER=1.00 NAIL=1.00 LS BEND=1.00 COMP=1.00 SHEAR=1.00 TENS= 1.00

COMPANION LIVE LOAD FACTOR = 1.00

TRUSS PLATE MANUFACTURER IS NOT RESPONSIBLE FOR QUALITY CONTROL IN THE TRUSS MANUFACTURING PLANT .

NAIL VALUES

PLATE	GRIP(DRY) (PSI) MAX	MIN	SHEAR (PLI) MAX	MIN	SECTION (PLI) MAX	MIN
MT20	650	371	1747	788	1987	1873

PLATE PLACEMENT TOL. = 0.250 inches

PLATE ROTATION TOL. = 5.0 Deg.

JSI GRIP= 0.24 (C) (INPUT = 0.90)
JSI METAL= 0.11 (B) (INPUT = 1.00)

LICENSED PROFESSIONAL ENGINEER
N.A. EL-MASRI
PROVINCE OF ONTARIO
Jul 18, 2023

READ ALL NOTES ON THIS PAGE AND ON THE ENGINEERING NOTES: TRUSSES. THE NOTE PAGE IS AN INTEGRAL PART OF THIS DRAWING AS IT CONTAINS SPECIFICATIONS AND CRITERIA USED IN THE DESIGN OF THIS COMPONENT.

KOTT

CORPORATION OF THE CITY OF OSHAWA
TRUE COPY OF PERMIT PLANS
Nov 03 2023
PER:
CHIEF BUILDING OFFICIAL

MHP 23036

JOB NAME	TRUSS NAME	QUANTITY	PLY	JOB DESC.	DRWG NO.
NE0723-112	J01	9	1	GREENPARK - ZADOR BAY ESTATES - VILLA 5-3 (TRUSS DESC.)	

Version 8.630 S Mar 22 2023 MiTek Industries, Inc. Tue Jul 18 14:41:37 2023 Page 1
ID:aX72BI6hiO7VoZWieLIJw?z93Pm-tXio1BcympeLxIara7sB6fdDpctflUFwT5RxvgywpWS

Scale = 1:23.6

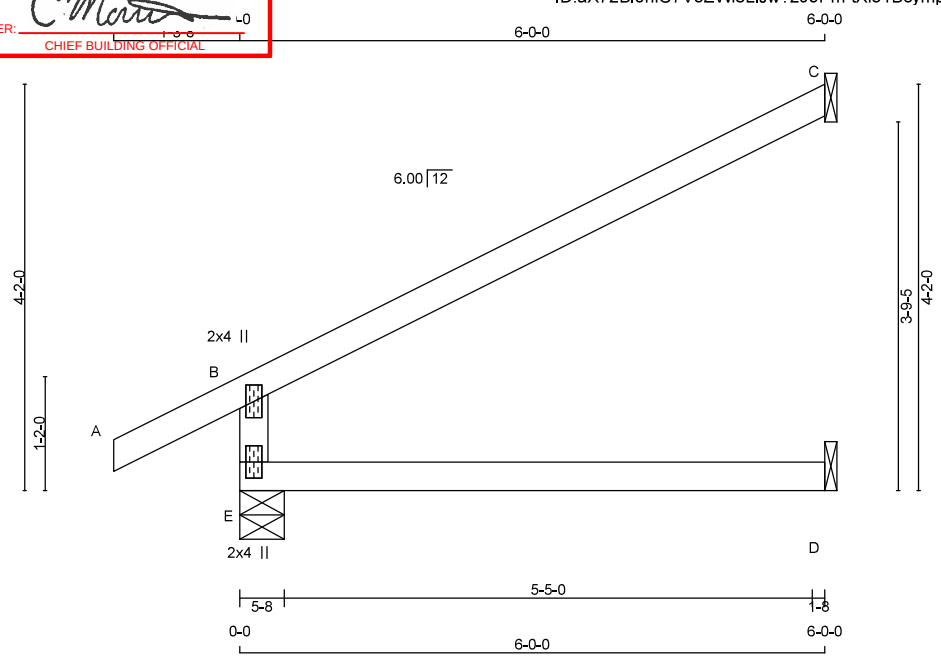

TOTAL WEIGHT = 9 X 17 = 154 lb [M]

LUMBER
N. L. G. A. RULES

CHORDS	SIZE		LUMBER	DESCR.
E - B	2x4	DRY	No.2	SPF
A - C	2x4	DRY	No.2	SPF
E - D	2x4	DRY	No.2	SPF

DRY: SEASONED LUMBER.

PLATES (table is in inches)

JT	TYPE	PLATES	W	LEN	Y	X
B	TMV+p	MT20	2.0	4.0		
E	BMV1+p	MT20	2.0	4.0		

DIMENSIONS, SUPPORTS AND LOADINGS SPECIFIED BY FABRICATOR TO BE VERIFIED BY BUILDING DESIGNER

BEARINGS

JT	FACTORED GROSS REACTION VERT	HORZ	MAXIMUM FACTORED GROSS REACTION DOWN	HORZ	UPLIFT	INPUT BRG IN-SX	REQRD BRG IN-SX
E	674	0	674	0	0	5-8	1-8
C	269	0	269	0	0	1-8	1-8
D	45	0	51	0	0	1-8	1-8

SEE MITEK STANDARD DETAIL MSD2015-H FOR CONNECTION TO JOINT(S) C , D

UNFACTORED REACTIONS

JT	1ST LCASE COMBINED	MAX./MIN. COMPONENT REACTIONS SNOW	LIVE	PERM.LIVE	WIND	DEAD	SOIL
E	468	355 / 0	0 / 0	0 / 0	0 / 0	113 / 0	0 / 0
C	184	157 / 0	0 / 0	0 / 0	0 / 0	27 / 0	0 / 0
D	36	0 / 0	0 / 0	0 / 0	0 / 0	36 / 0	0 / 0

BEARING MATERIAL TO BE SPF NO.2 OR BETTER AT JOINT(S) E

BRACING
TOP CHORD TO BE SHEATHED OR MAX. PURLIN SPACING = 6.25 FT.
MAX. UNBRACED BOTTOM CHORD LENGTH = 10.00 FT OR RIGID CEILING DIRECTLY APPLIED.

ALL PITCH BREAKS AND PERIMETER CORNER JOINTS MUST BE LATERALLY RESTRAINED.

LOADING
TOTAL LOAD CASES: (4)

CHORDS MEMB. FR-TO	MAX. FACTORED FORCE (LBS)	FACTORED VERT. LOAD (PLF) FROM	TO	LC1 MAX CSI (LC)	WEBS MAX. UNBRAC LENGTH	MEMB. FR-TO	MAX. FACTORED FORCE (LBS)	MAX CSI (LC)
E- B	-610 / 0	0.0	0.0	0.13 (4)	7.81			
A- B	0 / 36	-119.4	-119.4	0.16 (1)	10.00			
B- C	-40 / 0	-119.4	-119.4	0.73 (1)	6.25			
E- D	0 / 0	-18.2	-18.2	0.13 (4)	10.00			

DESIGN CRITERIA

SPECIFIED LOADS:

TOP CH.	LL	=	34.8	PSF
	DL	=	6.0	PSF
BOT CH.	LL	=	0.0	PSF
	DL	=	7.3	PSF
TOTAL LOAD		=	48.1	PSF

SPACING = 24.0 IN. C/C

THIS TRUSS IS DESIGNED FOR RESIDENTIAL OR SMALL BUILDING REQUIREMENTS OF PART 9, NBCC 2015

THIS DESIGN COMPLIES WITH:
- PART 9 OF BCBC 2018 , NBC-2019AE
- PART 9 OF OBC 2012 (2019 AMENDMENT)
- CSA 086-14
- TPIC 2014

DESIGN ASSUMPTIONS
-OVERHANG NOT TO BE ALTERED OR CUT OFF.

(55 % OF 48.1 P.S.F. G.S.L. PLUS 8.4 P.S.F. RAIN LOAD) EQUALS 34.8 P.S.F. SPECIFIED ROOF LIVE LOAD

ALLOWABLE DEFL.(LL)= L/360 (0.20")
CALCULATED VERT. DEFL.(LL) = L/ 999 (0.00")
ALLOWABLE DEFL.(TL)= L/360 (0.20")
CALCULATED VERT. DEFL.(TL) = L/ 999 (0.03")

CSI: TC=0.73/0.97 (B-C:1) , BC=0.13/0.97 (D-E:4) , WB=0.00/0.97 (n/a:0) , SSI=0.31/1.00 (B-C:1)

DOL LUMBER=1.00 NAIL=1.00 LS BEND=1.10 COMP=1.10 SHEAR=1.10 TENS= 1.10

COMPANION LIVE LOAD FACTOR = 1.00

TRUSS PLATE MANUFACTURER IS NOT RESPONSIBLE FOR QUALITY CONTROL IN THE TRUSS MANUFACTURING PLANT .

NAIL VALUES

PLATE	GRIP(DRY) (PSI) MAX	MIN	SHEAR (PLI) MAX	MIN	SECTION (PLI) MAX	MIN
MT20	650	371	1747	788	1987	1873

PLATE PLACEMENT TOL. = 0.250 inches

PLATE ROTATION TOL. = 5.0 Deg.

JSI GRIP= 0.34 (B) (INPUT = 0.90)
JSI METAL= 0.25 (B) (INPUT = 1.00)

LICENSED PROFESSIONAL ENGINEER
N.A. EL-MASRI
PROVINCE OF ONTARIO
Jul 18, 2023

READ ALL NOTES ON THIS PAGE AND ON THE ENGINEERING NOTES: TRUSSES. THE NOTE PAGE IS AN INTEGRAL PART OF THIS DRAWING AS IT CONTAINS SPECIFICATIONS AND CRITERIA USED IN THE DESIGN OF THIS COMPONENT.

KOTT

CORPORATION OF THE CITY OF OSHAWA
TRUE COPY OF PERMIT PLANS
Nov 03 2023
PER: C Martin
CHIEF BUILDING OFFICIAL

MHP 23036

JOB NAME	TRUSS NAME	QUANTITY	PLY	JOB DESC.	DRWG NO.
NE0723-112	J02	2	1	GREENPARK - ZADOR BAY ESTATES - VILLA 5-3 (TRUSS DESC.)	

Version 8.630 S Mar 22 2023 MiTek Industries, Inc. Tue Jul 18 14:41:38 2023 Page 1
ID:aX72Bl6hiO7VoZWieLIJw?z93Pm-LjGAFXdaX7mCZS917qNQfsAV9?Du1xV3ilBVS6ywpWR

Scale = 1:18.6

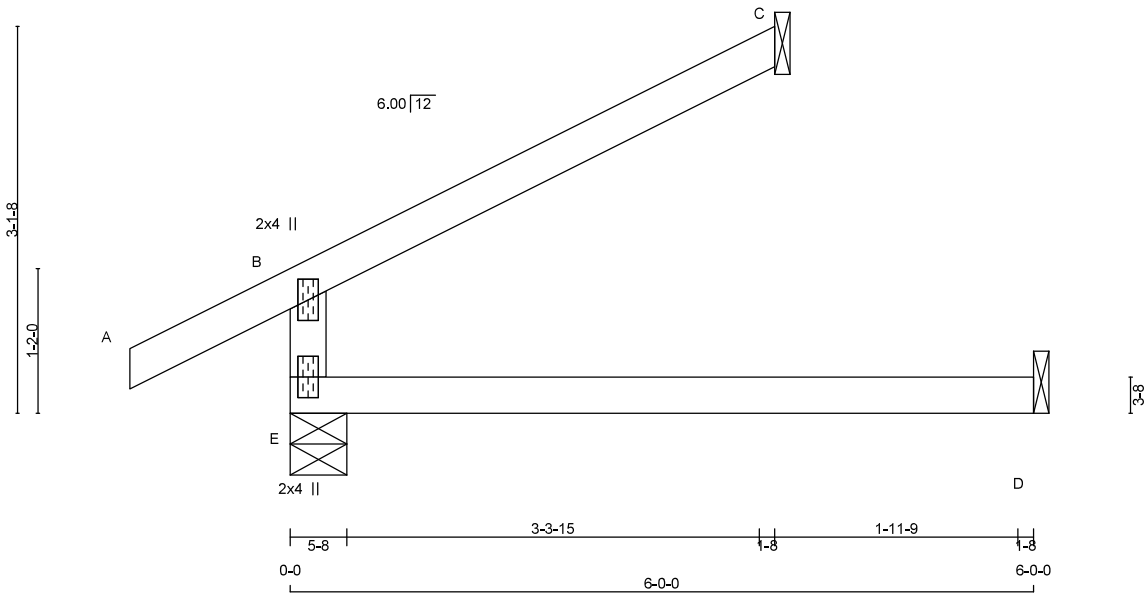

TOTAL WEIGHT = 2 X 14 = 29 lb [M]

LUMBER
N. L. G. A. RULES

CHORDS	SIZE		LUMBER	DESCR.
E - B	2x4	DRY	No.2	SPF
A - C	2x4	DRY	No.2	SPF
E - D	2x4	DRY	No.2	SPF

DRY: SEASONED LUMBER.

PLATES (table is in inches)

JT	TYPE	PLATES	W	LEN	Y	X
B	TMV+p	MT20	2.0	4.0		
E	BMV1+p	MT20	2.0	4.0		

DIMENSIONS, SUPPORTS AND LOADINGS SPECIFIED BY FABRICATOR TO BE VERIFIED BY BUILDING DESIGNER

BEARINGS

JT	FACTORED GROSS REACTION VERT	HORZ	MAXIMUM FACTORED GROSS REACTION DOWN	HORZ	UPLIFT	INPUT BRG IN-SX	REQRD BRG IN-SX
E	518	0	518	0	0	5-8	1-8
C	175	0	175	0	0	1-8	1-8
D	45	0	51	0	0	1-8	1-8

SEE MITEK STANDARD DETAIL MSD2015-H FOR CONNECTION TO JOINT(S) C , D

UNFACTORED REACTIONS

JT	1ST LCASE COMBINED	MAX./MIN. COMPONENT REACTIONS SNOW	LIVE	PERM.LIVE	WIND	DEAD	SOIL
E	362	265 / 0	0 / 0	0 / 0	0 / 0	97 / 0	0 / 0
C	120	102 / 0	0 / 0	0 / 0	0 / 0	18 / 0	0 / 0
D	36	0 / 0	0 / 0	0 / 0	0 / 0	36 / 0	0 / 0

BEARING MATERIAL TO BE SPF NO.2 OR BETTER AT JOINT(S) E, C

BRACING
TOP CHORD TO BE SHEATHED OR MAX. PURLIN SPACING = 6.25 FT.
MAX. UNBRACED BOTTOM CHORD LENGTH = 10.00 FT OR RIGID CEILING DIRECTLY APPLIED.

ALL PITCH BREAKS AND PERIMETER CORNER JOINTS MUST BE LATERALLY RESTRAINED.

LOADING
TOTAL LOAD CASES: (4)

CHORDS

MEMB. FR-TO	MAX. FACTORED FORCE (LBS)	FACTORED VERT. LOAD LC1 (PLF) FROM	TO	MAX CSI (LC)
E- B	-454 / 0	0.0	0.0	0.13 (4)
A- B	0 / 36	-119.4	-119.4	0.16 (1)
B- C	-26 / 0	-119.4	-119.4	0.31 (1)
E- D	0 / 0	-18.2	-18.2	0.13 (4)

WEBS

MEMB. FR-TO	MAX. UNBRAC LENGTH	MAX. FACTORED FORCE (LBS)	MAX CSI (LC)
E- B	7.81		
A- B	10.00		
B- C	6.25		
E- D	10.00		

DESIGN CRITERIA

SPECIFIED LOADS:

TOP CH.	LL =	34.8	PSF
	DL =	6.0	PSF
BOT CH.	LL =	0.0	PSF
	DL =	7.3	PSF
TOTAL LOAD	=	48.1	PSF

SPACING = 24.0 IN. C/C

THIS TRUSS IS DESIGNED FOR RESIDENTIAL OR SMALL BUILDING REQUIREMENTS OF PART 9, NBCC 2015

THIS DESIGN COMPLIES WITH:
- PART 9 OF BCBC 2018 , NBC-2019AE
- PART 9 OF OBC 2012 (2019 AMENDMENT)
- CSA 086-14
- TPIC 2014

DESIGN ASSUMPTIONS
-OVERHANG NOT TO BE ALTERED OR CUT OFF.

(55 % OF 48.1 P.S.F. G.S.L. PLUS 8.4 P.S.F. RAIN LOAD) EQUALS 34.8 P.S.F. SPECIFIED ROOF LIVE LOAD

ALLOWABLE DEFL.(LL)= L/360 (0.20")
CALCULATED VERT. DEFL.(LL) = L/ 999 (0.00")
ALLOWABLE DEFL.(TL)= L/360 (0.20")
CALCULATED VERT. DEFL.(TL) = L/ 999 (0.03")

CSI: TC=0.31/0.97 (B-C:1) , BC=0.13/0.97 (D-E:4) , WB=0.00/0.97 (n/a:0) , SSI=0.20/1.00 (B-C:1)

DOL LUMBER=1.00 NAIL=1.00 LS BEND=1.10 COMP=1.10 SHEAR=1.10 TENS= 1.10

COMPANION LIVE LOAD FACTOR = 1.00

TRUSS PLATE MANUFACTURER IS NOT RESPONSIBLE FOR QUALITY CONTROL IN THE TRUSS MANUFACTURING PLANT .

NAIL VALUES

PLATE	GRIP(DRY) (PSI) MAX	MIN	SHEAR (PLI) MAX	MIN	SECTION (PLI) MAX	MIN
MT20	650	371	1747	788	1987	1873

PLATE PLACEMENT TOL. = 0.250 inches

PLATE ROTATION TOL. = 5.0 Deg.

JSI GRIP= 0.25 (B) (INPUT = 0.90)
JSI METAL= 0.19 (B) (INPUT = 1.00)

LICENSED PROFESSIONAL ENGINEER
N.A. EL-MASRI
PROVINCE OF ONTARIO
Jul 18, 2023

READ ALL NOTES ON THIS PAGE AND ON THE ENGINEERING NOTES: TRUSSES. THE NOTE PAGE IS AN INTEGRAL PART OF THIS DRAWING AS IT CONTAINS SPECIFICATIONS AND CRITERIA USED IN THE DESIGN OF THIS COMPONENT.

KOTT

CORPORATION OF THE CITY OF OSHAWA
TRUE COPY OF PERMIT PLANS
Nov 03 2023
PER:
CHIEF BUILDING OFFICIAL

MHP 23036

JOB NAME	TRUSS NAME	QUANTITY	PLY	JOB DESC.	DRWG NO.
NE0723-112	J03	2	1	GREENPARK - ZADOR/BAFESTATES - VILLA 5-3 (TRUSS DESC.)	

Version 8.630 S Mar 22 2023 MiTek Industries, Inc. Tue Jul 18 14:41:38 2023 Page 1
ID:aX72Bl6hiO7VoZWieLIJw?z93Pm-LjGAFXdaX7mCZS917qNQfsAXa?Du1xV3ilBVS6ywpWR

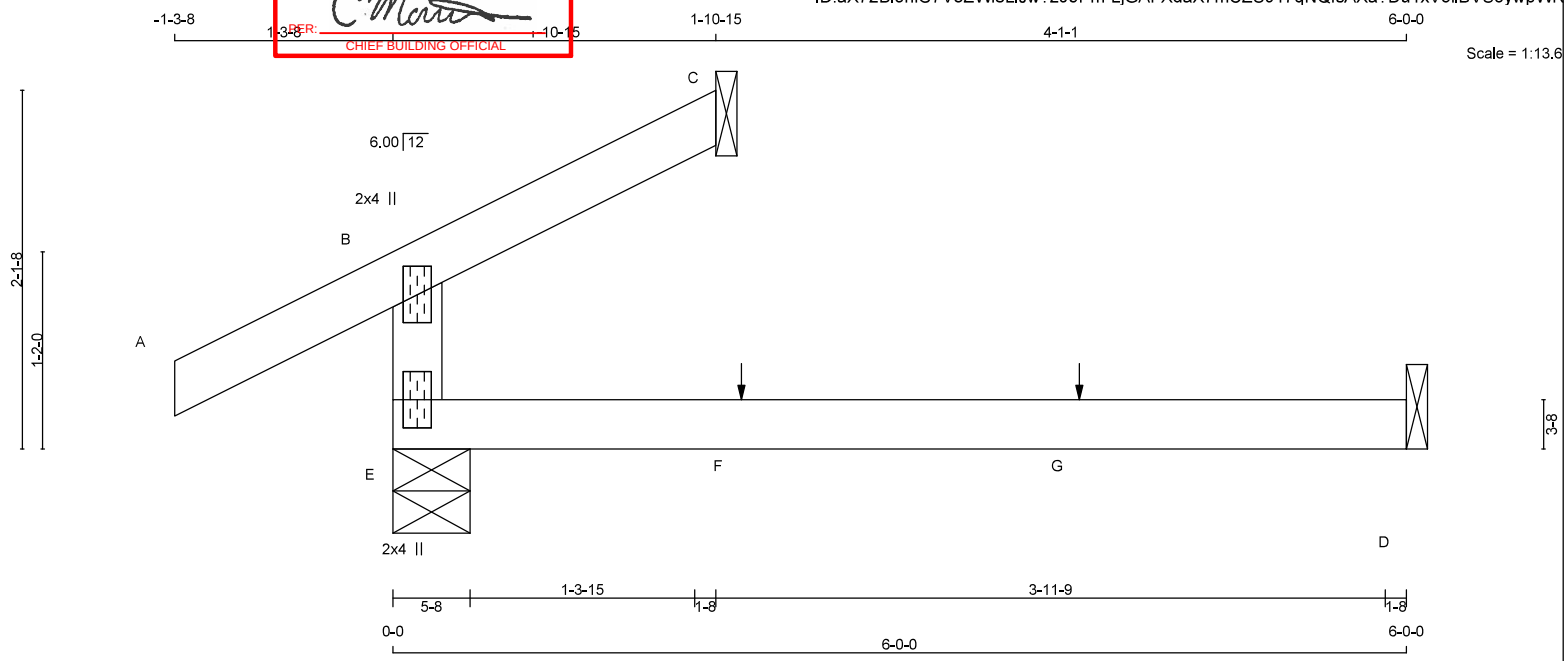

TOTAL WEIGHT = 2 X 12 = 24 lb [M]

LUMBER
N. L. G. A. RULES

CHORDS	SIZE		LUMBER	DESCR.
E - B	2x4	DRY	No.2	SPF
A - C	2x4	DRY	No.2	SPF
E - D	2x4	DRY	No.2	SPF

DRY: SEASONED LUMBER.

PLATES (table is in inches)

JT	TYPE	PLATES	W	LEN	Y	X
B	TMV+p	MT20	2.0	4.0		
E	BMV1+p	MT20	2.0	4.0		

DIMENSIONS, SUPPORTS AND LOADINGS SPECIFIED BY FABRICATOR TO BE VERIFIED BY BUILDING DESIGNER

BEARINGS

JT	FACTORED GROSS REACTION VERT	HORZ	MAXIMUM FACTORED GROSS REACTION DOWN	HORZ	UPLIFT	INPUT BRG IN-SX	REQRD BRG IN-SX
E	368	0	368	0	0	5-8	1-8
C	86	0	86	0	0	1-8	1-8
D	45	0	51	0	0	1-8	1-8

SEE MITEK STANDARD DETAIL MSD2015-H FOR CONNECTION TO JOINT(S) C , D

UNFACTORED REACTIONS

JT	1ST LCASE COMBINED	MAX./MIN. COMPONENT REACTIONS SNOW	LIVE	PERM.LIVE	WIND	DEAD	SOIL
E	259	177 / 0	0 / 0	0 / 0	0 / 0	82 / 0	0 / 0
C	59	50 / 0	0 / 0	0 / 0	0 / 0	9 / 0	0 / 0
D	36	0 / 0	0 / 0	0 / 0	0 / 0	36 / 0	0 / 0

BEARING MATERIAL TO BE SPF NO.2 OR BETTER AT JOINT(S) E, C

BRACING
TOP CHORD TO BE SHEATHED OR MAX. PURLIN SPACING = 6.25 FT.
MAX. UNBRACED BOTTOM CHORD LENGTH = 10.00 FT OR RIGID CEILING DIRECTLY APPLIED.

ALL PITCH BREAKS AND PERIMETER CORNER JOINTS MUST BE LATERALLY RESTRAINED.

LOADING
TOTAL LOAD CASES: (4)

CHORDS MEMB. FR-TO	MAX. FACTORED FORCE (LBS)	FACTORED VERT. LOAD (PLF) FROM	TO	LC1 MAX CSI (LC)	WEBS MEMB. FR-TO	MAX. UNBRAC LENGTH	FACTORED FORCE (LBS)	MAX CSI (LC)
E- B	-304 / 0	0.0	0.0	0.13 (4)		7.81		
A- B	0 / 36	-119.4	-119.4	0.16 (1)		10.00		
B- C	-12 / 0	-119.4	-119.4	0.07 (1)		6.25		
E- F	0 / 0	-18.2	-18.2	0.13 (4)		10.00		
F- G	0 / 0	-18.2	-18.2	0.13 (4)		10.00		
G- D	0 / 0	-18.2	-18.2	0.13 (4)		10.00		

SPECIFIED CONCENTRATED LOADS (LBS)

JT	LOC.	LC1	MAX-	MAX+	FACE	DIR.	TYPE	HEEL	CONN.
F	2-0-12	1	1	—	FRONT	VERT	TOTAL	—	C1
G	4-0-12	1	1	—	FRONT	VERT	TOTAL	—	C1

CONNECTION REQUIREMENTS

1) **C1:** A SUITABLE HANGER/MECHANICAL CONNECTION IS REQUIRED.

DESIGN CRITERIA

*** SPECIAL LOADS ANALYSIS ***
GEOMETRY AND/OR BASIC LOADS CHANGED BY USER.
LOADS WERE DERIVED FROM USER INPUT
NO FURTHER MODIFICATIONS WERE MADE

SPECIFIED LOADS:

TOP CH.	LL	=	34.8	PSF
	DL	=	6.0	PSF
BOT CH.	LL	=	0.0	PSF
	DL	=	7.3	PSF
TOTAL LOAD		=	48.1	PSF

SPACING = 24.0 IN. C/C

*** NON STANDARD GIRDER ***
ADDT'L USER-DEFINED LOADS APPLIED TO ALL LOAD CASES.

THIS TRUSS IS DESIGNED FOR RESIDENTIAL OR SMALL BUILDING REQUIREMENTS OF PART 9, NBCC 2015

THIS DESIGN COMPLIES WITH:
- PART 9 OF BCBC 2018 , NBC-2019AE
- PART 9 OF OBC 2012 (2019 AMENDMENT)
- CSA 086-14
- TPIC 2014

DESIGN ASSUMPTIONS
-OVERHANG NOT TO BE ALTERED OR CUT OFF.

(55 % OF 48.1 P.S.F. G.S.L. PLUS 8.4 P.S.F. RAIN LOAD) EQUALS 34.8 P.S.F. SPECIFIED ROOF LIVE LOAD

ALLOWABLE DEFL.(LL)= L/360 (0.20")
CALCULATED VERT. DEFL.(LL) = L/ 999 (0.00")
ALLOWABLE DEFL.(TL)= L/360 (0.20")
CALCULATED VERT. DEFL.(TL) = L/ 999 (0.03")

CSI: TC=0.16/0.97 (A-B:1) , BC=0.13/0.97 (D-E:4) , WB=0.00/0.97 (n/a:0) , SSI=0.11/1.00 (A-B:1)

DOL LUMBER=1.00 NAIL=1.00 LS BEND=1.10 COMP=1.10 SHEAR=1.10 TENS= 1.10

COMPANION LIVE LOAD FACTOR = 1.00

TRUSS PLATE MANUFACTURER IS NOT RESPONSIBLE FOR QUALITY CONTROL IN THE TRUSS MANUFACTURING PLANT .

NAIL VALUES

PLATE	GRIP(DRY) (PSI) MAX	MIN	SHEAR (PLI) MAX	MIN	SECTION (PLI) MAX	MIN
MT20	650	371	1747	788	1987	1873

PLATE PLACEMENT TOL. = 0.250 inches

PLATE ROTATION TOL. = 5.0 Deg.

JSI GRIP= 0.17 (B) (INPUT = 0.90)
JSI METAL= 0.13 (B) (INPUT = 1.00)

LICENSED PROFESSIONAL ENGINEER
N.A. EL-MASRI
PROVINCE OF ONTARIO
Jul 18, 2023

READ ALL NOTES ON THIS PAGE AND ON THE ENGINEERING NOTES: TRUSSES. THE NOTE PAGE IS AN INTEGRAL PART OF THIS DRAWING AS IT CONTAINS SPECIFICATIONS AND CRITERIA USED IN THE DESIGN OF THIS COMPONENT.

KOTT

CORPORATION OF THE CITY OF OSHAWA
TRUE COPY OF PERMIT PLANS
Nov 03 2023
PER:
CHIEF BUILDING OFFICIAL

MHP 23036

JOB NAME	TRUSS NAME	QUANTITY	PLY	JOB DESC.	DRWG NO.
NE0723-112	J04	2	1	GREENPARK - ZADOR BAY ESTATES - VILLA 5-3 (TRUSS DESC.)	

Version 8.630 S Mar 22 2023 MiTek Industries, Inc. Tue Jul 18 14:41:39 2023 Page 1
ID:aX72BI6hiO7VoZWieLIJw?z93Pm-pvqZSteDIRu3AckEhYufC4jgvPbzmOlCwPw2_YywpWQ

Scale = 1:18.8

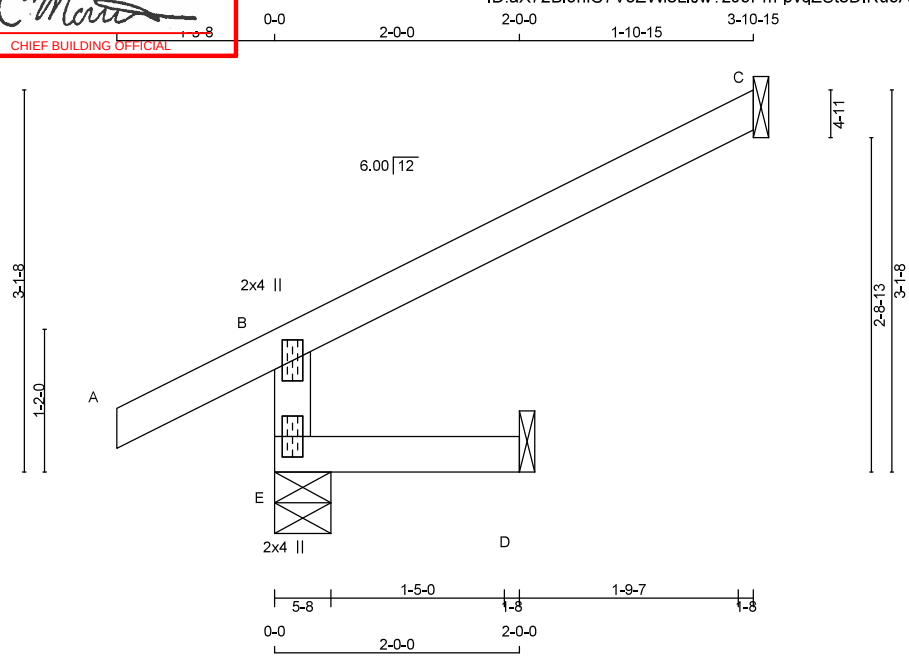

TOTAL WEIGHT = 2 X 10 = 20 lb
[M]

LUMBER
N. L. G. A. RULES

CHORDS	SIZE		LUMBER	DESCR.
E - B	2x4	DRY	No.2	SPF
A - C	2x4	DRY	No.2	SPF
E - D	2x4	DRY	No.2	SPF

DRY: SEASONED LUMBER.

PLATES (table is in inches)

JT	TYPE	PLATES	W	LEN	Y	X
B	TMV+p	MT20	2.0	4.0		
E	BMV1+p	MT20	2.0	4.0		

DIMENSIONS, SUPPORTS AND LOADINGS SPECIFIED BY FABRICATOR TO BE VERIFIED BY BUILDING DESIGNER

BEARINGS

JT	FACTORED GROSS REACTION VERT	HORZ	MAXIMUM FACTORED GROSS REACTION DOWN	HORZ	UPLIFT	INPUT BRG IN-SX	REQRD BRG IN-SX
E	474	0	474	0	0	5-8	1-8
C	175	0	175	0	0	1-8	1-8
D	16	0	18	0	0	1-8	1-8

SEE MITEK STANDARD DETAIL MSD2015-H FOR CONNECTION TO JOINT(S) C , D

UNFACTORED REACTIONS

JT	1ST LCASE COMBINED	MAX./MIN. COMPONENT REACTIONS SNOW	LIVE	PERM.LIVE	WIND	DEAD	SOIL
E	326	265 / 0	0 / 0	0 / 0	0 / 0	62 / 0	0 / 0
C	120	102 / 0	0 / 0	0 / 0	0 / 0	18 / 0	0 / 0
D	13	0 / 0	0 / 0	0 / 0	0 / 0	13 / 0	0 / 0

BEARING MATERIAL TO BE SPF NO.2 OR BETTER AT JOINT(S) E

BRACING
TOP CHORD TO BE SHEATHED OR MAX. PURLIN SPACING = 6.25 FT.
MAX. UNBRACED BOTTOM CHORD LENGTH = 10.00 FT OR RIGID CEILING DIRECTLY APPLIED.

ALL PITCH BREAKS AND PERIMETER CORNER JOINTS MUST BE LATERALLY RESTRAINED.

LOADING
TOTAL LOAD CASES: (5)

CHORDS

MEMB. FR-TO	MAX. FACTORED FORCE (LBS)	VERT. LOAD (PLF) FROM	TO	LC1 CSI (LC)	MAX UNBRAC LENGTH
E-B	-454 / 0	0.0	0.0	0.01 (4)	7.81
A-B	0 / 36	-119.4	-119.4	0.16 (1)	10.00
B-C	-26 / 0	-119.4	-119.4	0.31 (1)	6.25
E-D	0 / 0	-18.2	-18.2	0.02 (4)	10.00

WEBS

MEMB. FR-TO	MAX. FACTORED FORCE (LBS)	MAX CSI (LC)

CANTILEVER ANALYSIS HAS BEEN CONSIDERED IN THIS DESIGN

PATTERN-LOADING CHECK APPLIED TO THIS TRUSS.

DESIGN CRITERIA

SPECIFIED LOADS:

TOP CH.	LL	=	34.8	PSF
	DL	=	6.0	PSF
BOT CH.	LL	=	0.0	PSF
	DL	=	7.3	PSF
TOTAL LOAD		=	48.1	PSF

SPACING = 24.0 IN. C/C

THIS TRUSS IS DESIGNED FOR RESIDENTIAL OR SMALL BUILDING REQUIREMENTS OF PART 9, NBCC 2015

THIS DESIGN COMPLIES WITH:
- PART 9 OF BCBC 2018 , NBC-2019AE
- PART 9 OF OBC 2012 (2019 AMENDMENT)
- CSA 086-14
- TPIC 2014

DESIGN ASSUMPTIONS
-OVERHANG NOT TO BE ALTERED OR CUT OFF.

(55 % OF 48.1 P.S.F. G.S.L. PLUS 8.4 P.S.F. RAIN LOAD) EQUALS 34.8 P.S.F. SPECIFIED ROOF LIVE LOAD

ALLOWABLE DEFL.(LL)= L/360 (0.19")
CALCULATED VERT. DEFL.(LL) = L/ 999 (0.00")
ALLOWABLE DEFL.(TL)= L/360 (0.19")
CALCULATED VERT. DEFL.(TL) = L/ 999 (0.00")

CSI: TC=0.31/0.97 (B-C:1) , BC=0.02/0.97 (D-E:4) , WB=0.00/0.97 (n/a:0) , SSI=0.20/1.00 (B-C:1)

DOL LUMBER=1.00 NAIL=1.00 LS BEND=1.10 COMP=1.10 SHEAR=1.10 TENS= 1.10

COMPANION LIVE LOAD FACTOR = 1.00

TRUSS PLATE MANUFACTURER IS NOT RESPONSIBLE FOR QUALITY CONTROL IN THE TRUSS MANUFACTURING PLANT .

NAIL VALUES

PLATE	GRIP(DRY) (PSI) MAX	MIN	SHEAR (PLI) MAX	MIN	SECTION (PLI) MAX	MIN
MT20	650	371	1747	788	1987	1873

PLATE PLACEMENT TOL. = 0.250 inches

PLATE ROTATION TOL. = 5.0 Deg.

JSI GRIP= 0.25 (B) (INPUT = 0.90)
JSI METAL= 0.19 (B) (INPUT = 1.00)

LICENSED PROFESSIONAL ENGINEER
N.A. EL-MASRI
PROVINCE OF ONTARIO
Jul 18, 2023

READ ALL NOTES ON THIS PAGE AND ON THE ENGINEERING NOTES: TRUSSES. THE NOTE PAGE IS AN INTEGRAL PART OF THIS DRAWING AS IT CONTAINS SPECIFICATIONS AND CRITERIA USED IN THE DESIGN OF THIS COMPONENT.

KOTT

CORPORATION OF THE CITY OF OSHAWA
TRUE COPY OF PERMIT PLANS
Nov 03 2023
PER:
CHIEF BUILDING OFFICIAL

MHP 23036

JOB NAME	TRUSS NAME	QUANTITY	PLY	JOB DESC.	DRWG NO.
NE0723-112	J05	2	1	GREENPARK - ZADOR BAY ESTATES - VILLA 5-3 (TRUSS DESC.)	

Version 8.630 S Mar 22 2023 MiTek Industries, Inc. Tue Jul 18 14:41:39 2023 Page 1
ID:aX72BI6hiO7VoZWieLIJw?z93Pm-pvqZSteDIRu3AckEhYufC4jiKPbzmOlCwPw2_YywpWQ

Scale = 1:13.6

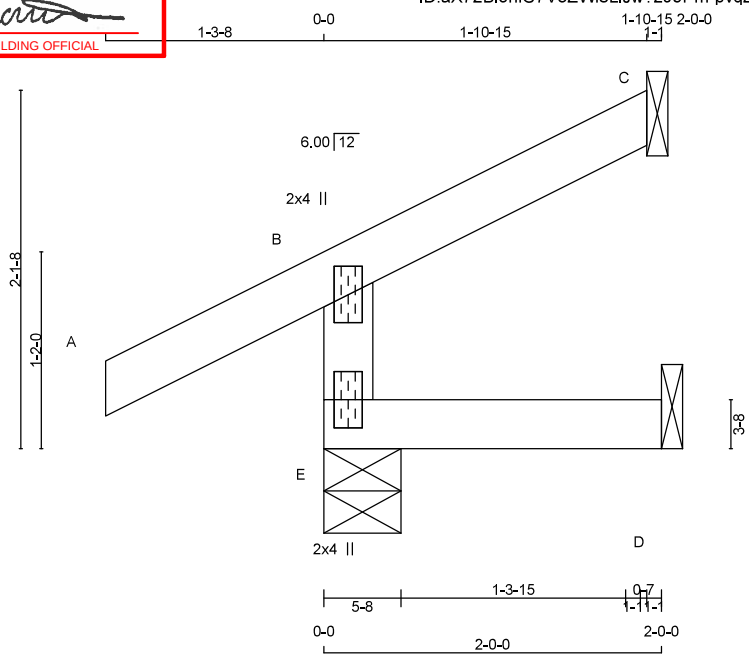

TOTAL WEIGHT = 2 X 7 = 15 lb
[M]

LUMBER
N. L. G. A. RULES

CHORDS	SIZE		LUMBER	DESCR.
E - B	2x4	DRY	No.2	SPF
A - C	2x4	DRY	No.2	SPF
E - D	2x4	DRY	No.2	SPF

DRY: SEASONED LUMBER.

PLATES (table is in inches)

JT	TYPE	PLATES	W	LEN	Y	X
B	TMV+p	MT20	2.0	4.0		
E	BMV1+p	MT20	2.0	4.0		

DIMENSIONS, SUPPORTS AND LOADINGS SPECIFIED BY FABRICATOR TO BE VERIFIED BY BUILDING DESIGNER

BEARINGS

JT	FACTORED GROSS REACTION VERT	HORZ	MAXIMUM FACTORED GROSS REACTION DOWN	HORZ	UPLIFT	INPUT BRG IN-SX	REQRD BRG IN-SX
E	324	0	324	0	0	5-8	1-8
C	86	0	86	0	0	1-8	1-8
D	16	0	18	0	0	1-8	1-8

SEE MITEK STANDARD DETAIL MSD2015-H FOR CONNECTION TO JOINT(S) C , D

UNFACTORED REACTIONS

JT	1ST LCASE COMBINED	MAX./MIN. COMPONENT REACTIONS SNOW	LIVE	PERM.LIVE	WIND	DEAD	SOIL
E	224	177 / 0	0 / 0	0 / 0	0 / 0	47 / 0	0 / 0
C	59	50 / 0	0 / 0	0 / 0	0 / 0	9 / 0	0 / 0
D	13	0 / 0	0 / 0	0 / 0	0 / 0	13 / 0	0 / 0

BEARING MATERIAL TO BE SPF NO.2 OR BETTER AT JOINT(S) E, C

BRACING
TOP CHORD TO BE SHEATHED OR MAX. PURLIN SPACING = 6.25 FT.
MAX. UNBRACED BOTTOM CHORD LENGTH = 10.00 FT OR RIGID CEILING DIRECTLY APPLIED.

ALL PITCH BREAKS AND PERIMETER CORNER JOINTS MUST BE LATERALLY RESTRAINED.

LOADING
TOTAL LOAD CASES: (5)

CHORDS

MEMB. FR-TO	MAX. FACTORED FORCE (LBS)	FACTORED VERT. LOAD LC1 (PLF) FROM	TO	MAX CSI (LC)
E- B	-304 / 0	0.0	0.0	0.01 (4)
A- B	0 / 36	-119.4	-119.4	0.16 (1)
B- C	-12 / 0	-119.4	-119.4	0.07 (1)
E- D	0 / 0	-18.2	-18.2	0.02 (4)

WEBS

MEMB. FR-TO	MAX. FACTORED FORCE (LBS)	MAX CSI (LC)	MAX. UNBRAC LENGTH
E- B			7.81
A- B			10.00
B- C			6.25
E- D			10.00

CANTILEVER ANALYSIS HAS BEEN CONSIDERED IN THIS DESIGN

PATTERN-LOADING CHECK APPLIED TO THIS TRUSS.

DESIGN CRITERIA

SPECIFIED LOADS:

TOP CH.	LL	=	34.8	PSF
	DL	=	6.0	PSF
BOT CH.	LL	=	0.0	PSF
	DL	=	7.3	PSF
TOTAL LOAD		=	48.1	PSF

SPACING = 24.0 IN. C/C

THIS TRUSS IS DESIGNED FOR RESIDENTIAL OR SMALL BUILDING REQUIREMENTS OF PART 9, NBCC 2015

THIS DESIGN COMPLIES WITH:
- PART 9 OF BCBC 2018 , NBC-2019AE
- PART 9 OF OBC 2012 (2019 AMENDMENT)
- CSA 086-14
- TPIC 2014

DESIGN ASSUMPTIONS
-OVERHANG NOT TO BE ALTERED OR CUT OFF.

(55 % OF 48.1 P.S.F. G.S.L. PLUS 8.4 P.S.F. RAIN LOAD) EQUALS 34.8 P.S.F. SPECIFIED ROOF LIVE LOAD

ALLOWABLE DEFL.(LL)= L/360 (0.19")
CALCULATED VERT. DEFL.(LL) = L/ 999 (0.00")
ALLOWABLE DEFL.(TL)= L/360 (0.19")
CALCULATED VERT. DEFL.(TL) = L/ 999 (0.00")

CSI: TC=0.16/0.97 (A-B:1) , BC=0.02/0.97 (D-E:4) , WB=0.00/0.97 (n/a:0) , SSI=0.11/1.00 (A-B:1)

DOL LUMBER=1.00 NAIL=1.00 LS BEND=1.10 COMP=1.10 SHEAR=1.10 TENS= 1.10

COMPANION LIVE LOAD FACTOR = 1.00

TRUSS PLATE MANUFACTURER IS NOT RESPONSIBLE FOR QUALITY CONTROL IN THE TRUSS MANUFACTURING PLANT .

NAIL VALUES

PLATE	GRIP(DRY) (PSI) MAX	MIN	SHEAR (PLI) MAX	MIN	SECTION (PLI) MAX	MIN
MT20	650	371	1747	788	1987	1873

PLATE PLACEMENT TOL. = 0.250 inches

PLATE ROTATION TOL. = 5.0 Deg.

JSI GRIP= 0.17 (B) (INPUT = 0.90)
JSI METAL= 0.13 (B) (INPUT = 1.00)

LICENSED PROFESSIONAL ENGINEER
N.A. EL-MASRI
PROVINCE OF ONTARIO
Jul 18, 2023

READ ALL NOTES ON THIS PAGE AND ON THE ENGINEERING NOTES: TRUSSES. THE NOTE PAGE IS AN INTEGRAL PART OF THIS DRAWING AS IT CONTAINS SPECIFICATIONS AND CRITERIA USED IN THE DESIGN OF THIS COMPONENT.

KOTT

CORPORATION OF THE CITY OF OSHAWA
TRUE COPY OF PERMIT PLANS
Nov 03 2023
PER: C Martin
CHIEF BUILDING OFFICIAL

MHP 23036

JOB NAME	TRUSS NAME	QUANTITY	PLY	JOB DESC.	DRWG NO.
NE0723-112	J06	4	1	GREENPARK - ZADOR BAY ESTATES - VILLA 5-3 (TRUSS DESC.)	

Version 8.630 S Mar 22 2023 MiTek Industries, Inc. Tue Jul 18 14:41:40 2023 Page 1
ID:aX72Bl6hiO7VoZWieLIJw?z93Pm-H6OxgDer3k0womJQFFPukHFqnpwPVr?M93gcW_ywpWP

Scale = 1:18.8

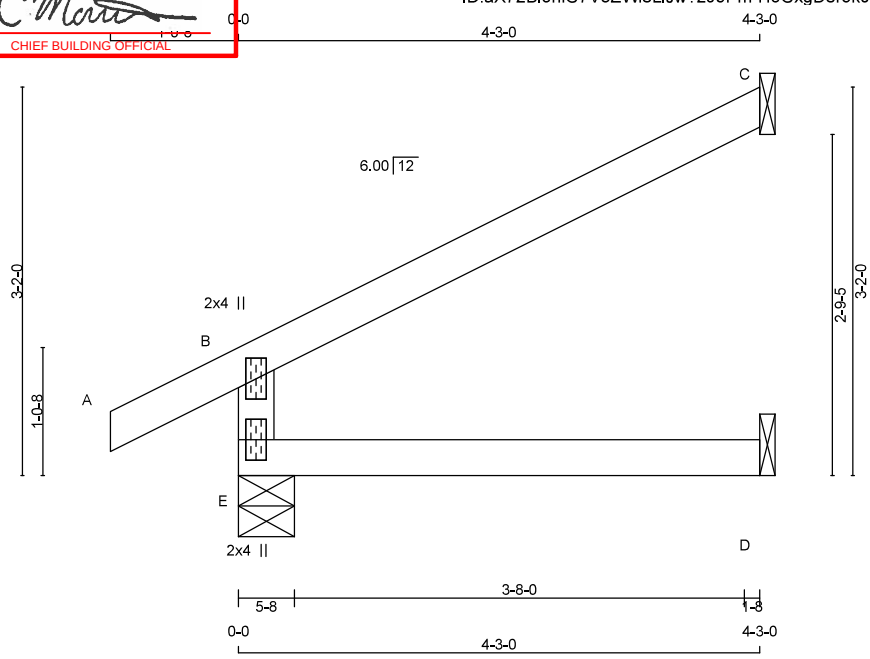

TOTAL WEIGHT = 4 X 12 = 50 lb
[M]

LUMBER
N. L. G. A. RULES

CHORDS	SIZE		LUMBER	DESCR.
E - B	2x4	DRY	No.2	SPF
A - C	2x4	DRY	No.2	SPF
E - D	2x4	DRY	No.2	SPF

DRY: SEASONED LUMBER.

PLATES (table is in inches)

JT	TYPE	PLATES	W	LEN	Y	X
B	TMV+p	MT20	2.0	4.0		
E	BMV1+p	MT20	2.0	4.0		

DIMENSIONS, SUPPORTS AND LOADINGS SPECIFIED BY FABRICATOR TO BE VERIFIED BY BUILDING DESIGNER

BEARINGS

JT	FACTORED GROSS REACTION VERT	HORZ	MAXIMUM FACTORED GROSS REACTION DOWN	HORZ	UPLIFT	INPUT BRG IN-SX	REQRD BRG IN-SX
E	494	0	494	0	0	5-8	1-8
C	190	0	190	0	0	1-8	1-8
D	32	0	36	0	0	1-8	1-8

SEE MITEK STANDARD DETAIL MSD2015-H FOR CONNECTION TO JOINT(S) C , D

UNFACTORED REACTIONS

JT	1ST LCASE COMBINED	MAX./MIN. COMPONENT REACTIONS SNOW	LIVE	PERM.LIVE	WIND	DEAD	SOIL
E	343	262 / 0	0 / 0	0 / 0	0 / 0	81 / 0	0 / 0
C	130	111 / 0	0 / 0	0 / 0	0 / 0	19 / 0	0 / 0
D	26	0 / 0	0 / 0	0 / 0	0 / 0	26 / 0	0 / 0

BEARING MATERIAL TO BE SPF NO.2 OR BETTER AT JOINT(S) E

BRACING
TOP CHORD TO BE SHEATHED OR MAX. PURLIN SPACING = 6.25 FT.
MAX. UNBRACED BOTTOM CHORD LENGTH = 10.00 FT OR RIGID CEILING DIRECTLY APPLIED.

ALL PITCH BREAKS AND PERIMETER CORNER JOINTS MUST BE LATERALLY RESTRAINED.

LOADING
TOTAL LOAD CASES: (4)

CHORDS

MEMB. FR-TO	MAX. FACTORED FORCE (LBS)	FACTORED VERT. LOAD (PLF) FROM	TO	LC1 MAX CSI (LC)
E- B	-449 / 0	0.0	0.0	0.06 (4)
A- B	0 / 30	-119.4	-119.4	0.10 (1)
B- C	-28 / 0	-119.4	-119.4	0.37 (1)
E- D	0 / 0	-18.2	-18.2	0.07 (4)

WEBS

MEMB. FR-TO	MAX. FACTORED FORCE (LBS)	MAX CSI (LC)	MAX UNBRAC LENGTH
E- B			7.81
A- B			10.00
B- C			6.25
E- D			10.00

DESIGN CRITERIA

SPECIFIED LOADS:

TOP CH.	LL	=	34.8	PSF
	DL	=	6.0	PSF
BOT CH.	LL	=	0.0	PSF
	DL	=	7.3	PSF
TOTAL LOAD		=	48.1	PSF

SPACING = 24.0 IN. C/C

THIS TRUSS IS DESIGNED FOR RESIDENTIAL OR SMALL BUILDING REQUIREMENTS OF PART 9, NBCC 2015

THIS DESIGN COMPLIES WITH:
- PART 9 OF BCBC 2018 , NBC-2019AE
- PART 9 OF OBC 2012 (2019 AMENDMENT)
- CSA 086-14
- TPIC 2014

DESIGN ASSUMPTIONS
-OVERHANG NOT TO BE ALTERED OR CUT OFF.

(55 % OF 48.1 P.S.F. G.S.L. PLUS 8.4 P.S.F. RAIN LOAD) EQUALS 34.8 P.S.F. SPECIFIED ROOF LIVE LOAD

ALLOWABLE DEFL.(LL)= L/360 (0.19")
CALCULATED VERT. DEFL.(LL) = L/ 999 (0.00")
ALLOWABLE DEFL.(TL)= L/360 (0.19")
CALCULATED VERT. DEFL.(TL) = L/ 999 (0.01")

CSI: TC=0.37/0.97 (B-C:1) , BC=0.07/0.97 (D-E:4) , WB=0.00/0.97 (n/a:0) , SSI=0.22/1.00 (B-C:1)

DOL LUMBER=1.00 NAIL=1.00 LS BEND=1.10 COMP=1.10 SHEAR=1.10 TENS= 1.10

COMPANION LIVE LOAD FACTOR = 1.00

TRUSS PLATE MANUFACTURER IS NOT RESPONSIBLE FOR QUALITY CONTROL IN THE TRUSS MANUFACTURING PLANT .

NAIL VALUES

PLATE	GRIP(DRY) (PSI) MAX	MIN	SHEAR (PLI) MAX	MIN	SECTION (PLI) MAX	MIN
MT20	650	371	1747	788	1987	1873

PLATE PLACEMENT TOL. = 0.250 inches

PLATE ROTATION TOL. = 5.0 Deg.

JSI GRIP= 0.25 (B) (INPUT = 0.90)
JSI METAL= 0.19 (B) (INPUT = 1.00)

LICENSED PROFESSIONAL ENGINEER
N.A. EL-MASRI
PROVINCE OF ONTARIO
Jul 18, 2023

READ ALL NOTES ON THIS PAGE AND ON THE ENGINEERING NOTES: TRUSSES. THE NOTE PAGE IS AN INTEGRAL PART OF THIS DRAWING AS IT CONTAINS SPECIFICATIONS AND CRITERIA USED IN THE DESIGN OF THIS COMPONENT.

KOTT

CORPORATION OF THE CITY OF OSHAWA
TRUE COPY OF PERMIT PLANS
Nov 03 2023
PER: CHIEF BUILDING OFFICIAL

MHP 23036

JOB NAME	TRUSS NAME	QUANTITY	PLY	JOB DESC.	DRWG NO.
NE0723-112	J07	3	1	GREENPARK - ZADOR BAY ESTATES - VILLA 5-3 (TRUSS DESC.)	

Version 8.630 S Mar 22 2023 MiTek Industries, Inc. Tue Jul 18 14:41:40 2023 Page 1
ID:aX72Bl6hiO7VoZWieLlJw?z93Pm-H6OxgDer3k0womJQFFPukHFqRpxVVr?M93gcW_ywpWP

Scale = 1:18.8

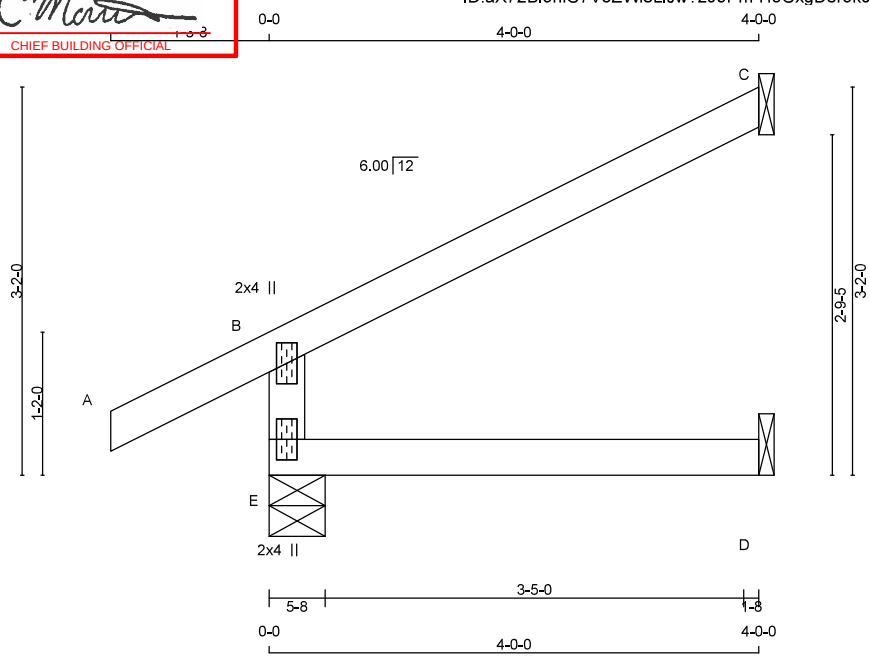

TOTAL WEIGHT = 3 X 12 = 37 lb [M]

LUMBER
N. L. G. A. RULES

CHORDS	SIZE		LUMBER	DESCR.
E - B	2x4	DRY	No.2	SPF
A - C	2x4	DRY	No.2	SPF
E - D	2x4	DRY	No.2	SPF

DRY: SEASONED LUMBER.

PLATES (table is in inches)

JT	TYPE	PLATES	W	LEN	Y	X
B	TMV+p	MT20	2.0	4.0		
E	BMV1+p	MT20	2.0	4.0		

DIMENSIONS, SUPPORTS AND LOADINGS SPECIFIED BY FABRICATOR TO BE VERIFIED BY BUILDING DESIGNER

BEARINGS

JT	FACTORED GROSS REACTION VERT	HORZ	MAXIMUM FACTORED GROSS REACTION DOWN	HORZ	UPLIFT	INPUT BRG IN-SX	REQRD BRG IN-SX
E	503	0	503	0	0	5-8	1-8
C	179	0	179	0	0	1-8	1-8
D	31	0	35	0	0	1-8	1-8

SEE MITEK STANDARD DETAIL MSD2015-H FOR CONNECTION TO JOINT(S) C , D

UNFACTORED REACTIONS

JT	1ST LCASE COMBINED	MAX./MIN. COMPONENT REACTIONS SNOW	LIVE	PERM.LIVE	WIND	DEAD	SOIL
E	348	268 / 0	0 / 0	0 / 0	0 / 0	80 / 0	0 / 0
C	123	105 / 0	0 / 0	0 / 0	0 / 0	18 / 0	0 / 0
D	25	0 / 0	0 / 0	0 / 0	0 / 0	25 / 0	0 / 0

BEARING MATERIAL TO BE SPF NO.2 OR BETTER AT JOINT(S) E

BRACING
TOP CHORD TO BE SHEATHED OR MAX. PURLIN SPACING = 6.25 FT.
MAX. UNBRACED BOTTOM CHORD LENGTH = 10.00 FT OR RIGID CEILING DIRECTLY APPLIED.

ALL PITCH BREAKS AND PERIMETER CORNER JOINTS MUST BE LATERALLY RESTRAINED.

LOADING
TOTAL LOAD CASES: (4)

CHORDS

MEMB. FR-TO	MAX. FACTORED FORCE (LBS)	FACTORED VERT. LOAD (PLF) FROM	TO	LC1	MAX CSI (LC)
E- B	-460 / 0	0.0	0.0	0.05 (4)	
A- B	0 / 36	-119.4	-119.4	0.16 (1)	
B- C	-27 / 0	-119.4	-119.4	0.32 (1)	
E- D	0 / 0	-18.2	-18.2	0.06 (4)	

WEBS

MEMB. FR-TO	MAX. FACTORED FORCE (LBS)	MAX CSI (LC)	MAX UNBRAC LENGTH
E- B			7.81
A- B			10.00
B- C			6.25
E- D			10.00

DESIGN CRITERIA

SPECIFIED LOADS:

TOP CH.	LL	=	34.8	PSF
	DL	=	6.0	PSF
BOT CH.	LL	=	0.0	PSF
	DL	=	7.3	PSF
TOTAL LOAD		=	48.1	PSF

SPACING = 24.0 IN. C/C

THIS TRUSS IS DESIGNED FOR RESIDENTIAL OR SMALL BUILDING REQUIREMENTS OF PART 9, NBCC 2015

THIS DESIGN COMPLIES WITH:
- PART 9 OF BCBC 2018 , NBC-2019AE
- PART 9 OF OBC 2012 (2019 AMENDMENT)
- CSA 086-14
- TPIC 2014

DESIGN ASSUMPTIONS
-OVERHANG NOT TO BE ALTERED OR CUT OFF.

(55 % OF 48.1 P.S.F. G.S.L. PLUS 8.4 P.S.F. RAIN LOAD) EQUALS 34.8 P.S.F. SPECIFIED ROOF LIVE LOAD

ALLOWABLE DEFL.(LL)= L/360 (0.19")
CALCULATED VERT. DEFL.(LL) = L/ 999 (0.00")
ALLOWABLE DEFL.(TL)= L/360 (0.19")
CALCULATED VERT. DEFL.(TL) = L/ 999 (0.01")

CSI: TC=0.32/0.97 (B-C:1) , BC=0.06/0.97 (D-E:4) , WB=0.00/0.97 (n/a:0) , SSI=0.21/1.00 (B-C:1)

DOL LUMBER=1.00 NAIL=1.00 LS BEND=1.10 COMP=1.10 SHEAR=1.10 TENS= 1.10

COMPANION LIVE LOAD FACTOR = 1.00

TRUSS PLATE MANUFACTURER IS NOT RESPONSIBLE FOR QUALITY CONTROL IN THE TRUSS MANUFACTURING PLANT .

NAIL VALUES

PLATE	GRIP(DRY) (PSI) MAX	MIN	SHEAR (PLI) MAX	MIN	SECTION (PLI) MAX	MIN
MT20	650	371	1747	788	1987	1873

PLATE PLACEMENT TOL. = 0.250 inches

PLATE ROTATION TOL. = 5.0 Deg.

JSI GRIP= 0.26 (B) (INPUT = 0.90)
JSI METAL= 0.19 (B) (INPUT = 1.00)

LICENSED PROFESSIONAL ENGINEER
N.A. EL-MASRI
PROVINCE OF ONTARIO
Jul 18, 2023

READ ALL NOTES ON THIS PAGE AND ON THE ENGINEERING NOTES: TRUSSES. THE NOTE PAGE IS AN INTEGRAL PART OF THIS DRAWING AS IT CONTAINS SPECIFICATIONS AND CRITERIA USED IN THE DESIGN OF THIS COMPONENT.

KOTT

CORPORATION OF THE CITY OF OSHAWA
TRUE COPY
OF PERMIT PLANS
Nov 03 2023
PER: -
CHIEF BUILDING OFFICIAL

MHP 23036

JOB NAME	TRUSS NAME	QUANTITY	PLY	JOB DESC.	DRWG NO.
NE0723-112	J08	2	1	GREENPARK - ZADOR BAY ESTATES - VILLA 5-3	
				TRUSS DESC.	

Version 8.630 S Mar 22 2023 MiTek Industries, Inc. Tue Jul 18 14:41:41 2023 Page 1
ID:aX72BI6hiO7VoZWieLIJw?z93Pm-IIxJtZfTq29nQvucpzw7HUo2qDHkEIEVOjP93RywpWO

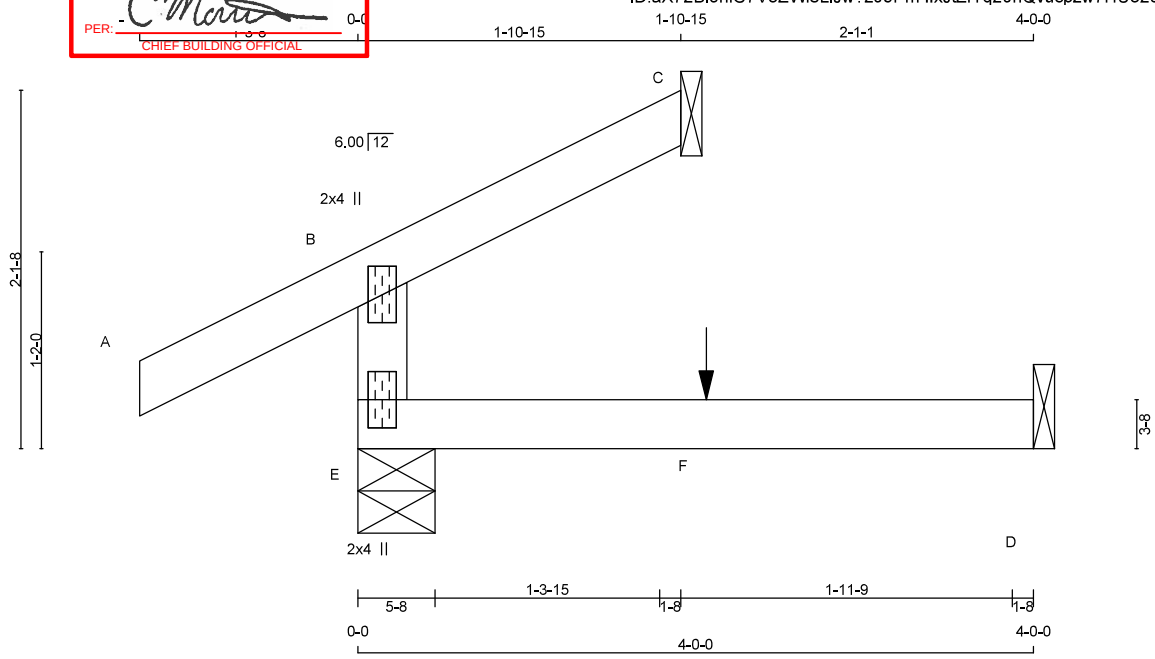

TOTAL WEIGHT = 2 X 10 = 19 lb [M]

LUMBER
N. L. G. A. RULES

CHORDS	SIZE		LUMBER	DESCR.
E - B	2x4	DRY	No.2	SPF
A - C	2x4	DRY	No.2	SPF
E - D	2x4	DRY	No.2	SPF

DRY: SEASONED LUMBER.

PLATES (table is in inches)

JT	TYPE	PLATES	W	LEN	Y	X
B	TMV+p	MT20	2.0	4.0		
E	BMV1+p	MT20	2.0	4.0		

DIMENSIONS, SUPPORTS AND LOADINGS SPECIFIED BY FABRICATOR TO BE VERIFIED BY BUILDING DESIGNER

BEARINGS

JT	FACTORED GROSS REACTION VERT	HORZ	MAXIMUM FACTORED GROSS REACTION DOWN	HORZ	UPLIFT	INPUT BRG IN-SX	REQRD BRG IN-SX
E	351	0	351	0	0	5-8	1-8
C	86	0	86	0	0	1-8	1-8
D	34	0	35	0	0	1-8	1-8

SEE MITEK STANDARD DETAIL MSD2015-H FOR CONNECTION TO JOINT(S) C , D

UNFACTORED REACTIONS

JT	1ST LCASE COMBINED	MAX./MIN. COMPONENT REACTIONS SNOW	LIVE	PERM.LIVE	WIND	DEAD	SOIL
E	244	180 / 0	0 / 0	0 / 0	0 / 0	64 / 0	0 / 0
C	59	50 / 0	0 / 0	0 / 0	0 / 0	9 / 0	0 / 0
D	27	2 / 0	0 / 0	0 / 0	0 / 0	25 / 0	0 / 0

BEARING MATERIAL TO BE SPF NO.2 OR BETTER AT JOINT(S) E, C

BRACING
TOP CHORD TO BE SHEATHED OR MAX. PURLIN SPACING = 6.25 FT.
MAX. UNBRACED BOTTOM CHORD LENGTH = 10.00 FT OR RIGID CEILING DIRECTLY APPLIED.

ALL PITCH BREAKS AND PERIMETER CORNER JOINTS MUST BE LATERALLY RESTRAINED.

LOADING
TOTAL LOAD CASES: (4)

CHORDS MEMB. FR-TO	MAX. FACTORED FORCE (LBS)	VERT. LOAD (PLF) FROM	TO	LC1	MAX CSI (LC)	WEBS MAX. UNBRAC LENGTH	MEMB. FR-TO	MAX. FACTORED FORCE (LBS)	MAX CSI (LC)
E-B	-304 / 0	0.0	0.0	0.05 (4)		7.81			
A-B	0 / 36	-119.4	-119.4	0.16 (1)		10.00			
B-C	-12 / 0	-119.4	-119.4	0.07 (1)		6.25			
E-F	0 / 0	-18.2	-18.2	0.06 (4)		10.00			
F-D	0 / 0	-18.2	-18.2	0.06 (4)		10.00			

SPECIFIED CONCENTRATED LOADS (LBS)

JT	LOC.	LC1	MAX-	MAX+	FACE	DIR.	TYPE	HEEL	CONN.
F	2-0-12	-5	-5	—	BACK	VERT	TOTAL	—	C1

CONNECTION REQUIREMENTS

1) **C1:** A SUITABLE HANGER/MECHANICAL CONNECTION IS REQUIRED.

DESIGN CRITERIA

*** SPECIAL LOADS ANALYSIS ***
GEOMETRY AND/OR BASIC LOADS CHANGED BY USER.
LOADS WERE DERIVED FROM USER INPUT
NO FURTHER MODIFICATIONS WERE MADE

SPECIFIED LOADS:

TOP CH.	LL	=	34.8	PSF
	DL	=	6.0	PSF
BOT CH.	LL	=	0.0	PSF
	DL	=	7.3	PSF
TOTAL LOAD		=	48.1	PSF

SPACING = 24.0 IN. C/C

*** NON STANDARD GIRDER ***
ADDT'L USER-DEFINED LOADS APPLIED TO ALL LOAD CASES.

THIS TRUSS IS DESIGNED FOR RESIDENTIAL OR SMALL BUILDING REQUIREMENTS OF PART 9, NBCC 2015

THIS DESIGN COMPLIES WITH:
- PART 9 OF BCBC 2018 , NBC-2019AE
- PART 9 OF OBC 2012 (2019 AMENDMENT)
- CSA 086-14
- TPIC 2014

DESIGN ASSUMPTIONS
-OVERHANG NOT TO BE ALTERED OR CUT OFF.

(55 % OF 48.1 P.S.F. G.S.L. PLUS 8.4 P.S.F. RAIN LOAD) EQUALS 34.8 P.S.F. SPECIFIED ROOF LIVE LOAD

ALLOWABLE DEFL.(LL)= L/360 (0.19")
CALCULATED VERT. DEFL.(LL) = L/ 999 (0.00")
ALLOWABLE DEFL.(TL)= L/360 (0.19")
CALCULATED VERT. DEFL.(TL) = L/ 999 (0.01")

CSI: TC=0.16/0.97 (A-B:1) , BC=0.06/0.97 (D-E:4) , WB=0.00/0.97 (n/a:0) , SSI=0.11/1.00 (A-B:1)

DOL LUMBER=1.00 NAIL=1.00 LS BEND=1.10 COMP=1.10 SHEAR=1.10 TENS= 1.10

COMPANION LIVE LOAD FACTOR = 1.00

TRUSS PLATE MANUFACTURER IS NOT RESPONSIBLE FOR QUALITY CONTROL IN THE TRUSS MANUFACTURING PLANT .

NAIL VALUES

PLATE	GRIP(DRY) (PSI) MAX	MIN	SHEAR (PLI) MAX	MIN	SECTION (PLI) MAX	MIN
MT20	650	371	1747	788	1987	1873

PLATE PLACEMENT TOL. = 0.250 inches

PLATE ROTATION TOL. = 5.0 Deg.

JSI GRIP= 0.17 (B) (INPUT = 0.90)
JSI METAL= 0.13 (B) (INPUT = 1.00)

LICENSED PROFESSIONAL ENGINEER
N.A. EL-MASRI
PROVINCE OF ONTARIO
Jul 18, 2023

READ ALL NOTES ON THIS PAGE AND ON THE ENGINEERING NOTES: TRUSSES. THE NOTE PAGE IS AN INTEGRAL PART OF THIS DRAWING AS IT CONTAINS SPECIFICATIONS AND CRITERIA USED IN THE DESIGN OF THIS COMPONENT.

KOTT

CORPORATION OF THE CITY OF OSHAWA
TRUE COPY OF PERMIT PLANS
Nov 03 2023
PER:
CHIEF BUILDING OFFICIAL

MHP 23036

JOB NAME	TRUSS NAME	QUANTITY	PLY	JOB DESC.	DRWG NO.
NE0723-112	J09	1	1	GREENPARK - ZADOR BAY ESTATES - VILLA 5-3 (TRUSS DESC.)	

Version 8.630 S Mar 22 2023 MiTek Industries, Inc. Tue Jul 18 14:41:41 2023 Page 1
ID:aX72Bl6hiO7VoZWieLIJw?z93Pm-IlxJtZfTq29nQvucpzw7HUo2qDHREIEVOjP93RywpWO

Scale = 1:13.6

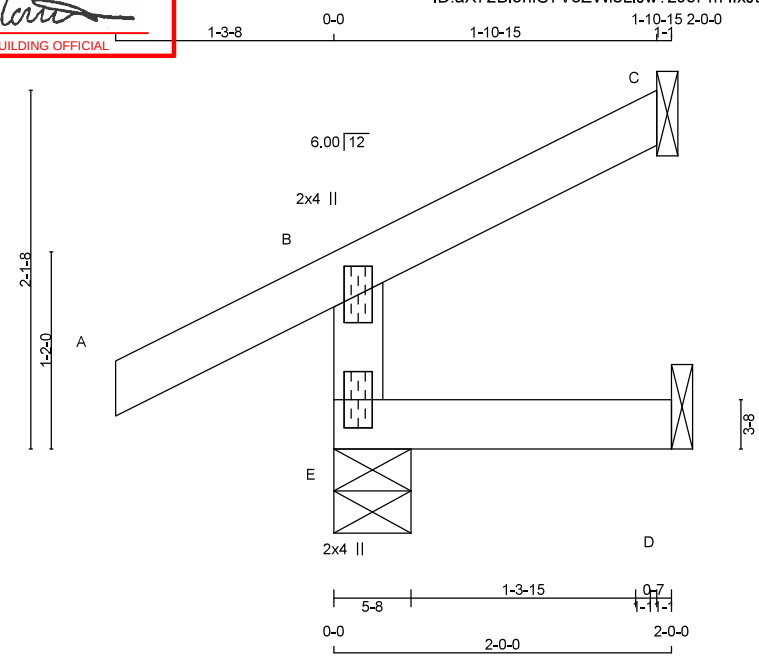

TOTAL WEIGHT = 7 lb
[M]

LUMBER
N. L. G. A. RULES

CHORDS	SIZE		LUMBER	DESCR.
E - B	2x4	DRY	No.2	SPF
A - C	2x4	DRY	No.2	SPF
E - D	2x4	DRY	No.2	SPF

DRY: SEASONED LUMBER.

PLATES (table is in inches)

JT	TYPE	PLATES	W	LEN	Y	X
B	TMV+p	MT20	2.0	4.0		
E	BMV1+p	MT20	2.0	4.0		

DIMENSIONS, SUPPORTS AND LOADINGS SPECIFIED BY FABRICATOR TO BE VERIFIED BY BUILDING DESIGNER

BEARINGS

JT	FACTORED GROSS REACTION VERT	HORZ	MAXIMUM FACTORED GROSS REACTION DOWN	HORZ	UPLIFT	INPUT BRG IN-SX	REQRD BRG IN-SX
E	324	0	324	0	0	5-8	1-8
C	86	0	86	0	0	1-8	1-8
D	16	0	18	0	0	1-8	1-8

SEE MITEK STANDARD DETAIL MSD2015-H FOR CONNECTION TO JOINT(S) C , D

UNFACTORED REACTIONS

JT	1ST LCASE COMBINED	MAX./MIN. COMPONENT REACTIONS SNOW	LIVE	PERM.LIVE	WIND	DEAD	SOIL
E	224	177 / 0	0 / 0	0 / 0	0 / 0	47 / 0	0 / 0
C	59	50 / 0	0 / 0	0 / 0	0 / 0	9 / 0	0 / 0
D	13	0 / 0	0 / 0	0 / 0	0 / 0	13 / 0	0 / 0

BEARING MATERIAL TO BE SPF NO.2 OR BETTER AT JOINT(S) E, C

BRACING
TOP CHORD TO BE SHEATHED OR MAX. PURLIN SPACING = 6.25 FT.
MAX. UNBRACED BOTTOM CHORD LENGTH = 10.00 FT OR RIGID CEILING DIRECTLY APPLIED.

ALL PITCH BREAKS AND PERIMETER CORNER JOINTS MUST BE LATERALLY RESTRAINED.

LOADING
TOTAL LOAD CASES: (5)

CHORDS

MEMB. FR-TO	MAX. FACTORED FORCE (LBS)	FACTORED VERT. LOAD (PLF) FROM	TO	LC1 MAX CSI (LC)
E- B	-304 / 0	0.0	0.0	0.01 (4)
A- B	0 / 36	-119.4	-119.4	0.16 (1)
B- C	-12 / 0	-119.4	-119.4	0.07 (1)
E- D	0 / 0	-18.2	-18.2	0.02 (4)

WEBS

MEMB. FR-TO	MAX. FACTORED FORCE (LBS)	MAX CSI (LC)	MAX UNBRAC LENGTH
E- B			7.81
A- B			10.00
B- C			6.25
E- D			10.00

CANTILEVER ANALYSIS HAS BEEN CONSIDERED IN THIS DESIGN

PATTERN-LOADING CHECK APPLIED TO THIS TRUSS.

DESIGN CRITERIA

SPECIFIED LOADS:

TOP CH.	LL	=	34.8	PSF
	DL	=	6.0	PSF
BOT CH.	LL	=	0.0	PSF
	DL	=	7.3	PSF
TOTAL LOAD		=	48.1	PSF

SPACING = 24.0 IN. C/C

THIS TRUSS IS DESIGNED FOR RESIDENTIAL OR SMALL BUILDING REQUIREMENTS OF PART 9, NBCC 2015

THIS DESIGN COMPLIES WITH:
- PART 9 OF BCBC 2018 , NBC-2019AE
- PART 9 OF OBC 2012 (2019 AMENDMENT)
- CSA 086-14
- TPIC 2014

DESIGN ASSUMPTIONS
-OVERHANG NOT TO BE ALTERED OR CUT OFF.

(55 % OF 48.1 P.S.F. G.S.L. PLUS 8.4 P.S.F. RAIN LOAD) EQUALS 34.8 P.S.F. SPECIFIED ROOF LIVE LOAD

ALLOWABLE DEFL.(LL)= L/360 (0.19")
CALCULATED VERT. DEFL.(LL) = L/ 999 (0.00")
ALLOWABLE DEFL.(TL)= L/360 (0.19")
CALCULATED VERT. DEFL.(TL) = L/ 999 (0.00")

CSI: TC=0.16/0.97 (A-B:1) , BC=0.02/0.97 (D-E:4) , WB=0.00/0.97 (n/a:0) , SSI=0.11/1.00 (A-B:1)

DOL LUMBER=1.00 NAIL=1.00 LS BEND=1.10 COMP=1.10 SHEAR=1.10 TENS= 1.10

COMPANION LIVE LOAD FACTOR = 1.00

TRUSS PLATE MANUFACTURER IS NOT RESPONSIBLE FOR QUALITY CONTROL IN THE TRUSS MANUFACTURING PLANT .

NAIL VALUES

PLATE	GRIP(DRY) (PSI) MAX	MIN	SHEAR (PLI) MAX	MIN	SECTION (PLI) MAX	MIN
MT20	650	371	1747	788	1987	1873

PLATE PLACEMENT TOL. = 0.250 inches

PLATE ROTATION TOL. = 5.0 Deg.

JSI GRIP= 0.17 (B) (INPUT = 0.90)
JSI METAL= 0.13 (B) (INPUT = 1.00)

LICENSED PROFESSIONAL ENGINEER
N.A. EL-MASRI
PROVINCE OF ONTARIO
Jul 18, 2023

READ ALL NOTES ON THIS PAGE AND ON THE ENGINEERING NOTES: TRUSSES. THE NOTE PAGE IS AN INTEGRAL PART OF THIS DRAWING AS IT CONTAINS SPECIFICATIONS AND CRITERIA USED IN THE DESIGN OF THIS COMPONENT.

KOTT

CORPORATION OF THE CITY OF OSHAWA
TRUE COPY OF PERMIT PLANS
Nov 03 2023
PER:
CHIEF BUILDING OFFICIAL

MHP 23036

JOB NAME	TRUSS NAME	QUANTITY	PLY	JOB DESC.	DRWG NO.
NE0723-112	J10	1	1	GREENPARK - ZADOR BAY ESTATES - VILLA 5-3	

TRUSS DESC.

Version 8.630 S Mar 22 2023 MiTek Industries, Inc. Tue Jul 18 14:41:41 2023 Page 1
ID:aX72Bl6hiO7VoZWieLIJw?z93Pm-IIxJtZfTq29nQvucpzw7HUo4QDHJEIEVOjP93RywpWO

Scale = 1:13.6

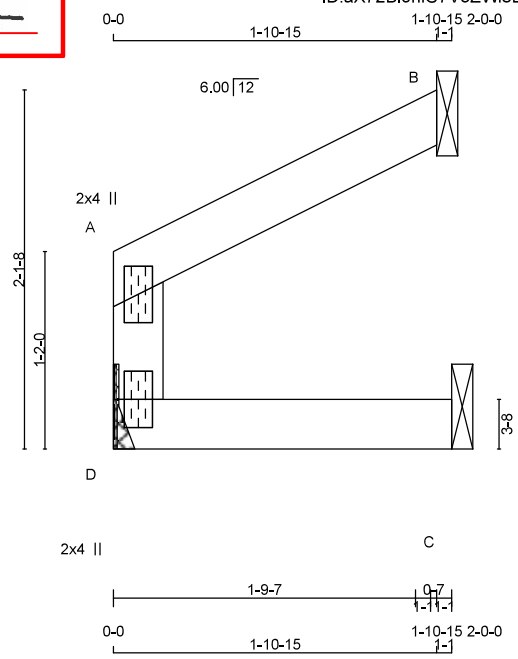

TOTAL WEIGHT = 6 lb
[M][F]

LUMBER
N. L. G. A. RULES

CHORDS	SIZE		LUMBER	DESCR.
D - A	2x4	DRY	No.2	SPF
A - B	2x4	DRY	No.2	SPF
D - C	2x4	DRY	No.2	SPF

DRY: SEASONED LUMBER.

PLATES (table is in inches)

JT	TYPE	PLATES	W	LEN	Y	X
A	TMV+p	MT20	2.0	4.0		
D	BMV1+p	MT20	2.0	4.0		

DIMENSIONS, SUPPORTS AND LOADINGS SPECIFIED BY FABRICATOR TO BE VERIFIED BY BUILDING DESIGNER

BEARINGS

JT	FACTORED GROSS REACTION VERT	HORZ	MAXIMUM FACTORED GROSS REACTION DOWN	HORZ	UPLIFT	INPUT BRG IN-SX	REQRD BRG IN-SX
D	133	0	133	0	0	MECHANICAL	
B	107	0	107	0	0	1-8	1-8
C	25	0	25	0	0	1-8	1-8

A SUITABLE HANGER/MECHANICAL CONNECTION IS REQUIRED AT JOINT D. MINIMUM BEARING LENGTH AT JOINT D = 1-8.

SEE MITEK STANDARD DETAIL MSD2015-H FOR CONNECTION TO JOINT(S) B , C

UNFACTORED REACTIONS

JT	1ST LCASE COMBINED	MAX./MIN. COMPONENT REACTIONS SNOW	LIVE	PERM.LIVE	WIND	DEAD	SOIL
D	93	67 / 0	0 / 0	0 / 0	0 / 0	26 / 0	0 / 0
B	73	61 / 0	0 / 0	0 / 0	0 / 0	12 / 0	0 / 0
C	19	5 / 0	0 / 0	0 / 0	0 / 0	14 / 0	0 / 0

BRACING
TOP CHORD TO BE SHEATHED OR MAX. PURLIN SPACING = 10.00 FT.
MAX. UNBRACED BOTTOM CHORD LENGTH = 10.00 FT OR RIGID CEILING DIRECTLY APPLIED.

ALL PITCH BREAKS AND PERIMETER CORNER JOINTS MUST BE LATERALLY RESTRAINED.

LOADING
TOTAL LOAD CASES: (4)

CHORDS MEMB. FR-TO	MAX. FACTORED FORCE (LBS)	FACTORED VERT. LOAD (PLF)	LC1	MAX CSI (LC)	WEBS MEMB. FROM-TO	MAX. UNBRAC LENGTH	MAX. FACTORED FORCE (LBS)	MAX CSI (LC)
D- A	-122 / 0	0.0	0.0	0.02 (1)		7.81		
A- B	-3 / 0	-119.4	-119.4	0.05 (1)		10.00		
D- C	0 / 0	-18.2	-18.2	0.02 (1)		10.00		

DESIGN CRITERIA

SPECIFIED LOADS:

TOP CH.	LL	=	34.8	PSF
	DL	=	6.0	PSF
BOT CH.	LL	=	0.0	PSF
	DL	=	7.3	PSF
TOTAL LOAD		=	48.1	PSF

SPACING = 24.0 IN. C/C

THIS TRUSS IS DESIGNED FOR RESIDENTIAL OR SMALL BUILDING REQUIREMENTS OF PART 9, NBCC 2015

THIS DESIGN COMPLIES WITH:
- PART 9 OF BCBC 2018 , NBC-2019AE
- PART 9 OF OBC 2012 (2019 AMENDMENT)
- CSA 086-14
- TPIC 2014

(55 % OF 48.1 P.S.F. G.S.L. PLUS 8.4 P.S.F. RAIN LOAD) EQUALS 34.8 P.S.F. SPECIFIED ROOF LIVE LOAD

ALLOWABLE DEFL.(LL)= L/360 (0.19")
CALCULATED VERT. DEFL.(LL) = L/ 999 (0.00")
ALLOWABLE DEFL.(TL)= L/360 (0.19")
CALCULATED VERT. DEFL.(TL) = L/ 999 (0.00")

CSI: TC=0.05/0.97 (A-B:1) , BC=0.02/0.97 (C-D:1) , WB=0.00/0.97 (n/a:0) , SSI=0.08/1.00 (A-B:1)

DOL LUMBER=1.00 NAIL=1.00 LS BEND=1.10 COMP=1.10 SHEAR=1.10 TENS= 1.10

COMPANION LIVE LOAD FACTOR = 1.00

TRUSS PLATE MANUFACTURER IS NOT RESPONSIBLE FOR QUALITY CONTROL IN THE TRUSS MANUFACTURING PLANT .

NAIL VALUES

PLATE	GRIP(DRY) (PSI) MAX	MIN	SHEAR (PLI) MAX	MIN	SECTION (PLI) MAX	MIN
MT20	650	371	1747	788	1987	1873

PLATE PLACEMENT TOL. = 0.250 inches

PLATE ROTATION TOL. = 5.0 Deg.

JSI GRIP= 0.07 (A) (INPUT = 0.90)
JSI METAL= 0.05 (A) (INPUT = 1.00)

LICENSED PROFESSIONAL ENGINEER
N.A. EL-MASRI
PROVINCE OF ONTARIO
Jul 18, 2023

READ ALL NOTES ON THIS PAGE AND ON THE ENGINEERING NOTES: TRUSSES. THE NOTE PAGE IS AN INTEGRAL PART OF THIS DRAWING AS IT CONTAINS SPECIFICATIONS AND CRITERIA USED IN THE DESIGN OF THIS COMPONENT.

KOTT

CORPORATION OF THE CITY OF OSHAWA
TRUE COPY OF PERMIT PLANS
Nov 03 2023
PER:
CHIEF BUILDING OFFICIAL

MHP 23036

JOB NAME	TRUSS NAME	QUANTITY	PLY	JOB DESC.	DRWG NO.
NE0723-112	T01	1	1	GREENPARK - ZADOR BAY ESTATES - VILLA 5-3 (TRUSS DESC.)	

Version 8.630 S Mar 22 2023 MiTek Industries, Inc. Tue Jul 18 14:41:42 2023 Page 1
ID:aX72BI6hiO7VoZWieLIJw?z93Pm-DUVh5vg5bMHe13SpMgSMpiK77dWJzdEfcN9ibtywpWN

-1-3-8 0-0 4-1-4 8-10-12 13-6-8 19-1-0 22-11-12 27-1-0 28-4-8
1-3-8 4-1-4 5-6-8 5-6-8 3-10-12 4-1-4 1-3-8

Scale = 1:46.5

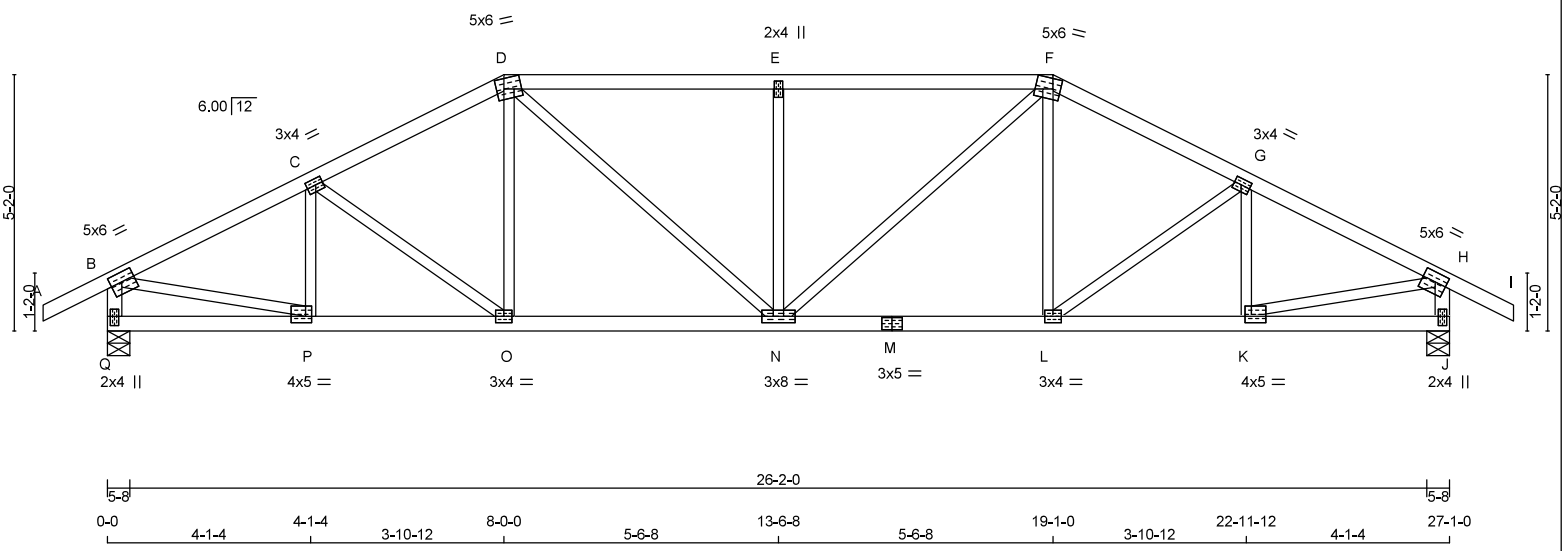

TOTAL WEIGHT = 110 lb
[M][F]

LUMBER
N. L. G. A. RULES

CHORDS	SIZE		LUMBER	DESCR.
A - D	2x4	DRY	No.2	SPF
D - F	2x4	DRY	No.2	SPF
F - I	2x4	DRY	No.2	SPF
Q - B	2x4	DRY	No.2	SPF
J - H	2x4	DRY	No.2	SPF
Q - M	2x4	DRY	No.2	SPF
M - J	2x4	DRY	No.2	SPF
ALL WEBS EXCEPT	2x3	DRY	No.2	SPF

DRY: SEASONED LUMBER.

PLATES (table is in inches)

JT	TYPE	PLATES	W	LEN	Y	X
B	TMVW-t	MT20	5.0	6.0	2.25	2.75
C	TMWW-t	MT20	3.0	4.0	1.50	1.75
D	TTWW-m	MT20	5.0	6.0	2.50	1.75
E	TMW+w	MT20	2.0	4.0		
F	TTWW-m	MT20	5.0	6.0	2.50	1.75
G	TMWW-t	MT20	3.0	4.0	1.50	1.75
H	TMVW-t	MT20	5.0	6.0	2.25	2.75
J	BMV1+p	MT20	2.0	4.0	2.25	1.00
K	BMWW-t	MT20	4.0	5.0	1.50	1.50
L	BMWW-t	MT20	3.0	4.0		
M	BS-t	MT20	3.0	5.0		
N	BMWWW-t	MT20	3.0	8.0		
O	BMWW-t	MT20	3.0	4.0		
P	BMWW-t	MT20	4.0	5.0	1.50	1.50
Q	BMV1+p	MT20	2.0	4.0	2.25	1.00

DIMENSIONS, SUPPORTS AND LOADINGS SPECIFIED BY FABRICATOR TO BE VERIFIED BY BUILDING DESIGNER

BEARINGS

JT	FACTORED GROSS REACTION VERT	HORZ	MAXIMUM FACTORED GROSS REACTION DOWN	HORZ	UPLIFT	INPUT BRG IN-SX	REQRD BRG IN-SX
Q	2026	0	2026	0	0	5-8	3-1
J	2026	0	2026	0	0	5-8	3-1

UNFACTORED REACTIONS

JT	1ST LCASE COMBINED	MAX./MIN. COMPONENT REACTIONS SNOW	LIVE	PERM.LIVE	WIND	DEAD	SOIL
Q	1414	1037 / 0	0 / 0	0 / 0	0 / 0	376 / 0	0 / 0
J	1414	1037 / 0	0 / 0	0 / 0	0 / 0	376 / 0	0 / 0

BEARING MATERIAL TO BE SPF NO.2 OR BETTER AT JOINT(S) Q, J

BRACING
TOP CHORD TO BE SHEATHED OR MAX. PURLIN SPACING = 3.58 FT.
MAX. UNBRACED BOTTOM CHORD LENGTH = 10.00 FT OR RIGID CEILING DIRECTLY APPLIED.

ALL PITCH BREAKS AND PERIMETER CORNER JOINTS MUST BE LATERALLY RESTRAINED.

LOADING
TOTAL LOAD CASES: (4)

CHORDS

MEMB. FR-TO	MAX. FACTORED FORCE (LBS)	FACTORED VERT. LOAD (PLF) FROM	TO	LC1	MAX CSI (LC)	MAX. UNBRAC LENGTH
A- B	0 / 36	-119.4	-119.4	0.16 (1)	10.00	
B- C	-2549 / 0	-119.4	-119.4	0.30 (1)	4.03	
C- D	-2446 / 0	-119.4	-119.4	0.29 (1)	4.11	
D- E	-2685 / 0	-119.4	-119.4	0.57 (1)	3.58	
E- F	-2685 / 0	-119.4	-119.4	0.57 (1)	3.58	
F- G	-2446 / 0	-119.4	-119.4	0.29 (1)	4.11	
G- H	-2549 / 0	-119.4	-119.4	0.30 (1)	4.03	
H- I	0 / 36	-119.4	-119.4	0.16 (1)	10.00	
Q- B	-1988 / 0	0.0	0.0	0.20 (1)	5.91	
J- H	-1988 / 0	0.0	0.0	0.20 (1)	5.91	
Q- P	0 / 0	-18.2	-18.2	0.07 (4)	10.00	
P- O	0 / 2301	-18.2	-18.2	0.42 (1)	10.00	
O- N	0 / 2169	-18.2	-18.2	0.40 (1)	10.00	
N- M	0 / 2169	-18.2	-18.2	0.40 (1)	10.00	
M- L	0 / 2169	-18.2	-18.2	0.40 (1)	10.00	
L- K	0 / 2301	-18.2	-18.2	0.42 (1)	10.00	
K- J	0 / 0	-18.2	-18.2	0.07 (4)	10.00	

WEBS

MEMB. FR-TO	MAX. FACTORED FORCE (LBS)	MAX CSI (LC)
P- C	-419 / 0	0.08 (1)
C- O	-168 / 0	0.07 (1)
O- D	0 / 198	0.04 (1)
D- N	0 / 687	0.15 (1)
N- E	-811 / 0	0.32 (1)
N- F	0 / 687	0.15 (1)
L- F	0 / 198	0.04 (1)
L- G	-168 / 0	0.07 (1)
K- G	-419 / 0	0.08 (1)
B- P	0 / 2350	0.53 (1)
K- H	0 / 2350	0.53 (1)

DESIGN CRITERIA

SPECIFIED LOADS:

TOP CH.	LL	=	34.8	PSF
	DL	=	6.0	PSF
BOT CH.	LL	=	0.0	PSF
	DL	=	7.3	PSF
TOTAL LOAD		=	48.1	PSF

SPACING = 24.0 IN. C/C

LOADING IN FLAT SECTION BASED ON A SLOPE OF 2.00/12 MINIMUM

THIS TRUSS IS DESIGNED FOR RESIDENTIAL OR SMALL BUILDING REQUIREMENTS OF PART 9, NBCC 2015

THIS DESIGN COMPLIES WITH:
- PART 9 OF BCBC 2018 , NBC-2019AE
- PART 9 OF OBC 2012 (2019 AMENDMENT)
- CSA 086-14
- TPIC 2014

(55 % OF 48.1 P.S.F. G.S.L. PLUS 8.4 P.S.F. RAIN LOAD) EQUALS 34.8 P.S.F. SPECIFIED ROOF LIVE LOAD

ALLOWABLE DEFL.(LL)= L/360 (0.90")
CALCULATED VERT. DEFL.(LL) = L/ 999 (0.12")
ALLOWABLE DEFL.(TL)= L/360 (0.90")
CALCULATED VERT. DEFL.(TL) = L/ 999 (0.21")

CSI: TC=0.57/0.97 (D-E:1) , BC=0.42/0.97 (K-L:1) , WB=0.53/0.97 (H-K:1) , SSI=0.32/1.00 (D-E:1)

DOL LUMBER=1.00 NAIL=1.00 LS BEND=1.10 COMP=1.10 SHEAR=1.10 TENS= 1.10

COMPANION LIVE LOAD FACTOR = 1.00

TRUSS PLATE MANUFACTURER IS NOT RESPONSIBLE FOR QUALITY CONTROL IN THE TRUSS MANUFACTURING PLANT .

NAIL VALUES

PLATE	GRIP(DRY) (PSI) MAX	MIN	SHEAR (PLI) MAX	MIN	SECTION (PLI) MAX	MIN
MT20	650	371	1747	788	1987	1873

PLATE PLACEMENT TOL. = 0.250 inches

PLATE ROTATION TOL. = 5.0 Deg.

JSI GRIP= 0.88 (P) (INPUT = 0.90)
JSI METAL= 0.69 (M) (INPUT = 1.00)

LICENSED PROFESSIONAL ENGINEER
N.A. EL-MASRI
PROVINCE OF ONTARIO
Jul 18, 2023

READ ALL NOTES ON THIS PAGE AND ON THE ENGINEERING NOTES: TRUSSES. THE NOTE PAGE IS AN INTEGRAL PART OF THIS DRAWING AS IT CONTAINS SPECIFICATIONS AND CRITERIA USED IN THE DESIGN OF THIS COMPONENT.

KOTT

CORPORATION OF THE CITY OF OSHAWA
TRUE COPY OF PERMIT PLANS
Nov 03 2023
PER: 4-10-12
CHIEF BUILDING OFFICIAL

MHP 23036

JOB NAME	TRUSS NAME	QUANTITY	PLY	JOB DESC.	DRWG NO.
NE0723-112	T02	1	1	GREENPARK - ZADOR BAY ESTATES - VILLA 5-3 TRUSS DESC.	

Version 8.630 S Mar 22 2023 MiTek Industries, Inc. Tue Jul 18 14:41:43 2023 Page 1
ID:aX72Bl6hiO7VoZWieLIJw?z93Pm-ih33IFhjMfPVfD1?wNzbMvtJN0sXi4Hor1uG7JywpVM

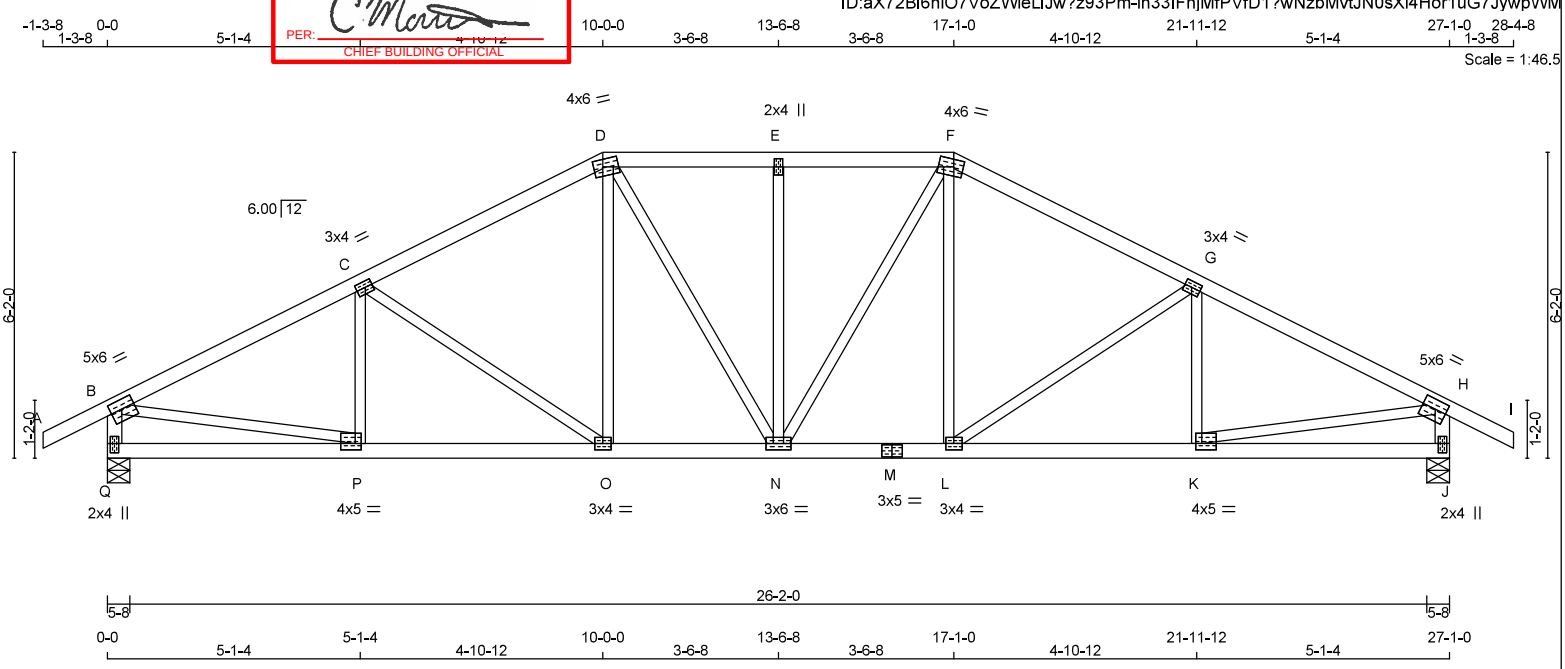

TOTAL WEIGHT = 116 lb
[M][F]

LUMBER
N. L. G. A. RULES

CHORDS	SIZE		LUMBER	DESCR.
A - D	2x4	DRY	No.2	SPF
D - F	2x4	DRY	No.2	SPF
F - I	2x4	DRY	No.2	SPF
Q - B	2x4	DRY	No.2	SPF
J - H	2x4	DRY	No.2	SPF
Q - M	2x4	DRY	No.2	SPF
M - J	2x4	DRY	No.2	SPF
ALL WEBS EXCEPT	2x3	DRY	No.2	SPF

DRY: SEASONED LUMBER.

PLATES (table is in inches)

JT	TYPE	PLATES	W	LEN	Y	X
B	TMVW-t	MT20	5.0	6.0	2.25	2.75
C	TMWW-t	MT20	3.0	4.0	1.50	1.75
D	TTWW-m	MT20	4.0	6.0	1.75	2.25
E	TMW+w	MT20	2.0	4.0		
F	TTWW-m	MT20	4.0	6.0	1.75	2.25
G	TMWW-t	MT20	3.0	4.0	1.50	1.75
H	TMVW-t	MT20	5.0	6.0	2.25	2.75
J	BMV1+p	MT20	2.0	4.0	2.25	1.00
K	BMWW-t	MT20	4.0	5.0	1.50	1.50
L	BMWW-t	MT20	3.0	4.0		
M	BS-t	MT20	3.0	5.0		
N	BMWWW-t	MT20	3.0	6.0		
O	BMWW-t	MT20	3.0	4.0		
P	BMWW-t	MT20	4.0	5.0	1.50	1.50
Q	BMV1+p	MT20	2.0	4.0	2.25	1.00

DIMENSIONS, SUPPORTS AND LOADINGS SPECIFIED BY FABRICATOR TO BE VERIFIED BY BUILDING DESIGNER

BEARINGS

JT	FACTORED GROSS REACTION VERT	HORZ	MAXIMUM FACTORED GROSS REACTION DOWN	HORZ	UPLIFT	INPUT BRG IN-SX	REQRD BRG IN-SX
Q	2026	0	2026	0	0	5-8	3-1
J	2026	0	2026	0	0	5-8	3-1

UNFACTORED REACTIONS

JT	1ST LCASE COMBINED	MAX./MIN. COMPONENT REACTIONS SNOW	LIVE	PERM.LIVE	WIND	DEAD	SOIL
Q	1414	1037 / 0	0 / 0	0 / 0	0 / 0	376 / 0	0 / 0
J	1414	1037 / 0	0 / 0	0 / 0	0 / 0	376 / 0	0 / 0

BEARING MATERIAL TO BE SPF NO.2 OR BETTER AT JOINT(S) Q, J

BRACING
TOP CHORD TO BE SHEATHED OR MAX. PURLIN SPACING = 3.78 FT.
MAX. UNBRACED BOTTOM CHORD LENGTH = 10.00 FT OR RIGID CEILING DIRECTLY APPLIED.

ALL PITCH BREAKS AND PERIMETER CORNER JOINTS MUST BE LATERALLY RESTRAINED.

LOADING
TOTAL LOAD CASES: (4)

CHORDS

MEMB. FR-TO	MAX. FACTORED FORCE (LBS)	VERT. LOAD (PLF) FROM	TO	LC1	MAX CSI (LC)	MAX. UNBRAC LENGTH
A- B	0 / 36	-119.4	-119.4	0.16 (1)	10.00	
B- C	-2621 / 0	-119.4	-119.4	0.47 (1)	3.78	
C- D	-2274 / 0	-119.4	-119.4	0.44 (1)	4.05	
D- E	-2177 / 0	-119.4	-119.4	0.23 (1)	4.39	
E- F	-2177 / 0	-119.4	-119.4	0.23 (1)	4.39	
F- G	-2274 / 0	-119.4	-119.4	0.44 (1)	4.05	
G- H	-2621 / 0	-119.4	-119.4	0.47 (1)	3.78	
H- I	0 / 36	-119.4	-119.4	0.16 (1)	10.00	
Q- B	-1984 / 0	0.0	0.0	0.20 (1)	5.91	
J- H	-1984 / 0	0.0	0.0	0.20 (1)	5.91	
Q- P	0 / 0	-18.2	-18.2	0.10 (4)	10.00	
P- O	0 / 2372	-18.2	-18.2	0.42 (1)	10.00	
O- N	0 / 2011	-18.2	-18.2	0.37 (1)	10.00	
N- M	0 / 2011	-18.2	-18.2	0.37 (1)	10.00	
M- L	0 / 2011	-18.2	-18.2	0.37 (1)	10.00	
L- K	0 / 2372	-18.2	-18.2	0.42 (1)	10.00	
K- J	0 / 0	-18.2	-18.2	0.10 (4)	10.00	

WEBS

MEMB. FR-TO	MAX. FACTORED FORCE (LBS)	MAX CSI (LC)
P- C	-305 / 9	0.07 (1)
C- O	-444 / 0	0.28 (1)
O- D	0 / 338	0.08 (1)
D- N	0 / 323	0.07 (1)
N- E	-506 / 0	0.30 (1)
N- F	0 / 323	0.07 (1)
L- F	0 / 338	0.08 (1)
L- G	-444 / 0	0.28 (1)
K- G	-305 / 9	0.07 (1)
B- P	0 / 2405	0.54 (1)
K- H	0 / 2405	0.54 (1)

DESIGN CRITERIA

SPECIFIED LOADS:

TOP CH.	LL =	34.8	PSF
	DL =	6.0	PSF
BOT CH.	LL =	0.0	PSF
	DL =	7.3	PSF
TOTAL LOAD	=	48.1	PSF

SPACING = 24.0 IN. C/C

LOADING IN FLAT SECTION BASED ON A SLOPE OF 2.00/12 MINIMUM

THIS TRUSS IS DESIGNED FOR RESIDENTIAL OR SMALL BUILDING REQUIREMENTS OF PART 9, NBCC 2015

THIS DESIGN COMPLIES WITH:
- PART 9 OF BCBC 2018 , NBC-2019AE
- PART 9 OF OBC 2012 (2019 AMENDMENT)
- CSA 086-14
- TPIC 2014

(55 % OF 48.1 P.S.F. G.S.L. PLUS 8.4 P.S.F. RAIN LOAD) EQUALS 34.8 P.S.F. SPECIFIED ROOF LIVE LOAD

ALLOWABLE DEFL.(LL)= L/360 (0.90")
CALCULATED VERT. DEFL.(LL) = L/ 999 (0.11")
ALLOWABLE DEFL.(TL)= L/360 (0.90")
CALCULATED VERT. DEFL.(TL) = L/ 999 (0.18")

CSI: TC=0.47/0.97 (G-H:1) , BC=0.42/0.97 (K-L:1) , WB=0.54/0.97 (H-K:1) , SSI=0.26/1.00 (G-H:1)

DOL LUMBER=1.00 NAIL=1.00 LS BEND=1.10 COMP=1.10 SHEAR=1.10 TENS= 1.10

COMPANION LIVE LOAD FACTOR = 1.00

TRUSS PLATE MANUFACTURER IS NOT RESPONSIBLE FOR QUALITY CONTROL IN THE TRUSS MANUFACTURING PLANT .

NAIL VALUES

PLATE	GRIP(DRY) (PSI) MAX	MIN	SHEAR (PLI) MAX	MIN	SECTION (PLI) MAX	MIN
MT20	650	371	1747	788	1987	1873

PLATE PLACEMENT TOL. = 0.250 inches

PLATE ROTATION TOL. = 5.0 Deg.

JSI GRIP= 0.88 (B) (INPUT = 0.90)
JSI METAL= 0.68 (K) (INPUT = 1.00)

LICENSED PROFESSIONAL ENGINEER
N.A. EL-MASRI
PROVINCE OF ONTARIO
Jul 18, 2023

READ ALL NOTES ON THIS PAGE AND ON THE ENGINEERING NOTES: TRUSSES. THE NOTE PAGE IS AN INTEGRAL PART OF THIS DRAWING AS IT CONTAINS SPECIFICATIONS AND CRITERIA USED IN THE DESIGN OF THIS COMPONENT.

KOTT

CORPORATION OF THE CITY OF OSHAWA
TRUE COPY OF PERMIT PLANS
Nov 03 2023
PER: _____
CHIEF BUILDING OFFICIAL

MHP 23036

JOB NAME	TRUSS NAME	QUANTITY	PLY	JOB DESC.	DRWG NO.
NE0723-112	T03	1	1	GREENPARK - ZADOR BAY ESTATES - VILLA 5-3	
				TRUSS DESC.	

Version 8.630 S Mar 22 2023 MiTek Industries, Inc. Tue Jul 18 14:41:43 2023 Page 1
ID:aX72BI6hiO7VoZWieLIJw?z93Pm-ih33IFhjMfPVfD1?wNzbMvtGv0r8i2xor1uG7JywpWM

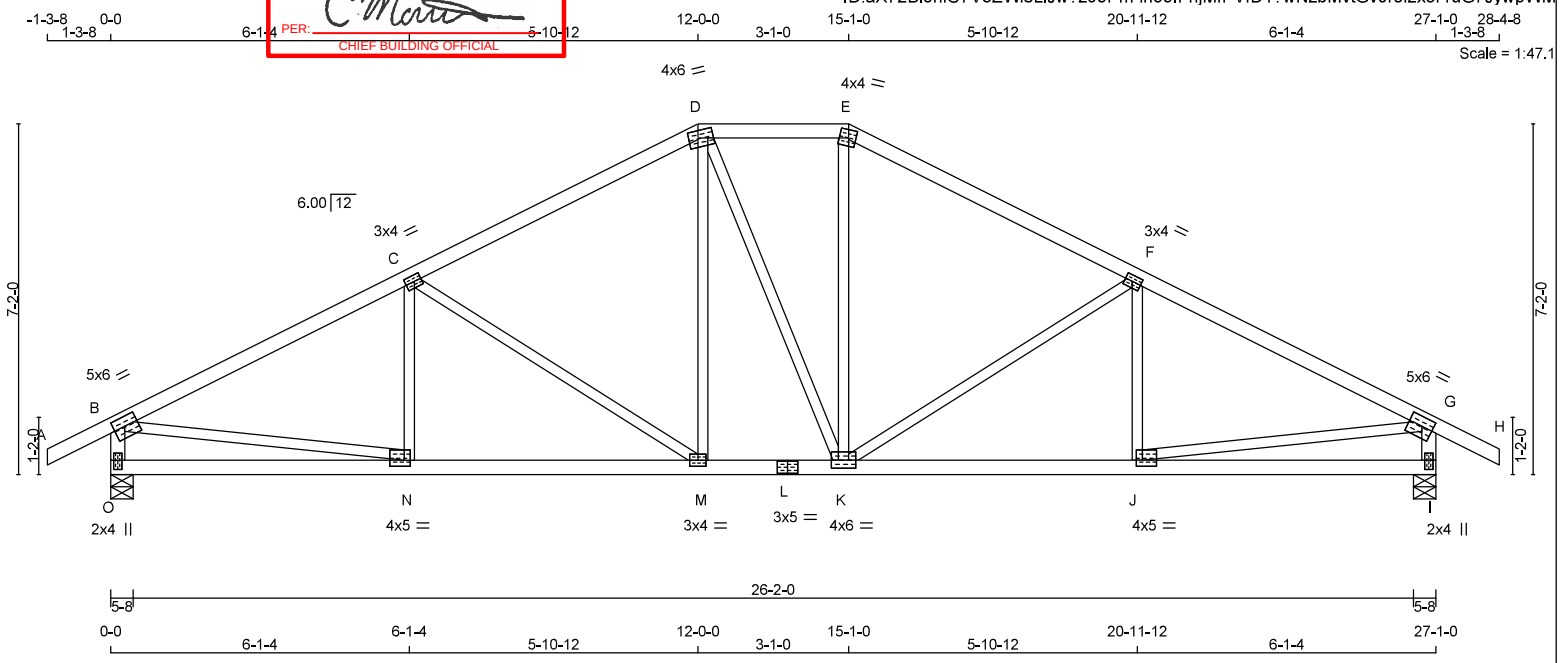

TOTAL WEIGHT = 113 lb
[M][F]

LUMBER
N. L. G. A. RULES

CHORDS	SIZE		LUMBER	DESCR.
A - D	2x4	DRY	No.2	SPF
D - E	2x4	DRY	No.2	SPF
E - H	2x4	DRY	No.2	SPF
O - B	2x4	DRY	No.2	SPF
I - G	2x4	DRY	No.2	SPF
O - L	2x4	DRY	No.2	SPF
L - I	2x4	DRY	No.2	SPF
ALL WEBS EXCEPT	2x3	DRY	No.2	SPF

DRY: SEASONED LUMBER.

PLATES (table is in inches)

JT	TYPE	PLATES	W	LEN	Y	X
B	TMVW-t	MT20	5.0	6.0	2.25	2.75
C	TMWW-t	MT20	3.0	4.0	1.50	1.75
D	TTWW-m	MT20	4.0	6.0	1.75	2.25
E	TTW-m	MT20	4.0	4.0	2.00	1.75
F	TMWW-t	MT20	3.0	4.0	1.50	1.75
G	TMVW-t	MT20	5.0	6.0	2.25	2.75
I	BMV1+p	MT20	2.0	4.0	2.25	1.00
J	BMWW-t	MT20	4.0	5.0	1.50	1.50
K	BMWWW-t	MT20	4.0	6.0		
L	BS-t	MT20	3.0	5.0		
M	BMWW-t	MT20	3.0	4.0		
N	BMWW-t	MT20	4.0	5.0	1.50	1.50
O	BMV1+p	MT20	2.0	4.0	2.25	1.00

DIMENSIONS, SUPPORTS AND LOADINGS SPECIFIED BY FABRICATOR TO BE VERIFIED BY BUILDING DESIGNER

BEARINGS

JT	FACTORED GROSS REACTION VERT	HORZ	MAXIMUM FACTORED GROSS REACTION DOWN	HORZ	UPLIFT	INPUT BRG IN-SX	REQRD BRG IN-SX
O	2026	0	2026	0	0	5-8	3-1
I	2026	0	2026	0	0	5-8	3-1

UNFACTORED REACTIONS

JT	1ST LCASE COMBINED	MAX./MIN. COMPONENT REACTIONS SNOW	LIVE	PERM.LIVE	WIND	DEAD	SOIL
O	1414	1037 / 0	0 / 0	0 / 0	0 / 0	376 / 0	0 / 0
I	1414	1037 / 0	0 / 0	0 / 0	0 / 0	376 / 0	0 / 0

BEARING MATERIAL TO BE SPF NO.2 OR BETTER AT JOINT(S) O, I

BRACING
TOP CHORD TO BE SHEATHED OR MAX. PURLIN SPACING = 3.43 FT.
MAX. UNBRACED BOTTOM CHORD LENGTH = 10.00 FT OR RIGID CEILING DIRECTLY APPLIED.

ALL PITCH BREAKS AND PERIMETER CORNER JOINTS MUST BE LATERALLY RESTRAINED.

LOADING
TOTAL LOAD CASES: (4)

CHORDS

MEMB. FR-TO	MAX. FACTORED FORCE (LBS)	FACTORED VERT. LOAD (PLF) FROM	TO	LC1 MAX CSI (LC)	MAX. UNBRAC LENGTH
A- B	0 / 36	-119.4	-119.4	0.16 (1)	10.00
B- C	-2643 / 0	-119.4	-119.4	0.69 (1)	3.43
C- D	-2066 / 0	-119.4	-119.4	0.62 (1)	3.92
D- E	-1821 / 0	-119.4	-119.4	0.18 (1)	4.77
E- F	-2068 / 0	-119.4	-119.4	0.62 (1)	3.92
F- G	-2642 / 0	-119.4	-119.4	0.69 (1)	3.43
G- H	0 / 36	-119.4	-119.4	0.16 (1)	10.00
O- B	-1979 / 0	0.0	0.0	0.20 (1)	5.92
I- G	-1978 / 0	0.0	0.0	0.20 (1)	5.92
O- N	0 / 0	-18.2	-18.2	0.16 (4)	10.00
N- M	0 / 2398	-18.2	-18.2	0.45 (1)	10.00
M- L	0 / 1819	-18.2	-18.2	0.35 (1)	10.00
L- K	0 / 1819	-18.2	-18.2	0.35 (1)	10.00
K- J	0 / 2397	-18.2	-18.2	0.45 (1)	10.00
J- I	0 / 0	-18.2	-18.2	0.16 (4)	10.00

WEBS

MEMB. FR-TO	MAX. FACTORED FORCE (LBS)	MAX CSI (LC)
N- C	-216 / 53	0.06 (1)
C- M	-698 / 0	0.69 (1)
M- D	0 / 456	0.10 (1)
D- K	0 / 4	0.00 (1)
K- E	0 / 460	0.10 (1)
K- F	-696 / 0	0.69 (1)
J- F	-218 / 52	0.06 (1)
B- N	0 / 2421	0.54 (1)
J- G	0 / 2421	0.54 (1)

DESIGN CRITERIA

SPECIFIED LOADS:

TOP CH.	LL	=	34.8	PSF
	DL	=	6.0	PSF
BOT CH.	LL	=	0.0	PSF
	DL	=	7.3	PSF
TOTAL LOAD		=	48.1	PSF

SPACING = 24.0 IN. C/C

LOADING IN FLAT SECTION BASED ON A SLOPE OF 2.00/12 MINIMUM

THIS TRUSS IS DESIGNED FOR RESIDENTIAL OR SMALL BUILDING REQUIREMENTS OF PART 9, NBCC 2015

THIS DESIGN COMPLIES WITH:
- PART 9 OF BCBC 2018 , NBC-2019AE
- PART 9 OF OBC 2012 (2019 AMENDMENT)
- CSA 086-14
- TPIC 2014

(55 % OF 48.1 P.S.F. G.S.L. PLUS 8.4 P.S.F. RAIN LOAD) EQUALS 34.8 P.S.F. SPECIFIED ROOF LIVE LOAD

ALLOWABLE DEFL.(LL)= L/360 (0.90")
CALCULATED VERT. DEFL.(LL) = L/ 999 (0.11")
ALLOWABLE DEFL.(TL)= L/360 (0.90")
CALCULATED VERT. DEFL.(TL) = L/ 999 (0.20")

CSI: TC=0.69/0.97 (B-C:1) , BC=0.45/0.97 (M-N:1) , WB=0.69/0.97 (C-M:1) , SSI=0.31/1.00 (F-G:1)

DOL LUMBER=1.00 NAIL=1.00 LS BEND=1.10 COMP=1.10 SHEAR=1.10 TENS= 1.10

COMPANION LIVE LOAD FACTOR = 1.00

TRUSS PLATE MANUFACTURER IS NOT RESPONSIBLE FOR QUALITY CONTROL IN THE TRUSS MANUFACTURING PLANT .

NAIL VALUES

PLATE	GRIP(DRY) (PSI) MAX	MIN	SHEAR (PLI) MAX	MIN	SECTION (PLI) MAX	MIN
MT20	650	371	1747	788	1987	1873

PLATE PLACEMENT TOL. = 0.250 inches

PLATE ROTATION TOL. = 5.0 Deg.

JSI GRIP= 0.89 (B) (INPUT = 0.90)
JSI METAL= 0.68 (N) (INPUT = 1.00)

LICENSED PROFESSIONAL ENGINEER
N.A. EL-MASRI
PROVINCE OF ONTARIO
Jul 18, 2023

READ ALL NOTES ON THIS PAGE AND ON THE ENGINEERING NOTES: TRUSSES. THE NOTE PAGE IS AN INTEGRAL PART OF THIS DRAWING AS IT CONTAINS SPECIFICATIONS AND CRITERIA USED IN THE DESIGN OF THIS COMPONENT.

KOTT

CORPORATION OF THE CITY OF OSHAWA
TRUE COPY OF PERMIT PLANS
Nov 03 2023
PER:
CHIEF BUILDING OFFICIAL

MHP 23036

JOB NAME	TRUSS NAME	QUANTITY	PLY	JOB DESC.	DRWG NO.
NE0723-112	T04	8	1	GREENPARK - ZADOR BAY ESTATES - VILLA 5-3 (TRUSS DESC.)	

Version 8.630 S Mar 22 2023 MiTek Industries, Inc. Tue Jul 18 14:41:44 2023 Page 1
ID:aX72BI6hiO7VoZWieLIJw?z93Pm-AtdSVbhL7zXMHNcBU5Uqv7QNJQB_RXWy4hepfmywpWL

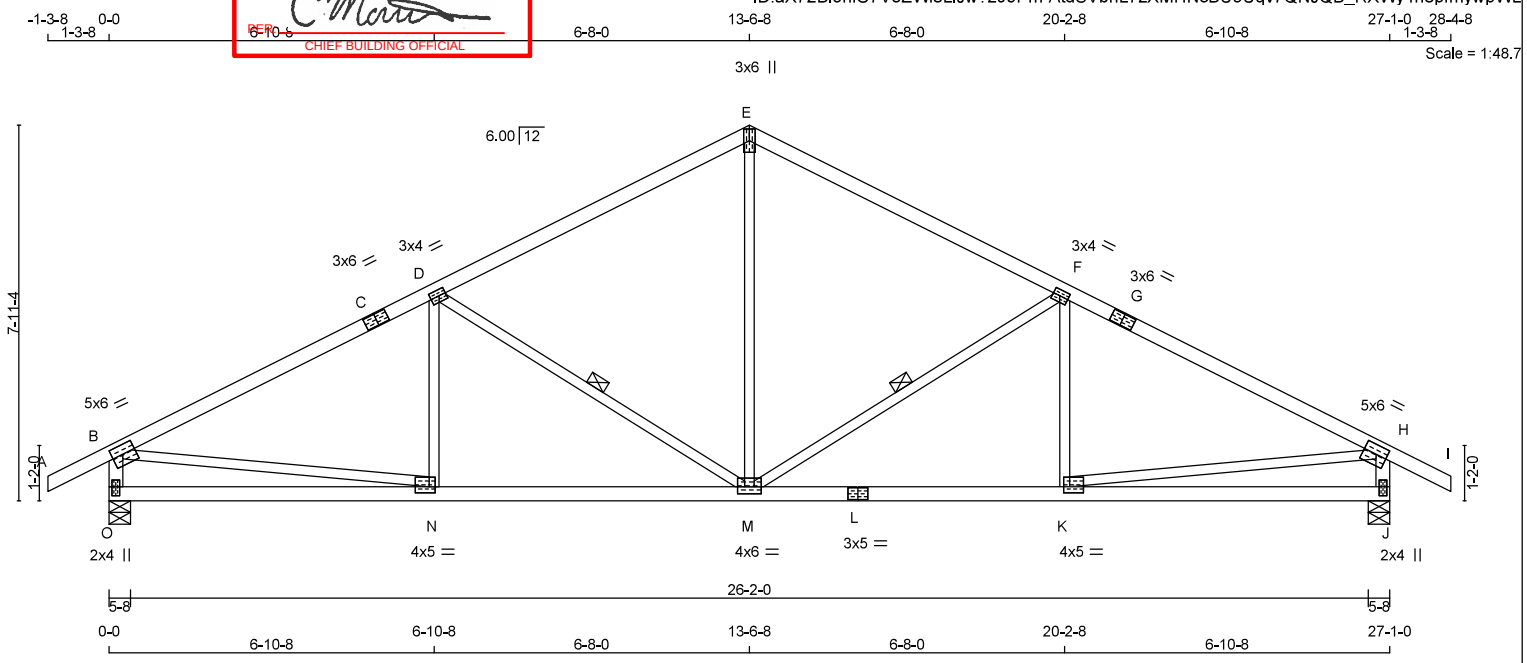

TOTAL WEIGHT = 8 X 106 = 849 lb
[M][F]

LUMBER
N. L. G. A. RULES

CHORDS	SIZE		LUMBER	DESCR.
A - C	2x4	DRY	No.2	SPF
C - E	2x4	DRY	No.2	SPF
E - G	2x4	DRY	No.2	SPF
G - I	2x4	DRY	No.2	SPF
O - B	2x4	DRY	No.2	SPF
J - H	2x4	DRY	No.2	SPF
O - L	2x4	DRY	No.2	SPF
L - J	2x4	DRY	No.2	SPF
ALL WEBS EXCEPT	2x3	DRY	No.2	SPF

DRY: SEASONED LUMBER.

PLATES (table is in inches)

JT	TYPE	PLATES	W	LEN	Y	X
B	TMVW-t	MT20	5.0	6.0	2.25	2.75
C	TS-t	MT20	3.0	6.0		
D	TMWW-t	MT20	3.0	4.0	1.50	1.75
E	TTW+p	MT20	3.0	6.0		
F	TMWW-t	MT20	3.0	4.0	1.50	1.75
G	TS-t	MT20	3.0	6.0		
H	TMVW-t	MT20	5.0	6.0	2.25	2.75
J	BMV1+p	MT20	2.0	4.0	2.25	1.00
K	BMWW-t	MT20	4.0	5.0	1.50	1.50
L	BS-t	MT20	3.0	5.0		
M	BMWWW-t	MT20	4.0	6.0	1.75	3.00
N	BMWW-t	MT20	4.0	5.0	1.50	1.50
O	BMV1+p	MT20	2.0	4.0	2.25	1.00

DIMENSIONS, SUPPORTS AND LOADINGS SPECIFIED BY FABRICATOR TO BE VERIFIED BY BUILDING DESIGNER

BEARINGS

JT	FACTORED GROSS REACTION VERT	HORZ	MAXIMUM FACTORED GROSS REACTION DOWN	HORZ	UPLIFT	INPUT BRG IN-SX	REQRD BRG IN-SX
O	2026	0	2026	0	0	5-8	3-1
J	2026	0	2026	0	0	5-8	3-1

UNFACTORED REACTIONS

JT	1ST LCASE COMBINED	MAX./MIN. COMPONENT REACTIONS SNOW	LIVE	PERM.LIVE	WIND	DEAD	SOIL
O	1414	1037 / 0	0 / 0	0 / 0	0 / 0	376 / 0	0 / 0
J	1414	1037 / 0	0 / 0	0 / 0	0 / 0	376 / 0	0 / 0

BEARING MATERIAL TO BE SPF NO.2 OR BETTER AT JOINT(S) O, J

BRACING
TOP CHORD TO BE SHEATHED OR MAX. PURLIN SPACING = 2.97 FT.
MAX. UNBRACED BOTTOM CHORD LENGTH = 10.00 FT OR RIGID CEILING DIRECTLY APPLIED.

ALL PITCH BREAKS AND PERIMETER CORNER JOINTS MUST BE LATERALLY RESTRAINED.

1 - 1x4 LATERAL BRACE(S) AT 1/ 2 LENGTH OF F-M, D-M. DBS = 20-0-0 . CBF = 109 LBS.

DBS = DIAGONAL BRACE SPACING (MAX). CBF = CUMULATIVE BRACING FORCE (PER BRACE). FASTEN LATERAL BRACE(S) USING (0.122"X3") SPIRAL NAILS : 1 NAIL FOR 2x3 BRACE(S), 2 FOR 1x4, 2x4, 2x5, 3 FOR 2x6, 4 FOR 2x8, 5 FOR 2x10, AND 6 FOR 2x12.

END VERTICAL(S) MUST BE SHEATHED OR HAVE BRACES AS INDICATED IN THE MAX. UNBRACED LENGTH COLUMN OF THE TABLE BELOW

LOADING
TOTAL LOAD CASES: (4)

CHORDS

MEMB. FR-TO	MAX. FACTORED FORCE (LBS)	FACTORED VERT. LOAD LC1 (PLF) FROM	TO	MAX CSI (LC)	MAX. UNBRAC LENGTH
A- B	0 / 36	-119.4	-119.4	0.16 (1)	10.00
B- C	-2634 / 0	-119.4	-119.4	0.91 (1)	2.97
C- D	-2634 / 0	-119.4	-119.4	0.91 (1)	2.97
D- E	-1904 / 0	-119.4	-119.4	0.79 (1)	3.65
E- F	-1904 / 0	-119.4	-119.4	0.79 (1)	3.65
F- G	-2634 / 0	-119.4	-119.4	0.91 (1)	2.97
G- H	-2634 / 0	-119.4	-119.4	0.91 (1)	2.97
H- I	0 / 36	-119.4	-119.4	0.16 (1)	10.00
O- B	-1973 / 0	0.0	0.0	0.20 (1)	5.92
J- H	-1973 / 0	0.0	0.0	0.20 (1)	5.92
O- N	0 / 0	-18.2	-18.2	0.20 (4)	10.00
N- M	0 / 2394	-18.2	-18.2	0.47 (1)	10.00
M- L	0 / 2394	-18.2	-18.2	0.47 (1)	10.00
L- K	0 / 2394	-18.2	-18.2	0.47 (1)	10.00
K- J	0 / 0	-18.2	-18.2	0.20 (4)	10.00

WEBS

MEMB. FR-TO	MAX. FACTORED FORCE (LBS)	MAX CSI (LC)
M- E	0 / 1065	0.24 (1)
M- F	-870 / 0	0.37 (1)
K- F	-167 / 76	0.05 (1)
D- M	-870 / 0	0.37 (1)
N- D	-167 / 76	0.05 (1)
B- N	0 / 2413	0.54 (1)
K- H	0 / 2413	0.54 (1)

DESIGN CRITERIA

SPECIFIED LOADS:

TOP CH.	LL =	34.8	PSF
	DL =	6.0	PSF
BOT CH.	LL =	0.0	PSF
	DL =	7.3	PSF
TOTAL LOAD	=	48.1	PSF

SPACING = 24.0 IN. C/C

THIS TRUSS IS DESIGNED FOR RESIDENTIAL OR SMALL BUILDING REQUIREMENTS OF PART 9, NBCC 2015

THIS DESIGN COMPLIES WITH:
- PART 9 OF BCBC 2018 , NBC-2019AE
- PART 9 OF OBC 2012 (2019 AMENDMENT)
- CSA 086-14
- TPIC 2014

(55 % OF 48.1 P.S.F. G.S.L. PLUS 8.4 P.S.F. RAIN LOAD) EQUALS 34.8 P.S.F. SPECIFIED ROOF LIVE LOAD

ALLOWABLE DEFL.(LL)= L/360 (0.90")
CALCULATED VERT. DEFL.(LL) = L/ 999 (0.12")
ALLOWABLE DEFL.(TL)= L/360 (0.90")
CALCULATED VERT. DEFL.(TL) = L/ 999 (0.21")

CSI: TC=0.91/0.97 (F-H:1) , BC=0.47/0.97 (K-M:1) , WB=0.54/0.97 (H-K:1) , SSI=0.35/1.00 (B-D:1)

DOL LUMBER=1.00 NAIL=1.00 LS BEND=1.10 COMP=1.10 SHEAR=1.10 TENS= 1.10

COMPANION LIVE LOAD FACTOR = 1.00

TRUSS PLATE MANUFACTURER IS NOT RESPONSIBLE FOR QUALITY CONTROL IN THE TRUSS MANUFACTURING PLANT .

NAIL VALUES

PLATE	GRIP(DRY) (PSI) MAX	MIN	SHEAR (PLI) MAX	MIN	SECTION (PLI) MAX	MIN
MT20	650	371	1747	788	1987	1873

PLATE PLACEMENT TOL. = 0.250 inches

PLATE ROTATION TOL. = 5.0 Deg.

JSI GRIP= 0.89 (B) (INPUT = 0.90)
JSI METAL= 0.74 (L) (INPUT = 1.00)

LICENSED PROFESSIONAL ENGINEER
N.A. EL-MASRI
PROVINCE OF ONTARIO
Jul 18, 2023

READ ALL NOTES ON THIS PAGE AND ON THE ENGINEERING NOTES: TRUSSES. THE NOTE PAGE IS AN INTEGRAL PART OF THIS DRAWING AS IT CONTAINS SPECIFICATIONS AND CRITERIA USED IN THE DESIGN OF THIS COMPONENT.

KOTT

CORPORATION OF THE CITY OF OSHAWA
TRUE COPY OF PERMIT PLANS
Nov 03 2023
CHIEF BUILDING OFFICIAL

MHP 23036

JOB NAME	TRUSS NAME	QUANTITY	PLY	JOB DESC.	DRWG NO.
NE0723-112	T05	2	1	GREENPARK - ZADOR BAY ESTATES - VILLA 5-3 (TRUSS DESC.)	

Version 8.630 S Mar 22 2023 MiTek Industries, Inc. Tue Jul 18 14:41:45 2023 Page 1
ID:aX72BI6hiO7VoZWieLIJw?z93Pm-e3BqjwizuHfDuXBO2o?3RKyY2qXGAwW5JLNMCCywpWK

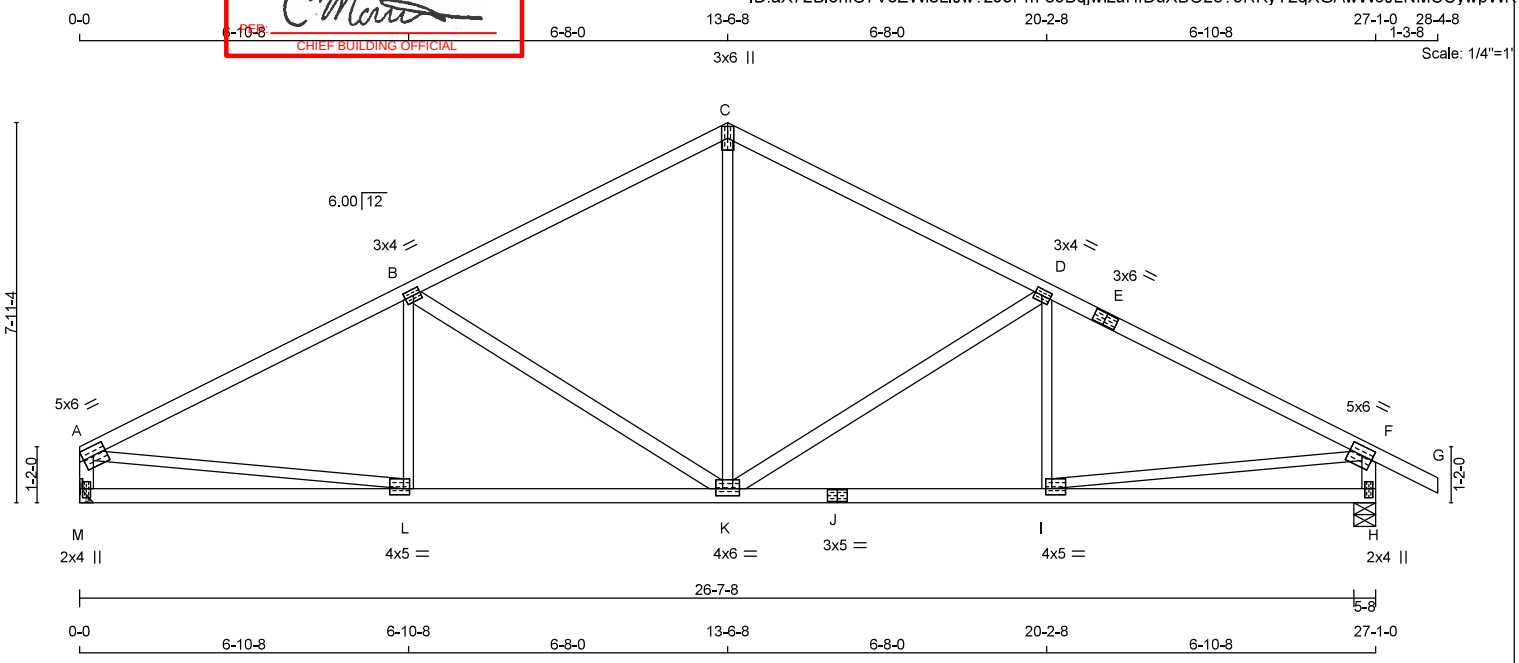

TOTAL WEIGHT = 2 X 110 = 219 lb
[M][F]

LUMBER
N. L. G. A. RULES

CHORDS	SIZE		LUMBER	DESCR.
A - C	2x4	DRY	No.2	SPF
C - E	2x4	DRY	No.2	SPF
E - G	2x4	DRY	No.2	SPF
M - A	2x4	DRY	No.2	SPF
H - F	2x4	DRY	No.2	SPF
M - J	2x4	DRY	No.2	SPF
J - H	2x4	DRY	No.2	SPF
ALL WEBS EXCEPT	2x3	DRY	No.2	SPF
K - D	2x4	DRY	No.2	SPF
B - K	2x4	DRY	No.2	SPF

DRY: SEASONED LUMBER.

PLATES (table is in inches)

JT	TYPE	PLATES	W	LEN	Y	X
A	TMVW-t	MT20	5.0	6.0	2.25	Edge
B	TMWW-t	MT20	3.0	4.0	1.50	1.75
C	TTW+p	MT20	3.0	6.0		
D	TMWW-t	MT20	3.0	4.0	1.50	1.75
E	TS-t	MT20	3.0	6.0		
F	TMVW-t	MT20	5.0	6.0	2.25	2.75
H	BMV1+p	MT20	2.0	4.0	2.25	1.00
I	BMWW-t	MT20	4.0	5.0	1.50	1.50
J	BS-t	MT20	3.0	5.0		
K	BMWWW-t	MT20	4.0	6.0	1.75	3.00
L	BMWW-t	MT20	4.0	5.0	1.50	1.50
M	BMV1+p	MT20	2.0	4.0	2.25	1.00

Edge - INDICATES REFERENCE CORNER OF PLATE TOUCHES EDGE OF CHORD.

DIMENSIONS, SUPPORTS AND LOADINGS SPECIFIED BY FABRICATOR TO BE VERIFIED BY BUILDING DESIGNER

BEARINGS

JT	FACTORED GROSS REACTION VERT	HORZ	MAXIMUM FACTORED GROSS REACTION DOWN	HORZ	UPLIFT	INPUT BRG IN-SX	REQRD BRG IN-SX
M	1864	0	1864	0	0	MECHANICAL	
H	2026	0	2026	0	0	5-8	3-1

A SUITABLE HANGER/MECHANICAL CONNECTION IS REQUIRED AT JOINT M. MINIMUM BEARING LENGTH AT JOINT M = 2-9.

UNFACTORED REACTIONS

JT	1ST LCASE COMBINED	MAX./MIN. COMPONENT REACTIONS SNOW	LIVE	PERM.LIVE	WIND	DEAD	SOIL
M	1303	943 / 0	0 / 0	0 / 0	0 / 0	360 / 0	0 / 0
H	1414	1037 / 0	0 / 0	0 / 0	0 / 0	376 / 0	0 / 0

BEARING MATERIAL TO BE SPF NO.2 OR BETTER AT JOINT(S) H

BRACING
TOP CHORD TO BE SHEATHED OR MAX. PURLIN SPACING = 2.95 FT.
MAX. UNBRACED BOTTOM CHORD LENGTH = 10.00 FT OR RIGID CEILING DIRECTLY APPLIED.

ALL PITCH BREAKS AND PERIMETER CORNER JOINTS MUST BE LATERALLY RESTRAINED.

LOADING
TOTAL LOAD CASES: (4)

CHORDS

MEMB. FR-TO	MAX. FORCE (LBS)	FACTORED VERT. LOAD LC1 (PLF) FROM	TO	MAX CSI (LC)	MAX. UNBRAC LENGTH
A- B	-2635 / 0	-119.4	-119.4	0.91 (1)	2.95
B- C	-1904 / 0	-119.4	-119.4	0.79 (1)	3.65
C- D	-1904 / 0	-119.4	-119.4	0.79 (1)	3.65
D- E	-2635 / 0	-119.4	-119.4	0.91 (1)	2.95
E- F	-2635 / 0	-119.4	-119.4	0.91 (1)	2.95
F- G	0 / 36	-119.4	-119.4	0.16 (1)	10.00
M- A	-1811 / 0	0.0	0.0	0.18 (1)	6.13
H- F	-1973 / 0	0.0	0.0	0.20 (1)	5.92
M- L	0 / 0	-18.2	-18.2	0.20 (4)	10.00
L- K	0 / 2395	-18.2	-18.2	0.47 (1)	10.00
K- J	0 / 2395	-18.2	-18.2	0.47 (1)	10.00
J- I	0 / 2395	-18.2	-18.2	0.47 (1)	10.00
I- H	0 / 0	-18.2	-18.2	0.20 (4)	10.00

WEBS

MEMB. FR-TO	MAX. FORCE (LBS)	MAX CSI (LC)
K- C	0 / 1065	0.24 (1)
K- D	-871 / 0	0.81 (1)
I- D	-166 / 76	0.05 (1)
B- K	-871 / 0	0.81 (1)
L- B	-166 / 76	0.05 (1)
A- L	0 / 2414	0.54 (1)
I- F	0 / 2414	0.54 (1)

DESIGN CRITERIA

SPECIFIED LOADS:

TOP CH.	LL	=	34.8	PSF
	DL	=	6.0	PSF
BOT CH.	LL	=	0.0	PSF
	DL	=	7.3	PSF
TOTAL LOAD		=	48.1	PSF

SPACING = 24.0 IN. C/C

THIS TRUSS IS DESIGNED FOR RESIDENTIAL OR SMALL BUILDING REQUIREMENTS OF PART 9, NBCC 2015

THIS DESIGN COMPLIES WITH:
- PART 9 OF BCBC 2018 , NBC-2019AE
- PART 9 OF OBC 2012 (2019 AMENDMENT)
- CSA 086-14
- TPIC 2014

(55 % OF 48.1 P.S.F. G.S.L. PLUS 8.4 P.S.F. RAIN LOAD) EQUALS 34.8 P.S.F. SPECIFIED ROOF LIVE LOAD

ALLOWABLE DEFL.(LL)= L/360 (0.90")
CALCULATED VERT. DEFL.(LL) = L/ 999 (0.12")
ALLOWABLE DEFL.(TL)= L/360 (0.90")
CALCULATED VERT. DEFL.(TL) = L/ 999 (0.21")

CSI: TC=0.91/0.97 (A-B:1) , BC=0.47/0.97 (K-L:1) , WB=0.81/0.97 (B-K:1) , SSI=0.35/1.00 (A-B:1)

DOL LUMBER=1.00 NAIL=1.00 LS BEND=1.10 COMP=1.10 SHEAR=1.10 TENS= 1.10

COMPANION LIVE LOAD FACTOR = 1.00

TRUSS PLATE MANUFACTURER IS NOT RESPONSIBLE FOR QUALITY CONTROL IN THE TRUSS MANUFACTURING PLANT .

NAIL VALUES

PLATE	GRIP(DRY) (PSI) MAX	MIN	SHEAR (PLI) MAX	MIN	SECTION (PLI) MAX	MIN
MT20	650	371	1747	788	1987	1873

PLATE PLACEMENT TOL. = 0.250 inches

PLATE ROTATION TOL. = 5.0 Deg.

JSI GRIP= 0.89 (A) (INPUT = 0.90)
JSI METAL= 0.74 (J) (INPUT = 1.00)

READ ALL NOTES ON THIS PAGE AND ON THE ENGINEERING NOTES: TRUSSES. THE NOTE PAGE IS AN INTEGRAL PART OF THIS DRAWING AS IT CONTAINS SPECIFICATIONS AND CRITERIA USED IN THE DESIGN OF THIS COMPONENT.

KOTT

CORPORATION OF THE CITY OF OSHAWA
TRUE COPY OF PERMIT PLANS
Nov 03 2023
PER: C Martin
CHIEF BUILDING OFFICIAL

MHP 23036

JOB NAME	TRUSS NAME	QUANTITY	PLY	JOB DESC.	DRWG NO.
NE0723-112	T06	2	1	GREENPARK - ZADOR BAY ESTATES - VILLA 5-3 (TRUSS DESC.)	

Version 8.630 S Mar 22 2023 MiTek Industries, Inc. Tue Jul 18 14:41:45 2023 Page 1
ID:aX72Bl6hiO7VoZWieLIJw?z93Pm-e3BqjwizuHfDuXBO2o?3RKyZfqUFA_P5JLNMCCywpWK

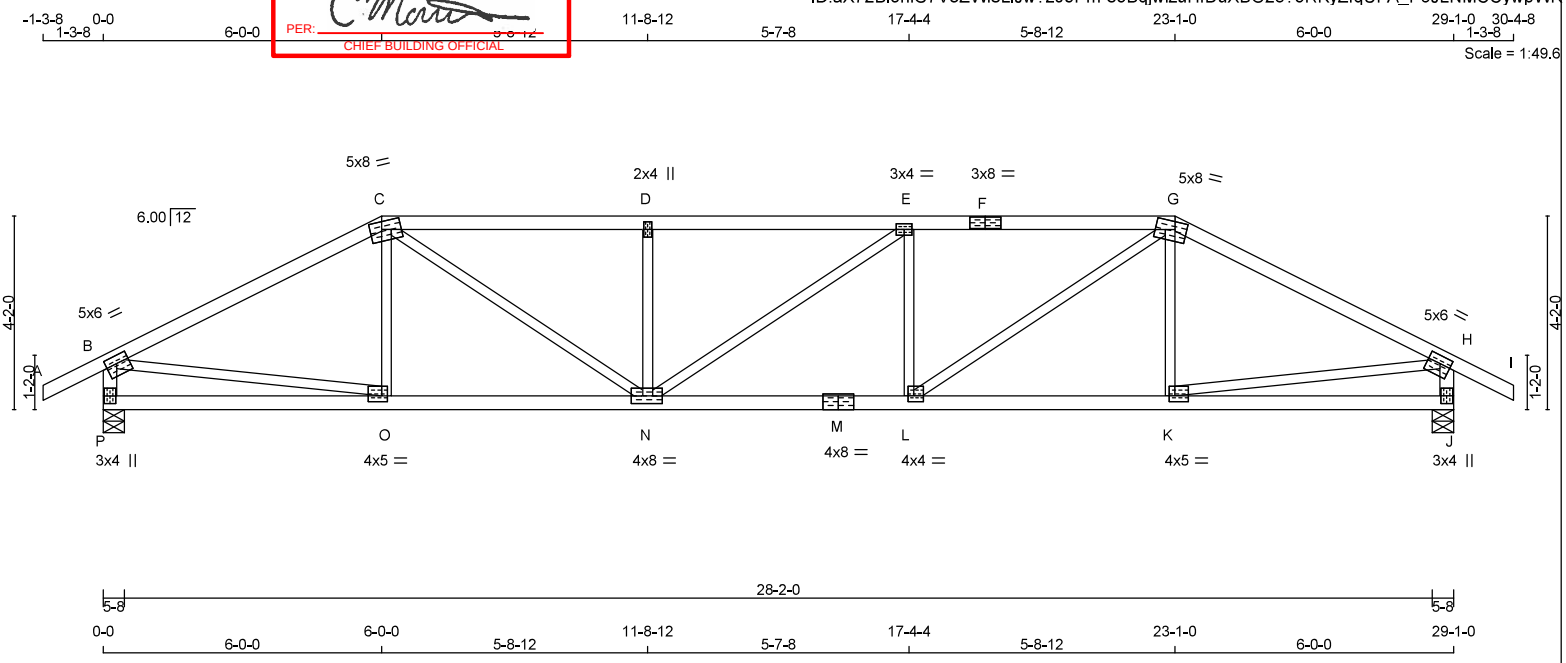

TOTAL WEIGHT = 2 X 110 = 220 lb [M]

LUMBER
N. L. G. A. RULES

CHORDS	SIZE		LUMBER	DESCR.
A - C	2x4	DRY	2100F 1.8E	SPF
C - F	2x4	DRY	No.2	SPF
F - G	2x4	DRY	No.2	SPF
G - I	2x4	DRY	2100F 1.8E	SPF
P - B	2x4	DRY	No.2	SPF
J - H	2x4	DRY	No.2	SPF
P - M	2x4	DRY	No.2	SPF
M - J	2x4	DRY	No.2	SPF
ALL WEBS EXCEPT	2x3	DRY	No.2	SPF

DRY: SEASONED LUMBER.

PLATES (table is in inches)

JT	TYPE	PLATES	W	LEN	Y	X
B	TMVW-t	MT20	5.0	6.0	2.00	2.75
C	TTWW-m	MT20	5.0	8.0	2.00	3.00
D	TMW+w	MT20	2.0	4.0		
E	TMWW-t	MT20	3.0	4.0		
F	TS-t	MT20	3.0	8.0		
G	TTWW-m	MT20	5.0	8.0	2.00	3.00
H	TMVW-t	MT20	5.0	6.0	2.00	2.75
J	BMV1+p	MT20	3.0	4.0		
K	BMWW-t	MT20	4.0	5.0	1.50	1.50
L	BMWW-t	MT20	4.0	4.0	1.50	1.50
M	BS-t	MT20	4.0	8.0		
N	BMWWW-t	MT20	4.0	8.0	2.00	3.00
O	BMWW-t	MT20	4.0	5.0	1.50	1.50
P	BMV1+p	MT20	3.0	4.0		

DIMENSIONS, SUPPORTS AND LOADINGS SPECIFIED BY FABRICATOR TO BE VERIFIED BY BUILDING DESIGNER

BEARINGS

JT	FACTORED GROSS REACTION VERT	HORZ	MAXIMUM FACTORED GROSS REACTION DOWN	HORZ	UPLIFT	INPUT BRG IN-SX	REQRD BRG IN-SX
P	2164	0	2164	0	0	5-8	3-9
J	2164	0	2164	0	0	5-8	3-9

UNFACTORED REACTIONS

JT	1ST LCASE COMBINED	MAX./MIN. COMPONENT REACTIONS SNOW	LIVE	PERM.LIVE	WIND	DEAD	SOIL
P	1510	1107 / 0	0 / 0	0 / 0	0 / 0	403 / 0	0 / 0
J	1510	1107 / 0	0 / 0	0 / 0	0 / 0	403 / 0	0 / 0

BEARING MATERIAL TO BE SPF NO.2 OR BETTER AT JOINT(S) P, J

BRACING
TOP CHORD TO BE SHEATHED OR MAX. PURLIN SPACING = 2.78 FT.
MAX. UNBRACED BOTTOM CHORD LENGTH = 10.00 FT OR RIGID CEILING DIRECTLY APPLIED.

ALL PITCH BREAKS AND PERIMETER CORNER JOINTS MUST BE LATERALLY RESTRAINED.

LOADING
TOTAL LOAD CASES: (4)

CHORDS

MEMB. FR-TO	MAX. FACTORED FORCE (LBS)	FACTORED VERT. LOAD LC1 (PLF) FROM	TO	MAX CSI (LC)	MAX. UNBRAC LENGTH
A- B	0 / 36	-119.4	-119.4	0.10 (1)	10.00
B- C	-2784 / 0	-119.4	-119.4	0.62 (1)	4.25
C- D	-3714 / 0	-119.4	-119.4	0.87 (1)	2.78
D- E	-3714 / 0	-119.4	-119.4	0.86 (1)	2.78
E- F	-3715 / 0	-119.4	-119.4	0.87 (1)	2.78
F- G	-3715 / 0	-119.4	-119.4	0.87 (1)	2.78
G- H	-2784 / 0	-119.4	-119.4	0.62 (1)	4.25
H- I	0 / 36	-119.4	-119.4	0.10 (1)	10.00
P- B	-2118 / 0	0.0	0.0	0.21 (1)	5.75
J- H	-2118 / 0	0.0	0.0	0.21 (1)	5.75
P- O	0 / 0	-18.2	-18.2	0.15 (4)	10.00
O- N	0 / 2483	-18.2	-18.2	0.48 (1)	10.00
N- M	0 / 3715	-18.2	-18.2	0.66 (1)	10.00
M- L	0 / 3715	-18.2	-18.2	0.66 (1)	10.00
L- K	0 / 2482	-18.2	-18.2	0.48 (1)	10.00
K- J	0 / 0	-18.2	-18.2	0.15 (4)	10.00

WEBS

MEMB. FR-TO	MAX. FACTORED FORCE (LBS)	MAX CSI (LC)
O- C	-227 / 41	0.06 (1)
C- N	0 / 1486	0.33 (1)
N- D	-736 / 0	0.19 (1)
N- E	0 / 0	0.00 (1)
L- E	-734 / 0	0.19 (1)
L- G	0 / 1487	0.33 (1)
K- G	-228 / 40	0.06 (1)
B- O	0 / 2513	0.57 (1)
K- H	0 / 2513	0.57 (1)

DESIGN CRITERIA

SPECIFIED LOADS:

TOP CH.	LL	=	34.8	PSF
	DL	=	6.0	PSF
BOT CH.	LL	=	0.0	PSF
	DL	=	7.3	PSF
TOTAL LOAD		=	48.1	PSF

SPACING = 24.0 IN. C/C

LOADING IN FLAT SECTION BASED ON A SLOPE OF 2.00/12 MINIMUM

THIS TRUSS IS DESIGNED FOR RESIDENTIAL OR SMALL BUILDING REQUIREMENTS OF PART 9, NBCC 2015

THIS DESIGN COMPLIES WITH:
- PART 9 OF BCBC 2018 , NBC-2019AE
- PART 9 OF OBC 2012 (2019 AMENDMENT)
- CSA 086-14
- TPIC 2014

(55 % OF 48.1 P.S.F. G.S.L. PLUS 8.4 P.S.F. RAIN LOAD) EQUALS 34.8 P.S.F. SPECIFIED ROOF LIVE LOAD

ALLOWABLE DEFL.(LL)= L/360 (0.97")
CALCULATED VERT. DEFL.(LL) = L/ 999 (0.21")
ALLOWABLE DEFL.(TL)= L/360 (0.97")
CALCULATED VERT. DEFL.(TL) = L/ 947 (0.37")

CSI: TC=0.87/0.97 (C-D:1) , BC=0.66/0.97 (L-N:1) , WB=0.57/0.97 (B-O:1) , SSI=0.32/1.00 (C-D:1)

DOL LUMBER=1.00 NAIL=1.00 LS BEND=1.10 COMP=1.10 SHEAR=1.10 TENS= 1.10

COMPANION LIVE LOAD FACTOR = 1.00

TRUSS PLATE MANUFACTURER IS NOT RESPONSIBLE FOR QUALITY CONTROL IN THE TRUSS MANUFACTURING PLANT .

NAIL VALUES

PLATE	GRIP(DRY) (PSI) MAX	MIN	SHEAR (PLI) MAX	MIN	SECTION (PLI) MAX	MIN
MT20	650	371	1747	788	1987	1873

PLATE PLACEMENT TOL. = 0.250 inches

PLATE ROTATION TOL. = 5.0 Deg.

JSI GRIP= 0.89 (B) (INPUT = 0.90)
JSI METAL= 0.84 (M) (INPUT = 1.00)

LICENSED PROFESSIONAL ENGINEER
N.A. EL-MASRI
PROVINCE OF ONTARIO
Jul 18, 2023

READ ALL NOTES ON THIS PAGE AND ON THE ENGINEERING NOTES: TRUSSES. THE NOTE PAGE IS AN INTEGRAL PART OF THIS DRAWING AS IT CONTAINS SPECIFICATIONS AND CRITERIA USED IN THE DESIGN OF THIS COMPONENT.

KOTT

JOB NAME	TRUSS NAME	QUANTITY	PLY	JOB DESC.	DRWG NO.
NE0723-112	T07	2	1	GREENPARK - ZADOR BAY ESTATES - VILLA 5-3 (TRUSS DESC.)	

MHP 23036

CORPORATION OF THE CITY OF OSHAWA
TRUE COPY OF PERMIT PLANS
Nov 03 2023
PER: C. Martin
CHIEF BUILDING OFFICIAL

Version 8.630 S Mar 22 2023 MiTek Industries, Inc. Tue Jul 18 14:41:46 2023 Page 1
ID:aX72BI6hiO7VoZWieLIJw?z93Pm-6GICwGjcfan4WhmabWWl_YVkvEtVvRYEX?7wkeywpWJ

Scale = 1:49.6

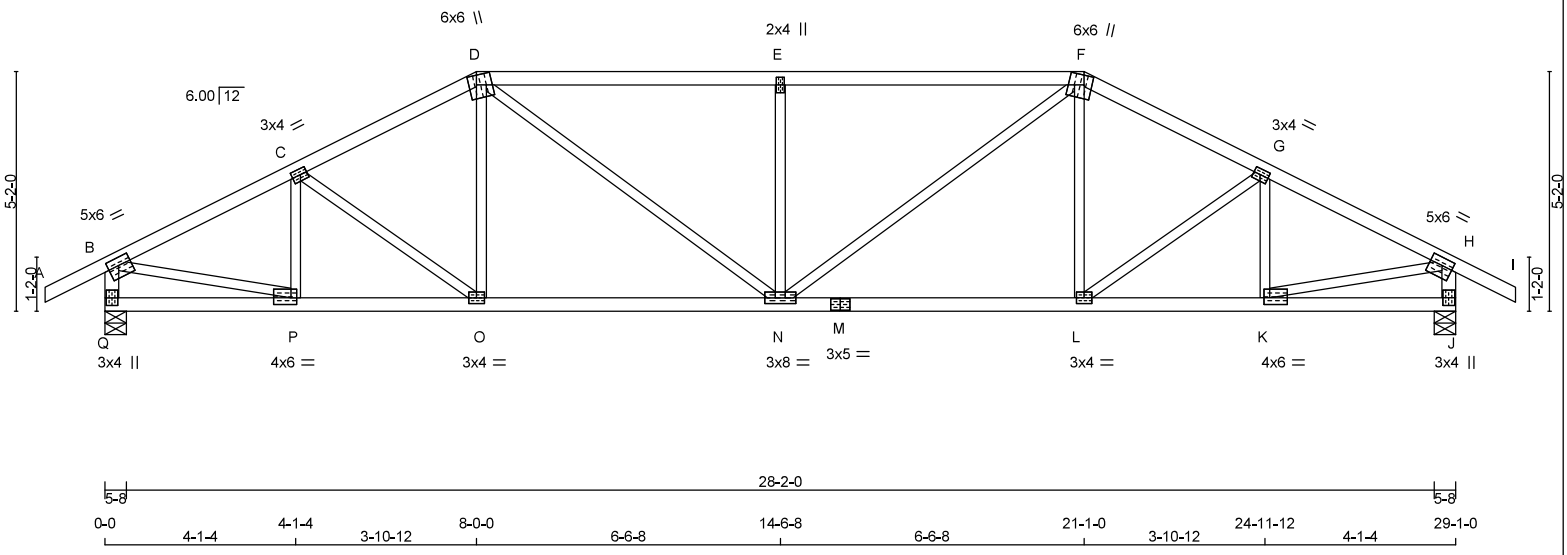

TOTAL WEIGHT = 2 X 115 = 231 lb

[M][F]

LUMBER

N. L. G. A. RULES

CHORDS	SIZE		LUMBER	DESCR.
A - D	2x4	DRY	No.2	SPF
D - F	2x4	DRY	No.2	SPF
F - I	2x4	DRY	No.2	SPF
Q - B	2x4	DRY	No.2	SPF
J - H	2x4	DRY	No.2	SPF
Q - M	2x4	DRY	No.2	SPF
M - J	2x4	DRY	No.2	SPF
ALL WEBS EXCEPT	2x3	DRY	No.2	SPF

DRY: SEASONED LUMBER.

PLATES (table is in inches)

JT	TYPE	PLATES	W	LEN	Y	X
B	TMVW-t	MT20	5.0	6.0	2.00	2.75
C	TMWW-t	MT20	3.0	4.0	1.50	1.75
D	TTWW+m	MT20	6.0	6.0	2.50	2.00
E	TMW+w	MT20	2.0	4.0		
F	TTWW+m	MT20	6.0	6.0	2.50	2.00
G	TMWW-t	MT20	3.0	4.0	1.50	1.75
H	TMVW-t	MT20	5.0	6.0	2.00	2.75
J	BMV1+p	MT20	3.0	4.0		
K	BMWW-t	MT20	4.0	6.0	1.75	1.50
L	BMWW-t	MT20	3.0	4.0		
M	BS-t	MT20	3.0	5.0		
N	BMWWW-t	MT20	3.0	8.0		
O	BMWW-t	MT20	3.0	4.0		
P	BMWW-t	MT20	4.0	6.0	1.75	1.50
Q	BMV1+p	MT20	3.0	4.0		

DIMENSIONS, SUPPORTS AND LOADINGS SPECIFIED BY FABRICATOR TO BE VERIFIED BY BUILDING DESIGNER

BEARINGS

JT	FACTORED GROSS REACTION VERT	HORZ	MAXIMUM FACTORED GROSS REACTION DOWN	HORZ	UPLIFT	INPUT BRG IN-SX	REQRD BRG IN-SX
Q	2164	0	2164	0	0	5-8	3-9
J	2164	0	2164	0	0	5-8	3-9

UNFACTORED REACTIONS

JT	1ST LCASE COMBINED	MAX./MIN. COMPONENT REACTIONS SNOW	LIVE	PERM.LIVE	WIND	DEAD	SOIL
Q	1510	1107 / 0	0 / 0	0 / 0	0 / 0	403 / 0	0 / 0
J	1510	1107 / 0	0 / 0	0 / 0	0 / 0	403 / 0	0 / 0

BEARING MATERIAL TO BE SPF NO.2 OR BETTER AT JOINT(S) Q, J

BRACING

TOP CHORD TO BE SHEATHED OR MAX. PURLIN SPACING = 2.86 FT.
MAX. UNBRACED BOTTOM CHORD LENGTH = 10.00 FT OR RIGID CEILING DIRECTLY APPLIED.

ALL PITCH BREAKS AND PERIMETER CORNER JOINTS MUST BE LATERALLY RESTRAINED.

LOADING

TOTAL LOAD CASES: (4)

CHORDS

MEMB. FR-TO	MAX. FACTORED FORCE (LBS)	VERT. LOAD (PLF) FROM	TO	LC1	MAX CSI (LC)	MAX. UNBRAC LENGTH
A- B	0 / 36	-119.4	-119.4	0.16 (1)	10.00	
B- C	-2764 / 0	-119.4	-119.4	0.32 (1)	3.88	
C- D	-2703 / 0	-119.4	-119.4	0.31 (1)	3.92	
D- E	-3121 / 0	-119.4	-119.4	0.84 (1)	2.86	
E- F	-3121 / 0	-119.4	-119.4	0.84 (1)	2.86	
F- G	-2703 / 0	-119.4	-119.4	0.31 (1)	3.92	
G- H	-2764 / 0	-119.4	-119.4	0.32 (1)	3.88	
H- I	0 / 36	-119.4	-119.4	0.16 (1)	10.00	
Q- B	-2124 / 0	0.0	0.0	0.21 (1)	5.74	
J- H	-2124 / 0	0.0	0.0	0.21 (1)	5.74	
Q- P	0 / 0	-18.2	-18.2	0.07 (4)	10.00	
P- O	0 / 2492	-18.2	-18.2	0.47 (1)	10.00	
O- N	0 / 2398	-18.2	-18.2	0.46 (1)	10.00	
N- M	0 / 2398	-18.2	-18.2	0.46 (1)	10.00	
M- L	0 / 2398	-18.2	-18.2	0.46 (1)	10.00	
L- K	0 / 2492	-18.2	-18.2	0.47 (1)	10.00	
K- J	0 / 0	-18.2	-18.2	0.07 (4)	10.00	

WEBS

MEMB. FR-TO	MAX. FACTORED FORCE (LBS)	MAX CSI (LC)
P- C	-465 / 0	0.09 (1)
C- O	-121 / 0	0.05 (1)
O- D	0 / 183	0.04 (4)
D- N	0 / 902	0.20 (1)
N- E	-961 / 0	0.38 (1)
N- F	0 / 902	0.20 (1)
L- F	0 / 183	0.04 (4)
L- G	-121 / 0	0.05 (1)
K- G	-465 / 0	0.09 (1)
B- P	0 / 2546	0.57 (1)
K- H	0 / 2546	0.57 (1)

DESIGN CRITERIA

SPECIFIED LOADS:

TOP CH.	LL	=	34.8	PSF
	DL	=	6.0	PSF
BOT CH.	LL	=	0.0	PSF
	DL	=	7.3	PSF
TOTAL LOAD		=	48.1	PSF

SPACING = 24.0 IN. C/C

LOADING IN FLAT SECTION BASED ON A SLOPE OF 2.00/12 MINIMUM

THIS TRUSS IS DESIGNED FOR RESIDENTIAL OR SMALL BUILDING REQUIREMENTS OF PART 9, NBCC 2015

THIS DESIGN COMPLIES WITH:
- PART 9 OF BCBC 2018 , NBC-2019AE
- PART 9 OF OBC 2012 (2019 AMENDMENT)
- CSA 086-14
- TPIC 2014

(55 % OF 48.1 P.S.F. G.S.L. PLUS 8.4 P.S.F. RAIN LOAD) EQUALS 34.8 P.S.F. SPECIFIED ROOF LIVE LOAD

ALLOWABLE DEFL.(LL)= L/360 (0.97")
CALCULATED VERT. DEFL.(LL) = L/ 999 (0.15")
ALLOWABLE DEFL.(TL)= L/360 (0.97")
CALCULATED VERT. DEFL.(TL) = L/ 999 (0.27")

CSI: TC=0.84/0.97 (D-E:1) , BC=0.47/0.97 (K-L:1) , WB=0.57/0.97 (H-K:1) , SSI=0.38/1.00 (D-E:1)

DOL LUMBER=1.00 NAIL=1.00 LS BEND=1.10 COMP=1.10 SHEAR=1.10 TENS= 1.10

COMPANION LIVE LOAD FACTOR = 1.00

TRUSS PLATE MANUFACTURER IS NOT RESPONSIBLE FOR QUALITY CONTROL IN THE TRUSS MANUFACTURING PLANT .

NAIL VALUES

PLATE	GRIP(DRY) (PSI) MAX	MIN	SHEAR (PLI) MAX	MIN	SECTION (PLI) MAX	MIN
MT20	650	371	1747	788	1987	1873

PLATE PLACEMENT TOL. = 0.250 inches

PLATE ROTATION TOL. = 5.0 Deg.

JSI GRIP= 0.89 (H) (INPUT = 0.90)
JSI METAL= 0.70 (M) (INPUT = 1.00)

LICENSED PROFESSIONAL ENGINEER
N.A. EL-MASRI
PROVINCE OF ONTARIO
Jul 18, 2023

READ ALL NOTES ON THIS PAGE AND ON THE ENGINEERING NOTES: TRUSSES. THE NOTE PAGE IS AN INTEGRAL PART OF THIS DRAWING AS IT CONTAINS SPECIFICATIONS AND CRITERIA USED IN THE DESIGN OF THIS COMPONENT.

KOTT

CORPORATION OF THE CITY OF OSHAWA
TRUE COPY OF PERMIT PLANS
Nov 03 2023
PER: CHIEF BUILDING OFFICIAL

MHP 23036

JOB NAME	TRUSS NAME	QUANTITY	PLY	JOB DESC.	DRWG NO.
NE0723-112	T08	2	1	GREENPARK - ZADOR BAY ESTATES - VILLA 5-3 (TRUSS DESC.)	

Version 8.630 S Mar 22 2023 MiTek Industries, Inc. Tue Jul 18 14:41:47 2023 Page 1
ID:aX72Bl6hiO7VoZWieLIJw?z93Pm-aSJa8ckEQuvw8qLm9D1XWl2?3eDsetYOmfsTG4ywpWl

Scale = 1:49.6

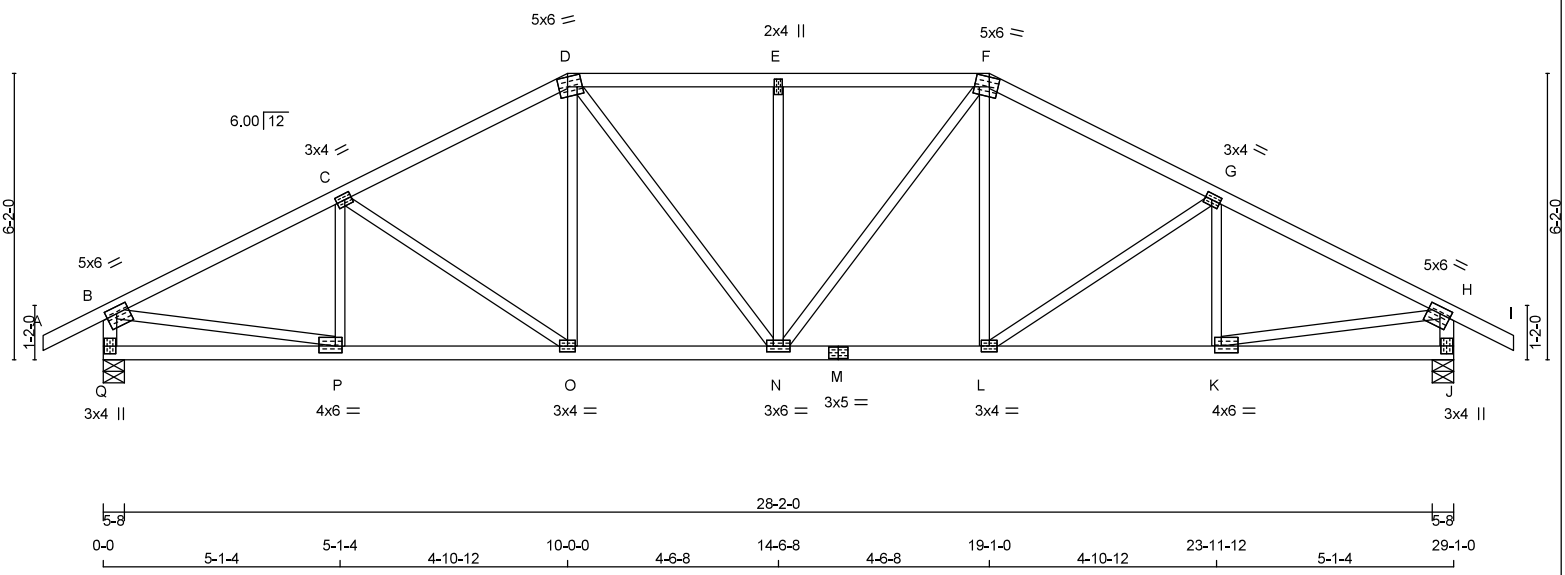

TOTAL WEIGHT = 2 X 122 = 243 lb
[M][F]

LUMBER
N. L. G. A. RULES

CHORDS	SIZE		LUMBER	DESCR.
A - D	2x4	DRY	No.2	SPF
D - F	2x4	DRY	No.2	SPF
F - I	2x4	DRY	No.2	SPF
Q - B	2x4	DRY	No.2	SPF
J - H	2x4	DRY	No.2	SPF
Q - M	2x4	DRY	No.2	SPF
M - J	2x4	DRY	No.2	SPF
ALL WEBS EXCEPT	2x3	DRY	No.2	SPF

DRY: SEASONED LUMBER.

PLATES (table is in inches)

JT	TYPE	PLATES	W	LEN	Y	X
B	TMVW-t	MT20	5.0	6.0	1.75	2.75
C	TMWW-t	MT20	3.0	4.0	1.50	1.75
D	TTWW-m	MT20	5.0	6.0	2.50	2.25
E	TMW+w	MT20	2.0	4.0		
F	TTWW-m	MT20	5.0	6.0	2.50	2.25
G	TMWW-t	MT20	3.0	4.0	1.50	1.75
H	TMVW-t	MT20	5.0	6.0	1.75	2.75
J	BMV1+p	MT20	3.0	4.0		
K	BMWW-t	MT20	4.0	6.0	1.75	1.75
L	BMWW-t	MT20	3.0	4.0		
M	BS-t	MT20	3.0	5.0		
N	BMWWW-t	MT20	3.0	6.0		
O	BMWW-t	MT20	3.0	4.0		
P	BMWW-t	MT20	4.0	6.0	1.75	1.75
Q	BMV1+p	MT20	3.0	4.0		

DIMENSIONS, SUPPORTS AND LOADINGS SPECIFIED BY FABRICATOR TO BE VERIFIED BY BUILDING DESIGNER

BEARINGS

JT	FACTORED GROSS REACTION VERT	HORZ	MAXIMUM FACTORED GROSS REACTION DOWN	HORZ	UPLIFT	INPUT BRG IN-SX	REQRD BRG IN-SX
Q	2164	0	2164	0	0	5-8	3-9
J	2164	0	2164	0	0	5-8	3-9

UNFACTORED REACTIONS

JT	1ST LCASE COMBINED	MAX./MIN. COMPONENT REACTIONS SNOW	LIVE	PERM.LIVE	WIND	DEAD	SOIL
Q	1510	1107 / 0	0 / 0	0 / 0	0 / 0	403 / 0	0 / 0
J	1510	1107 / 0	0 / 0	0 / 0	0 / 0	403 / 0	0 / 0

BEARING MATERIAL TO BE SPF NO.2 OR BETTER AT JOINT(S) Q, J

BRACING
TOP CHORD TO BE SHEATHED OR MAX. PURLIN SPACING = 3.63 FT.
MAX. UNBRACED BOTTOM CHORD LENGTH = 10.00 FT OR RIGID CEILING DIRECTLY APPLIED.

ALL PITCH BREAKS AND PERIMETER CORNER JOINTS MUST BE LATERALLY RESTRAINED.

LOADING
TOTAL LOAD CASES: (4)

CHORDS

MEMB. FR-TO	MAX. FACTORED FORCE (LBS)	FACTORED VERT. LOAD (PLF) FROM	TO	LC1	MAX CSI (LC)	MAX. UNBRAC LENGTH
A- B	0 / 36	-119.4	-119.4	0.16 (1)	10.00	
B- C	-2850 / 0	-119.4	-119.4	0.49 (1)	3.63	
C- D	-2538 / 0	-119.4	-119.4	0.46 (1)	3.85	
D- E	-2529 / 0	-119.4	-119.4	0.38 (1)	3.94	
E- F	-2529 / 0	-119.4	-119.4	0.38 (1)	3.94	
F- G	-2538 / 0	-119.4	-119.4	0.46 (1)	3.85	
G- H	-2850 / 0	-119.4	-119.4	0.49 (1)	3.63	
H- I	0 / 36	-119.4	-119.4	0.16 (1)	10.00	
Q- B	-2121 / 0	0.0	0.0	0.21 (1)	5.74	
J- H	-2121 / 0	0.0	0.0	0.21 (1)	5.74	
Q- P	0 / 0	-18.2	-18.2	0.10 (4)	10.00	
P- O	0 / 2576	-18.2	-18.2	0.46 (1)	10.00	
O- N	0 / 2246	-18.2	-18.2	0.41 (1)	10.00	
N- M	0 / 2246	-18.2	-18.2	0.41 (1)	10.00	
M- L	0 / 2246	-18.2	-18.2	0.41 (1)	10.00	
L- K	0 / 2576	-18.2	-18.2	0.46 (1)	10.00	
K- J	0 / 0	-18.2	-18.2	0.10 (4)	10.00	

WEBS

MEMB. FR-TO	MAX. FACTORED FORCE (LBS)	MAX CSI (LC)
P- C	-342 / 0	0.08 (1)
C- O	-406 / 0	0.26 (1)
O- D	0 / 324	0.07 (1)
D- N	0 / 462	0.10 (1)
N- E	-659 / 0	0.40 (1)
N- F	0 / 462	0.10 (1)
L- F	0 / 324	0.07 (1)
L- G	-406 / 0	0.26 (1)
K- G	-342 / 0	0.08 (1)
B- P	0 / 2612	0.59 (1)
K- H	0 / 2612	0.59 (1)

DESIGN CRITERIA

SPECIFIED LOADS:

TOP CH.	LL	=	34.8	PSF
	DL	=	6.0	PSF
BOT CH.	LL	=	0.0	PSF
	DL	=	7.3	PSF
TOTAL LOAD		=	48.1	PSF

SPACING = 24.0 IN. C/C

LOADING IN FLAT SECTION BASED ON A SLOPE OF 2.00/12 MINIMUM

THIS TRUSS IS DESIGNED FOR RESIDENTIAL OR SMALL BUILDING REQUIREMENTS OF PART 9, NBCC 2015

THIS DESIGN COMPLIES WITH:
- PART 9 OF BCBC 2018 , NBC-2019AE
- PART 9 OF OBC 2012 (2019 AMENDMENT)
- CSA 086-14
- TPIC 2014

(55 % OF 48.1 P.S.F. G.S.L. PLUS 8.4 P.S.F. RAIN LOAD) EQUALS 34.8 P.S.F. SPECIFIED ROOF LIVE LOAD

ALLOWABLE DEFL.(LL)= L/360 (0.97")
CALCULATED VERT. DEFL.(LL) = L/ 999 (0.13")
ALLOWABLE DEFL.(TL)= L/360 (0.97")
CALCULATED VERT. DEFL.(TL) = L/ 999 (0.22")

CSI: TC=0.49/0.97 (B-C:1) , BC=0.46/0.97 (O-P:1) , WB=0.59/0.97 (B-P:1) ; SSI=0.26/1.00 (D-E:1)

DOL LUMBER=1.00 NAIL=1.00 LS BEND=1.10 COMP=1.10 SHEAR=1.10 TENS= 1.10

COMPANION LIVE LOAD FACTOR = 1.00

TRUSS PLATE MANUFACTURER IS NOT RESPONSIBLE FOR QUALITY CONTROL IN THE TRUSS MANUFACTURING PLANT .

NAIL VALUES

PLATE	GRIP(DRY) (PSI) MAX	MIN	SHEAR (PLI) MAX	MIN	SECTION (PLI) MAX	MIN
MT20	650	371	1747	788	1987	1873

PLATE PLACEMENT TOL. = 0.250 inches

PLATE ROTATION TOL. = 5.0 Deg.

JSI GRIP= 0.90 (B) (INPUT = 0.90)
JSI METAL= 0.73 (H) (INPUT = 1.00)

LICENSED PROFESSIONAL ENGINEER
N.A. EL-MASRI
PROVINCE OF ONTARIO
Jul 18, 2023

READ ALL NOTES ON THIS PAGE AND ON THE ENGINEERING NOTES: TRUSSES. THE NOTE PAGE IS AN INTEGRAL PART OF THIS DRAWING AS IT CONTAINS SPECIFICATIONS AND CRITERIA USED IN THE DESIGN OF THIS COMPONENT.

KOTT

CORPORATION OF THE CITY OF OSHAWA
TRUE COPY OF PERMIT PLANS
Nov 03 2023
PER:
CHIEF BUILDING OFFICIAL

MHP 23036

JOB NAME	TRUSS NAME	QUANTITY	PLY	JOB DESC.	DRWG NO.
NE0723-112	T09	2	1	GREENPARK - ZADOR BAY ESTATES - VILLA 5-3 (TRUSS DESC.)	

Version 8.630 S Mar 22 2023 MiTek Industries, Inc. Tue Jul 18 14:41:47 2023 Page 1
ID:aX72BI6hiO7VoZWieLIJw?z93Pm-aSJa8ckEQuvw8qLm9D1XWl2xTeDbesSOmfsTG4ywpWl

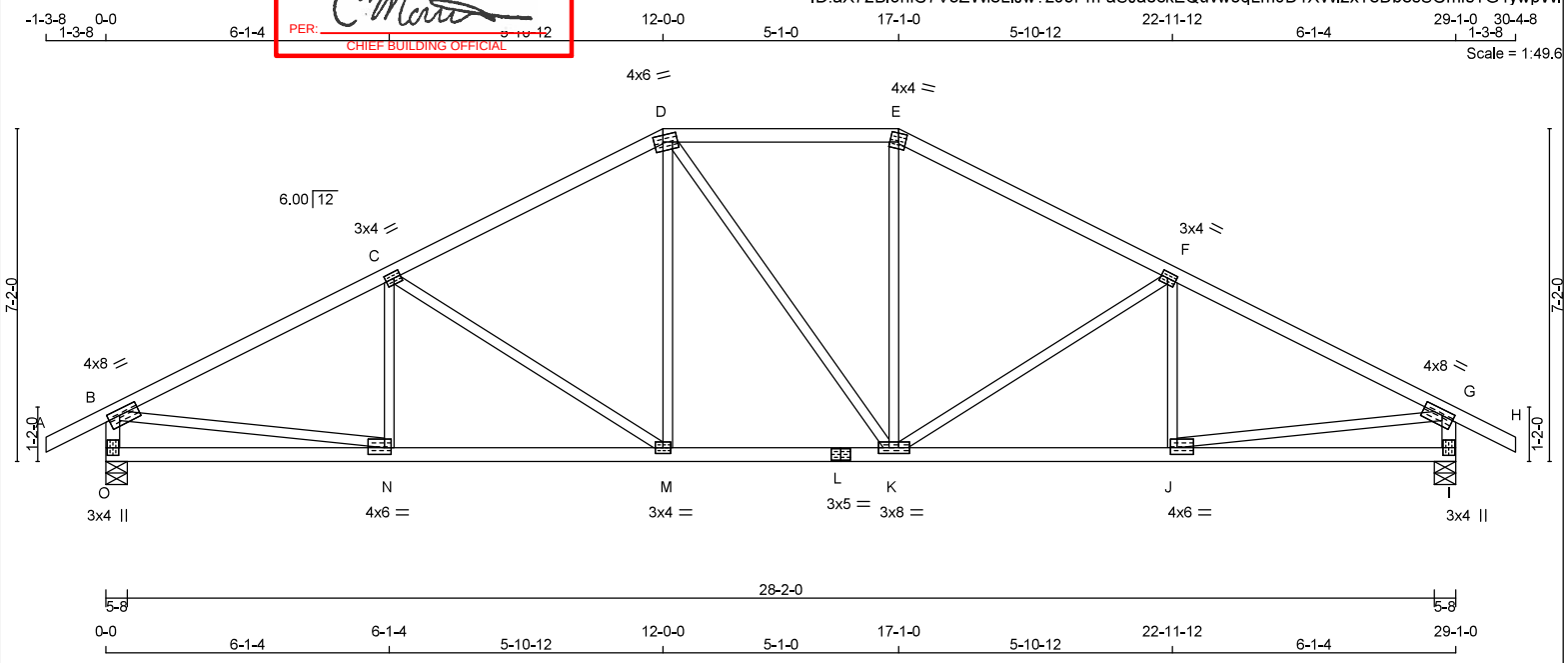

TOTAL WEIGHT = 2 X 119 = 237 lb
[M][F]

LUMBER
N. L. G. A. RULES

CHORDS	SIZE		LUMBER	DESCR.
A - D	2x4	DRY	No.2	SPF
D - E	2x4	DRY	No.2	SPF
E - H	2x4	DRY	No.2	SPF
O - B	2x4	DRY	No.2	SPF
I - G	2x4	DRY	No.2	SPF
O - L	2x4	DRY	No.2	SPF
L - I	2x4	DRY	No.2	SPF
ALL WEBS EXCEPT	2x3	DRY	No.2	SPF

DRY: SEASONED LUMBER.

PLATES (table is in inches)

JT	TYPE	PLATES	W	LEN	Y	X
B	TMVW-t	MT20	4.0	8.0	1.50	3.00
C	TMWW-t	MT20	3.0	4.0	1.50	1.75
D	TTWW-m	MT20	4.0	6.0	1.75	2.25
E	TTW-m	MT20	4.0	4.0	2.25	1.75
F	TMWW-t	MT20	3.0	4.0	1.50	1.75
G	TMVW-t	MT20	4.0	8.0	1.50	3.00
I	BMV1+p	MT20	3.0	4.0		
J	BMWW-t	MT20	4.0	6.0	1.75	1.75
K	BMWWW-t	MT20	3.0	8.0		
L	BS-t	MT20	3.0	5.0		
M	BMWW-t	MT20	3.0	4.0		
N	BMWW-t	MT20	4.0	6.0	1.75	1.75
O	BMV1+p	MT20	3.0	4.0		

DIMENSIONS, SUPPORTS AND LOADINGS SPECIFIED BY FABRICATOR TO BE VERIFIED BY BUILDING DESIGNER

BEARINGS

JT	FACTORED GROSS REACTION VERT	HORZ	MAXIMUM FACTORED GROSS REACTION DOWN	HORZ	UPLIFT	INPUT BRG IN-SX	REQRD BRG IN-SX
O	2164	0	2164	0	0	5-8	3-9
I	2164	0	2164	0	0	5-8	3-9

UNFACTORED REACTIONS

JT	1ST LCASE COMBINED	MAX./MIN. COMPONENT REACTIONS SNOW	LIVE	PERM.LIVE	WIND	DEAD	SOIL
O	1510	1107 / 0	0 / 0	0 / 0	0 / 0	403 / 0	0 / 0
I	1510	1107 / 0	0 / 0	0 / 0	0 / 0	403 / 0	0 / 0

BEARING MATERIAL TO BE SPF NO.2 OR BETTER AT JOINT(S) O, I

BRACING
TOP CHORD TO BE SHEATHED OR MAX. PURLIN SPACING = 3.27 FT.
MAX. UNBRACED BOTTOM CHORD LENGTH = 10.00 FT OR RIGID CEILING DIRECTLY APPLIED.

ALL PITCH BREAKS AND PERIMETER CORNER JOINTS MUST BE LATERALLY RESTRAINED.

LOADING
TOTAL LOAD CASES: (4)

CHORDS

MEMB. FR-TO	MAX. FACTORED FORCE (LBS)	FACTORED VERT. LOAD (PLF) FROM	TO	LC1 MAX CSI (LC)	MAX. UNBRAC LENGTH
A- B	0 / 36	-119.4	-119.4	0.16 (1)	10.00
B- C	-2882 / 0	-119.4	-119.4	0.72 (1)	3.27
C- D	-2337 / 0	-119.4	-119.4	0.64 (1)	3.69
D- E	-2062 / 0	-119.4	-119.4	0.45 (1)	4.18
E- F	-2338 / 0	-119.4	-119.4	0.64 (1)	3.69
F- G	-2881 / 0	-119.4	-119.4	0.72 (1)	3.27
G- H	0 / 36	-119.4	-119.4	0.16 (1)	10.00
O- B	-2115 / 0	0.0	0.0	0.21 (1)	5.75
I- G	-2115 / 0	0.0	0.0	0.21 (1)	5.75
O- N	0 / 0	-18.2	-18.2	0.15 (4)	10.00
N- M	0 / 2611	-18.2	-18.2	0.48 (1)	10.00
M- L	0 / 2062	-18.2	-18.2	0.39 (1)	10.00
L- K	0 / 2062	-18.2	-18.2	0.39 (1)	10.00
K- J	0 / 2611	-18.2	-18.2	0.48 (1)	10.00
J- I	0 / 0	-18.2	-18.2	0.15 (4)	10.00

WEBS

MEMB. FR-TO	MAX. FACTORED FORCE (LBS)	MAX CSI (LC)
N- C	-249 / 42	0.07 (1)
C- M	-664 / 0	0.66 (1)
M- D	0 / 460	0.10 (1)
D- K	0 / 1	0.00 (1)
K- E	0 / 462	0.10 (1)
K- F	-663 / 0	0.66 (1)
J- F	-250 / 41	0.07 (1)
B- N	0 / 2637	0.59 (1)
J- G	0 / 2636	0.59 (1)

DESIGN CRITERIA

SPECIFIED LOADS:

TOP CH.	LL	=	34.8	PSF
	DL	=	6.0	PSF
BOT CH.	LL	=	0.0	PSF
	DL	=	7.3	PSF
TOTAL LOAD		=	48.1	PSF

SPACING = 24.0 IN. C/C

LOADING IN FLAT SECTION BASED ON A SLOPE OF 2.00/12 MINIMUM

THIS TRUSS IS DESIGNED FOR RESIDENTIAL OR SMALL BUILDING REQUIREMENTS OF PART 9, NBCC 2015

THIS DESIGN COMPLIES WITH:
- PART 9 OF BCBC 2018 , NBC-2019AE
- PART 9 OF OBC 2012 (2019 AMENDMENT)
- CSA 086-14
- TPIC 2014

(55 % OF 48.1 P.S.F. G.S.L. PLUS 8.4 P.S.F. RAIN LOAD) EQUALS 34.8 P.S.F. SPECIFIED ROOF LIVE LOAD

ALLOWABLE DEFL.(LL)= L/360 (0.97")
CALCULATED VERT. DEFL.(LL) = L/ 999 (0.13")
ALLOWABLE DEFL.(TL)= L/360 (0.97")
CALCULATED VERT. DEFL.(TL) = L/ 999 (0.23")

CSI: TC=0.72/0.97 (B-C:1) , BC=0.48/0.97 (J-K:1) , WB=0.66/0.97 (C-M:1) , SSI=0.31/1.00 (F-G:1)

DOL LUMBER=1.00 NAIL=1.00 LS BEND=1.10 COMP=1.10 SHEAR=1.10 TENS= 1.10

COMPANION LIVE LOAD FACTOR = 1.00

TRUSS PLATE MANUFACTURER IS NOT RESPONSIBLE FOR QUALITY CONTROL IN THE TRUSS MANUFACTURING PLANT .

NAIL VALUES

PLATE	GRIP(DRY) (PSI) MAX	MIN	SHEAR (PLI) MAX	MIN	SECTION (PLI) MAX	MIN
MT20	650	371	1747	788	1987	1873

PLATE PLACEMENT TOL. = 0.250 inches

PLATE ROTATION TOL. = 5.0 Deg.

JSI GRIP= 0.87 (M) (INPUT = 0.90)
JSI METAL= 0.62 (N) (INPUT = 1.00)

LICENSED PROFESSIONAL ENGINEER
N.A. EL-MASRI
PROVINCE OF ONTARIO
Jul 18, 2023

READ ALL NOTES ON THIS PAGE AND ON THE ENGINEERING NOTES: TRUSSES. THE NOTE PAGE IS AN INTEGRAL PART OF THIS DRAWING AS IT CONTAINS SPECIFICATIONS AND CRITERIA USED IN THE DESIGN OF THIS COMPONENT.

KOTT

CORPORATION OF THE CITY OF OSHAWA
TRUE COPY OF PERMIT PLANS
Nov 03 2023
PER:
CHIEF BUILDING OFFICIAL

MHP 23036

JOB NAME	TRUSS NAME	QUANTITY	PLY	JOB DESC.	DRWG NO.
NE0723-112	T10	2	1	GREENPARK - ZADOR BAY ESTATES - VILLA 5-3	
				TRUSS DESC.	

Version 8.630 S Mar 22 2023 MiTek Industries, Inc. Tue Jul 18 14:41:48 2023 Page 1
ID:aX72BI6hiO7VoZWieLlJw?z93Pm-2esyLyksAC1nl_wyjxYm3zaDh1bdNTMX?Jc1oXywpWH

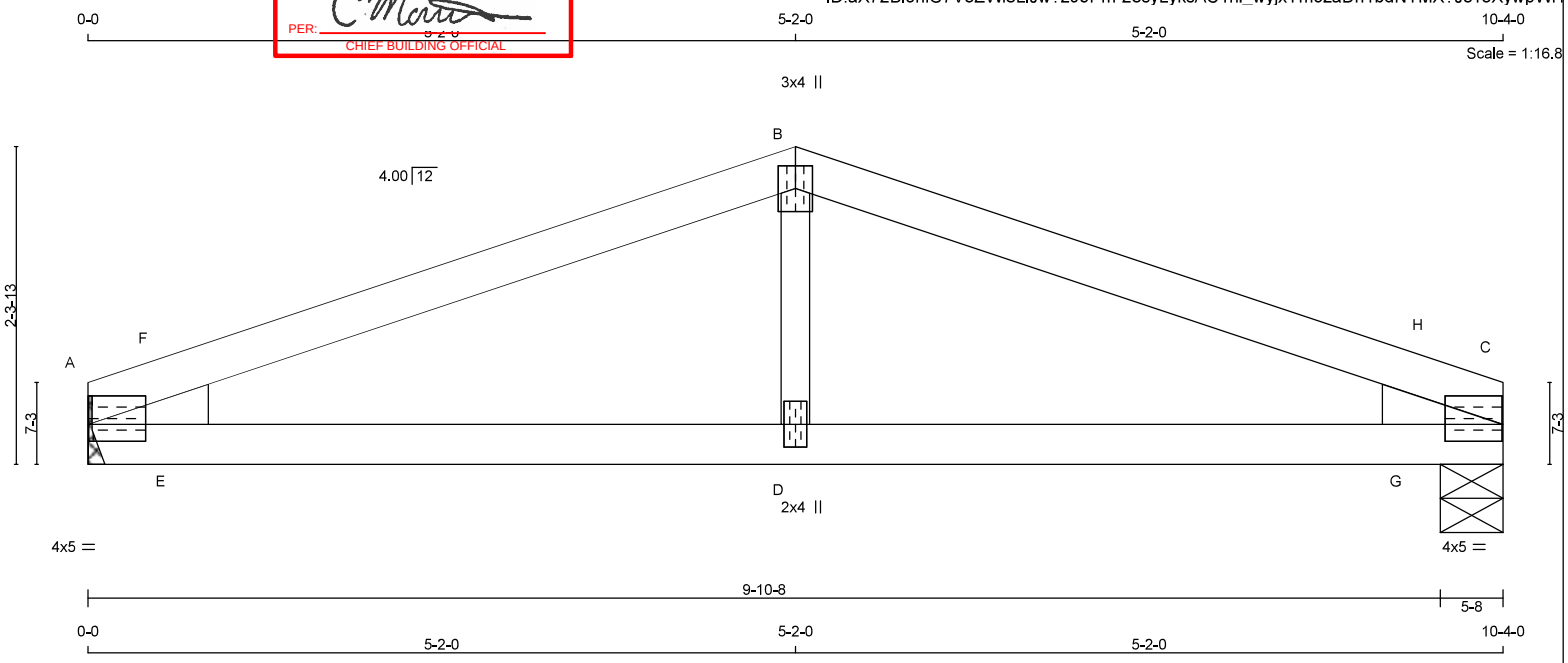

TOTAL WEIGHT = 2 X 28 = 56 lb
[M][F]

LUMBER
N. L. G. A. RULES

CHORDS	SIZE		LUMBER	DESCR.
A - B	2x4	DRY	No.2	SPF
B - C	2x4	DRY	No.2	SPF
A - C	2x4	DRY	No.2	SPF
ALL WEBS	2x3	DRY	No.2	SPF

DRY: SEASONED LUMBER.

PLATES (table is in inches)

JT	TYPE	PLATES	W	LEN	Y	X
A	TMBH1-I	MT20	4.0	5.0	1.50	
B	TTW+p	MT20	3.0	4.0		
C	TMBH1-I	MT20	4.0	5.0	1.50	
D	BMW+w	MT20	2.0	4.0		

DIMENSIONS, SUPPORTS AND LOADINGS SPECIFIED BY FABRICATOR TO BE VERIFIED BY BUILDING DESIGNER

BEARINGS

JT	FACTORED GROSS REACTION VERT	HORZ	MAXIMUM FACTORED GROSS REACTION DOWN	HORZ	UPLIFT	INPUT BRG IN-SX	REQRD BRG IN-SX	HEEL WEDGE
A	711	0	711	0	0	MECHANICAL		2x4 L
C	711	0	711	0	0	5-8	1-8	2x4 R

A SUITABLE HANGER/MECHANICAL CONNECTION IS REQUIRED AT JOINT A. MINIMUM BEARING LENGTH AT JOINT A = 1-8.

UNFACTORED REACTIONS

JT	1ST LCASE COMBINED	MAX./MIN. COMPONENT REACTIONS SNOW	LIVE	PERM.LIVE	WIND	DEAD	SOIL
A	497	360 / 0	0 / 0	0 / 0	0 / 0	137 / 0	0 / 0
C	497	360 / 0	0 / 0	0 / 0	0 / 0	137 / 0	0 / 0

BEARING MATERIAL TO BE SPF NO.2 OR BETTER AT JOINT(S) C

BRACING
TOP CHORD TO BE SHEATHED OR MAX. PURLIN SPACING = 5.76 FT.
MAX. UNBRACED BOTTOM CHORD LENGTH = 10.00 FT OR RIGID CEILING DIRECTLY APPLIED.

ALL PITCH BREAKS AND PERIMETER CORNER JOINTS MUST BE LATERALLY RESTRAINED.

LOADING
TOTAL LOAD CASES: (4)

CHORDS

MEMB. FR-TO	MAX. FACTORED FORCE (LBS)	VERT. LOAD LC1 (PLF) FROM	TO	MAX CSI (LC)	MAX. UNBRAC LENGTH
A- F	-1067 / 0	-119.4	-119.4	0.18 (1)	5.85
F- B	-1024 / 0	-119.4	-119.4	0.31 (1)	5.76
B- H	-1024 / 0	-119.4	-119.4	0.31 (1)	5.76
H- C	-1067 / 0	-119.4	-119.4	0.18 (1)	5.85
A- E	0 / 961	-18.2	-18.2	0.30 (1)	10.00
E- D	0 / 961	-18.2	-18.2	0.30 (1)	10.00
D- G	0 / 961	-18.2	-18.2	0.30 (1)	10.00
G- C	0 / 961	-18.2	-18.2	0.30 (1)	10.00

WEBS

MEMB. FR-TO	MAX. FACTORED FORCE (LBS)	MAX CSI (LC)
D- B	0 / 176	0.04 (1)
E- F	-162 / 48	0.00 (1)
G- H	-162 / 48	0.00 (1)

DESIGN CRITERIA

SPECIFIED LOADS:

TOP CH.	LL	=	34.8	PSF
	DL	=	6.0	PSF
BOT CH.	LL	=	0.0	PSF
	DL	=	7.3	PSF
TOTAL LOAD		=	48.1	PSF

SPACING = 24.0 IN. C/C

THIS TRUSS IS DESIGNED FOR RESIDENTIAL OR SMALL BUILDING REQUIREMENTS OF PART 9, NBCC 2015

THIS DESIGN COMPLIES WITH:
- PART 9 OF BCBC 2018 , NBC-2019AE
- PART 9 OF OBC 2012 (2019 AMENDMENT)
- CSA 086-14
- TPIC 2014

(55 % OF 48.1 P.S.F. G.S.L. PLUS 8.4 P.S.F. RAIN LOAD) EQUALS 34.8 P.S.F. SPECIFIED ROOF LIVE LOAD

ALLOWABLE DEFL.(LL)= L/360 (0.34")
CALCULATED VERT. DEFL.(LL) = L/ 999 (0.02")
ALLOWABLE DEFL.(TL)= L/360 (0.34")
CALCULATED VERT. DEFL.(TL) = L/ 999 (0.04")

CSI: TC=0.31/0.97 (B-H:1) , BC=0.30/0.97 (C-G:1) , WB=0.04/0.97 (B-D:1) , SSI=0.23/1.00 (B-H:1)

DOL LUMBER=1.00 NAIL=1.00 LS BEND=1.10 COMP=1.10 SHEAR=1.10 TENS= 1.10

COMPANION LIVE LOAD FACTOR = 1.00

TRUSS PLATE MANUFACTURER IS NOT RESPONSIBLE FOR QUALITY CONTROL IN THE TRUSS MANUFACTURING PLANT .

NAIL VALUES

PLATE	GRIP(DRY) (PSI) MAX	MIN	SHEAR (PLI) MAX	MIN	SECTION (PLI) MAX	MIN
MT20	650	371	1747	788	1987	1873

PLATE PLACEMENT TOL. = 0.250 inches

PLATE ROTATION TOL. = 5.0 Deg.

JSI GRIP= 0.87 (C) (INPUT = 0.90)
JSI METAL= 0.27 (A) (INPUT = 1.00)

LICENSED PROFESSIONAL ENGINEER
N.A. EL-MASRI
PROVINCE OF ONTARIO
Jul 18, 2023

READ ALL NOTES ON THIS PAGE AND ON THE ENGINEERING NOTES: TRUSSES. THE NOTE PAGE IS AN INTEGRAL PART OF THIS DRAWING AS IT CONTAINS SPECIFICATIONS AND CRITERIA USED IN THE DESIGN OF THIS COMPONENT.

KOTT

CORPORATION OF THE CITY OF OSHAWA
TRUE COPY OF PERMIT PLANS
Nov 03 2023
PER:
CHIEF BUILDING OFFICIAL

MHP 23036

JOB NAME	TRUSS NAME	QUANTITY	PLY	JOB DESC.	DRWG NO.
NE0723-112	T11	1	1	GREENPARK - ZADOR BAY ESTATES - VILLA 5-3 TRUSS DESC.	

Version 8.630 S Mar 22 2023 MiTek Industries, Inc. Tue Jul 18 14:41:48 2023 Page 1
ID:aX72BI6hiO7VoZWieLIJw?z93Pm-2esyLyksAC1nl_wyjxYm3zaDp1dENQHX?Jc1oXywpWH

Scale = 1:18.2

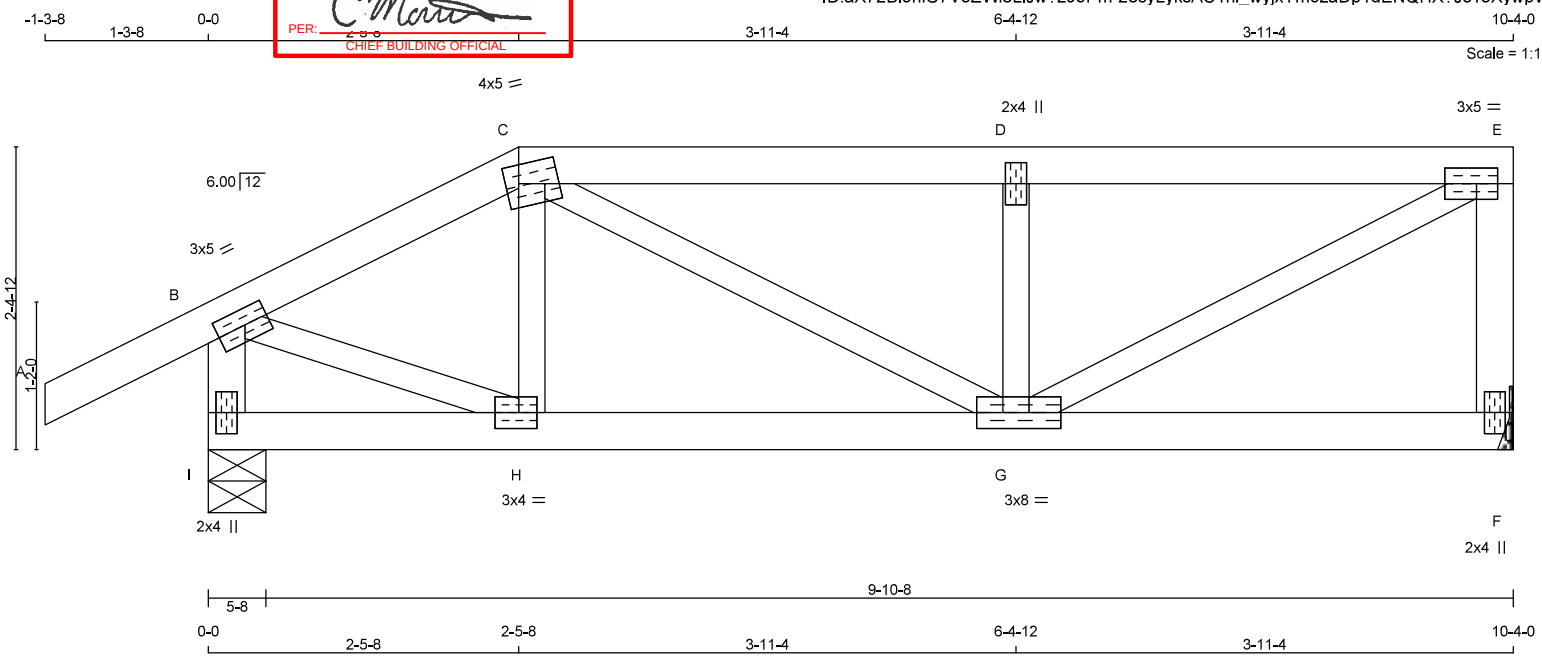

TOTAL WEIGHT = 40 lb [M]

LUMBER
N. L. G. A. RULES

CHORDS	SIZE		LUMBER	DESCR.
A - C	2x4	DRY	No.2	SPF
C - E	2x4	DRY	No.2	SPF
F - E	2x4	DRY	No.2	SPF
I - B	2x4	DRY	No.2	SPF
I - F	2x4	DRY	No.2	SPF
ALL WEBS EXCEPT	2x3	DRY	No.2	SPF

DRY: SEASONED LUMBER.

PLATES (table is in inches)

JT	TYPE	PLATES	W	LEN	Y	X
B	TMVW-t	MT20	3.0	5.0	1.50	2.25
C	TTWW-m	MT20	4.0	5.0	1.75	1.25
D	TMW+w	MT20	2.0	4.0		
E	TMVW-t	MT20	3.0	5.0	1.50	2.00
F	BMV1+p	MT20	2.0	4.0		
G	BMWWW-t	MT20	3.0	8.0	1.50	2.50
H	BMWW-t	MT20	3.0	4.0	1.50	1.75
I	BMV1+p	MT20	2.0	4.0		

DIMENSIONS, SUPPORTS AND LOADINGS SPECIFIED BY FABRICATOR TO BE VERIFIED BY BUILDING DESIGNER

BEARINGS

JT	FACTORED GROSS REACTION VERT	HORZ	MAXIMUM FACTORED GROSS REACTION DOWN	HORZ	UPLIFT	INPUT BRG IN-SX	REQRD BRG IN-SX
F	711	0	711	0	0	MECHANICAL	
I	873	0	873	0	0	5-8	1-8

A SUITABLE HANGER/MECHANICAL CONNECTION IS REQUIRED AT JOINT F. MINIMUM BEARING LENGTH AT JOINT F = 1-8.

UNFACTORED REACTIONS

JT	1ST LCASE COMBINED	MAX./MIN. COMPONENT REACTIONS SNOW	LIVE	PERM.LIVE	WIND	DEAD	SOIL
F	497	360 / 0	0 / 0	0 / 0	0 / 0	137 / 0	0 / 0
I	608	454 / 0	0 / 0	0 / 0	0 / 0	154 / 0	0 / 0

BEARING MATERIAL TO BE SPF NO.2 OR BETTER AT JOINT(S) I

BRACING
TOP CHORD TO BE SHEATHED OR MAX. PURLIN SPACING = 5.96 FT.
MAX. UNBRACED BOTTOM CHORD LENGTH = 10.00 FT OR RIGID CEILING DIRECTLY APPLIED.

ALL PITCH BREAKS AND PERIMETER CORNER JOINTS MUST BE LATERALLY RESTRAINED.

LOADING
TOTAL LOAD CASES: (4)

CHORDS

MEMB. FR-TO	MAX. FORCE (LBS)	FACTORED VERT. LOAD LC1 (PLF) FROM	TO	MAX CSI (LC)	MAX. UNBRAC LENGTH
A- B	0 / 36	-119.4	-119.4	0.16 (1)	10.00
B- C	-731 / 0	-119.4	-119.4	0.13 (1)	6.25
C- D	-926 / 0	-119.4	-119.4	0.30 (1)	5.96
D- E	-926 / 0	-119.4	-119.4	0.30 (1)	5.96
F- E	-677 / 0	0.0	0.0	0.08 (1)	7.81
I- B	-856 / 0	0.0	0.0	0.09 (1)	7.81
I- H	0 / 0	-18.2	-18.2	0.04 (4)	10.00
H- G	0 / 645	-18.2	-18.2	0.13 (1)	10.00
G- F	0 / 0	-18.2	-18.2	0.06 (4)	10.00

WEBS

MEMB. FR-TO	MAX. FORCE (LBS)	MAX CSI (LC)
H- C	-152 / 9	0.02 (1)
C- G	0 / 318	0.07 (1)
G- D	-574 / 0	0.09 (1)
G- E	0 / 1050	0.24 (1)
B- H	0 / 688	0.15 (1)

DESIGN CRITERIA

SPECIFIED LOADS:

TOP CH.	LL =	34.8	PSF
	DL =	6.0	PSF
BOT CH.	LL =	0.0	PSF
	DL =	7.3	PSF
TOTAL LOAD	=	48.1	PSF

SPACING = 24.0 IN. C/C

LOADING IN FLAT SECTION BASED ON A SLOPE OF 2.00/12 MINIMUM

THIS TRUSS IS DESIGNED FOR RESIDENTIAL OR SMALL BUILDING REQUIREMENTS OF PART 9, NBCC 2015

THIS DESIGN COMPLIES WITH:
- PART 9 OF BCBC 2018 , NBC-2019AE
- PART 9 OF OBC 2012 (2019 AMENDMENT)
- CSA 086-14
- TPIC 2014

(55 % OF 48.1 P.S.F. G.S.L. PLUS 8.4 P.S.F. RAIN LOAD) EQUALS 34.8 P.S.F. SPECIFIED ROOF LIVE LOAD

ALLOWABLE DEFL.(LL)= L/360 (0.34")
CALCULATED VERT. DEFL.(LL) = L/ 999 (0.02")
ALLOWABLE DEFL.(TL)= L/360 (0.34")
CALCULATED VERT. DEFL.(TL) = L/ 999 (0.03")

CSI: TC=0.30/0.97 (D-E:1) , BC=0.13/0.97 (G-H:1) , WB=0.24/0.97 (E-G:1) , SSI=0.22/1.00 (D-E:1)

DOL LUMBER=1.00 NAIL=1.00 LS BEND=1.10 COMP=1.10 SHEAR=1.10 TENS= 1.10

COMPANION LIVE LOAD FACTOR = 1.00

TRUSS PLATE MANUFACTURER IS NOT RESPONSIBLE FOR QUALITY CONTROL IN THE TRUSS MANUFACTURING PLANT .

NAIL VALUES

PLATE	GRIP(DRY) (PSI) MAX	MIN	SHEAR (PLI) MAX	MIN	SECTION (PLI) MAX	MIN
MT20	650	371	1747	788	1987	1873

PLATE PLACEMENT TOL. = 0.250 inches

PLATE ROTATION TOL. = 5.0 Deg.

JSI GRIP= 0.83 (E) (INPUT = 0.90)
JSI METAL= 0.26 (E) (INPUT = 1.00)

LICENSED PROFESSIONAL ENGINEER
N.A. EL-MASRI
PROVINCE OF ONTARIO
Jul 18, 2023

READ ALL NOTES ON THIS PAGE AND ON THE ENGINEERING NOTES: TRUSSES. THE NOTE PAGE IS AN INTEGRAL PART OF THIS DRAWING AS IT CONTAINS SPECIFICATIONS AND CRITERIA USED IN THE DESIGN OF THIS COMPONENT.

KOTT

CORPORATION OF THE CITY OF OSHAWA
TRUE COPY
OF PERMIT PLANS
Nov 03 2023
P.E.A.
CHIEF BUILDING OFFICIAL

MHP 23036

KOTT TRUSS BEARING CAPACITY TABLE

(INTERNAL USE ONLY)

TRUSS BEARING CAPACITIES [LBS.] [illegible] ED ON SPF #2 TOP PLATE) 7-Jun-21

	TYPE 1, NO FLUSH PLATE, B2>=2B1								
NO BEARING ENHANCER	BEARING PLATE (B1)	1-PLY		2-PLY		3-PLY		4-PLY	
		MSR2100	SPF No.2 MSR1950	MSR2100	SPF No.2 MSR1950	MSR2100	SPF No.2 MSR1950	MSR2100	SPF No.2 MSR1950
	1 1/2"	1383		2767		4151		5534	
	2x4	3712	3228	7425	6457	11138	9685	14851	12914
	2x6	5834	5073	11668	10146	17503	15220	23337	20293
	2x8	7690	6687	15381	13375	23072	20063	30763	26750
	TYPE 1, FLUSH PLATE								
FLUSH PLATE	BEARING PLATE (B1)	1-PLY		2-PLY		3-PLY		4-PLY	
		MSR2100	SPF No.2 MSR1950	MSR2100	SPF No.2 MSR1950	MSR2100	SPF No.2 MSR1950	MSR2100	SPF No.2 MSR1950
	1 1/2"	1383		2767		4151		5534	
	2x4	3712		7425		11138		14851	
	2x6	5834		11668		17503		23337	
	2x8	7690		15381		23072		30763	
	TYPE 1, FLUSH PLATE + BEARING ENHANCER								
BEARING ENHANCER	BEARING PLATE (B1)	1-PLY		2-PLY		3-PLY		4-PLY	
		MSR2100	SPF No.2 MSR1950	MSR2100	SPF No.2 MSR1950	MSR2100	SPF No.2 MSR1950	MSR2100	SPF No.2 MSR1950
CPn-4 (Simpson)	2x4	4515		9030		13545		18065	
CPn-6 (Simpson)	2x6	7095		14190		21285		28390	
CP4-9 (KOTT)	2x4	6007	4898	12014	9796	18021	14694	19801	19592
CP6-9 (KOTT)	2x6	8677	7075	17354	14150	26031	21225	31117	28300
SBP4 (MiTek)	2x4	7288		11001		14714		18427	
SBP6 (MiTek)	2x6	11030		16865		22699		28534	
SBP6 (MiTek)	2x8	12886		20578		28269		35960	

TYPE 1 CONFIGURATIONS

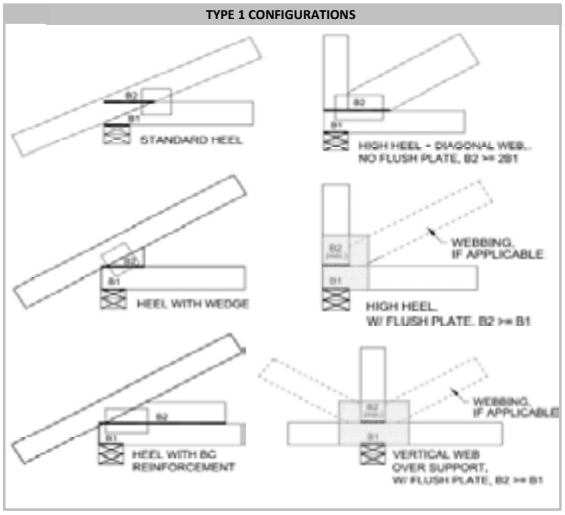

	TYPE 1 (END GRAIN)									
END GRAIN	BEARING PLATE (B1)	POST (B2) ABOVE BEARING	1-PLY		2-PLY		3-PLY		4-PLY	
			MSR2100 (EG)	SPF No.2 (EG)	MSR2100 (EG)	SPF No.2 (EG)	MSR2100 (EG)	SPF No.2 (EG)	MSR2100 (EG)	SPF No.2 (EG)
	2x4	2x4	3712		7425		11138		14851	
	2x6	2x6	5834		11668		17503		23337	
			MSR1950 (EG)	SPF No.2	MSR1950 (EG)	SPF No.2	MSR1950 (EG)	SPF No.2	MSR1950 (EG)	SPF No.2
	2x8	2x8	7690		15381		23072		30763	
	TYPE 1 (END GRAIN), FLUSH PLATE + BEARING ENHANCER									
END GRAIN, BEARING ENHANCER	BEARING PLATE (B1)	POST (B2) ABOVE BEARING	1-PLY		2-PLY		3-PLY		4-PLY	
			MSR2100 (EG)	SPF No.2 (EG)	MSR2100 (EG)	SPF No.2 (EG)	MSR2100 (EG)	SPF No.2 (EG)	MSR2100 (EG)	SPF No.2 (EG)
CPn-4 (Simpson)	2x4	2x4	4515		9030		13545		18065	
CPn-6 (Simpson)	2x6	2x6	7095		14190		21285		28390	
CP4-9 (KOTT)	2x4	2x6	15585	9006	19801	18013	19801		19801	
			MSR1950 (EG)	SPF No.2 (EG)	MSR1950 (EG)	SPF No.2 (EG)	MSR1950 (EG)	SPF No.2 (EG)	MSR1950 (EG)	SPF No.2 (EG)
CP6-9 (KOTT)	2x6	2x8	21834	13009	31117	26019	31117		31117	

TYPE 1 (END GRAIN) CONFIGURATIONS

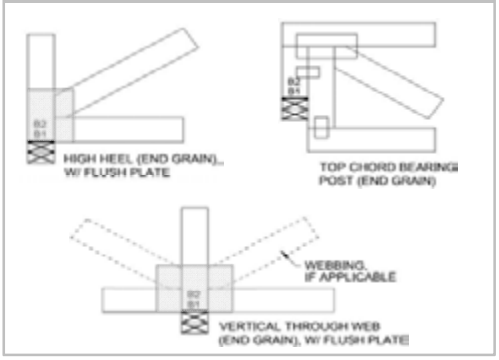

	TYPE 2, NO FLUSH PLATE, B2<2B1									
NO BEARING ENHANCER	BEARING PLATE (B1)	POST (B2) ABOVE BEARING	1-PLY		2-PLY		3-PLY		4-PLY	
			MSR2100	SPF No.2 MSR1950	MSR2100	SPF No.2 MSR1950	MSR2100	SPF No.2 MSR1950	MSR2100	SPF No.2 MSR1950
	2x4	2x4	2639	2152	5279	4304	7919	6457	10588	8609
		2x6	3393	2767	6787	5534	10181	8302	13575	11069
	2x6	2x4	3393	2767	6787	5534	10181	8302	13575	11069
		2x6	4147	3382	8296	6764	12444	10146	16592	13529
		2x8	4808	3920	9616	7840	14424	11761	19232	15681
		2x10	5562	4535	11124	9070	16686	13606	22248	18141
	2x8	2x4	3959	3228	7919	6457	11878	9685	15838	12914
		2x6	4808	3920	9616	7840	14424	11761	19232	15681
		2x8	5467	4458	10935	8916	16403	13375	21871	17833
	TYPE 2, FLUSH PLATE									
FLUSH PLATE	BEARING PLATE (B1)	POST (B2) ABOVE BEARING	1-PLY		2-PLY		3-PLY		4-PLY	
			MSR2100	SPF No.2 MSR1950	MSR2100	SPF No.2 MSR1950	MSR2100	SPF No.2 MSR1950	MSR2100	SPF No.2 MSR1950
	2x4	2x4	TYPE 1 APPLIES							
		2x6								
	2x6	2x4	4672	3809	9344	7619	14016	11429	18689	15238
		2x6	TYPE 1 APPLIES							
		2x8								
		2x10								
	2x8	2x4	4672	3809	9344	7619	14016	11429	18689	15238
		2x6	7342	5986	14684	11973	22026	17959	29368	23946
		2x8	TYPE 1 APPLIES							

TYPE 2 CONFIGURATIONS

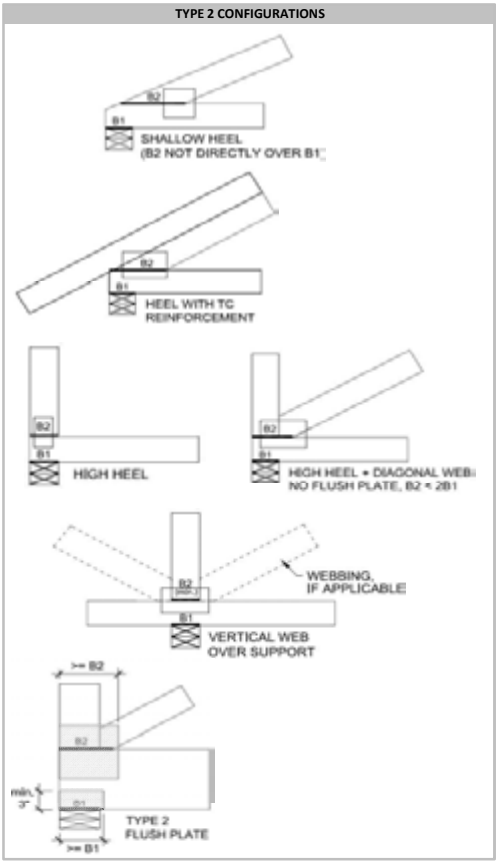

NOTES:

1. Factored truss reaction shall not exceed bearing capacity corresponding to: configuration type, size of bearing surfaces, truss lumber, # of plies, and applicable enhancers.

2a. Values in table are in conformance with CSA O86-14 Cl. 6.5.7 and TPIC 2014-Update 2, and may be used for residential or commercial designs.

2b. Values in table are in conformance with MiTek Canada Detail B37821Q "SPF Bearing Capacities".

2c. Values in table are in conformance with Simpson Catalogue C-C-CAN2020.

3a. Conditions for use of table values include: standard duration (K_D=1), dry lumber (K_{Scp}=1), untreated lumber (K_T=1), length of bearing factor not applied (K_B=1).

3b. Size factor (K_{Zcp}) applied to support material calculation when acceptable. Flush plate factor (K_P) applied to truss material calculation when acceptable (ie. excludes end grain).

3c. Flat roof factor (K_F) must applied for trusses making up a flat roof system; to do so, multiply bearing capacity values by 0.75 for this application.

4. Bearing plate is to be specified by the project engineer; values in table assume a bearing material of SPF #2 (or better).

5. When required, flush plate must not be located further than 1/4" away from bearing surface, and must cover the entire bearing plate length (B1).

6. When required, bearing enhancer must be installed as per manufacturer's guidelines.

7. Type 2 bearing configurations can be converted to use Type 1 table values as outlined in TPIC 2014-Update 1 Cl. 7.5.9.

8. This table is not valid after April 30, 2022.

CORPORATION OF THE CITY OF OSHAWA
TRUE COPY
OF PERMIT PLANS
Nov 03 2023
PER: C. Marr
CHIEF BUILDING OFFICIAL

MHP 23036

MiTek

STANDARD DETAIL **MSD2015-H**

Issued: MARCH 1, 2022
Expiry: APRIL 30, 2024

TOE-NAIL CAPACITY DETAILS

LATERAL AND WITHDRAWAL RESISTANCE OF BEARING ANCHORAGE BY TOE-NAILS

NAIL TYPE	Length (in)	Diameter (in)	LATERAL Resistance per nail (Lbs.)		WITHDRAWAL Resistance per nai (Lbs.)	
			SPF	D. FIR	SPF	D. FIR
COMMON WIRE	3.00	0.144	122	139	30	42
	3.25	0.144	127	144	32	45
	3.50	0.160	152	173	38	52
COMMON SPIRAL	3.00	0.122	96	108	26	36
	3.25	0.122	97	108	28	40
	3.50	0.152	142	161	36	50
3.25" Gun nail	3.25	0.120	94	105	28	39

Note: If using truss with D. Fir lumber and SPF bearing plate, use tabulated SPF values in table.

Nail type:	Common wire	Common spiral	Common wire	Common spiral	Gun Nail
Diameter (in.)	0.160	0.152	0.144	0.122	0.120
Length (in.)	3.50	3.50	3.00	3.00	3.25
LUMBER	**MAXIMUM NUMBER OF TOE-NAILS**				
2x4 SPF	2	2	3	3	3
2x6 SPF	4	4	4	5	5
2x4 D. FIR	2	2	2	2	2
2x6 D. FIR	3	3	3	4	4

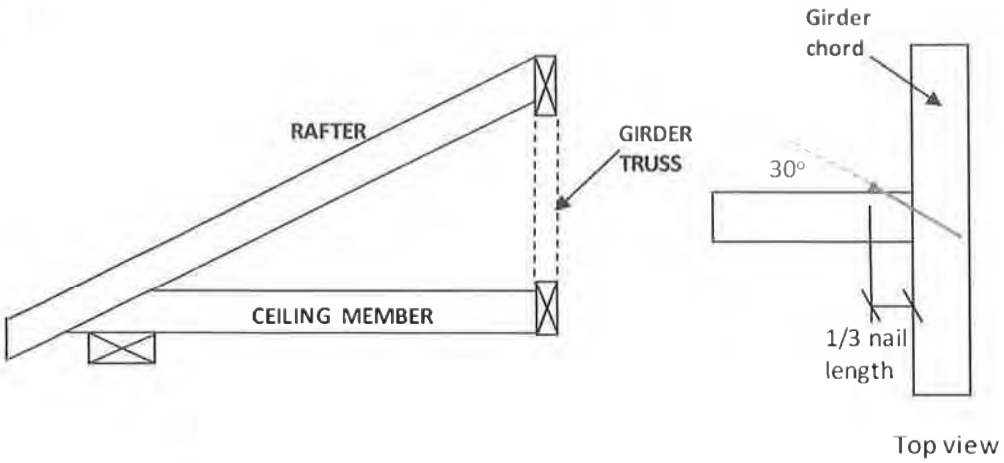

Figure 1: Toe-Nailing Rafter / Ceiling Member to Girder Truss

PEO
Certificate No. 10889485

LICENSED PROFESSIONAL ENGINEER
2022-04-05
C. Cordogiannis
90553736
PROVINCE OF ONTARIO

©2020 MiTek Canada Inc., 240 Stirling Crescent, Bradford, Ontario, L3Z 4L5 | (800) 268-3434, www.mitek.ca

CORPORATION OF THE CITY OF OSHAWA
TRUE COPY
OF PERMIT PLANS
Nov 03 2023
PER:
CHIEF BUILDING OFFICIAL

MHP 23036

MiTek

STANDARD DETAIL **MSD2015-H**

Issued: MARCH 1, 2022
Expiry: APRIL 30, 2024

TOE-NAIL CAPACITY DETAILS

Figure 2: Toe-Nail Anchorage to Bearing Plate for Uplift

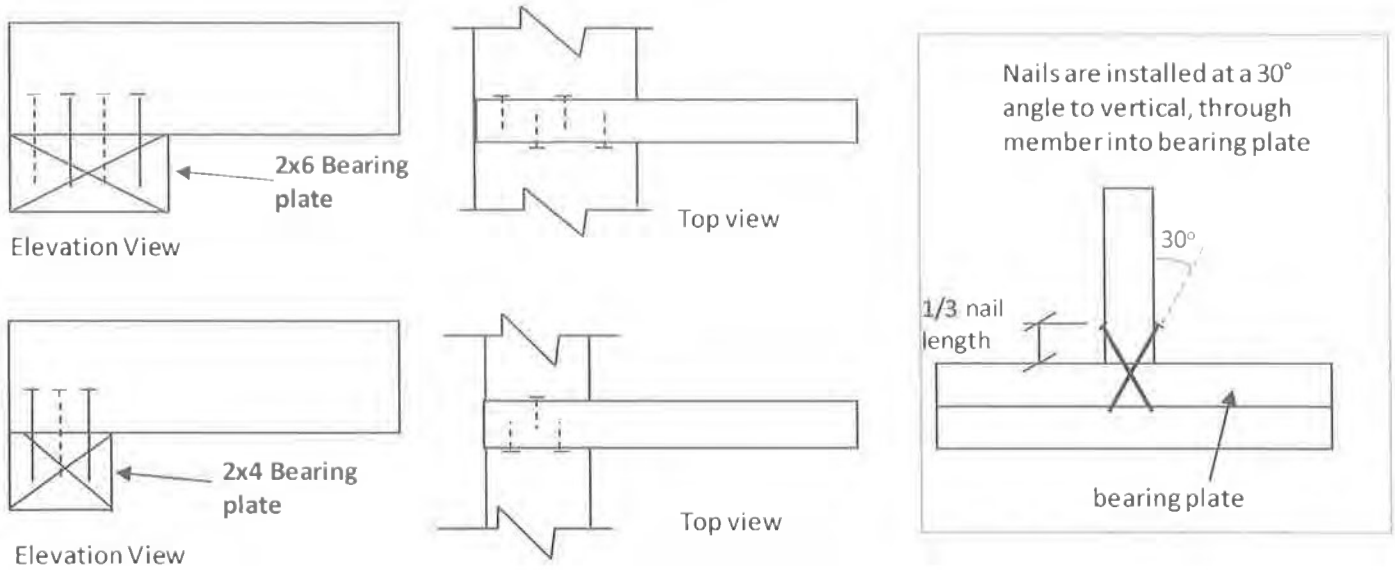

NOTES:

1. Rafter and ceiling members may be connected to top and bottom chords of girder truss by toe-nailing the members into the girder chords (see fig. 1), provided the factored vertical reactions of the supported members do not exceed the lateral resistance of the toe-nails. Mechanical connectors (hangers) are required if factored vertical reactions exceed the toe-nail capacity, or if the connection must resist horizontal loads (loads perpendicular to the face of girder or rafter).

2. Trusses, rafters or ceiling members may be anchored to the bearing plate with toe-nails (see fig. 2), provided that the factored uplift reactions due to **wind or earthquake loads** do not exceed the **withdrawal resistance of the toe-nails.** Mechanical anchors (tie-downs) are required for reactions that exceed the toe-nail withdrawal capacity. Toe-nail anchorage to bearing plates is **NOT** permitted if uplift reactions are generated from gravity loads (snow, floor live, dead).

3. Tabulated toe-nail resistances on page 1 are for **one** toe-nail. Multiply unit values by the number of nails used in the connection. Maximum number of nails in a connection shall not exceed the tabulated limits shown on page 1 for a given lumber size /species.

4. Nail values are based on specific gravity of G = 0.42 (SPF) and G = 0.49 (D. Fir).

5. Toe-nails shall be driven at approximately 1/3 the nail length from the edge of the joist/truss chord and driven at an angle of 30° to the grain of the member.

6. For wind / earthquake loads, tabulated lateral resistances may be multiplied by 1.15 (K_D factor). No increases are permitted for tabulated withdrawal resistances.

7. Lumber must be dry (< 19% moisture content) at the time of nail installation.

8. Nail values in this table comply with CSA O86-19, Clause 12.9.

PEO
Certificate No. 10889485

LICENSED PROFESSIONAL ENGINEER
2022-04-05
C. Cordogiannis
90553736
PROVINCE OF ONTARIO

©2020 MiTek Canada Inc., 240 Stirling Crescent, Bradford, Ontario, L3Z 4L5 | (800) 268-3434, www.mitek.ca

CORPORATION OF THE CITY OF OSHAWA
TRUE COPY
OF PERMIT PLANS
Nov 03 2023
PER:
CHIEF BUILDING OFFICIAL

MHP 23036

MiTek

STANDARD DETAIL MSD2015-J

Issued: **MARCH 17, 2021**
Expiry: **APRIL 30, 2023**

STANDARD HIP END FRAMING

PLAN VIEW

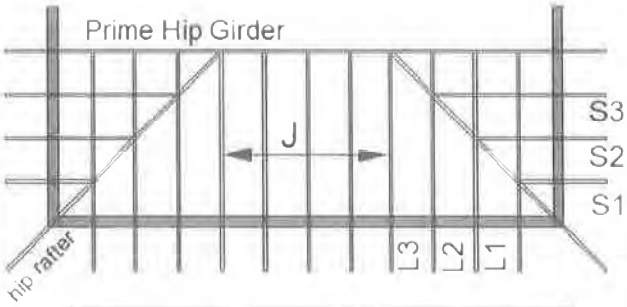

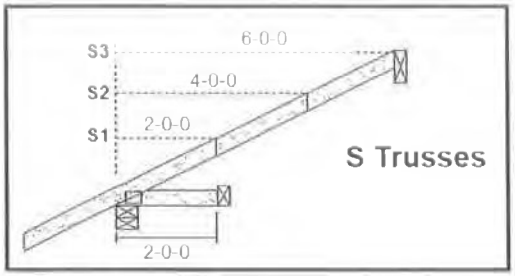

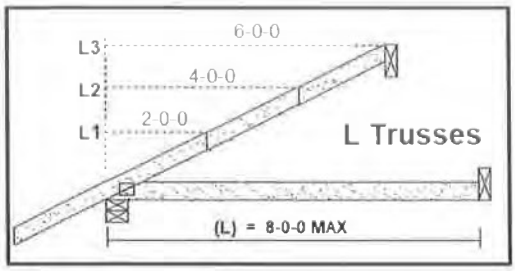

Specified Load Rating:

Top chord Live:	51.0 PSF or less
Top chord Dead:	6.0 PSF or less
Bottom chord Live:	0.0 PSF
Bottom chord Dead:	7.3 PSF or less

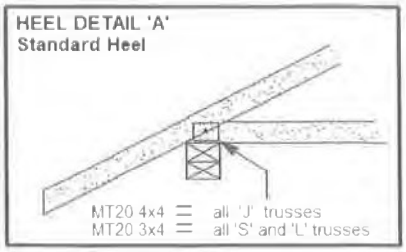

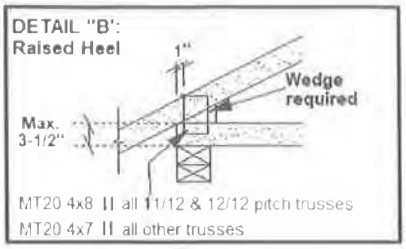

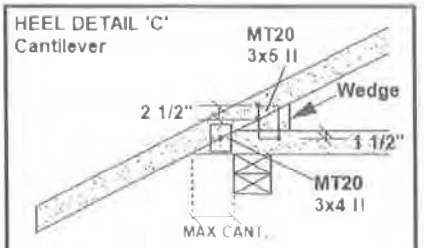

CANTILEVER DETAIL "C"

SLOPE	MAX CANT.	WEDGE PLATE	WEDGE SIZE
3/12	17"	3 X 5	2 X 3
4/12	14"	3 X 5	2 X 3
5/12	12"	3 X 5	2 X 4
6/12	10"	3 X 5	2 X 4
7/12	9"	3 X 5	2 X 6
8/12	8.5"	3 X 5	2 X 6
9/12	8"	3 X 5	2 X 6
10/12	7.5"	3 X 5	2 X 6

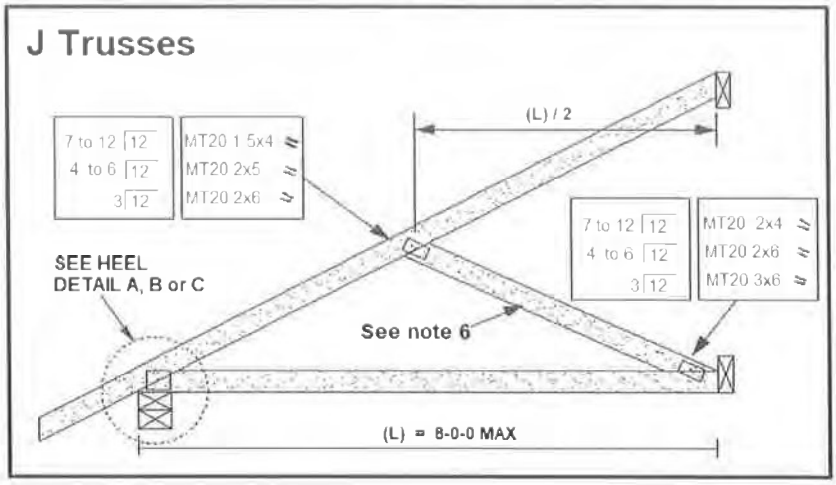

PEO
Certificate No. 10889485

LICENSED PROFESSIONAL ENGINEER
2022-04-27
C. Cordogiannis
90553736
PROVINCE OF ONTARIO

NOTES:

1. This detail is valid only for projects conforming to **PART 9 NBCC 2015** that do not require a wind analysis to be incorporated into the design of the trusses.
2. Overhang length shall not exceed 24 inches.
3. All lumber shall be 2x4 SPF (or D-Fir) DRY No. 2 grade or better.
4. All plates specified are MITEK MT20, pressed into both faces of each truss. Heel plates of all trusses shall conform to heel details 'A', 'B' or 'C'.
5. Diagonal hip rafter design shall conform to section 9.23.14.6 of NBCC 2015.
6. For 6.0 ft. or less span, diagonal web on truss 'J" is optional. Girder design must reflect choice of partial jack ('J' with diagonal web) or open jack ('J' without diagonal web)
7. All truss-to-rafter and truss-to-truss connections shall be specified as per MITEK standard detail *'MSD2015-H: Toe-Nail Capacity Details'*

©2021 MiTek Canada Inc.240 Stirling Cr. Bradford Ontario, L3Z 4L5 (800) 268-3434, www.mitek.ca

CORPORATION OF THE CITY OF OSHAWA
TRUE COPY
OF PERMIT PLANS
Nov 03 2023
PER: C. Mar
CHIEF BUILDING OFFICIAL

MHP 23036

MiTek

STANDARD DETAIL **MSD2015-K**

Issued: **MARCH 1, 2022**
Expiry: **APRIL 30, 2024**

STANDARD GABLE END DETAIL

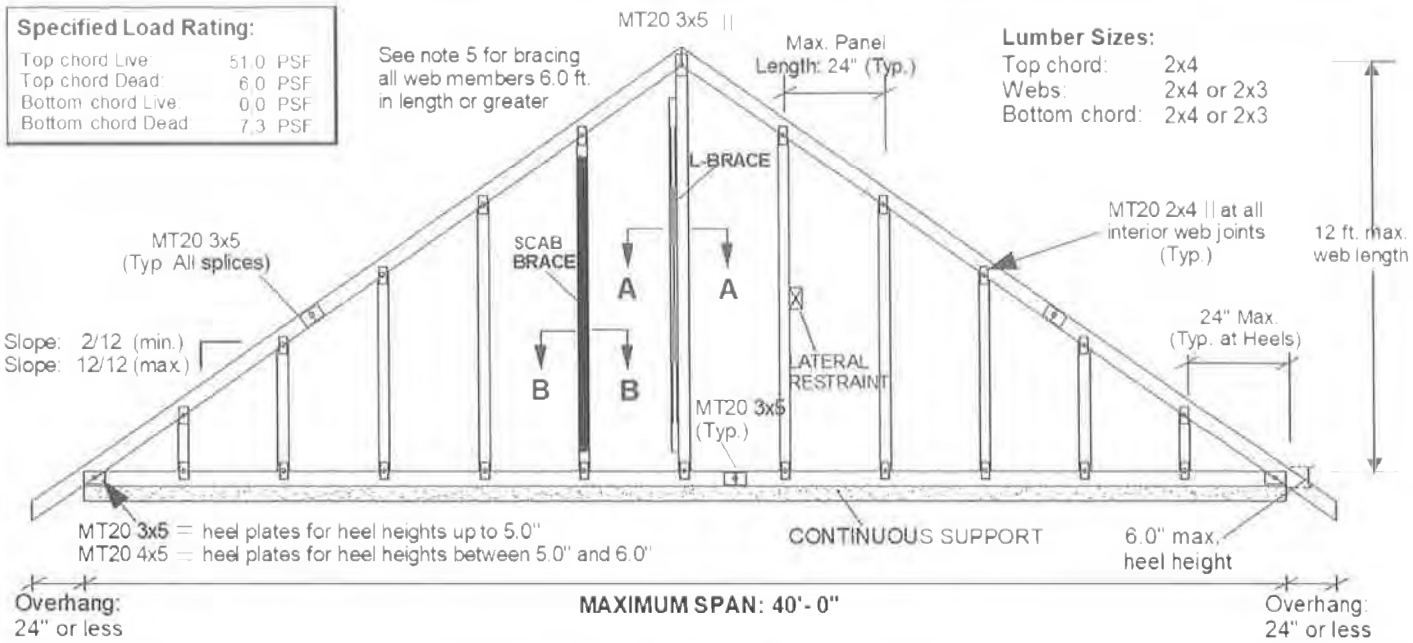

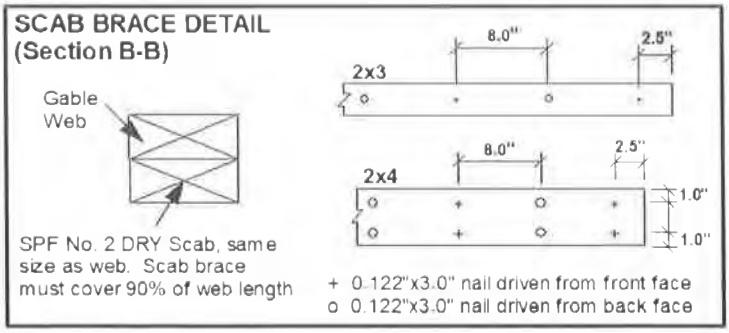

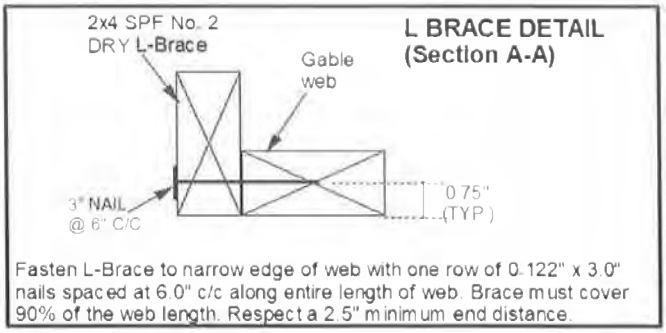

Notes:

1. This detail is only valid for projects conforming to **Part 9, NBCC 2015** that do not require a wind analysis to be incorporated into the design of the truss.
2. This detail is for vertical (gravity) load rating of the truss only. Truss must be continuously supported over the entire length of bottom chord.
3. Maximum web length not to exceed 12.0 ft. Spacing of gable stud webs in the truss not to exceed 24 inches cc.
4. Splice joints shall not be located in the first panel adjacent to the heel joint or peak joint.
5. Lateral restraint required at half-length of all webs over 6.0 ft. long. Alternatively install an L-Brace or scab brace as shown above. Scab braces shall be limited to 10 ft. long webs or less.
6. All plates are MITEK MT20 pressed into both faces of truss.
7. All lumber to be SPF (or D-Fir) DRY and of No.2 grade or better.
8. Additional building bracing is typically installed to brace the face of the end wall assembly. See BCSI Canada *'Building Designer Responsibilities for Gable End Frame Bracing'* for additional information on building bracing for gable-end assemblies.

PEO
Certificate No. 10889485

LICENSED PROFESSIONAL ENGINEER
2022-04-05
C. Cordogiannis
90553736
PROVINCE OF ONTARIO

©2020 MiTek Canada Inc., 240 Stirling Crescent, Bradford, Ontario, L3Z 4L5 | (800) 268-3434, www.mitek.ca

CORPORATION OF THE CITY OF OSHAWA
TRUE COPY
OF PERMIT PLANS
Nov 03 2023
PER:
CHIEF BUILDING OFFICIAL

MHP 23036

CANADA B3C

BCSI-B3C SUMMARY SHEET - PERMANENT RESTRAINT/BRACING OF CHORDS & WEB MEMBERS

Truss clear spans of 60' or greater may require complex permanent bracing. Please always consult a registered design professional.

WARNING Disregarding permanent restraint/bracing is a major cause of truss field performance problems and has been known to lead to roof or floor system collapse.

AVERTISSEMENT Le fait de négliger la retenue et le contreventement permanents est une cause majeure des problèmes visant la performance des fermes sur le chantier et cela est reconnu pour avoir entraîné l'effondrement des systèmes de toit et de plancher.

CAUTION Trusses with clear spans of 60 feet (18.3 m) or greater, may require complex permanent bracing. Please always consult a registered design professional.

MISE EN GARDE Les fermes ayant des portées libres de 18,3m (60 pi) et plus peuvent exiger un contreventement permanent complexe. Veuillez toujours consulter un concepteur professionnel agréé.

Restraint/Bracing Materials & Fasteners
Matériaux et attaches de retenue et de contreventement

Commonly used restraint/bracing materials include wood structural panels, gypsum board sheathing, stress-graded lumber, proprietary metal products, and metal purlins and straps.

Les matériaux de retenue et de contreventement communs incluent les panneaux structuraux de bois, le revêtement de panneaux de gypse, le bois classé par résistance mécanique, les produits métalliques exclusifs, les pannes et les feuillards métalliques.

MINIMUM ATTACHMENT REQUIREMENTS FOR LUMBER RESTRAINT/BRACING[1,2]
LES EXIGENCES MINIMUMS DES ATTACHMENTS POUR LA CONTRAINTE/LE CONTREVENTEMENT DU BOIS[1,2]

Lumber Size / *Taille de Bois*	Minimum Nail Size / *Taille Minimum de Clou*	Minimum Number of Nails per Connection / *Nombre Minimum de Clous par Connexion*
2x4 stress-graded / *38mm x 89mm classé par la résistance mécanique*	3" common spiral (0.122"x3") / *clous vrilles ordinaires 3" (3mm x 76mm)* 3" common wire (0.144"x3") / *clous ronds ordinaire 3" (3.7mm x 76mm)*	2
2x6 stress-graded / *38mm x 140mm classé par la résistance mécanique*	0.131" x 3" pneumatic / *clous pneumatique 0.131"x3"(3.3mm x 76mm)*	3

[1] Other attachment requirements may be specified by the truss designer or building designer.
[2] The grade/size and attachment for bracing materials such as wood structural panels, gypsum board sheathing, proprietary metal restraint/bracing products, and metal purlins and straps are provided by the building designer.

[1] Des autres exigences d'attachement peuvent être spécifiées par le dessinateur de ferme ou le concepteur du bâtiment.
[2] La taille et l'attachement pour des materiaux de contreventement comme les panneaux structuraux de bois, le revêtement de panneaux de gypse, les produits métalliques exclusifs pour la contrainte ou le contreventement, et des pannes et des feuillards sont fournis par le concepteur du bâtiment.

Permanent Bracing for the Various Planes of a Truss
Contreventement permanent pour les divers plans d'une ferme

Permanent bracing is important because it:
a) prevents out-of-plane buckling of truss members
b) helps maintain proper truss spacing
c) resists and transfers lateral loads from wind and seismic forces

Le contreventement permanent est important parce qu'il :
a) prévient le flambement hors plan des membrures de fermes
b) aide à maintenir l'espacement approprié des fermes
c) résiste aux charges latérales des forces du vent et des forces sismiques et les transfère

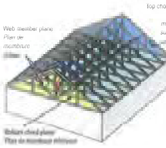

Trusses require permanent bracing within ALL of the following planes:
1. Top chord plane
2. Bottom chord plane
3. Web member plane

Les fermes exigent un contreventement permanentdans TOUS les plans suivants :
1. Le plan de la membrure supérieure
2. Le plan de la membrure inférieure
3. Le plan de la membrure d'âme

CAUTION Without permanent bracing the truss, or a portion of its members, will buckle (i.e., fail) at loads far less than design.

MISE EN GARDE Sans un contreventement permanent, la ferme, ou une partie de ses membrures, flambera (c'est-à-dire fera défaut) à des charges grandement inférieures à celles indiquées dans la conception.

1. Permanent Bracing for the Top Chord Plane
Contreventement permanent pour le plan de membrure supérieure

Use plywood, oriented strand board (OSB), or wood or metal structural purlins that are properly braced. Attach to each truss.

Utilisez du contreplaque, des panneaux OSB ou des pannes structurales de bois ou de métal correctement contreventés. Fixez à chaque ferme.

The truss design drawing (TDD) provides information on the assumed support for the top chord.

Le dessin de conception de ferme (DCF) fournit des renseignements sur le support prévu pour la membrure supérieure.

Fastener size and spacing requirements and grade for the sheathing, purlins and bracing are provided in the building code and/or by the building designer.

Le code du bâtiment et (ou) le concepteur du bâtiment fournissent les exigences relatives à la taille des attaches, à l'espacement et au classement du revêtement, des pannes et du contreventement.

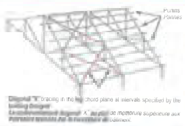

2. Permanent Bracing for the Bottom Chord Plane
Contreventement permanent pour le plan de membrure inférieure

Use rows of continuous lateral restraint with diagonal bracing, gypsum board sheathing or some other ceiling material capable of functioning as a diaphragm.

Utilisez des rangées de retenues latérales continues avec un contreventement diagonal, un revêtement de panneaux de gypse ou un autre matériau en mesure de fonctionner comme diaphragme.

The TDD provides information on the assumed support for the bottom chord.

Le DCF fournit des renseignements sur le support prévu pour la membrure inférieure.

Install bottom chord permanent lateral restraint at the spacing indicated on the TDD and/or by the building designer with a maximum of 10' (3 m) on center.

Installez la retenue latérale permanente de la membrure inférieure à l'espacement indiqué sur le DCF et (ou) par le concepteur du bâtiment avec un maximum de 3m (10 pi) entraxes.

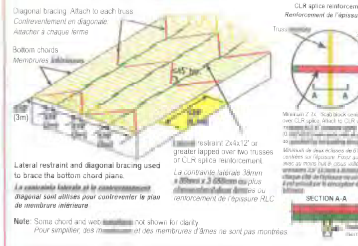

Lateral restraint and diagonal bracing used to brace the bottom chord plane.

restraint 2x4x12' or greater lapped over two trusses or CLR splice reinforcement.

La contrainte latérale 38mm ... ou renforcement de l'épissure RLC

Note: Some chord and web members not shown for clarity.
Pour simplifier, des membrures et des membrures d'âmes ne sont pas montrées

3. Permanent Bracing for the Web Member Plane
Contreventement permanent pour le plan de membrure d'âme

Web member permanent bracing collects and transfers buckling restraint forces and/or lateral loads from wind and seismic forces. The same bracing can often be used for both functions.

Le contreventement permanent de la membrure d'âme récupère et transfère les forces de retenue de flambement et (ou) les charges latérales des forces du vent et des forces sismiques. Le même contreventement peut souvent être utilisé pour les deux fonctions.

Individual Web Member Permanent Restraint & Bracing
Retenue et contreventement permanents des membrures d'âme individuelles

Check the TDD to determine which web members (if any) require restraint to resist buckling.

Vérifiez le DCF pour déterminer quelles membrures d'âme (si applicable) nécessitent une retenue pour résister au flambement.

Restrain and brace with:
A. continuous lateral restraint & diagonal bracing
B. individual member web reinforcement

Retenue et contreventement à l'aide :
A. d'une retenue latérale continue et d'un contreventement diagonal.
B. d'un renforcement des membrures d'âme individuelles

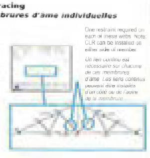

A. Continuous Lateral Restraint (CLR) & Diagonal Bracing
Retenue latérale continue (RLC) et contreventement diagonal

Attach each row of CLR at the locations shown on the TDD.
Fixez la RLC aux emplacements indiqués sur le DCF.

Install the diagonal bracing at an angle of less-than-or-equal-to 45° to the CLR and position so that it crosses the web in close proximity to the CLR. Attach the diagonal brace as close to the top and bottom chords as possible and to each web it crosses. Repeat every 20' (6.1 m) or less.

Installer le contreventement diagonal à un angle de 45° ou moins par rapport à la RLC et le positionner de sorte qu'il traverse l'âme à proximité de la RLC. Fixer le contreventement diagonal aussi près que possible des membrures supérieures et inférieures et de chaque âme qu'il croise. Répétez à tous les 6,1 m (20 pi) ou moins.

Examples of Diagonal Bracing with Continuous Restraint
Des exemples du contreventement diagonal avec la contrainte latérale continue

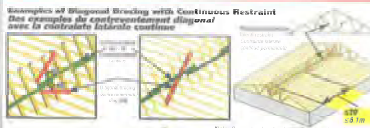

Note: Some chord and web members not shown for clarity.
***Notez:** Pour simplifier, des membrures et des membrures d'âme ne sont pas montrées*

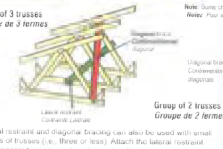

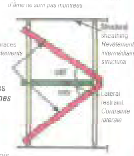

Lateral restraint and diagonal bracing can also be used with small groups of trusses (i.e., three or less). Attach the lateral restraint and diagonal brace to each web member they cross.

Les retenues latérales et le contreventement diagonal peuvent également être utilisés avec de petits groupes de fermes (p. ex., trois ou moins). Fixez la retenue latérale et le contreventement diagonal à chaque membrure d'âme qu'ils traversent.

ALWAYS DIAGONALLY BRACE THE CONTINUOUS LATERAL RESTRAINT!
CONTREVENTEZ TOUJOURS EN DIAGONAL LA RETENUE LATÉRALE CONTINUE!

B. Individual Web Member Reinforcement
Renforcement des membrures d'âme individuelles

T-, L-, Scab, L, U-Reinforcement and proprietary metal reinforcement provide an alternative for resisting web buckling. Refer to TDD, supplemental document provided by the truss designer or the construction documents prepared by the building designer for the size, grade, span and attachment of the web reinforcement.

Le renforcement en T, en L, en ... en L en U, le renforcement par produits métalliques exclusifs ... préparés par concepteur du bâtiment pour la grosseur, le grade, la portée et la méthode de fixation du renforcement.

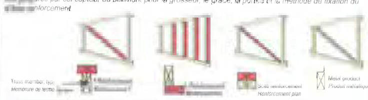

Web Member Plane Permanent Building Stability Bracing to Transfer Wind & Seismic Forces
Contreventement permanent pour assurer la stabilité du bâtiment des plans des membrures d'âme pour transférer les forces du vent et les forces sismiques

The web member restraint or reinforcement specified on a TDD is required to resist buckling due to axial forces created by the in-plane loads applied to the truss. Additional restraint and bracing within the web member plane may also be required to transfer lateral forces due to wind and/or seismic loads applied perpendicular to the plane of the trusses. This restraint and bracing is typically specified by the building designer.

La contrainte ou le renforcement des membrures d'âme précisé au DAF est requis pour résister au flambement sous des forces axiales causées par les chargements verticaux. Une contrainte ou un renforcement supplémentaire peut être requis dans le plan de la membrure d'âme pour transférer les forces latérales causées par le vent ou des charges sismiques ... précisées par le concepteur du bâtiment.

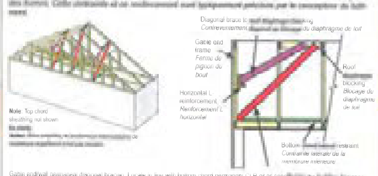

Gable end/wall permanent diagonal bracing. Locate in line with bottom chord permanent CLR or as specified by the building designer.
Le contreventement diagonal permanent du pignon du bout/mur. Placez en ligne avec la CLC permanente ... ou comme est spécifié par le concepteur du bâtiment.

Some truss designers provide general design tables and details to assist the building designer in determining the bracing required to transfer lateral loads due to wind and/or seismic forces from the gable end frame into the roof and/or ceiling diaphragm.

Certains concepteurs de fermes fournissent des tableaux de conception générale et des détails pour assister le concepteur du bâtiment à déterminer le contreventement requis pour transférer les charges latérales causées par les forces du vent et (ou) les forces sismiques provenant de la ferme du pignon jusqu'au diaphragme de toit et (ou) de plafond.

Gable End Frames and Sloped Bottom Chords
Ferme du pignon et membrures inférieures en pente

The gable end frame should always match the profile of the adjacent trusses to permit installation of proper bottom chord plane restraint & bracing unless special bracing is designed to support the end wall.

La ferme du pignon devrait toujours correspondre au profil des fermes adjacentes pour permettre l'installation de la retenue et du contreventement appropriés du plan de membrure inférieure, à moins qu'un contreventement spécial soit conçu pour supporter le mur d'extrémité.

WARNING Using a flat bottom chord gable end frame with adjacent trusses that have sloped bottom chords is prohibited by some building codes as adequate bracing of this condition is difficult and sometimes impossible. Special end wall bracing design considerations are required by the building designer if the gable end frame profile does not match the adjacent trusses.

MISE EN GARDE ... est interdit par certains codes du bâtiment ... ferme de pignon à membrure inférieure plate ... fermes adjacentes qui ont des membrures inférieures en pente, car ... concepteur du bâtiment si le profil de la ferme de pignon ne correspond pas aux fermes adjacentes.

Permanent Bracing for Special Conditions
Contreventement permanent pour des conditions spéciales

Sway Bracing—*Entretoise de contreventement*

Sway bracing is installed at the discretion of the building designer to help stabilize the truss system and minimize the lateral movement due to wind and seismic loads.

L'entretoise de contreventement est installé à la discrétion du concepteur du bâtiment pour aider à stabiliser le système de fermes et à minimiser le mouvement latéral causé par les charges du vent et les charges sismiques.

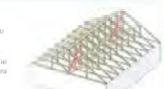

Sway bracing installed continuously across the building also serves to distribute gravity loads between trusses of varying stiffness.

L'entretoise de contreventement installée de façon continue le long d'un bâtiment sert également à distribuer les charges de gravité entre les fermes de rigidité variable.

Permanent Restraint/Bracing for the Top Chord in a Piggyback Assembly
Retenue et contreventement permanents pour la membrure supérieure dans un assemblage de fermes chapeaux

Provide restraint and bracing by:
- using rows of minimum 4x2 stress-graded lumber CLR and diagonal bracing
- connecting the CLR into the roof diaphragm
- adding structural sheathing or bracing frames
- some other equivalent means

Installez la retenue et le contreventement en :
- *utilisant des rangées de RLC et un contreventement diagonal de bois classé par résistance mécanique d'au moins 4x2*
- *fixant la RLC au diaphragme du toit*
- *ajoutant un revêtement structural ou des fermes de contreventement*
- *utilisant un autre moyen équivalent.*

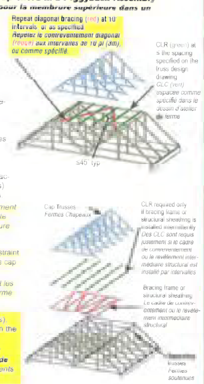

Refer to the TDD for the maximum assumed spacing between rows of lateral restraint (e.g. purlins) attached to the top chord of the supporting truss.

Reportez-vous au DAF pour connaître l'espacement maximal supposé entre les rangées de contrainte latérale (par ex., les pannes) fixées à la membrure supérieure de la ferme de support.

The TDD provides the assumed thickness of the restraint and minimum connection requirements between the cap and the supporting truss or restraint.

Le DCF fournit l'épaisseur prévue de la retenue et les exigences minimales de raccordement entre la ferme chapeau et la ferme portante ou la retenue.

If diagonal bracing is used to restrain the CLR(s), repeat **at 10' (3 m) intervals, or as specified** in the construction documents.

*Si un contreventement diagonal est utilisé pour retenir la (les) RLC, répétez **à des intervalles de 3m (10 pi) ou comme le précisent** les documents de construction.*

SBCA
Structural Building Components Association
6300 Enterprise Lane · Madison, WI 53719
608-274-4849 · sbcindustry.com

Truss Plate Institute of Canada
c/o MiTek Canada
100 Industrial Rd · Bradford, ON L3Z 3G7
905-952-2900 · tpic.ca

CANADAB3 190301

This document summarizes the information provided in Section B3C of the 2014 Edition of Building Component Safety Information BCSI CANADA - Guide to Good Practice for Handling, Installing, Restraining & Bracing of Metal Plate Connected Wood Trusses
Copyright © 2019 Structural Building Components Association and Truss Plate Institute of Canada. All Rights Reserved. This guide or any part thereof may not be reproduced in any form without the written permission of the publishers. Printed in the United States of America.
Ce document résume les renseignements fournis dans l'article B3C de l'édition 2014 de BCSI CANADA - Guide to Good Practice for Handling, Installing, Restraining & Bracing of Metal Plate Connected Wood Trusses

RETENUE ET CONTREVENTEMENT PERMANENTS DES MEMBRURES ET DES MEMBRURES D'ÂME

Les portées de 18,3m (60 pi) et plus peuvent exiger un contreventement permanent complexe. Veuillez toujours consulter un ingénieur professionnel.