CORPORATION OF THE CITY OF OSHAWA
TRUE COPY
OF PERMIT PLANS
Oct 30 2023
PER:
CHIEF BUILDING OFFICIAL

JOB NAME	TRUSS NAME	QUANTITY	PLY	JOB DESC.	DRWG NO.
IM0723-093	J02A	2	1	TRUSS DESC.	MHP 23030

Version 8.630 S Mar 22 2023 MiTek Industries, Inc. Fri Jul 14 07:35:59 2023 Page 1
ID:bcGHXsLhLjMpVeVc_4eeDgzAk?y-148LgimlH?koM1DbU1CmzeDY5d2K1OBfQLjxcOyyE7U

Scale = 1:18.7

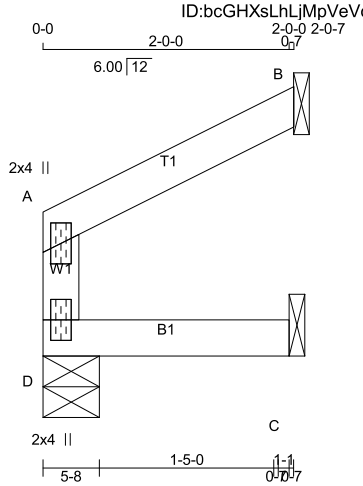

TOTAL WEIGHT = 2 X 6 = 12 lb

[M][F]

LUMBER
N. L. G. A. RULES

CHORDS	SIZE		LUMBER	DESCR.
D - A	2x4	DRY	No.2	SPF
A - B	2x4	DRY	No.2	SPF
D - C	2x4	DRY	No.2	SPF

DRY: SEASONED LUMBER.

PLATES (table is in inches)

JT	TYPE	PLATES	W	LEN	Y	X
A	TMV+p	MT20	2.0	4.0		
D	BMV1+p	MT20	2.0	4.0		

DIMENSIONS, SUPPORTS AND LOADINGS SPECIFIED BY FABRICATOR TO BE VERIFIED BY BUILDING DESIGNER

BEARINGS

JT	FACTORED GROSS REACTION VERT	HORZ	MAXIMUM FACTORED GROSS REACTION DOWN	HORZ	UPLIFT	INPUT BRG IN-SX	REQRD BRG IN-SX
D	140	0	140	0	0	5-8	1-8
B	113	0	113	0	0	1-8	1-8
C	27	0	27	0	0	1-8	1-8

SEE MITEK STANDARD DETAIL MSD2015-H FOR CONNECTION TO JOINT(S) B , C

UNFACTORED REACTIONS

JT	1ST LCASE COMBINED	MAX./MIN. COMPONENT REACTIONS SNOW	LIVE	PERM.LIVE	WIND	DEAD	SOIL
D	98	71 / 0	0 / 0	0 / 0	0 / 0	27 / 0	0 / 0
B	77	65 / 0	0 / 0	0 / 0	0 / 0	12 / 0	0 / 0
C	21	6 / 0	0 / 0	0 / 0	0 / 0	15 / 0	0 / 0

BEARING MATERIAL TO BE SPF NO.2 OR BETTER AT JOINT(S) D

BRACING
TOP CHORD TO BE SHEATHED OR MAX. PURLIN SPACING = 10.00 FT.
MAX. UNBRACED BOTTOM CHORD LENGTH = 10.00 FT OR RIGID CEILING DIRECTLY APPLIED.

ALL PITCH BREAKS AND PERIMETER CORNER JOINTS MUST BE LATERALLY RESTRAINED.

LOADING
TOTAL LOAD CASES: (4)

CHORDS

MEMB. FR-TO	MAX. FACTORED FORCE (LBS)	FACTORED VERT. LOAD (PLF) FROM	TO	LC1 MAX CSI (LC)	MAX. UNBRAC LENGTH
D- A	-130 / 0	0.0	0.0	0.02 (1)	7.81
A- B	-4 / 0	-119.4	-119.4	0.06 (1)	10.00
D- C	0 / 0	-18.2	-18.2	0.03 (1)	10.00

WEBS

MEMB. FR-TO	MAX. FACTORED FORCE (LBS)	MAX CSI (LC)

DESIGN CRITERIA

SPECIFIED LOADS:

TOP CH.	LL	=	34.8	PSF
	DL	=	6.0	PSF
BOT CH.	LL	=	0.0	PSF
	DL	=	7.3	PSF
TOTAL LOAD		=	48.1	PSF

SPACING = 24.0 IN. C/C

THIS TRUSS IS DESIGNED FOR RESIDENTIAL OR SMALL BUILDING REQUIREMENTS OF PART 9, NBCC 2015

THIS DESIGN COMPLIES WITH:
- PART 9 OF BCBC 2018 , NBC-2019AE
- PART 9 OF OBC 2012 (2019 AMENDMENT)
- CSA 086-14
- TPIC 2014

(55 % OF 48.1 P.S.F. G.S.L. PLUS 8.4 P.S.F. RAIN LOAD) EQUALS 34.8 P.S.F. SPECIFIED ROOF LIVE LOAD

ALLOWABLE DEFL.(LL)= L/360 (0.19")
CALCULATED VERT. DEFL.(LL) = L/ 999 (0.00")
ALLOWABLE DEFL.(TL)= L/360 (0.19")
CALCULATED VERT. DEFL.(TL) = L/ 999 (0.00")

CSI: TC=0.06/0.97 (A-B:1) , BC=0.03/0.97 (C-D:1) , WB=0.00/0.97 (n/a:0) , SSI=0.09/1.00 (A-B:1)

DOL LUMBER=1.00 NAIL=1.00 LS BEND=1.10 COMP=1.10 SHEAR=1.10 TENS= 1.10

COMPANION LIVE LOAD FACTOR = 1.00

TRUSS PLATE MANUFACTURER IS NOT RESPONSIBLE FOR QUALITY CONTROL IN THE TRUSS MANUFACTURING PLANT .

NAIL VALUES

PLATE	GRIP(DRY) (PSI) MAX	MIN	SHEAR (PLI) MAX	MIN	SECTION (PLI) MAX	MIN
MT20	650	371	1747	788	1987	1873

PLATE PLACEMENT TOL. = 0.250 inches

PLATE ROTATION TOL. = 5.0 Deg.

JSI GRIP= 0.07 (A) (INPUT = 0.90)
JSI METAL= 0.05 (A) (INPUT = 1.00)

LICENSED PROFESSIONAL ENGINEER
I.MATIJEVIC
100528832
PROVINCE OF ONTARIO
JULY 14, 2023

READ ALL NOTES ON THIS PAGE AND ON THE ENGINEERING NOTES: TRUSSES. THE NOTE PAGE IS AN INTEGRAL PART OF THIS DRAWING AS IT CONTAINS SPECIFICATIONS AND CRITERIA USED IN THE DESIGN OF THIS COMPONENT.

KOTT

CORPORATION OF THE CITY OF OSHAWA
TRUE COPY
OF PERMIT PLANS
Oct 30 2023
PER: C Martin
CHIEF BUILDING OFFICIAL

JOB NAME	TRUSS NAME	QUANTITY	PLY	JOB DESC.	DRWG NO.
IM0723-093	J03	5	1	TRUSS DESC.	MHP 23030

Version 8.630 S Mar 22 2023 MiTek Industries, Inc. Fri Jul 14 07:35:59 2023 Page 1
ID:bcGHXsLhLjMpVeVc_4eeDgzAk?y-148LgimlH?koM1DbU1CmzeDWdd0f1OBfQLjxcOyyE7U

Scale = 1:18.7

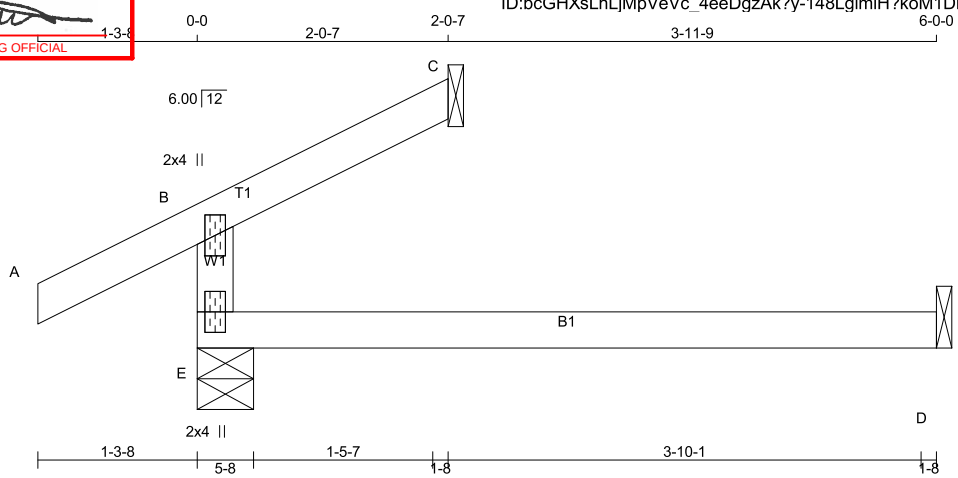

TOTAL WEIGHT = 5 X 12 = 60 lb

[M]

LUMBER

N. L. G. A. RULES

CHORDS	SIZE		LUMBER	DESCR.
E - B	2x4	DRY	No.2	SPF
A - C	2x4	DRY	No.2	SPF
E - D	2x4	DRY	No.2	SPF

DRY: SEASONED LUMBER.

PLATES (table is in inches)

JT	TYPE	PLATES	W	LEN	Y	X
B	TMV+p	MT20	2.0	4.0		
E	BMV1+p	MT20	2.0	4.0		

DIMENSIONS, SUPPORTS AND LOADINGS SPECIFIED BY FABRICATOR TO BE VERIFIED BY BUILDING DESIGNER

BEARINGS

JT	FACTORED GROSS REACTION VERT	HORZ	MAXIMUM FACTORED GROSS REACTION DOWN	HORZ	UPLIFT	INPUT BRG IN-SX	REQRD BRG IN-SX
E	378	0	378	0	0	5-8	1-8
C	92	0	92	0	0	1-8	1-8
D	45	0	51	0	0	1-8	1-8

SEE MITEK STANDARD DETAIL MSD2015-H FOR CONNECTION TO JOINT(S) C , D

UNFACTORED REACTIONS

JT	1ST LCASE COMBINED	MAX./MIN. COMPONENT REACTIONS SNOW	LIVE	PERM.LIVE	WIND	DEAD	SOIL
E	266	183 / 0	0 / 0	0 / 0	0 / 0	83 / 0	0 / 0
C	63	54 / 0	0 / 0	0 / 0	0 / 0	9 / 0	0 / 0
D	36	0 / 0	0 / 0	0 / 0	0 / 0	36 / 0	0 / 0

BEARING MATERIAL TO BE SPF NO.2 OR BETTER AT JOINT(S) E, C

BRACING

TOP CHORD TO BE SHEATHED OR MAX. PURLIN SPACING = 6.25 FT.
MAX. UNBRACED BOTTOM CHORD LENGTH = 10.00 FT OR RIGID CEILING DIRECTLY APPLIED.

ALL PITCH BREAKS AND PERIMETER CORNER JOINTS MUST BE LATERALLY RESTRAINED.

LOADING

TOTAL LOAD CASES: (4)

CHORDS MEMB. FR-TO	MAX. FACTORED FORCE (LBS)	FACTORED VERT. LOAD (PLF) FROM	TO	LC1 MAX CSI (LC)	MAX. UNBRAC LENGTH FR-TO	WEBS MEMB.	MAX. FACTORED FORCE (LBS)	MAX CSI (LC)
E- B	-313 / 0	0.0	0.0	0.13 (4)	7.81			
A- B	0 / 36	-119.4	-119.4	0.16 (1)	10.00			
B- C	-13 / 0	-119.4	-119.4	0.08 (1)	6.25			
E- D	0 / 0	-18.2	-18.2	0.13 (4)	10.00			

DESIGN CRITERIA

SPECIFIED LOADS:

TOP	CH.	LL	=	34.8	PSF
		DL	=	6.0	PSF
BOT	CH.	LL	=	0.0	PSF
		DL	=	7.3	PSF
TOTAL	LOAD		=	48.1	PSF

SPACING = 24.0 IN. C/C

THIS TRUSS IS DESIGNED FOR RESIDENTIAL OR SMALL BUILDING REQUIREMENTS OF PART 9, NBCC 2015

THIS DESIGN COMPLIES WITH:
- PART 9 OF BCBC 2018 , NBC-2019AE
- PART 9 OF OBC 2012 (2019 AMENDMENT)
- CSA 086-14
- TPIC 2014

DESIGN ASSUMPTIONS
-OVERHANG NOT TO BE ALTERED OR CUT OFF.

(55 % OF 48.1 P.S.F. G.S.L. PLUS 8.4 P.S.F. RAIN LOAD) EQUALS 34.8 P.S.F. SPECIFIED ROOF LIVE LOAD

ALLOWABLE DEFL.(LL)= L/360 (0.20")
CALCULATED VERT. DEFL.(LL) = L/ 999 (0.00")
ALLOWABLE DEFL.(TL)= L/360 (0.20")
CALCULATED VERT. DEFL.(TL) = L/ 999 (0.03")

CSI: TC=0.16/0.97 (A-B:1) , BC=0.13/0.97 (D-E:4) , WB=0.00/0.97 (n/a:0) , SSI=0.11/1.00 (A-B:1)

DOL LUMBER=1.00 NAIL=1.00 LS BEND=1.10 COMP=1.10 SHEAR=1.10 TENS= 1.10

COMPANION LIVE LOAD FACTOR = 1.00

TRUSS PLATE MANUFACTURER IS NOT RESPONSIBLE FOR QUALITY CONTROL IN THE TRUSS MANUFACTURING PLANT .

NAIL VALUES

PLATE	GRIP(DRY) (PSI) MAX	MIN	SHEAR (PLI) MAX	MIN	SECTION (PLI) MAX	MIN
MT20	650	371	1747	788	1987	1873

PLATE PLACEMENT TOL. = 0.250 inches

PLATE ROTATION TOL. = 5.0 Deg.

JSI GRIP= 0.18 (B) (INPUT = 0.90)
JSI METAL= 0.13 (B) (INPUT = 1.00)

LICENSED PROFESSIONAL ENGINEER
I.MATIJEVIC
100528832
PROVINCE OF ONTARIO
JULY 14, 2023

READ ALL NOTES ON THIS PAGE AND ON THE ENGINEERING NOTES: TRUSSES. THE NOTE PAGE IS AN INTEGRAL PART OF THIS DRAWING AS IT CONTAINS SPECIFICATIONS AND CRITERIA USED IN THE DESIGN OF THIS COMPONENT.

KOTT

CORPORATION OF THE CITY OF OSHAWA
TRUE COPY
OF PERMIT PLANS
Oct 30 2023
PER:
CHIEF BUILDING OFFICIAL

JOB NAME	TRUSS NAME	QUANTITY	PLY	JOB DESC.	DRWG NO.
IM0723-093	J04	5	1	TRUSS DESC.	MHP 23030

Version 8.630 S Mar 22 2023 MiTek Industries, Inc. Fri Jul 14 07:36:00 2023 Page 1
ID:bcGHXsLhLjMpVeVc_4eeDgzAk?y-VGijt2nN2Jsf_Bon2kj?Vslee1LumrQoe?TV8qyyE7T

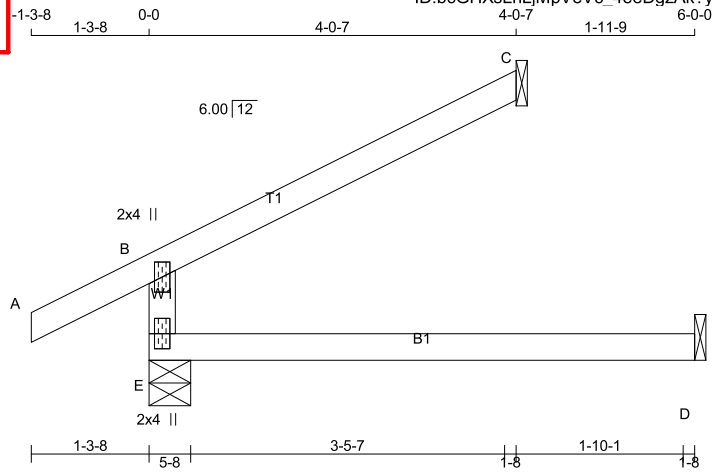

TOTAL WEIGHT = 5 X 15 = 73 lb

[M]

LUMBER
N. L. G. A. RULES

CHORDS	SIZE		LUMBER	DESCR.
E - B	2x4	DRY	No.2	SPF
A - C	2x4	DRY	No.2	SPF
E - D	2x4	DRY	No.2	SPF

DRY: SEASONED LUMBER.

PLATES (table is in inches)

JT	TYPE	PLATES	W	LEN	Y	X
B	TMV+p	MT20	2.0	4.0		
E	BMV1+p	MT20	2.0	4.0		

DIMENSIONS, SUPPORTS AND LOADINGS SPECIFIED BY FABRICATOR TO BE VERIFIED BY BUILDING DESIGNER

BEARINGS

JT	FACTORED GROSS REACTION VERT	HORZ	MAXIMUM FACTORED GROSS REACTION DOWN	HORZ	UPLIFT	INPUT BRG IN-SX	REQRD BRG IN-SX
E	528	0	528	0	0	5-8	1-8
C	181	0	181	0	0	1-8	1-8
D	45	0	51	0	0	1-8	1-8

SEE MITEK STANDARD DETAIL MSD2015-H FOR CONNECTION TO JOINT(S) C , D

UNFACTORED REACTIONS

JT	1ST LCASE COMBINED	MAX./MIN. COMPONENT REACTIONS SNOW	LIVE	PERM.LIVE	WIND	DEAD	SOIL
E	368	270 / 0	0 / 0	0 / 0	0 / 0	98 / 0	0 / 0
C	124	105 / 0	0 / 0	0 / 0	0 / 0	18 / 0	0 / 0
D	36	0 / 0	0 / 0	0 / 0	0 / 0	36 / 0	0 / 0

BEARING MATERIAL TO BE SPF NO.2 OR BETTER AT JOINT(S) E, C

BRACING
TOP CHORD TO BE SHEATHED OR MAX. PURLIN SPACING = 6.25 FT.
MAX. UNBRACED BOTTOM CHORD LENGTH = 10.00 FT OR RIGID CEILING DIRECTLY APPLIED.

ALL PITCH BREAKS AND PERIMETER CORNER JOINTS MUST BE LATERALLY RESTRAINED.

LOADING
TOTAL LOAD CASES: (4)

CHORDS

MEMB. FR-TO	MAX. FACTORED FORCE (LBS)	FACTORED VERT. LOAD (PLF) FROM	TO	LC1 MAX CSI (LC)	MAX. UNBRAC LENGTH
E- B	-463 / 0	0.0	0.0	0.13 (4)	7.81
A- B	0 / 36	-119.4	-119.4	0.16 (1)	10.00
B- C	-27 / 0	-119.4	-119.4	0.33 (1)	6.25
E- D	0 / 0	-18.2	-18.2	0.13 (4)	10.00

WEBS

MEMB. FR-TO	MAX. FACTORED FORCE (LBS)	MAX CSI (LC)

DESIGN CRITERIA

SPECIFIED LOADS:

TOP CH.	LL	=	34.8	PSF
	DL	=	6.0	PSF
BOT CH.	LL	=	0.0	PSF
	DL	=	7.3	PSF
TOTAL LOAD		=	48.1	PSF

SPACING = 24.0 IN. C/C

THIS TRUSS IS DESIGNED FOR RESIDENTIAL OR SMALL BUILDING REQUIREMENTS OF PART 9, NBCC 2015

THIS DESIGN COMPLIES WITH:
- PART 9 OF BCBC 2018 , NBC-2019AE
- PART 9 OF OBC 2012 (2019 AMENDMENT)
- CSA 086-14
- TPIC 2014

DESIGN ASSUMPTIONS
-OVERHANG NOT TO BE ALTERED OR CUT OFF.

(55 % OF 48.1 P.S.F. G.S.L. PLUS 8.4 P.S.F. RAIN LOAD) EQUALS 34.8 P.S.F. SPECIFIED ROOF LIVE LOAD

ALLOWABLE DEFL.(LL)= L/360 (0.20")
CALCULATED VERT. DEFL.(LL) = L/ 999 (0.00")
ALLOWABLE DEFL.(TL)= L/360 (0.20")
CALCULATED VERT. DEFL.(TL) = L/ 999 (0.03")

CSI: TC=0.33/0.97 (B-C:1) , BC=0.13/0.97 (D-E:4) , WB=0.00/0.97 (n/a:0) , SSI=0.21/1.00 (B-C:1)

DOL LUMBER=1.00 NAIL=1.00 LS BEND=1.10 COMP=1.10 SHEAR=1.10 TENS= 1.10

COMPANION LIVE LOAD FACTOR = 1.00

TRUSS PLATE MANUFACTURER IS NOT RESPONSIBLE FOR QUALITY CONTROL IN THE TRUSS MANUFACTURING PLANT .

NAIL VALUES

PLATE	GRIP(DRY) (PSI) MAX	MIN	SHEAR (PLI) MAX	MIN	SECTION (PLI) MAX	MIN
MT20	650	371	1747	788	1987	1873

PLATE PLACEMENT TOL. = 0.250 inches

PLATE ROTATION TOL. = 5.0 Deg.

JSI GRIP= 0.26 (B) (INPUT = 0.90)
JSI METAL= 0.19 (B) (INPUT = 1.00)

LICENSED PROFESSIONAL ENGINEER
I.MATIJEVIC
100528832
PROVINCE OF ONTARIO
JULY 14, 2023

READ ALL NOTES ON THIS PAGE AND ON THE ENGINEERING NOTES: TRUSSES. THE NOTE PAGE IS AN INTEGRAL PART OF THIS DRAWING AS IT CONTAINS SPECIFICATIONS AND CRITERIA USED IN THE DESIGN OF THIS COMPONENT.

KOTT

CORPORATION OF THE CITY OF OSHAWA
TRUE COPY
OF PERMIT PLANS
Oct 30 2023
PER:
CHIEF BUILDING OFFICIAL

JOB NAME	TRUSS NAME	QUANTITY	PLY	JOB DESC.	DRWG NO.
IM0723-093	J05	13	1	TRUSS DESC.	MHP 23030

Version 8.630 S Mar 22 2023 MiTek Industries, Inc. Fri Jul 14 07:36:00 2023 Page 1
ID:bcGHXsLhLjMpVeVc_4eeDgzAk?y-VGijt2nN2Jsf_Bon2kj?VslYL1LumrQoe?TV8qyyE7T

Scale = 1:34.0

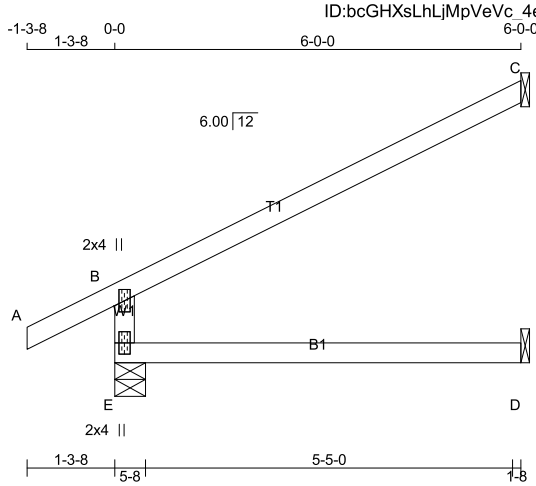

TOTAL WEIGHT = 13 X 17 = 222 lb

LUMBER
N. L. G. A. RULES

CHORDS	SIZE		LUMBER	DESCR.
E - B	2x4	DRY	No.2	SPF
A - C	2x4	DRY	No.2	SPF
E - D	2x4	DRY	No.2	SPF

DRY: SEASONED LUMBER.

PLATES (table is in inches)

JT	TYPE	PLATES	W	LEN	Y	X
B	TMV+p	MT20	2.0	4.0		
E	BMV1+p	MT20	2.0	4.0		

DIMENSIONS, SUPPORTS AND LOADINGS SPECIFIED BY FABRICATOR TO BE VERIFIED BY BUILDING DESIGNER

BEARINGS

JT	FACTORED GROSS REACTION VERT	HORZ	MAXIMUM FACTORED GROSS REACTION DOWN	HORZ	UPLIFT	INPUT BRG IN-SX	REQRD BRG IN-SX
E	674	0	674	0	0	5-8	1-8
C	269	0	269	0	0	1-8	1-8
D	45	0	51	0	0	1-8	1-8

SEE MITEK STANDARD DETAIL MSD2015-H FOR CONNECTION TO JOINT(S) C , D

UNFACTORED REACTIONS

JT	1ST LCASE COMBINED	MAX./MIN. COMPONENT REACTIONS SNOW	LIVE	PERM.LIVE	WIND	DEAD	SOIL
E	468	355 / 0	0 / 0	0 / 0	0 / 0	113 / 0	0 / 0
C	184	157 / 0	0 / 0	0 / 0	0 / 0	27 / 0	0 / 0
D	36	0 / 0	0 / 0	0 / 0	0 / 0	36 / 0	0 / 0

BEARING MATERIAL TO BE SPF NO.2 OR BETTER AT JOINT(S) E

BRACING
TOP CHORD TO BE SHEATHED OR MAX. PURLIN SPACING = 6.25 FT.
MAX. UNBRACED BOTTOM CHORD LENGTH = 10.00 FT OR RIGID CEILING DIRECTLY APPLIED.

ALL PITCH BREAKS AND PERIMETER CORNER JOINTS MUST BE LATERALLY RESTRAINED.

LOADING
TOTAL LOAD CASES: (4)

CHORDS MEMB. FR-TO	MAX. FACTORED FORCE (LBS)	FACTORED VERT. LOAD (PLF) FROM	TO	LC1 MAX CSI (LC)	MAX. UNBRAC LENGTH	WEBS MEMB. FR-TO	MAX. FACTORED FORCE (LBS)	MAX CSI (LC)
E- B	-610 / 0	0.0	0.0	0.13 (4)	7.81			
A- B	0 / 36	-119.4	-119.4	0.16 (1)	10.00			
B- C	-40 / 0	-119.4	-119.4	0.73 (1)	6.25			
E- D	0 / 0	-18.2	-18.2	0.13 (4)	10.00			

DESIGN CRITERIA

SPECIFIED LOADS:

TOP CH.	LL	=	34.8	PSF
	DL	=	6.0	PSF
BOT CH.	LL	=	0.0	PSF
	DL	=	7.3	PSF
TOTAL LOAD		=	48.1	PSF

SPACING = 24.0 IN. C/C

THIS TRUSS IS DESIGNED FOR RESIDENTIAL OR SMALL BUILDING REQUIREMENTS OF PART 9, NBCC 2015

THIS DESIGN COMPLIES WITH:
- PART 9 OF BCBC 2018 , NBC-2019AE
- PART 9 OF OBC 2012 (2019 AMENDMENT)
- CSA 086-14
- TPIC 2014

DESIGN ASSUMPTIONS
-OVERHANG NOT TO BE ALTERED OR CUT OFF.

(55 % OF 48.1 P.S.F. G.S.L. PLUS 8.4 P.S.F. RAIN LOAD) EQUALS 34.8 P.S.F. SPECIFIED ROOF LIVE LOAD

ALLOWABLE DEFL.(LL)= L/360 (0.20")
CALCULATED VERT. DEFL.(LL) = L/ 999 (0.00")
ALLOWABLE DEFL.(TL)= L/360 (0.20")
CALCULATED VERT. DEFL.(TL) = L/ 999 (0.03")

CSI: TC=0.73/0.97 (B-C:1) , BC=0.13/0.97 (D-E:4) , WB=0.00/0.97 (n/a:0) , SSI=0.31/1.00 (B-C:1)

DOL LUMBER=1.00 NAIL=1.00 LS BEND=1.10 COMP=1.10 SHEAR=1.10 TENS= 1.10

COMPANION LIVE LOAD FACTOR = 1.00

TRUSS PLATE MANUFACTURER IS NOT RESPONSIBLE FOR QUALITY CONTROL IN THE TRUSS MANUFACTURING PLANT .

NAIL VALUES

PLATE	GRIP(DRY) (PSI) MAX	MIN	SHEAR (PLI) MAX	MIN	SECTION (PLI) MAX	MIN
MT20	650	371	1747	788	1987	1873

PLATE PLACEMENT TOL. = 0.250 inches

PLATE ROTATION TOL. = 5.0 Deg.

JSI GRIP= 0.34 (B) (INPUT = 0.90)
JSI METAL= 0.25 (B) (INPUT = 1.00)

LICENSED PROFESSIONAL ENGINEER
I.MATIJEVIC
100528832
PROVINCE OF ONTARIO
JULY 14, 2023

READ ALL NOTES ON THIS PAGE AND ON THE ENGINEERING NOTES: TRUSSES. THE NOTE PAGE IS AN INTEGRAL PART OF THIS DRAWING AS IT CONTAINS SPECIFICATIONS AND CRITERIA USED IN THE DESIGN OF THIS COMPONENT.

KOTT

CORPORATION OF THE CITY OF OSHAWA
TRUE COPY
OF PERMIT PLANS
Oct 30 2023
PER:
CHIEF BUILDING OFFICIAL

JOB NAME	TRUSS NAME	QUANTITY	PLY	JOB DESC.	DRWG NO.
IM0723-093	T01	1	1	TRUSS DESC.	MHP 23030

Version 8.630 S Mar 22 2023 MiTek Industries, Inc. Fri Jul 14 07:36:01 2023 Page 1
ID:bcGHXsLhLjMpVeVc_4eeDgzAk?y-zTG55Oo?oc_WbLNzbSFE23InsQa1V93xtfC2hGyyE7S

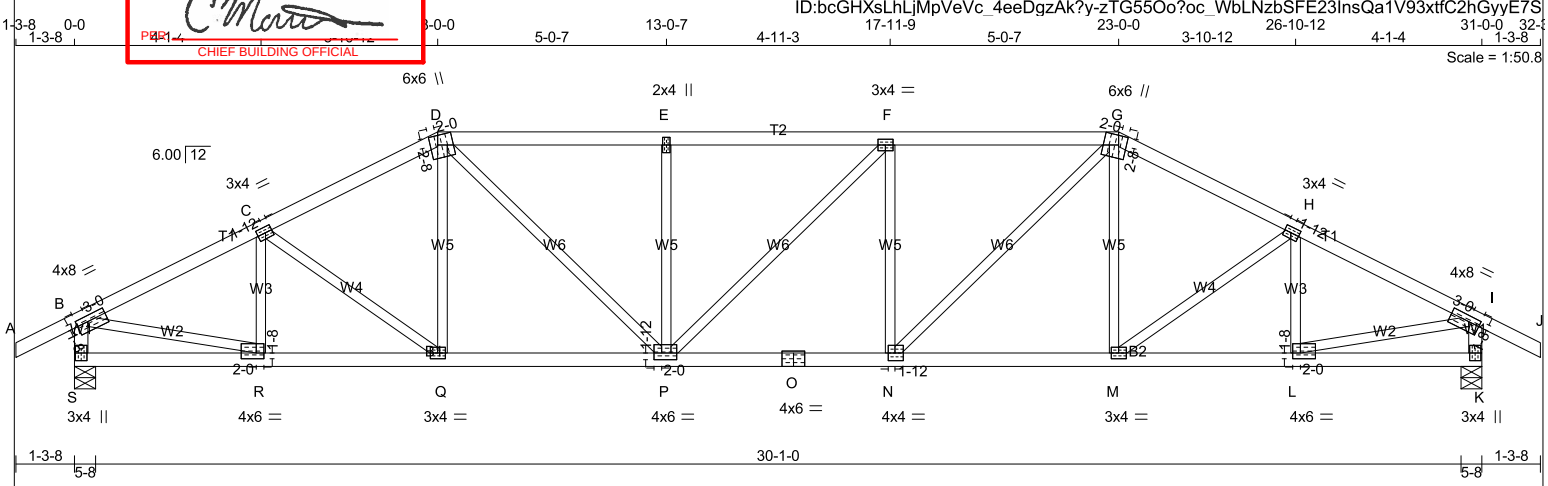

TOTAL WEIGHT = 127 lb

[M][F]

LUMBER

N. L. G. A. RULES

CHORDS	SIZE		LUMBER	DESCR.
A - D	2x4	DRY	No.2	SPF
D - G	2x4	DRY	No.2	SPF
G - J	2x4	DRY	No.2	SPF
S - B	2x4	DRY	No.2	SPF
K - I	2x4	DRY	No.2	SPF
S - O	2x4	DRY	No.2	SPF
O - K	2x4	DRY	No.2	SPF
ALL WEBS EXCEPT	2x3	DRY	No.2	SPF

DRY: SEASONED LUMBER.

PLATES (table is in inches)

JT	TYPE	PLATES	W	LEN	Y	X
B	TMVW-t	MT20	4.0	8.0	1.50	3.00
C	TMWW-t	MT20	3.0	4.0	1.50	1.75
D	TTWW+m	MT20	6.0	6.0	2.50	2.00
E	TMW+w	MT20	2.0	4.0		
F	TMWW-t	MT20	3.0	4.0		
G	TTWW+m	MT20	6.0	6.0	2.50	2.00
H	TMWW-t	MT20	3.0	4.0	1.50	1.75
I	TMVW-t	MT20	4.0	8.0	1.50	3.00
K	BMV1+p	MT20	3.0	4.0		
L	BMWW-t	MT20	4.0	6.0	1.50	2.00
M	BMWW-t	MT20	3.0	4.0		
N	BMWW-t	MT20	4.0	4.0	2.00	1.75
O	BS-t	MT20	4.0	6.0		
P	BMWWW-t	MT20	4.0	6.0	1.75	2.00
Q	BMWW-t	MT20	3.0	4.0		
R	BMWW-t	MT20	4.0	6.0	1.50	2.00
S	BMV1+p	MT20	3.0	4.0		

DIMENSIONS, SUPPORTS AND LOADINGS SPECIFIED BY FABRICATOR TO BE VERIFIED BY BUILDING DESIGNER

BEARINGS

JT	FACTORED GROSS REACTION VERT	HORZ	MAXIMUM FACTORED GROSS REACTION DOWN	HORZ	UPLIFT	INPUT BRG IN-SX	REQRD BRG IN-SX
S	2296	0	2296	0	0	5-8	3-15
K	2296	0	2296	0	0	5-8	3-15

UNFACTORED REACTIONS

JT	1ST LCASE COMBINED	MAX./MIN. COMPONENT REACTIONS SNOW	LIVE	PERM.LIVE	WIND	DEAD	SOIL
S	1602	1174 / 0	0 / 0	0 / 0	0 / 0	429 / 0	0 / 0
K	1602	1174 / 0	0 / 0	0 / 0	0 / 0	429 / 0	0 / 0

BEARING MATERIAL TO BE SPF NO.2 OR BETTER AT JOINT(S) S, K

BRACING

TOP CHORD TO BE SHEATHED OR MAX. PURLIN SPACING = 3.35 FT.
MAX. UNBRACED BOTTOM CHORD LENGTH = 10.00 FT OR RIGID CEILING DIRECTLY APPLIED.

ALL PITCH BREAKS AND PERIMETER CORNER JOINTS MUST BE LATERALLY RESTRAINED.

LOADING

TOTAL LOAD CASES: (4)

CHORDS

MEMB. FR-TO	MAX. FACTORED FORCE (LBS)	FACTORED VERT. LOAD (PLF) FROM	TO	LC1 CSI (LC)	MAX UNBRAC LENGTH
A- B	0 / 36	-119.4	-119.4	0.16 (1)	10.00
B- C	-2972 / 0	-119.4	-119.4	0.33 (1)	3.74
C- D	-2942 / 0	-119.4	-119.4	0.32 (1)	3.77
D- E	-3367 / 0	-119.4	-119.4	0.49 (1)	3.35
E- F	-3367 / 0	-119.4	-119.4	0.45 (1)	3.40
F- G	-3369 / 0	-119.4	-119.4	0.49 (1)	3.35
G- H	-2942 / 0	-119.4	-119.4	0.32 (1)	3.77
H- I	-2972 / 0	-119.4	-119.4	0.33 (1)	3.74
I- J	0 / 36	-119.4	-119.4	0.16 (1)	10.00
S- B	-2256 / 0	0.0	0.0	0.23 (1)	5.60
K- I	-2256 / 0	0.0	0.0	0.23 (1)	5.60
S- R	0 / 0	-18.2	-18.2	0.07 (4)	10.00
R- Q	0 / 2678	-18.2	-18.2	0.48 (1)	10.00
Q- P	0 / 2611	-18.2	-18.2	0.47 (1)	10.00
P- O	0 / 3369	-18.2	-18.2	0.59 (1)	10.00
O- N	0 / 3369	-18.2	-18.2	0.59 (1)	10.00
N- M	0 / 2611	-18.2	-18.2	0.47 (1)	10.00
M- L	0 / 2678	-18.2	-18.2	0.48 (1)	10.00
L- K	0 / 0	-18.2	-18.2	0.07 (4)	10.00

WEBS

MEMB. FR-TO	MAX. FACTORED FORCE (LBS)	MAX CSI (LC)
R- C	-499 / 0	0.09 (1)
Q- D	0 / 148	0.04 (4)
P- D	0 / 1051	0.24 (1)
P- E	-643 / 0	0.25 (1)
P- F	-3 / 0	0.00 (1)
N- F	-644 / 0	0.25 (1)
N- G	0 / 1055	0.24 (1)
M- G	0 / 146	0.04 (4)
M- H	-87 / 0	0.03 (1)
L- H	-499 / 0	0.09 (1)
B- R	0 / 2736	0.62 (1)
L- I	0 / 2736	0.62 (1)

DESIGN CRITERIA

SPECIFIED LOADS:

TOP CH.	LL	=	34.8	PSF
	DL	=	6.0	PSF
BOT CH.	LL	=	0.0	PSF
	DL	=	7.3	PSF
TOTAL LOAD		=	48.1	PSF

SPACING = 24.0 IN. C/C

LOADING IN FLAT SECTION BASED ON A SLOPE OF 2.00/12 MINIMUM

THIS TRUSS IS DESIGNED FOR RESIDENTIAL OR SMALL BUILDING REQUIREMENTS OF PART 9, NBCC 2015

THIS DESIGN COMPLIES WITH:
- PART 9 OF BCBC 2018 , NBC-2019AE
- PART 9 OF OBC 2012 (2019 AMENDMENT)
- CSA 086-14
- TPIC 2014

(55 % OF 48.1 P.S.F. G.S.L. PLUS 8.4 P.S.F. RAIN LOAD) EQUALS 34.8 P.S.F. SPECIFIED ROOF LIVE LOAD

ALLOWABLE DEFL.(LL)= L/360 (1.03")
CALCULATED VERT. DEFL.(LL) = L/ 999 (0.18")
ALLOWABLE DEFL.(TL)= L/360 (1.03")
CALCULATED VERT. DEFL.(TL) = L/ 999 (0.32")

CSI: TC=0.49/0.97 (D-E:1) , BC=0.59/0.97 (N-P:1) , WB=0.62/0.97 (I-L:1) , SSI=0.28/1.00 (F-G:1)

DOL LUMBER=1.00 NAIL=1.00 LS BEND=1.10 COMP=1.10 SHEAR=1.10 TENS= 1.10

COMPANION LIVE LOAD FACTOR = 1.00

TRUSS PLATE MANUFACTURER IS NOT RESPONSIBLE FOR QUALITY CONTROL IN THE TRUSS MANUFACTURING PLANT .

NAIL VALUES

PLATE	GRIP(DRY) (PSI) MAX	MIN	SHEAR (PLI) MAX	MIN	SECTION (PLI) MAX	MIN
MT20	650	371	1747	788	1987	1873

PLATE PLACEMENT TOL. = 0.250 inches

PLATE ROTATION TOL. = 5.0 Deg.

JSI GRIP= 0.90 (K) (INPUT = 0.90)
JSI METAL= 0.76 (O) (INPUT = 1.00)

LICENSED PROFESSIONAL ENGINEER
I.MATIJEVIC
100528832
PROVINCE OF ONTARIO
JULY 14, 2023

READ ALL NOTES ON THIS PAGE AND ON THE ENGINEERING NOTES: TRUSSES. THE NOTE PAGE IS AN INTEGRAL PART OF THIS DRAWING AS IT CONTAINS SPECIFICATIONS AND CRITERIA USED IN THE DESIGN OF THIS COMPONENT.

KOTT

CORPORATION OF THE CITY OF OSHAWA
TRUE COPY
OF PERMIT PLANS
Oct 30 2023
PER:
CHIEF BUILDING OFFICIAL

JOB NAME	TRUSS NAME	QUANTITY	PLY	JOB DESC.	DRWG NO.
IM0723-093	T02	1	1	TRUSS DESC.	MHP 23030

Version 8.630 S Mar 22 2023 MiTek Industries, Inc. Fri Jul 14 07:36:02 2023 Page 1
ID:bcGHXsLhLjMpVeVc_4eeDgzAk?y-RfqTlkodZw6NDUyA99mTbHrwFqxPEc256JybDjyyE7R

Scale = 1:55.3

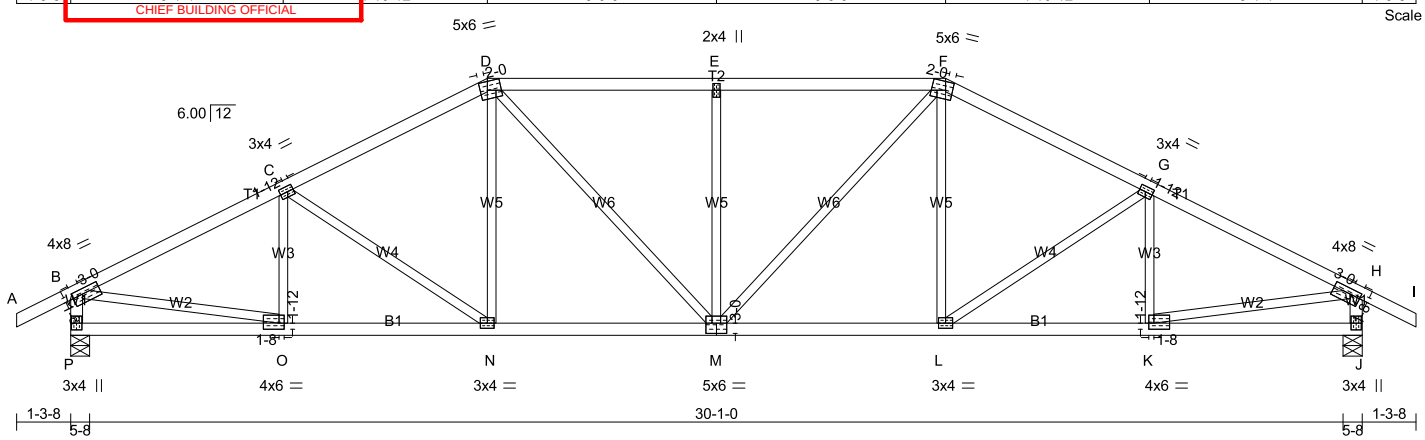

TOTAL WEIGHT = 127 lb

[M][F]

LUMBER

N. L. G. A. RULES

CHORDS	SIZE		LUMBER	DESCR.
A - D	2x4	DRY	No.2	SPF
D - F	2x4	DRY	No.2	SPF
F - I	2x4	DRY	No.2	SPF
P - B	2x4	DRY	No.2	SPF
J - H	2x4	DRY	No.2	SPF
P - M	2x4	DRY	No.2	SPF
M - J	2x4	DRY	No.2	SPF
ALL WEBS EXCEPT	2x3	DRY	No.2	SPF

DRY: SEASONED LUMBER.

PLATES (table is in inches)

JT	TYPE	PLATES	W	LEN	Y	X
B	TMVW-t	MT20	4.0	8.0	1.50	3.00
C	TMWW-t	MT20	3.0	4.0	1.50	1.75
D	TTWW-m	MT20	5.0	6.0	2.50	2.00
E	TMW+w	MT20	2.0	4.0		
F	TTWW-m	MT20	5.0	6.0	2.50	2.00
G	TMWW-t	MT20	3.0	4.0	1.50	1.75
H	TMVW-t	MT20	4.0	8.0	1.50	3.00
J	BMV1+p	MT20	3.0	4.0		
K	BMWW-t	MT20	4.0	6.0	1.75	1.50
L	BMWW-t	MT20	3.0	4.0		
M	BSWWW-l	MT20	5.0	6.0	3.00	3.00
N	BMWW-t	MT20	3.0	4.0		
O	BMWW-t	MT20	4.0	6.0	1.75	1.50
P	BMV1+p	MT20	3.0	4.0		

DIMENSIONS, SUPPORTS AND LOADINGS SPECIFIED BY FABRICATOR TO BE VERIFIED BY BUILDING DESIGNER

BEARINGS

JT	FACTORED GROSS REACTION VERT	HORZ	MAXIMUM FACTORED GROSS REACTION DOWN	HORZ	UPLIFT	INPUT BRG IN-SX	REQRD BRG IN-SX
P	2296	0	2296	0	0	5-8	3-15
J	2296	0	2296	0	0	5-8	3-15

UNFACTORED REACTIONS

JT	1ST LCASE COMBINED	MAX./MIN. COMPONENT REACTIONS SNOW	LIVE	PERM.LIVE	WIND	DEAD	SOIL
P	1602	1174 / 0	0 / 0	0 / 0	0 / 0	429 / 0	0 / 0
J	1602	1174 / 0	0 / 0	0 / 0	0 / 0	429 / 0	0 / 0

BEARING MATERIAL TO BE SPF NO.2 OR BETTER AT JOINT(S) P, J

BRACING

TOP CHORD TO BE SHEATHED OR MAX. PURLIN SPACING = 3.45 FT.
MAX. UNBRACED BOTTOM CHORD LENGTH = 10.00 FT OR RIGID CEILING DIRECTLY APPLIED.

ALL PITCH BREAKS AND PERIMETER CORNER JOINTS MUST BE LATERALLY RESTRAINED.

LOADING

TOTAL LOAD CASES: (4)

CHORDS

MEMB. FR-TO	MAX. FACTORED FORCE (LBS)	FACTORED VERT. LOAD (PLF) FROM	TO	LC1 CSI (LC)	MAX UNBRAC LENGTH
A- B	0 / 36	-119.4	-119.4	0.16 (1)	10.00
B- C	-3069 / 0	-119.4	-119.4	0.51 (1)	3.49
C- D	-2793 / 0	-119.4	-119.4	0.48 (1)	3.67
D- E	-2888 / 0	-119.4	-119.4	0.58 (1)	3.45
E- F	-2888 / 0	-119.4	-119.4	0.58 (1)	3.45
F- G	-2793 / 0	-119.4	-119.4	0.48 (1)	3.67
G- H	-3069 / 0	-119.4	-119.4	0.51 (1)	3.49
H- I	0 / 36	-119.4	-119.4	0.16 (1)	10.00
P- B	-2251 / 0	0.0	0.0	0.23 (1)	5.60
J- H	-2251 / 0	0.0	0.0	0.23 (1)	5.60
P- O	0 / 0	-18.2	-18.2	0.10 (4)	10.00
O- N	0 / 2771	-18.2	-18.2	0.52 (1)	10.00
N- M	0 / 2474	-18.2	-18.2	0.47 (1)	10.00
M- L	0 / 2474	-18.2	-18.2	0.47 (1)	10.00
L- K	0 / 2771	-18.2	-18.2	0.52 (1)	10.00
K- J	0 / 0	-18.2	-18.2	0.10 (4)	10.00

WEBS

MEMB. FR-TO	MAX. FACTORED FORCE (LBS)	MAX CSI (LC)
O- C	-380 / 0	0.08 (1)
N- C	-367 / 0	0.23 (1)
N- D	0 / 319	0.07 (1)
D- M	0 / 606	0.14 (1)
M- E	-804 / 0	0.48 (1)
M- F	0 / 606	0.14 (1)
L- F	0 / 319	0.07 (1)
L- G	-367 / 0	0.23 (1)
K- G	-380 / 0	0.08 (1)
B- O	0 / 2810	0.63 (1)
K- H	0 / 2810	0.63 (1)

DESIGN CRITERIA

SPECIFIED LOADS:

TOP CH.	LL	=	34.8	PSF
	DL	=	6.0	PSF
BOT CH.	LL	=	0.0	PSF
	DL	=	7.3	PSF
TOTAL LOAD		=	48.1	PSF

SPACING = 24.0 IN. C/C

LOADING IN FLAT SECTION BASED ON A SLOPE OF 2.00/12 MINIMUM

THIS TRUSS IS DESIGNED FOR RESIDENTIAL OR SMALL BUILDING REQUIREMENTS OF PART 9, NBCC 2015

THIS DESIGN COMPLIES WITH:
- PART 9 OF BCBC 2018 , NBC-2019AE
- PART 9 OF OBC 2012 (2019 AMENDMENT)
- CSA 086-14
- TPIC 2014

(55 % OF 48.1 P.S.F. G.S.L. PLUS 8.4 P.S.F. RAIN LOAD) EQUALS 34.8 P.S.F. SPECIFIED ROOF LIVE LOAD

ALLOWABLE DEFL.(LL)= L/360 (1.03")
CALCULATED VERT. DEFL.(LL) = L/ 999 (0.16")
ALLOWABLE DEFL.(TL)= L/360 (1.03")
CALCULATED VERT. DEFL.(TL) = L/ 999 (0.28")

CSI: TC=0.58/0.97 (E-F:1) , BC=0.52/0.97 (N-O:1) , WB=0.63/0.97 (B-O:1) , SSI=0.32/1.00 (E-F:1)

DOL LUMBER=1.00 NAIL=1.00 LS BEND=1.10 COMP=1.10 SHEAR=1.10 TENS= 1.10

COMPANION LIVE LOAD FACTOR = 1.00

TRUSS PLATE MANUFACTURER IS NOT RESPONSIBLE FOR QUALITY CONTROL IN THE TRUSS MANUFACTURING PLANT .

NAIL VALUES

PLATE	GRIP(DRY) (PSI) MAX	MIN	SHEAR (PLI) MAX	MIN	SECTION (PLI) MAX	MIN
MT20	650	371	1747	788	1987	1873

PLATE PLACEMENT TOL. = 0.250 inches

PLATE ROTATION TOL. = 5.0 Deg.

JSI GRIP= 0.90 (J) (INPUT = 0.90)
JSI METAL= 0.66 (K) (INPUT = 1.00)

LICENSED PROFESSIONAL ENGINEER
I.MATIJEVIC
100528832
PROVINCE OF ONTARIO
JULY 14, 2023

READ ALL NOTES ON THIS PAGE AND ON THE ENGINEERING NOTES: TRUSSES. THE NOTE PAGE IS AN INTEGRAL PART OF THIS DRAWING AS IT CONTAINS SPECIFICATIONS AND CRITERIA USED IN THE DESIGN OF THIS COMPONENT.

KOTT

CORPORATION OF THE CITY OF OSHAWA
TRUE COPY
OF PERMIT PLANS
Oct 30 2023
PER
CHIEF BUILDING OFFICIAL

JOB NAME	TRUSS NAME	QUANTITY	PLY	JOB DESC.	DRWG NO.
IM0723-093	T03	1	1	TRUSS DESC.	MHP 23030

Version 8.630 S Mar 22 2023 MiTek Industries, Inc. Fri Jul 14 07:36:03 2023 Page 1
ID:bcGHXsLhLjMpVeVc_4eeDgzAk?y-vrOsV4pFKEEEreXMjsHi7UN3JEH9z3BEKzh9I9yyE7Q

Scale = 1:61.5

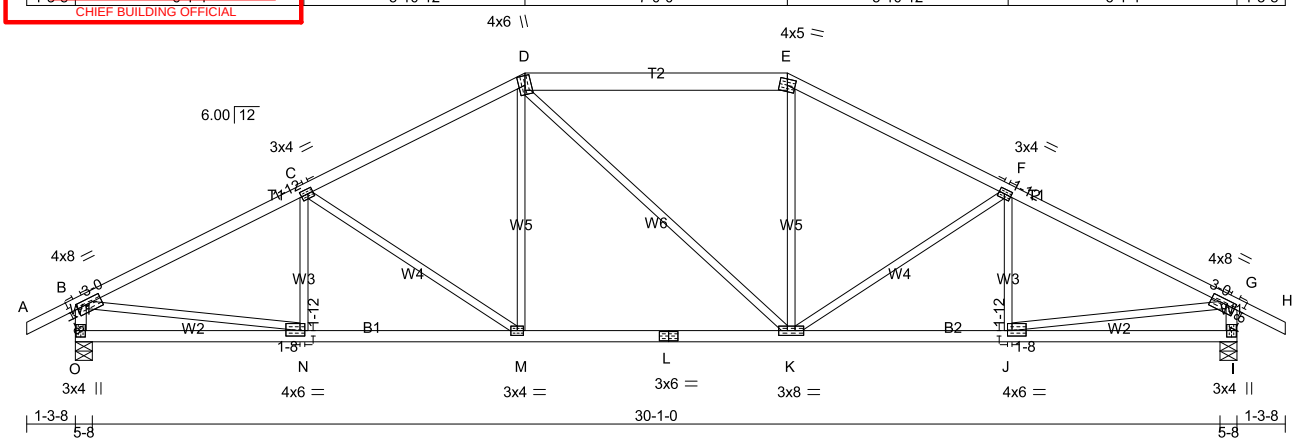

TOTAL WEIGHT = 128 lb

[M][F]

LUMBER

N. L. G. A. RULES

CHORDS	SIZE		LUMBER	DESCR.
A - D	2x4	DRY	No.2	SPF
D - E	2x6	DRY	No.2	SPF
E - H	2x4	DRY	No.2	SPF
O - B	2x4	DRY	No.2	SPF
I - G	2x4	DRY	No.2	SPF
O - L	2x4	DRY	No.2	SPF
L - I	2x4	DRY	No.2	SPF
ALL WEBS EXCEPT	2x3	DRY	No.2	SPF

DRY: SEASONED LUMBER.

PLATES (table is in inches)

JT	TYPE	PLATES	W	LEN	Y	X
B	TMVW-t	MT20	4.0	8.0	1.50	3.00
C	TMWW-t	MT20	3.0	4.0	1.50	1.75
D	TTWW+m	MT20	4.0	6.0		
E	TTW-m	MT20	4.0	5.0		
F	TMWW-t	MT20	3.0	4.0	1.50	1.75
G	TMVW-t	MT20	4.0	8.0	1.50	3.00
I	BMV1+p	MT20	3.0	4.0		
J	BMWW-t	MT20	4.0	6.0	1.75	1.50
K	BMWWW-t	MT20	3.0	8.0		
L	BS-t	MT20	3.0	6.0		
M	BMWW-t	MT20	3.0	4.0		
N	BMWW-t	MT20	4.0	6.0	1.75	1.50
O	BMV1+p	MT20	3.0	4.0		

DIMENSIONS, SUPPORTS AND LOADINGS SPECIFIED BY FABRICATOR TO BE VERIFIED BY BUILDING DESIGNER

BEARINGS

JT	FACTORED GROSS REACTION VERT	HORZ	MAXIMUM FACTORED GROSS REACTION DOWN	HORZ	UPLIFT	INPUT BRG IN-SX	REQRD BRG IN-SX
O	2296	0	2296	0	0	5-8	3-15
I	2296	0	2296	0	0	5-8	3-15

UNFACTORED REACTIONS

JT	1ST LCASE COMBINED	MAX./MIN. COMPONENT REACTIONS SNOW	LIVE	PERM.LIVE	WIND	DEAD	SOIL
O	1602	1174 / 0	0 / 0	0 / 0	0 / 0	429 / 0	0 / 0
I	1602	1174 / 0	0 / 0	0 / 0	0 / 0	429 / 0	0 / 0

BEARING MATERIAL TO BE SPF NO.2 OR BETTER AT JOINT(S) O, I

BRACING

TOP CHORD TO BE SHEATHED OR MAX. PURLIN SPACING = 3.13 FT.
MAX. UNBRACED BOTTOM CHORD LENGTH = 10.00 FT OR RIGID CEILING DIRECTLY APPLIED.

ALL PITCH BREAKS AND PERIMETER CORNER JOINTS MUST BE LATERALLY RESTRAINED.

LOADING

TOTAL LOAD CASES: (4)

CHORDS MEMB. FR-TO	MAX. FACTORED FORCE (LBS)	FACTORED VERT. LOAD (PLF) FROM	TO	LC1 CSI (LC)	MAX UNBRAC LENGTH	WEBS MEMB. FR-TO	MAX. FACTORED FORCE (LBS)	MAX CSI (LC)
A- B	0 / 36	-119.4	-119.4	0.16 (1)	10.00	N- C	-287 / 24	0.08 (1)
B- C	-3109 / 0	-119.4	-119.4	0.75 (1)	3.13	C- M	-602 / 0	0.56 (1)
C- D	-2621 / 0	-119.4	-119.4	0.67 (1)	3.47	M- D	0 / 460	0.10 (1)
D- E	-2309 / 0	-119.4	-119.4	0.40 (1)	4.89	D- K	0 / 1	0.00 (1)
E- F	-2622 / 0	-119.4	-119.4	0.67 (1)	3.47	K- E	0 / 461	0.10 (1)
F- G	-3108 / 0	-119.4	-119.4	0.75 (1)	3.13	K- F	-600 / 0	0.56 (1)
G- H	0 / 36	-119.4	-119.4	0.16 (1)	10.00	J- F	-288 / 23	0.08 (1)
O- B	-2246 / 0	0.0	0.0	0.23 (1)	5.61	B- N	0 / 2841	0.64 (1)
I- G	-2245 / 0	0.0	0.0	0.23 (1)	5.61	J- G	0 / 2841	0.64 (1)
O- N	0 / 0	-18.2	-18.2	0.14 (4)	10.00			
N- M	0 / 2814	-18.2	-18.2	0.54 (1)	10.00			
M- L	0 / 2308	-18.2	-18.2	0.47 (1)	10.00			
L- K	0 / 2308	-18.2	-18.2	0.47 (1)	10.00			
K- J	0 / 2814	-18.2	-18.2	0.55 (1)	10.00			
J- I	0 / 0	-18.2	-18.2	0.14 (4)	10.00			

DESIGN CRITERIA

SPECIFIED LOADS:

TOP CH.	LL	=	34.8	PSF
	DL	=	6.0	PSF
BOT CH.	LL	=	0.0	PSF
	DL	=	7.3	PSF
TOTAL LOAD		=	48.1	PSF

SPACING = 24.0 IN. C/C

LOADING IN FLAT SECTION BASED ON A SLOPE OF 2.00/12 MINIMUM

THIS TRUSS IS DESIGNED FOR RESIDENTIAL OR SMALL BUILDING REQUIREMENTS OF PART 9, NBCC 2015

THIS DESIGN COMPLIES WITH:
- PART 9 OF BCBC 2018 , NBC-2019AE
- PART 9 OF OBC 2012 (2019 AMENDMENT)
- CSA 086-14
- TPIC 2014

(55 % OF 48.1 P.S.F. G.S.L. PLUS 8.4 P.S.F. RAIN LOAD) EQUALS 34.8 P.S.F. SPECIFIED ROOF LIVE LOAD

ALLOWABLE DEFL.(LL)= L/360 (1.03")
CALCULATED VERT. DEFL.(LL) = L/ 999 (0.14")
ALLOWABLE DEFL.(TL)= L/360 (1.03")
CALCULATED VERT. DEFL.(TL) = L/ 999 (0.27")

CSI: TC=0.75/0.97 (B-C:1) , BC=0.55/0.97 (J-K:1) , WB=0.64/0.97 (B-N:1) , SSI=0.31/1.00 (F-G:1)

DOL LUMBER=1.00 NAIL=1.00 LS BEND=1.10 COMP=1.10 SHEAR=1.10 TENS= 1.10

COMPANION LIVE LOAD FACTOR = 1.00

TRUSS PLATE MANUFACTURER IS NOT RESPONSIBLE FOR QUALITY CONTROL IN THE TRUSS MANUFACTURING PLANT .

NAIL VALUES

PLATE	GRIP(DRY) (PSI) MAX	MIN	SHEAR (PLI) MAX	MIN	SECTION (PLI) MAX	MIN
MT20	650	371	1747	788	1987	1873

PLATE PLACEMENT TOL. = 0.250 inches

PLATE ROTATION TOL. = 5.0 Deg.

JSI GRIP= 0.90 (O) (INPUT = 0.90)
JSI METAL= 0.78 (L) (INPUT = 1.00)

LICENSED PROFESSIONAL ENGINEER
I.MATIJEVIC
100528832
PROVINCE OF ONTARIO
JULY 14, 2023

READ ALL NOTES ON THIS PAGE AND ON THE ENGINEERING NOTES: TRUSSES. THE NOTE PAGE IS AN INTEGRAL PART OF THIS DRAWING AS IT CONTAINS SPECIFICATIONS AND CRITERIA USED IN THE DESIGN OF THIS COMPONENT.

KOTT

CORPORATION OF THE CITY OF OSHAWA
TRUE COPY
OF PERMIT PLANS
Oct 30 2023
PER:
CHIEF BUILDING OFFICIAL

JOB NAME	TRUSS NAME	QUANTITY	PLY	JOB DESC.	DRWG NO.
IM0723-093	T04	1	1	TRUSS DESC.	MHP 23030

Version 8.630 S Mar 22 2023 MiTek Industries, Inc. Fri Jul 14 07:36:03 2023 Page 1

ID:bcGHXsLhLjMpVeVc_4eeDgzAk?y-vrOsV4pFKEEEreXMjsHi7UN7zEI7z04EKzh9I9yyE7Q

Scale = 1:71.2

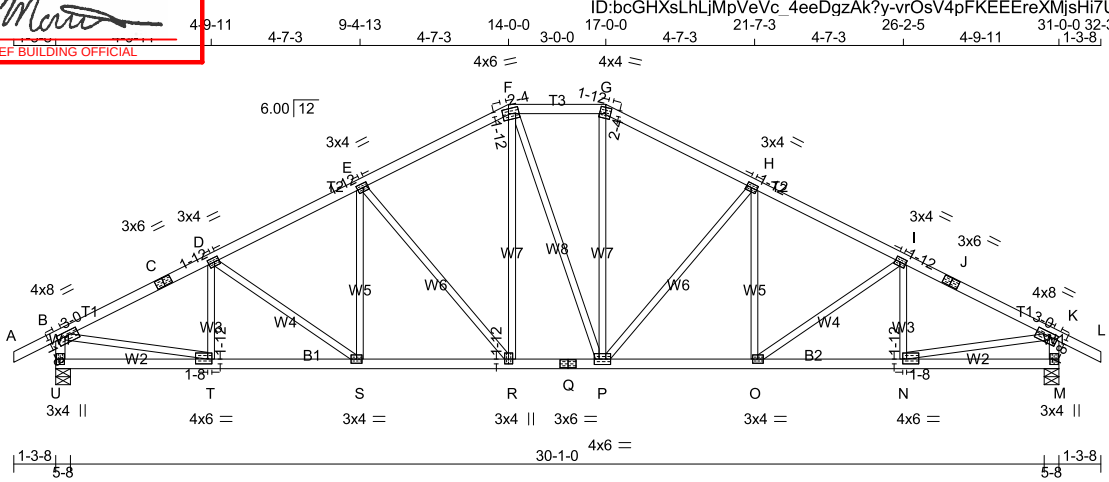

TOTAL WEIGHT = 139 lb

[M][F]

LUMBER

N. L. G. A. RULES

CHORDS	SIZE		LUMBER	DESCR.
A - C	2x4	DRY	No.2	SPF
C - F	2x4	DRY	No.2	SPF
F - G	2x4	DRY	No.2	SPF
G - J	2x4	DRY	No.2	SPF
J - L	2x4	DRY	No.2	SPF
U - B	2x4	DRY	No.2	SPF
M - K	2x4	DRY	No.2	SPF
U - Q	2x4	DRY	No.2	SPF
Q - M	2x4	DRY	No.2	SPF
ALL WEBS EXCEPT	2x3	DRY	No.2	SPF

DRY: SEASONED LUMBER.

PLATES (table is in inches)

JT	TYPE	PLATES	W	LEN	Y	X
B	TMVW-t	MT20	4.0	8.0	1.50	3.00
C	TS-t	MT20	3.0	6.0		
D, E, H, I						
D	TMWW-t	MT20	3.0	4.0	1.50	1.75
F	TTWW-m	MT20	4.0	6.0	1.75	2.25
G	TTW-m	MT20	4.0	4.0	2.25	1.75
J	TS-t	MT20	3.0	6.0		
K	TMVW-t	MT20	4.0	8.0	1.50	3.00
M	BMV1+p	MT20	3.0	4.0		
N	BMWW-t	MT20	4.0	6.0	1.75	1.50
O	BMWW-t	MT20	3.0	4.0		
P	BMWWW-t	MT20	4.0	6.0		
Q	BS-t	MT20	3.0	6.0		
R	BMWW+t	MT20	3.0	4.0	1.75	1.50
S	BMWW-t	MT20	3.0	4.0		
T	BMWW-t	MT20	4.0	6.0	1.75	1.50
U	BMV1+p	MT20	3.0	4.0		

DIMENSIONS, SUPPORTS AND LOADINGS SPECIFIED BY FABRICATOR TO BE VERIFIED BY BUILDING DESIGNER

BEARINGS

JT	FACTORED GROSS REACTION VERT	HORZ	MAXIMUM FACTORED GROSS REACTION DOWN	HORZ	UPLIFT	INPUT BRG IN-SX	REQRD BRG IN-SX
U	2296	0	2296	0	0	5-8	3-15
M	2296	0	2296	0	0	5-8	3-15

UNFACTORED REACTIONS

JT	1ST LCASE COMBINED	MAX./MIN. COMPONENT REACTIONS SNOW	LIVE	PERM.LIVE	WIND	DEAD	SOIL
U	1602	1174 / 0	0 / 0	0 / 0	0 / 0	429 / 0	0 / 0
M	1602	1174 / 0	0 / 0	0 / 0	0 / 0	429 / 0	0 / 0

BEARING MATERIAL TO BE SPF NO.2 OR BETTER AT JOINT(S) U, M

BRACING

TOP CHORD TO BE SHEATHED OR MAX. PURLIN SPACING = 3.58 FT.
MAX. UNBRACED BOTTOM CHORD LENGTH = 10.00 FT OR RIGID CEILING DIRECTLY APPLIED.

ALL PITCH BREAKS AND PERIMETER CORNER JOINTS MUST BE LATERALLY RESTRAINED.

LOADING

TOTAL LOAD CASES: (4)

CHORDS

MEMB. FR-TO	MAX. FACTORED FORCE (LBS)	FACTORED VERT. LOAD (PLF) FROM	TO	LC1 MAX CSI (LC)	MAX. UNBRAC LENGTH
A- B	0 / 36	-119.4	-119.4	0.16 (1)	10.00
B- C	-3034 / 0	-119.4	-119.4	0.45 (1)	3.58
C- D	-3034 / 0	-119.4	-119.4	0.45 (1)	3.58
D- E	-2865 / 0	-119.4	-119.4	0.37 (1)	3.77
E- F	-2347 / 0	-119.4	-119.4	0.36 (1)	4.11
F- G	-2087 / 0	-119.4	-119.4	0.18 (1)	4.51
G- H	-2349 / 0	-119.4	-119.4	0.36 (1)	4.11
H- I	-2864 / 0	-119.4	-119.4	0.37 (1)	3.77
I- J	-3034 / 0	-119.4	-119.4	0.45 (1)	3.58
J- K	-3034 / 0	-119.4	-119.4	0.45 (1)	3.58
K- L	0 / 36	-119.4	-119.4	0.16 (1)	10.00
U- B	-2254 / 0	0.0	0.0	0.23 (1)	5.60
M- K	-2254 / 0	0.0	0.0	0.23 (1)	5.60
U- T	0 / 0	-18.2	-18.2	0.09 (4)	10.00
T- S	0 / 2734	-18.2	-18.2	0.48 (1)	10.00
S- R	0 / 2562	-18.2	-18.2	0.45 (1)	10.00
R- Q	0 / 2085	-18.2	-18.2	0.38 (1)	10.00
Q- P	0 / 2085	-18.2	-18.2	0.38 (1)	10.00
P- O	0 / 2561	-18.2	-18.2	0.46 (1)	10.00
O- N	0 / 2734	-18.2	-18.2	0.48 (1)	10.00
N- M	0 / 0	-18.2	-18.2	0.09 (4)	10.00

WEBS

MEMB. FR-TO	MAX. FACTORED FORCE (LBS)	MAX CSI (LC)
T- D	-404 / 0	0.09 (1)
S- E	0 / 212	0.05 (1)
E- R	-753 / 0	0.77 (1)
R- F	0 / 634	0.14 (1)
F- P	0 / 7	0.00 (1)
P- G	0 / 642	0.14 (1)
P- H	-747 / 0	0.77 (1)
O- H	0 / 207	0.05 (1)
O- I	-211 / 0	0.11 (1)
N- I	-403 / 0	0.09 (1)
B- T	0 / 2777	0.62 (1)
N- K	0 / 2777	0.62 (1)

DESIGN CRITERIA

SPECIFIED LOADS:

TOP CH.	LL	=	34.8	PSF
	DL	=	6.0	PSF
BOT CH.	LL	=	0.0	PSF
	DL	=	7.3	PSF
TOTAL LOAD		=	48.1	PSF

SPACING = 24.0 IN. C/C

LOADING IN FLAT SECTION BASED ON A SLOPE OF 2.00/12 MINIMUM

THIS TRUSS IS DESIGNED FOR RESIDENTIAL OR SMALL BUILDING REQUIREMENTS OF PART 9, NBCC 2015

THIS DESIGN COMPLIES WITH:
- PART 9 OF BCBC 2018 , NBC-2019AE
- PART 9 OF OBC 2012 (2019 AMENDMENT)
- CSA 086-14
- TPIC 2014

(55 % OF 48.1 P.S.F. G.S.L. PLUS 8.4 P.S.F. RAIN LOAD) EQUALS 34.8 P.S.F. SPECIFIED ROOF LIVE LOAD

ALLOWABLE DEFL.(LL)= L/360 (1.03")
CALCULATED VERT. DEFL.(LL) = L/ 999 (0.14")
ALLOWABLE DEFL.(TL)= L/360 (1.03")
CALCULATED VERT. DEFL.(TL) = L/ 999 (0.25")

CSI: TC=0.45/0.97 (I-K:1) , BC=0.48/0.97 (N-O:1) , WB=0.77/0.97 (E-R:1) , SSI=0.23/1.00 (I-K:1)

DOL LUMBER=1.00 NAIL=1.00 LS BEND=1.10 COMP=1.10 SHEAR=1.10 TENS= 1.10

COMPANION LIVE LOAD FACTOR = 1.00

TRUSS PLATE MANUFACTURER IS NOT RESPONSIBLE FOR QUALITY CONTROL IN THE TRUSS MANUFACTURING PLANT .

NAIL VALUES

PLATE	GRIP(DRY) (PSI) MAX	MIN	SHEAR (PLI) MAX	MIN	SECTION (PLI) MAX	MIN
MT20	650	371	1747	788	1987	1873

PLATE PLACEMENT TOL. = 0.250 inches

PLATE ROTATION TOL. = 5.0 Deg.

JSI GRIP= 0.90 (M) (INPUT = 0.90)
JSI METAL= 0.65 (N) (INPUT = 1.00)

LICENSED PROFESSIONAL ENGINEER
I.MATIJEVIC
100528832
PROVINCE OF ONTARIO
JULY 14, 2023

READ ALL NOTES ON THIS PAGE AND ON THE ENGINEERING NOTES: TRUSSES. THE NOTE PAGE IS AN INTEGRAL PART OF THIS DRAWING AS IT CONTAINS SPECIFICATIONS AND CRITERIA USED IN THE DESIGN OF THIS COMPONENT.

KOTT

CORPORATION OF THE CITY OF OSHAWA
TRUE COPY
OF PERMIT PLANS
Oct 30 2023
PER:
CHIEF BUILDING OFFICIAL

JOB NAME	TRUSS NAME	QUANTITY	PLY	JOB DESC.	DRWG NO.
IM0723-093	T05	8	1	TRUSS DESC.	MHP 23030

Version 8.630 S Mar 22 2023 MiTek Industries, Inc. Fri Jul 14 07:36:04 2023 Page 1

ID:bcGHXsLhLjMpVeVc_4eeDgzAk?y-N2yEjPqt5XM5So6YHaoxgiwHFeeBiWaOZdRiIbyyE7P

Scale = 1:72.8

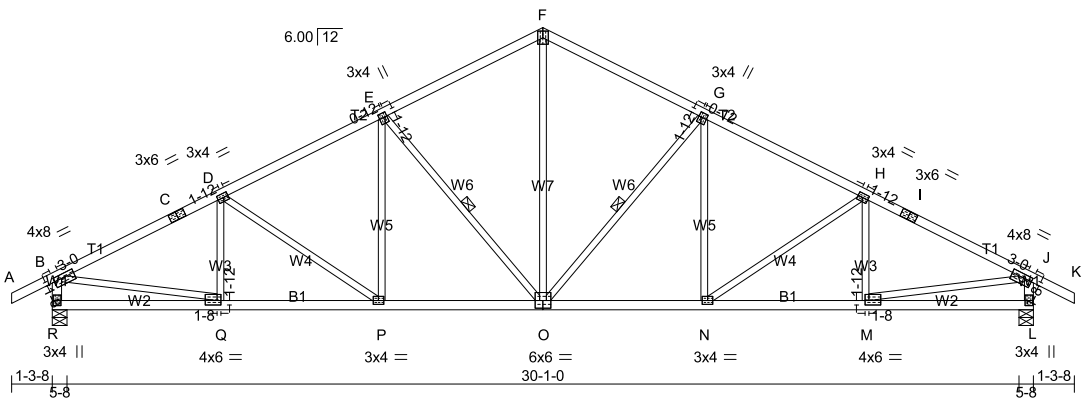

TOTAL WEIGHT = 8 X 132 = 1053 lb

[M][F]

LUMBER

N. L. G. A. RULES

CHORDS	SIZE		LUMBER	DESCR.
A - C	2x4	DRY	No.2	SPF
C - F	2x4	DRY	No.2	SPF
F - I	2x4	DRY	No.2	SPF
I - K	2x4	DRY	No.2	SPF
R - B	2x4	DRY	No.2	SPF
L - J	2x4	DRY	No.2	SPF
R - O	2x4	DRY	No.2	SPF
O - L	2x4	DRY	No.2	SPF
ALL WEBS EXCEPT	2x3	DRY	No.2	SPF

DRY: SEASONED LUMBER.

PLATES (table is in inches)

JT	TYPE	PLATES	W	LEN	Y	X
B	TMVW-t	MT20	4.0	8.0	1.50	3.00
C	TS-t	MT20	3.0	6.0		
D	TMWW-t	MT20	3.0	4.0	1.50	1.75
E	TMWW+t	MT20	3.0	4.0	1.75	0.75
F	TTW+p	MT20	4.0	5.0		
G	TMWW+t	MT20	3.0	4.0	1.75	0.75
H	TMWW-t	MT20	3.0	4.0	1.50	1.75
I	TS-t	MT20	3.0	6.0		
J	TMVW-t	MT20	4.0	8.0	1.50	3.00
L	BMV1+p	MT20	3.0	4.0		
M	BMWW-t	MT20	4.0	6.0	1.75	1.50
N	BMWW-t	MT20	3.0	4.0		
O	BSWWW-l	MT20	6.0	6.0		
P	BMWW-t	MT20	3.0	4.0		
Q	BMWW-t	MT20	4.0	6.0	1.75	1.50
R	BMV1+p	MT20	3.0	4.0		

DIMENSIONS, SUPPORTS AND LOADINGS SPECIFIED BY FABRICATOR TO BE VERIFIED BY BUILDING DESIGNER

BEARINGS

JT	FACTORED GROSS REACTION VERT	HORZ	MAXIMUM FACTORED GROSS REACTION DOWN	HORZ	UPLIFT	INPUT BRG IN-SX	REQRD BRG IN-SX
R	2296	0	2296	0	0	5-8	3-15
L	2296	0	2296	0	0	5-8	3-15

UNFACTORED REACTIONS

JT	1ST LCASE COMBINED	MAX./MIN. COMPONENT REACTIONS SNOW	LIVE	PERM.LIVE	WIND	DEAD	SOIL
R	1602	1174 / 0	0 / 0	0 / 0	0 / 0	429 / 0	0 / 0
L	1602	1174 / 0	0 / 0	0 / 0	0 / 0	429 / 0	0 / 0

BEARING MATERIAL TO BE SPF NO.2 OR BETTER AT JOINT(S) R, L

BRACING

TOP CHORD TO BE SHEATHED OR MAX. PURLIN SPACING = 3.45 FT.
MAX. UNBRACED BOTTOM CHORD LENGTH = 10.00 FT OR RIGID CEILING DIRECTLY APPLIED.

ALL PITCH BREAKS AND PERIMETER CORNER JOINTS MUST BE LATERALLY RESTRAINED.

1 - 1x4 LATERAL BRACE(S) AT 1/ 2 LENGTH OF G-O, E-O. DBS = 20-0-0 . CBF = 110 LBS.

DBS = DIAGONAL BRACE SPACING (MAX). CBF = CUMULATIVE BRACING FORCE (PER BRACE). FASTEN LATERAL BRACE(S) USING (0.122"X3") SPIRAL NAILS : 1 NAIL FOR 2x3 BRACE(S), 2 FOR 1x4, 2x4, 2x5, 3 FOR 2x6, 4 FOR 2x8, 5 FOR 2x10, AND 6 FOR 2x12.

END VERTICAL(S) MUST BE SHEATHED OR HAVE BRACES AS INDICATED IN THE MAX. UNBRACED LENGTH COLUMN OF THE TABLE BELOW

LOADING

TOTAL LOAD CASES: (4)

CHORDS

MEMB. FR-TO	MAX. FACTORED FORCE (LBS)	FACTORED VERT. LOAD (PLF) FROM	TO	LC1 MAX CSI (LC)	MAX. UNBRAC LENGTH
A- B	0 / 36	-119.4	-119.4	0.16 (1)	10.00
B- C	-3065 / 0	-119.4	-119.4	0.55 (1)	3.45
C- D	-3065 / 0	-119.4	-119.4	0.55 (1)	3.45
D- E	-2784 / 0	-119.4	-119.4	0.45 (1)	3.74
E- F	-2174 / 0	-119.4	-119.4	0.42 (1)	4.16
F- G	-2174 / 0	-119.4	-119.4	0.42 (1)	4.16
G- H	-2784 / 0	-119.4	-119.4	0.45 (1)	3.74
H- I	-3065 / 0	-119.4	-119.4	0.55 (1)	3.45
I- J	-3065 / 0	-119.4	-119.4	0.55 (1)	3.45
J- K	0 / 36	-119.4	-119.4	0.16 (1)	10.00
R- B	-2251 / 0	0.0	0.0	0.23 (1)	5.60
L- J	-2251 / 0	0.0	0.0	0.23 (1)	5.60
R- Q	0 / 0	-18.2	-18.2	0.10 (4)	10.00
Q- P	0 / 2764	-18.2	-18.2	0.50 (1)	10.00
P- O	0 / 2489	-18.2	-18.2	0.46 (1)	10.00
O- N	0 / 2489	-18.2	-18.2	0.46 (1)	10.00
N- M	0 / 2764	-18.2	-18.2	0.50 (1)	10.00
M- L	0 / 0	-18.2	-18.2	0.10 (4)	10.00

WEBS

MEMB. FR-TO	MAX. FACTORED FORCE (LBS)	MAX CSI (LC)
O- F	0 / 1428	0.32 (1)
O- G	-882 / 0	0.37 (1)
N- G	0 / 294	0.07 (1)
N- H	-334 / 0	0.23 (1)
M- H	-352 / 0	0.08 (1)
E- O	-882 / 0	0.37 (1)
P- E	0 / 294	0.07 (1)
D- P	-334 / 0	0.23 (1)
Q- D	-352 / 0	0.08 (1)
B- Q	0 / 2800	0.63 (1)
M- J	0 / 2800	0.63 (1)

DESIGN CRITERIA

SPECIFIED LOADS:

TOP CH.	LL	=	34.8	PSF
	DL	=	6.0	PSF
BOT CH.	LL	=	0.0	PSF
	DL	=	7.3	PSF
TOTAL LOAD		=	48.1	PSF

SPACING = 24.0 IN. C/C

THIS TRUSS IS DESIGNED FOR RESIDENTIAL OR SMALL BUILDING REQUIREMENTS OF PART 9, NBCC 2015

THIS DESIGN COMPLIES WITH:
- PART 9 OF BCBC 2018 , NBC-2019AE
- PART 9 OF OBC 2012 (2019 AMENDMENT)
- CSA 086-14
- TPIC 2014

(55 % OF 48.1 P.S.F. G.S.L. PLUS 8.4 P.S.F. RAIN LOAD) EQUALS 34.8 P.S.F. SPECIFIED ROOF LIVE LOAD

ALLOWABLE DEFL.(LL)= L/360 (1.03")
CALCULATED VERT. DEFL.(LL) = L/ 999 (0.15")
ALLOWABLE DEFL.(TL)= L/360 (1.03")
CALCULATED VERT. DEFL.(TL) = L/ 999 (0.27")

CSI: TC=0.55/0.97 (B-D:1) , BC=0.50/0.97 (P-Q:1) , WB=0.63/0.97 (B-Q:1) , SSI=0.26/1.00 (B-D:1)

DOL LUMBER=1.00 NAIL=1.00 LS BEND=1.10 COMP=1.10 SHEAR=1.10 TENS= 1.10

COMPANION LIVE LOAD FACTOR = 1.00

TRUSS PLATE MANUFACTURER IS NOT RESPONSIBLE FOR QUALITY CONTROL IN THE TRUSS MANUFACTURING PLANT .

NAIL VALUES

PLATE	GRIP(DRY) (PSI) MAX	MIN	SHEAR (PLI) MAX	MIN	SECTION (PLI) MAX	MIN
MT20	650	371	1747	788	1987	1873

PLATE PLACEMENT TOL. = 0.250 inches

PLATE ROTATION TOL. = 5.0 Deg.

JSI GRIP= 0.90 (L) (INPUT = 0.90)
JSI METAL= 0.66 (Q) (INPUT = 1.00)

LICENSED PROFESSIONAL ENGINEER
I.MATIJEVIC
100528832
PROVINCE OF ONTARIO
JULY 14, 2023

READ ALL NOTES ON THIS PAGE AND ON THE ENGINEERING NOTES: TRUSSES. THE NOTE PAGE IS AN INTEGRAL PART OF THIS DRAWING AS IT CONTAINS SPECIFICATIONS AND CRITERIA USED IN THE DESIGN OF THIS COMPONENT.

KOTT

CORPORATION OF THE CITY OF OSHAWA
TRUE COPY
OF PERMIT PLANS
Oct 30 2023
PER:
CHIEF BUILDING OFFICIAL

JOB NAME	TRUSS NAME	QUANTITY	PLY	JOB DESC.	DRWG NO.
IM0723-093	T06	1	1	TRUSS DESC.	MHP 23030

Version 8.630 S Mar 22 2023 MiTek Industries, Inc. Fri Jul 14 07:36:05 2023 Page 1

ID:bcGHXsLhLjMpVeVc_4eeDgzAk?y-rEVcwlrVsrUy4yhlqHJACvTWR21qR1GXoHAGq1yyE7O

Scale = 1:45.0

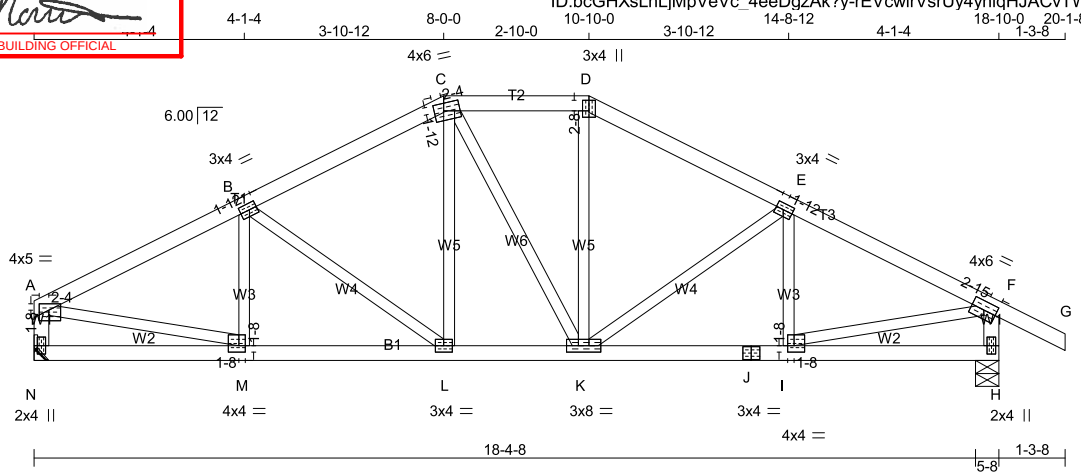

TOTAL WEIGHT = 78 lb

[M][F]

LUMBER

N. L. G. A. RULES

CHORDS	SIZE		LUMBER	DESCR.
A - C	2x4	DRY	No.2	SPF
C - D	2x4	DRY	No.2	SPF
D - G	2x4	DRY	No.2	SPF
N - A	2x4	DRY	No.2	SPF
H - F	2x4	DRY	No.2	SPF
N - J	2x4	DRY	No.2	SPF
J - H	2x4	DRY	No.2	SPF
ALL WEBS EXCEPT	2x3	DRY	No.2	SPF

DRY: SEASONED LUMBER.

PLATES (table is in inches)

JT	TYPE	PLATES	W	LEN	Y	X
A	TMVW-p	MT20	4.0	5.0	1.50	2.25
B	TMWW-t	MT20	3.0	4.0	1.50	1.75
C	TTWW-m	MT20	4.0	6.0	1.75	2.25
D	TTW+p	MT20	3.0	4.0	2.50	1.50
E	TMWW-t	MT20	3.0	4.0	1.50	1.75
F	TMVW-t	MT20	4.0	6.0	2.00	3.00
H	BMV1+p	MT20	2.0	4.0		
I	BMWW-t	MT20	4.0	4.0	1.50	1.50
J	BS-t	MT20	3.0	4.0		
K	BMWWW-t	MT20	3.0	8.0		
L	BMWW-t	MT20	3.0	4.0		
M	BMWW-t	MT20	4.0	4.0	1.50	1.50
N	BMV1+p	MT20	2.0	4.0		

DIMENSIONS, SUPPORTS AND LOADINGS SPECIFIED BY FABRICATOR TO BE VERIFIED BY BUILDING DESIGNER

BEARINGS

JT	FACTORED GROSS REACTION VERT	HORZ	MAXIMUM FACTORED GROSS REACTION DOWN	HORZ	UPLIFT	INPUT BRG IN-SX	REQRD BRG IN-SX
N	1296	0	1296	0	0	MECHANICAL	
H	1459	0	1459	0	0	5-8	1-9

A SUITABLE HANGER/MECHANICAL CONNECTION IS REQUIRED AT JOINT N. MINIMUM BEARING LENGTH AT JOINT N = 1-8.

UNFACTORED REACTIONS

JT	1ST LCASE COMBINED	MAX./MIN. COMPONENT REACTIONS SNOW	LIVE	PERM.LIVE	WIND	DEAD	SOIL
N	906	656 / 0	0 / 0	0 / 0	0 / 0	250 / 0	0 / 0
H	1017	750 / 0	0 / 0	0 / 0	0 / 0	267 / 0	0 / 0

BEARING MATERIAL TO BE SPF NO.2 OR BETTER AT JOINT(S) H

BRACING

TOP CHORD TO BE SHEATHED OR MAX. PURLIN SPACING = 4.85 FT.
MAX. UNBRACED BOTTOM CHORD LENGTH = 10.00 FT OR RIGID CEILING DIRECTLY APPLIED.

ALL PITCH BREAKS AND PERIMETER CORNER JOINTS MUST BE LATERALLY RESTRAINED.

LOADING

TOTAL LOAD CASES: (4)

CHORDS

MEMB. FR-TO	MAX. FACTORED FORCE (LBS)	FACTORED VERT. LOAD (PLF) FROM	TO	LC1 MAX CSI (LC)	MAX. UNBRAC LENGTH
A- B	-1662 / 0	-119.4	-119.4	0.26 (1)	4.85
B- C	-1394 / 0	-119.4	-119.4	0.25 (1)	5.21
C- D	-1230 / 0	-119.4	-119.4	0.14 (1)	5.61
D- E	-1395 / 0	-119.4	-119.4	0.25 (1)	5.21
E- F	-1662 / 0	-119.4	-119.4	0.26 (1)	4.85
F- G	0 / 36	-119.4	-119.4	0.16 (1)	10.00
N- A	-1262 / 0	0.0	0.0	0.13 (1)	7.08
H- F	-1423 / 0	0.0	0.0	0.14 (1)	6.76
N- M	0 / 0	-18.2	-18.2	0.07 (4)	10.00
M- L	0 / 1508	-18.2	-18.2	0.28 (1)	10.00
L- K	0 / 1229	-18.2	-18.2	0.22 (1)	10.00
K- J	0 / 1508	-18.2	-18.2	0.27 (1)	10.00
J- I	0 / 1508	-18.2	-18.2	0.27 (1)	10.00
I- H	0 / 0	-18.2	-18.2	0.06 (4)	10.00

WEBS

MEMB. FR-TO	MAX. FACTORED FORCE (LBS)	MAX CSI (LC)
M- B	-239 / 9	0.05 (1)
B- L	-352 / 0	0.14 (1)
L- C	0 / 266	0.06 (1)
C- K	0 / 3	0.00 (1)
K- D	0 / 269	0.06 (1)
K- E	-350 / 0	0.14 (1)
I- E	-242 / 8	0.05 (1)
A- M	0 / 1541	0.35 (1)
I- F	0 / 1540	0.35 (1)

DESIGN CRITERIA

SPECIFIED LOADS:

TOP CH.	LL	=	34.8	PSF
	DL	=	6.0	PSF
BOT CH.	LL	=	0.0	PSF
	DL	=	7.3	PSF
TOTAL LOAD		=	48.1	PSF

SPACING = 24.0 IN. C/C

LOADING IN FLAT SECTION BASED ON A SLOPE OF 2.00/12 MINIMUM

THIS TRUSS IS DESIGNED FOR RESIDENTIAL OR SMALL BUILDING REQUIREMENTS OF PART 9, NBCC 2015

THIS DESIGN COMPLIES WITH:
- PART 9 OF BCBC 2018 , NBC-2019AE
- PART 9 OF OBC 2012 (2019 AMENDMENT)
- CSA 086-14
- TPIC 2014

(55 % OF 48.1 P.S.F. G.S.L. PLUS 8.4 P.S.F. RAIN LOAD) EQUALS 34.8 P.S.F. SPECIFIED ROOF LIVE LOAD

ALLOWABLE DEFL.(LL)= L/360 (0.63")
CALCULATED VERT. DEFL.(LL) = L/ 999 (0.04")
ALLOWABLE DEFL.(TL)= L/360 (0.63")
CALCULATED VERT. DEFL.(TL) = L/ 999 (0.08")

CSI: TC=0.26/0.97 (A-B:1) , BC=0.28/0.97 (L-M:1) , WB=0.35/0.97 (A-M:1) , SSI=0.21/1.00 (E-F:1)

DOL LUMBER=1.00 NAIL=1.00 LS BEND=1.10 COMP=1.10 SHEAR=1.10 TENS= 1.10

COMPANION LIVE LOAD FACTOR = 1.00

TRUSS PLATE MANUFACTURER IS NOT RESPONSIBLE FOR QUALITY CONTROL IN THE TRUSS MANUFACTURING PLANT .

NAIL VALUES

PLATE	GRIP(DRY) (PSI) MAX	MIN	SHEAR (PLI) MAX	MIN	SECTION (PLI) MAX	MIN
MT20	650	371	1747	788	1987	1873

PLATE PLACEMENT TOL. = 0.250 inches

PLATE ROTATION TOL. = 5.0 Deg.

JSI GRIP= 0.89 (D) (INPUT = 0.90)
JSI METAL= 0.51 (M) (INPUT = 1.00)

LICENSED PROFESSIONAL ENGINEER
I.MATIJEVIC
100528832
PROVINCE OF ONTARIO
JULY 14, 2023

READ ALL NOTES ON THIS PAGE AND ON THE ENGINEERING NOTES: TRUSSES. THE NOTE PAGE IS AN INTEGRAL PART OF THIS DRAWING AS IT CONTAINS SPECIFICATIONS AND CRITERIA USED IN THE DESIGN OF THIS COMPONENT.

KOTT

CORPORATION OF THE CITY OF OSHAWA
TRUE COPY
OF PERMIT PLANS
Oct 30 2023
PER: C Martin
CHIEF BUILDING OFFICIAL

JOB NAME	TRUSS NAME	QUANTITY	PLY	JOB DESC.	DRWG NO.
IM0723-093	T07	1	1	TRUSS DESC.	MHP 23030

Version 8.630 S Mar 22 2023 MiTek Industries, Inc. Fri Jul 14 07:36:06 2023 Page 1
ID:bcGHXsLhLjMpVeVc_4eeDgzAk?y-JQ3_85r8d9cpi6FxO?qPl7?gaRNrAUTg1xwpMUyyE7N

Scale = 1:49.8

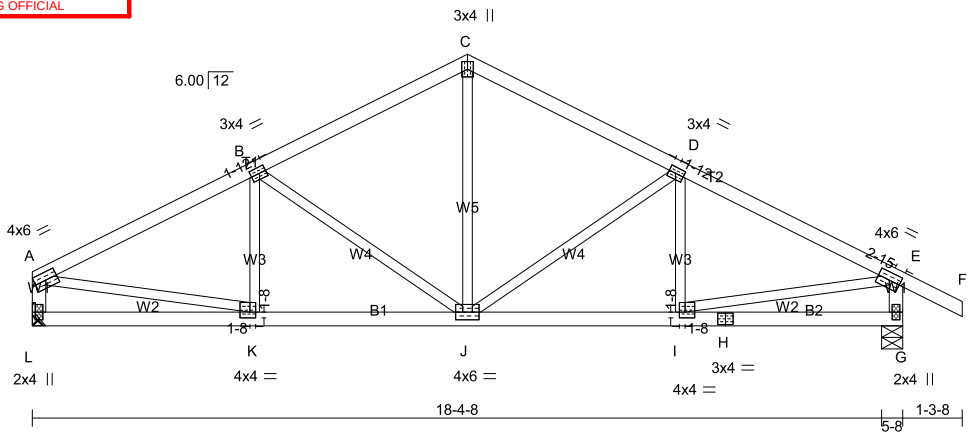

TOTAL WEIGHT = 74 lb

[M][F]

LUMBER

N. L. G. A. RULES

CHORDS	SIZE		LUMBER	DESCR.
A - C	2x4	DRY	No.2	SPF
C - F	2x4	DRY	No.2	SPF
L - A	2x4	DRY	No.2	SPF
G - E	2x4	DRY	No.2	SPF
L - H	2x4	DRY	No.2	SPF
H - G	2x4	DRY	No.2	SPF
ALL WEBS EXCEPT	2x3	DRY	No.2	SPF

DRY: SEASONED LUMBER.

PLATES (table is in inches)

JT	TYPE	PLATES	W	LEN	Y	X
A	TMVW-t	MT20	4.0	6.0		Edge
B	TMWW-t	MT20	3.0	4.0	1.50	1.75
C	TTW+p	MT20	3.0	4.0		
D	TMWW-t	MT20	3.0	4.0	1.50	1.75
E	TMVW-t	MT20	4.0	6.0	2.00	3.00
G	BMV1+p	MT20	2.0	4.0		
H	BS-t	MT20	3.0	4.0		
I	BMWW-t	MT20	4.0	4.0	1.50	1.50
J	BMWWW-t	MT20	4.0	6.0		
K	BMWW-t	MT20	4.0	4.0	1.50	1.50
L	BMV1+p	MT20	2.0	4.0		

Edge - INDICATES REFERENCE CORNER OF PLATE TOUCHES EDGE OF CHORD.

DIMENSIONS, SUPPORTS AND LOADINGS SPECIFIED BY FABRICATOR TO BE VERIFIED BY BUILDING DESIGNER

BEARINGS

JT	FACTORED GROSS REACTION VERT	HORZ	MAXIMUM FACTORED GROSS REACTION DOWN	HORZ	UPLIFT	INPUT BRG IN-SX	REQRD BRG IN-SX
L	1296	0	1296	0	0	MECHANICAL	
G	1459	0	1459	0	0	5-8	1-9

A SUITABLE HANGER/MECHANICAL CONNECTION IS REQUIRED AT JOINT L. MINIMUM BEARING LENGTH AT JOINT L = 1-8.

UNFACTORED REACTIONS

JT	1ST LCASE COMBINED	SNOW	MAX./MIN. COMPONENT REACTIONS LIVE	PERM.LIVE	WIND	DEAD	SOIL
L	906	656 / 0	0 / 0	0 / 0	0 / 0	250 / 0	0 / 0
G	1017	750 / 0	0 / 0	0 / 0	0 / 0	267 / 0	0 / 0

BEARING MATERIAL TO BE SPF NO.2 OR BETTER AT JOINT(S) G

BRACING

TOP CHORD TO BE SHEATHED OR MAX. PURLIN SPACING = 4.70 FT.
MAX. UNBRACED BOTTOM CHORD LENGTH = 10.00 FT OR RIGID CEILING DIRECTLY APPLIED.

ALL PITCH BREAKS AND PERIMETER CORNER JOINTS MUST BE LATERALLY RESTRAINED.

LOADING

TOTAL LOAD CASES: (4)

CHORDS

MEMB. FR-TO	MAX. FACTORED FORCE (LBS)	FACTORED VERT. LOAD (PLF) FROM	TO	LC1 MAX CSI (LC)	MAX. UNBRAC LENGTH
A- B	-1675 / 0	-119.4	-119.4	0.37 (1)	4.70
B- C	-1263 / 0	-119.4	-119.4	0.35 (1)	5.27
C- D	-1263 / 0	-119.4	-119.4	0.35 (1)	5.27
D- E	-1675 / 0	-119.4	-119.4	0.37 (1)	4.70
E- F	0 / 36	-119.4	-119.4	0.16 (1)	10.00
L- A	-1257 / 0	0.0	0.0	0.13 (1)	7.10
G- E	-1419 / 0	0.0	0.0	0.14 (1)	6.77
L- K	0 / 0	-18.2	-18.2	0.09 (4)	10.00
K- J	0 / 1524	-18.2	-18.2	0.29 (1)	10.00
J- I	0 / 1524	-18.2	-18.2	0.29 (1)	10.00
I- H	0 / 0	-18.2	-18.2	0.09 (4)	10.00
H- G	0 / 0	-18.2	-18.2	0.09 (4)	10.00

WEBS

MEMB. FR-TO	MAX. FACTORED FORCE (LBS)	MAX CSI (LC)
J- C	0 / 687	0.15 (1)
J- D	-516 / 0	0.28 (1)
I- D	-185 / 34	0.04 (1)
B- J	-516 / 0	0.28 (1)
K- B	-184 / 34	0.04 (1)
A- K	0 / 1548	0.35 (1)
I- E	0 / 1548	0.35 (1)

DESIGN CRITERIA

SPECIFIED LOADS:

TOP CH.	LL	=	34.8	PSF
	DL	=	6.0	PSF
BOT CH.	LL	=	0.0	PSF
	DL	=	7.3	PSF
TOTAL LOAD		=	48.1	PSF

SPACING = 24.0 IN. C/C

THIS TRUSS IS DESIGNED FOR RESIDENTIAL OR SMALL BUILDING REQUIREMENTS OF PART 9, NBCC 2015

THIS DESIGN COMPLIES WITH:
- PART 9 OF BCBC 2018 , NBC-2019AE
- PART 9 OF OBC 2012 (2019 AMENDMENT)
- CSA 086-14
- TPIC 2014

(55 % OF 48.1 P.S.F. G.S.L. PLUS 8.4 P.S.F. RAIN LOAD) EQUALS 34.8 P.S.F. SPECIFIED ROOF LIVE LOAD

ALLOWABLE DEFL.(LL)= L/360 (0.63")
CALCULATED VERT. DEFL.(LL) = L/ 999 (0.05")
ALLOWABLE DEFL.(TL)= L/360 (0.63")
CALCULATED VERT. DEFL.(TL) = L/ 999 (0.09")

CSI: TC=0.37/0.97 (A-B:1) , BC=0.29/0.97 (J-K:1) , WB=0.35/0.97 (A-K:1) , SSI=0.25/1.00 (A-B:1)

DOL LUMBER=1.00 NAIL=1.00 LS BEND=1.10 COMP=1.10 SHEAR=1.10 TENS= 1.10

COMPANION LIVE LOAD FACTOR = 1.00

TRUSS PLATE MANUFACTURER IS NOT RESPONSIBLE FOR QUALITY CONTROL IN THE TRUSS MANUFACTURING PLANT .

NAIL VALUES

PLATE	GRIP(DRY) (PSI) MAX	MIN	SHEAR (PLI) MAX	MIN	SECTION (PLI) MAX	MIN
MT20	650	371	1747	788	1987	1873

PLATE PLACEMENT TOL. = 0.250 inches

PLATE ROTATION TOL. = 5.0 Deg.

JSI GRIP= 0.85 (I) (INPUT = 0.90)
JSI METAL= 0.52 (I) (INPUT = 1.00)

LICENSED PROFESSIONAL ENGINEER
I.MATIJEVIC
100528832
PROVINCE OF ONTARIO
JULY 14, 2023

READ ALL NOTES ON THIS PAGE AND ON THE ENGINEERING NOTES: TRUSSES. THE NOTE PAGE IS AN INTEGRAL PART OF THIS DRAWING AS IT CONTAINS SPECIFICATIONS AND CRITERIA USED IN THE DESIGN OF THIS COMPONENT.

KOTT

CORPORATION OF THE CITY OF OSHAWA
TRUE COPY
OF PERMIT PLANS
Oct 30 2023
PER: _____
CHIEF BUILDING OFFICIAL

JOB NAME	TRUSS NAME	QUANTITY	PLY	JOB DESC.	DRWG NO.
IM0723-093	T08	1	1	TRUSS DESC.	MHP 23030

Version 8.630 S Mar 22 2023 MiTek Industries, Inc. Fri Jul 14 07:36:07 2023 Page 1
ID:bcGHXsLhLjMpVeVc_4eeDgzAk?y-oddMLRsmOSkgJGq7yiMeIKYiOriAvvgqFbfMuwyyE7M

Scale = 1:50.7

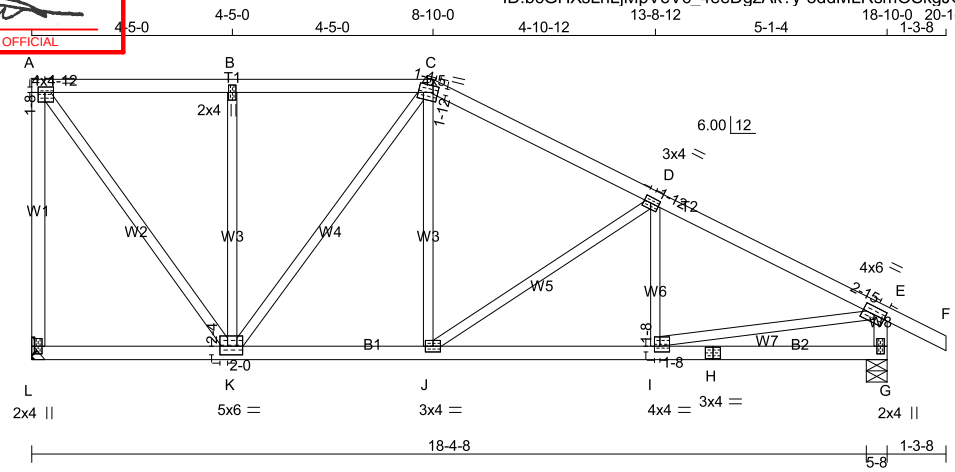

TOTAL WEIGHT = 85 lb

[M][F]

LUMBER

N. L. G. A. RULES

CHORDS	SIZE		LUMBER	DESCR.
L - A	2x4	DRY	No.2	SPF
A - C	2x4	DRY	No.2	SPF
C - F	2x4	DRY	No.2	SPF
G - E	2x4	DRY	No.2	SPF
L - H	2x4	DRY	No.2	SPF
H - G	2x4	DRY	No.2	SPF
ALL WEBS EXCEPT	2x3	DRY	No.2	SPF

DRY: SEASONED LUMBER.

PLATES (table is in inches)

JT	TYPE	PLATES	W	LEN	Y	X
A	TMVW-t	MT20	4.0	4.0	1.50	1.75
B	TMW+w	MT20	2.0	4.0		
C	TTWW-m	MT20	4.0	5.0	1.75	1.25
D	TMWW-t	MT20	3.0	4.0	1.50	1.75
E	TMVW-t	MT20	4.0	6.0	2.00	3.00
G	BMV1+p	MT20	2.0	4.0		
H	BS-t	MT20	3.0	4.0		
I	BMWW-t	MT20	4.0	4.0	1.50	1.50
J	BMWW-t	MT20	3.0	4.0		
K	BMWWW-t	MT20	5.0	6.0	2.25	2.00
L	BMV1+p	MT20	2.0	4.0		

DIMENSIONS, SUPPORTS AND LOADINGS SPECIFIED BY FABRICATOR TO BE VERIFIED BY BUILDING DESIGNER

BEARINGS

JT	FACTORED GROSS REACTION VERT	HORZ	MAXIMUM FACTORED GROSS REACTION DOWN	HORZ	UPLIFT	INPUT BRG IN-SX	REQRD BRG IN-SX
L	1296	0	1296	0	0	MECHANICAL	
G	1459	0	1459	0	0	5-8	1-9

A SUITABLE HANGER/MECHANICAL CONNECTION IS REQUIRED AT JOINT L. MINIMUM BEARING LENGTH AT JOINT L = 1-8.

UNFACTORED REACTIONS

JT	1ST LCASE COMBINED	SNOW	MAX./MIN. COMPONENT REACTIONS LIVE	PERM.LIVE	WIND	DEAD	SOIL
L	906	656 / 0	0 / 0	0 / 0	0 / 0	250 / 0	0 / 0
G	1017	750 / 0	0 / 0	0 / 0	0 / 0	267 / 0	0 / 0

BEARING MATERIAL TO BE SPF NO.2 OR BETTER AT JOINT(S) G

BRACING

TOP CHORD TO BE SHEATHED OR MAX. PURLIN SPACING = 4.63 FT.
MAX. UNBRACED BOTTOM CHORD LENGTH = 10.00 FT OR RIGID CEILING DIRECTLY APPLIED.

ALL PITCH BREAKS AND PERIMETER CORNER JOINTS MUST BE LATERALLY RESTRAINED.

LOADING

TOTAL LOAD CASES: (4)

CHORDS

MEMB. FR-TO	MAX. FACTORED FORCE (LBS)	FACTORED VERT. LOAD (PLF) FROM	TO	LC1 MAX CSI (LC)	MAX. UNBRAC LENGTH
L- A	-1262 / 0	0.0	0.0	0.94 (1)	7.08
A- B	-797 / 0	-119.4	-119.4	0.30 (1)	6.25
B- C	-797 / 0	-119.4	-119.4	0.30 (1)	6.25
C- D	-1190 / 0	-119.4	-119.4	0.39 (1)	5.32
D- E	-1676 / 0	-119.4	-119.4	0.41 (1)	4.63
E- F	0 / 36	-119.4	-119.4	0.16 (1)	10.00
G- E	-1418 / 0	0.0	0.0	0.14 (1)	6.77
L- K	0 / 0	-18.2	-18.2	0.08 (4)	10.00
K- J	0 / 1042	-18.2	-18.2	0.21 (1)	10.00
J- I	0 / 1527	-18.2	-18.2	0.28 (1)	10.00
I- H	0 / 0	-18.2	-18.2	0.11 (4)	10.00
H- G	0 / 0	-18.2	-18.2	0.11 (4)	10.00

WEBS

MEMB. FR-TO	MAX. FACTORED FORCE (LBS)	MAX CSI (LC)
A- K	0 / 1327	0.30 (1)
K- B	-651 / 0	0.39 (1)
K- C	-407 / 0	0.42 (1)
J- C	0 / 421	0.09 (1)
J- D	-595 / 0	0.38 (1)
I- D	-159 / 48	0.04 (1)
I- E	0 / 1548	0.35 (1)

DESIGN CRITERIA

SPECIFIED LOADS:

TOP CH.	LL	=	34.8	PSF
	DL	=	6.0	PSF
BOT CH.	LL	=	0.0	PSF
	DL	=	7.3	PSF
TOTAL LOAD		=	48.1	PSF

SPACING = 24.0 IN. C/C

LOADING IN FLAT SECTION BASED ON A SLOPE OF 2.00/12 MINIMUM

THIS TRUSS IS DESIGNED FOR RESIDENTIAL OR SMALL BUILDING REQUIREMENTS OF PART 9, NBCC 2015

THIS DESIGN COMPLIES WITH:
- PART 9 OF BCBC 2018 , NBC-2019AE
- PART 9 OF OBC 2012 (2019 AMENDMENT)
- CSA 086-14
- TPIC 2014

(55 % OF 48.1 P.S.F. G.S.L. PLUS 8.4 P.S.F. RAIN LOAD) EQUALS 34.8 P.S.F. SPECIFIED ROOF LIVE LOAD

ALLOWABLE DEFL.(LL)= L/360 (0.63")
CALCULATED VERT. DEFL.(LL) = L/ 999 (0.05")
ALLOWABLE DEFL.(TL)= L/360 (0.63")
CALCULATED VERT. DEFL.(TL) = L/ 999 (0.09")

CSI: TC=0.94/0.97 (A-L:1) , BC=0.28/0.97 (I-J:1) , WB=0.42/0.97 (C-K:1) , SSI=0.26/1.00 (D-E:1)

DOL LUMBER=1.00 NAIL=1.00 LS BEND=1.10 COMP=1.10 SHEAR=1.10 TENS= 1.10

COMPANION LIVE LOAD FACTOR = 1.00

TRUSS PLATE MANUFACTURER IS NOT RESPONSIBLE FOR QUALITY CONTROL IN THE TRUSS MANUFACTURING PLANT .

NAIL VALUES

PLATE	GRIP(DRY) (PSI) MAX	MIN	SHEAR (PLI) MAX	MIN	SECTION (PLI) MAX	MIN
MT20	650	371	1747	788	1987	1873

PLATE PLACEMENT TOL. = 0.250 inches

PLATE ROTATION TOL. = 5.0 Deg.

JSI GRIP= 0.87 (K) (INPUT = 0.90)
JSI METAL= 0.52 (I) (INPUT = 1.00)

LICENSED PROFESSIONAL ENGINEER
I.MATIJEVIC
100528832
PROVINCE OF ONTARIO
JULY 14, 2023

READ ALL NOTES ON THIS PAGE AND ON THE ENGINEERING NOTES: TRUSSES. THE NOTE PAGE IS AN INTEGRAL PART OF THIS DRAWING AS IT CONTAINS SPECIFICATIONS AND CRITERIA USED IN THE DESIGN OF THIS COMPONENT.

KOTT

CORPORATION OF THE CITY OF OSHAWA
TRUE COPY
OF PERMIT PLANS
Oct 30 2023
PER:
CHIEF BUILDING OFFICIAL

JOB NAME	TRUSS NAME	QUANTITY	PLY	JOB DESC.	DRWG NO.
IM0723-093	T09	1	1	TRUSS DESC.	MHP 23030

Version 8.630 S Mar 22 2023 MiTek Industries, Inc. Fri Jul 14 07:36:07 2023 Page 1
ID:bcGHXsLhLjMpVeVc_4eeDgzAk?y-oddMLRsmOSkgJGq7yiMeIKYoeripvr2qFbfMuwyyE7M

Scale = 1:53.9

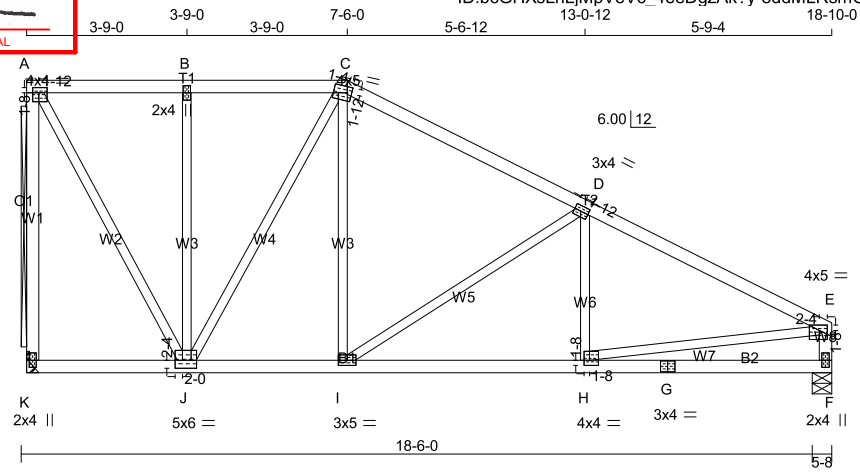

TOTAL WEIGHT = 87 lb

[M][F]

LUMBER

N. L. G. A. RULES

CHORDS	SIZE		LUMBER	DESCR.
K - A	2x4	DRY	No.2	SPF
A - C	2x4	DRY	No.2	SPF
C - E	2x4	DRY	No.2	SPF
F - E	2x4	DRY	No.2	SPF
K - G	2x4	DRY	No.2	SPF
G - F	2x4	DRY	No.2	SPF
ALL WEBS EXCEPT	2x3	DRY	No.2	SPF

DRY: SEASONED LUMBER.

PLATES (table is in inches)

JT	TYPE	PLATES	W	LEN	Y	X
A	TMVW-t	MT20	4.0	4.0	1.50	1.75
B	TMW+w	MT20	2.0	4.0		
C	TTWW-m	MT20	4.0	5.0	1.75	1.25
D	TMWW-t	MT20	3.0	4.0	1.50	1.75
E	TMVW-p	MT20	4.0	5.0	1.50	2.25
F	BMV1+p	MT20	2.0	4.0		
G	BS-t	MT20	3.0	4.0		
H	BMWW-t	MT20	4.0	4.0	1.50	1.50
I	BMWW-t	MT20	3.0	5.0		
J	BMWWW-t	MT20	5.0	6.0	2.25	2.00
K	BMV1+p	MT20	2.0	4.0		

DIMENSIONS, SUPPORTS AND LOADINGS SPECIFIED BY FABRICATOR TO BE VERIFIED BY BUILDING DESIGNER

BEARINGS

JT	FACTORED GROSS REACTION VERT	HORZ	MAXIMUM FACTORED GROSS REACTION DOWN	HORZ	UPLIFT	INPUT BRG IN-SX	REQRD BRG IN-SX
K	1296	0	1296	0	0	MECHANICAL	
F	1296	0	1296	0	0	5-8	1-8

A SUITABLE HANGER/MECHANICAL CONNECTION IS REQUIRED AT JOINT K. MINIMUM BEARING LENGTH AT JOINT K = 1-8.

UNFACTORED REACTIONS

JT	1ST LCASE COMBINED	SNOW	LIVE	PERM.LIVE	WIND	DEAD	SOIL
		MAX./MIN. COMPONENT REACTIONS					
K	906	656 / 0	0 / 0	0 / 0	0 / 0	250 / 0	0 / 0
F	906	656 / 0	0 / 0	0 / 0	0 / 0	250 / 0	0 / 0

BEARING MATERIAL TO BE SPF NO.2 OR BETTER AT JOINT(S) F

BRACING

TOP CHORD TO BE SHEATHED OR MAX. PURLIN SPACING = 4.43 FT.
MAX. UNBRACED BOTTOM CHORD LENGTH = 10.00 FT OR RIGID CEILING DIRECTLY APPLIED.

ALL PITCH BREAKS AND PERIMETER CORNER JOINTS MUST BE LATERALLY RESTRAINED.

2x4 DRY SPF No.2 T-BRACE AT A-K

FASTEN T AND I-BRACES TO NARROW EDGE OF WEB WITH ONE ROW PER PLY OF 3" COMMON WIRE NAILS @ 6" O.C. WITH 3" MINIMUM END DISTANCE. BRACE MUST COVER 90% OF WEB LENGTH.

END VERTICAL(S) MUST BE SHEATHED OR HAVE BRACES AS INDICATED IN THE MAX. UNBRACED LENGTH COLUMN OF THE TABLE BELOW

LOADING

TOTAL LOAD CASES: (4)

CHORDS

MEMB. FR-TO	MAX. FACTORED FORCE (LBS)	FACTORED VERT. LOAD (PLF) FROM	TO	LC1 MAX CSI (LC)	MAX. UNBRAC LENGTH
K- A	-1266 / 0	0.0	0.0	0.32 (1)	7.81
A- B	-627 / 0	-119.4	-119.4	0.21 (1)	6.25
B- C	-627 / 0	-119.4	-119.4	0.21 (1)	6.25
C- D	-1036 / 0	-119.4	-119.4	0.50 (1)	5.40
D- E	-1665 / 0	-119.4	-119.4	0.54 (1)	4.43
F- E	-1252 / 0	0.0	0.0	0.13 (1)	7.10
K- J	0 / 0	-18.2	-18.2	0.05 (4)	10.00
J- I	0 / 901	-18.2	-18.2	0.19 (1)	10.00
I- H	0 / 1522	-18.2	-18.2	0.31 (1)	10.00
H- G	0 / 0	-18.2	-18.2	0.14 (4)	10.00
G- F	0 / 0	-18.2	-18.2	0.14 (4)	10.00

WEBS

MEMB. FR-TO	MAX. FACTORED FORCE (LBS)	MAX CSI (LC)
A- J	0 / 1260	0.28 (1)
J- B	-550 / 0	0.43 (1)
J- C	-551 / 0	0.61 (1)
I- C	0 / 503	0.11 (1)
I- D	-753 / 0	0.65 (1)
H- D	-111 / 74	0.03 (1)
H- E	0 / 1538	0.35 (1)

DESIGN CRITERIA

SPECIFIED LOADS:

TOP CH.	LL	=	34.8	PSF
	DL	=	6.0	PSF
BOT CH.	LL	=	0.0	PSF
	DL	=	7.3	PSF
TOTAL LOAD		=	48.1	PSF

SPACING = 24.0 IN. C/C

LOADING IN FLAT SECTION BASED ON A SLOPE OF 2.00/12 MINIMUM

THIS TRUSS IS DESIGNED FOR RESIDENTIAL OR SMALL BUILDING REQUIREMENTS OF PART 9, NBCC 2015

THIS DESIGN COMPLIES WITH:
- PART 9 OF BCBC 2018 , NBC-2019AE
- PART 9 OF OBC 2012 (2019 AMENDMENT)
- CSA 086-14
- TPIC 2014

(55 % OF 48.1 P.S.F. G.S.L. PLUS 8.4 P.S.F. RAIN LOAD) EQUALS 34.8 P.S.F. SPECIFIED ROOF LIVE LOAD

ALLOWABLE DEFL.(LL)= L/360 (0.63")
CALCULATED VERT. DEFL.(LL) = L/ 999 (0.05")
ALLOWABLE DEFL.(TL)= L/360 (0.63")
CALCULATED VERT. DEFL.(TL) = L/ 999 (0.10")

CSI: TC=0.54/0.97 (D-E:1) , BC=0.31/0.97 (H-I:1) , WB=0.65/0.97 (D-I:1) , SSI=0.30/1.00 (D-E:1)

DOL LUMBER=1.00 NAIL=1.00 LS BEND=1.10 COMP=1.10 SHEAR=1.10 TENS= 1.10

COMPANION LIVE LOAD FACTOR = 1.00

TRUSS PLATE MANUFACTURER IS NOT RESPONSIBLE FOR QUALITY CONTROL IN THE TRUSS MANUFACTURING PLANT .

NAIL VALUES

PLATE	GRIP(DRY) (PSI) MAX	MIN	SHEAR (PLI) MAX	MIN	SECTION (PLI) MAX	MIN
MT20	650	371	1747	788	1987	1873

PLATE PLACEMENT TOL. = 0.250 inches

PLATE ROTATION TOL. = 5.0 Deg.

JSI GRIP= 0.89 (A) (INPUT = 0.90)
JSI METAL= 0.52 (H) (INPUT = 1.00)

LICENSED PROFESSIONAL ENGINEER
I.MATIJEVIC
100528832
PROVINCE OF ONTARIO
JULY 14, 2023

READ ALL NOTES ON THIS PAGE AND ON THE ENGINEERING NOTES: TRUSSES. THE NOTE PAGE IS AN INTEGRAL PART OF THIS DRAWING AS IT CONTAINS SPECIFICATIONS AND CRITERIA USED IN THE DESIGN OF THIS COMPONENT.

KOTT

CORPORATION OF THE CITY OF OSHAWA
TRUE COPY
OF PERMIT PLANS
Oct 30 2023
PER:
CHIEF BUILDING OFFICIAL

JOB NAME	TRUSS NAME	QUANTITY	PLY	JOB DESC.	DRWG NO.
IM0723-093	T10	1	1	TRUSS DESC.	MHP 23030

Version 8.630 S Mar 22 2023 MiTek Industries, Inc. Fri Jul 14 07:36:08 2023 Page 1
ID:3suF8DUMbbxFEOWsk3nNIizALn9-GpBlZntO9msXxPPKWQttqY5zWF0jeEwzUFPwRMyyE7L

Scale = 1:57.0

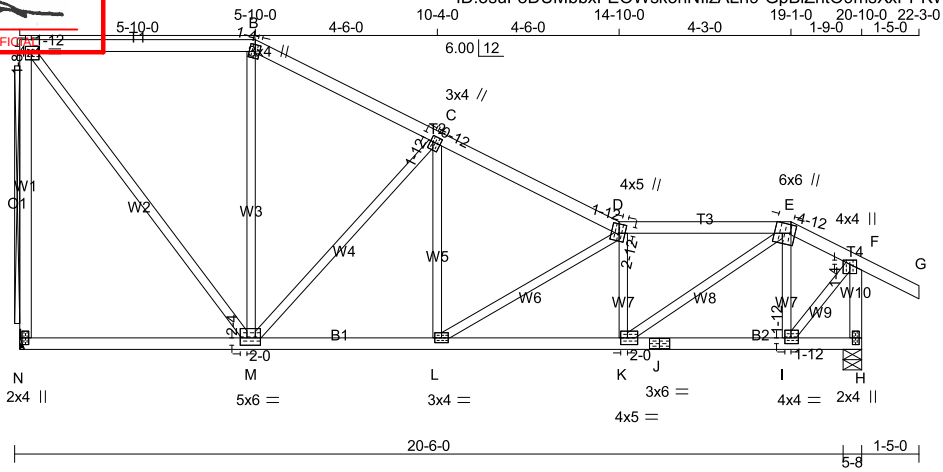

TOTAL WEIGHT = 98 lb

[M][F]

LUMBER

N. L. G. A. RULES

CHORDS	SIZE		LUMBER	DESCR.
N - A	2x4	DRY	No.2	SPF
A - B	2x4	DRY	No.2	SPF
B - D	2x4	DRY	No.2	SPF
D - E	2x4	DRY	No.2	SPF
E - G	2x4	DRY	No.2	SPF
H - F	2x4	DRY	No.2	SPF
N - J	2x4	DRY	No.2	SPF
J - H	2x4	DRY	No.2	SPF
ALL WEBS	2x3	DRY	No.2	SPF

EXCEPT

DRY: SEASONED LUMBER.

PLATES (table is in inches)

JT	TYPE	PLATES	W	LEN	Y	X
A	TMVW-t	MT20	4.0	4.0	1.50	1.75
B	TTW+m	MT20	3.0	4.0	2.00	1.25
C	TMWW+t	MT20	3.0	4.0	1.75	0.75
D	TTWW+m	MT20	4.0	5.0	2.75	1.75
E	TTWW+m	MT20	6.0	6.0	Edge	4.75
F	TMVW+p	MT20	4.0	4.0	1.25	2.00
H	BMV1+p	MT20	2.0	4.0		
I	BMWW-t	MT20	4.0	4.0	1.75	1.75
J	BS-t	MT20	3.0	6.0		
K	BMWW-t	MT20	4.0	5.0	2.00	2.00
L	BMWW-t	MT20	3.0	4.0		
M	BMWWW-t	MT20	5.0	6.0	2.25	2.00
N	BMV1+p	MT20	2.0	4.0		

Edge - INDICATES REFERENCE CORNER OF PLATE TOUCHES EDGE OF CHORD.

DIMENSIONS, SUPPORTS AND LOADINGS SPECIFIED BY FABRICATOR TO BE VERIFIED BY BUILDING DESIGNER

BEARINGS

JT	FACTORED GROSS REACTION VERT	HORZ	MAXIMUM FACTORED GROSS REACTION DOWN	HORZ	UPLIFT	INPUT BRG IN-SX	REQRD BRG IN-SX
N	1428	0	1428	0	0	MECHANICAL	
H	1617	0	1617	0	0	5-8	1-12

A SUITABLE HANGER/MECHANICAL CONNECTION IS REQUIRED AT JOINT N. MINIMUM BEARING LENGTH AT JOINT N = 1-9.

UNFACTORED REACTIONS

JT	1ST LCASE COMBINED	SNOW	MAX./MIN. COMPONENT REACTIONS LIVE	PERM.LIVE	WIND	DEAD	SOIL
N	998	722 / 0	0 / 0	0 / 0	0 / 0	276 / 0	0 / 0
H	1128	832 / 0	0 / 0	0 / 0	0 / 0	295 / 0	0 / 0

BEARING MATERIAL TO BE SPF NO.2 OR BETTER AT JOINT(S) H

BRACING

TOP CHORD TO BE SHEATHED OR MAX. PURLIN SPACING = 4.35 FT.
MAX. UNBRACED BOTTOM CHORD LENGTH = 10.00 FT OR RIGID CEILING DIRECTLY APPLIED.

ALL PITCH BREAKS AND PERIMETER CORNER JOINTS MUST BE LATERALLY RESTRAINED.

2x4 DRY SPF No.2 T-BRACE AT A-N

FASTEN T AND I-BRACES TO NARROW EDGE OF WEB WITH ONE ROW PER PLY OF 3" COMMON WIRE NAILS @ 6" O.C. WITH 3" MINIMUM END DISTANCE. BRACE MUST COVER 90% OF WEB LENGTH.

END VERTICAL(S) MUST BE SHEATHED OR HAVE BRACES AS INDICATED IN THE MAX. UNBRACED LENGTH COLUMN OF THE TABLE BELOW

LOADING

TOTAL LOAD CASES: (4)

CHORDS

MEMB. FR-TO	MAX. FACTORED FORCE (LBS)	FACTORED VERT. LOAD (PLF) FROM	TO	LC1 MAX CSI (LC)	MAX. UNBRAC LENGTH
N- A	-1384 / 0	0.0	0.0	0.45 (1)	7.81
A- B	-806 / 0	-119.4	-119.4	0.53 (1)	5.85
B- C	-933 / 0	-119.4	-119.4	0.32 (1)	5.94
C- D	-1659 / 0	-119.4	-119.4	0.35 (1)	4.74
D- E	-2072 / 0	-119.4	-119.4	0.33 (1)	4.35
E- F	-931 / 0	-119.4	-119.4	0.15 (1)	6.21
F- G	0 / 40	-119.4	-119.4	0.18 (1)	10.00
H- F	-1617 / 0	0.0	0.0	0.20 (1)	6.42
N- M	0 / 0	-18.2	-18.2	0.13 (4)	10.00
M- L	0 / 1511	-18.2	-18.2	0.31 (1)	10.00
L- K	0 / 2103	-18.2	-18.2	0.39 (1)	10.00
K- J	0 / 772	-18.2	-18.2	0.17 (1)	10.00
J- I	0 / 772	-18.2	-18.2	0.17 (1)	10.00
I- H	0 / 0	-18.2	-18.2	0.05 (4)	10.00

WEBS

MEMB. FR-TO	MAX. FACTORED FORCE (LBS)	MAX CSI (LC)
A- M	0 / 1313	0.30 (1)
M- B	-147 / 35	0.16 (1)
M- C	-1051 / 0	0.93 (1)
L- C	0 / 459	0.10 (1)
L- D	-701 / 0	0.34 (1)
K- D	-834 / 0	0.15 (1)
K- E	0 / 1581	0.36 (1)
I- E	-779 / 0	0.14 (1)
I- F	0 / 1172	0.26 (1)

DESIGN CRITERIA

SPECIFIED LOADS:

TOP CH.	LL	=	34.8	PSF
	DL	=	6.0	PSF
BOT CH.	LL	=	0.0	PSF
	DL	=	7.3	PSF
TOTAL LOAD		=	48.1	PSF

SPACING = 24.0 IN. C/C

LOADING IN ALL FLAT SECTIONS BASED ON A SLOPE OF 2.00/12 MINIMUM

THIS TRUSS IS DESIGNED FOR RESIDENTIAL OR SMALL BUILDING REQUIREMENTS OF PART 9, NBCC 2015

THIS DESIGN COMPLIES WITH:
- PART 9 OF BCBC 2018 , NBC-2019AE
- PART 9 OF OBC 2012 (2019 AMENDMENT)
- CSA 086-14
- TPIC 2014

DESIGN ASSUMPTIONS
-OVERHANG NOT TO BE ALTERED OR CUT OFF.

(55 % OF 48.1 P.S.F. G.S.L. PLUS 8.4 P.S.F. RAIN LOAD) EQUALS 34.8 P.S.F. SPECIFIED ROOF LIVE LOAD

ALLOWABLE DEFL.(LL)= L/360 (0.69")
CALCULATED VERT. DEFL.(LL) = L/ 999 (0.08")
ALLOWABLE DEFL.(TL)= L/360 (0.69")
CALCULATED VERT. DEFL.(TL) = L/ 999 (0.14")

CSI: TC=0.53/0.97 (A-B:1) , BC=0.39/0.97 (K-L:1) , WB=0.93/0.97 (C-M:1) , SSI=0.27/1.00 (A-B:1)

DOL LUMBER=1.00 NAIL=1.00 LS BEND=1.10 COMP=1.10 SHEAR=1.10 TENS= 1.10

COMPANION LIVE LOAD FACTOR = 1.00

TRUSS PLATE MANUFACTURER IS NOT RESPONSIBLE FOR QUALITY CONTROL IN THE TRUSS MANUFACTURING PLANT .

NAIL VALUES

PLATE	GRIP(DRY) (PSI) MAX	MIN	SHEAR (PLI) MAX	MIN	SECTION (PLI) MAX	MIN
MT20	650	371	1747	788	1987	1873

PLATE PLACEMENT TOL. = 0.250 inches

PLATE ROTATION TOL. = 0.5 Deg.

JSI GRIP= 0.89 (M) (INPUT = 0.90)
JSI METAL= 0.36 (K) (INPUT = 1.00)

LICENSED PROFESSIONAL ENGINEER
I.MATIJEVIC
100528832
PROVINCE OF ONTARIO
JULY 14, 2023

READ ALL NOTES ON THIS PAGE AND ON THE ENGINEERING NOTES: TRUSSES. THE NOTE PAGE IS AN INTEGRAL PART OF THIS DRAWING AS IT CONTAINS SPECIFICATIONS AND CRITERIA USED IN THE DESIGN OF THIS COMPONENT.

KOTT

CORPORATION OF THE CITY OF OSHAWA
TRUE COPY
OF PERMIT PLANS
Oct 30 2023
PER:
CHIEF BUILDING OFFICIAL

JOB NAME	TRUSS NAME	QUANTITY	PLY	JOB DESC.	DRWG NO.
IM0723-093	T01	1	1	TRUSS DESC.	MHP 23030

Version 8.630 S Mar 22 2023 MiTek Industries, Inc. Fri Jul 14 07:36:09 2023 Page 1
ID:3suF8DUMbbxFEOWsk3nNIizALn9-k?l7m7u0w4_OZZ_W37O6Nld7wfNpNoj7jv8TzpyyE7K

Scale = 1:65.0

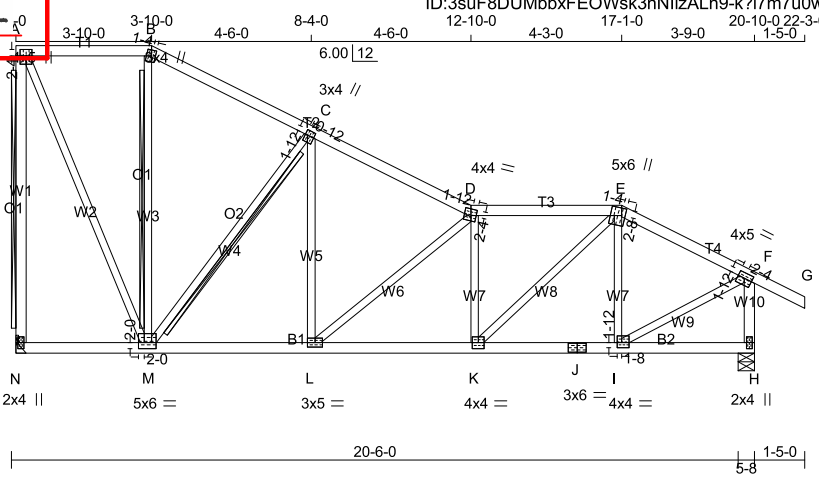

TOTAL WEIGHT = 105 lb

[M][F]

LUMBER

N. L. G. A. RULES

CHORDS	SIZE		LUMBER	DESCR.
N - A	2x4	DRY	No.2	SPF
A - B	2x4	DRY	No.2	SPF
B - D	2x4	DRY	No.2	SPF
D - E	2x4	DRY	No.2	SPF
E - G	2x4	DRY	No.2	SPF
H - F	2x4	DRY	No.2	SPF
N - J	2x4	DRY	No.2	SPF
J - H	2x4	DRY	No.2	SPF
ALL WEBS EXCEPT	2x3	DRY	No.2	SPF

DRY: SEASONED LUMBER.

PLATES (table is in inches)

JT	TYPE	PLATES	W	LEN	Y	X
A	TMVW+p	MT20	4.0	5.0	2.25	2.00
B	TTW+m	MT20	3.0	4.0	2.00	1.25
C	TMWW+t	MT20	3.0	4.0	1.75	0.75
D	TTWW-m	MT20	4.0	4.0	2.25	1.75
E	TTWW+m	MT20	5.0	6.0	2.50	1.25
F	TMVW-t	MT20	4.0	5.0	1.75	2.25
H	BMV1+p	MT20	2.0	4.0		
I	BMWW-t	MT20	4.0	4.0	1.75	1.50
J	BS-t	MT20	3.0	6.0		
K	BMWW-t	MT20	4.0	4.0		
L	BMWW-t	MT20	3.0	5.0		
M	BMWWW-t	MT20	5.0	6.0	2.00	2.00
N	BMV1+p	MT20	2.0	4.0		

DIMENSIONS, SUPPORTS AND LOADINGS SPECIFIED BY FABRICATOR TO BE VERIFIED BY BUILDING DESIGNER

BEARINGS

JT	FACTORED GROSS REACTION VERT	HORZ	MAXIMUM FACTORED GROSS REACTION DOWN	HORZ	UPLIFT	INPUT BRG IN-SX	REQRD BRG IN-SX
N	1434	0	1434	0	0	MECHANICAL	
H	1611	0	1611	0	0	5-8	1-12

A SUITABLE HANGER/MECHANICAL CONNECTION IS REQUIRED AT JOINT N. MINIMUM BEARING LENGTH AT JOINT N = 1-9.

UNFACTORED REACTIONS

JT	1ST LCASE COMBINED	SNOW	MAX./MIN. COMPONENT REACTIONS LIVE	PERM.LIVE	WIND	DEAD	SOIL
N	1002	725 / 0	0 / 0	0 / 0	0 / 0	277 / 0	0 / 0
H	1123	828 / 0	0 / 0	0 / 0	0 / 0	295 / 0	0 / 0

BEARING MATERIAL TO BE SPF NO.2 OR BETTER AT JOINT(S) H

BRACING

TOP CHORD TO BE SHEATHED OR MAX. PURLIN SPACING = 4.61 FT.
MAX. UNBRACED BOTTOM CHORD LENGTH = 10.00 FT OR RIGID CEILING DIRECTLY APPLIED.

ALL PITCH BREAKS AND PERIMETER CORNER JOINTS MUST BE LATERALLY RESTRAINED.

2x4 DRY SPF No.2 T-BRACE AT A-N, B-M, C-M

FASTEN T AND I-BRACES TO NARROW EDGE OF WEB WITH ONE ROW PER PLY OF 3" COMMON WIRE NAILS @ 6" O.C. WITH 3" MINIMUM END DISTANCE. BRACE MUST COVER 90% OF WEB LENGTH.

END VERTICAL(S) MUST BE SHEATHED OR HAVE BRACES AS INDICATED IN THE MAX. UNBRACED LENGTH COLUMN OF THE TABLE BELOW

LOADING

TOTAL LOAD CASES: (4)

CHORDS

MEMB. FR-TO	MAX. FACTORED FORCE (LBS)	FACTORED VERT. LOAD (PLF) FROM	TO	LC1 MAX CSI (LC)	MAX. UNBRAC LENGTH
N- A	-1406 / 0	0.0	0.0	0.61 (1)	7.81
A- B	-525 / 0	-119.4	-119.4	0.23 (1)	6.25
B- C	-619 / 0	-119.4	-119.4	0.32 (1)	6.25
C- D	-1341 / 0	-119.4	-119.4	0.34 (1)	5.16
D- E	-1814 / 0	-119.4	-119.4	0.32 (1)	4.61
E- F	-1301 / 0	-119.4	-119.4	0.24 (1)	5.36
F- G	0 / 40	-119.4	-119.4	0.18 (1)	10.00
H- F	-1583 / 0	0.0	0.0	0.19 (1)	6.48
N- M	0 / 0	-18.2	-18.2	0.07 (4)	10.00
M- L	0 / 1227	-18.2	-18.2	0.23 (1)	10.00
L- K	0 / 1829	-18.2	-18.2	0.34 (1)	10.00
K- J	0 / 1149	-18.2	-18.2	0.22 (1)	10.00
J- I	0 / 1149	-18.2	-18.2	0.22 (1)	10.00
I- H	0 / 0	-18.2	-18.2	0.07 (4)	10.00

WEBS

MEMB. FR-TO	MAX. FACTORED FORCE (LBS)	MAX CSI (LC)
A- M	0 / 1290	0.29 (1)
M- B	-169 / 12	0.09 (1)
M- C	-1163 / 0	0.51 (1)
L- C	0 / 606	0.14 (1)
L- D	-794 / 0	0.49 (1)
K- D	-551 / 0	0.14 (1)
K- E	0 / 910	0.20 (1)
I- E	-514 / 0	0.13 (1)
I- F	0 / 1308	0.29 (1)

DESIGN CRITERIA

SPECIFIED LOADS:

TOP CH.	LL	=	34.8	PSF
	DL	=	6.0	PSF
BOT CH.	LL	=	0.0	PSF
	DL	=	7.3	PSF
TOTAL LOAD		=	48.1	PSF

SPACING = 24.0 IN. C/C

LOADING IN ALL FLAT SECTIONS BASED ON A SLOPE OF 2.00/12 MINIMUM

THIS TRUSS IS DESIGNED FOR RESIDENTIAL OR SMALL BUILDING REQUIREMENTS OF PART 9, NBCC 2015

THIS DESIGN COMPLIES WITH:
- PART 9 OF BCBC 2018 , NBC-2019AE
- PART 9 OF OBC 2012 (2019 AMENDMENT)
- CSA 086-14
- TPIC 2014

(55 % OF 48.1 P.S.F. G.S.L. PLUS 8.4 P.S.F. RAIN LOAD) EQUALS 34.8 P.S.F. SPECIFIED ROOF LIVE LOAD

ALLOWABLE DEFL.(LL)= L/360 (0.69")
CALCULATED VERT. DEFL.(LL) = L/ 999 (0.07")
ALLOWABLE DEFL.(TL)= L/360 (0.69")
CALCULATED VERT. DEFL.(TL) = L/ 999 (0.12")

CSI: TC=0.61/0.97 (A-N:1) , BC=0.34/0.97 (K-L:1) , WB=0.51/0.97 (C-M:1) , SSI=0.23/1.00 (C-D:1)

DOL LUMBER=1.00 NAIL=1.00 LS BEND=1.10 COMP=1.10 SHEAR=1.10 TENS= 1.10

COMPANION LIVE LOAD FACTOR = 1.00

TRUSS PLATE MANUFACTURER IS NOT RESPONSIBLE FOR QUALITY CONTROL IN THE TRUSS MANUFACTURING PLANT .

NAIL VALUES

PLATE	GRIP(DRY) (PSI) MAX	MIN	SHEAR (PLI) MAX	MIN	SECTION (PLI) MAX	MIN
MT20	650	371	1747	788	1987	1873

PLATE PLACEMENT TOL. = 0.250 inches

PLATE ROTATION TOL. = 5.0 Deg.

JSI GRIP= 0.89 (C) (INPUT = 0.90)
JSI METAL= 0.40 (F) (INPUT = 1.00)

LICENSED PROFESSIONAL ENGINEER
I.MATIJEVIC
100528832
PROVINCE OF ONTARIO
JULY 14, 2023

READ ALL NOTES ON THIS PAGE AND ON THE ENGINEERING NOTES: TRUSSES. THE NOTE PAGE IS AN INTEGRAL PART OF THIS DRAWING AS IT CONTAINS SPECIFICATIONS AND CRITERIA USED IN THE DESIGN OF THIS COMPONENT.

KOTT

CORPORATION OF THE CITY OF OSHAWA
TRUE COPY
OF PERMIT PLANS
Oct 30 2023
PER:
CHIEF BUILDING OFFICIAL

JOB NAME	TRUSS NAME	QUANTITY	PLY	JOB DESC.	DRWG NO.
IM0723-093	T12	1	1	TRUSS DESC.	MHP 23030

Version 8.630 S Mar 22 2023 MiTek Industries, Inc. Fri Jul 14 07:36:10 2023 Page 1
ID:3suF8DUMbbxFEOWsk3nNlizALn9-CCJVzTuehN6FAjZidrvLvzAJ_3kI67iGxZu1VFyyE7J

Scale = 1:57.4

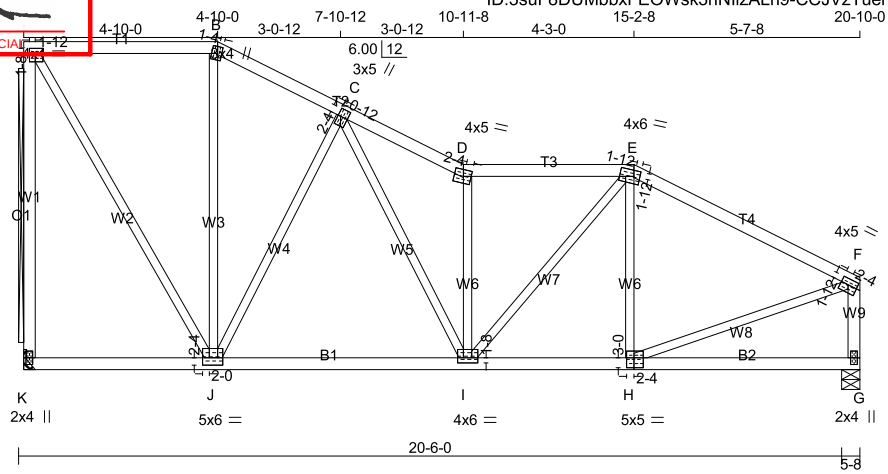

TOTAL WEIGHT = 101 lb

[M][F]

LUMBER

N. L. G. A. RULES

CHORDS	SIZE		LUMBER	DESCR.
K - A	2x4	DRY	No.2	SPF
A - B	2x4	DRY	No.2	SPF
B - D	2x4	DRY	No.2	SPF
D - E	2x4	DRY	No.2	SPF
E - F	2x4	DRY	No.2	SPF
G - F	2x4	DRY	No.2	SPF
K - H	2x4	DRY	No.2	SPF
H - G	2x4	DRY	No.2	SPF
ALL WEBS EXCEPT	2x3	DRY	No.2	SPF

DRY: SEASONED LUMBER.

PLATES (table is in inches)

JT	TYPE	PLATES	W	LEN	Y	X
A	TMVW-t	MT20	4.0	4.0	1.50	1.75
B	TTW+m	MT20	3.0	4.0	2.00	1.25
C	TMWW+t	MT20	3.0	5.0	2.25	0.75
D	TTW-m	MT20	4.0	5.0	2.00	2.25
E	TTWW-m	MT20	4.0	6.0	1.75	1.75
F	TMVW-t	MT20	4.0	5.0	1.75	2.25
G	BMV1+p	MT20	2.0	4.0		
H	BSWW-l	MT20	5.0	5.0	3.00	2.25
I	BMWWW-t	MT20	4.0	6.0	1.50	3.00
J	BMWWW-t	MT20	5.0	6.0	2.25	2.00
K	BMV1+p	MT20	2.0	4.0		

DIMENSIONS, SUPPORTS AND LOADINGS SPECIFIED BY FABRICATOR TO BE VERIFIED BY BUILDING DESIGNER

BEARINGS

JT	FACTORED GROSS REACTION VERT	HORZ	MAXIMUM FACTORED GROSS REACTION DOWN	HORZ	UPLIFT	INPUT BRG	REQRD BRG
K	1434	0	1434	0	0	MECHANICAL	
G	1434	0	1434	0	0	5-8	1-9

A SUITABLE HANGER/MECHANICAL CONNECTION IS REQUIRED AT JOINT K. MINIMUM BEARING LENGTH AT JOINT K = 1-9.

UNFACTORED REACTIONS

JT	1ST LCASE COMBINED	SNOW	MAX./MIN. COMPONENT REACTIONS LIVE	PERM.LIVE	WIND	DEAD	SOIL
K	1002	725 / 0	0 / 0	0 / 0	0 / 0	277 / 0	0 / 0
G	1002	725 / 0	0 / 0	0 / 0	0 / 0	277 / 0	0 / 0

BEARING MATERIAL TO BE SPF NO.2 OR BETTER AT JOINT(S) G

BRACING

TOP CHORD TO BE SHEATHED OR MAX. PURLIN SPACING = 4.80 FT.
MAX. UNBRACED BOTTOM CHORD LENGTH = 10.00 FT OR RIGID CEILING DIRECTLY APPLIED.

ALL PITCH BREAKS AND PERIMETER CORNER JOINTS MUST BE LATERALLY RESTRAINED.

2x4 DRY SPF No.2 T-BRACE AT A-K

FASTEN T AND I-BRACES TO NARROW EDGE OF WEB WITH ONE ROW PER PLY OF 3" COMMON WIRE NAILS @ 6" O.C. WITH 3" MINIMUM END DISTANCE. BRACE MUST COVER 90% OF WEB LENGTH.

END VERTICAL(S) MUST BE SHEATHED OR HAVE BRACES AS INDICATED IN THE MAX. UNBRACED LENGTH COLUMN OF THE TABLE BELOW

LOADING

TOTAL LOAD CASES: (4)

CHORDS

MEMB. FR-TO	MAX. FACTORED FORCE (LBS)	FACTORED VERT. LOAD (PLF) FROM	TO	LC1 MAX CSI (LC)	MAX. UNBRAC LENGTH
K- A	-1403 / 0	0.0	0.0	0.53 (1)	7.81
A- B	-670 / 0	-119.4	-119.4	0.36 (1)	6.25
B- C	-773 / 0	-119.4	-119.4	0.16 (1)	6.25
C- D	-1738 / 0	-119.4	-119.4	0.19 (1)	4.85
D- E	-1550 / 0	-119.4	-119.4	0.30 (1)	4.92
E- F	-1381 / 0	-119.4	-119.4	0.52 (1)	4.80
G- F	-1382 / 0	0.0	0.0	0.17 (1)	6.84
K- J	0 / 0	-18.2	-18.2	0.14 (4)	10.00
J- I	0 / 1127	-18.2	-18.2	0.26 (1)	10.00
I- H	0 / 1227	-18.2	-18.2	0.24 (1)	10.00
H- G	0 / 0	-18.2	-18.2	0.18 (4)	10.00

WEBS

MEMB. FR-TO	MAX. FACTORED FORCE (LBS)	MAX CSI (LC)
A- J	0 / 1301	0.29 (1)
J- B	-87 / 35	0.11 (1)
J- C	-1019 / 0	0.97 (1)
C- I	0 / 1001	0.23 (1)
I- D	-1172 / 0	0.45 (1)
I- E	0 / 495	0.11 (1)
H- E	-346 / 0	0.13 (1)
H- F	0 / 1306	0.29 (1)

DESIGN CRITERIA

SPECIFIED LOADS:

TOP CH.	LL	=	34.8	PSF
	DL	=	6.0	PSF
BOT CH.	LL	=	0.0	PSF
	DL	=	7.3	PSF
TOTAL LOAD		=	48.1	PSF

SPACING = 24.0 IN. C/C

LOADING IN ALL FLAT SECTIONS BASED ON A SLOPE OF 2.00/12 MINIMUM

THIS TRUSS IS DESIGNED FOR RESIDENTIAL OR SMALL BUILDING REQUIREMENTS OF PART 9, NBCC 2015

THIS DESIGN COMPLIES WITH:
- PART 9 OF BCBC 2018 , NBC-2019AE
- PART 9 OF OBC 2012 (2019 AMENDMENT)
- CSA 086-14
- TPIC 2014

(55 % OF 48.1 P.S.F. G.S.L. PLUS 8.4 P.S.F. RAIN LOAD) EQUALS 34.8 P.S.F. SPECIFIED ROOF LIVE LOAD

ALLOWABLE DEFL.(LL)= L/360 (0.69")
CALCULATED VERT. DEFL.(LL) = L/ 999 (0.07")
ALLOWABLE DEFL.(TL)= L/360 (0.69")
CALCULATED VERT. DEFL.(TL) = L/ 999 (0.13")

CSI: TC=0.53/0.97 (A-K:1) , BC=0.26/0.97 (I-J:1) , WB=0.97/0.97 (C-J:1) , SSI=0.23/1.00 (E-F:1)

DOL LUMBER=1.00 NAIL=1.00 LS BEND=1.10 COMP=1.10 SHEAR=1.10 TENS= 1.10

COMPANION LIVE LOAD FACTOR = 1.00

TRUSS PLATE MANUFACTURER IS NOT RESPONSIBLE FOR QUALITY CONTROL IN THE TRUSS MANUFACTURING PLANT .

NAIL VALUES

PLATE	GRIP(DRY) (PSI) MAX	MIN	SHEAR (PLI) MAX	MIN	SECTION (PLI) MAX	MIN
MT20	650	371	1747	788	1987	1873

PLATE PLACEMENT TOL. = 0.250 inches

PLATE ROTATION TOL. = 5.0 Deg.

JSI GRIP= 0.89 (A) (INPUT = 0.90)
JSI METAL= 0.47 (C) (INPUT = 1.00)

LICENSED PROFESSIONAL ENGINEER
I.MATIJEVIC
100528832
PROVINCE OF ONTARIO
JULY 14, 2023

READ ALL NOTES ON THIS PAGE AND ON THE ENGINEERING NOTES: TRUSSES. THE NOTE PAGE IS AN INTEGRAL PART OF THIS DRAWING AS IT CONTAINS SPECIFICATIONS AND CRITERIA USED IN THE DESIGN OF THIS COMPONENT.

KOTT