MHP 23028

CORPORATION OF THE CITY OF OSHAWA
TRUE COPY
OF PERMIT PLANS
Nov 15 2023
PER: C. Morr
CHIEF BUILDING OFFICIAL

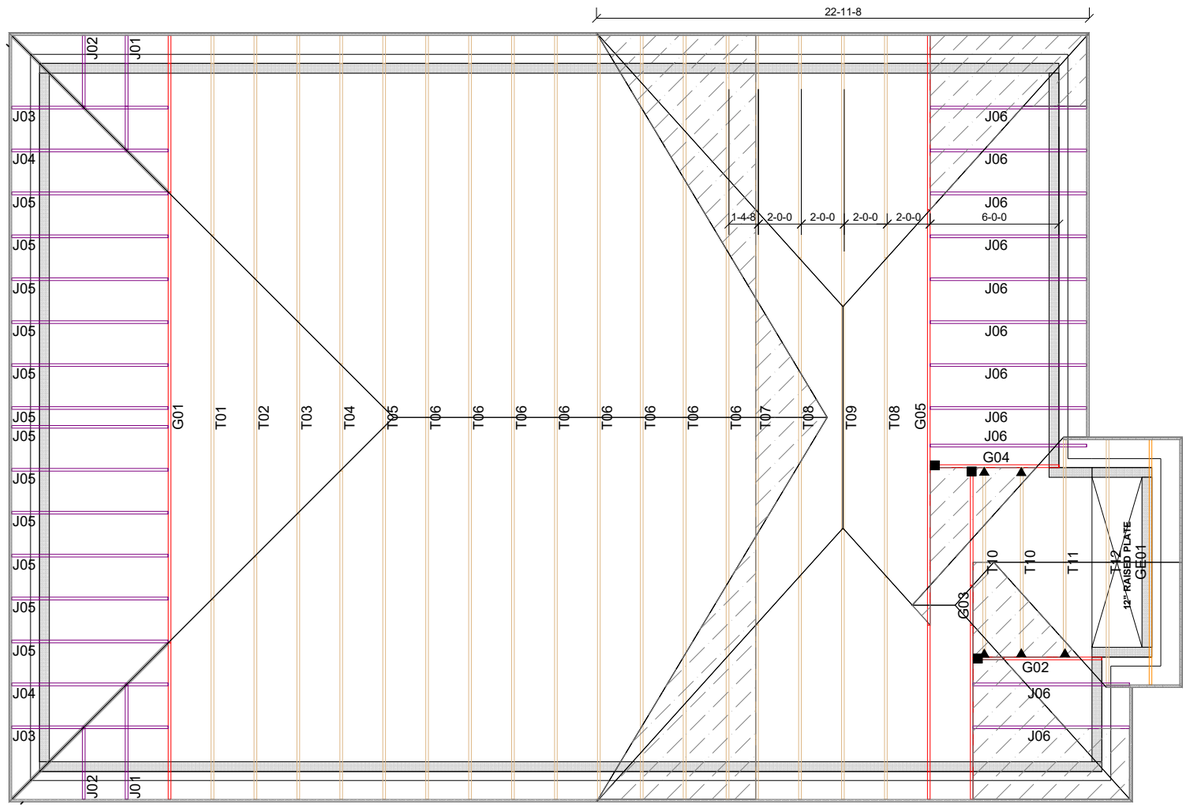

Hanger Name	Symbol	QTY
LUS24	▲	5
LJS26DS	■	3
	●	0
	⬟	0
	△	0
	□	0
	⬠	0
	○	0

BOTTOM OF SOFFIT LEVEL WITH TOP OF PLATE

CONVENTIONAL FRAMING BY OTHERS

ALL CONVENTIONAL FRAMING TO CONFORM WITH PART 9 OF THE OBC. ROOF RAFTERS THAT CROSS OVER TRUSSES TO BE MIN. 2x4 SPF @ 24" C/C WITH A 2x4 VERTICAL POST TO THE TRUSS BELOW. VERTICAL POSTS TO BE LATERALLY BRACED SO THAT UNBRACED LENGTH DOES NOT EXCEED 6'. DESIGN OF CONVENTIONAL FRAMING IS THE RESPONSIBILITY OF THE PROJECT ENGINEER.

JOB INFORMATION

Customer	GREENPARK HOMES
Job #	23-00109R0
Address	ZADORRA ESTATES ROSE 2 EL 1 OSHAWA,ON
Model	ROSE 2 EL 1
Sales Rep	RALPH MIRIGELLO
Designer	BB
Date	5/30/2023
Path	S:\DESIGN\KLU\CUSTOMERS\GREENPARK\ZADORRA ESTATES\MODELS\ROSE 2\ROSE 2-1\T-ROSE

DESIGN INFORMATION

Code	NBCC 2015
Bldg	Residential - HSB (NBCC Part 9)
TC LL	34.8 lb/ft²
TC DL	6.0 lb/ft²
BC LL	0.0 lb/ft²
BC DL	7.3 lb/ft²
Deflection	LL=L/360 TL=L/360
Spacing	24" O/C unless otherwise noted
Complies With	OBC 2012 (2019 Amendment) CSA O86-14 and TPIC 2014

IMPORTANT INFORMATION

Hangers and Fasteners to be installed as per manufacturer

Refer to truss drawings in the Truss Engineering Package for ply-to-ply attachment notes

For site-framed valleys: top chords of all roof trusses must be laterally supported using 2x4 continuous bracing @24 O/C - all bracing must be anchored at ends as per TPIC Installation Guidelines

Read all notes on this page in addition to those shown on the KOTT Truss Engineering package

Field erection, handling and bracing are not the responsibility of KOTT, or KOTT Engineering

Unless noted otherwise, hurricane ties are to be installed at the bearings of all trusses > 40 ft clear span, and any girder or beam supporting trusses with a clear span >40 ft. See hanger legend for type.

Unless noted otherwise, for Part 9 bldgs, all trusses are to be anchored to the top of supporting walls as follows: trusses with a clear span <40 ft use 3-1/4" nails @ each bearing; trusses with a clear span >40 ft use 3-1/4" nails @ each bearing in addition to the appropriate hurricane tie.

KOTT Inc.
14 Anderson Blvd.
Uxbridge, ON
905.642.4400

Engineering Notes: Trusses

KOTT

MHP 23028

CORPORATION OF THE CITY OF OSHAWA
TRUE COPY
OF PERMIT PLANS
Nov 15, 2023
PER:
CHIEF BUILDING OFFICIAL

PLEASE READ THIS PRIOR TO INSTALLATION OF THE COMPONENT

RESPONSIBILITIES

THE UNDERSIGNED ENGINEER IS ONLY RESPONSIBLE FOR THE STRUCTURAL INTEGRITY OF THIS BUILDING COMPONENT FOR THE CONDITIONS AND LOADS SHOWN ON CALCULATION PAGE. THE STRUCTURAL INTEGRITY OF THE BUILDING AND THE VERIFICATION OF THE DIMENSIONS AND THE DESIGN LOADS USED ARE THE RESPONSIBILITY OF THE BUILDING DESIGNER.
THE UNDERSIGNED ENGINEER DISCLAIMS ANY RESPONSIBILITY FOR DAMAGES AS A RESULT OF FAULTY OR INCORRECT INFORMATION, SPECIFICATION AND/OR DESIGNS FURNISHED TO THE ENGINEER.
IT IS THE RESPONSIBILITY OF KOTT Inc. TO ENSURE THAT TRUSSES ARE MANUFACTURED IN CONFORMANCE WITH THESE DESIGNS AND WITH THE SPECIFICATIONS OUTLINED BELOW. THE UNDERSIGNED ENGINEER IS NOT RESPONSIBLE FOR QUALITY CONTROL IN THE TRUSS MANUFACTURING PLANT.

DESIGN INFORMATION

THIS DESIGN IS FOR AN INDIVIDUAL BUILDING COMPONENT AND HAS BEEN BASED ON INFORMATION PROVIDED BY KOTT DESIGN.

1. THE BUILDING USE AND OCCUPANCY TYPE IS AS INDICATED ON THE DRAWING.
2. GEOMETRY OF THE TRUSS AND DIMENSIONS INDICATED ON THE DRAWING ARE IDENTICAL TO THOSE OF THE INSTALLED TRUSS.
3. THE TRUSS LOADING INTENSITY AND DISTRIBUTION AS WELL AS LOAD TRANSFER MECHANISM IS THAT INDICATED ON THE DRAWING. NO BUILDINGS, TREES, PARAPETS OR OTHER PROJECTIONS HIGHER THAN THE ROOF FOR WHICH THE TRUSSES ARE USED ARE LOCATED WITHIN A DISTANCE LESS THAN TEN (10) TIMES THE DIFFERENCE IN HEIGHT, OR FIVE METERS (16 FT) WHICHEVER IS GREATER, UNLESS THE DRAWING INDICATES THAT THE SNOW DRIFTING HAS BEEN TAKEN INTO ACCOUNT.
4. THE TRUSSES ARE TO BE SUPPORTED AT THE BEARING POINTS INDICATED AND ANCHORED TO THE SUPPORTS WHERE CONSIDERED NECESSARY BY THE DESIGNER OF THE OVERALL STRUCTURE. BEARING SIZES SHOWN ARE THE MINIMUM REQUIRED TO PREVENT CRUSHING OF THE TRUSS MEMBERS AND DO NOT NECESSARILY TAKE INTO ACCOUNT STABILITY OF THE OVERALL BUILDING STRUCTURE. ELEVATION OF BEARINGS MUST BE CAREFULLY CHECKED AND SHIMMED TO ALIGNMENT FOR SOLID BEARINGS. ADEQUATE WOOD TRUSS BEARING IS THE RESPONSIBILITY OF THE BUILDING DESIGNER.

CODE

TRUSSES ARE DESIGNED IN CONFORMANCE WITH THE RELEVANT SECTIONS OF THE NATIONAL BUILDING CODE OF CANADA OR THE CANADIAN CODE FOR FARM BUILDINGS, WHICHEVER APPLIES TO THE BUILDING TYPE INDICATED ON THE DRAWING, THE ONTARIO BUILDING CODE, TPIC AND CANADIAN STANDARDS ASSOCIATION GUIDELINES.

HANDLING, INSTALLATION AND BRACING

1. THE TRUSSES MUST BE HANDLED AND INSTALLED BY A QUALIFIED PROFESSIONAL AS PER THE SUPPLIED DOCUMENT TITLED INFORMATION FOR TRUSS INSTALLERS AND THE BCSI-B1 AND BCSI-B3 SUMMARY SHEETS.
2. THE COMPRESSION CHORDS ARE LATERALLY BRACED BY CONTINUOUS RIGID DIAPHRAGM SHEATHING OR AS SPECIFIED ON THE DRAWING.
3. TEMPORARY AND PERMANENT BRACING MUST BE INSTALLED AS INDICATED ON THE TRUSS DRAWING AND ACCORDING TO THE BCSI-B1 AND BCSI-B3 SUMMARY SHEETS. BRACING FOR THE LATERAL STABILITY OF THE TRUSS IS TO BE PROVIDED BY THE BUILDING DESIGNER.
4. IT IS RECOMMENDED THAT A PROFESSIONAL ENGINEER'S ADVICE BE OBTAINED FOR THE BRACING OF TRUSSES SPANNING MORE THAN 12.37M (40'-7").

JOB NAME	TRUSS NAME	QUANTITY	PLY	JOB DESC.	DRWG NO.
IM0723-064	G01	1	1	TRUSS DESC.	

Version 8.630 S Mar 22 2023 MiTek Industries, Inc. Wed Jul 12 08:37:27 2023 Page 1

ID:Ri?c3qtNEFC6pyB5PxlOCzBNDdZk1mRAJOXPqq8_diUENzL6lwYDAp6?rAsNH3NyytPs

MHP 23028

CORPORATION OF THE CITY OF OSHAWA
TRUE COPY
OF PERMIT PLANS
Nov 15 2023
PER:
CHIEF BUILDING OFFICIAL

Scale = 1:53.8

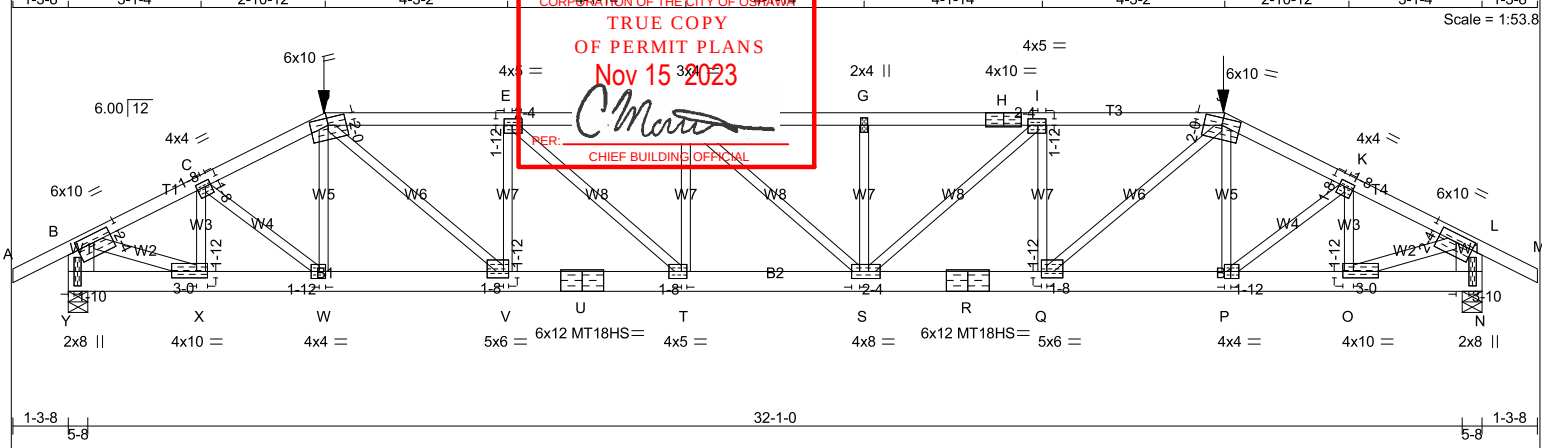

TOTAL WEIGHT = 158 lb

[M]

LUMBER

N. L. G. A. RULES

CHORDS	SIZE		LUMBER	DESCR.
A - D	2x4	DRY	No.2	SPF
D - H	2x4	DRY	2100F 1.8E	SPF
H - J	2x4	DRY	2100F 1.8E	SPF
J - M	2x4	DRY	No.2	SPF
Y - B	2x8	DRY	No.2	SPF
N - L	2x8	DRY	No.2	SPF
Y - U	2x6	DRY	2100F 1.8E	SPF
U - R	2x6	DRY	2100F 1.8E	SPF
R - N	2x6	DRY	2100F 1.8E	SPF
ALL WEBS	2x3	DRY	No.2	SPF
EXCEPT				
B - X	2x4	DRY	No.2	SPF
O - L	2x4	DRY	No.2	SPF

DRY: SEASONED LUMBER.

PLATES (table is in inches)

JT	TYPE	PLATES	W	LEN	Y	X
B	TMVW-t	MT20	6.0	10.0	2.25	5.00
C	TMWW-t	MT20	4.0	4.0	1.50	1.50
D	TTWW-m	MT20	6.0	10.0	2.00	5.00
E	TMWW-t	MT20	4.0	5.0	1.75	2.25
F	TMWW-t	MT20	3.0	4.0		
G	TMW+w	MT20	2.0	4.0		
H	TS-t	MT20	4.0	10.0	Edge	5.00
I	TMWW-t	MT20	4.0	5.0	1.75	2.25
J	TTWW-m	MT20	6.0	10.0	2.00	5.00
K	TMWW-t	MT20	4.0	4.0	1.50	1.50
L	TMVW-t	MT20	6.0	10.0	2.25	5.00
N	BMV1+p	MT20	2.0	8.0	4.00	3.75
O	BMWW-t	MT20	4.0	10.0	1.75	3.00
P	BMWW-t	MT20	4.0	4.0	2.00	1.75
Q	BMWW-t	MT20	5.0	6.0	1.75	1.50
R	BS-t	MT18HS	6.0	12.0		
S	BMWWW-t	MT20	4.0	8.0	2.00	2.25
T	BMWW-t	MT20	4.0	5.0	2.00	1.50
U	BS-t	MT18HS	6.0	12.0		
V	BMWW-t	MT20	5.0	6.0	1.75	1.50
W	BMWW-t	MT20	4.0	4.0	2.00	1.75
X	BMWW-t	MT20	4.0	10.0	1.75	3.00
Y	BMV1+p	MT20	2.0	8.0	4.00	1.50

Edge - INDICATES REFERENCE CORNER OF PLATE TOUCHES EDGE OF CHORD.

DIMENSIONS, SUPPORTS AND LOADINGS SPECIFIED BY FABRICATOR TO BE VERIFIED BY BUILDING DESIGNER

BEARINGS

JT	FACTORED GROSS REACTION VERT	HORZ	MAXIMUM FACTORED GROSS REACTION DOWN	HORZ	UPLIFT	INPUT BRG IN-SX	REQRD BRG IN-SX
Y	4344	0	4344	0	0	5-8	4-4
N	4344	0	4344	0	0	5-8	4-4

UNFACTORED REACTIONS

JT	1ST LCASE COMBINED	MAX./MIN. COMPONENT REACTIONS SNOW	LIVE	PERM.LIVE	WIND	DEAD	SOIL
Y	3035	2202 / 0	0 / 0	0 / 0	0 / 0	834 / 0	0 / 0
N	3035	2202 / 0	0 / 0	0 / 0	0 / 0	834 / 0	0 / 0

BEARING MATERIAL TO BE SPF NO.2 OR BETTER AT JOINT(S) Y, N
BEARING SIZE FACTOR = 1.15 AT JNT(S) Y, N (BASED ON SUPPORT DEPTH = 1-8)

BRACING

TOP CHORD TO BE SHEATHED OR MAX. PURLIN SPACING = 1.92 FT.
MAX. UNBRACED BOTTOM CHORD LENGTH = 10.00 FT OR RIGID CEILING DIRECTLY APPLIED.

ALL PITCH BREAKS AND PERIMETER CORNER JOINTS MUST BE LATERALLY RESTRAINED.

LOADING

TOTAL LOAD CASES: (4)

CHORDS

MEMB. FR-TO	MAX. FACTORED FORCE (LBS)	FACTORED VERT. LOAD LC1 (PLF) FROM	TO	MAX CSI (LC)	MAX. UNBRAC LENGTH
A- B	0 / 36	-119.4	-119.4	0.17 (1)	10.00
B- C	-5782 / 0	-119.4	-119.4	0.63 (1)	2.30
C- D	-6648 / 0	-119.4	-119.4	0.74 (1)	1.94
D- E	-8405 / 0	-225.2	-225.2	0.83 (1)	2.26
E- F	-9564 / 0	-225.2	-225.2	0.95 (1)	1.92
F- G	-9535 / 0	-225.2	-225.2	0.83 (1)	2.14
G- H	-9535 / 0	-225.2	-225.2	0.95 (1)	1.92
H- I	-9535 / 0	-225.2	-225.2	0.95 (1)	1.92
I- J	-8411 / 0	-225.2	-225.2	0.84 (1)	2.25
J- K	-6646 / 0	-119.4	-119.4	0.74 (1)	1.95
K- L	-5783 / 0	-119.4	-119.4	0.63 (1)	2.30
L- M	0 / 36	-119.4	-119.4	0.17 (1)	10.00
Y- B	-4206 / 0	0.0	0.0	0.23 (1)	5.80
N- L	-4206 / 0	0.0	0.0	0.23 (1)	5.80
Y- X	0 / 0	-34.4	-34.4	0.11 (1)	10.00
X- W	0 / 5182	-34.4	-34.4	0.38 (1)	10.00
W- V	0 / 5941	-34.4	-34.4	0.36 (1)	10.00
V- U	0 / 8405	-34.4	-34.4	0.51 (1)	10.00
U- T	0 / 8405	-34.4	-34.4	0.51 (1)	10.00
T- S	0 / 9564	-34.4	-34.4	0.59 (1)	10.00
S- R	0 / 8411	-34.4	-34.4	0.53 (1)	10.00
R- Q	0 / 8411	-34.4	-34.4	0.53 (1)	10.00
Q- P	0 / 5940	-34.4	-34.4	0.35 (1)	10.00
P- O	0 / 5183	-34.4	-34.4	0.38 (1)	10.00
O- N	0 / 0	-34.4	-34.4	0.11 (1)	10.00

WEBS

MEMB. FR-TO	MAX. FACTORED FORCE (LBS)	MAX CSI (LC)
X- C	-1402 / 0	0.24 (1)
C- W	0 / 970	0.24 (1)
W- D	-316 / 40	0.08 (1)
D- V	0 / 3309	0.82 (1)
V- E	-2111 / 0	0.55 (1)
E- T	0 / 1569	0.39 (1)
T- F	-892 / 0	0.23 (1)
F- S	-40 / 0	0.02 (1)
S- G	-901 / 0	0.23 (1)
S- I	0 / 1520	0.38 (1)
Q- I	-2086 / 0	0.54 (1)
Q- J	0 / 3320	0.82 (1)
P- J	-323 / 39	0.08 (1)
P- K	0 / 968	0.24 (1)
O- K	-1399 / 0	0.24 (1)
B- X	0 / 5341	0.94 (1)
O- L	0 / 5342	0.94 (1)

SPECIFIED CONCENTRATED LOADS (LBS)

JT	LOC.	LC1	MAX-	MAX+	FACE	DIR.	TYPE	HEEL	CONN.
D	6-0-7	-367	-367	---	FRONT	VERT	TOTAL	---	C1
J	26-11-9	-367	-367	---	FRONT	VERT	TOTAL	---	C1

CONNECTION REQUIREMENTS

1) **C1:** A SUITABLE HANGER/MECHANICAL CONNECTION IS REQUIRED.

DESIGN CRITERIA

SPECIFIED LOADS:

TOP	CH.	LL	=	34.8	PSF
		DL	=	6.0	PSF
BOT	CH.	LL	=	0.0	PSF
		DL	=	7.3	PSF
TOTAL	LOAD		=	48.1	PSF

SPACING = 24.0 IN. C/C

LOADING IN FLAT SECTION BASED ON A SLOPE OF 2.00/12 MINIMUM

GIRDER TYPE: CPrimeHip
SIDE SETBACK = 6-0-0
END SETBACK = 6-0-0
END WALL WIDTH = 5-8
CORNER FRAMING TYPE: CONVENTIONAL
END JACK TYPE: CONVENTIONAL
APPLIED TO FRONT SIDE
- ADDT'L LOADS BASED ON 55 % OF GSL.

THIS TRUSS IS DESIGNED FOR RESIDENTIAL OR SMALL BUILDING REQUIREMENTS OF PART 9, NBCC 2015

THIS DESIGN COMPLIES WITH:
- PART 9 OF BCBC 2018 , NBC-2019AE
- PART 9 OF OBC 2012 (2019 AMENDMENT)
- CSA 086-14
- TPIC 2014

(55 % OF 48.1 P.S.F. G.S.L. PLUS 8.4 P.S.F. RAIN LOAD) EQUALS 34.8 P.S.F. SPECIFIED ROOF LIVE LOAD

ALLOWABLE DEFL.(LL)= L/360 (1.10")
CALCULATED VERT. DEFL.(LL) = L/ 871 (0.45")
ALLOWABLE DEFL.(TL)= L/360 (1.10")
CALCULATED VERT. DEFL.(TL) = L/ 511 (0.78")

CSI: TC=0.95/0.97 (G-I:1) , BC=0.59/0.97 (S-T:1) , WB=0.94/0.97 (L-O:1) , SSI=0.48/1.00 (I-J:1)

DOL LUMBER=1.00 NAIL=1.00 LS BEND=1.00 COMP=1.00 SHEAR=1.00 TENS= 1.00

COMPANION LIVE LOAD FACTOR = 1.00

TRUSS PLATE MANUFACTURER IS NOT RESPONSIBLE FOR QUALITY CONTROL IN THE TRUSS MANUFACTURING PLANT .

NAIL VALUES

PLATE	GRIP(DRY) (PSI) MAX	MIN	SHEAR (PLI) MAX	MIN	SECTION (PLI) MAX	MIN
MT20	650	371	1747	788	1987	1873
MT18HS	586	403	2455	1382	3163	3004

PLATE PLACEMENT TOL. = 0.250 inches

PLATE ROTATION TOL. = 5.0 Deg.

JSI GRIP= 0.90 (N) (INPUT = 0.90)
JSI METAL= 0.88 (N) (INPUT = 1.00)

LICENSED PROFESSIONAL ENGINEER
I.MATIJEVIC
100528832
PROVINCE OF ONTARIO
JULY 12, 2023

READ ALL NOTES ON THIS PAGE AND ON THE ENGINEERING NOTES: TRUSSES. THE NOTE PAGE IS AN INTEGRAL PART OF THIS DRAWING AS IT CONTAINS SPECIFICATIONS AND CRITERIA USED IN THE DESIGN OF THIS COMPONENT.

KOTT

JOB NAME	TRUSS NAME	QUANTITY	PLY	JOB DESC.	DRWG NO.
IM0723-064	G02	1	1	TRUSS DESC.	

Version 8.630 S Mar 22 2023 MiTek Industries, Inc. Wed Jul 12 08:37:28 2023 Page 1

ID:Rhd3ttNEF06by35PxlOOzBNOd-1vlP2nBL9eXhRlZpFBlcWZfWLydRYjA_PW7rcpyytPr

MIP 23028

CORPORATION OF THE CITY OF OSHAWA
TRUE COPY
OF PERMIT PLANS
Nov 15 2023
PER: CHIEF BUILDING OFFICIAL

Scale: 1/4"=1'

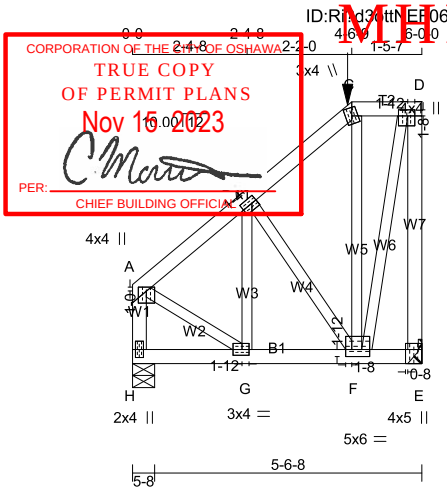

TOTAL WEIGHT = 38 lb

[M]

LUMBER

N. L. G. A. RULES

CHORDS	SIZE		LUMBER	DESCR.
A - C	2x4	DRY	No.2	SPF
C - D	2x4	DRY	No.2	SPF
E - D	2x4	DRY	No.2	SPF
H - A	2x4	DRY	No.2	SPF
H - E	2x4	DRY	No.2	SPF
ALL WEBS EXCEPT	2x3	DRY	No.2	SPF

DRY: SEASONED LUMBER.

PLATES (table is in inches)

JT	TYPE	PLATES	W	LEN	Y	X
A	TMVW+p	MT20	4.0	4.0	1.00	2.00
B	TMWW-t	MT20	3.0	4.0	1.50	1.25
C	TTW+m	MT20	3.0	4.0		
D	TMVW+p	MT20	4.0	4.0	1.50	1.75
E	BMV1+t	MT20	4.0	5.0	Edge	0.50
F	BMWWW-t	MT20	5.0	6.0	1.75	1.50
G	BMWW-t	MT20	3.0	4.0	1.50	1.75
H	BMV1+p	MT20	2.0	4.0		

Edge - INDICATES REFERENCE CORNER OF PLATE TOUCHES EDGE OF CHORD.

DIMENSIONS, SUPPORTS AND LOADINGS SPECIFIED BY FABRICATOR TO BE VERIFIED BY BUILDING DESIGNER

BEARINGS

JT	FACTORED GROSS REACTION VERT	HORZ	MAXIMUM FACTORED GROSS REACTION DOWN	HORZ	UPLIFT	INPUT BRG IN-SX	REQRD BRG IN-SX
E	1515	0	1515	0	0	MECHANICAL	
H	1252	0	1252	0	0	5-8	1-8

A SUITABLE HANGER/MECHANICAL CONNECTION IS REQUIRED AT JOINT E. MINIMUM BEARING LENGTH AT JOINT E = 3-8.

UNFACTORED REACTIONS

MAX./MIN. COMPONENT REACTIONS

JT	1ST LCASE COMBINED	SNOW	LIVE	PERM.LIVE	WIND	DEAD	SOIL
E	1057	775 / 0	0 / 0	0 / 0	0 / 0	282 / 0	0 / 0
H	877	621 / 0	0 / 0	0 / 0	0 / 0	256 / 0	0 / 0

BEARING MATERIAL TO BE SPF NO.2 OR BETTER AT JOINT(S) H

BRACING

TOP CHORD TO BE SHEATHED OR MAX. PURLIN SPACING = 6.25 FT.
MAX. UNBRACED BOTTOM CHORD LENGTH = 10.00 FT OR RIGID CEILING DIRECTLY APPLIED.

ALL PITCH BREAKS AND PERIMETER CORNER JOINTS MUST BE LATERALLY RESTRAINED.

LOADING

TOTAL LOAD CASES: (4)

CHORDS

MEMB. FR-TO	MAX. FACTORED FORCE (LBS)	FACTORED VERT. LOAD (PLF) FROM	TO	LC1 MAX CSI (LC)	MAX. UNBRAC LENGTH
A- B	-815 / 0	-119.4	-119.4	0.11 (1)	6.25
B- C	-445 / 0	-119.4	-119.4	0.11 (1)	6.25
C- D	-318 / 0	-201.5	-201.5	0.08 (1)	6.25
E- D	-1352 / 0	0.0	0.0	0.72 (1)	6.85
H- A	-998 / 0	0.0	0.0	0.12 (1)	7.71
H- G	0 / 0	-266.0	-266.0	0.22 (1)	10.00
G- F	0 / 641	-266.0	-266.0	0.33 (1)	10.00
F- E	0 / 0	-266.0	-266.0	0.07 (1)	10.00

WEBS

MEMB. FR-TO	MAX. FACTORED FORCE (LBS)	MAX CSI (LC)
G- B	0 / 385	0.10 (1)
B- F	-555 / 0	0.16 (1)
F- C	-311 / 0	0.14 (1)
F- D	0 / 1252	0.31 (1)
A- G	0 / 731	0.18 (1)

SPECIFIED CONCENTRATED LOADS (LBS)

JT	LOC.	LC1	MAX-	MAX+	FACE	DIR.	TYPE	HEEL	CONN.
C	4-6-9	-229	-229	---	FRONT	VERT	TOTAL	---	C1

CONNECTION REQUIREMENTS

1) **C1:** A SUITABLE HANGER/MECHANICAL CONNECTION IS REQUIRED.

DESIGN CRITERIA

SPECIFIED LOADS:

TOP CH.	LL	=	34.8	PSF
	DL	=	6.0	PSF
BOT CH.	LL	=	0.0	PSF
	DL	=	7.3	PSF
TOTAL LOAD		=	48.1	PSF

SPACING = 24.0 IN. C/C

LOADING IN FLAT SECTION BASED ON A SLOPE OF 2.00/12 MINIMUM

GIRDER TYPE: CStdGirder
START DISTANCE = 0-0
START SPAN CARRIED = 8-10-0
END DISTANCE = 6-0-0
END SPAN CARRIED = 8-10-0
END WALL WIDTH = 0-0
APPLIED TO FRONT SIDE OF BOTTOM CHORD.
- ADDT'L LOADS BASED ON 55 % OF GSL.

GIRDER TYPE: CPrimeHip
LEFT SETBACK = 4-6-9
RIGHT SETBACK = 0-0
END SETBACK = 5-2-8
END WALL WIDTH = 5-8
CORNER FRAMING TYPE: CONVENTIONAL
END JACK TYPE: CONVENTIONAL
APPLIED TO FRONT SIDE
- ADDT'L LOADS BASED ON 55 % OF GSL.

THIS TRUSS IS DESIGNED FOR RESIDENTIAL OR SMALL BUILDING REQUIREMENTS OF PART 9, NBCC 2015

THIS DESIGN COMPLIES WITH:
- PART 9 OF BCBC 2018 , NBC-2019AE
- PART 9 OF OBC 2012 (2019 AMENDMENT)
- CSA 086-14
- TPIC 2014

(55 % OF 48.1 P.S.F. G.S.L. PLUS 8.4 P.S.F. RAIN LOAD) EQUALS 34.8 P.S.F. SPECIFIED ROOF LIVE LOAD

ALLOWABLE DEFL.(LL)= L/360 (0.20")
CALCULATED VERT. DEFL.(LL) = L/ 999 (0.02")
ALLOWABLE DEFL.(TL)= L/360 (0.20")
CALCULATED VERT. DEFL.(TL) = L/ 999 (0.03")

CSI: TC=0.72/0.97 (D-E:1) , BC=0.33/0.97 (F-G:1) , WB=0.31/0.97 (D-F:1) , SSI=0.32/1.00 (G-H:1)

DOL LUMBER=1.00 NAIL=1.00 LS BEND=1.00 COMP=1.00 SHEAR=1.00 TENS= 1.00

COMPANION LIVE LOAD FACTOR = 1.00

TRUSS PLATE MANUFACTURER IS NOT RESPONSIBLE FOR QUALITY CONTROL IN THE TRUSS MANUFACTURING PLANT .

NAIL VALUES

PLATE	GRIP(DRY) (PSI) MAX	MIN	SHEAR (PLI) MAX	MIN	SECTION (PLI) MAX	MIN
MT20	650	371	1747	788	1987	1873

CONTINUED ON PAGE 2

LICENSED PROFESSIONAL ENGINEER
I.MATIJEVIC
100528832
PROVINCE OF ONTARIO
JULY 12, 2023

READ ALL NOTES ON THIS PAGE AND ON THE ENGINEERING NOTES: TRUSSES. THE NOTE PAGE IS AN INTEGRAL PART OF THIS DRAWING AS IT CONTAINS SPECIFICATIONS AND CRITERIA USED IN THE DESIGN OF THIS COMPONENT.

KOTT

JOB NAME	TRUSS NAME	QUANTITY	PLY	JOB DESC.	DRWG NO.
IM0723-064	G02	1	1	TRUSS DESC.	

Version 8.630 S Mar 22 2023 MiTek Industries, Inc. Wed Jul 12 08:37:28 2023 Page 2

ID:Rhd3ttNEF06ny35PxIOOzBNOd-1vIP2nBL9eXhRIZpFBlcWZfWLydRYjA_PW7rcpyytPr

MHP 23028

CORPORATION OF THE CITY OF OSHAWA
TRUE COPY
OF PERMIT PLANS
Nov 15 2023
PER: C. Matt
CHIEF BUILDING OFFICIAL

PLATE PLACEMENT TOL. = 0.250 inches

PLATE ROTATION TOL. = 5.0 Deg.

JSI GRIP= 0.87 (G) (INPUT = 0.90)
JSI METAL= 0.30 (F) (INPUT = 1.00)

LICENSED PROFESSIONAL ENGINEER
I.MATIJEVIC
100528832
PROVINCE OF ONTARIO

JULY 12, 2023

READ ALL NOTES ON THIS PAGE AND ON THE ENGINEERING NOTES: TRUSSES. THE NOTE PAGE IS AN INTEGRAL PART OF THIS DRAWING AS IT CONTAINS SPECIFICATIONS AND CRITERIA USED IN THE DESIGN OF THIS COMPONENT.

KOTT

JOB NAME	TRUSS NAME	QUANTITY	PLY	JOB DESC.	DRWG NO.
IM0723-064	G03	1	1	TRUSS DESC.	

Version 8.630 S Mar 22 2023 MiTek Industries, Inc. Wed Jul 12 15:33:24 2023 Page 1

ID:Ri?d3otNFL06ov35FxDOzBNOd-?1EoI6CN_NjfRVO9CPTuyGFHBs3FnQRI0AQOWKyynJv

MHP 23028

COPY OF PERMIT PLANS
TRUE COPY
Nov 15 2023
PER:
CHIEF BUILDING OFFICIAL
CORPORATION OF THE CITY OF OTTAWA

Scale = 1:53.9

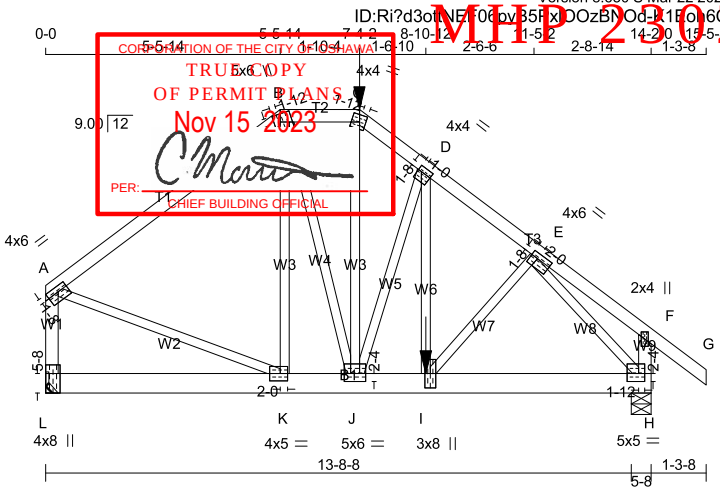

TOTAL WEIGHT = 83 lb

[M]

LUMBER

N. L. G. A. RULES

CHORDS	SIZE		LUMBER	DESCR.
A - B	2x4	DRY	No.2	SPF
B - C	2x4	DRY	No.2	SPF
C - G	2x4	DRY	No.2	SPF
L - A	2x4	DRY	No.2	SPF
H - F	2x4	DRY	No.2	SPF
L - H	2x6	DRY	No.2	SPF
ALL WEBS EXCEPT	2x3	DRY	No.2	SPF

DRY: SEASONED LUMBER.

PLATES (table is in inches)

JT	TYPE	PLATES	W	LEN	Y	X
A	TMVW-t	MT20	4.0	6.0	1.50	Edge
B	TTWW+m	MT20	5.0	6.0	2.25	1.75
C	TTW-m	MT20	4.0	4.0	2.00	1.75
D	TMWW-t	MT20	4.0	4.0	1.50	1.00
E	TMWW-t	MT20	4.0	6.0	1.50	2.00
F	TMV+p	MT20	2.0	4.0		
H	BMVW1-t	MT20	5.0	5.0	2.25	1.75
I	BMWW+t	MT20	3.0	8.0		
J	BMWWW-t	MT20	5.0	6.0	2.25	3.00
K	BMWW-t	MT20	4.0	5.0	2.00	2.00
L	BMV1+t	MT20	4.0	8.0	5.50	

Edge - INDICATES REFERENCE CORNER OF PLATE TOUCHES EDGE OF CHORD.

DIMENSIONS, SUPPORTS AND LOADINGS SPECIFIED BY FABRICATOR TO BE VERIFIED BY BUILDING DESIGNER

BEARINGS

JT	FACTORED GROSS REACTION VERT	HORZ	MAXIMUM FACTORED GROSS REACTION DOWN	HORZ	UPLIFT	INPUT BRG IN-SX	REQRD BRG IN-SX
L	1858	0	1858	0	0	MECHANICAL	
H	2487	0	2487	0	0	5-8	2-14

A SUITABLE HANGER/MECHANICAL CONNECTION IS REQUIRED AT JOINT L. MINIMUM BEARING LENGTH AT JOINT L = 3-8.

UNFACTORED REACTIONS

JT	1ST LCASE COMBINED	SNOW	MAX./MIN. COMPONENT REACTIONS LIVE	PERM.LIVE	WIND	DEAD	SOIL
L	1296	948 / 0	0 / 0	0 / 0	0 / 0	348 / 0	0 / 0
H	1739	1252 / 0	0 / 0	0 / 0	0 / 0	487 / 0	0 / 0

BEARING MATERIAL TO BE SPF NO.2 OR BETTER AT JOINT(S) H

BRACING

TOP CHORD TO BE SHEATHED OR MAX. PURLIN SPACING = 3.75 FT.
MAX. UNBRACED BOTTOM CHORD LENGTH = 10.00 FT OR RIGID CEILING DIRECTLY APPLIED.

ALL PITCH BREAKS AND PERIMETER CORNER JOINTS MUST BE LATERALLY RESTRAINED.

LOADING

TOTAL LOAD CASES: (4)

CHORDS

MEMB. FR-TO	MAX. FACTORED FORCE (LBS)	FACTORED VERT. LOAD (PLF) FROM	TO	LC1 MAX CSI (LC)	MAX. UNBRAC LENGTH
A- B	-1655 / 0	-119.4	-119.4	0.86 (1)	3.75
B- C	-1581 / 0	-119.4	-119.4	0.11 (1)	5.09
C- D	-1989 / 0	-119.4	-119.4	0.09 (1)	4.67
D- E	-2471 / 0	-119.4	-119.4	0.19 (1)	4.16
E- F	0 / 12	-119.4	-119.4	0.12 (1)	10.00
F- G	0 / 49	-119.4	-119.4	0.18 (1)	10.00
L- A	-1822 / 0	0.0	0.0	0.25 (1)	6.07
H- F	-301 / 0	0.0	0.0	0.03 (1)	7.81
L- K	0 / 0	-18.2	-18.2	0.07 (4)	10.00
K- J	0 / 1315	-18.2	-18.2	0.23 (1)	10.00
J- I	0 / 1972	-34.4	-34.4	0.37 (1)	10.00
I- H	0 / 1761	-34.4	-34.4	0.38 (1)	10.00

WEBS

MEMB. FR-TO	MAX. FACTORED FORCE (LBS)	MAX CSI (LC)
K- B	-392 / 0	0.27 (1)
B- J	0 / 985	0.24 (1)
J- C	0 / 401	0.10 (1)
J- D	-1279 / 0	0.62 (1)
I- D	0 / 1237	0.31 (1)
I- E	0 / 322	0.08 (1)
A- K	0 / 1412	0.35 (1)
E- H	-2716 / 0	0.75 (1)

SPECIFIED CONCENTRATED LOADS (LBS)

JT	LOC.	LC1	MAX-	MAX+	FACE	DIR.	TYPE	HEEL	CONN.
C	7-4-2	-418	-418	---	FRONT	VERT	TOTAL	---	C1
I	8-10-12	-1053	-1053	---	FRONT	VERT	TOTAL	---	C1

CONNECTION REQUIREMENTS

1) **C1:** A SUITABLE HANGER/MECHANICAL CONNECTION IS REQUIRED.

DESIGN CRITERIA

*** SPECIAL LOADS ANALYSIS ***
GEOMETRY AND/OR BASIC LOADS CHANGED BY USER.
LOADS WERE DERIVED FROM USER INPUT
NO FURTHER MODIFICATIONS WERE MADE

SPECIFIED LOADS:

TOP CH.	LL	=	34.8	PSF
	DL	=	6.0	PSF
BOT CH.	LL	=	0.0	PSF
	DL	=	7.3	PSF
TOTAL LOAD		=	48.1	PSF

SPACING = 24.0 IN. C/C

LOADING IN FLAT SECTION BASED ON A SLOPE OF 2.00/12 MINIMUM

GIRDER TYPE: CPrimeHip
LEFT SETBACK = 5-5-14
RIGHT SETBACK = 6-9-14
END SETBACK = 6-0-0
END WALL WIDTH = 5-8
CORNER FRAMING TYPE: CONVENTIONAL
END JACK TYPE: CONVENTIONAL
APPLIED TO FRONT SIDE
- ADDT'L LOADS BASED ON 55 % OF GSL.
LOADS APPLIED TO FIRST 6-9-14 OF SPAN MEASURED FROM THE RIGHT.

*** NON STANDARD GIRDER ***
ADDT'L USER-DEFINED LOADS APPLIED TO ALL LOAD CASES.

THIS TRUSS IS DESIGNED FOR RESIDENTIAL OR SMALL BUILDING REQUIREMENTS OF PART 9, NBCC 2015

THIS DESIGN COMPLIES WITH:
- PART 9 OF BCBC 2018 , NBC-2019AE
- PART 9 OF OBC 2012 (2019 AMENDMENT)
- CSA 086-14
- TPIC 2014

(55 % OF 48.1 P.S.F. G.S.L. PLUS 8.4 P.S.F. RAIN LOAD) EQUALS 34.8 P.S.F. SPECIFIED ROOF LIVE LOAD

ALLOWABLE DEFL.(LL)= L/360 (0.47")
CALCULATED VERT. DEFL.(LL) = L/ 999 (0.05")
ALLOWABLE DEFL.(TL)= L/360 (0.47")
CALCULATED VERT. DEFL.(TL) = L/ 999 (0.09")

CSI: TC=0.86/0.97 (A-B:1) , BC=0.38/0.97 (H-I:1) , WB=0.75/0.97 (E-H:1) , SSI=0.22/1.00 (A-B:1)

DOL LUMBER=1.00 NAIL=1.00 LS BEND=1.00 COMP=1.00 SHEAR=1.00 TENS= 1.00

COMPANION LIVE LOAD FACTOR = 1.00

TRUSS PLATE MANUFACTURER IS NOT RESPONSIBLE FOR QUALITY CONTROL IN THE TRUSS MANUFACTURING PLANT .

LICENSED PROFESSIONAL ENGINEER
I.MATIJEVIC
100528832
PROVINCE OF ONTARIO

JULY 13, 2023

READ ALL NOTES ON THIS PAGE AND ON THE ENGINEERING NOTES: TRUSSES. THE NOTE PAGE IS AN INTEGRAL PART OF THIS DRAWING AS IT CONTAINS SPECIFICATIONS AND CRITERIA USED IN THE DESIGN OF THIS COMPONENT.

CONTINUED ON PAGE 2

KOTT

JOB NAME	TRUSS NAME	QUANTITY	PLY	JOB DESC.	DRWG NO.
IM0723-064	G03	1	1	TRUSS DESC.	

Version 8.630 S Mar 22 2023 MiTek Industries, Inc. Wed Jul 12 15:33:24 2023 Page 2

ID:Ri?d3otNEY06ov35FxDOzBNOd-R1Eoh6CN_NjfRVO9CPTuyGFHBs3FnQRI0AQOWKyynJv

MHP 23028

CORPORATION OF THE CITY OF OSHAWA
TRUE COPY
OF PERMIT PLANS
Nov 15 2023
PER:
CHIEF BUILDING OFFICIAL

NAIL VALUES

PLATE	GRIP(DRY) (PSI) MAX	MIN	SHEAR (PLI) MAX	MIN	SECTION (PLI) MAX	MIN
MT20	650	371	1747	788	1987	1873

PLATE PLACEMENT TOL. = 0.250 inches

PLATE ROTATION TOL. = 5.0 Deg.

JSI GRIP= 0.90 (D) (INPUT = 0.90)
JSI METAL= 0.64 (E) (INPUT = 1.00)

LICENSED PROFESSIONAL ENGINEER
I.MATIJEVIC
100528832
PROVINCE OF ONTARIO

JULY 13, 2023

READ ALL NOTES ON THIS PAGE AND ON THE ENGINEERING NOTES: TRUSSES. THE NOTE PAGE IS AN INTEGRAL PART OF THIS DRAWING AS IT CONTAINS SPECIFICATIONS AND CRITERIA USED IN THE DESIGN OF THIS COMPONENT.

KOTT

JOB NAME	TRUSS NAME	QUANTITY	PLY	JOB DESC.	DRWG NO.
IM0723-064	G04	1	1	TRUSS DESC.	

Version 8.630 S Mar 22 2023 MiTek Industries, Inc. Wed Jul 12 15:33:25 2023 Page 1
ID:Ri?d3ottIEIf06byE5?xlOOzBNQd-cDoBVSD?lqa3fzLm6_7VUodnGP1WtQRFq9x2myynJu

MHP 23028
CORPORATION OF THE CITY OF OSHAWA
TRUE COPY
OF PERMIT PLANS
Nov 15 2023
PER:
CHIEF BUILDING OFFICIAL

Scale = 1:57.4

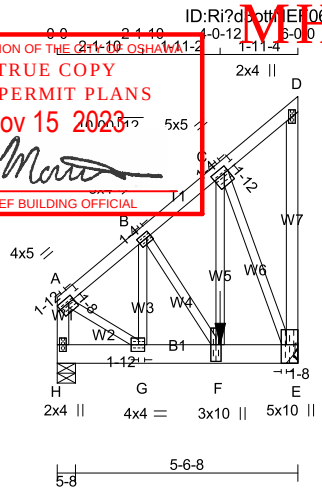

TOTAL WEIGHT = 41 lb

[M]

LUMBER

N. L. G. A. RULES

CHORDS	SIZE		LUMBER	DESCR.
H - A	2x4	DRY	No.2	SPF
A - D	2x4	DRY	No.2	SPF
E - D	2x4	DRY	No.2	SPF
H - E	2x6	DRY	No.2	SPF
ALL WEBS	2x3	DRY	No.2	SPF

DRY: SEASONED LUMBER.

PLATES (table is in inches)

JT	TYPE	PLATES	W	LEN	Y	X
A	TMVW-t	MT20	4.0	5.0	1.50	1.75
B	TMWW-t	MT20	3.0	4.0	1.50	1.25
C	TMWW-t	MT20	5.0	5.0	1.75	1.25
D	TMV+p	MT20	2.0	4.0		
E	BMVW1+t	MT20	5.0	10.0	Edge	1.50
F	BMWW+t	MT20	3.0	10.0		
G	BMWW-t	MT20	4.0	4.0	2.00	1.75
H	BMV1+p	MT20	2.0	4.0		

Edge - INDICATES REFERENCE CORNER OF PLATE TOUCHES EDGE OF CHORD.

DIMENSIONS, SUPPORTS AND LOADINGS SPECIFIED BY FABRICATOR TO BE VERIFIED BY BUILDING DESIGNER

BEARINGS

JT	FACTORED GROSS REACTION VERT	HORZ	MAXIMUM FACTORED GROSS REACTION DOWN	HORZ	UPLIFT	INPUT BRG	REQRD BRG
H	1644	0	1644	0	0	5-8	1-14
E	1992	0	1992	0	0	MECHANICAL	IN-SX

A SUITABLE HANGER/MECHANICAL CONNECTION IS REQUIRED AT JOINT E. MINIMUM BEARING LENGTH AT JOINT E = 3-8.

UNFACTORED REACTIONS

MAX./MIN. COMPONENT REACTIONS

JT	1ST LCASE COMBINED	SNOW	LIVE	PERM.LIVE	WIND	DEAD	SOIL
H	1149	831 / 0	0 / 0	0 / 0	0 / 0	318 / 0	0 / 0
E	1392	1007 / 0	0 / 0	0 / 0	0 / 0	385 / 0	0 / 0

BEARING MATERIAL TO BE SPF NO.2 OR BETTER AT JOINT(S) H

BRACING

TOP CHORD TO BE SHEATHED OR MAX. PURLIN SPACING = 5.66 FT.
MAX. UNBRACED BOTTOM CHORD LENGTH = 10.00 FT OR RIGID CEILING DIRECTLY APPLIED.

ALL PITCH BREAKS AND PERIMETER CORNER JOINTS MUST BE LATERALLY RESTRAINED.

LOADING

TOTAL LOAD CASES: (4)

CHORDS

MEMB. FR-TO	MAX. FACTORED FORCE (LBS)	FACTORED VERT. LOAD (PLF) FROM	TO	LC1 MAX CSI (LC)	MAX. UNBRAC LENGTH
H- A	-1413 / 0	0.0	0.0	0.16 (1)	6.74
A- B	-1192 / 0	-119.4	-119.4	0.12 (1)	5.66
B- C	-932 / 0	-119.4	-119.4	0.08 (1)	6.25
C- D	-15 / 0	-119.4	-119.4	0.07 (1)	6.25
E- D	-92 / 0	0.0	0.0	0.08 (1)	7.81
H- G	0 / 0	-253.4	-253.4	0.08 (1)	10.00
G- F	0 / 917	-253.4	-253.4	0.35 (1)	10.00
F- E	0 / 726	-18.2	-18.2	0.32 (1)	10.00

WEBS

MEMB. FR-TO	MAX. FACTORED FORCE (LBS)	MAX CSI (LC)
A- G	0 / 1057	0.26 (1)
G- B	0 / 231	0.06 (1)
B- F	-355 / 0	0.08 (1)
F- C	0 / 2056	0.51 (1)
C- E	-1872 / 0	0.76 (1)

SPECIFIED CONCENTRATED LOADS (LBS)

JT	LOC.	LC1	MAX-	MAX+	FACE	DIR.	TYPE	HEEL	CONN.
F	4-0-12	-1296	-1296	---	FRONT	VERT	TOTAL	---	C1

CONNECTION REQUIREMENTS

1) **C1:** A SUITABLE HANGER/MECHANICAL CONNECTION IS REQUIRED.

DESIGN CRITERIA

*** SPECIAL LOADS ANALYSIS ***
GEOMETRY AND/OR BASIC LOADS CHANGED BY USER.
LOADS WERE DERIVED FROM USER INPUT
NO FURTHER MODIFICATIONS WERE MADE

SPECIFIED LOADS:

TOP	CH.	LL	=	34.8	PSF
		DL	=	6.0	PSF
BOT	CH.	LL	=	0.0	PSF
		DL	=	7.3	PSF
TOTAL	LOAD		=	48.1	PSF

SPACING = 24.0 IN. C/C

GIRDER TYPE: CStdGirder
START DISTANCE = 0-0
START SPAN CARRIED = 8-10-0
END DISTANCE = 4-0-12
END SPAN CARRIED = 8-10-0
END WALL WIDTH = 0-0
APPLIED TO FRONT SIDE OF BOTTOM CHORD.
- ADDT'L LOADS BASED ON 55 % OF GSL.

*** NON STANDARD GIRDER ***
ADDT'L USER-DEFINED LOADS APPLIED TO ALL LOAD CASES.

THIS TRUSS IS DESIGNED FOR RESIDENTIAL OR SMALL BUILDING REQUIREMENTS OF PART 9, NBCC 2015

THIS DESIGN COMPLIES WITH:
- PART 9 OF BCBC 2018 , NBC-2019AE
- PART 9 OF OBC 2012 (2019 AMENDMENT)
- CSA 086-14
- TPIC 2014

(55 % OF 48.1 P.S.F. G.S.L. PLUS 8.4 P.S.F. RAIN LOAD) EQUALS 34.8 P.S.F. SPECIFIED ROOF LIVE LOAD

ALLOWABLE DEFL.(LL)= L/360 (0.20")
CALCULATED VERT. DEFL.(LL) = L/ 999 (0.02")
ALLOWABLE DEFL.(TL)= L/360 (0.20")
CALCULATED VERT. DEFL.(TL) = L/ 999 (0.04")

CSI: TC=0.16/0.97 (A-H:1) , BC=0.35/0.97 (F-G:1) , WB=0.76/0.97 (C-E:1) , SSI=0.30/1.00 (F-G:1)

DOL LUMBER=1.00 NAIL=1.00 LS BEND=1.00 COMP=1.00 SHEAR=1.00 TENS= 1.00

COMPANION LIVE LOAD FACTOR = 1.00

TRUSS PLATE MANUFACTURER IS NOT RESPONSIBLE FOR QUALITY CONTROL IN THE TRUSS MANUFACTURING PLANT .

NAIL VALUES

PLATE	GRIP(DRY) (PSI) MAX	MIN	SHEAR (PLI) MAX	MIN	SECTION (PLI) MAX	MIN
MT20	650	371	1747	788	1987	1873

PLATE PLACEMENT TOL. = 0.250 inches

PLATE ROTATION TOL. = 5.0 Deg.

CONTINUED ON PAGE 2

JULY 13, 2023

READ ALL NOTES ON THIS PAGE AND ON THE ENGINEERING NOTES: TRUSSES. THE NOTE PAGE IS AN INTEGRAL PART OF THIS DRAWING AS IT CONTAINS SPECIFICATIONS AND CRITERIA USED IN THE DESIGN OF THIS COMPONENT.

KOTT

JOB NAME	TRUSS NAME	QUANTITY	PLY	JOB DESC.	DRWG NO.
IM0723-064	G04	1	1	TRUSS DESC.	

Version 8.630 S Mar 22 2023 MiTek Industries, Inc. Wed Jul 12 15:33:25 2023 Page 2

ID:Ri?d3ottnEIf06byE5PxlOOzBNQd-cDoBVSD?ofa3fzLm6_7VUodnGP1WtQRFq9x2myynJu

MHP 23028

CORPORATION OF THE CITY OF OSHAWA
TRUE COPY
OF PERMIT PLANS
Nov 15 2023
PER: C. Martin
CHIEF BUILDING OFFICIAL

JSI GRIP= 0.86 (C) (INPUT = 0.90)
JSI METAL= 0.49 (F) (INPUT = 1.00)

LICENSED PROFESSIONAL ENGINEER
I.MATIJEVIC
100528832
PROVINCE OF ONTARIO

JULY 13, 2023

READ ALL NOTES ON THIS PAGE AND ON THE ENGINEERING NOTES: TRUSSES. THE NOTE PAGE IS AN INTEGRAL PART OF THIS DRAWING AS IT CONTAINS SPECIFICATIONS AND CRITERIA USED IN THE DESIGN OF THIS COMPONENT.

KOTT

JOB NAME	TRUSS NAME	QUANTITY	PLY	JOB DESC.	DRWG NO.
IM0723-064	G05	1	1	TRUSS DESC.	

Version 8.630 S Mar 22 2023 MiTek Industries, Inc. Wed Jul 12 15:33:26 2023 Page 1

ID:Ri?d3o?tN6FG6pvB5?lOOzBNOdHPMZ6oDdWzRgoYXKqWM2hKfegj?FIGbUUvVaDyynJt

MHP23028

CORPORATION OF THE CITY OF OSHAWA
TRUE COPY
OF PERMIT PLANS
Nov 15 2023
PER: C Martin
CHIEF BUILDING OFFICIAL

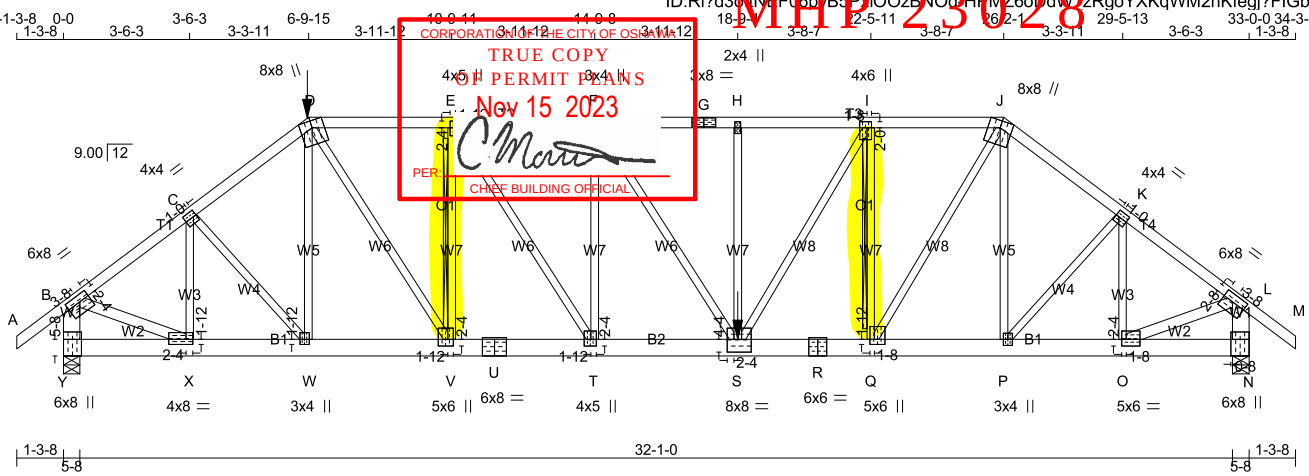

[M]

LUMBER

N. L. G. A. RULES

CHORDS	SIZE		LUMBER	DESCR.
A - D	2x4	DRY	No.2	SPF
D - G	2x4	DRY	2100F 1.8E	SPF
G - J	2x4	DRY	2100F 1.8E	SPF
J - M	2x4	DRY	No.2	SPF
Y - B	2x6	DRY	No.2	SPF
N - L	2x6	DRY	No.2	SPF
Y - U	2x6	DRY	2100F 1.8E	SPF
U - R	2x6	DRY	2100F 1.8E	SPF
R - N	2x6	DRY	2100F 1.8E	SPF
ALL WEBS	2x3	DRY	No.2	SPF
EXCEPT				
B - X	2x4	DRY	No.2	SPF
O - L	2x4	DRY	No.2	SPF

DRY: SEASONED LUMBER.

PLATES (table is in inches)

JT	TYPE	PLATES	W	LEN	Y	X
B	TMVW-t	MT20	6.0	8.0	2.25	3.50
C	TMWW-t	MT20	4.0	4.0	2.00	1.00
D	TTWW+m	MT20	8.0	8.0	Edge	
E	TMWW+t	MT20	4.0	5.0	2.25	1.75
F	TMWW+t	MT20	3.0	4.0		
G	TS-t	MT20	3.0	8.0		
H	TMW+w	MT20	2.0	4.0		
I	TMWW+t	MT20	4.0	6.0	2.00	1.50
J	TTWW+m	MT20	8.0	8.0	Edge	
K	TMWW-t	MT20	4.0	4.0	2.00	1.00
L	TMVW-t	MT20	6.0	8.0	2.50	3.50
N	BMV1+t	MT20	6.0	8.0	Edge	0.50
O	BMWW-t	MT20	5.0	6.0	2.25	1.50
P	BMWW+t	MT20	3.0	4.0		
Q	BMWW+t	MT20	5.0	6.0	1.75	1.50
R	BS-t	MT20	6.0	6.0		
S	BMWWW-t	MT20	8.0	8.0	4.25	2.25
T	BMWW+t	MT20	4.0	5.0	2.25	1.75
U	BS-t	MT20	6.0	8.0		
V	BMWW+t	MT20	5.0	6.0	2.25	1.75
W	BMWW+t	MT20	3.0	4.0	1.75	1.50
X	BMWW-t	MT20	4.0	8.0	1.75	2.25
Y	BMV1+t	MT20	6.0	8.0	5.50	

Edge - INDICATES REFERENCE CORNER OF PLATE TOUCHES EDGE OF CHORD.

LICENSED PROFESSIONAL ENGINEER
I.MATIJEVIC
100528832
PROVINCE OF ONTARIO
JULY 13, 2023

READ ALL NOTES ON THIS PAGE AND ON THE ENGINEERING NOTES: TRUSSES. THE NOTE PAGE IS AN INTEGRAL PART OF THIS DRAWING AS IT CONTAINS SPECIFICATIONS AND CRITERIA USED IN THE DESIGN OF THIS COMPONENT.

DIMENSIONS, SUPPORTS AND LOADINGS SPECIFIED BY FABRICATOR TO BE VERIFIED BY BUILDING DESIGNER

BEARINGS

JT	FACTORED GROSS REACTION VERT	HORZ	MAXIMUM FACTORED GROSS REACTION DOWN	HORZ	UPLIFT	INPUT BRG IN-SX	REQRD BRG IN-SX
Y	4766	0	4766	0	0	5-8	5-8
N	4272	0	4272	0	0	5-8	5-8

UNFACTORED REACTIONS

JT	1ST LCASE COMBINED	MAX./MIN. COMPONENT REACTIONS SNOW	LIVE	PERM.LIVE	WIND	DEAD	SOIL
Y	3331	2410 / 0	0 / 0	0 / 0	0 / 0	921 / 0	0 / 0
N	2982	2177 / 0	0 / 0	0 / 0	0 / 0	805 / 0	0 / 0

BEARING MATERIAL TO BE SPF NO.2 OR BETTER AT JOINT(S) Y, N
BEARING SIZE FACTOR = 1.15 AT JNT(S) Y, N (BASED ON SUPPORT DEPTH = 1-8)

BRACING

TOP CHORD TO BE SHEATHED OR MAX. PURLIN SPACING = 2.26 FT.
MAX. UNBRACED BOTTOM CHORD LENGTH = 10.00 FT OR RIGID CEILING DIRECTLY APPLIED.

ALL PITCH BREAKS AND PERIMETER CORNER JOINTS MUST BE LATERALLY RESTRAINED.

2x4 DRY SPF No.2 T-BRACE AT E-V, I-Q

FASTEN T AND I-BRACES TO NARROW EDGE OF WEB WITH ONE ROW PER PLY OF 3" COMMON WIRE NAILS @ 6" O.C. WITH 3" MINIMUM END DISTANCE. BRACE MUST COVER 90% OF WEB LENGTH.

END VERTICAL(S) MUST BE SHEATHED OR HAVE BRACES AS INDICATED IN THE MAX. UNBRACED LENGTH COLUMN OF THE TABLE BELOW

LOADING

TOTAL LOAD CASES: (4)

CHORDS

MEMB. FR-TO	MAX. FACTORED FORCE (LBS)	FACTORED VERT. LOAD (PLF) FROM	TO	LC1	MAX CSI (LC)	MAX. UNBRAC LENGTH
A- B	0 / 49	-119.4	-119.4	0.18 (1)	10.00	
B- C	-5064 / 0	-119.4	-119.4	0.65 (1)	2.53	
C- D	-5627 / 0	-119.4	-119.4	0.73 (1)	2.26	
D- E	-6039 / 0	-225.2	-225.2	0.55 (1)	3.04	
E- F	-6917 / 0	-225.2	-225.2	0.62 (1)	2.77	
F- G	-7077 / 0	-225.2	-225.2	0.59 (1)	2.80	
G- H	-7077 / 0	-225.2	-225.2	0.59 (1)	2.80	
H- I	-7077 / 0	-119.4	-119.4	0.43 (1)	2.98	
I- J	-5715 / 0	-119.4	-119.4	0.32 (1)	3.42	
J- K	-5026 / 0	-119.4	-119.4	0.64 (1)	2.53	
K- L	-4517 / 0	-119.4	-119.4	0.57 (1)	2.78	
L- M	0 / 49	-119.4	-119.4	0.18 (1)	10.00	
Y- B	-4670 / 0	0.0	0.0	0.34 (1)	4.87	
N- L	-4204 / 0	0.0	0.0	0.30 (1)	5.12	
Y- X	0 / 0	-34.4	-34.4	0.05 (1)	10.00	
X- W	0 / 4071	-34.4	-34.4	0.26 (1)	10.00	
W- V	0 / 4483	-34.4	-34.4	0.27 (1)	10.00	
V- U	0 / 6039	-34.4	-34.4	0.35 (1)	10.00	
U- T	0 / 6039	-34.4	-34.4	0.35 (1)	10.00	
T- S	0 / 6917	-34.4	-34.4	0.49 (1)	10.00	
S- R	0 / 5715	-18.2	-18.2	0.43 (1)	10.00	
R- Q	0 / 5715	-18.2	-18.2	0.43 (1)	10.00	
Q- P	0 / 4002	-18.2	-18.2	0.25 (1)	10.00	
P- O	0 / 3634	-18.2	-18.2	0.24 (1)	10.00	
O- N	0 / 0	-18.2	-18.2	0.05 (1)	10.00	

WEBS

MEMB. FR-TO	MAX. FACTORED FORCE (LBS)	MAX CSI (LC)
X- C	-1268 / 0	0.33 (1)
C- W	0 / 620	0.15 (1)
W- D	-247 / 61	0.17 (1)
D- V	0 / 2928	0.72 (1)
V- E	-2366 / 0	0.73 (1)
E- T	0 / 1636	0.41 (1)
T- F	-1171 / 0	0.81 (1)
F- S	0 / 299	0.07 (1)
S- H	-648 / 0	0.45 (1)
S- I	0 / 2678	0.66 (1)
Q- I	-2766 / 0	0.85 (1)
Q- J	0 / 3402	0.84 (1)
P- J	-281 / 0	0.20 (1)
P- K	0 / 552	0.14 (1)
O- K	-1186 / 0	0.31 (1)
B- X	0 / 4269	0.75 (1)
O- L	0 / 3811	0.67 (1)

SPECIFIED CONCENTRATED LOADS (LBS)

JT	LOC.	LC1	MAX-	MAX+	FACE	DIR.	TYPE	HEEL	CONN.
D	6-10-8	-418	-418	---	FRONT	VERT	TOTAL	---	C1
S	18-9-4	-1392	-1392	---	FRONT	VERT	TOTAL	---	C1

CONNECTION REQUIREMENTS

1) **C1:** A SUITABLE HANGER/MECHANICAL CONNECTION IS REQUIRED.

DESIGN CRITERIA

*** SPECIAL LOADS ANALYSIS ***
GEOMETRY AND/OR BASIC LOADS CHANGED BY USER.
LOADS WERE DERIVED FROM USER INPUT
NO FURTHER MODIFICATIONS WERE MADE

SPECIFIED LOADS:

TOP	CH.	LL	=	34.8	PSF
		DL	=	6.0	PSF
BOT	CH.	LL	=	0.0	PSF
		DL	=	7.3	PSF
TOTAL	LOAD		=	48.1	PSF

SPACING = 24.0 IN. C/C

LOADING IN FLAT SECTION BASED ON A SLOPE OF 2.00/12 MINIMUM

GIRDER TYPE: CPrimeHip
SIDE SETBACK = 6-9-15
END SETBACK = 6-0-0
END WALL WIDTH = 5-8
CORNER FRAMING TYPE: CONVENTIONAL
END JACK TYPE: CONVENTIONAL
APPLIED TO FRONT SIDE
- ADDT'L LOADS BASED ON 55 % OF GSL.
LOADS APPLIED TO FIRST 18-9-4 OF SPAN MEASURED FROM THE LEFT.

*** NON STANDARD GIRDER ***
ADDT'L USER-DEFINED LOADS APPLIED TO ALL LOAD CASES.

THIS TRUSS IS DESIGNED FOR RESIDENTIAL OR SMALL BUILDING REQUIREMENTS OF PART 9, NBCC 2015

THIS DESIGN COMPLIES WITH:
- PART 9 OF BCBC 2018 , NBC-2019AE
- PART 9 OF OBC 2012 (2019 AMENDMENT)
- CSA 086-14
- TPIC 2014

(55 % OF 48.1 P.S.F. G.S.L. PLUS 8.4 P.S.F. RAIN LOAD) EQUALS 34.8 P.S.F. SPECIFIED ROOF LIVE LOAD

ALLOWABLE DEFL.(LL)= L/360 (1.10")
CALCULATED VERT. DEFL.(LL) = L/ 999 (0.28")
ALLOWABLE DEFL.(TL)= L/360 (1.10")
CALCULATED VERT. DEFL.(TL) = L/ 840 (0.47")

CSI: TC=0.73/0.97 (C-D:1) , BC=0.49/0.97 (S-T:1) , WB=0.85/0.97 (I-Q:1) , SSI=0.45/1.00 (D-E:1)

DOL LUMBER=1.00 NAIL=1.00 LS BEND=1.00 COMP=1.00 SHEAR=1.00 TENS= 1.00

COMPANION LIVE LOAD FACTOR = 1.00

TRUSS PLATE MANUFACTURER IS NOT RESPONSIBLE FOR QUALITY CONTROL IN THE TRUSS MANUFACTURING PLANT .

CONTINUED ON PAGE 2

KOTT

JOB NAME	TRUSS NAME	QUANTITY	PLY	JOB DESC.	DRWG NO.
IM0723-064	G05	1	1	TRUSS DESC.	

Version 8.630 S Mar 22 2023 MiTek Industries, Inc. Wed Jul 12 15:33:26 2023 Page 2

ID:Ri?d3cNNEF06pVB5PxIOOzBNOdHPMZ6oDdWzRgoYXKqWM2hKfegj?FIGbUUvVaDyynJt

MHP 23028

CORPORATION OF THE CITY OF OSHAWA
TRUE COPY
OF PERMIT PLANS
Nov 15 2023
PER: _____
CHIEF BUILDING OFFICIAL

NAIL VALUES

PLATE	GRIP(DRY) (PSI) MAX	MIN	SHEAR (PLI) MAX	MIN	SECTION (PLI) MAX	MIN
MT20	650	371	1747	788	1987	1873

PLATE PLACEMENT TOL. = 0.250 inches

PLATE ROTATION TOL. = 5.0 Deg.

JSI GRIP= 0.90 (E) (INPUT = 0.90)
JSI METAL= 0.94 (B) (INPUT = 1.00)

LICENSED PROFESSIONAL ENGINEER
I.MATIJEVIC
100528832
PROVINCE OF ONTARIO

JULY 13, 2023

READ ALL NOTES ON THIS PAGE AND ON THE ENGINEERING NOTES: TRUSSES. THE NOTE PAGE IS AN INTEGRAL PART OF THIS DRAWING AS IT CONTAINS SPECIFICATIONS AND CRITERIA USED IN THE DESIGN OF THIS COMPONENT.

KOTT

JOB NAME	TRUSS NAME	QUANTITY	PLY	JOB DESC.	DRWG NO.
IM0723-064	GE01	1	1	TRUSS DESC.	

Version 8.630 S Mar 22 2023 MiTek Industries, Inc. Wed Jul 12 08:37:31 2023 Page 1

ID:Ri?03ot NBF06pYBbPxlOOzBNDdSJ_XopDESZvGIlHOxKIJ7BHAF9j?I7bR5ULVC8yytPo

MHP 23-028

Scale = 1:43.3

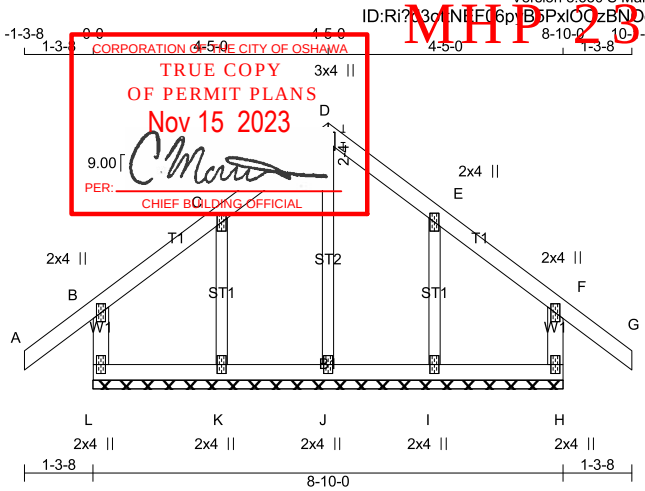

CORPORATION OF THE CITY OF OSHAWA
TRUE COPY
OF PERMIT PLANS
Nov 15 2023
PER:
CHIEF BUILDING OFFICIAL

TOTAL WEIGHT = 37 lb

[M]

LUMBER

N. L. G. A. RULES

CHORDS	SIZE		LUMBER	DESCR.
L - B	2x4	DRY	No.2	SPF
A - D	2x4	DRY	No.2	SPF
D - G	2x4	DRY	No.2	SPF
H - F	2x4	DRY	No.2	SPF
L - H	2x4	DRY	No.2	SPF
ALL WEBS	2x3	DRY	No.2	SPF
ALL GABLE WEBS	2x3	DRY	No.2	SPF

DRY: SEASONED LUMBER.

GABLE STUDS SPACED AT 2-0-0 OC.

PLATES (table is in inches)

JT	TYPE	PLATES	W	LEN	Y	X
B	TMV+p	MT20	2.0	4.0		
C	TMW+w	MT20	2.0	4.0		
D	TTW+p	MT20	3.0	4.0	2.25	1.50
E	TMW+w	MT20	2.0	4.0		
F	TMV+p	MT20	2.0	4.0		
H	BMV1+p	MT20	2.0	4.0		
I, J, K						
I	BMW1+w	MT20	2.0	4.0		
L	BMV1+p	MT20	2.0	4.0		

DIMENSIONS, SUPPORTS AND LOADINGS SPECIFIED BY FABRICATOR TO BE VERIFIED BY BUILDING DESIGNER

BEARINGS

THIS TRUSS DESIGNED FOR CONTINUOUS BEARINGS.

THIS TRUSS REQUIRES RIGID SHEATHING ON EXPOSED FACE.

BEARING MATERIAL TO BE SPF NO.2 OR BETTER AT JOINT(S)

BRACING

TOP CHORD TO BE SHEATHED OR MAX. PURLIN SPACING = 6.25 FT.
MAX. UNBRACED BOTTOM CHORD LENGTH = 10.00 FT OR RIGID CEILING DIRECTLY APPLIED.

ALL PITCH BREAKS AND PERIMETER CORNER JOINTS MUST BE LATERALLY RESTRAINED.

LOADING

TOTAL LOAD CASES: (4)

CHORDS

MEMB. FR-TO	MAX. FACTORED FORCE (LBS)	FACTORED VERT. LOAD (PLF) FROM	TO	LC1 CSI (LC)	MAX UNBRAC LENGTH
L- B	-324 / 0	0.0	0.0	0.02 (1)	7.81
A- B	0 / 49	-119.4	-119.4	0.16 (1)	10.00
B- C	-29 / 0	-119.4	-119.4	0.08 (1)	6.25
C- D	-19 / 0	-119.4	-119.4	0.07 (1)	6.25
D- E	-19 / 0	-119.4	-119.4	0.07 (1)	6.25
E- F	-29 / 0	-119.4	-119.4	0.08 (1)	6.25
F- G	0 / 49	-119.4	-119.4	0.16 (1)	10.00
H- F	-324 / 0	0.0	0.0	0.02 (1)	7.81
L- K	0 / 21	-18.2	-18.2	0.02 (4)	10.00
K- J	0 / 13	-18.2	-18.2	0.02 (4)	10.00
J- I	0 / 13	-18.2	-18.2	0.02 (4)	10.00
I- H	0 / 21	-18.2	-18.2	0.02 (4)	10.00

WEBS

MEMB. FR-TO	MAX. FACTORED FORCE (LBS)	MAX CSI (LC)
J- D	-222 / 0	0.07 (1)
K- C	-257 / 0	0.05 (1)
I- E	-257 / 0	0.05 (1)

DESIGN CRITERIA

SPECIFIED LOADS:

TOP	CH.	LL	=	34.8	PSF
		DL	=	6.0	PSF
BOT	CH.	LL	=	0.0	PSF
		DL	=	7.3	PSF
TOTAL	LOAD		=	48.1	PSF

SPACING = 24.0 IN. C/C

THIS TRUSS IS DESIGNED FOR RESIDENTIAL OR SMALL BUILDING REQUIREMENTS OF PART 9, NBCC 2015

THIS DESIGN COMPLIES WITH:
- PART 9 OF BCBC 2018 , NBC-2019AE
- PART 9 OF OBC 2012 (2019 AMENDMENT)
- CSA 086-14
- TPIC 2014

DESIGN ASSUMPTIONS
-OVERHANG NOT TO BE ALTERED OR CUT OFF.

(55 % OF 48.1 P.S.F. G.S.L. PLUS 8.4 P.S.F. RAIN LOAD) EQUALS 34.8 P.S.F. SPECIFIED ROOF LIVE LOAD

CSI: TC=0.16/0.97 (A-B:1) , BC=0.02/0.97 (K-L:4) , WB=0.07/0.97 (D-J:1) , SSI=0.10/1.00 (A-B:1)

DOL LUMBER=1.00 NAIL=1.00 LS BEND=1.10 COMP=1.10 SHEAR=1.10 TENS= 1.10

COMPANION LIVE LOAD FACTOR = 1.00

TRUSS PLATE MANUFACTURER IS NOT RESPONSIBLE FOR QUALITY CONTROL IN THE TRUSS MANUFACTURING PLANT .

NAIL VALUES

PLATE	GRIP(DRY) (PSI) MAX	MIN	SHEAR (PLI) MAX	MIN	SECTION (PLI) MAX	MIN
MT20	650	371	1747	788	1987	1873

PLATE PLACEMENT TOL. = 0.250 inches

PLATE ROTATION TOL. = 5.0 Deg.

JSI GRIP= 0.23 (F) (INPUT = 0.90)
JSI METAL= 0.19 (B) (INPUT = 1.00)

LICENSED PROFESSIONAL ENGINEER
I.MATIJEVIC
100528832
PROVINCE OF ONTARIO
JULY 12, 2023

READ ALL NOTES ON THIS PAGE AND ON THE ENGINEERING NOTES: TRUSSES. THE NOTE PAGE IS AN INTEGRAL PART OF THIS DRAWING AS IT CONTAINS SPECIFICATIONS AND CRITERIA USED IN THE DESIGN OF THIS COMPONENT.

KOTT

JOB NAME	TRUSS NAME	QUANTITY	PLY	JOB DESC.	DRWG NO.
IM0723-064	J01	2	1	TRUSS DESC.	

Version 8.630 S Mar 22 2023 MiTek Industries, Inc. Wed Jul 12 08:37:32 2023 Page 1

ID:Ri?dJotUNEF0dpyb5PxlOOzBNOd-vgYwpDEsDs16wvsaU1pYgPpHNZ3KUb_aJ852IayytPn

MHP23028

CORPORATION OF THE CITY OF OSHAWA
TRUE COPY
OF PERMIT PLANS
Nov 15 2023
PER:
CHIEF BUILDING OFFICIAL

Scale = 1:25.7

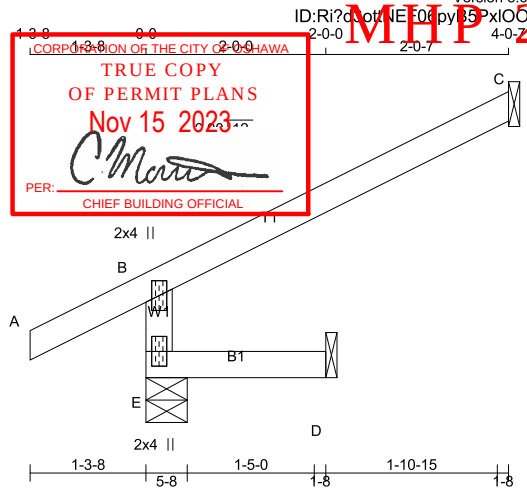

TOTAL WEIGHT = 2 X 10 = 20 lb

[M]

LUMBER

N. L. G. A. RULES

CHORDS	SIZE		LUMBER	DESCR.
E - B	2x4	DRY	No.2	SPF
A - C	2x4	DRY	No.2	SPF
E - D	2x4	DRY	No.2	SPF

DRY: SEASONED LUMBER.

PLATES (table is in inches)

JT	TYPE	PLATES	W	LEN	Y	X
B	TMV+p	MT20	2.0	4.0		
E	BMV1+p	MT20	2.0	4.0		

DIMENSIONS, SUPPORTS AND LOADINGS SPECIFIED BY FABRICATOR TO BE VERIFIED BY BUILDING DESIGNER

BEARINGS

JT	FACTORED GROSS REACTION VERT	HORZ	MAXIMUM FACTORED GROSS REACTION DOWN	HORZ	UPLIFT	INPUT BRG IN-SX	REQRD BRG IN-SX
E	483	0	483	0	0	5-8	1-8
C	181	0	181	0	0	1-8	1-8
D	16	0	18	0	0	1-8	1-8

SEE MITEK STANDARD DETAIL MSD2015-H FOR CONNECTION TO JOINT(S) C , D

UNFACTORED REACTIONS

JT	1ST LCASE COMBINED	MAX./MIN. COMPONENT REACTIONS SNOW	LIVE	PERM.LIVE	WIND	DEAD	SOIL
E	333	270 / 0	0 / 0	0 / 0	0 / 0	63 / 0	0 / 0
C	124	105 / 0	0 / 0	0 / 0	0 / 0	18 / 0	0 / 0
D	13	0 / 0	0 / 0	0 / 0	0 / 0	13 / 0	0 / 0

BEARING MATERIAL TO BE SPF NO.2 OR BETTER AT JOINT(S) E

BRACING

TOP CHORD TO BE SHEATHED OR MAX. PURLIN SPACING = 6.25 FT.
MAX. UNBRACED BOTTOM CHORD LENGTH = 10.00 FT OR RIGID CEILING DIRECTLY APPLIED.

ALL PITCH BREAKS AND PERIMETER CORNER JOINTS MUST BE LATERALLY RESTRAINED.

LOADING

TOTAL LOAD CASES: (4)

CHORDS

MEMB. FR-TO	MAX. FACTORED FORCE (LBS)	FACTORED VERT. LOAD (PLF) FROM	TO	LC1 MAX CSI (LC)	MAX. UNBRAC LENGTH
E- B	-463 / 0	0.0	0.0	0.01 (4)	7.81
A- B	0 / 36	-119.4	-119.4	0.16 (1)	10.00
B- C	-27 / 0	-119.4	-119.4	0.33 (1)	6.25
E- D	0 / 0	-18.2	-18.2	0.02 (4)	10.00

WEBS

MEMB. FR-TO	MAX. FACTORED FORCE (LBS)	MAX CSI (LC)

DESIGN CRITERIA

SPECIFIED LOADS:

TOP CH.	LL	=	34.8	PSF
	DL	=	6.0	PSF
BOT CH.	LL	=	0.0	PSF
	DL	=	7.3	PSF
TOTAL LOAD		=	48.1	PSF

SPACING = 24.0 IN. C/C

THIS TRUSS IS DESIGNED FOR RESIDENTIAL OR SMALL BUILDING REQUIREMENTS OF PART 9, NBCC 2015

THIS DESIGN COMPLIES WITH:
- PART 9 OF BCBC 2018 , NBC-2019AE
- PART 9 OF OBC 2012 (2019 AMENDMENT)
- CSA 086-14
- TPIC 2014

DESIGN ASSUMPTIONS
-OVERHANG NOT TO BE ALTERED OR CUT OFF.

(55 % OF 48.1 P.S.F. G.S.L. PLUS 8.4 P.S.F. RAIN LOAD) EQUALS 34.8 P.S.F. SPECIFIED ROOF LIVE LOAD

ALLOWABLE DEFL.(LL)= L/360 (0.19")
CALCULATED VERT. DEFL.(LL) = L/ 999 (0.00")
ALLOWABLE DEFL.(TL)= L/360 (0.19")
CALCULATED VERT. DEFL.(TL) = L/ 999 (0.00")

CSI: TC=0.33/0.97 (B-C:1) , BC=0.02/0.97 (D-E:4) , WB=0.00/0.97 (n/a:0) , SSI=0.21/1.00 (B-C:1)

DOL LUMBER=1.00 NAIL=1.00 LS BEND=1.10 COMP=1.10 SHEAR=1.10 TENS= 1.10

COMPANION LIVE LOAD FACTOR = 1.00

TRUSS PLATE MANUFACTURER IS NOT RESPONSIBLE FOR QUALITY CONTROL IN THE TRUSS MANUFACTURING PLANT .

NAIL VALUES

PLATE	GRIP(DRY) (PSI) MAX	MIN	SHEAR (PLI) MAX	MIN	SECTION (PLI) MAX	MIN
MT20	650	371	1747	788	1987	1873

PLATE PLACEMENT TOL. = 0.250 inches

PLATE ROTATION TOL. = 5.0 Deg.

JSI GRIP= 0.26 (B) (INPUT = 0.90)
JSI METAL= 0.19 (B) (INPUT = 1.00)

LICENSED PROFESSIONAL ENGINEER
I.MATIJEVIC
100528832
PROVINCE OF ONTARIO
JULY 12, 2023

READ ALL NOTES ON THIS PAGE AND ON THE ENGINEERING NOTES: TRUSSES. THE NOTE PAGE IS AN INTEGRAL PART OF THIS DRAWING AS IT CONTAINS SPECIFICATIONS AND CRITERIA USED IN THE DESIGN OF THIS COMPONENT.

KOTT

JOB NAME	TRUSS NAME	QUANTITY	PLY	JOB DESC.	DRWG NO.
IM0723-064	J02	2	1	TRUSS DESC.	

Version 8.630 S Mar 22 2023 MiTek Industries, Inc. Wed Jul 12 08:37:32 2023 Page 1
ID:Ri?dBotNEF0Spy3PxlOOzBNOd-wcYwp9EDs16wvsaU1pYgPpK6Z3KUb_aJ852layytPn

MHP23028

CORPORATION OF THE CITY OF OSHAWA
TRUE COPY OF PERMIT PLANS
Nov 15 2023
PER: C Martin
CHIEF BUILDING OFFICIAL

Scale = 1:18.7

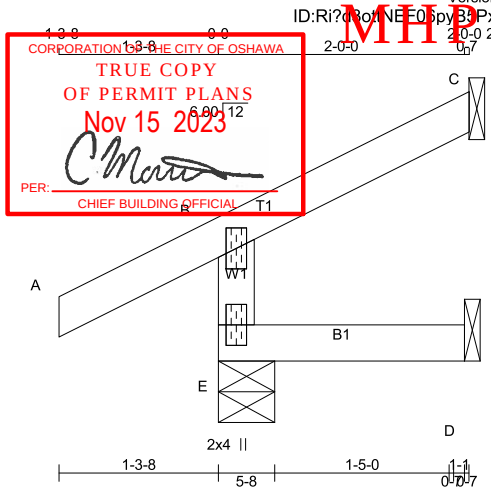

TOTAL WEIGHT = 2 X 7 = 15 lb [M]

LUMBER
N. L. G. A. RULES

CHORDS	SIZE		LUMBER	DESCR.
E - B	2x4	DRY	No.2	SPF
A - C	2x4	DRY	No.2	SPF
E - D	2x4	DRY	No.2	SPF

DRY: SEASONED LUMBER.

PLATES (table is in inches)

JT	TYPE	PLATES	W	LEN	Y	X
B	TMV+p	MT20	2.0	4.0		
E	BMV1+p	MT20	2.0	4.0		

DIMENSIONS, SUPPORTS AND LOADINGS SPECIFIED BY FABRICATOR TO BE VERIFIED BY BUILDING DESIGNER

BEARINGS

JT	FACTORED GROSS REACTION VERT	HORZ	MAXIMUM FACTORED GROSS REACTION DOWN	HORZ	UPLIFT	INPUT BRG IN-SX	REQRD BRG IN-SX
E	334	0	334	0	0	5-8	1-8
C	92	0	92	0	0	1-8	1-8
D	16	0	18	0	0	1-8	1-8

SEE MITEK STANDARD DETAIL MSD2015-H FOR CONNECTION TO JOINT(S) C , D

UNFACTORED REACTIONS

JT	1ST LCASE COMBINED	MAX./MIN. COMPONENT REACTIONS SNOW	LIVE	PERM.LIVE	WIND	DEAD	SOIL
E	230	183 / 0	0 / 0	0 / 0	0 / 0	48 / 0	0 / 0
C	63	54 / 0	0 / 0	0 / 0	0 / 0	9 / 0	0 / 0
D	13	0 / 0	0 / 0	0 / 0	0 / 0	13 / 0	0 / 0

BEARING MATERIAL TO BE SPF NO.2 OR BETTER AT JOINT(S) E

BRACING
TOP CHORD TO BE SHEATHED OR MAX. PURLIN SPACING = 6.25 FT.
MAX. UNBRACED BOTTOM CHORD LENGTH = 10.00 FT OR RIGID CEILING DIRECTLY APPLIED.

ALL PITCH BREAKS AND PERIMETER CORNER JOINTS MUST BE LATERALLY RESTRAINED.

LOADING
TOTAL LOAD CASES: (5)

CHORDS

MEMB. FR-TO	MAX. FACTORED FORCE (LBS)	FACTORED VERT. LOAD (PLF) FROM	TO	LC1 MAX CSI (LC)	MAX. UNBRAC LENGTH
E- B	-313 / 0	0.0	0.0	0.01 (4)	7.81
A- B	0 / 36	-119.4	-119.4	0.16 (1)	10.00
B- C	-13 / 0	-119.4	-119.4	0.08 (1)	6.25
E- D	0 / 0	-18.2	-18.2	0.02 (4)	10.00

WEBS

MEMB. FR-TO	MAX. FACTORED FORCE (LBS)	MAX CSI (LC)

CANTILEVER ANALYSIS HAS BEEN CONSIDERED IN THIS DESIGN

PATTERN-LOADING CHECK APPLIED TO THIS TRUSS.

DESIGN CRITERIA

SPECIFIED LOADS:

TOP CH.	LL	=	34.8	PSF
	DL	=	6.0	PSF
BOT CH.	LL	=	0.0	PSF
	DL	=	7.3	PSF
TOTAL LOAD		=	48.1	PSF

SPACING = 24.0 IN. C/C

THIS TRUSS IS DESIGNED FOR RESIDENTIAL OR SMALL BUILDING REQUIREMENTS OF PART 9, NBCC 2015

THIS DESIGN COMPLIES WITH:
- PART 9 OF BCBC 2018 , NBC-2019AE
- PART 9 OF OBC 2012 (2019 AMENDMENT)
- CSA 086-14
- TPIC 2014

DESIGN ASSUMPTIONS
-OVERHANG NOT TO BE ALTERED OR CUT OFF.

(55 % OF 48.1 P.S.F. G.S.L. PLUS 8.4 P.S.F. RAIN LOAD) EQUALS 34.8 P.S.F. SPECIFIED ROOF LIVE LOAD

ALLOWABLE DEFL.(LL)= L/360 (0.19")
CALCULATED VERT. DEFL.(LL) = L/ 999 (0.00")
ALLOWABLE DEFL.(TL)= L/360 (0.19")
CALCULATED VERT. DEFL.(TL) = L/ 999 (0.00")

CSI: TC=0.16/0.97 (A-B:1) , BC=0.02/0.97 (D-E:4) , WB=0.00/0.97 (n/a:0) , SSI=0.11/1.00 (A-B:1)

DOL LUMBER=1.00 NAIL=1.00 LS BEND=1.10 COMP=1.10 SHEAR=1.10 TENS= 1.10

COMPANION LIVE LOAD FACTOR = 1.00

TRUSS PLATE MANUFACTURER IS NOT RESPONSIBLE FOR QUALITY CONTROL IN THE TRUSS MANUFACTURING PLANT .

NAIL VALUES

PLATE	GRIP(DRY) (PSI) MAX	MIN	SHEAR (PLI) MAX	MIN	SECTION (PLI) MAX	MIN
MT20	650	371	1747	788	1987	1873

PLATE PLACEMENT TOL. = 0.250 inches

PLATE ROTATION TOL. = 5.0 Deg.

JSI GRIP= 0.18 (B) (INPUT = 0.90)
JSI METAL= 0.13 (B) (INPUT = 1.00)

LICENSED PROFESSIONAL ENGINEER
I.MATIJEVIC
100528832
PROVINCE OF ONTARIO
JULY 12, 2023

READ ALL NOTES ON THIS PAGE AND ON THE ENGINEERING NOTES: TRUSSES. THE NOTE PAGE IS AN INTEGRAL PART OF THIS DRAWING AS IT CONTAINS SPECIFICATIONS AND CRITERIA USED IN THE DESIGN OF THIS COMPONENT.

KOTT

JOB NAME	TRUSS NAME	QUANTITY	PLY	JOB DESC.	DRWG NO.
IM0723-064	J03	2	1	TRUSS DESC.	

Version 8.630 S Mar 22 2023 MiTek Industries, Inc. Wed Jul 12 08:37:33 2023 Page 1

ID:Ri?d?otNEF06pyB5PxlOO2BNOd-D85I1VFUzA9zY3Rm2lKnDcMVszNjD1EjYoqcH1yytPm

MHP 23028

CORPORATION OF THE CITY OF OSHAWA
TRUE COPY
OF PERMIT PLANS
Nov 15 2023
PER:
CHIEF BUILDING OFFICIAL

Scale = 1:18.7

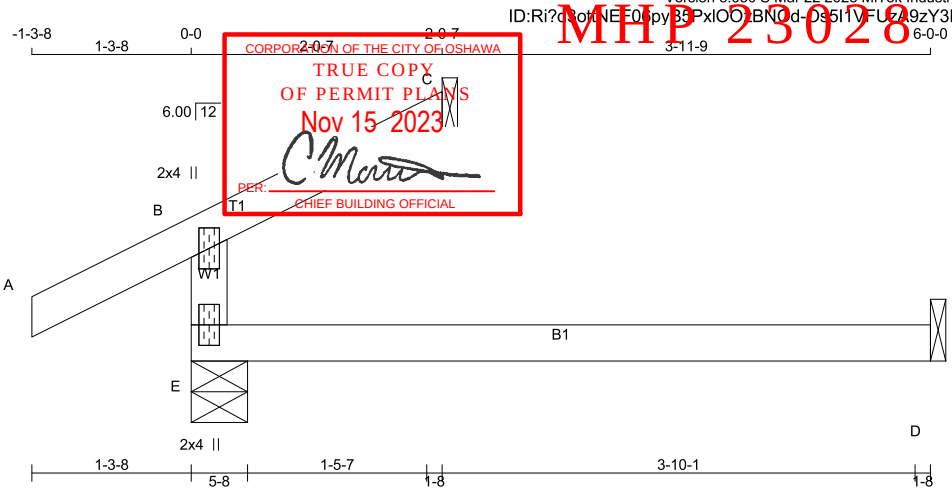

TOTAL WEIGHT = 2 X 12 = 24 lb

[M]

LUMBER

N. L. G. A. RULES

CHORDS	SIZE		LUMBER	DESCR.
E - B	2x4	DRY	No.2	SPF
A - C	2x4	DRY	No.2	SPF
E - D	2x4	DRY	No.2	SPF

DRY: SEASONED LUMBER.

PLATES (table is in inches)

JT	TYPE	PLATES	W	LEN	Y	X
B	TMV+p	MT20	2.0	4.0		
E	BMV1+p	MT20	2.0	4.0		

DIMENSIONS, SUPPORTS AND LOADINGS SPECIFIED BY FABRICATOR TO BE VERIFIED BY BUILDING DESIGNER

BEARINGS

JT	FACTORED GROSS REACTION VERT	HORZ	MAXIMUM FACTORED GROSS REACTION DOWN	HORZ	UPLIFT	INPUT BRG IN-SX	REQRD BRG IN-SX
E	378	0	378	0	0	5-8	1-8
C	92	0	92	0	0	1-8	1-8
D	45	0	51	0	0	1-8	1-8

SEE MITEK STANDARD DETAIL MSD2015-H FOR CONNECTION TO JOINT(S) C , D

UNFACTORED REACTIONS

JT	1ST LCASE COMBINED	MAX./MIN. COMPONENT REACTIONS SNOW	LIVE	PERM.LIVE	WIND	DEAD	SOIL
E	266	183 / 0	0 / 0	0 / 0	0 / 0	83 / 0	0 / 0
C	63	54 / 0	0 / 0	0 / 0	0 / 0	9 / 0	0 / 0
D	36	0 / 0	0 / 0	0 / 0	0 / 0	36 / 0	0 / 0

BEARING MATERIAL TO BE SPF NO.2 OR BETTER AT JOINT(S) E, C

BRACING

TOP CHORD TO BE SHEATHED OR MAX. PURLIN SPACING = 6.25 FT.
MAX. UNBRACED BOTTOM CHORD LENGTH = 10.00 FT OR RIGID CEILING DIRECTLY APPLIED.

ALL PITCH BREAKS AND PERIMETER CORNER JOINTS MUST BE LATERALLY RESTRAINED.

LOADING

TOTAL LOAD CASES: (4)

CHORDS

MEMB. FR-TO	MAX. FACTORED FORCE (LBS)	FACTORED VERT. LOAD (PLF) FROM	TO	LC1 MAX CSI (LC)	MAX. UNBRAC LENGTH
E- B	-313 / 0	0.0	0.0	0.13 (4)	7.81
A- B	0 / 36	-119.4	-119.4	0.16 (1)	10.00
B- C	-13 / 0	-119.4	-119.4	0.08 (1)	6.25
E- D	0 / 0	-18.2	-18.2	0.13 (4)	10.00

WEBS

MEMB. FR-TO	MAX. FACTORED FORCE (LBS)	MAX CSI (LC)

DESIGN CRITERIA

SPECIFIED LOADS:

TOP CH.	LL	=	34.8	PSF
	DL	=	6.0	PSF
BOT CH.	LL	=	0.0	PSF
	DL	=	7.3	PSF
TOTAL LOAD		=	48.1	PSF

SPACING = 24.0 IN. C/C

THIS TRUSS IS DESIGNED FOR RESIDENTIAL OR SMALL BUILDING REQUIREMENTS OF PART 9, NBCC 2015

THIS DESIGN COMPLIES WITH:
- PART 9 OF BCBC 2018 , NBC-2019AE
- PART 9 OF OBC 2012 (2019 AMENDMENT)
- CSA 086-14
- TPIC 2014

DESIGN ASSUMPTIONS
-OVERHANG NOT TO BE ALTERED OR CUT OFF.

(55 % OF 48.1 P.S.F. G.S.L. PLUS 8.4 P.S.F. RAIN LOAD) EQUALS 34.8 P.S.F. SPECIFIED ROOF LIVE LOAD

ALLOWABLE DEFL.(LL)= L/360 (0.20")
CALCULATED VERT. DEFL.(LL) = L/ 999 (0.00")
ALLOWABLE DEFL.(TL)= L/360 (0.20")
CALCULATED VERT. DEFL.(TL) = L/ 999 (0.03")

CSI: TC=0.16/0.97 (A-B:1) , BC=0.13/0.97 (D-E:4) , WB=0.00/0.97 (n/a:0) , SSI=0.11/1.00 (A-B:1)

DOL LUMBER=1.00 NAIL=1.00 LS BEND=1.10 COMP=1.10 SHEAR=1.10 TENS= 1.10

COMPANION LIVE LOAD FACTOR = 1.00

TRUSS PLATE MANUFACTURER IS NOT RESPONSIBLE FOR QUALITY CONTROL IN THE TRUSS MANUFACTURING PLANT .

NAIL VALUES

PLATE	GRIP(DRY) (PSI) MAX	MIN	SHEAR (PLI) MAX	MIN	SECTION (PLI) MAX	MIN
MT20	650	371	1747	788	1987	1873

PLATE PLACEMENT TOL. = 0.250 inches

PLATE ROTATION TOL. = 5.0 Deg.

JSI GRIP= 0.18 (B) (INPUT = 0.90)
JSI METAL= 0.13 (B) (INPUT = 1.00)

LICENSED PROFESSIONAL ENGINEER
I.MATIJEVIC
100528832
PROVINCE OF ONTARIO
JULY 12, 2023

READ ALL NOTES ON THIS PAGE AND ON THE ENGINEERING NOTES: TRUSSES. THE NOTE PAGE IS AN INTEGRAL PART OF THIS DRAWING AS IT CONTAINS SPECIFICATIONS AND CRITERIA USED IN THE DESIGN OF THIS COMPONENT.

KOTT

JOB NAME	TRUSS NAME	QUANTITY	PLY	JOB DESC.	DRWG NO.
IM0723-064	J04	2	1	TRUSS DESC.	

Version 8.630 S Mar 22 2023 MiTek Industries, Inc. Wed Jul 12 08:37:34 2023 Page 1

ID:Ri?13dttNEF06pyB5P-IIOQ2BNQd-S2gEpR6kUHq9D0zcSs0lqudtNjyyUUtnSa9pTyytPl

MHP 23028

CORPORATION OF THE CITY OF OTTAWA
TRUE COPY
OF PERMIT PLANS
Nov 15 2023
PER: C. Martin
CHIEF BUILDING OFFICIAL

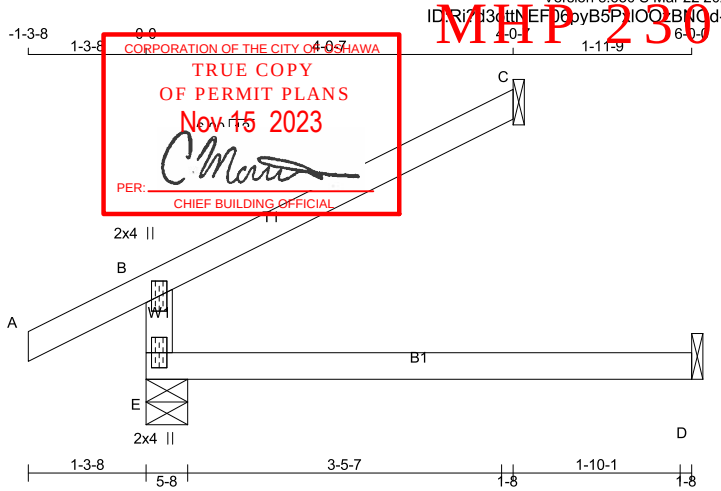

TOTAL WEIGHT = 2 X 15 = 29 lb

[M]

LUMBER

N. L. G. A. RULES

CHORDS	SIZE		LUMBER	DESCR.
E - B	2x4	DRY	No.2	SPF
A - C	2x4	DRY	No.2	SPF
E - D	2x4	DRY	No.2	SPF

DRY: SEASONED LUMBER.

PLATES (table is in inches)

JT	TYPE	PLATES	W	LEN	Y	X
B	TMV+p	MT20	2.0	4.0		
E	BMV1+p	MT20	2.0	4.0		

DIMENSIONS, SUPPORTS AND LOADINGS SPECIFIED BY FABRICATOR TO BE VERIFIED BY BUILDING DESIGNER

BEARINGS

JT	FACTORED GROSS REACTION VERT	HORZ	MAXIMUM FACTORED GROSS REACTION DOWN	HORZ	UPLIFT	INPUT BRG IN-SX	REQRD BRG IN-SX
E	528	0	528	0	0	5-8	1-8
C	181	0	181	0	0	1-8	1-8
D	45	0	51	0	0	1-8	1-8

SEE MITEK STANDARD DETAIL MSD2015-H FOR CONNECTION TO JOINT(S) C , D

UNFACTORED REACTIONS

JT	1ST LCASE COMBINED	MAX./MIN. COMPONENT REACTIONS SNOW	LIVE	PERM.LIVE	WIND	DEAD	SOIL
E	368	270 / 0	0 / 0	0 / 0	0 / 0	98 / 0	0 / 0
C	124	105 / 0	0 / 0	0 / 0	0 / 0	18 / 0	0 / 0
D	36	0 / 0	0 / 0	0 / 0	0 / 0	36 / 0	0 / 0

BEARING MATERIAL TO BE SPF NO.2 OR BETTER AT JOINT(S) E, C

BRACING

TOP CHORD TO BE SHEATHED OR MAX. PURLIN SPACING = 6.25 FT.
MAX. UNBRACED BOTTOM CHORD LENGTH = 10.00 FT OR RIGID CEILING DIRECTLY APPLIED.

ALL PITCH BREAKS AND PERIMETER CORNER JOINTS MUST BE LATERALLY RESTRAINED.

LOADING

TOTAL LOAD CASES: (4)

CHORDS

MEMB. FR-TO	MAX. FACTORED FORCE (LBS)	FACTORED VERT. LOAD (PLF) FROM	TO	LC1 MAX CSI (LC)	MAX. UNBRAC LENGTH
E- B	-463 / 0	0.0	0.0	0.13 (4)	7.81
A- B	0 / 36	-119.4	-119.4	0.16 (1)	10.00
B- C	-27 / 0	-119.4	-119.4	0.33 (1)	6.25
E- D	0 / 0	-18.2	-18.2	0.13 (4)	10.00

WEBS

MEMB. FR-TO	MAX. FACTORED FORCE (LBS)	MAX CSI (LC)

DESIGN CRITERIA

SPECIFIED LOADS:

TOP CH.	LL	=	34.8	PSF
	DL	=	6.0	PSF
BOT CH.	LL	=	0.0	PSF
	DL	=	7.3	PSF
TOTAL LOAD		=	48.1	PSF

SPACING = 24.0 IN. C/C

THIS TRUSS IS DESIGNED FOR RESIDENTIAL OR SMALL BUILDING REQUIREMENTS OF PART 9, NBCC 2015

THIS DESIGN COMPLIES WITH:
- PART 9 OF BCBC 2018 , NBC-2019AE
- PART 9 OF OBC 2012 (2019 AMENDMENT)
- CSA 086-14
- TPIC 2014

DESIGN ASSUMPTIONS
-OVERHANG NOT TO BE ALTERED OR CUT OFF.

(55 % OF 48.1 P.S.F. G.S.L. PLUS 8.4 P.S.F. RAIN LOAD) EQUALS 34.8 P.S.F. SPECIFIED ROOF LIVE LOAD

ALLOWABLE DEFL.(LL)= L/360 (0.20")
CALCULATED VERT. DEFL.(LL) = L/ 999 (0.00")
ALLOWABLE DEFL.(TL)= L/360 (0.20")
CALCULATED VERT. DEFL.(TL) = L/ 999 (0.03")

CSI: TC=0.33/0.97 (B-C:1) , BC=0.13/0.97 (D-E:4) , WB=0.00/0.97 (n/a:0) , SSI=0.21/1.00 (B-C:1)

DOL LUMBER=1.00 NAIL=1.00 LS BEND=1.10 COMP=1.10 SHEAR=1.10 TENS= 1.10

COMPANION LIVE LOAD FACTOR = 1.00

TRUSS PLATE MANUFACTURER IS NOT RESPONSIBLE FOR QUALITY CONTROL IN THE TRUSS MANUFACTURING PLANT .

NAIL VALUES

PLATE	GRIP(DRY) (PSI) MAX	MIN	SHEAR (PLI) MAX	MIN	SECTION (PLI) MAX	MIN
MT20	650	371	1747	788	1987	1873

PLATE PLACEMENT TOL. = 0.250 inches

PLATE ROTATION TOL. = 5.0 Deg.

JSI GRIP= 0.26 (B) (INPUT = 0.90)
JSI METAL= 0.19 (B) (INPUT = 1.00)

LICENSED PROFESSIONAL ENGINEER
I.MATIJEVIC
100528832
PROVINCE OF ONTARIO
JULY 12, 2023

READ ALL NOTES ON THIS PAGE AND ON THE ENGINEERING NOTES: TRUSSES. THE NOTE PAGE IS AN INTEGRAL PART OF THIS DRAWING AS IT CONTAINS SPECIFICATIONS AND CRITERIA USED IN THE DESIGN OF THIS COMPONENT.

KOTT

JOB NAME	TRUSS NAME	QUANTITY	PLY	JOB DESC.	DRWG NO.
IM0723-064	J05	12	1	TRUSS DESC.	

Version 8.630 S Mar 22 2023 MiTek Industries, Inc. Wed Jul 12 08:37:35 2023 Page 1

ID:Ri?o3qdNEF05pyB3PxlOCzBNDdcKFD2RAGkVnPhnNb9AANFI1RiJm3Bhxk006JjLvyytPk

MHP 23028

CORPORATION OF THE CITY OF OSHAWA

TRUE COPY OF PERMIT PLANS

Nov 15 2023

PER:

CHIEF BUILDING OFFICIAL

Scale = 1:34.0

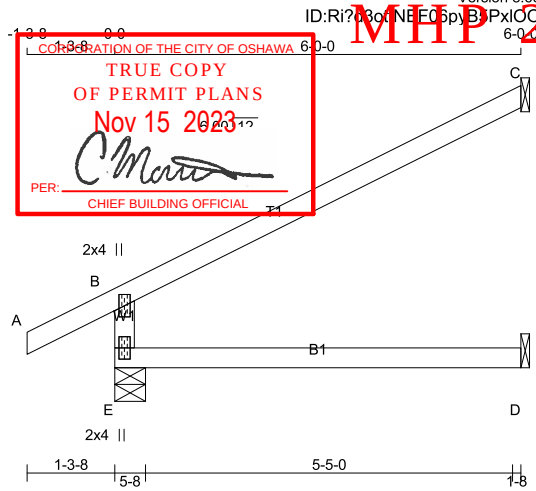

TOTAL WEIGHT = 12 X 17 = 205 lb

[M]

LUMBER

N. L. G. A. RULES

CHORDS	SIZE		LUMBER	DESCR.
E - B	2x4	DRY	No.2	SPF
A - C	2x4	DRY	No.2	SPF
E - D	2x4	DRY	No.2	SPF

DRY: SEASONED LUMBER.

PLATES (table is in inches)

JT	TYPE	PLATES	W	LEN	Y	X
B	TMV+p	MT20	2.0	4.0		
E	BMV1+p	MT20	2.0	4.0		

DIMENSIONS, SUPPORTS AND LOADINGS SPECIFIED BY FABRICATOR TO BE VERIFIED BY BUILDING DESIGNER

BEARINGS

JT	FACTORED GROSS REACTION VERT	HORZ	MAXIMUM FACTORED GROSS REACTION DOWN	HORZ	UPLIFT	INPUT BRG IN-SX	REQRD BRG IN-SX
E	674	0	674	0	0	5-8	1-8
C	269	0	269	0	0	1-8	1-8
D	45	0	51	0	0	1-8	1-8

SEE MITEK STANDARD DETAIL MSD2015-H FOR CONNECTION TO JOINT(S) C , D

UNFACTORED REACTIONS

JT	1ST LCASE COMBINED	MAX./MIN. COMPONENT REACTIONS SNOW	LIVE	PERM.LIVE	WIND	DEAD	SOIL
E	468	355 / 0	0 / 0	0 / 0	0 / 0	113 / 0	0 / 0
C	184	157 / 0	0 / 0	0 / 0	0 / 0	27 / 0	0 / 0
D	36	0 / 0	0 / 0	0 / 0	0 / 0	36 / 0	0 / 0

BEARING MATERIAL TO BE SPF NO.2 OR BETTER AT JOINT(S) E

BRACING

TOP CHORD TO BE SHEATHED OR MAX. PURLIN SPACING = 6.25 FT.
MAX. UNBRACED BOTTOM CHORD LENGTH = 10.00 FT OR RIGID CEILING DIRECTLY APPLIED.

ALL PITCH BREAKS AND PERIMETER CORNER JOINTS MUST BE LATERALLY RESTRAINED.

LOADING

TOTAL LOAD CASES: (4)

CHORDS

MEMB. FR-TO	MAX. FACTORED FORCE (LBS)	FACTORED VERT. LOAD (PLF) FROM	TO	LC1 MAX CSI (LC)	MAX. UNBRAC LENGTH
E- B	-610 / 0	0.0	0.0	0.13 (4)	7.81
A- B	0 / 36	-119.4	-119.4	0.16 (1)	10.00
B- C	-40 / 0	-119.4	-119.4	0.73 (1)	6.25
E- D	0 / 0	-18.2	-18.2	0.13 (4)	10.00

WEBS

MEMB. FR-TO	MAX. FACTORED FORCE (LBS)	MAX CSI (LC)

DESIGN CRITERIA

SPECIFIED LOADS:

TOP CH.	LL	=	34.8	PSF
	DL	=	6.0	PSF
BOT CH.	LL	=	0.0	PSF
	DL	=	7.3	PSF
TOTAL LOAD		=	48.1	PSF

SPACING = 24.0 IN. C/C

THIS TRUSS IS DESIGNED FOR RESIDENTIAL OR SMALL BUILDING REQUIREMENTS OF PART 9, NBCC 2015

THIS DESIGN COMPLIES WITH:
- PART 9 OF BCBC 2018 , NBC-2019AE
- PART 9 OF OBC 2012 (2019 AMENDMENT)
- CSA 086-14
- TPIC 2014

DESIGN ASSUMPTIONS
-OVERHANG NOT TO BE ALTERED OR CUT OFF.

(55 % OF 48.1 P.S.F. G.S.L. PLUS 8.4 P.S.F. RAIN LOAD) EQUALS 34.8 P.S.F. SPECIFIED ROOF LIVE LOAD

ALLOWABLE DEFL.(LL)= L/360 (0.20")
CALCULATED VERT. DEFL.(LL) = L/ 999 (0.00")
ALLOWABLE DEFL.(TL)= L/360 (0.20")
CALCULATED VERT. DEFL.(TL) = L/ 999 (0.03")

CSI: TC=0.73/0.97 (B-C:1) , BC=0.13/0.97 (D-E:4) , WB=0.00/0.97 (n/a:0) , SSI=0.31/1.00 (B-C:1)

DOL LUMBER=1.00 NAIL=1.00 LS BEND=1.10 COMP=1.10 SHEAR=1.10 TENS= 1.10

COMPANION LIVE LOAD FACTOR = 1.00

TRUSS PLATE MANUFACTURER IS NOT RESPONSIBLE FOR QUALITY CONTROL IN THE TRUSS MANUFACTURING PLANT .

NAIL VALUES

PLATE	GRIP(DRY) (PSI) MAX	MIN	SHEAR (PLI) MAX	MIN	SECTION (PLI) MAX	MIN
MT20	650	371	1747	788	1987	1873

PLATE PLACEMENT TOL. = 0.250 inches

PLATE ROTATION TOL. = 5.0 Deg.

JSI GRIP= 0.34 (B) (INPUT = 0.90)
JSI METAL= 0.25 (B) (INPUT = 1.00)

LICENSED PROFESSIONAL ENGINEER
I.MATIJEVIC
100528832
PROVINCE OF ONTARIO

JULY 12, 2023

READ ALL NOTES ON THIS PAGE AND ON THE ENGINEERING NOTES: TRUSSES. THE NOTE PAGE IS AN INTEGRAL PART OF THIS DRAWING AS IT CONTAINS SPECIFICATIONS AND CRITERIA USED IN THE DESIGN OF THIS COMPONENT.

KOTT