| JOB NAME | TRUSS NAME | QUANTITY | PLY | JOB DESC. | DRWG NO. |
|---|---|---|---|---|---|
| T-RIVER 3-1 | J03 | 1 | 1 | ZADORRA ESTATES INC | ME23-5764-11 |

Kott, Uxbridge,ON

TRUE COPY OF PERMIT PLANS
CORPORATION OF THE CITY OF OTTAWA
Dec 04 2023
PER: _____
CHIEF BUILDING OFFICIAL

TRUSS DESC.

Version 8.630 S Mar 22 2023 MiTek Industries, Inc. Tue Jul 4 09:05:44 2023 Page 1
ID:NccLgzmhd_IdQzH3VGMNlRzOs0a-_ukZgmNsLdPn0cHLKeF6DbUKpizIbiV1CI3JDWz?VIL

MHP 23023

Scale = 1:19.2

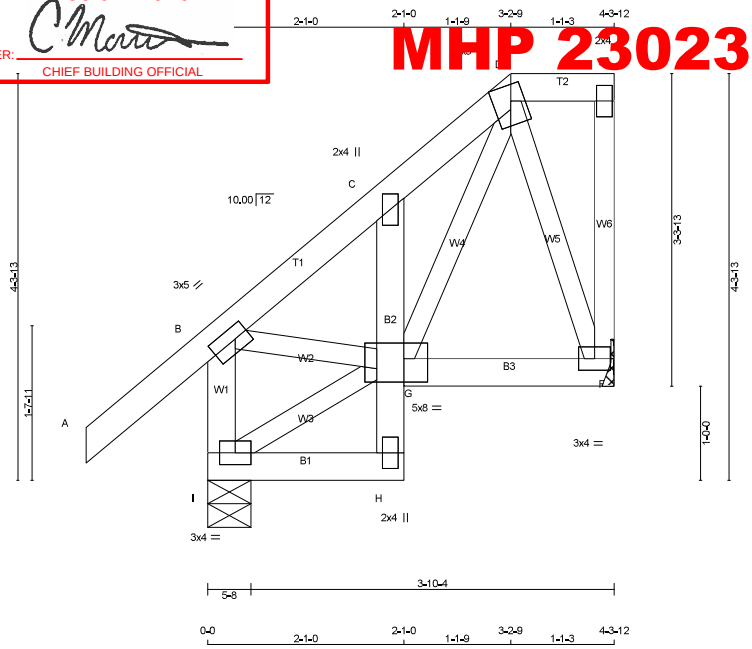


TOTAL WEIGHT = 27 lb [M]

**LUMBER**
N. L. G. A. RULES

| CHORDS | SIZE | | LUMBER | DESCR. |
|---|---|---|---|---|
| I - B | 2x4 | DRY | No.2 | SPF |
| A - D | 2x4 | DRY | No.2 | SPF |
| D - E | 2x4 | DRY | No.2 | SPF |
| F - E | 2x3 | DRY | No.2 | SPF |
| I - H | 2x4 | DRY | No.2 | SPF |
| H - C | 2x4 | DRY | No.2 | SPF |
| G - F | 2x4 | DRY | No.2 | SPF |
| ALL WEBS | 2x3 | DRY | No.2 | SPF |

DRY: SEASONED LUMBER.

**PLATES (table is in inches)**

| JT | TYPE | PLATES | W | LEN | Y | X |
|---|---|---|---|---|---|---|
| B | TMVW-t | MT20 | 3.0 | 5.0 | 1.50 | 1.75 |
| C | TMV+p | MT20 | 2.0 | 4.0 | | |
| D | TTWW+m | MT20 | 4.0 | 5.0 | 2.00 | 1.75 |
| E | TMV+p | MT20 | 2.0 | 4.0 | | |
| F | BMVW1-t | MT20 | 3.0 | 4.0 | | |
| G | BVMWWW-l | MT20 | 5.0 | 8.0 | 3.00 | 3.00 |
| H | BMV+p | MT20 | 2.0 | 4.0 | | |
| I | BMVW1-t | MT20 | 3.0 | 4.0 | | |

**DIMENSIONS, SUPPORTS AND LOADINGS SPECIFIED BY FABRICATOR TO BE VERIFIED BY BUILDING DESIGNER**

**BEARINGS**

| JT | FACTORED GROSS REACTION VERT | HORZ | MAXIMUM GROSS REACTION DOWN | FACTORED HORZ | UPLIFT | INPUT BRG | REQRD BRG |
|---|---|---|---|---|---|---|---|
| I | 489 | 0 | 489 | 0 | 0 | 5-8 | 1-8 |
| F | 270 | 0 | 270 | 0 | 0 | MECHANICAL | |

A SUITABLE HANGER/MECHANICAL CONNECTION IS REQUIRED AT JOINT F. MINIMUM BEARING LENGTH AT JOINT F = 1-8.

**UNFACTORED REACTIONS**

| JT | 1ST LCASE COMBINED | SNOW | MAX./MIN. COMPONENT REACTIONS LIVE | PERM.LIVE | WIND | DEAD | SOIL |
|---|---|---|---|---|---|---|---|
| I | 339 | 262 / 0 | 0 / 0 | 0 / 0 | 0 / 0 | 77 / 0 | 0 / 0 |
| F | 189 | 135 / 0 | 0 / 0 | 0 / 0 | 0 / 0 | 55 / 0 | 0 / 0 |

BEARING MATERIAL TO BE SPF NO.2 OR BETTER AT JOINT(S) I

**BRACING**
TOP CHORD TO BE SHEATHED OR MAX. PURLIN SPACING = 6.25 FT.
MAX. UNBRACED BOTTOM CHORD LENGTH = 7.81 FT OR RIGID CEILING DIRECTLY APPLIED.

ALL PITCH BREAKS AND PERIMETER CORNER JOINTS MUST BE LATERALLY RESTRAINED.

**LOADING**
TOTAL LOAD CASES: (4)

CHORDS

| MEMB. FR-TO | MAX. FACTORED FORCE (LBS) | FACTORED VERT. LOAD (PLF) FROM | TO | LC1 | MAX CSI (LC) | MAX. UNBRAC LENGTH |
|---|---|---|---|---|---|---|
| I- B | -468 / 0 | 0.0 | 0.0 | 0.05 (1) | 7.81 | |
| A- B | 0 / 53 | -119.4 | -119.4 | 0.16 (1) | 10.00 | |
| B- C | -211 / 0 | -119.4 | -119.4 | 0.16 (1) | 6.25 | |
| C- D | -167 / 0 | -119.4 | -119.4 | 0.04 (1) | 6.25 | |
| D- E | 0 / 0 | -119.4 | -119.4 | 0.02 (1) | 10.00 | |
| F- E | -66 / 0 | 0.0 | 0.0 | 0.02 (1) | 7.81 | |
| I- H | 0 / 5 | -18.2 | -18.2 | 0.02 (4) | 10.00 | |
| H- G | 0 / 20 | 0.0 | 0.0 | 0.01 (1) | 10.00 | |
| G- C | -127 / 0 | 0.0 | 0.0 | 0.01 (1) | 7.81 | |
| G- F | 0 / 67 | -18.2 | -18.2 | 0.03 (4) | 10.00 | |

WEBS

| MEMB. FR-TO | MAX. FACTORED FORCE (LBS) | MAX CSI (LC) |
|---|---|---|
| I- G | -6 / 0 | 0.00 (1) |
| B- G | 0 / 133 | 0.03 (1) |
| G- D | 0 / 156 | 0.04 (1) |
| D- F | -195 / 0 | 0.04 (1) |

**DESIGN CRITERIA**

SPECIFIED LOADS:

| | | | | |
|---|---|---|---|---|
| TOP CH. | LL | = | 34.8 | PSF |
| | DL | = | 6.0 | PSF |
| BOT CH. | LL | = | 0.0 | PSF |
| | DL | = | 7.3 | PSF |
| TOTAL LOAD | | = | 48.1 | PSF |

**SPACING = 24.0 IN. C/C**

LOADING IN FLAT SECTION BASED ON A SLOPE OF 2.00/12 MINIMUM

THIS TRUSS IS DESIGNED FOR RESIDENTIAL OR SMALL BUILDING REQUIREMENTS OF PART 9, NBCC 2015

THIS DESIGN COMPLIES WITH:
- PART 9 OF BCBC 2018 , NBC-2019AE
- PART 9 OF OBC 2012 (2019 AMENDMENT)
- CSA 086-14
- TPIC 2014

DESIGN ASSUMPTIONS
-OVERHANG NOT TO BE ALTERED OR CUT OFF.

(55 % OF 48.1 P.S.F. G.S.L. PLUS 8.4 P.S.F. RAIN LOAD) EQUALS 34.8 P.S.F. SPECIFIED ROOF LIVE LOAD

ALLOWABLE DEFL.(LL)= L/360 (0.19")
CALCULATED VERT. DEFL.(LL) = L/ 999 (0.00")
ALLOWABLE DEFL.(TL)= L/360 (0.19")
CALCULATED VERT. DEFL.(TL) = L/ 999 (0.00")

CSI: TC=0.16/1.00 (A-B:1) , BC=0.03/1.00 (F-G:4) , WB=0.04/1.00 (D-F:1) , SSI=0.10/1.00 (B-C:1)

DOL LUMBER=1.00 NAIL=1.00 LS BEND=1.10 COMP=1.10 SHEAR=1.10 TENS= 1.10

COMPANION LIVE LOAD FACTOR = 1.00

TRUSS PLATE MANUFACTURER IS NOT RESPONSIBLE FOR QUALITY CONTROL IN THE TRUSS MANUFACTURING PLANT .

NAIL VALUES

| PLATE | GRIP(DRY) (PSI) MAX | MIN | SHEAR (PLI) MAX | MIN | SECTION (PLI) MAX | MIN |
|---|---|---|---|---|---|---|
| MT20 | 650 | 371 | 1747 | 788 | 1987 | 1873 |

PLATE PLACEMENT TOL. = 0.250 inches

PLATE ROTATION TOL. = 5.0 Deg.

JSI GRIP= 0.44 (I) (INPUT = 0.90 )
JSI METAL= 0.11 (B) (INPUT = 1.00 )

MODULUS ENGINEERING LTD.

LICENSED PROFESSIONAL ENGINEER
07/04/2023
D. A. SHERMAN
100123373
PROVINCE OF ONTARIO

REVIEW FOR TRUSS COMPONENT ONLY

*NOTE: ALTERING THIS DOCUMENT VOIDS THE ENGINEERS SEAL*

**WARNING - Verify design parameters and READ NOTES ON THIS AND INCLUDED IN MODULUS ENGINEERING LTD. NOTES ME-TCD01 (VER 06/2017) BEFORE USE.**
Design valid for use only with Mitek connectors. This design is based only upon parameters shown, and is for individual building components. Applicability of design parameters and proper incorporation of component is responsibility of building designer - not truss designer. Bracing shown is for lateral support of individual web members only. Additional temporary bracing to ensure stability during construction is the responsibility of the erector. Additional permanent bracing of the overall structure is the responsibility of the building designer. For general guidance regarding fabrication, quality control, storage, delivery, erection and bracing, consult
**TPIC Appendix G - Minimum quality Manufacturing Criteria** available from **www.tpic.ca** and **BCSI-CANADA (Building Component Safety Information) available** from TPI, 781 N. Lee Street, Suite 312, Alexandria, VA 22314 or www.sbcindustry.com

KOTT

| JOB NAME | TRUSS NAME | QUANTITY | PLY | JOB DESC. | DRWG NO. |
|---|---|---|---|---|---|
| T-RIVER 3-1 | J04 | 6 | 1 | ZADORRA ESTATES INC | ME23-5764-12 |
| Kott, Uxbridge,ON | | | | TRUSS DESC. | |

Version 8.630 S Mar 22 2023 MiTek Industries, Inc. Tue Jul 4 09:05:45 2023 Page 1

ID:NccLgzmhd_ldQzH3VGMNlRzOs0a-S4Ixt6OV6wXeemsXuMmLlp0Tj6ErK9UBQyptlyz?VIK

CORPORATION OF THE CITY OF OTTAWA
TRUE COPY
OF PERMIT PLANS
Dec 04 2023
PER:
CHIEF BUILDING OFFICIAL

MHP 23023

Scale = 1:16.2

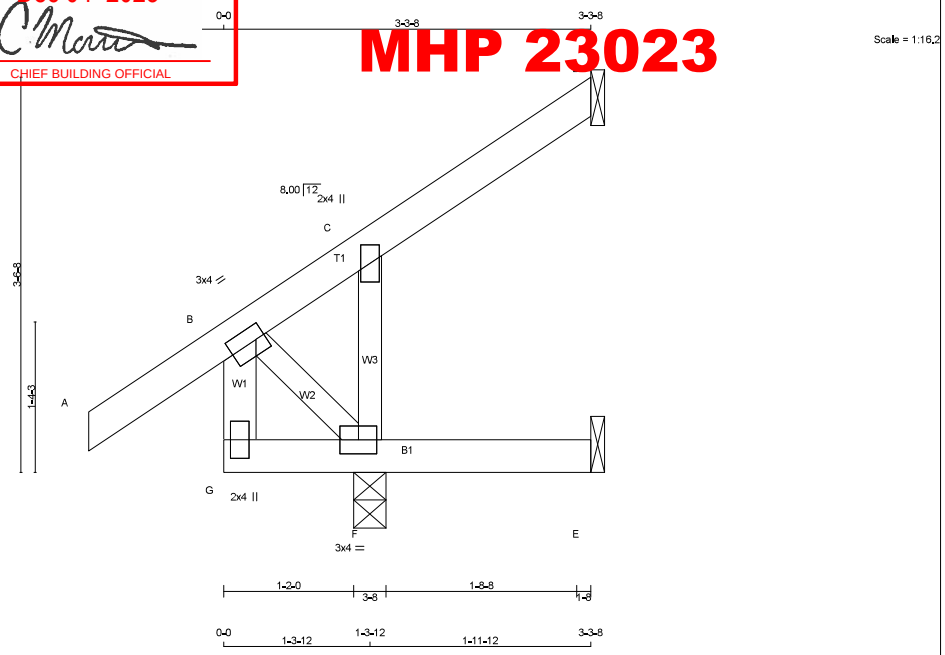


TOTAL WEIGHT = 6 X 14 = 81 lb [M]

**LUMBER**
N. L. G. A. RULES

| CHORDS | SIZE | | LUMBER | DESCR. |
|---|---|---|---|---|
| G - B | 2x4 | DRY | No.2 | SPF |
| A - D | 2x4 | DRY | No.2 | SPF |
| G - E | 2x4 | DRY | No.2 | SPF |
| ALL WEBS | 2x3 | DRY | No.2 | SPF |

DRY: SEASONED LUMBER.

**PLATES (table is in inches)**

| JT | TYPE | PLATES | W | LEN | Y | X |
|---|---|---|---|---|---|---|
| B | TMVW-t | MT20 | 3.0 | 4.0 | 1.50 | 1.00 |
| C | TMW+w | MT20 | 2.0 | 4.0 | | |
| F | BMWW1-t | MT20 | 3.0 | 4.0 | | |
| G | BMV+p | MT20 | 2.0 | 4.0 | | |

**DIMENSIONS, SUPPORTS AND LOADINGS SPECIFIED BY FABRICATOR TO BE VERIFIED BY BUILDING DESIGNER**

**BEARINGS**

| JT | FACTORED GROSS REACTION VERT | HORZ | MAXIMUM FACTORED GROSS REACTION DOWN | HORZ | UPLIFT | INPUT BRG IN-SX | REQRD BRG IN-SX |
|---|---|---|---|---|---|---|---|
| D | 24 | 0 | 24 | 0 | -77 | 1-8 | 1-8 |
| E | -100 | 0 | 0 | 0 | -111 | 1-8 | 1-8 |
| F | 683 | 0 | 683 | 0 | 0 | 3-8 | 1-8 |

SEE MITEK STANDARD DETAIL MSD2015-H FOR CONNECTION TO JOINT(S) D , E

PROVIDE ANCHORAGE AT BEARING JOINT D FOR 150 LBS FACTORED UPLIFT
PROVIDE ANCHORAGE AT BEARING JOINT E FOR 150 LBS FACTORED UPLIFT

**UNFACTORED REACTIONS**

| JT | 1ST LCASE COMBINED | MAX./MIN. COMPONENT REACTIONS SNOW | LIVE | PERM.LIVE | WIND | DEAD | SOIL |
|---|---|---|---|---|---|---|---|
| D | 16 | 15 / -50 | 0 / 0 | 0 / 0 | 0 / 0 | 1 / 0 | 0 / 0 |
| E | -67 | 0 / -69 | 0 / 0 | 0 / 0 | 0 / 0 | 0 / -2 | 0 / 0 |
| F | 473 | 369 / 0 | 0 / 0 | 0 / 0 | 0 / 0 | 104 / 0 | 0 / 0 |

BEARING MATERIAL TO BE SPF NO.2 OR BETTER AT JOINT(S) D, F

**BRACING**
TOP CHORD TO BE SHEATHED OR MAX. PURLIN SPACING = 6.25 FT.
MAX. UNBRACED BOTTOM CHORD LENGTH = 10.00 FT OR RIGID CEILING DIRECTLY APPLIED.

ALL PITCH BREAKS AND PERIMETER CORNER JOINTS MUST BE LATERALLY RESTRAINED.

**LOADING**
TOTAL LOAD CASES: (5)

CHORDS

| MEMB. FR-TO | MAX. FACTORED FORCE (LBS) | FACTORED VERT. LOAD (PLF) FROM | TO | LC1 MAX CSI (LC) | MAX. UNBRAC LENGTH |
|---|---|---|---|---|---|
| G- B | -175 / 0 | 0.0 | 0.0 | 0.02 (5) | 7.81 |
| A- B | 0 / 43 | -119.4 | -119.4 | 0.14 (1) | 10.00 |
| B- C | 0 / 28 | -119.4 | -119.4 | 0.28 (1) | 10.00 |
| C- D | -55 / 0 | -119.4 | -119.4 | 0.28 (1) | 6.25 |
| G- F | 0 / 0 | -18.2 | -18.2 | 0.33 (5) | 10.00 |
| F- E | 0 / 0 | -18.2 | -18.2 | 0.33 (5) | 10.00 |

WEBS

| MEMB. FR-TO | MAX. FACTORED FORCE (LBS) | MAX CSI (LC) |
|---|---|---|
| F- C | -371 / 0 | 0.06 (1) |
| B- F | 0 / 21 | 0.00 (1) |

CANTILEVER ANALYSIS HAS BEEN CONSIDERED IN THIS DESIGN

PATTERN-LOADING CHECK APPLIED TO THIS TRUSS.

**DESIGN CRITERIA**

SPECIFIED LOADS:

| | | | | |
|---|---|---|---|---|
| TOP CH. | LL | = | 34.8 | PSF |
| | DL | = | 6.0 | PSF |
| BOT CH. | LL | = | 0.0 | PSF |
| | DL | = | 7.3 | PSF |
| TOTAL LOAD | | = | 48.1 | PSF |

**SPACING = 24.0 IN. C/C**

THIS TRUSS IS DESIGNED FOR RESIDENTIAL OR SMALL BUILDING REQUIREMENTS OF PART 9, NBCC 2015

THIS DESIGN COMPLIES WITH:
- PART 9 OF BCBC 2018 , NBC-2019AE
- PART 9 OF OBC 2012 (2019 AMENDMENT)
- CSA 086-14
- TPIC 2014

DESIGN ASSUMPTIONS
-OVERHANG NOT TO BE ALTERED OR CUT OFF.

(55 % OF 48.1 P.S.F. G.S.L. PLUS 8.4 P.S.F. RAIN LOAD) EQUALS 34.8 P.S.F. SPECIFIED ROOF LIVE LOAD

ALLOWABLE DEFL.(LL)= L/360 (0.19")
CALCULATED VERT. DEFL.(LL) = L/ 999 (0.01")
ALLOWABLE DEFL.(TL)= L/360 (0.19")
CALCULATED VERT. DEFL.(TL) = L/ 999 (0.01")

CANTILEVER DEFLECTION:
ALLOWABLE DEFL.(LL)= L/120 (0.19")
CALCULATED VERT. DEFL.(LL) = L/ 340 ( 0.05")
ALLOWABLE DEFL.(TL)= L/120 (0.19")
CALCULATED VERT. DEFL.(TL) = L/ 223 ( 0.07")

CSI: TC=0.28/1.00 (B-C:1) , BC=0.33/1.00 (F-G:5) , WB=0.06/1.00 (C-F:1) , SSI=0.16/1.00 (F-G:5)

DOL LUMBER=1.00 NAIL=1.00 LS BEND=1.10 COMP=1.10 SHEAR=1.10 TENS= 1.10

COMPANION LIVE LOAD FACTOR = 1.00

AUTOSOLVE RIGHT HEEL ONLY

TRUSS PLATE MANUFACTURER IS NOT RESPONSIBLE FOR QUALITY CONTROL IN THE TRUSS MANUFACTURING PLANT .

NAIL VALUES

| PLATE | GRIP(DRY) (PSI) MAX | MIN | SHEAR (PLI) MAX | MIN | SECTION (PLI) MAX | MIN |
|---|---|---|---|---|---|---|
| MT20 | 650 | 371 | 1747 | 788 | 1987 | 1873 |

PLATE PLACEMENT TOL. = 0.250 inches

PLATE ROTATION TOL. = 5.0 Deg.

JSI GRIP= 0.35 (F) (INPUT = 0.90 )
JSI METAL= 0.19 (C) (INPUT = 1.00 )

MODULUS ENGINEERING LTD.

LICENSED PROFESSIONAL ENGINEER
07/04/2023
D. A. SHERMAN
100123373
PROVINCE OF ONTARIO

**REVIEW FOR TRUSS COMPONENT ONLY**

*NOTE: ALTERING THIS DOCUMENT VOIDS THE ENGINEERS SEAL*

**WARNING - Verify design parameters and READ NOTES ON THIS AND INCLUDED IN MODULUS ENGINEERING LTD. NOTES ME-TCD01 (VER 06/2017) BEFORE USE.**
Design valid for use only with Mitek connectors. This design is based only upon parameters shown, and is for individual building components. Applicability of design parameters and proper incorporation of component is responsibility of building designer - not truss designer. Bracing shown is for lateral support of individual web members only. Additional temporary bracing to ensure stability during construction is the responsibility of the erector. Additional permanent bracing of the overall structure is the responsibility of the building designer. For general guidance regarding fabrication, quality control, storage, delivery, erection and bracing, consult
**TPIC Appendix G - Minimum quality Manufacturing Criteria** available from **www.tpic.ca** and **BCSI-CANADA (Building Component Safety Information) available** from TPI, 781 N. Lee Street, Suite 312, Alexandria, VA 22314 or www.sbcindustry.com

KOTT

| JOB NAME | TRUSS NAME | QUANTITY | PLY | JOB DESC. | DRWG NO. |
|---|---|---|---|---|---|
| T-RIVER 3-1 | T01 | 13 | 1 | ZADORRA ESTATES INC | ME23-5764-13 |
| Kott, Uxbridge,ON | | | | TRUSS DESC. | |

CORPORATION OF THE CITY OF OTTAWA
TRUE COPY
OF PERMIT PLANS
Dec 04 2023
PER:
CHIEF BUILDING OFFICIAL

Version 8.630 S Mar 22 2023 MiTek Industries, Inc. Tue Jul 4 09:05:46 2023 Page 1
ID:NccLgzmhd_IdQzH3VGMNlRzOs0a-xGsJ5SP7tEgVGvRkS3HaI0ZYzVZS3RNKfcYQHOz?VL

MHP 23023

Scale = 1:39.7

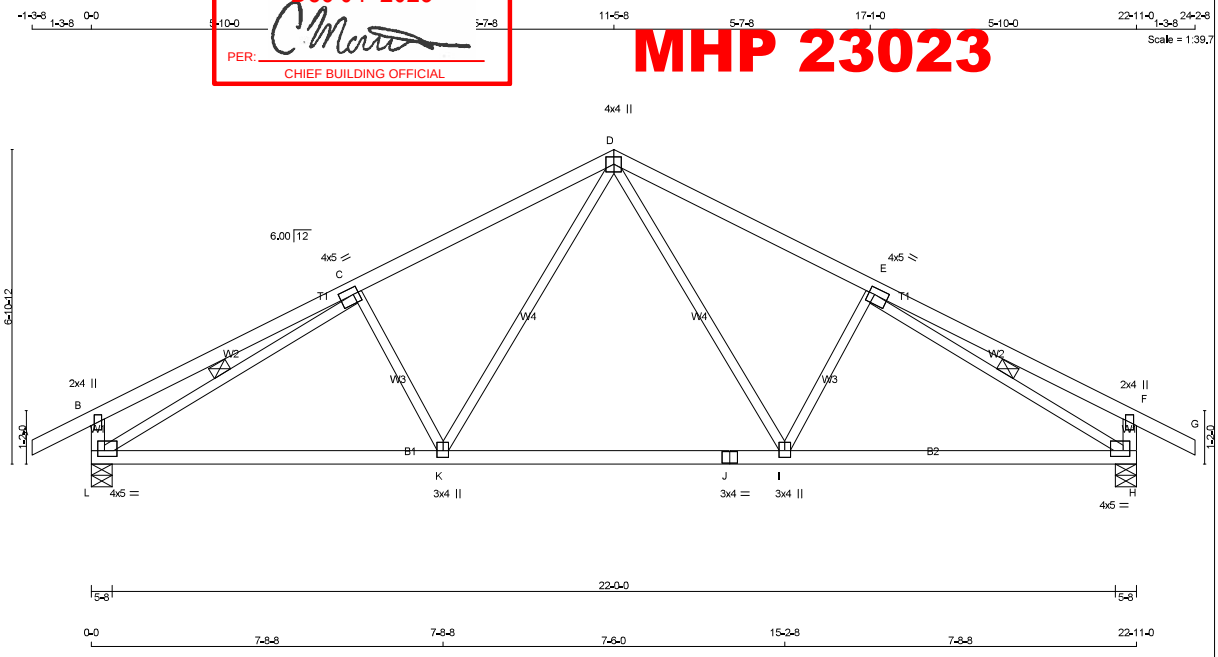


TOTAL WEIGHT = 13 X 89 = 1162 lb
[M][F]

**LUMBER**
N. L. G. A. RULES

| CHORDS | SIZE | | LUMBER | DESCR. |
|---|---|---|---|---|
| A - D | 2x4 | DRY | No.2 | SPF |
| D - G | 2x4 | DRY | No.2 | SPF |
| L - B | 2x4 | DRY | No.2 | SPF |
| H - F | 2x4 | DRY | No.2 | SPF |
| L - J | 2x4 | DRY | No.2 | SPF |
| J - H | 2x4 | DRY | No.2 | SPF |
| ALL WEBS EXCEPT | 2x3 | DRY | No.2 | SPF |

DRY: SEASONED LUMBER.

**PLATES (table is in inches)**

| JT | TYPE | PLATES | W | LEN | Y | X |
|---|---|---|---|---|---|---|
| B | TMV+p | MT20 | 2.0 | 4.0 | | |
| C | TMWW+t | MT20 | 4.0 | 5.0 | 1.75 | 1.50 |
| D | TTWW+p | MT20 | 4.0 | 4.0 | | |
| E | TMWW+t | MT20 | 4.0 | 5.0 | 1.75 | 1.50 |
| F | TMV+p | MT20 | 2.0 | 4.0 | | |
| H | BMVW1+t | MT20 | 4.0 | 5.0 | 1.50 | 1.75 |
| I | BMWW+t | MT20 | 3.0 | 4.0 | 1.75 | 1.50 |
| J | BS+t | MT20 | 3.0 | 4.0 | | |
| K | BMWW+t | MT20 | 3.0 | 4.0 | 1.75 | 1.50 |
| L | BMVW1+t | MT20 | 4.0 | 5.0 | 1.50 | 1.75 |

**DIMENSIONS, SUPPORTS AND LOADINGS SPECIFIED BY FABRICATOR TO BE VERIFIED BY BUILDING DESIGNER**

**BEARINGS**

| JT | FACTORED GROSS REACTION VERT | HORZ | MAXIMUM FACTORED GROSS REACTION DOWN | HORZ | UPLIFT | INPUT BRG | REQRD BRG |
|---|---|---|---|---|---|---|---|
| L | 1740 | 0 | 1740 | 0 | 0 | 5-8 | 1-14 |
| H | 1740 | 0 | 1740 | 0 | 0 | 5-8 | 1-14 |

**UNFACTORED REACTIONS**

| JT | 1ST LCASE COMBINED | MAX./MIN. COMPONENT REACTIONS SNOW | LIVE | PERM.LIVE | WIND | DEAD | SOIL |
|---|---|---|---|---|---|---|---|
| L | 1213 | 892 / 0 | 0 / 0 | 0 / 0 | 0 / 0 | 321 / 0 | 0 / 0 |
| H | 1213 | 892 / 0 | 0 / 0 | 0 / 0 | 0 / 0 | 321 / 0 | 0 / 0 |

BEARING MATERIAL TO BE SPF NO.2 OR BETTER AT JOINT(S) L, H

**BRACING**
TOP CHORD TO BE SHEATHED OR MAX. PURLIN SPACING = 4.20 FT.
MAX. UNBRACED BOTTOM CHORD LENGTH = 10.00 FT OR RIGID CEILING DIRECTLY APPLIED.

ALL PITCH BREAKS AND PERIMETER CORNER JOINTS MUST BE LATERALLY RESTRAINED.

1 LATERAL BRACE(S) AT 1/ 2 LENGTH OF C-L, E-H.

END VERTICAL(S) MUST BE SHEATHED OR HAVE BRACES AS INDICATED IN THE MAX. UNBRACED LENGTH COLUMN OF THE TABLE BELOW

**LOADING**
TOTAL LOAD CASES: (4)

CHORDS

| MEMB. FR-TO | MAX. FACTORED FORCE (LBS) | FACTORED VERT. LOAD (PLF) FROM | TO | LC1 | MAX CSI (LC) | MAX. UNBRAC LENGTH |
|---|---|---|---|---|---|---|
| A- B | 0 / 36 | -119.4 | -119.4 | 0.16 (1) | 10.00 | |
| B- C | 0 / 36 | -119.4 | -119.4 | 0.63 (1) | 10.00 | |
| C- D | -1939 / 0 | -119.4 | -119.4 | 0.56 (1) | 4.20 | |
| D- E | -1939 / 0 | -119.4 | -119.4 | 0.56 (1) | 4.20 | |
| E- F | 0 / 36 | -119.4 | -119.4 | 0.63 (1) | 10.00 | |
| F- G | 0 / 36 | -119.4 | -119.4 | 0.16 (1) | 10.00 | |
| L- B | -424 / 0 | 0.0 | 0.0 | 0.04 (1) | 7.81 | |
| H- F | -424 / 0 | 0.0 | 0.0 | 0.04 (1) | 7.81 | |
| L- K | 0 / 1936 | -18.2 | -18.2 | 0.44 (1) | 10.00 | |
| K- J | 0 / 1367 | -18.2 | -18.2 | 0.34 (1) | 10.00 | |
| J- I | 0 / 1367 | -18.2 | -18.2 | 0.34 (1) | 10.00 | |
| I- H | 0 / 1936 | -18.2 | -18.2 | 0.44 (1) | 10.00 | |

WEBS

| MEMB. FR-TO | MAX. FACTORED FORCE (LBS) | MAX CSI (LC) |
|---|---|---|
| D- I | 0 / 679 | 0.15 (1) |
| I- E | -497 / 0 | 0.15 (1) |
| K- D | 0 / 679 | 0.15 (1) |
| C- K | -497 / 0 | 0.15 (1) |
| L- C | -2308 / 0 | 0.72 (1) |
| E- H | -2308 / 0 | 0.72 (1) |

**DESIGN CRITERIA**

SPECIFIED LOADS:

| | | | | |
|---|---|---|---|---|
| TOP CH. | LL | = | 34.8 | PSF |
| | DL | = | 6.0 | PSF |
| BOT CH. | LL | = | 0.0 | PSF |
| | DL | = | 7.3 | PSF |
| TOTAL LOAD | | = | 48.1 | PSF |

**SPACING = 24.0 IN. C/C**

THIS TRUSS IS DESIGNED FOR RESIDENTIAL OR SMALL BUILDING REQUIREMENTS OF PART 9, NBCC 2015

THIS DESIGN COMPLIES WITH:
- PART 9 OF BCBC 2018 , NBC-2019AE
- PART 9 OF OBC 2012 (2019 AMENDMENT)
- CSA 086-14
- TPIC 2014

(55 % OF 48.1 P.S.F. G.S.L. PLUS 8.4 P.S.F. RAIN LOAD) EQUALS 34.8 P.S.F. SPECIFIED ROOF LIVE LOAD

ALLOWABLE DEFL.(LL)= L/360 (0.76")
CALCULATED VERT. DEFL.(LL) = L/ 999 (0.09")
ALLOWABLE DEFL.(TL)= L/360 (0.76")
CALCULATED VERT. DEFL.(TL) = L/ 999 (0.17")

CSI: TC=0.63/1.00 (B-C:1) , BC=0.44/1.00 (H-I:1) , WB=0.72/1.00 (C-L:1) , SSI=0.30/1.00 (B-C:1)

DOL LUMBER=1.00 NAIL=1.00 LS BEND=1.10 COMP=1.10 SHEAR=1.10 TENS= 1.10

COMPANION LIVE LOAD FACTOR = 1.00

TRUSS PLATE MANUFACTURER IS NOT RESPONSIBLE FOR QUALITY CONTROL IN THE TRUSS MANUFACTURING PLANT .

NAIL VALUES

| PLATE | GRIP(DRY) (PSI) MAX | MIN | SHEAR (PLI) MAX | MIN | SECTION (PLI) MAX | MIN |
|---|---|---|---|---|---|---|
| MT20 | 650 | 371 | 1747 | 788 | 1987 | 1873 |

PLATE PLACEMENT TOL. = 0.250 inches

PLATE ROTATION TOL. = 5.0 Deg.

JSI GRIP= 0.89 (E) (INPUT = 0.90 )
JSI METAL= 0.62 (E) (INPUT = 1.00 )

MODULUS ENGINEERING LTD.

LICENSED PROFESSIONAL ENGINEER
07/04/2023
D. A. SHERMAN
100123373
PROVINCE OF ONTARIO

**REVIEW FOR TRUSS COMPONENT ONLY**

*NOTE: ALTERING THIS DOCUMENT VOIDS THE ENGINEERS SEAL*

**WARNING - Verify design parameters and READ NOTES ON THIS AND INCLUDED IN MODULUS ENGINEERING LTD. NOTES ME-TCD01 (VER 06/2017) BEFORE USE.**
Design valid for use only with Mitek connectors. This design is based only upon parameters shown, and is for individual building components. Applicability of design parameters and proper incorporation of component is responsibility of building designer - not truss designer. Bracing shown is for lateral support of individual web members only. Additional temporary bracing to ensure stability during construction is the responsibility of the erector. Additional permanent bracing of the overall structure is the responsibility of the building designer. For general guidance regarding fabrication, quality control, storage, delivery, erection and bracing, consult
**TPIC Appendix G - Minimum quality Manufacturing Criteria** available from **www.tpic.ca** and **BCSI-CANADA (Building Component Safety Information) available** from TPI, 781 N. Lee Street, Suite 312, Alexandria, VA 22314 or www.sbcindustry.com

KOTT

| JOB NAME | TRUSS NAME | QUANTITY | PLY | JOB DESC. | DRWG NO. |
|---|---|---|---|---|---|
| T-RIVER 3-1 | T02 | 1 | 1 | ZADORRA ESTATES INC<br>TRUSS DESC. | ME23-5764-14 |

Kott, Uxbridge,ON

Version 8.630 S Mar 22 2023 MiTek Industries, Inc. Tue Jul 4 09:05:48 2023 Page 1

ID:NccLgzmhd_ldQzH3VGMNlRzOs0a-tfz3W8QNPrwDVDb6ZUJ2NRetNJDZXM8d7w1XMHz?VlH

CORPORATION OF THE CITY OF OTTAWA
TRUE COPY
OF PERMIT PLANS
Dec 04 2023
PER: C. Martin
CHIEF BUILDING OFFICIAL

MHP 23023

Scale = 1:40.2

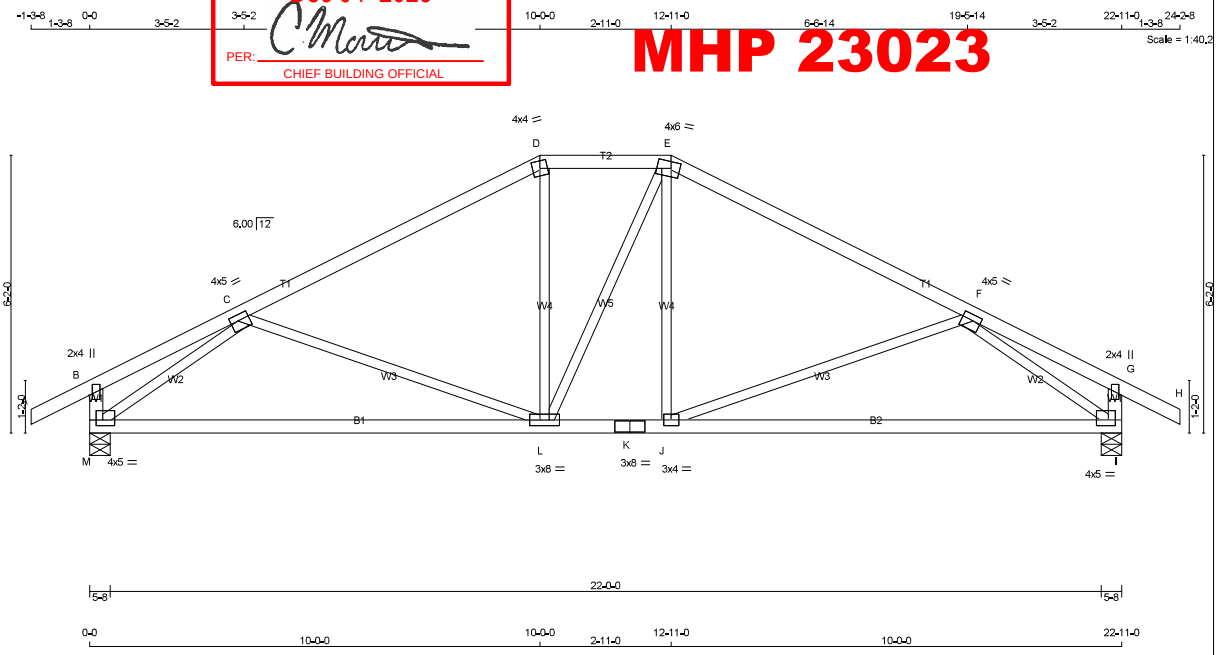





TOTAL WEIGHT = 92 lb

[M][F]

**LUMBER**

N. L. G. A. RULES

| CHORDS | SIZE | | LUMBER | DESCR. |
|---|---|---|---|---|
| A - D | 2x4 | DRY | No.2 | SPF |
| D - E | 2x4 | DRY | No.2 | SPF |
| E - H | 2x4 | DRY | No.2 | SPF |
| M - B | 2x4 | DRY | No.2 | SPF |
| I - G | 2x4 | DRY | No.2 | SPF |
| M - K | 2x4 | DRY | No.2 | SPF |
| K - I | 2x4 | DRY | No.2 | SPF |
| ALL WEBS EXCEPT | 2x3 | DRY | No.2 | SPF |

DRY: SEASONED LUMBER.

**PLATES (table is in inches)**

| JT | TYPE | PLATES | W | LEN | Y | X |
|---|---|---|---|---|---|---|
| B | TMV+p | MT20 | 2.0 | 4.0 | | |
| C | TMWW-t | MT20 | 4.0 | 5.0 | 1.50 | 2.00 |
| D | TTW-m | MT20 | 4.0 | 4.0 | | |
| E | TTWW-m | MT20 | 4.0 | 6.0 | 1.75 | 2.25 |
| F | TMWW-t | MT20 | 4.0 | 5.0 | 1.50 | 2.00 |
| G | TMV+p | MT20 | 2.0 | 4.0 | | |
| I | BMVW1-t | MT20 | 4.0 | 5.0 | 1.50 | 1.75 |
| J | BMWW-t | MT20 | 3.0 | 4.0 | | |
| K | BS-t | MT20 | 3.0 | 8.0 | | |
| L | BMWWW-t | MT20 | 3.0 | 8.0 | | |
| M | BMVW1-t | MT20 | 4.0 | 5.0 | 1.50 | 1.75 |

**DIMENSIONS, SUPPORTS AND LOADINGS SPECIFIED BY FABRICATOR TO BE VERIFIED BY BUILDING DESIGNER**

**BEARINGS**

| JT | FACTORED GROSS REACTION VERT | HORZ | MAXIMUM GROSS REACTION DOWN | HORZ | UPLIFT | INPUT BRG IN-SX | REQRD BRG IN-SX |
|---|---|---|---|---|---|---|---|
| M | 1740 | 0 | 1740 | 0 | 0 | 5-8 | 1-14 |
| I | 1740 | 0 | 1740 | 0 | 0 | 5-8 | 1-14 |

**UNFACTORED REACTIONS**

1ST LCASE — MAX./MIN. COMPONENT REACTIONS

| JT | COMBINED | SNOW | LIVE | PERM.LIVE | WIND | DEAD | SOIL |
|---|---|---|---|---|---|---|---|
| M | 1213 | 892 / 0 | 0 / 0 | 0 / 0 | 0 / 0 | 321 / 0 | 0 / 0 |
| I | 1213 | 892 / 0 | 0 / 0 | 0 / 0 | 0 / 0 | 321 / 0 | 0 / 0 |

BEARING MATERIAL TO BE SPF NO.2 OR BETTER AT JOINT(S) M, I

**BRACING**

TOP CHORD TO BE SHEATHED OR MAX. PURLIN SPACING = 4.10 FT.
MAX. UNBRACED BOTTOM CHORD LENGTH = 10.00 FT OR RIGID CEILING DIRECTLY APPLIED.

ALL PITCH BREAKS AND PERIMETER CORNER JOINTS MUST BE LATERALLY RESTRAINED.

**LOADING**

TOTAL LOAD CASES: (4)

CHORDS

| MEMB. FR-TO | MAX. FACTORED FORCE (LBS) | FACTORED VERT. LOAD (PLF) FROM | TO | LC1 | MAX CSI (LC) | MAX. UNBRAC LENGTH |
|---|---|---|---|---|---|---|
| A- B | 0 / 36 | -119.4 | -119.4 | 0.16 (1) | 10.00 | |
| B- C | 0 / 62 | -119.4 | -119.4 | 0.64 (1) | 10.00 | |
| C- D | -1752 / 0 | -119.4 | -119.4 | 0.70 (1) | 4.10 | |
| D- E | -1543 / 0 | -119.4 | -119.4 | 0.16 (1) | 5.16 | |
| E- F | -1752 / 0 | -119.4 | -119.4 | 0.70 (1) | 4.10 | |
| F- G | 0 / 62 | -119.4 | -119.4 | 0.64 (1) | 10.00 | |
| G- H | 0 / 36 | -119.4 | -119.4 | 0.16 (1) | 10.00 | |
| M- B | -223 / 0 | 0.0 | 0.0 | 0.02 (1) | 7.81 | |
| I- G | -223 / 0 | 0.0 | 0.0 | 0.02 (1) | 7.81 | |
| M- L | 0 / 1903 | -18.2 | -18.2 | 0.52 (1) | 10.00 | |
| L- K | 0 / 1543 | -18.2 | -18.2 | 0.50 (4) | 10.00 | |
| K- J | 0 / 1543 | -18.2 | -18.2 | 0.50 (4) | 10.00 | |
| J- I | 0 / 1903 | -18.2 | -18.2 | 0.53 (1) | 10.00 | |

WEBS

| MEMB. FR-TO | MAX. FACTORED FORCE (LBS) | MAX CSI (LC) |
|---|---|---|
| C- L | -390 / 0 | 0.42 (1) |
| L- D | 0 / 269 | 0.06 (1) |
| L- E | 0 / 1 | 0.00 (1) |
| J- E | 0 / 268 | 0.06 (1) |
| J- F | -390 / 0 | 0.42 (1) |
| M- C | -2386 / 0 | 0.70 (1) |
| F- I | -2386 / 0 | 0.70 (1) |

**DESIGN CRITERIA**

SPECIFIED LOADS:

| | | | | |
|---|---|---|---|---|
| TOP CH. | LL | = | 34.8 | PSF |
| | DL | = | 6.0 | PSF |
| BOT CH. | LL | = | 0.0 | PSF |
| | DL | = | 7.3 | PSF |
| TOTAL LOAD | | = | 48.1 | PSF |

**SPACING = 24.0 IN. C/C**

LOADING IN FLAT SECTION BASED ON A SLOPE OF 2.00/12 MINIMUM

THIS TRUSS IS DESIGNED FOR RESIDENTIAL OR SMALL BUILDING REQUIREMENTS OF PART 9, NBCC 2015

THIS DESIGN COMPLIES WITH:
- PART 9 OF BCBC 2018 , NBC-2019AE
- PART 9 OF OBC 2012 (2019 AMENDMENT)
- CSA 086-14
- TPIC 2014

(55 % OF 48.1 P.S.F. G.S.L. PLUS 8.4 P.S.F. RAIN LOAD) EQUALS 34.8 P.S.F. SPECIFIED ROOF LIVE LOAD

ALLOWABLE DEFL.(LL)= L/360 (0.76")
CALCULATED VERT. DEFL.(LL) = L/ 999 (0.07")
ALLOWABLE DEFL.(TL)= L/360 (0.76")
CALCULATED VERT. DEFL.(TL) = L/ 813 (0.34")

CSI: TC=0.70/1.00 (C-D:1) , BC=0.53/1.00 (I-J:1) , WB=0.70/1.00 (C-M:1) , SSI=0.33/1.00 (E-F:1)

DOL LUMBER=1.00 NAIL=1.00 LS BEND=1.10 COMP=1.10 SHEAR=1.10 TENS= 1.10

COMPANION LIVE LOAD FACTOR = 1.00

TRUSS PLATE MANUFACTURER IS NOT RESPONSIBLE FOR QUALITY CONTROL IN THE TRUSS MANUFACTURING PLANT .

NAIL VALUES

| PLATE | GRIP(DRY) (PSI) MAX | MIN | SHEAR (PLI) MAX | MIN | SECTION (PLI) MAX | MIN |
|---|---|---|---|---|---|---|
| MT20 | 650 | 371 | 1747 | 788 | 1987 | 1873 |

PLATE PLACEMENT TOL. = 0.250 inches

PLATE ROTATION TOL. = 5.0 Deg.

JSI GRIP= 0.88 (K) (INPUT = 0.90 )
JSI METAL= 0.89 (K) (INPUT = 1.00 )

MODULUS ENGINEERING LTD.

LICENSED PROFESSIONAL ENGINEER
07/04/2023
D. A. SHERMAN
100123373
PROVINCE OF ONTARIO

REVIEW FOR TRUSS COMPONENT ONLY

*NOTE: ALTERING THIS DOCUMENT VOIDS THE ENGINEERS SEAL*

**WARNING - Verify design parameters and READ NOTES ON THIS AND INCLUDED IN MODULUS ENGINEERING LTD. NOTES ME-TCD01 (VER 06/2017) BEFORE USE.**
Design valid for use only with Mitek connectors. This design is based only upon parameters shown, and is for individual building components. Applicability of design parameters and proper incorporation of component is responsibility of building designer - not truss designer. Bracing shown is for lateral support of individual web members only. Additional temporary bracing to ensure stability during construction is the responsibility of the erector. Additional permanent bracing of the overall structure is the responsibility of the building designer. For general guidance regarding fabrication, quality control, storage, delivery, erection and bracing, consult
**TPIC Appendix G - Minimum quality Manufacturing Criteria** available from **www.tpic.ca** and **BCSI-CANADA (Building Component Safety Information) available** from TPI, 781 N. Lee Street, Suite 312, Alexandria, VA 22314 or www.sbcindustry.com

KOTT

| JOB NAME | TRUSS NAME | QUANTITY | PLY | JOB DESC. | DRWG NO. |
|---|---|---|---|---|---|
| T-RIVER 3-1 | T03 | 1 | 1 | ZADORRA ESTATES INC<br>TRUSS DESC. | ME23-5764-15 |

Kott, Uxbridge,ON

Version 8.630 S Mar 22 2023 MiTek Industries, Inc. Tue Jul 4 09:05:49 2023 Page 1
ID:NccLgzmhd_ldQzH3VGMNlRzOs0a-LrXSjUR?A9247NAJ7BqHwfB8ijaDGIEmLan4ujz?VIG

CORPORATION OF THE CITY OF OTTAWA
TRUE COPY
OF PERMIT PLANS
Dec 04 2023
PER: C. Martin
CHIEF BUILDING OFFICIAL

MHP 23023

Scale = 1:40.2

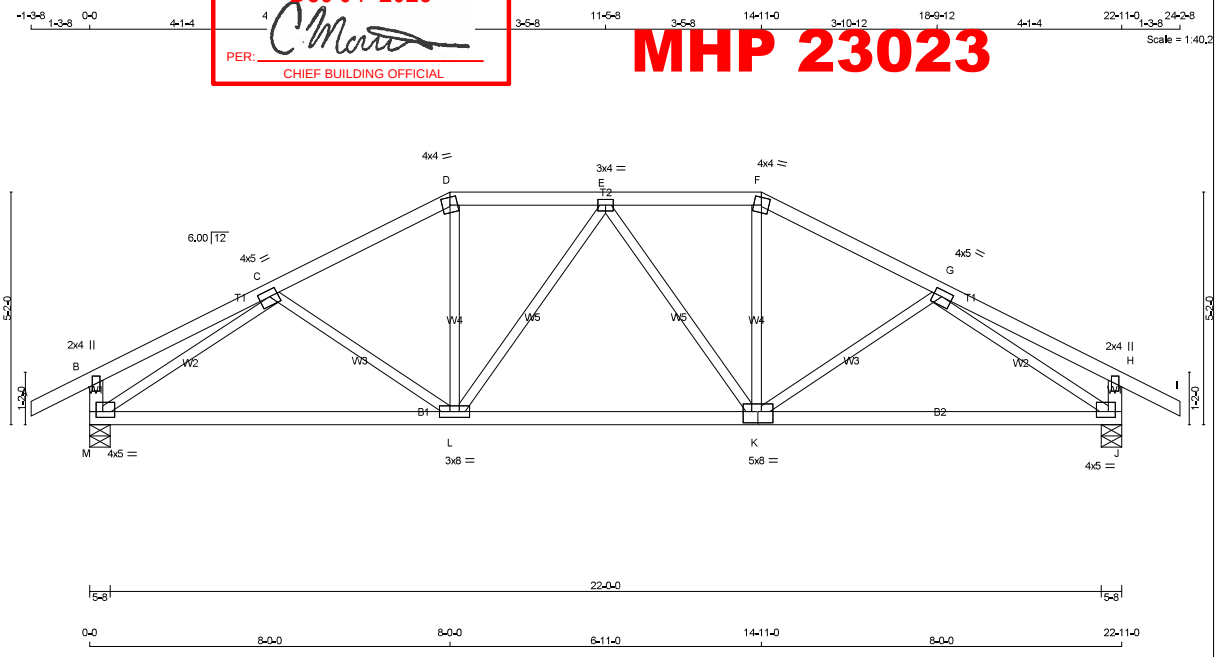


TOTAL WEIGHT = 91 lb

[M][F]

**LUMBER**
N. L. G. A. RULES

| CHORDS | SIZE | | LUMBER | DESCR. |
|---|---|---|---|---|
| A - D | 2x4 | DRY | No.2 | SPF |
| D - F | 2x4 | DRY | No.2 | SPF |
| F - I | 2x4 | DRY | No.2 | SPF |
| M - B | 2x4 | DRY | No.2 | SPF |
| J - H | 2x4 | DRY | No.2 | SPF |
| M - K | 2x4 | DRY | No.2 | SPF |
| K - J | 2x4 | DRY | No.2 | SPF |
| ALL WEBS EXCEPT | 2x3 | DRY | No.2 | SPF |

DRY: SEASONED LUMBER.

**PLATES (table is in inches)**

| JT | TYPE | PLATES | W | LEN | Y | X |
|---|---|---|---|---|---|---|
| B | TMV+p | MT20 | 2.0 | 4.0 | | |
| C | TMWW-t | MT20 | 4.0 | 5.0 | 1.75 | 2.25 |
| D | TTW-m | MT20 | 4.0 | 4.0 | | |
| E | TMWW-t | MT20 | 3.0 | 4.0 | | |
| F | TTW-m | MT20 | 4.0 | 4.0 | | |
| G | TMWW-t | MT20 | 4.0 | 5.0 | 1.75 | 2.25 |
| H | TMV+p | MT20 | 2.0 | 4.0 | | |
| J | BMVW1-t | MT20 | 4.0 | 5.0 | 1.50 | 1.75 |
| K | BSWWW-t | MT20 | 5.0 | 8.0 | 3.00 | 4.00 |
| L | BMWWW-t | MT20 | 3.0 | 8.0 | | |
| M | BMVW1-t | MT20 | 4.0 | 5.0 | 1.50 | 1.75 |

**DIMENSIONS, SUPPORTS AND LOADINGS SPECIFIED BY FABRICATOR TO BE VERIFIED BY BUILDING DESIGNER**

**BEARINGS**

| JT | FACTORED GROSS REACTION VERT | HORZ | MAXIMUM GROSS REACTION DOWN | HORZ | UPLIFT | INPUT BRG | REQRD BRG |
|---|---|---|---|---|---|---|---|
| M | 1740 | 0 | 1740 | 0 | 0 | 5-8 | 1-14 |
| J | 1740 | 0 | 1740 | 0 | 0 | 5-8 | 1-14 |

**UNFACTORED REACTIONS**

1ST LCASE — MAX./MIN. COMPONENT REACTIONS

| JT | COMBINED | SNOW | LIVE | PERM.LIVE | WIND | DEAD | SOIL |
|---|---|---|---|---|---|---|---|
| M | 1213 | 892 / 0 | 0 / 0 | 0 / 0 | 0 / 0 | 321 / 0 | 0 / 0 |
| J | 1213 | 892 / 0 | 0 / 0 | 0 / 0 | 0 / 0 | 321 / 0 | 0 / 0 |

BEARING MATERIAL TO BE SPF NO.2 OR BETTER AT JOINT(S) M, J

**BRACING**
TOP CHORD TO BE SHEATHED OR MAX. PURLIN SPACING = 4.60 FT.
MAX. UNBRACED BOTTOM CHORD LENGTH = 10.00 FT OR RIGID CEILING DIRECTLY APPLIED.

ALL PITCH BREAKS AND PERIMETER CORNER JOINTS MUST BE LATERALLY RESTRAINED.

**LOADING**
TOTAL LOAD CASES: (4)

CHORDS

| MEMB. FR-TO | MAX. FORCE (LBS) | FACTORED VERT. LOAD (PLF) FROM | TO | LC1 | MAX CSI (LC) | MAX. UNBRAC LENGTH |
|---|---|---|---|---|---|---|
| A- B | 0 / 36 | -119.4 | -119.4 | 0.16 (1) | 10.00 | |
| B- C | 0 / 23 | -119.4 | -119.4 | 0.28 (1) | 10.00 | |
| C- D | -1933 / 0 | -119.4 | -119.4 | 0.26 (1) | 4.60 | |
| D- E | -1718 / 0 | -119.4 | -119.4 | 0.20 (1) | 4.90 | |
| E- F | -1693 / 0 | -119.4 | -119.4 | 0.20 (1) | 4.93 | |
| F- G | -1909 / 0 | -119.4 | -119.4 | 0.26 (1) | 4.63 | |
| G- H | 0 / 23 | -119.4 | -119.4 | 0.28 (1) | 10.00 | |
| H- I | 0 / 36 | -119.4 | -119.4 | 0.16 (1) | 10.00 | |
| M- B | -351 / 0 | 0.0 | 0.0 | 0.04 (1) | 7.81 | |
| J- H | -351 / 0 | 0.0 | 0.0 | 0.04 (1) | 7.81 | |
| M- L | 0 / 1862 | -18.2 | -18.2 | 0.45 (1) | 10.00 | |
| L- K | 0 / 1877 | -18.2 | -18.2 | 0.46 (1) | 10.00 | |
| K- J | 0 / 1843 | -18.2 | -18.2 | 0.50 (1) | 10.00 | |

WEBS

| MEMB. FR-TO | MAX. FORCE (LBS) | MAX CSI (LC) |
|---|---|---|
| C- L | -189 / 19 | 0.08 (1) |
| L- D | 0 / 506 | 0.11 (1) |
| L- E | -281 / 0 | 0.17 (1) |
| E- K | -323 / 0 | 0.20 (1) |
| K- F | 0 / 495 | 0.11 (1) |
| K- G | -193 / 14 | 0.08 (1) |
| M- C | -2288 / 0 | 0.90 (1) |
| G- J | -2264 / 0 | 0.89 (1) |

**DESIGN CRITERIA**

SPECIFIED LOADS:

| | | | | |
|---|---|---|---|---|
| TOP CH. | LL | = | 34.8 | PSF |
| | DL | = | 6.0 | PSF |
| BOT CH. | LL | = | 0.0 | PSF |
| | DL | = | 7.3 | PSF |
| TOTAL LOAD | | = | 48.1 | PSF |

**SPACING = 24.0 IN. C/C**

LOADING IN FLAT SECTION BASED ON A SLOPE OF 2.00/12 MINIMUM

THIS TRUSS IS DESIGNED FOR RESIDENTIAL OR SMALL BUILDING REQUIREMENTS OF PART 9, NBCC 2015

THIS DESIGN COMPLIES WITH:
- PART 9 OF BCBC 2018 , NBC-2019AE
- PART 9 OF OBC 2012 (2019 AMENDMENT)
- CSA 086-14
- TPIC 2014

(55 % OF 48.1 P.S.F. G.S.L. PLUS 8.4 P.S.F. RAIN LOAD) EQUALS 34.8 P.S.F. SPECIFIED ROOF LIVE LOAD

ALLOWABLE DEFL.(LL)= L/360 (0.76")
CALCULATED VERT. DEFL.(LL) = L/ 999 (0.08")
ALLOWABLE DEFL.(TL)= L/360 (0.76")
CALCULATED VERT. DEFL.(TL) = L/ 999 (0.26")

CSI: TC=0.28/1.00 (G-H:1) , BC=0.50/1.00 (J-K:1) , WB=0.90/1.00 (C-M:1) , SSI=0.20/1.00 (G-H:1)

DOL LUMBER=1.00 NAIL=1.00 LS BEND=1.10 COMP=1.10 SHEAR=1.10 TENS= 1.10

COMPANION LIVE LOAD FACTOR = 1.00

TRUSS PLATE MANUFACTURER IS NOT RESPONSIBLE FOR QUALITY CONTROL IN THE TRUSS MANUFACTURING PLANT .

NAIL VALUES

| PLATE | GRIP(DRY) (PSI) MAX | MIN | SHEAR (PLI) MAX | MIN | SECTION (PLI) MAX | MIN |
|---|---|---|---|---|---|---|
| MT20 | 650 | 371 | 1747 | 788 | 1987 | 1873 |

PLATE PLACEMENT TOL. = 0.250 inches

PLATE ROTATION TOL. = 5.0 Deg.

JSI GRIP= 0.88 (K) (INPUT = 0.90 )
JSI METAL= 0.59 (C) (INPUT = 1.00 )

MODULUS ENGINEERING LTD.

LICENSED PROFESSIONAL ENGINEER
07/04/2023
D. A. SHERMAN
100123373
PROVINCE OF ONTARIO

REVIEW FOR TRUSS COMPONENT ONLY

*NOTE: ALTERING THIS DOCUMENT VOIDS THE ENGINEERS SEAL*

**WARNING - Verify design parameters and READ NOTES ON THIS AND INCLUDED IN MODULUS ENGINEERING LTD. NOTES ME-TCD01 (VER 06/2017) BEFORE USE.**
Design valid for use only with Mitek connectors. This design is based only upon parameters shown, and is for individual building components. Applicability of design parameters and proper incorporation of component is responsibility of building designer - not truss designer. Bracing shown is for lateral support of individual web members only. Additional temporary bracing to ensure stability during construction is the responsibility of the erector. Additional permanent bracing of the overall structure is the responsibility of the building designer. For general guidance regarding fabrication, quality control, storage, delivery, erection and bracing, consult
**TPIC Appendix G - Minimum quality Manufacturing Criteria** available from **www.tpic.ca** and **BCSI-CANADA (Building Component Safety Information) available** from TPI, 781 N. Lee Street, Suite 312, Alexandria, VA 22314 or www.sbcindustry.com

KOTT

| JOB NAME | TRUSS NAME | QUANTITY | PLY | JOB DESC. | DRWG NO. |
|---|---|---|---|---|---|
| T-RIVER 3-1 | T04 | 2 | 1 | ZADORRA ESTATES INC<br>TRUSS DESC. | ME23-5764-16 |

Kott, Uxbridge,ON

Version 8.630 S Mar 22 2023 MiTek Industries, Inc. Tue Jul 4 09:05:50 2023 Page 1

ID:NccLgzmhd_ldQzH3VGMNlRzOs0a-p25qwqSdxTAxkXIVhvLWSskFo7w9?ErwaEWdQAz?VIF

CORPORATION OF THE CITY OF OTTAWA
TRUE COPY
OF PERMIT PLANS
Dec 04 2023
PER: C. Martin
CHIEF BUILDING OFFICIAL

MHP 23023

Scale = 1:40.2

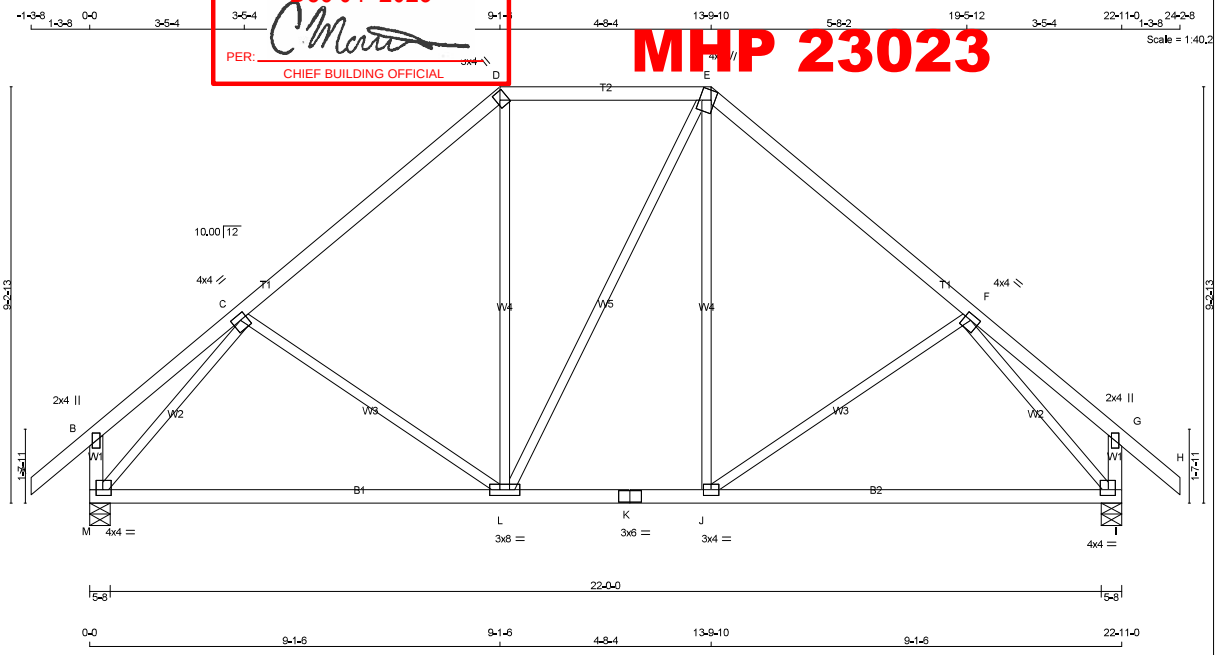


TOTAL WEIGHT = 2 X 107 = 214 lb

[M][F]

**LUMBER**

N. L. G. A. RULES

| CHORDS | SIZE | | LUMBER | DESCR. |
|---|---|---|---|---|
| A - D | 2x4 | DRY | No.2 | SPF |
| D - E | 2x4 | DRY | No.2 | SPF |
| E - H | 2x4 | DRY | No.2 | SPF |
| M - B | 2x4 | DRY | No.2 | SPF |
| I - G | 2x4 | DRY | No.2 | SPF |
| M - K | 2x4 | DRY | No.2 | SPF |
| K - I | 2x4 | DRY | No.2 | SPF |
| ALL WEBS EXCEPT | 2x3 | DRY | No.2 | SPF |

DRY: SEASONED LUMBER.

**PLATES (table is in inches)**

| JT | TYPE | PLATES | W | LEN | Y | X |
|---|---|---|---|---|---|---|
| B | TMV+p | MT20 | 2.0 | 4.0 | | |
| C | TMWW-t | MT20 | 4.0 | 4.0 | 1.50 | 1.75 |
| D | TTW+h | MT20 | 3.0 | 4.0 | 2.00 | 1.00 |
| E | TTWW+m | MT20 | 4.0 | 6.0 | Edge | 1.00 |
| F | TMWW-t | MT20 | 4.0 | 4.0 | 1.50 | 1.75 |
| G | TMV+p | MT20 | 2.0 | 4.0 | | |
| I | BMVW1-t | MT20 | 4.0 | 4.0 | 1.50 | 1.75 |
| J | BMWW-t | MT20 | 3.0 | 4.0 | | |
| K | BS-t | MT20 | 3.0 | 6.0 | | |
| L | BMWWW-t | MT20 | 3.0 | 8.0 | | |
| M | BMVW1-t | MT20 | 4.0 | 4.0 | 1.50 | 1.75 |

Edge - INDICATES REFERENCE CORNER OF PLATE TOUCHES EDGE OF CHORD.

**DIMENSIONS, SUPPORTS AND LOADINGS SPECIFIED BY FABRICATOR TO BE VERIFIED BY BUILDING DESIGNER**

**BEARINGS**

| JT | FACTORED GROSS REACTION VERT | HORZ | MAXIMUM GROSS REACTION DOWN | HORZ | UPLIFT | INPUT BRG IN-SX | REQRD BRG IN-SX |
|---|---|---|---|---|---|---|---|
| M | 1743 | 0 | 1743 | 0 | 0 | 5-8 | 1-14 |
| I | 1743 | 0 | 1743 | 0 | 0 | 5-8 | 1-14 |

**UNFACTORED REACTIONS**

MAX./MIN. COMPONENT REACTIONS

| JT | 1ST LCASE COMBINED | SNOW | LIVE | PERM.LIVE | WIND | DEAD | SOIL |
|---|---|---|---|---|---|---|---|
| M | 1216 | 894 / 0 | 0 / 0 | 0 / 0 | 0 / 0 | 321 / 0 | 0 / 0 |
| I | 1216 | 894 / 0 | 0 / 0 | 0 / 0 | 0 / 0 | 321 / 0 | 0 / 0 |

BEARING MATERIAL TO BE SPF NO.2 OR BETTER AT JOINT(S) M, I

**BRACING**

TOP CHORD TO BE SHEATHED OR MAX. PURLIN SPACING = 4.98 FT.
MAX. UNBRACED BOTTOM CHORD LENGTH = 10.00 FT OR RIGID CEILING DIRECTLY APPLIED.

ALL PITCH BREAKS AND PERIMETER CORNER JOINTS MUST BE LATERALLY RESTRAINED.

**LOADING**

TOTAL LOAD CASES: (4)

CHORDS

| MEMB. FR-TO | MAX. FACTORED FORCE (LBS) | FACTORED VERT. LOAD (PLF) FROM | TO | LC1 CSI (LC) | MAX UNBRAC LENGTH |
|---|---|---|---|---|---|
| A- B | 0 / 53 | -119.4 | -119.4 | 0.16 (1) | 10.00 |
| B- C | 0 / 70 | -119.4 | -119.4 | 0.50 (1) | 10.00 |
| C- D | -1320 / 0 | -119.4 | -119.4 | 0.52 (1) | 4.98 |
| D- E | -985 / 0 | -119.4 | -119.4 | 0.35 (1) | 5.83 |
| E- F | -1320 / 0 | -119.4 | -119.4 | 0.52 (1) | 4.98 |
| F- G | 0 / 70 | -119.4 | -119.4 | 0.50 (1) | 10.00 |
| G- H | 0 / 53 | -119.4 | -119.4 | 0.16 (1) | 10.00 |
| M- B | -255 / 0 | 0.0 | 0.0 | 0.03 (1) | 7.81 |
| I- G | -255 / 0 | 0.0 | 0.0 | 0.03 (1) | 7.81 |
| M- L | 0 / 1156 | -18.2 | -18.2 | 0.39 (4) | 10.00 |
| L- K | 0 / 984 | -18.2 | -18.2 | 0.36 (4) | 10.00 |
| K- J | 0 / 984 | -18.2 | -18.2 | 0.36 (4) | 10.00 |
| J- I | 0 / 1155 | -18.2 | -18.2 | 0.39 (4) | 10.00 |

WEBS

| MEMB. FR-TO | MAX. FACTORED FORCE (LBS) | MAX CSI (LC) |
|---|---|---|
| C- L | -211 / 5 | 0.21 (1) |
| L- D | 0 / 258 | 0.06 (1) |
| L- E | 0 / 0 | 0.00 (1) |
| J- E | 0 / 257 | 0.06 (1) |
| J- F | -212 / 5 | 0.21 (1) |
| M- C | -1829 / 0 | 0.82 (1) |
| F- I | -1828 / 0 | 0.82 (1) |

**DESIGN CRITERIA**

SPECIFIED LOADS:

| | | | | |
|---|---|---|---|---|
| TOP CH. | LL | = | 34.8 | PSF |
| | DL | = | 6.0 | PSF |
| BOT CH. | LL | = | 0.0 | PSF |
| | DL | = | 7.3 | PSF |
| TOTAL LOAD | | = | 48.1 | PSF |

**SPACING = 24.0 IN. C/C**

LOADING IN FLAT SECTION BASED ON A SLOPE OF 2.00/12 MINIMUM

THIS TRUSS IS DESIGNED FOR RESIDENTIAL OR SMALL BUILDING REQUIREMENTS OF PART 9, NBCC 2015

THIS DESIGN COMPLIES WITH:
- PART 9 OF BCBC 2018 , NBC-2019AE
- PART 9 OF OBC 2012 (2019 AMENDMENT)
- CSA 086-14
- TPIC 2014

(55 % OF 48.1 P.S.F. G.S.L. PLUS 8.4 P.S.F. RAIN LOAD) EQUALS 34.8 P.S.F. SPECIFIED ROOF LIVE LOAD

ALLOWABLE DEFL.(LL)= L/360 (0.76")
CALCULATED VERT. DEFL.(LL) = L/ 999 (0.04")
ALLOWABLE DEFL.(TL)= L/360 (0.76")
CALCULATED VERT. DEFL.(TL) = L/ 999 (0.24")

CSI: TC=0.52/1.00 (C-D:1) , BC=0.39/1.00 (I-J:4) , WB=0.82/1.00 (C-M:1) , SSI=0.24/1.00 (E-F:1)

DOL LUMBER=1.00 NAIL=1.00 LS BEND=1.10 COMP=1.10 SHEAR=1.10 TENS= 1.10

COMPANION LIVE LOAD FACTOR = 1.00

TRUSS PLATE MANUFACTURER IS NOT RESPONSIBLE FOR QUALITY CONTROL IN THE TRUSS MANUFACTURING PLANT .

NAIL VALUES

| PLATE | GRIP(DRY) (PSI) MAX | MIN | SHEAR (PLI) MAX | MIN | SECTION (PLI) MAX | MIN |
|---|---|---|---|---|---|---|
| MT20 | 650 | 371 | 1747 | 788 | 1987 | 1873 |

PLATE PLACEMENT TOL. = 0.250 inches

PLATE ROTATION TOL. = 5.0 Deg.

JSI GRIP= 0.89 (M) (INPUT = 0.90 )
JSI METAL= 0.59 (C) (INPUT = 1.00 )

MODULUS ENGINEERING LTD.

LICENSED PROFESSIONAL ENGINEER
07/04/2023
D. A. SHERMAN
100123373
PROVINCE OF ONTARIO

REVIEW FOR TRUSS COMPONENT ONLY

*NOTE: ALTERING THIS DOCUMENT VOIDS THE ENGINEERS SEAL*

**WARNING - Verify design parameters and READ NOTES ON THIS AND INCLUDED IN MODULUS ENGINEERING LTD. NOTES ME-TCD01 (VER 06/2017) BEFORE USE.**
Design valid for use only with Mitek connectors. This design is based only upon parameters shown, and is for individual building components. Applicability of design parameters and proper incorporation of component is responsibility of building designer - not truss designer. Bracing shown is for lateral support of individual web members only. Additional temporary bracing to ensure stability during construction is the responsibility of the erector. Additional permanent bracing of the overall structure is the responsibility of the building designer. For general guidance regarding fabrication, quality control, storage, delivery, erection and bracing, consult
**TPIC Appendix G - Minimum quality Manufacturing Criteria** available from **www.tpic.ca** and **BCSI-CANADA (Building Component Safety Information) available** from TPI, 781 N. Lee Street, Suite 312, Alexandria, VA 22314 or www.sbcindustry.com

KOTT

| JOB NAME | TRUSS NAME | QUANTITY | PLY | JOB DESC. | DRWG NO. |
|---|---|---|---|---|---|
| T-RIVER 3-1 | T05 | 2 | 1 | ZADORRA ESTATES INC | ME23-5764-17 |
| Kott, Uxbridge,ON | | | | TRUSS DESC. | |

Version 8.630 S Mar 22 2023 MiTek Industries, Inc. Tue Jul 4 09:05:52 2023 Page 1
ID:NccLgzmhd_IdQzH3VGMNIRzOs0a-IQDaLVTuT4Qf_qvtoKO_XHpfGwdYT4ID1Y?kV2z?VID

CORPORATION OF THE CITY OF OSHAWA
TRUE COPY
OF PERMIT PLANS
Dec 04 2023
PER: C Martin
CHIEF BUILDING OFFICIAL

MHP 23023

Scale = 1:40.2

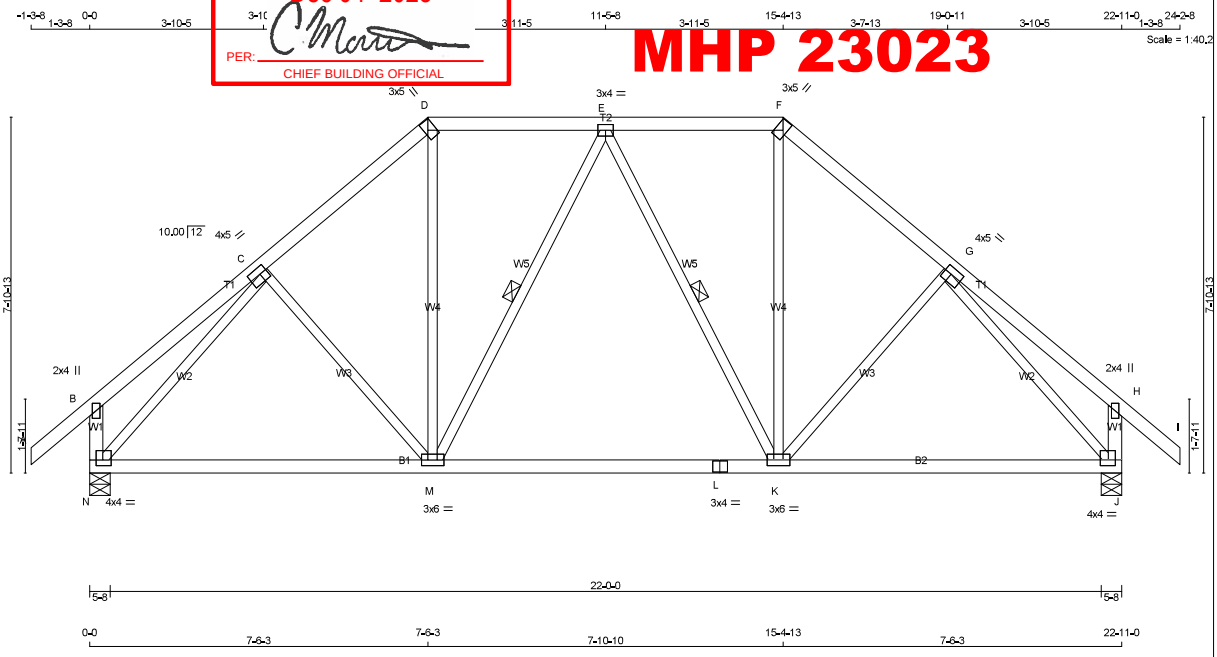


TOTAL WEIGHT = 2 X 108 = 215 lb
[M][F]

**LUMBER**
N. L. G. A. RULES

| CHORDS | SIZE | | LUMBER | DESCR. |
|---|---|---|---|---|
| A - D | 2x4 | DRY | No.2 | SPF |
| D - F | 2x4 | DRY | No.2 | SPF |
| F - I | 2x4 | DRY | No.2 | SPF |
| N - B | 2x4 | DRY | No.2 | SPF |
| J - H | 2x4 | DRY | No.2 | SPF |
| N - L | 2x4 | DRY | No.2 | SPF |
| L - J | 2x4 | DRY | No.2 | SPF |
| ALL WEBS EXCEPT | 2x3 | DRY | No.2 | SPF |

DRY: SEASONED LUMBER.

**PLATES (table is in inches)**

| JT | TYPE | PLATES | W | LEN | Y | X |
|---|---|---|---|---|---|---|
| B | TMV+p | MT20 | 2.0 | 4.0 | | |
| C | TMWW-t | MT20 | 4.0 | 5.0 | 1.75 | 2.00 |
| D | TTW+h | MT20 | 3.0 | 5.0 | 2.50 | 1.00 |
| E | TMWW-t | MT20 | 3.0 | 4.0 | | |
| F | TTW+h | MT20 | 3.0 | 5.0 | 2.50 | 1.00 |
| G | TMWW-t | MT20 | 4.0 | 5.0 | 1.75 | 2.00 |
| H | TMV+p | MT20 | 2.0 | 4.0 | | |
| J | BMVW1-t | MT20 | 4.0 | 4.0 | 1.50 | 1.75 |
| K | BMWWW-t | MT20 | 3.0 | 6.0 | | |
| L | BS-t | MT20 | 3.0 | 4.0 | | |
| M | BMWWW-t | MT20 | 3.0 | 6.0 | | |
| N | BMVW1-t | MT20 | 4.0 | 4.0 | 1.50 | 1.75 |

**DIMENSIONS, SUPPORTS AND LOADINGS SPECIFIED BY FABRICATOR TO BE VERIFIED BY BUILDING DESIGNER**

**BEARINGS**

| JT | FACTORED GROSS REACTION VERT | HORZ | MAXIMUM FACTORED GROSS REACTION DOWN | HORZ | UPLIFT | INPUT BRG | REQRD BRG |
|---|---|---|---|---|---|---|---|
| N | 1743 | 0 | 1743 | 0 | 0 | 5-8 | 1-14 |
| J | 1743 | 0 | 1743 | 0 | 0 | 5-8 | 1-14 |

**UNFACTORED REACTIONS**

1ST LCASE MAX./MIN. COMPONENT REACTIONS

| JT | COMBINED | SNOW | LIVE | PERM.LIVE | WIND | DEAD | SOIL |
|---|---|---|---|---|---|---|---|
| N | 1216 | 894 / 0 | 0 / 0 | 0 / 0 | 0 / 0 | 321 / 0 | 0 / 0 |
| J | 1216 | 894 / 0 | 0 / 0 | 0 / 0 | 0 / 0 | 321 / 0 | 0 / 0 |

BEARING MATERIAL TO BE SPF NO.2 OR BETTER AT JOINT(S) N, J

**BRACING**
TOP CHORD TO BE SHEATHED OR MAX. PURLIN SPACING = 5.25 FT.
MAX. UNBRACED BOTTOM CHORD LENGTH = 10.00 FT OR RIGID CEILING DIRECTLY APPLIED.

ALL PITCH BREAKS AND PERIMETER CORNER JOINTS MUST BE LATERALLY RESTRAINED.

1 LATERAL BRACE(S) AT 1/ 2 LENGTH OF E-M, E-K.

END VERTICAL(S) MUST BE SHEATHED OR HAVE BRACES AS INDICATED IN THE MAX. UNBRACED LENGTH COLUMN OF THE TABLE BELOW

**LOADING**
TOTAL LOAD CASES: (4)

CHORDS

| MEMB. FR-TO | MAX. FACTORED FORCE (LBS) | FACTORED VERT. LOAD (PLF) FROM | TO | MAX CSI (LC) | MAX. UNBRAC LENGTH |
|---|---|---|---|---|---|
| A- B | 0 / 53 | -119.4 | -119.4 | 0.16 (1) | 10.00 |
| B- C | 0 / 33 | -119.4 | -119.4 | 0.26 (1) | 10.00 |
| C- D | -1417 / 0 | -119.4 | -119.4 | 0.23 (1) | 5.25 |
| D- E | -1068 / 0 | -119.4 | -119.4 | 0.24 (1) | 5.82 |
| E- F | -1068 / 0 | -119.4 | -119.4 | 0.24 (1) | 5.82 |
| F- G | -1417 / 0 | -119.4 | -119.4 | 0.23 (1) | 5.25 |
| G- H | 0 / 33 | -119.4 | -119.4 | 0.26 (1) | 10.00 |
| H- I | 0 / 53 | -119.4 | -119.4 | 0.16 (1) | 10.00 |
| N- B | -337 / 0 | 0.0 | 0.0 | 0.04 (1) | 7.81 |
| J- H | -337 / 0 | 0.0 | 0.0 | 0.04 (1) | 7.81 |
| N- M | 0 / 1141 | -18.2 | -18.2 | 0.32 (1) | 10.00 |
| M- L | 0 / 1211 | -18.2 | -18.2 | 0.33 (1) | 10.00 |
| L- K | 0 / 1211 | -18.2 | -18.2 | 0.33 (1) | 10.00 |
| K- J | 0 / 1141 | -18.2 | -18.2 | 0.32 (1) | 10.00 |

WEBS

| MEMB. FR-TO | MAX. FACTORED FORCE (LBS) | MAX CSI (LC) |
|---|---|---|
| C- M | -121 / 17 | 0.07 (1) |
| M- D | 0 / 527 | 0.12 (1) |
| M- E | -318 / 0 | 0.16 (1) |
| E- K | -318 / 0 | 0.16 (1) |
| K- F | 0 / 527 | 0.12 (1) |
| K- G | -121 / 17 | 0.07 (1) |
| N- C | -1767 / 0 | 0.98 (1) |
| G- J | -1767 / 0 | 0.98 (1) |

**DESIGN CRITERIA**

SPECIFIED LOADS:

| | | | | |
|---|---|---|---|---|
| TOP CH. | LL | = | 34.8 | PSF |
| | DL | = | 6.0 | PSF |
| BOT CH. | LL | = | 0.0 | PSF |
| | DL | = | 7.3 | PSF |
| TOTAL LOAD | | = | 48.1 | PSF |

**SPACING = 24.0 IN. C/C**

LOADING IN FLAT SECTION BASED ON A SLOPE OF 2.00/12 MINIMUM

THIS TRUSS IS DESIGNED FOR RESIDENTIAL OR SMALL BUILDING REQUIREMENTS OF PART 9, NBCC 2015

THIS DESIGN COMPLIES WITH:
- PART 9 OF BCBC 2018 , NBC-2019AE
- PART 9 OF OBC 2012 (2019 AMENDMENT)
- CSA 086-14
- TPIC 2014

(55 % OF 48.1 P.S.F. G.S.L. PLUS 8.4 P.S.F. RAIN LOAD) EQUALS 34.8 P.S.F. SPECIFIED ROOF LIVE LOAD

ALLOWABLE DEFL.(LL)= L/360 (0.76")
CALCULATED VERT. DEFL.(LL) = L/ 999 (0.05")
ALLOWABLE DEFL.(TL)= L/360 (0.76")
CALCULATED VERT. DEFL.(TL) = L/ 999 (0.12")

CSI: TC=0.26/1.00 (G-H:1) , BC=0.33/1.00 (K-M:1) , WB=0.98/1.00 (G-J:1) , SSI=0.23/1.00 (D-E:1)

DOL LUMBER=1.00 NAIL=1.00 LS BEND=1.10 COMP=1.10 SHEAR=1.10 TENS= 1.10

COMPANION LIVE LOAD FACTOR = 1.00

TRUSS PLATE MANUFACTURER IS NOT RESPONSIBLE FOR QUALITY CONTROL IN THE TRUSS MANUFACTURING PLANT .

NAIL VALUES

| PLATE | GRIP(DRY) (PSI) MAX | MIN | SHEAR (PLI) MAX | MIN | SECTION (PLI) MAX | MIN |
|---|---|---|---|---|---|---|
| MT20 | 650 | 371 | 1747 | 788 | 1987 | 1873 |

PLATE PLACEMENT TOL. = 0.250 inches

PLATE ROTATION TOL. = 5.0 Deg.

JSI GRIP= 0.90 (C) (INPUT = 0.90 )
JSI METAL= 0.47 (C) (INPUT = 1.00 )

MODULUS ENGINEERING LTD.

LICENSED PROFESSIONAL ENGINEER
07/04/2023
D. A. SHERMAN
100123373
PROVINCE OF ONTARIO

REVIEW FOR TRUSS COMPONENT ONLY

*NOTE: ALTERING THIS DOCUMENT VOIDS THE ENGINEERS SEAL*

**WARNING - Verify design parameters and READ NOTES ON THIS AND INCLUDED IN MODULUS ENGINEERING LTD. NOTES ME-TCD01 (VER 06/2017) BEFORE USE.**
Design valid for use only with Mitek connectors. This design is based only upon parameters shown, and is for individual building components. Applicability of design parameters and proper incorporation of component is responsibility of building designer - not truss designer. Bracing shown is for lateral support of individual web members only. Additional temporary bracing to ensure stability during construction is the responsibility of the erector. Additional permanent bracing of the overall structure is the responsibility of the building designer. For general guidance regarding fabrication, quality control, storage, delivery, erection and bracing, consult
**TPIC Appendix G - Minimum quality Manufacturing Criteria** available from **www.tpic.ca** and **BCSI-CANADA (Building Component Safety Information) available** from TPI, 781 N. Lee Street, Suite 312, Alexandria, VA 22314 or www.sbcindustry.com

KOTT

| JOB NAME | TRUSS NAME | QUANTITY | PLY | JOB DESC. | DRWG NO. |
|---|---|---|---|---|---|
| T-RIVER 3-1 | T06 | 2 | 1 | ZADORRA ESTATES INC | ME23-5764-18 |
| Kott, Uxbridge,ON | | | | TRUSS DESC. | |

Version 8.630 S Mar 22 2023 MiTek Industries, Inc. Tue Jul 4 09:05:53 2023 Page 1
ID:NccLgzmhd_IdQzH3VGMNlRzOs0a-DdnyZrUWDOYWb_T4M1vD4VMnKK_ICePMGCIl1Vz?VIC


CORPORATION OF THE CITY OF OTTAWA
TRUE COPY
OF PERMIT PLANS
Dec 04 2023
PER:
CHIEF BUILDING OFFICIAL
MHP 23023


Scale = 1:40.2

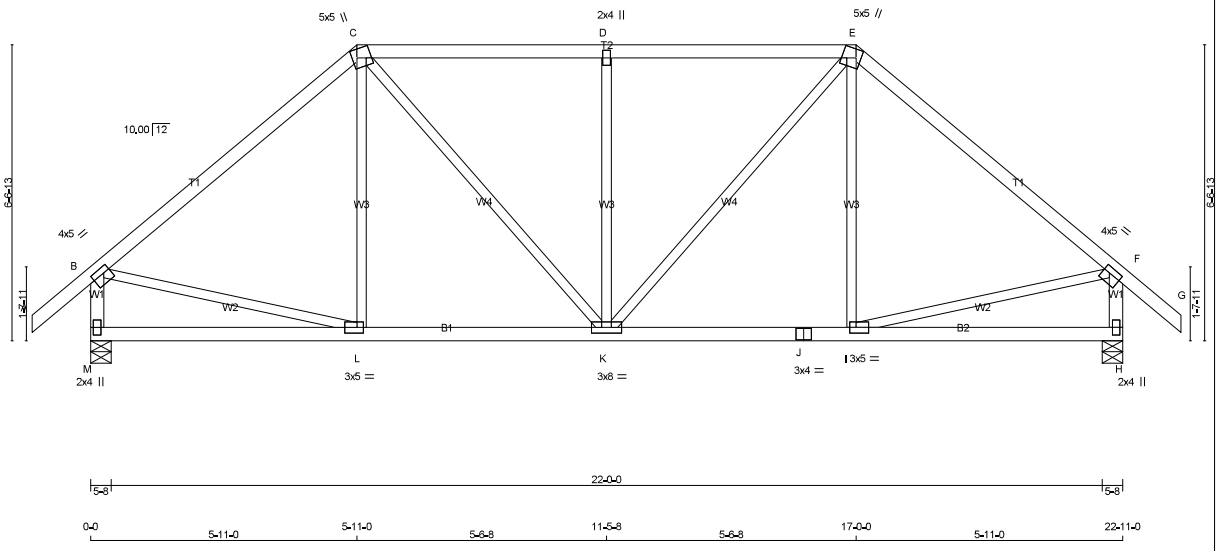


TOTAL WEIGHT = 2 X 100 = 201 lb
[M][F]

**LUMBER**
N. L. G. A. RULES

| CHORDS | SIZE | | LUMBER | DESCR. |
|---|---|---|---|---|
| A - C | 2x4 | DRY | 2100F 1.8E | SPF |
| C - E | 2x4 | DRY | No.2 | SPF |
| E - G | 2x4 | DRY | 2100F 1.8E | SPF |
| M - B | 2x4 | DRY | No.2 | SPF |
| H - F | 2x4 | DRY | No.2 | SPF |
| M - J | 2x4 | DRY | No.2 | SPF |
| J - H | 2x4 | DRY | No.2 | SPF |
| ALL WEBS EXCEPT | 2x3 | DRY | No.2 | SPF |

DRY: SEASONED LUMBER.

**PLATES (table is in inches)**

| JT | TYPE | PLATES | W | LEN | Y | X |
|---|---|---|---|---|---|---|
| B | TMVW-t | MT20 | 4.0 | 5.0 | 1.50 | 1.75 |
| C | TTWW+m | MT20 | 5.0 | 5.0 | 2.25 | 1.25 |
| D | TMW+w | MT20 | 2.0 | 4.0 | | |
| E | TTWW+m | MT20 | 5.0 | 5.0 | 2.25 | 1.25 |
| F | TMVW-t | MT20 | 4.0 | 5.0 | 1.50 | 1.75 |
| H | BMV1+p | MT20 | 2.0 | 4.0 | | |
| I | BMWW-t | MT20 | 3.0 | 5.0 | 1.50 | 1.75 |
| J | BS-t | MT20 | 3.0 | 4.0 | | |
| K | BMWWW-t | MT20 | 3.0 | 8.0 | | |
| L | BMWW-t | MT20 | 3.0 | 5.0 | 1.50 | 1.75 |
| M | BMV1+p | MT20 | 2.0 | 4.0 | | |

**DIMENSIONS, SUPPORTS AND LOADINGS SPECIFIED BY FABRICATOR TO BE VERIFIED BY BUILDING DESIGNER**

**BEARINGS**

| JT | FACTORED GROSS REACTION VERT | HORZ | MAXIMUM FACTORED GROSS REACTION DOWN | HORZ | UPLIFT | INPUT BRG | REQRD BRG |
|---|---|---|---|---|---|---|---|
| M | 1743 | 0 | 1743 | 0 | 0 | IN-SX | IN-SX |
| H | 1743 | 0 | 1743 | 0 | 0 | 5-8 | 2-3 |
| | | | | | | 5-8 | 2-3 |

**UNFACTORED REACTIONS**

| JT | 1ST LCASE COMBINED | MAX./MIN. COMPONENT REACTIONS SNOW | LIVE | PERM.LIVE | WIND | DEAD | SOIL |
|---|---|---|---|---|---|---|---|
| M | 1216 | 894 / 0 | 0 / 0 | 0 / 0 | 0 / 0 | 321 / 0 | 0 / 0 |
| H | 1216 | 894 / 0 | 0 / 0 | 0 / 0 | 0 / 0 | 321 / 0 | 0 / 0 |

BEARING MATERIAL TO BE SPF NO.2 OR BETTER AT JOINT(S) M, H

**BRACING**
TOP CHORD TO BE SHEATHED OR MAX. PURLIN SPACING = 4.71 FT.
MAX. UNBRACED BOTTOM CHORD LENGTH = 10.00 FT OR RIGID CEILING DIRECTLY APPLIED.

ALL PITCH BREAKS AND PERIMETER CORNER JOINTS MUST BE LATERALLY RESTRAINED.

**LOADING**
TOTAL LOAD CASES: (4)

CHORDS

| MEMB. FR-TO | MAX. FACTORED FORCE (LBS) | FACTORED VERT. LOAD (PLF) FROM | TO | LC1 MAX CSI (LC) | MAX. UNBRAC LENGTH |
|---|---|---|---|---|---|
| A- B | 0 / 53 | -119.4 | -119.4 | 0.11 (1) | 10.00 |
| B- C | -1461 / 0 | -119.4 | -119.4 | 0.37 (1) | 5.94 |
| C- D | -1514 / 0 | -119.4 | -119.4 | 0.50 (1) | 4.71 |
| D- E | -1514 / 0 | -119.4 | -119.4 | 0.50 (1) | 4.71 |
| E- F | -1461 / 0 | -119.4 | -119.4 | 0.37 (1) | 5.94 |
| F- G | 0 / 53 | -119.4 | -119.4 | 0.11 (1) | 10.00 |
| M- B | -1699 / 0 | 0.0 | 0.0 | 0.18 (1) | 6.38 |
| H- F | -1699 / 0 | 0.0 | 0.0 | 0.18 (1) | 6.38 |
| M- L | 0 / 0 | -18.2 | -18.2 | 0.15 (4) | 10.00 |
| L- K | 0 / 1118 | -18.2 | -18.2 | 0.27 (1) | 10.00 |
| K- J | 0 / 1118 | -18.2 | -18.2 | 0.27 (1) | 10.00 |
| J- I | 0 / 1118 | -18.2 | -18.2 | 0.27 (1) | 10.00 |
| I- H | 0 / 0 | -18.2 | -18.2 | 0.15 (4) | 10.00 |

WEBS

| MEMB. FR-TO | MAX. FACTORED FORCE (LBS) | MAX CSI (LC) |
|---|---|---|
| L- C | -119 / 69 | 0.08 (1) |
| C- K | 0 / 597 | 0.13 (1) |
| K- D | -810 / 0 | 0.57 (1) |
| K- E | 0 / 597 | 0.13 (1) |
| I- E | -119 / 69 | 0.08 (1) |
| B- L | 0 / 1146 | 0.26 (1) |
| I- F | 0 / 1146 | 0.26 (1) |

**DESIGN CRITERIA**

SPECIFIED LOADS:

| | | | | |
|---|---|---|---|---|
| TOP CH. | LL | = | 34.8 | PSF |
| | DL | = | 6.0 | PSF |
| BOT CH. | LL | = | 0.0 | PSF |
| | DL | = | 7.3 | PSF |
| TOTAL LOAD | | = | 48.1 | PSF |

**SPACING = 24.0 IN. C/C**

LOADING IN FLAT SECTION BASED ON A SLOPE OF 2.00/12 MINIMUM

THIS TRUSS IS DESIGNED FOR RESIDENTIAL OR SMALL BUILDING REQUIREMENTS OF PART 9, NBCC 2015

THIS DESIGN COMPLIES WITH:
- PART 9 OF BCBC 2018 , NBC-2019AE
- PART 9 OF OBC 2012 (2019 AMENDMENT)
- CSA 086-14
- TPIC 2014

(55 % OF 48.1 P.S.F. G.S.L. PLUS 8.4 P.S.F. RAIN LOAD) EQUALS 34.8 P.S.F. SPECIFIED ROOF LIVE LOAD

ALLOWABLE DEFL.(LL)= L/360 (0.76")
CALCULATED VERT. DEFL.(LL) = L/ 999 (0.04")
ALLOWABLE DEFL.(TL)= L/360 (0.76")
CALCULATED VERT. DEFL.(TL) = L/ 999 (0.08")

CSI: TC=0.50/1.00 (C-D:1) , BC=0.27/1.00 (K-L:1) , WB=0.57/1.00 (D-K:1) , SSI=0.32/1.00 (D-E:1)

DOL LUMBER=1.00 NAIL=1.00 LS BEND=1.10 COMP=1.10 SHEAR=1.10 TENS= 1.10

COMPANION LIVE LOAD FACTOR = 1.00

TRUSS PLATE MANUFACTURER IS NOT RESPONSIBLE FOR QUALITY CONTROL IN THE TRUSS MANUFACTURING PLANT .

NAIL VALUES

| PLATE | GRIP(DRY) (PSI) MAX | MIN | SHEAR (PLI) MAX | MIN | SECTION (PLI) MAX | MIN |
|---|---|---|---|---|---|---|
| MT20 | 650 | 371 | 1747 | 788 | 1987 | 1873 |

PLATE PLACEMENT TOL. = 0.250 inches

PLATE ROTATION TOL. = 5.0 Deg.

JSI GRIP= 0.87 (E) (INPUT = 0.90 )
JSI METAL= 0.51 (B) (INPUT = 1.00 )

MODULUS ENGINEERING LTD.

LICENSED PROFESSIONAL ENGINEER
07/04/2023
D. A. SHERMAN
100123373
PROVINCE OF ONTARIO

REVIEW FOR TRUSS COMPONENT ONLY

*NOTE: ALTERING THIS DOCUMENT VOIDS THE ENGINEERS SEAL*


**WARNING - Verify design parameters and READ NOTES ON THIS AND INCLUDED IN MODULUS ENGINEERING LTD. NOTES ME-TCD01 (VER 06/2017) BEFORE USE.**
Design valid for use only with Mitek connectors. This design is based only upon parameters shown, and is for individual building components. Applicability of design parameters and proper incorporation of component is responsibility of building designer - not truss designer. Bracing shown is for lateral support of individual web members only. Additional temporary bracing to ensure stability during construction is the responsibility of the erector. Additional permanent bracing of the overall structure is the responsibility of the building designer. For general guidance regarding fabrication, quality control, storage, delivery, erection and bracing, consult
**TPIC Appendix G - Minimum quality Manufacturing Criteria** available from **www.tpic.ca** and **BCSI-CANADA (Building Component Safety Information) available** from TPI, 781 N. Lee Street, Suite 312, Alexandria, VA 22314 or www.sbcindustry.com


KOTT

| JOB NAME | TRUSS NAME | QUANTITY | PLY | JOB DESC. | DRWG NO. |
|---|---|---|---|---|---|
| T-RIVER 3-1 | T07 | 1 | 1 | ZADORRA ESTATES INC | ME23-5764-19 |
| Kott, Uxbridge,ON | | | | TRUSS DESC. | |

Version 8.630 S Mar 22 2023 MiTek Industries, Inc. Tue Jul 4 09:05:54 2023 Page 1
ID:NccLgzmhd_ldQzH3VGMNlRzOs0a-ipLLmBV8_hgMD82GwlQSciutZkKxx7xVVsUrZxz?VIB

CORPORATION OF THE CITY OF OTTAWA
TRUE COPY
OF PERMIT PLANS
Dec 04 2023
PER: C Martin
CHIEF BUILDING OFFICIAL

**MHP 23023**

Scale = 1:40.2

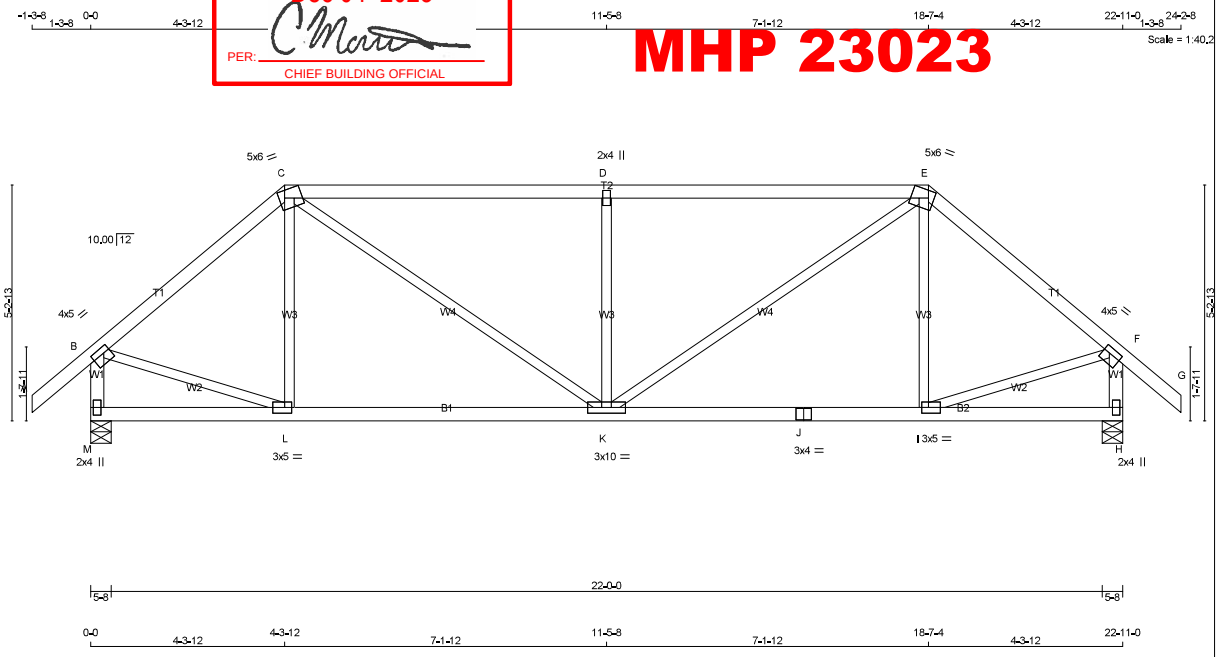


TOTAL WEIGHT = 94 lb [M]

**LUMBER**
N. L. G. A. RULES

| CHORDS | SIZE | | LUMBER | DESCR. |
|---|---|---|---|---|
| A - C | 2x4 | DRY | No.2 | SPF |
| C - E | 2x4 | DRY | 2100F 1.8E | SPF |
| E - G | 2x4 | DRY | No.2 | SPF |
| M - B | 2x4 | DRY | No.2 | SPF |
| H - F | 2x4 | DRY | No.2 | SPF |
| M - J | 2x4 | DRY | No.2 | SPF |
| J - H | 2x4 | DRY | No.2 | SPF |
| ALL WEBS EXCEPT | 2x3 | DRY | No.2 | SPF |

DRY: SEASONED LUMBER.

**PLATES (table is in inches)**

| JT | TYPE | PLATES | W | LEN | Y | X |
|---|---|---|---|---|---|---|
| B | TMVW-t | MT20 | 4.0 | 5.0 | 1.50 | 1.75 |
| C | TTWW-m | MT20 | 5.0 | 6.0 | 2.00 | 1.50 |
| D | TMW+w | MT20 | 2.0 | 4.0 | | |
| E | TTWW-m | MT20 | 5.0 | 6.0 | 2.00 | 1.50 |
| F | TMVW-t | MT20 | 4.0 | 5.0 | 1.50 | 1.75 |
| H | BMV1+p | MT20 | 2.0 | 4.0 | | |
| I | BMWW-t | MT20 | 3.0 | 5.0 | 1.50 | 1.75 |
| J | BS-t | MT20 | 3.0 | 4.0 | | |
| K | BMWWW-t | MT20 | 3.0 | 10.0 | | |
| L | BMWW-t | MT20 | 3.0 | 5.0 | 1.50 | 1.75 |
| M | BMV1+p | MT20 | 2.0 | 4.0 | | |

**DIMENSIONS, SUPPORTS AND LOADINGS SPECIFIED BY FABRICATOR TO BE VERIFIED BY BUILDING DESIGNER**

**BEARINGS**

| JT | FACTORED GROSS REACTION VERT | HORZ | MAXIMUM GROSS REACTION DOWN | HORZ | UPLIFT | INPUT BRG IN-SX | REQRD BRG IN-SX |
|---|---|---|---|---|---|---|---|
| M | 1743 | 0 | 1743 | 0 | 0 | 5-8 | 2-3 |
| H | 1743 | 0 | 1743 | 0 | 0 | 5-8 | 2-3 |

**UNFACTORED REACTIONS**

1ST LCASE MAX./MIN. COMPONENT REACTIONS

| JT | COMBINED | SNOW | LIVE | PERM.LIVE | WIND | DEAD | SOIL |
|---|---|---|---|---|---|---|---|
| M | 1216 | 894 / 0 | 0 / 0 | 0 / 0 | 0 / 0 | 321 / 0 | 0 / 0 |
| H | 1216 | 894 / 0 | 0 / 0 | 0 / 0 | 0 / 0 | 321 / 0 | 0 / 0 |

BEARING MATERIAL TO BE SPF NO.2 OR BETTER AT JOINT(S) M, H

**BRACING**
TOP CHORD TO BE SHEATHED OR MAX. PURLIN SPACING = 4.49 FT.
MAX. UNBRACED BOTTOM CHORD LENGTH = 10.00 FT OR RIGID CEILING DIRECTLY APPLIED.

ALL PITCH BREAKS AND PERIMETER CORNER JOINTS MUST BE LATERALLY RESTRAINED.

**LOADING**
TOTAL LOAD CASES: (4)

CHORDS

| MEMB. FR-TO | MAX. FACTORED FORCE (LBS) | FACTORED VERT. LOAD (PLF) FROM | TO | LC1 | MAX CSI (LC) | MAX. UNBRAC LENGTH |
|---|---|---|---|---|---|---|
| A- B | 0 / 53 | -119.4 | -119.4 | 0.16 (1) | 10.00 | |
| B- C | -1490 / 0 | -119.4 | -119.4 | 0.45 (1) | 4.82 | |
| C- D | -1991 / 0 | -119.4 | -119.4 | 0.79 (1) | 4.49 | |
| D- E | -1991 / 0 | -119.4 | -119.4 | 0.79 (1) | 4.49 | |
| E- F | -1490 / 0 | -119.4 | -119.4 | 0.45 (1) | 4.82 | |
| F- G | 0 / 53 | -119.4 | -119.4 | 0.16 (1) | 10.00 | |
| M- B | -1717 / 0 | 0.0 | 0.0 | 0.18 (1) | 6.35 | |
| H- F | -1717 / 0 | 0.0 | 0.0 | 0.18 (1) | 6.35 | |
| M- L | 0 / 0 | -18.2 | -18.2 | 0.14 (4) | 10.00 | |
| L- K | 0 / 1137 | -18.2 | -18.2 | 0.27 (1) | 10.00 | |
| K- J | 0 / 1137 | -18.2 | -18.2 | 0.27 (1) | 10.00 | |
| J- I | 0 / 1137 | -18.2 | -18.2 | 0.27 (1) | 10.00 | |
| I- H | 0 / 0 | -18.2 | -18.2 | 0.14 (4) | 10.00 | |

WEBS

| MEMB. FR-TO | MAX. FACTORED FORCE (LBS) | MAX CSI (LC) |
|---|---|---|
| L- C | -218 / 36 | 0.09 (1) |
| C- K | 0 / 1037 | 0.23 (1) |
| K- D | -1047 / 0 | 0.43 (1) |
| K- E | 0 / 1037 | 0.23 (1) |
| I- E | -218 / 36 | 0.09 (1) |
| B- L | 0 / 1190 | 0.27 (1) |
| I- F | 0 / 1190 | 0.27 (1) |

**DESIGN CRITERIA**

SPECIFIED LOADS:

| | | | | |
|---|---|---|---|---|
| TOP CH. | LL | = | 34.8 | PSF |
| | DL | = | 6.0 | PSF |
| BOT CH. | LL | = | 0.0 | PSF |
| | DL | = | 7.3 | PSF |
| TOTAL LOAD | | = | 48.1 | PSF |

**SPACING = 24.0 IN. C/C**

LOADING IN FLAT SECTION BASED ON A SLOPE OF 2.00/12 MINIMUM

THIS TRUSS IS DESIGNED FOR RESIDENTIAL OR SMALL BUILDING REQUIREMENTS OF PART 9, NBCC 2015

THIS DESIGN COMPLIES WITH:
- PART 9 OF BCBC 2018 , NBC-2019AE
- PART 9 OF OBC 2012 (2019 AMENDMENT)
- CSA 086-14
- TPIC 2014

(55 % OF 48.1 P.S.F. G.S.L. PLUS 8.4 P.S.F. RAIN LOAD) EQUALS 34.8 P.S.F. SPECIFIED ROOF LIVE LOAD

ALLOWABLE DEFL.(LL)= L/360 (0.76")
CALCULATED VERT. DEFL.(LL) = L/ 999 (0.06")
ALLOWABLE DEFL.(TL)= L/360 (0.76")
CALCULATED VERT. DEFL.(TL) = L/ 999 (0.12")

CSI: TC=0.79/1.00 (C-D:1) , BC=0.27/1.00 (K-L:1) , WB=0.43/1.00 (D-K:1) , SSI=0.41/1.00 (C-D:1)

DOL LUMBER=1.00 NAIL=1.00 LS BEND=1.10 COMP=1.10 SHEAR=1.10 TENS= 1.10

COMPANION LIVE LOAD FACTOR = 1.00

TRUSS PLATE MANUFACTURER IS NOT RESPONSIBLE FOR QUALITY CONTROL IN THE TRUSS MANUFACTURING PLANT .

NAIL VALUES

| PLATE | GRIP(DRY) (PSI) MAX | MIN | SHEAR (PLI) MAX | MIN | SECTION (PLI) MAX | MIN |
|---|---|---|---|---|---|---|
| MT20 | 650 | 371 | 1747 | 788 | 1987 | 1873 |

PLATE PLACEMENT TOL. = 0.250 inches

PLATE ROTATION TOL. = 5.0 Deg.

JSI GRIP= 0.89 (C) (INPUT = 0.90 )
JSI METAL= 0.50 (B) (INPUT = 1.00 )

MODULUS ENGINEERING LTD.

LICENSED PROFESSIONAL ENGINEER
07/04/2023
D. A. SHERMAN
100123373
PROVINCE OF ONTARIO

REVIEW FOR TRUSS COMPONENT ONLY

*NOTE: ALTERING THIS DOCUMENT VOIDS THE ENGINEERS SEAL*

**WARNING - Verify design parameters and READ NOTES ON THIS AND INCLUDED IN MODULUS ENGINEERING LTD. NOTES ME-TCD01 (VER 06/2017) BEFORE USE.**
Design valid for use only with Mitek connectors. This design is based only upon parameters shown, and is for individual building components. Applicability of design parameters and proper incorporation of component is responsibility of building designer - not truss designer. Bracing shown is for lateral support of individual web members only. Additional temporary bracing to ensure stability during construction is the responsibility of the erector. Additional permanent bracing of the overall structure is the responsibility of the building designer. For general guidance regarding fabrication, quality control, storage, delivery, erection and bracing, consult
**TPIC Appendix G - Minimum quality Manufacturing Criteria** available from **www.tpic.ca** and **BCSI-CANADA (Building Component Safety Information) available** from TPI, 781 N. Lee Street, Suite 312, Alexandria, VA 22314 or www.sbcindustry.com

KOTT

| JOB NAME | TRUSS NAME | QUANTITY | PLY | JOB DESC. | DRWG NO. |
|---|---|---|---|---|---|
| T-RIVER 3-1 | T08 | 2 | 1 | ZADORRA ESTATES INC<br>TRUSS DESC. | ME23-5764-20 |

Kott, Uxbridge,ON

Version 8.630 S Mar 22 2023 MiTek Industries, Inc. Tue Jul 4 09:05:55 2023 Page 1
ID:NccLgzmhd_ldQzH3VGMNlRzOs0a-A?uj_XWml?oDrIdSUSxh9wR9I8iggfRfkWEO6Nz?VIA


CORPORATION OF THE CITY OF OTTAWA
TRUE COPY
OF PERMIT PLANS
Dec 04 2023
PER:
CHIEF BUILDING OFFICIAL
MHP 23023


Scale = 1:28.0

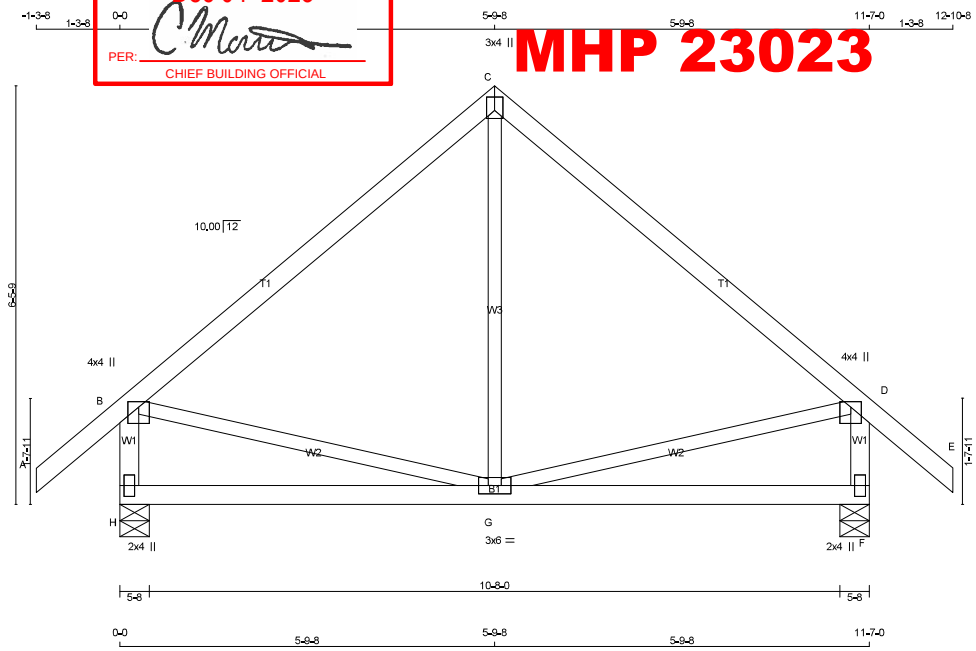


TOTAL WEIGHT = 2 X 51 = 103 lb
[M][F]

**LUMBER**
N. L. G. A. RULES

| CHORDS | SIZE | | LUMBER | DESCR. |
|---|---|---|---|---|
| A - C | 2x4 | DRY | 2100F 1.8E | SPF |
| C - E | 2x4 | DRY | 2100F 1.8E | SPF |
| H - B | 2x4 | DRY | No.2 | SPF |
| F - D | 2x4 | DRY | No.2 | SPF |
| H - F | 2x4 | DRY | No.2 | SPF |
| ALL WEBS EXCEPT | 2x3 | DRY | No.2 | SPF |

DRY: SEASONED LUMBER.

**PLATES (table is in inches)**

| JT | TYPE | PLATES | W | LEN | Y | X |
|---|---|---|---|---|---|---|
| B | TMVW+p | MT20 | 4.0 | 4.0 | 1.00 | 2.00 |
| C | TTW+p | MT20 | 3.0 | 4.0 | 2.50 | 1.50 |
| D | TMVW+p | MT20 | 4.0 | 4.0 | 1.00 | 2.00 |
| F | BMV1+p | MT20 | 2.0 | 4.0 | | |
| G | BMWWW-t | MT20 | 3.0 | 6.0 | | |
| H | BMV1+p | MT20 | 2.0 | 4.0 | | |

**DIMENSIONS, SUPPORTS AND LOADINGS SPECIFIED BY FABRICATOR TO BE VERIFIED BY BUILDING DESIGNER**

**BEARINGS**

| JT | FACTORED GROSS REACTION VERT | HORZ | MAXIMUM FACTORED GROSS REACTION DOWN | HORZ | UPLIFT | INPUT BRG | REQRD BRG |
|---|---|---|---|---|---|---|---|
| H | 963 | 0 | 963 | 0 | 0 | 5-8 | 1-8 |
| F | 963 | 0 | 963 | 0 | 0 | 5-8 | 1-8 |

**UNFACTORED REACTIONS**

| JT | 1ST LCASE COMBINED | SNOW | MAX./MIN. COMPONENT REACTIONS LIVE | PERM.LIVE | WIND | DEAD | SOIL |
|---|---|---|---|---|---|---|---|
| H | 670 | 500 / 0 | 0 / 0 | 0 / 0 | 0 / 0 | 171 / 0 | 0 / 0 |
| F | 670 | 500 / 0 | 0 / 0 | 0 / 0 | 0 / 0 | 171 / 0 | 0 / 0 |

BEARING MATERIAL TO BE SPF NO.2 OR BETTER AT JOINT(S) H, F

**BRACING**
TOP CHORD TO BE SHEATHED OR MAX. PURLIN SPACING = 6.25 FT.
MAX. UNBRACED BOTTOM CHORD LENGTH = 10.00 FT OR RIGID CEILING DIRECTLY APPLIED.

ALL PITCH BREAKS AND PERIMETER CORNER JOINTS MUST BE LATERALLY RESTRAINED.

**LOADING**
TOTAL LOAD CASES: (4)

CHORDS

| MEMB. FR-TO | MAX. FACTORED FORCE (LBS) | FACTORED VERT. LOAD (PLF) FROM | TO | LC1 | MAX CSI (LC) | MAX. UNBRAC LENGTH |
|---|---|---|---|---|---|---|
| A- B | 0 / 53 | -119.4 | -119.4 | 0.11 (1) | 10.00 | |
| B- C | -506 / 0 | -119.4 | -119.4 | 0.34 (1) | 6.25 | |
| C- D | -506 / 0 | -119.4 | -119.4 | 0.34 (1) | 6.25 | |
| D- E | 0 / 53 | -119.4 | -119.4 | 0.11 (1) | 10.00 | |
| H- B | -922 / 0 | 0.0 | 0.0 | 0.10 (1) | 7.81 | |
| F- D | -922 / 0 | 0.0 | 0.0 | 0.10 (1) | 7.81 | |
| H- G | 0 / 0 | -18.2 | -18.2 | 0.18 (4) | 10.00 | |
| G- F | 0 / 0 | -18.2 | -18.2 | 0.18 (4) | 10.00 | |

WEBS

| MEMB. FR-TO | MAX. FACTORED FORCE (LBS) | MAX CSI (LC) |
|---|---|---|
| C- G | -44 / 95 | 0.03 (4) |
| B- G | 0 / 398 | 0.09 (1) |
| G- D | 0 / 398 | 0.09 (1) |

**DESIGN CRITERIA**

SPECIFIED LOADS:

| | | | | |
|---|---|---|---|---|
| TOP CH. | LL | = | 34.8 | PSF |
| | DL | = | 6.0 | PSF |
| BOT CH. | LL | = | 0.0 | PSF |
| | DL | = | 7.3 | PSF |
| TOTAL LOAD | | = | 48.1 | PSF |

**SPACING = 24.0 IN. C/C**

THIS TRUSS IS DESIGNED FOR RESIDENTIAL OR SMALL BUILDING REQUIREMENTS OF PART 9, NBCC 2015

THIS DESIGN COMPLIES WITH:
- PART 9 OF BCBC 2018 , NBC-2019AE
- PART 9 OF OBC 2012 (2019 AMENDMENT)
- CSA 086-14
- TPIC 2014

(55 % OF 48.1 P.S.F. G.S.L. PLUS 8.4 P.S.F. RAIN LOAD) EQUALS 34.8 P.S.F. SPECIFIED ROOF LIVE LOAD

ALLOWABLE DEFL.(LL)= L/360 (0.39")
CALCULATED VERT. DEFL.(LL) = L/ 999 (0.01")
ALLOWABLE DEFL.(TL)= L/360 (0.39")
CALCULATED VERT. DEFL.(TL) = L/ 999 (0.03")

CSI: TC=0.34/1.00 (B-C:1) , BC=0.18/1.00 (G-H:4) , WB=0.09/1.00 (D-G:1) , SSI=0.21/1.00 (B-C:1)

DOL LUMBER=1.00 NAIL=1.00 LS BEND=1.10 COMP=1.10 SHEAR=1.10 TENS= 1.10

COMPANION LIVE LOAD FACTOR = 1.00

TRUSS PLATE MANUFACTURER IS NOT RESPONSIBLE FOR QUALITY CONTROL IN THE TRUSS MANUFACTURING PLANT .

NAIL VALUES

| PLATE | GRIP(DRY) (PSI) MAX | MIN | SHEAR (PLI) MAX | MIN | SECTION (PLI) MAX | MIN |
|---|---|---|---|---|---|---|
| MT20 | 650 | 371 | 1747 | 788 | 1987 | 1873 |

PLATE PLACEMENT TOL. = 0.250 inches

PLATE ROTATION TOL. = 5.0 Deg.

JSI GRIP= 0.79 (D) (INPUT = 0.90 )
JSI METAL= 0.21 (D) (INPUT = 1.00 )

MODULUS ENGINEERING LTD.

LICENSED PROFESSIONAL ENGINEER
07/04/2023
D. A. SHERMAN
100123373
PROVINCE OF ONTARIO

**REVIEW FOR TRUSS COMPONENT ONLY**

*NOTE: ALTERING THIS DOCUMENT VOIDS THE ENGINEERS SEAL*


**WARNING - Verify design parameters and READ NOTES ON THIS AND INCLUDED IN MODULUS ENGINEERING LTD. NOTES ME-TCD01 (VER 06/2017) BEFORE USE.**
Design valid for use only with Mitek connectors. This design is based only upon parameters shown, and is for individual building components. Applicability of design parameters and proper incorporation of component is responsibility of building designer - not truss designer. Bracing shown is for lateral support of individual web members only. Additional temporary bracing to ensure stability during construction is the responsibility of the erector. Additional permanent bracing of the overall structure is the responsibility of the building designer. For general guidance regarding fabrication, quality control, storage, delivery, erection and bracing, consult
**TPIC Appendix G - Minimum quality Manufacturing Criteria** available from **www.tpic.ca** and **BCSI-CANADA (Building Component Safety Information) available** from TPI, 781 N. Lee Street, Suite 312, Alexandria, VA 22314 or www.sbcindustry.com


KOTT

| JOB NAME | TRUSS NAME | QUANTITY | PLY | JOB DESC. | DRWG NO. |
|---|---|---|---|---|---|
| T-RIVER 3-1 | T09 | 1 | 1 | ZADORRA ESTATES INC | ME23-5764-21 |

Kott, Uxbridge,ON

TRUE COPY OF PERMIT PLANS
CORPORATION OF THE CITY OF OTTAWA
Dec 04 2023
PER: C Matt
CHIEF BUILDING OFFICIAL

TRUSS DESC.

Version 8.630 S Mar 22 2023 MiTek Industries, Inc. Tue Jul 4 09:05:57 2023 Page 1
ID:NccLgzmhd_IdQzH3VGMNIRzOs0a-6O0TPDX0Hc2x4cnrbtz9ELWXOxKg8YxyBpjVAGz?VI8

MHP 23023

Scale = 1:27.4

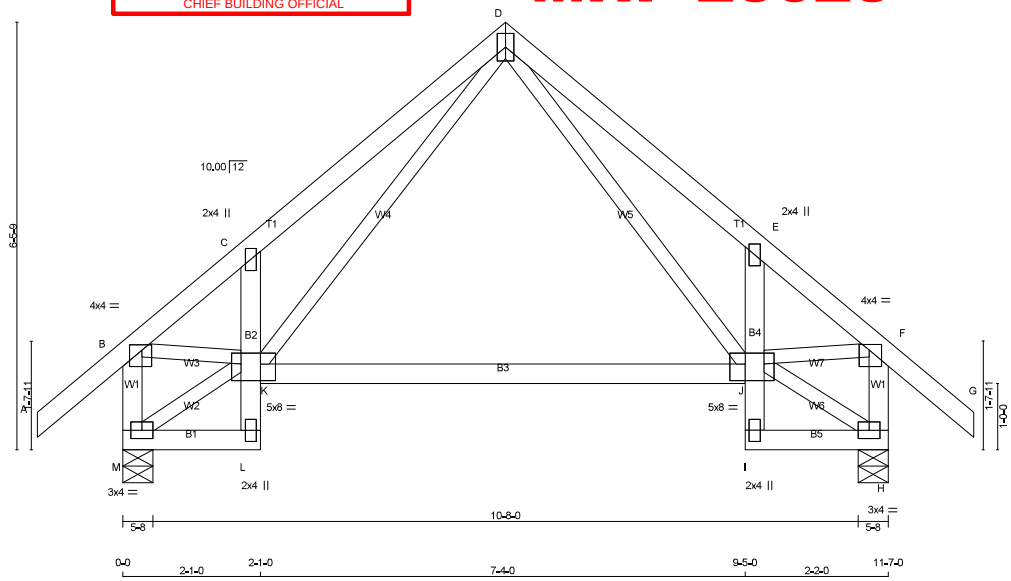


TOTAL WEIGHT = 59 lb
[M][F]

**LUMBER**
N. L. G. A. RULES

| CHORDS | SIZE | | LUMBER | DESCR. |
|---|---|---|---|---|
| A - D | 2x4 | DRY | No.2 | SPF |
| D - G | 2x4 | DRY | No.2 | SPF |
| M - B | 2x4 | DRY | No.2 | SPF |
| H - F | 2x4 | DRY | No.2 | SPF |
| M - L | 2x4 | DRY | No.2 | SPF |
| L - C | 2x4 | DRY | No.2 | SPF |
| K - J | 2x4 | DRY | No.2 | SPF |
| I - E | 2x4 | DRY | No.2 | SPF |
| I - H | 2x4 | DRY | No.2 | SPF |
| ALL WEBS | 2x3 | DRY | No.2 | SPF |

DRY: SEASONED LUMBER.

**PLATES (table is in inches)**

| JT | TYPE | PLATES | W | LEN | Y | X |
|---|---|---|---|---|---|---|
| B | TMVW-p | MT20 | 4.0 | 4.0 | 1.00 | 2.25 |
| C | TMV+p | MT20 | 2.0 | 4.0 | | |
| D | TTWW+p | MT20 | 3.0 | 5.0 | | |
| E | TMV+p | MT20 | 2.0 | 4.0 | | |
| F | TMVW-p | MT20 | 4.0 | 4.0 | 1.00 | 2.25 |
| H | BMVW1-t | MT20 | 3.0 | 4.0 | | |
| I | BMV+p | MT20 | 2.0 | 4.0 | | |
| J | BVMWWW-l | MT20 | 5.0 | 8.0 | 3.00 | 2.75 |
| K | BVMWWW-l | MT20 | 5.0 | 8.0 | 3.00 | 2.75 |
| L | BMV+p | MT20 | 2.0 | 4.0 | | |
| M | BMVW1-t | MT20 | 3.0 | 4.0 | | |

**DIMENSIONS, SUPPORTS AND LOADINGS SPECIFIED BY FABRICATOR TO BE VERIFIED BY BUILDING DESIGNER**

**BEARINGS**

| JT | FACTORED GROSS REACTION VERT | HORZ | MAXIMUM FACTORED GROSS REACTION DOWN | HORZ | UPLIFT | INPUT BRG IN-SX | REQRD BRG IN-SX |
|---|---|---|---|---|---|---|---|
| M | 963 | 0 | 963 | 0 | 0 | 5-8 | 1-8 |
| H | 963 | 0 | 963 | 0 | 0 | 5-8 | 1-8 |

**UNFACTORED REACTIONS**

1ST LCASE — MAX./MIN. COMPONENT REACTIONS

| JT | COMBINED | SNOW | LIVE | PERM.LIVE | WIND | DEAD | SOIL |
|---|---|---|---|---|---|---|---|
| M | 670 | 500 / 0 | 0 / 0 | 0 / 0 | 0 / 0 | 171 / 0 | 0 / 0 |
| H | 670 | 500 / 0 | 0 / 0 | 0 / 0 | 0 / 0 | 171 / 0 | 0 / 0 |

BEARING MATERIAL TO BE SPF NO.2 OR BETTER AT JOINT(S) M, H

**BRACING**
TOP CHORD TO BE SHEATHED OR MAX. PURLIN SPACING = 6.23 FT.
MAX. UNBRACED BOTTOM CHORD LENGTH = 7.81 FT OR RIGID CEILING DIRECTLY APPLIED.

ALL PITCH BREAKS AND PERIMETER CORNER JOINTS MUST BE LATERALLY RESTRAINED.

**LOADING**
TOTAL LOAD CASES: (4)

CHORDS

| MEMB. FR-TO | MAX. FACTORED FORCE (LBS) | FACTORED VERT. LOAD (PLF) FROM | TO | LC1 CSI (LC) | MAX UNBRAC LENGTH |
|---|---|---|---|---|---|
| A- B | 0 / 53 | -119.4 | -119.4 | 0.16 (1) | 10.00 |
| B- C | -873 / 0 | -119.4 | -119.4 | 0.15 (1) | 6.25 |
| C- D | -888 / 0 | -119.4 | -119.4 | 0.24 (1) | 6.23 |
| D- E | -880 / 0 | -119.4 | -119.4 | 0.23 (1) | 6.25 |
| E- F | -868 / 0 | -119.4 | -119.4 | 0.14 (1) | 6.25 |
| F- G | 0 / 53 | -119.4 | -119.4 | 0.16 (1) | 10.00 |
| M- B | -935 / 0 | 0.0 | 0.0 | 0.10 (1) | 7.81 |
| H- F | -935 / 0 | 0.0 | 0.0 | 0.10 (1) | 7.81 |
| M- L | 0 / 20 | -18.2 | -18.2 | 0.02 (4) | 10.00 |
| L- K | 0 / 20 | 0.0 | 0.0 | 0.03 (1) | 10.00 |
| K- C | -380 / 0 | 0.0 | 0.0 | 0.02 (1) | 7.81 |
| K- J | 0 / 402 | -18.2 | -18.2 | 0.33 (4) | 10.00 |
| I- J | 0 / 21 | 0.0 | 0.0 | 0.03 (1) | 10.00 |
| J- E | -374 / 0 | 0.0 | 0.0 | 0.02 (1) | 7.81 |
| I- H | 0 / 19 | -18.2 | -18.2 | 0.02 (4) | 10.00 |

WEBS

| MEMB. FR-TO | MAX. FACTORED FORCE (LBS) | MAX CSI (LC) |
|---|---|---|
| K- D | 0 / 440 | 0.10 (1) |
| D- J | 0 / 437 | 0.10 (1) |
| B- K | 0 / 683 | 0.15 (1) |
| M- K | -22 / 0 | 0.00 (1) |
| J- F | 0 / 677 | 0.15 (1) |
| J- H | -21 / 0 | 0.00 (1) |

**DESIGN CRITERIA**

SPECIFIED LOADS:

| | | | | |
|---|---|---|---|---|
| TOP CH. | LL | = | 34.8 | PSF |
| | DL | = | 6.0 | PSF |
| BOT CH. | LL | = | 0.0 | PSF |
| | DL | = | 7.3 | PSF |
| TOTAL LOAD | | = | 48.1 | PSF |

**SPACING = 24.0 IN. C/C**

THIS TRUSS IS DESIGNED FOR RESIDENTIAL OR SMALL BUILDING REQUIREMENTS OF PART 9, NBCC 2015

THIS DESIGN COMPLIES WITH:
- PART 9 OF BCBC 2018 , NBC-2019AE
- PART 9 OF OBC 2012 (2019 AMENDMENT)
- CSA 086-14
- TPIC 2014

DESIGN ASSUMPTIONS
-OVERHANG NOT TO BE ALTERED OR CUT OFF.

(55 % OF 48.1 P.S.F. G.S.L. PLUS 8.4 P.S.F. RAIN LOAD) EQUALS 34.8 P.S.F. SPECIFIED ROOF LIVE LOAD

ALLOWABLE DEFL.(LL)= L/360 (0.39")
CALCULATED VERT. DEFL.(LL) = L/ 999 (0.01")
ALLOWABLE DEFL.(TL)= L/360 (0.39")
CALCULATED VERT. DEFL.(TL) = L/ 798 (0.17")

CSI: TC=0.24/1.00 (C-D:1) , BC=0.33/1.00 (J-K:4) , WB=0.15/1.00 (B-K:1) , SSI=0.16/1.00 (C-D:1)

DOL LUMBER=1.00 NAIL=1.00 LS BEND=1.10 COMP=1.10 SHEAR=1.10 TENS= 1.10

COMPANION LIVE LOAD FACTOR = 1.00

AUTOSOLVE HEELS OFF

TRUSS PLATE MANUFACTURER IS NOT RESPONSIBLE FOR QUALITY CONTROL IN THE TRUSS MANUFACTURING PLANT .

NAIL VALUES

| PLATE | GRIP(DRY) (PSI) MAX | MIN | SHEAR (PLI) MAX | MIN | SECTION (PLI) MAX | MIN |
|---|---|---|---|---|---|---|
| MT20 | 650 | 371 | 1747 | 788 | 1987 | 1873 |

PLATE PLACEMENT TOL. = 0.250 inches

PLATE ROTATION TOL. = 5.0 Deg.

JSI GRIP= 0.88 (M) (INPUT = 0.90 )
JSI METAL= 0.25 (B) (INPUT = 1.00 )

MODULUS ENGINEERING LTD.

LICENSED PROFESSIONAL ENGINEER
07/04/2023
D. A. SHERMAN
100123373
PROVINCE OF ONTARIO

REVIEW FOR TRUSS COMPONENT ONLY

*NOTE: ALTERING THIS DOCUMENT VOIDS THE ENGINEERS SEAL*

**WARNING - Verify design parameters and READ NOTES ON THIS AND INCLUDED IN MODULUS ENGINEERING LTD. NOTES ME-TCD01 (VER 06/2017) BEFORE USE.**
Design valid for use only with Mitek connectors. This design is based only upon parameters shown, and is for individual building components. Applicability of design parameters and proper incorporation of component is responsibility of building designer - not truss designer. Bracing shown is for lateral support of individual web members only. Additional temporary bracing to ensure stability during construction is the responsibility of the erector. Additional permanent bracing of the overall structure is the responsibility of the building designer. For general guidance regarding fabrication, quality control, storage, delivery, erection and bracing, consult
**TPIC Appendix G - Minimum quality Manufacturing Criteria** available from **www.tpic.ca** and **BCSI-CANADA (Building Component Safety Information) available** from TPI, 781 N. Lee Street, Suite 312, Alexandria, VA 22314 or www.sbcindustry.com

KOTT