CORPORATION OF THE CITY OF OSHAWA
TRUE COPY
OF PERMIT PLANS
Nov 04 2023
PER: C Morr
CHIEF BUILDING OFFICIAL

MHP 23021

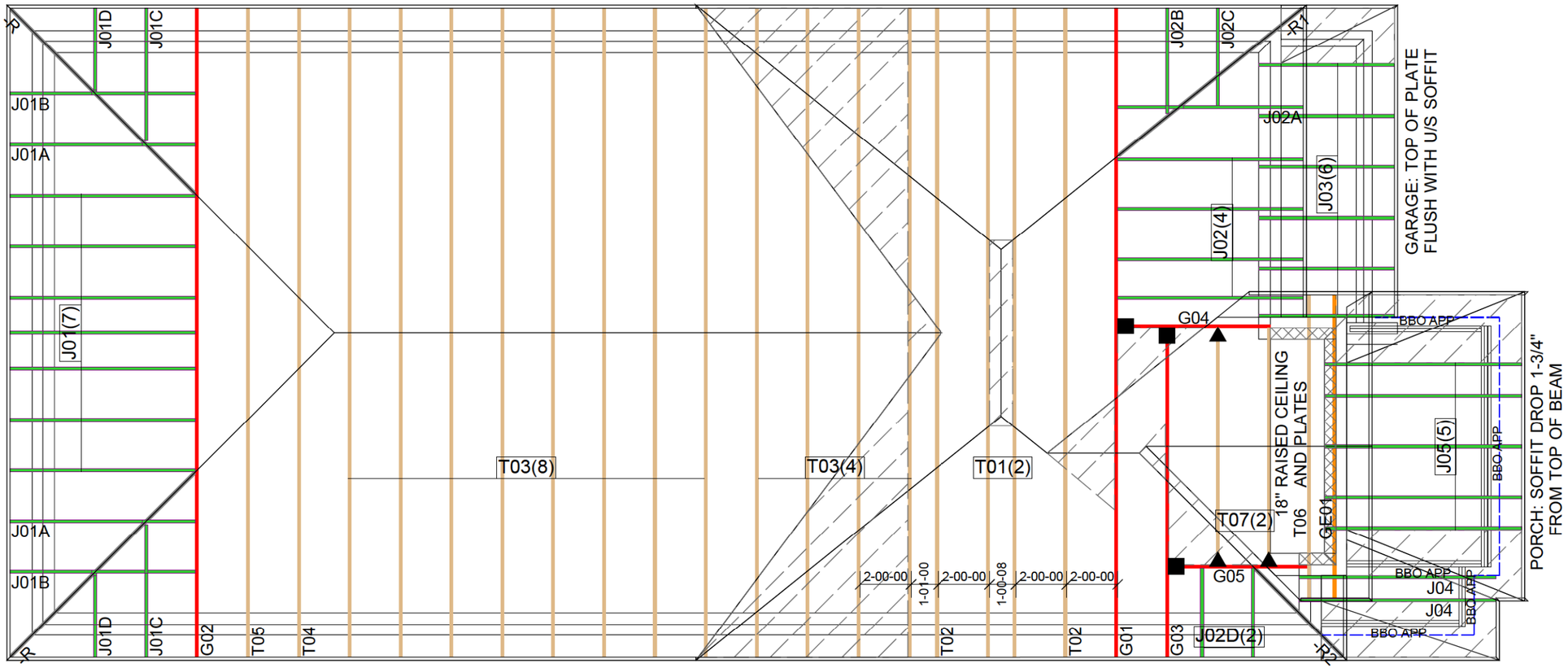

UPPER LEVEL: TOP OF PLATE FLUSH WITH U/S SOFFIT

Hanger Name	Symbol	QTY
LUS24	▲	3
LJS26DS	■	3

CONVENTIONAL FRAMING BY OTHERS

ALL CONVENTIONAL FRAMING TO CONFORM WITH PART 9 OF THE OBC. ROOF RAFTERS THAT CROSS OVER TRUSSES TO BE MIN. 2x4 SPF @ 24" C/C WITH A 2x4 VERTICAL POST TO THE TRUSS BELOW. VERTICAL POSTS TO BE LATERALLY BRACED SO THAT UNBRACED LENGTH DOES NOT EXCEED 6'. DESIGN OF CONVENTIONAL FRAMING IS THE RESPONSIBILITY OF THE PROJECT ENGINEER.

JOB INFORMATION

Customer	GREENPARK GROUP
Job #	23-00071R0
Address	ZADORRA ESTATES ZADORRA ESTATES INC OSHAWA,ON
Model	RIVER 1-2
Sales Rep	RALPH MIRIGELLO
Designer	LI
Date	2023-04-20
Path	C:\MITEK\CA\JOBS\GREENPARK GROUP\ZADORRA ESTATES\MODELS\RIVER 1\RIVER 1-2\T-RIVE

DESIGN INFORMATION

Code	NBCC 2015
Bldg	Residential - HSB (NBCC Part 9)
TC LL	34.8 lb/ft^2
TC DL	6.0 lb/ft^2
BC LL	0.0 lb/ft^2
BC DL	7.3 lb/ft^2
Deflection	LL=L/360 TL=L/360
Spacing	24" O/C unless otherwise noted
Complies With	OBC 2012 (2019 Amendment) CSA O86-14 and TPIC 2014

IMPORTANT INFORMATION

Hangers and Fasteners to be installed as per manufacturer

Refer to truss drawings in the Truss Engineering Package for ply-to-ply attachment notes

For site-framed valleys: top chords of all roof trusses must be laterally supported using 2x4 continuous bracing @24 O/C - all bracing must be anchored at ends as per TPIC Installation Guidelines

Read all notes on this page in addition to those shown on the KOTT Truss Engineering package

Field erection, handling and bracing are not the responsibility of KOTT, or KOTT Engineering

Unless noted otherwise, hurricane ties are to be installed at the bearings of all trusses > 40 ft clear span, and any girder or beam supporting trusses with a clear span >40 ft. See hanger legend for type.

Unless noted otherwise, for Part 9 bldgs, all trusses are to be anchored to the top of supporting walls as follows: trusses with a clear span <40 ft use 3-1/4" nails @ each bearing; trusses with a clear span >40 ft use 3-1/4" nails @ each bearing in addition to the appropriate hurricane tie.

KOTT Inc.
14 Anderson Blvd.
Uxbridge, ON
905.642.4400

modulus engineering ltd.

General Guidelines for Truss Manufacturer and Installer on Reading Truss Component Drawings

Read Carefully Prior to Manufacture and Installation

Note: It is important that all information on the truss component drawing is understood by all interested parties. If clarification is required, please contact your truss supplier prior to installation of the trusses

Standard Design Loading:

Standard loading is indicated on the drawing legend for the top and bottom chords, for snow, live and dead loads where indicated. Actual panel UDL is further indicated for individual panels in the body of the truss drawing.

Non-Standard Loading:

Additional uniform loading is included in individual panel loading. Concentrated loads are noted in a separate table in the body of the drawing.

Reactions:

Factored gross reactions are indicated as Maximum Factored Reactions, not necessarily for the load case outlined on the drawing. Includes vertical, horizontal and uplift.

Lumber size and Grade:

The member size and grade is indicated in the lumber table. The truss must be manufactured with the same size and species noted but may be an equal or better grade than indicated.

Plates sizes:

Plate sizes are noted as Width x Length, where the plate slot direction is parallel to the plate length. Plate sizes indicated are the minimum required and may be increased.

Plate location:

Plates are centred on the joint unless an x-y offset is indicated. If clarification of placement is required prior to manufacture or during inspection, additional detail on plate placement is available from the truss manufacturer.

Bearing:

In most cases, input bearing size (input by designer) and minimum required bearing are indicated on the drawing. In cases where the bearing capacity has been enhanced by using a bearing block, bearing enhancer or flush plate, the bearing required will match the input bearing even where the required bearing might be less than what is indicated

Ply to ply connection:

Where the truss is designed for 2 or more plys, the individual truss plys must be fastened together. A nailing chart will be included which includes nails size, type, spacing and rows for each member. For 4 ply trusses, bolts or structural screws may also be noted

Building Code:

The truss will be designed as Part 9, Part 4 or Farm and will be noted in the legend. In certain cases, wind loading will also be required and will be outlined on the drawing, including information pertaining to location, building height, exposure class and opening size. TPIC requires that some non-trangulated frames such as attic trusses and gambrel arches be designed Part 4 even though the building itself might meet the requirements of Part 9.

Chord Bracing:

Minimum spacing for bracing for the top and bottom chord is clearly indicated. This can also be achieved when suitable sheathing is directly connected to the top chord and when a suitable ceiling is directly connected to the bottom chord. For large cantilevers where there is typically not a directly connected ceiling, care should be taken to meet the bracing criteria noted. The base truss for piggyback situations must have 2x4 purlins (max truss spacing 24" o/c) connected at a maximum of 24" o/c along the flat top chord section. Additional x-bracing may be required in the plane of the purlins.

Web Bracing:

Requirements for individual web bracing will be indicated on the drawing. This will either be a lateral brace or T-brace. Where a T-brace is specified, size, grade and nailing requirement will be noted. For a lateral brace, a 1x4 minimum is required. Note: The building designer is responsible for ensuring adequate load transfer from the individual lateral braces into the overall structure.

Design Results:

Axial forces for load case 1 are indicated on the drawing. Other load case results can be supplied upon request. Maximum stress indices are also indicated for both the lumber and plates. Maximum deflection is indicated, both allowable and calculated.

Manufacturing tolerances:

Tolerances for plate placement as outlined in TPIC Appendix G are noted on each truss component drawing.

Failure to follow these guidelines could cause property damage and personal injury

1. Additional stability bracing for truss system, e.g. diagonal or xbracing is always required. Consult **BCSI-CANADA** for installation requirements (copies available from your truss supplier or from www.sbcindustry.com)

2. Truss bracing must be designed by an engineer. Individual lateral braces shown in truss drawings must be incorporated into overall structure through connection to diaphragm or other means.

3. Never exceed the design loading shown and never stack building materials on inadequately braced trusses

4. Provide copies of truss component drawings to the building department, erection supervisor, property owner and all interested parties (e.g. Building designer where required)

5. Cut members to bear tightly against one another

6. Place plates on each face of truss at each joint and embed using proper roller or hydraulic press. Knots and wane at locations are regulated by TPIC Appendix G

7. Design assumes trusses will be suitably protected from the environment in accordance with TPIC

8. Unless otherwise noted, MC of lumber shall not exceed 19% at time of manufacture

9. Unless expressly noted, this design is not applicable for fire retardant, preservative treatment or green lumber nor for use in a corrosive environment

10. Connections not shown are the responsibility of others

11. Do not cut or alter truss members or plates without prior approval of an engineer

12. Install and load vertically unless otherwise noted

13. Review all portions of this design including all notes. Reviewing pictures alone is not sufficient

14. Design assumes manufactured in accordance with TPIC Quality criteria as outlined in Appendix G

16. Building designer must review individual component drawings to ensure they are suitable for the structure

15. Not designed for solar panels unless specifically noted

CORPORATION OF THE CITY OF OSHAWA
TRUE COPY
OF PERMIT PLANS
Nov 04 2023
PER: CHIEF BUILDING OFFICIAL
MHP 23021

JOB NAME	TRUSS NAME	QUANTITY	PLY	JOB DESC.	DRWG NO.
T-RIVER 1-2	G01	1	1	ZADORRA ESTATES INC TRUSS DESC.	ME23-5757-1

Kott, Uxbridge,ON

Version 8.630 S Mar 22 2023 MiTek Industries, Inc. Mon Jul 3 15:03:48 2023 Page 1
ID:NccLgzmhd_IdQzH3VGMNlRzOs0a-i6FdDkmL9Ahc_Pc0U7c3C7sTFg5vg4fzneyFm8z?lbf

CORPORATION OF THE CITY OF OSHAWA
TRUE COPY
OF PERMIT PLANS
Nov 04 2023
PER: C Mott
CHIEF BUILDING OFFICIAL

MHP 23021

Scale = 1:40.2

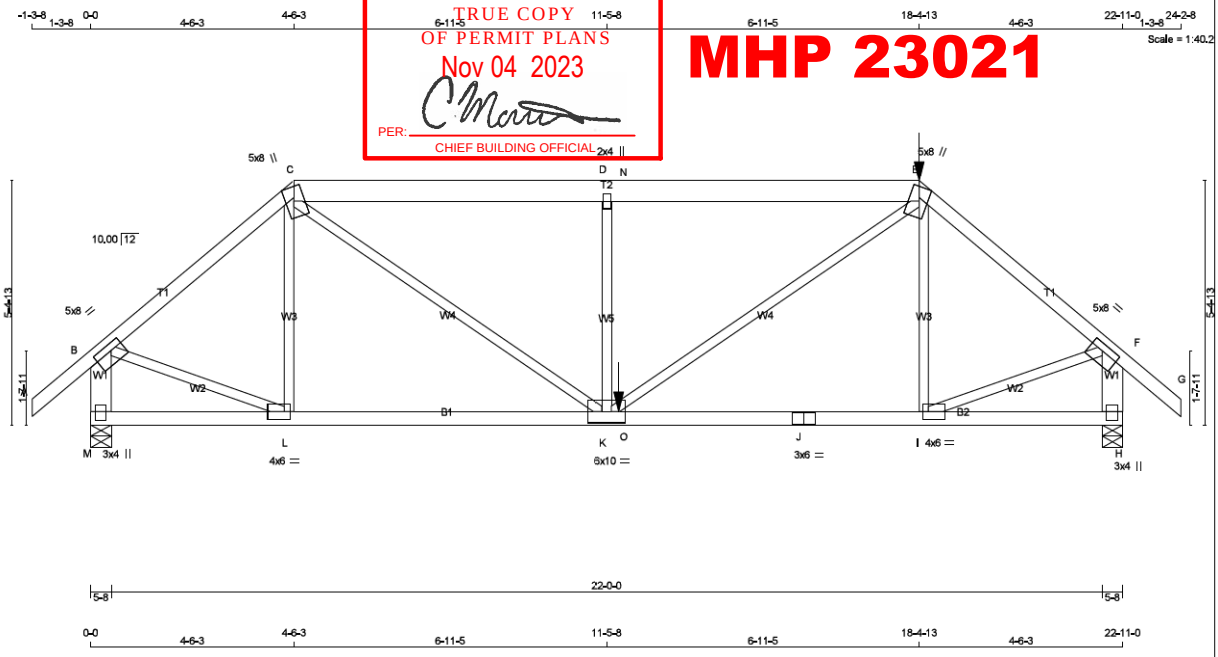

TOTAL WEIGHT = 105 lb [M]

LUMBER
N. L. G. A. RULES

CHORDS	SIZE		LUMBER	DESCR.
A - C	2x4	DRY	No.2	SPF
C - E	2x6	DRY	No.2	SPF
E - G	2x4	DRY	No.2	SPF
M - B	2x6	DRY	No.2	SPF
H - F	2x6	DRY	No.2	SPF
M - J	2x4	DRY	No.2	SPF
J - H	2x4	DRY	No.2	SPF
ALL WEBS EXCEPT	2x3	DRY	No.2	SPF

DRY: SEASONED LUMBER.

PLATES (table is in inches)

JT	TYPE	PLATES	W	LEN	Y	X
B	TMVW-t	MT20	5.0	8.0	1.75	3.25
C	TTWW+m	MT20	5.0	8.0	Edge	
D	TMW+w	MT20	2.0	4.0		
E	TTWW+m	MT20	5.0	8.0	Edge	
F	TMVW-t	MT20	5.0	8.0	1.75	3.25
H	BMV1+p	MT20	3.0	4.0	2.25	1.50
I	BMWW-t	MT20	4.0	6.0	2.00	1.50
J	BS-t	MT20	3.0	6.0		
K	BMWWW-t	MT20	6.0	10.0		
L	BMWW-t	MT20	4.0	6.0	2.00	1.50
M	BMV1+p	MT20	3.0	4.0	2.25	1.50

Edge - INDICATES REFERENCE CORNER OF PLATE TOUCHES EDGE OF CHORD.

DIMENSIONS, SUPPORTS AND LOADINGS SPECIFIED BY FABRICATOR TO BE VERIFIED BY BUILDING DESIGNER

BEARINGS

JT	FACTORED GROSS REACTION VERT	HORZ	MAXIMUM FACTORED GROSS REACTION DOWN	HORZ	UPLIFT	INPUT BRG	REQRD BRG
M	2616	0	2616	0	0	5-8	3-0
H	3175	0	3175	0	0	5-8	4-13

UNFACTORED REACTIONS

1ST LCASE MAX./MIN. COMPONENT REACTIONS

JT	COMBINED	SNOW	LIVE	PERM.LIVE	WIND	DEAD	SOIL
M	1825	1338 / 0	0 / 0	0 / 0	0 / 0	487 / 0	0 / 0
H	2218	1610 / 0	0 / 0	0 / 0	0 / 0	608 / 0	0 / 0

BEARING MATERIAL TO BE SPF NO.2 OR BETTER AT JOINT(S) M, H

BRACING
TOP CHORD TO BE SHEATHED OR MAX. PURLIN SPACING = 3.05 FT.
MAX. UNBRACED BOTTOM CHORD LENGTH = 10.00 FT OR RIGID CEILING DIRECTLY APPLIED.

ALL PITCH BREAKS AND PERIMETER CORNER JOINTS MUST BE LATERALLY RESTRAINED.

LOADING
TOTAL LOAD CASES: (4)

CHORDS

MEMB. FR-TO	FORCE (LBS)	FACTORED VERT. (PLF)	LOAD LC1 FROM	LOAD LC1 TO	MAX CSI (LC)	MAX. UNBRAC LENGTH
A- B	0 / 53	-119.4	-119.4	0.18 (1)	10.00	
B- C	-2488 / 0	-119.4	-119.4	0.66 (1)	3.63	
C- D	-3983 / 0	-119.4	-119.4	0.83 (1)	3.16	
D- N	-3983 / 0	-119.4	-119.4	0.87 (1)	3.05	
N- E	-3983 / 0	-225.2	-225.2	0.87 (1)	3.05	
E- F	-3111 / 0	-119.4	-119.4	0.76 (1)	3.18	
F- G	0 / 53	-119.4	-119.4	0.18 (1)	10.00	
M- B	-2589 / 0	0.0	0.0	0.20 (1)	6.41	
H- F	-3128 / 0	0.0	0.0	0.24 (1)	5.93	
M- L	0 / 0	-18.2	-18.2	0.13 (4)	10.00	
L- K	0 / 1924	-18.2	-18.2	0.47 (1)	10.00	
K- O	0 / 2405	-18.2	-18.2	0.62 (1)	10.00	
O- J	0 / 2405	-34.4	-34.4	0.62 (1)	10.00	
J- I	0 / 2405	-34.4	-34.4	0.62 (1)	10.00	
I- H	0 / 0	-34.4	-34.4	0.32 (4)	10.00	

WEBS

MEMB. FR-TO	FORCE (LBS)	MAX CSI (LC)
L- C	-453 / 0	0.20 (1)
C- K	0 / 2544	0.63 (1)
K- D	-1430 / 0	0.60 (1)
K- E	0 / 1950	0.48 (1)
I- E	-476 / 61	0.21 (1)
B- L	0 / 1997	0.49 (1)
I- F	0 / 2497	0.62 (1)

FACTORED CONCENTRATED LOADS (LBS)

JT	LOC.	LC1	MAX-	MAX+	FACE	DIR.	TYPE	HEEL	CONN.
E	18-4-13	-404	-404	—	FRONT	VERT	TOTAL	—	C1
K	11-8-12	-1037	-1037	—	FRONT	VERT	TOTAL	—	C1

CONNECTION REQUIREMENTS

1) **C1**: A SUITABLE HANGER/MECHANICAL CONNECTION IS REQUIRED.

DESIGN CRITERIA

*** SPECIAL LOADS ANALYSIS ***
GEOMETRY AND/OR BASIC LOADS CHANGED BY USER.
LOADS WERE DERIVED FROM USER INPUT
NO FURTHER MODIFICATIONS WERE MADE

SPECIFIED LOADS:

TOP CH.	LL	=	34.8	PSF
	DL	=	6.0	PSF
BOT CH.	LL	=	0.0	PSF
	DL	=	7.3	PSF
TOTAL LOAD		=	48.1	PSF

SPACING = 24.0 IN. C/C

LOADING IN FLAT SECTION BASED ON A SLOPE OF 2.00/12 MINIMUM

GIRDER TYPE: CPrimeHip
SIDE SETBACK = 4-6-3
END SETBACK = 6-0-0
END WALL WIDTH = 5-8
CORNER FRAMING TYPE: CONVENTIONAL
END JACK TYPE: CONVENTIONAL
APPLIED TO FRONT SIDE
- ADDT'L LOADS BASED ON 55 % OF GSL.
LOADS APPLIED TO FIRST 11-0-0 OF SPAN MEASURED FROM THE RIGHT.

*** NON STANDARD GIRDER ***
ADDT'L USER-DEFINED LOADS APPLIED TO ALL LOAD CASES.

THIS TRUSS IS DESIGNED FOR RESIDENTIAL OR SMALL BUILDING REQUIREMENTS OF PART 9, NBCC 2015

THIS DESIGN COMPLIES WITH:
- PART 9 OF BCBC 2018 , NBC-2019AE
- PART 9 OF OBC 2012 (2019 AMENDMENT)
- CSA 086-14
- TPIC 2014

(55 % OF 48.1 P.S.F. G.S.L. PLUS 8.4 P.S.F. RAIN LOAD) EQUALS 34.8 P.S.F. SPECIFIED ROOF LIVE LOAD

ALLOWABLE DEFL.(LL)= L/360 (0.76")
CALCULATED VERT. DEFL.(LL) = L/ 999 (0.11")
ALLOWABLE DEFL.(TL)= L/360 (0.76")
CALCULATED VERT. DEFL.(TL) = L/ 999 (0.24")

CSI: TC=0.87/1.00 (D-E:1) , BC=0.62/1.00 (I-K:1) , WB=0.63/1.00 (C-K:1) , SSI=0.57/1.00 (D-E:1)

DOL LUMBER=1.00 NAIL=1.00 LS BEND=1.00 COMP=1.00 SHEAR=1.00 TENS= 1.00

COMPANION LIVE LOAD FACTOR = 1.00

TRUSS PLATE MANUFACTURER IS NOT RESPONSIBLE FOR QUALITY CONTROL IN THE TRUSS MANUFACTURING PLANT.

NAIL VALUES

PLATE	GRIP(DRY) (PSI) MAX	MIN	SHEAR (PLI) MAX	MIN	SECTION (PLI) MAX	MIN
MT20	650	371	1747	788	1987	1873

PLATE PLACEMENT TOL. = 0.250 inches

PLATE ROTATION TOL. = 5.0 Deg.

JSI GRIP= 0.89 (F) (INPUT = 0.90)
JSI METAL= 0.91 (J) (INPUT = 1.00)

MODULUS ENGINEERING LTD.

LICENSED PROFESSIONAL ENGINEER
07/04/2023
D. A. SHERMAN
100123373
PROVINCE OF ONTARIO

REVIEW FOR TRUSS COMPONENT ONLY

NOTE: ALTERING THIS DOCUMENT VOIDS THE ENGINEERS SEAL

WARNING - Verify design parameters and READ NOTES ON THIS AND INCLUDED IN MODULUS ENGINEERING LTD. NOTES ME-TCD01 (VER 06/2017) BEFORE USE.
Design valid for use only with Mitek connectors. This design is based only upon parameters shown, and is for individual building components. Applicability of design parameters and proper incorporation of component is responsibility of building designer - not truss designer. Bracing shown is for lateral support of individual web members only. Additional temporary bracing to ensure stability during construction is the responsibility of the erector. Additional permanent bracing of the overall structure is the responsibility of the building designer. For general guidance regarding fabrication, quality control, storage, delivery, erection and bracing, consult
TPIC Appendix G - Minimum quality Manufacturing Criteria available from **www.tpic.ca** and **BCSI-CANADA (Building Component Safety Information) available** from TPI, 781 N. Lee Street, Suite 312, Alexandria, VA 22314 or www.sbcindustry.com

KOTT

JOB NAME	TRUSS NAME	QUANTITY	PLY	JOB DESC.	DRWG NO.
T-RIVER 1-2	G02	1	1	ZADORRA ESTATES INC TRUSS DESC.	ME23-5757-2

Kott, Uxbridge,ON

Version 8.630 S Mar 22 2023 MiTek Industries, Inc. Mon Jul 3 15:03:49 2023 Page 1

ID:NccLgzmhd_ldQzH3VGMNIRzOs0a-AJp?R4nzwUpTcZAC1q7lILOeV3OsPSs60lioJaz?lbe

CORPORATION OF THE CITY OF OSHAWA
TRUE COPY
OF PERMIT PLANS
Nov 04 2023
PER:
CHIEF BUILDING OFFICIAL

MHP 23021

Scale = 1:40.2

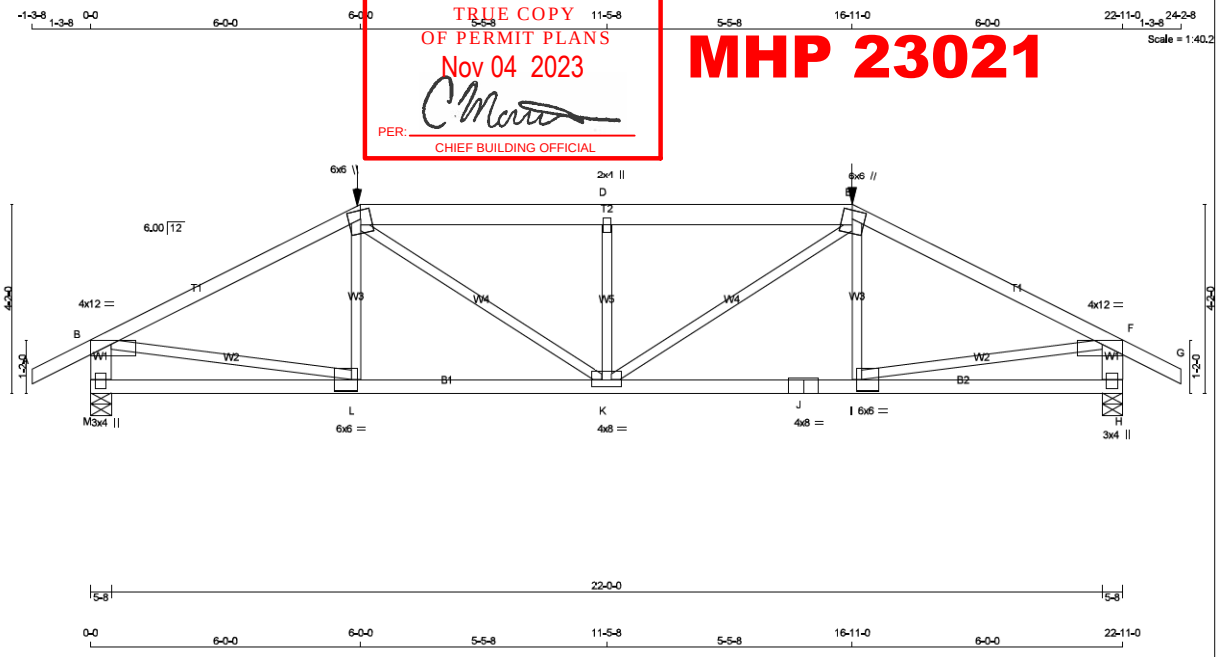

TOTAL WEIGHT = 95 lb [M]

LUMBER
N. L. G. A. RULES

CHORDS	SIZE		LUMBER	DESCR.
A - C	2x4	DRY	2100F 1.8E	SPF
C - E	2x6	DRY	No.2	SPF
E - G	2x4	DRY	2100F 1.8E	SPF
M - B	2x6	DRY	No.2	SPF
H - F	2x6	DRY	No.2	SPF
M - J	2x4	DRY	No.2	SPF
J - H	2x4	DRY	No.2	SPF
ALL WEBS EXCEPT	2x3	DRY	No.2	SPF

DRY: SEASONED LUMBER.

PLATES (table is in inches)

JT	TYPE	PLATES	W	LEN	Y	X
B	TMVW-p	MT20	4.0	12.0	1.00	5.50
C	TTWW+m	MT20	6.0	6.0	2.25	2.75
D	TMW+w	MT20	2.0	4.0		
E	TTWW+m	MT20	6.0	6.0	2.25	2.75
F	TMVW-p	MT20	4.0	12.0	1.00	5.50
H	BMV1+p	MT20	3.0	4.0	2.25	1.50
I	BMWW-t	MT20	6.0	6.0	3.00	1.50
J	BS-t	MT20	4.0	8.0		
K	BMWWW-t	MT20	4.0	8.0	1.75	4.00
L	BMWW-t	MT20	6.0	6.0	3.00	1.50
M	BMV1+p	MT20	3.0	4.0	2.25	1.50

DIMENSIONS, SUPPORTS AND LOADINGS SPECIFIED BY FABRICATOR TO BE VERIFIED BY BUILDING DESIGNER

BEARINGS

JT	FACTORED GROSS REACTION VERT	HORZ	MAXIMUM FACTORED GROSS REACTION DOWN	HORZ	UPLIFT	INPUT BRG	REQRD BRG
M	3039	0	3039	0	0	5-8	4-6
H	3039	0	3039	0	0	5-8	4-6

UNFACTORED REACTIONS

1ST LCASE MAX./MIN. COMPONENT REACTIONS

JT	COMBINED	SNOW	LIVE	PERM.LIVE	WIND	DEAD	SOIL
M	2123	1542 / 0	0 / 0	0 / 0	0 / 0	581 / 0	0 / 0
H	2123	1542 / 0	0 / 0	0 / 0	0 / 0	581 / 0	0 / 0

BEARING MATERIAL TO BE SPF NO.2 OR BETTER AT JOINT(S) M, H

BRACING
TOP CHORD TO BE SHEATHED OR MAX. PURLIN SPACING = 3.09 FT.
MAX. UNBRACED BOTTOM CHORD LENGTH = 10.00 FT OR RIGID CEILING DIRECTLY APPLIED.

ALL PITCH BREAKS AND PERIMETER CORNER JOINTS MUST BE LATERALLY RESTRAINED.

LOADING
TOTAL LOAD CASES: (4)

CHORDS

MEMB. FR-TO	MAX. FACTORED FORCE (LBS)	FACTORED VERT. LOAD (PLF) FROM	TO	LC1	MAX CSI (LC)	MAX. UNBRAC LENGTH
A- B	0 / 36	-119.4	-119.4	0.11 (1)	10.00	
B- C	-4244 / 0	-119.4	-119.4	0.84 (1)	3.37	
C- D	-5035 / 0	-225.2	-225.2	0.68 (1)	3.09	
D- E	-5035 / 0	-225.2	-225.2	0.68 (1)	3.09	
E- F	-4244 / 0	-119.4	-119.4	0.84 (1)	3.37	
F- G	0 / 36	-119.4	-119.4	0.11 (1)	10.00	
M- B	-2955 / 0	0.0	0.0	0.21 (1)	6.07	
H- F	-2955 / 0	0.0	0.0	0.21 (1)	6.07	
M- L	0 / 0	-34.4	-34.4	0.30 (4)	10.00	
L- K	0 / 3813	-34.4	-34.4	0.83 (1)	10.00	
K- J	0 / 3813	-34.4	-34.4	0.83 (1)	10.00	
J- I	0 / 3813	-34.4	-34.4	0.83 (1)	10.00	
I- H	0 / 0	-34.4	-34.4	0.30 (4)	10.00	

WEBS

MEMB. FR-TO	MAX. FACTORED FORCE (LBS)	MAX CSI (LC)
L- C	-330 / 106	0.09 (1)
C- K	0 / 1490	0.37 (1)
K- D	-1538 / 0	0.40 (1)
K- E	0 / 1490	0.37 (1)
I- E	-330 / 106	0.09 (1)
B- L	0 / 3844	0.95 (1)
I- F	0 / 3844	0.95 (1)

FACTORED CONCENTRATED LOADS (LBS)

JT	LOC.	LC1	MAX-	MAX+	FACE	DIR.	TYPE	HEEL	CONN.
C	6-0-0	-537	-537	—	FRONT	VERT	TOTAL	—	C1
E	16-11-0	-537	-537	—	FRONT	VERT	TOTAL	—	C1

CONNECTION REQUIREMENTS

1) **C1:** A SUITABLE HANGER/MECHANICAL CONNECTION IS REQUIRED.

DESIGN CRITERIA

SPECIFIED LOADS:

TOP CH.	LL	=	34.8	PSF
	DL	=	6.0	PSF
BOT CH.	LL	=	0.0	PSF
	DL	=	7.3	PSF
TOTAL LOAD		=	48.1	PSF

SPACING = 24.0 IN. C/C

LOADING IN FLAT SECTION BASED ON A SLOPE OF 2.00/12 MINIMUM

GIRDER TYPE: CPrimeHip
SIDE SETBACK = 6-0-0
END SETBACK = 6-0-0
END WALL WIDTH = 5-8
CORNER FRAMING TYPE: CONVENTIONAL
END JACK TYPE: CONVENTIONAL
APPLIED TO FRONT SIDE
- ADDT'L LOADS BASED ON 55 % OF GSL.

THIS TRUSS IS DESIGNED FOR RESIDENTIAL OR SMALL BUILDING REQUIREMENTS OF PART 9, NBCC 2015

THIS DESIGN COMPLIES WITH:
- PART 9 OF BCBC 2018 , NBC-2019AE
- PART 9 OF OBC 2012 (2019 AMENDMENT)
- CSA 086-14
- TPIC 2014

(55 % OF 48.1 P.S.F. G.S.L. PLUS 8.4 P.S.F. RAIN LOAD) EQUALS 34.8 P.S.F. SPECIFIED ROOF LIVE LOAD

ALLOWABLE DEFL.(LL)= L/360 (0.76")
CALCULATED VERT. DEFL.(LL) = L/ 999 (0.17")
ALLOWABLE DEFL.(TL)= L/360 (0.76")
CALCULATED VERT. DEFL.(TL) = L/ 941 (0.29")

CSI: TC=0.84/1.00 (B-C:1) , BC=0.83/1.00 (K-L:1) , WB=0.95/1.00 (B-L:1) , SSI=0.49/1.00 (C-D:1)

DOL LUMBER=1.00 NAIL=1.00 LS BEND=1.00 COMP=1.00 SHEAR=1.00 TENS= 1.00

COMPANION LIVE LOAD FACTOR = 1.00

AUTOSOLVE HEELS OFF

TRUSS PLATE MANUFACTURER IS NOT RESPONSIBLE FOR QUALITY CONTROL IN THE TRUSS MANUFACTURING PLANT .

NAIL VALUES

PLATE	GRIP(DRY) (PSI) MAX	MIN	SHEAR (PLI) MAX	MIN	SECTION (PLI) MAX	MIN
MT20	650	371	1747	788	1987	1873

PLATE PLACEMENT TOL. = 0.250 inches

PLATE ROTATION TOL. = 5.0 Deg.

JSI GRIP= 0.88 (I) (INPUT = 0.90)
JSI METAL= 0.87 (L) (INPUT = 1.00)

MODULUS ENGINEERING LTD.

LICENSED PROFESSIONAL ENGINEER
07/04/2023
D. A. SHERMAN
100123373
PROVINCE OF ONTARIO

REVIEW FOR TRUSS COMPONENT ONLY

NOTE: ALTERING THIS DOCUMENT VOIDS THE ENGINEERS SEAL

WARNING - Verify design parameters and READ NOTES ON THIS AND INCLUDED IN MODULUS ENGINEERING LTD. NOTES ME-TCD01 (VER 06/2017) BEFORE USE.
Design valid for use only with Mitek connectors. This design is based only upon parameters shown, and is for individual building components. Applicability of design parameters and proper incorporation of component is responsibility of building designer - not truss designer. Bracing shown is for lateral support of individual web members only. Additional temporary bracing to ensure stability during construction is the responsibility of the erector. Additional permanent bracing of the overall structure is the responsibility of the building designer. For general guidance regarding fabrication, quality control, storage, delivery, erection and bracing, consult
TPIC Appendix G - Minimum quality Manufacturing Criteria available from **www.tpic.ca** and **BCSI-CANADA (Building Component Safety Information) available** from TPI, 781 N. Lee Street, Suite 312, Alexandria, VA 22314 or www.sbcindustry.com

KOTT

JOB NAME	TRUSS NAME	QUANTITY	PLY	JOB DESC.	DRWG NO.
T-RIVER 1-2	G03	1	1	ZADORRA ESTATES INC TRUSS DESC.	ME23-5757-3

Kott, Uxbridge,ON

Version 8.630 S Mar 22 2023 MiTek Industries, Inc. Mon Jul 3 15:03:50 2023 Page 1
ID:NccLgzmhd_ldQzH3VGMNRzOs0a-eVNOeQnbhoxKDJObYeXIYxx3Ttd835GFyRMr1z?lbd

CORPORATION OF THE CITY OF OSHAWA
TRUE COPY
OF PERMIT PLANS
Nov 04 2023
PER:
CHIEF BUILDING OFFICIAL

MHP 23021

Scale = 1:26.6

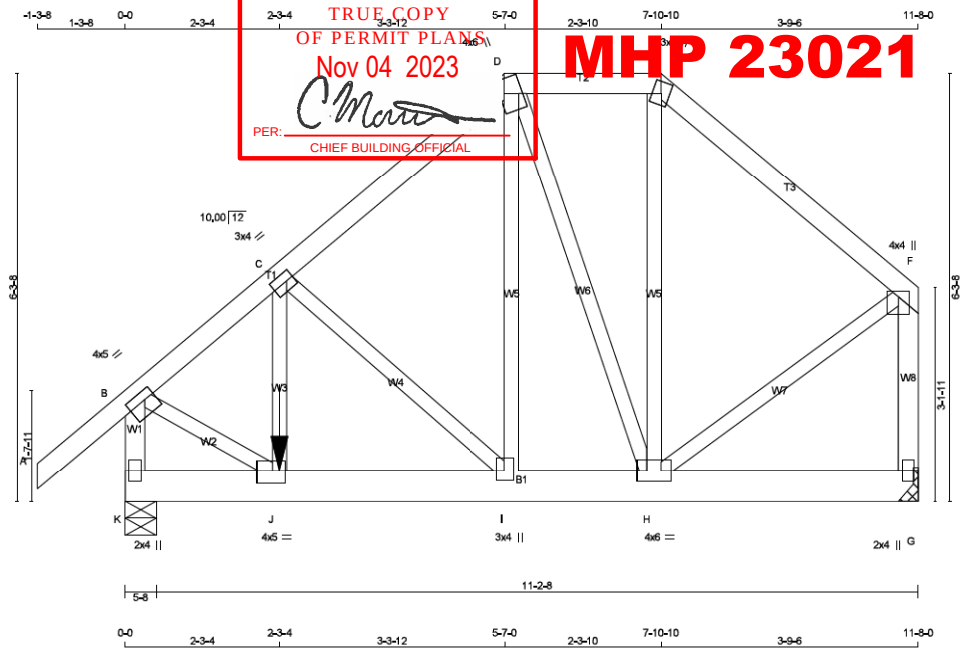

TOTAL WEIGHT = 69 lb
[M]

LUMBER
N. L. G. A. RULES

CHORDS	SIZE		LUMBER	DESCR.
A - D	2x4	DRY	No.2	SPF
D - E	2x4	DRY	No.2	SPF
E - F	2x4	DRY	No.2	SPF
K - B	2x4	DRY	No.2	SPF
G - F	2x4	DRY	No.2	SPF
K - G	2x6	DRY	No.2	SPF
ALL WEBS EXCEPT	2x3	DRY	No.2	SPF

DRY: SEASONED LUMBER.

PLATES (table is in inches)

JT	TYPE	PLATES	W	LEN	Y	X
B	TMVW-t	MT20	4.0	5.0	1.50	1.75
C	TMWW-t	MT20	3.0	4.0	1.50	1.25
D	TTWW+m	MT20	4.0	6.0	Edge	1.00
E	TTW+m	MT20	3.0	4.0		
F	TMVW+p	MT20	4.0	4.0	1.00	2.00
G	BMV1+p	MT20	2.0	4.0		
H	BMWWW-t	MT20	4.0	6.0		
I	BMWW+t	MT20	3.0	4.0	1.75	1.50
J	BMWW-t	MT20	4.0	5.0	2.25	2.25
K	BMV1+p	MT20	2.0	4.0		

Edge - INDICATES REFERENCE CORNER OF PLATE TOUCHES EDGE OF CHORD.

DIMENSIONS, SUPPORTS AND LOADINGS SPECIFIED BY FABRICATOR TO BE VERIFIED BY BUILDING DESIGNER

BEARINGS

JT	FACTORED GROSS REACTION VERT	HORZ	MAXIMUM GROSS REACTION DOWN	HORZ	UPLIFT	INPUT BRG IN-SX	REQRD BRG IN-SX
K	1838	0	1838	0	0	5-8	2-8
G	1013	0	1013	0	0	MECHANICAL	

A SUITABLE HANGER/MECHANICAL CONNECTION IS REQUIRED AT JOINT G. MINIMUM BEARING LENGTH AT JOINT G = 1-8.

UNFACTORED REACTIONS

1ST LCASE — MAX./MIN. COMPONENT REACTIONS

JT	COMBINED	SNOW	LIVE	PERM.LIVE	WIND	DEAD	SOIL
K	1282	942 / 0	0 / 0	0 / 0	0 / 0	340 / 0	0 / 0
G	708	512 / 0	0 / 0	0 / 0	0 / 0	196 / 0	0 / 0

BEARING MATERIAL TO BE SPF NO.2 OR BETTER AT JOINT(S) K

BRACING
TOP CHORD TO BE SHEATHED OR MAX. PURLIN SPACING = 5.24 FT.
MAX. UNBRACED BOTTOM CHORD LENGTH = 10.00 FT OR RIGID CEILING DIRECTLY APPLIED.

ALL PITCH BREAKS AND PERIMETER CORNER JOINTS MUST BE LATERALLY RESTRAINED.

LOADING
TOTAL LOAD CASES: (4)

CHORDS

MEMB. FR-TO	MAX. FACTORED FORCE (LBS)	FACTORED VERT. LOAD (PLF) FROM	TO	LC1	MAX CSI (LC)	MAX. UNBRAC LENGTH
A- B	0 / 53	-119.4	-119.4	0.18 (1)	10.00	
B- C	-1415 / 0	-119.4	-119.4	0.19 (1)	5.24	
C- D	-809 / 0	-119.4	-119.4	0.18 (1)	6.25	
D- E	-497 / 0	-119.4	-119.4	0.12 (1)	6.25	
E- F	-647 / 0	-119.4	-119.4	0.34 (1)	6.25	
K- B	-1776 / 0	0.0	0.0	0.20 (1)	6.22	
G- F	-989 / 0	0.0	0.0	0.17 (1)	7.81	
K- J	0 / 0	-18.2	-18.2	0.07 (1)	10.00	
J- I	0 / 1111	-18.2	-18.2	0.22 (1)	10.00	
I- H	0 / 612	-18.2	-18.2	0.11 (1)	10.00	
H- G	0 / 0	-18.2	-18.2	0.04 (4)	10.00	

WEBS

MEMB. FR-TO	MAX. FACTORED FORCE (LBS)	MAX CSI (LC)
J- C	0 / 468	0.12 (1)
C- I	-687 / 0	0.24 (1)
I- D	0 / 514	0.13 (1)
D- H	-331 / 0	0.23 (1)
H- E	0 / 64	0.02 (4)
B- J	0 / 1261	0.31 (1)
H- F	0 / 605	0.15 (1)

FACTORED CONCENTRATED LOADS (LBS)

JT	LOC.	LC1	MAX-	MAX+	FACE	DIR.	TYPE	HEEL	CONN.
J	2-3-4	-1080	-1080	—	FRONT	VERT	TOTAL	—	C1

CONNECTION REQUIREMENTS

1) **C1**: A SUITABLE HANGER/MECHANICAL CONNECTION IS REQUIRED.

DESIGN CRITERIA

*** SPECIAL LOADS ANALYSIS ***
GEOMETRY AND/OR BASIC LOADS CHANGED BY USER.
LOADS WERE DERIVED FROM USER INPUT
NO FURTHER MODIFICATIONS WERE MADE

SPECIFIED LOADS:

TOP CH.	LL	=	34.8	PSF
	DL	=	6.0	PSF
BOT CH.	LL	=	0.0	PSF
	DL	=	7.3	PSF
TOTAL LOAD		=	48.1	PSF

SPACING = 24.0 IN. C/C

LOADING IN FLAT SECTION BASED ON A SLOPE OF 2.00/12 MINIMUM

*** NON STANDARD GIRDER ***
ADDT'L USER-DEFINED LOADS APPLIED TO ALL LOAD CASES.

THIS TRUSS IS DESIGNED FOR RESIDENTIAL OR SMALL BUILDING REQUIREMENTS OF PART 9, NBCC 2015

THIS DESIGN COMPLIES WITH:
- PART 9 OF BCBC 2018 , NBC-2019AE
- PART 9 OF OBC 2012 (2019 AMENDMENT)
- CSA 086-14
- TPIC 2014

(55 % OF 48.1 P.S.F. G.S.L. PLUS 8.4 P.S.F. RAIN LOAD) EQUALS 34.8 P.S.F. SPECIFIED ROOF LIVE LOAD

ALLOWABLE DEFL.(LL)= L/360 (0.39")
CALCULATED VERT. DEFL.(LL) = L/ 999 (0.02")
ALLOWABLE DEFL.(TL)= L/360 (0.39")
CALCULATED VERT. DEFL.(TL) = L/ 999 (0.03")

CSI: TC=0.34/1.00 (E-F:1) , BC=0.22/1.00 (I-J:1) , WB=0.31/1.00 (B-J:1) , SSI=0.15/1.00 (C-D:1)

DOL LUMBER=1.00 NAIL=1.00 LS BEND=1.00 COMP=1.00 SHEAR=1.00 TENS= 1.00

COMPANION LIVE LOAD FACTOR = 1.00

TRUSS PLATE MANUFACTURER IS NOT RESPONSIBLE FOR QUALITY CONTROL IN THE TRUSS MANUFACTURING PLANT .

NAIL VALUES

PLATE	GRIP(DRY) (PSI) MAX	MIN	SHEAR (PLI) MAX	MIN	SECTION (PLI) MAX	MIN
MT20	650	371	1747	788	1987	1873

PLATE PLACEMENT TOL. = 0.250 inches

PLATE ROTATION TOL. = 5.0 Deg.

JSI GRIP= 0.90 (J) (INPUT = 0.90)
JSI METAL= 0.46 (B) (INPUT = 1.00)

MODULUS ENGINEERING LTD.

LICENSED PROFESSIONAL ENGINEER
07/04/2023
D. A. SHERMAN
100123373
PROVINCE OF ONTARIO

REVIEW FOR TRUSS COMPONENT ONLY

NOTE: ALTERING THIS DOCUMENT VOIDS THE ENGINEERS SEAL

WARNING - Verify design parameters and READ NOTES ON THIS AND INCLUDED IN MODULUS ENGINEERING LTD. NOTES ME-TCD01 (VER 06/2017) BEFORE USE.
Design valid for use only with Mitek connectors. This design is based only upon parameters shown, and is for individual building components. Applicability of design parameters and proper incorporation of component is responsibility of building designer - not truss designer. Bracing shown is for lateral support of individual web members only. Additional temporary bracing to ensure stability during construction is the responsibility of the erector. Additional permanent bracing of the overall structure is the responsibility of the building designer. For general guidance regarding fabrication, quality control, storage, delivery, erection and bracing, consult
TPIC Appendix G - Minimum quality Manufacturing Criteria available from **www.tpic.ca** and **BCSI-CANADA (Building Component Safety Information) available** from TPI, 781 N. Lee Street, Suite 312, Alexandria, VA 22314 or www.sbcindustry.com

KOTT

JOB NAME	TRUSS NAME	QUANTITY	PLY	JOB DESC.	DRWG NO.
T-RIVER 1-2	G04	1	1	ZADORRA ESTATES INC TRUSS DESC.	ME23-5757-4

Kott, Uxbridge,ON

Version 8.630 S Mar 22 2023 MiTek Industries, Inc. Mon Jul 3 15:03:51 2023 Page 1
ID:NcvLqzmhd_IdQzH3VGMNIRzOs0a-7hxmsmoDS53BrtKa9F9mqmU1ut9DtVTPUcBvNTz?lbc

CORPORATION OF THE CITY OF OSHAWA
TRUE COPY
OF PERMIT PLANS
Nov 04 2023
PER:
CHIEF BUILDING OFFICIAL

MHP 23021

Scale = 1:23.4

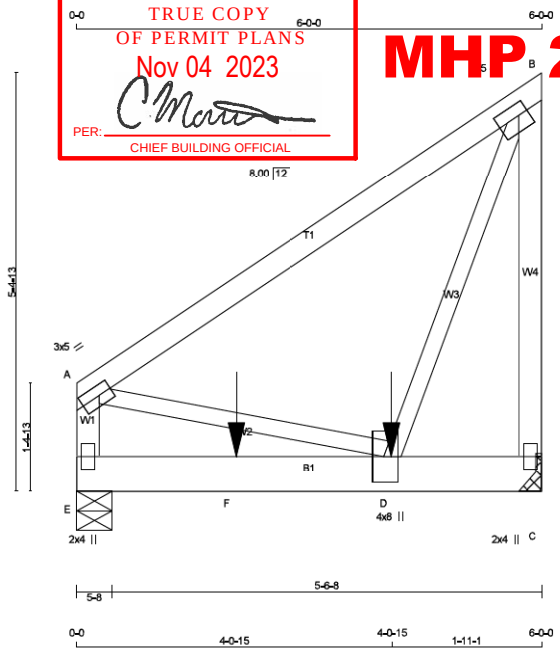

TOTAL WEIGHT = 32 lb [M]

LUMBER
N. L. G. A. RULES

CHORDS	SIZE		LUMBER	DESCR.
E - A	2x4	DRY	No.2	SPF
A - B	2x4	DRY	2100F 1.8E	SPF
C - B	2x4	DRY	No.2	SPF
E - C	2x6	DRY	No.2	SPF
ALL WEBS	2x3	DRY	No.2	SPF

DRY: SEASONED LUMBER.

PLATES (table is in inches)

JT	TYPE	PLATES	W	LEN	Y	X
A	TMVW-t	MT20	3.0	5.0	1.50	2.00
B	TMVW-t	MT20	4.0	5.0	1.75	1.50
C	BMV1+p	MT20	2.0	4.0		
D	BMWW+t	MT20	4.0	8.0	4.00	1.75
E	BMV1+p	MT20	2.0	4.0		

DIMENSIONS, SUPPORTS AND LOADINGS SPECIFIED BY FABRICATOR TO BE VERIFIED BY BUILDING DESIGNER

BEARINGS

JT	FACTORED GROSS REACTION VERT	HORZ	MAXIMUM GROSS REACTION DOWN	HORZ	UPLIFT	INPUT BRG	REQRD BRG
E	1160	0	1160	0	0	5-8	1-8
C	1323	0	1323	0	0	MECHANICAL	

A SUITABLE HANGER/MECHANICAL CONNECTION IS REQUIRED AT JOINT C. MINIMUM BEARING LENGTH AT JOINT C = 1-8.

UNFACTORED REACTIONS

1ST LCASE MAX./MIN. COMPONENT REACTIONS

JT	COMBINED	SNOW	LIVE	PERM.LIVE	WIND	DEAD	SOIL
E	811	587 / 0	0 / 0	0 / 0	0 / 0	224 / 0	0 / 0
C	924	669 / 0	0 / 0	0 / 0	0 / 0	256 / 0	0 / 0

BEARING MATERIAL TO BE SPF NO.2 OR BETTER AT JOINT(S) E

BRACING
TOP CHORD TO BE SHEATHED OR MAX. PURLIN SPACING = 6.25 FT.
MAX. UNBRACED BOTTOM CHORD LENGTH = 10.00 FT OR RIGID CEILING DIRECTLY APPLIED.

ALL PITCH BREAKS AND PERIMETER CORNER JOINTS MUST BE LATERALLY RESTRAINED.

LOADING
TOTAL LOAD CASES: (4)

CHORDS

MEMB. FR-TO	MAX. FACTORED FORCE (LBS)	FACTORED VERT. LOAD (PLF) FROM	TO	LC1	MAX CSI (LC)	MAX. UNBRAC LENGTH
E- A	-846 / 0	0.0	0.0	0.09 (1)	7.81	
A- B	-644 / 0	-119.4	-119.4	0.56 (1)	6.25	
C- B	-1393 / 0	0.0	0.0	0.65 (1)	6.86	
E- F	0 / 0	-18.2	-18.2	0.45 (1)	10.00	
F- D	0 / 0	-18.2	-18.2	0.45 (1)	10.00	
D- C	0 / 0	-18.2	-18.2	0.12 (1)	10.00	

WEBS

MEMB. FR-TO	MAX. FACTORED FORCE (LBS)	MAX CSI (LC)
A- D	0 / 551	0.14 (1)
D- B	0 / 1491	0.37 (1)

FACTORED CONCENTRATED LOADS (LBS)

JT	LOC.	LC1	MAX-	MAX+	FACE	DIR.	TYPE	HEEL	CONN.
D	4-0-12	-1013	-1013	—	FRONT	VERT	TOTAL	—	C1
F	2-0-12	-644	-644	—	FRONT	VERT	TOTAL	—	C1

CONNECTION REQUIREMENTS

1) **C1:** A SUITABLE HANGER/MECHANICAL CONNECTION IS REQUIRED.

DESIGN CRITERIA

*** SPECIAL LOADS ANALYSIS ***
GEOMETRY AND/OR BASIC LOADS CHANGED BY USER.
LOADS WERE DERIVED FROM USER INPUT
NO FURTHER MODIFICATIONS WERE MADE

SPECIFIED LOADS:

TOP CH.	LL	=	34.8	PSF
	DL	=	6.0	PSF
BOT CH.	LL	=	0.0	PSF
	DL	=	7.3	PSF
TOTAL LOAD		=	48.1	PSF

SPACING = 24.0 IN. C/C

*** NON STANDARD GIRDER ***
ADDT'L USER-DEFINED LOADS APPLIED TO ALL LOAD CASES.

THIS TRUSS IS DESIGNED FOR RESIDENTIAL OR SMALL BUILDING REQUIREMENTS OF PART 9, NBCC 2015

THIS DESIGN COMPLIES WITH:
- PART 9 OF BCBC 2018 , NBC-2019AE
- PART 9 OF OBC 2012 (2019 AMENDMENT)
- CSA 086-14
- TPIC 2014

(55 % OF 48.1 P.S.F. G.S.L. PLUS 8.4 P.S.F. RAIN LOAD) EQUALS 34.8 P.S.F. SPECIFIED ROOF LIVE LOAD

ALLOWABLE DEFL.(LL)= L/360 (0.20")
CALCULATED VERT. DEFL.(LL) = L/ 999 (0.03")
ALLOWABLE DEFL.(TL)= L/360 (0.20")
CALCULATED VERT. DEFL.(TL) = L/ 999 (0.06")

CSI: TC=0.65/1.00 (B-C:1) , BC=0.45/1.00 (D-E:1) , WB=0.37/1.00 (B-D:1) , SSI=0.27/1.00 (D-E:1)

DOL LUMBER=1.00 NAIL=1.00 LS BEND=1.00 COMP=1.00 SHEAR=1.00 TENS= 1.00

COMPANION LIVE LOAD FACTOR = 1.00

TRUSS PLATE MANUFACTURER IS NOT RESPONSIBLE FOR QUALITY CONTROL IN THE TRUSS MANUFACTURING PLANT .

NAIL VALUES

PLATE	GRIP(DRY) (PSI) MAX	MIN	SHEAR (PLI) MAX	MIN	SECTION (PLI) MAX	MIN
MT20	650	371	1747	788	1987	1873

PLATE PLACEMENT TOL. = 0.250 inches

PLATE ROTATION TOL. = 5.0 Deg.

JSI GRIP= 0.86 (D) (INPUT = 0.90)
JSI METAL= 0.32 (D) (INPUT = 1.00)

MODULUS ENGINEERING LTD.

LICENSED PROFESSIONAL ENGINEER
07/04/2023
D. A. SHERMAN
100123373
PROVINCE OF ONTARIO

REVIEW FOR TRUSS COMPONENT ONLY

NOTE: ALTERING THIS DOCUMENT VOIDS THE ENGINEERS SEAL

WARNING - Verify design parameters and READ NOTES ON THIS AND INCLUDED IN MODULUS ENGINEERING LTD. NOTES ME-TCD01 (VER 06/2017) BEFORE USE.
Design valid for use only with Mitek connectors. This design is based only upon parameters shown, and is for individual building components. Applicability of design parameters and proper incorporation of component is responsibility of building designer - not truss designer. Bracing shown is for lateral support of individual web members only. Additional temporary bracing to ensure stability during construction is the responsibility of the erector. Additional permanent bracing of the overall structure is the responsibility of the building designer. For general guidance regarding fabrication, quality control, storage, delivery, erection and bracing, consult
TPIC Appendix G - Minimum quality Manufacturing Criteria available from **www.tpic.ca** and **BCSI-CANADA (Building Component Safety Information) available** from TPI, 781 N. Lee Street, Suite 312, Alexandria, VA 22314 or www.sbcindustry.com

KOTT

JOB NAME	TRUSS NAME	QUANTITY	PLY	JOB DESC.	DRWG NO.
T-RIVER 1-2	G05	1	1	ZADORRA ESTATES INC TRUSS DESC.	ME23-5757-5

Kott, Uxbridge,ON

Version 8.630 S Mar 22 2023 MiTek Industries, Inc. Mon Jul 3 15:03:52 2023 Page 1
ID:NccLgzmhd_IdQzH3VGMNIRzOs0a-buV836prDPB2T0vnjzg?Nz0L_HUHc_YZiGwSvvz?lbb

CORPORATION OF THE CITY OF OSHAWA
TRUE COPY
OF PERMIT PLANS
Nov 04 2023
PER:
CHIEF BUILDING OFFICIAL

MHP 23021

Scale = 1:15.8

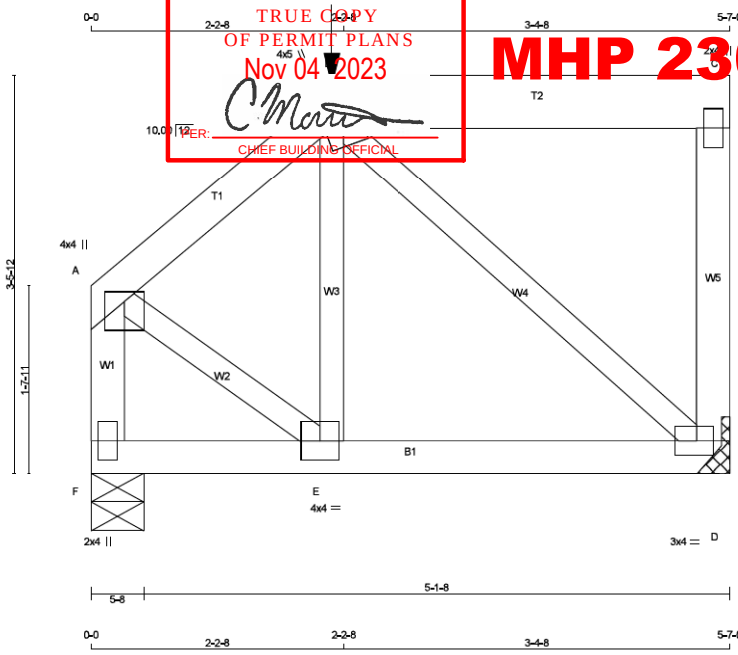

TOTAL WEIGHT = 28 lb.
[M]

LUMBER
N. L. G. A. RULES

CHORDS	SIZE		LUMBER	DESCR.
F - A	2x4	DRY	No.2	SPF
A - B	2x4	DRY	No.2	SPF
B - C	2x6	DRY	No.2	SPF
D - C	2x4	DRY	No.2	SPF
F - D	2x4	DRY	No.2	SPF
ALL WEBS	2x3	DRY	No.2	SPF

DRY: SEASONED LUMBER.

PLATES (table is in inches)

JT	TYPE	PLATES	W	LEN	Y	X
A	TMVW+p	MT20	4.0	4.0	1.00	2.00
B	TTWW+m	MT20	4.0	5.0	2.25	1.75
C	TMV+p	MT20	2.0	4.0		
D	BMVW1+t	MT20	3.0	4.0	1.50	1.75
E	BMWW+t	MT20	4.0	4.0		
F	BMV1+p	MT20	2.0	4.0		

DIMENSIONS, SUPPORTS AND LOADINGS SPECIFIED BY FABRICATOR TO BE VERIFIED BY BUILDING DESIGNER

BEARINGS

JT	FACTORED GROSS REACTION VERT	HORZ	MAXIMUM FACTORED GROSS REACTION DOWN	HORZ	UPLIFT	INPUT BRG	REQRD BRG
F	1097	0	1097	0	0	5-8	1-8
D	1081	0	1081	0	0	MECHANICAL	

A SUITABLE HANGER/MECHANICAL CONNECTION IS REQUIRED AT JOINT D. MINIMUM BEARING LENGTH AT JOINT D = 1-8.

UNFACTORED REACTIONS

1ST LCASE MAX./MIN. COMPONENT REACTIONS

JT	COMBINED	SNOW	LIVE	PERM.LIVE	WIND	DEAD	SOIL
F	766	557 / 0	0 / 0	0 / 0	0 / 0	209 / 0	0 / 0
D	755	548 / 0	0 / 0	0 / 0	0 / 0	207 / 0	0 / 0

BEARING MATERIAL TO BE SPF NO.2 OR BETTER AT JOINT(S) F

BRACING
TOP CHORD TO BE SHEATHED OR MAX. PURLIN SPACING = 6.25 FT.
MAX. UNBRACED BOTTOM CHORD LENGTH = 10.00 FT OR RIGID CEILING DIRECTLY APPLIED.

ALL PITCH BREAKS AND PERIMETER CORNER JOINTS MUST BE LATERALLY RESTRAINED.

LOADING
TOTAL LOAD CASES: (4)

CHORDS

MEMB. FR-TO	MAX. FACTORED FORCE (LBS)	FACTORED VERT. LOAD (PLF) FROM	TO	LC1 CSI (LC)	MAX UNBRAC LENGTH
F- A	-949 / 0	0.0	0.0	0.11 (1)	7.81
A- B	-733 / 0	-119.4	-119.4	0.12 (1)	6.25
B- C	0 / 0	-112.0	-112.0	0.12 (1)	10.00
D- C	-189 / 0	0.0	0.0	0.03 (1)	7.81
F- E	0 / 0	-269.5	-269.5	0.43 (1)	10.00
E- D	0 / 545	-269.5	-269.5	0.52 (1)	10.00

WEBS

MEMB. FR-TO	MAX. FACTORED FORCE (LBS)	MAX CSI (LC)
A- E	0 / 666	0.16 (1)
E- B	0 / 620	0.15 (1)
B- D	-743 / 0	0.25 (1)

FACTORED CONCENTRATED LOADS (LBS)

JT	LOC.	LC1	MAX-	MAX+	FACE	DIR.	TYPE	HEEL	CONN.
B	2-2-8	-31	-31	—	FRONT	VERT	TOTAL	—	C1

CONNECTION REQUIREMENTS

1) **C1:** A SUITABLE HANGER/MECHANICAL CONNECTION IS REQUIRED.

DESIGN CRITERIA

SPECIFIED LOADS:

TOP CH.	LL	=	34.8	PSF
	DL	=	6.0	PSF
BOT CH.	LL	=	0.0	PSF
	DL	=	7.3	PSF
TOTAL LOAD		=	48.1	PSF

SPACING = 24.0 IN. C/C

LOADING IN FLAT SECTION BASED ON A SLOPE OF 2.00/12 MINIMUM

GIRDER TYPE: CPrimeHip
LEFT SETBACK = 2-2-8
RIGHT SETBACK = 0-0
END SETBACK = 2-2-8
END WALL WIDTH = 5-8
CORNER FRAMING TYPE: CONVENTIONAL
END JACK TYPE: CONVENTIONAL
APPLIED TO FRONT SIDE
- ADDT'L LOADS BASED ON 55 % OF GSL.

GIRDER TYPE: CStdGirder
START DISTANCE = 0-0
START SPAN CARRIED = 9-4-0
END DISTANCE = 5-7-0
END SPAN CARRIED = 9-4-0
END WALL WIDTH = 0-0
APPLIED TO BACK SIDE OF BOTTOM CHORD.
- ADDT'L LOADS BASED ON 55 % OF GSL.

THIS TRUSS IS DESIGNED FOR RESIDENTIAL OR SMALL BUILDING REQUIREMENTS OF PART 9, NBCC 2015

THIS DESIGN COMPLIES WITH:
- PART 9 OF BCBC 2018 , NBC-2019AE
- PART 9 OF OBC 2012 (2019 AMENDMENT)
- CSA 086-14
- TPIC 2014

(55 % OF 48.1 P.S.F. G.S.L. PLUS 8.4 P.S.F. RAIN LOAD) EQUALS 34.8 P.S.F. SPECIFIED ROOF LIVE LOAD

ALLOWABLE DEFL.(LL)= L/360 (0.19")
CALCULATED VERT. DEFL.(LL) = L/ 999 (0.04")
ALLOWABLE DEFL.(TL)= L/360 (0.19")
CALCULATED VERT. DEFL.(TL) = L/ 999 (0.07")

CSI: TC=0.12/1.00 (B-C:1) , BC=0.52/1.00 (D-E:1) , WB=0.25/1.00 (B-D:1) , SSI=0.47/1.00 (D-E:1)

DOL LUMBER=1.00 NAIL=1.00 LS BEND=1.00 COMP=1.00 SHEAR=1.00 TENS= 1.00

COMPANION LIVE LOAD FACTOR = 1.00

TRUSS PLATE MANUFACTURER IS NOT RESPONSIBLE FOR QUALITY CONTROL IN THE TRUSS MANUFACTURING PLANT.

NAIL VALUES

PLATE	GRIP(DRY) (PSI) MAX	MIN	SHEAR (PLI) MAX	MIN	SECTION (PLI) MAX	MIN
MT20	650	371	1747	788	1987	1873

PLATE PLACEMENT TOL. = 0.250 inches

PLATE ROTATION TOL. = 5.0 Deg.

JSI GRIP= 0.78 (D) (INPUT = 0.90)
JSI METAL= 0.22 (E) (INPUT = 1.00)

MODULUS ENGINEERING LTD.

LICENSED PROFESSIONAL ENGINEER
07/04/2023
D. A. SHERMAN
100123373
PROVINCE OF ONTARIO

REVIEW FOR TRUSS COMPONENT ONLY

NOTE: ALTERING THIS DOCUMENT VOIDS THE ENGINEERS SEAL

WARNING - Verify design parameters and READ NOTES ON THIS AND INCLUDED IN MODULUS ENGINEERING LTD. NOTES ME-TCD01 (VER 06/2017) BEFORE USE.
Design valid for use only with Mitek connectors. This design is based only upon parameters shown, and is for individual building components. Applicability of design parameters and proper incorporation of component is responsibility of building designer - not truss designer. Bracing shown is for lateral support of individual web members only. Additional temporary bracing to ensure stability during construction is the responsibility of the erector. Additional permanent bracing of the overall structure is the responsibility of the building designer. For general guidance regarding fabrication, quality control, storage, delivery, erection and bracing, consult
TPIC Appendix G - Minimum quality Manufacturing Criteria available from **www.tpic.ca** and **BCSI-CANADA (Building Component Safety Information) available** from TPI, 781 N. Lee Street, Suite 312, Alexandria, VA 22314 or www.sbcindustry.com

KOTT

JOB NAME	TRUSS NAME	QUANTITY	PLY	JOB DESC.	DRWG NO.
T-RIVER 1-2	GE01	1	1	ZADORRA ESTATES INC TRUSS DESC.	ME23-5757-6

Kott, Uxbridge,ON

Version 8.630 S Mar 22 2023 MiTek Industries, Inc. Mon Jul 3 15:03:53 2023 Page 1
ID:NcqLqzmhd_IdQzH3VGMNIRzOs0a-343WHSqT_jJv4AUzGgCEvBZV?hxSLShixwg0SMz?Iba

CORPORATION OF THE CITY OF OSHAWA
TRUE COPY
OF PERMIT PLANS
Nov 04 2023
PER: C Mott
CHIEF BUILDING OFFICIAL

MHP 23021

Scale = 1:25.3

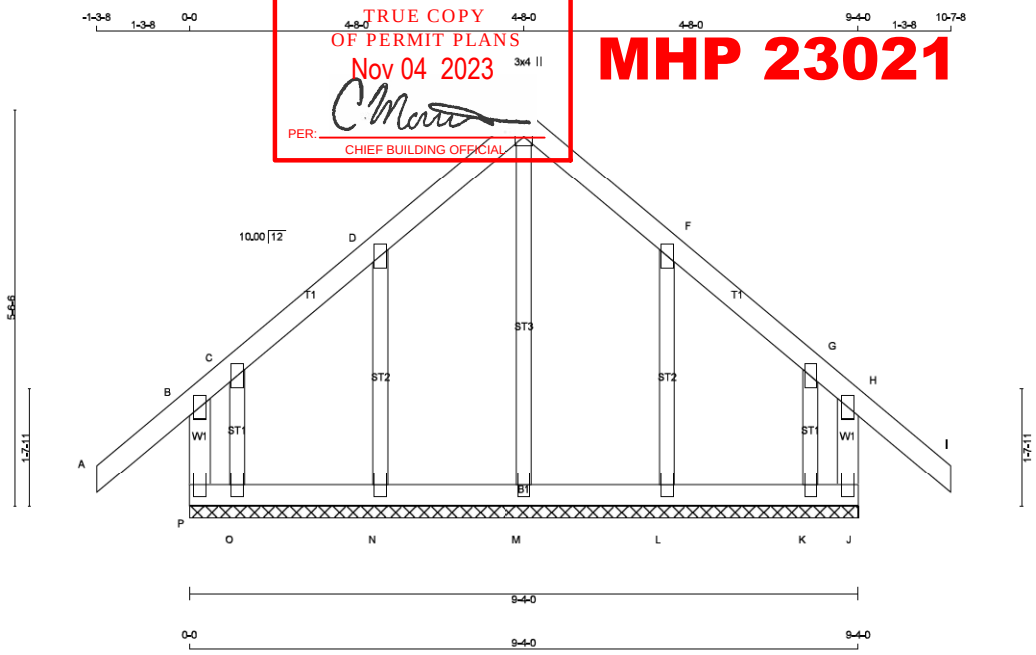

TOTAL WEIGHT = 44 lb [M]

LUMBER
N. L. G. A. RULES

CHORDS	SIZE		LUMBER	DESCR.
P - B	2x4	DRY	No.2	SPF
A - E	2x4	DRY	No.2	SPF
E - I	2x4	DRY	No.2	SPF
J - H	2x4	DRY	No.2	SPF
P - J	2x4	DRY	No.2	SPF
ALL WEBS	2x3	DRY	No.2	SPF
ALL GABLE WEBS	2x3	DRY	No.2	SPF

DRY: SEASONED LUMBER.

GABLE STUDS SPACED AT 2-0-0 OC.

PLATES (table is in inches)

JT	TYPE	PLATES	W	LEN	Y	X
B	TMV+p	MT20	2.0	4.0		
C, D, F, G						
C	TMW+w	MT20	2.0	4.0		
E	TTW+p	MT20	3.0	4.0	2.50	1.50
H	TMV+p	MT20	2.0	4.0		
J	BMV1+p	MT20	2.0	4.0		
K, L, M, N, O						
K	BMW1+w	MT20	2.0	4.0		
P	BMV1+p	MT20	2.0	4.0		

DIMENSIONS, SUPPORTS AND LOADINGS SPECIFIED BY FABRICATOR TO BE VERIFIED BY BUILDING DESIGNER

BEARINGS

THIS TRUSS DESIGNED FOR CONTINUOUS BEARINGS.

THIS TRUSS REQUIRES RIGID SHEATHING ON EXPOSED FACE.

BEARING MATERIAL TO BE SPF NO.2 OR BETTER AT JOINT(S)

BRACING
TOP CHORD TO BE SHEATHED OR MAX. PURLIN SPACING = 6.25 FT.
MAX. UNBRACED BOTTOM CHORD LENGTH = 6.25 FT OR RIGID CEILING DIRECTLY APPLIED.

ALL PITCH BREAKS AND PERIMETER CORNER JOINTS MUST BE LATERALLY RESTRAINED.

LOADING
TOTAL LOAD CASES: (4)

CHORDS

MEMB. FR-TO	MAX. FORCE (LBS)	FACTORED VERT. LOAD (PLF) FROM	TO	LC1	MAX CSI (LC)	MAX. UNBRAC LENGTH
P- B	-281 / 0	0.0	0.0	0.04	(1)	7.81
A- B	0 / 53	-119.4	-119.4	0.16	(1)	10.00
B- C	-36 / 0	-119.4	-119.4	0.11	(1)	6.25
C- D	0 / 37	-119.4	-119.4	0.07	(1)	10.00
D- E	0 / 37	-119.4	-119.4	0.07	(1)	10.00
E- F	0 / 37	-119.4	-119.4	0.07	(1)	10.00
F- G	0 / 37	-119.4	-119.4	0.07	(1)	10.00
G- H	-36 / 0	-119.4	-119.4	0.11	(1)	6.25
H- I	0 / 53	-119.4	-119.4	0.16	(1)	10.00
J- H	-281 / 0	0.0	0.0	0.04	(1)	7.81
P- O	-21 / 0	-18.2	-18.2	0.01	(4)	6.25
O- N	-24 / 0	-18.2	-18.2	0.02	(4)	6.25
N- M	-30 / 0	-18.2	-18.2	0.02	(4)	6.25
M- L	-30 / 0	-18.2	-18.2	0.02	(4)	6.25
L- K	-24 / 0	-18.2	-18.2	0.02	(4)	6.25
K- J	-21 / 0	-18.2	-18.2	0.01	(4)	6.25

WEBS

MEMB. FR-TO	MAX. FORCE (LBS)	MAX CSI (LC)
M- E	-294 / 0	0.13 (1)
N- D	-252 / 0	0.06 (1)
O- C	-43 / 0	0.01 (1)
L- F	-252 / 0	0.06 (1)
K- G	-43 / 0	0.01 (1)

DESIGN CRITERIA

SPECIFIED LOADS:

TOP CH.	LL	=	34.8	PSF
	DL	=	6.0	PSF
BOT CH.	LL	=	0.0	PSF
	DL	=	7.3	PSF
TOTAL LOAD		=	48.1	PSF

SPACING = 24.0 IN. C/C

THIS TRUSS IS DESIGNED FOR RESIDENTIAL OR SMALL BUILDING REQUIREMENTS OF PART 9, NBCC 2015

THIS DESIGN COMPLIES WITH:
- PART 9 OF BCBC 2018 , NBC-2019AE
- PART 9 OF OBC 2012 (2019 AMENDMENT)
- CSA 086-14
- TPIC 2014

DESIGN ASSUMPTIONS
-OVERHANG NOT TO BE ALTERED OR CUT OFF.

(55 % OF 48.1 P.S.F. G.S.L. PLUS 8.4 P.S.F. RAIN LOAD) EQUALS 34.8 P.S.F. SPECIFIED ROOF LIVE LOAD

CSI: TC=0.16/1.00 (A-B:1) , BC=0.02/1.00 (M-N:4) , WB=0.13/1.00 (E-M:1) , SSI=0.10/1.00 (A-B:1)

DOL LUMBER=1.00 NAIL=1.00 LS BEND=1.10 COMP=1.10 SHEAR=1.10 TENS= 1.10

COMPANION LIVE LOAD FACTOR = 1.00

TRUSS PLATE MANUFACTURER IS NOT RESPONSIBLE FOR QUALITY CONTROL IN THE TRUSS MANUFACTURING PLANT.

NAIL VALUES

PLATE	GRIP(DRY) (PSI) MAX	MIN	SHEAR (PLI) MAX	MIN	SECTION (PLI) MAX	MIN
MT20	650	371	1747	788	1987	1873

PLATE PLACEMENT TOL. = 0.250 inches

PLATE ROTATION TOL. = 5.0 Deg.

JSI GRIP= 0.37 (E) (INPUT = 0.90)
JSI METAL= 0.14 (B) (INPUT = 1.00)

MODULUS ENGINEERING LTD.

LICENSED PROFESSIONAL ENGINEER
07/04/2023
D. A. SHERMAN
100123373
PROVINCE OF ONTARIO

REVIEW FOR TRUSS COMPONENT ONLY

NOTE: ALTERING THIS DOCUMENT VOIDS THE ENGINEERS SEAL

WARNING - Verify design parameters and READ NOTES ON THIS AND INCLUDED IN MODULUS ENGINEERING LTD. NOTES ME-TCD01 (VER 06/2017) BEFORE USE.
Design valid for use only with Mitek connectors. This design is based only upon parameters shown, and is for individual building components. Applicability of design parameters and proper incorporation of component is responsibility of building designer - not truss designer. Bracing shown is for lateral support of individual web members only. Additional temporary bracing to ensure stability during construction is the responsibility of the erector. Additional permanent bracing of the overall structure is the responsibility of the building designer. For general guidance regarding fabrication, quality control, storage, delivery, erection and bracing, consult
TPIC Appendix G - Minimum quality Manufacturing Criteria available from **www.tpic.ca** and **BCSI-CANADA (Building Component Safety Information) available** from TPI, 781 N. Lee Street, Suite 312, Alexandria, VA 22314 or www.sbcindustry.com

KOTT

JOB NAME	TRUSS NAME	QUANTITY	PLY	JOB DESC.	DRWG NO.
T-RIVER 1-2	J01	7	1	ZADORRA ESTATES INC TRUSS DESC.	ME23-5757-7

Kott, Uxbridge,ON

Version 8.630 S Mar 22 2023 MiTek Industries, Inc. Mon Jul 3 15:03:55 2023 Page 1

ID:NccLqzmhd_ldQzH3VGMNIRzOs0a-?TAHh7rkVKZcKUeMO5Ei?cehbUb3pOD?OE97WEz?IbY

CORPORATION OF THE CITY OF OSHAWA
TRUE COPY
OF PERMIT PLANS
Nov 04 2023
PER:
CHIEF BUILDING OFFICIAL

MHP 23021

Scale = 1:18.4

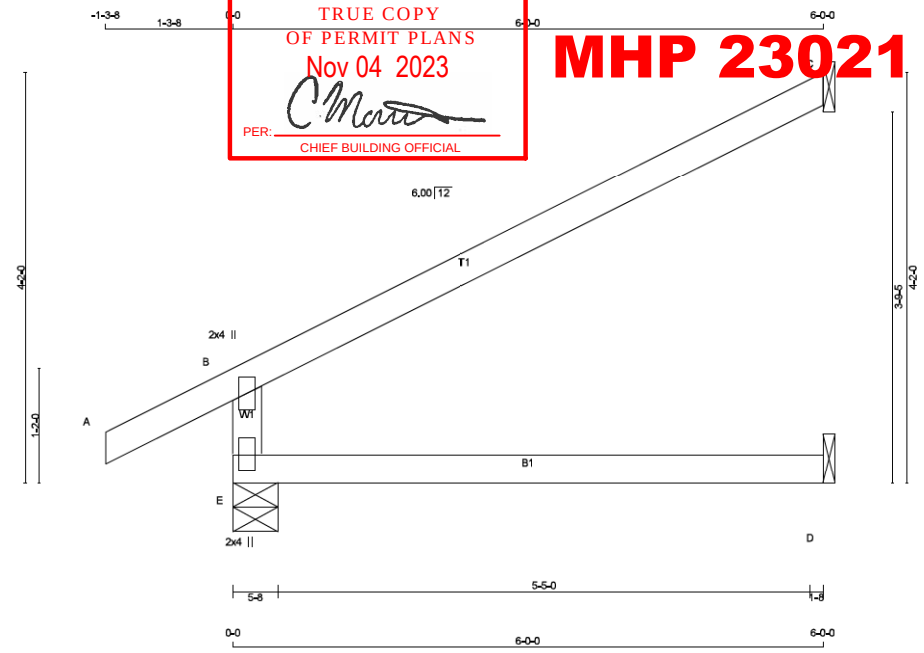

TOTAL WEIGHT = 7 X 17 = 120 lb

[M]

LUMBER
N. L. G. A. RULES

CHORDS	SIZE		LUMBER	DESCR.
E - B	2x4	DRY	No.2	SPF
A - C	2x4	DRY	No.2	SPF
E - D	2x4	DRY	No.2	SPF

DRY: SEASONED LUMBER.

PLATES (table is in inches)

JT	TYPE	PLATES	W	LEN	Y	X
B	TMV+p	MT20	2.0	4.0		
E	BMV1+p	MT20	2.0	4.0		

DIMENSIONS, SUPPORTS AND LOADINGS SPECIFIED BY FABRICATOR TO BE VERIFIED BY BUILDING DESIGNER

BEARINGS

JT	FACTORED GROSS REACTION VERT	HORZ	MAXIMUM GROSS REACTION DOWN	HORZ	UPLIFT	INPUT BRG IN-SX	REQRD BRG IN-SX
E	674	0	674	0	0	5-8	1-8
C	269	0	269	0	0	1-8	1-8
D	45	0	51	0	0	1-8	1-8

SEE MITEK STANDARD DETAIL MSD2015-H FOR CONNECTION TO JOINT(S) C , D

UNFACTORED REACTIONS

JT	1ST LCASE COMBINED	MAX./MIN. COMPONENT REACTIONS SNOW	LIVE	PERM.LIVE	WIND	DEAD	SOIL
E	468	355 / 0	0 / 0	0 / 0	0 / 0	113 / 0	0 / 0
C	184	157 / 0	0 / 0	0 / 0	0 / 0	27 / 0	0 / 0
D	36	0 / 0	0 / 0	0 / 0	0 / 0	36 / 0	0 / 0

BEARING MATERIAL TO BE SPF NO.2 OR BETTER AT JOINT(S) E

BRACING
TOP CHORD TO BE SHEATHED OR MAX. PURLIN SPACING = 6.25 FT.
MAX. UNBRACED BOTTOM CHORD LENGTH = 10.00 FT OR RIGID CEILING DIRECTLY APPLIED.

ALL PITCH BREAKS AND PERIMETER CORNER JOINTS MUST BE LATERALLY RESTRAINED.

LOADING
TOTAL LOAD CASES: (4)

CHORDS

MEMB. FR-TO	MAX. FACTORED FORCE (LBS)	FACTORED VERT. LOAD (PLF) FROM	TO	LC1 CSI (LC)	MAX UNBRAC LENGTH
E- B	-610 / 0	0.0	0.0	0.13 (4)	7.81
A- B	0 / 36	-119.4	-119.4	0.16 (1)	10.00
B- C	-40 / 0	-119.4	-119.4	0.73 (1)	6.25
E- D	0 / 0	-18.2	-18.2	0.13 (4)	10.00

WEBS

MEMB. FR-TO	MAX. FACTORED FORCE (LBS)	MAX CSI (LC)

DESIGN CRITERIA

SPECIFIED LOADS:

TOP CH.	LL	=	34.8	PSF
	DL	=	6.0	PSF
BOT CH.	LL	=	0.0	PSF
	DL	=	7.3	PSF
TOTAL LOAD		=	48.1	PSF

SPACING = 24.0 IN. C/C

THIS TRUSS IS DESIGNED FOR RESIDENTIAL OR SMALL BUILDING REQUIREMENTS OF PART 9, NBCC 2015

THIS DESIGN COMPLIES WITH:
- PART 9 OF BCBC 2018 , NBC-2019AE
- PART 9 OF OBC 2012 (2019 AMENDMENT)
- CSA 086-14
- TPIC 2014

DESIGN ASSUMPTIONS
-OVERHANG NOT TO BE ALTERED OR CUT OFF.

(55 % OF 48.1 P.S.F. G.S.L. PLUS 8.4 P.S.F. RAIN LOAD) EQUALS 34.8 P.S.F. SPECIFIED ROOF LIVE LOAD

ALLOWABLE DEFL.(LL)= L/360 (0.20")
CALCULATED VERT. DEFL.(LL) = L/ 999 (0.00")
ALLOWABLE DEFL.(TL)= L/360 (0.20")
CALCULATED VERT. DEFL.(TL) = L/ 999 (0.03")

CSI: TC=0.73/1.00 (B-C:1) , BC=0.13/1.00 (D-E:4) , WB=0.00/1.00 (n/a:0) , SSI=0.31/1.00 (B-C:1)

DOL LUMBER=1.00 NAIL=1.00 LS BEND=1.10 COMP=1.10 SHEAR=1.10 TENS= 1.10

COMPANION LIVE LOAD FACTOR = 1.00

TRUSS PLATE MANUFACTURER IS NOT RESPONSIBLE FOR QUALITY CONTROL IN THE TRUSS MANUFACTURING PLANT .

NAIL VALUES

PLATE	GRIP(DRY) (PSI) MAX	MIN	SHEAR (PLI) MAX	MIN	SECTION (PLI) MAX	MIN
MT20	650	371	1747	788	1987	1873

PLATE PLACEMENT TOL. = 0.250 inches

PLATE ROTATION TOL. = 5.0 Deg.

JSI GRIP= 0.34 (B) (INPUT = 0.90)
JSI METAL= 0.25 (B) (INPUT = 1.00)

MODULUS ENGINEERING LTD.

LICENSED PROFESSIONAL ENGINEER
07/04/2023
D. A. SHERMAN
100123373
PROVINCE OF ONTARIO

REVIEW FOR TRUSS COMPONENT ONLY

NOTE: ALTERING THIS DOCUMENT VOIDS THE ENGINEERS SEAL

WARNING - Verify design parameters and READ NOTES ON THIS AND INCLUDED IN MODULUS ENGINEERING LTD. NOTES ME-TCD01 (VER 06/2017) BEFORE USE.
Design valid for use only with Mitek connectors. This design is based only upon parameters shown, and is for individual building components. Applicability of design parameters and proper incorporation of component is responsibility of building designer - not truss designer. Bracing shown is for lateral support of individual web members only. Additional temporary bracing to ensure stability during construction is the responsibility of the erector. Additional permanent bracing of the overall structure is the responsibility of the building designer. For general guidance regarding fabrication, quality control, storage, delivery, erection and bracing, consult
TPIC Appendix G - Minimum quality Manufacturing Criteria available from **www.tpic.ca** and **BCSI-CANADA (Building Component Safety Information) available** from TPI, 781 N. Lee Street, Suite 312, Alexandria, VA 22314 or www.sbcindustry.com

KOTT

JOB NAME	TRUSS NAME	QUANTITY	PLY	JOB DESC.	DRWG NO.
T-RIVER 1-2	J01A	2	1	ZADORRA ESTATES INC TRUSS DESC.	ME23-5757-8

Kott, Uxbridge,ON

Version 8.630 S Mar 22 2023 MiTek Industries, Inc. Mon Jul 3 15:03:56 2023 Page 1
ID:NccLgzmhd_ldQzH3VGMNlRzOs0a-TfkfvTsMGehTxeDYxpbxXpBzyuxlYrS8duug2hz?lbX

CORPORATION OF THE CITY OF OSHAWA
TRUE COPY
OF PERMIT PLANS
Nov 04 2023
PER: C Morr
CHIEF BUILDING OFFICIAL

MHP 23021

Scale = 1:14.5

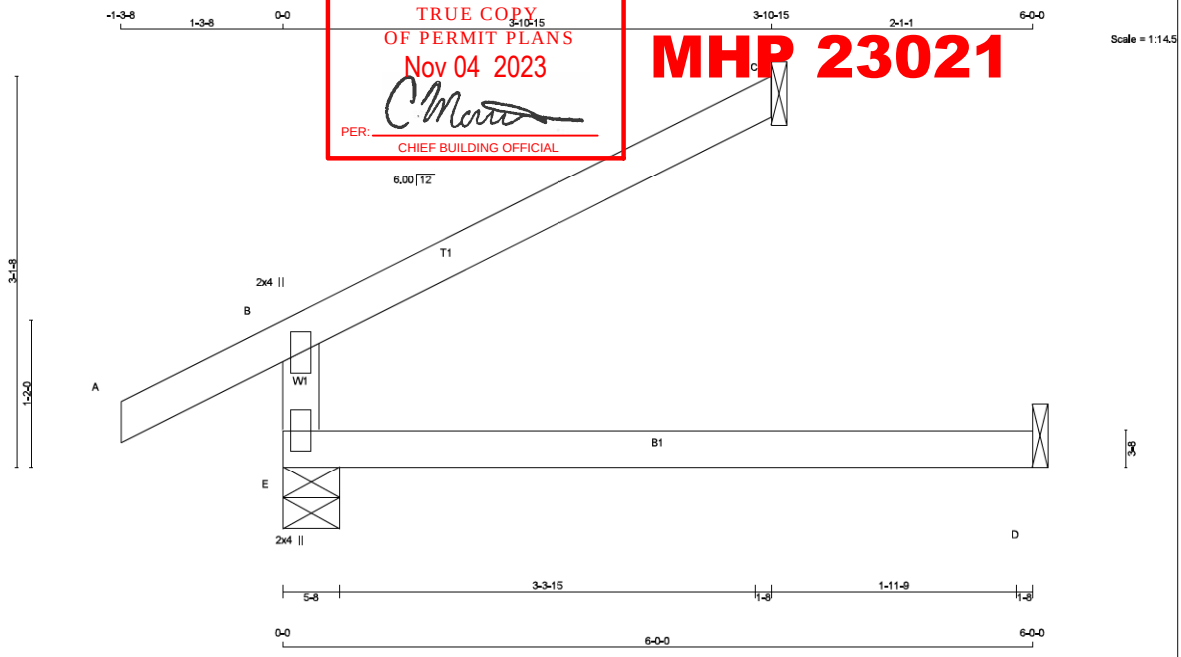

TOTAL WEIGHT = 2 X 14 = 29 lb.

LUMBER
N. L. G. A. RULES

CHORDS	SIZE		LUMBER	DESCR.
E - B	2x4	DRY	No.2	SPF
A - C	2x4	DRY	No.2	SPF
E - D	2x4	DRY	No.2	SPF

DRY: SEASONED LUMBER.

PLATES (table is in inches)

JT	TYPE	PLATES	W	LEN	Y	X
B	TMV+p	MT20	2.0	4.0		
E	BMV1+p	MT20	2.0	4.0		

DIMENSIONS, SUPPORTS AND LOADINGS SPECIFIED BY FABRICATOR TO BE VERIFIED BY BUILDING DESIGNER

BEARINGS

JT	FACTORED GROSS REACTION VERT	HORZ	MAXIMUM FACTORED GROSS REACTION DOWN	HORZ	UPLIFT	INPUT BRG	REQRD BRG
E	518	0	518	0	0	5-8	1-8
C	175	0	175	0	0	1-8	1-8
D	45	0	51	0	0	1-8	1-8

SEE MITEK STANDARD DETAIL MSD2015-H FOR CONNECTION TO JOINT(S) C , D

UNFACTORED REACTIONS

JT	1ST LCASE COMBINED	MAX./MIN. COMPONENT REACTIONS SNOW	LIVE	PERM.LIVE	WIND	DEAD	SOIL
E	362	265 / 0	0 / 0	0 / 0	0 / 0	97 / 0	0 / 0
C	120	102 / 0	0 / 0	0 / 0	0 / 0	18 / 0	0 / 0
D	36	0 / 0	0 / 0	0 / 0	0 / 0	36 / 0	0 / 0

BEARING MATERIAL TO BE SPF NO.2 OR BETTER AT JOINT(S) E, C

BRACING
TOP CHORD TO BE SHEATHED OR MAX. PURLIN SPACING = 6.25 FT.
MAX. UNBRACED BOTTOM CHORD LENGTH = 10.00 FT OR RIGID CEILING DIRECTLY APPLIED.

ALL PITCH BREAKS AND PERIMETER CORNER JOINTS MUST BE LATERALLY RESTRAINED.

LOADING
TOTAL LOAD CASES: (4)

CHORDS

MEMB. FR-TO	MAX. FACTORED FORCE (LBS)	FACTORED VERT. LOAD LC1 (PLF) FROM	TO	MAX CSI (LC)	MAX. UNBRAC LENGTH
E- B	-454 / 0	0.0	0.0	0.13 (4)	7.81
A- B	0 / 36	-119.4	-119.4	0.16 (1)	10.00
B- C	-26 / 0	-119.4	-119.4	0.31 (1)	6.25
E- D	0 / 0	-18.2	-18.2	0.13 (4)	10.00

WEBS

MEMB. FR-TO	MAX. FACTORED FORCE (LBS)	MAX CSI (LC)

DESIGN CRITERIA

SPECIFIED LOADS:

TOP CH.	LL	=	34.8	PSF
	DL	=	6.0	PSF
BOT CH.	LL	=	0.0	PSF
	DL	=	7.3	PSF
TOTAL LOAD		=	48.1	PSF

SPACING = 24.0 IN. C/C

THIS TRUSS IS DESIGNED FOR RESIDENTIAL OR SMALL BUILDING REQUIREMENTS OF PART 9, NBCC 2015

THIS DESIGN COMPLIES WITH:
- PART 9 OF BCBC 2018 , NBC-2019AE
- PART 9 OF OBC 2012 (2019 AMENDMENT)
- CSA 086-14
- TPIC 2014

DESIGN ASSUMPTIONS
-OVERHANG NOT TO BE ALTERED OR CUT OFF.

(55 % OF 48.1 P.S.F. G.S.L. PLUS 8.4 P.S.F. RAIN LOAD) EQUALS 34.8 P.S.F. SPECIFIED ROOF LIVE LOAD

ALLOWABLE DEFL.(LL)= L/360 (0.20")
CALCULATED VERT. DEFL.(LL) = L/ 999 (0.00")
ALLOWABLE DEFL.(TL)= L/360 (0.20")
CALCULATED VERT. DEFL.(TL) = L/ 999 (0.03")

CSI: TC=0.31/1.00 (B-C:1) , BC=0.13/1.00 (D-E:4) , WB=0.00/1.00 (n/a:0) , SSI=0.20/1.00 (B-C:1)

DOL LUMBER=1.00 NAIL=1.00 LS BEND=1.10 COMP=1.10 SHEAR=1.10 TENS= 1.10

COMPANION LIVE LOAD FACTOR = 1.00

TRUSS PLATE MANUFACTURER IS NOT RESPONSIBLE FOR QUALITY CONTROL IN THE TRUSS MANUFACTURING PLANT .

NAIL VALUES

PLATE	GRIP(DRY) (PSI) MAX	MIN	SHEAR (PLI) MAX	MIN	SECTION (PLI) MAX	MIN
MT20	650	371	1747	788	1987	1873

PLATE PLACEMENT TOL. = 0.250 inches

PLATE ROTATION TOL. = 5.0 Deg.

JSI GRIP= 0.25 (B) (INPUT = 0.90)
JSI METAL= 0.19 (B) (INPUT = 1.00)

MODULUS ENGINEERING LTD.

LICENSED PROFESSIONAL ENGINEER
07/04/2023
D. A. SHERMAN
100123373
PROVINCE OF ONTARIO

REVIEW FOR TRUSS COMPONENT ONLY

NOTE: ALTERING THIS DOCUMENT VOIDS THE ENGINEERS SEAL

WARNING - Verify design parameters and READ NOTES ON THIS AND INCLUDED IN MODULUS ENGINEERING LTD. NOTES ME-TCD01 (VER 06/2017) BEFORE USE.
Design valid for use only with Mitek connectors. This design is based only upon parameters shown, and is for individual building components. Applicability of design parameters and proper incorporation of component is responsibility of building designer - not truss designer. Bracing shown is for lateral support of individual web members only. Additional temporary bracing to ensure stability during construction is the responsibility of the erector. Additional permanent bracing of the overall structure is the responsibility of the building designer. For general guidance regarding fabrication, quality control, storage, delivery, erection and bracing, consult
TPIC Appendix G - Minimum quality Manufacturing Criteria available from **www.tpic.ca** and **BCSI-CANADA (Building Component Safety Information) available** from TPI, 781 N. Lee Street, Suite 312, Alexandria, VA 22314 or www.sbcindustry.com

KOTT

JOB NAME	TRUSS NAME	QUANTITY	PLY	JOB DESC.	DRWG NO.
T-RIVER 1-2	J01B	2	1	ZADORRA ESTATES INC TRUSS DESC.	ME23-5757-9

Kott, Uxbridge,ON

Version 8.630 S Mar 22 2023 MiTek Industries, Inc. Mon Jul 3 15:03:58 2023 Page 1

ID:NccLgzmhd_ldQzH3VGMNlRzOs0a-P2sPK9ucoFxBBxMx3DnPcEGLtidm0lyR5CNn7Zz?lbV

CORPORATION OF THE CITY OF OSHAWA
TRUE COPY
OF PERMIT PLANS
Nov 04 2023
PER: C Mott
CHIEF BUILDING OFFICIAL

MHP 23021

Scale = 1:13.6

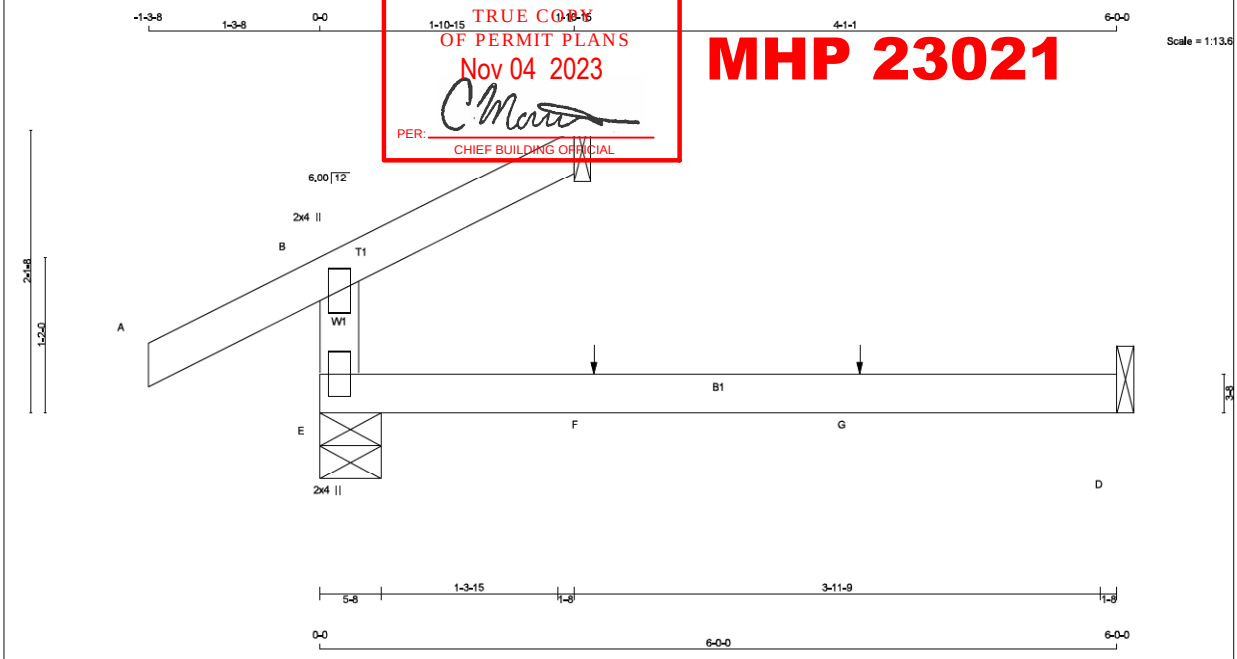

TOTAL WEIGHT = 2 X 12 = 24 lb [M]

LUMBER
N. L. G. A. RULES

CHORDS	SIZE		LUMBER	DESCR.
E - B	2x4	DRY	No.2	SPF
A - C	2x4	DRY	No.2	SPF
E - D	2x4	DRY	No.2	SPF

DRY: SEASONED LUMBER.

PLATES (table is in inches)

JT	TYPE	PLATES	W	LEN	Y	X
B	TMV+p	MT20	2.0	4.0		
E	BMV1+p	MT20	2.0	4.0		

DIMENSIONS, SUPPORTS AND LOADINGS SPECIFIED BY FABRICATOR TO BE VERIFIED BY BUILDING DESIGNER

BEARINGS

JT	FACTORED GROSS REACTION VERT	HORZ	MAXIMUM FACTORED GROSS REACTION DOWN	HORZ	UPLIFT	INPUT BRG IN-SX	REQRD BRG IN-SX
E	368	0	368	0	0	5-8	1-8
C	86	0	86	0	0	1-8	1-8
D	45	0	51	0	0	1-8	1-8

SEE MITEK STANDARD DETAIL MSD2015-H FOR CONNECTION TO JOINT(S) C , D

UNFACTORED REACTIONS

JT	1ST LCASE COMBINED	MAX./MIN. COMPONENT REACTIONS SNOW	LIVE	PERM.LIVE	WIND	DEAD	SOIL
E	259	177 / 0	0 / 0	0 / 0	0 / 0	82 / 0	0 / 0
C	59	50 / 0	0 / 0	0 / 0	0 / 0	9 / 0	0 / 0
D	36	0 / 0	0 / 0	0 / 0	0 / 0	36 / 0	0 / 0

BEARING MATERIAL TO BE SPF NO.2 OR BETTER AT JOINT(S) E, C

BRACING
TOP CHORD TO BE SHEATHED OR MAX. PURLIN SPACING = 6.25 FT.
MAX. UNBRACED BOTTOM CHORD LENGTH = 10.00 FT OR RIGID CEILING DIRECTLY APPLIED.

ALL PITCH BREAKS AND PERIMETER CORNER JOINTS MUST BE LATERALLY RESTRAINED.

LOADING
TOTAL LOAD CASES: (4)

CHORDS

MEMB. FR-TO	MAX. FACTORED FORCE (LBS)	FACTORED VERT. LOAD (PLF) FROM	TO	LC1	MAX CSI (LC)	MAX. UNBRAC LENGTH
E- B	-304 / 0	0.0	0.0	0.13 (4)	7.81	
A- B	0 / 36	-119.4	-119.4	0.16 (1)	10.00	
B- C	-12 / 0	-119.4	-119.4	0.07 (1)	6.25	
E- F	0 / 0	-18.2	-18.2	0.13 (4)	10.00	
F- G	0 / 0	-18.2	-18.2	0.13 (4)	10.00	
G- D	0 / 0	-18.2	-18.2	0.13 (4)	10.00	

WEBS

MEMB. FR-TO	MAX. FACTORED FORCE (LBS)	MAX CSI (LC)

FACTORED CONCENTRATED LOADS (LBS)

JT	LOC.	LC1	MAX-	MAX+	FACE	DIR.	TYPE	HEEL	CONN.
F	2-0-12	1	1	—	FRONT	VERT	TOTAL	—	C1
G	4-0-12	1	1	—	FRONT	VERT	TOTAL	—	C1

CONNECTION REQUIREMENTS

1) **C1:** A SUITABLE HANGER/MECHANICAL CONNECTION IS REQUIRED.

DESIGN CRITERIA

SPECIFIED LOADS:

TOP CH.	LL	=	34.8	PSF
	DL	=	6.0	PSF
BOT CH.	LL	=	0.0	PSF
	DL	=	7.3	PSF
TOTAL LOAD		=	48.1	PSF

SPACING = 24.0 IN. C/C

THIS TRUSS IS DESIGNED FOR RESIDENTIAL OR SMALL BUILDING REQUIREMENTS OF PART 9, NBCC 2015

THIS DESIGN COMPLIES WITH:
- PART 9 OF BCBC 2018 , NBC-2019AE
- PART 9 OF OBC 2012 (2019 AMENDMENT)
- CSA 086-14
- TPIC 2014

DESIGN ASSUMPTIONS
-OVERHANG NOT TO BE ALTERED OR CUT OFF.

(55 % OF 48.1 P.S.F. G.S.L. PLUS 8.4 P.S.F. RAIN LOAD) EQUALS 34.8 P.S.F. SPECIFIED ROOF LIVE LOAD

ALLOWABLE DEFL.(LL)= L/360 (0.20")
CALCULATED VERT. DEFL.(LL) = L/ 999 (0.00")
ALLOWABLE DEFL.(TL)= L/360 (0.20")
CALCULATED VERT. DEFL.(TL) = L/ 999 (0.03")

CSI: TC=0.16/1.00 (A-B:1) , BC=0.13/1.00 (D-E:4) , WB=0.00/1.00 (n/a:0) , SSI=0.11/1.00 (A-B:1)

DOL LUMBER=1.00 NAIL=1.00 LS BEND=1.10 COMP=1.10 SHEAR=1.10 TENS= 1.10

COMPANION LIVE LOAD FACTOR = 1.00

TRUSS PLATE MANUFACTURER IS NOT RESPONSIBLE FOR QUALITY CONTROL IN THE TRUSS MANUFACTURING PLANT .

NAIL VALUES

PLATE	GRIP(DRY) (PSI) MAX	MIN	SHEAR (PLI) MAX	MIN	SECTION (PLI) MAX	MIN
MT20	650	371	1747	788	1987	1873

PLATE PLACEMENT TOL. = 0.250 inches

PLATE ROTATION TOL. = 5.0 Deg.

JSI GRIP= 0.17 (B) (INPUT = 0.90)
JSI METAL= 0.13 (B) (INPUT = 1.00)

MODULUS ENGINEERING LTD.

LICENSED PROFESSIONAL ENGINEER
07/04/2023
D. A. SHERMAN
100123373
PROVINCE OF ONTARIO

REVIEW FOR TRUSS COMPONENT ONLY

NOTE: ALTERING THIS DOCUMENT VOIDS THE ENGINEERS SEAL

WARNING - Verify design parameters and READ NOTES ON THIS AND INCLUDED IN MODULUS ENGINEERING LTD. NOTES ME-TCD01 (VER 06/2017) BEFORE USE.
Design valid for use only with Mitek connectors. This design is based only upon parameters shown, and is for individual building components. Applicability of design parameters and proper incorporation of component is responsibility of building designer - not truss designer. Bracing shown is for lateral support of individual web members only. Additional temporary bracing to ensure stability during construction is the responsibility of the erector. Additional permanent bracing of the overall structure is the responsibility of the building designer. For general guidance regarding fabrication, quality control, storage, delivery, erection and bracing, consult
TPIC Appendix G - Minimum quality Manufacturing Criteria available from **www.tpic.ca** and **BCSI-CANADA (Building Component Safety Information) available** from TPI, 781 N. Lee Street, Suite 312, Alexandria, VA 22314 or www.sbcindustry.com

KOTT

JOB NAME	TRUSS NAME	QUANTITY	PLY	JOB DESC.	DRWG NO.
T-RIVER 1-2	J01C	2	1	ZADORRA ESTATES INC TRUSS DESC.	ME23-5757-10

Kott, Uxbridge,ON

Version 8.630 S Mar 22 2023 MiTek Industries, Inc. Mon Jul 3 15:04:00 2023 Page 1
ID:1ccLgzmhd_ldQzH3VGMNlRzOs0a-MQ_AlrvsKsBvQFWJAeqtifMfyVK4UfSkYWstBSz?lbT

CORPORATION OF THE CITY OF OSHAWA
TRUE COPY
OF PERMIT PLANS
Nov 04 2023
PER:
CHIEF BUILDING OFFICIAL

MHP 23021

Scale = 1:14.7

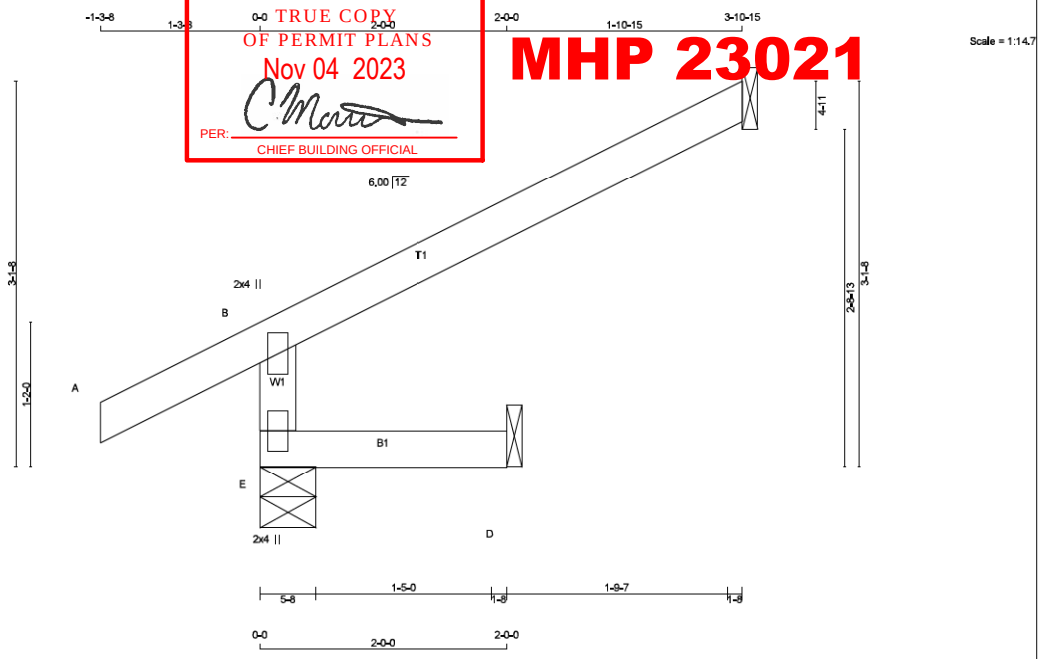

TOTAL WEIGHT = 2 X 10 = 20 lb

LUMBER
N. L. G. A. RULES

CHORDS	SIZE		LUMBER	DESCR.
E - B	2x4	DRY	No.2	SPF
A - C	2x4	DRY	No.2	SPF
E - D	2x4	DRY	No.2	SPF

DRY: SEASONED LUMBER.

PLATES (table is in inches)

JT	TYPE	PLATES	W	LEN	Y	X
B	TMV+p	MT20	2.0	4.0		
E	BMV1+p	MT20	2.0	4.0		

DIMENSIONS, SUPPORTS AND LOADINGS SPECIFIED BY FABRICATOR TO BE VERIFIED BY BUILDING DESIGNER

BEARINGS

JT	FACTORED GROSS REACTION VERT	HORZ	MAXIMUM FACTORED GROSS REACTION DOWN	HORZ	UPLIFT	INPUT BRG	REQRD BRG
E	474	0	474	0	0	5-8	1-8
C	175	0	175	0	0	1-8	1-8
D	16	0	18	0	0	1-8	1-8

SEE MITEK STANDARD DETAIL MSD2015-H FOR CONNECTION TO JOINT(S) C , D

UNFACTORED REACTIONS

MAX./MIN. COMPONENT REACTIONS

JT	1ST LCASE COMBINED	SNOW	LIVE	PERM.LIVE	WIND	DEAD	SOIL
E	326	265 / 0	0 / 0	0 / 0	0 / 0	62 / 0	0 / 0
C	120	102 / 0	0 / 0	0 / 0	0 / 0	18 / 0	0 / 0
D	13	0 / 0	0 / 0	0 / 0	0 / 0	13 / 0	0 / 0

BEARING MATERIAL TO BE SPF NO.2 OR BETTER AT JOINT(S) E

BRACING
TOP CHORD TO BE SHEATHED OR MAX. PURLIN SPACING = 6.25 FT.
MAX. UNBRACED BOTTOM CHORD LENGTH = 10.00 FT OR RIGID CEILING DIRECTLY APPLIED.

ALL PITCH BREAKS AND PERIMETER CORNER JOINTS MUST BE LATERALLY RESTRAINED.

LOADING
TOTAL LOAD CASES: (5)

CHORDS

MEMB. FR-TO	MAX. FACTORED FORCE (LBS)	FACTORED VERT. LOAD (PLF) FROM	TO	LC1	MAX CSI (LC)	MAX. UNBRAC LENGTH
E- B	-454 / 0	0.0	0.0	0.01 (4)		7.81
A- B	0 / 36	-119.4	-119.4	0.16 (1)		10.00
B- C	-26 / 0	-119.4	-119.4	0.31 (1)		6.25
E- D	0 / 0	-18.2	-18.2	0.02 (4)		10.00

WEBS

MEMB. FR-TO	MAX. FACTORED FORCE (LBS)	MAX CSI (LC)

CANTILEVER ANALYSIS HAS BEEN CONSIDERED IN THIS DESIGN

PATTERN-LOADING CHECK APPLIED TO THIS TRUSS.

DESIGN CRITERIA

SPECIFIED LOADS:

TOP CH.	LL	=	34.8	PSF
	DL	=	6.0	PSF
BOT CH.	LL	=	0.0	PSF
	DL	=	7.3	PSF
TOTAL LOAD		=	48.1	PSF

SPACING = 24.0 IN. C/C

THIS TRUSS IS DESIGNED FOR RESIDENTIAL OR SMALL BUILDING REQUIREMENTS OF PART 9, NBCC 2015

THIS DESIGN COMPLIES WITH:
- PART 9 OF BCBC 2018 , NBC-2019AE
- PART 9 OF OBC 2012 (2019 AMENDMENT)
- CSA 086-14
- TPIC 2014

DESIGN ASSUMPTIONS
-OVERHANG NOT TO BE ALTERED OR CUT OFF.

(55 % OF 48.1 P.S.F. G.S.L. PLUS 8.4 P.S.F. RAIN LOAD) EQUALS 34.8 P.S.F. SPECIFIED ROOF LIVE LOAD

ALLOWABLE DEFL.(LL)= L/360 (0.19")
CALCULATED VERT. DEFL.(LL) = L/ 999 (0.00")
ALLOWABLE DEFL.(TL)= L/360 (0.19")
CALCULATED VERT. DEFL.(TL) = L/ 999 (0.00")

CSI: TC=0.31/1.00 (B-C:1) , BC=0.02/1.00 (D-E:4) , WB=0.00/1.00 (n/a:0) , SSI=0.20/1.00 (B-C:1)

DOL LUMBER=1.00 NAIL=1.00 LS BEND=1.10 COMP=1.10 SHEAR=1.10 TENS= 1.10

COMPANION LIVE LOAD FACTOR = 1.00

TRUSS PLATE MANUFACTURER IS NOT RESPONSIBLE FOR QUALITY CONTROL IN THE TRUSS MANUFACTURING PLANT .

NAIL VALUES

PLATE	GRIP(DRY) (PSI) MAX	MIN	SHEAR (PLI) MAX	MIN	SECTION (PLI) MAX	MIN
MT20	650	371	1747	788	1987	1873

PLATE PLACEMENT TOL. = 0.250 inches

PLATE ROTATION TOL. = 5.0 Deg.

JSI GRIP= 0.25 (B) (INPUT = 0.90)
JSI METAL= 0.19 (B) (INPUT = 1.00)

MODULUS ENGINEERING LTD.

LICENSED PROFESSIONAL ENGINEER
07/04/2023
D. A. SHERMAN
100123373
PROVINCE OF ONTARIO

REVIEW FOR TRUSS COMPONENT ONLY

NOTE: ALTERING THIS DOCUMENT VOIDS THE ENGINEERS SEAL

WARNING - Verify design parameters and READ NOTES ON THIS AND INCLUDED IN MODULUS ENGINEERING LTD. NOTES ME-TCD01 (VER 06/2017) BEFORE USE.
Design valid for use only with Mitek connectors. This design is based only upon parameters shown, and is for individual building components. Applicability of design parameters and proper incorporation of component is responsibility of building designer - not truss designer. Bracing shown is for lateral support of individual web members only. Additional temporary bracing to ensure stability during construction is the responsibility of the erector. Additional permanent bracing of the overall structure is the responsibility of the building designer. For general guidance regarding fabrication, quality control, storage, delivery, erection and bracing, consult
TPIC Appendix G - Minimum quality Manufacturing Criteria available from **www.tpic.ca** and **BCSI-CANADA (Building Component Safety Information) available** from TPI, 781 N. Lee Street, Suite 312, Alexandria, VA 22314 or www.sbcindustry.com

KOTT

JOB NAME	TRUSS NAME	QUANTITY	PLY	JOB DESC.	DRWG NO.
T-RIVER 1-2	J01D	2	1	ZADORRA ESTATES INC TRUSS DESC.	ME23-5757-11

Kott, Uxbridge,ON

Version 8.630 S Mar 22 2023 MiTek Industries, Inc. Mon Jul 3 15:04:02 2023 Page 1
ID:NccLgzmhd_ldQzH3VGMNlRzOs0a-lp5w9Xx7sURdfZgil3sLn4R1sJ0YyZx1?qM_GKz?lbR

CORPORATION OF THE CITY OF OSHAWA
TRUE COPY
OF PERMIT PLANS
Nov 04 2023
PER: C Mott
CHIEF BUILDING OFFICIAL

MHP 23021

Scale = 1:10.6

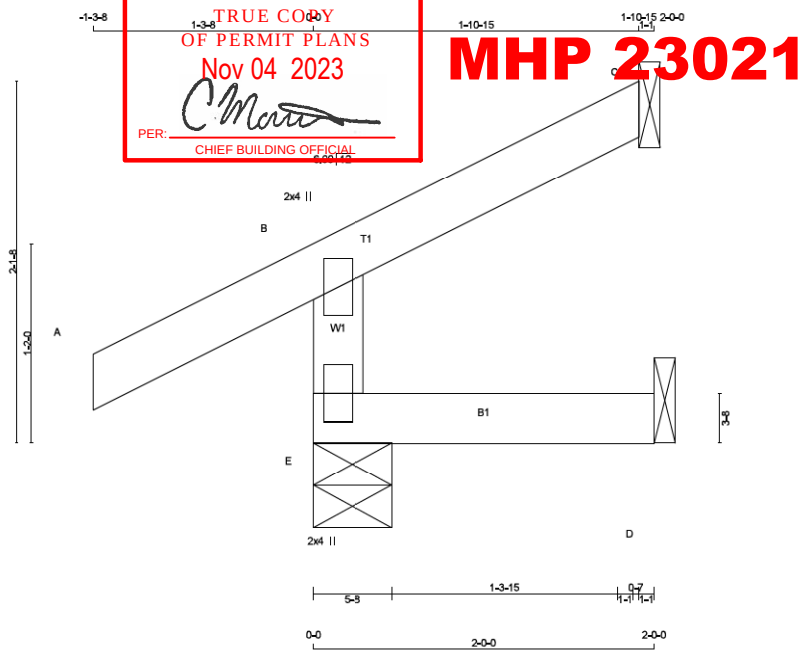

TOTAL WEIGHT = 2 X 7 = 15 lb.
[M]

LUMBER
N. L. G. A. RULES

CHORDS	SIZE		LUMBER	DESCR.
E - B	2x4	DRY	No.2	SPF
A - C	2x4	DRY	No.2	SPF
E - D	2x4	DRY	No.2	SPF

DRY: SEASONED LUMBER.

PLATES (table is in inches)

JT	TYPE	PLATES	W	LEN	Y	X
B	TMV+p	MT20	2.0	4.0		
E	BMV1+p	MT20	2.0	4.0		

DIMENSIONS, SUPPORTS AND LOADINGS SPECIFIED BY FABRICATOR TO BE VERIFIED BY BUILDING DESIGNER

BEARINGS

JT	FACTORED GROSS REACTION VERT	HORZ	MAXIMUM FACTORED GROSS REACTION DOWN	HORZ	UPLIFT	INPUT BRG IN-SX	REQRD BRG IN-SX
E	324	0	324	0	0	5-8	1-8
C	86	0	86	0	0	1-8	1-8
D	16	0	18	0	0	1-8	1-8

SEE MITEK STANDARD DETAIL MSD2015-H FOR CONNECTION TO JOINT(S) C , D

UNFACTORED REACTIONS

JT	1ST LCASE COMBINED	MAX./MIN. COMPONENT REACTIONS SNOW	LIVE	PERM.LIVE	WIND	DEAD	SOIL
E	224	177 / 0	0 / 0	0 / 0	0 / 0	47 / 0	0 / 0
C	59	50 / 0	0 / 0	0 / 0	0 / 0	9 / 0	0 / 0
D	13	0 / 0	0 / 0	0 / 0	0 / 0	13 / 0	0 / 0

BEARING MATERIAL TO BE SPF NO.2 OR BETTER AT JOINT(S) E, C

BRACING
TOP CHORD TO BE SHEATHED OR MAX. PURLIN SPACING = 6.25 FT.
MAX. UNBRACED BOTTOM CHORD LENGTH = 10.00 FT OR RIGID CEILING DIRECTLY APPLIED.

ALL PITCH BREAKS AND PERIMETER CORNER JOINTS MUST BE LATERALLY RESTRAINED.

LOADING
TOTAL LOAD CASES: (5)

CHORDS

MEMB. FR-TO	MAX. FACTORED FORCE (LBS)	FACTORED VERT. LOAD LC1 (PLF) FROM	TO	MAX CSI (LC)	MAX. UNBRAC LENGTH
E- B	-304 / 0	0.0	0.0	0.01 (4)	7.81
A- B	0 / 36	-119.4	-119.4	0.16 (1)	10.00
B- C	-12 / 0	-119.4	-119.4	0.07 (1)	6.25
E- D	0 / 0	-18.2	-18.2	0.02 (4)	10.00

WEBS

MEMB. FR-TO	MAX. FACTORED FORCE (LBS)	MAX CSI (LC)

CANTILEVER ANALYSIS HAS BEEN CONSIDERED IN THIS DESIGN

PATTERN-LOADING CHECK APPLIED TO THIS TRUSS.

DESIGN CRITERIA

SPECIFIED LOADS:

TOP CH.	LL	=	34.8	PSF
	DL	=	6.0	PSF
BOT CH.	LL	=	0.0	PSF
	DL	=	7.3	PSF
TOTAL LOAD		=	48.1	PSF

SPACING = 24.0 IN. C/C

THIS TRUSS IS DESIGNED FOR RESIDENTIAL OR SMALL BUILDING REQUIREMENTS OF PART 9, NBCC 2015

THIS DESIGN COMPLIES WITH:
- PART 9 OF BCBC 2018 , NBC-2019AE
- PART 9 OF OBC 2012 (2019 AMENDMENT)
- CSA 086-14
- TPIC 2014

DESIGN ASSUMPTIONS
-OVERHANG NOT TO BE ALTERED OR CUT OFF.

(55 % OF 48.1 P.S.F. G.S.L. PLUS 8.4 P.S.F. RAIN LOAD) EQUALS 34.8 P.S.F. SPECIFIED ROOF LIVE LOAD

ALLOWABLE DEFL.(LL)= L/360 (0.19")
CALCULATED VERT. DEFL.(LL) = L/ 999 (0.00")
ALLOWABLE DEFL.(TL)= L/360 (0.19")
CALCULATED VERT. DEFL.(TL) = L/ 999 (0.00")

CSI: TC=0.16/1.00 (A-B:1) , BC=0.02/1.00 (D-E:4) , WB=0.00/1.00 (n/a:0) , SSI=0.11/1.00 (A-B:1)

DOL LUMBER=1.00 NAIL=1.00 LS BEND=1.10 COMP=1.10 SHEAR=1.10 TENS= 1.10

COMPANION LIVE LOAD FACTOR = 1.00

TRUSS PLATE MANUFACTURER IS NOT RESPONSIBLE FOR QUALITY CONTROL IN THE TRUSS MANUFACTURING PLANT .

NAIL VALUES

PLATE	GRIP(DRY) (PSI) MAX	MIN	SHEAR (PLI) MAX	MIN	SECTION (PLI) MAX	MIN
MT20	650	371	1747	788	1987	1873

PLATE PLACEMENT TOL. = 0.250 inches

PLATE ROTATION TOL. = 5.0 Deg.

JSI GRIP= 0.17 (B) (INPUT = 0.90)
JSI METAL= 0.13 (B) (INPUT = 1.00)

MODULUS ENGINEERING LTD.

LICENSED PROFESSIONAL ENGINEER
07/04/2023
D. A. SHERMAN
100123373
PROVINCE OF ONTARIO

REVIEW FOR TRUSS COMPONENT ONLY

NOTE: ALTERING THIS DOCUMENT VOIDS THE ENGINEERS SEAL

WARNING - Verify design parameters and READ NOTES ON THIS AND INCLUDED IN MODULUS ENGINEERING LTD. NOTES ME-TCD01 (VER 06/2017) BEFORE USE.
Design valid for use only with Mitek connectors. This design is based only upon parameters shown, and is for individual building components. Applicability of design parameters and proper incorporation of component is responsibility of building designer - not truss designer. Bracing shown is for lateral support of individual web members only. Additional temporary bracing to ensure stability during construction is the responsibility of the erector. Additional permanent bracing of the overall structure is the responsibility of the building designer. For general guidance regarding fabrication, quality control, storage, delivery, erection and bracing, consult
TPIC Appendix G - Minimum quality Manufacturing Criteria available from **www.tpic.ca** and **BCSI-CANADA (Building Component Safety Information) available** from TPI, 781 N. Lee Street, Suite 312, Alexandria, VA 22314 or www.sbcindustry.com

KOTT

JOB NAME	TRUSS NAME	QUANTITY	PLY	JOB DESC.	DRWG NO.
T-RIVER 1-2	J02	4	1	ZADORRA ESTATES INC TRUSS DESC.	ME23-5757-12

Kott, Uxbridge,ON

Version 8.630 S Mar 22 2023 MiTek Industries, Inc. Mon Jul 3 15:04:03 2023 Page 1
ID:NccLgzmhd_ldQzH3VGMNlRzOs0a-m?flNbdlnaUHjFusnNaJl_3ZjKwh0BAEU5Yonz?lbQ

CORPORATION OF THE CITY OF OSHAWA
TRUE COPY
OF PERMIT PLANS
Nov 04 2023
PER:
CHIEF BUILDING OFFICIAL

MHP 23021

Scale = 1:23.3

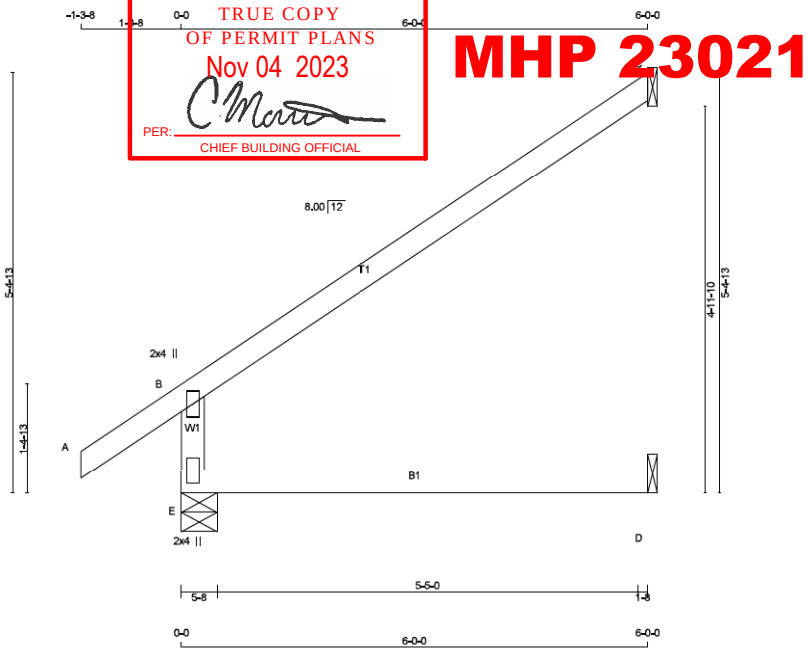

TOTAL WEIGHT = 4 X 18 = 73 lb.
[M]

LUMBER
N. L. G. A. RULES

CHORDS	SIZE		LUMBER	DESCR.
E - B	2x4	DRY	No.2	SPF
A - C	2x4	DRY	No.2	SPF
E - D	2x4	DRY	No.2	SPF

DRY: SEASONED LUMBER.

PLATES (table is in inches)

JT	TYPE	PLATES	W	LEN	Y	X
B	TMV+p	MT20	2.0	4.0		
E	BMV1+p	MT20	2.0	4.0		

DIMENSIONS, SUPPORTS AND LOADINGS SPECIFIED BY FABRICATOR TO BE VERIFIED BY BUILDING DESIGNER

BEARINGS

JT	FACTORED GROSS REACTION VERT	HORZ	MAXIMUM FACTORED GROSS REACTION DOWN	HORZ	UPLIFT	INPUT BRG IN-SX	REQRD BRG IN-SX
E	675	0	675	0	0	5-8	1-8
C	269	0	269	0	0	1-8	1-8
D	46	0	51	0	0	1-8	1-8

SEE MITEK STANDARD DETAIL MSD2015-H FOR CONNECTION TO JOINT(S) C , D

UNFACTORED REACTIONS

JT	1ST LCASE COMBINED	MAX./MIN. COMPONENT REACTIONS SNOW	LIVE	PERM.LIVE	WIND	DEAD	SOIL
E	469	357 / 0	0 / 0	0 / 0	0 / 0	112 / 0	0 / 0
C	184	157 / 0	0 / 0	0 / 0	0 / 0	27 / 0	0 / 0
D	37	0 / 0	0 / 0	0 / 0	0 / 0	37 / 0	0 / 0

BEARING MATERIAL TO BE SPF NO.2 OR BETTER AT JOINT(S) E

BRACING
TOP CHORD TO BE SHEATHED OR MAX. PURLIN SPACING = 6.25 FT.
MAX. UNBRACED BOTTOM CHORD LENGTH = 10.00 FT OR RIGID CEILING DIRECTLY APPLIED.

ALL PITCH BREAKS AND PERIMETER CORNER JOINTS MUST BE LATERALLY RESTRAINED.

LOADING
TOTAL LOAD CASES: (4)

CHORDS

MEMB. FR-TO	MAX. FACTORED FORCE (LBS)	FACTORED VERT. LOAD LC1 (PLF) FROM	TO	MAX CSI (LC)	MAX. UNBRAC LENGTH
E- B	-612 / 0	0.0	0.0	0.13 (4)	7.81
A- B	0 / 45	-119.4	-119.4	0.16 (1)	10.00
B- C	-50 / 0	-119.4	-119.4	0.73 (1)	6.25
E- D	0 / 0	-18.2	-18.2	0.14 (4)	10.00

WEBS

MEMB. FR-TO	MAX. FACTORED FORCE (LBS)	MAX CSI (LC)

DESIGN CRITERIA

SPECIFIED LOADS:

TOP CH.	LL	=	34.8	PSF
	DL	=	6.0	PSF
BOT CH.	LL	=	0.0	PSF
	DL	=	7.3	PSF
TOTAL LOAD		=	48.1	PSF

SPACING = 24.0 IN. C/C

THIS TRUSS IS DESIGNED FOR RESIDENTIAL OR SMALL BUILDING REQUIREMENTS OF PART 9, NBCC 2015

THIS DESIGN COMPLIES WITH:
- PART 9 OF BCBC 2018 , NBC-2019AE
- PART 9 OF OBC 2012 (2019 AMENDMENT)
- CSA 086-14
- TPIC 2014

DESIGN ASSUMPTIONS
-OVERHANG NOT TO BE ALTERED OR CUT OFF.

(55 % OF 48.1 P.S.F. G.S.L. PLUS 8.4 P.S.F. RAIN LOAD) EQUALS 34.8 P.S.F. SPECIFIED ROOF LIVE LOAD

ALLOWABLE DEFL.(LL)= L/360 (0.20")
CALCULATED VERT. DEFL.(LL) = L/ 999 (0.00")
ALLOWABLE DEFL.(TL)= L/360 (0.20")
CALCULATED VERT. DEFL.(TL) = L/ 999 (0.04")

CSI: TC=0.73/1.00 (B-C:1) , BC=0.14/1.00 (D-E:4) , WB=0.00/1.00 (n/a:0) , SSI=0.29/1.00 (B-C:1)

DOL LUMBER=1.00 NAIL=1.00 LS BEND=1.10 COMP=1.10 SHEAR=1.10 TENS= 1.10

COMPANION LIVE LOAD FACTOR = 1.00

TRUSS PLATE MANUFACTURER IS NOT RESPONSIBLE FOR QUALITY CONTROL IN THE TRUSS MANUFACTURING PLANT .

NAIL VALUES

PLATE	GRIP(DRY) (PSI) MAX	MIN	SHEAR (PLI) MAX	MIN	SECTION (PLI) MAX	MIN
MT20	650	371	1747	788	1987	1873

PLATE PLACEMENT TOL. = 0.250 inches

PLATE ROTATION TOL. = 5.0 Deg.

JSI GRIP= 0.38 (B) (INPUT = 0.90)
JSI METAL= 0.31 (B) (INPUT = 1.00)

MODULUS ENGINEERING LTD.

LICENSED PROFESSIONAL ENGINEER
07/04/2023
D. A. SHERMAN
100123373
PROVINCE OF ONTARIO

REVIEW FOR TRUSS COMPONENT ONLY

NOTE: ALTERING THIS DOCUMENT VOIDS THE ENGINEERS SEAL

WARNING - Verify design parameters and READ NOTES ON THIS AND INCLUDED IN MODULUS ENGINEERING LTD. NOTES ME-TCD01 (VER 06/2017) BEFORE USE.
Design valid for use only with Mitek connectors. This design is based only upon parameters shown, and is for individual building components. Applicability of design parameters and proper incorporation of component is responsibility of building designer - not truss designer. Bracing shown is for lateral support of individual web members only. Additional temporary bracing to ensure stability during construction is the responsibility of the erector. Additional permanent bracing of the overall structure is the responsibility of the building designer. For general guidance regarding fabrication, quality control, storage, delivery, erection and bracing, consult
TPIC Appendix G - Minimum quality Manufacturing Criteria available from **www.tpic.ca** and **BCSI-CANADA (Building Component Safety Information) available** from TPI, 781 N. Lee Street, Suite 312, Alexandria, VA 22314 or www.sbcindustry.com

KOTT

JOB NAME	TRUSS NAME	QUANTITY	PLY	JOB DESC.	DRWG NO.
T-RIVER 1-2	J02A	1	1	ZADORRA ESTATES INC TRUSS DESC.	ME23-5757-13

Kott, Uxbridge,ON

Version 8.630 S Mar 22 2023 MiTek Industries, Inc. Mon Jul 3 15:04:05 2023 Page 1

ID:NccLgzmhd_ldQzH3VGMNlRzOs0a-iOn3oYz?9PqCX0PHzCP2Oj3XuW?H9whTioaetfz?lbO

CORPORATION OF THE CITY OF OSHAWA
TRUE COPY
OF PERMIT PLANS
Nov 04 2023
PER: C Mott
CHIEF BUILDING OFFICIAL

MHP 23021

Scale = 1:16.7

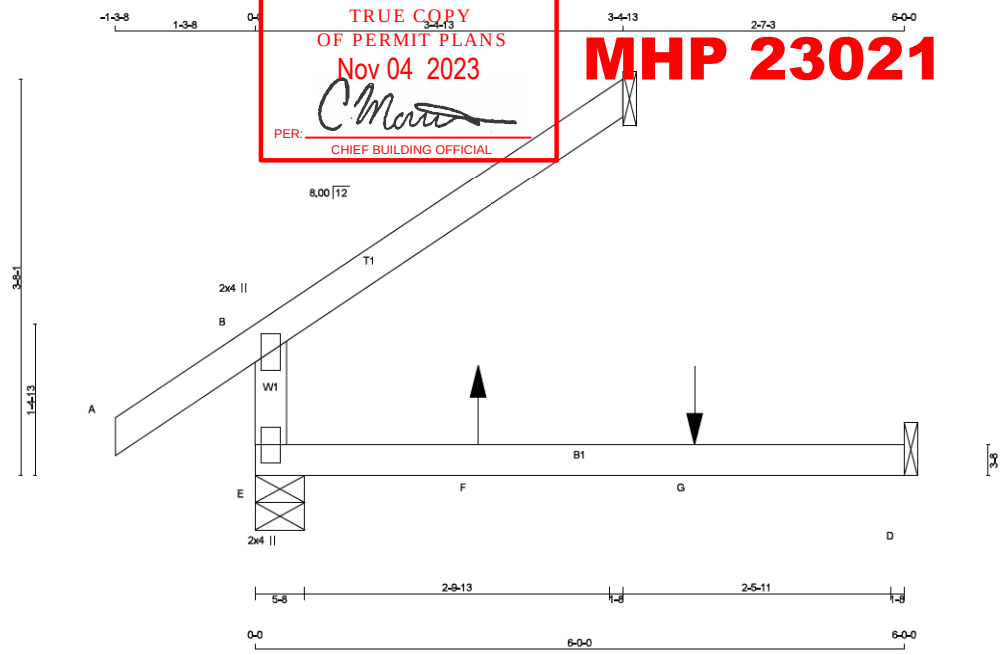

TOTAL WEIGHT = 15 lb [M]

LUMBER
N. L. G. A. RULES

CHORDS	SIZE		LUMBER	DESCR.
E - B	2x4	DRY	No.2	SPF
A - C	2x4	DRY	No.2	SPF
E - D	2x4	DRY	No.2	SPF

DRY: SEASONED LUMBER.

PLATES (table is in inches)

JT	TYPE	PLATES	W	LEN	Y	X
B	TMV+p	MT20	2.0	4.0		
E	BMV1+p	MT20	2.0	4.0		

DIMENSIONS, SUPPORTS AND LOADINGS SPECIFIED BY FABRICATOR TO BE VERIFIED BY BUILDING DESIGNER

BEARINGS

JT	FACTORED GROSS REACTION VERT	HORZ	MAXIMUM GROSS REACTION DOWN	HORZ	UPLIFT	FACTORED INPUT BRG	REQRD BRG
E	478	0	478	0	0	5-8	1-8
C	152	0	152	0	0	1-8	1-8
D	46	0	53	0	0	1-8	1-8

SEE MITEK STANDARD DETAIL MSD2015-H FOR CONNECTION TO JOINT(S) C , D

UNFACTORED REACTIONS

MAX./MIN. COMPONENT REACTIONS

JT	1ST LCASE COMBINED	SNOW	LIVE	PERM.LIVE	WIND	DEAD	SOIL
E	335	240 / 0	0 / 0	0 / 0	0 / 0	95 / 0	0 / 0
C	104	89 / 0	0 / 0	0 / 0	0 / 0	15 / 0	0 / 0
D	37	0 / -1	0 / 0	0 / 0	0 / 0	38 / 0	0 / 0

BEARING MATERIAL TO BE SPF NO.2 OR BETTER AT JOINT(S) E, C

BRACING
TOP CHORD TO BE SHEATHED OR MAX. PURLIN SPACING = 6.25 FT.
MAX. UNBRACED BOTTOM CHORD LENGTH = 10.00 FT OR RIGID CEILING DIRECTLY APPLIED.

ALL PITCH BREAKS AND PERIMETER CORNER JOINTS MUST BE LATERALLY RESTRAINED.

LOADING
TOTAL LOAD CASES: (4)

CHORDS

MEMB. FR-TO	MAX. FACTORED FORCE (LBS)	FACTORED VERT. LOAD (PLF) FROM	TO	LC1 CSI (LC)	MAX UNBRAC LENGTH
E- B	-417 / 0	0.0	0.0	0.13 (4)	7.81
A- B	0 / 45	-119.4	-119.4	0.16 (1)	10.00
B- C	-28 / 0	-119.4	-119.4	0.23 (1)	6.25

WEBS

MEMB. FR-TO	MAX. FACTORED FORCE (LBS)	MAX CSI (LC)
E- F	0 / 0	-18.2 -18.2 0.14 (4) 10.00
F- G	0 / 0	-18.2 -18.2 0.14 (4) 10.00
G- D	0 / 0	-18.2 -18.2 0.14 (4) 10.00

FACTORED CONCENTRATED LOADS (LBS)

JT	LOC.	LC1	MAX-	MAX+	FACE	DIR.	TYPE	HEEL	CONN.
F	2-0-12	5	1	5	FRONT	VERT	TOTAL	—	C1
G	4-0-12	-2	-2	—	FRONT	VERT	TOTAL	—	C1

CONNECTION REQUIREMENTS

1) **C1:** A SUITABLE HANGER/MECHANICAL CONNECTION IS REQUIRED.

DESIGN CRITERIA

SPECIFIED LOADS:

TOP CH.	LL	=	34.8	PSF
	DL	=	6.0	PSF
BOT CH.	LL	=	0.0	PSF
	DL	=	7.3	PSF
TOTAL LOAD		=	48.1	PSF

SPACING = 24.0 IN. C/C

THIS TRUSS IS DESIGNED FOR RESIDENTIAL OR SMALL BUILDING REQUIREMENTS OF PART 9, NBCC 2015

THIS DESIGN COMPLIES WITH:
- PART 9 OF BCBC 2018 , NBC-2019AE
- PART 9 OF OBC 2012 (2019 AMENDMENT)
- CSA 086-14
- TPIC 2014

DESIGN ASSUMPTIONS
-OVERHANG NOT TO BE ALTERED OR CUT OFF.

(55 % OF 48.1 P.S.F. G.S.L. PLUS 8.4 P.S.F. RAIN LOAD) EQUALS 34.8 P.S.F. SPECIFIED ROOF LIVE LOAD

ALLOWABLE DEFL.(LL)= L/360 (0.20")
CALCULATED VERT. DEFL.(LL) = L/ 999 (0.00")
ALLOWABLE DEFL.(TL)= L/360 (0.20")
CALCULATED VERT. DEFL.(TL) = L/ 999 (0.04")

CSI: TC=0.23/1.00 (B-C:1) , BC=0.14/1.00 (D-E:4) , WB=0.00/1.00 (n/a:0) , SSI=0.16/1.00 (B-C:1)

DOL LUMBER=1.00 NAIL=1.00 LS BEND=1.10 COMP=1.10 SHEAR=1.10 TENS= 1.10

COMPANION LIVE LOAD FACTOR = 1.00

TRUSS PLATE MANUFACTURER IS NOT RESPONSIBLE FOR QUALITY CONTROL IN THE TRUSS MANUFACTURING PLANT .

NAIL VALUES

PLATE	GRIP(DRY) (PSI) MAX	MIN	SHEAR (PLI) MAX	MIN	SECTION (PLI) MAX	MIN
MT20	650	371	1747	788	1987	1873

PLATE PLACEMENT TOL. = 0.250 inches

PLATE ROTATION TOL. = 5.0 Deg.

JSI GRIP= 0.26 (B) (INPUT = 0.90)
JSI METAL= 0.21 (B) (INPUT = 1.00)

MODULUS ENGINEERING LTD.

LICENSED PROFESSIONAL ENGINEER
07/04/2023
D. A. SHERMAN
100123373
PROVINCE OF ONTARIO

REVIEW FOR TRUSS COMPONENT ONLY

NOTE: ALTERING THIS DOCUMENT VOIDS THE ENGINEERS SEAL

WARNING - Verify design parameters and READ NOTES ON THIS AND INCLUDED IN MODULUS ENGINEERING LTD. NOTES ME-TCD01 (VER 06/2017) BEFORE USE.
Design valid for use only with Mitek connectors. This design is based only upon parameters shown, and is for individual building components. Applicability of design parameters and proper incorporation of component is responsibility of building designer - not truss designer. Bracing shown is for lateral support of individual web members only. Additional temporary bracing to ensure stability during construction is the responsibility of the erector. Additional permanent bracing of the overall structure is the responsibility of the building designer. For general guidance regarding fabrication, quality control, storage, delivery, erection and bracing, consult
TPIC Appendix G - Minimum quality Manufacturing Criteria available from **www.tpic.ca** and **BCSI-CANADA (Building Component Safety Information) available** from TPI, 781 N. Lee Street, Suite 312, Alexandria, VA 22314 or www.sbcindustry.com

KOTT

JOB NAME	TRUSS NAME	QUANTITY	PLY	JOB DESC.	DRWG NO.
T-RIVER 1-2	J02B	1	1	ZADORRA ESTATES INC TRUSS DESC.	ME23-5757-14

Kott, Uxbridge,ON

Version 8.630 S Mar 22 2023 MiTek Industries, Inc. Mon Jul 3 15:04:06 2023 Page 1

ID:NccLgzmhd_ldQzH3VGMNlRzOs0a-AaLR?u_dwiy38A_TXvwHxwcjjwNJtNxcwSKCP5z?lbN

CORPORATION OF THE CITY OF OSHAWA
TRUE COPY
OF PERMIT PLANS
Nov 04 2023
PER:
CHIEF BUILDING OFFICIAL

MHP 23021

Scale = 1:18.2

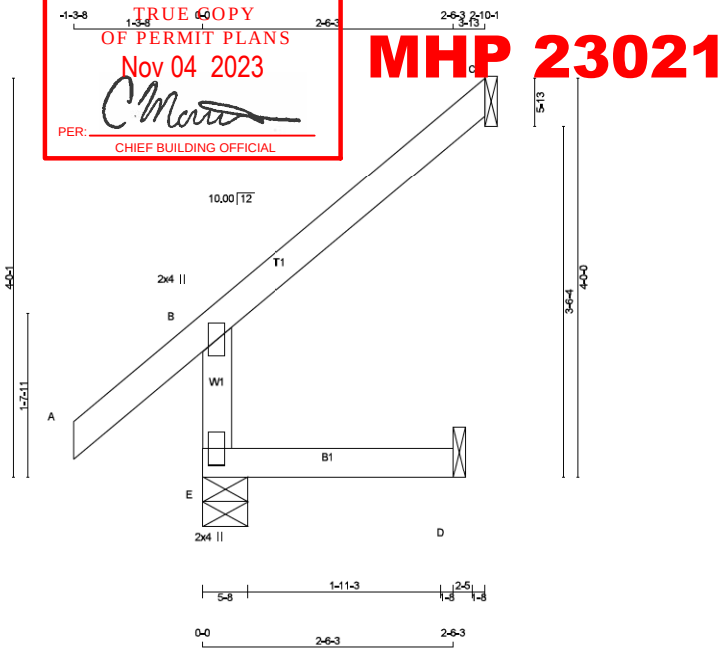

TOTAL WEIGHT = 11 lb [M]

LUMBER
N. L. G. A. RULES

CHORDS	SIZE		LUMBER	DESCR.
E - B	2x4	DRY	No.2	SPF
A - C	2x4	DRY	No.2	SPF
E - D	2x4	DRY	No.2	SPF

DRY: SEASONED LUMBER.

PLATES (table is in inches)

JT	TYPE	PLATES	W	LEN	Y	X
B	TMV+p	MT20	2.0	4.0		
E	BMV1+p	MT20	2.0	4.0		

DIMENSIONS, SUPPORTS AND LOADINGS SPECIFIED BY FABRICATOR TO BE VERIFIED BY BUILDING DESIGNER

BEARINGS

JT	FACTORED GROSS REACTION VERT	HORZ	MAXIMUM FACTORED GROSS REACTION DOWN	HORZ	UPLIFT	INPUT BRG IN-SX	REQRD BRG IN-SX
E	402	0	402	0	0	5-8	1-8
C	127	0	127	0	0	1-8	1-8
D	21	0	23	0	0	1-8	1-8

SEE MITEK STANDARD DETAIL MSD2015-H FOR CONNECTION TO JOINT(S) C , D

UNFACTORED REACTIONS

JT	1ST LCASE COMBINED	MAX./MIN. COMPONENT REACTIONS SNOW	LIVE	PERM.LIVE	WIND	DEAD	SOIL
E	278	220 / 0	0 / 0	0 / 0	0 / 0	58 / 0	0 / 0
C	87	74 / 0	0 / 0	0 / 0	0 / 0	13 / 0	0 / 0
D	17	0 / 0	0 / 0	0 / 0	0 / 0	17 / 0	0 / 0

BEARING MATERIAL TO BE SPF NO.2 OR BETTER AT JOINT(S) E

BRACING
TOP CHORD TO BE SHEATHED OR MAX. PURLIN SPACING = 6.25 FT.
MAX. UNBRACED BOTTOM CHORD LENGTH = 10.00 FT OR RIGID CEILING DIRECTLY APPLIED.

ALL PITCH BREAKS AND PERIMETER CORNER JOINTS MUST BE LATERALLY RESTRAINED.

LOADING
TOTAL LOAD CASES: (7)

CHORDS

MEMB. FR-TO	MAX. FACTORED FORCE (LBS)	FACTORED VERT. LOAD LC1 (PLF) FROM	TO	MAX CSI (LC)	MAX. UNBRAC LENGTH
E- B	-377 / 0	0.0	0.0	0.01 (4)	7.81
A- B	0 / 53	-119.4	-119.4	0.16 (1)	10.00
B- C	-27 / 0	-119.4	-119.4	0.16 (6)	6.25
E- D	0 / 0	-18.2	-18.2	0.03 (4)	10.00

WEBS

MEMB. FR-TO	MAX. FACTORED FORCE (LBS)	MAX CSI (LC)

CANTILEVER ANALYSIS HAS BEEN CONSIDERED IN THIS DESIGN

PATTERN-LOADING CHECK APPLIED TO THIS TRUSS.

DESIGN CRITERIA

SPECIFIED LOADS:

TOP CH.	LL	=	34.8	PSF
	DL	=	6.0	PSF
BOT CH.	LL	=	0.0	PSF
	DL	=	7.3	PSF
TOTAL LOAD		=	48.1	PSF

SPACING = 24.0 IN. C/C

THIS TRUSS IS DESIGNED FOR RESIDENTIAL OR SMALL BUILDING REQUIREMENTS OF PART 9, NBCC 2015

THIS DESIGN COMPLIES WITH:
- PART 9 OF BCBC 2018 , NBC-2019AE
- PART 9 OF OBC 2012 (2019 AMENDMENT)
- CSA 086-14
- TPIC 2014

DESIGN ASSUMPTIONS
-OVERHANG NOT TO BE ALTERED OR CUT OFF.

(55 % OF 48.1 P.S.F. G.S.L. PLUS 8.4 P.S.F. RAIN LOAD) EQUALS 34.8 P.S.F. SPECIFIED ROOF LIVE LOAD

ALLOWABLE DEFL.(LL)= L/360 (0.19")
CALCULATED VERT. DEFL.(LL) = L/ 999 (0.00")
ALLOWABLE DEFL.(TL)= L/360 (0.19")
CALCULATED VERT. DEFL.(TL) = L/ 999 (0.00")

CSI: TC=0.16/1.00 (A-B:1) , BC=0.03/1.00 (D-E:4) , WB=0.00/1.00 (n/a:0) , SSI=0.13/1.00 (B-C:6)

DOL LUMBER=1.00 NAIL=1.00 LS BEND=1.10 COMP=1.10 SHEAR=1.10 TENS= 1.10

COMPANION LIVE LOAD FACTOR = 1.00

TRUSS PLATE MANUFACTURER IS NOT RESPONSIBLE FOR QUALITY CONTROL IN THE TRUSS MANUFACTURING PLANT .

NAIL VALUES

PLATE	GRIP(DRY) (PSI) MAX	MIN	SHEAR (PLI) MAX	MIN	SECTION (PLI) MAX	MIN
MT20	650	371	1747	788	1987	1873

PLATE PLACEMENT TOL. = 0.250 inches

PLATE ROTATION TOL. = 5.0 Deg.

JSI GRIP= 0.26 (B) (INPUT = 0.90)
JSI METAL= 0.20 (B) (INPUT = 1.00)

MODULUS ENGINEERING LTD.

LICENSED PROFESSIONAL ENGINEER
07/04/2023
D. A. SHERMAN
100123373
PROVINCE OF ONTARIO

REVIEW FOR TRUSS COMPONENT ONLY

NOTE: ALTERING THIS DOCUMENT VOIDS THE ENGINEERS SEAL

WARNING - Verify design parameters and READ NOTES ON THIS AND INCLUDED IN MODULUS ENGINEERING LTD. NOTES ME-TCD01 (VER 06/2017) BEFORE USE.
Design valid for use only with Mitek connectors. This design is based only upon parameters shown, and is for individual building components. Applicability of design parameters and proper incorporation of component is responsibility of building designer - not truss designer. Bracing shown is for lateral support of individual web members only. Additional temporary bracing to ensure stability during construction is the responsibility of the erector. Additional permanent bracing of the overall structure is the responsibility of the building designer. For general guidance regarding fabrication, quality control, storage, delivery, erection and bracing, consult
TPIC Appendix G - Minimum quality Manufacturing Criteria available from **www.tpic.ca** and **BCSI-CANADA (Building Component Safety Information) available** from TPI, 781 N. Lee Street, Suite 312, Alexandria, VA 22314 or www.sbcindustry.com

KOTT

JOB NAME	TRUSS NAME	QUANTITY	PLY	JOB DESC.	DRWG NO.
T-RIVER 1-2	J02C	1	1	ZADORRA ESTATES INC TRUSS DESC.	ME23-5757-15

Kott, Uxbridge,ON

Version 8.630 S Mar 22 2023 MiTek Industries, Inc. Mon Jul 3 15:04:07 2023 Page 1

ID:Nc?Lgzmhd_ldQzH3VGMNlRzOs0a-fmvpDE?Fh04vmKZf5cSWU88uTKjPcpBm963lxYz?lbM

CORPORATION OF THE CITY OF OSHAWA
TRUE COPY
OF PERMIT PLANS
Nov 04 2023
PER: C Mott
CHIEF BUILDING OFFICIAL

MHP 23021

Scale = 1:12.9

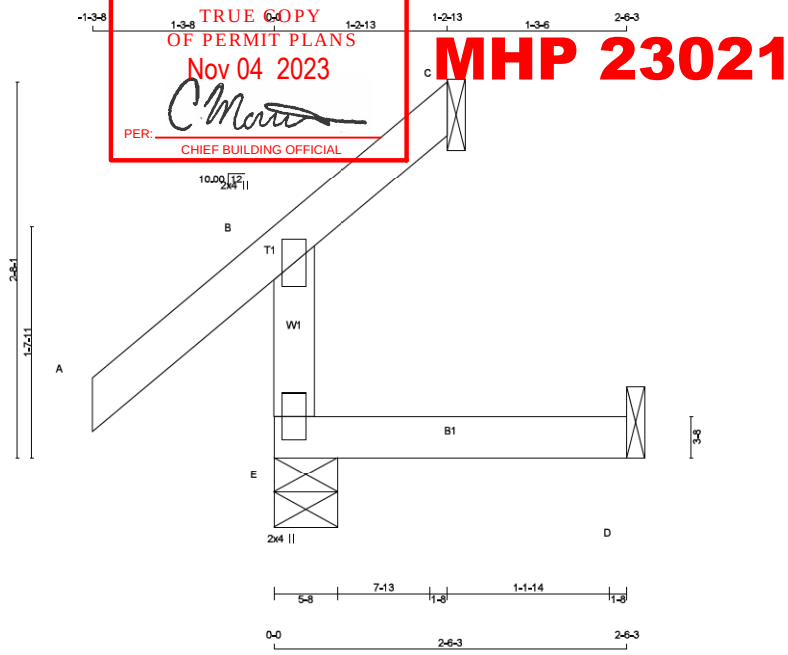

TOTAL WEIGHT = 8 lb.
[M]

LUMBER
N. L. G. A. RULES

CHORDS	SIZE		LUMBER	DESCR.
E - B	2x4	DRY	No.2	SPF
A - C	2x4	DRY	No.2	SPF
E - D	2x4	DRY	No.2	SPF

DRY: SEASONED LUMBER.

PLATES (table is in inches)

JT	TYPE	PLATES	W	LEN	Y	X
B	TMV+p	MT20	2.0	4.0		
E	BMV1+p	MT20	2.0	4.0		

DIMENSIONS, SUPPORTS AND LOADINGS SPECIFIED BY FABRICATOR TO BE VERIFIED BY BUILDING DESIGNER

BEARINGS

JT	FACTORED GROSS REACTION VERT	HORZ	MAXIMUM GROSS REACTION DOWN	HORZ	UPLIFT	INPUT BRG	REQRD BRG
E	345	0	345	0	0	5-8	1-8
C	0	0	4	0	-64	1-8	1-8
D	13	0	23	0	0	1-8	1-8

SEE MITEK STANDARD DETAIL MSD2015-H FOR CONNECTION TO JOINT(S) C , D

PROVIDE ANCHORAGE AT BEARING JOINT C FOR 150 LBS FACTORED UPLIFT

UNFACTORED REACTIONS

JT	1ST LCASE COMBINED	MAX./MIN. COMPONENT REACTIONS SNOW	LIVE	PERM.LIVE	WIND	DEAD	SOIL
E	238	189 / 0	0 / 0	0 / 0	0 / 0	49 / 0	0 / 0
C	0	0 / -43	0 / 0	0 / 0	0 / 0	3 / 0	0 / 0
D	12	0 / -5	0 / 0	0 / 0	0 / 0	16 / 0	0 / 0

BEARING MATERIAL TO BE SPF NO.2 OR BETTER AT JOINT(S) E, C

BRACING
TOP CHORD TO BE SHEATHED OR MAX. PURLIN SPACING = 6.25 FT.
MAX. UNBRACED BOTTOM CHORD LENGTH = 10.00 FT OR RIGID CEILING DIRECTLY APPLIED.

ALL PITCH BREAKS AND PERIMETER CORNER JOINTS MUST BE LATERALLY RESTRAINED.

LOADING
TOTAL LOAD CASES: (5)

CHORDS

MEMB. FR-TO	MAX. FACTORED FORCE (LBS)	FACTORED VERT. LOAD (PLF) FROM	TO	LC1	MAX CSI (LC)	MAX. UNBRAC LENGTH
E- B	-313 / 0	0.0	0.0	0.04 (5)	7.81	
A- B	0 / 53	-119.4	-119.4	0.16 (1)	10.00	
B- C	-47 / 0	-119.4	-119.4	0.12 (1)	6.25	
E- D	0 / 0	-18.2	-18.2	0.04 (5)	10.00	

WEBS

MEMB. FR-TO	MAX. FACTORED FORCE (LBS)	MAX CSI (LC)

CANTILEVER ANALYSIS HAS BEEN CONSIDERED IN THIS DESIGN

PATTERN-LOADING CHECK APPLIED TO THIS TRUSS.

DESIGN CRITERIA

SPECIFIED LOADS:

TOP CH.	LL	=	34.8	PSF
	DL	=	6.0	PSF
BOT CH.	LL	=	0.0	PSF
	DL	=	7.3	PSF
TOTAL LOAD		=	48.1	PSF

SPACING = 24.0 IN. C/C

THIS TRUSS IS DESIGNED FOR RESIDENTIAL OR SMALL BUILDING REQUIREMENTS OF PART 9, NBCC 2015

THIS DESIGN COMPLIES WITH:
- PART 9 OF BCBC 2018 , NBC-2019AE
- PART 9 OF OBC 2012 (2019 AMENDMENT)
- CSA 086-14
- TPIC 2014

DESIGN ASSUMPTIONS
-OVERHANG NOT TO BE ALTERED OR CUT OFF.

(55 % OF 48.1 P.S.F. G.S.L. PLUS 8.4 P.S.F. RAIN LOAD) EQUALS 34.8 P.S.F. SPECIFIED ROOF LIVE LOAD

ALLOWABLE DEFL.(LL)= L/360 (0.19")
CALCULATED VERT. DEFL.(LL) = L/ 999 (0.00")
ALLOWABLE DEFL.(TL)= L/360 (0.19")
CALCULATED VERT. DEFL.(TL) = L/ 999 (0.00")

CSI: TC=0.16/1.00 (A-B:1) , BC=0.04/1.00 (D-E:5) , WB=0.00/1.00 (n/a:0) , SSI=0.10/1.00 (A-B:1)

DOL LUMBER=1.00 NAIL=1.00 LS BEND=1.10 COMP=1.10 SHEAR=1.10 TENS= 1.10

COMPANION LIVE LOAD FACTOR = 1.00

TRUSS PLATE MANUFACTURER IS NOT RESPONSIBLE FOR QUALITY CONTROL IN THE TRUSS MANUFACTURING PLANT .

NAIL VALUES

PLATE	GRIP(DRY) (PSI) MAX	MIN	SHEAR (PLI) MAX	MIN	SECTION (PLI) MAX	MIN
MT20	650	371	1747	788	1987	1873

PLATE PLACEMENT TOL. = 0.250 inches

PLATE ROTATION TOL. = 5.0 Deg.

JSI GRIP= 0.21 (B) (INPUT = 0.90)
JSI METAL= 0.17 (B) (INPUT = 1.00)

MODULUS ENGINEERING LTD.

LICENSED PROFESSIONAL ENGINEER
07/04/2023
D. A. SHERMAN
100123373
PROVINCE OF ONTARIO

REVIEW FOR TRUSS COMPONENT ONLY

NOTE: ALTERING THIS DOCUMENT VOIDS THE ENGINEERS SEAL

WARNING - Verify design parameters and READ NOTES ON THIS AND INCLUDED IN MODULUS ENGINEERING LTD. NOTES ME-TCD01 (VER 06/2017) BEFORE USE.
Design valid for use only with Mitek connectors. This design is based only upon parameters shown, and is for individual building components. Applicability of design parameters and proper incorporation of component is responsibility of building designer - not truss designer. Bracing shown is for lateral support of individual web members only. Additional temporary bracing to ensure stability during construction is the responsibility of the erector. Additional permanent bracing of the overall structure is the responsibility of the building designer. For general guidance regarding fabrication, quality control, storage, delivery, erection and bracing, consult
TPIC Appendix G - Minimum quality Manufacturing Criteria available from **www.tpic.ca** and **BCSI-CANADA (Building Component Safety Information) available** from TPI, 781 N. Lee Street, Suite 312, Alexandria, VA 22314 or www.sbcindustry.com

KOTT

JOB NAME	TRUSS NAME	QUANTITY	PLY	JOB DESC.	DRWG NO.
T-RIVER 1-2	J02D	2	1	ZADORRA ESTATES INC TRUSS DESC.	ME23-5757-16

Kott, Uxbridge,ON

Version 8.630 S Mar 22 2023 MiTek Industries, Inc. Mon Jul 3 15:04:09 2023 Page 1
ID:NcoLqzmhd_IdQzH3VGMNIRzOs0a-b91Zdw0WCdKd?ei2C1U_ZZDEy7P54jg3cQYs0Qz?IbK

CORPORATION OF THE CITY OF OSHAWA
TRUE COPY
OF PERMIT PLANS
Nov 04 2023
PER: C Mott
CHIEF BUILDING OFFICIAL

MHP 23021

Scale: 3/4"=1'

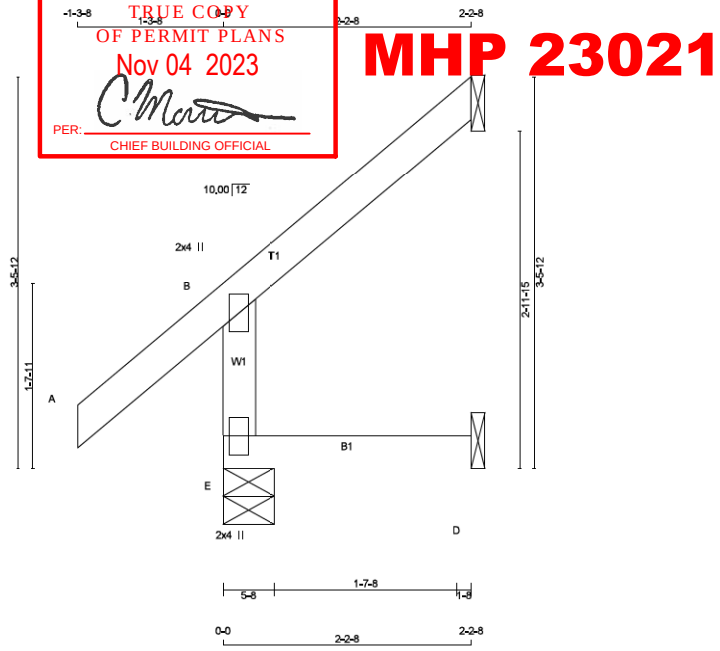

TOTAL WEIGHT = 2 X 9 = 19 lb
[M]

LUMBER
N. L. G. A. RULES

CHORDS	SIZE		LUMBER	DESCR.
E - B	2x4	DRY	No.2	SPF
A - C	2x4	DRY	No.2	SPF
E - D	2x4	DRY	No.2	SPF

DRY: SEASONED LUMBER.

PLATES (table is in inches)

JT	TYPE	PLATES	W	LEN	Y	X
B	TMV+p	MT20	2.0	4.0		
E	BMV1+p	MT20	2.0	4.0		

DIMENSIONS, SUPPORTS AND LOADINGS SPECIFIED BY FABRICATOR TO BE VERIFIED BY BUILDING DESIGNER

BEARINGS

JT	FACTORED GROSS REACTION VERT	HORZ	MAXIMUM FACTORED GROSS REACTION DOWN	HORZ	UPLIFT	INPUT BRG IN-SX	REQRD BRG IN-SX
E	352	0	352	0	0	5-8	1-8
C	100	0	100	0	0	1-8	1-8
D	18	0	21	0	0	1-8	1-8

SEE MITEK STANDARD DETAIL MSD2015-H FOR CONNECTION TO JOINT(S) C , D

UNFACTORED REACTIONS

JT	1ST LCASE COMBINED	MAX./MIN. COMPONENT REACTIONS SNOW	LIVE	PERM.LIVE	WIND	DEAD	SOIL
E	243	192 / 0	0 / 0	0 / 0	0 / 0	51 / 0	0 / 0
C	68	58 / 0	0 / 0	0 / 0	0 / 0	10 / 0	0 / 0
D	15	0 / 0	0 / 0	0 / 0	0 / 0	15 / 0	0 / 0

BEARING MATERIAL TO BE SPF NO.2 OR BETTER AT JOINT(S) E

BRACING
TOP CHORD TO BE SHEATHED OR MAX. PURLIN SPACING = 6.25 FT.
MAX. UNBRACED BOTTOM CHORD LENGTH = 10.00 FT OR RIGID CEILING DIRECTLY APPLIED.

ALL PITCH BREAKS AND PERIMETER CORNER JOINTS MUST BE LATERALLY RESTRAINED.

LOADING
TOTAL LOAD CASES: (5)

CHORDS

MEMB. FR-TO	MAX. FACTORED FORCE (LBS)	FACTORED VERT. LOAD (PLF) FROM	TO	LC1	MAX CSI (LC)	MAX. UNBRAC LENGTH
E- B	-330 / 0	0.0	0.0	0.01 (4)		7.81
A- B	0 / 53	-119.4	-119.4	0.16 (1)		10.00
B- C	-21 / 0	-119.4	-119.4	0.10 (1)		6.25
E- D	0 / 0	-18.2	-18.2	0.02 (4)		10.00

WEBS

MEMB. FR-TO	MAX. FACTORED FORCE (LBS)	MAX CSI (LC)

CANTILEVER ANALYSIS HAS BEEN CONSIDERED IN THIS DESIGN

PATTERN-LOADING CHECK APPLIED TO THIS TRUSS.

DESIGN CRITERIA

SPECIFIED LOADS:

TOP CH.	LL	=	34.8	PSF
	DL	=	6.0	PSF
BOT CH.	LL	=	0.0	PSF
	DL	=	7.3	PSF
TOTAL LOAD		=	48.1	PSF

SPACING = 24.0 IN. C/C

THIS TRUSS IS DESIGNED FOR RESIDENTIAL OR SMALL BUILDING REQUIREMENTS OF PART 9, NBCC 2015

THIS DESIGN COMPLIES WITH:
- PART 9 OF BCBC 2018 , NBC-2019AE
- PART 9 OF OBC 2012 (2019 AMENDMENT)
- CSA 086-14
- TPIC 2014

DESIGN ASSUMPTIONS
-OVERHANG NOT TO BE ALTERED OR CUT OFF.

(55 % OF 48.1 P.S.F. G.S.L. PLUS 8.4 P.S.F. RAIN LOAD) EQUALS 34.8 P.S.F. SPECIFIED ROOF LIVE LOAD

ALLOWABLE DEFL.(LL)= L/360 (0.19")
CALCULATED VERT. DEFL.(LL) = L/ 999 (0.00")
ALLOWABLE DEFL.(TL)= L/360 (0.19")
CALCULATED VERT. DEFL.(TL) = L/ 999 (0.00")

CSI: TC=0.16/1.00 (A-B:1) , BC=0.02/1.00 (D-E:4) , WB=0.00/1.00 (n/a:0) , SSI=0.10/1.00 (A-B:1)

DOL LUMBER=1.00 NAIL=1.00 LS BEND=1.10 COMP=1.10 SHEAR=1.10 TENS= 1.10

COMPANION LIVE LOAD FACTOR = 1.00

TRUSS PLATE MANUFACTURER IS NOT RESPONSIBLE FOR QUALITY CONTROL IN THE TRUSS MANUFACTURING PLANT .

NAIL VALUES

PLATE	GRIP(DRY) (PSI) MAX	MIN	SHEAR (PLI) MAX	MIN	SECTION (PLI) MAX	MIN
MT20	650	371	1747	788	1987	1873

PLATE PLACEMENT TOL. = 0.250 inches

PLATE ROTATION TOL. = 5.0 Deg.

JSI GRIP= 0.23 (B) (INPUT = 0.90)
JSI METAL= 0.18 (B) (INPUT = 1.00)

MODULUS ENGINEERING LTD.

LICENSED PROFESSIONAL ENGINEER
07/04/2023
D. A. SHERMAN
100123373
PROVINCE OF ONTARIO

REVIEW FOR TRUSS COMPONENT ONLY

NOTE: ALTERING THIS DOCUMENT VOIDS THE ENGINEERS SEAL

WARNING - Verify design parameters and READ NOTES ON THIS AND INCLUDED IN MODULUS ENGINEERING LTD. NOTES ME-TCD01 (VER 06/2017) BEFORE USE.
Design valid for use only with Mitek connectors. This design is based only upon parameters shown, and is for individual building components. Applicability of design parameters and proper incorporation of component is responsibility of building designer - not truss designer. Bracing shown is for lateral support of individual web members only. Additional temporary bracing to ensure stability during construction is the responsibility of the erector. Additional permanent bracing of the overall structure is the responsibility of the building designer. For general guidance regarding fabrication, quality control, storage, delivery, erection and bracing, consult
TPIC Appendix G - Minimum quality Manufacturing Criteria available from **www.tpic.ca** and **BCSI-CANADA (Building Component Safety Information) available** from TPI, 781 N. Lee Street, Suite 312, Alexandria, VA 22314 or www.sbcindustry.com

KOTT

JOB NAME	TRUSS NAME	QUANTITY	PLY	JOB DESC.	DRWG NO.
T-RIVER 1-2	J03	6	1	ZADORRA ESTATES INC TRUSS DESC.	ME23-5757-17

Kott, Uxbridge,ON

Version 8.630 S Mar 22 2023 MiTek Industries, Inc. Mon Jul 3 15:04:10 2023 Page 1
ID:NccLgzmhd_ldQzH3VGMNlRzOs0a-3LayrG18zxSUdnHEmI?D5mmMtXkfpAwCr4IPYtz?lbJ

CORPORATION OF THE CITY OF OSHAWA
TRUE COPY
OF PERMIT PLANS
Nov 04 2023
PER:
CHIEF BUILDING OFFICIAL

MHP 23021

Scale = 1:14.7

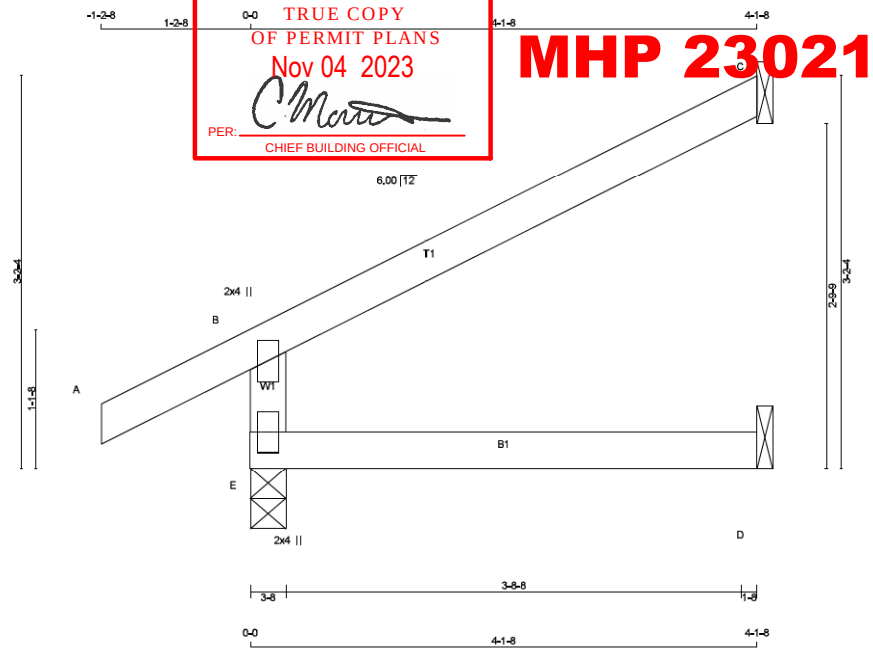

TOTAL WEIGHT = 6 X 12 = 74 lb [M]

LUMBER
N. L. G. A. RULES

CHORDS	SIZE		LUMBER	DESCR.
E - B	2x4	DRY	No.2	SPF
A - C	2x4	DRY	No.2	SPF
E - D	2x4	DRY	No.2	SPF

DRY: SEASONED LUMBER.

PLATES (table is in inches)

JT	TYPE	PLATES	W	LEN	Y	X
B	TMV+p	MT20	2.0	4.0		
E	BMV1+p	MT20	2.0	4.0		

DIMENSIONS, SUPPORTS AND LOADINGS SPECIFIED BY FABRICATOR TO BE VERIFIED BY BUILDING DESIGNER

BEARINGS

JT	FACTORED GROSS REACTION VERT	HORZ	MAXIMUM FACTORED GROSS REACTION DOWN	HORZ	UPLIFT	INPUT BRG	REQRD BRG
E	503	0	503	0	0	3-8	1-8
C	185	0	185	0	0	1-8	1-8
D	32	0	36	0	0	1-8	1-8

SEE MITEK STANDARD DETAIL MSD2015-H FOR CONNECTION TO JOINT(S) C , D

UNFACTORED REACTIONS

JT	1ST LCASE COMBINED	MAX./MIN. COMPONENT REACTIONS SNOW	LIVE	PERM.LIVE	WIND	DEAD	SOIL
E	349	268 / 0	0 / 0	0 / 0	0 / 0	81 / 0	0 / 0
C	126	108 / 0	0 / 0	0 / 0	0 / 0	19 / 0	0 / 0
D	25	0 / 0	0 / 0	0 / 0	0 / 0	25 / 0	0 / 0

BEARING MATERIAL TO BE SPF NO.2 OR BETTER AT JOINT(S) E

BRACING
TOP CHORD TO BE SHEATHED OR MAX. PURLIN SPACING = 6.25 FT.
MAX. UNBRACED BOTTOM CHORD LENGTH = 10.00 FT OR RIGID CEILING DIRECTLY APPLIED.

ALL PITCH BREAKS AND PERIMETER CORNER JOINTS MUST BE LATERALLY RESTRAINED.

LOADING
TOTAL LOAD CASES: (4)

CHORDS

MEMB. FR-TO	MAX. FACTORED FORCE (LBS)	FACTORED VERT. LOAD LC1 (PLF) FROM	TO	MAX CSI (LC)	MAX. UNBRAC LENGTH
E- B	-460 / 0	0.0	0.0	0.06 (4)	7.81
A- B	0 / 34	-119.4	-119.4	0.14 (1)	10.00
B- C	-27 / 0	-119.4	-119.4	0.35 (1)	6.25
E- D	0 / 0	-18.2	-18.2	0.06 (4)	10.00

WEBS

MEMB. FR-TO	MAX. FACTORED FORCE (LBS)	MAX CSI (LC)

DESIGN CRITERIA

SPECIFIED LOADS:

TOP CH.	LL	=	34.8	PSF
	DL	=	6.0	PSF
BOT CH.	LL	=	0.0	PSF
	DL	=	7.3	PSF
TOTAL LOAD		=	48.1	PSF

SPACING = 24.0 IN. C/C

THIS TRUSS IS DESIGNED FOR RESIDENTIAL OR SMALL BUILDING REQUIREMENTS OF PART 9, NBCC 2015

THIS DESIGN COMPLIES WITH:
- PART 9 OF BCBC 2018 , NBC-2019AE
- PART 9 OF OBC 2012 (2019 AMENDMENT)
- CSA 086-14
- TPIC 2014

DESIGN ASSUMPTIONS
-OVERHANG NOT TO BE ALTERED OR CUT OFF.

(55 % OF 48.1 P.S.F. G.S.L. PLUS 8.4 P.S.F. RAIN LOAD) EQUALS 34.8 P.S.F. SPECIFIED ROOF LIVE LOAD

ALLOWABLE DEFL.(LL)= L/360 (0.19")
CALCULATED VERT. DEFL.(LL) = L/ 999 (0.00")
ALLOWABLE DEFL.(TL)= L/360 (0.19")
CALCULATED VERT. DEFL.(TL) = L/ 999 (0.01")

CSI: TC=0.35/1.00 (B-C:1) , BC=0.06/1.00 (D-E:4) , WB=0.00/1.00 (n/a:0) , SSI=0.21/1.00 (B-C:1)

DOL LUMBER=1.00 NAIL=1.00 LS BEND=1.10 COMP=1.10 SHEAR=1.10 TENS= 1.10

COMPANION LIVE LOAD FACTOR = 1.00

TRUSS PLATE MANUFACTURER IS NOT RESPONSIBLE FOR QUALITY CONTROL IN THE TRUSS MANUFACTURING PLANT .

NAIL VALUES

PLATE	GRIP(DRY) (PSI) MAX	MIN	SHEAR (PLI) MAX	MIN	SECTION (PLI) MAX	MIN
MT20	650	371	1747	788	1987	1873

PLATE PLACEMENT TOL. = 0.250 inches

PLATE ROTATION TOL. = 5.0 Deg.

JSI GRIP= 0.26 (B) (INPUT = 0.90)
JSI METAL= 0.19 (B) (INPUT = 1.00)

MODULUS ENGINEERING LTD.

LICENSED PROFESSIONAL ENGINEER
07/04/2023
D. A. SHERMAN
100123373
PROVINCE OF ONTARIO

REVIEW FOR TRUSS COMPONENT ONLY

NOTE: ALTERING THIS DOCUMENT VOIDS THE ENGINEERS SEAL

WARNING - Verify design parameters and READ NOTES ON THIS AND INCLUDED IN MODULUS ENGINEERING LTD. NOTES ME-TCD01 (VER 06/2017) BEFORE USE.
Design valid for use only with Mitek connectors. This design is based only upon parameters shown, and is for individual building components. Applicability of design parameters and proper incorporation of component is responsibility of building designer - not truss designer. Bracing shown is for lateral support of individual web members only. Additional temporary bracing to ensure stability during construction is the responsibility of the erector. Additional permanent bracing of the overall structure is the responsibility of the building designer. For general guidance regarding fabrication, quality control, storage, delivery, erection and bracing, consult
TPIC Appendix G - Minimum quality Manufacturing Criteria available from **www.tpic.ca** and **BCSI-CANADA (Building Component Safety Information) available** from TPI, 781 N. Lee Street, Suite 312, Alexandria, VA 22314 or www.sbcindustry.com

KOTT

JOB NAME	TRUSS NAME	QUANTITY	PLY	JOB DESC.	DRWG NO.
T-RIVER 1-2	J04	2	1	ZADORRA ESTATES INC TRUSS DESC.	ME23-5757-18

Kott, Uxbridge,ON

Version 8.630 S Mar 22 2023 MiTek Industries, Inc. Mon Jul 3 15:04:12 2023 Page 1
ID:NccLgzmhd_ldQzH3VGMNlRzOs0a-?kiiGx2OVYiCs5RdtA1hBBrcKLNZH4QVJNnWdlz?IbH

CORPORATION OF THE CITY OF OSHAWA
TRUE COPY
OF PERMIT PLANS
Nov 04 2023
PER: C Mott
CHIEF BUILDING OFFICIAL

MHP 23021

Scale = 1:14.0

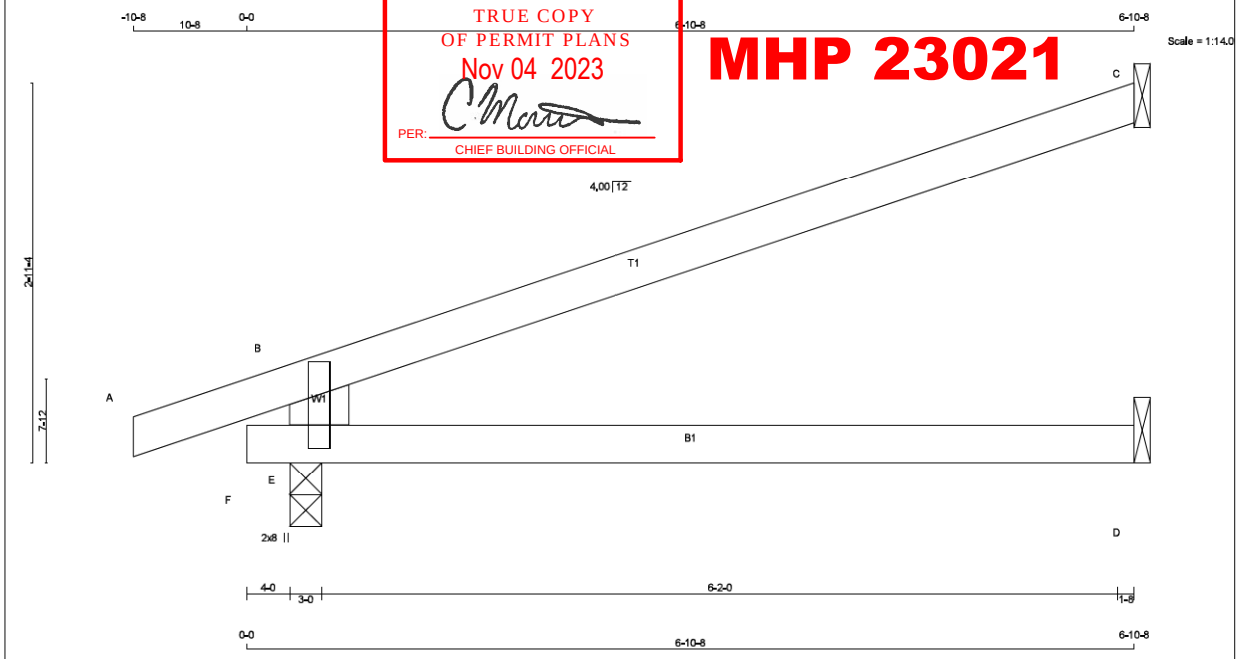

TOTAL WEIGHT = 2 X 18 = 36 lb
[M][F]

LUMBER
N. L. G. A. RULES

CHORDS	SIZE		LUMBER	DESCR.
E - B	2x6	DRY	No.2	SPF
A - C	2x4	DRY	No.2	SPF
F - D	2x4	DRY	No.2	SPF

DRY: SEASONED LUMBER.

PLATES (table is in inches)

JT	TYPE	PLATES	W	LEN	Y	X
B						
E						
E	TMBMV1+p	MT20	2.0	8.0		

DIMENSIONS, SUPPORTS AND LOADINGS SPECIFIED BY FABRICATOR TO BE VERIFIED BY BUILDING DESIGNER

BEARINGS

JT	FACTORED GROSS REACTION VERT	HORZ	MAXIMUM FACTORED GROSS REACTION DOWN	HORZ	UPLIFT	INPUT BRG	REQRD BRG
E	719	0	719	0	0	3-0	1-8
C	293	0	293	0	0	1-8	1-8
D	45	0	50	0	0	1-8	1-8

SEE MITEK STANDARD DETAIL MSD2015-H FOR CONNECTION TO JOINT(S) C , D

UNFACTORED REACTIONS

JT	1ST LCASE COMBINED	MAX./MIN. COMPONENT REACTIONS SNOW	LIVE	PERM.LIVE	WIND	DEAD	SOIL
E	501	372 / 0	0 / 0	0 / 0	0 / 0	129 / 0	0 / 0
C	200	171 / 0	0 / 0	0 / 0	0 / 0	29 / 0	0 / 0
D	36	0 / 0	0 / 0	0 / 0	0 / 0	36 / 0	0 / 0

BEARING MATERIAL TO BE SPF NO.2 OR BETTER AT JOINT(S) E, C

BRACING
TOP CHORD TO BE SHEATHED OR MAX. PURLIN SPACING = 6.25 FT.
MAX. UNBRACED BOTTOM CHORD LENGTH = 10.00 FT OR RIGID CEILING DIRECTLY APPLIED.

ALL PITCH BREAKS AND PERIMETER CORNER JOINTS MUST BE LATERALLY RESTRAINED.

LOADING
TOTAL LOAD CASES: (4)

CHORDS

MEMB. FR-TO	MAX. FACTORED FORCE (LBS)	FACTORED VERT. LOAD (PLF) FROM	TO	LC1 CSI (LC)	MAX UNBRAC LENGTH
E- B	-638 / 0	0.0	0.0	0.04 (1)	7.81
A- B	0 / 24	-119.4	-119.4	0.13 (1)	10.00
B- C	-31 / 0	-119.4	-119.4	0.67 (1)	6.25
F- E	0 / 0	-18.2	-18.2	0.00 (4)	10.00
E- D	0 / 0	-18.2	-18.2	0.23 (4)	10.00

WEBS

MEMB. FR-TO	MAX. FACTORED FORCE (LBS)	MAX CSI (LC)

DESIGN CRITERIA

SPECIFIED LOADS:

TOP CH.	LL	=	34.8	PSF
	DL	=	6.0	PSF
BOT CH.	LL	=	0.0	PSF
	DL	=	7.3	PSF
TOTAL LOAD		=	48.1	PSF

SPACING = 24.0 IN. C/C

THIS TRUSS IS DESIGNED FOR RESIDENTIAL OR SMALL BUILDING REQUIREMENTS OF PART 9, NBCC 2015

THIS DESIGN COMPLIES WITH:
- PART 9 OF BCBC 2018 , NBC-2019AE
- PART 9 OF OBC 2012 (2019 AMENDMENT)
- CSA 086-14
- TPIC 2014

DESIGN ASSUMPTIONS
-OVERHANG NOT TO BE ALTERED OR CUT OFF.

(55 % OF 48.1 P.S.F. G.S.L. PLUS 8.4 P.S.F. RAIN LOAD) EQUALS 34.8 P.S.F. SPECIFIED ROOF LIVE LOAD

ALLOWABLE DEFL.(TL)= L/360 (0.22")
CALCULATED VERT. DEFL.(TL) = L/ 999 (0.03")

CANTILEVER DEFLECTION:
ALLOWABLE DEFL.(TL)= L/120 (0.19")
CALCULATED VERT. DEFL.(TL) = L/ 999 (0.00")

CSI: TC=0.67/1.00 (B-C:1) , BC=0.23/1.00 (D-E:4) , WB=0.00/1.00 (n/a:0) , SSI=0.36/1.00 (B-C:1)

DOL LUMBER=1.00 NAIL=1.00 LS BEND=1.10 COMP=1.10 SHEAR=1.10 TENS= 1.10

COMPANION LIVE LOAD FACTOR = 1.00

AUTOSOLVE RIGHT HEEL ONLY

TRUSS PLATE MANUFACTURER IS NOT RESPONSIBLE FOR QUALITY CONTROL IN THE TRUSS MANUFACTURING PLANT.

NAIL VALUES

PLATE	GRIP(DRY) (PSI) MAX	MIN	SHEAR (PLI) MAX	MIN	SECTION (PLI) MAX	MIN
MT20	650	371	1747	788	1987	1873

PLATE PLACEMENT TOL. = 0.250 inches

PLATE ROTATION TOL. = 5.0 Deg.

JSI GRIP= 0.29 (E) (INPUT = 0.90)
JSI METAL= 0.19 (E) (INPUT = 1.00)

MODULUS ENGINEERING LTD.

LICENSED PROFESSIONAL ENGINEER
07/04/2023
D. A. SHERMAN
100123373
PROVINCE OF ONTARIO

REVIEW FOR TRUSS COMPONENT ONLY

NOTE: ALTERING THIS DOCUMENT VOIDS THE ENGINEERS SEAL

WARNING - Verify design parameters and READ NOTES ON THIS AND INCLUDED IN MODULUS ENGINEERING LTD. NOTES ME-TCD01 (VER 06/2017) BEFORE USE.
Design valid for use only with Mitek connectors. This design is based only upon parameters shown, and is for individual building components. Applicability of design parameters and proper incorporation of component is responsibility of building designer - not truss designer. Bracing shown is for lateral support of individual web members only. Additional temporary bracing to ensure stability during construction is the responsibility of the erector. Additional permanent bracing of the overall structure is the responsibility of the building designer. For general guidance regarding fabrication, quality control, storage, delivery, erection and bracing, consult
TPIC Appendix G - Minimum quality Manufacturing Criteria available from **www.tpic.ca** and **BCSI-CANADA (Building Component Safety Information) available** from TPI, 781 N. Lee Street, Suite 312, Alexandria, VA 22314 or www.sbcindustry.com

KOTT

JOB NAME	TRUSS NAME	QUANTITY	PLY	JOB DESC.	DRWG NO.
T-RIVER 1-2	J05	5	1	ZADORRA ESTATES INC TRUSS DESC.	ME23-5757-19

Kott, Uxbridge,ON

Version 8.630 S Mar 22 2023 MiTek Industries, Inc. Mon Jul 3 15:04:13 2023 Page 1

ID:Nc?Lgzmhd_ldQzH3VGMNlRzOs0a-TwG4TH30Gsq3UF0pRtZwjPOn4Ijo0XgeX1W39Bz?IbG

CORPORATION OF THE CITY OF OSHAWA
TRUE COPY
OF PERMIT PLANS
Nov 04 2023
PER: C Mott
CHIEF BUILDING OFFICIAL

MHP 23021

Scale = 1:14.4

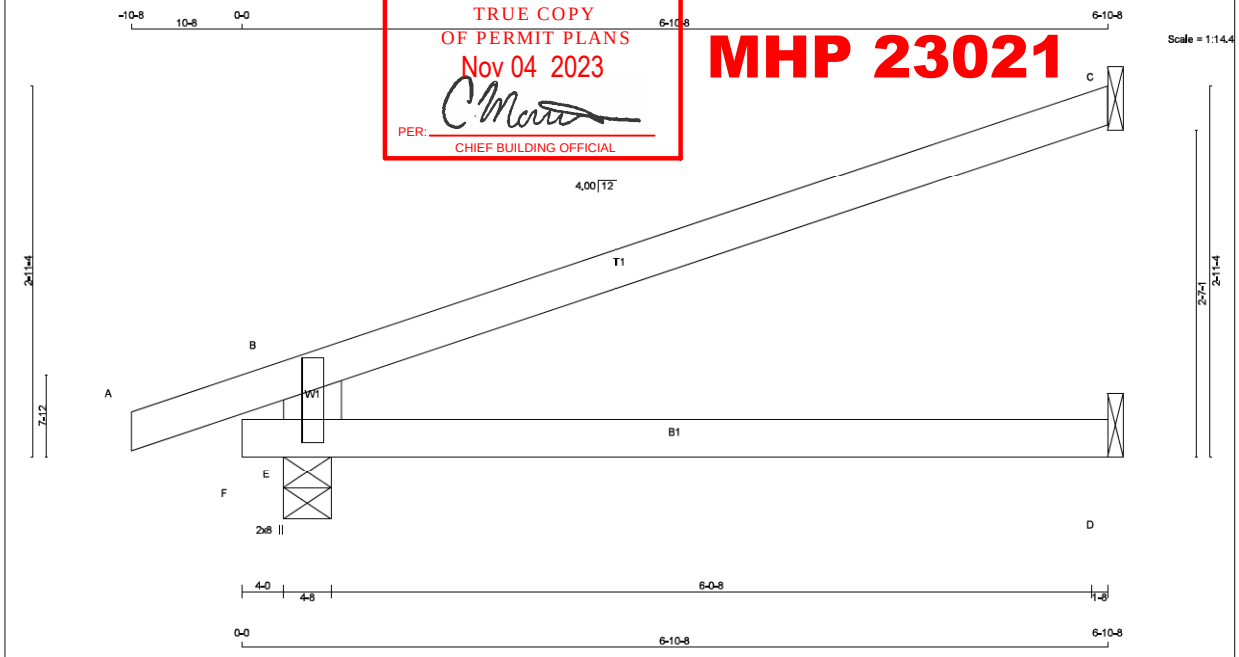

TOTAL WEIGHT = 5 X 18 = 89 lb

[M][F]

LUMBER
N. L. G. A. RULES

CHORDS	SIZE		LUMBER	DESCR.
E - B	2x6	DRY	No.2	SPF
A - C	2x4	DRY	No.2	SPF
F - D	2x4	DRY	No.2	SPF

DRY: SEASONED LUMBER.

PLATES (table is in inches)

JT	TYPE	PLATES	W	LEN	Y	X
B						
E						
E	TMBMV1+p	MT20	2.0	8.0		

DIMENSIONS, SUPPORTS AND LOADINGS SPECIFIED BY FABRICATOR TO BE VERIFIED BY BUILDING DESIGNER

BEARINGS

JT	FACTORED GROSS REACTION VERT	HORZ	MAXIMUM FACTORED GROSS REACTION DOWN	HORZ	UPLIFT	INPUT BRG IN-SX	REQRD BRG IN-SX
E	719	0	719	0	0	4-8	1-8
C	293	0	293	0	0	1-8	1-8
D	45	0	50	0	0	1-8	1-8

SEE MITEK STANDARD DETAIL MSD2015-H FOR CONNECTION TO JOINT(S) C , D

UNFACTORED REACTIONS

JT	1ST LCASE COMBINED	MAX./MIN. COMPONENT REACTIONS SNOW	LIVE	PERM.LIVE	WIND	DEAD	SOIL
E	501	372 / 0	0 / 0	0 / 0	0 / 0	129 / 0	0 / 0
C	200	171 / 0	0 / 0	0 / 0	0 / 0	29 / 0	0 / 0
D	36	0 / 0	0 / 0	0 / 0	0 / 0	36 / 0	0 / 0

BEARING MATERIAL TO BE SPF NO.2 OR BETTER AT JOINT(S) E

BRACING
TOP CHORD TO BE SHEATHED OR MAX. PURLIN SPACING = 6.25 FT.
MAX. UNBRACED BOTTOM CHORD LENGTH = 10.00 FT OR RIGID CEILING DIRECTLY APPLIED.

ALL PITCH BREAKS AND PERIMETER CORNER JOINTS MUST BE LATERALLY RESTRAINED.

LOADING
TOTAL LOAD CASES: (4)

CHORDS

MEMB. FR-TO	MAX. FACTORED FORCE (LBS)	FACTORED VERT. LOAD (PLF) FROM	TO	LC1 CSI (LC)	MAX UNBRAC LENGTH
E- B	-638 / 0	0.0	0.0	0.04 (1)	7.81
A- B	0 / 24	-119.4	-119.4	0.13 (1)	10.00
B- C	-31 / 0	-119.4	-119.4	0.67 (1)	6.25
F- E	0 / 0	-18.2	-18.2	0.00 (4)	10.00
E- D	0 / 0	-18.2	-18.2	0.23 (4)	10.00

WEBS

MEMB. FR-TO	MAX. FACTORED FORCE (LBS)	MAX CSI (LC)

DESIGN CRITERIA

SPECIFIED LOADS:

TOP CH.	LL	=	34.8	PSF
	DL	=	6.0	PSF
BOT CH.	LL	=	0.0	PSF
	DL	=	7.3	PSF
TOTAL LOAD		=	48.1	PSF

SPACING = 24.0 IN. C/C

THIS TRUSS IS DESIGNED FOR RESIDENTIAL OR SMALL BUILDING REQUIREMENTS OF PART 9, NBCC 2015

THIS DESIGN COMPLIES WITH:
- PART 9 OF BCBC 2018 , NBC-2019AE
- PART 9 OF OBC 2012 (2019 AMENDMENT)
- CSA 086-14
- TPIC 2014

DESIGN ASSUMPTIONS
-OVERHANG NOT TO BE ALTERED OR CUT OFF.

(55 % OF 48.1 P.S.F. G.S.L. PLUS 8.4 P.S.F. RAIN LOAD) EQUALS 34.8 P.S.F. SPECIFIED ROOF LIVE LOAD

ALLOWABLE DEFL.(TL)= L/360 (0.22")
CALCULATED VERT. DEFL.(TL) = L/ 999 (0.03")

CANTILEVER DEFLECTION:
ALLOWABLE DEFL.(TL)= L/120 (0.19")
CALCULATED VERT. DEFL.(TL) = L/ 999 (0.00")

CSI: TC=0.67/1.00 (B-C:1) , BC=0.23/1.00 (D-E:4) , WB=0.00/1.00 (n/a:0) , SSI=0.36/1.00 (B-C:1)

DOL LUMBER=1.00 NAIL=1.00 LS BEND=1.10 COMP=1.10 SHEAR=1.10 TENS= 1.10

COMPANION LIVE LOAD FACTOR = 1.00

AUTOSOLVE RIGHT HEEL ONLY

TRUSS PLATE MANUFACTURER IS NOT RESPONSIBLE FOR QUALITY CONTROL IN THE TRUSS MANUFACTURING PLANT.

NAIL VALUES

PLATE	GRIP(DRY) (PSI) MAX	MIN	SHEAR (PLI) MAX	MIN	SECTION (PLI) MAX	MIN
MT20	650	371	1747	788	1987	1873

PLATE PLACEMENT TOL. = 0.250 inches

PLATE ROTATION TOL. = 5.0 Deg.

JSI GRIP= 0.29 (E) (INPUT = 0.90)
JSI METAL= 0.19 (E) (INPUT = 1.00)

MODULUS ENGINEERING LTD.

LICENSED PROFESSIONAL ENGINEER
07/04/2023
D. A. SHERMAN
100123373
PROVINCE OF ONTARIO

REVIEW FOR TRUSS COMPONENT ONLY

NOTE: ALTERING THIS DOCUMENT VOIDS THE ENGINEERS SEAL

WARNING - Verify design parameters and READ NOTES ON THIS AND INCLUDED IN MODULUS ENGINEERING LTD. NOTES ME-TCD01 (VER 06/2017) BEFORE USE.
Design valid for use only with Mitek connectors. This design is based only upon parameters shown, and is for individual building components. Applicability of design parameters and proper incorporation of component is responsibility of building designer - not truss designer. Bracing shown is for lateral support of individual web members only. Additional temporary bracing to ensure stability during construction is the responsibility of the erector. Additional permanent bracing of the overall structure is the responsibility of the building designer. For general guidance regarding fabrication, quality control, storage, delivery, erection and bracing, consult
TPIC Appendix G - Minimum quality Manufacturing Criteria available from **www.tpic.ca** and **BCSI-CANADA (Building Component Safety Information) available** from TPI, 781 N. Lee Street, Suite 312, Alexandria, VA 22314 or www.sbcindustry.com

KOTT

JOB NAME	TRUSS NAME	QUANTITY	PLY	JOB DESC.	DRWG NO.
T-RIVER 1-2	T01	2	1	ZADORRA ESTATES INC TRUSS DESC.	ME23-5757-20

Kott, Uxbridge,ON

Version 8.630 S Mar 22 2023 MiTek Industries, Inc. Mon Jul 3 15:04:14 2023 Page 1

ID:NkcLgzmhd_ldQzH3VGMNlRzOs0a-y7qShd4e1Ayw6Pb??a49Gcx2d81XloSomhGdhez?lbF

CORPORATION OF THE CITY OF OSHAWA
TRUE COPY
OF PERMIT PLANS
Nov 04 2023
PER:
CHIEF BUILDING OFFICIAL

MHP 23021

Scale = 1:40.2

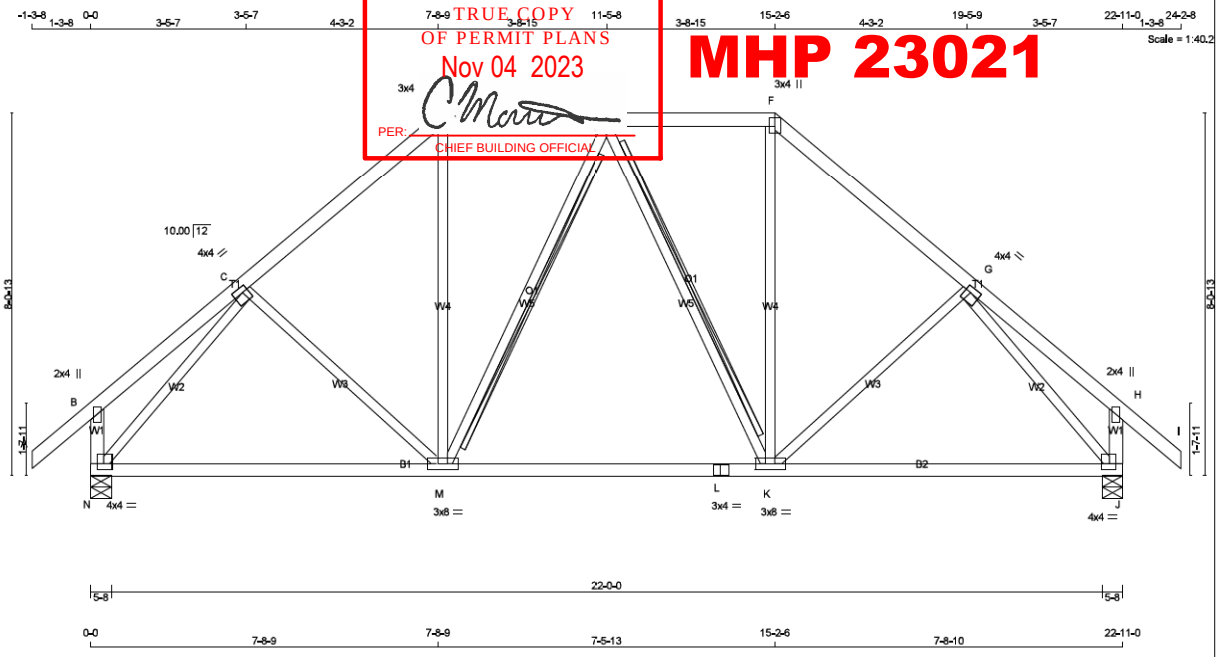

TOTAL WEIGHT = 2 X 108 = 215 lb
[M][F]

LUMBER
N. L. G. A. RULES

CHORDS	SIZE		LUMBER	DESCR.
A - D	2x4	DRY	No.2	SPF
D - F	2x4	DRY	No.2	SPF
F - I	2x4	DRY	No.2	SPF
N - B	2x4	DRY	No.2	SPF
J - H	2x4	DRY	No.2	SPF
N - L	2x4	DRY	No.2	SPF
L - J	2x4	DRY	No.2	SPF
ALL WEBS EXCEPT	2x3	DRY	No.2	SPF

DRY: SEASONED LUMBER.

PLATES (table is in inches)

JT	TYPE	PLATES	W	LEN	Y	X
B	TMV+p	MT20	2.0	4.0		
C	TMWW-t	MT20	4.0	4.0	1.50	1.50
D	TTW+p	MT20	3.0	4.0	2.25	1.50
E	TMWW-t	MT20	3.0	4.0		
F	TTW+p	MT20	3.0	4.0	2.25	1.50
G	TMWW-t	MT20	4.0	4.0	1.50	1.50
H	TMV+p	MT20	2.0	4.0		
J	BMVW1-t	MT20	4.0	4.0	1.50	1.75
K	BMWWW-t	MT20	3.0	8.0		
L	BS-t	MT20	3.0	4.0		
M	BMWWW-t	MT20	3.0	8.0		
N	BMVW1-t	MT20	4.0	4.0	1.50	1.75

DIMENSIONS, SUPPORTS AND LOADINGS SPECIFIED BY FABRICATOR TO BE VERIFIED BY BUILDING DESIGNER

BEARINGS

JT	FACTORED GROSS REACTION VERT	HORZ	MAXIMUM GROSS REACTION DOWN	HORZ	UPLIFT	FACTORED INPUT BRG	REQRD BRG
N	1743	0	1743	0	0	5-8	1-14
J	1743	0	1743	0	0	5-8	1-14

UNFACTORED REACTIONS

JT	1ST LCASE COMBINED	MAX./MIN. COMPONENT REACTIONS SNOW	LIVE	PERM.LIVE	WIND	DEAD	SOIL
N	1216	894 / 0	0 / 0	0 / 0	0 / 0	321 / 0	0 / 0
J	1216	894 / 0	0 / 0	0 / 0	0 / 0	321 / 0	0 / 0

BEARING MATERIAL TO BE SPF NO.2 OR BETTER AT JOINT(S) N, J

BRACING

TOP CHORD TO BE SHEATHED OR MAX. PURLIN SPACING = 5.19 FT.
MAX. UNBRACED BOTTOM CHORD LENGTH = 10.00 FT OR RIGID CEILING DIRECTLY APPLIED.

ALL PITCH BREAKS AND PERIMETER CORNER JOINTS MUST BE LATERALLY RESTRAINED.

2x4 DRY SPF No.2 T-BRACE AT E-M, E-K

FASTEN T AND I-BRACES TO NARROW EDGE OF WEB WITH ONE ROW PER PLY OF 3" COMMON WIRE NAILS @ 6" O.C. WITH 3" MINIMUM END DISTANCE. BRACE MUST COVER 90% OF WEB LENGTH.

END VERTICAL(S) MUST BE SHEATHED OR HAVE BRACES AS INDICATED IN THE MAX. UNBRACED LENGTH COLUMN OF THE TABLE BELOW

LOADING

TOTAL LOAD CASES: (4)

CHORDS

MEMB. FR-TO	MAX. FACTORED FORCE (LBS)	FACTORED VERT. LOAD (PLF) FROM	TO	CSI (LC)	MAX. UNBRAC LENGTH
A- B	0 / 53	-119.4	-119.4	0.16 (1)	10.00
B- C	0 / 41	-119.4	-119.4	0.30 (1)	10.00
C- D	-1404 / 0	-119.4	-119.4	0.29 (1)	5.19
D- E	-1058 / 0	-119.4	-119.4	0.21 (1)	5.87
E- F	-1058 / 0	-119.4	-119.4	0.21 (1)	5.87
F- G	-1404 / 0	-119.4	-119.4	0.29 (1)	5.19
G- H	0 / 41	-119.4	-119.4	0.30 (1)	10.00
H- I	0 / 53	-119.4	-119.4	0.16 (1)	10.00
N- B	-300 / 0	0.0	0.0	0.03 (1)	7.81
J- H	-300 / 0	0.0	0.0	0.03 (1)	7.81
N- M	0 / 1130	-18.2	-18.2	0.32 (1)	10.00
M- L	0 / 1184	-18.2	-18.2	0.32 (1)	10.00
L- K	0 / 1184	-18.2	-18.2	0.32 (1)	10.00
K- J	0 / 1130	-18.2	-18.2	0.32 (1)	10.00

WEBS

MEMB. FR-TO	MAX. FACTORED FORCE (LBS)	MAX CSI (LC)
C- M	-105 / 22	0.07 (1)
M- D	0 / 490	0.11 (1)
M- E	-297 / 0	0.17 (1)
E- K	-296 / 0	0.17 (1)
K- F	0 / 490	0.11 (1)
K- G	-106 / 22	0.07 (1)
N- C	-1787 / 0	0.80 (1)
G- J	-1787 / 0	0.80 (1)

DESIGN CRITERIA

SPECIFIED LOADS:

TOP CH.	LL	=	34.8	PSF
	DL	=	6.0	PSF
BOT CH.	LL	=	0.0	PSF
	DL	=	7.3	PSF
TOTAL LOAD		=	48.1	PSF

SPACING = 24.0 IN. C/C

LOADING IN FLAT SECTION BASED ON A SLOPE OF 2.00/12 MINIMUM

THIS TRUSS IS DESIGNED FOR RESIDENTIAL OR SMALL BUILDING REQUIREMENTS OF PART 9, NBCC 2015

THIS DESIGN COMPLIES WITH:
- PART 9 OF BCBC 2018 , NBC-2019AE
- PART 9 OF OBC 2012 (2019 AMENDMENT)
- CSA 086-14
- TPIC 2014

(55 % OF 48.1 P.S.F. G.S.L. PLUS 8.4 P.S.F. RAIN LOAD) EQUALS 34.8 P.S.F. SPECIFIED ROOF LIVE LOAD

ALLOWABLE DEFL.(LL)= L/360 (0.76")
CALCULATED VERT. DEFL.(LL) = L/ 999 (0.04")
ALLOWABLE DEFL.(TL)= L/360 (0.76")
CALCULATED VERT. DEFL.(TL) = L/ 999 (0.13")

CSI: TC=0.30/1.00 (G-H:1) , BC=0.32/1.00 (K-M:1) , WB=0.80/1.00 (G-J:1) , SSI=0.21/1.00 (D-E:1)

DOL LUMBER=1.00 NAIL=1.00 LS BEND=1.10 COMP=1.10 SHEAR=1.10 TENS= 1.10

COMPANION LIVE LOAD FACTOR = 1.00

TRUSS PLATE MANUFACTURER IS NOT RESPONSIBLE FOR QUALITY CONTROL IN THE TRUSS MANUFACTURING PLANT.

NAIL VALUES

PLATE	GRIP(DRY) (PSI) MAX	MIN	SHEAR (PLI) MAX	MIN	SECTION (PLI) MAX	MIN
MT20	650	371	1747	788	1987	1873

PLATE PLACEMENT TOL. = 0.250 inches

PLATE ROTATION TOL. = 5.0 Deg.

JSI GRIP= 0.90 (D) (INPUT = 0.90)
JSI METAL= 0.59 (C) (INPUT = 1.00)

MODULUS ENGINEERING LTD.

LICENSED PROFESSIONAL ENGINEER
07/04/2023
D. A. SHERMAN
100123373
PROVINCE OF ONTARIO

REVIEW FOR TRUSS COMPONENT ONLY

NOTE: ALTERING THIS DOCUMENT VOIDS THE ENGINEERS SEAL

WARNING - Verify design parameters and READ NOTES ON THIS AND INCLUDED IN MODULUS ENGINEERING LTD. NOTES ME-TCD01 (VER 06/2017) BEFORE USE.
Design valid for use only with Mitek connectors. This design is based only upon parameters shown, and is for individual building components. Applicability of design parameters and proper incorporation of component is responsibility of building designer - not truss designer. Bracing shown is for lateral support of individual web members only. Additional temporary bracing to ensure stability during construction is the responsibility of the erector. Additional permanent bracing of the overall structure is the responsibility of the building designer. For general guidance regarding fabrication, quality control, storage, delivery, erection and bracing, consult
TPIC Appendix G - Minimum quality Manufacturing Criteria available from **www.tpic.ca** and **BCSI-CANADA (Building Component Safety Information) available** from TPI, 781 N. Lee Street, Suite 312, Alexandria, VA 22314 or www.sbcindustry.com

KOTT

JOB NAME	TRUSS NAME	QUANTITY	PLY	JOB DESC.	DRWG NO.
T-RIVER 1-2	T02	2	1	ZADORRA ESTATES INC TRUSS DESC.	ME23-5757-21

Kott, Uxbridge,ON

Version 8.630 S Mar 22 2023 MiTek Industries, Inc. Mon Jul 3 15:04:16 2023 Page 1

ID:NccLgzmhd_ldQzH3VGMNlRzOs0a-uVyD5J5vZnCeLjlO6?6dL10LYykvDkr5D?lkmWz?lbD

CORPORATION OF THE CITY OF OSHAWA
TRUE COPY
OF PERMIT PLANS
Nov 04 2023
PER: _____
CHIEF BUILDING OFFICIAL

MHP 23021

Scale = 1:40.2

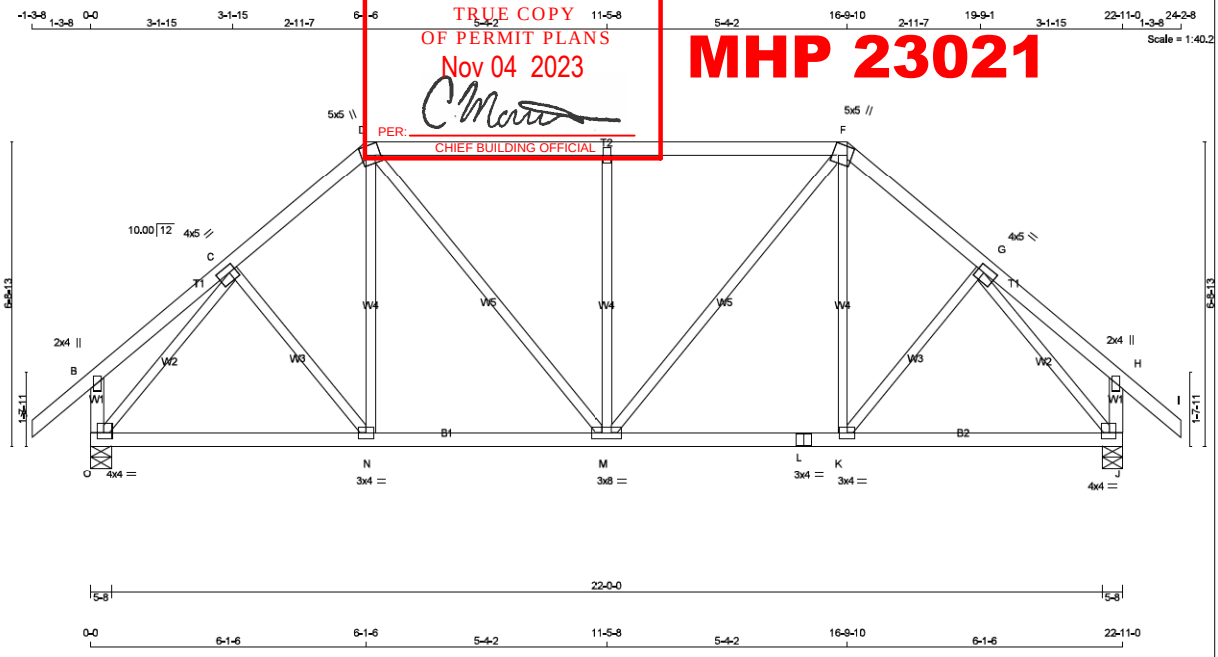

TOTAL WEIGHT = 2 X 107 = 213 lb [M][F]

LUMBER
N. L. G. A. RULES

CHORDS	SIZE		LUMBER	DESCR.
A - D	2x4	DRY	No.2	SPF
D - F	2x4	DRY	No.2	SPF
F - I	2x4	DRY	No.2	SPF
O - B	2x4	DRY	No.2	SPF
J - H	2x4	DRY	No.2	SPF
O - L	2x4	DRY	No.2	SPF
L - J	2x4	DRY	No.2	SPF
ALL WEBS EXCEPT	2x3	DRY	No.2	SPF

DRY: SEASONED LUMBER.

PLATES (table is in inches)

JT	TYPE	PLATES	W	LEN	Y	X
B	TMV+p	MT20	2.0	4.0		
C	TMWW+t	MT20	4.0	5.0	1.75	1.75
D	TTWW+m	MT20	5.0	5.0	2.25	1.25
E	TMW+w	MT20	2.0	4.0		
F	TTWW+m	MT20	5.0	5.0	2.25	1.25
G	TMWW+t	MT20	4.0	5.0	1.75	1.75
H	TMV+p	MT20	2.0	4.0		
J	BMVW1+t	MT20	4.0	4.0	1.50	1.75
K	BMWW+t	MT20	3.0	4.0		
L	BS+t	MT20	3.0	4.0		
M	BMWWW+t	MT20	3.0	8.0		
N	BMWW+t	MT20	3.0	4.0		
O	BMVW1+t	MT20	4.0	4.0	1.50	1.75

DIMENSIONS, SUPPORTS AND LOADINGS SPECIFIED BY FABRICATOR TO BE VERIFIED BY BUILDING DESIGNER

BEARINGS

JT	FACTORED GROSS REACTION VERT	HORZ	MAXIMUM FACTORED GROSS REACTION DOWN	HORZ	UPLIFT	INPUT BRG	REQRD BRG
O	1743	0	1743	0	0	5-8	1-14
J	1743	0	1743	0	0	5-8	1-14

UNFACTORED REACTIONS

JT	1ST LCASE COMBINED	MAX./MIN. COMPONENT REACTIONS SNOW	LIVE	PERM.LIVE	WIND	DEAD	SOIL
O	1216	894 / 0	0 / 0	0 / 0	0 / 0	321 / 0	0 / 0
J	1216	894 / 0	0 / 0	0 / 0	0 / 0	321 / 0	0 / 0

BEARING MATERIAL TO BE SPF NO.2 OR BETTER AT JOINT(S) O, J

BRACING
TOP CHORD TO BE SHEATHED OR MAX. PURLIN SPACING = 4.83 FT.
MAX. UNBRACED BOTTOM CHORD LENGTH = 10.00 FT OR RIGID CEILING DIRECTLY APPLIED.

ALL PITCH BREAKS AND PERIMETER CORNER JOINTS MUST BE LATERALLY RESTRAINED.

LOADING
TOTAL LOAD CASES: (4)

CHORDS

MEMB. FR-TO	MAX. FACTORED FORCE (LBS)	FACTORED VERT. LOAD (PLF) FROM	TO	LC1 CSI (LC)	MAX UNBRAC LENGTH
A- B	0 / 53	-119.4	-119.4	0.16 (1)	10.00
B- C	0 / 25	-119.4	-119.4	0.16 (1)	10.00
C- D	-1475 / 0	-119.4	-119.4	0.15 (1)	5.26
D- E	-1469 / 0	-119.4	-119.4	0.46 (1)	4.83
E- F	-1469 / 0	-119.4	-119.4	0.46 (1)	4.83
F- G	-1475 / 0	-119.4	-119.4	0.15 (1)	5.26
G- H	0 / 25	-119.4	-119.4	0.16 (1)	10.00
H- I	0 / 53	-119.4	-119.4	0.16 (1)	10.00
O- B	-307 / 0	0.0	0.0	0.03 (1)	7.81
J- H	-307 / 0	0.0	0.0	0.03 (1)	7.81
O- N	0 / 1099	-18.2	-18.2	0.26 (1)	10.00
N- M	0 / 1112	-18.2	-18.2	0.27 (1)	10.00
M- L	0 / 1112	-18.2	-18.2	0.27 (1)	10.00
L- K	0 / 1112	-18.2	-18.2	0.27 (1)	10.00
K- J	0 / 1099	-18.2	-18.2	0.26 (1)	10.00

WEBS

MEMB. FR-TO	MAX. FACTORED FORCE (LBS)	MAX CSI (LC)
C- N	0 / 45	0.02 (4)
N- D	0 / 109	0.04 (4)
D- M	0 / 558	0.13 (1)
M- E	-779 / 0	0.59 (1)
M- F	0 / 558	0.13 (1)
K- F	0 / 110	0.04 (4)
K- G	0 / 45	0.02 (4)
O- C	-1771 / 0	0.68 (1)
G- J	-1771 / 0	0.68 (1)

DESIGN CRITERIA

SPECIFIED LOADS:

TOP CH.	LL	=	34.8	PSF
	DL	=	6.0	PSF
BOT CH.	LL	=	0.0	PSF
	DL	=	7.3	PSF
TOTAL LOAD		=	48.1	PSF

SPACING = 24.0 IN. C/C

LOADING IN FLAT SECTION BASED ON A SLOPE OF 2.00/12 MINIMUM

THIS TRUSS IS DESIGNED FOR RESIDENTIAL OR SMALL BUILDING REQUIREMENTS OF PART 9, NBCC 2015

THIS DESIGN COMPLIES WITH:
- PART 9 OF BCBC 2018 , NBC-2019AE
- PART 9 OF OBC 2012 (2019 AMENDMENT)
- CSA 086-14
- TPIC 2014

(55 % OF 48.1 P.S.F. G.S.L. PLUS 8.4 P.S.F. RAIN LOAD) EQUALS 34.8 P.S.F. SPECIFIED ROOF LIVE LOAD

ALLOWABLE DEFL.(LL)= L/360 (0.76")
CALCULATED VERT. DEFL.(LL) = L/ 999 (0.05")
ALLOWABLE DEFL.(TL)= L/360 (0.76")
CALCULATED VERT. DEFL.(TL) = L/ 999 (0.08")

CSI: TC=0.46/1.00 (D-E:1) , BC=0.27/1.00 (K-M:1) , WB=0.68/1.00 (G-J:1) , SSI=0.31/1.00 (D-E:1)

DOL LUMBER=1.00 NAIL=1.00 LS BEND=1.10 COMP=1.10 SHEAR=1.10 TENS= 1.10

COMPANION LIVE LOAD FACTOR = 1.00

TRUSS PLATE MANUFACTURER IS NOT RESPONSIBLE FOR QUALITY CONTROL IN THE TRUSS MANUFACTURING PLANT.

NAIL VALUES

PLATE	GRIP(DRY) (PSI) MAX	MIN	SHEAR (PLI) MAX	MIN	SECTION (PLI) MAX	MIN
MT20	650	371	1747	788	1987	1873

PLATE PLACEMENT TOL. = 0.250 inches

PLATE ROTATION TOL. = 5.0 Deg.

JSI GRIP= 0.88 (G) (INPUT = 0.90)
JSI METAL= 0.47 (C) (INPUT = 1.00)

MODULUS ENGINEERING LTD.

LICENSED PROFESSIONAL ENGINEER
07/04/2023
D. A. SHERMAN
100123373
PROVINCE OF ONTARIO

REVIEW FOR TRUSS COMPONENT ONLY

NOTE: ALTERING THIS DOCUMENT VOIDS THE ENGINEERS SEAL

WARNING - Verify design parameters and READ NOTES ON THIS AND INCLUDED IN MODULUS ENGINEERING LTD. NOTES ME-TCD01 (VER 06/2017) BEFORE USE.
Design valid for use only with Mitek connectors. This design is based only upon parameters shown, and is for individual building components. Applicability of design parameters and proper incorporation of component is responsibility of building designer - not truss designer. Bracing shown is for lateral support of individual web members only. Additional temporary bracing to ensure stability during construction is the responsibility of the erector. Additional permanent bracing of the overall structure is the responsibility of the building designer. For general guidance regarding fabrication, quality control, storage, delivery, erection and bracing, consult
TPIC Appendix G - Minimum quality Manufacturing Criteria available from **www.tpic.ca** and **BCSI-CANADA (Building Component Safety Information) available** from TPI, 781 N. Lee Street, Suite 312, Alexandria, VA 22314 or www.sbcindustry.com

KOTT

JOB NAME	TRUSS NAME	QUANTITY	PLY	JOB DESC.	DRWG NO.
T-RIVER 1-2	T03	12	1	ZADORRA ESTATES INC TRUSS DESC.	ME23-5757-22

Kott, Uxbridge,ON

Version 8.630 S Mar 22 2023 MiTek Industries, Inc. Mon Jul 3 15:04:17 2023 Page 1
ID:IccLgzmhd_ldQzH3VGMNIRzOs0a-MiVbJf6XK5KVzsJaqjdsuFZTKM2PyCkESfUHIzz?IbC

CORPORATION OF THE CITY OF OSHAWA
TRUE COPY
OF PERMIT PLANS
Nov 04 2023
PER:
CHIEF BUILDING OFFICIAL

MHP 23021

Scale = 1:39.7

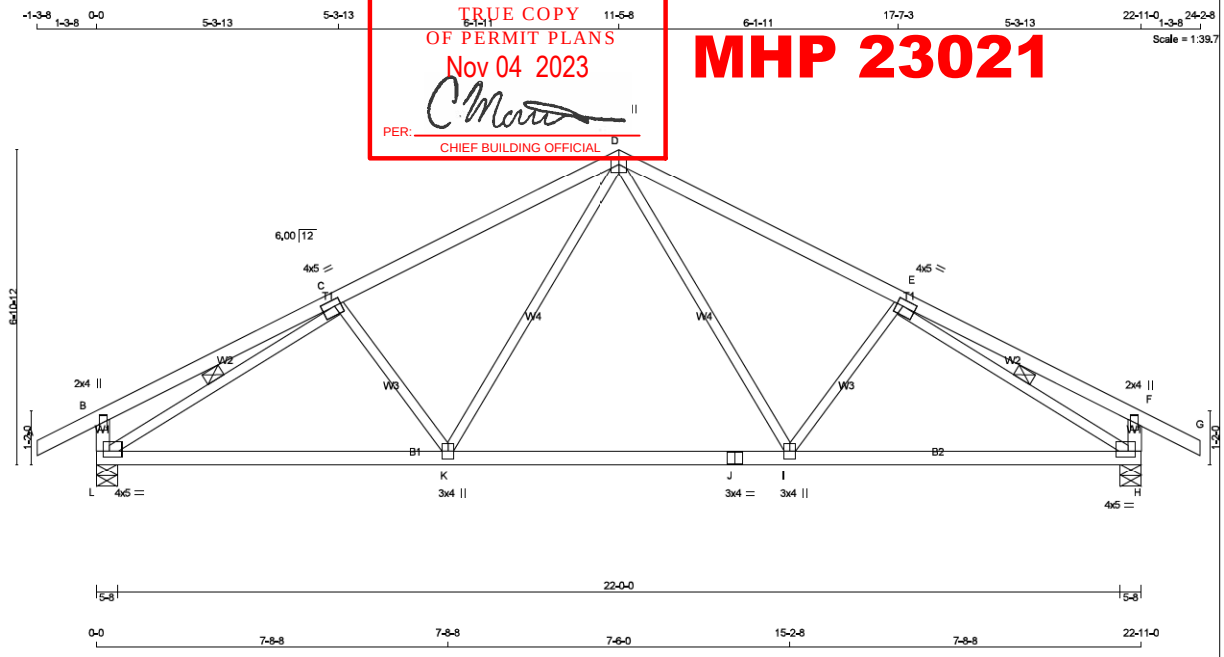

TOTAL WEIGHT = 12 X 89 = 1063 lb [M][F]

LUMBER
N. L. G. A. RULES

CHORDS	SIZE		LUMBER	DESCR.
A - D	2x4	DRY	No.2	SPF
D - G	2x4	DRY	No.2	SPF
L - B	2x4	DRY	No.2	SPF
H - F	2x4	DRY	No.2	SPF
L - J	2x4	DRY	No.2	SPF
J - H	2x4	DRY	No.2	SPF
ALL WEBS EXCEPT	2x3	DRY	No.2	SPF

DRY: SEASONED LUMBER.

PLATES (table is in inches)

JT	TYPE	PLATES	W	LEN	Y	X
B	TMV+p	MT20	2.0	4.0		
C	TMWW-t	MT20	4.0	5.0	1.75	1.75
D	TTWW+p	MT20	4.0	4.0		
E	TMWW-t	MT20	4.0	5.0	1.75	1.75
F	TMV+p	MT20	2.0	4.0		
H	BMVW1-t	MT20	4.0	5.0	1.50	1.75
I	BMWW+t	MT20	3.0	4.0		
J	BS-t	MT20	3.0	4.0		
K	BMWW+t	MT20	3.0	4.0		
L	BMVW1-t	MT20	4.0	5.0	1.50	1.75

DIMENSIONS, SUPPORTS AND LOADINGS SPECIFIED BY FABRICATOR TO BE VERIFIED BY BUILDING DESIGNER

BEARINGS

JT	FACTORED GROSS REACTION VERT	HORZ	MAXIMUM FACTORED GROSS REACTION DOWN	HORZ	UPLIFT	INPUT BRG	REQRD BRG
L	1740	0	1740	0	0	5-8	1-14
H	1740	0	1740	0	0	5-8	1-14

UNFACTORED REACTIONS

JT	1ST LCASE COMBINED	MAX./MIN. COMPONENT REACTIONS SNOW	LIVE	PERM.LIVE	WIND	DEAD	SOIL
L	1213	892 / 0	0 / 0	0 / 0	0 / 0	321 / 0	0 / 0
H	1213	892 / 0	0 / 0	0 / 0	0 / 0	321 / 0	0 / 0

BEARING MATERIAL TO BE SPF NO.2 OR BETTER AT JOINT(S) L, H

BRACING
TOP CHORD TO BE SHEATHED OR MAX. PURLIN SPACING = 4.13 FT.
MAX. UNBRACED BOTTOM CHORD LENGTH = 10.00 FT OR RIGID CEILING DIRECTLY APPLIED.

ALL PITCH BREAKS AND PERIMETER CORNER JOINTS MUST BE LATERALLY RESTRAINED.

1 LATERAL BRACE(S) AT 1/ 2 LENGTH OF C-L, E-H.

END VERTICAL(S) MUST BE SHEATHED OR HAVE BRACES AS INDICATED IN THE MAX. UNBRACED LENGTH COLUMN OF THE TABLE BELOW

LOADING
TOTAL LOAD CASES: (4)

CHORDS

MEMB. FR-TO	MAX. FACTORED FORCE (LBS)	FACTORED VERT. LOAD (PLF) FROM	TO	LC1 MAX CSI (LC)	MAX. UNBRAC LENGTH
A- B	0 / 36	-119.4	-119.4	0.16 (1)	10.00
B- C	0 / 41	-119.4	-119.4	0.65 (1)	10.00
C- D	-1906 / 0	-119.4	-119.4	0.62 (1)	4.13
D- E	-1906 / 0	-119.4	-119.4	0.62 (1)	4.13
E- F	0 / 41	-119.4	-119.4	0.65 (1)	10.00
F- G	0 / 36	-119.4	-119.4	0.16 (1)	10.00
L- B	-383 / 0	0.0	0.0	0.04 (1)	7.81
H- F	-383 / 0	0.0	0.0	0.04 (1)	7.81
L- K	0 / 1954	-18.2	-18.2	0.44 (1)	10.00
K- J	0 / 1367	-18.2	-18.2	0.34 (1)	10.00
J- I	0 / 1367	-18.2	-18.2	0.34 (1)	10.00
I- H	0 / 1954	-18.2	-18.2	0.44 (1)	10.00

WEBS

MEMB. FR-TO	MAX. FACTORED FORCE (LBS)	MAX CSI (LC)
D- I	0 / 622	0.14 (1)
I- E	-480 / 0	0.15 (1)
K- D	0 / 622	0.14 (1)
C- K	-480 / 0	0.15 (1)
L- C	-2346 / 0	0.64 (1)
E- H	-2346 / 0	0.64 (1)

DESIGN CRITERIA

SPECIFIED LOADS:

TOP CH.	LL	=	34.8	PSF
	DL	=	6.0	PSF
BOT CH.	LL	=	0.0	PSF
	DL	=	7.3	PSF
TOTAL LOAD		=	48.1	PSF

SPACING = 24.0 IN. C/C

THIS TRUSS IS DESIGNED FOR RESIDENTIAL OR SMALL BUILDING REQUIREMENTS OF PART 9, NBCC 2015

THIS DESIGN COMPLIES WITH:
- PART 9 OF BCBC 2018 , NBC-2019AE
- PART 9 OF OBC 2012 (2019 AMENDMENT)
- CSA 086-14
- TPIC 2014

(55 % OF 48.1 P.S.F. G.S.L. PLUS 8.4 P.S.F. RAIN LOAD) EQUALS 34.8 P.S.F. SPECIFIED ROOF LIVE LOAD

ALLOWABLE DEFL.(LL)= L/360 (0.76")
CALCULATED VERT. DEFL.(LL) = L/ 999 (0.09")
ALLOWABLE DEFL.(TL)= L/360 (0.76")
CALCULATED VERT. DEFL.(TL) = L/ 999 (0.17")

CSI: TC=0.65/1.00 (B-C:1) , BC=0.44/1.00 (K-L:1) , WB=0.64/1.00 (C-L:1) , SSI=0.31/1.00 (C-D:1)

DOL LUMBER=1.00 NAIL=1.00 LS BEND=1.10 COMP=1.10 SHEAR=1.10 TENS= 1.10

COMPANION LIVE LOAD FACTOR = 1.00

TRUSS PLATE MANUFACTURER IS NOT RESPONSIBLE FOR QUALITY CONTROL IN THE TRUSS MANUFACTURING PLANT.

NAIL VALUES

PLATE	GRIP(DRY) (PSI) MAX	MIN	SHEAR (PLI) MAX	MIN	SECTION (PLI) MAX	MIN
MT20	650	371	1747	788	1987	1873

PLATE PLACEMENT TOL. = 0.250 inches

PLATE ROTATION TOL. = 5.0 Deg.

JSI GRIP= 0.88 (C) (INPUT = 0.90)
JSI METAL= 0.61 (E) (INPUT = 1.00)

MODULUS ENGINEERING LTD.

LICENSED PROFESSIONAL ENGINEER
07/04/2023
D. A. SHERMAN
100123373
PROVINCE OF ONTARIO

REVIEW FOR TRUSS COMPONENT ONLY

NOTE: ALTERING THIS DOCUMENT VOIDS THE ENGINEERS SEAL

WARNING - Verify design parameters and READ NOTES ON THIS AND INCLUDED IN MODULUS ENGINEERING LTD. NOTES ME-TCD01 (VER 06/2017) BEFORE USE.
Design valid for use only with Mitek connectors. This design is based only upon parameters shown, and is for individual building components. Applicability of design parameters and proper incorporation of component is responsibility of building designer - not truss designer. Bracing shown is for lateral support of individual web members only. Additional temporary bracing to ensure stability during construction is the responsibility of the erector. Additional permanent bracing of the overall structure is the responsibility of the building designer. For general guidance regarding fabrication, quality control, storage, delivery, erection and bracing, consult
TPIC Appendix G - Minimum quality Manufacturing Criteria available from **www.tpic.ca** and **BCSI-CANADA (Building Component Safety Information) available** from TPI, 781 N. Lee Street, Suite 312, Alexandria, VA 22314 or www.sbcindustry.com

KOTT

JOB NAME	TRUSS NAME	QUANTITY	PLY	JOB DESC.	DRWG NO.
T-RIVER 1-2	T04	1	1	ZADORRA ESTATES INC TRUSS DESC.	ME23-5757-23

Kott, Uxbridge,ON

Version 8.630 S Mar 22 2023 MiTek Industries, Inc. Mon Jul 3 15:04:19 2023 Page 1
ID:NccLgzmhd_ldQzH3VGMNlRzOs0a-l4dLkL8nsibCCATzo8fKzgep09hZQ5CXwzzOMrz?lbA

CORPORATION OF THE CITY OF OSHAWA
TRUE COPY
OF PERMIT PLANS
Nov 04 2023
PER: C Mott
CHIEF BUILDING OFFICIAL

MHP 23021

Scale = 1:40.2

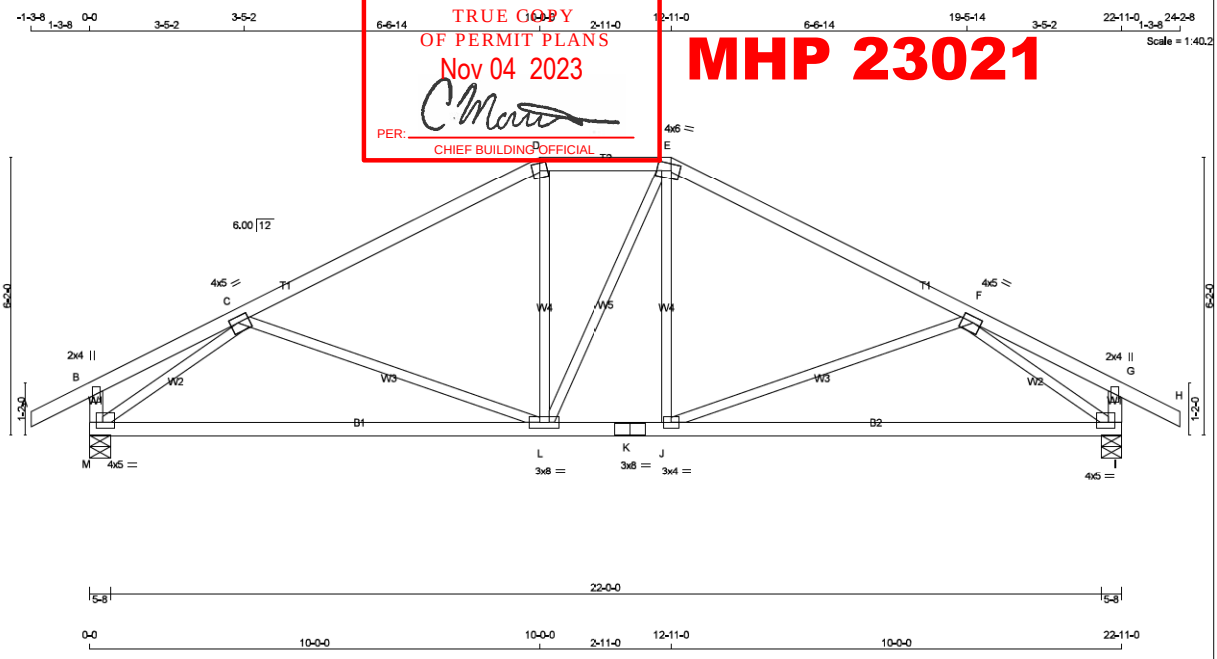

TOTAL WEIGHT = 92 lb
[M][F]

LUMBER
N. L. G. A. RULES

CHORDS	SIZE		LUMBER	DESCR.
A - D	2x4	DRY	No.2	SPF
D - E	2x4	DRY	No.2	SPF
E - H	2x4	DRY	No.2	SPF
M - B	2x4	DRY	No.2	SPF
I - G	2x4	DRY	No.2	SPF
M - K	2x4	DRY	No.2	SPF
K - I	2x4	DRY	No.2	SPF
ALL WEBS EXCEPT	2x3	DRY	No.2	SPF

DRY: SEASONED LUMBER.

PLATES (table is in inches)

JT	TYPE	PLATES	W	LEN	Y	X
B	TMV+p	MT20	2.0	4.0		
C	TMWW-t	MT20	4.0	5.0	1.50	2.00
D	TTW-m	MT20	4.0	4.0		
E	TTWW-m	MT20	4.0	6.0	1.75	2.25
F	TMWW-t	MT20	4.0	5.0	1.50	2.00
G	TMV+p	MT20	2.0	4.0		
I	BMVW1-t	MT20	4.0	5.0	1.50	1.75
J	BMWW-t	MT20	3.0	4.0		
K	BS-t	MT20	3.0	8.0		
L	BMWWW-t	MT20	3.0	8.0		
M	BMVW1-t	MT20	4.0	5.0	1.50	1.75

DIMENSIONS, SUPPORTS AND LOADINGS SPECIFIED BY FABRICATOR TO BE VERIFIED BY BUILDING DESIGNER

BEARINGS

JT	FACTORED GROSS REACTION VERT	HORZ	MAXIMUM FACTORED GROSS REACTION DOWN	HORZ	UPLIFT	INPUT BRG	REQRD BRG
M	1740	0	1740	0	0	5-8	1-14
I	1740	0	1740	0	0	5-8	1-14

UNFACTORED REACTIONS

JT	1ST LCASE COMBINED	MAX./MIN. COMPONENT REACTIONS SNOW	LIVE	PERM.LIVE	WIND	DEAD	SOIL
M	1213	892 / 0	0 / 0	0 / 0	0 / 0	321 / 0	0 / 0
I	1213	892 / 0	0 / 0	0 / 0	0 / 0	321 / 0	0 / 0

BEARING MATERIAL TO BE SPF NO.2 OR BETTER AT JOINT(S) M, I

BRACING
TOP CHORD TO BE SHEATHED OR MAX. PURLIN SPACING = 4.10 FT.
MAX. UNBRACED BOTTOM CHORD LENGTH = 10.00 FT OR RIGID CEILING DIRECTLY APPLIED.

ALL PITCH BREAKS AND PERIMETER CORNER JOINTS MUST BE LATERALLY RESTRAINED.

LOADING
TOTAL LOAD CASES: (4)

CHORDS

MEMB. FR-TO	MAX. FACTORED FORCE (LBS)	FACTORED VERT. LOAD (PLF) FROM	TO	LC1 CSI (LC)	MAX UNBRAC LENGTH
A- B	0 / 36	-119.4	-119.4	0.16 (1)	10.00
B- C	0 / 62	-119.4	-119.4	0.64 (1)	10.00
C- D	-1752 / 0	-119.4	-119.4	0.70 (1)	4.10
D- E	-1543 / 0	-119.4	-119.4	0.16 (1)	5.16
E- F	-1752 / 0	-119.4	-119.4	0.70 (1)	4.10
F- G	0 / 62	-119.4	-119.4	0.64 (1)	10.00
G- H	0 / 36	-119.4	-119.4	0.16 (1)	10.00
M- B	-223 / 0	0.0	0.0	0.02 (1)	7.81
I- G	-223 / 0	0.0	0.0	0.02 (1)	7.81
M- L	0 / 1903	-18.2	-18.2	0.52 (1)	10.00
L- K	0 / 1543	-18.2	-18.2	0.50 (4)	10.00
K- J	0 / 1543	-18.2	-18.2	0.50 (4)	10.00
J- I	0 / 1903	-18.2	-18.2	0.53 (1)	10.00

WEBS

MEMB. FR-TO	MAX. FACTORED FORCE (LBS)	MAX CSI (LC)
C- L	-390 / 0	0.42 (1)
L- D	0 / 269	0.06 (1)
L- E	0 / 1	0.00 (1)
J- E	0 / 268	0.06 (1)
J- F	-390 / 0	0.42 (1)
M- C	-2386 / 0	0.70 (1)
F- I	-2386 / 0	0.70 (1)

DESIGN CRITERIA

SPECIFIED LOADS:

TOP CH.	LL	=	34.8	PSF
	DL	=	6.0	PSF
BOT CH.	LL	=	0.0	PSF
	DL	=	7.3	PSF
TOTAL LOAD		=	48.1	PSF

SPACING = 24.0 IN. C/C

LOADING IN FLAT SECTION BASED ON A SLOPE OF 2.00/12 MINIMUM

THIS TRUSS IS DESIGNED FOR RESIDENTIAL OR SMALL BUILDING REQUIREMENTS OF PART 9, NBCC 2015

THIS DESIGN COMPLIES WITH:
- PART 9 OF BCBC 2018 , NBC-2019AE
- PART 9 OF OBC 2012 (2019 AMENDMENT)
- CSA 086-14
- TPIC 2014

(55 % OF 48.1 P.S.F. G.S.L. PLUS 8.4 P.S.F. RAIN LOAD) EQUALS 34.8 P.S.F. SPECIFIED ROOF LIVE LOAD

ALLOWABLE DEFL.(LL)= L/360 (0.76")
CALCULATED VERT. DEFL.(LL) = L/ 999 (0.07")
ALLOWABLE DEFL.(TL)= L/360 (0.76")
CALCULATED VERT. DEFL.(TL) = L/ 813 (0.34")

CSI: TC=0.70/1.00 (C-D:1) , BC=0.53/1.00 (I-J:1) , WB=0.70/1.00 (C-M:1) , SSI=0.33/1.00 (E-F:1)

DOL LUMBER=1.00 NAIL=1.00 LS BEND=1.10 COMP=1.10 SHEAR=1.10 TENS= 1.10

COMPANION LIVE LOAD FACTOR = 1.00

TRUSS PLATE MANUFACTURER IS NOT RESPONSIBLE FOR QUALITY CONTROL IN THE TRUSS MANUFACTURING PLANT.

NAIL VALUES

PLATE	GRIP(DRY) (PSI) MAX	MIN	SHEAR (PLI) MAX	MIN	SECTION (PLI) MAX	MIN
MT20	650	371	1747	788	1987	1873

PLATE PLACEMENT TOL. = 0.250 inches

PLATE ROTATION TOL. = 5.0 Deg.

JSI GRIP= 0.88 (K) (INPUT = 0.90)
JSI METAL= 0.89 (K) (INPUT = 1.00)

MODULUS ENGINEERING LTD.

LICENSED PROFESSIONAL ENGINEER
07/04/2023
D. A. SHERMAN
100123373
PROVINCE OF ONTARIO

REVIEW FOR TRUSS COMPONENT ONLY

NOTE: ALTERING THIS DOCUMENT VOIDS THE ENGINEERS SEAL

WARNING - Verify design parameters and READ NOTES ON THIS AND INCLUDED IN MODULUS ENGINEERING LTD. NOTES ME-TCD01 (VER 06/2017) BEFORE USE.
Design valid for use only with Mitek connectors. This design is based only upon parameters shown, and is for individual building components. Applicability of design parameters and proper incorporation of component is responsibility of building designer - not truss designer. Bracing shown is for lateral support of individual web members only. Additional temporary bracing to ensure stability during construction is the responsibility of the erector. Additional permanent bracing of the overall structure is the responsibility of the building designer. For general guidance regarding fabrication, quality control, storage, delivery, erection and bracing, consult
TPIC Appendix G - Minimum quality Manufacturing Criteria available from **www.tpic.ca** and **BCSI-CANADA (Building Component Safety Information) available** from TPI, 781 N. Lee Street, Suite 312, Alexandria, VA 22314 or www.sbcindustry.com

KOTT

JOB NAME	TRUSS NAME	QUANTITY	PLY	JOB DESC.	DRWG NO.
T-RIVER 1-2	T05	1	1	ZADORRA ESTATES INC TRUSS DESC.	ME23-5757-24

Kott, Uxbridge,ON

Version 8.630 S Mar 22 2023 MiTek Industries, Inc. Mon Jul 3 15:04:20 2023 Page 1

ID:NccLgzmhd_ldQzH3VGMNIRzOs0a-mGBkxh9Pd0j3qK29LrBZVtB4LZ2D9UIq8djxvHz?Ib9

CORPORATION OF THE CITY OF OSHAWA
TRUE COPY
OF PERMIT PLANS
Nov 04 2023
PER: C Morr
CHIEF BUILDING OFFICIAL

MHP 23021

Scale = 1:40.2

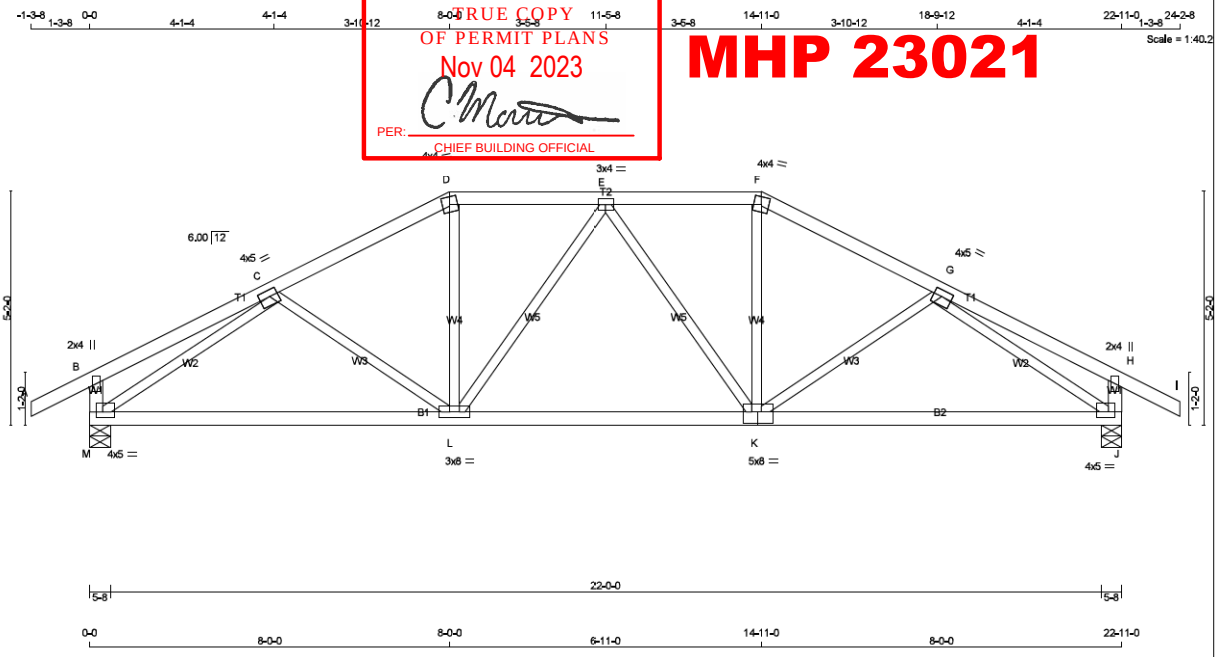

TOTAL WEIGHT = 91 lb
[M][F]

LUMBER
N. L. G. A. RULES

CHORDS	SIZE		LUMBER	DESCR.
A - D	2x4	DRY	No.2	SPF
D - F	2x4	DRY	No.2	SPF
F - I	2x4	DRY	No.2	SPF
M - B	2x4	DRY	No.2	SPF
J - H	2x4	DRY	No.2	SPF
M - K	2x4	DRY	No.2	SPF
K - J	2x4	DRY	No.2	SPF
ALL WEBS EXCEPT	2x3	DRY	No.2	SPF

DRY: SEASONED LUMBER.

PLATES (table is in inches)

JT	TYPE	PLATES	W	LEN	Y	X
B	TMV+p	MT20	2.0	4.0		
C	TMWW-t	MT20	4.0	5.0	1.75	2.25
D	TTW-m	MT20	4.0	4.0		
E	TMWW-t	MT20	3.0	4.0		
F	TTW-m	MT20	4.0	4.0		
G	TMWW-t	MT20	4.0	5.0	1.75	2.25
H	TMV+p	MT20	2.0	4.0		
J	BMVW1-t	MT20	4.0	5.0	1.50	1.75
K	BSWWW-l	MT20	5.0	8.0	3.00	4.00
L	BMWWW-t	MT20	3.0	8.0		
M	BMVW1-t	MT20	4.0	5.0	1.50	1.75

DIMENSIONS, SUPPORTS AND LOADINGS SPECIFIED BY FABRICATOR TO BE VERIFIED BY BUILDING DESIGNER

BEARINGS

JT	FACTORED GROSS REACTION VERT	HORZ	MAXIMUM GROSS REACTION DOWN	HORZ	UPLIFT	INPUT BRG IN-SX	REQRD BRG IN-SX
M	1740	0	1740	0	0	5-8	1-14
J	1740	0	1740	0	0	5-8	1-14

UNFACTORED REACTIONS

JT	1ST LCASE COMBINED	SNOW	MAX./MIN. COMPONENT REACTIONS LIVE	PERM.LIVE	WIND	DEAD	SOIL
M	1213	892 / 0	0 / 0	0 / 0	0 / 0	321 / 0	0 / 0
J	1213	892 / 0	0 / 0	0 / 0	0 / 0	321 / 0	0 / 0

BEARING MATERIAL TO BE SPF NO.2 OR BETTER AT JOINT(S) M, J

BRACING
TOP CHORD TO BE SHEATHED OR MAX. PURLIN SPACING = 4.60 FT.
MAX. UNBRACED BOTTOM CHORD LENGTH = 10.00 FT OR RIGID CEILING DIRECTLY APPLIED.

ALL PITCH BREAKS AND PERIMETER CORNER JOINTS MUST BE LATERALLY RESTRAINED.

LOADING
TOTAL LOAD CASES: (4)

CHORDS

MEMB. FR-TO	MAX. FACTORED FORCE (LBS)	FACTORED VERT. LOAD (PLF) FROM	TO	LC1 MAX CSI (LC)	MAX. UNBRAC LENGTH
A- B	0 / 36	-119.4	-119.4	0.16 (1)	10.00
B- C	0 / 23	-119.4	-119.4	0.28 (1)	10.00
C- D	-1933 / 0	-119.4	-119.4	0.26 (1)	4.60
D- E	-1718 / 0	-119.4	-119.4	0.20 (1)	4.90
E- F	-1693 / 0	-119.4	-119.4	0.20 (1)	4.93
F- G	-1909 / 0	-119.4	-119.4	0.26 (1)	4.63
G- H	0 / 23	-119.4	-119.4	0.28 (1)	10.00
H- I	0 / 36	-119.4	-119.4	0.16 (1)	10.00
M- B	-351 / 0	0.0	0.0	0.04 (1)	7.81
J- H	-351 / 0	0.0	0.0	0.04 (1)	7.81
M- L	0 / 1862	-18.2	-18.2	0.45 (1)	10.00
L- K	0 / 1877	-18.2	-18.2	0.46 (1)	10.00
K- J	0 / 1843	-18.2	-18.2	0.50 (1)	10.00

WEBS

MEMB. FR-TO	MAX. FACTORED FORCE (LBS)	MAX CSI (LC)
C- L	-189 / 19	0.08 (1)
L- D	0 / 506	0.11 (1)
L- E	-281 / 0	0.17 (1)
E- K	-323 / 0	0.20 (1)
K- F	0 / 495	0.11 (1)
K- G	-193 / 14	0.08 (1)
M- C	-2288 / 0	0.90 (1)
G- J	-2264 / 0	0.89 (1)

DESIGN CRITERIA

SPECIFIED LOADS:

TOP CH.	LL	=	34.8	PSF
	DL	=	6.0	PSF
BOT CH.	LL	=	0.0	PSF
	DL	=	7.3	PSF
TOTAL LOAD		=	48.1	PSF

SPACING = 24.0 IN. C/C

LOADING IN FLAT SECTION BASED ON A SLOPE OF 2.00/12 MINIMUM

THIS TRUSS IS DESIGNED FOR RESIDENTIAL OR SMALL BUILDING REQUIREMENTS OF PART 9, NBCC 2015

THIS DESIGN COMPLIES WITH:
- PART 9 OF BCBC 2018 , NBC-2019AE
- PART 9 OF OBC 2012 (2019 AMENDMENT)
- CSA 086-14
- TPIC 2014

(55 % OF 48.1 P.S.F. G.S.L. PLUS 8.4 P.S.F. RAIN LOAD) EQUALS 34.8 P.S.F. SPECIFIED ROOF LIVE LOAD

ALLOWABLE DEFL.(LL)= L/360 (0.76")
CALCULATED VERT. DEFL.(LL) = L/ 999 (0.08")
ALLOWABLE DEFL.(TL)= L/360 (0.76")
CALCULATED VERT. DEFL.(TL) = L/ 999 (0.26")

CSI: TC=0.28/1.00 (G-H:1) , BC=0.50/1.00 (J-K:1) , WB=0.90/1.00 (C-M:1) , SSI=0.20/1.00 (G-H:1)

DOL LUMBER=1.00 NAIL=1.00 LS BEND=1.10 COMP=1.10 SHEAR=1.10 TENS= 1.10

COMPANION LIVE LOAD FACTOR = 1.00

TRUSS PLATE MANUFACTURER IS NOT RESPONSIBLE FOR QUALITY CONTROL IN THE TRUSS MANUFACTURING PLANT.

NAIL VALUES

PLATE	GRIP(DRY) (PSI) MAX	MIN	SHEAR (PLI) MAX	MIN	SECTION (PLI) MAX	MIN
MT20	650	371	1747	788	1987	1873

PLATE PLACEMENT TOL. = 0.250 inches

PLATE ROTATION TOL. = 5.0 Deg.

JSI GRIP= 0.88 (K) (INPUT = 0.90)
JSI METAL= 0.59 (C) (INPUT = 1.00)

MODULUS ENGINEERING LTD.

LICENSED PROFESSIONAL ENGINEER
07/04/2023
D. A. SHERMAN
100123373
PROVINCE OF ONTARIO

REVIEW FOR TRUSS COMPONENT ONLY

NOTE: ALTERING THIS DOCUMENT VOIDS THE ENGINEERS SEAL

WARNING - Verify design parameters and READ NOTES ON THIS AND INCLUDED IN MODULUS ENGINEERING LTD. NOTES ME-TCD01 (VER 06/2017) BEFORE USE.
Design valid for use only with Mitek connectors. This design is based only upon parameters shown, and is for individual building components. Applicability of design parameters and proper incorporation of component is responsibility of building designer - not truss designer. Bracing shown is for lateral support of individual web members only. Additional temporary bracing to ensure stability during construction is the responsibility of the erector. Additional permanent bracing of the overall structure is the responsibility of the building designer. For general guidance regarding fabrication, quality control, storage, delivery, erection and bracing, consult
TPIC Appendix G - Minimum quality Manufacturing Criteria available from **www.tpic.ca** and **BCSI-CANADA (Building Component Safety Information) available** from TPI, 781 N. Lee Street, Suite 312, Alexandria, VA 22314 or www.sbcindustry.com

KOTT

JOB NAME	TRUSS NAME	QUANTITY	PLY	JOB DESC.	DRWG NO.
T-RIVER 1-2	T06	1	1	ZADORRA ESTATES INC TRUSS DESC.	ME23-5757-25

Kott, Uxbridge,ON

Version 8.630 S Mar 22 2023 MiTek Industries, Inc. Mon Jul 3 15:04:21 2023 Page 1
ID:NccLgzmhd_ldQzH3VGMNlRzOs0a-ETl69091OJrwRUdLvZio25jEHzUUu8ZqNHSVRkz?Ib8

CORPORATION OF THE CITY OF OSHAWA
TRUE COPY
OF PERMIT PLANS
Nov 04 2023
PER: C Mott
CHIEF BUILDING OFFICIAL

MHP 23021

Scale = 1:24.8

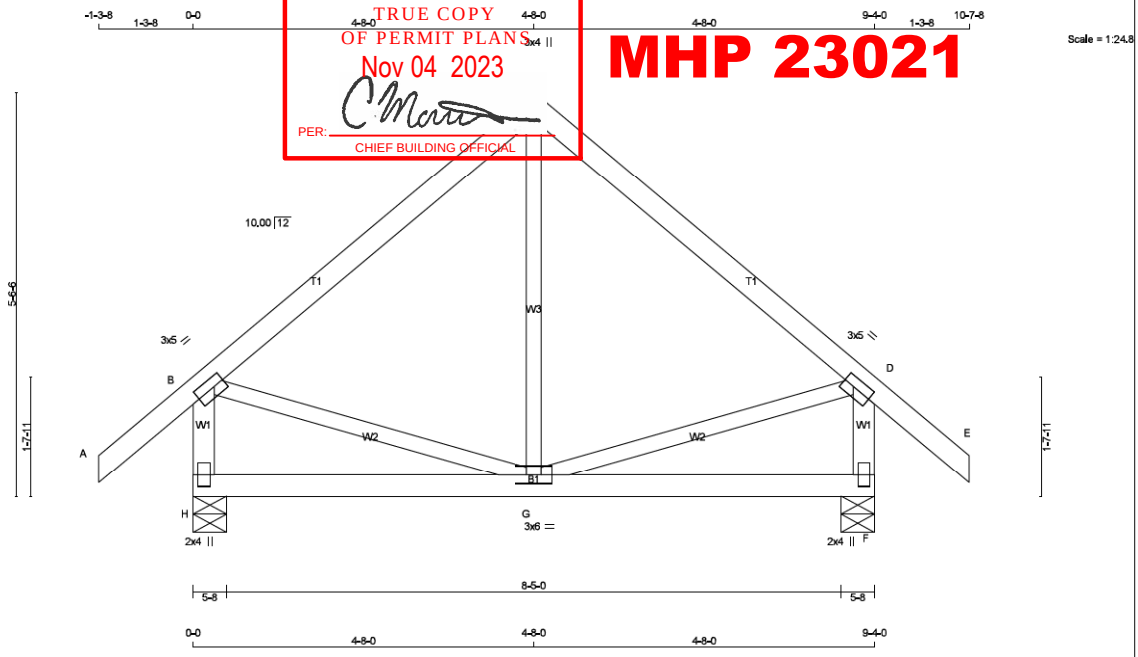

TOTAL WEIGHT = 43 lb
[M][F]

LUMBER
N. L. G. A. RULES

CHORDS	SIZE		LUMBER	DESCR.
A - C	2x4	DRY	No.2	SPF
C - E	2x4	DRY	No.2	SPF
H - B	2x4	DRY	No.2	SPF
F - D	2x4	DRY	No.2	SPF
H - F	2x4	DRY	No.2	SPF
ALL WEBS EXCEPT	2x3	DRY	No.2	SPF

DRY: SEASONED LUMBER.

PLATES (table is in inches)

JT	TYPE	PLATES	W	LEN	Y	X
B	TMWW-t	MT20	3.0	5.0	1.50	1.75
C	TTW+p	MT20	3.0	4.0	2.50	1.50
D	TMVW-t	MT20	3.0	5.0	1.50	1.75
F	BMV1+p	MT20	2.0	4.0		
G	BMWWW-t	MT20	3.0	6.0		
H	BMV1+p	MT20	2.0	4.0		

DIMENSIONS, SUPPORTS AND LOADINGS SPECIFIED BY FABRICATOR TO BE VERIFIED BY BUILDING DESIGNER

BEARINGS

JT	FACTORED GROSS REACTION VERT	HORZ	MAXIMUM FACTORED GROSS REACTION DOWN	HORZ	UPLIFT	INPUT BRG	REQRD BRG
H	808	0	808	0	0	5-8	1-8
F	808	0	808	0	0	5-8	1-8

UNFACTORED REACTIONS

1ST LCASE MAX./MIN. COMPONENT REACTIONS

JT	COMBINED	SNOW	LIVE	PERM.LIVE	WIND	DEAD	SOIL
H	562	421 / 0	0 / 0	0 / 0	0 / 0	141 / 0	0 / 0
F	562	421 / 0	0 / 0	0 / 0	0 / 0	141 / 0	0 / 0

BEARING MATERIAL TO BE SPF NO.2 OR BETTER AT JOINT(S) H, F

BRACING
TOP CHORD TO BE SHEATHED OR MAX. PURLIN SPACING = 6.25 FT.
MAX. UNBRACED BOTTOM CHORD LENGTH = 10.00 FT OR RIGID CEILING DIRECTLY APPLIED.

ALL PITCH BREAKS AND PERIMETER CORNER JOINTS MUST BE LATERALLY RESTRAINED.

LOADING
TOTAL LOAD CASES: (4)

CHORDS

MEMB. FR-TO	MAX. FACTORED FORCE (LBS)	FACTORED VERT. LOAD (PLF) FROM	TO	LC1	MAX CSI (LC)	MAX. UNBRAC LENGTH
A- B	0 / 53	-119.4	-119.4	0.16 (1)	10.00	
B- C	-387 / 0	-119.4	-119.4	0.33 (1)	6.25	
C- D	-387 / 0	-119.4	-119.4	0.33 (1)	6.25	
D- E	0 / 53	-119.4	-119.4	0.16 (1)	10.00	
H- B	-775 / 0	0.0	0.0	0.08 (1)	7.81	
F- D	-775 / 0	0.0	0.0	0.08 (1)	7.81	
H- G	0 / 0	-18.2	-18.2	0.11 (4)	10.00	
G- F	0 / 0	-18.2	-18.2	0.11 (4)	10.00	

WEBS

MEMB. FR-TO	MAX. FACTORED FORCE (LBS)	MAX CSI (LC)
G- C	-62 / 69	0.03 (1)
B- G	0 / 309	0.07 (1)
G- D	0 / 309	0.07 (1)

DESIGN CRITERIA

SPECIFIED LOADS:

TOP CH.	LL	=	34.8	PSF
	DL	=	6.0	PSF
BOT CH.	LL	=	0.0	PSF
	DL	=	7.3	PSF
TOTAL LOAD		=	48.1	PSF

SPACING = 24.0 IN. C/C

THIS TRUSS IS DESIGNED FOR RESIDENTIAL OR SMALL BUILDING REQUIREMENTS OF PART 9, NBCC 2015

THIS DESIGN COMPLIES WITH:
- PART 9 OF BCBC 2018 , NBC-2019AE
- PART 9 OF OBC 2012 (2019 AMENDMENT)
- CSA 086-14
- TPIC 2014

(55 % OF 48.1 P.S.F. G.S.L. PLUS 8.4 P.S.F. RAIN LOAD) EQUALS 34.8 P.S.F. SPECIFIED ROOF LIVE LOAD

ALLOWABLE DEFL.(LL)= L/360 (0.31")
CALCULATED VERT. DEFL.(LL) = L/ 999 (0.00")
ALLOWABLE DEFL.(TL)= L/360 (0.31")
CALCULATED VERT. DEFL.(TL) = L/ 999 (0.01")

CSI: TC=0.33/1.00 (B-C:1) , BC=0.11/1.00 (G-H:4) , WB=0.07/1.00 (D-G:1) , SSI=0.17/1.00 (C-D:1)

DOL LUMBER=1.00 NAIL=1.00 LS BEND=1.10 COMP=1.10 SHEAR=1.10 TENS= 1.10

COMPANION LIVE LOAD FACTOR = 1.00

TRUSS PLATE MANUFACTURER IS NOT RESPONSIBLE FOR QUALITY CONTROL IN THE TRUSS MANUFACTURING PLANT.

NAIL VALUES

PLATE	GRIP(DRY) (PSI) MAX	MIN	SHEAR (PLI) MAX	MIN	SECTION (PLI) MAX	MIN
MT20	650	371	1747	788	1987	1873

PLATE PLACEMENT TOL. = 0.250 inches

PLATE ROTATION TOL. = 5.0 Deg.

JSI GRIP= 0.66 (B) (INPUT = 0.90)
JSI METAL= 0.19 (B) (INPUT = 1.00)

MODULUS ENGINEERING LTD.

LICENSED PROFESSIONAL ENGINEER
07/04/2023
D. A. SHERMAN
100123373
PROVINCE OF ONTARIO

REVIEW FOR TRUSS COMPONENT ONLY

NOTE: ALTERING THIS DOCUMENT VOIDS THE ENGINEERS SEAL

WARNING - Verify design parameters and READ NOTES ON THIS AND INCLUDED IN MODULUS ENGINEERING LTD. NOTES ME-TCD01 (VER 06/2017) BEFORE USE.
Design valid for use only with Mitek connectors. This design is based only upon parameters shown, and is for individual building components. Applicability of design parameters and proper incorporation of component is responsibility of building designer - not truss designer. Bracing shown is for lateral support of individual web members only. Additional temporary bracing to ensure stability during construction is the responsibility of the erector. Additional permanent bracing of the overall structure is the responsibility of the building designer. For general guidance regarding fabrication, quality control, storage, delivery, erection and bracing, consult
TPIC Appendix G - Minimum quality Manufacturing Criteria available from **www.tpic.ca** and **BCSI-CANADA (Building Component Safety Information) available** from TPI, 781 N. Lee Street, Suite 312, Alexandria, VA 22314 or www.sbcindustry.com

KOTT

JOB NAME	TRUSS NAME	QUANTITY	PLY	JOB DESC.	DRWG NO.
T-RIVER 1-2	T07	2	1	ZADORRA ESTATES INC TRUSS DESC.	ME23-5757-26

Kott, Uxbridge,ON

Version 8.630 S Mar 22 2023 MiTek Industries, Inc. Mon Jul 3 15:04:23 2023 Page 1
ID:NccLgzmhd_ldQzH3VGMNlRzOs0a-BrtsaiBlvx5ehnnk1zkG7WpannAxM1x7qbxbVcz?lb6

CORPORATION OF THE CITY OF OSHAWA
TRUE COPY
OF PERMIT PLANS
Nov 04 2023
PER: C Mott
CHIEF BUILDING OFFICIAL

MHP 23021

Scale = 1:30.8

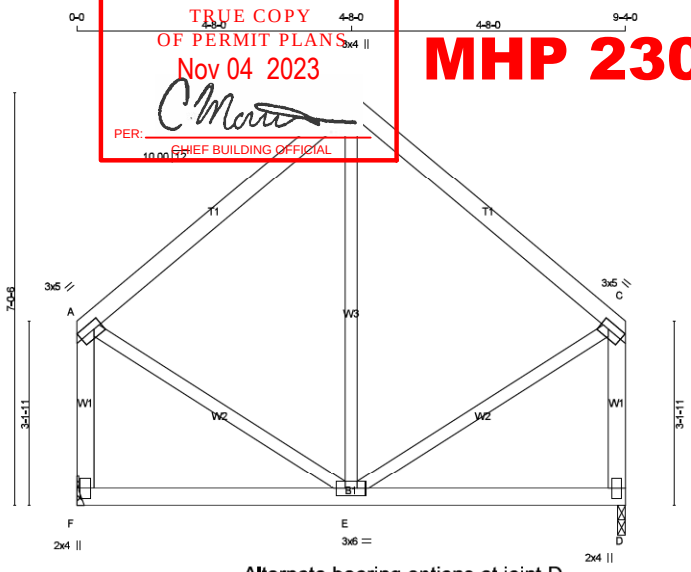

Alternate bearing options at joint D
1) approved hanger with 1 1/2" min. seat
2) spf no. 2 or better bearing plates with 1 1/2" min seat

TOTAL WEIGHT = 2 X 45 = 89 lb
[M][F]

LUMBER
N. L. G. A. RULES

CHORDS	SIZE		LUMBER	DESCR.
A - B	2x4	DRY	No.2	SPF
B - C	2x4	DRY	No.2	SPF
F - A	2x4	DRY	No.2	SPF
D - C	2x4	DRY	No.2	SPF
F - D	2x4	DRY	No.2	SPF
ALL WEBS EXCEPT	2x3	DRY	No.2	SPF

DRY: SEASONED LUMBER.

PLATES (table is in inches)

JT	TYPE	PLATES	W	LEN	Y	X
A	TMVW+t	MT20	3.0	5.0	1.50	1.75
B	TTW+p	MT20	3.0	4.0	2.50	1.50
C	TMVW+t	MT20	3.0	5.0	1.50	1.75
D	BMV1+p	MT20	2.0	4.0		
E	BMWWW+t	MT20	3.0	6.0		
F	BMV1+p	MT20	2.0	4.0		

DIMENSIONS, SUPPORTS AND LOADINGS SPECIFIED BY FABRICATOR TO BE VERIFIED BY BUILDING DESIGNER

BEARINGS

JT	FACTORED GROSS REACTION VERT	HORZ	MAXIMUM GROSS REACTION DOWN	HORZ	UPLIFT	FACTORED INPUT BRG	REQRD BRG
F	642	0	642	0	0	MECHANICAL	
D	642	0	642	0	0	1-8	1-8

A SUITABLE HANGER/MECHANICAL CONNECTION IS REQUIRED AT JOINT F. MINIMUM BEARING LENGTH AT JOINT F = 1-8.

UNFACTORED REACTIONS

1ST LCASE MAX./MIN. COMPONENT REACTIONS

JT	COMBINED	SNOW	LIVE	PERM.LIVE	WIND	DEAD	SOIL
F	449	325 / 0	0 / 0	0 / 0	0 / 0	124 / 0	0 / 0
D	449	325 / 0	0 / 0	0 / 0	0 / 0	124 / 0	0 / 0

BEARING MATERIAL TO BE SPF NO.2 OR BETTER AT JOINT(S) D

BRACING
TOP CHORD TO BE SHEATHED OR MAX. PURLIN SPACING = 6.25 FT.
MAX. UNBRACED BOTTOM CHORD LENGTH = 10.00 FT OR RIGID CEILING DIRECTLY APPLIED.

ALL PITCH BREAKS AND PERIMETER CORNER JOINTS MUST BE LATERALLY RESTRAINED.

LOADING
TOTAL LOAD CASES: (4)

CHORDS

MEMB. FR-TO	MAX. FORCE (LBS)	FACTORED VERT. LOAD (PLF) FROM	TO	LC1	MAX CSI (LC)	MAX. UNBRAC LENGTH
A- B	-300 / 0	-119.4	-119.4	0.33 (1)	6.25	
B- C	-300 / 0	-119.4	-119.4	0.33 (1)	6.25	
F- A	-610 / 0	0.0	0.0	0.11 (1)	7.81	
D- C	-610 / 0	0.0	0.0	0.11 (1)	7.81	
F- E	0 / 0	-18.2	-18.2	0.11 (4)	10.00	
E- D	0 / 0	-18.2	-18.2	0.11 (4)	10.00	

WEBS

MEMB. FR-TO	MAX. FORCE (LBS)	MAX CSI (LC)
E- B	-173 / 36	0.14 (1)
A- E	0 / 269	0.06 (1)
E- C	0 / 269	0.06 (1)

DESIGN CRITERIA

SPECIFIED LOADS:

TOP CH.	LL	=	34.8	PSF
	DL	=	6.0	PSF
BOT CH.	LL	=	0.0	PSF
	DL	=	7.3	PSF
TOTAL LOAD		=	48.1	PSF

SPACING = 24.0 IN. C/C

THIS TRUSS IS DESIGNED FOR RESIDENTIAL OR SMALL BUILDING REQUIREMENTS OF PART 9, NBCC 2015

THIS DESIGN COMPLIES WITH:
- PART 9 OF BCBC 2018 , NBC-2019AE
- PART 9 OF OBC 2012 (2019 AMENDMENT)
- CSA 086-14
- TPIC 2014

(55 % OF 48.1 P.S.F. G.S.L. PLUS 8.4 P.S.F. RAIN LOAD) EQUALS 34.8 P.S.F. SPECIFIED ROOF LIVE LOAD

ALLOWABLE DEFL.(LL)= L/360 (0.31")
CALCULATED VERT. DEFL.(LL) = L/ 999 (0.00")
ALLOWABLE DEFL.(TL)= L/360 (0.31")
CALCULATED VERT. DEFL.(TL) = L/ 999 (0.01")

CSI: TC=0.33/1.00 (A-B:1) , BC=0.11/1.00 (D-E:4) , WB=0.14/1.00 (B-E:1) , SSI=0.17/1.00 (A-B:1)

DOL LUMBER=1.00 NAIL=1.00 LS BEND=1.10 COMP=1.10 SHEAR=1.10 TENS= 1.10

COMPANION LIVE LOAD FACTOR = 1.00

TRUSS PLATE MANUFACTURER IS NOT RESPONSIBLE FOR QUALITY CONTROL IN THE TRUSS MANUFACTURING PLANT.

NAIL VALUES

PLATE	GRIP(DRY) (PSI) MAX	MIN	SHEAR (PLI) MAX	MIN	SECTION (PLI) MAX	MIN
MT20	650	371	1747	788	1987	1873

PLATE PLACEMENT TOL. = 0.250 inches

PLATE ROTATION TOL. = 5.0 Deg.

JSI GRIP= 0.52 (A) (INPUT = 0.90)
JSI METAL= 0.14 (A) (INPUT = 1.00)

MODULUS ENGINEERING LTD.

LICENSED PROFESSIONAL ENGINEER
07/04/2023
D. A. SHERMAN
100123373
PROVINCE OF ONTARIO

REVIEW FOR TRUSS COMPONENT ONLY

NOTE: ALTERING THIS DOCUMENT VOIDS THE ENGINEERS SEAL

WARNING - Verify design parameters and READ NOTES ON THIS AND INCLUDED IN MODULUS ENGINEERING LTD. NOTES ME-TCD01 (VER 06/2017) BEFORE USE.
Design valid for use only with Mitek connectors. This design is based only upon parameters shown, and is for individual building components. Applicability of design parameters and proper incorporation of component is responsibility of building designer - not truss designer. Bracing shown is for lateral support of individual web members only. Additional temporary bracing to ensure stability during construction is the responsibility of the erector. Additional permanent bracing of the overall structure is the responsibility of the building designer. For general guidance regarding fabrication, quality control, storage, delivery, erection and bracing, consult
TPIC Appendix G - Minimum quality Manufacturing Criteria available from **www.tpic.ca** and **BCSI-CANADA (Building Component Safety Information) available** from TPI, 781 N. Lee Street, Suite 312, Alexandria, VA 22314 or www.sbcindustry.com

KOTT