CORPORATION OF THE CITY OF OSHAWA
TRUE COPY
OF PERMIT PLANS
Dec 06 2023
PER: C Marr
CHIEF BUILDING OFFICIAL

MHP 23018

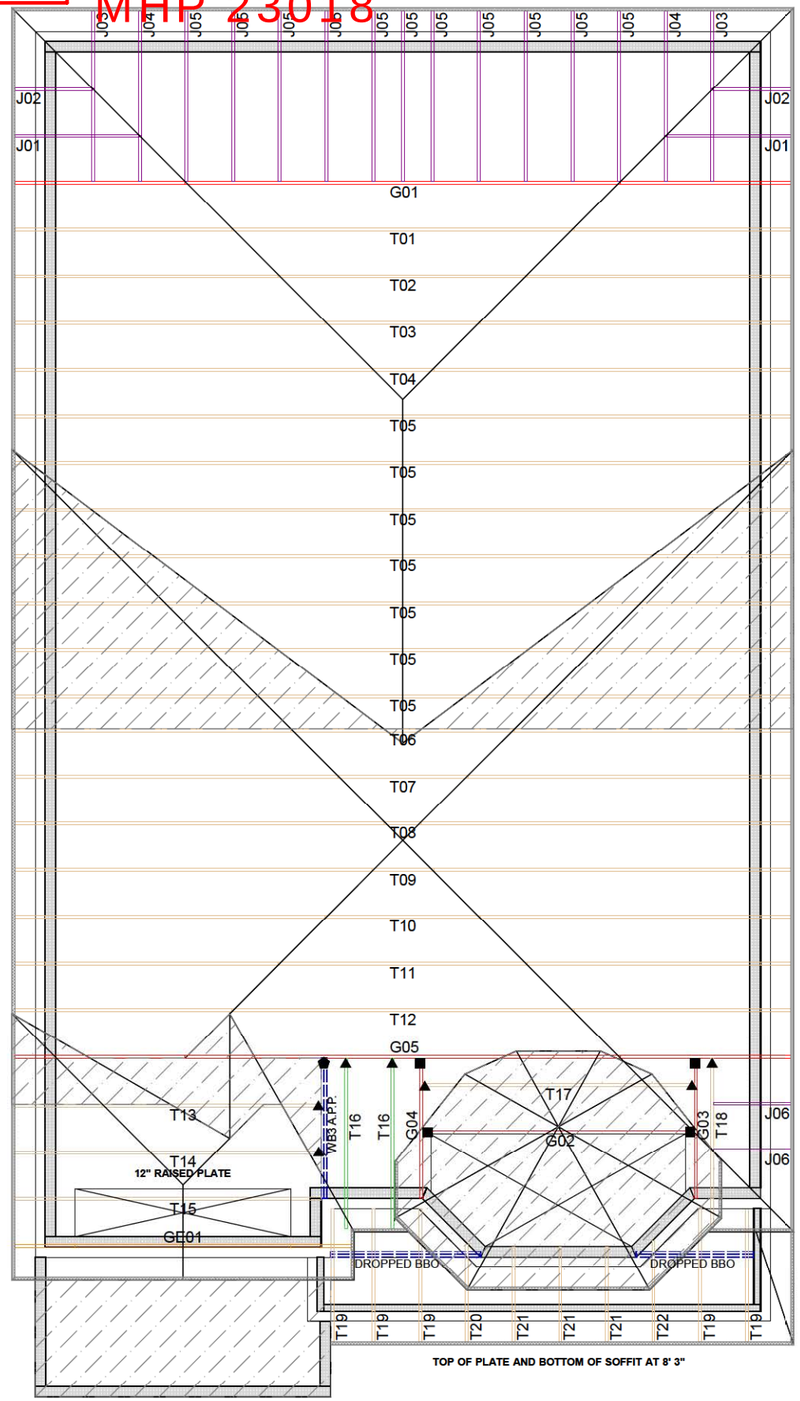

Hanger Name	Symbol	QTY
LUS24	▲	7
LJS26DS	■	4
	●	0
LUS26-2	⬟	1
	△	0
	□	0
	⬠	0
	○	0

CONVENTIONAL FRAMING BY OTHERS

ALL CONVENTIONAL FRAMING TO CONFORM WITH PART 9 OF THE OBC. ROOF RAFTERS THAT CROSS OVER TRUSSES TO BE MIN. 2x4 SPF @ 24" C/C WITH A 2x4 VERTICAL POST TO THE TRUSS BELOW. VERTICAL POSTS TO BE LATERALLY BRACED SO THAT UNBRACED LENGTH DOES NOT EXCEED 6'. DESIGN OF CONVENTIONAL FRAMING IS THE RESPONSIBILITY OF THE PROJECT ENGINEER.

JOB INFORMATION

Customer	GREENPARK HOMES
Job #	22-00192R0
Address	ZADORRA PENROSE 1-1 OSHAWA,ON
Model	PENROSE 1-1
Sales Rep	RALPH MIRIGELLO
Designer	BB
Date	5/30/2022
Path	S:\DESIGN\KLU\CUSTOMERS\GREENPARK\ZADORRA ESTATES\MODELS\PENROSE 1\PENROSE 1-1\T

DESIGN INFORMATION

Code	NBCC 2015
Bldg	Residential - HSB (NBCC Part 9)
TC LL	34.8 lb/ft^2
TC DL	3.0 lb/ft^2
BC LL	0.0 lb/ft^2
BC DL	7.3 lb/ft^2
Deflection	LL=L/360 TL=L/360
Spacing	24" O/C unless otherwise noted
Complies With	OBC 2012 (2019 Amendment) CSA O86-14 and TPIC 2014

IMPORTANT INFORMATION

Hangers and Fasteners to be installed as per manufacturer

Refer to truss drawings in the Truss Engineering Package for ply-to-ply attachment notes

For site-framed valleys: top chords of all roof trusses must be laterally supported using 2x4 continuous bracing @24 O/C - all bracing must be anchored at ends as per TPIC Installation Guidelines

Read all notes on this page in addition to those shown on the KOTT Truss Engineering package

Field erection, handling and bracing are not the responsibility of KOTT, or KOTT Engineering

Unless noted otherwise, hurricane ties are to be installed at the bearings of all trusses > 40 ft clear span, and any girder or beam supporting trusses with a clear span >40 ft. See hanger legend for type.

Unless noted otherwise, for Part 9 bldgs, all trusses are to be anchored to the top of supporting walls as follows: trusses with a clear span <40 ft use 3-1/4" nails @ each bearing; trusses with a clear span >40 ft use 3-1/4" nails @ each bearing in addition to the appropriate hurricane tie.

KOTT Inc.
14 Anderson Blvd.
Uxbridge, ON
905.642.4400

CORPORATION OF THE CITY OF OSHAWA
TRUE COPY
OF PERMIT PLANS
Dec 06 2023
PER
CHIEF BUILDING OFFICIAL
MHP 23018

ENGINEERING NO (NP-1)
PLEASE READ PRIOR TO INSTALLATION

RESPONSIBILITIES

THIS DESIGN IS FOR AN INDIVIDUAL BUILDING COMPONENT AND HAS BEEN BASED ON INFORMATION PROVIDED BY KOTT DESIGN. THE UNDERSIGNED ENGINEER DISCLAIMS ANY RESPONSIBILITY FOR DAMAGES AS A RESULT OF FAULTY OR INCORRECT INFORMATION, SPECIFICATION AND/OR DESIGNS FURNISHED TO THE ENGINEER. THE UNDERSIGNED ENGINEER IS ONLY RESPONSIBLE FOR THE STRUCTURAL INTEGRITY OF THIS BUILDING COMPONENT FOR THE CONDITIONS AND LOADS SHOWN ON THIS DRAWING. THE STRUCTURAL INTEGRITY OF THE BUILDING AND THE VERIFICATION OF THE DIMENSIONS AND THE DESIGN LOADS USED ARE THE RESPONSIBILITY OF THE BUILDING DESIGNER.

TRUSSES ARE DESIGNED IN CONFORMANCE WITH THE RELEVANT SECTIONS OF THE NATIONAL BUILDING CODE OF CANADA OR THE CANADIAN CODE FOR FARM BUILDINGS, WHICHEVER APPLIES TO THE BUILDING TYPE INDICATED ON THE DRAWING

IT IS THE RESPONSIBILITY OF KOTT TO ENSURE THAT TRUSSES ARE MANUFACTURED IN CONFORMANCE WITH THESE DESIGNS AND WITH THE SPECIFICATIONS OUTLINED BELOW. THE UNDERSIGNED ENGINEER IS NOT RESPONSIBLE FOR QUALITY CONTROL IN THE TRUSS MANUFACTURING PLANT.

USE AND OCCUPANCY

- The building is of the type indicated on the drawing

LOADING

- The truss loading intensity and distribution as well as load transfer mechanism is that indicated on the drawing
- No buildings, trees, parapets or other projections higher than the roof for which the trusses are used are located within a distance less than ten (10) times the difference in height, or five metres (16 ft) whichever is greater, unless the drawing indicates that the snow drifting has been taken into account

HANDLING, INSTALLATION AND BRACING

- The trusses must be handled and installed by a qualified professional as per the supplied document titled *Information for Truss Installers* and the BCSI-B1 and BCSI-B3 Summary Sheets
- The compression chords are laterally braced by continuous rigid diaphragm sheathing or as specified on the drawing
- Temporary and permanent bracing must be installed as indicated on the truss drawing and according to the BCSI-B1 and BCSI-B3 Summary Sheets. Bracing for the lateral stability of the truss is to be provided by the building designer
- **It is recommended that a Professional Engineer's advice be obtained for the bracing of trusses spanning more than 12.37m (40'-7")**

SUPPORTS

- The trusses are to be supported at the bearing points indicated and anchored to the supports where considered necessary by the designer of the overall structure
- Bearing sizes shown are the minimum required to prevent crushing of the truss members and do not necessarily take into account stability of the overall building structure
- Elevation of bearings must be carefully checked and shimmed to alignment for solid bearings
- Adequate wood truss bearing is the responsibility of the building designer.

DIMENSIONS

- Geometry of the truss and dimensions indicated on the drawing are identical to those of the installed truss.

KOTT

CORPORATION OF THE CITY OF OSHAWA
TRUE COPY
OF PERMIT PLANS
Dec 06 2023
PER:
CHIEF BUILDING OFFICIAL
MHP 23018

JOB NAME	TRUSS NAME	QUANTITY	PLY	JOB DESC.	DRWG NO.
IM0622-131	G01			TRUSS DESC.	

Version 8.500 S Aug 16 2021 MiTek Industries, Inc. Thu Jun 23 08:36:07 2022 Page 1
ID:OzM1q?scz2BChOKfHahjdLzPugE-8VPVfxxofhXFLH3TgpKD1CGnz?1ZlehbnkfsbWz3TJ6
Scale = 1:50.3

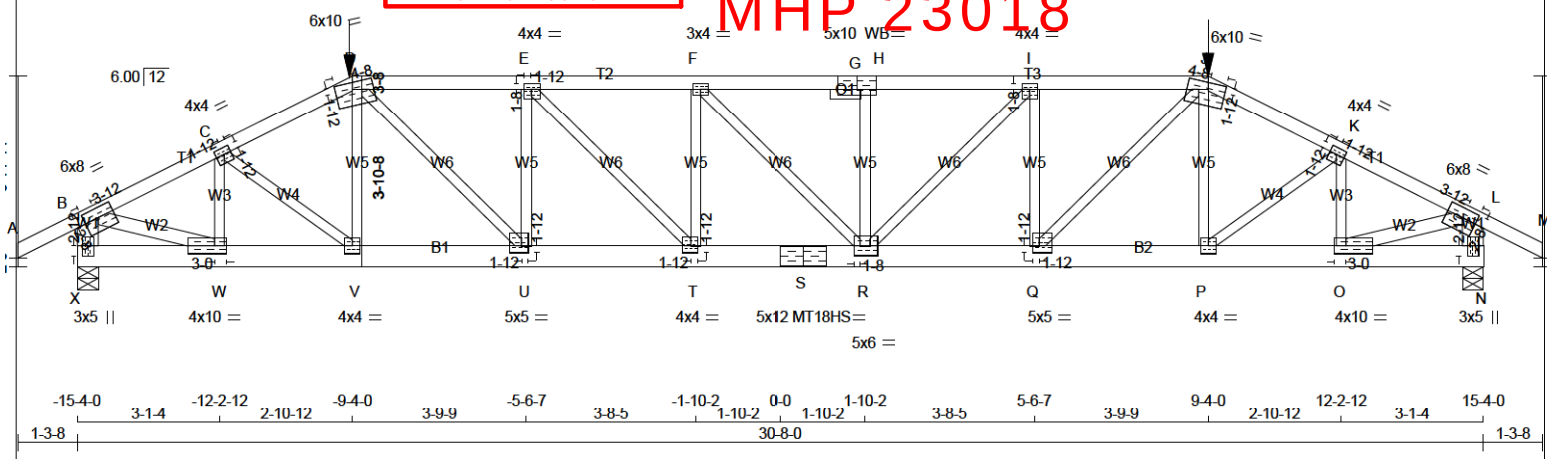

TOTAL WEIGHT = 149 lb
[M]

LUMBER
N. L. G. A. RULES

CHORDS	SIZE		LUMBER	DESCR.
A - D	2x4	DRY	No.2	SPF
D - G	2x4	DRY	2100F 1.8E	SPF
G - J	2x4	DRY	2100F 1.8E	SPF
J - M	2x4	DRY	No.2	SPF
X - B	2x6	DRY	No.2	SPF
N - L	2x6	DRY	No.2	SPF
X - S	2x6	DRY	2100F 1.8E	SPF
S - N	2x6	DRY	2100F 1.8E	SPF
ALL WEBS	2x3	DRY	No.2	SPF
EXCEPT				
B - W	2x4	DRY	No.2	SPF
O - L	2x4	DRY	No.2	SPF

DRY: SEASONED LUMBER.

PLATES (table is in inches)

JT	TYPE	PLATES	W	LEN	Y	X
B	TMVW-t	MT20	6.0	8.0	2.50	3.75
C	TMWW-t	MT20	4.0	4.0	1.75	1.75
D	TTWW-m	MT20	6.0	10.0	1.75	4.50
E	TMWW-t	MT20	4.0	4.0	1.50	1.75
F	TMWW-t	MT20	3.0	4.0		
G						
G	TSW-I	MT20	5.0	10.0	Edge	5.00
H						
I	TMWW-t	MT20	4.0	4.0	1.50	2.00
J	TTWW-m	MT20	6.0	10.0	1.75	4.50
K	TMWW-t	MT20	4.0	4.0	1.75	1.75
L	TMVW-t	MT20	6.0	8.0	2.50	3.75
N	BMV1+p	MT20	3.0	5.0	2.75	1.50
O	BMWW-t	MT20	4.0	10.0	2.00	3.00
P	BMWW-t	MT20	4.0	4.0		
Q	BMWW-t	MT20	5.0	5.0	1.75	1.75
R	BMWWW-t	MT20	5.0	6.0	2.50	1.50
S	BS-t	MT18HS	5.0	12.0		
T	BMWW-t	MT20	4.0	4.0	1.75	1.75
U	BMWW-t	MT20	5.0	5.0	1.75	1.75
V	BMWW-t	MT20	4.0	4.0		
W	BMWW-t	MT20	4.0	10.0	2.00	3.00
X	BMV1+p	MT20	3.0	5.0	2.75	1.50

Edge - INDICATES REFERENCE CORNER OF PLATE TOUCHES EDGE OF CHORD.

LICENSED PROFESSIONAL ENGINEER
I.MATIJEVIC
100528832
PROVINCE OF ONTARIO
June 23, 2022

READ ALL NOTES ON THIS PAGE AND ON THE ENGINEERING NOTE PAGE ENP-1. THE NOTE PAGE IS AN INTEGRAL PART OF THIS DRAWING AS IT CONTAINS SPECIFICATIONS AND CRITERIA USED IN THE DESIGN OF THIS COMPONENT.

DIMENSIONS, SUPPORTS AND LOADINGS SPECIFIED BY FABRICATOR TO BE VERIFIED BY BUILDING DESIGNER

BEARINGS

JT	FACTORED GROSS REACTION VERT	HORZ	MAXIMUM FACTORED GROSS REACTION DOWN	HORZ	UPLIFT	INPUT BRG	REQRD BRG
X	3823	0	3823	0	0	5-8	4-10
N	3823	0	3823	0	0	5-8	4-10

UNFACTORED REACTIONS

JT	1ST LCASE COMBINED	SNOW	MAX./MIN. COMPONENT REACTIONS LIVE	PERM.LIVE	WIND	DEAD	SOIL
X	2648	2050 / 0	0 / 0	0 / 0	0 / 0	599 / 0	0 / 0
N	2648	2050 / 0	0 / 0	0 / 0	0 / 0	599 / 0	0 / 0

BEARING MATERIAL TO BE SPF NO.2 OR BETTER AT JOINT(S) X, N
BEARING SIZE FACTOR = 1.15 AT JNT(S) X, N (BASED ON SUPPORT DEPTH = 1-8)

BRACING
TOP CHORD TO BE SHEATHED OR MAX. PURLIN SPACING = 2.40 FT.
MAX. UNBRACED BOTTOM CHORD LENGTH = 10.00 FT OR RIGID CEILING DIRECTLY APPLIED.

ALL PITCH BREAKS AND PERIMETER CORNER JOINTS MUST BE LATERALLY RESTRAINED.

LOADING
TOTAL LOAD CASES: (4)

CHORDS

MEMB. FR-TO	MAX. FACTORED FORCE (LBS)	FACTORED VERT. LOAD LC1 (PLF) FROM	TO	MAX CSI (LC)	MAX. UNBRAC LENGTH
A- B	0 / 34	-111.9	-111.9	0.16 (1)	10.00
B- C	-5054 / 0	-111.9	-111.9	0.51 (1)	2.69
C- D	-5784 / 0	-111.9	-111.9	0.58 (1)	2.40
D- E	-6988 / 0	-210.9	-210.9	0.55 (1)	2.89
E- F	-7851 / 0	-210.9	-210.9	0.61 (1)	2.65
F- G	-7825 / 0	-210.9	-210.9	0.53 (1)	2.76
G- H	-7825 / 0	-210.9	-210.9	0.53 (1)	2.76
H- I	-7825 / 0	-210.9	-210.9	0.62 (1)	2.65
I- J	-6994 / 0	-210.9	-210.9	0.56 (1)	2.88
J- K	-5783 / 0	-111.9	-111.9	0.58 (1)	2.40
K- L	-5054 / 0	-111.9	-111.9	0.51 (1)	2.69
L- M	0 / 34	-111.9	-111.9	0.16 (1)	10.00
X- B	-3696 / 0	0.0	0.0	0.26 (1)	5.51
N- L	-3696 / 0	0.0	0.0	0.26 (1)	5.51
X- W	0 / 0	-34.4	-34.4	0.09 (1)	10.00
W- V	0 / 4530	-34.4	-34.4	0.33 (1)	10.00
V- U	0 / 5151	-34.4	-34.4	0.31 (1)	10.00
U- T	0 / 6988	-34.4	-34.4	0.43 (1)	10.00
T- S	0 / 7851	-34.4	-34.4	0.49 (1)	10.00
S- R	0 / 7851	-34.4	-34.4	0.49 (1)	10.00
R- Q	0 / 6994	-34.4	-34.4	0.44 (1)	10.00
Q- P	0 / 5150	-34.4	-34.4	0.30 (1)	10.00
P- O	0 / 4530	-34.4	-34.4	0.33 (1)	10.00
O- N	0 / 0	-34.4	-34.4	0.09 (1)	10.00

WEBS

MEMB. FR-TO	MAX. FACTORED FORCE (LBS)	MAX CSI (LC)
W- C	-1202 / 0	0.21 (1)
C- V	0 / 793	0.20 (1)
V- D	-221 / 78	0.06 (1)
D- U	0 / 2594	0.64 (1)
U- E	-1751 / 0	0.45 (1)
E- T	0 / 1238	0.31 (1)
T- F	-738 / 0	0.19 (1)
F- R	-38 / 0	0.02 (1)
R- H	-747 / 0	0.19 (1)
R- I	0 / 1191	0.29 (1)
Q- I	-1726 / 0	0.45 (1)
Q- J	0 / 2604	0.64 (1)
P- J	-228 / 77	0.06 (1)
P- K	0 / 791	0.20 (1)
O- K	-1200 / 0	0.21 (1)
B- W	0 / 4669	0.83 (1)
O- L	0 / 4669	0.83 (1)

FACTORED CONCENTRATED LOADS (LBS)

JT	LOC.	LC1	MAX-	MAX+	FACE	DIR.	TYPE	HEEL	CONN.
D	6-0-0	-503	-503	---	FRONT	VERT	TOTAL	---	C1
J	24-8-0	-503	-503	---	FRONT	VERT	TOTAL	---	C1

CONNECTION REQUIREMENTS

1) **C1:** A SUITABLE HANGER/MECHANICAL CONNECTION IS REQUIRED.

DESIGN CRITERIA

SPECIFIED LOADS:

TOP CH.	LL	=	34.8	PSF
	DL	=	3.0	PSF
BOT CH.	LL	=	0.0	PSF
	DL	=	7.3	PSF
TOTAL LOAD		=	45.1	PSF

SPACING = 24.0 IN. C/C

LOADING IN FLAT SECTION BASED ON A SLOPE OF 2.00/12 MINIMUM

GIRDER TYPE: CPrimeHip
SIDE SETBACK = 6-0-0
END SETBACK = 6-0-0
END WALL WIDTH = 5-8
CORNER FRAMING TYPE: CONVENTIONAL
END JACK TYPE: CONVENTIONAL
APPLIED TO FRONT SIDE
- ADDT'L LOADS BASED ON 55 % OF GSL.

THIS TRUSS IS DESIGNED FOR RESIDENTIAL OR SMALL BUILDING REQUIREMENTS OF PART 9, NBCC 2015

THIS DESIGN COMPLIES WITH:
- PART 9 OF BCBC 2018 , ABC 2019
- PART 9 OF OBC 2012 (2019 AMENDMENT)
- CSA 086-14
- TPIC 2014

(55 % OF 48.1 P.S.F. G.S.L. PLUS 8.4 P.S.F. RAIN LOAD) EQUALS 34.8 P.S.F. SPECIFIED ROOF LIVE LOAD

ALLOWABLE DEFL.(LL)= L/360 (1.02")
CALCULATED VERT. DEFL.(LL) = L/ 999 (0.35")
ALLOWABLE DEFL.(TL)= L/360 (1.02")
CALCULATED VERT. DEFL.(TL) = L/ 645 (0.57")

CSI: TC=0.62/1.00 (H-I:1) , BC=0.49/1.00 (R-T:1) , WB=0.83/1.00 (L-O:1) , SSI=0.41/1.00 (I-J:1)

DOL LUMBER=1.00 NAIL=1.00 LS BEND=1.00 COMP=1.00 SHEAR=1.00 TENS= 1.00

COMPANION LIVE LOAD FACTOR = 1.00

TRUSS PLATE MANUFACTURER IS NOT RESPONSIBLE FOR QUALITY CONTROL IN THE TRUSS MANUFACTURING PLANT .

NAIL VALUES

PLATE	GRIP(DRY) (PSI) MAX	MIN	SHEAR (PLI) MAX	MIN	SECTION (PLI) MAX	MIN
MT20	650	371	1747	788	1987	1873
MT18HS	586	403	2455	1382	3163	3004

PLATE PLACEMENT TOL. = 0.250 inches

PLATE ROTATION TOL. = 5.0 Deg.

JSI GRIP= 0.90 (Q) (INPUT = 0.90)
JSI METAL= 0.99 (S) (INPUT = 1.00)

CONTINUED ON PAGE 2

KOTT

CORPORATION OF THE CITY OF OSHAWA
TRUE COPY
OF ORIGINAL PLANS
Dec 06 2023
PER: C Martin
CHIEF BUILDING OFFICIAL

JOB NAME	TRUSS NAME	QUANTITY	PLY	JOB DESC.	DRWG NO.
IM0622-131	G01			TRUSS DESC.	

Version 8.500 S Aug 16 2021 MiTek Industries, Inc. Thu Jun 23 08:36:08 2022 Page 2
ID:OzM1q?scz2BChOKfHahjdLzPugE-dhzttGxQQ?f6yRefEWrSZQpyjPMoU5xk0OPP7yz3TJ5

MHP 23018

WB - INDICATES BLOCKING REQUIRED

LICENSED PROFESSIONAL ENGINEER
I.MATIJEVIC
100528832
PROVINCE OF ONTARIO
June 23, 2022

READ ALL NOTES ON THIS PAGE AND ON THE ENGINEERING NOTE PAGE ENP-1. THE NOTE PAGE IS AN INTEGRAL PART OF THIS DRAWING AS IT CONTAINS SPECIFICATIONS AND CRITERIA USED IN THE DESIGN OF THIS COMPONENT.

KOTT

CORPORATION OF THE CITY OF OSHAWA
TRUE COPY
OF QUANTITY PLANS
Dec 06 2023
PER:
CHIEF BUILDING OFFICIAL

MHP 23018

JOB NAME	TRUSS NAME	QUANTITY	PLY	JOB DESC.	DRWG NO.
IM0622-131	G02			TRUSS DESC.	

Version 8.500 S Aug 16 2021 MiTek Industries, Inc. Thu Jun 23 08:36:08 2022 Page 1
ID:OzM1q?scz2BChOKfHahjdLzPugE-dhzttGxQQ?f6yRefEWrSZQp25PQzUBlk0OPP7yz3TJ5
Scale = 1:27.0

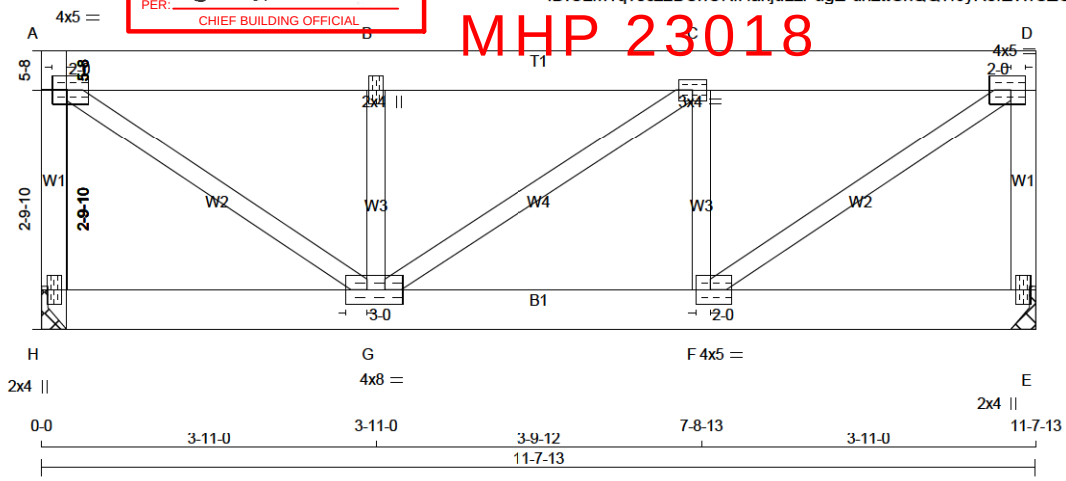

TOTAL WEIGHT = 61 lb
[M]

LUMBER
N. L. G. A. RULES

CHORDS	SIZE		LUMBER	DESCR.
H - A	2x4	DRY	No.2	SPF
A - D	2x6	DRY	No.2	SPF
E - D	2x4	DRY	No.2	SPF
H - E	2x6	DRY	No.2	SPF
ALL WEBS	2x3	DRY	No.2	SPF

DRY: SEASONED LUMBER.

PLATES (table is in inches)

JT	TYPE	PLATES	W	LEN	Y	X
A	TMVW-t	MT20	4.0	5.0	2.00	2.00
B	TMW+w	MT20	2.0	4.0		
C	TMWW-t	MT20	3.0	4.0		
D	TMVW-t	MT20	4.0	5.0	2.00	2.00
E	BMV1+p	MT20	2.0	4.0		
F	BMWW-t	MT20	4.0	5.0	2.00	2.00
G	BMWWW-t	MT20	4.0	8.0	2.00	3.00
H	BMV1+p	MT20	2.0	4.0		

DIMENSIONS, SUPPORTS AND LOADINGS SPECIFIED BY FABRICATOR TO BE VERIFIED BY BUILDING DESIGNER

BEARINGS

JT	FACTORED GROSS REACTION VERT	HORZ	MAXIMUM FACTORED GROSS REACTION DOWN	HORZ	UPLIFT	INPUT BRG	REQRD BRG
H	1295	0	1295	0	0	MECHANICAL	
E	1295	0	1295	0	0	MECHANICAL	

A SUITABLE HANGER/MECHANICAL CONNECTION IS REQUIRED AT JOINT H, E. MINIMUM BEARING LENGTH AT JOINT H = 1-8, JOINT E = 1-8.

UNFACTORED REACTIONS

JT	1ST LCASE COMBINED	MAX./MIN. COMPONENT REACTIONS SNOW	LIVE	PERM.LIVE	WIND	DEAD	SOIL
H	897	692 / 0	0 / 0	0 / 0	0 / 0	205 / 0	0 / 0
E	897	692 / 0	0 / 0	0 / 0	0 / 0	205 / 0	0 / 0

BRACING
TOP CHORD TO BE SHEATHED OR MAX. PURLIN SPACING = 6.25 FT.
MAX. UNBRACED BOTTOM CHORD LENGTH = 10.00 FT OR RIGID CEILING DIRECTLY APPLIED.

ALL PITCH BREAKS AND PERIMETER CORNER JOINTS MUST BE LATERALLY RESTRAINED.

LOADING
TOTAL LOAD CASES: (4)

CHORDS

MEMB. FR-TO	MAX. FACTORED FORCE (LBS)	FACTORED VERT. LOAD (PLF) FROM	TO	LC1 MAX CSI (LC)	MAX. UNBRAC LENGTH
H- A	-1226 / 0	0.0	0.0	0.19 (1)	7.20
A- B	-1266 / 0	-191.1	-191.1	0.21 (1)	6.25
B- C	-1266 / 0	-191.1	-191.1	0.18 (1)	6.25
C- D	-1280 / 0	-191.1	-191.1	0.20 (1)	6.25
E- D	-1231 / 0	0.0	0.0	0.19 (1)	7.19
H- G	0 / 0	-31.2	-31.2	0.06 (4)	10.00
G- F	0 / 1280	-31.2	-31.2	0.22 (1)	10.00
F- E	0 / 0	-31.2	-31.2	0.06 (4)	10.00

WEBS

MEMB. FR-TO	MAX. FACTORED FORCE (LBS)	MAX CSI (LC)
A- G	0 / 1556	0.39 (1)
G- B	-787 / 0	0.15 (1)
G- C	-18 / 0	0.01 (1)
F- C	-793 / 0	0.15 (1)
F- D	0 / 1574	0.39 (1)

DESIGN CRITERIA

SPECIFIED LOADS:

TOP CH.	LL =	34.8	PSF
	DL =	3.0	PSF
BOT CH.	LL =	0.0	PSF
	DL =	7.3	PSF
TOTAL LOAD	=	45.1	PSF

SPACING = 24.0 IN. C/C

LOADING IN FLAT SECTION BASED ON A SLOPE OF 2.00/12 MINIMUM

GIRDER TYPE: CPrimeHip
SIDE SETBACK = 0-0
END SETBACK = 4-10-0
END WALL WIDTH = 0-0
CORNER FRAMING TYPE: CONVENTIONAL
END JACK TYPE: CONVENTIONAL
APPLIED TO FRONT SIDE
- ADDT'L LOADS BASED ON 55 % OF GSL.

THIS TRUSS IS DESIGNED FOR RESIDENTIAL OR SMALL BUILDING REQUIREMENTS OF PART 9, NBCC 2015

THIS DESIGN COMPLIES WITH:
- PART 9 OF BCBC 2018 , ABC 2019
- PART 9 OF OBC 2012 (2019 AMENDMENT)
- CSA 086-14
- TPIC 2014

(55 % OF 48.1 P.S.F. G.S.L. PLUS 8.4 P.S.F. RAIN LOAD) EQUALS 34.8 P.S.F. SPECIFIED ROOF LIVE LOAD

ALLOWABLE DEFL.(LL)= L/360 (0.39")
CALCULATED VERT. DEFL.(LL) = L/ 999 (0.03")
ALLOWABLE DEFL.(TL)= L/360 (0.39")
CALCULATED VERT. DEFL.(TL) = L/ 999 (0.05")

CSI: TC=0.21/1.00 (A-B:1) , BC=0.22/1.00 (F-G:1) , WB=0.39/1.00 (D-F:1) , SSI=0.29/1.00 (C-D:1)

DOL LUMBER=1.00 NAIL=1.00 LS BEND=1.00 COMP=1.00 SHEAR=1.00 TENS= 1.00

COMPANION LIVE LOAD FACTOR = 1.00

TRUSS PLATE MANUFACTURER IS NOT RESPONSIBLE FOR QUALITY CONTROL IN THE TRUSS MANUFACTURING PLANT .

NAIL VALUES

PLATE	GRIP(DRY) (PSI) MAX	MIN	SHEAR (PLI) MAX	MIN	SECTION (PLI) MAX	MIN
MT20	650	371	1747	788	1987	1873

PLATE PLACEMENT TOL. = 0.250 inches

PLATE ROTATION TOL. = 5.0 Deg.

JSI GRIP= 0.88 (D) (INPUT = 0.90)
JSI METAL= 0.35 (D) (INPUT = 1.00)

LICENSED PROFESSIONAL ENGINEER
I.MATIJEVIC
100528832
PROVINCE OF ONTARIO
June 23, 2022

READ ALL NOTES ON THIS PAGE AND ON THE ENGINEERING NOTE PAGE ENP-1. THE NOTE PAGE IS AN INTEGRAL PART OF THIS DRAWING AS IT CONTAINS SPECIFICATIONS AND CRITERIA USED IN THE DESIGN OF THIS COMPONENT.

KOTT

CORPORATION OF THE CITY OF OSHAWA
TRUE COPY
OF ORIGINAL PLANS
Dec 06 2023
PER:
CHIEF BUILDING OFFICIAL

JOB NAME	TRUSS NAME	QUANTITY	PLY	JOB DESC.	DRWG NO.
IM0622-131	G03			TRUSS DESC.	

Version 8.500 S Aug 16 2021 MiTek Industries, Inc. Thu Jun 23 08:36:09 2022 Page 1
ID:OzM1q?scz2BChOKfHahjdLzPugE-5tXF4cy3BJnzabDrnEMh6dLDZpiaDdctF28zfOz3TJ4
Scale = 1:29.3

MHP 23018

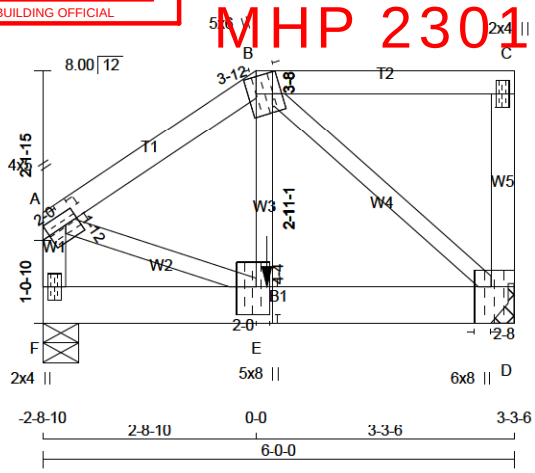

TOTAL WEIGHT = 29 lb

LUMBER
N. L. G. A. RULES

CHORDS	SIZE		LUMBER	DESCR.
A - B	2x4	DRY	No.2	SPF
B - C	2x4	DRY	No.2	SPF
D - C	2x4	DRY	No.2	SPF
F - A	2x4	DRY	No.2	SPF
F - D	2x6	DRY	No.2	SPF
ALL WEBS EXCEPT	2x3	DRY	No.2	SPF

DRY: SEASONED LUMBER.

PLATES (table is in inches)

JT	TYPE	PLATES	W	LEN	Y	X
A	TMVW-t	MT20	4.0	5.0	1.75	Edge
B	TTWW+m	MT20	5.0	6.0	Edge	3.75
C	TMV+p	MT20	2.0	4.0		
D	BMVW1+t	MT20	6.0	8.0	Edge	2.50
E	BMWW+t	MT20	5.0	8.0	4.25	2.00
F	BMV1+p	MT20	2.0	4.0		

Edge - INDICATES REFERENCE CORNER OF PLATE TOUCHES EDGE OF CHORD.

DIMENSIONS, SUPPORTS AND LOADINGS SPECIFIED BY FABRICATOR TO BE VERIFIED BY BUILDING DESIGNER

BEARINGS

JT	FACTORED GROSS REACTION VERT	HORZ	MAXIMUM FACTORED GROSS REACTION DOWN	HORZ	UPLIFT	INPUT BRG IN-SX	REQRD BRG IN-SX
D	1773	0	1773	0	0	MECHANICAL	
F	1387	0	1387	0	0	5-8	1-8

A SUITABLE HANGER/MECHANICAL CONNECTION IS REQUIRED AT JOINT D. MINIMUM BEARING LENGTH AT JOINT D = 3-8.

UNFACTORED REACTIONS

JT	1ST LCASE COMBINED	MAX./MIN. COMPONENT REACTIONS SNOW	LIVE	PERM.LIVE	WIND	DEAD	SOIL
D	1229	948 / 0	0 / 0	0 / 0	0 / 0	281 / 0	0 / 0
F	961	741 / 0	0 / 0	0 / 0	0 / 0	219 / 0	0 / 0

BEARING MATERIAL TO BE SPF NO.2 OR BETTER AT JOINT(S) F

BRACING
TOP CHORD TO BE SHEATHED OR MAX. PURLIN SPACING = 5.21 FT.
MAX. UNBRACED BOTTOM CHORD LENGTH = 10.00 FT OR RIGID CEILING DIRECTLY APPLIED.

ALL PITCH BREAKS AND PERIMETER CORNER JOINTS MUST BE LATERALLY RESTRAINED.

LOADING
TOTAL LOAD CASES: (4)

CHORDS

MEMB. FR-TO	MAX. FACTORED FORCE (LBS)	FACTORED VERT. LOAD (PLF) FROM	TO	LC1 MAX CSI (LC)	MAX. UNBRAC LENGTH
A- B	-1439 / 0	-111.9	-111.9	0.19 (1)	5.21
B- C	0 / 0	-111.9	-111.9	0.23 (1)	10.00
D- C	-184 / 0	0.0	0.0	0.03 (1)	7.81
F- A	-1377 / 0	0.0	0.0	0.15 (1)	6.89
F- E	0 / 0	-18.2	-18.2	0.03 (1)	10.00
E- D	0 / 1252	-332.2	-332.2	0.45 (1)	10.00

WEBS

MEMB. FR-TO	MAX. FACTORED FORCE (LBS)	MAX CSI (LC)
E- B	0 / 1544	0.38 (1)
B- D	-1650 / 0	0.48 (1)
A- E	0 / 1267	0.31 (1)

FACTORED CONCENTRATED LOADS (LBS)

JT	LOC.	LC1	MAX-	MAX+	FACE	DIR.	TYPE	HEEL	CONN.
E	2-10-4	-1381	-1381	—	FRONT	VERT	TOTAL	—	C1

CONNECTION REQUIREMENTS

1) **C1:** A SUITABLE HANGER/MECHANICAL CONNECTION IS REQUIRED.

DESIGN CRITERIA

*** SPECIAL LOADS ANALYSIS ***
GEOMETRY AND/OR BASIC LOADS CHANGED BY USER.
LOADS WERE DERIVED FROM USER INPUT
NO FURTHER MODIFICATIONS WERE MADE

SPECIFIED LOADS:

TOP	CH.	LL	=	34.8	PSF
		DL	=	3.0	PSF
BOT	CH.	LL	=	0.0	PSF
		DL	=	7.3	PSF
TOTAL	LOAD		=	45.1	PSF

SPACING = 24.0 IN. C/C

LOADING IN FLAT SECTION BASED ON A SLOPE OF 2.00/12 MINIMUM

GIRDER TYPE: CStdGirder
START DISTANCE = 2-9-8
START SPAN CARRIED = 11-7-13
END DISTANCE = 6-0-0
END SPAN CARRIED = 11-7-13
END WALL WIDTH = 0-0
APPLIED TO FRONT SIDE OF BOTTOM CHORD.
- ADDT'L LOADS BASED ON 55 % OF GSL.

*** NON STANDARD GIRDER ***
ADDT'L USER-DEFINED LOADS APPLIED TO ALL LOAD CASES.

THIS TRUSS IS DESIGNED FOR RESIDENTIAL OR SMALL BUILDING REQUIREMENTS OF PART 9, NBCC 2015

THIS DESIGN COMPLIES WITH:
- PART 9 OF BCBC 2018 , ABC 2019
- PART 9 OF OBC 2012 (2019 AMENDMENT)
- CSA 086-14
- TPIC 2014

(55 % OF 48.1 P.S.F. G.S.L. PLUS 8.4 P.S.F. RAIN LOAD) EQUALS 34.8 P.S.F. SPECIFIED ROOF LIVE LOAD

ALLOWABLE DEFL.(LL)= L/360 (0.20")
CALCULATED VERT. DEFL.(LL) = L/ 999 (0.02")
ALLOWABLE DEFL.(TL)= L/360 (0.20")
CALCULATED VERT. DEFL.(TL) = L/ 999 (0.04")

CSI: TC=0.23/1.00 (B-C:1) , BC=0.45/1.00 (D-E:1) , WB=0.48/1.00 (B-D:1) , SSI=0.36/1.00 (D-E:1)

DOL LUMBER=1.00 NAIL=1.00 LS BEND=1.00 COMP=1.00 SHEAR=1.00 TENS= 1.00

COMPANION LIVE LOAD FACTOR = 1.00

TRUSS PLATE MANUFACTURER IS NOT RESPONSIBLE FOR QUALITY CONTROL IN THE TRUSS MANUFACTURING PLANT .

LICENSED PROFESSIONAL ENGINEER
I.MATIJEVIC
100528832
PROVINCE OF ONTARIO
June 23, 2022

READ ALL NOTES ON THIS PAGE AND ON THE ENGINEERING NOTE PAGE ENP-1. THE NOTE PAGE IS AN INTEGRAL PART OF THIS DRAWING AS IT CONTAINS SPECIFICATIONS AND CRITERIA USED IN THE DESIGN OF THIS COMPONENT.

CONTINUED ON PAGE 2

KOTT

CORPORATION OF THE CITY OF OSHAWA
TRUE COPY
OF ORIGINAL PLANS
Dec 06 2023
PER:
CHIEF BUILDING OFFICIAL

JOB NAME	TRUSS NAME	QUANTITY	PLY	JOB DESC.	DRWG NO.
IM0622-131	G03			TRUSS DESC.	

Version 8.500 S Aug 16 2021 MiTek Industries, Inc. Thu Jun 23 08:36:09 2022 Page 2
ID:OzM1q?scz2BChOKfHahjdLzPugE-5tXF4cy3BJnzabDrnEMh6dLDZpiaDdctF28zfOz3TJ4

MHP 23018

NAIL VALUES

PLATE	GRIP(DRY) (PSI)		SHEAR (PLI)		SECTION (PLI)	
	MAX	MIN	MAX	MIN	MAX	MIN
MT20	650	371	1747	788	1987	1873

PLATE PLACEMENT TOL. = 0.250 inches

PLATE ROTATION TOL. = 5.0 Deg.

JSI GRIP= 0.88 (A) (INPUT = 0.90)
JSI METAL= 0.46 (B) (INPUT = 1.00)

LICENSED PROFESSIONAL ENGINEER
I.MATIJEVIC
100528832
PROVINCE OF ONTARIO
June 23, 2022

READ ALL NOTES ON THIS PAGE AND ON THE ENGINEERING NOTE PAGE ENP-1. THE NOTE PAGE IS AN INTEGRAL PART OF THIS DRAWING AS IT CONTAINS SPECIFICATIONS AND CRITERIA USED IN THE DESIGN OF THIS COMPONENT.

KOTT

CORPORATION OF THE CITY OF OSHAWA
TRUE COPY
OF QUANTITY PLANS
Dec 06 2023
PER:
CHIEF BUILDING OFFICIAL

JOB NAME	TRUSS NAME	QUANTITY	PLY	JOB DESC.	DRWG NO.
IM0622-131	G04			TRUSS DESC.	

Version 8.500 S Aug 16 2021 MiTek Industries, Inc. Thu Jun 23 08:36:10 2022 Page 1
ID:OzM1q?scz2BChOKfHahjdLzPugE-Z45dHyzhycvqClo2LxtwfruPsC2my4c1TiuWBrz3TJ3
Scale = 1:43.7

MHP 23018

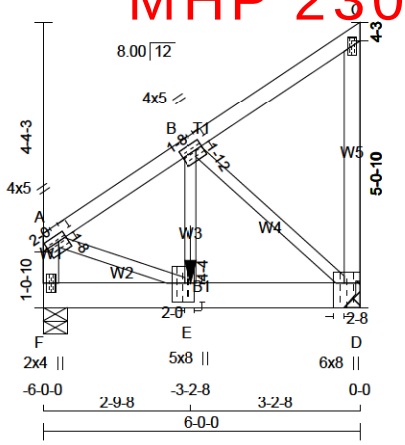

TOTAL WEIGHT = 33 lb

LUMBER
N. L. G. A. RULES

CHORDS	SIZE		LUMBER	DESCR.
F - A	2x4	DRY	No.2	SPF
A - C	2x4	DRY	No.2	SPF
D - C	2x4	DRY	No.2	SPF
F - D	2x6	DRY	No.2	SPF
ALL WEBS	2x3	DRY	No.2	SPF

DRY: SEASONED LUMBER.

PLATES (table is in inches)

JT	TYPE	PLATES	W	LEN	Y	X
A	TMVW-t	MT20	4.0	5.0	1.50	2.00
B	TMWW-t	MT20	4.0	5.0	1.75	1.50
C	TMV+p	MT20	2.0	4.0		
D	BMVW1+t	MT20	6.0	8.0	Edge	2.50
E	BMWW+t	MT20	5.0	8.0	4.25	2.00
F	BMV1+p	MT20	2.0	4.0		

Edge - INDICATES REFERENCE CORNER OF PLATE TOUCHES EDGE OF CHORD.

DIMENSIONS, SUPPORTS AND LOADINGS SPECIFIED BY FABRICATOR TO BE VERIFIED BY BUILDING DESIGNER

BEARINGS

JT	FACTORED GROSS REACTION VERT	HORZ	MAXIMUM FACTORED GROSS REACTION DOWN	HORZ	UPLIFT	INPUT BRG IN-SX	REQRD BRG IN-SX
F	1398	0	1398	0	0	5-8	1-8
D	1771	0	1771	0	0	MECHANICAL	

A SUITABLE HANGER/MECHANICAL CONNECTION IS REQUIRED AT JOINT D. MINIMUM BEARING LENGTH AT JOINT D = 3-8.

UNFACTORED REACTIONS

JT	1ST LCASE COMBINED	MAX./MIN. COMPONENT REACTIONS SNOW	LIVE	PERM.LIVE	WIND	DEAD	SOIL
F	969	748 / 0	0 / 0	0 / 0	0 / 0	221 / 0	0 / 0
D	1227	947 / 0	0 / 0	0 / 0	0 / 0	280 / 0	0 / 0

BEARING MATERIAL TO BE SPF NO.2 OR BETTER AT JOINT(S) F

BRACING
TOP CHORD TO BE SHEATHED OR MAX. PURLIN SPACING = 5.16 FT.
MAX. UNBRACED BOTTOM CHORD LENGTH = 10.00 FT OR RIGID CEILING DIRECTLY APPLIED.

ALL PITCH BREAKS AND PERIMETER CORNER JOINTS MUST BE LATERALLY RESTRAINED.

LOADING
TOTAL LOAD CASES: (4)

CHORDS

MEMB. FR-TO	MAX. FACTORED FORCE (LBS)	FACTORED VERT. LOAD (PLF) FROM	TO	LC1 MAX CSI (LC)	MAX. UNBRAC LENGTH
F- A	-1391 / 0	0.0	0.0	0.16 (1)	6.87
A- B	-1473 / 0	-111.9	-111.9	0.19 (1)	5.16
B- C	-18 / 0	-111.9	-111.9	0.16 (1)	6.25
D- C	-147 / 0	0.0	0.0	0.07 (1)	7.81
F- E	0 / 0	-18.2	-18.2	0.04 (1)	10.00
E- D	0 / 1243	-332.2	-332.2	0.46 (1)	10.00

WEBS

MEMB. FR-TO	MAX. FACTORED FORCE (LBS)	MAX CSI (LC)
A- E	0 / 1320	0.33 (1)
E- B	0 / 1530	0.38 (1)
B- D	-1664 / 0	0.49 (1)

FACTORED CONCENTRATED LOADS (LBS)

JT	LOC.	LC1	MAX-	MAX+	FACE	DIR.	TYPE	HEEL	CONN.
E	2-9-8	-1381	-1381	—	FRONT	VERT	TOTAL	—	C1

CONNECTION REQUIREMENTS

1) **C1:** A SUITABLE HANGER/MECHANICAL CONNECTION IS REQUIRED.

DESIGN CRITERIA

*** SPECIAL LOADS ANALYSIS ***
GEOMETRY AND/OR BASIC LOADS CHANGED BY USER.
LOADS WERE DERIVED FROM USER INPUT
NO FURTHER MODIFICATIONS WERE MADE

SPECIFIED LOADS:

TOP	CH.	LL	=	34.8	PSF
		DL	=	3.0	PSF
BOT	CH.	LL	=	0.0	PSF
		DL	=	7.3	PSF
TOTAL	LOAD		=	45.1	PSF

SPACING = 24.0 IN. C/C

GIRDER TYPE: CStdGirder
START DISTANCE = 2-9-8
START SPAN CARRIED = 11-7-13
END DISTANCE = 6-0-0
END SPAN CARRIED = 11-7-13
END WALL WIDTH = 0-0
APPLIED TO FRONT SIDE OF BOTTOM CHORD.
- ADDT'L LOADS BASED ON 55 % OF GSL.

*** NON STANDARD GIRDER ***
ADDT'L USER-DEFINED LOADS APPLIED TO ALL LOAD CASES.

THIS TRUSS IS DESIGNED FOR RESIDENTIAL OR SMALL BUILDING REQUIREMENTS OF PART 9, NBCC 2015

THIS DESIGN COMPLIES WITH:
- PART 9 OF BCBC 2018 , ABC 2019
- PART 9 OF OBC 2012 (2019 AMENDMENT)
- CSA 086-14
- TPIC 2014

(55 % OF 48.1 P.S.F. G.S.L. PLUS 8.4 P.S.F. RAIN LOAD) EQUALS 34.8 P.S.F. SPECIFIED ROOF LIVE LOAD

ALLOWABLE DEFL.(LL)= L/360 (0.20")
CALCULATED VERT. DEFL.(LL) = L/ 999 (0.02")
ALLOWABLE DEFL.(TL)= L/360 (0.20")
CALCULATED VERT. DEFL.(TL) = L/ 999 (0.04")

CSI: TC=0.19/1.00 (A-B:1) , BC=0.46/1.00 (D-E:1) , WB=0.49/1.00 (B-D:1) , SSI=0.36/1.00 (D-E:1)

DOL LUMBER=1.00 NAIL=1.00 LS BEND=1.00 COMP=1.00 SHEAR=1.00 TENS= 1.00

COMPANION LIVE LOAD FACTOR = 1.00

TRUSS PLATE MANUFACTURER IS NOT RESPONSIBLE FOR QUALITY CONTROL IN THE TRUSS MANUFACTURING PLANT .

NAIL VALUES

PLATE	GRIP(DRY) (PSI) MAX	MIN	SHEAR (PLI) MAX	MIN	SECTION (PLI) MAX	MIN
MT20	650	371	1747	788	1987	1873

CONTINUED ON PAGE 2

LICENSED PROFESSIONAL ENGINEER
I.MATIJEVIC
100528832
PROVINCE OF ONTARIO
June 23, 2022

READ ALL NOTES ON THIS PAGE AND ON THE ENGINEERING NOTE PAGE ENP-1. THE NOTE PAGE IS AN INTEGRAL PART OF THIS DRAWING AS IT CONTAINS SPECIFICATIONS AND CRITERIA USED IN THE DESIGN OF THIS COMPONENT.

KOTT

CORPORATION OF THE CITY OF OSHAWA
TRUE COPY
OF ORIGINAL PLANS
Dec 06 2023
PER: C Martin
CHIEF BUILDING OFFICIAL

JOB NAME	TRUSS NAME	QUANTITY	PLY	JOB DESC.	DRWG NO.
IM0622-131	G04			TRUSS DESC.	

Version 8.500 S Aug 16 2021 MiTek Industries, Inc. Thu Jun 23 08:36:10 2022 Page 2
ID:OzM1q?scz2BChOKfHahjdLzPugE-Z45dHyzhycvqClo2LxtwfruPsC2my4c1TiuWBrz3TJ3

MHP 23018

PLATE PLACEMENT TOL. = 0.250 inches

PLATE ROTATION TOL. = 5.0 Deg.

JSI GRIP= 0.89 (B) (INPUT = 0.90)
JSI METAL= 0.45 (E) (INPUT = 1.00)

LICENSED PROFESSIONAL ENGINEER
I.MATIJEVIC
100528832
PROVINCE OF ONTARIO
June 23, 2022

READ ALL NOTES ON THIS PAGE AND ON THE ENGINEERING NOTE PAGE ENP-1. THE NOTE PAGE IS AN INTEGRAL PART OF THIS DRAWING AS IT CONTAINS SPECIFICATIONS AND CRITERIA USED IN THE DESIGN OF THIS COMPONENT.

KOTT

CORPORATION OF THE CITY OF OSHAWA
TRUE COPY
OF ORIGINAL PLANS
Dec 06 2023
PER:
CHIEF BUILDING OFFICIAL

MHP 23018

JOB NAME	TRUSS NAME	QUANTITY	JOB DESC.	DRWG NO.
IM0622-131	G05	PLY	TRUSS DESC.	

Version 8.500 S Aug 16 2021 MiTek Industries, Inc. Thu Jun 23 08:36:12 2022 Page 1
ID:OzM1q?scz2BChOKfHahjdLzPugE-VSDNie_xUE9XR2xQTMwOkGzd90h7QsNKx0NdGjz3TJ1
Scale = 1:55.1

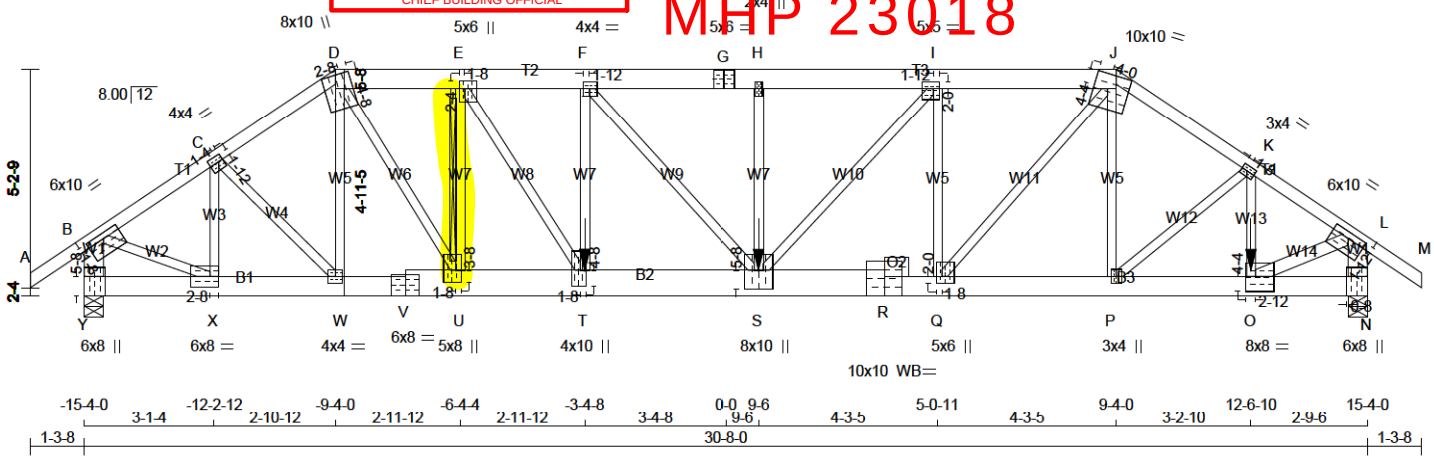

TOTAL WEIGHT = 180 lb [M]

LUMBER
N. L. G. A. RULES

CHORDS	SIZE		LUMBER	DESCR.
A - D	2x4	DRY	No.2	SPF
D - G	2x6	DRY	No.2	SPF
G - J	2x6	DRY	No.2	SPF
J - M	2x4	DRY	No.2	SPF
Y - B	2x6	DRY	No.2	SPF
N - L	2x6	DRY	No.2	SPF
Y - V	2x6	DRY	No.2	SPF
V - R	2x8	DRY	1950F 1.7E	SPF
R - N	2x6	DRY	2100F 1.8E	SPF
ALL WEBS EXCEPT	2x3	DRY	No.2	SPF
O - L	2x4	DRY	No.2	SPF

DRY: SEASONED LUMBER.

PLATES (table is in inches)

JT	TYPE	PLATES	W	LEN	Y	X
B	TMVW-t	MT20	6.0	10.0	1.50	5.00
C	TMWW-t	MT20	4.0	4.0	1.75	1.25
D	TTWW+m	MT20	8.0	10.0	4.50	2.50
E	TMWW+t	MT20	5.0	6.0	2.25	1.50
F	TMWW-t	MT20	4.0	4.0	2.00	1.75
G	TS-t	MT20	5.0	6.0		
H	TMW+w	MT20	2.0	4.0		
I	TMWW-t	MT20	5.0	5.0	2.00	1.75
J	TTWW-m	MT20	10.0	10.0	4.25	4.00
K	TMWW-t	MT20	3.0	4.0	1.50	1.50
L	TMVW-t	MT20	6.0	10.0	1.75	5.00
N	BMV1+t	MT20	6.0	8.0	Edge	0.50
O	BMWW-t	MT20	8.0	8.0	4.25	2.75
P	BMWW+t	MT20	3.0	4.0		
Q	BMWW+t	MT20	5.0	6.0	2.00	1.50
R	BS-t	MT20	10.0	10.0		
S	BMWWW+t	MT20	8.0	10.0	5.50	4.00
T	BMWW+t	MT20	4.0	10.0	4.50	1.50
U	BMWW+t	MT20	5.0	8.0	3.50	1.50
V	BS-t	MT20	6.0	8.0		
W	BMWW-t	MT20	4.0	4.0		
X	BMWW-t	MT20	6.0	8.0	3.00	2.50
Y	BMV1+t	MT20	6.0	8.0	5.50	

Edge - INDICATES REFERENCE CORNER OF PLATE TOUCHES EDGE OF CHORD.

LICENSED PROFESSIONAL ENGINEER
I.MATIJEVIC
100528832
PROVINCE OF ONTARIO
June 23, 2022

READ ALL NOTES ON THIS PAGE AND ON THE ENGINEERING NOTE PAGE ENP-1. THE NOTE PAGE IS AN INTEGRAL PART OF THIS DRAWING AS IT CONTAINS SPECIFICATIONS AND CRITERIA USED IN THE DESIGN OF THIS COMPONENT.

DIMENSIONS, SUPPORTS AND LOADINGS SPECIFIED BY FABRICATOR TO BE VERIFIED BY BUILDING DESIGNER

BEARINGS

JT	FACTORED GROSS REACTION VERT	HORZ	MAXIMUM FACTORED GROSS REACTION DOWN	HORZ	UPLIFT	INPUT BRG IN-SX	REQRD BRG IN-SX
Y	4130	0	4130	0	0	5-8	5-8
N	5669	0	5669	0	0	5-8	5-8

UNFACTORED REACTIONS

JT	1ST LCASE COMBINED	SNOW	MAX./MIN. COMPONENT REACTIONS LIVE	PERM.LIVE	WIND	DEAD	SOIL
Y	2860	2222 / 0	0 / 0	0 / 0	0 / 0	638 / 0	0 / 0
N	3926	3045 / 0	0 / 0	0 / 0	0 / 0	881 / 0	0 / 0

BEARING MATERIAL TO BE SPF NO.2 OR BETTER AT JOINT(S) Y, N
BEARING SIZE FACTOR = 1.15 AT JNT(S) Y, N (BASED ON SUPPORT DEPTH = 1-8)

BRACING
TOP CHORD TO BE SHEATHED OR MAX. PURLIN SPACING = 2.35 FT.
MAX. UNBRACED BOTTOM CHORD LENGTH = 10.00 FT OR RIGID CEILING DIRECTLY APPLIED.

ALL PITCH BREAKS AND PERIMETER CORNER JOINTS MUST BE LATERALLY RESTRAINED.

2x4 DRY SPF No.2 T-BRACE AT E-U

FASTEN T AND I-BRACES TO NARROW EDGE OF WEB WITH ONE ROW PER PLY OF 3" COMMON WIRE NAILS @ 6" O.C. WITH 3" MINIMUM END DISTANCE. BRACE MUST COVER 90% OF WEB LENGTH.

END VERTICAL(S) MUST BE SHEATHED OR HAVE BRACES AS INDICATED IN THE MAX. UNBRACED LENGTH COLUMN OF THE TABLE BELOW

LOADING
TOTAL LOAD CASES: (4)

CHORDS

MEMB. FR-TO	MAX. FACTORED FORCE (LBS)	FACTORED VERT. LOAD (PLF) FROM	TO	LC1 MAX CSI (LC)	MAX. UNBRAC LENGTH
A- B	0 / 43	-111.9	-111.9	0.17 (1)	10.00
B- C	-4552 / 0	-111.9	-111.9	0.45 (1)	2.92
C- D	-5240 / 0	-111.9	-111.9	0.52 (1)	2.62
D- E	-6247 / 0	-111.9	-111.9	0.34 (1)	3.27
E- F	-7808 / 0	-111.9	-111.9	0.46 (1)	2.81
F- G	-8417 / 0	-111.9	-111.9	0.62 (1)	2.55
G- H	-8417 / 0	-111.9	-111.9	0.62 (1)	2.55
H- I	-8417 / 0	-111.9	-111.9	0.59 (1)	2.58
I- J	-6849 / 0	-111.9	-111.9	0.44 (1)	3.03
J- K	-5707 / 0	-111.9	-111.9	0.65 (1)	2.37
K- L	-5960 / 0	-111.9	-111.9	0.60 (1)	2.35
L- M	0 / 43	-111.9	-111.9	0.17 (1)	10.00
Y- B	-4052 / 0	0.0	0.0	0.29 (1)	5.28
N- L	-5378 / 0	0.0	0.0	0.38 (1)	4.59
Y- X	0 / 0	-18.2	-18.2	0.11 (1)	10.00
X- W	0 / 3801	-18.2	-18.2	0.61 (1)	10.00
W- V	0 / 4354	-18.3	-18.3	0.66 (1)	10.00
V- U	0 / 4354	-18.2	-18.2	0.66 (1)	10.00
U- T	0 / 6247	-18.2	-18.2	0.35 (1)	10.00
T- S	0 / 7808	-133.5	-133.5	0.51 (1)	10.00
S- R	0 / 6847	-18.2	-18.2	0.45 (1)	10.00
R- Q	0 / 6847	-18.3	-18.3	0.45 (1)	10.00
Q- P	0 / 4764	-18.2	-18.2	0.29 (1)	10.00
P- O	0 / 4971	-18.2	-18.2	0.38 (1)	10.00
O- N	0 / 0	-133.5	-133.5	0.13 (1)	10.00

WEBS

MEMB. FR-TO	MAX. FACTORED FORCE (LBS)	MAX CSI (LC)
X- C	-1307 / 0	0.27 (1)
C- W	0 / 806	0.20 (1)
W- D	-492 / 0	0.19 (1)
D- U	0 / 3642	0.90 (1)
U- E	-2914 / 0	0.63 (1)
E- T	0 / 2990	0.74 (1)
T- F	-1136 / 0	0.42 (1)
F- S	0 / 939	0.23 (1)
S- H	-437 / 0	0.16 (1)
S- I	0 / 2377	0.59 (1)
Q- I	-2370 / 0	0.93 (1)
Q- J	0 / 3195	0.79 (1)
P- J	0 / 388	0.10 (1)
P- K	-283 / 0	0.09 (1)
O- K	-18 / 50	0.02 (4)
B- X	0 / 3992	0.99 (1)
O- L	0 / 5281	0.93 (1)

FACTORED CONCENTRATED LOADS (LBS)

JT	LOC.	LC1	MAX-	MAX+	FACE	DIR.	TYPE	HEEL	CONN.
O	27-10-10	-1773	-1773	—	FRONT	VERT	TOTAL	—	C1
S	16-1-6	-1773	-1773	—	FRONT	VERT	TOTAL	—	C1
T	11-11-8	-229	-256	—	FRONT	VERT	DEAD	—	C1
T	11-11-8	-927	-927	—	FRONT	VERT	SNOW	—	C1

CONNECTION REQUIREMENTS

1) **C1:** A SUITABLE HANGER/MECHANICAL CONNECTION IS REQUIRED.

DESIGN CRITERIA

*** SPECIAL LOADS ANALYSIS ***
GEOMETRY AND/OR BASIC LOADS CHANGED BY USER.
LOADS WERE DERIVED FROM USER INPUT
NO FURTHER MODIFICATIONS WERE MADE

SPECIFIED LOADS:

TOP	CH.	LL	=	34.8	PSF
		DL	=	3.0	PSF
BOT	CH.	LL	=	0.0	PSF
		DL	=	7.3	PSF
TOTAL	LOAD		=	45.1	PSF

SPACING = 24.0 IN. C/C

LOADING IN FLAT SECTION BASED ON A SLOPE OF 2.00/12 MINIMUM

GIRDER TYPE: CStdGirder
START DISTANCE = 11-11-8
START SPAN CARRIED = 6-0-0
END DISTANCE = 16-1-6
END SPAN CARRIED = 6-0-0
END WALL WIDTH = 5-8
APPLIED TO FRONT SIDE OF BOTTOM CHORD.
- ADDT'L LOADS BASED ON 55 % OF GSL.

GIRDER TYPE: CStdGirder
START DISTANCE = 27-10-10
START SPAN CARRIED = 6-0-0
END DISTANCE = 30-8-0
END SPAN CARRIED = 6-0-0
END WALL WIDTH = 5-8
APPLIED TO FRONT SIDE OF BOTTOM CHORD.
- ADDT'L LOADS BASED ON 55 % OF GSL.

*** NON STANDARD GIRDER ***
ADDT'L USER-DEFINED LOADS APPLIED TO ALL LOAD CASES.

THIS TRUSS IS DESIGNED FOR RESIDENTIAL OR SMALL BUILDING REQUIREMENTS OF PART 9, NBCC 2015

THIS DESIGN COMPLIES WITH:
- PART 9 OF BCBC 2018 , ABC 2019
- PART 9 OF OBC 2012 (2019 AMENDMENT)
- CSA 086-14
- TPIC 2014

(55 % OF 48.1 P.S.F. G.S.L. PLUS 8.4 P.S.F. RAIN LOAD) EQUALS 34.8 P.S.F. SPECIFIED ROOF LIVE LOAD

ALLOWABLE DEFL.(LL)= L/360 (1.02")
CALCULATED VERT. DEFL.(LL) = L/ 999 (0.31")
ALLOWABLE DEFL.(TL)= L/360 (1.02")
CALCULATED VERT. DEFL.(TL) = L/ 742 (0.50")

CSI: TC=0.65/1.00 (J-K:1) , BC=0.66/1.00 (U-W:1) , WB=0.99/1.00 (B-X:1) , SSI=0.19/1.00 (N-O:1)

DOL LUMBER=1.00 NAIL=1.00 LS BEND=1.00 COMP=1.00 SHEAR=1.00 TENS= 1.00

COMPANION LIVE LOAD FACTOR = 1.00

CONTINUED ON PAGE 2

KOTT

CORPORATION OF THE CITY OF OSHAWA
TRUE COPY
OF PERMIT PLANS
Dec 06 2023
PER:
CHIEF BUILDING OFFICIAL

JOB NAME	TRUSS NAME	QUANTITY	PLY	JOB DESC.	DRWG NO.
IM0622-131	G05			TRUSS DESC.	

Version 8.500 S Aug 16 2021 MiTek Industries, Inc. Thu Jun 23 08:36:12 2022 Page 2
ID:OzM1q?scz2BChOKfHahjdLzPugE-VSDNie_xUE9XR2xQTMwOkGzd90h7QsNKx0NdGjz3TJ1

MHP 23018

WB - INDICATES BLOCKING REQUIRED

CONNECTION REQUIREMENTS

1) **C1:** A SUITABLE HANGER/MECHANICAL CONNECTION IS REQUIRED.

TRUSS PLATE MANUFACTURER IS NOT RESPONSIBLE FOR QUALITY CONTROL IN THE TRUSS MANUFACTURING PLANT .

NAIL VALUES

PLATE	GRIP(DRY) (PSI)		SHEAR (PLI)		SECTION (PLI)	
	MAX	MIN	MAX	MIN	MAX	MIN
MT20	650	371	1747	788	1987	1873

PLATE PLACEMENT TOL. = 0.250 inches

PLATE ROTATION TOL. = 5.0 Deg.

JSI GRIP= 0.90 (I) (INPUT = 0.90)
JSI METAL= 1.00 (J) (INPUT = 1.00)

LICENSED PROFESSIONAL ENGINEER
I.MATIJEVIC
100528832
PROVINCE OF ONTARIO
June 23, 2022

READ ALL NOTES ON THIS PAGE AND ON THE ENGINEERING NOTE PAGE ENP-1. THE NOTE PAGE IS AN INTEGRAL PART OF THIS DRAWING AS IT CONTAINS SPECIFICATIONS AND CRITERIA USED IN THE DESIGN OF THIS COMPONENT.

KOTT

CORPORATION OF THE CITY OF OSHAWA
TRUE COPY
OF QUANTITY PLANS
Dec 06 2023
PER:
CHIEF BUILDING OFFICIAL

JOB NAME	TRUSS NAME	QUANTITY	PLY	JOB DESC.	DRWG NO.
IM0622-131	GE01			TRUSS DESC.	

Version 8.500 S Aug 16 2021 MiTek Industries, Inc. Thu Jun 23 08:36:13 2022 Page 1
ID:OzM1q?scz2BChOKfHahjdLzPugE-zfmmw_?ZFXHO3CWd03RdGTWuTQ9O9W0T9g7AoAz3TJ0
Scale = 1:80.0

MHP 23018

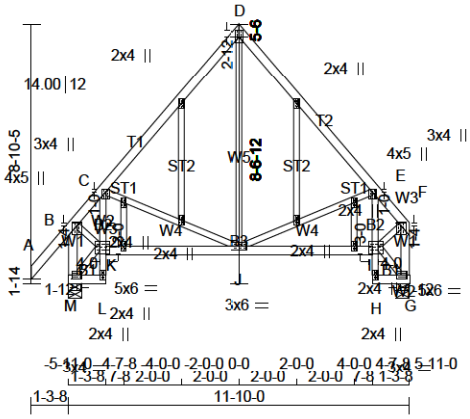

TOTAL WEIGHT = 73 lb
[M][F]

LUMBER
N. L. G. A. RULES

CHORDS	SIZE		LUMBER	DESCR.
A - D	2x4	DRY	No.2	SPF
D - F	2x4	DRY	No.2	SPF
M - B	2x4	DRY	No.2	SPF
G - F	2x4	DRY	No.2	SPF
M - L	2x4	DRY	No.2	SPF
L - C	2x3	DRY	No.2	SPF
K - I	2x4	DRY	No.2	SPF
H - E	2x3	DRY	No.2	SPF
H - G	2x4	DRY	No.2	SPF
ALL WEBS	2x3	DRY	No.2	SPF
EXCEPT				
ALL GABLE WEBS	2x3	DRY	No.2	SPF

DRY: SEASONED LUMBER.

GABLE STUDS SPACED AT 2-0-0 OC.

PLATES (table is in inches)

JT	TYPE	PLATES	W	LEN	Y	X
B	TMVW+p	MT20	4.0	5.0	1.25	2.00
C	TMVW+p	MT20	3.0	4.0	1.00	1.50
D	TTW+p	MT20	3.0	5.0	2.75	1.50
E	TMVW+p	MT20	3.0	4.0	1.00	1.50
F	TMVW+p	MT20	4.0	5.0	1.25	2.00
G	BMVW1-t	MT20	3.0	4.0	1.50	1.75
H	BMV+p	MT20	2.0	4.0		
I	BVMWW-l	MT20	5.0	6.0	3.00	4.00
J	BMWWW-t	MT20	3.0	6.0		
K	BVMWW-l	MT20	5.0	6.0	3.00	4.00
L	BMV+p	MT20	2.0	4.0		
M	BMVW1-t	MT20	3.0	4.0	1.50	1.75
N, O, P, Q, R, S, T, U						
N	NP+w	MT20	2.0	4.0		

DIMENSIONS, SUPPORTS AND LOADINGS SPECIFIED BY FABRICATOR TO BE VERIFIED BY BUILDING DESIGNER

BEARINGS

JT	FACTORED GROSS REACTION VERT	HORZ	MAXIMUM FACTORED GROSS REACTION DOWN	HORZ	UPLIFT	INPUT BRG	REQRD BRG
M	936	0	936	0	0	5-8	1-8
G	761	0	761	0	0	5-8	1-8

UNFACTORED REACTIONS

JT	1ST LCASE COMBINED	SNOW	MAX./MIN. COMPONENT REACTIONS LIVE	PERM.LIVE	WIND	DEAD	SOIL
M	646	515 / 0	0 / 0	0 / 0	0 / 0	131 / 0	0 / 0
G	527	406 / 0	0 / 0	0 / 0	0 / 0	121 / 0	0 / 0

BEARING MATERIAL TO BE SPF NO.2 OR BETTER AT JOINT(S) M, G

BRACING
TOP CHORD TO BE SHEATHED OR MAX. PURLIN SPACING = 6.25 FT.
MAX. UNBRACED BOTTOM CHORD LENGTH = 7.81 FT OR RIGID CEILING DIRECTLY APPLIED.

ALL PITCH BREAKS AND PERIMETER CORNER JOINTS MUST BE LATERALLY RESTRAINED.

LOADING
TOTAL LOAD CASES: (4)

CHORDS

MEMB. FR-TO	MAX. FACTORED FORCE (LBS)	FACTORED VERT. LOAD (PLF) FROM	TO	LC1 MAX CSI (LC)	MAX. UNBRAC LENGTH
A- B	0 / 60	-111.9	-111.9	0.16 (1)	10.00
B- C	-609 / 0	-111.9	-111.9	0.26 (1)	6.25
C- D	-494 / 0	-111.9	-111.9	0.29 (1)	6.25
D- E	-495 / 0	-111.9	-111.9	0.30 (1)	6.25
E- F	-604 / 0	-111.9	-111.9	0.26 (1)	6.25
M- B	-920 / 0	0.0	0.0	0.11 (1)	7.81
G- F	-745 / 0	0.0	0.0	0.09 (1)	7.81
M- L	0 / 6	-18.2	-18.2	0.01 (4)	10.00
L- K	0 / 12	0.0	0.0	0.02 (1)	10.00
K- C	-240 / 0	0.0	0.0	0.01 (1)	7.81
K- J	0 / 451	-18.2	-18.2	0.14 (4)	10.00
J- I	0 / 497	-18.2	-18.2	0.14 (1)	10.00
H- I	0 / 12	0.0	0.0	0.02 (1)	10.00
I- E	-268 / 0	0.0	0.0	0.01 (1)	7.81
H- G	0 / 5	-18.2	-18.2	0.01 (4)	10.00

WEBS

MEMB. FR-TO	MAX. FACTORED FORCE (LBS)	MAX CSI (LC)
J- D	0 / 265	0.06 (1)
J- E	-219 / 0	0.10 (1)
C- J	-169 / 0	0.08 (1)
B- K	0 / 528	0.12 (1)
I- F	0 / 583	0.13 (1)
M- K	-7 / 0	0.00 (1)
I- G	-7 / 0	0.00 (1)

DESIGN CRITERIA

SPECIFIED LOADS:

TOP CH.	LL	=	34.8	PSF
	DL	=	3.0	PSF
BOT CH.	LL	=	0.0	PSF
	DL	=	7.3	PSF
TOTAL LOAD		=	45.1	PSF

SPACING = 24.0 IN. C/C

THIS TRUSS IS DESIGNED FOR RESIDENTIAL OR SMALL BUILDING REQUIREMENTS OF PART 9, NBCC 2015

THIS DESIGN COMPLIES WITH:
- PART 9 OF BCBC 2018 , ABC 2019
- PART 9 OF OBC 2012 (2019 AMENDMENT)
- CSA 086-14
- TPIC 2014

DESIGN ASSUMPTIONS
-OVERHANG NOT TO BE ALTERED OR CUT OFF.

(55 % OF 48.1 P.S.F. G.S.L. PLUS 8.4 P.S.F. RAIN LOAD) EQUALS 34.8 P.S.F. SPECIFIED ROOF LIVE LOAD

ALLOWABLE DEFL.(LL)= L/360 (0.39")
CALCULATED VERT. DEFL.(LL) = L/ 999 (0.01")
ALLOWABLE DEFL.(TL)= L/360 (0.39")
CALCULATED VERT. DEFL.(TL) = L/ 999 (0.02")

CSI: TC=0.30/1.00 (D-E:1) , BC=0.14/1.00 (I-J:1) , WB=0.13/1.00 (F-I:1) , SSI=0.16/1.00 (D-E:1)

DOL LUMBER=1.00 NAIL=1.00 LS BEND=1.10 COMP=1.10 SHEAR=1.10 TENS= 1.10

COMPANION LIVE LOAD FACTOR = 1.00

AUTOSOLVE HEELS OFF

TRUSS PLATE MANUFACTURER IS NOT RESPONSIBLE FOR QUALITY CONTROL IN THE TRUSS MANUFACTURING PLANT .

NAIL VALUES

PLATE	GRIP(DRY) (PSI) MAX	MIN	SHEAR (PLI) MAX	MIN	SECTION (PLI) MAX	MIN
MT20	650	371	1747	788	1987	1873

PLATE PLACEMENT TOL. = 0.250 inches

PLATE ROTATION TOL. = 5.0 Deg.

JSI GRIP= 0.75 (M) (INPUT = 0.90)
JSI METAL= 0.30 (B) (INPUT = 1.00)

LICENSED PROFESSIONAL ENGINEER
I.MATIJEVIC
100528832
PROVINCE OF ONTARIO
June 23, 2022

READ ALL NOTES ON THIS PAGE AND ON THE ENGINEERING NOTE PAGE ENP-1. THE NOTE PAGE IS AN INTEGRAL PART OF THIS DRAWING AS IT CONTAINS SPECIFICATIONS AND CRITERIA USED IN THE DESIGN OF THIS COMPONENT.

KOTT

CORPORATION OF THE CITY OF OSHAWA
TRUE COPY
OF QUANTITY PLANS
Dec 06 2023
PER:
CHIEF BUILDING OFFICIAL

JOB NAME	TRUSS NAME	QUANTITY	PLY	JOB DESC.	DRWG NO.
IM0622-131	J01			TRUSS DESC.	

Version 8.500 S Aug 16 2021 MiTek Industries, Inc. Thu Jun 23 08:36:14 2022 Page 1
ID:OzM1q?scz2BChOKfHahjdLzPugE-RrK87K0B0rPFgM5panysph23?qXbu?JcOKskLcz3TJ?
Scale = 1:24.8

MHP 23018

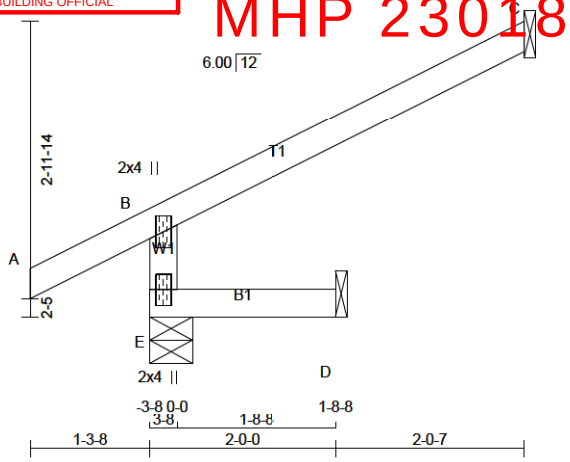

TOTAL WEIGHT = 2 X 10 = 20 lb
[M]

LUMBER
N. L. G. A. RULES

CHORDS	SIZE		LUMBER	DESCR.
E - B	2x4	DRY	No.2	SPF
A - C	2x4	DRY	No.2	SPF
E - D	2x4	DRY	No.2	SPF

DRY: SEASONED LUMBER.

PLATES (table is in inches)

JT	TYPE	PLATES	W	LEN	Y	X
B	TMV+p	MT20	2.0	4.0		
E	BMV1+p	MT20	2.0	4.0		

DIMENSIONS, SUPPORTS AND LOADINGS SPECIFIED BY FABRICATOR TO BE VERIFIED BY BUILDING DESIGNER

BEARINGS

JT	FACTORED GROSS REACTION VERT	HORZ	MAXIMUM FACTORED GROSS REACTION DOWN	HORZ	UPLIFT	INPUT BRG IN-SX	REQRD BRG IN-SX
E	454	0	454	0	0	5-8	1-8
C	169	0	169	0	0	1-8	1-8
D	16	0	18	0	0	1-8	1-8

SEE MITEK STANDARD DETAIL MSD2015-H FOR CONNECTION TO JOINT(S) C , D

UNFACTORED REACTIONS

JT	1ST LCASE COMBINED	MAX./MIN. COMPONENT REACTIONS SNOW	LIVE	PERM.LIVE	WIND	DEAD	SOIL
E	309	270 / 0	0 / 0	0 / 0	0 / 0	39 / 0	0 / 0
C	114	105 / 0	0 / 0	0 / 0	0 / 0	9 / 0	0 / 0
D	13	0 / 0	0 / 0	0 / 0	0 / 0	13 / 0	0 / 0

BEARING MATERIAL TO BE SPF NO.2 OR BETTER AT JOINT(S) E

BRACING
TOP CHORD TO BE SHEATHED OR MAX. PURLIN SPACING = 6.25 FT.
MAX. UNBRACED BOTTOM CHORD LENGTH = 10.00 FT OR RIGID CEILING DIRECTLY APPLIED.

ALL PITCH BREAKS AND PERIMETER CORNER JOINTS MUST BE LATERALLY RESTRAINED.

LOADING
TOTAL LOAD CASES: (4)

CHORDS

MEMB. FR-TO	MAX. FACTORED FORCE (LBS)	FACTORED VERT. LOAD (PLF) FROM	TO	LC1 MAX CSI (LC)	MAX. UNBRAC LENGTH
E- B	-434 / 0	0.0	0.0	0.01 (4)	7.81
A- B	0 / 34	-111.9	-111.9	0.15 (1)	10.00
B- C	-25 / 0	-111.9	-111.9	0.31 (1)	6.25
E- D	0 / 0	-18.2	-18.2	0.02 (4)	10.00

WEBS

MEMB. FR-TO	MAX. FACTORED FORCE (LBS)	MAX CSI (LC)

DESIGN CRITERIA

SPECIFIED LOADS:

TOP CH.	LL	=	34.8	PSF
	DL	=	3.0	PSF
BOT CH.	LL	=	0.0	PSF
	DL	=	7.3	PSF
TOTAL LOAD		=	45.1	PSF

SPACING = 24.0 IN. C/C

THIS TRUSS IS DESIGNED FOR RESIDENTIAL OR SMALL BUILDING REQUIREMENTS OF PART 9, NBCC 2015

THIS DESIGN COMPLIES WITH:
- PART 9 OF BCBC 2018 , ABC 2019
- PART 9 OF OBC 2012 (2019 AMENDMENT)
- CSA 086-14
- TPIC 2014

DESIGN ASSUMPTIONS
-OVERHANG NOT TO BE ALTERED OR CUT OFF.

(55 % OF 48.1 P.S.F. G.S.L. PLUS 8.4 P.S.F. RAIN LOAD) EQUALS 34.8 P.S.F. SPECIFIED ROOF LIVE LOAD

ALLOWABLE DEFL.(LL)= L/360 (0.19")
CALCULATED VERT. DEFL.(LL) = L/ 999 (0.00")
ALLOWABLE DEFL.(TL)= L/360 (0.19")
CALCULATED VERT. DEFL.(TL) = L/ 999 (0.00")

CSI: TC=0.31/1.00 (B-C:1) , BC=0.02/1.00 (D-E:4) , WB=0.00/1.00 (n/a:0) , SSI=0.20/1.00 (B-C:1)

DOL LUMBER=1.00 NAIL=1.00 LS BEND=1.10 COMP=1.10 SHEAR=1.10 TENS= 1.10

COMPANION LIVE LOAD FACTOR = 1.00

TRUSS PLATE MANUFACTURER IS NOT RESPONSIBLE FOR QUALITY CONTROL IN THE TRUSS MANUFACTURING PLANT .

NAIL VALUES

PLATE	GRIP(DRY) (PSI) MAX	MIN	SHEAR (PLI) MAX	MIN	SECTION (PLI) MAX	MIN
MT20	650	371	1747	788	1987	1873

PLATE PLACEMENT TOL. = 0.250 inches

PLATE ROTATION TOL. = 5.0 Deg.

JSI GRIP= 0.24 (B) (INPUT = 0.90)
JSI METAL= 0.18 (B) (INPUT = 1.00)

LICENSED PROFESSIONAL ENGINEER
I.MATIJEVIC
100528832
PROVINCE OF ONTARIO
June 23, 2022

READ ALL NOTES ON THIS PAGE AND ON THE ENGINEERING NOTE PAGE ENP-1. THE NOTE PAGE IS AN INTEGRAL PART OF THIS DRAWING AS IT CONTAINS SPECIFICATIONS AND CRITERIA USED IN THE DESIGN OF THIS COMPONENT.

KOTT

CORPORATION OF THE CITY OF OSHAWA
TRUE COPY
OF ORIGINAL PLANS
Dec 06 2023
PER:
CHIEF BUILDING OFFICIAL

JOB NAME	TRUSS NAME	QUANTITY	PLY	JOB DESC.	DRWG NO.
IM0622-131	J02			TRUSS DESC.	

Version 8.500 S Aug 16 2021 MiTek Industries, Inc. Thu Jun 23 08:36:14 2022 Page 1
ID:OzM1q?scz2BChOKfHahjdLzPugE-RrK87K0B0rPFgM5panysph25ZqXbu?JcOKskLcz3TJ?
Scale = 1:18.1

MHP 23018

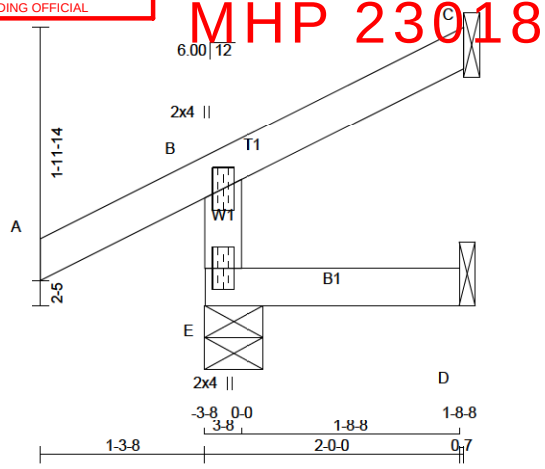

TOTAL WEIGHT = 2 X 7 = 15 lb
[M]

LUMBER
N. L. G. A. RULES

CHORDS	SIZE		LUMBER	DESCR.
E - B	2x4	DRY	No.2	SPF
A - C	2x4	DRY	No.2	SPF
E - D	2x4	DRY	No.2	SPF

DRY: SEASONED LUMBER.

PLATES (table is in inches)

JT	TYPE	PLATES	W	LEN	Y	X
B	TMV+p	MT20	2.0	4.0		
E	BMV1+p	MT20	2.0	4.0		

DIMENSIONS, SUPPORTS AND LOADINGS SPECIFIED BY FABRICATOR TO BE VERIFIED BY BUILDING DESIGNER

BEARINGS

JT	FACTORED GROSS REACTION VERT	HORZ	MAXIMUM FACTORED GROSS REACTION DOWN	HORZ	UPLIFT	INPUT BRG IN-SX	REQRD BRG IN-SX
E	314	0	314	0	0	5-8	1-8
C	86	0	86	0	0	1-8	1-8
D	16	0	18	0	0	1-8	1-8

SEE MITEK STANDARD DETAIL MSD2015-H FOR CONNECTION TO JOINT(S) C , D

UNFACTORED REACTIONS

JT	1ST LCASE COMBINED	MAX./MIN. COMPONENT REACTIONS SNOW	LIVE	PERM.LIVE	WIND	DEAD	SOIL
E	215	183 / 0	0 / 0	0 / 0	0 / 0	32 / 0	0 / 0
C	58	54 / 0	0 / 0	0 / 0	0 / 0	5 / 0	0 / 0
D	13	0 / 0	0 / 0	0 / 0	0 / 0	13 / 0	0 / 0

BEARING MATERIAL TO BE SPF NO.2 OR BETTER AT JOINT(S) E

BRACING
TOP CHORD TO BE SHEATHED OR MAX. PURLIN SPACING = 6.25 FT.
MAX. UNBRACED BOTTOM CHORD LENGTH = 10.00 FT OR RIGID CEILING DIRECTLY APPLIED.

ALL PITCH BREAKS AND PERIMETER CORNER JOINTS MUST BE LATERALLY RESTRAINED.

LOADING
TOTAL LOAD CASES: (5)

CHORDS

MEMB. FR-TO	MAX. FACTORED FORCE (LBS)	FACTORED VERT. LOAD (PLF) FROM	TO	LC1 MAX CSI (LC)	MAX. UNBRAC LENGTH
E- B	-294 / 0	0.0	0.0	0.01 (4)	7.81
A- B	0 / 34	-111.9	-111.9	0.15 (1)	10.00
B- C	-12 / 0	-111.9	-111.9	0.08 (1)	6.25
E- D	0 / 0	-18.2	-18.2	0.02 (4)	10.00

WEBS

MEMB. FR-TO	MAX. FACTORED FORCE (LBS)	MAX CSI (LC)

CANTILEVER ANALYSIS HAS BEEN CONSIDERED IN THIS DESIGN

PATTERN-LOADING CHECK APPLIED TO THIS TRUSS.

DESIGN CRITERIA

SPECIFIED LOADS:

TOP CH.	LL	=	34.8	PSF
	DL	=	3.0	PSF
BOT CH.	LL	=	0.0	PSF
	DL	=	7.3	PSF
TOTAL LOAD		=	45.1	PSF

SPACING = 24.0 IN. C/C

THIS TRUSS IS DESIGNED FOR RESIDENTIAL OR SMALL BUILDING REQUIREMENTS OF PART 9, NBCC 2015

THIS DESIGN COMPLIES WITH:
- PART 9 OF BCBC 2018 , ABC 2019
- PART 9 OF OBC 2012 (2019 AMENDMENT)
- CSA 086-14
- TPIC 2014

DESIGN ASSUMPTIONS
-OVERHANG NOT TO BE ALTERED OR CUT OFF.

(55 % OF 48.1 P.S.F. G.S.L. PLUS 8.4 P.S.F. RAIN LOAD) EQUALS 34.8 P.S.F. SPECIFIED ROOF LIVE LOAD

ALLOWABLE DEFL.(LL)= L/360 (0.19")
CALCULATED VERT. DEFL.(LL) = L/ 999 (0.00")
ALLOWABLE DEFL.(TL)= L/360 (0.19")
CALCULATED VERT. DEFL.(TL) = L/ 999 (0.00")

CSI: TC=0.15/1.00 (A-B:1) , BC=0.02/1.00 (D-E:4) , WB=0.00/1.00 (n/a:0) , SSI=0.11/1.00 (A-B:1)

DOL LUMBER=1.00 NAIL=1.00 LS BEND=1.10 COMP=1.10 SHEAR=1.10 TENS= 1.10

COMPANION LIVE LOAD FACTOR = 1.00

TRUSS PLATE MANUFACTURER IS NOT RESPONSIBLE FOR QUALITY CONTROL IN THE TRUSS MANUFACTURING PLANT .

NAIL VALUES

PLATE	GRIP(DRY) (PSI) MAX	MIN	SHEAR (PLI) MAX	MIN	SECTION (PLI) MAX	MIN
MT20	650	371	1747	788	1987	1873

PLATE PLACEMENT TOL. = 0.250 inches

PLATE ROTATION TOL. = 5.0 Deg.

JSI GRIP= 0.16 (B) (INPUT = 0.90)
JSI METAL= 0.12 (B) (INPUT = 1.00)

LICENSED PROFESSIONAL ENGINEER
I.MATIJEVIC
100528832
PROVINCE OF ONTARIO
June 23, 2022

READ ALL NOTES ON THIS PAGE AND ON THE ENGINEERING NOTE PAGE ENP-1. THE NOTE PAGE IS AN INTEGRAL PART OF THIS DRAWING AS IT CONTAINS SPECIFICATIONS AND CRITERIA USED IN THE DESIGN OF THIS COMPONENT.

KOTT

CORPORATION OF THE CITY OF OSHAWA
TRUE COPY
OF ORIGINAL PLANS
Dec 06 2023
PER:
CHIEF BUILDING OFFICIAL

JOB NAME	TRUSS NAME	QUANTITY	PLY	JOB DESC.	DRWG NO.
IM0622-131	J03			TRUSS DESC.	

Version 8.500 S Aug 16 2021 MiTek Industries, Inc. Thu Jun 23 08:36:15 2022 Page 1
ID:OzM1q?scz2BChOKfHahjdLzPugE-v1uWLg1pn9X6IWg?8UT5MubGJDq_dSZmd_cHt2z3TJ_
Scale = 1:18.1

MHP 23018

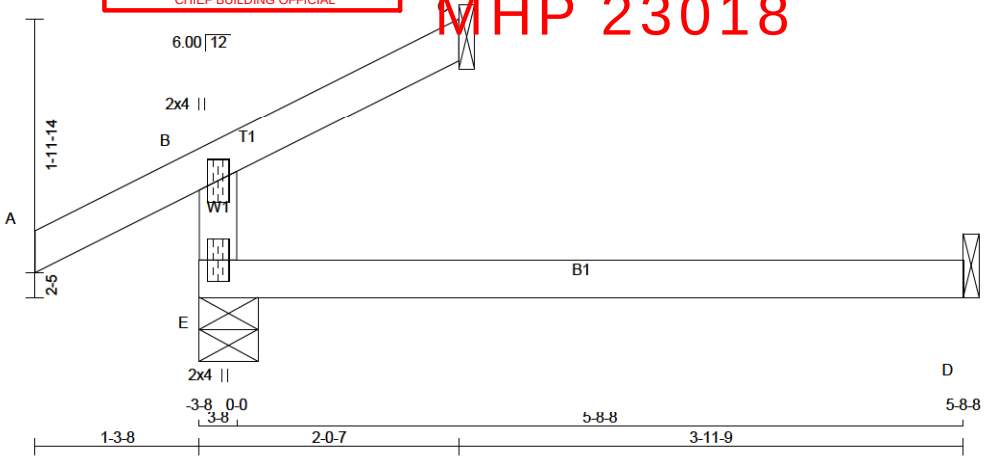

TOTAL WEIGHT = 2 X 12 = 24 lb
[M]

LUMBER
N. L. G. A. RULES

CHORDS	SIZE		LUMBER	DESCR.
E - B	2x4	DRY	No.2	SPF
A - C	2x4	DRY	No.2	SPF
E - D	2x4	DRY	No.2	SPF

DRY: SEASONED LUMBER.

PLATES (table is in inches)

JT	TYPE	PLATES	W	LEN	Y	X
B	TMV+p	MT20	2.0	4.0		
E	BMV1+p	MT20	2.0	4.0		

DIMENSIONS, SUPPORTS AND LOADINGS SPECIFIED BY FABRICATOR TO BE VERIFIED BY BUILDING DESIGNER

BEARINGS

JT	FACTORED GROSS REACTION VERT	HORZ	MAXIMUM FACTORED GROSS REACTION DOWN	HORZ	UPLIFT	INPUT BRG IN-SX	REQRD BRG IN-SX
E	358	0	358	0	0	5-8	1-8
C	86	0	86	0	0	1-8	1-8
D	45	0	51	0	0	1-8	1-8

SEE MITEK STANDARD DETAIL MSD2015-H FOR CONNECTION TO JOINT(S) C , D

UNFACTORED REACTIONS

JT	1ST LCASE COMBINED	MAX./MIN. COMPONENT REACTIONS SNOW	LIVE	PERM.LIVE	WIND	DEAD	SOIL
E	250	183 / 0	0 / 0	0 / 0	0 / 0	67 / 0	0 / 0
C	58	54 / 0	0 / 0	0 / 0	0 / 0	5 / 0	0 / 0
D	36	0 / 0	0 / 0	0 / 0	0 / 0	36 / 0	0 / 0

BEARING MATERIAL TO BE SPF NO.2 OR BETTER AT JOINT(S) E, C

BRACING
TOP CHORD TO BE SHEATHED OR MAX. PURLIN SPACING = 6.25 FT.
MAX. UNBRACED BOTTOM CHORD LENGTH = 10.00 FT OR RIGID CEILING DIRECTLY APPLIED.

ALL PITCH BREAKS AND PERIMETER CORNER JOINTS MUST BE LATERALLY RESTRAINED.

LOADING
TOTAL LOAD CASES: (4)

CHORDS

MEMB. FR-TO	MAX. FACTORED FORCE (LBS)	FACTORED VERT. LOAD (PLF) FROM	TO	LC1 MAX CSI (LC)	MAX. UNBRAC LENGTH
E- B	-294 / 0	0.0	0.0	0.13 (4)	7.81
A- B	0 / 34	-111.9	-111.9	0.15 (1)	10.00
B- C	-12 / 0	-111.9	-111.9	0.08 (1)	6.25
E- D	0 / 0	-18.2	-18.2	0.13 (4)	10.00

WEBS

MEMB. FR-TO	MAX. FACTORED FORCE (LBS)	MAX CSI (LC)

DESIGN CRITERIA

SPECIFIED LOADS:

TOP	CH.	LL	=	34.8	PSF
		DL	=	3.0	PSF
BOT	CH.	LL	=	0.0	PSF
		DL	=	7.3	PSF
TOTAL	LOAD		=	45.1	PSF

SPACING = 24.0 IN. C/C

THIS TRUSS IS DESIGNED FOR RESIDENTIAL OR SMALL BUILDING REQUIREMENTS OF PART 9, NBCC 2015

THIS DESIGN COMPLIES WITH:
- PART 9 OF BCBC 2018 , ABC 2019
- PART 9 OF OBC 2012 (2019 AMENDMENT)
- CSA 086-14
- TPIC 2014

DESIGN ASSUMPTIONS
-OVERHANG NOT TO BE ALTERED OR CUT OFF.

(55 % OF 48.1 P.S.F. G.S.L. PLUS 8.4 P.S.F. RAIN LOAD) EQUALS 34.8 P.S.F. SPECIFIED ROOF LIVE LOAD

ALLOWABLE DEFL.(LL)= L/360 (0.20")
CALCULATED VERT. DEFL.(LL) = L/ 999 (0.00")
ALLOWABLE DEFL.(TL)= L/360 (0.20")
CALCULATED VERT. DEFL.(TL) = L/ 999 (0.03")

CSI: TC=0.15/1.00 (A-B:1) , BC=0.13/1.00 (D-E:4) , WB=0.00/1.00 (n/a:0) , SSI=0.11/1.00 (A-B:1)

DOL LUMBER=1.00 NAIL=1.00 LS BEND=1.10 COMP=1.10 SHEAR=1.10 TENS= 1.10

COMPANION LIVE LOAD FACTOR = 1.00

TRUSS PLATE MANUFACTURER IS NOT RESPONSIBLE FOR QUALITY CONTROL IN THE TRUSS MANUFACTURING PLANT .

NAIL VALUES

PLATE	GRIP(DRY) (PSI) MAX	MIN	SHEAR (PLI) MAX	MIN	SECTION (PLI) MAX	MIN
MT20	650	371	1747	788	1987	1873

PLATE PLACEMENT TOL. = 0.250 inches

PLATE ROTATION TOL. = 5.0 Deg.

JSI GRIP= 0.16 (B) (INPUT = 0.90)
JSI METAL= 0.12 (B) (INPUT = 1.00)

LICENSED PROFESSIONAL ENGINEER
I.MATIJEVIC
100528832
PROVINCE OF ONTARIO
June 23, 2022

READ ALL NOTES ON THIS PAGE AND ON THE ENGINEERING NOTE PAGE ENP-1. THE NOTE PAGE IS AN INTEGRAL PART OF THIS DRAWING AS IT CONTAINS SPECIFICATIONS AND CRITERIA USED IN THE DESIGN OF THIS COMPONENT.

KOTT

CORPORATION OF THE CITY OF OSHAWA
TRUE COPY
OF BUILDING PLANS
Dec 06 2023
PER:
CHIEF BUILDING OFFICIAL

JOB NAME	TRUSS NAME	QUANTITY	PLY	JOB DESC.	DRWG NO.
IM0622-131	J04			TRUSS DESC.	

Version 8.500 S Aug 16 2021 MiTek Industries, Inc. Thu Jun 23 08:36:16 2022 Page 1
ID:OzM1q?scz2BChOKfHahjdLzPugE-OESuY01SYSgzwgFCiC_Ku68PUdADMvovseLqOUz3Tlz
Scale = 1:24.5

MHP 23018

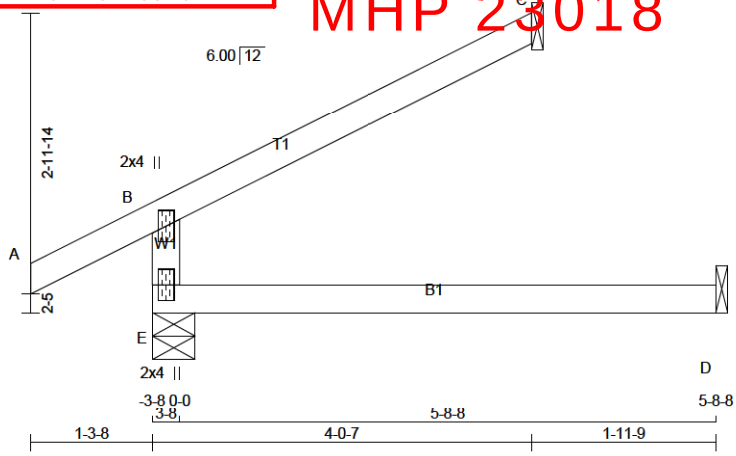

TOTAL WEIGHT = 2 X 15 = 29 lb
[M]

LUMBER
N. L. G. A. RULES

CHORDS	SIZE		LUMBER	DESCR.
E - B	2x4	DRY	No.2	SPF
A - C	2x4	DRY	No.2	SPF
E - D	2x4	DRY	No.2	SPF

DRY: SEASONED LUMBER.

PLATES (table is in inches)

JT	TYPE	PLATES	W	LEN	Y	X
B	TMV+p	MT20	2.0	4.0		
E	BMV1+p	MT20	2.0	4.0		

DIMENSIONS, SUPPORTS AND LOADINGS SPECIFIED BY FABRICATOR TO BE VERIFIED BY BUILDING DESIGNER

BEARINGS

JT	FACTORED GROSS REACTION VERT	HORZ	MAXIMUM FACTORED GROSS REACTION DOWN	HORZ	UPLIFT	INPUT BRG IN-SX	REQRD BRG IN-SX
E	498	0	498	0	0	5-8	1-8
C	169	0	169	0	0	1-8	1-8
D	45	0	51	0	0	1-8	1-8

SEE MITEK STANDARD DETAIL MSD2015-H FOR CONNECTION TO JOINT(S) C , D

UNFACTORED REACTIONS

JT	1ST LCASE COMBINED	MAX./MIN. COMPONENT REACTIONS SNOW	LIVE	PERM.LIVE	WIND	DEAD	SOIL
E	345	270 / 0	0 / 0	0 / 0	0 / 0	75 / 0	0 / 0
C	114	105 / 0	0 / 0	0 / 0	0 / 0	9 / 0	0 / 0
D	36	0 / 0	0 / 0	0 / 0	0 / 0	36 / 0	0 / 0

BEARING MATERIAL TO BE SPF NO.2 OR BETTER AT JOINT(S) E, C

BRACING
TOP CHORD TO BE SHEATHED OR MAX. PURLIN SPACING = 6.25 FT.
MAX. UNBRACED BOTTOM CHORD LENGTH = 10.00 FT OR RIGID CEILING DIRECTLY APPLIED.

ALL PITCH BREAKS AND PERIMETER CORNER JOINTS MUST BE LATERALLY RESTRAINED.

LOADING
TOTAL LOAD CASES: (4)

CHORDS

MEMB. FR-TO	MAX. FACTORED FORCE (LBS)	FACTORED VERT. LOAD (PLF) FROM	TO	LC1 MAX CSI (LC)	MAX. UNBRAC LENGTH
E- B	-434 / 0	0.0	0.0	0.13 (4)	7.81
A- B	0 / 34	-111.9	-111.9	0.15 (1)	10.00
B- C	-25 / 0	-111.9	-111.9	0.31 (1)	6.25
E- D	0 / 0	-18.2	-18.2	0.13 (4)	10.00

WEBS

MEMB. FR-TO	MAX. FACTORED FORCE (LBS)	MAX CSI (LC)

DESIGN CRITERIA

SPECIFIED LOADS:

TOP CH.	LL	=	34.8	PSF
	DL	=	3.0	PSF
BOT CH.	LL	=	0.0	PSF
	DL	=	7.3	PSF
TOTAL LOAD		=	45.1	PSF

SPACING = 24.0 IN. C/C

THIS TRUSS IS DESIGNED FOR RESIDENTIAL OR SMALL BUILDING REQUIREMENTS OF PART 9, NBCC 2015

THIS DESIGN COMPLIES WITH:
- PART 9 OF BCBC 2018 , ABC 2019
- PART 9 OF OBC 2012 (2019 AMENDMENT)
- CSA 086-14
- TPIC 2014

DESIGN ASSUMPTIONS
-OVERHANG NOT TO BE ALTERED OR CUT OFF.

(55 % OF 48.1 P.S.F. G.S.L. PLUS 8.4 P.S.F. RAIN LOAD) EQUALS 34.8 P.S.F. SPECIFIED ROOF LIVE LOAD

ALLOWABLE DEFL.(LL)= L/360 (0.20")
CALCULATED VERT. DEFL.(LL) = L/ 999 (0.00")
ALLOWABLE DEFL.(TL)= L/360 (0.20")
CALCULATED VERT. DEFL.(TL) = L/ 999 (0.03")

CSI: TC=0.31/1.00 (B-C:1) , BC=0.13/1.00 (D-E:4) , WB=0.00/1.00 (n/a:0) , SSI=0.20/1.00 (B-C:1)

DOL LUMBER=1.00 NAIL=1.00 LS BEND=1.10 COMP=1.10 SHEAR=1.10 TENS= 1.10

COMPANION LIVE LOAD FACTOR = 1.00

TRUSS PLATE MANUFACTURER IS NOT RESPONSIBLE FOR QUALITY CONTROL IN THE TRUSS MANUFACTURING PLANT .

NAIL VALUES

PLATE	GRIP(DRY) (PSI) MAX	MIN	SHEAR (PLI) MAX	MIN	SECTION (PLI) MAX	MIN
MT20	650	371	1747	788	1987	1873

PLATE PLACEMENT TOL. = 0.250 inches

PLATE ROTATION TOL. = 5.0 Deg.

JSI GRIP= 0.24 (B) (INPUT = 0.90)
JSI METAL= 0.18 (B) (INPUT = 1.00)

LICENSED PROFESSIONAL ENGINEER
I.MATIJEVIC
100528832
PROVINCE OF ONTARIO
June 23, 2022

READ ALL NOTES ON THIS PAGE AND ON THE ENGINEERING NOTE PAGE ENP-1. THE NOTE PAGE IS AN INTEGRAL PART OF THIS DRAWING AS IT CONTAINS SPECIFICATIONS AND CRITERIA USED IN THE DESIGN OF THIS COMPONENT.

KOTT

CORPORATION OF THE CITY OF OSHAWA
TRUE COPY
OF PERMIT PLANS
Dec 06 2023
PER:
CHIEF BUILDING OFFICIAL

JOB NAME	TRUSS NAME	QUANTITY	PLY	JOB DESC.	DRWG NO.
IM0622-131	J05			TRUSS DESC.	

Version 8.500 S Aug 16 2021 MiTek Industries, Inc. Thu Jun 23 08:36:17 2022 Page 1
ID:OzM1q?scz2BChOKfHahjdLzPugE-sQ0GlL24ImoqXqqOFvVZRJgUL1WS5M234I5Owxz3Tly
Scale = 1:32.8

MHP 23018

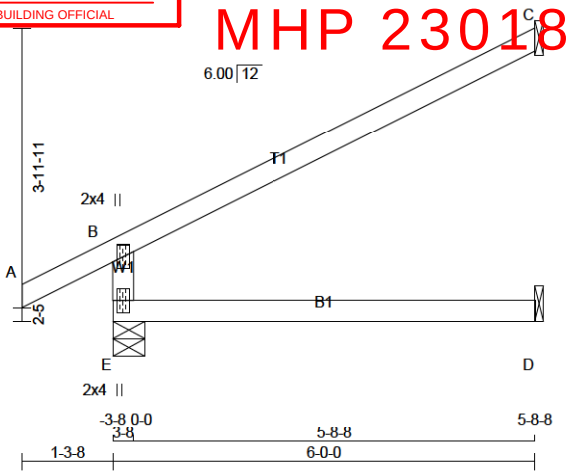

TOTAL WEIGHT = 11 X 17 = 188 lb

LUMBER
N. L. G. A. RULES

CHORDS	SIZE		LUMBER	DESCR.
E - B	2x4	DRY	No.2	SPF
A - C	2x4	DRY	No.2	SPF
E - D	2x4	DRY	No.2	SPF

DRY: SEASONED LUMBER.

PLATES (table is in inches)

JT	TYPE	PLATES	W	LEN	Y	X
B	TMV+p	MT20	2.0	4.0		
E	BMV1+p	MT20	2.0	4.0		

DIMENSIONS, SUPPORTS AND LOADINGS SPECIFIED BY FABRICATOR TO BE VERIFIED BY BUILDING DESIGNER

BEARINGS

JT	FACTORED GROSS REACTION VERT	HORZ	MAXIMUM FACTORED GROSS REACTION DOWN	HORZ	UPLIFT	INPUT BRG IN-SX	REQRD BRG IN-SX
E	636	0	636	0	0	5-8	1-8
C	252	0	252	0	0	1-8	1-8
D	45	0	51	0	0	1-8	1-8

SEE MITEK STANDARD DETAIL MSD2015-H FOR CONNECTION TO JOINT(S) C , D

UNFACTORED REACTIONS

JT	1ST LCASE COMBINED	MAX./MIN. COMPONENT REACTIONS SNOW	LIVE	PERM.LIVE	WIND	DEAD	SOIL
E	437	355 / 0	0 / 0	0 / 0	0 / 0	82 / 0	0 / 0
C	170	157 / 0	0 / 0	0 / 0	0 / 0	14 / 0	0 / 0
D	36	0 / 0	0 / 0	0 / 0	0 / 0	36 / 0	0 / 0

BEARING MATERIAL TO BE SPF NO.2 OR BETTER AT JOINT(S) E

BRACING
TOP CHORD TO BE SHEATHED OR MAX. PURLIN SPACING = 6.25 FT.
MAX. UNBRACED BOTTOM CHORD LENGTH = 10.00 FT OR RIGID CEILING DIRECTLY APPLIED.

ALL PITCH BREAKS AND PERIMETER CORNER JOINTS MUST BE LATERALLY RESTRAINED.

LOADING
TOTAL LOAD CASES: (4)

CHORDS

MEMB. FR-TO	MAX. FACTORED FORCE (LBS)	FACTORED VERT. LOAD (PLF) FROM	TO	LC1 MAX CSI (LC)	MAX. UNBRAC LENGTH
E- B	-571 / 0	0.0	0.0	0.13 (4)	7.81
A- B	0 / 34	-111.9	-111.9	0.15 (1)	10.00
B- C	-38 / 0	-111.9	-111.9	0.69 (1)	6.25
E- D	0 / 0	-18.2	-18.2	0.13 (4)	10.00

WEBS

MEMB. FR-TO	MAX. FACTORED FORCE (LBS)	MAX CSI (LC)

DESIGN CRITERIA

SPECIFIED LOADS:

TOP CH.	LL	=	34.8	PSF
	DL	=	3.0	PSF
BOT CH.	LL	=	0.0	PSF
	DL	=	7.3	PSF
TOTAL LOAD		=	45.1	PSF

SPACING = 24.0 IN. C/C

THIS TRUSS IS DESIGNED FOR RESIDENTIAL OR SMALL BUILDING REQUIREMENTS OF PART 9, NBCC 2015

THIS DESIGN COMPLIES WITH:
- PART 9 OF BCBC 2018 , ABC 2019
- PART 9 OF OBC 2012 (2019 AMENDMENT)
- CSA 086-14
- TPIC 2014

DESIGN ASSUMPTIONS
-OVERHANG NOT TO BE ALTERED OR CUT OFF.

(55 % OF 48.1 P.S.F. G.S.L. PLUS 8.4 P.S.F. RAIN LOAD) EQUALS 34.8 P.S.F. SPECIFIED ROOF LIVE LOAD

ALLOWABLE DEFL.(LL)= L/360 (0.20")
CALCULATED VERT. DEFL.(LL) = L/ 999 (0.00")
ALLOWABLE DEFL.(TL)= L/360 (0.20")
CALCULATED VERT. DEFL.(TL) = L/ 999 (0.03")

CSI: TC=0.69/1.00 (B-C:1) , BC=0.13/1.00 (D-E:4) , WB=0.00/1.00 (n/a:0) , SSI=0.29/1.00 (B-C:1)

DOL LUMBER=1.00 NAIL=1.00 LS BEND=1.10 COMP=1.10 SHEAR=1.10 TENS= 1.10

COMPANION LIVE LOAD FACTOR = 1.00

TRUSS PLATE MANUFACTURER IS NOT RESPONSIBLE FOR QUALITY CONTROL IN THE TRUSS MANUFACTURING PLANT .

NAIL VALUES

PLATE	GRIP(DRY) (PSI) MAX	MIN	SHEAR (PLI) MAX	MIN	SECTION (PLI) MAX	MIN
MT20	650	371	1747	788	1987	1873

PLATE PLACEMENT TOL. = 0.250 inches

PLATE ROTATION TOL. = 5.0 Deg.

JSI GRIP= 0.32 (B) (INPUT = 0.90)
JSI METAL= 0.24 (B) (INPUT = 1.00)

LICENSED PROFESSIONAL ENGINEER
I.MATIJEVIC
100528832
PROVINCE OF ONTARIO
June 23, 2022

READ ALL NOTES ON THIS PAGE AND ON THE ENGINEERING NOTE PAGE ENP-1. THE NOTE PAGE IS AN INTEGRAL PART OF THIS DRAWING AS IT CONTAINS SPECIFICATIONS AND CRITERIA USED IN THE DESIGN OF THIS COMPONENT.

KOTT

CORPORATION OF THE CITY OF OSHAWA
TRUE COPY
OF ORIGINAL PLANS
Dec 06 2023
PER:
CHIEF BUILDING OFFICIAL

JOB NAME	TRUSS NAME	QUANTITY	PLY	JOB DESC.	DRWG NO.
IM0622-131	J06			TRUSS DESC.	

Version 8.500 S Aug 16 2021 MiTek Industries, Inc. Thu Jun 23 08:36:18 2022 Page 1
ID:OzM1q?scz2BChOKfHahjdLzPugE-Kcafzh3i34wh9zPapd1ozXDnTRuWqpICJyqxTNz3TIx
Scale = 1:21.8

MHP 23018

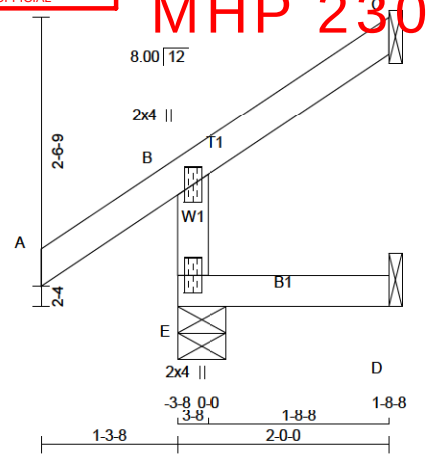

TOTAL WEIGHT = 2 X 8 = 16 lb
[M]

LUMBER
N. L. G. A. RULES

CHORDS	SIZE		LUMBER	DESCR.
E - B	2x4	DRY	No.2	SPF
A - C	2x4	DRY	No.2	SPF
E - D	2x4	DRY	No.2	SPF

DRY: SEASONED LUMBER.

PLATES (table is in inches)

JT	TYPE	PLATES	W	LEN	Y	X
B	TMV+p	MT20	2.0	4.0		
E	BMV1+p	MT20	2.0	4.0		

DIMENSIONS, SUPPORTS AND LOADINGS SPECIFIED BY FABRICATOR TO BE VERIFIED BY BUILDING DESIGNER

BEARINGS

JT	FACTORED GROSS REACTION VERT	HORZ	MAXIMUM FACTORED GROSS REACTION DOWN	HORZ	UPLIFT	INPUT BRG IN-SX	REQRD BRG IN-SX
E	313	0	313	0	0	5-8	1-8
C	85	0	85	0	0	1-8	1-8
D	17	0	18	0	0	1-8	1-8

SEE MITEK STANDARD DETAIL MSD2015-H FOR CONNECTION TO JOINT(S) C , D

UNFACTORED REACTIONS

JT	1ST LCASE COMBINED	MAX./MIN. COMPONENT REACTIONS SNOW	LIVE	PERM.LIVE	WIND	DEAD	SOIL
E	214	182 / 0	0 / 0	0 / 0	0 / 0	32 / 0	0 / 0
C	57	53 / 0	0 / 0	0 / 0	0 / 0	5 / 0	0 / 0
D	13	0 / 0	0 / 0	0 / 0	0 / 0	13 / 0	0 / 0

BEARING MATERIAL TO BE SPF NO.2 OR BETTER AT JOINT(S) E

BRACING
TOP CHORD TO BE SHEATHED OR MAX. PURLIN SPACING = 6.25 FT.
MAX. UNBRACED BOTTOM CHORD LENGTH = 10.00 FT OR RIGID CEILING DIRECTLY APPLIED.

ALL PITCH BREAKS AND PERIMETER CORNER JOINTS MUST BE LATERALLY RESTRAINED.

LOADING
TOTAL LOAD CASES: (5)

CHORDS

MEMB. FR-TO	MAX. FACTORED FORCE (LBS)	FACTORED VERT. LOAD (PLF) FROM	TO	LC1 MAX CSI (LC)	MAX. UNBRAC LENGTH
E- B	-293 / 0	0.0	0.0	0.01 (4)	7.81
A- B	0 / 43	-111.9	-111.9	0.15 (1)	10.00
B- C	-15 / 0	-111.9	-111.9	0.07 (1)	6.25
E- D	0 / 0	-18.2	-18.2	0.02 (4)	10.00

WEBS

MEMB. FR-TO	MAX. FACTORED FORCE (LBS)	MAX CSI (LC)

CANTILEVER ANALYSIS HAS BEEN CONSIDERED IN THIS DESIGN

PATTERN-LOADING CHECK APPLIED TO THIS TRUSS.

DESIGN CRITERIA

SPECIFIED LOADS:

TOP CH.	LL	=	34.8	PSF
	DL	=	3.0	PSF
BOT CH.	LL	=	0.0	PSF
	DL	=	7.3	PSF
TOTAL LOAD		=	45.1	PSF

SPACING = 24.0 IN. C/C

THIS TRUSS IS DESIGNED FOR RESIDENTIAL OR SMALL BUILDING REQUIREMENTS OF PART 9, NBCC 2015

THIS DESIGN COMPLIES WITH:
- PART 9 OF BCBC 2018 , ABC 2019
- PART 9 OF OBC 2012 (2019 AMENDMENT)
- CSA 086-14
- TPIC 2014

DESIGN ASSUMPTIONS
-OVERHANG NOT TO BE ALTERED OR CUT OFF.

(55 % OF 48.1 P.S.F. G.S.L. PLUS 8.4 P.S.F. RAIN LOAD) EQUALS 34.8 P.S.F. SPECIFIED ROOF LIVE LOAD

ALLOWABLE DEFL.(LL)= L/360 (0.19")
CALCULATED VERT. DEFL.(LL) = L/ 999 (0.00")
ALLOWABLE DEFL.(TL)= L/360 (0.19")
CALCULATED VERT. DEFL.(TL) = L/ 999 (0.00")

CSI: TC=0.15/1.00 (A-B:1) , BC=0.02/1.00 (D-E:4) , WB=0.00/1.00 (n/a:0) , SSI=0.10/1.00 (A-B:1)

DOL LUMBER=1.00 NAIL=1.00 LS BEND=1.10 COMP=1.10 SHEAR=1.10 TENS= 1.10

COMPANION LIVE LOAD FACTOR = 1.00

TRUSS PLATE MANUFACTURER IS NOT RESPONSIBLE FOR QUALITY CONTROL IN THE TRUSS MANUFACTURING PLANT .

NAIL VALUES

PLATE	GRIP(DRY) (PSI) MAX	MIN	SHEAR (PLI) MAX	MIN	SECTION (PLI) MAX	MIN
MT20	650	371	1747	788	1987	1873

PLATE PLACEMENT TOL. = 0.250 inches

PLATE ROTATION TOL. = 5.0 Deg.

JSI GRIP= 0.18 (B) (INPUT = 0.90)
JSI METAL= 0.15 (B) (INPUT = 1.00)

LICENSED PROFESSIONAL ENGINEER
I.MATIJEVIC
100528832
PROVINCE OF ONTARIO
June 23, 2022

READ ALL NOTES ON THIS PAGE AND ON THE ENGINEERING NOTE PAGE ENP-1. THE NOTE PAGE IS AN INTEGRAL PART OF THIS DRAWING AS IT CONTAINS SPECIFICATIONS AND CRITERIA USED IN THE DESIGN OF THIS COMPONENT.

KOTT

CORPORATION OF THE CITY OF OSHAWA
TRUE COPY
OF ORIGINAL PLANS
Dec 06 2023
PER:
CHIEF BUILDING OFFICIAL

MHP 23018

JOB NAME	TRUSS NAME	QUANTITY	PLY	JOB DESC.	DRWG NO.
IM0622-131	T01			TRUSS DESC.	

Version 8.500 S Aug 16 2021 MiTek Industries, Inc. Thu Jun 23 08:36:19 2022 Page 1
ID:OzM1q?scz2BChOKfHahjdLzPugE-oo81A14KqN2Yn7_mNKY1Wkmurr6VZ8aMYcaV?pz3TIw
Scale = 1:50.3

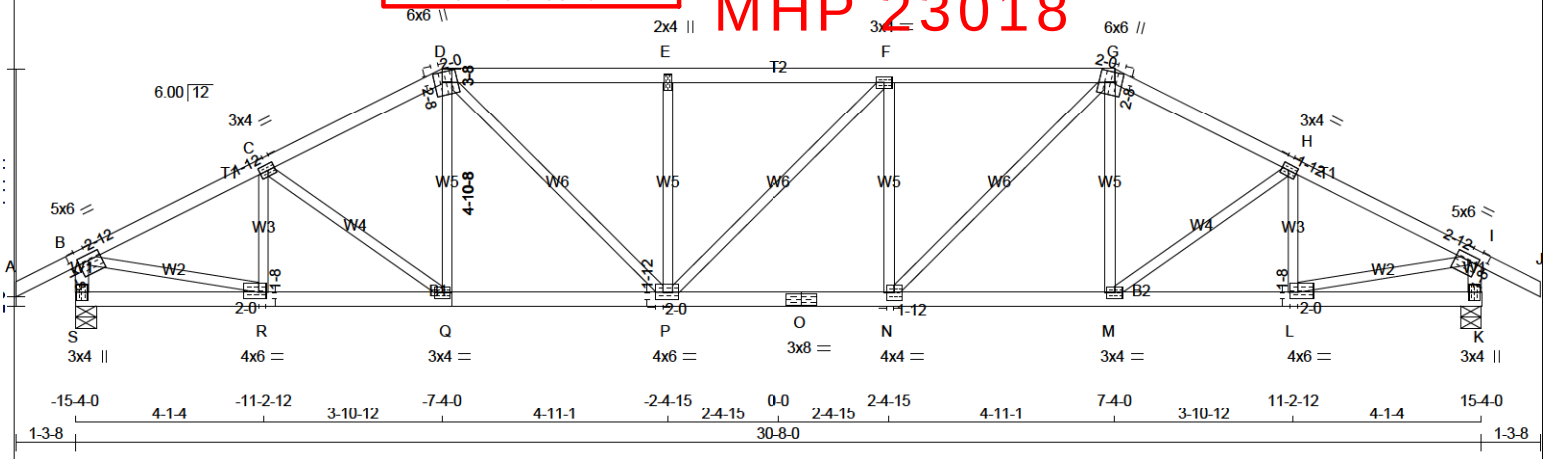

TOTAL WEIGHT = 126 lb
[M][F]

LUMBER
N. L. G. A. RULES

CHORDS	SIZE		LUMBER	DESCR.
A - D	2x4	DRY	No.2	SPF
D - G	2x4	DRY	No.2	SPF
G - J	2x4	DRY	No.2	SPF
S - B	2x4	DRY	No.2	SPF
K - I	2x4	DRY	No.2	SPF
S - O	2x4	DRY	No.2	SPF
O - K	2x4	DRY	No.2	SPF
ALL WEBS EXCEPT	2x3	DRY	No.2	SPF

DRY: SEASONED LUMBER.

PLATES (table is in inches)

JT	TYPE	PLATES	W	LEN	Y	X
B	TMVW-t	MT20	5.0	6.0	1.50	2.75
C	TMWW-t	MT20	3.0	4.0	1.50	1.75
D	TTWW+m	MT20	6.0	6.0	2.50	2.00
E	TMW+w	MT20	2.0	4.0		
F	TMWW-t	MT20	3.0	4.0		
G	TTWW+m	MT20	6.0	6.0	2.50	2.00
H	TMWW-t	MT20	3.0	4.0	1.50	1.75
I	TMVW-t	MT20	5.0	6.0	1.50	2.75
K	BMV1+p	MT20	3.0	4.0		
L	BMWW-t	MT20	4.0	6.0	1.50	2.00
M	BMWW-t	MT20	3.0	4.0		
N	BMWW-t	MT20	4.0	4.0	2.00	1.75
O	BS-t	MT20	3.0	8.0		
P	BMWWW-t	MT20	4.0	6.0	1.75	2.00
Q	BMWW-t	MT20	3.0	4.0		
R	BMWW-t	MT20	4.0	6.0	1.50	2.00
S	BMV1+p	MT20	3.0	4.0		

DIMENSIONS, SUPPORTS AND LOADINGS SPECIFIED BY FABRICATOR TO BE VERIFIED BY BUILDING DESIGNER

BEARINGS

JT	FACTORED GROSS REACTION VERT	HORZ	MAXIMUM FACTORED GROSS REACTION DOWN	HORZ	UPLIFT	INPUT BRG IN-SX	REQRD BRG IN-SX
S	2147	0	2147	0	0	5-8	3-8
K	2147	0	2147	0	0	5-8	3-8

UNFACTORED REACTIONS

JT	1ST LCASE COMBINED	SNOW	MAX./MIN. COMPONENT REACTIONS LIVE	PERM.LIVE	WIND	DEAD	SOIL
S	1485	1161 / 0	0 / 0	0 / 0	0 / 0	324 / 0	0 / 0
K	1485	1161 / 0	0 / 0	0 / 0	0 / 0	324 / 0	0 / 0

BEARING MATERIAL TO BE SPF NO.2 OR BETTER AT JOINT(S) S, K

BRACING
TOP CHORD TO BE SHEATHED OR MAX. PURLIN SPACING = 3.59 FT.
MAX. UNBRACED BOTTOM CHORD LENGTH = 10.00 FT OR RIGID CEILING DIRECTLY APPLIED.

ALL PITCH BREAKS AND PERIMETER CORNER JOINTS MUST BE LATERALLY RESTRAINED.

LOADING
TOTAL LOAD CASES: (4)

CHORDS

MEMB. FR-TO	MAX. FACTORED FORCE (LBS)	FACTORED VERT. LOAD (PLF) FROM	TO	LC1 MAX CSI (LC)	MAX. UNBRAC LENGTH
A- B	0 / 34	-111.9	-111.9	0.15 (1)	10.00
B- C	-2775 / 0	-111.9	-111.9	0.30 (1)	3.92
C- D	-2741 / 0	-111.9	-111.9	0.29 (1)	3.95
D- E	-3115 / 0	-111.9	-111.9	0.43 (1)	3.59
E- F	-3115 / 0	-111.9	-111.9	0.40 (1)	3.63
F- G	-3117 / 0	-111.9	-111.9	0.43 (1)	3.59
G- H	-2740 / 0	-111.9	-111.9	0.29 (1)	3.95
H- I	-2775 / 0	-111.9	-111.9	0.30 (1)	3.92
I- J	0 / 34	-111.9	-111.9	0.15 (1)	10.00
S- B	-2108 / 0	0.0	0.0	0.21 (1)	5.84
K- I	-2108 / 0	0.0	0.0	0.21 (1)	5.84
S- R	0 / 0	-18.2	-18.2	0.07 (4)	10.00
R- Q	0 / 2501	-18.2	-18.2	0.45 (1)	10.00
Q- P	0 / 2433	-18.2	-18.2	0.44 (1)	10.00
P- O	0 / 3117	-18.2	-18.2	0.55 (1)	10.00
O- N	0 / 3117	-18.2	-18.2	0.55 (1)	10.00
N- M	0 / 2432	-18.2	-18.2	0.44 (1)	10.00
M- L	0 / 2501	-18.2	-18.2	0.45 (1)	10.00
L- K	0 / 0	-18.2	-18.2	0.07 (4)	10.00

WEBS

MEMB. FR-TO	MAX. FACTORED FORCE (LBS)	MAX CSI (LC)
R- C	-461 / 0	0.09 (1)
C- Q	-88 / 0	0.04 (1)
Q- D	0 / 146	0.03 (4)
D- P	0 / 959	0.22 (1)
P- E	-589 / 0	0.23 (1)
P- F	-3 / 0	0.00 (1)
N- F	-590 / 0	0.23 (1)
N- G	0 / 962	0.22 (1)
M- G	0 / 145	0.03 (4)
M- H	-89 / 0	0.04 (1)
L- H	-460 / 0	0.09 (1)
B- R	0 / 2555	0.57 (1)
L- I	0 / 2555	0.57 (1)

DESIGN CRITERIA

SPECIFIED LOADS:

TOP CH.	LL	=	34.8	PSF
	DL	=	3.0	PSF
BOT CH.	LL	=	0.0	PSF
	DL	=	7.3	PSF
TOTAL LOAD		=	45.1	PSF

SPACING = 24.0 IN. C/C

LOADING IN FLAT SECTION BASED ON A SLOPE OF 2.00/12 MINIMUM

THIS TRUSS IS DESIGNED FOR RESIDENTIAL OR SMALL BUILDING REQUIREMENTS OF PART 9, NBCC 2015

THIS DESIGN COMPLIES WITH:
- PART 9 OF BCBC 2018 , ABC 2019
- PART 9 OF OBC 2012 (2019 AMENDMENT)
- CSA 086-14
- TPIC 2014

(55 % OF 48.1 P.S.F. G.S.L. PLUS 8.4 P.S.F. RAIN LOAD) EQUALS 34.8 P.S.F. SPECIFIED ROOF LIVE LOAD

ALLOWABLE DEFL.(LL)= L/360 (1.02")
CALCULATED VERT. DEFL.(LL) = L/ 999 (0.18")
ALLOWABLE DEFL.(TL)= L/360 (1.02")
CALCULATED VERT. DEFL.(TL) = L/ 999 (0.29")

CSI: TC=0.43/1.00 (D-E:1) , BC=0.55/1.00 (N-P:1) , WB=0.57/1.00 (I-L:1) , SSI=0.25/1.00 (F-G:1)

DOL LUMBER=1.00 NAIL=1.00 LS BEND=1.10 COMP=1.10 SHEAR=1.10 TENS= 1.10

COMPANION LIVE LOAD FACTOR = 1.00

TRUSS PLATE MANUFACTURER IS NOT RESPONSIBLE FOR QUALITY CONTROL IN THE TRUSS MANUFACTURING PLANT .

NAIL VALUES

PLATE	GRIP(DRY) (PSI) MAX	MIN	SHEAR (PLI) MAX	MIN	SECTION (PLI) MAX	MIN
MT20	650	371	1747	788	1987	1873

PLATE PLACEMENT TOL. = 0.250 inches

PLATE ROTATION TOL. = 5.0 Deg.

JSI GRIP= 0.85 (I) (INPUT = 0.90)
JSI METAL= 0.95 (O) (INPUT = 1.00)

LICENSED PROFESSIONAL ENGINEER
I.MATIJEVIC
100528832
PROVINCE OF ONTARIO
June 23, 2022

READ ALL NOTES ON THIS PAGE AND ON THE ENGINEERING NOTE PAGE ENP-1. THE NOTE PAGE IS AN INTEGRAL PART OF THIS DRAWING AS IT CONTAINS SPECIFICATIONS AND CRITERIA USED IN THE DESIGN OF THIS COMPONENT.

KOTT

CORPORATION OF THE CITY OF OSHAWA
TRUE COPY
OF ORIGINAL PLANS
Dec 06 2023
PER: CM
CHIEF BUILDING OFFICIAL

MHP 23018

JOB NAME	TRUSS NAME	QUANTITY	PLY	JOB DESC.	DRWG NO.
IM0622-131	T02			TRUSS DESC.	

Version 8.500 S Aug 16 2021 MiTek Industries, Inc. Thu Jun 23 08:36:20 2022 Page 1
ID:OzM1q?scz2BChOKfHahjdLzPugE-G?hPON5ybhAPOHZzx23G3yI2UETjIaaVmGJ2XGz3Tlv
Scale = 1:53.7

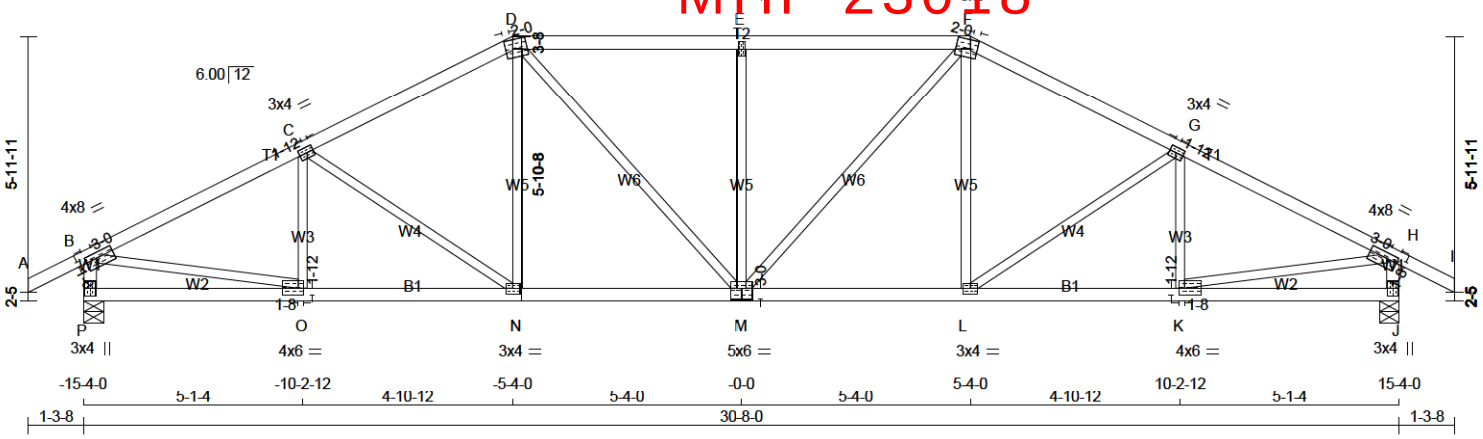

TOTAL WEIGHT = 126 lb
[M][F]

LUMBER
N. L. G. A. RULES

CHORDS	SIZE		LUMBER	DESCR.
A - D	2x4	DRY	No.2	SPF
D - F	2x4	DRY	No.2	SPF
F - I	2x4	DRY	No.2	SPF
P - B	2x4	DRY	No.2	SPF
J - H	2x4	DRY	No.2	SPF
P - M	2x4	DRY	No.2	SPF
M - J	2x4	DRY	No.2	SPF
ALL WEBS EXCEPT	2x3	DRY	No.2	SPF

DRY: SEASONED LUMBER.

PLATES (table is in inches)

JT	TYPE	PLATES	W	LEN	Y	X
B	TMVW-t	MT20	4.0	8.0	1.50	3.00
C	TMWW-t	MT20	3.0	4.0	1.50	1.75
D	TTWW-m	MT20	5.0	6.0	2.50	2.00
E	TMW+w	MT20	2.0	4.0		
F	TTWW-m	MT20	5.0	6.0	2.50	2.00
G	TMWW-t	MT20	3.0	4.0	1.50	1.75
H	TMVW-t	MT20	4.0	8.0	1.50	3.00
J	BMV1+p	MT20	3.0	4.0		
K	BMWW-t	MT20	4.0	6.0	1.75	1.50
L	BMWW-t	MT20	3.0	4.0		
M	BSWWW-I	MT20	5.0	6.0	3.00	3.00
N	BMWW-t	MT20	3.0	4.0		
O	BMWW-t	MT20	4.0	6.0	1.75	1.50
P	BMV1+p	MT20	3.0	4.0		

DIMENSIONS, SUPPORTS AND LOADINGS SPECIFIED BY FABRICATOR TO BE VERIFIED BY BUILDING DESIGNER

BEARINGS

JT	FACTORED GROSS REACTION VERT	HORZ	MAXIMUM FACTORED GROSS REACTION DOWN	HORZ	UPLIFT	INPUT BRG IN-SX	REQRD BRG IN-SX
P	2147	0	2147	0	0	5-8	3-8
J	2147	0	2147	0	0	5-8	3-8

UNFACTORED REACTIONS

JT	1ST LCASE COMBINED	SNOW	MAX./MIN. COMPONENT REACTIONS LIVE	PERM.LIVE	WIND	DEAD	SOIL
P	1485	1161 / 0	0 / 0	0 / 0	0 / 0	324 / 0	0 / 0
J	1485	1161 / 0	0 / 0	0 / 0	0 / 0	324 / 0	0 / 0

BEARING MATERIAL TO BE SPF NO.2 OR BETTER AT JOINT(S) P, J

BRACING
TOP CHORD TO BE SHEATHED OR MAX. PURLIN SPACING = 3.69 FT.
MAX. UNBRACED BOTTOM CHORD LENGTH = 10.00 FT OR RIGID CEILING DIRECTLY APPLIED.

ALL PITCH BREAKS AND PERIMETER CORNER JOINTS MUST BE LATERALLY RESTRAINED.

LOADING
TOTAL LOAD CASES: (4)

CHORDS

MEMB. FR-TO	MAX. FACTORED FORCE (LBS)	FACTORED VERT. LOAD (PLF) FROM	TO	LC1 MAX CSI (LC)	MAX. UNBRAC LENGTH
A- B	0 / 34	-111.9	-111.9	0.15 (1)	10.00
B- C	-2864 / 0	-111.9	-111.9	0.47 (1)	3.69
C- D	-2598 / 0	-111.9	-111.9	0.44 (1)	3.88
D- E	-2668 / 0	-111.9	-111.9	0.50 (1)	3.74
E- F	-2668 / 0	-111.9	-111.9	0.50 (1)	3.74
F- G	-2598 / 0	-111.9	-111.9	0.44 (1)	3.88
G- H	-2864 / 0	-111.9	-111.9	0.47 (1)	3.69
H- I	0 / 34	-111.9	-111.9	0.15 (1)	10.00
P- B	-2103 / 0	0.0	0.0	0.21 (1)	5.84
J- H	-2103 / 0	0.0	0.0	0.21 (1)	5.84
P- O	0 / 0	-18.2	-18.2	0.10 (4)	10.00
O- N	0 / 2587	-18.2	-18.2	0.48 (1)	10.00
N- M	0 / 2302	-18.2	-18.2	0.44 (1)	10.00
M- L	0 / 2301	-18.2	-18.2	0.44 (1)	10.00
L- K	0 / 2587	-18.2	-18.2	0.48 (1)	10.00
K- J	0 / 0	-18.2	-18.2	0.10 (4)	10.00

WEBS

MEMB. FR-TO	MAX. FACTORED FORCE (LBS)	MAX CSI (LC)
O- C	-347 / 14	0.08 (1)
N- D	0 / 308	0.23 (1)
D- M	0 / 545	0.12 (1)
M- E	-730 / 0	0.44 (1)
M- F	0 / 545	0.12 (1)
L- F	0 / 308	0.07 (1)
L- G	-352 / 0	0.23 (1)
K- G	-347 / 14	0.08 (1)
B- O	0 / 2623	0.59 (1)
K- H	0 / 2623	0.59 (1)

DESIGN CRITERIA

SPECIFIED LOADS:

TOP CH.	LL	=	34.8	PSF
	DL	=	3.0	PSF
BOT CH.	LL	=	0.0	PSF
	DL	=	7.3	PSF
TOTAL LOAD		=	45.1	PSF

SPACING = 24.0 IN. C/C

LOADING IN FLAT SECTION BASED ON A SLOPE OF 2.00/12 MINIMUM

THIS TRUSS IS DESIGNED FOR RESIDENTIAL OR SMALL BUILDING REQUIREMENTS OF PART 9, NBCC 2015

THIS DESIGN COMPLIES WITH:
- PART 9 OF BCBC 2018 , ABC 2019
- PART 9 OF OBC 2012 (2019 AMENDMENT)
- CSA 086-14
- TPIC 2014

(55 % OF 48.1 P.S.F. G.S.L. PLUS 8.4 P.S.F. RAIN LOAD) EQUALS 34.8 P.S.F. SPECIFIED ROOF LIVE LOAD

ALLOWABLE DEFL.(LL)= L/360 (1.02")
CALCULATED VERT. DEFL.(LL) = L/ 999 (0.15")
ALLOWABLE DEFL.(TL)= L/360 (1.02")
CALCULATED VERT. DEFL.(TL) = L/ 999 (0.25")

CSI: TC=0.50/1.00 (D-E:1) , BC=0.48/1.00 (N-O:1) , WB=0.59/1.00 (B-O:1) , SSI=0.29/1.00 (D-E:1)

DOL LUMBER=1.00 NAIL=1.00 LS BEND=1.10 COMP=1.10 SHEAR=1.10 TENS= 1.10

COMPANION LIVE LOAD FACTOR = 1.00

TRUSS PLATE MANUFACTURER IS NOT RESPONSIBLE FOR QUALITY CONTROL IN THE TRUSS MANUFACTURING PLANT .

NAIL VALUES

PLATE	GRIP(DRY) (PSI) MAX	MIN	SHEAR (PLI) MAX	MIN	SECTION (PLI) MAX	MIN
MT20	650	371	1747	788	1987	1873

PLATE PLACEMENT TOL. = 0.250 inches

PLATE ROTATION TOL. = 5.0 Deg.

JSI GRIP= 0.84 (J) (INPUT = 0.90)
JSI METAL= 0.62 (K) (INPUT = 1.00)

LICENSED PROFESSIONAL ENGINEER
I.MATIJEVIC
100528832
PROVINCE OF ONTARIO
June 23, 2022

READ ALL NOTES ON THIS PAGE AND ON THE ENGINEERING NOTE PAGE ENP-1. THE NOTE PAGE IS AN INTEGRAL PART OF THIS DRAWING AS IT CONTAINS SPECIFICATIONS AND CRITERIA USED IN THE DESIGN OF THIS COMPONENT.

KOTT

CORPORATION OF THE CITY OF OSHAWA
TRUE COPY
OF QUANTITY PLANS
Dec 06 2023
PER: C Martin
CHIEF BUILDING OFFICIAL

MHP 23018

JOB NAME	TRUSS NAME	QUANTITY	PLY	JOB DESC.	DRWG NO.
IM0622-131	T03			TRUSS DESC.	

Version 8.500 S Aug 16 2021 MiTek Industries, Inc. Thu Jun 23 08:36:21 2022 Page 1
ID:OzM1q?scz2BChOKfHahjdLzPugE-kBFnbj5aM_IG0R79UlaVb9rAJeog11ke?w3b3iz3Tlu
Scale = 1:59.1

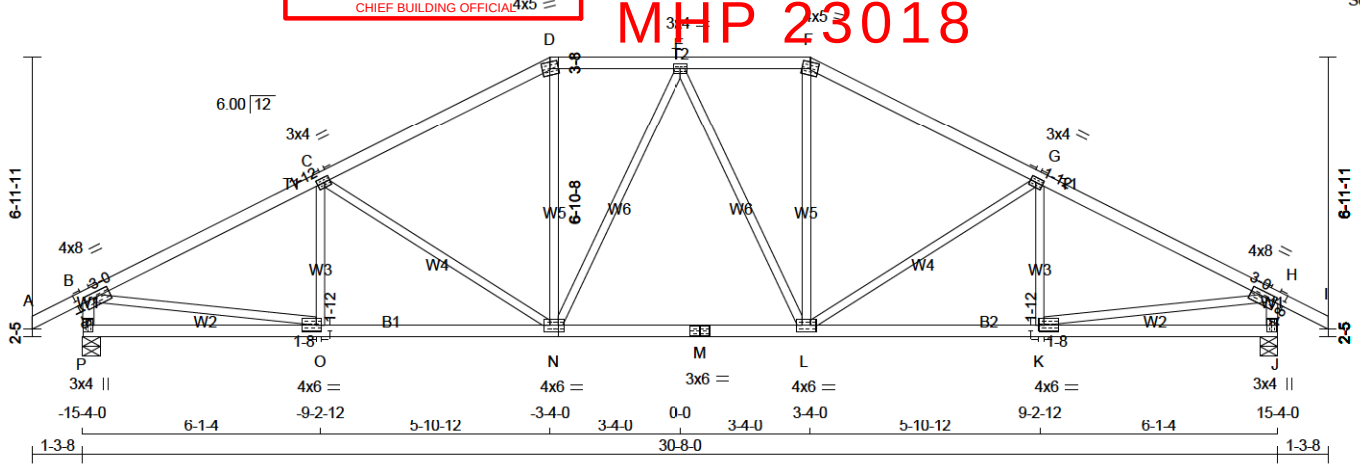

TOTAL WEIGHT = 127 lb
[M][F]

LUMBER
N. L. G. A. RULES

CHORDS	SIZE		LUMBER	DESCR.
A - D	2x4	DRY	No.2	SPF
D - F	2x4	DRY	No.2	SPF
F - I	2x4	DRY	No.2	SPF
P - B	2x4	DRY	No.2	SPF
J - H	2x4	DRY	No.2	SPF
P - M	2x4	DRY	No.2	SPF
M - J	2x4	DRY	No.2	SPF
ALL WEBS EXCEPT	2x3	DRY	No.2	SPF

DRY: SEASONED LUMBER.

PLATES (table is in inches)

JT	TYPE	PLATES	W	LEN	Y	X
B	TMVW-t	MT20	4.0	8.0	1.50	3.00
C	TMWW-t	MT20	3.0	4.0	1.50	1.75
D	TTW-m	MT20	4.0	5.0		
E	TMWW-t	MT20	3.0	4.0		
F	TTW-m	MT20	4.0	5.0		
G	TMWW-t	MT20	3.0	4.0	1.50	1.75
H	TMVW-t	MT20	4.0	8.0	1.50	3.00
J	BMV1+p	MT20	3.0	4.0		
K	BMWW-t	MT20	4.0	6.0	1.75	1.50
L	BMWWW-t	MT20	4.0	6.0		
M	BS-t	MT20	3.0	6.0		
N	BMWWW-t	MT20	4.0	6.0		
O	BMWW-t	MT20	4.0	6.0	1.75	1.50
P	BMV1+p	MT20	3.0	4.0		

DIMENSIONS, SUPPORTS AND LOADINGS SPECIFIED BY FABRICATOR TO BE VERIFIED BY BUILDING DESIGNER

BEARINGS

JT	FACTORED GROSS REACTION VERT	HORZ	MAXIMUM FACTORED GROSS REACTION DOWN	HORZ	UPLIFT	INPUT BRG IN-SX	REQRD BRG IN-SX
P	2147	0	2147	0	0	5-8	3-8
J	2147	0	2147	0	0	5-8	3-8

UNFACTORED REACTIONS

JT	1ST LCASE COMBINED	SNOW	MAX./MIN. COMPONENT REACTIONS LIVE	PERM.LIVE	WIND	DEAD	SOIL
P	1485	1161 / 0	0 / 0	0 / 0	0 / 0	324 / 0	0 / 0
J	1485	1161 / 0	0 / 0	0 / 0	0 / 0	324 / 0	0 / 0

BEARING MATERIAL TO BE SPF NO.2 OR BETTER AT JOINT(S) P, J

BRACING
TOP CHORD TO BE SHEATHED OR MAX. PURLIN SPACING = 3.39 FT.
MAX. UNBRACED BOTTOM CHORD LENGTH = 10.00 FT OR RIGID CEILING DIRECTLY APPLIED.

ALL PITCH BREAKS AND PERIMETER CORNER JOINTS MUST BE LATERALLY RESTRAINED.

LOADING
TOTAL LOAD CASES: (4)

CHORDS

MEMB. FR-TO	MAX. FACTORED FORCE (LBS)	FROM	FACTORED VERT. LOAD (PLF) TO	LC1	MAX CSI (LC)	MAX. UNBRAC LENGTH
A- B	0 / 34	-111.9	-111.9	0.15 (1)	10.00	
B- C	-2902 / 0	-111.9	-111.9	0.69 (1)	3.39	
C- D	-2413 / 0	-111.9	-111.9	0.62 (1)	3.76	
D- E	-2135 / 0	-111.9	-111.9	0.19 (1)	4.50	
E- F	-2135 / 0	-111.9	-111.9	0.19 (1)	4.50	
F- G	-2413 / 0	-111.9	-111.9	0.62 (1)	3.76	
G- H	-2902 / 0	-111.9	-111.9	0.69 (1)	3.39	
H- I	0 / 34	-111.9	-111.9	0.15 (1)	10.00	
P- B	-2098 / 0	0.0	0.0	0.21 (1)	5.84	
J- H	-2098 / 0	0.0	0.0	0.21 (1)	5.84	
P- O	0 / 0	-18.2	-18.2	0.15 (4)	10.00	
O- N	0 / 2626	-18.2	-18.2	0.50 (1)	10.00	
N- M	0 / 2239	-18.2	-18.2	0.44 (1)	10.00	
M- L	0 / 2239	-18.2	-18.2	0.44 (1)	10.00	
L- K	0 / 2626	-18.2	-18.2	0.50 (1)	10.00	
K- J	0 / 0	-18.2	-18.2	0.15 (4)	10.00	

WEBS

MEMB. FR-TO	MAX. FACTORED FORCE (LBS)	MAX CSI (LC)
O- C	-255 / 55	0.07 (1)
C- N	-598 / 0	0.59 (1)
N- D	0 / 664	0.15 (1)
N- E	-243 / 0	0.28 (1)
E- L	-243 / 0	0.28 (1)
L- F	0 / 664	0.15 (1)
L- G	-598 / 0	0.59 (1)
K- G	-255 / 55	0.07 (1)
B- O	0 / 2652	0.60 (1)
K- H	0 / 2652	0.60 (1)

DESIGN CRITERIA

SPECIFIED LOADS:

TOP CH.	LL	=	34.8	PSF
	DL	=	3.0	PSF
BOT CH.	LL	=	0.0	PSF
	DL	=	7.3	PSF
TOTAL LOAD		=	45.1	PSF

SPACING = 24.0 IN. C/C

LOADING IN FLAT SECTION BASED ON A SLOPE OF 2.00/12 MINIMUM

THIS TRUSS IS DESIGNED FOR RESIDENTIAL OR SMALL BUILDING REQUIREMENTS OF PART 9, NBCC 2015

THIS DESIGN COMPLIES WITH:
- PART 9 OF BCBC 2018 , ABC 2019
- PART 9 OF OBC 2012 (2019 AMENDMENT)
- CSA 086-14
- TPIC 2014

(55 % OF 48.1 P.S.F. G.S.L. PLUS 8.4 P.S.F. RAIN LOAD) EQUALS 34.8 P.S.F. SPECIFIED ROOF LIVE LOAD

ALLOWABLE DEFL.(LL)= L/360 (1.02")
CALCULATED VERT. DEFL.(LL) = L/ 999 (0.14")
ALLOWABLE DEFL.(TL)= L/360 (1.02")
CALCULATED VERT. DEFL.(TL) = L/ 999 (0.25")

CSI: TC=0.69/1.00 (B-C:1) , BC=0.50/1.00 (N-O:1) , WB=0.60/1.00 (B-O:1) , SSI=0.29/1.00 (B-C:1)

DOL LUMBER=1.00 NAIL=1.00 LS BEND=1.10 COMP=1.10 SHEAR=1.10 TENS= 1.10

COMPANION LIVE LOAD FACTOR = 1.00

TRUSS PLATE MANUFACTURER IS NOT RESPONSIBLE FOR QUALITY CONTROL IN THE TRUSS MANUFACTURING PLANT .

NAIL VALUES

PLATE	GRIP(DRY) (PSI) MAX	MIN	SHEAR (PLI) MAX	MIN	SECTION (PLI) MAX	MIN
MT20	650	371	1747	788	1987	1873

PLATE PLACEMENT TOL. = 0.250 inches

PLATE ROTATION TOL. = 5.0 Deg.

JSI GRIP= 0.84 (J) (INPUT = 0.90)
JSI METAL= 0.72 (M) (INPUT = 1.00)

LICENSED PROFESSIONAL ENGINEER
I.MATIJEVIC
100528832
PROVINCE OF ONTARIO
June 23, 2022

READ ALL NOTES ON THIS PAGE AND ON THE ENGINEERING NOTE PAGE ENP-1. THE NOTE PAGE IS AN INTEGRAL PART OF THIS DRAWING AS IT CONTAINS SPECIFICATIONS AND CRITERIA USED IN THE DESIGN OF THIS COMPONENT.

KOTT

CORPORATION OF THE CITY OF OSHAWA
TRUE COPY
OF ORIGINAL PLANS
Dec 06 2023
PER:
CHIEF BUILDING OFFICIAL

JOB NAME	TRUSS NAME	QUANTITY	PLY	JOB DESC.	DRWG NO.
IM0622-131	T04			TRUSS DESC.	

Version 8.500 S Aug 16 2021 MiTek Industries, Inc. Thu Jun 23 08:36:22 2022 Page 1
ID:OzM1q?scz2BChOKfHahjdLzPugE-CNp9p36C7IQ7ebiL2S5k8NOPL28emSooEao9c8z3TIt
Scale = 1:68.6

MHP 23018

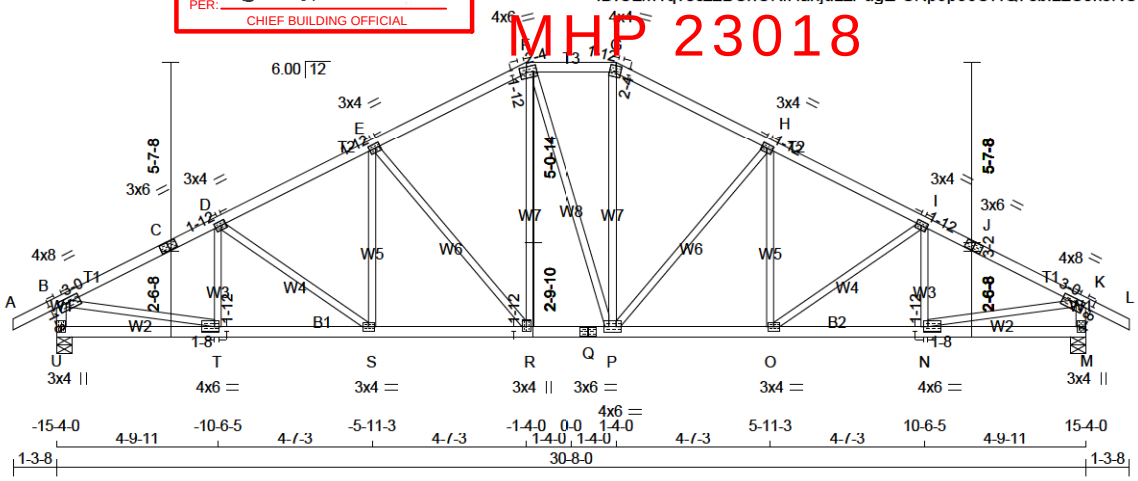

TOTAL WEIGHT = 138 lb
[M][F]

LUMBER
N. L. G. A. RULES

CHORDS	SIZE		LUMBER	DESCR.
A - C	2x4	DRY	No.2	SPF
C - F	2x4	DRY	No.2	SPF
F - G	2x4	DRY	No.2	SPF
G - J	2x4	DRY	No.2	SPF
J - L	2x4	DRY	No.2	SPF
U - B	2x4	DRY	No.2	SPF
M - K	2x4	DRY	No.2	SPF
U - Q	2x4	DRY	No.2	SPF
Q - M	2x4	DRY	No.2	SPF
ALL WEBS EXCEPT	2x3	DRY	No.2	SPF

DRY: SEASONED LUMBER.

PLATES (table is in inches)

JT	TYPE	PLATES	W	LEN	Y	X
B	TMVW-t	MT20	4.0	8.0	1.50	3.00
C	TS-t	MT20	3.0	6.0		
D, E, H, I						
D	TMWW-t	MT20	3.0	4.0	1.50	1.75
F	TTWW-m	MT20	4.0	6.0	1.75	2.25
G	TTW-m	MT20	4.0	4.0	2.25	1.75
J	TS-t	MT20	3.0	6.0		
K	TMVW-t	MT20	4.0	8.0	1.50	3.00
M	BMV1+p	MT20	3.0	4.0		
N	BMWW-t	MT20	4.0	6.0	1.75	1.50
O	BMWW-t	MT20	3.0	4.0		
P	BMWWW-t	MT20	4.0	6.0		
Q	BS-t	MT20	3.0	6.0		
R	BMWW+t	MT20	3.0	4.0	1.75	1.50
S	BMWW-t	MT20	3.0	4.0		
T	BMWW-t	MT20	4.0	6.0	1.75	1.50
U	BMV1+p	MT20	3.0	4.0		

DIMENSIONS, SUPPORTS AND LOADINGS SPECIFIED BY FABRICATOR TO BE VERIFIED BY BUILDING DESIGNER

BEARINGS

JT	FACTORED GROSS REACTION VERT	HORZ	MAXIMUM FACTORED GROSS REACTION DOWN	HORZ	UPLIFT	INPUT BRG IN-SX	REQRD BRG IN-SX
U	2147	0	2147	0	0	5-8	3-8
M	2147	0	2147	0	0	5-8	3-8

UNFACTORED REACTIONS

JT	1ST LCASE COMBINED	SNOW	MAX./MIN. COMPONENT REACTIONS LIVE	PERM.LIVE	WIND	DEAD	SOIL
U	1485	1161 / 0	0 / 0	0 / 0	0 / 0	324 / 0	0 / 0
M	1485	1161 / 0	0 / 0	0 / 0	0 / 0	324 / 0	0 / 0

BEARING MATERIAL TO BE SPF NO.2 OR BETTER AT JOINT(S) U, M

BRACING
TOP CHORD TO BE SHEATHED OR MAX. PURLIN SPACING = 3.78 FT.
MAX. UNBRACED BOTTOM CHORD LENGTH = 10.00 FT OR RIGID CEILING DIRECTLY APPLIED.

ALL PITCH BREAKS AND PERIMETER CORNER JOINTS MUST BE LATERALLY RESTRAINED.

LOADING
TOTAL LOAD CASES: (4)

CHORDS

MEMB. FR-TO	MAX. FACTORED FORCE (LBS)	FACTORED VERT. LOAD (PLF) FROM	TO	LC1 MAX CSI (LC)	MAX. UNBRAC LENGTH
A- B	0 / 34	-111.9	-111.9	0.15 (1)	10.00
B- C	-2832 / 0	-111.9	-111.9	0.41 (1)	3.78
C- D	-2832 / 0	-111.9	-111.9	0.41 (1)	3.78
D- E	-2667 / 0	-111.9	-111.9	0.34 (1)	3.96
E- F	-2174 / 0	-111.9	-111.9	0.33 (1)	4.32
F- G	-1935 / 0	-111.9	-111.9	0.14 (1)	4.74
G- H	-2177 / 0	-111.9	-111.9	0.33 (1)	4.32
H- I	-2666 / 0	-111.9	-111.9	0.34 (1)	3.96
I- J	-2833 / 0	-111.9	-111.9	0.41 (1)	3.78
J- K	-2833 / 0	-111.9	-111.9	0.41 (1)	3.78
K- L	0 / 34	-111.9	-111.9	0.15 (1)	10.00
U- B	-2105 / 0	0.0	0.0	0.21 (1)	5.84
M- K	-2106 / 0	0.0	0.0	0.21 (1)	5.84
U- T	0 / 0	-18.2	-18.2	0.09 (4)	10.00
T- S	0 / 2552	-18.2	-18.2	0.45 (1)	10.00
S- R	0 / 2385	-18.2	-18.2	0.43 (1)	10.00
R- Q	0 / 1932	-18.2	-18.2	0.36 (1)	10.00
Q- P	0 / 1932	-18.2	-18.2	0.36 (1)	10.00
P- O	0 / 2384	-18.2	-18.2	0.43 (1)	10.00
O- N	0 / 2552	-18.2	-18.2	0.45 (1)	10.00
N- M	0 / 0	-18.2	-18.2	0.08 (4)	10.00

WEBS

MEMB. FR-TO	MAX. FACTORED FORCE (LBS)	MAX CSI (LC)
T- D	-371 / 4	0.08 (1)
S- E	0 / 209	0.05 (1)
E- R	-715 / 0	0.74 (1)
R- F	0 / 599	0.13 (1)
F- P	0 / 9	0.00 (1)
P- G	0 / 609	0.14 (1)
P- H	-709 / 0	0.73 (1)
O- H	0 / 203	0.05 (1)
O- I	-206 / 0	0.11 (1)
N- I	-369 / 5	0.08 (1)
B- T	0 / 2592	0.58 (1)
N- K	0 / 2593	0.58 (1)

DESIGN CRITERIA

SPECIFIED LOADS:

TOP CH.	LL	=	34.8	PSF
	DL	=	3.0	PSF
BOT CH.	LL	=	0.0	PSF
	DL	=	7.3	PSF
TOTAL LOAD		=	45.1	PSF

SPACING = 24.0 IN. C/C

LOADING IN FLAT SECTION BASED ON A SLOPE OF 2.00/12 MINIMUM

THIS TRUSS IS DESIGNED FOR RESIDENTIAL OR SMALL BUILDING REQUIREMENTS OF PART 9, NBCC 2015

THIS DESIGN COMPLIES WITH:
- PART 9 OF BCBC 2018 , ABC 2019
- PART 9 OF OBC 2012 (2019 AMENDMENT)
- CSA 086-14
- TPIC 2014

(55 % OF 48.1 P.S.F. G.S.L. PLUS 8.4 P.S.F. RAIN LOAD) EQUALS 34.8 P.S.F. SPECIFIED ROOF LIVE LOAD

ALLOWABLE DEFL.(LL)= L/360 (1.02")
CALCULATED VERT. DEFL.(LL) = L/ 999 (0.14")
ALLOWABLE DEFL.(TL)= L/360 (1.02")
CALCULATED VERT. DEFL.(TL) = L/ 999 (0.23")

CSI: TC=0.41/1.00 (I-K:1) , BC=0.45/1.00 (N-O:1) , WB=0.74/1.00 (E-R:1) , SSI=0.22/1.00 (I-K:1)

DOL LUMBER=1.00 NAIL=1.00 LS BEND=1.10 COMP=1.10 SHEAR=1.10 TENS= 1.10

COMPANION LIVE LOAD FACTOR = 1.00

TRUSS PLATE MANUFACTURER IS NOT RESPONSIBLE FOR QUALITY CONTROL IN THE TRUSS MANUFACTURING PLANT .

NAIL VALUES

PLATE	GRIP(DRY) (PSI) MAX	MIN	SHEAR (PLI) MAX	MIN	SECTION (PLI) MAX	MIN
MT20	650	371	1747	788	1987	1873

PLATE PLACEMENT TOL. = 0.250 inches

PLATE ROTATION TOL. = 5.0 Deg.

JSI GRIP= 0.85 (G) (INPUT = 0.90)
JSI METAL= 0.61 (N) (INPUT = 1.00)

LICENSED PROFESSIONAL ENGINEER
I.MATIJEVIC
100528832
PROVINCE OF ONTARIO
June 23, 2022

READ ALL NOTES ON THIS PAGE AND ON THE ENGINEERING NOTE PAGE ENP-1. THE NOTE PAGE IS AN INTEGRAL PART OF THIS DRAWING AS IT CONTAINS SPECIFICATIONS AND CRITERIA USED IN THE DESIGN OF THIS COMPONENT.

KOTT

CORPORATION OF THE CITY OF OSHAWA
TRUE COPY
OF QUANTITY PLANS
Dec 06 2023
PER:
CHIEF BUILDING OFFICIAL

JOB NAME	TRUSS NAME	QUANTITY	PLY	JOB DESC.	DRWG NO.
IM0622-131	T05			TRUSS DESC.	

Version 8.500 S Aug 16 2021 MiTek Industries, Inc. Thu Jun 23 08:36:23 2022 Page 1
ID:OzM1q?scz2BChOKfHahjdLzPugE-gaNY0P7rucYzFlHYcAczgawVfST1VxExTEYi8az3TIs
Scale = 1:69.8

MHP 23018

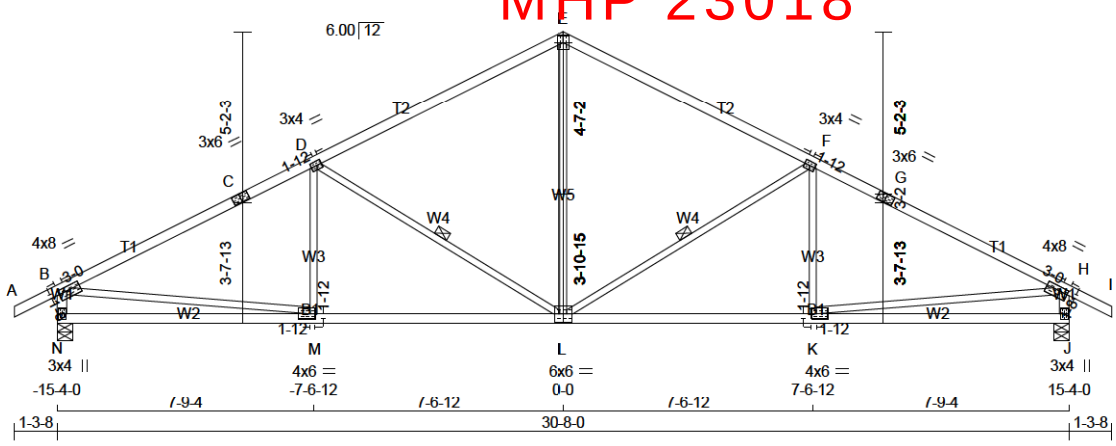

TOTAL WEIGHT = 7 X 119 = 836 lb

[M][F]

LUMBER

N. L. G. A. RULES

CHORDS	SIZE		LUMBER	DESCR.
A - C	2x4	DRY	2100F 1.8E	SPF
C - E	2x4	DRY	2100F 1.8E	SPF
E - G	2x4	DRY	2100F 1.8E	SPF
G - I	2x4	DRY	2100F 1.8E	SPF
N - B	2x4	DRY	No.2	SPF
J - H	2x4	DRY	No.2	SPF
N - L	2x4	DRY	No.2	SPF
L - J	2x4	DRY	No.2	SPF
ALL WEBS EXCEPT	2x3	DRY	No.2	SPF

DRY: SEASONED LUMBER.

PLATES (table is in inches)

JT	TYPE	PLATES	W	LEN	Y	X
B	TMVW-t	MT20	4.0	8.0	1.50	3.00
C	TS-t	MT20	3.0	6.0		
D	TMWW-t	MT20	3.0	4.0	1.50	1.75
E	TTW+p	MT20	4.0	5.0		
F	TMWW-t	MT20	3.0	4.0	1.50	1.75
G	TS-t	MT20	3.0	6.0		
H	TMVW-t	MT20	4.0	8.0	1.50	3.00
J	BMV1+p	MT20	3.0	4.0		
K	BMWW-t	MT20	4.0	6.0	1.75	1.75
L	BSWWW-I	MT20	6.0	6.0		
M	BMWW-t	MT20	4.0	6.0	1.75	1.75
N	BMV1+p	MT20	3.0	4.0		

DIMENSIONS, SUPPORTS AND LOADINGS SPECIFIED BY FABRICATOR TO BE VERIFIED BY BUILDING DESIGNER

BEARINGS

JT	FACTORED GROSS REACTION VERT	HORZ	MAXIMUM FACTORED GROSS REACTION DOWN	HORZ	UPLIFT	INPUT BRG	REQRD BRG
N	2147	0	2147	0	0	5-8	3-8
J	2147	0	2147	0	0	5-8	3-8

UNFACTORED REACTIONS

JT	1ST LCASE COMBINED	SNOW	MAX./MIN. COMPONENT REACTIONS LIVE	PERM.LIVE	WIND	DEAD	SOIL
N	1485	1161 / 0	0 / 0	0 / 0	0 / 0	324 / 0	0 / 0
J	1485	1161 / 0	0 / 0	0 / 0	0 / 0	324 / 0	0 / 0

BEARING MATERIAL TO BE SPF NO.2 OR BETTER AT JOINT(S) N, J

BRACING

TOP CHORD TO BE SHEATHED OR MAX. PURLIN SPACING = 4.16 FT.
MAX. UNBRACED BOTTOM CHORD LENGTH = 10.00 FT OR RIGID CEILING DIRECTLY APPLIED.

ALL PITCH BREAKS AND PERIMETER CORNER JOINTS MUST BE LATERALLY RESTRAINED.

1 - 1x4 LATERAL BRACE(S) AT 1/ 2 LENGTH OF F-L, D-L. DBS = 20-0-0 . CBF = 123 LBS.

DBS = DIAGONAL BRACE SPACING (MAX). CBF = CUMULATIVE BRACING FORCE (PER BRACE). FASTEN LATERAL BRACE(S) USING (0.122"X3") SPIRAL NAILS : 1 NAIL FOR 2x3 BRACE(S), 2 FOR 1x4, 2x4, 2x5, 3 FOR 2x6, 4 FOR 2x8, 5 FOR 2x10, AND 6 FOR 2x12.

END VERTICAL(S) MUST BE SHEATHED OR HAVE BRACES AS INDICATED IN THE MAX. UNBRACED LENGTH COLUMN OF THE TABLE BELOW

LOADING

TOTAL LOAD CASES: (4)

CHORDS

MEMB. FR-TO	MAX. FACTORED FORCE (LBS)	FACTORED VERT. LOAD (PLF) FROM	TO	LC1 MAX CSI (LC)	MAX. UNBRAC LENGTH
A- B	0 / 34	-111.9	-111.9	0.09 (1)	10.00
B- C	-2895 / 0	-111.9	-111.9	0.70 (1)	4.16
C- D	-2895 / 0	-111.9	-111.9	0.70 (1)	4.16
D- E	-2053 / 0	-111.9	-111.9	0.62 (1)	4.83
E- F	-2053 / 0	-111.9	-111.9	0.62 (1)	4.83
F- G	-2895 / 0	-111.9	-111.9	0.70 (1)	4.16
G- H	-2895 / 0	-111.9	-111.9	0.70 (1)	4.16
H- I	0 / 34	-111.9	-111.9	0.09 (1)	10.00
N- B	-2090 / 0	0.0	0.0	0.21 (1)	5.86
J- H	-2090 / 0	0.0	0.0	0.21 (1)	5.86
N- M	0 / 0	-18.2	-18.2	0.30 (4)	10.00
M- L	0 / 2630	-18.2	-18.2	0.57 (1)	10.00
L- K	0 / 2630	-18.2	-18.2	0.57 (1)	10.00
K- J	0 / 0	-18.2	-18.2	0.30 (4)	10.00

WEBS

MEMB. FR-TO	MAX. FACTORED FORCE (LBS)	MAX CSI (LC)
L- E	0 / 1158	0.26 (1)
L- F	-987 / 0	0.55 (1)
K- F	-122 / 130	0.05 (1)
D- L	-987 / 0	0.55 (1)
M- D	-122 / 130	0.05 (1)
B- M	0 / 2646	0.60 (1)
K- H	0 / 2646	0.60 (1)

DESIGN CRITERIA

SPECIFIED LOADS:

TOP CH.	LL	=	34.8	PSF
	DL	=	3.0	PSF
BOT CH.	LL	=	0.0	PSF
	DL	=	7.3	PSF
TOTAL LOAD		=	45.1	PSF

SPACING = 24.0 IN. C/C

THIS TRUSS IS DESIGNED FOR RESIDENTIAL OR SMALL BUILDING REQUIREMENTS OF PART 9, NBCC 2015

THIS DESIGN COMPLIES WITH:
- PART 9 OF BCBC 2018 , ABC 2019
- PART 9 OF OBC 2012 (2019 AMENDMENT)
- CSA 086-14
- TPIC 2014

(55 % OF 48.1 P.S.F. G.S.L. PLUS 8.4 P.S.F. RAIN LOAD) EQUALS 34.8 P.S.F. SPECIFIED ROOF LIVE LOAD

ALLOWABLE DEFL.(LL)= L/360 (1.02")
CALCULATED VERT. DEFL.(LL) = L/ 999 (0.14")
ALLOWABLE DEFL.(TL)= L/360 (1.02")
CALCULATED VERT. DEFL.(TL) = L/ 999 (0.29")

CSI: TC=0.70/1.00 (B-D:1) , BC=0.57/1.00 (L-M:1) , WB=0.60/1.00 (B-M:1) , SSI=0.37/1.00 (B-D:1)

DOL LUMBER=1.00 NAIL=1.00 LS BEND=1.10 COMP=1.10 SHEAR=1.10 TENS= 1.10

COMPANION LIVE LOAD FACTOR = 1.00

TRUSS PLATE MANUFACTURER IS NOT RESPONSIBLE FOR QUALITY CONTROL IN THE TRUSS MANUFACTURING PLANT .

NAIL VALUES

PLATE	GRIP(DRY) (PSI) MAX	MIN	SHEAR (PLI) MAX	MIN	SECTION (PLI) MAX	MIN
MT20	650	371	1747	788	1987	1873

PLATE PLACEMENT TOL. = 0.250 inches

PLATE ROTATION TOL. = 5.0 Deg.

JSI GRIP= 0.83 (J) (INPUT = 0.90)
JSI METAL= 0.63 (K) (INPUT = 1.00)

LICENSED PROFESSIONAL ENGINEER
I.MATIJEVIC
100528832
PROVINCE OF ONTARIO
June 23, 2022

READ ALL NOTES ON THIS PAGE AND ON THE ENGINEERING NOTE PAGE ENP-1. THE NOTE PAGE IS AN INTEGRAL PART OF THIS DRAWING AS IT CONTAINS SPECIFICATIONS AND CRITERIA USED IN THE DESIGN OF THIS COMPONENT.

KOTT

CORPORATION OF THE CITY OF OSHAWA
TRUE COPY
OF QUANTITY PLANS
Dec 06 2023
PER: C Martin
CHIEF BUILDING OFFICIAL

MHP 23018

JOB NAME	TRUSS NAME	QUANTITY	PLY	JOB DESC.	DRWG NO.
IM0622-131	T06			TRUSS DESC.	

Version 8.500 S Aug 16 2021 MiTek Industries, Inc. Thu Jun 23 08:36:24 2022 Page 1
ID:OzM1q?scz2BChOKfHahjdLzPugE-9mxwDl8TfvgqtuskAt7CDoTjXssIEPg5huHGg1z3TIr
Scale = 1:66.7

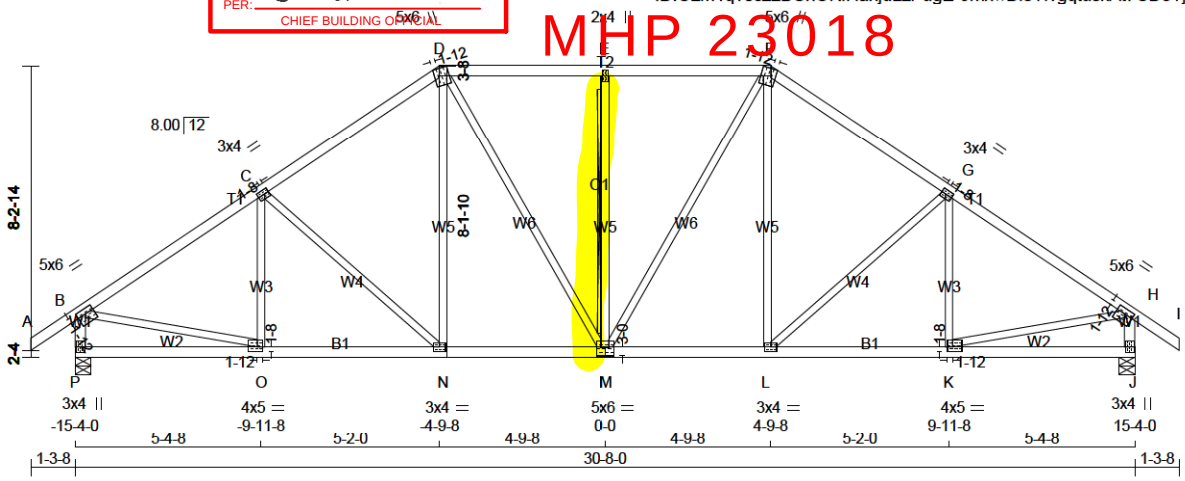

TOTAL WEIGHT = 141 lb
[M][F]

LUMBER
N. L. G. A. RULES

CHORDS	SIZE		LUMBER	DESCR.
A - D	2x4	DRY	No.2	SPF
D - F	2x4	DRY	No.2	SPF
F - I	2x4	DRY	No.2	SPF
P - B	2x4	DRY	No.2	SPF
J - H	2x4	DRY	No.2	SPF
P - M	2x4	DRY	No.2	SPF
M - J	2x4	DRY	No.2	SPF
ALL WEBS EXCEPT	2x3	DRY	No.2	SPF

DRY: SEASONED LUMBER.

PLATES (table is in inches)

JT	TYPE	PLATES	W	LEN	Y	X
B	TMVW-t	MT20	5.0	6.0	1.75	3.00
C	TMWW-t	MT20	3.0	4.0	1.50	1.50
D	TTWW+m	MT20	5.0	6.0	Edge	1.75
E	TMW+w	MT20	2.0	4.0		
F	TTWW+m	MT20	5.0	6.0	Edge	1.75
G	TMWW-t	MT20	3.0	4.0	1.50	1.50
H	TMVW-t	MT20	5.0	6.0	1.75	3.00
J	BMV1+p	MT20	3.0	4.0		
K	BMWW-t	MT20	4.0	5.0	1.50	1.75
L	BMWW-t	MT20	3.0	4.0		
M	BSWWW-I	MT20	5.0	6.0	3.00	3.00
N	BMWW-t	MT20	3.0	4.0		
O	BMWW-t	MT20	4.0	5.0	1.50	1.75
P	BMV1+p	MT20	3.0	4.0		

Edge - INDICATES REFERENCE CORNER OF PLATE TOUCHES EDGE OF CHORD.

DIMENSIONS, SUPPORTS AND LOADINGS SPECIFIED BY FABRICATOR TO BE VERIFIED BY BUILDING DESIGNER

BEARINGS

JT	FACTORED GROSS REACTION VERT	HORZ	MAXIMUM FACTORED GROSS REACTION DOWN	HORZ	UPLIFT	INPUT BRG	REQRD BRG
P	2149	0	2149	0	0	5-8	3-8
J	2149	0	2149	0	0	5-8	3-8

UNFACTORED REACTIONS

JT	1ST LCASE COMBINED	SNOW	MAX./MIN. COMPONENT REACTIONS LIVE	PERM.LIVE	WIND	DEAD	SOIL
P	1487	1162 / 0	0 / 0	0 / 0	0 / 0	324 / 0	0 / 0
J	1487	1162 / 0	0 / 0	0 / 0	0 / 0	324 / 0	0 / 0

BEARING MATERIAL TO BE SPF NO.2 OR BETTER AT JOINT(S) P, J

BRACING
TOP CHORD TO BE SHEATHED OR MAX. PURLIN SPACING = 3.99 FT.
MAX. UNBRACED BOTTOM CHORD LENGTH = 10.00 FT OR RIGID CEILING DIRECTLY APPLIED.

ALL PITCH BREAKS AND PERIMETER CORNER JOINTS MUST BE LATERALLY RESTRAINED.

2x4 DRY SPF No.2 T-BRACE AT E-M

FASTEN T AND I-BRACES TO NARROW EDGE OF WEB WITH ONE ROW PER PLY OF 3" COMMON WIRE NAILS @ 6" O.C. WITH 3" MINIMUM END DISTANCE. BRACE MUST COVER 90% OF WEB LENGTH.

END VERTICAL(S) MUST BE SHEATHED OR HAVE BRACES AS INDICATED IN THE MAX. UNBRACED LENGTH COLUMN OF THE TABLE BELOW

LOADING
TOTAL LOAD CASES: (4)

CHORDS

MEMB. FR-TO	MAX. FACTORED FORCE (LBS)	FACTORED VERT. LOAD (PLF) FROM	TO	LC1 MAX CSI (LC)	MAX. UNBRAC LENGTH
A- B	0 / 43	-111.9	-111.9	0.15 (1)	10.00
B- C	-2345 / 0	-111.9	-111.9	0.50 (1)	3.99
C- D	-2087 / 0	-111.9	-111.9	0.47 (1)	4.22
D- E	-1917 / 0	-111.9	-111.9	0.37 (1)	4.49
E- F	-1917 / 0	-111.9	-111.9	0.37 (1)	4.49
F- G	-2087 / 0	-111.9	-111.9	0.47 (1)	4.22
G- H	-2345 / 0	-111.9	-111.9	0.50 (1)	3.99
H- I	0 / 43	-111.9	-111.9	0.15 (1)	10.00
P- B	-2106 / 0	0.0	0.0	0.22 (1)	5.84
J- H	-2106 / 0	0.0	0.0	0.22 (1)	5.84
P- O	0 / 0	-18.2	-18.2	0.12 (4)	10.00
O- N	0 / 1983	-18.2	-18.2	0.38 (1)	10.00
N- M	0 / 1705	-18.2	-18.2	0.33 (1)	10.00
M- L	0 / 1705	-18.2	-18.2	0.33 (1)	10.00
L- K	0 / 1983	-18.2	-18.2	0.38 (1)	10.00
K- J	0 / 0	-18.2	-18.2	0.12 (4)	10.00

WEBS

MEMB. FR-TO	MAX. FACTORED FORCE (LBS)	MAX CSI (LC)
O- C	-297 / 33	0.11 (1)
C- N	-377 / 0	0.35 (1)
N- D	0 / 352	0.08 (1)
D- M	0 / 417	0.09 (1)
M- E	-651 / 0	0.33 (1)
M- F	0 / 417	0.09 (1)
L- F	0 / 352	0.08 (1)
L- G	-377 / 0	0.35 (1)
K- G	-297 / 33	0.11 (1)
B- O	0 / 2023	0.46 (1)
K- H	0 / 2023	0.46 (1)

DESIGN CRITERIA

SPECIFIED LOADS:

TOP CH.	LL	=	34.8	PSF
	DL	=	3.0	PSF
BOT CH.	LL	=	0.0	PSF
	DL	=	7.3	PSF
TOTAL LOAD		=	45.1	PSF

SPACING = 24.0 IN. C/C

LOADING IN FLAT SECTION BASED ON A SLOPE OF 2.00/12 MINIMUM

THIS TRUSS IS DESIGNED FOR RESIDENTIAL OR SMALL BUILDING REQUIREMENTS OF PART 9, NBCC 2015

THIS DESIGN COMPLIES WITH:
- PART 9 OF BCBC 2018 , ABC 2019
- PART 9 OF OBC 2012 (2019 AMENDMENT)
- CSA 086-14
- TPIC 2014

(55 % OF 48.1 P.S.F. G.S.L. PLUS 8.4 P.S.F. RAIN LOAD) EQUALS 34.8 P.S.F. SPECIFIED ROOF LIVE LOAD

ALLOWABLE DEFL.(LL)= L/360 (1.02")
CALCULATED VERT. DEFL.(LL) = L/ 999 (0.10")
ALLOWABLE DEFL.(TL)= L/360 (1.02")
CALCULATED VERT. DEFL.(TL) = L/ 999 (0.16")

CSI: TC=0.50/1.00 (B-C:1) , BC=0.38/1.00 (N-O:1) , WB=0.46/1.00 (B-O:1) , SSI=0.26/1.00 (E-F:1)

DOL LUMBER=1.00 NAIL=1.00 LS BEND=1.10 COMP=1.10 SHEAR=1.10 TENS= 1.10

COMPANION LIVE LOAD FACTOR = 1.00

TRUSS PLATE MANUFACTURER IS NOT RESPONSIBLE FOR QUALITY CONTROL IN THE TRUSS MANUFACTURING PLANT .

NAIL VALUES

PLATE	GRIP(DRY) (PSI) MAX	MIN	SHEAR (PLI) MAX	MIN	SECTION (PLI) MAX	MIN
MT20	650	371	1747	788	1987	1873

PLATE PLACEMENT TOL. = 0.250 inches

PLATE ROTATION TOL. = 5.0 Deg.

JSI GRIP= 0.86 (B) (INPUT = 0.90)
JSI METAL= 0.62 (H) (INPUT = 1.00)

LICENSED PROFESSIONAL ENGINEER
I.MATIJEVIC
100528832
PROVINCE OF ONTARIO
June 23, 2022

READ ALL NOTES ON THIS PAGE AND ON THE ENGINEERING NOTE PAGE ENP-1. THE NOTE PAGE IS AN INTEGRAL PART OF THIS DRAWING AS IT CONTAINS SPECIFICATIONS AND CRITERIA USED IN THE DESIGN OF THIS COMPONENT.

KOTT

CORPORATION OF THE CITY OF OSHAWA
TRUE COPY
OF BUILDING PLANS
Dec 06 2023
PER:
CHIEF BUILDING OFFICIAL
MHP 23018

JOB NAME	TRUSS NAME	QUANTITY	PLY	JOB DESC.	DRWG NO.
IM0622-131	T07			TRUSS DESC.	

Version 8.500 S Aug 16 2021 MiTek Industries, Inc. Thu Jun 23 08:36:25 2022 Page 1
ID:OzM1q?scz2BChOKfHahjdLzPugE-dyVIR485QDohV2RwjbfRm?0qeFB5zsvEwY1pCTz3Tlq
Scale = 1:76.6

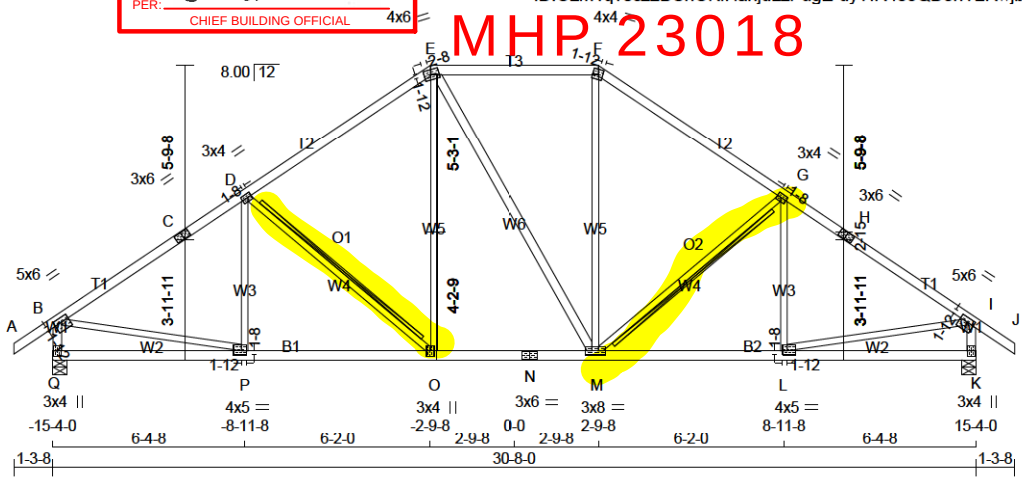

TOTAL WEIGHT = 140 lb
[M][F]

LUMBER
N. L. G. A. RULES

CHORDS	SIZE		LUMBER	DESCR.
A - C	2x4	DRY	No.2	SPF
C - E	2x4	DRY	No.2	SPF
E - F	2x4	DRY	No.2	SPF
F - H	2x4	DRY	No.2	SPF
H - J	2x4	DRY	No.2	SPF
Q - B	2x4	DRY	No.2	SPF
K - I	2x4	DRY	No.2	SPF
Q - N	2x4	DRY	No.2	SPF
N - K	2x4	DRY	No.2	SPF
ALL WEBS EXCEPT	2x3	DRY	No.2	SPF
E - M	2x4	DRY	No.2	SPF

DRY: SEASONED LUMBER.

PLATES (table is in inches)

JT	TYPE	PLATES	W	LEN	Y	X
B	TMVW-t	MT20	5.0	6.0	1.75	3.00
C	TS-t	MT20	3.0	6.0		
D	TMWW-t	MT20	3.0	4.0	1.50	1.50
E	TTWW-m	MT20	4.0	6.0	1.75	2.50
F	TTW-m	MT20	4.0	4.0	2.00	1.75
G	TMWW-t	MT20	3.0	4.0	1.50	1.50
H	TS-t	MT20	3.0	6.0		
I	TMVW-t	MT20	5.0	6.0	1.75	3.00
K	BMV1+p	MT20	3.0	4.0		
L	BMWW-t	MT20	4.0	5.0	1.50	1.75
M	BMWWW-t	MT20	3.0	8.0		
N	BS-t	MT20	3.0	6.0		
O	BMWW+t	MT20	3.0	4.0		
P	BMWW-t	MT20	4.0	5.0	1.50	1.75
Q	BMV1+p	MT20	3.0	4.0		

DIMENSIONS, SUPPORTS AND LOADINGS SPECIFIED BY FABRICATOR TO BE VERIFIED BY BUILDING DESIGNER

BEARINGS

JT	FACTORED GROSS REACTION VERT	HORZ	MAXIMUM FACTORED GROSS REACTION DOWN	HORZ	UPLIFT	INPUT BRG IN-SX	REQRD BRG IN-SX
Q	2149	0	2149	0	0	5-8	3-8
K	2149	0	2149	0	0	5-8	3-8

UNFACTORED REACTIONS

JT	1ST LCASE COMBINED	SNOW	MAX./MIN. COMPONENT REACTIONS LIVE	PERM.LIVE	WIND	DEAD	SOIL
Q	1487	1162 / 0	0 / 0	0 / 0	0 / 0	324 / 0	0 / 0
K	1487	1162 / 0	0 / 0	0 / 0	0 / 0	324 / 0	0 / 0

BEARING MATERIAL TO BE SPF NO.2 OR BETTER AT JOINT(S) Q, K

BRACING
TOP CHORD TO BE SHEATHED OR MAX. PURLIN SPACING = 3.65 FT.
MAX. UNBRACED BOTTOM CHORD LENGTH = 10.00 FT OR RIGID CEILING DIRECTLY APPLIED.

ALL PITCH BREAKS AND PERIMETER CORNER JOINTS MUST BE LATERALLY RESTRAINED.

2x4 DRY SPF No.2 T-BRACE AT D-O, G-M

FASTEN T AND I-BRACES TO NARROW EDGE OF WEB WITH ONE ROW PER PLY OF 3" COMMON WIRE NAILS @ 6" O.C. WITH 3" MINIMUM END DISTANCE. BRACE MUST COVER 90% OF WEB LENGTH.

END VERTICAL(S) MUST BE SHEATHED OR HAVE BRACES AS INDICATED IN THE MAX. UNBRACED LENGTH COLUMN OF THE TABLE BELOW

LOADING
TOTAL LOAD CASES: (4)

CHORDS MEMB. FR-TO	MAX. FACTORED FORCE (LBS)	FACTORED VERT. LOAD (PLF) FROM	TO	LC1 MAX CSI (LC)	MAX. UNBRAC LENGTH
A- B	0 / 43	-111.9	-111.9	0.15 (1)	10.00
B- C	-2360 / 0	-111.9	-111.9	0.73 (1)	3.65
C- D	-2360 / 0	-111.9	-111.9	0.73 (1)	3.65
D- E	-1930 / 0	-111.9	-111.9	0.66 (1)	4.06
E- F	-1570 / 0	-111.9	-111.9	0.48 (1)	4.68
F- G	-1931 / 0	-111.9	-111.9	0.66 (1)	4.06
G- H	-2359 / 0	-111.9	-111.9	0.73 (1)	3.65
H- I	-2359 / 0	-111.9	-111.9	0.73 (1)	3.65
I- J	0 / 43	-111.9	-111.9	0.15 (1)	10.00
Q- B	-2100 / 0	0.0	0.0	0.22 (1)	5.84
K- I	-2100 / 0	0.0	0.0	0.22 (1)	5.84
Q- P	0 / 0	-18.2	-18.2	0.18 (4)	10.00
P- O	0 / 2002	-18.2	-18.2	0.40 (1)	10.00
O- N	0 / 1569	-18.2	-18.2	0.32 (1)	10.00
N- M	0 / 1569	-18.2	-18.2	0.32 (1)	10.00
M- L	0 / 2002	-18.2	-18.2	0.40 (1)	10.00
L- K	0 / 0	-18.2	-18.2	0.18 (4)	10.00

WEBS MEMB. FR-TO	MAX. FACTORED FORCE (LBS)	MAX CSI (LC)
P- D	-211 / 73	0.10 (1)
D- O	-574 / 0	0.30 (1)
O- E	0 / 475	0.11 (1)
E- M	0 / 1	0.00 (1)
M- F	0 / 476	0.11 (1)
M- G	-573 / 0	0.30 (1)
L- G	-213 / 72	0.10 (1)
B- P	0 / 2030	0.46 (1)
L- I	0 / 2030	0.46 (1)

DESIGN CRITERIA

SPECIFIED LOADS:

TOP CH.	LL	=	34.8	PSF
	DL	=	3.0	PSF
BOT CH.	LL	=	0.0	PSF
	DL	=	7.3	PSF
TOTAL LOAD		=	45.1	PSF

SPACING = 24.0 IN. C/C

LOADING IN FLAT SECTION BASED ON A SLOPE OF 2.00/12 MINIMUM

THIS TRUSS IS DESIGNED FOR RESIDENTIAL OR SMALL BUILDING REQUIREMENTS OF PART 9, NBCC 2015

THIS DESIGN COMPLIES WITH:
- PART 9 OF BCBC 2018 , ABC 2019
- PART 9 OF OBC 2012 (2019 AMENDMENT)
- CSA 086-14
- TPIC 2014

(55 % OF 48.1 P.S.F. G.S.L. PLUS 8.4 P.S.F. RAIN LOAD) EQUALS 34.8 P.S.F. SPECIFIED ROOF LIVE LOAD

ALLOWABLE DEFL.(LL)= L/360 (1.02")
CALCULATED VERT. DEFL.(LL) = L/ 999 (0.09")
ALLOWABLE DEFL.(TL)= L/360 (1.02")
CALCULATED VERT. DEFL.(TL) = L/ 999 (0.17")

CSI: TC=0.73/1.00 (B-D:1) , BC=0.40/1.00 (O-P:1) , WB=0.46/1.00 (B-P:1) , SSI=0.29/1.00 (G-I:1)

DOL LUMBER=1.00 NAIL=1.00 LS BEND=1.10 COMP=1.10 SHEAR=1.10 TENS= 1.10

COMPANION LIVE LOAD FACTOR = 1.00

TRUSS PLATE MANUFACTURER IS NOT RESPONSIBLE FOR QUALITY CONTROL IN THE TRUSS MANUFACTURING PLANT .

NAIL VALUES

PLATE	GRIP(DRY) (PSI) MAX	MIN	SHEAR (PLI) MAX	MIN	SECTION (PLI) MAX	MIN
MT20	650	371	1747	788	1987	1873

PLATE PLACEMENT TOL. = 0.250 inches

PLATE ROTATION TOL. = 5.0 Deg.

JSI GRIP= 0.85 (B) (INPUT = 0.90)
JSI METAL= 0.63 (B) (INPUT = 1.00)

LICENSED PROFESSIONAL ENGINEER
I.MATIJEVIC
100528832
PROVINCE OF ONTARIO
June 23, 2022

READ ALL NOTES ON THIS PAGE AND ON THE ENGINEERING NOTE PAGE ENP-1. THE NOTE PAGE IS AN INTEGRAL PART OF THIS DRAWING AS IT CONTAINS SPECIFICATIONS AND CRITERIA USED IN THE DESIGN OF THIS COMPONENT.

KOTT

CORPORATION OF THE CITY OF OSHAWA
TRUE COPY
OF ORIGINAL PLANS
Dec 06 2023
PER:
CHIEF BUILDING OFFICIAL

JOB NAME	TRUSS NAME	QUANTITY	PLY	JOB DESC.	DRWG NO.
IM0622-131	T08			TRUSS DESC.	

Version 8.500 S Aug 16 2021 MiTek Industries, Inc. Thu Jun 23 08:36:26 2022 Page 1
ID:OzM1q?scz2BChOKfHahjdLzPugE-593geQ9jBXwY7C07HlAgIDY1HfWciloO9CmMlvz3Tlp
Scale = 1:99.1

MHP 23018

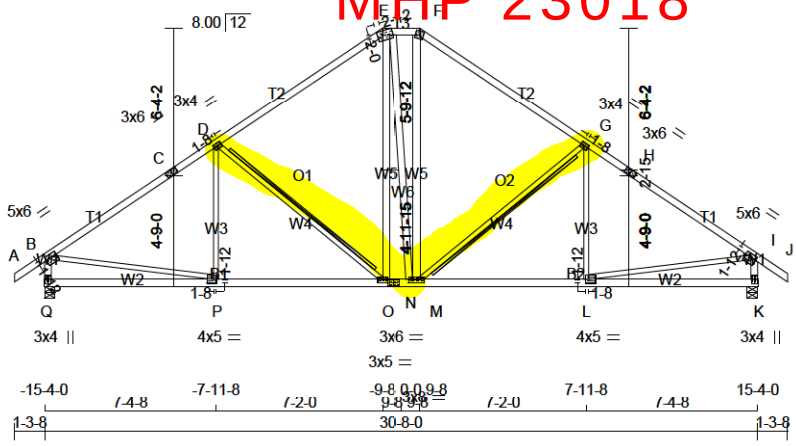

TOTAL WEIGHT = 154 lb
[M][F]

LUMBER
N. L. G. A. RULES

CHORDS	SIZE		LUMBER	DESCR.
A - C	2x4	DRY	2100F 1.8E	SPF
C - E	2x4	DRY	2100F 1.8E	SPF
E - F	2x4	DRY	No.2	SPF
F - H	2x4	DRY	2100F 1.8E	SPF
H - J	2x4	DRY	2100F 1.8E	SPF
Q - B	2x4	DRY	No.2	SPF
K - I	2x4	DRY	No.2	SPF
Q - N	2x4	DRY	No.2	SPF
N - K	2x4	DRY	No.2	SPF
ALL WEBS	2x3	DRY	No.2	SPF
EXCEPT				
O - E	2x4	DRY	No.2	SPF
E - M	2x4	DRY	No.2	SPF
M - F	2x4	DRY	No.2	SPF

DRY: SEASONED LUMBER.

PLATES (table is in inches)

JT	TYPE	PLATES	W	LEN	Y	X
B	TMVW-t	MT20	5.0	6.0	1.75	3.00
C	TS-t	MT20	3.0	6.0		
D	TMWW-t	MT20	3.0	4.0	1.50	1.50
E	TTWW-m	MT20	5.0	8.0	2.00	2.75
F	TTW-m	MT20	4.0	4.0		
G	TMWW-t	MT20	3.0	4.0	1.50	1.50
H	TS-t	MT20	3.0	6.0		
I	TMVW-t	MT20	5.0	6.0	1.75	3.00
K	BMV1+p	MT20	3.0	4.0		
L	BMWW-t	MT20	4.0	5.0	1.75	1.50
M	BMWWW-t	MT20	3.0	8.0		
N	BS-t	MT20	3.0	6.0		
O	BMWW-t	MT20	3.0	5.0		
P	BMWW-t	MT20	4.0	5.0	1.75	1.50
Q	BMV1+p	MT20	3.0	4.0		

DIMENSIONS, SUPPORTS AND LOADINGS SPECIFIED BY FABRICATOR TO BE VERIFIED BY BUILDING DESIGNER

BEARINGS

JT	FACTORED GROSS REACTION VERT	HORZ	MAXIMUM FACTORED GROSS REACTION DOWN	HORZ	UPLIFT	INPUT BRG IN-SX	REQRD BRG IN-SX
Q	2149	0	2149	0	0	5-8	3-8
K	2149	0	2149	0	0	5-8	3-8

UNFACTORED REACTIONS

JT	1ST LCASE COMBINED	SNOW	MAX./MIN. COMPONENT REACTIONS LIVE	PERM.LIVE	WIND	DEAD	SOIL
Q	1487	1162 / 0	0 / 0	0 / 0	0 / 0	324 / 0	0 / 0
K	1487	1162 / 0	0 / 0	0 / 0	0 / 0	324 / 0	0 / 0

BEARING MATERIAL TO BE SPF NO.2 OR BETTER AT JOINT(S) Q, K

BRACING
TOP CHORD TO BE SHEATHED OR MAX. PURLIN SPACING = 4.66 FT.
MAX. UNBRACED BOTTOM CHORD LENGTH = 10.00 FT OR RIGID CEILING DIRECTLY APPLIED.

ALL PITCH BREAKS AND PERIMETER CORNER JOINTS MUST BE LATERALLY RESTRAINED.

2x4 DRY SPF No.2 T-BRACE AT D-O, G-M

FASTEN T AND I-BRACES TO NARROW EDGE OF WEB WITH ONE ROW PER PLY OF 3" COMMON WIRE NAILS @ 6" O.C. WITH 3" MINIMUM END DISTANCE. BRACE MUST COVER 90% OF WEB LENGTH.

END VERTICAL(S) MUST BE SHEATHED OR HAVE BRACES AS INDICATED IN THE MAX. UNBRACED LENGTH COLUMN OF THE TABLE BELOW

LOADING
TOTAL LOAD CASES: (4)

CHORDS

MEMB. FR-TO	MAX. FACTORED FORCE (LBS)	FACTORED VERT. LOAD (PLF) FROM	TO	LC1 MAX CSI (LC)	MAX. UNBRAC LENGTH
A- B	0 / 43	-111.9	-111.9	0.10 (1)	10.00
B- C	-2349 / 0	-111.9	-111.9	0.61 (1)	4.66
C- D	-2349 / 0	-111.9	-111.9	0.61 (1)	4.66
D- E	-1753 / 0	-111.9	-111.9	0.56 (1)	5.26
E- F	-1421 / 0	-111.9	-111.9	0.06 (1)	5.44
F- G	-1756 / 0	-111.9	-111.9	0.56 (1)	5.26
G- H	-2348 / 0	-111.9	-111.9	0.61 (1)	4.66
H- I	-2348 / 0	-111.9	-111.9	0.61 (1)	4.66
I- J	0 / 43	-111.9	-111.9	0.10 (1)	10.00
Q- B	-2094 / 0	0.0	0.0	0.22 (1)	5.85
K- I	-2094 / 0	0.0	0.0	0.22 (1)	5.85
Q- P	0 / 0	-18.2	-18.2	0.25 (4)	10.00
P- O	0 / 2000	-18.2	-18.2	0.45 (1)	10.00
O- N	0 / 1418	-18.2	-18.2	0.33 (1)	10.00
N- M	0 / 1418	-18.2	-18.2	0.33 (1)	10.00
M- L	0 / 1999	-18.2	-18.2	0.44 (1)	10.00
L- K	0 / 0	-18.2	-18.2	0.25 (4)	10.00

WEBS

MEMB. FR-TO	MAX. FACTORED FORCE (LBS)	MAX CSI (LC)
P- D	-139 / 110	0.09 (1)
D- O	-762 / 0	0.54 (1)
O- E	0 / 535	0.09 (1)
E- M	0 / 20	0.00 (1)
M- F	0 / 556	0.09 (1)
M- G	-757 / 0	0.54 (1)
L- G	-144 / 108	0.09 (1)
B- P	0 / 2021	0.45 (1)
L- I	0 / 2020	0.45 (1)

DESIGN CRITERIA

SPECIFIED LOADS:

TOP	CH.	LL	=	34.8	PSF
		DL	=	3.0	PSF
BOT	CH.	LL	=	0.0	PSF
		DL	=	7.3	PSF
TOTAL	LOAD		=	45.1	PSF

SPACING = 24.0 IN. C/C

LOADING IN FLAT SECTION BASED ON A SLOPE OF 2.00/12 MINIMUM

THIS TRUSS IS DESIGNED FOR RESIDENTIAL OR SMALL BUILDING REQUIREMENTS OF PART 9, NBCC 2015

THIS DESIGN COMPLIES WITH:
- PART 9 OF BCBC 2018 , ABC 2019
- PART 9 OF OBC 2012 (2019 AMENDMENT)
- CSA 086-14
- TPIC 2014

(55 % OF 48.1 P.S.F. G.S.L. PLUS 8.4 P.S.F. RAIN LOAD) EQUALS 34.8 P.S.F. SPECIFIED ROOF LIVE LOAD

ALLOWABLE DEFL.(LL)= L/360 (1.02")
CALCULATED VERT. DEFL.(LL) = L/ 999 (0.09")
ALLOWABLE DEFL.(TL)= L/360 (1.02")
CALCULATED VERT. DEFL.(TL) = L/ 999 (0.18")

CSI: TC=0.61/1.00 (B-D:1) , BC=0.45/1.00 (O-P:1) , WB=0.54/1.00 (D-O:1) , SSI=0.33/1.00 (B-D:1)

DOL LUMBER=1.00 NAIL=1.00 LS BEND=1.10 COMP=1.10 SHEAR=1.10 TENS= 1.10

COMPANION LIVE LOAD FACTOR = 1.00

TRUSS PLATE MANUFACTURER IS NOT RESPONSIBLE FOR QUALITY CONTROL IN THE TRUSS MANUFACTURING PLANT .

NAIL VALUES

PLATE	GRIP(DRY) (PSI) MAX	MIN	SHEAR (PLI) MAX	MIN	SECTION (PLI) MAX	MIN
MT20	650	371	1747	788	1987	1873

PLATE PLACEMENT TOL. = 0.250 inches

PLATE ROTATION TOL. = 5.0 Deg.

JSI GRIP= 0.85 (B) (INPUT = 0.90)
JSI METAL= 0.63 (B) (INPUT = 1.00)

LICENSED PROFESSIONAL ENGINEER
I.MATIJEVIC
100528832
PROVINCE OF ONTARIO
June 23, 2022

READ ALL NOTES ON THIS PAGE AND ON THE ENGINEERING NOTE PAGE ENP-1. THE NOTE PAGE IS AN INTEGRAL PART OF THIS DRAWING AS IT CONTAINS SPECIFICATIONS AND CRITERIA USED IN THE DESIGN OF THIS COMPONENT.

KOTT

CORPORATION OF THE CITY OF OSHAWA
TRUE COPY
OF APPROVED PLANS
Dec 06 2023
PER:
CHIEF BUILDING OFFICIAL

JOB NAME	TRUSS NAME	QUANTITY	PLY	JOB DESC.	DRWG NO.
IM0622-131	T09			TRUSS DESC.	

Version 8.500 S Aug 16 2021 MiTek Industries, Inc. Thu Jun 23 08:36:27 2022 Page 1
ID:OzM1q?scz2BChOKfHahjdLzPugE-ZLd2smALyq2PkMbJr0hvrQ5Dq3s?RmFXOsWwHMz3Tlo
Scale = 1:90.5

MHP 23018

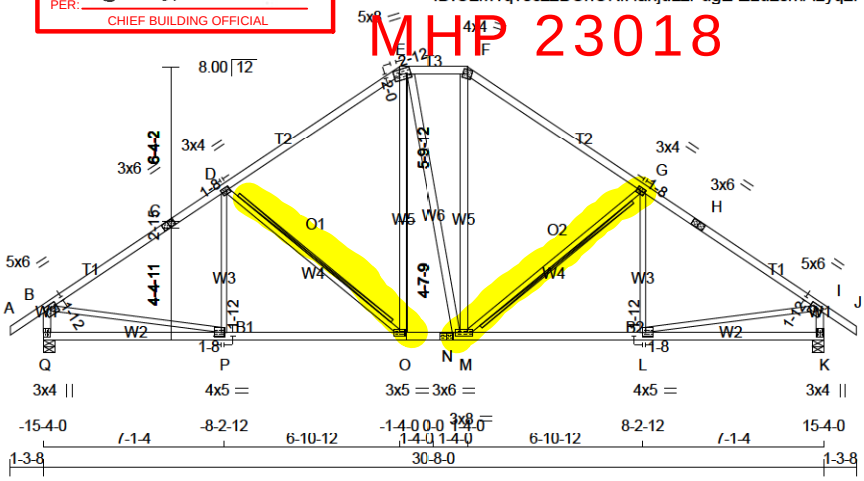

TOTAL WEIGHT = 152 lb
[M][F]

LUMBER
N. L. G. A. RULES

CHORDS	SIZE		LUMBER	DESCR.
A - C	2x4	DRY	2100F 1.8E	SPF
C - E	2x4	DRY	2100F 1.8E	SPF
E - F	2x4	DRY	No.2	SPF
F - H	2x4	DRY	2100F 1.8E	SPF
H - J	2x4	DRY	2100F 1.8E	SPF
Q - B	2x4	DRY	No.2	SPF
K - I	2x4	DRY	No.2	SPF
Q - N	2x4	DRY	No.2	SPF
N - K	2x4	DRY	No.2	SPF
ALL WEBS	2x3	DRY	No.2	SPF
EXCEPT				
O - E	2x4	DRY	No.2	SPF
E - M	2x4	DRY	No.2	SPF
M - F	2x4	DRY	No.2	SPF

DRY: SEASONED LUMBER.

PLATES (table is in inches)

JT	TYPE	PLATES	W	LEN	Y	X
B	TMVW-t	MT20	5.0	6.0	1.75	3.00
C	TS-t	MT20	3.0	6.0		
D	TMWW-t	MT20	3.0	4.0	1.50	1.50
E	TTWW-m	MT20	5.0	8.0	2.00	2.75
F	TTW-m	MT20	4.0	4.0		
G	TMWW-t	MT20	3.0	4.0	1.50	1.50
H	TS-t	MT20	3.0	6.0		
I	TMVW-t	MT20	5.0	6.0	1.75	3.00
K	BMV1+p	MT20	3.0	4.0		
L	BMWW-t	MT20	4.0	5.0	1.75	1.50
M	BMWWW-t	MT20	3.0	8.0		
N	BS-t	MT20	3.0	6.0		
O	BMWW-t	MT20	3.0	5.0		
P	BMWW-t	MT20	4.0	5.0	1.75	1.50
Q	BMV1+p	MT20	3.0	4.0		

DIMENSIONS, SUPPORTS AND LOADINGS SPECIFIED BY FABRICATOR TO BE VERIFIED BY BUILDING DESIGNER

BEARINGS

JT	FACTORED GROSS REACTION VERT	HORZ	MAXIMUM FACTORED GROSS REACTION DOWN	HORZ	UPLIFT	INPUT BRG IN-SX	REQRD BRG IN-SX
Q	2149	0	2149	0	0	5-8	3-8
K	2149	0	2149	0	0	5-8	3-8

UNFACTORED REACTIONS

JT	1ST LCASE COMBINED	SNOW	MAX./MIN. COMPONENT REACTIONS LIVE	PERM.LIVE	WIND	DEAD	SOIL
Q	1487	1162 / 0	0 / 0	0 / 0	0 / 0	324 / 0	0 / 0
K	1487	1162 / 0	0 / 0	0 / 0	0 / 0	324 / 0	0 / 0

BEARING MATERIAL TO BE SPF NO.2 OR BETTER AT JOINT(S) Q, K

BRACING
TOP CHORD TO BE SHEATHED OR MAX. PURLIN SPACING = 4.74 FT.
MAX. UNBRACED BOTTOM CHORD LENGTH = 10.00 FT OR RIGID CEILING DIRECTLY APPLIED.

ALL PITCH BREAKS AND PERIMETER CORNER JOINTS MUST BE LATERALLY RESTRAINED.

2x4 DRY SPF No.2 T-BRACE AT D-O, G-M

FASTEN T AND I-BRACES TO NARROW EDGE OF WEB WITH ONE ROW PER PLY OF 3" COMMON WIRE NAILS @ 6" O.C. WITH 3" MINIMUM END DISTANCE. BRACE MUST COVER 90% OF WEB LENGTH.

END VERTICAL(S) MUST BE SHEATHED OR HAVE BRACES AS INDICATED IN THE MAX. UNBRACED LENGTH COLUMN OF THE TABLE BELOW

LOADING
TOTAL LOAD CASES: (4)

CHORDS

MEMB. FR-TO	MAX. FACTORED FORCE (LBS)	FACTORED VERT. LOAD (PLF) FROM	TO	LC1 MAX CSI (LC)	MAX. UNBRAC LENGTH
A- B	0 / 43	-111.9	-111.9	0.10 (1)	10.00
B- C	-2354 / 0	-111.9	-111.9	0.56 (1)	4.74
C- D	-2354 / 0	-111.9	-111.9	0.56 (1)	4.74
D- E	-1801 / 0	-111.9	-111.9	0.51 (1)	5.29
E- F	-1461 / 0	-111.9	-111.9	0.12 (1)	5.30
F- G	-1803 / 0	-111.9	-111.9	0.51 (1)	5.29
G- H	-2354 / 0	-111.9	-111.9	0.56 (1)	4.74
H- I	-2354 / 0	-111.9	-111.9	0.56 (1)	4.74
I- J	0 / 43	-111.9	-111.9	0.10 (1)	10.00
Q- B	-2096 / 0	0.0	0.0	0.22 (1)	5.85
K- I	-2096 / 0	0.0	0.0	0.22 (1)	5.85
Q- P	0 / 0	-18.2	-18.2	0.23 (4)	10.00
P- O	0 / 2002	-18.2	-18.2	0.44 (1)	10.00
O- N	0 / 1460	-18.2	-18.2	0.31 (1)	10.00
N- M	0 / 1460	-18.2	-18.2	0.31 (1)	10.00
M- L	0 / 2002	-18.2	-18.2	0.44 (1)	10.00
L- K	0 / 0	-18.2	-18.2	0.23 (4)	10.00

WEBS

MEMB. FR-TO	MAX. FACTORED FORCE (LBS)	MAX CSI (LC)
P- D	-156 / 102	0.09 (1)
D- O	-713 / 0	0.47 (1)
O- E	0 / 528	0.08 (1)
E- M	0 / 6	0.00 (1)
M- F	0 / 534	0.09 (1)
M- G	-710 / 0	0.46 (1)
L- G	-159 / 101	0.09 (1)
B- P	0 / 2025	0.46 (1)
L- I	0 / 2025	0.46 (1)

DESIGN CRITERIA

SPECIFIED LOADS:

TOP CH.	LL	=	34.8	PSF
	DL	=	3.0	PSF
BOT CH.	LL	=	0.0	PSF
	DL	=	7.3	PSF
TOTAL LOAD		=	45.1	PSF

SPACING = 24.0 IN. C/C

LOADING IN FLAT SECTION BASED ON A SLOPE OF 2.00/12 MINIMUM

THIS TRUSS IS DESIGNED FOR RESIDENTIAL OR SMALL BUILDING REQUIREMENTS OF PART 9, NBCC 2015

THIS DESIGN COMPLIES WITH:
- PART 9 OF BCBC 2018 , ABC 2019
- PART 9 OF OBC 2012 (2019 AMENDMENT)
- CSA 086-14
- TPIC 2014

(55 % OF 48.1 P.S.F. G.S.L. PLUS 8.4 P.S.F. RAIN LOAD) EQUALS 34.8 P.S.F. SPECIFIED ROOF LIVE LOAD

ALLOWABLE DEFL.(LL)= L/360 (1.02")
CALCULATED VERT. DEFL.(LL) = L/ 999 (0.09")
ALLOWABLE DEFL.(TL)= L/360 (1.02")
CALCULATED VERT. DEFL.(TL) = L/ 999 (0.17")

CSI: TC=0.56/1.00 (B-D:1) , BC=0.44/1.00 (O-P:1) , WB=0.47/1.00 (D-O:1) , SSI=0.32/1.00 (B-D:1)

DOL LUMBER=1.00 NAIL=1.00 LS BEND=1.10 COMP=1.10 SHEAR=1.10 TENS= 1.10

COMPANION LIVE LOAD FACTOR = 1.00

TRUSS PLATE MANUFACTURER IS NOT RESPONSIBLE FOR QUALITY CONTROL IN THE TRUSS MANUFACTURING PLANT .

NAIL VALUES

PLATE	GRIP(DRY) (PSI) MAX	MIN	SHEAR (PLI) MAX	MIN	SECTION (PLI) MAX	MIN
MT20	650	371	1747	788	1987	1873

PLATE PLACEMENT TOL. = 0.250 inches

PLATE ROTATION TOL. = 5.0 Deg.

JSI GRIP= 0.85 (B) (INPUT = 0.90)
JSI METAL= 0.63 (B) (INPUT = 1.00)

LICENSED PROFESSIONAL ENGINEER
I.MATIJEVIC
100528832
PROVINCE OF ONTARIO
June 23, 2022

READ ALL NOTES ON THIS PAGE AND ON THE ENGINEERING NOTE PAGE ENP-1. THE NOTE PAGE IS AN INTEGRAL PART OF THIS DRAWING AS IT CONTAINS SPECIFICATIONS AND CRITERIA USED IN THE DESIGN OF THIS COMPONENT.

KOTT

CORPORATION OF THE CITY OF OSHAWA
TRUE COPY
OF BUILDING PLANS
Dec 06 2023
PER: C Matt
CHIEF BUILDING OFFICIAL

JOB NAME	TRUSS NAME	QUANTITY	PLY	JOB DESC.	DRWG NO.
IM0622-131	T10			TRUSS DESC.	

Version 8.500 S Aug 16 2021 MiTek Industries, Inc. Thu Jun 23 08:36:28 2022 Page 1
ID:OzM1q?scz2BChOKfHahjdLzPugE-1XAR36Bzj8AGMWAVPjC8NeeMzTCpAATgcWFTpoz3TIn
Scale = 1:73.7

MHP 23018

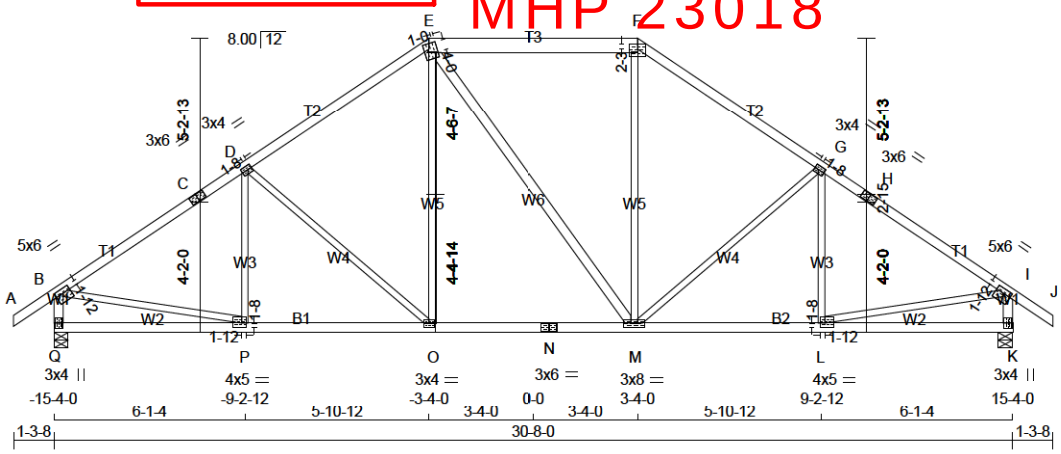

TOTAL WEIGHT = 142 lb
[M][F]

LUMBER
N. L. G. A. RULES

CHORDS	SIZE		LUMBER	DESCR.
A - C	2x4	DRY	No.2	SPF
C - E	2x4	DRY	No.2	SPF
E - F	2x6	DRY	No.2	SPF
F - H	2x4	DRY	No.2	SPF
H - J	2x4	DRY	No.2	SPF
Q - B	2x4	DRY	No.2	SPF
K - I	2x4	DRY	No.2	SPF
Q - N	2x4	DRY	No.2	SPF
N - K	2x4	DRY	No.2	SPF
ALL WEBS EXCEPT	2x3	DRY	No.2	SPF
E - M	2x4	DRY	No.2	SPF

DRY: SEASONED LUMBER.

PLATES (table is in inches)

JT	TYPE	PLATES	W	LEN	Y	X
B	TMVW-t	MT20	5.0	6.0	1.75	3.00
C	TS-t	MT20	3.0	6.0		
D	TMWW-t	MT20	3.0	4.0	1.50	1.50
E	TTWW+m	MT20	5.0	6.0	4.00	1.00
F	TTW-I	MT20	5.0	6.0	2.25	3.00
G	TMWW-t	MT20	3.0	4.0	1.50	1.50
H	TS-t	MT20	3.0	6.0		
I	TMVW-t	MT20	5.0	6.0	1.75	3.00
K	BMV1+p	MT20	3.0	4.0		
L	BMWW-t	MT20	4.0	5.0	1.50	1.75
M	BMWWW-t	MT20	3.0	8.0		
N	BS-t	MT20	3.0	6.0		
O	BMWW-t	MT20	3.0	4.0		
P	BMWW-t	MT20	4.0	5.0	1.50	1.75
Q	BMV1+p	MT20	3.0	4.0		

DIMENSIONS, SUPPORTS AND LOADINGS SPECIFIED BY FABRICATOR TO BE VERIFIED BY BUILDING DESIGNER

BEARINGS

JT	FACTORED GROSS REACTION VERT	HORZ	MAXIMUM FACTORED GROSS REACTION DOWN	HORZ	UPLIFT	INPUT BRG IN-SX	REQRD BRG IN-SX
Q	2149	0	2149	0	0	5-8	3-8
K	2149	0	2149	0	0	5-8	3-8

UNFACTORED REACTIONS

JT	1ST LCASE COMBINED	SNOW	MAX./MIN. COMPONENT REACTIONS LIVE	PERM.LIVE	WIND	DEAD	SOIL
Q	1487	1162 / 0	0 / 0	0 / 0	0 / 0	324 / 0	0 / 0
K	1487	1162 / 0	0 / 0	0 / 0	0 / 0	324 / 0	0 / 0

BEARING MATERIAL TO BE SPF NO.2 OR BETTER AT JOINT(S) Q, K

BRACING
TOP CHORD TO BE SHEATHED OR MAX. PURLIN SPACING = 3.76 FT.
MAX. UNBRACED BOTTOM CHORD LENGTH = 10.00 FT OR RIGID CEILING DIRECTLY APPLIED.

ALL PITCH BREAKS AND PERIMETER CORNER JOINTS MUST BE LATERALLY RESTRAINED.

LOADING
TOTAL LOAD CASES: (4)

CHORDS

MEMB. FR-TO	MAX. FACTORED FORCE (LBS)	FACTORED VERT. LOAD (PLF) FROM	TO	LC1 MAX CSI (LC)	MAX. UNBRAC LENGTH
A- B	0 / 43	-111.9	-111.9	0.15 (1)	10.00
B- C	-2358 / 0	-111.9	-111.9	0.66 (1)	3.76
C- D	-2358 / 0	-111.9	-111.9	0.66 (1)	3.76
D- E	-1978 / 0	-111.9	-111.9	0.60 (1)	4.11
E- F	-1617 / 0	-111.9	-111.9	0.33 (1)	5.77
F- G	-1979 / 0	-111.9	-111.9	0.60 (1)	4.11
G- H	-2358 / 0	-111.9	-111.9	0.66 (1)	3.76
H- I	-2358 / 0	-111.9	-111.9	0.66 (1)	3.76
I- J	0 / 43	-111.9	-111.9	0.15 (1)	10.00
Q- B	-2101 / 0	0.0	0.0	0.22 (1)	5.84
K- I	-2101 / 0	0.0	0.0	0.22 (1)	5.84
Q- P	0 / 0	-18.2	-18.2	0.15 (4)	10.00
P- O	0 / 1999	-18.2	-18.2	0.40 (1)	10.00
O- N	0 / 1617	-18.2	-18.2	0.34 (1)	10.00
N- M	0 / 1617	-18.2	-18.2	0.34 (1)	10.00
M- L	0 / 1998	-18.2	-18.2	0.40 (1)	10.00
L- K	0 / 0	-18.2	-18.2	0.15 (4)	10.00

WEBS

MEMB. FR-TO	MAX. FACTORED FORCE (LBS)	MAX CSI (LC)
P- D	-236 / 59	0.11 (1)
D- O	-510 / 0	0.66 (1)
O- E	0 / 446	0.10 (1)
E- M	0 / 1	0.00 (1)
M- F	0 / 447	0.10 (1)
M- G	-509 / 0	0.66 (1)
L- G	-237 / 59	0.11 (1)
B- P	0 / 2030	0.46 (1)
L- I	0 / 2029	0.46 (1)

DESIGN CRITERIA

SPECIFIED LOADS:

TOP	CH.	LL	=	34.8	PSF
		DL	=	3.0	PSF
BOT	CH.	LL	=	0.0	PSF
		DL	=	7.3	PSF
TOTAL	LOAD		=	45.1	PSF

SPACING = 24.0 IN. C/C

LOADING IN FLAT SECTION BASED ON A SLOPE OF 2.00/12 MINIMUM

THIS TRUSS IS DESIGNED FOR RESIDENTIAL OR SMALL BUILDING REQUIREMENTS OF PART 9, NBCC 2015

THIS DESIGN COMPLIES WITH:
- PART 9 OF BCBC 2018 , ABC 2019
- PART 9 OF OBC 2012 (2019 AMENDMENT)
- CSA 086-14
- TPIC 2014

(55 % OF 48.1 P.S.F. G.S.L. PLUS 8.4 P.S.F. RAIN LOAD) EQUALS 34.8 P.S.F. SPECIFIED ROOF LIVE LOAD

ALLOWABLE DEFL.(LL)= L/360 (1.02")
CALCULATED VERT. DEFL.(LL) = L/ 999 (0.09")
ALLOWABLE DEFL.(TL)= L/360 (1.02")
CALCULATED VERT. DEFL.(TL) = L/ 999 (0.17")

CSI: TC=0.66/1.00 (B-D:1) , BC=0.40/1.00 (L-M:1) , WB=0.66/1.00 (D-O:1) , SSI=0.27/1.00 (G-I:1)

DOL LUMBER=1.00 NAIL=1.00 LS BEND=1.10 COMP=1.10 SHEAR=1.10 TENS= 1.10

COMPANION LIVE LOAD FACTOR = 1.00

TRUSS PLATE MANUFACTURER IS NOT RESPONSIBLE FOR QUALITY CONTROL IN THE TRUSS MANUFACTURING PLANT .

NAIL VALUES

PLATE	GRIP(DRY) (PSI) MAX	MIN	SHEAR (PLI) MAX	MIN	SECTION (PLI) MAX	MIN
MT20	650	371	1747	788	1987	1873

PLATE PLACEMENT TOL. = 0.250 inches

PLATE ROTATION TOL. = 5.0 Deg.

JSI GRIP= 0.85 (B) (INPUT = 0.90)
JSI METAL= 0.63 (B) (INPUT = 1.00)

LICENSED PROFESSIONAL ENGINEER
I.MATIJEVIC
100528832
PROVINCE OF ONTARIO
June 23, 2022

READ ALL NOTES ON THIS PAGE AND ON THE ENGINEERING NOTE PAGE ENP-1. THE NOTE PAGE IS AN INTEGRAL PART OF THIS DRAWING AS IT CONTAINS SPECIFICATIONS AND CRITERIA USED IN THE DESIGN OF THIS COMPONENT.

KOTT

CORPORATION OF THE CITY OF OSHAWA
TRUE COPY
OF ORIGINAL PLANS
Dec 06 2023
PER: C Martin
CHIEF BUILDING OFFICIAL

MHP 23018

JOB NAME	TRUSS NAME	QUANTITY	JOB DESC.	DRWG NO.
IM0622-131	T11	1 PLY	TRUSS DESC.	

Version 8.500 S Aug 16 2021 MiTek Industries, Inc. Thu Jun 23 08:36:29 2022 Page 1
ID:OzM1q?scz2BChOKfHahjdLzPugE-VkkpHSCcUSI7_glhyQjNwrAastZMvZoqrA?0LEz3TIm
Scale = 1:64.7

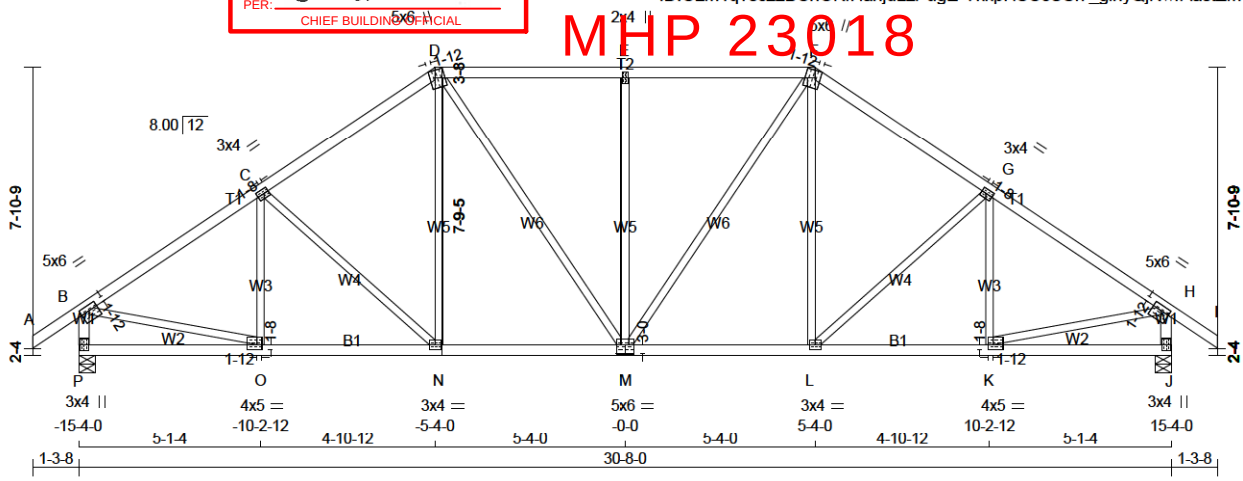

TOTAL WEIGHT = 139 lb
[M][F]

LUMBER
N. L. G. A. RULES

CHORDS	SIZE		LUMBER	DESCR.
A - D	2x4	DRY	No.2	SPF
D - F	2x4	DRY	No.2	SPF
F - I	2x4	DRY	No.2	SPF
P - B	2x4	DRY	No.2	SPF
J - H	2x4	DRY	No.2	SPF
P - M	2x4	DRY	No.2	SPF
M - J	2x4	DRY	No.2	SPF
ALL WEBS EXCEPT	2x3	DRY	No.2	SPF

DRY: SEASONED LUMBER.

PLATES (table is in inches)

JT	TYPE	PLATES	W	LEN	Y	X
B	TMVW-t	MT20	5.0	6.0	1.75	3.00
C	TMWW-t	MT20	3.0	4.0	1.50	1.50
D	TTWW+m	MT20	5.0	6.0	Edge	1.75
E	TMW+w	MT20	2.0	4.0		
F	TTWW+m	MT20	5.0	6.0	Edge	1.75
G	TMWW-t	MT20	3.0	4.0	1.50	1.50
H	TMVW-t	MT20	5.0	6.0	1.75	3.00
J	BMV1+p	MT20	3.0	4.0		
K	BMWW-t	MT20	4.0	5.0	1.50	1.75
L	BMWW-t	MT20	3.0	4.0		
M	BSWWW-I	MT20	5.0	6.0	3.00	3.00
N	BMWW-t	MT20	3.0	4.0		
O	BMWW-t	MT20	4.0	5.0	1.50	1.75
P	BMV1+p	MT20	3.0	4.0		

Edge - INDICATES REFERENCE CORNER OF PLATE TOUCHES EDGE OF CHORD.

DIMENSIONS, SUPPORTS AND LOADINGS SPECIFIED BY FABRICATOR TO BE VERIFIED BY BUILDING DESIGNER

BEARINGS

JT	FACTORED GROSS REACTION VERT	HORZ	MAXIMUM FACTORED GROSS REACTION DOWN	HORZ	UPLIFT	INPUT BRG	REQRD BRG
P	2149	0	2149	0	0	IN-SX	IN-SX
J	2149	0	2149	0	0	IN-SX	IN-SX

UNFACTORED REACTIONS

JT	1ST LCASE COMBINED	SNOW	MAX./MIN. COMPONENT REACTIONS LIVE	PERM.LIVE	WIND	DEAD	SOIL
P	1487	1162 / 0	0 / 0	0 / 0	0 / 0	324 / 0	0 / 0
J	1487	1162 / 0	0 / 0	0 / 0	0 / 0	324 / 0	0 / 0

BEARING MATERIAL TO BE SPF NO.2 OR BETTER AT JOINT(S) P, J

BRACING
TOP CHORD TO BE SHEATHED OR MAX. PURLIN SPACING = 4.06 FT.
MAX. UNBRACED BOTTOM CHORD LENGTH = 10.00 FT OR RIGID CEILING DIRECTLY APPLIED.

ALL PITCH BREAKS AND PERIMETER CORNER JOINTS MUST BE LATERALLY RESTRAINED.

LOADING
TOTAL LOAD CASES: (4)

CHORDS

MEMB. FR-TO	MAX. FACTORED FORCE (LBS)	FACTORED VERT. LOAD (PLF) FROM	TO	LC1 MAX CSI (LC)	MAX. UNBRAC LENGTH
A- B	0 / 43	-111.9	-111.9	0.15 (1)	10.00
B- C	-2335 / 0	-111.9	-111.9	0.45 (1)	4.06
C- D	-2126 / 0	-111.9	-111.9	0.42 (1)	4.24
D- E	-2016 / 0	-111.9	-111.9	0.46 (1)	4.27
E- F	-2016 / 0	-111.9	-111.9	0.46 (1)	4.27
F- G	-2126 / 0	-111.9	-111.9	0.42 (1)	4.24
G- H	-2335 / 0	-111.9	-111.9	0.45 (1)	4.06
H- I	0 / 43	-111.9	-111.9	0.15 (1)	10.00
P- B	-2107 / 0	0.0	0.0	0.22 (1)	5.84
J- H	-2107 / 0	0.0	0.0	0.22 (1)	5.84
P- O	0 / 0	-18.2	-18.2	0.10 (4)	10.00
O- N	0 / 1973	-18.2	-18.2	0.38 (1)	10.00
N- M	0 / 1740	-18.2	-18.2	0.35 (1)	10.00
M- L	0 / 1740	-18.2	-18.2	0.35 (1)	10.00
L- K	0 / 1973	-18.2	-18.2	0.38 (1)	10.00
K- J	0 / 0	-18.2	-18.2	0.10 (4)	10.00

WEBS

MEMB. FR-TO	MAX. FACTORED FORCE (LBS)	MAX CSI (LC)
O- C	-325 / 19	0.11 (1)
C- N	-320 / 0	0.27 (1)
N- D	0 / 321	0.07 (1)
D- M	0 / 488	0.11 (1)
M- E	-728 / 0	0.91 (1)
M- F	0 / 488	0.11 (1)
L- F	0 / 321	0.07 (1)
L- G	-320 / 0	0.27 (1)
K- G	-325 / 19	0.11 (1)
B- O	0 / 2017	0.45 (1)
K- H	0 / 2017	0.45 (1)

DESIGN CRITERIA

SPECIFIED LOADS:

TOP CH.	LL	=	34.8	PSF
	DL	=	3.0	PSF
BOT CH.	LL	=	0.0	PSF
	DL	=	7.3	PSF
TOTAL LOAD		=	45.1	PSF

SPACING = 24.0 IN. C/C

LOADING IN FLAT SECTION BASED ON A SLOPE OF 2.00/12 MINIMUM

THIS TRUSS IS DESIGNED FOR RESIDENTIAL OR SMALL BUILDING REQUIREMENTS OF PART 9, NBCC 2015

THIS DESIGN COMPLIES WITH:
- PART 9 OF BCBC 2018 , ABC 2019
- PART 9 OF OBC 2012 (2019 AMENDMENT)
- CSA 086-14
- TPIC 2014

(55 % OF 48.1 P.S.F. G.S.L. PLUS 8.4 P.S.F. RAIN LOAD) EQUALS 34.8 P.S.F. SPECIFIED ROOF LIVE LOAD

ALLOWABLE DEFL.(LL)= L/360 (1.02")
CALCULATED VERT. DEFL.(LL) = L/ 999 (0.10")
ALLOWABLE DEFL.(TL)= L/360 (1.02")
CALCULATED VERT. DEFL.(TL) = L/ 999 (0.17")

CSI: TC=0.46/1.00 (D-E:1) , BC=0.38/1.00 (N-O:1) , WB=0.91/1.00 (E-M:1) , SSI=0.29/1.00 (D-E:1)

DOL LUMBER=1.00 NAIL=1.00 LS BEND=1.10 COMP=1.10 SHEAR=1.10 TENS= 1.10

COMPANION LIVE LOAD FACTOR = 1.00

TRUSS PLATE MANUFACTURER IS NOT RESPONSIBLE FOR QUALITY CONTROL IN THE TRUSS MANUFACTURING PLANT .

NAIL VALUES

PLATE	GRIP(DRY) (PSI) MAX	MIN	SHEAR (PLI) MAX	MIN	SECTION (PLI) MAX	MIN
MT20	650	371	1747	788	1987	1873

PLATE PLACEMENT TOL. = 0.250 inches

PLATE ROTATION TOL. = 5.0 Deg.

JSI GRIP= 0.86 (H) (INPUT = 0.90)
JSI METAL= 0.61 (H) (INPUT = 1.00)

LICENSED PROFESSIONAL ENGINEER
I.MATIJEVIC
100528832
PROVINCE OF ONTARIO
June 23, 2022

READ ALL NOTES ON THIS PAGE AND ON THE ENGINEERING NOTE PAGE ENP-1. THE NOTE PAGE IS AN INTEGRAL PART OF THIS DRAWING AS IT CONTAINS SPECIFICATIONS AND CRITERIA USED IN THE DESIGN OF THIS COMPONENT.

KOTT

CORPORATION OF THE CITY OF OSHAWA
TRUE COPY
OF ORIGINAL PLANS
Dec 06 2023
PER:
CHIEF BUILDING OFFICIAL
MHP 23018

JOB NAME	TRUSS NAME	QUANTITY	PLY	JOB DESC.	DRWG NO.
IM0622-131	T12			TRUSS DESC.	

Version 8.500 S Aug 16 2021 MiTek Industries, Inc. Thu Jun 23 08:36:31 2022 Page 1
ID:OzM1q?scz2BChOKfHahjdLzPugE-R6sZh8Ds?3YrDzu44rlr?GGp?gEBNWb7ITU7Q7z3Tlk
Scale = 1:57.2

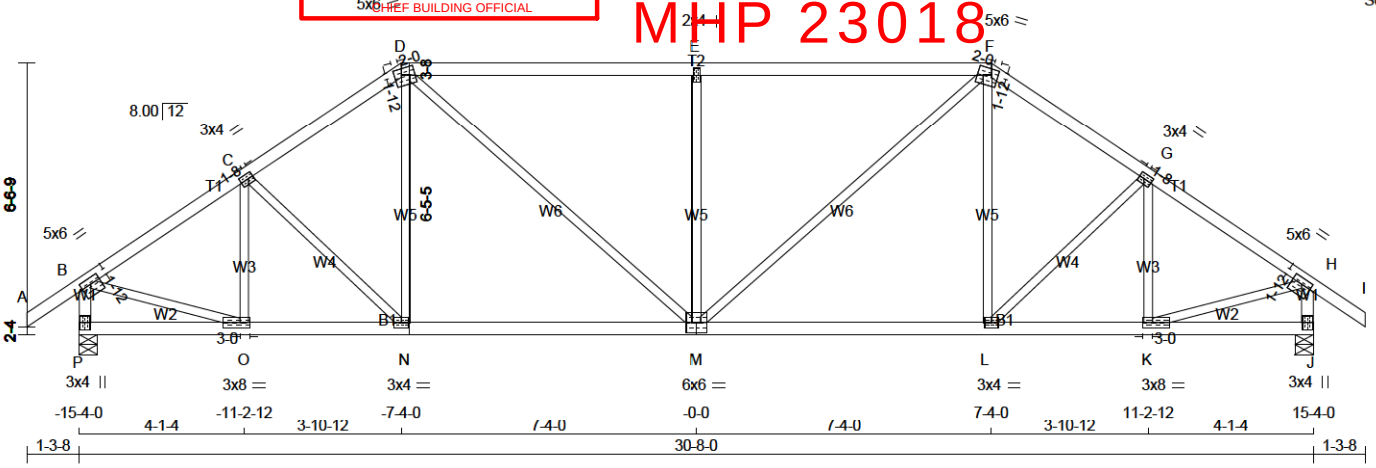

TOTAL WEIGHT = 131 lb
[M][F]

LUMBER
N. L. G. A. RULES

CHORDS	SIZE		LUMBER	DESCR.
A - D	2x4	DRY	No.2	SPF
D - F	2x4	DRY	No.2	SPF
F - I	2x4	DRY	No.2	SPF
P - B	2x4	DRY	No.2	SPF
J - H	2x4	DRY	No.2	SPF
P - M	2x4	DRY	No.2	SPF
M - J	2x4	DRY	No.2	SPF
ALL WEBS EXCEPT	2x3	DRY	No.2	SPF

DRY: SEASONED LUMBER.

PLATES (table is in inches)

JT	TYPE	PLATES	W	LEN	Y	X
B	TMVW-t	MT20	5.0	6.0	1.75	3.00
C	TMWW-t	MT20	3.0	4.0	1.50	1.50
D	TTWW-m	MT20	5.0	6.0	1.75	2.00
E	TMW+w	MT20	2.0	4.0		
F	TTWW-m	MT20	5.0	6.0	1.75	2.00
G	TMWW-t	MT20	3.0	4.0	1.50	1.50
H	TMVW-t	MT20	5.0	6.0	1.75	3.00
J	BMV1+p	MT20	3.0	4.0		
K	BMWW-t	MT20	3.0	8.0	1.50	3.00
L	BMWW-t	MT20	3.0	4.0		
M	BSWWW-I	MT20	6.0	6.0		
N	BMWW-t	MT20	3.0	4.0		
O	BMWW-t	MT20	3.0	8.0	1.50	3.00
P	BMV1+p	MT20	3.0	4.0		

DIMENSIONS, SUPPORTS AND LOADINGS SPECIFIED BY FABRICATOR TO BE VERIFIED BY BUILDING DESIGNER

BEARINGS

JT	FACTORED GROSS REACTION VERT	HORZ	MAXIMUM FACTORED GROSS REACTION DOWN	HORZ	UPLIFT	INPUT BRG IN-SX	REQRD BRG IN-SX
P	2149	0	2149	0	0	5-8	3-8
J	2149	0	2149	0	0	5-8	3-8

UNFACTORED REACTIONS

JT	1ST LCASE COMBINED	SNOW	MAX./MIN. COMPONENT REACTIONS LIVE	PERM.LIVE	WIND	DEAD	SOIL
P	1487	1162 / 0	0 / 0	0 / 0	0 / 0	324 / 0	0 / 0
J	1487	1162 / 0	0 / 0	0 / 0	0 / 0	324 / 0	0 / 0

BEARING MATERIAL TO BE SPF NO.2 OR BETTER AT JOINT(S) P, J

BRACING
TOP CHORD TO BE SHEATHED OR MAX. PURLIN SPACING = 2.94 FT.
MAX. UNBRACED BOTTOM CHORD LENGTH = 10.00 FT OR RIGID CEILING DIRECTLY APPLIED.

ALL PITCH BREAKS AND PERIMETER CORNER JOINTS MUST BE LATERALLY RESTRAINED.

LOADING
TOTAL LOAD CASES: (4)

CHORDS

MEMB. FR-TO	FORCE (LBS)	FACTORED VERT. LOAD FROM (PLF)	TO	LC1 MAX CSI (LC)	MAX. UNBRAC LENGTH
A- B	0 / 43	-111.9	-111.9	0.15 (1)	10.00
B- C	-2269 / 0	-111.9	-111.9	0.28 (1)	4.30
C- D	-2253 / 0	-111.9	-111.9	0.28 (1)	4.31
D- E	-2488 / 0	-111.9	-111.9	0.93 (1)	2.94
E- F	-2488 / 0	-111.9	-111.9	0.93 (1)	2.94
F- G	-2253 / 0	-111.9	-111.9	0.28 (1)	4.31
G- H	-2269 / 0	-111.9	-111.9	0.28 (1)	4.30
H- I	0 / 43	-111.9	-111.9	0.15 (1)	10.00
P- B	-2110 / 0	0.0	0.0	0.22 (1)	5.83
J- H	-2110 / 0	0.0	0.0	0.22 (1)	5.83
P- O	0 / 0	-18.2	-18.2	0.08 (4)	10.00
O- N	0 / 1910	-18.2	-18.2	0.42 (1)	10.00
N- M	0 / 1850	-18.2	-18.2	0.41 (1)	10.00
M- L	0 / 1850	-18.2	-18.2	0.41 (1)	10.00
L- K	0 / 1910	-18.2	-18.2	0.42 (1)	10.00
K- J	0 / 0	-18.2	-18.2	0.08 (4)	10.00

WEBS

MEMB. FR-TO	MAX. FACTORED FORCE (LBS)	MAX CSI (LC)
O- C	-453 / 0	0.12 (1)
C- N	-88 / 3	0.05 (1)
N- D	0 / 198	0.05 (4)
D- M	0 / 848	0.19 (1)
M- E	-1010 / 0	0.76 (1)
M- F	0 / 848	0.19 (1)
L- F	0 / 198	0.05 (4)
L- G	-88 / 3	0.05 (1)
K- G	-453 / 0	0.12 (1)
B- O	0 / 1975	0.44 (1)
K- H	0 / 1975	0.44 (1)

DESIGN CRITERIA

SPECIFIED LOADS:

TOP CH.	LL	=	34.8	PSF
	DL	=	3.0	PSF
BOT CH.	LL	=	0.0	PSF
	DL	=	7.3	PSF
TOTAL LOAD		=	45.1	PSF

SPACING = 24.0 IN. C/C

LOADING IN FLAT SECTION BASED ON A SLOPE OF 2.00/12 MINIMUM

THIS TRUSS IS DESIGNED FOR RESIDENTIAL OR SMALL BUILDING REQUIREMENTS OF PART 9, NBCC 2015

THIS DESIGN COMPLIES WITH:
- PART 9 OF BCBC 2018 , ABC 2019
- PART 9 OF OBC 2012 (2019 AMENDMENT)
- CSA 086-14
- TPIC 2014

(55 % OF 48.1 P.S.F. G.S.L. PLUS 8.4 P.S.F. RAIN LOAD) EQUALS 34.8 P.S.F. SPECIFIED ROOF LIVE LOAD

ALLOWABLE DEFL.(LL)= L/360 (1.02")
CALCULATED VERT. DEFL.(LL) = L/ 999 (0.12")
ALLOWABLE DEFL.(TL)= L/360 (1.02")
CALCULATED VERT. DEFL.(TL) = L/ 999 (0.24")

CSI: TC=0.93/1.00 (D-E:1) , BC=0.42/1.00 (N-O:1) , WB=0.76/1.00 (E-M:1) , SSI=0.40/1.00 (D-E:1)

DOL LUMBER=1.00 NAIL=1.00 LS BEND=1.10 COMP=1.10 SHEAR=1.10 TENS= 1.10

COMPANION LIVE LOAD FACTOR = 1.00

TRUSS PLATE MANUFACTURER IS NOT RESPONSIBLE FOR QUALITY CONTROL IN THE TRUSS MANUFACTURING PLANT .

NAIL VALUES

PLATE	GRIP(DRY) (PSI) MAX	MIN	SHEAR (PLI) MAX	MIN	SECTION (PLI) MAX	MIN
MT20	650	371	1747	788	1987	1873

PLATE PLACEMENT TOL. = 0.250 inches

PLATE ROTATION TOL. = 5.0 Deg.

JSI GRIP= 0.86 (B) (INPUT = 0.90)
JSI METAL= 0.61 (M) (INPUT = 1.00)

LICENSED PROFESSIONAL ENGINEER
I.MATIJEVIC
100528832
PROVINCE OF ONTARIO
June 23, 2022

READ ALL NOTES ON THIS PAGE AND ON THE ENGINEERING NOTE PAGE ENP-1. THE NOTE PAGE IS AN INTEGRAL PART OF THIS DRAWING AS IT CONTAINS SPECIFICATIONS AND CRITERIA USED IN THE DESIGN OF THIS COMPONENT.

KOTT

CORPORATION OF THE CITY OF OSHAWA
TRUE COPY
OF ORIGINAL PLANS
Dec 06 2023
PER: C Martin
CHIEF BUILDING OFFICIAL

MHP 23018

JOB NAME	TRUSS NAME	QUANTITY	PLY	JOB DESC.	DRWG NO.
IM0622-131	T13			TRUSS DESC.	

Version 8.500 S Aug 16 2021 MiTek Industries, Inc. Thu Jun 23 08:36:32 2022 Page 1
ID:OzM1q?scz2BChOKfHahjdLzPugE-wJQxvUEUmNhir7TGeZH4YUo5E4ed67KGX7DhyZz3TIj
Scale = 1:40.1

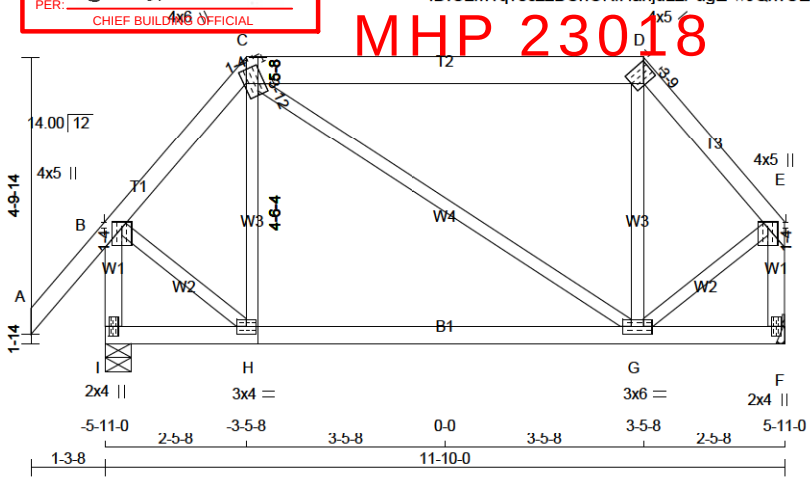

TOTAL WEIGHT = 59 lb
[M]

LUMBER
N. L. G. A. RULES

CHORDS	SIZE		LUMBER	DESCR.
A - C	2x4	DRY	No.2	SPF
C - D	2x6	DRY	No.2	SPF
D - E	2x4	DRY	No.2	SPF
I - B	2x4	DRY	No.2	SPF
F - E	2x4	DRY	No.2	SPF
I - F	2x4	DRY	No.2	SPF
ALL WEBS EXCEPT	2x3	DRY	No.2	SPF

DRY: SEASONED LUMBER.

PLATES (table is in inches)

JT	TYPE	PLATES	W	LEN	Y	X
B	TMVW+p	MT20	4.0	5.0	1.25	2.00
C	TTWW+m	MT20	4.0	6.0	3.75	1.25
D	TTW+h	MT20	4.0	5.0	Edge	3.50
E	TMVW+p	MT20	4.0	5.0	1.25	2.00
F	BMV1+p	MT20	2.0	4.0		
G	BMWWW-t	MT20	3.0	6.0		
H	BMWW-t	MT20	3.0	4.0		
I	BMV1+p	MT20	2.0	4.0		

Edge - INDICATES REFERENCE CORNER OF PLATE TOUCHES EDGE OF CHORD.

DIMENSIONS, SUPPORTS AND LOADINGS SPECIFIED BY FABRICATOR TO BE VERIFIED BY BUILDING DESIGNER

BEARINGS

JT	FACTORED GROSS REACTION VERT	HORZ	MAXIMUM FACTORED GROSS REACTION DOWN	HORZ	UPLIFT	INPUT BRG IN-SX	REQRD BRG IN-SX
I	927	0	927	0	0	5-8	1-8
F	770	0	770	0	0	MECHANICAL	

A SUITABLE HANGER/MECHANICAL CONNECTION IS REQUIRED AT JOINT F. MINIMUM BEARING LENGTH AT JOINT F = 1-8.

UNFACTORED REACTIONS

JT	1ST LCASE COMBINED	MAX./MIN. COMPONENT REACTIONS SNOW	LIVE	PERM.LIVE	WIND	DEAD	SOIL
I	640	509 / 0	0 / 0	0 / 0	0 / 0	130 / 0	0 / 0
F	534	412 / 0	0 / 0	0 / 0	0 / 0	122 / 0	0 / 0

BEARING MATERIAL TO BE SPF NO.2 OR BETTER AT JOINT(S) I

BRACING
TOP CHORD TO BE SHEATHED OR MAX. PURLIN SPACING = 6.25 FT.
MAX. UNBRACED BOTTOM CHORD LENGTH = 10.00 FT OR RIGID CEILING DIRECTLY APPLIED.

ALL PITCH BREAKS AND PERIMETER CORNER JOINTS MUST BE LATERALLY RESTRAINED.

LOADING
TOTAL LOAD CASES: (4)

CHORDS

MEMB. FR-TO	MAX. FACTORED FORCE (LBS)	FACTORED VERT. LOAD LC1 (PLF) FROM	TO	MAX CSI (LC)	MAX. UNBRAC LENGTH
A- B	0 / 60	-111.9	-111.9	0.16 (1)	10.00
B- C	-525 / 0	-111.9	-111.9	0.12 (1)	6.25
C- D	-339 / 0	-111.9	-111.9	0.45 (1)	6.25
D- E	-525 / 0	-111.9	-111.9	0.12 (1)	6.25
I- B	-925 / 0	0.0	0.0	0.11 (1)	7.81
F- E	-768 / 0	0.0	0.0	0.09 (1)	7.81
I- H	0 / 0	-18.2	-18.2	0.13 (4)	10.00
H- G	0 / 339	-18.2	-18.2	0.16 (4)	10.00
G- F	0 / 0	-18.2	-18.2	0.13 (4)	10.00

WEBS

MEMB. FR-TO	MAX. FACTORED FORCE (LBS)	MAX CSI (LC)
H- C	-126 / 61	0.04 (1)
C- G	0 / 0	0.00 (1)
G- D	-126 / 61	0.04 (1)
B- H	0 / 413	0.09 (1)
G- E	0 / 413	0.09 (1)

DESIGN CRITERIA

SPECIFIED LOADS:

TOP CH.	LL	=	34.8	PSF
	DL	=	3.0	PSF
BOT CH.	LL	=	0.0	PSF
	DL	=	7.3	PSF
TOTAL LOAD		=	45.1	PSF

SPACING = 24.0 IN. C/C

LOADING IN FLAT SECTION BASED ON A SLOPE OF 2.00/12 MINIMUM

THIS TRUSS IS DESIGNED FOR RESIDENTIAL OR SMALL BUILDING REQUIREMENTS OF PART 9, NBCC 2015

THIS DESIGN COMPLIES WITH:
- PART 9 OF BCBC 2018 , ABC 2019
- PART 9 OF OBC 2012 (2019 AMENDMENT)
- CSA 086-14
- TPIC 2014

(55 % OF 48.1 P.S.F. G.S.L. PLUS 8.4 P.S.F. RAIN LOAD) EQUALS 34.8 P.S.F. SPECIFIED ROOF LIVE LOAD

ALLOWABLE DEFL.(LL)= L/360 (0.39")
CALCULATED VERT. DEFL.(LL) = L/ 999 (0.01")
ALLOWABLE DEFL.(TL)= L/360 (0.39")
CALCULATED VERT. DEFL.(TL) = L/ 999 (0.04")

CSI: TC=0.45/1.00 (C-D:1) , BC=0.16/1.00 (G-H:4) , WB=0.09/1.00 (E-G:1) , SSI=0.23/1.00 (C-D:1)

DOL LUMBER=1.00 NAIL=1.00 LS BEND=1.10 COMP=1.10 SHEAR=1.10 TENS= 1.10

COMPANION LIVE LOAD FACTOR = 1.00

TRUSS PLATE MANUFACTURER IS NOT RESPONSIBLE FOR QUALITY CONTROL IN THE TRUSS MANUFACTURING PLANT .

NAIL VALUES

PLATE	GRIP(DRY) (PSI) MAX	MIN	SHEAR (PLI) MAX	MIN	SECTION (PLI) MAX	MIN
MT20	650	371	1747	788	1987	1873

PLATE PLACEMENT TOL. = 0.250 inches

PLATE ROTATION TOL. = 5.0 Deg.

JSI GRIP= 0.74 (G) (INPUT = 0.90)
JSI METAL= 0.28 (B) (INPUT = 1.00)

LICENSED PROFESSIONAL ENGINEER
I.MATIJEVIC
100528832
PROVINCE OF ONTARIO
June 23, 2022

READ ALL NOTES ON THIS PAGE AND ON THE ENGINEERING NOTE PAGE ENP-1. THE NOTE PAGE IS AN INTEGRAL PART OF THIS DRAWING AS IT CONTAINS SPECIFICATIONS AND CRITERIA USED IN THE DESIGN OF THIS COMPONENT.

KOTT

CORPORATION OF THE CITY OF OSHAWA
TRUE COPY
OF QUANTITY PLANS
Dec 06 2023
PER:
CHIEF BUILDING OFFICIAL

JOB NAME	TRUSS NAME	QUANTITY	PLY	JOB DESC.	DRWG NO.
IM0622-131	T14			TRUSS DESC.	

Version 8.500 S Aug 16 2021 MiTek Industries, Inc. Thu Jun 23 08:36:32 2022 Page 1
ID:OzM1q?scz2BChOKfHahjdLzPugE-wJQxvUEUmNhir7TGeZH4YUo8n4fg67bGX7DhyZz3Tlj
Scale = 1:56.8

MHP 23018

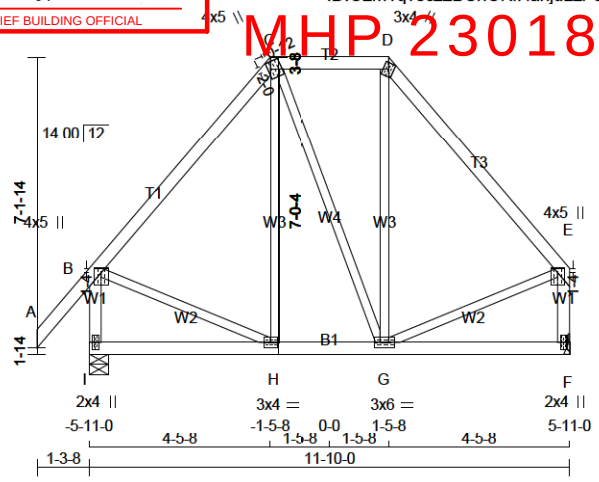

TOTAL WEIGHT = 64 lb

[M][F]

LUMBER

N. L. G. A. RULES

CHORDS	SIZE		LUMBER	DESCR.
A - C	2x4	DRY	No.2	SPF
C - D	2x4	DRY	No.2	SPF
D - E	2x4	DRY	No.2	SPF
I - B	2x4	DRY	No.2	SPF
F - E	2x4	DRY	No.2	SPF
I - F	2x4	DRY	No.2	SPF
ALL WEBS EXCEPT	2x3	DRY	No.2	SPF

DRY: SEASONED LUMBER.

PLATES (table is in inches)

JT	TYPE	PLATES	W	LEN	Y	X
B	TMVW+p	MT20	4.0	5.0	1.25	2.00
C	TTWW+m	MT20	4.0	5.0	2.00	0.75
D	TTW+m	MT20	3.0	4.0	Edge	
E	TMVW+p	MT20	4.0	5.0	1.25	2.00
F	BMV1+p	MT20	2.0	4.0		
G	BMWWW-t	MT20	3.0	6.0		
H	BMWW-t	MT20	3.0	4.0		
I	BMV1+p	MT20	2.0	4.0		

Edge - INDICATES REFERENCE CORNER OF PLATE TOUCHES EDGE OF CHORD.

DIMENSIONS, SUPPORTS AND LOADINGS SPECIFIED BY FABRICATOR TO BE VERIFIED BY BUILDING DESIGNER

BEARINGS

JT	FACTORED GROSS REACTION VERT	HORZ	MAXIMUM FACTORED GROSS REACTION DOWN	HORZ	UPLIFT	INPUT BRG	REQRD BRG
I	927	0	927	0	0	5-8	1-8
F	770	0	770	0	0	MECHANICAL	

A SUITABLE HANGER/MECHANICAL CONNECTION IS REQUIRED AT JOINT F. MINIMUM BEARING LENGTH AT JOINT F = 1-8.

UNFACTORED REACTIONS

JT	1ST LCASE COMBINED	MAX./MIN. COMPONENT REACTIONS SNOW	LIVE	PERM.LIVE	WIND	DEAD	SOIL
I	640	509 / 0	0 / 0	0 / 0	0 / 0	130 / 0	0 / 0
F	534	412 / 0	0 / 0	0 / 0	0 / 0	122 / 0	0 / 0

BEARING MATERIAL TO BE SPF NO.2 OR BETTER AT JOINT(S) I

BRACING

TOP CHORD TO BE SHEATHED OR MAX. PURLIN SPACING = 6.25 FT.
MAX. UNBRACED BOTTOM CHORD LENGTH = 10.00 FT OR RIGID CEILING DIRECTLY APPLIED.

ALL PITCH BREAKS AND PERIMETER CORNER JOINTS MUST BE LATERALLY RESTRAINED.

LOADING

TOTAL LOAD CASES: (4)

CHORDS

MEMB. FR-TO	MAX. FACTORED FORCE (LBS)	FACTORED VERT. LOAD (PLF) FROM	TO	LC1 MAX CSI (LC)	MAX. UNBRAC LENGTH
A- B	0 / 60	-111.9	-111.9	0.16 (1)	10.00
B- C	-481 / 0	-111.9	-111.9	0.29 (1)	6.25
C- D	-311 / 0	-111.9	-111.9	0.12 (1)	6.25
D- E	-480 / 0	-111.9	-111.9	0.29 (1)	6.25
I- B	-891 / 0	0.0	0.0	0.11 (1)	7.81
F- E	-734 / 0	0.0	0.0	0.09 (1)	7.81
I- H	0 / 0	-18.2	-18.2	0.08 (4)	10.00
H- G	0 / 311	-18.2	-18.2	0.09 (4)	10.00
G- F	0 / 0	-18.2	-18.2	0.08 (4)	10.00

WEBS

MEMB. FR-TO	MAX. FACTORED FORCE (LBS)	MAX CSI (LC)
H- C	-46 / 53	0.04 (1)
C- G	0 / 0	0.00 (1)
G- D	-47 / 54	0.04 (1)
B- H	0 / 333	0.08 (1)
G- E	0 / 333	0.07 (1)

DESIGN CRITERIA

SPECIFIED LOADS:

TOP CH.	LL	=	34.8	PSF
	DL	=	3.0	PSF
BOT CH.	LL	=	0.0	PSF
	DL	=	7.3	PSF
TOTAL LOAD		=	45.1	PSF

SPACING = 24.0 IN. C/C

LOADING IN FLAT SECTION BASED ON A SLOPE OF 2.00/12 MINIMUM

THIS TRUSS IS DESIGNED FOR RESIDENTIAL OR SMALL BUILDING REQUIREMENTS OF PART 9, NBCC 2015

THIS DESIGN COMPLIES WITH:
- PART 9 OF BCBC 2018 , ABC 2019
- PART 9 OF OBC 2012 (2019 AMENDMENT)
- CSA 086-14
- TPIC 2014

(55 % OF 48.1 P.S.F. G.S.L. PLUS 8.4 P.S.F. RAIN LOAD) EQUALS 34.8 P.S.F. SPECIFIED ROOF LIVE LOAD

ALLOWABLE DEFL.(LL)= L/360 (0.39")
CALCULATED VERT. DEFL.(LL) = L/ 999 (0.01")
ALLOWABLE DEFL.(TL)= L/360 (0.39")
CALCULATED VERT. DEFL.(TL) = L/ 999 (0.02")

CSI: TC=0.29/1.00 (B-C:1) , BC=0.09/1.00 (G-H:4) , WB=0.08/1.00 (B-H:1) , SSI=0.13/1.00 (C-D:1)

DOL LUMBER=1.00 NAIL=1.00 LS BEND=1.10 COMP=1.10 SHEAR=1.10 TENS= 1.10

COMPANION LIVE LOAD FACTOR = 1.00

TRUSS PLATE MANUFACTURER IS NOT RESPONSIBLE FOR QUALITY CONTROL IN THE TRUSS MANUFACTURING PLANT .

NAIL VALUES

PLATE	GRIP(DRY) (PSI) MAX	MIN	SHEAR (PLI) MAX	MIN	SECTION (PLI) MAX	MIN
MT20	650	371	1747	788	1987	1873

PLATE PLACEMENT TOL. = 0.250 inches

PLATE ROTATION TOL. = 5.0 Deg.

JSI GRIP= 0.73 (D) (INPUT = 0.90)
JSI METAL= 0.30 (B) (INPUT = 1.00)

LICENSED PROFESSIONAL ENGINEER
I.MATIJEVIC
100528832
PROVINCE OF ONTARIO
June 23, 2022

READ ALL NOTES ON THIS PAGE AND ON THE ENGINEERING NOTE PAGE ENP-1. THE NOTE PAGE IS AN INTEGRAL PART OF THIS DRAWING AS IT CONTAINS SPECIFICATIONS AND CRITERIA USED IN THE DESIGN OF THIS COMPONENT.

KOTT

CORPORATION OF THE CITY OF OSHAWA
TRUE COPY
OF QUANTITY PLANS
Dec 06 2023
PER:
CHIEF BUILDING OFFICIAL

JOB NAME	TRUSS NAME	QUANTITY	PLY	JOB DESC.	DRWG NO.
IM0622-131	T15			TRUSS DESC.	

Version 8.500 S Aug 16 2021 MiTek Industries, Inc. Thu Jun 23 08:36:33 2022 Page 1
ID:OzM1q?scz2BChOKfHahjdLzPugE-OV_K6qF6XgpZSH2TBGoJ4hLJQU_3rZzPmnzEV?z3Tli
Scale = 1:80.0

MHP 23018

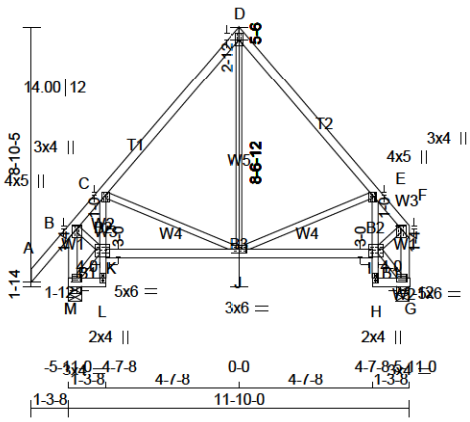

TOTAL WEIGHT = 64 lb

LUMBER
N. L. G. A. RULES

CHORDS	SIZE		LUMBER	DESCR.
A - D	2x4	DRY	No.2	SPF
D - F	2x4	DRY	No.2	SPF
M - B	2x4	DRY	No.2	SPF
G - F	2x4	DRY	No.2	SPF
M - L	2x4	DRY	No.2	SPF
L - C	2x3	DRY	No.2	SPF
K - I	2x4	DRY	No.2	SPF
H - E	2x3	DRY	No.2	SPF
H - G	2x4	DRY	No.2	SPF
ALL WEBS EXCEPT	2x3	DRY	No.2	SPF

DRY: SEASONED LUMBER.

PLATES (table is in inches)

JT	TYPE	PLATES	W	LEN	Y	X
B	TMVW+p	MT20	4.0	5.0	1.25	2.00
C	TMVW+p	MT20	3.0	4.0	1.00	1.50
D	TTW+p	MT20	3.0	5.0	2.75	1.50
E	TMVW+p	MT20	3.0	4.0	1.00	1.50
F	TMVW+p	MT20	4.0	5.0	1.25	2.00
G	BMVW1-t	MT20	3.0	4.0	1.50	1.75
H	BMV+p	MT20	2.0	4.0		
I	BVMWW-l	MT20	5.0	6.0	3.00	4.00
J	BMWWW-t	MT20	3.0	6.0		
K	BVMWW-l	MT20	5.0	6.0	3.00	4.00
L	BMV+p	MT20	2.0	4.0		
M	BMVW1-t	MT20	3.0	4.0	1.50	1.75

DIMENSIONS, SUPPORTS AND LOADINGS SPECIFIED BY FABRICATOR TO BE VERIFIED BY BUILDING DESIGNER

BEARINGS

JT	FACTORED GROSS REACTION VERT	HORZ	MAXIMUM FACTORED GROSS REACTION DOWN	HORZ	UPLIFT	INPUT BRG IN-SX	REQRD BRG IN-SX
M	936	0	936	0	0	5-8	1-8
G	761	0	761	0	0	5-8	1-8

UNFACTORED REACTIONS

JT	1ST LCASE COMBINED	SNOW	MAX./MIN. COMPONENT REACTIONS LIVE	PERM.LIVE	WIND	DEAD	SOIL
M	646	515 / 0	0 / 0	0 / 0	0 / 0	131 / 0	0 / 0
G	527	406 / 0	0 / 0	0 / 0	0 / 0	121 / 0	0 / 0

BEARING MATERIAL TO BE SPF NO.2 OR BETTER AT JOINT(S) M, G

BRACING
TOP CHORD TO BE SHEATHED OR MAX. PURLIN SPACING = 6.25 FT.
MAX. UNBRACED BOTTOM CHORD LENGTH = 7.81 FT OR RIGID CEILING DIRECTLY APPLIED.

ALL PITCH BREAKS AND PERIMETER CORNER JOINTS MUST BE LATERALLY RESTRAINED.

LOADING
TOTAL LOAD CASES: (4)

CHORDS

MEMB. FR-TO	MAX. FACTORED FORCE (LBS)	FACTORED VERT. LOAD (PLF) FROM	TO	LC1 MAX CSI (LC)	MAX. UNBRAC LENGTH
A- B	0 / 60	-111.9	-111.9	0.16 (1)	10.00
B- C	-609 / 0	-111.9	-111.9	0.26 (1)	6.25
C- D	-494 / 0	-111.9	-111.9	0.29 (1)	6.25
D- E	-495 / 0	-111.9	-111.9	0.30 (1)	6.25
E- F	-604 / 0	-111.9	-111.9	0.26 (1)	6.25
M- B	-920 / 0	0.0	0.0	0.11 (1)	7.81
G- F	-745 / 0	0.0	0.0	0.09 (1)	7.81
M- L	0 / 6	-18.2	-18.2	0.01 (4)	10.00
L- K	0 / 12	0.0	0.0	0.02 (1)	10.00
K- C	-240 / 0	0.0	0.0	0.01 (1)	7.81
K- J	0 / 451	-18.2	-18.2	0.14 (4)	10.00
J- I	0 / 497	-18.2	-18.2	0.14 (1)	10.00
H- I	0 / 12	0.0	0.0	0.02 (1)	10.00
I- E	-268 / 0	0.0	0.0	0.01 (1)	7.81
H- G	0 / 5	-18.2	-18.2	0.01 (4)	10.00

WEBS

MEMB. FR-TO	MAX. FACTORED FORCE (LBS)	MAX CSI (LC)
J- D	0 / 265	0.06 (1)
J- E	-219 / 0	0.10 (1)
C- J	-169 / 0	0.08 (1)
B- K	0 / 528	0.12 (1)
I- F	0 / 583	0.13 (1)
M- K	-7 / 0	0.00 (1)
I- G	-7 / 0	0.00 (1)

DESIGN CRITERIA

SPECIFIED LOADS:

TOP CH.	LL	=	34.8	PSF
	DL	=	3.0	PSF
BOT CH.	LL	=	0.0	PSF
	DL	=	7.3	PSF
TOTAL LOAD		=	45.1	PSF

SPACING = 24.0 IN. C/C

THIS TRUSS IS DESIGNED FOR RESIDENTIAL OR SMALL BUILDING REQUIREMENTS OF PART 9, NBCC 2015

THIS DESIGN COMPLIES WITH:
- PART 9 OF BCBC 2018 , ABC 2019
- PART 9 OF OBC 2012 (2019 AMENDMENT)
- CSA 086-14
- TPIC 2014

DESIGN ASSUMPTIONS
-OVERHANG NOT TO BE ALTERED OR CUT OFF.

(55 % OF 48.1 P.S.F. G.S.L. PLUS 8.4 P.S.F. RAIN LOAD) EQUALS 34.8 P.S.F. SPECIFIED ROOF LIVE LOAD

ALLOWABLE DEFL.(LL)= L/360 (0.39")
CALCULATED VERT. DEFL.(LL) = L/ 999 (0.01")
ALLOWABLE DEFL.(TL)= L/360 (0.39")
CALCULATED VERT. DEFL.(TL) = L/ 999 (0.02")

CSI: TC=0.30/1.00 (D-E:1) , BC=0.14/1.00 (I-J:1) , WB=0.13/1.00 (F-I:1) , SSI=0.16/1.00 (D-E:1)

DOL LUMBER=1.00 NAIL=1.00 LS BEND=1.10 COMP=1.10 SHEAR=1.10 TENS= 1.10

COMPANION LIVE LOAD FACTOR = 1.00

AUTOSOLVE HEELS OFF

TRUSS PLATE MANUFACTURER IS NOT RESPONSIBLE FOR QUALITY CONTROL IN THE TRUSS MANUFACTURING PLANT .

NAIL VALUES

PLATE	GRIP(DRY) (PSI) MAX	MIN	SHEAR (PLI) MAX	MIN	SECTION (PLI) MAX	MIN
MT20	650	371	1747	788	1987	1873

PLATE PLACEMENT TOL. = 0.250 inches

PLATE ROTATION TOL. = 5.0 Deg.

JSI GRIP= 0.75 (M) (INPUT = 0.90)
JSI METAL= 0.30 (B) (INPUT = 1.00)

LICENSED PROFESSIONAL ENGINEER
I.MATIJEVIC
100528832
PROVINCE OF ONTARIO
June 23, 2022

READ ALL NOTES ON THIS PAGE AND ON THE ENGINEERING NOTE PAGE ENP-1. THE NOTE PAGE IS AN INTEGRAL PART OF THIS DRAWING AS IT CONTAINS SPECIFICATIONS AND CRITERIA USED IN THE DESIGN OF THIS COMPONENT.

KOTT

CORPORATION OF THE CITY OF OSHAWA
TRUE COPY
OF ORIGINAL PLANS
Dec 06 2023
PER:
CHIEF BUILDING OFFICIAL

JOB NAME	TRUSS NAME	QUANTITY	PLY	JOB DESC.	DRWG NO.
IM0622-131	T16			TRUSS DESC.	

Version 8.500 S Aug 16 2021 MiTek Industries, Inc. Thu Jun 23 08:36:34 2022 Page 1
ID:OzM1q?scz2BChOKfHahjdLzPugE-shYiK9FkI_xQ4RdfI_JYdvtWBuLda1lZ?Rin1Sz3Tlh
Scale = 1:43.7

MHP 23018

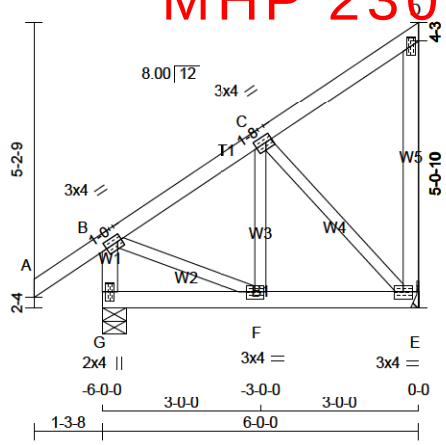

TOTAL WEIGHT = 2 X 31 = 63 lb
[M]

LUMBER
N. L. G. A. RULES

CHORDS	SIZE		LUMBER	DESCR.
G - B	2x4	DRY	No.2	SPF
A - D	2x4	DRY	No.2	SPF
E - D	2x4	DRY	No.2	SPF
G - E	2x4	DRY	No.2	SPF
ALL WEBS	2x3	DRY	No.2	SPF

DRY: SEASONED LUMBER.

PLATES (table is in inches)

JT	TYPE	PLATES	W	LEN	Y	X
B	TMVW-t	MT20	3.0	4.0	1.50	1.00
C	TMWW-t	MT20	3.0	4.0	1.50	1.50
D	TMV+p	MT20	2.0	4.0		
E	BMVW1-t	MT20	3.0	4.0		
F	BMWW-t	MT20	3.0	4.0		
G	BMV1+p	MT20	2.0	4.0		

DIMENSIONS, SUPPORTS AND LOADINGS SPECIFIED BY FABRICATOR TO BE VERIFIED BY BUILDING DESIGNER

BEARINGS

JT	FACTORED GROSS REACTION VERT	HORZ	MAXIMUM FACTORED GROSS REACTION DOWN	HORZ	UPLIFT	INPUT BRG	REQRD BRG
G	544	0	544	0	0	5-8	1-8
E	390	0	390	0	0	MECHANICAL	

A SUITABLE HANGER/MECHANICAL CONNECTION IS REQUIRED AT JOINT E. MINIMUM BEARING LENGTH AT JOINT E = 1-8.

UNFACTORED REACTIONS

JT	1ST LCASE COMBINED	MAX./MIN. COMPONENT REACTIONS SNOW	LIVE	PERM.LIVE	WIND	DEAD	SOIL
G	374	304 / 0	0 / 0	0 / 0	0 / 0	70 / 0	0 / 0
E	271	209 / 0	0 / 0	0 / 0	0 / 0	62 / 0	0 / 0

BEARING MATERIAL TO BE SPF NO.2 OR BETTER AT JOINT(S) G

BRACING
TOP CHORD TO BE SHEATHED OR MAX. PURLIN SPACING = 6.25 FT.
MAX. UNBRACED BOTTOM CHORD LENGTH = 10.00 FT OR RIGID CEILING DIRECTLY APPLIED.

ALL PITCH BREAKS AND PERIMETER CORNER JOINTS MUST BE LATERALLY RESTRAINED.

LOADING
TOTAL LOAD CASES: (4)

CHORDS

MEMB. FR-TO	MAX. FACTORED FORCE (LBS)	FACTORED VERT. LOAD (PLF) FROM	TO	LC1 MAX CSI (LC)	MAX. UNBRAC LENGTH
G- B	-521 / 0	0.0	0.0	0.05 (1)	7.81
A- B	0 / 43	-111.9	-111.9	0.15 (1)	10.00
B- C	-259 / 0	-111.9	-111.9	0.17 (1)	6.25
C- D	-22 / 0	-111.9	-111.9	0.17 (1)	6.25
E- D	-127 / 0	0.0	0.0	0.06 (1)	7.81
G- F	0 / 0	-18.2	-18.2	0.04 (4)	10.00
F- E	0 / 234	-18.2	-18.2	0.06 (1)	10.00

WEBS

MEMB. FR-TO	MAX. FACTORED FORCE (LBS)	MAX CSI (LC)
B- F	0 / 248	0.06 (1)
F- C	-21 / 57	0.02 (4)
C- E	-335 / 0	0.10 (1)

DESIGN CRITERIA

SPECIFIED LOADS:

TOP CH.	LL	=	34.8	PSF
	DL	=	3.0	PSF
BOT CH.	LL	=	0.0	PSF
	DL	=	7.3	PSF
TOTAL LOAD		=	45.1	PSF

SPACING = 24.0 IN. C/C

THIS TRUSS IS DESIGNED FOR RESIDENTIAL OR SMALL BUILDING REQUIREMENTS OF PART 9, NBCC 2015

THIS DESIGN COMPLIES WITH:
- PART 9 OF BCBC 2018 , ABC 2019
- PART 9 OF OBC 2012 (2019 AMENDMENT)
- CSA 086-14
- TPIC 2014

(55 % OF 48.1 P.S.F. G.S.L. PLUS 8.4 P.S.F. RAIN LOAD) EQUALS 34.8 P.S.F. SPECIFIED ROOF LIVE LOAD

ALLOWABLE DEFL.(LL)= L/360 (0.20")
CALCULATED VERT. DEFL.(LL) = L/ 999 (0.00")
ALLOWABLE DEFL.(TL)= L/360 (0.20")
CALCULATED VERT. DEFL.(TL) = L/ 999 (0.00")

CSI: TC=0.17/1.00 (B-C:1) , BC=0.06/1.00 (E-F:1) , WB=0.10/1.00 (C-E:1) , SSI=0.14/1.00 (B-C:1)

DOL LUMBER=1.00 NAIL=1.00 LS BEND=1.10 COMP=1.10 SHEAR=1.10 TENS= 1.10

COMPANION LIVE LOAD FACTOR = 1.00

TRUSS PLATE MANUFACTURER IS NOT RESPONSIBLE FOR QUALITY CONTROL IN THE TRUSS MANUFACTURING PLANT .

NAIL VALUES

PLATE	GRIP(DRY) (PSI) MAX	MIN	SHEAR (PLI) MAX	MIN	SECTION (PLI) MAX	MIN
MT20	650	371	1747	788	1987	1873

PLATE PLACEMENT TOL. = 0.250 inches

PLATE ROTATION TOL. = 5.0 Deg.

JSI GRIP= 0.77 (B) (INPUT = 0.90)
JSI METAL= 0.15 (B) (INPUT = 1.00)

LICENSED PROFESSIONAL ENGINEER
I.MATIJEVIC
100528832
PROVINCE OF ONTARIO
June 23, 2022

READ ALL NOTES ON THIS PAGE AND ON THE ENGINEERING NOTE PAGE ENP-1. THE NOTE PAGE IS AN INTEGRAL PART OF THIS DRAWING AS IT CONTAINS SPECIFICATIONS AND CRITERIA USED IN THE DESIGN OF THIS COMPONENT.

KOTT

CORPORATION OF THE CITY OF OSHAWA
TRUE COPY
OF ORIGINAL PLANS
Dec 06 2023
PER:
CHIEF BUILDING OFFICIAL

MHP 23018

JOB NAME	TRUSS NAME	QUANTITY	PLY	JOB DESC.	DRWG NO.
IM0622-131	T17			TRUSS DESC.	

Version 8.500 S Aug 16 2021 MiTek Industries, Inc. Thu Jun 23 08:36:35 2022 Page 1
ID:OzM1q?scz2BChOKfHahjdLzPugE-Kt54XVGM3I3GibCrJhqn96QdbHgrJSFiD5SLZuz3Tlg
Scale = 1:37.7

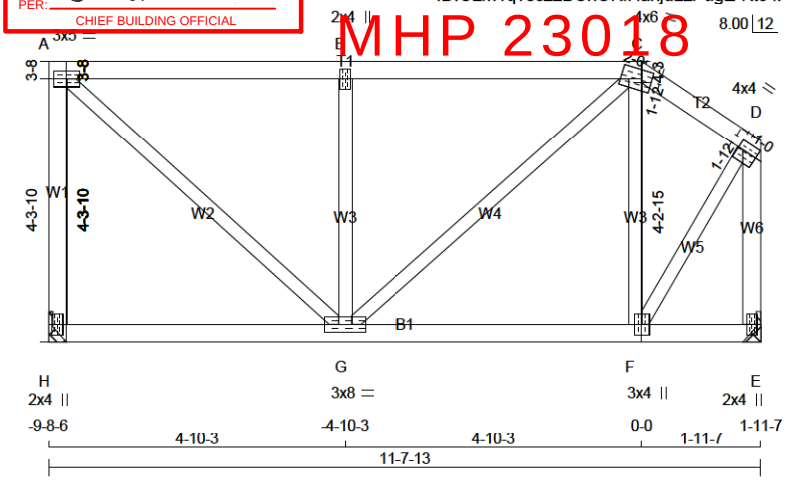

TOTAL WEIGHT = 54 lb
[M]

LUMBER
N. L. G. A. RULES

CHORDS	SIZE		LUMBER	DESCR.
H - A	2x4	DRY	No.2	SPF
A - C	2x4	DRY	No.2	SPF
C - D	2x4	DRY	No.2	SPF
E - D	2x4	DRY	No.2	SPF
H - E	2x4	DRY	No.2	SPF
ALL WEBS EXCEPT	2x3	DRY	No.2	SPF

DRY: SEASONED LUMBER.

PLATES (table is in inches)

JT	TYPE	PLATES	W	LEN	Y	X
A	TMVW-t	MT20	3.0	5.0		
B	TMW+w	MT20	2.0	4.0		
C	TTWW-m	MT20	4.0	6.0	1.75	2.00
D	TMVW-t	MT20	4.0	4.0	1.75	Edge
E	BMV1+p	MT20	2.0	4.0		
F	BMWW+t	MT20	3.0	4.0		
G	BMWWW-t	MT20	3.0	8.0		
H	BMV1+p	MT20	2.0	4.0		

Edge - INDICATES REFERENCE CORNER OF PLATE TOUCHES EDGE OF CHORD.

DIMENSIONS, SUPPORTS AND LOADINGS SPECIFIED BY FABRICATOR TO BE VERIFIED BY BUILDING DESIGNER

BEARINGS

JT	FACTORED GROSS REACTION VERT	HORZ	MAXIMUM FACTORED GROSS REACTION DOWN	HORZ	UPLIFT	INPUT BRG IN-SX	REQRD BRG IN-SX
H	758	0	758	0	0	MECHANICAL	
E	758	0	758	0	0	MECHANICAL	

A SUITABLE HANGER/MECHANICAL CONNECTION IS REQUIRED AT JOINT H, E. MINIMUM BEARING LENGTH AT JOINT H = 1-8, JOINT E = 1-8.

UNFACTORED REACTIONS

JT	1ST LCASE COMBINED	SNOW	MAX./MIN. COMPONENT REACTIONS LIVE	PERM.LIVE	WIND	DEAD	SOIL
H	525	405 / 0	0 / 0	0 / 0	0 / 0	120 / 0	0 / 0
E	525	405 / 0	0 / 0	0 / 0	0 / 0	120 / 0	0 / 0

BRACING
TOP CHORD TO BE SHEATHED OR MAX. PURLIN SPACING = 6.25 FT.
MAX. UNBRACED BOTTOM CHORD LENGTH = 10.00 FT OR RIGID CEILING DIRECTLY APPLIED.

ALL PITCH BREAKS AND PERIMETER CORNER JOINTS MUST BE LATERALLY RESTRAINED.

LOADING
TOTAL LOAD CASES: (4)

CHORDS

MEMB. FR-TO	MAX. FACTORED FORCE (LBS)	FACTORED VERT. LOAD LC1 (PLF) FROM	TO	MAX CSI (LC)	MAX. UNBRAC LENGTH
H- A	-721 / 0	0.0	0.0	0.24 (1)	7.81
A- B	-580 / 0	-111.9	-111.9	0.44 (1)	6.25
B- C	-580 / 0	-111.9	-111.9	0.44 (1)	6.25
C- D	-365 / 0	-111.9	-111.9	0.07 (1)	6.25
E- D	-751 / 0	0.0	0.0	0.14 (1)	7.81
H- G	0 / 0	-18.2	-18.2	0.11 (4)	10.00
G- F	0 / 294	-18.2	-18.2	0.12 (4)	10.00
F- E	0 / 0	-18.2	-18.2	0.05 (4)	10.00

WEBS

MEMB. FR-TO	MAX. FACTORED FORCE (LBS)	MAX CSI (LC)
A- G	0 / 775	0.17 (1)
G- B	-671 / 0	0.21 (1)
G- C	0 / 382	0.09 (1)
F- C	-366 / 0	0.11 (1)
F- D	0 / 532	0.12 (1)

DESIGN CRITERIA

SPECIFIED LOADS:

TOP CH.	LL	=	34.8	PSF
	DL	=	3.0	PSF
BOT CH.	LL	=	0.0	PSF
	DL	=	7.3	PSF
TOTAL LOAD		=	45.1	PSF

SPACING = 24.0 IN. C/C

LOADING IN FLAT SECTION BASED ON A SLOPE OF 2.00/12 MINIMUM

THIS TRUSS IS DESIGNED FOR RESIDENTIAL OR SMALL BUILDING REQUIREMENTS OF PART 9, NBCC 2015

THIS DESIGN COMPLIES WITH:
- PART 9 OF BCBC 2018 , ABC 2019
- PART 9 OF OBC 2012 (2019 AMENDMENT)
- CSA 086-14
- TPIC 2014

(55 % OF 48.1 P.S.F. G.S.L. PLUS 8.4 P.S.F. RAIN LOAD) EQUALS 34.8 P.S.F. SPECIFIED ROOF LIVE LOAD

ALLOWABLE DEFL.(LL)= L/360 (0.39")
CALCULATED VERT. DEFL.(LL) = L/ 999 (0.02")
ALLOWABLE DEFL.(TL)= L/360 (0.39")
CALCULATED VERT. DEFL.(TL) = L/ 999 (0.03")

CSI: TC=0.44/1.00 (A-B:1) , BC=0.12/1.00 (F-G:4) , WB=0.21/1.00 (B-G:1) , SSI=0.26/1.00 (A-B:1)

DOL LUMBER=1.00 NAIL=1.00 LS BEND=1.10 COMP=1.10 SHEAR=1.10 TENS= 1.10

COMPANION LIVE LOAD FACTOR = 1.00

TRUSS PLATE MANUFACTURER IS NOT RESPONSIBLE FOR QUALITY CONTROL IN THE TRUSS MANUFACTURING PLANT .

NAIL VALUES

PLATE	GRIP(DRY) (PSI) MAX	MIN	SHEAR (PLI) MAX	MIN	SECTION (PLI) MAX	MIN
MT20	650	371	1747	788	1987	1873

PLATE PLACEMENT TOL. = 0.250 inches

PLATE ROTATION TOL. = 5.0 Deg.

JSI GRIP= 0.88 (A) (INPUT = 0.90)
JSI METAL= 0.21 (A) (INPUT = 1.00)

LICENSED PROFESSIONAL ENGINEER
I.MATIJEVIC
100528832
PROVINCE OF ONTARIO
June 23, 2022

READ ALL NOTES ON THIS PAGE AND ON THE ENGINEERING NOTE PAGE ENP-1. THE NOTE PAGE IS AN INTEGRAL PART OF THIS DRAWING AS IT CONTAINS SPECIFICATIONS AND CRITERIA USED IN THE DESIGN OF THIS COMPONENT.

KOTT

CORPORATION OF THE CITY OF OSHAWA
TRUE COPY
OF BUILDING PLANS
Dec 06 2023
PER:
CHIEF BUILDING OFFICIAL

JOB NAME	TRUSS NAME	QUANTITY	PLY	JOB DESC.	DRWG NO.
IM0622-131	T18			TRUSS DESC.	

Version 8.500 S Aug 16 2021 MiTek Industries, Inc. Thu Jun 23 08:36:35 2022 Page 1
ID:OzM1q?scz2BChOKfHahjdLzPugE-Kt54XVGM3I3GibCrJhqn96QfnHgeJUBiD5SLZuz3Tlg
Scale: 1/2"=1'

MHP 23018

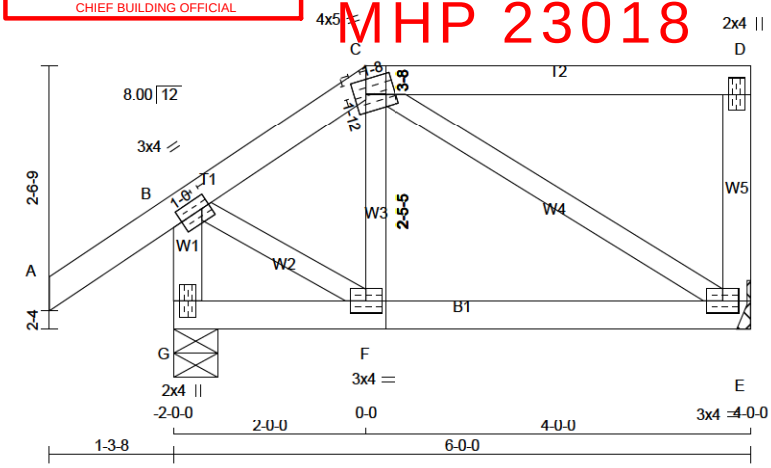

TOTAL WEIGHT = 26 lb
[M]

LUMBER
N. L. G. A. RULES

CHORDS	SIZE		LUMBER	DESCR.
A - C	2x4	DRY	No.2	SPF
C - D	2x4	DRY	No.2	SPF
E - D	2x4	DRY	No.2	SPF
G - B	2x4	DRY	No.2	SPF
G - E	2x4	DRY	No.2	SPF
ALL WEBS EXCEPT	2x3	DRY	No.2	SPF

DRY: SEASONED LUMBER.

PLATES (table is in inches)

JT	TYPE	PLATES	W	LEN	Y	X
B	TMVW-t	MT20	3.0	4.0	1.50	1.00
C	TTWW-m	MT20	4.0	5.0	1.75	1.50
D	TMV+p	MT20	2.0	4.0		
E	BMVW1-t	MT20	3.0	4.0		
F	BMWW-t	MT20	3.0	4.0		
G	BMV1+p	MT20	2.0	4.0		

DIMENSIONS, SUPPORTS AND LOADINGS SPECIFIED BY FABRICATOR TO BE VERIFIED BY BUILDING DESIGNER

BEARINGS

JT	FACTORED GROSS REACTION VERT	HORZ	MAXIMUM FACTORED GROSS REACTION DOWN	HORZ	UPLIFT	INPUT BRG IN-SX	REQRD BRG IN-SX
E	390	0	390	0	0	MECHANICAL	
G	544	0	544	0	0	5-8	1-8

A SUITABLE HANGER/MECHANICAL CONNECTION IS REQUIRED AT JOINT E. MINIMUM BEARING LENGTH AT JOINT E = 1-8.

UNFACTORED REACTIONS

JT	1ST LCASE COMBINED	MAX./MIN. COMPONENT REACTIONS SNOW	LIVE	PERM.LIVE	WIND	DEAD	SOIL
E	271	209 / 0	0 / 0	0 / 0	0 / 0	62 / 0	0 / 0
G	374	304 / 0	0 / 0	0 / 0	0 / 0	70 / 0	0 / 0

BEARING MATERIAL TO BE SPF NO.2 OR BETTER AT JOINT(S) G

BRACING
TOP CHORD TO BE SHEATHED OR MAX. PURLIN SPACING = 6.25 FT.
MAX. UNBRACED BOTTOM CHORD LENGTH = 10.00 FT OR RIGID CEILING DIRECTLY APPLIED.

ALL PITCH BREAKS AND PERIMETER CORNER JOINTS MUST BE LATERALLY RESTRAINED.

LOADING
TOTAL LOAD CASES: (4)

CHORDS

MEMB. FR-TO	MAX. FACTORED FORCE (LBS)	FACTORED VERT. LOAD (PLF) FROM	TO	LC1 MAX CSI (LC)	MAX. UNBRAC LENGTH
A- B	0 / 43	-111.9	-111.9	0.15 (1)	10.00
B- C	-272 / 0	-111.9	-111.9	0.08 (1)	6.25
C- D	0 / 0	-111.9	-111.9	0.30 (1)	10.00
E- D	-224 / 0	0.0	0.0	0.03 (1)	7.81
G- B	-534 / 0	0.0	0.0	0.05 (1)	7.81
G- F	0 / 0	-18.2	-18.2	0.06 (4)	10.00
F- E	0 / 224	-18.2	-18.2	0.07 (1)	10.00

WEBS

MEMB. FR-TO	MAX. FACTORED FORCE (LBS)	MAX CSI (LC)
F- C	-48 / 51	0.02 (4)
C- E	-262 / 0	0.08 (1)
B- F	0 / 254	0.06 (1)

DESIGN CRITERIA

SPECIFIED LOADS:

TOP CH.	LL	=	34.8	PSF
	DL	=	3.0	PSF
BOT CH.	LL	=	0.0	PSF
	DL	=	7.3	PSF
TOTAL LOAD		=	45.1	PSF

SPACING = 24.0 IN. C/C

LOADING IN FLAT SECTION BASED ON A SLOPE OF 2.00/12 MINIMUM

THIS TRUSS IS DESIGNED FOR RESIDENTIAL OR SMALL BUILDING REQUIREMENTS OF PART 9, NBCC 2015

THIS DESIGN COMPLIES WITH:
- PART 9 OF BCBC 2018 , ABC 2019
- PART 9 OF OBC 2012 (2019 AMENDMENT)
- CSA 086-14
- TPIC 2014

(55 % OF 48.1 P.S.F. G.S.L. PLUS 8.4 P.S.F. RAIN LOAD) EQUALS 34.8 P.S.F. SPECIFIED ROOF LIVE LOAD

ALLOWABLE DEFL.(LL)= L/360 (0.20")
CALCULATED VERT. DEFL.(LL) = L/ 999 (0.00")
ALLOWABLE DEFL.(TL)= L/360 (0.20")
CALCULATED VERT. DEFL.(TL) = L/ 999 (0.01")

CSI: TC=0.30/1.00 (C-D:1) , BC=0.07/1.00 (E-F:1) , WB=0.08/1.00 (C-E:1) , SSI=0.17/1.00 (C-D:1)

DOL LUMBER=1.00 NAIL=1.00 LS BEND=1.10 COMP=1.10 SHEAR=1.10 TENS= 1.10

COMPANION LIVE LOAD FACTOR = 1.00

TRUSS PLATE MANUFACTURER IS NOT RESPONSIBLE FOR QUALITY CONTROL IN THE TRUSS MANUFACTURING PLANT .

NAIL VALUES

PLATE	GRIP(DRY) (PSI) MAX	MIN	SHEAR (PLI) MAX	MIN	SECTION (PLI) MAX	MIN
MT20	650	371	1747	788	1987	1873

PLATE PLACEMENT TOL. = 0.250 inches

PLATE ROTATION TOL. = 5.0 Deg.

JSI GRIP= 0.79 (B) (INPUT = 0.90)
JSI METAL= 0.14 (B) (INPUT = 1.00)

LICENSED PROFESSIONAL ENGINEER
I.MATIJEVIC
100528832
PROVINCE OF ONTARIO
June 23, 2022

READ ALL NOTES ON THIS PAGE AND ON THE ENGINEERING NOTE PAGE ENP-1. THE NOTE PAGE IS AN INTEGRAL PART OF THIS DRAWING AS IT CONTAINS SPECIFICATIONS AND CRITERIA USED IN THE DESIGN OF THIS COMPONENT.

KOTT

CORPORATION OF THE CITY OF OSHAWA
TRUE COPY
OF ORIGINAL PLANS
Dec 06 2023
PER:
CHIEF BUILDING OFFICIAL

MHP 23018

JOB NAME	TRUSS NAME	QUANTITY	PLY	JOB DESC.	DRWG NO.
IM0622-131	T19			TRUSS DESC.	

Version 8.500 S Aug 16 2021 MiTek Industries, Inc. Thu Jun 23 08:36:36 2022 Page 1
ID:OzM1q?scz2BChOKfHahjdLzPugE-o4fSlrH?qbB7Jkn2tPL0iKzszh1X2xisSlBu5Kz3TIf
Scale = 1:25.7

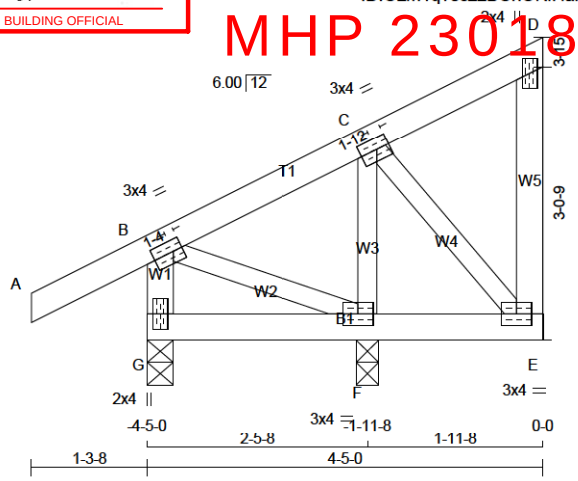

TOTAL WEIGHT = 5 X 22 = 108 lb

LUMBER
N. L. G. A. RULES

CHORDS	SIZE		LUMBER	DESCR.
A - D	2x4	DRY	No.2	SPF
E - D	2x4	DRY	No.2	SPF
G - B	2x4	DRY	No.2	SPF
G - E	2x4	DRY	No.2	SPF
ALL WEBS EXCEPT	2x3	DRY	No.2	SPF

DRY: SEASONED LUMBER.

PLATES (table is in inches)

JT	TYPE	PLATES	W	LEN	Y	X
B	TMVW-t	MT20	3.0	4.0	1.50	1.25
C	TMWW-t	MT20	3.0	4.0	1.50	1.75
D	TMV+p	MT20	2.0	4.0		
E	BMVW-t	MT20	3.0	4.0		
F	BMWW1-t	MT20	3.0	4.0		
G	BMV1+p	MT20	2.0	4.0		

DIMENSIONS, SUPPORTS AND LOADINGS SPECIFIED BY FABRICATOR TO BE VERIFIED BY BUILDING DESIGNER

BEARINGS

JT	FACTORED GROSS REACTION VERT	HORZ	MAXIMUM FACTORED GROSS REACTION DOWN	HORZ	UPLIFT	INPUT BRG IN-SX	REQRD BRG IN-SX
G	210	0	292	0	-71	3-8	1-8
F	516	0	516	0	0	3-0	1-8

PROVIDE ANCHORAGE AT BEARING JOINT G FOR 150 LBS FACTORED UPLIFT

UNFACTORED REACTIONS

JT	1ST LCASE COMBINED	MAX./MIN. COMPONENT REACTIONS SNOW	LIVE	PERM.LIVE	WIND	DEAD	SOIL
G	143	180 / -54	0 / 0	0 / 0	0 / 0	17 / 0	0 / 0
F	358	276 / 0	0 / 0	0 / 0	0 / 0	82 / 0	0 / 0

BEARING MATERIAL TO BE SPF NO.2 OR BETTER AT JOINT(S) G, F

BRACING
TOP CHORD TO BE SHEATHED OR MAX. PURLIN SPACING = 6.25 FT.
MAX. UNBRACED BOTTOM CHORD LENGTH = 6.25 FT OR RIGID CEILING DIRECTLY APPLIED.

ALL PITCH BREAKS AND PERIMETER CORNER JOINTS MUST BE LATERALLY RESTRAINED.

LOADING
TOTAL LOAD CASES: (13)

CHORDS

MEMB. FR-TO	MAX. FORCE (LBS)	FACTORED VERT. LOAD (PLF) FROM	TO	LC1 MAX CSI (LC)	MAX. UNBRAC LENGTH
A- B	0 / 34	-111.9	-111.9	0.15 (5)	10.00
B- C	0 / 114	-111.9	-111.9	0.12 (1)	10.00
C- D	-17 / 0	-111.9	-111.9	0.10 (1)	6.25
E- D	-94 / 17	0.0	0.0	0.02 (12)	7.81
G- B	-274 / 81	0.0	0.0	0.03 (7)	7.81
G- F	0 / 0	-18.2	-18.2	0.03 (4)	10.00
F- E	-98 / 6	-18.2	-18.2	0.03 (4)	6.25

WEBS

MEMB. FR-TO	MAX. FORCE (LBS)	MAX CSI (LC)
F- C	-432 / 0	0.07 (1)
C- E	-8 / 143	0.03 (13)
B- F	-103 / 6	0.02 (13)

CANTILEVER ANALYSIS HAS BEEN CONSIDERED IN THIS DESIGN

PATTERN-LOADING CHECK APPLIED TO THIS TRUSS.

DESIGN CRITERIA

SPECIFIED LOADS:

TOP CH.	LL	=	34.8	PSF
	DL	=	3.0	PSF
BOT CH.	LL	=	0.0	PSF
	DL	=	7.3	PSF
TOTAL LOAD		=	45.1	PSF

SPACING = 24.0 IN. C/C

THIS TRUSS IS DESIGNED FOR RESIDENTIAL OR SMALL BUILDING REQUIREMENTS OF PART 9, NBCC 2015

THIS DESIGN COMPLIES WITH:
- PART 9 OF BCBC 2018 , ABC 2019
- PART 9 OF OBC 2012 (2019 AMENDMENT)
- CSA 086-14
- TPIC 2014

(55 % OF 48.1 P.S.F. G.S.L. PLUS 8.4 P.S.F. RAIN LOAD) EQUALS 34.8 P.S.F. SPECIFIED ROOF LIVE LOAD

ALLOWABLE DEFL.(LL)= L/360 (0.19")
CALCULATED VERT. DEFL.(LL) = L/ 999 (0.00")
ALLOWABLE DEFL.(TL)= L/360 (0.19")
CALCULATED VERT. DEFL.(TL) = L/ 999 (0.00")

CANTILEVER DEFLECTION:
ALLOWABLE DEFL.(LL)= L/120 (0.20")
CALCULATED VERT. DEFL.(LL) = L/ 999 (0.00")
ALLOWABLE DEFL.(TL)= L/120 (0.20")
CALCULATED VERT. DEFL.(TL) = L/ 999 (0.00")

CSI: TC=0.15/1.00 (A-B:5) , BC=0.03/1.00 (E-F:4) , WB=0.07/1.00 (C-F:1) , SSI=0.12/1.00 (B-C:1)

DOL LUMBER=1.00 NAIL=1.00 LS BEND=1.10 COMP=1.10 SHEAR=1.10 TENS= 1.10

COMPANION LIVE LOAD FACTOR = 1.00

TRUSS PLATE MANUFACTURER IS NOT RESPONSIBLE FOR QUALITY CONTROL IN THE TRUSS MANUFACTURING PLANT .

NAIL VALUES

PLATE	GRIP(DRY) (PSI) MAX	MIN	SHEAR (PLI) MAX	MIN	SECTION (PLI) MAX	MIN
MT20	650	371	1747	788	1987	1873

PLATE PLACEMENT TOL. = 0.250 inches

PLATE ROTATION TOL. = 5.0 Deg.

JSI GRIP= 0.53 (C) (INPUT = 0.90)
JSI METAL= 0.08 (C) (INPUT = 1.00)

LICENSED PROFESSIONAL ENGINEER
I.MATIJEVIC
100528832
PROVINCE OF ONTARIO
June 23, 2022

READ ALL NOTES ON THIS PAGE AND ON THE ENGINEERING NOTE PAGE ENP-1. THE NOTE PAGE IS AN INTEGRAL PART OF THIS DRAWING AS IT CONTAINS SPECIFICATIONS AND CRITERIA USED IN THE DESIGN OF THIS COMPONENT.

KOTT

CORPORATION OF THE CITY OF OSHAWA
TRUE COPY
OF QUANTITY PLANS
Dec 06 2023
PER:
CHIEF BUILDING OFFICIAL

JOB NAME	TRUSS NAME	QUANTITY	PLY	JOB DESC.	DRWG NO.
IM0622-131	T20			TRUSS DESC.	

Version 8.500 S Aug 16 2021 MiTek Industries, Inc. Thu Jun 23 08:36:37 2022 Page 1
ID:OzM1q?scz2BChOKfHahjdLzPugE-GGDqyBIdbvJ_xuMEQ6sFFXV1I5NfnP??hPxSenz3TIe
Scale = 1:18.9

MHP 23018

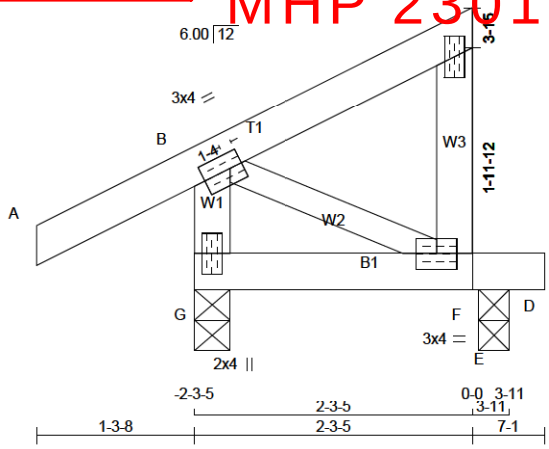

TOTAL WEIGHT = 12 lb
[M]

LUMBER
N. L. G. A. RULES

CHORDS	SIZE		LUMBER	DESCR.
A - C	2x4	DRY	No.2	SPF
F - C	2x4	DRY	No.2	SPF
G - B	2x4	DRY	No.2	SPF
G - D	2x4	DRY	No.2	SPF
ALL WEBS	2x3	DRY	No.2	SPF

DRY: SEASONED LUMBER.

PLATES (table is in inches)

JT	TYPE	PLATES	W	LEN	Y	X
B	TMVW-t	MT20	3.0	4.0	1.50	1.25
C	TMV+p	MT20	2.0	4.0		
F	BMVW-t	MT20	3.0	4.0		
G	BMV1+p	MT20	2.0	4.0		

DIMENSIONS, SUPPORTS AND LOADINGS SPECIFIED BY FABRICATOR TO BE VERIFIED BY BUILDING DESIGNER

BEARINGS

JT	FACTORED GROSS REACTION VERT	HORZ	MAXIMUM FACTORED GROSS REACTION DOWN	HORZ	UPLIFT	INPUT BRG	REQRD BRG
G	310	0	310	0	0	3-8	1-8
E	149	0	149	0	0	3-0	1-8

UNFACTORED REACTIONS

JT	1ST LCASE COMBINED	SNOW	MAX./MIN. COMPONENT REACTIONS LIVE	PERM.LIVE	WIND	DEAD	SOIL
G	212	179 / 0	0 / 0	0 / 0	0 / 0	33 / 0	0 / 0
E	104	73 / 0	0 / 0	0 / 0	0 / 0	31 / 0	0 / 0

BEARING MATERIAL TO BE SPF NO.2 OR BETTER AT JOINT(S) G, E

BRACING
TOP CHORD TO BE SHEATHED OR MAX. PURLIN SPACING = 10.00 FT.
MAX. UNBRACED BOTTOM CHORD LENGTH = 10.00 FT OR RIGID CEILING DIRECTLY APPLIED.

ALL PITCH BREAKS AND PERIMETER CORNER JOINTS MUST BE LATERALLY RESTRAINED.

LOADING
TOTAL LOAD CASES: (7)

CHORDS

MEMB. FR-TO	MAX. FACTORED FORCE (LBS)	FACTORED VERT. LOAD (PLF) FROM	TO	LC1 MAX CSI (LC)	MAX. UNBRAC LENGTH
A- B	0 / 34	-111.9	-111.9	0.15 (1)	10.00
B- C	0 / 0	-111.9	-111.9	0.10 (1)	10.00
F- C	-127 / 0	0.0	0.0	0.01 (1)	7.81
G- B	-279 / 0	0.0	0.0	0.03 (1)	7.81
G- F	0 / 0	-18.2	-18.2	0.04 (6)	10.00
F- E	0 / 0	-18.2	-18.2	0.03 (1)	10.00
E- D	0 / 0	-18.2	-18.2	0.00 (4)	10.00

WEBS

MEMB. FR-TO	MAX. FACTORED FORCE (LBS)	MAX CSI (LC)
B- F	0 / 0	0.00 (1)

CANTILEVER ANALYSIS HAS BEEN CONSIDERED IN THIS DESIGN

PATTERN-LOADING CHECK APPLIED TO THIS TRUSS.

DESIGN CRITERIA

SPECIFIED LOADS:

TOP CH.	LL	=	34.8	PSF
	DL	=	3.0	PSF
BOT CH.	LL	=	0.0	PSF
	DL	=	7.3	PSF
TOTAL LOAD		=	45.1	PSF

SPACING = 24.0 IN. C/C

THIS TRUSS IS DESIGNED FOR RESIDENTIAL OR SMALL BUILDING REQUIREMENTS OF PART 9, NBCC 2015

THIS DESIGN COMPLIES WITH:
- PART 9 OF BCBC 2018 , ABC 2019
- PART 9 OF OBC 2012 (2019 AMENDMENT)
- CSA 086-14
- TPIC 2014

DESIGN ASSUMPTIONS
-OVERHANG NOT TO BE ALTERED OR CUT OFF.

(55 % OF 48.1 P.S.F. G.S.L. PLUS 8.4 P.S.F. RAIN LOAD) EQUALS 34.8 P.S.F. SPECIFIED ROOF LIVE LOAD

ALLOWABLE DEFL.(LL)= L/360 (0.19")
CALCULATED VERT. DEFL.(LL) = L/ 999 (0.00")
ALLOWABLE DEFL.(TL)= L/360 (0.19")
CALCULATED VERT. DEFL.(TL) = L/ 999 (0.00")

CANTILEVER DEFLECTION:
ALLOWABLE DEFL.(LL)= L/120 (0.19")
CALCULATED VERT. DEFL.(LL) = L/ 999 (0.00")
ALLOWABLE DEFL.(TL)= L/120 (0.19")
CALCULATED VERT. DEFL.(TL) = L/ 999 (0.00")

CSI: TC=0.15/1.00 (A-B:1) , BC=0.04/1.00 (F-G:6) , WB=0.00/1.00 (B-F:1) , SSI=0.11/1.00 (E-F:1)

DOL LUMBER=1.00 NAIL=1.00 LS BEND=1.10 COMP=1.10 SHEAR=1.10 TENS= 1.10

COMPANION LIVE LOAD FACTOR = 1.00

TRUSS PLATE MANUFACTURER IS NOT RESPONSIBLE FOR QUALITY CONTROL IN THE TRUSS MANUFACTURING PLANT .

NAIL VALUES

PLATE	GRIP(DRY) (PSI) MAX	MIN	SHEAR (PLI) MAX	MIN	SECTION (PLI) MAX	MIN
MT20	650	371	1747	788	1987	1873

PLATE PLACEMENT TOL. = 0.250 inches

PLATE ROTATION TOL. = 5.0 Deg.

JSI GRIP= 0.25 (B) (INPUT = 0.90)
JSI METAL= 0.06 (G) (INPUT = 1.00)

LICENSED PROFESSIONAL ENGINEER
I.MATIJEVIC
100528832
PROVINCE OF ONTARIO
June 23, 2022

READ ALL NOTES ON THIS PAGE AND ON THE ENGINEERING NOTE PAGE ENP-1. THE NOTE PAGE IS AN INTEGRAL PART OF THIS DRAWING AS IT CONTAINS SPECIFICATIONS AND CRITERIA USED IN THE DESIGN OF THIS COMPONENT.

KOTT

CORPORATION OF THE CITY OF OSHAWA
TRUE COPY
OF ISSUED PLANS
Dec 06 2023
PER:
CHIEF BUILDING OFFICIAL

JOB NAME	TRUSS NAME	QUANTITY	PLY	JOB DESC.	DRWG NO.
IM0622-131	T21			TRUSS DESC.	

Version 8.500 S Aug 16 2021 MiTek Industries, Inc. Thu Jun 23 08:36:38 2022 Page 1
ID:OzM1q?scz2BChOKfHahjdLzPugE-kSnD9XJFMDRrZ2xQ_pOUnl2CIVj9WsF9v3g?ADz3TId
Scale = 1:20.7

MHP 23018

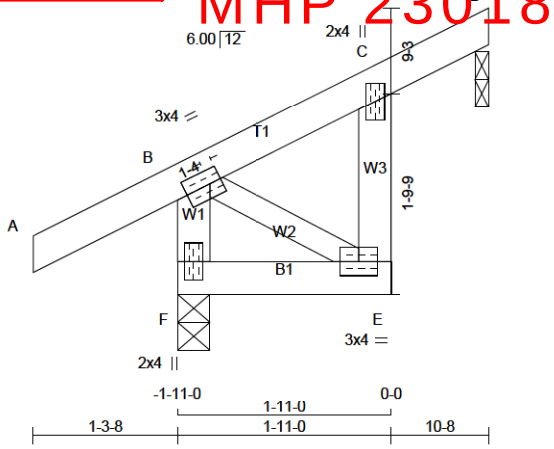

TOTAL WEIGHT = 3 X 11 = 34 lb
[M]

LUMBER
N. L. G. A. RULES

CHORDS	SIZE		LUMBER	DESCR.
A - D	2x4	DRY	No.2	SPF
E - C	2x4	DRY	No.2	SPF
F - B	2x4	DRY	No.2	SPF
F - E	2x4	DRY	No.2	SPF
ALL WEBS	2x3	DRY	No.2	SPF

DRY: SEASONED LUMBER.

PLATES (table is in inches)

JT	TYPE	PLATES	W	LEN	Y	X
B	TMVW-t	MT20	3.0	4.0	1.50	1.25
C	TMV+p	MT20	2.0	4.0		
E	BMVW-t	MT20	3.0	4.0		
F	BMV1+p	MT20	2.0	4.0		

DIMENSIONS, SUPPORTS AND LOADINGS SPECIFIED BY FABRICATOR TO BE VERIFIED BY BUILDING DESIGNER

BEARINGS

JT	FACTORED GROSS REACTION VERT	HORZ	MAXIMUM FACTORED GROSS REACTION DOWN	HORZ	UPLIFT	INPUT BRG IN-SX	REQRD BRG IN-SX
D	168	0	168	0	0	1-8	1-8
F	331	0	331	0	0	3-8	1-8

BEVELED PLATE OR SHIM REQUIRED TO PROVIDE FULL BEARING SURFACE WITH TRUSS CHORD AT JT(S): D

UNFACTORED REACTIONS

JT	1ST LCASE COMBINED	MAX./MIN. COMPONENT REACTIONS SNOW	LIVE	PERM.LIVE	WIND	DEAD	SOIL
D	115	97 / 0	0 / 0	0 / 0	0 / 0	18 / 0	0 / 0
F	226	192 / 0	0 / 0	0 / 0	0 / 0	35 / 0	0 / 0

BEARING MATERIAL TO BE SPF NO.2 OR BETTER AT JOINT(S) D, F

BRACING
TOP CHORD TO BE SHEATHED OR MAX. PURLIN SPACING = 6.25 FT.
MAX. UNBRACED BOTTOM CHORD LENGTH = 10.00 FT OR RIGID CEILING DIRECTLY APPLIED.

ALL PITCH BREAKS AND PERIMETER CORNER JOINTS MUST BE LATERALLY RESTRAINED.

LOADING
TOTAL LOAD CASES: (7)

CHORDS

MEMB. FR-TO	MAX. FACTORED FORCE (LBS)	FACTORED VERT. LOAD (PLF) FROM	TO	LC1 MAX CSI (LC)	MAX. UNBRAC LENGTH
A- B	0 / 34	-111.9	-111.9	0.15 (1)	10.00
B- C	-24 / 0	-111.9	-111.9	0.16 (6)	6.25
C- D	0 / 53	-111.9	-111.9	0.15 (6)	10.00
E- C	0 / 20	0.0	0.0	0.00 (4)	10.00
F- B	-313 / 0	0.0	0.0	0.03 (1)	7.81
F- E	0 / 0	-18.2	-18.2	0.02 (4)	10.00

WEBS

MEMB. FR-TO	MAX. FACTORED FORCE (LBS)	MAX CSI (LC)
B- E	0 / 0	0.00 (1)

CANTILEVER ANALYSIS HAS BEEN CONSIDERED IN THIS DESIGN

PATTERN-LOADING CHECK APPLIED TO THIS TRUSS.

DESIGN CRITERIA

SPECIFIED LOADS:

TOP CH.	LL	=	34.8	PSF
	DL	=	3.0	PSF
BOT CH.	LL	=	0.0	PSF
	DL	=	7.3	PSF
TOTAL LOAD		=	45.1	PSF

SPACING = 24.0 IN. C/C

THIS TRUSS IS DESIGNED FOR RESIDENTIAL OR SMALL BUILDING REQUIREMENTS OF PART 9, NBCC 2015

THIS DESIGN COMPLIES WITH:
- PART 9 OF BCBC 2018 , ABC 2019
- PART 9 OF OBC 2012 (2019 AMENDMENT)
- CSA 086-14
- TPIC 2014

(55 % OF 48.1 P.S.F. G.S.L. PLUS 8.4 P.S.F. RAIN LOAD) EQUALS 34.8 P.S.F. SPECIFIED ROOF LIVE LOAD

ALLOWABLE DEFL.(LL)= L/360 (0.19")
CALCULATED VERT. DEFL.(LL) = L/ 999 (0.01")
ALLOWABLE DEFL.(TL)= L/360 (0.19")
CALCULATED VERT. DEFL.(TL) = L/ 999 (0.02")

CSI: TC=0.16/1.00 (B-C:6) , BC=0.02/1.00 (E-F:4) , WB=0.00/1.00 (B-E:1) , SSI=0.12/1.00 (C-D:6)

DOL LUMBER=1.00 NAIL=1.00 LS BEND=1.10 COMP=1.10 SHEAR=1.10 TENS= 1.10

COMPANION LIVE LOAD FACTOR = 1.00

TRUSS PLATE MANUFACTURER IS NOT RESPONSIBLE FOR QUALITY CONTROL IN THE TRUSS MANUFACTURING PLANT .

NAIL VALUES

PLATE	GRIP(DRY) (PSI) MAX	MIN	SHEAR (PLI) MAX	MIN	SECTION (PLI) MAX	MIN
MT20	650	371	1747	788	1987	1873

PLATE PLACEMENT TOL. = 0.250 inches

PLATE ROTATION TOL. = 5.0 Deg.

JSI GRIP= 0.28 (B) (INPUT = 0.90)
JSI METAL= 0.07 (F) (INPUT = 1.00)

LICENSED PROFESSIONAL ENGINEER
I.MATIJEVIC
100528832
PROVINCE OF ONTARIO
June 23, 2022

READ ALL NOTES ON THIS PAGE AND ON THE ENGINEERING NOTE PAGE ENP-1. THE NOTE PAGE IS AN INTEGRAL PART OF THIS DRAWING AS IT CONTAINS SPECIFICATIONS AND CRITERIA USED IN THE DESIGN OF THIS COMPONENT.

KOTT

CORPORATION OF THE CITY OF OSHAWA
TRUE COPY
OF QUALITY PLANS
Dec 06 2023
PER:
CHIEF BUILDING OFFICIAL

JOB NAME	TRUSS NAME	QUANTITY	PLY	JOB DESC.	DRWG NO.
IM0622-131	T22			TRUSS DESC.	

Version 8.500 S Aug 16 2021 MiTek Industries, Inc. Thu Jun 23 08:36:38 2022 Page 1
ID:OzM1q?scz2BChOKfHahjdLzPugE-kSnD9XJFMDRrZ2xQ_pOUnl2CVVjzWsF9v3g?ADz3Tld
Scale = 1:19.4

MHP 23018

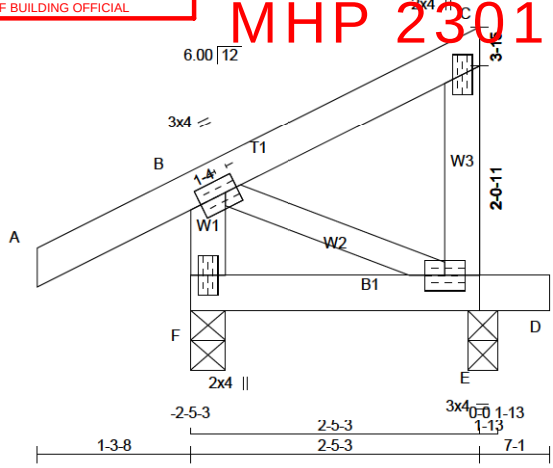

TOTAL WEIGHT = 13 lb
[M]

LUMBER
N. L. G. A. RULES

CHORDS	SIZE		LUMBER	DESCR.
A - C	2x4	DRY	No.2	SPF
E - C	2x4	DRY	No.2	SPF
F - B	2x4	DRY	No.2	SPF
F - D	2x4	DRY	No.2	SPF
ALL WEBS	2x3	DRY	No.2	SPF

DRY: SEASONED LUMBER.

PLATES (table is in inches)

JT	TYPE	PLATES	W	LEN	Y	X
B	TMVW-t	MT20	3.0	4.0	1.50	1.25
C	TMV+p	MT20	2.0	4.0		
E	BMVW1-t	MT20	3.0	4.0		
F	BMV1+p	MT20	2.0	4.0		

DIMENSIONS, SUPPORTS AND LOADINGS SPECIFIED BY FABRICATOR TO BE VERIFIED BY BUILDING DESIGNER

BEARINGS

JT	FACTORED GROSS REACTION VERT	HORZ	MAXIMUM FACTORED GROSS REACTION DOWN	HORZ	UPLIFT	INPUT BRG IN-SX	REQRD BRG IN-SX
E	169	0	169	0	0	3-0	1-8
F	310	0	310	0	0	3-8	1-8

UNFACTORED REACTIONS

JT	1ST LCASE COMBINED	SNOW	MAX./MIN. COMPONENT REACTIONS LIVE	PERM.LIVE	WIND	DEAD	SOIL
E	118	85 / 0	0 / 0	0 / 0	0 / 0	34 / 0	0 / 0
F	212	179 / 0	0 / 0	0 / 0	0 / 0	33 / 0	0 / 0

BEARING MATERIAL TO BE SPF NO.2 OR BETTER AT JOINT(S) E, F

BRACING
TOP CHORD TO BE SHEATHED OR MAX. PURLIN SPACING = 10.00 FT.
MAX. UNBRACED BOTTOM CHORD LENGTH = 10.00 FT OR RIGID CEILING DIRECTLY APPLIED.

ALL PITCH BREAKS AND PERIMETER CORNER JOINTS MUST BE LATERALLY RESTRAINED.

LOADING
TOTAL LOAD CASES: (7)

CHORDS

MEMB. FR-TO	MAX. FACTORED FORCE (LBS)	FACTORED VERT. LOAD (PLF) FROM	TO	LC1 MAX CSI (LC)	MAX. UNBRAC LENGTH
A- B	0 / 34	-111.9	-111.9	0.15 (1)	10.00
B- C	0 / 0	-111.9	-111.9	0.11 (1)	10.00
E- C	-136 / 0	0.0	0.0	0.02 (1)	7.81
F- B	-288 / 0	0.0	0.0	0.03 (1)	7.81
F- E	0 / 0	-18.2	-18.2	0.03 (4)	10.00
E- D	0 / 0	-18.2	-18.2	0.01 (4)	10.00

WEBS

MEMB. FR-TO	MAX. FACTORED FORCE (LBS)	MAX CSI (LC)
B- E	0 / 0	0.00 (1)

CANTILEVER ANALYSIS HAS BEEN CONSIDERED IN THIS DESIGN

PATTERN-LOADING CHECK APPLIED TO THIS TRUSS.

DESIGN CRITERIA

SPECIFIED LOADS:

TOP CH.	LL	=	34.8	PSF
	DL	=	3.0	PSF
BOT CH.	LL	=	0.0	PSF
	DL	=	7.3	PSF
TOTAL LOAD		=	45.1	PSF

SPACING = 24.0 IN. C/C

THIS TRUSS IS DESIGNED FOR RESIDENTIAL OR SMALL BUILDING REQUIREMENTS OF PART 9, NBCC 2015

THIS DESIGN COMPLIES WITH:
- PART 9 OF BCBC 2018 , ABC 2019
- PART 9 OF OBC 2012 (2019 AMENDMENT)
- CSA 086-14
- TPIC 2014

(55 % OF 48.1 P.S.F. G.S.L. PLUS 8.4 P.S.F. RAIN LOAD) EQUALS 34.8 P.S.F. SPECIFIED ROOF LIVE LOAD

ALLOWABLE DEFL.(TL)= L/360 (0.19")
CALCULATED VERT. DEFL.(TL) = L/ 999 (0.00")

CANTILEVER DEFLECTION:
ALLOWABLE DEFL.(TL)= L/120 (0.19")
CALCULATED VERT. DEFL.(TL) = L/ 999 (0.00")

CSI: TC=0.15/1.00 (A-B:1) , BC=0.03/1.00 (E-F:4) , WB=0.00/1.00 (B-E:1) , SSI=0.11/1.00 (A-B:1)

DOL LUMBER=1.00 NAIL=1.00 LS BEND=1.10 COMP=1.10 SHEAR=1.10 TENS= 1.10

COMPANION LIVE LOAD FACTOR = 1.00

TRUSS PLATE MANUFACTURER IS NOT RESPONSIBLE FOR QUALITY CONTROL IN THE TRUSS MANUFACTURING PLANT .

NAIL VALUES

PLATE	GRIP(DRY) (PSI) MAX	MIN	SHEAR (PLI) MAX	MIN	SECTION (PLI) MAX	MIN
MT20	650	371	1747	788	1987	1873

PLATE PLACEMENT TOL. = 0.250 inches

PLATE ROTATION TOL. = 5.0 Deg.

JSI GRIP= 0.25 (B) (INPUT = 0.90)
JSI METAL= 0.06 (F) (INPUT = 1.00)

LICENSED PROFESSIONAL ENGINEER
I.MATIJEVIC
100528832
PROVINCE OF ONTARIO
June 23, 2022

READ ALL NOTES ON THIS PAGE AND ON THE ENGINEERING NOTE PAGE ENP-1. THE NOTE PAGE IS AN INTEGRAL PART OF THIS DRAWING AS IT CONTAINS SPECIFICATIONS AND CRITERIA USED IN THE DESIGN OF THIS COMPONENT.

KOTT

CORPORATION OF THE CITY OF OSHAWA
TRUE COPY
OF PERMIT PLANS
Dec 06 2023
PER:
CHIEF BUILDING OFFICIAL

MiTek®

MHP 23018

STANDARD DETAIL **MSD2015-H**

Issued: MARCH 1, 2022
Expiry: APRIL 30, 2024

TOE-NAIL CAPACITY DETAILS

LATERAL AND WITHDRAWAL RESISTANCE OF BEARING ANCHORAGE BY TOE-NAILS

NAIL TYPE	Length (in)	Diameter (in)	LATERAL Resistance per nail (Lbs.)		WITHDRAWAL Resistance per nail (Lbs.)	
			SPF	D. FIR	SPF	D. FIR
COMMON WIRE	3.00	0.144	122	139	30	42
	3.25	0.144	127	144	32	45
	3.50	0.160	152	173	38	52
COMMON SPIRAL	3.00	0.122	96	108	26	36
	3.25	0.122	97	108	28	40
	3.50	0.152	142	161	36	50
3.25" Gun nail	3.25	0.120	94	105	28	39

Note: If using truss with D. Fir lumber and SPF bearing plate, use tabulated SPF values in table.

Nail type:	Common wire	Common spiral	Common wire	Common spiral	Gun Nail
Diameter (in.)	0.160	0.152	0.144	0.122	0.120
Length (in.)	3.50	3.50	3.00	3.00	3.25
LUMBER	**MAXIMUM NUMBER OF TOE-NAILS**				
2x4 SPF	2	2	3	3	3
2x6 SPF	4	4	4	5	5
2x4 D. FIR	2	2	2	2	2
2x6 D. FIR	3	3	3	4	4

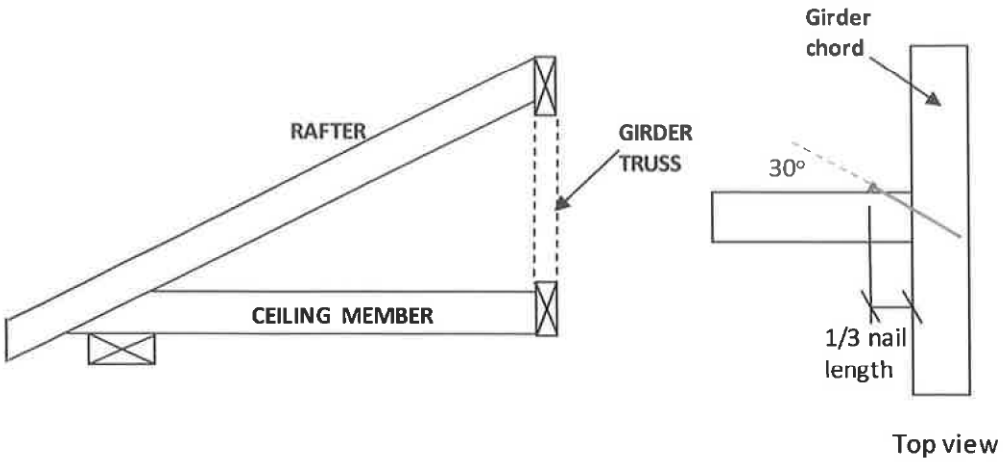

Figure 1: Toe-Nailing Rafter / Ceiling Member to Girder Truss

PEO
Certificate No. 10889485

LICENSED PROFESSIONAL ENGINEER
2022-04-05
C. Cordogiannis
90553736
PROVINCE OF ONTARIO

©2020 MiTek Canada Inc., 240 Stirling Crescent, Bradford, Ontario, L3Z 4L5 | (800) 268-3434, www.mitek.ca

CORPORATION OF THE CITY OF OSHAWA
TRUE COPY
OF PERMIT PLANS
Dec 06 2023
PER:
CHIEF BUILDING OFFICIAL

MiTek®

MHP 23018

STANDARD DETAIL **MSD2015-H**

Issued: MARCH 1, 2022
Expiry: APRIL 30, 2024

TOE-NAIL CAPACITY DETAILS

Figure 2: Toe-Nail Anchorage to Bearing Plate for Uplift

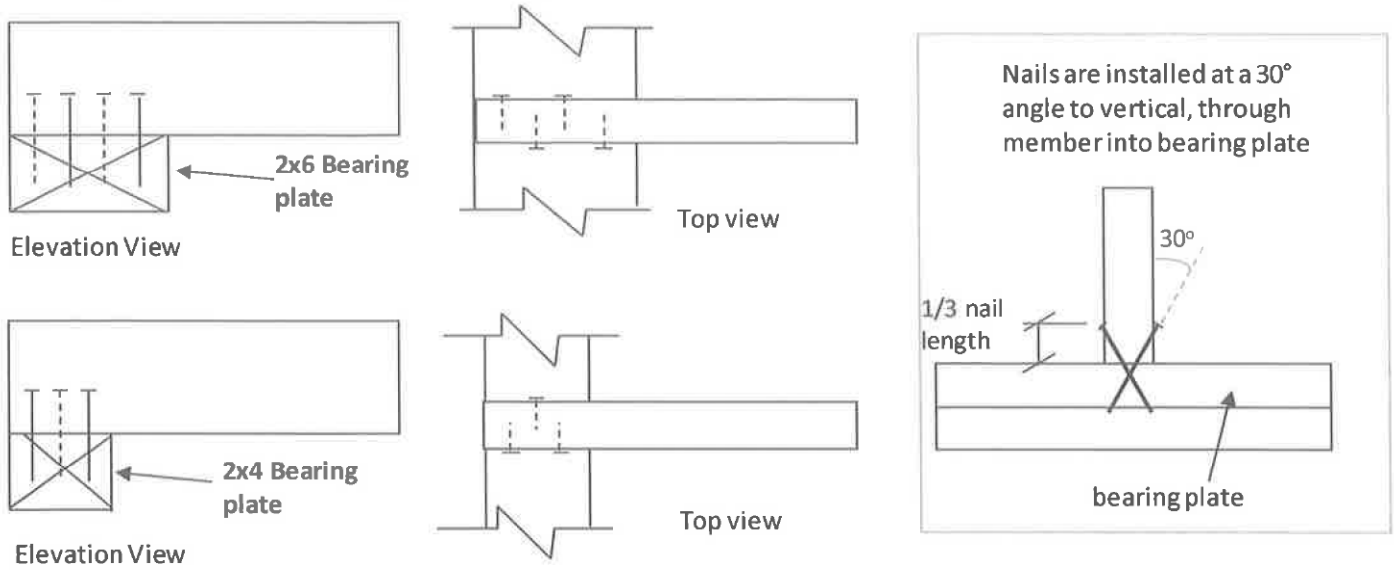

NOTES:

1. Rafter and ceiling members may be connected to top and bottom chords of girder truss by toe-nailing the members into the girder chords (see fig. 1), provided the factored vertical reactions of the supported members do not exceed the lateral resistance of the toe-nails. Mechanical connectors (hangers) are required if factored vertical reactions exceed the toe-nail capacity, or if the connection must resist horizontal loads (loads perpendicular to the face of girder or rafter).

2. Trusses, rafters or ceiling members may be anchored to the bearing plate with toe-nails (see fig. 2), provided that the factored uplift reactions due to **wind or earthquake loads** do not exceed the **withdrawal resistance of the toe-nails.** Mechanical anchors (tie-downs) are required for reactions that exceed the toe-nail withdrawal capacity. Toe-nail anchorage to bearing plates is **NOT** permitted if uplift reactions are generated from gravity loads (snow, floor live, dead).

3. Tabulated toe-nail resistances on page 1 are for **one** toe-nail. Multiply unit values by the number of nails used in the connection. Maximum number of nails in a connection shall not exceed the tabulated limits shown on page 1 for a given lumber size /species.

4. Nail values are based on specific gravity of G = 0.42 (SPF) and G = 0.49 (D. Fir).

5. Toe-nails shall be driven at approximately 1/3 the nail length from the edge of the joist/truss chord and driven at an angle of 30° to the grain of the member.

6. For wind / earthquake loads, tabulated lateral resistances may be multiplied by 1.15 (K_D factor). No increases are permitted for tabulated withdrawal resistances.

7. Lumber must be dry (< 19% moisture content) at the time of nail installation.

8. Nail values in this table comply with CSA O86-19, Clause 12.9.

PEO
Certificate No. 10889485

LICENSED PROFESSIONAL ENGINEER
2022-04-05
C. Cordogiannis
90553736
PROVINCE OF ONTARIO

©2020 MiTek Canada Inc., 240 Stirling Crescent, Bradford, Ontario, L3Z 4L5 | (800) 268-3434, www.mitek.ca

CORPORATION OF THE CITY OF OSHAWA
TRUE COPY
OF PERMIT PLANS
Dec 06 2023
PER:
CHIEF BUILDING OFFICIAL

MiTek®

MHP 23018

STANDARD DETAIL MSD2015-J

Issued: **MARCH 17, 2021**
Expiry: **APRIL 30, 2023**

STANDARD HIP END FRAMING

PLAN VIEW

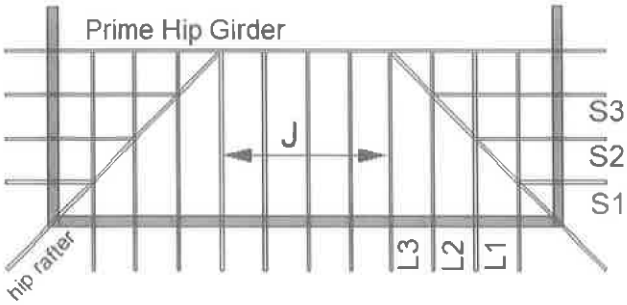

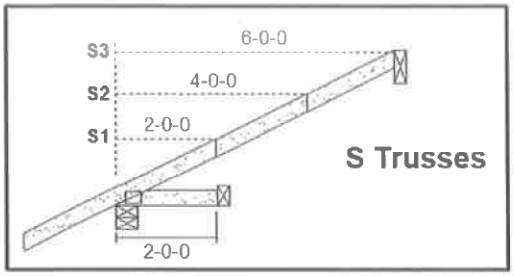

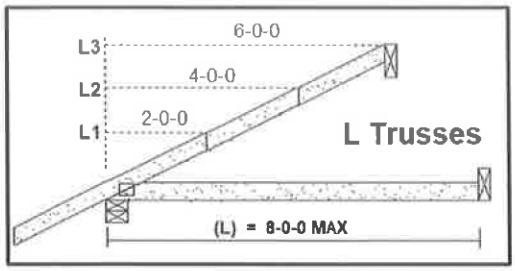

Specified Load Rating:

Top chord Live:	51.0 PSF or less
Top chord Dead:	6.0 PSF or less
Bottom chord Live:	0.0 PSF
Bottom chord Dead:	7.3 PSF or less

HEEL DETAIL 'A'
Standard Heel

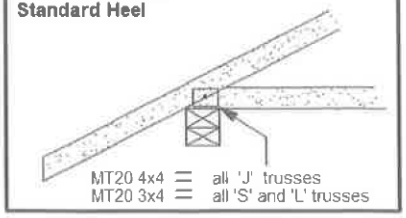

DETAIL "B":
Raised Heel

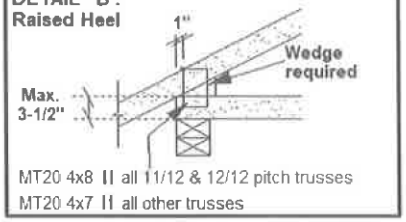

HEEL DETAIL 'C'
Cantilever

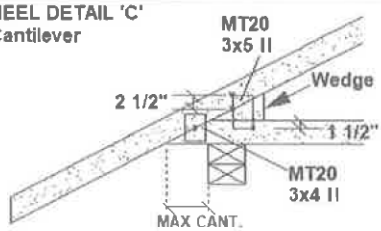

CANTILEVER DETAIL "C"

SLOPE	MAX CANT.	WEDGE PLATE	WEDGE SIZE
3/12	17"	3 X 5	2 X 3
4/12	14"	3 X 5	2 X 3
5/12	12"	3 X 5	2 X 4
6/12	10"	3 X 5	2 X 4
7/12	9"	3 X 5	2 X 6
8/12	8.5"	3 X 5	2 X 6
9/12	8"	3 X 5	2 X 6
10/12	7.5"	3 X 5	2 X 6

J Trusses

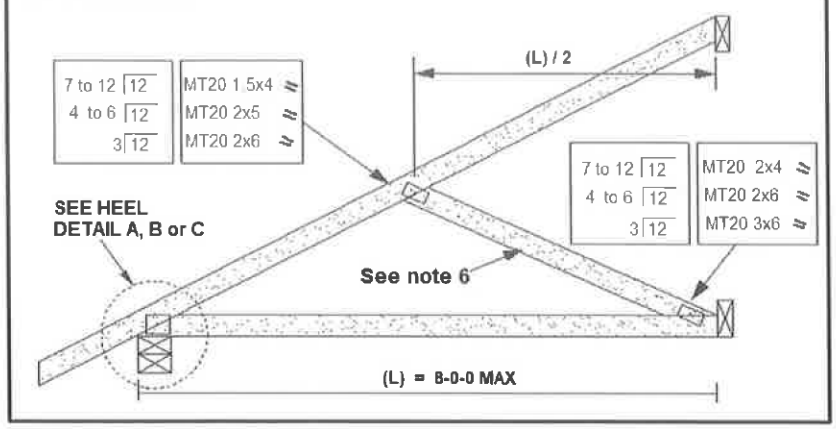

PEO
Certificate No. 10889485

LICENSED PROFESSIONAL ENGINEER
2022-04-27
C. Cordogiannis
90553736
PROVINCE OF ONTARIO

NOTES:

1. This detail is valid only for projects conforming to **PART 9 NBCC 2015** that do not require a wind analysis to be incorporated into the design of the trusses.
2. Overhang length shall not exceed 24 inches.
3. All lumber shall be 2x4 SPF (or D-Fir) DRY No. 2 grade or better.
4. All plates specified are MITEK MT20, pressed into both faces of each truss. Heel plates of all trusses shall conform to heel details 'A', 'B' or 'C'.
5. Diagonal hip rafter design shall conform to section 9.23.14.6 of NBCC 2015.
6. For 6.0 ft. or less span, diagonal web on truss 'J" is optional. Girder design must reflect choice of partial jack ('J' with diagonal web) or open jack ('J' without diagonal web)
7. All truss-to-rafter and truss-to-truss connections shall be specified as per MITEK standard detail *'MSD2015-H: Toe-Nail Capacity Details'*

©2021 MiTek Canada Inc.240 Stirling Cr. Bradford Ontario, L3Z 4L5 (800) 268-3434, www.mitek.ca

CORPORATION OF THE CITY OF OSHAWA
TRUE COPY
OF PERMIT PLANS
Dec 06 2023
PER: C Martin
CHIEF BUILDING OFFICIAL

MiTek®

MHP 23018

STANDARD DETAIL MSD2015-K

Issued: **MARCH 1, 2022**
Expiry: **APRIL 30, 2024**

STANDARD GABLE END DETAIL

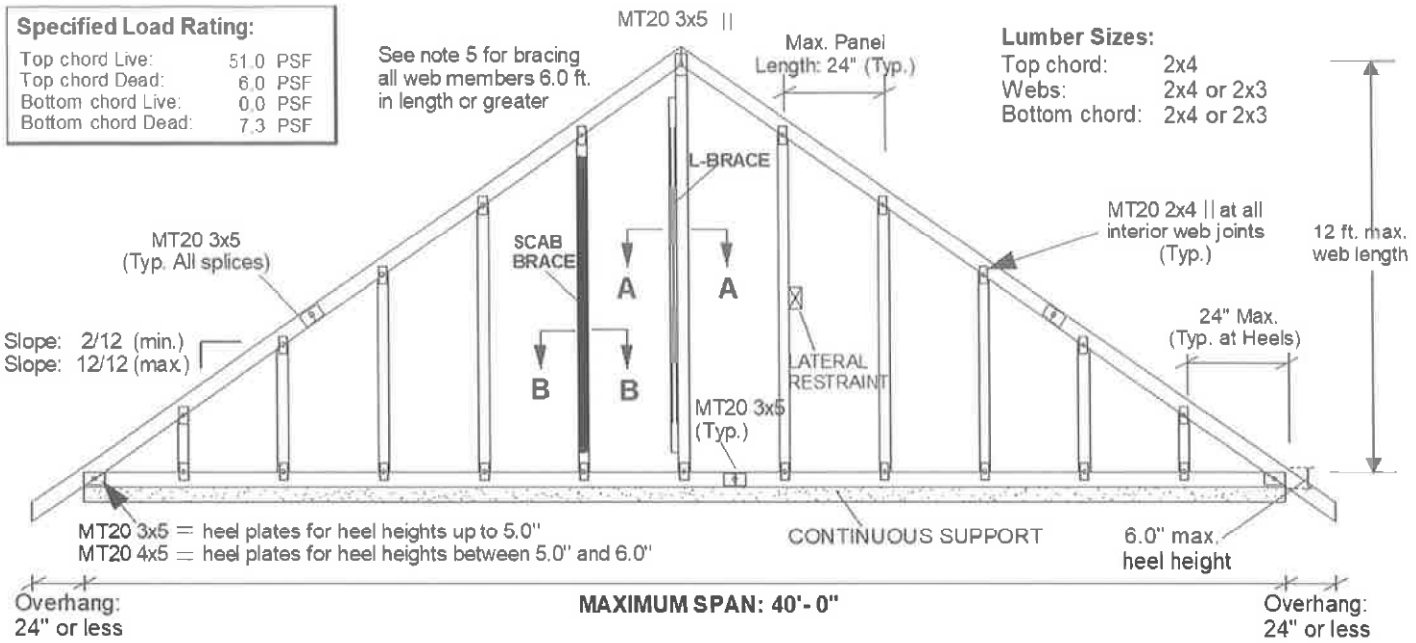

SCAB BRACE DETAIL (Section B-B)

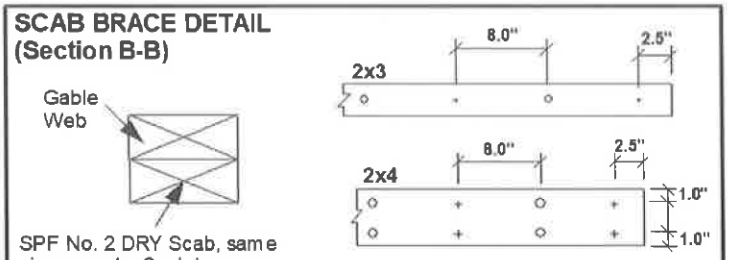

L BRACE DETAIL (Section A-A)

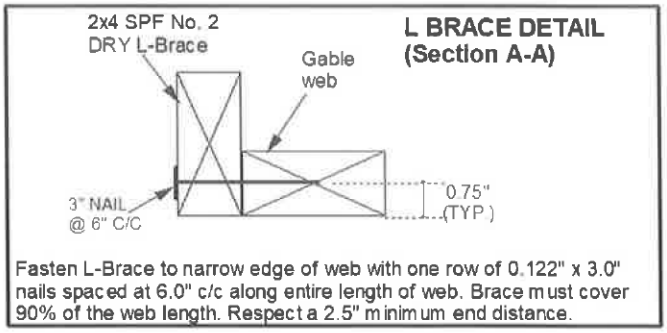

Notes:

1. This detail is only valid for projects conforming to **Part 9, NBCC 2015** that do not require a wind analysis to be incorporated into the design of the truss.
2. This detail is for vertical (gravity) load rating of the truss only. Truss must be continuously supported over the entire length of bottom chord.
3. Maximum web length not to exceed 12.0 ft. Spacing of gable stud webs in the truss not to exceed 24 inches cc.
4. Splice joints shall not be located in the first panel adjacent to the heel joint or peak joint.
5. Lateral restraint required at half-length of all webs over 6.0 ft. long. Alternatively install an L-Brace or scab brace as shown above. Scab braces shall be limited to 10 ft. long webs or less.
6. All plates are MITEK MT20 pressed into both faces of truss.
7. All lumber to be SPF (or D-Fir) DRY and of No.2 grade or better.
8. Additional building bracing is typically installed to brace the face of the end wall assembly. See BCSI Canada *'Building Designer Responsibilities for Gable End Frame Bracing'* for additional information on building bracing for gable-end assemblies.

PEO
Certificate No. 10889485

LICENSED PROFESSIONAL ENGINEER
2022-04-05
C. Cordogiannis
90553736
PROVINCE OF ONTARIO

©2020 MiTek Canada Inc., 240 Stirling Crescent, Bradford, Ontario, L3Z 4L5 | (800) 268-3434, www.mitek.ca