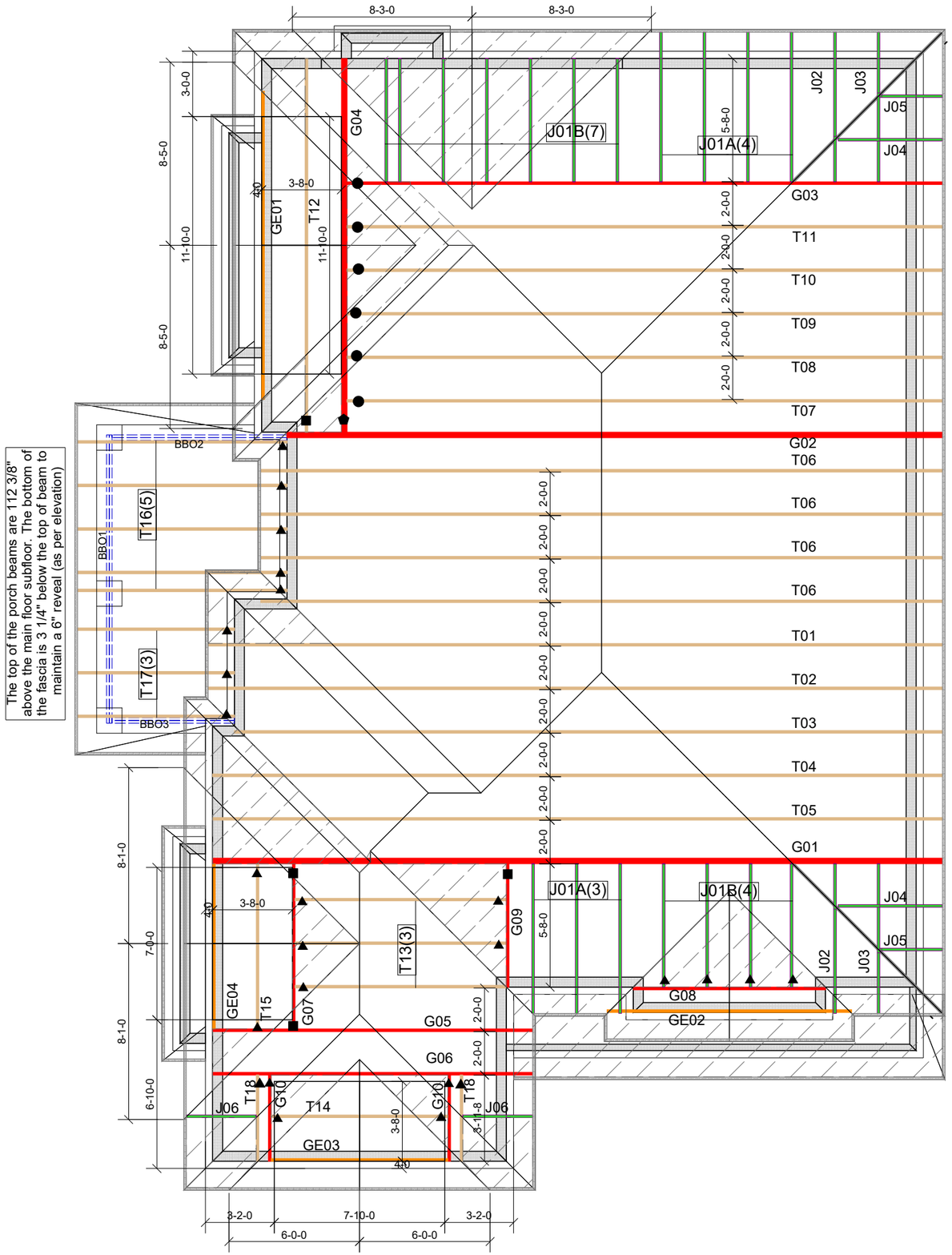


| Hanger Name | Symbol | QTY |
|---|---|---|
| LUS24 | ▲ | 25 |
| LUS26 | ■ | 4 |
| LJS26DS | ● | 6 |
| HGUS26-2 | ⬟ | 1 |

CONVENTIONAL FRAMING BY OTHERS

ALL CONVENTIONAL FRAMING TO CONFORM WITH PART 9 OF THE OBC. ROOF RAFTERS THAT CROSS OVER TRUSSES TO BE MIN. 2x4 SPF @ 24" C/C WITH A 2x4 VERTICAL POST TO THE TRUSS BELOW. VERTICAL POSTS TO BE LATERALLY BRACED SO THAT UNBRACED LENGTH DOES NOT EXCEED 6'. DESIGN OF CONVENTIONAL FRAMING IS THE RESPONSIBILITY OF THE PROJECT ENGINEER.

## JOB INFORMATION

| | |
|---|---|
| Customer | ROUNDEL HOMES INC |
| Job # | 23-00026R0 |
| Address | ROUNDEL HOMES<br>PINETREE 11<br>RICHMOND HILL,ON |
| Model | PINETREE 11 ELEV 2 |
| Sales Rep | RALPH MIRIGELLO |
| Designer | KR |
| Date | 4/25/2023 |
| Path | C:\MITEK\CA\JOBS\GREENPARK GROUP\ROUNDEL HOMES INC\T-PT11-2\ |

## DESIGN INFORMATION

| | |
|---|---|
| Code | NBCC 2015 |
| Bldg | Residential - HSB (NBCC Part 9) |
| TC LL | 25.6 lb/ft² |
| TC DL | 3.0 lb/ft² |
| BC LL | 0.0 lb/ft² |
| BC DL | 7.3 lb/ft² |
| Deflection | LL=L/360 TL=L/360 |
| Spacing | 24" O/C unless otherwise noted |
| Complies With | OBC 2012 (2019 Amendment) CSA O86-14 and TPIC 2014 |

## IMPORTANT INFORMATION

Hangers and Fasteners to be installed as per manufacturer

Refer to truss drawings in the Truss Engineering Package for ply-to-ply attachment notes

For site-framed valleys: top chords of all roof trusses must be laterally supported using 2x4 continuous bracing @24 O/C - all bracing must be anchored at ends as per TPIC Installation Guidelines

Read all notes on this page in addition to those shown on the KOTT Truss Engineering package

Field erection, handling and bracing are not the responsibility of KOTT, or KOTT Engineering

Unless noted otherwise, hurricane ties are to be installed at the bearings of all trusses > 40 ft clear span, and any girder or beam supporting trusses with a clear span >40 ft. See hanger legend for type.

Unless noted otherwise, for Part 9 bldgs, all trusses are to be anchored to the top of supporting walls as follows: trusses with a clear span <40 ft use 3-1/4" nails @ each bearing; trusses with a clear span >40 ft use 3-1/4" nails @ each bearing in addition to the appropriate hurricane tie.

KOTT Inc.
14 Anderson Blvd.
Uxbridge, ON
905.642.4400

KOTT

CITY OF RICHMOND HILL
BUILDING DIVISION
05/24/2023
RECEIVED
Per: joshua.nabua

| JOB NAME | TRUSS NAME | QUANTITY | PLY | JOB DESC. | DRWG NO. |
|---|---|---|---|---|---|
| IM0423-071 | G01 | 1 | 2 | TRUSS DESC. | |

Version 8.630 S Mar 22 2023 MiTek Industries, Inc. Fri Apr 21 14:13:25 2023 Page 1
ID:Oft3GgR1zRzAGpn6KZ87ljzYiN_-MjHMMvaQ91zXgRR9YMjQE89yYig2xmJixi8_CVzOUMu

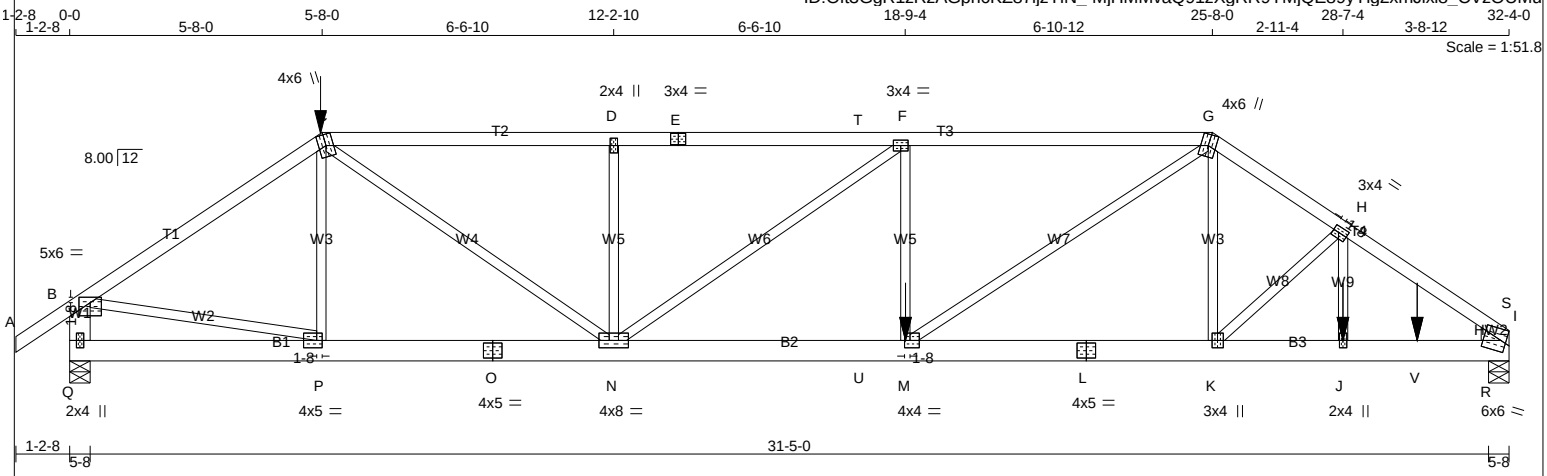


TOTAL WEIGHT = 2 X 144 = 289 lb [M]

**LUMBER**

N. L. G. A. RULES

| CHORDS | SIZE | | LUMBER | DESCR. |
|---|---|---|---|---|
| A - C | 2x4 | DRY | No.2 | SPF |
| C - E | 2x4 | DRY | No.2 | SPF |
| E - G | 2x4 | DRY | No.2 | SPF |
| G - I | 2x4 | DRY | No.2 | SPF |
| Q - B | 2x6 | DRY | No.2 | SPF |
| Q - O | 2x6 | DRY | No.2 | SPF |
| O - L | 2x6 | DRY | No.2 | SPF |
| L - I | 2x6 | DRY | No.2 | SPF |
| ALL WEBS EXCEPT | 2x3 | DRY | No.2 | SPF |

DRY: SEASONED LUMBER.

DESIGN CONSISTS OF 2 TRUSSES BUILT SEPARATELY THEN FASTENED TOGETHER AS FOLLOWS:

| CHORDS | #ROWS | SURFACE SPACING (IN) | LOAD(PLF) |
|---|---|---|---|
| TOP CHORDS : (0.122"X3") SPIRAL NAILS | | | |
| A- C | 1 | 12 | SIDE(0.0) |
| C- E | 1 | 12 | SIDE(33.8) |
| E- G | 1 | 12 | SIDE(33.8) |
| G- I | 1 | 12 | TOP |
| Q- B | 2 | 12 | TOP |
| BOTTOM CHORDS : (0.122"X3") SPIRAL NAILS | | | |
| Q- O | 2 | 12 | SIDE(8.2) |
| O- L | 2 | 12 | SIDE(8.2) |
| L- I | 2 | 12 | SIDE(0.0) |
| WEBS : (0.122"X3") SPIRAL NAILS | | | |
| 2x3 | 1 | 6 | |

NAILS TO BE DRIVEN FROM ONE SIDE ONLY.

GIRDER NAILING ASSUMES NAILED HANGERS ARE FASTENED WITH MIN. 3-0 INCH NAILS.

TOP - COMPONENTS ARE LOADED FROM THE TOP AND MUST BE PLACED ON TOP EDGE OF ALL PLIES FOR THE LOAD TO BE TRANSFERRED TO EACH PLY.

SIDE - PLF SHOWN IS THE EQUIVALENT UDL APPLIED TO ONE SIDE THAT THE CORRESPONDING NAILING PATTERN SHALL BE CAPABLE OF TRANSFERING. REMAINING PLF MUST BE APPLIED ON THE OPPOSITE SIDE OR ON THE TOP.

**PLATES (table is in inches)**

| JT | TYPE | PLATES | W | LEN | Y | X |
|---|---|---|---|---|---|---|
| B | TMVW-p | MT20 | 5.0 | 6.0 | 1.50 | 3.00 |
| C | TTWW+m | MT20 | 4.0 | 6.0 | | |
| D | TMW+w | MT20 | 2.0 | 4.0 | | |
| E | TS-t | MT20 | 3.0 | 4.0 | | |

APRIL 24, 2023

**READ ALL NOTES ON THIS PAGE AND ON THE ENGINEERING NOTES: TRUSSES. THE NOTE PAGE IS AN INTEGRAL PART OF THIS DRAWING AS IT CONTAINS SPECIFICATIONS AND CRITERIA USED IN THE DESIGN OF THIS COMPONENET.**

**DIMENSIONS, SUPPORTS AND LOADINGS SPECIFIED BY FABRICATOR TO BE VERIFIED BY BUILDING DESIGNER**

**BEARINGS**

| JT | FACTORED GROSS REACTION VERT | HORZ | MAXIMUM FACTORED GROSS REACTION DOWN | HORZ | UPLIFT | INPUT BRG IN-SX | REQRD BRG IN-SX | HEEL WEDGE |
|---|---|---|---|---|---|---|---|---|
| Q | 3161 | 0 | 3161 | 0 | 0 | 5-8 | 1-11 | |
| I | 3702 | 0 | 3702 | 0 | 0 | 5-8 | 2-0 | 2x4 R |

**UNFACTORED REACTIONS**

| JT | 1ST LCASE COMBINED | MAX./MIN. COMPONENT REACTIONS SNOW | LIVE | PERM.LIVE | WIND | DEAD | SOIL |
|---|---|---|---|---|---|---|---|
| Q | 2212 | 1581 / 0 | 0 / 0 | 0 / 0 | 0 / 0 | 631 / 0 | 0 / 0 |
| I | 2592 | 1851 / 0 | 0 / 0 | 0 / 0 | 0 / 0 | 741 / 0 | 0 / 0 |

BEARING MATERIAL TO BE SPF NO.2 OR BETTER AT JOINT(S) Q, I

**BRACING**

TOP CHORD TO BE SHEATHED OR MAX. PURLIN SPACING = 3.40 FT.
MAX. UNBRACED BOTTOM CHORD LENGTH = 10.00 FT OR RIGID CEILING DIRECTLY APPLIED.

ALL PITCH BREAKS AND PERIMETER CORNER JOINTS MUST BE LATERALLY RESTRAINED.

**LOADING**

TOTAL LOAD CASES: (4)

| CHORDS MEMB. FR-TO | MAX. FACTORED FORCE (LBS) | FACTORED VERT. LOAD (PLF) FROM | TO | LC1 MAX CSI (LC) | MAX. UNBRAC LENGTH | WEBS MEMB. FR-TO | MAX. FACTORED FORCE (LBS) | MAX CSI (LC) |
|---|---|---|---|---|---|---|---|---|
| A- B | 0 / 30 | -84.3 | -84.3 | 0.06 (1) | 10.00 | P- C | -317 / 97 | 0.06 (1) |
| B- C | -3944 / 0 | -84.3 | -84.3 | 0.41 (1) | 4.43 | C- N | 0 / 2605 | 0.32 (1) |
| C- D | -5389 / 0 | -151.8 | -151.8 | 0.79 (1) | 3.40 | N- D | -1118 / 0 | 0.21 (1) |
| D- E | -5389 / 0 | -151.8 | -151.8 | 0.80 (1) | 3.40 | N- F | -358 / 0 | 0.24 (1) |
| E- T | -5389 / 0 | -151.8 | -151.8 | 0.80 (1) | 3.40 | M- F | -547 / 0 | 0.10 (1) |
| T- F | -5389 / 0 | -84.3 | -84.3 | 0.80 (1) | 3.40 | M- G | 0 / 2326 | 0.29 (1) |
| F- G | -5679 / 0 | -84.3 | -84.3 | 0.66 (1) | 3.59 | K- G | 0 / 837 | 0.10 (1) |
| G- H | -4537 / 0 | -84.3 | -84.3 | 0.15 (1) | 4.39 | K- H | -782 / 0 | 0.11 (1) |
| H- S | -5261 / 0 | -84.3 | -84.3 | 0.26 (1) | 4.01 | J- H | 0 / 726 | 0.09 (1) |
| S- I | -6659 / 0 | -84.3 | -84.3 | 0.28 (1) | 3.55 | B- P | 0 / 3327 | 0.41 (1) |
| Q- B | -3085 / 0 | 0.0 | 0.0 | 0.11 (1) | 7.81 | R- S | 0 / 1930 | 0.00 (1) |
| Q- P | 0 / 0 | -32.9 | -32.9 | 0.07 (4) | 10.00 | | | |
| P- O | 0 / 3285 | -32.9 | -32.9 | 0.26 (1) | 10.00 | | | |
| O- N | 0 / 3285 | -32.9 | -32.9 | 0.26 (1) | 10.00 | | | |
| N- U | 0 / 5679 | -32.9 | -32.9 | 0.43 (1) | 10.00 | | | |
| U- M | 0 / 5679 | -18.2 | -18.2 | 0.43 (1) | 10.00 | | | |
| M- L | 0 / 3768 | -18.2 | -18.2 | 0.30 (1) | 10.00 | | | |
| L- K | 0 / 3768 | -18.2 | -18.2 | 0.30 (1) | 10.00 | | | |
| K- J | 0 / 4347 | -18.2 | -18.2 | 0.43 (1) | 10.00 | | | |
| J- V | 0 / 4347 | -18.2 | -18.2 | 0.52 (1) | 10.00 | | | |
| V- R | 0 / 4347 | -18.2 | -18.2 | 0.52 (1) | 10.00 | | | |
| R- I | 0 / 4347 | -18.2 | -18.2 | 0.52 (1) | 10.00 | | | |

SPECIFIED CONCENTRATED LOADS (LBS)

| JT | LOC. | LC1 | MAX- | MAX+ | FACE | DIR. | TYPE | HEEL | CONN. |
|---|---|---|---|---|---|---|---|---|---|
| C | 5-8-8 | -227 | -227 | --- | FRONT | VERT | TOTAL | --- | C1 |
| J | 28-7-4 | -196 | -196 | --- | FRONT | VERT | DEAD | --- | C1 |
| J | 28-7-4 | -488 | -488 | --- | FRONT | VERT | SNOW | --- | C1 |
| M | 18-9-4 | -131 | -131 | --- | FRONT | VERT | DEAD | --- | C1 |
| M | 18-9-4 | -326 | -326 | --- | FRONT | VERT | SNOW | --- | C1 |
| V | 30-3-4 | -81 | -81 | --- | FRONT | VERT | DEAD | --- | C1 |
| V | 30-3-4 | -200 | -200 | --- | FRONT | VERT | SNOW | --- | C1 |

**CONNECTION REQUIREMENTS**

1) **C1:** A SUITABLE HANGER/MECHANICAL CONNECTION IS REQUIRED.

**DESIGN CRITERIA**

*** SPECIAL LOADS ANALYSIS ***
GEOMETRY AND/OR BASIC LOADS CHANGED BY USER.
LOADS WERE DERIVED FROM USER INPUT
NO FURTHER MODIFICATIONS WERE MADE

SPECIFIED LOADS:

| | | | | |
|---|---|---|---|---|
| TOP CH. | LL | = | 25.6 | PSF |
| | DL | = | 3.0 | PSF |
| BOT CH. | LL | = | 0.0 | PSF |
| | DL | = | 7.3 | PSF |
| TOTAL LOAD | | = | 35.9 | PSF |

**SPACING = 24.0 IN. C/C**

LOADING IN FLAT SECTION BASED ON A SLOPE OF 8.00/12

GIRDER TYPE: CPrimeHip
LEFT SETBACK = 5-8-8
RIGHT SETBACK = 6-8-8
END SETBACK = 5-8-0
END WALL WIDTH = 5-8
CORNER FRAMING TYPE: CONVENTIONAL
END JACK TYPE: CONVENTIONAL
APPLIED TO FRONT SIDE
- ADDT'L LOADS BASED ON 55 % OF GSL.
LOADS APPLIED TO FIRST 17-9-4 OF SPAN MEASURED FROM THE LEFT.

*** NON STANDARD GIRDER ***
ADDT'L USER-DEFINED LOADS APPLIED TO ALL LOAD CASES.

THIS TRUSS IS DESIGNED FOR RESIDENTIAL OR SMALL BUILDING REQUIREMENTS OF PART 9, NBCC 2015

THIS DESIGN COMPLIES WITH:
- PART 9 OF BCBC 2018 , NBC-2019AE
- PART 9 OF OBC 2012 (2019 AMENDMENT)
- CSA 086-14
- TPIC 2014

(55 % OF 31.3 P.S.F. G.S.L. PLUS 8.4 P.S.F. RAIN LOAD) EQUALS 25.6 P.S.F. SPECIFIED ROOF LIVE LOAD

ALLOWABLE DEFL.(LL)= L/360 (1.08")
CALCULATED VERT. DEFL.(LL) = L/ 999 (0.15")
ALLOWABLE DEFL.(TL)= L/360 (1.08")
CALCULATED VERT. DEFL.(TL) = L/ 999 (0.26")

CSI: TC=0.80/1.00 (D-F:1) , BC=0.52/1.00 (J-R:1) , WB=0.41/1.00 (B-P:1) , SSI=0.46/1.00 (I-R:1)

DOL LUMBER=1.00 NAIL=1.00 LS BEND=1.00 COMP=1.00 SHEAR=1.00 TENS= 1.00

COMPANION LIVE LOAD FACTOR = 1.00

TRUSS PLATE MANUFACTURER IS NOT RESPONSIBLE FOR QUALITY CONTROL IN THE TRUSS MANUFACTURING PLANT .

CONTINUED ON PAGE 2

CITY OF RICHMOND HILL
BUILDING DIVISION
05/24/2023
RECEIVED
Per: joshua.nabua

| JOB NAME | TRUSS NAME | QUANTITY | PLY | JOB DESC. | DRWG NO. |
|---|---|---|---|---|---|
| IM0423-071 | G01 | 1 | 2 | TRUSS DESC. | |

Version 8.630 S Mar 22 2023 MiTek Industries, Inc. Fri Apr 21 14:13:25 2023 Page 2
ID:Oft3GgR1zRzAGpn6KZ87IjzYiN_-MjHMMvaQ91zXgRR9YMjQE89yYig2xmJixi8_CVzOUMu

**PLATES (table is in inches)**

| JT | TYPE | PLATES | W | LEN | Y | X |
|---|---|---|---|---|---|---|
| F | TMWW-t | MT20 | 3.0 | 4.0 | | |
| G | TTWW+m | MT20 | 4.0 | 6.0 | | |
| H | TMWW-t | MT20 | 3.0 | 4.0 | 1.50 | 1.50 |
| I | TMBH1-m | MT20 | 6.0 | 6.0 | | Edge |
| J | BMW+w | MT20 | 2.0 | 4.0 | | |
| K | BMWW+t | MT20 | 3.0 | 4.0 | | |
| L | BS-t | MT20 | 4.0 | 5.0 | | |
| M | BMWW-t | MT20 | 4.0 | 4.0 | 2.00 | 1.50 |
| N | BMWWW-t | MT20 | 4.0 | 8.0 | | |
| O | BS-t | MT20 | 4.0 | 5.0 | | |
| P | BMWW-t | MT20 | 4.0 | 5.0 | 2.00 | 1.50 |
| Q | BMV1+p | MT20 | 2.0 | 4.0 | | |

Edge - INDICATES REFERENCE CORNER OF PLATE TOUCHES EDGE OF CHORD.

NAIL VALUES

| PLATE | GRIP(DRY) (PSI) MAX | MIN | SHEAR (PLI) MAX | MIN | SECTION (PLI) MAX | MIN |
|---|---|---|---|---|---|---|
| MT20 | 650 | 371 | 1747 | 788 | 1987 | 1873 |

PLATE PLACEMENT TOL. = 0.250 inches

PLATE ROTATION TOL. = 5.0 Deg.

JSI GRIP= 0.89 (E) (INPUT = 0.90 )
JSI METAL= 0.64 (I) (INPUT = 1.00 )

LICENSED PROFESSIONAL ENGINEER
I.MATIJEVIC
100528832
PROVINCE OF ONTARIO
APRIL 24, 2023

**READ ALL NOTES ON THIS PAGE AND ON THE ENGINEERING NOTES: TRUSSES. THE NOTE PAGE IS AN INTEGRAL PART OF THIS DRAWING AS IT CONTAINS SPECIFICATIONS AND CRITERIA USED IN THE DESIGN OF THIS COMPONENET.**

CITY OF RICHMOND HILL
BUILDING DIVISION
05/24/2023
RECEIVED
Per:_____joshua.nabua_____

KOTT

| JOB NAME | TRUSS NAME | QUANTITY | PLY | JOB DESC. | DRWG NO. |
|---|---|---|---|---|---|
| IM0423-071 | G02 | 1 | 2 | TRUSS DESC. | |

Version 8.630 S Mar 22 2023 MiTek Industries, Inc. Fri Apr 21 14:13:25 2023 Page 1
ID:Oft3GgR1zRzAGpn6KZ87ljzYiN_-MjHMMvaQ91zXgRR9YMjQE890GigKxgzixi8_CVzOUMu

Scale = 1:89.1

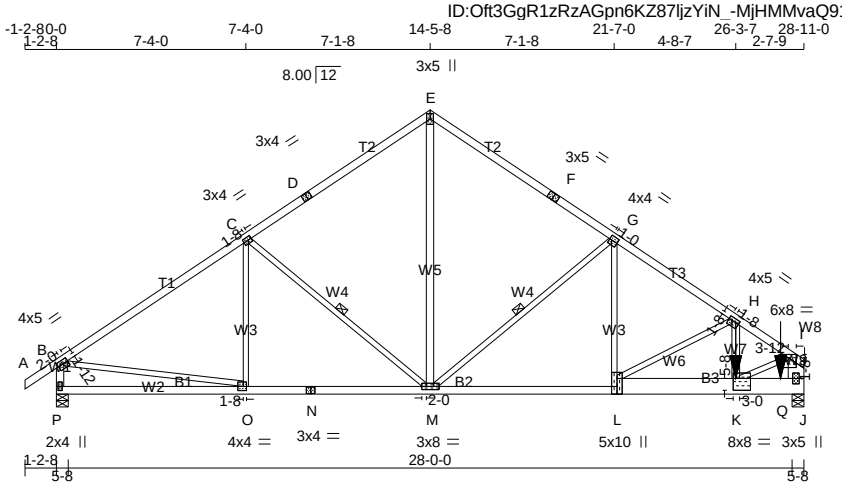


TOTAL WEIGHT = 2 X 136 = 272 lb

[M]

**LUMBER**

N. L. G. A. RULES

| CHORDS | SIZE | | LUMBER | DESCR. |
|---|---|---|---|---|
| A - D | 2x4 | DRY | No.2 | SPF |
| D - E | 2x4 | DRY | No.2 | SPF |
| E - F | 2x4 | DRY | No.2 | SPF |
| F - I | 2x4 | DRY | No.2 | SPF |
| P - B | 2x4 | DRY | No.2 | SPF |
| J - I | 2x8 | DRY | No.2 | SPF |
| P - N | 2x4 | DRY | No.2 | SPF |
| N - L | 2x4 | DRY | No.2 | SPF |
| L - J | 2x8 | DRY | No.2 | SPF |
| ALL WEBS EXCEPT | 2x3 | DRY | No.2 | SPF |
| M - E | 2x4 | DRY | No.2 | SPF |
| K - H | 2x4 | DRY | No.2 | SPF |

DRY: SEASONED LUMBER.

DESIGN CONSISTS OF 2 TRUSSES BUILT SEPARATELY THEN FASTENED TOGETHER AS FOLLOWS:

| CHORDS | #ROWS | SURFACE SPACING (IN) | LOAD(PLF) |
|---|---|---|---|
| TOP CHORDS : (0.122"X3") SPIRAL NAILS | | | |
| A- D | 1 | 12 | TOP |
| D- E | 1 | 12 | TOP |
| E- F | 1 | 12 | TOP |
| F- I | 1 | 12 | TOP |
| P- B | 1 | 12 | TOP |
| J- I | 2 | 12 | TOP |
| BOTTOM CHORDS : (0.122"X3") SPIRAL NAILS | | | |
| P- N | 1 | 12 | TOP |
| N- L | 1 | 12 | TOP |
| L- J | 2 | 12 | SIDE(0.0) |
| WEBS : (0.122"X3") SPIRAL NAILS | | | |
| 2x3 | 1 | 6 | |
| 2x4 | 1 | 6 | |

NAILS TO BE DRIVEN FROM ONE SIDE ONLY.

GIRDER NAILING ASSUMES NAILED HANGERS ARE FASTENED WITH MIN. 3-0 INCH NAILS.

TOP - COMPONENTS ARE LOADED FROM THE TOP AND MUST BE PLACED ON TOP EDGE OF ALL PLIES FOR THE LOAD TO BE TRANSFERRED TO EACH PLY.

SIDE - PLF SHOWN IS THE EQUIVALENT UDL APPLIED TO ONE SIDE THAT THE CORRESPONDING NAILING PATTERN SHALL BE CAPABLE OF TRANSFERING. REMAINING PLF MUST BE APPLIED ON THE OPPOSITE SIDE OR ON THE TOP.

LICENSED PROFESSIONAL ENGINEER
I.MATIJEVIC
100528832
PROVINCE OF ONTARIO
APRIL 24, 2023

**READ ALL NOTES ON THIS PAGE AND ON THE ENGINEERING NOTES: TRUSSES. THE NOTE PAGE IS AN INTEGRAL PART OF THIS DRAWING AS IT CONTAINS SPECIFICATIONS AND CRITERIA USED IN THE DESIGN OF THIS COMPONENET.**

**DIMENSIONS, SUPPORTS AND LOADINGS SPECIFIED BY FABRICATOR TO BE VERIFIED BY BUILDING DESIGNER**

**BEARINGS**

| JT | FACTORED GROSS REACTION VERT | HORZ | MAXIMUM FACTORED GROSS REACTION DOWN | HORZ | UPLIFT | INPUT BRG IN-SX | REQRD BRG IN-SX |
|---|---|---|---|---|---|---|---|
| P | 2120 | 0 | 2120 | 0 | 0 | 5-8 | 1-8 |
| J | 7349 | 0 | 7349 | 0 | 0 | 5-8 | 4-11 |

**UNFACTORED REACTIONS**

| JT | 1ST LCASE COMBINED | MAX./MIN. COMPONENT REACTIONS SNOW | LIVE | PERM.LIVE | WIND | DEAD | SOIL |
|---|---|---|---|---|---|---|---|
| P | 1482 | 1070 / 0 | 0 / 0 | 0 / 0 | 0 / 0 | 412 / 0 | 0 / 0 |
| J | 5145 | 3668 / 0 | 0 / 0 | 0 / 0 | 0 / 0 | 1477 / 0 | 0 / 0 |

BEARING MATERIAL TO BE SPF NO.2 OR BETTER AT JOINT(S) P, J

**BRACING**

TOP CHORD TO BE SHEATHED OR MAX. PURLIN SPACING = 3.39 FT.
MAX. UNBRACED BOTTOM CHORD LENGTH = 10.00 FT OR RIGID CEILING DIRECTLY APPLIED.

ALL PITCH BREAKS AND PERIMETER CORNER JOINTS MUST BE LATERALLY RESTRAINED.

1 - 1x4 LATERAL BRACE(S) AT 1/ 2 LENGTH OF C-M. DBS = 20-0-0 . CBF = 65 LBS.
1 - 1x4 LATERAL BRACE(S) AT 1/ 2 LENGTH OF G-M. DBS = 14-0-0 . CBF = 196 LBS.

DBS = DIAGONAL BRACE SPACING (MAX). CBF = CUMULATIVE BRACING FORCE (PER BRACE). FASTEN LATERAL BRACE(S) TO EACH PLY USING (0.122"X3") SPIRAL NAILS : 1 NAIL FOR 2x3 BRACE(S), 2 FOR 1x4, 2x4, 2x5, 3 FOR 2x6, 4 FOR 2x8, 5 FOR 2x10, AND 6 FOR 2x12.

END VERTICAL(S) MUST BE SHEATHED OR HAVE BRACES AS INDICATED IN THE MAX. UNBRACED LENGTH COLUMN OF THE TABLE BELOW

**LOADING**

TOTAL LOAD CASES: (4)

CHORDS

| MEMB. FR-TO | MAX. FACTORED FORCE (LBS) | FACTORED VERT. LOAD (PLF) FROM | TO | MAX CSI (LC) | MAX. UNBRAC LENGTH |
|---|---|---|---|---|---|
| A- B | 0 / 30 | -84.3 | -84.3 | 0.06 (1) | 10.00 |
| B- C | -2519 / 0 | -84.3 | -84.3 | 0.56 (1) | 5.09 |
| C- D | -2121 / 0 | -84.3 | -84.3 | 0.51 (1) | 5.46 |
| D- E | -2121 / 0 | -84.3 | -84.3 | 0.51 (1) | 5.46 |
| E- F | -2112 / 0 | -84.3 | -84.3 | 0.40 (1) | 5.65 |
| F- G | -2112 / 0 | -84.3 | -84.3 | 0.40 (1) | 5.65 |
| G- H | -4150 / 0 | -84.3 | -84.3 | 0.43 (1) | 4.25 |
| H- I | -7549 / 0 | -84.3 | -84.3 | 0.28 (1) | 3.39 |
| P- B | -2063 / 0 | 0.0 | 0.0 | 0.12 (1) | 7.70 |
| J- I | -6389 / 0 | 0.0 | 0.0 | 0.17 (1) | 6.59 |
| P- O | 0 / 0 | -18.2 | -18.2 | 0.12 (4) | 10.00 |
| O- N | 0 / 2130 | -18.2 | -18.2 | 0.26 (1) | 10.00 |
| N- M | 0 / 2130 | -18.2 | -18.2 | 0.26 (1) | 10.00 |
| M- L | 0 / 3459 | -18.3 | -18.3 | 0.38 (1) | 10.00 |
| L- K | 0 / 6274 | -18.2 | -18.2 | 0.57 (1) | 10.00 |
| K- Q | 0 / 0 | -18.2 | -18.2 | 0.23 (1) | 10.00 |
| Q- J | 0 / 0 | -18.2 | -18.2 | 0.23 (1) | 10.00 |

WEBS

| MEMB. FR-TO | MAX. FACTORED FORCE (LBS) | MAX CSI (LC) |
|---|---|---|
| O- C | -159 / 78 | 0.05 (1) |
| C- M | -519 / 0 | 0.16 (1) |
| M- E | 0 / 1839 | 0.16 (1) |
| M- G | -2246 / 0 | 0.69 (1) |
| L- G | 0 / 1962 | 0.24 (1) |
| L- H | -3198 / 0 | 0.77 (1) |
| K- H | 0 / 3243 | 0.29 (1) |
| B- O | 0 / 2150 | 0.27 (1) |
| K- I | 0 / 6609 | 0.82 (1) |

SPECIFIED CONCENTRATED LOADS (LBS)

| JT | LOC. | LC1 | MAX- | MAX+ | FACE | DIR. | TYPE | HEEL | CONN. |
|---|---|---|---|---|---|---|---|---|---|
| K | 26-3-7 | -1109 | -1109 | --- | FRONT | VERT | DEAD | --- | C1 |
| K | 26-3-7 | -2753 | -2753 | --- | FRONT | VERT | SNOW | --- | C1 |
| Q | 28-0-4 | -177 | -177 | --- | FRONT | VERT | DEAD | --- | C1 |
| Q | 28-0-4 | -439 | -439 | --- | FRONT | VERT | SNOW | --- | C1 |

**CONNECTION REQUIREMENTS**

1) **C1:** A SUITABLE HANGER/MECHANICAL CONNECTION IS REQUIRED.

**DESIGN CRITERIA**

*** SPECIAL LOADS ANALYSIS ***
GEOMETRY AND/OR BASIC LOADS CHANGED BY USER.
LOADS WERE DERIVED FROM USER INPUT
NO FURTHER MODIFICATIONS WERE MADE

SPECIFIED LOADS:

| | | | | |
|---|---|---|---|---|
| TOP CH. | LL | = | 25.6 | PSF |
| | DL | = | 3.0 | PSF |
| BOT CH. | LL | = | 0.0 | PSF |
| | DL | = | 7.3 | PSF |
| TOTAL LOAD | | = | 35.9 | PSF |

**SPACING = 24.0 IN. C/C**

*** NON STANDARD GIRDER ***
ADDT'L USER-DEFINED LOADS APPLIED TO ALL LOAD CASES.

THIS TRUSS IS DESIGNED FOR RESIDENTIAL OR SMALL BUILDING REQUIREMENTS OF PART 9, NBCC 2015

THIS DESIGN COMPLIES WITH:
- PART 9 OF BCBC 2018 , NBC-2019AE
- PART 9 OF OBC 2012 (2019 AMENDMENT)
- CSA 086-14
- TPIC 2014

(55 % OF 31.3 P.S.F. G.S.L. PLUS 8.4 P.S.F. RAIN LOAD) EQUALS 25.6 P.S.F. SPECIFIED ROOF LIVE LOAD

ALLOWABLE DEFL.(LL)= L/360 (0.96")
CALCULATED VERT. DEFL.(LL) = L/ 999 (0.07")
ALLOWABLE DEFL.(TL)= L/360 (0.96")
CALCULATED VERT. DEFL.(TL) = L/ 999 (0.15")

CSI: TC=0.56/1.00 (B-C:1) , BC=0.57/1.00 (K-L:1) , WB=0.82/1.00 (I-K:1) , SSI=0.28/1.00 (J-K:1)

DOL LUMBER=1.00 NAIL=1.00 LS BEND=1.00 COMP=1.00 SHEAR=1.00 TENS= 1.00

COMPANION LIVE LOAD FACTOR = 1.00

TRUSS PLATE MANUFACTURER IS NOT RESPONSIBLE FOR QUALITY CONTROL IN THE TRUSS MANUFACTURING PLANT .

NAIL VALUES

| PLATE | GRIP(DRY) (PSI) MAX | MIN | SHEAR (PLI) MAX | MIN | SECTION (PLI) MAX | MIN |
|---|---|---|---|---|---|---|
| MT20 | 650 | 371 | 1747 | 788 | 1987 | 1873 |

PLATE PLACEMENT TOL. = 0.250 inches

PLATE ROTATION TOL. = 5.0 Deg.

JSI GRIP= 0.89 (G) (INPUT = 0.90 )
JSI METAL= 0.59 (I) (INPUT = 1.00 )

CONTINUED ON PAGE 2

CITY OF RICHMOND HILL
BUILDING DIVISION
05/24/2023
KOTT
RECEIVED
Per: joshua.nabua

| JOB NAME | TRUSS NAME | QUANTITY | PLY | JOB DESC. | DRWG NO. |
|---|---|---|---|---|---|
| IM0423-071 | G02 | 1 | 2 | TRUSS DESC. | |

Version 8.630 S Mar 22 2023 MiTek Industries, Inc. Fri Apr 21 14:13:26 2023 Page 2
ID:Oft3GgR1zRzAGpn6KZ87ljzYiN_-qwrkZFb2wK5OIb0M63EfmLiB?6?Zg7CsAMuYkxzOUMt

**PLATES (table is in inches)**

| JT | TYPE | PLATES | W | LEN | Y | X |
|---|---|---|---|---|---|---|
| B | TMVW-t | MT20 | 4.0 | 5.0 | 1.75 | 2.00 |
| C | TMWW-t | MT20 | 3.0 | 4.0 | 1.50 | 1.50 |
| D | TS-t | MT20 | 3.0 | 4.0 | | |
| E | TTW+p | MT20 | 3.0 | 5.0 | | |
| F | TS-t | MT20 | 3.0 | 5.0 | | |
| G | TMWW-t | MT20 | 4.0 | 4.0 | 2.00 | 1.00 |
| H | TMWW-t | MT20 | 4.0 | 5.0 | 1.50 | 1.50 |
| I | TMVW-p | MT20 | 6.0 | 8.0 | 1.50 | 3.75 |
| J | BMV1+p | MT20 | 3.0 | 5.0 | | |
| K | BMWW-t | MT20 | 8.0 | 8.0 | 5.50 | 3.00 |
| L | BSWW+l | MT20 | 5.0 | 10.0 | Edge | |
| M | BMWWW-t | MT20 | 3.0 | 8.0 | 1.50 | 2.00 |
| N | BS-t | MT20 | 3.0 | 4.0 | | |
| O | BMWW-t | MT20 | 4.0 | 4.0 | 2.00 | 1.50 |
| P | BMV1+p | MT20 | 2.0 | 4.0 | | |

Edge - INDICATES REFERENCE CORNER OF PLATE TOUCHES EDGE OF CHORD.

LICENSED PROFESSIONAL ENGINEER
I.MATIJEVIC
100528832
PROVINCE OF ONTARIO
APRIL 24, 2023

**READ ALL NOTES ON THIS PAGE AND ON THE ENGINEERING NOTES: TRUSSES. THE NOTE PAGE IS AN INTEGRAL PART OF THIS DRAWING AS IT CONTAINS SPECIFICATIONS AND CRITERIA USED IN THE DESIGN OF THIS COMPONENET.**

CITY OF RICHMOND HILL
BUILDING DIVISION
05/24/2023
RECEIVED
Per: joshua.nabua

KOTT

| JOB NAME | TRUSS NAME | QUANTITY | PLY | JOB DESC. | DRWG NO. |
|---|---|---|---|---|---|
| IM0423-071 | G03 | 1 | 1 | TRUSS DESC. | |

Version 8.630 S Mar 22 2023 MiTek Industries, Inc. Fri Apr 21 14:13:26 2023 Page 1
ID:Oft3GgR1zRzAGpn6KZ87ljzYiN_-qwrkZFb2wK5OIb0M63EfmLi926zIgB9sAMuYkxzOUMt

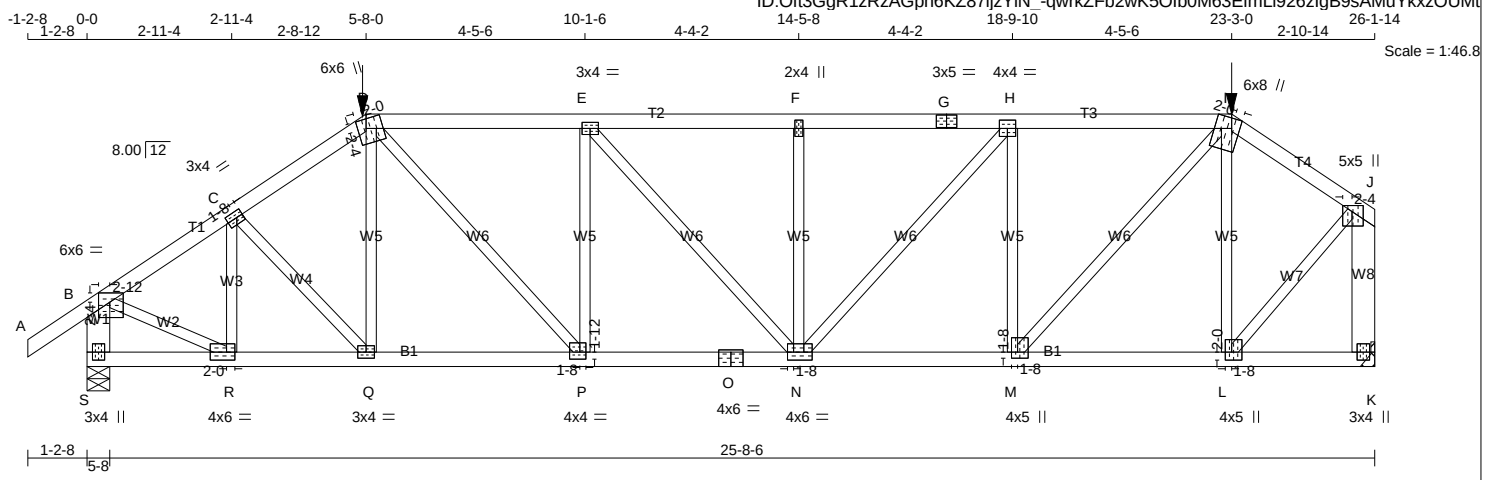


TOTAL WEIGHT = 120 lb
[M]

**LUMBER**
N. L. G. A. RULES

| CHORDS | SIZE | | LUMBER | DESCR. |
|---|---|---|---|---|
| A - D | 2x4 | DRY | No.2 | SPF |
| D - G | 2x4 | DRY | No.2 | SPF |
| G - I | 2x4 | DRY | No.2 | SPF |
| I - J | 2x4 | DRY | No.2 | SPF |
| S - B | 2x6 | DRY | No.2 | SPF |
| K - J | 2x6 | DRY | No.2 | SPF |
| S - O | 2x4 | DRY | No.2 | SPF |
| O - K | 2x4 | DRY | No.2 | SPF |
| ALL WEBS EXCEPT | 2x3 | DRY | No.2 | SPF |

DRY: SEASONED LUMBER.

**PLATES (table is in inches)**

| JT | TYPE | PLATES | W | LEN | Y | X |
|---|---|---|---|---|---|---|
| B | TMVW-p | MT20 | 6.0 | 6.0 | 2.25 | 2.75 |
| C | TMWW-t | MT20 | 3.0 | 4.0 | 1.50 | 1.50 |
| D | TTWW+m | MT20 | 6.0 | 6.0 | 2.25 | 2.00 |
| E | TMWW-t | MT20 | 3.0 | 4.0 | | |
| F | TMW+w | MT20 | 2.0 | 4.0 | | |
| G | TS-t | MT20 | 3.0 | 5.0 | | |
| H | TMWW-t | MT20 | 4.0 | 4.0 | | |
| I | TTWW+m | MT20 | 6.0 | 8.0 | Edge | 2.00 |
| J | TMVW+p | MT20 | 5.0 | 5.0 | Edge | 2.25 |
| K | BMV1+p | MT20 | 3.0 | 4.0 | | |
| L | BMWW+t | MT20 | 4.0 | 5.0 | 2.00 | 1.50 |
| M | BMWW+t | MT20 | 4.0 | 5.0 | 1.50 | 1.50 |
| N | BMWWW-t | MT20 | 4.0 | 6.0 | 2.00 | 1.50 |
| O | BS-t | MT20 | 4.0 | 6.0 | | |
| P | BMWW-t | MT20 | 4.0 | 4.0 | 1.75 | 1.50 |
| Q | BMWW-t | MT20 | 3.0 | 4.0 | | |
| R | BMWW-t | MT20 | 4.0 | 6.0 | 2.00 | 2.00 |
| S | BMV1+p | MT20 | 3.0 | 4.0 | | |

Edge - INDICATES REFERENCE CORNER OF PLATE TOUCHES EDGE OF CHORD.

**DIMENSIONS, SUPPORTS AND LOADINGS SPECIFIED BY FABRICATOR TO BE VERIFIED BY BUILDING DESIGNER**

**BEARINGS**

| JT | FACTORED GROSS REACTION VERT | HORZ | MAXIMUM FACTORED GROSS REACTION DOWN | HORZ | UPLIFT | INPUT BRG | REQRD BRG |
|---|---|---|---|---|---|---|---|
| S | 2451 | 0 | 2451 | 0 | 0 | 5-8 | 2-10 |
| K | 2412 | 0 | 2412 | 0 | 0 | IN-SX MECHANICAL | IN-SX |

A SUITABLE HANGER/MECHANICAL CONNECTION IS REQUIRED AT JOINT K. MINIMUM BEARING LENGTH AT JOINT K = 2-10.

**UNFACTORED REACTIONS**

| JT | 1ST LCASE COMBINED | SNOW | LIVE | PERM.LIVE | WIND | DEAD | SOIL |
|---|---|---|---|---|---|---|---|
| | MAX./MIN. COMPONENT REACTIONS | | | | | | |
| S | 1715 | 1227 / 0 | 0 / 0 | 0 / 0 | 0 / 0 | 488 / 0 | 0 / 0 |
| K | 1689 | 1204 / 0 | 0 / 0 | 0 / 0 | 0 / 0 | 485 / 0 | 0 / 0 |

BEARING MATERIAL TO BE SPF NO.2 OR BETTER AT JOINT(S) S

**BRACING**

TOP CHORD TO BE SHEATHED OR MAX. PURLIN SPACING = 3.03 FT.
MAX. UNBRACED BOTTOM CHORD LENGTH = 10.00 FT OR RIGID CEILING DIRECTLY APPLIED.

ALL PITCH BREAKS AND PERIMETER CORNER JOINTS MUST BE LATERALLY RESTRAINED.

**LOADING**

TOTAL LOAD CASES: (4)

CHORDS

| MEMB. FR-TO | MAX. FACTORED FORCE (LBS) | FACTORED VERT. LOAD (PLF) FROM | TO | LC1 MAX CSI (LC) | MAX. UNBRAC LENGTH |
|---|---|---|---|---|---|
| A- B | 0 / 30 | -84.3 | -84.3 | 0.11 (1) | 10.00 |
| B- C | -2577 / 0 | -84.3 | -84.3 | 0.19 (1) | 4.11 |
| C- D | -2874 / 0 | -84.3 | -84.3 | 0.20 (1) | 3.91 |
| D- E | -3286 / 0 | -151.8 | -151.8 | 0.68 (1) | 3.09 |
| E- F | -3372 / 0 | -151.8 | -151.8 | 0.68 (1) | 3.03 |
| F- G | -3372 / 0 | -151.8 | -151.8 | 0.69 (1) | 3.03 |
| G- H | -3372 / 0 | -151.8 | -151.8 | 0.69 (1) | 3.03 |
| H- I | -2788 / 0 | -151.8 | -151.8 | 0.62 (1) | 3.42 |
| I- J | -1675 / 0 | -84.3 | -84.3 | 0.18 (1) | 4.93 |
| S- B | -2401 / 0 | 0.0 | 0.0 | 0.17 (1) | 6.61 |
| K- J | -2381 / 0 | 0.0 | 0.0 | 0.30 (1) | 6.64 |
| S- R | 0 / 0 | -32.9 | -32.9 | 0.07 (4) | 10.00 |
| R- Q | 0 / 2153 | -32.9 | -32.9 | 0.44 (1) | 10.00 |
| Q- P | 0 / 2374 | -32.9 | -32.9 | 0.48 (1) | 10.00 |
| P- O | 0 / 3287 | -32.9 | -32.9 | 0.65 (1) | 10.00 |
| O- N | 0 / 3287 | -32.9 | -32.9 | 0.65 (1) | 10.00 |
| N- M | 0 / 2788 | -32.9 | -32.9 | 0.56 (1) | 10.00 |
| M- L | 0 / 1365 | -32.9 | -32.9 | 0.32 (1) | 10.00 |
| L- K | 0 / 0 | -32.9 | -32.9 | 0.12 (4) | 10.00 |

WEBS

| MEMB. FR-TO | MAX. FACTORED FORCE (LBS) | MAX CSI (LC) |
|---|---|---|
| R- C | -676 / 0 | 0.14 (1) |
| C- Q | 0 / 323 | 0.08 (1) |
| Q- D | -100 / 89 | 0.04 (1) |
| D- P | 0 / 1347 | 0.33 (1) |
| P- E | -845 / 0 | 0.34 (1) |
| E- N | 0 / 127 | 0.03 (1) |
| N- F | -606 / 0 | 0.24 (1) |
| N- H | 0 / 874 | 0.22 (1) |
| M- H | -1402 / 0 | 0.56 (1) |
| M- I | 0 / 2099 | 0.52 (1) |
| L- I | -1181 / 0 | 0.47 (1) |
| B- R | 0 / 2281 | 0.56 (1) |
| L- J | 0 / 1920 | 0.48 (1) |

SPECIFIED CONCENTRATED LOADS (LBS)

| JT | LOC. | LC1 | MAX- | MAX+ | FACE | DIR. | TYPE | HEEL | CONN. |
|---|---|---|---|---|---|---|---|---|---|
| D | 5-8-0 | -225 | -225 | --- | FRONT | VERT | TOTAL | --- | C1 |
| I | 23-3-0 | -115 | -115 | --- | FRONT | VERT | TOTAL | --- | C1 |

**CONNECTION REQUIREMENTS**

1) **C1:** A SUITABLE HANGER/MECHANICAL CONNECTION IS REQUIRED.

**DESIGN CRITERIA**

SPECIFIED LOADS:

| | | | | |
|---|---|---|---|---|
| TOP CH. | LL | = | 25.6 | PSF |
| | DL | = | 3.0 | PSF |
| BOT CH. | LL | = | 0.0 | PSF |
| | DL | = | 7.3 | PSF |
| TOTAL LOAD | | = | 35.9 | PSF |

**SPACING = 24.0 IN. C/C**

LOADING IN FLAT SECTION BASED ON A SLOPE OF 8.00/12

GIRDER TYPE: CPrimeHip
LEFT SETBACK = 5-8-0
RIGHT SETBACK = 2-10-14
END SETBACK = 5-8-0
END WALL WIDTH = 5-8
CORNER FRAMING TYPE: CONVENTIONAL
END JACK TYPE: CONVENTIONAL
APPLIED TO FRONT SIDE
- ADDT'L LOADS BASED ON 55 % OF GSL.

THIS TRUSS IS DESIGNED FOR RESIDENTIAL OR SMALL BUILDING REQUIREMENTS OF PART 9, NBCC 2015

THIS DESIGN COMPLIES WITH:
- PART 9 OF BCBC 2018 , NBC-2019AE
- PART 9 OF OBC 2012 (2019 AMENDMENT)
- CSA 086-14
- TPIC 2014

(55 % OF 31.3 P.S.F. G.S.L. PLUS 8.4 P.S.F. RAIN LOAD) EQUALS 25.6 P.S.F. SPECIFIED ROOF LIVE LOAD

ALLOWABLE DEFL.(LL)= L/360 (0.87")
CALCULATED VERT. DEFL.(LL) = L/ 999 (0.14")
ALLOWABLE DEFL.(TL)= L/360 (0.87")
CALCULATED VERT. DEFL.(TL) = L/ 999 (0.24")

CSI: TC=0.69/1.00 (F-H:1) , BC=0.65/1.00 (N-P:1) , WB=0.56/1.00 (B-R:1) , SSI=0.35/1.00 (H-I:1)

DOL LUMBER=1.00 NAIL=1.00 LS BEND=1.00 COMP=1.00 SHEAR=1.00 TENS= 1.00

COMPANION LIVE LOAD FACTOR = 1.00

TRUSS PLATE MANUFACTURER IS NOT RESPONSIBLE FOR QUALITY CONTROL IN THE TRUSS MANUFACTURING PLANT .

NAIL VALUES

| PLATE | GRIP(DRY) (PSI) MAX | MIN | SHEAR (PLI) MAX | MIN | SECTION (PLI) MAX | MIN |
|---|---|---|---|---|---|---|
| MT20 | 650 | 371 | 1747 | 788 | 1987 | 1873 |

PLATE PLACEMENT TOL. = 0.250 inches

PLATE ROTATION TOL. = 5.0 Deg.

JSI GRIP= 0.90 (C) (INPUT = 0.90 )
JSI METAL= 0.75 (O) (INPUT = 1.00 )

LICENSED PROFESSIONAL ENGINEER
I.MATIJEVIC
100528832
PROVINCE OF ONTARIO
APRIL 24, 2023

**READ ALL NOTES ON THIS PAGE AND ON THE ENGINEERING NOTES: TRUSSES. THE NOTE PAGE IS AN INTEGRAL PART OF THIS DRAWING AS IT CONTAINS SPECIFICATIONS AND CRITERIA USED IN THE DESIGN OF THIS COMPONENET.**

CITY OF RICHMOND HILL
BUILDING DIVISION
05/24/2023
KOTT
RECEIVED
Per: joshua.nabua

| JOB NAME | TRUSS NAME | QUANTITY | PLY | JOB DESC. | DRWG NO. |
|---|---|---|---|---|---|
| IM0423-071 | G04 | 1 | 2 | TRUSS DESC. | |

Version 8.630 S Mar 22 2023 MiTek Industries, Inc. Fri Apr 21 14:13:27 2023 Page 1
ID:Oft3GgR1zRzAGpn6KZ87ljzYiN_-I6P6nbcgheDFvlbYgmmuJZFQlWlxPZd?O0d5GNzOUMs

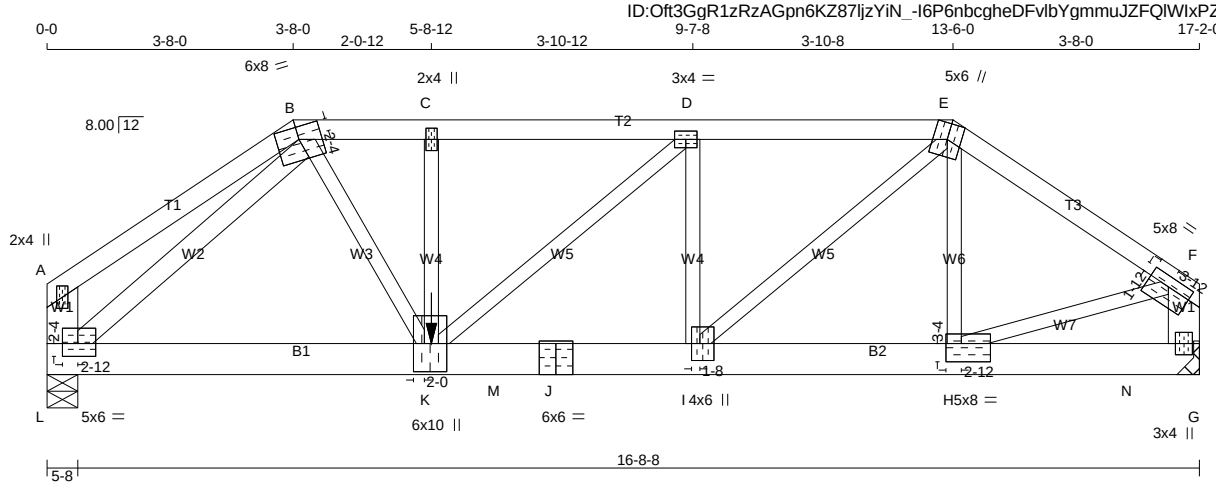


TOTAL WEIGHT = 2 X 81 = 163 lb [M]

**LUMBER**

N. L. G. A. RULES

| CHORDS | SIZE | | LUMBER | DESCR. |
|---|---|---|---|---|
| A - B | 2x4 | DRY | No.2 | SPF |
| B - E | 2x4 | DRY | No.2 | SPF |
| E - F | 2x4 | DRY | No.2 | SPF |
| L - A | 2x6 | DRY | No.2 | SPF |
| G - F | 2x6 | DRY | No.2 | SPF |
| L - J | 2x6 | DRY | No.2 | SPF |
| J - G | 2x6 | DRY | No.2 | SPF |
| ALL WEBS | 2x3 | DRY | No.2 | SPF |
| EXCEPT | | | | |
| L - B | 2x4 | DRY | No.2 | SPF |

DRY: SEASONED LUMBER.

DESIGN CONSISTS OF 2 TRUSSES BUILT SEPARATELY THEN FASTENED TOGETHER AS FOLLOWS:

| CHORDS | #ROWS | SURFACE SPACING (IN) | LOAD(PLF) |
|---|---|---|---|
| TOP CHORDS : (0.122"X3") SPIRAL NAILS | | | |
| A- B | 1 | 12 | TOP |
| B- E | 1 | 12 | TOP |
| E- F | 1 | 12 | TOP |
| L- A | 2 | 12 | TOP |
| G- F | 2 | 12 | TOP |
| BOTTOM CHORDS : (0.122"X3") SPIRAL NAILS | | | |
| L- J | 2 | 8 | SIDE(304.3) |
| J- G | 2 | 8 | SIDE(304.3) |
| WEBS : (0.122"X3") SPIRAL NAILS | | | |
| 2x3 | 1 | 6 | |
| 2x4 | 1 | 6 | |

NAILS TO BE DRIVEN FROM ONE SIDE ONLY.

GIRDER NAILING ASSUMES NAILED HANGERS ARE FASTENED WITH MIN. 3-0 INCH NAILS.

TOP - COMPONENTS ARE LOADED FROM THE TOP AND MUST BE PLACED ON TOP EDGE OF ALL PLIES FOR THE LOAD TO BE TRANSFERRED TO EACH PLY.

SIDE - PLF SHOWN IS THE EQUIVALENT UDL APPLIED TO ONE SIDE THAT THE CORRESPONDING NAILING PATTERN SHALL BE CAPABLE OF TRANSFERING. REMAINING PLF MUST BE APPLIED ON THE OPPOSITE SIDE OR ON THE TOP.

**PLATES (table is in inches)**

| JT | TYPE | PLATES | W | LEN | Y | X |
|---|---|---|---|---|---|---|
| A | TMV+p | MT20 | 2.0 | 4.0 | | |
| B | TTWW-m | MT20 | 6.0 | 8.0 | 2.25 | 4.00 |
| C | TMW+w | MT20 | 2.0 | 4.0 | | |
| D | TMWW-t | MT20 | 3.0 | 4.0 | | |

APRIL 24, 2023

**READ ALL NOTES ON THIS PAGE AND ON THE ENGINEERING NOTES: TRUSSES. THE NOTE PAGE IS AN INTEGRAL PART OF THIS DRAWING AS IT CONTAINS SPECIFICATIONS AND CRITERIA USED IN THE DESIGN OF THIS COMPONENET.**

**DIMENSIONS, SUPPORTS AND LOADINGS SPECIFIED BY FABRICATOR TO BE VERIFIED BY BUILDING DESIGNER**

**BEARINGS**

| JT | FACTORED GROSS REACTION VERT | HORZ | MAXIMUM FACTORED GROSS REACTION DOWN | HORZ | UPLIFT | INPUT BRG IN-SX | REQRD BRG IN-SX |
|---|---|---|---|---|---|---|---|
| G | 5515 | 0 | 5515 | 0 | 0 | MECHANICAL | |
| L | 4401 | 0 | 4401 | 0 | 0 | 5-8 | 2-6 |

A SUITABLE HANGER/MECHANICAL CONNECTION IS REQUIRED AT JOINT G. MINIMUM BEARING LENGTH AT JOINT G = 3-7.

**UNFACTORED REACTIONS**

| JT | 1ST LCASE COMBINED | SNOW | LIVE | PERM.LIVE | WIND | DEAD | SOIL |
|---|---|---|---|---|---|---|---|
| | MAX./MIN. COMPONENT REACTIONS | | | | | | |
| G | 3862 | 2753 / 0 | 0 / 0 | 0 / 0 | 0 / 0 | 1109 / 0 | 0 / 0 |
| L | 3081 | 2197 / 0 | 0 / 0 | 0 / 0 | 0 / 0 | 885 / 0 | 0 / 0 |

BEARING MATERIAL TO BE SPF NO.2 OR BETTER AT JOINT(S) L

**BRACING**

TOP CHORD TO BE SHEATHED OR MAX. PURLIN SPACING = 3.33 FT.
MAX. UNBRACED BOTTOM CHORD LENGTH = 10.00 FT OR RIGID CEILING DIRECTLY APPLIED.

ALL PITCH BREAKS AND PERIMETER CORNER JOINTS MUST BE LATERALLY RESTRAINED.

**LOADING**

TOTAL LOAD CASES: (4)

| CHORDS MEMB. FR-TO | MAX. FACTORED FORCE (LBS) | FACTORED VERT. LOAD (PLF) FROM | TO | LC1 MAX CSI (LC) | MAX. UNBRAC LENGTH | WEBS MEMB. FR-TO | MAX. FACTORED FORCE (LBS) | MAX CSI (LC) |
|---|---|---|---|---|---|---|---|---|
| A- B | 0 / 0 | -84.3 | -84.3 | 0.11 (1) | 10.00 | B- K | 0 / 4607 | 0.57 (1) |
| B- C | -6909 / 0 | -84.3 | -84.3 | 0.18 (1) | 3.62 | K- C | -230 / 0 | 0.03 (1) |
| C- D | -6909 / 0 | -84.3 | -84.3 | 0.27 (1) | 3.55 | K- D | -1080 / 0 | 0.24 (1) |
| D- E | -7721 / 0 | -84.3 | -84.3 | 0.30 (1) | 3.33 | I- D | 0 / 344 | 0.04 (1) |
| E- F | -6403 / 0 | -84.3 | -84.3 | 0.28 (1) | 3.67 | I- E | 0 / 3234 | 0.40 (1) |
| L- A | -156 / 0 | 0.0 | 0.0 | 0.01 (1) | 7.81 | H- E | 0 / 1104 | 0.14 (1) |
| G- F | -5086 / 0 | 0.0 | 0.0 | 0.18 (1) | 6.46 | H- F | 0 / 5503 | 0.68 (1) |
| | | | | | | L- B | -6209 / 0 | 0.87 (1) |
| L- K | 0 / 4567 | -18.2 | -18.2 | 0.33 (1) | 10.00 | | | |
| K- M | 0 / 7721 | -18.2 | -18.2 | 0.75 (1) | 10.00 | | | |
| M- J | 0 / 7721 | -626.9 | -626.9 | 0.75 (1) | 10.00 | | | |
| J- I | 0 / 7721 | -626.9 | -626.9 | 0.75 (1) | 10.00 | | | |
| I- H | 0 / 5308 | -626.9 | -626.9 | 0.60 (1) | 10.00 | | | |
| H- N | 0 / 0 | -626.9 | -626.9 | 0.25 (1) | 10.00 | | | |
| N- G | 0 / 0 | -18.2 | -18.2 | 0.25 (1) | 10.00 | | | |

SPECIFIED CONCENTRATED LOADS (LBS)

| JT | LOC. | LC1 | MAX- | MAX+ | FACE | DIR. | TYPE | HEEL | CONN. |
|---|---|---|---|---|---|---|---|---|---|
| K | 5-8-12 | -485 | -485 | --- | FRONT | VERT | DEAD | --- | C1 |
| K | 5-8-12 | -1204 | -1204 | --- | FRONT | VERT | SNOW | --- | C1 |

**CONNECTION REQUIREMENTS**

1) **C1:** A SUITABLE HANGER/MECHANICAL CONNECTION IS REQUIRED.

**DESIGN CRITERIA**

*** SPECIAL LOADS ANALYSIS ***
GEOMETRY AND/OR BASIC LOADS CHANGED BY USER.
LOADS WERE DERIVED FROM USER INPUT
NO FURTHER MODIFICATIONS WERE MADE

SPECIFIED LOADS:

| | | | | | |
|---|---|---|---|---|---|
| TOP | CH. | LL | = | 25.6 | PSF |
| | | DL | = | 3.0 | PSF |
| BOT | CH. | LL | = | 0.0 | PSF |
| | | DL | = | 7.3 | PSF |
| TOTAL | LOAD | | = | 35.9 | PSF |

**SPACING = 24.0 IN. C/C**

LOADING IN FLAT SECTION BASED ON A SLOPE OF 8.00/12

GIRDER TYPE: CStdGirder
START DISTANCE = 6-8-12
START SPAN CARRIED = 25-9-0
END DISTANCE = 16-2-0
END SPAN CARRIED = 25-9-0
END WALL WIDTH = 0-0
APPLIED TO FRONT SIDE OF BOTTOM CHORD.
- ADDT'L LOADS BASED ON 55 % OF GSL.

*** NON STANDARD GIRDER ***
ADDT'L USER-DEFINED LOADS APPLIED TO ALL LOAD CASES.

THIS TRUSS IS DESIGNED FOR RESIDENTIAL OR SMALL BUILDING REQUIREMENTS OF PART 9, NBCC 2015

THIS DESIGN COMPLIES WITH:
- PART 9 OF BCBC 2018 , NBC-2019AE
- PART 9 OF OBC 2012 (2019 AMENDMENT)
- CSA 086-14
- TPIC 2014

(55 % OF 31.3 P.S.F. G.S.L. PLUS 8.4 P.S.F. RAIN LOAD) EQUALS 25.6 P.S.F. SPECIFIED ROOF LIVE LOAD

ALLOWABLE DEFL.(LL)= L/360 (0.57")
CALCULATED VERT. DEFL.(LL) = L/ 999 (0.09")
ALLOWABLE DEFL.(TL)= L/360 (0.57")
CALCULATED VERT. DEFL.(TL) = L/ 999 (0.16")

CSI: TC=0.30/1.00 (D-E:1) , BC=0.75/1.00 (I-K:1) , WB=0.87/1.00 (B-L:1) , SSI=0.43/1.00 (I-K:1)

DOL LUMBER=1.00 NAIL=1.00 LS BEND=1.00 COMP=1.00 SHEAR=1.00 TENS= 1.00

COMPANION LIVE LOAD FACTOR = 1.00

AUTOSOLVE RIGHT HEEL ONLY

TRUSS PLATE MANUFACTURER IS NOT RESPONSIBLE FOR QUALITY CONTROL IN THE TRUSS MANUFACTURING PLANT .

NAIL VALUES

| PLATE | GRIP(DRY) (PSI) MAX | MIN | SHEAR (PLI) MAX | MIN | SECTION (PLI) MAX | MIN |
|---|---|---|---|---|---|---|
| MT20 | 650 | 371 | 1747 | 788 | 1987 | 1873 |

CONTINUED ON PAGE 2

CITY OF MOUNT HOLLY HILL BUILDING DIVISION
05/24/2023
KOTT
RECEIVED
Per: joshua.nabua

| JOB NAME | TRUSS NAME | QUANTITY | PLY | JOB DESC. | DRWG NO. |
|---|---|---|---|---|---|
| IM0423-071 | G04 | 1 | 2 | TRUSS DESC. | |

Version 8.630 S Mar 22 2023 MiTek Industries, Inc. Fri Apr 21 14:13:27 2023 Page 2
ID:Oft3GgR1zRzAGpn6KZ87ljzYiN_-I6P6nbcgheDFvlbYgmmuJZFQlWIxPZd?O0d5GNzOUMs

**PLATES (table is in inches)**

| JT | TYPE | PLATES | W | LEN | Y | X |
|---|---|---|---|---|---|---|
| E | TTWW+m | MT20 | 5.0 | 6.0 | Edge | |
| F | TMVW-t | MT20 | 5.0 | 8.0 | 1.75 | 3.75 |
| G | BMV1+p | MT20 | 3.0 | 4.0 | | |
| H | BMWW-t | MT20 | 5.0 | 8.0 | 3.25 | 2.75 |
| I | BMWW+t | MT20 | 4.0 | 6.0 | 3.00 | 1.50 |
| J | BS-t | MT20 | 6.0 | 6.0 | | |
| K | BMWWW+t | MT20 | 6.0 | 10.0 | 5.00 | 2.00 |
| L | BMVW1-t | MT20 | 5.0 | 6.0 | 2.25 | 2.75 |

Edge - INDICATES REFERENCE CORNER OF PLATE TOUCHES EDGE OF CHORD.

PLATE PLACEMENT TOL. = 0.250 inches

PLATE ROTATION TOL. = 5.0 Deg.

JSI GRIP= 0.90 (H) (INPUT = 0.90 )
JSI METAL= 0.78 (J) (INPUT = 1.00 )

LICENSED PROFESSIONAL ENGINEER
I.MATIJEVIC
100528832
PROVINCE OF ONTARIO
APRIL 24, 2023

**READ ALL NOTES ON THIS PAGE AND ON THE ENGINEERING NOTES: TRUSSES. THE NOTE PAGE IS AN INTEGRAL PART OF THIS DRAWING AS IT CONTAINS SPECIFICATIONS AND CRITERIA USED IN THE DESIGN OF THIS COMPONENET.**

CITY OF RICHMOND HILL
BUILDING DIVISION
05/24/2023
RECEIVED
Per:_____joshua.nabua_____

KOTT

| JOB NAME | TRUSS NAME | QUANTITY | PLY | JOB DESC. | DRWG NO. |
|---|---|---|---|---|---|
| IM0423-071 | G05 | 1 | 1 | TRUSS DESC. | |

Version 8.630 S Mar 22 2023 MiTek Industries, Inc. Fri Apr 21 14:13:28 2023 Page 1
ID:Oft3GgR1zRzAGpn6KZ87ljzYiN_-mIzV_wcJSyM6XuAkEUH7smncwwnG88v8dgNeopzOUMr

Scale = 1:44.2

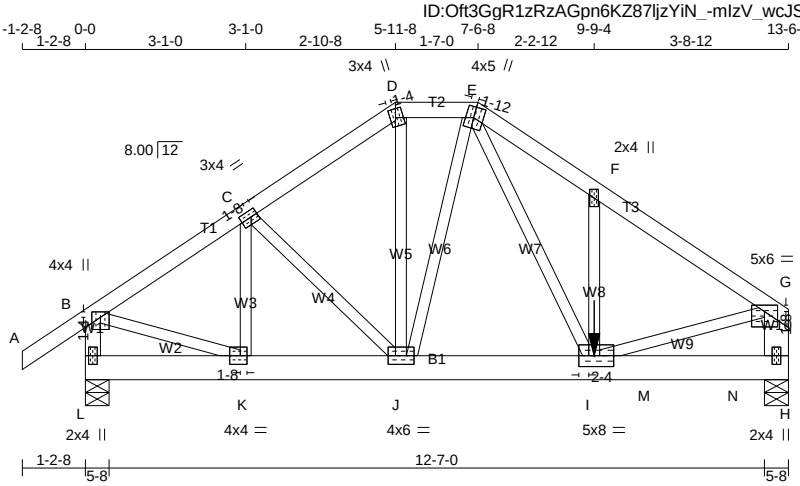


TOTAL WEIGHT = 71 lb

[M]

**LUMBER**

N. L. G. A. RULES

| CHORDS | SIZE | | LUMBER | DESCR. |
|---|---|---|---|---|
| A - D | 2x4 | DRY | No.2 | SPF |
| D - E | 2x4 | DRY | No.2 | SPF |
| E - G | 2x4 | DRY | No.2 | SPF |
| L - B | 2x4 | DRY | No.2 | SPF |
| H - G | 2x6 | DRY | No.2 | SPF |
| L - H | 2x6 | DRY | No.2 | SPF |
| ALL WEBS EXCEPT | 2x3 | DRY | No.2 | SPF |

DRY: SEASONED LUMBER.

**PLATES (table is in inches)**

| JT | TYPE | PLATES | W | LEN | Y | X |
|---|---|---|---|---|---|---|
| B | TMVW+p | MT20 | 4.0 | 4.0 | 1.25 | 2.00 |
| C | TMWW-t | MT20 | 3.0 | 4.0 | 1.50 | 1.50 |
| D | TTW+m | MT20 | 3.0 | 4.0 | 2.00 | 1.25 |
| E | TTWW+m | MT20 | 4.0 | 5.0 | 2.50 | 1.75 |
| F | TMW+w | MT20 | 2.0 | 4.0 | | |
| G | TMVW-p | MT20 | 5.0 | 6.0 | 1.50 | 3.00 |
| H | BMV1+p | MT20 | 2.0 | 4.0 | | |
| I | BMWWW-t | MT20 | 5.0 | 8.0 | 2.50 | 2.25 |
| J | BMWWW-t | MT20 | 4.0 | 6.0 | | |
| K | BMWW-t | MT20 | 4.0 | 4.0 | 2.00 | 1.50 |
| L | BMV1+p | MT20 | 2.0 | 4.0 | | |

**DIMENSIONS, SUPPORTS AND LOADINGS SPECIFIED BY FABRICATOR TO BE VERIFIED BY BUILDING DESIGNER**

**BEARINGS**

| JT | FACTORED GROSS REACTION VERT | HORZ | MAXIMUM FACTORED GROSS REACTION DOWN | HORZ | UPLIFT | INPUT BRG IN-SX | REQRD BRG IN-SX |
|---|---|---|---|---|---|---|---|
| L | 1094 | 0 | 1094 | 0 | 0 | 5-8 | 1-8 |
| H | 1585 | 0 | 1585 | 0 | 0 | 5-8 | 1-11 |

**UNFACTORED REACTIONS**

| JT | 1ST LCASE COMBINED | MAX./MIN. COMPONENT REACTIONS SNOW | LIVE | PERM.LIVE | WIND | DEAD | SOIL |
|---|---|---|---|---|---|---|---|
| L | 764 | 558 / 0 | 0 / 0 | 0 / 0 | 0 / 0 | 206 / 0 | 0 / 0 |
| H | 1110 | 791 / 0 | 0 / 0 | 0 / 0 | 0 / 0 | 319 / 0 | 0 / 0 |

BEARING MATERIAL TO BE SPF NO.2 OR BETTER AT JOINT(S) L, H

**BRACING**

TOP CHORD TO BE SHEATHED OR MAX. PURLIN SPACING = 4.90 FT.
MAX. UNBRACED BOTTOM CHORD LENGTH = 10.00 FT OR RIGID CEILING DIRECTLY APPLIED.

ALL PITCH BREAKS AND PERIMETER CORNER JOINTS MUST BE LATERALLY RESTRAINED.

**LOADING**

TOTAL LOAD CASES: (4)

| CHORDS MEMB. FR-TO | MAX. FACTORED FORCE (LBS) | FACTORED VERT. LOAD (PLF) FROM | TO | LC1 MAX CSI (LC) | MAX. UNBRAC LENGTH | WEBS MEMB. FR-TO | MAX. FACTORED FORCE (LBS) | MAX CSI (LC) |
|---|---|---|---|---|---|---|---|---|
| A- B | 0 / 30 | -84.3 | -84.3 | 0.11 (1) | 10.00 | K- C | -255 / 0 | 0.05 (1) |
| B- C | -1024 / 0 | -84.3 | -84.3 | 0.14 (1) | 6.01 | C- J | -46 / 0 | 0.01 (1) |
| C- D | -1018 / 0 | -84.3 | -84.3 | 0.14 (1) | 6.02 | J- D | 0 / 393 | 0.10 (1) |
| D- E | -840 / 0 | -84.3 | -84.3 | 0.05 (1) | 6.25 | J- E | -251 / 0 | 0.11 (1) |
| E- F | -1684 / 0 | -84.3 | -84.3 | 0.14 (1) | 4.96 | E- I | 0 / 1144 | 0.28 (1) |
| F- G | -1666 / 0 | -84.3 | -84.3 | 0.21 (1) | 4.90 | I- F | -296 / 0 | 0.07 (1) |
| L- B | -1054 / 0 | 0.0 | 0.0 | 0.12 (1) | 7.64 | B- K | 0 / 904 | 0.22 (1) |
| H- G | -1418 / 0 | 0.0 | 0.0 | 0.10 (1) | 7.81 | I- G | 0 / 1439 | 0.36 (1) |
| L- K | 0 / 0 | -18.2 | -18.2 | 0.03 (1) | 10.00 | | | |
| K- J | 0 / 864 | -18.2 | -18.2 | 0.15 (1) | 10.00 | | | |
| J- I | 0 / 910 | -18.2 | -18.2 | 0.16 (1) | 10.00 | | | |
| I- M | 0 / 0 | -18.2 | -18.2 | 0.17 (1) | 10.00 | | | |
| M- N | 0 / 0 | -161.3 | -161.3 | 0.17 (1) | 10.00 | | | |
| N- H | 0 / 0 | -18.2 | -18.2 | 0.17 (1) | 10.00 | | | |

SPECIFIED CONCENTRATED LOADS (LBS)

| JT | LOC. | LC1 | MAX- | MAX+ | FACE | DIR. | TYPE | HEEL | CONN. |
|---|---|---|---|---|---|---|---|---|---|
| I | 9-9-4 | -189 | -189 | --- | FRONT | VERT | DEAD | --- | C1 |
| I | 9-9-4 | -469 | -469 | --- | FRONT | VERT | SNOW | --- | C1 |

**CONNECTION REQUIREMENTS**

1) **C1:** A SUITABLE HANGER/MECHANICAL CONNECTION IS REQUIRED.

**DESIGN CRITERIA**

*** SPECIAL LOADS ANALYSIS ***
GEOMETRY AND/OR BASIC LOADS CHANGED BY USER.
LOADS WERE DERIVED FROM USER INPUT
NO FURTHER MODIFICATIONS WERE MADE

SPECIFIED LOADS:

| | | | | |
|---|---|---|---|---|
| TOP CH. | LL | = | 25.6 | PSF |
| | DL | = | 3.0 | PSF |
| BOT CH. | LL | = | 0.0 | PSF |
| | DL | = | 7.3 | PSF |
| TOTAL LOAD | | = | 35.9 | PSF |

**SPACING = 24.0 IN. C/C**

LOADING IN FLAT SECTION BASED ON A SLOPE OF 8.00/12

GIRDER TYPE: CStdGirder
START DISTANCE = 10-9-4
START SPAN CARRIED = 7-7-0
END DISTANCE = 12-6-0
END SPAN CARRIED = 7-7-0
END WALL WIDTH = 0-0
APPLIED TO FRONT SIDE OF BOTTOM CHORD.
- ADDT'L LOADS BASED ON 55 % OF GSL. (DEFINED BY USER)

*** NON STANDARD GIRDER ***
ADDT'L USER-DEFINED LOADS APPLIED TO ALL LOAD CASES.

THIS TRUSS IS DESIGNED FOR RESIDENTIAL OR SMALL BUILDING REQUIREMENTS OF PART 9, NBCC 2015

THIS DESIGN COMPLIES WITH:
- PART 9 OF BCBC 2018 , NBC-2019AE
- PART 9 OF OBC 2012 (2019 AMENDMENT)
- CSA 086-14
- TPIC 2014

(55 % OF 31.3 P.S.F. G.S.L. PLUS 8.4 P.S.F. RAIN LOAD) EQUALS 25.6 P.S.F. SPECIFIED ROOF LIVE LOAD

ALLOWABLE DEFL.(LL)= L/360 (0.45")
CALCULATED VERT. DEFL.(LL) = L/ 999 (0.03")
ALLOWABLE DEFL.(TL)= L/360 (0.45")
CALCULATED VERT. DEFL.(TL) = L/ 999 (0.05")

CSI: TC=0.21/1.00 (F-G:1) , BC=0.17/1.00 (H-I:1) , WB=0.36/1.00 (G-I:1) , SSI=0.12/1.00 (F-G:1)

DOL LUMBER=1.00 NAIL=1.00 LS BEND=1.00 COMP=1.00 SHEAR=1.00 TENS= 1.00

COMPANION LIVE LOAD FACTOR = 1.00

TRUSS PLATE MANUFACTURER IS NOT RESPONSIBLE FOR QUALITY CONTROL IN THE TRUSS MANUFACTURING PLANT .

NAIL VALUES

| PLATE | GRIP(DRY) (PSI) MAX | MIN | SHEAR (PLI) MAX | MIN | SECTION (PLI) MAX | MIN |
|---|---|---|---|---|---|---|
| MT20 | 650 | 371 | 1747 | 788 | 1987 | 1873 |

CONTINUED ON PAGE 2

LICENSED PROFESSIONAL ENGINEER
I.MATIJEVIC
100528832
PROVINCE OF ONTARIO
APRIL 24, 2023

**READ ALL NOTES ON THIS PAGE AND ON THE ENGINEERING NOTES: TRUSSES. THE NOTE PAGE IS AN INTEGRAL PART OF THIS DRAWING AS IT CONTAINS SPECIFICATIONS AND CRITERIA USED IN THE DESIGN OF THIS COMPONENET.**

CITY OF MISSISSAUGA - HILL BUILDING DIVISION
05/24/2023
KOTT
RECEIVED
Per: joshua.nabua

| JOB NAME | TRUSS NAME | QUANTITY | PLY | JOB DESC. | DRWG NO. |
|---|---|---|---|---|---|
| IM0423-071 | G05 | 1 | 1 | TRUSS DESC. | |

Version 8.630 S Mar 22 2023 MiTek Industries, Inc. Fri Apr 21 14:13:28 2023 Page 2

ID:Oft3GgR1zRzAGpn6KZ87ljzYiN_-mIzV_wcJSyM6XuAkEUH7smncwwnG88v8dgNeopzOUMr

PLATE PLACEMENT TOL. = 0.250 inches

PLATE ROTATION TOL. = 5.0 Deg.

JSI GRIP= 0.90 (B) (INPUT = 0.90 )
JSI METAL= 0.31 (G) (INPUT = 1.00 )

LICENSED PROFESSIONAL ENGINEER
I.MATIJEVIC
100528832
PROVINCE OF ONTARIO

APRIL 24, 2023

**READ ALL NOTES ON THIS PAGE AND ON THE ENGINEERING NOTES: TRUSSES. THE NOTE PAGE IS AN INTEGRAL PART OF THIS DRAWING AS IT CONTAINS SPECIFICATIONS AND CRITERIA USED IN THE DESIGN OF THIS COMPONENET.**

CITY OF RICHMOND HILL
BUILDING DIVISION
05/24/2023
RECEIVED
Per:_____joshua.nabua_____

| JOB NAME | TRUSS NAME | QUANTITY | PLY | JOB DESC. | DRWG NO. |
|---|---|---|---|---|---|
| IM0423-071 | G06 | 1 | 1 | TRUSS DESC. | |

Version 8.630 S Mar 22 2023 MiTek Industries, Inc. Fri Apr 21 14:13:29 2023 Page 1
ID:Oft3GgR1zRzAGpn6KZ87ljzYiN_-EVXtCGdxDFUz92lxnBoMO_KmgJ7AtdyIsK6CLGzOUMq

Scale = 1:34.1

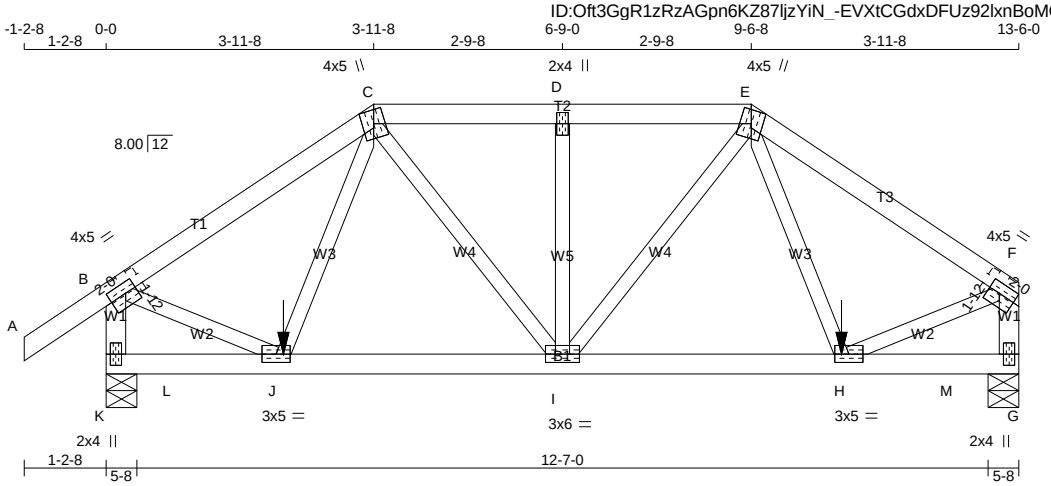


TOTAL WEIGHT = 56 lb

**LUMBER**

N. L. G. A. RULES

| CHORDS | SIZE | | LUMBER | DESCR. |
|---|---|---|---|---|
| A - C | 2x4 | DRY | No.2 | SPF |
| C - E | 2x4 | DRY | No.2 | SPF |
| E - F | 2x4 | DRY | No.2 | SPF |
| K - B | 2x4 | DRY | No.2 | SPF |
| G - F | 2x4 | DRY | No.2 | SPF |
| K - G | 2x4 | DRY | No.2 | SPF |
| ALL WEBS EXCEPT | 2x3 | DRY | No.2 | SPF |

DRY: SEASONED LUMBER.

**PLATES (table is in inches)**

| JT | TYPE | PLATES | W | LEN | Y | X |
|---|---|---|---|---|---|---|
| B | TMVW-t | MT20 | 4.0 | 5.0 | 1.75 | 2.00 |
| C | TTWW+m | MT20 | 4.0 | 5.0 | Edge | |
| D | TMW+w | MT20 | 2.0 | 4.0 | | |
| E | TTWW+m | MT20 | 4.0 | 5.0 | Edge | |
| F | TMVW-t | MT20 | 4.0 | 5.0 | 1.75 | Edge |
| G | BMV1+p | MT20 | 2.0 | 4.0 | | |
| H | BMWW-t | MT20 | 3.0 | 5.0 | | |
| I | BMWWW-t | MT20 | 3.0 | 6.0 | | |
| J | BMWW-t | MT20 | 3.0 | 5.0 | | |
| K | BMV1+p | MT20 | 2.0 | 4.0 | | |

Edge - INDICATES REFERENCE CORNER OF PLATE TOUCHES EDGE OF CHORD.

**DIMENSIONS, SUPPORTS AND LOADINGS SPECIFIED BY FABRICATOR TO BE VERIFIED BY BUILDING DESIGNER**

**BEARINGS**

| JT | FACTORED GROSS REACTION VERT | HORZ | MAXIMUM FACTORED GROSS REACTION DOWN | HORZ | UPLIFT | INPUT BRG IN-SX | REQRD BRG IN-SX |
|---|---|---|---|---|---|---|---|
| K | 1282 | 0 | 1282 | 0 | 0 | 5-8 | 1-8 |
| G | 1173 | 0 | 1173 | 0 | 0 | 5-8 | 1-8 |

**UNFACTORED REACTIONS**

| JT | 1ST LCASE COMBINED | MAX./MIN. COMPONENT REACTIONS SNOW | LIVE | PERM.LIVE | WIND | DEAD | SOIL |
|---|---|---|---|---|---|---|---|
| K | 895 | 651 / 0 | 0 / 0 | 0 / 0 | 0 / 0 | 244 / 0 | 0 / 0 |
| G | 822 | 585 / 0 | 0 / 0 | 0 / 0 | 0 / 0 | 236 / 0 | 0 / 0 |

BEARING MATERIAL TO BE SPF NO.2 OR BETTER AT JOINT(S) K, G

**BRACING**

TOP CHORD TO BE SHEATHED OR MAX. PURLIN SPACING = 5.67 FT.
MAX. UNBRACED BOTTOM CHORD LENGTH = 10.00 FT OR RIGID CEILING DIRECTLY APPLIED.

ALL PITCH BREAKS AND PERIMETER CORNER JOINTS MUST BE LATERALLY RESTRAINED.

**LOADING**

TOTAL LOAD CASES: (4)

| CHORDS MEMB. FR-TO | MAX. FACTORED FORCE (LBS) | FACTORED VERT. LOAD (PLF) FROM | TO | LC1 | MAX CSI (LC) | MAX. UNBRAC LENGTH | WEBS MEMB. FR-TO | MAX. FACTORED FORCE (LBS) | MAX CSI (LC) |
|---|---|---|---|---|---|---|---|---|---|
| A- B | 0 / 30 | -84.3 | -84.3 | 0.11 | (1) | 10.00 | J- C | 0 / 177 | 0.04 (1) |
| B- C | -1092 / 0 | -84.3 | -84.3 | 0.28 | (1) | 5.67 | C- I | 0 / 223 | 0.06 (1) |
| C- D | -979 / 0 | -84.3 | -84.3 | 0.12 | (1) | 6.14 | I- D | -273 / 0 | 0.07 (1) |
| D- E | -979 / 0 | -84.3 | -84.3 | 0.12 | (1) | 6.14 | I- E | 0 / 223 | 0.06 (1) |
| E- F | -1092 / 0 | -84.3 | -84.3 | 0.28 | (1) | 5.67 | E- H | 0 / 177 | 0.04 (1) |
| K- B | -1246 / 0 | 0.0 | 0.0 | 0.14 | (1) | 7.16 | B- J | 0 / 977 | 0.24 (1) |
| G- F | -1138 / 0 | 0.0 | 0.0 | 0.13 | (1) | 7.42 | H- F | 0 / 977 | 0.24 (1) |
| K- L | 0 / 0 | -18.2 | -18.2 | 0.05 | (4) | 10.00 | | | |
| L- J | 0 / 0 | -56.7 | -56.7 | 0.05 | (4) | 10.00 | | | |
| J- I | 0 / 844 | -18.2 | -18.2 | 0.19 | (1) | 10.00 | | | |
| I- H | 0 / 844 | -18.2 | -18.2 | 0.19 | (1) | 10.00 | | | |
| H- M | 0 / 0 | -56.7 | -56.7 | 0.05 | (4) | 10.00 | | | |
| M- G | 0 / 0 | -18.2 | -18.2 | 0.05 | (4) | 10.00 | | | |

SPECIFIED CONCENTRATED LOADS (LBS)

| JT | LOC. | LC1 | MAX- | MAX+ | FACE | DIR. | TYPE | HEEL | CONN. |
|---|---|---|---|---|---|---|---|---|---|
| H | 10-10-8 | -85 | -85 | --- | FRONT | VERT | DEAD | --- | C1 |
| H | 10-10-8 | -210 | -210 | --- | FRONT | VERT | SNOW | --- | C1 |
| J | 2-7-8 | -85 | -85 | --- | FRONT | VERT | DEAD | --- | C1 |
| J | 2-7-8 | -210 | -210 | --- | FRONT | VERT | SNOW | --- | C1 |

**CONNECTION REQUIREMENTS**

1) **C1:** A SUITABLE HANGER/MECHANICAL CONNECTION IS REQUIRED.

**DESIGN CRITERIA**

*** SPECIAL LOADS ANALYSIS ***
GEOMETRY AND/OR BASIC LOADS CHANGED BY USER.
LOADS WERE DERIVED FROM USER INPUT
NO FURTHER MODIFICATIONS WERE MADE

SPECIFIED LOADS:

| | | | | |
|---|---|---|---|---|
| TOP CH. | LL | = | 25.6 | PSF |
| | DL | = | 3.0 | PSF |
| BOT CH. | LL | = | 0.0 | PSF |
| | DL | = | 7.3 | PSF |
| TOTAL LOAD | | = | 35.9 | PSF |

**SPACING = 24.0 IN. C/C**

LOADING IN FLAT SECTION BASED ON A SLOPE OF 8.00/12

GIRDER TYPE: CStdGirder
START DISTANCE = 1-0-0
START SPAN CARRIED = 3-11-8
END DISTANCE = 2-7-8
END SPAN CARRIED = 3-11-8
END WALL WIDTH = 5-8
APPLIED TO FRONT SIDE OF BOTTOM CHORD.
- ADDT'L LOADS BASED ON 55 % OF GSL. (DEFINED BY USER)

GIRDER TYPE: CStdGirder
START DISTANCE = 10-10-8
START SPAN CARRIED = 3-11-8
END DISTANCE = 12-6-0
END SPAN CARRIED = 3-11-8
END WALL WIDTH = 5-8
APPLIED TO FRONT SIDE OF BOTTOM CHORD.
- ADDT'L LOADS BASED ON 55 % OF GSL. (DEFINED BY USER)

*** NON STANDARD GIRDER ***
ADDT'L USER-DEFINED LOADS APPLIED TO ALL LOAD CASES.

THIS TRUSS IS DESIGNED FOR RESIDENTIAL OR SMALL BUILDING REQUIREMENTS OF PART 9, NBCC 2015

THIS DESIGN COMPLIES WITH:
- PART 9 OF BCBC 2018 , NBC-2019AE
- PART 9 OF OBC 2012 (2019 AMENDMENT)
- CSA 086-14
- TPIC 2014

(55 % OF 31.3 P.S.F. G.S.L. PLUS 8.4 P.S.F. RAIN LOAD) EQUALS 25.6 P.S.F. SPECIFIED ROOF LIVE LOAD

ALLOWABLE DEFL.(LL)= L/360 (0.45")
CALCULATED VERT. DEFL.(LL) = L/ 999 (0.02")
ALLOWABLE DEFL.(TL)= L/360 (0.45")
CALCULATED VERT. DEFL.(TL) = L/ 999 (0.03")

CSI: TC=0.28/1.00 (E-F:1) , BC=0.19/1.00 (H-I:1) , WB=0.24/1.00 (F-H:1) , SSI=0.12/1.00 (C-D:1)

DOL LUMBER=1.00 NAIL=1.00 LS BEND=1.00 COMP=1.00 SHEAR=1.00 TENS= 1.00

COMPANION LIVE LOAD FACTOR = 1.00

CONTINUED ON PAGE 2

LICENSED PROFESSIONAL ENGINEER
I.MATIJEVIC
100528832
PROVINCE OF ONTARIO
APRIL 24, 2023

**READ ALL NOTES ON THIS PAGE AND ON THE ENGINEERING NOTES: TRUSSES. THE NOTE PAGE IS AN INTEGRAL PART OF THIS DRAWING AS IT CONTAINS SPECIFICATIONS AND CRITERIA USED IN THE DESIGN OF THIS COMPONENET.**

CITY OF KITCHENER - HILL BUILDING DIVISION
05/24/2023
KOTT
RECEIVED
Per: joshua.nabua

| JOB NAME | TRUSS NAME | QUANTITY | PLY | JOB DESC. | DRWG NO. |
|---|---|---|---|---|---|
| IM0423-071 | G06 | 1 | 1 | TRUSS DESC. | |

Version 8.630 S Mar 22 2023 MiTek Industries, Inc. Fri Apr 21 14:13:29 2023 Page 2
ID:Oft3GgR1zRzAGpn6KZ87ljzYiN_-EVXtCGdxDFUz92lxnBoMO_KmgJ7AtdyIsK6CLGzOUMq

TRUSS PLATE MANUFACTURER IS NOT RESPONSIBLE FOR QUALITY CONTROL IN THE TRUSS MANUFACTURING PLANT .

NAIL VALUES

| PLATE | GRIP(DRY) (PSI) | | SHEAR (PLI) | | SECTION (PLI) | |
|---|---|---|---|---|---|---|
| | MAX | MIN | MAX | MIN | MAX | MIN |
| MT20 | 650 | 371 | 1747 | 788 | 1987 | 1873 |

PLATE PLACEMENT TOL. = 0.250 inches

PLATE ROTATION TOL. = 5.0 Deg.

JSI GRIP= 0.88 (H) (INPUT = 0.90 )
JSI METAL= 0.36 (F) (INPUT = 1.00 )

LICENSED PROFESSIONAL ENGINEER
I.MATIJEVIC
100528832
PROVINCE OF ONTARIO

APRIL 24, 2023

**READ ALL NOTES ON THIS PAGE AND ON THE ENGINEERING NOTES: TRUSSES. THE NOTE PAGE IS AN INTEGRAL PART OF THIS DRAWING AS IT CONTAINS SPECIFICATIONS AND CRITERIA USED IN THE DESIGN OF THIS COMPONENET.**

CITY OF RICHMOND HILL
BUILDING DIVISION
05/24/2023
RECEIVED
Per:_____joshua.nabua_____

KOTT

| JOB NAME | TRUSS NAME | QUANTITY | PLY | JOB DESC. | DRWG NO. |
|---|---|---|---|---|---|
| IM0423-071 | G07 | 1 | 1 | TRUSS DESC. | |

Version 8.630 S Mar 22 2023 MiTek Industries, Inc. Fri Apr 21 14:13:29 2023 Page 1
ID:Oft3GgR1zRzAGpn6KZ87ljzYiN_-EVXtCGdxDFUz92lxnBoMO_Kn4J2PteYIsK6CLGzOUMq

Scale = 1:50.7

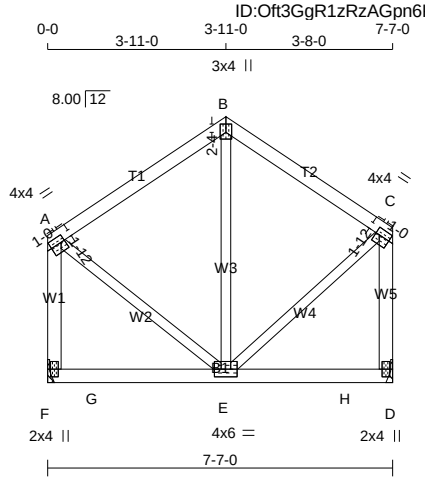


TOTAL WEIGHT = 38 lb

**LUMBER**
N. L. G. A. RULES

| CHORDS | SIZE | | LUMBER | DESCR. |
|---|---|---|---|---|
| A - B | 2x4 | DRY | No.2 | SPF |
| B - C | 2x4 | DRY | No.2 | SPF |
| F - A | 2x4 | DRY | No.2 | SPF |
| D - C | 2x4 | DRY | No.2 | SPF |
| F - D | 2x4 | DRY | No.2 | SPF |
| ALL WEBS EXCEPT | 2x3 | DRY | No.2 | SPF |

DRY: SEASONED LUMBER.

**PLATES (table is in inches)**

| JT | TYPE | PLATES | W | LEN | Y | X |
|---|---|---|---|---|---|---|
| A | TMVW-t | MT20 | 4.0 | 4.0 | 1.75 | Edge |
| B | TTW+p | MT20 | 3.0 | 4.0 | 2.25 | 1.50 |
| C | TMVW-t | MT20 | 4.0 | 4.0 | 1.75 | Edge |
| D | BMV1+p | MT20 | 2.0 | 4.0 | | |
| E | BMWWW-t | MT20 | 4.0 | 6.0 | | |
| F | BMV1+p | MT20 | 2.0 | 4.0 | | |

Edge - INDICATES REFERENCE CORNER OF PLATE TOUCHES EDGE OF CHORD.

**DIMENSIONS, SUPPORTS AND LOADINGS SPECIFIED BY FABRICATOR TO BE VERIFIED BY BUILDING DESIGNER**

**BEARINGS**

| JT | FACTORED GROSS REACTION VERT | HORZ | MAXIMUM FACTORED GROSS REACTION DOWN | HORZ | UPLIFT | INPUT BRG IN-SX | REQRD BRG IN-SX |
|---|---|---|---|---|---|---|---|
| F | 940 | 0 | 940 | 0 | 0 | MECHANICAL | |
| D | 940 | 0 | 940 | 0 | 0 | MECHANICAL | |

A SUITABLE HANGER/MECHANICAL CONNECTION IS REQUIRED AT JOINT F, D. MINIMUM BEARING LENGTH AT JOINT F = 1-8, JOINT D = 1-8.

**UNFACTORED REACTIONS**

| JT | 1ST LCASE COMBINED | MAX./MIN. COMPONENT REACTIONS SNOW | LIVE | PERM.LIVE | WIND | DEAD | SOIL |
|---|---|---|---|---|---|---|---|
| F | 658 | 469 / 0 | 0 / 0 | 0 / 0 | 0 / 0 | 189 / 0 | 0 / 0 |
| D | 658 | 469 / 0 | 0 / 0 | 0 / 0 | 0 / 0 | 189 / 0 | 0 / 0 |

**BRACING**
TOP CHORD TO BE SHEATHED OR MAX. PURLIN SPACING = 6.25 FT.
MAX. UNBRACED BOTTOM CHORD LENGTH = 10.00 FT OR RIGID CEILING DIRECTLY APPLIED.

ALL PITCH BREAKS AND PERIMETER CORNER JOINTS MUST BE LATERALLY RESTRAINED.

**LOADING**
TOTAL LOAD CASES: (4)

CHORDS

| MEMB. FR-TO | MAX. FACTORED FORCE (LBS) | FACTORED VERT. LOAD LC1 (PLF) FROM | TO | MAX CSI (LC) | MAX. UNBRAC LENGTH |
|---|---|---|---|---|---|
| A- B | -518 / 0 | -84.3 | -84.3 | 0.25 (1) | 6.25 |
| B- C | -518 / 0 | -84.3 | -84.3 | 0.22 (1) | 6.25 |
| F- A | -774 / 0 | 0.0 | 0.0 | 0.15 (1) | 7.81 |
| D- C | -805 / 0 | 0.0 | 0.0 | 0.17 (1) | 7.81 |
| F- G | 0 / 0 | -18.2 | -18.2 | 0.49 (1) | 10.00 |
| G- E | 0 / 0 | -215.8 | -215.8 | 0.49 (1) | 10.00 |
| E- H | 0 / 0 | -215.8 | -215.8 | 0.49 (1) | 10.00 |
| H- D | 0 / 0 | -18.2 | -18.2 | 0.49 (1) | 10.00 |

WEBS

| MEMB. FR-TO | MAX. FACTORED FORCE (LBS) | MAX CSI (LC) |
|---|---|---|
| E- B | 0 / 256 | 0.06 (1) |
| A- E | 0 / 538 | 0.13 (1) |
| E- C | 0 / 564 | 0.14 (1) |

**DESIGN CRITERIA**

SPECIFIED LOADS:

| | | | | | |
|---|---|---|---|---|---|
| TOP CH. | LL | = | 25.6 | PSF |
| | DL | = | 3.0 | PSF |
| BOT CH. | LL | = | 0.0 | PSF |
| | DL | = | 7.3 | PSF |
| TOTAL LOAD | | = | 35.9 | PSF |

**SPACING = 24.0 IN. C/C**

GIRDER TYPE: CStdGirder
START DISTANCE = 1-0-0
START SPAN CARRIED = 9-8-8
END DISTANCE = 6-7-0
END SPAN CARRIED = 9-8-8
END WALL WIDTH = 0-0
APPLIED TO FRONT SIDE OF BOTTOM CHORD.
- ADDT'L LOADS BASED ON 55 % OF GSL. (DEFINED BY USER)

THIS TRUSS IS DESIGNED FOR RESIDENTIAL OR SMALL BUILDING REQUIREMENTS OF PART 9, NBCC 2015

THIS DESIGN COMPLIES WITH:
- PART 9 OF BCBC 2018 , NBC-2019AE
- PART 9 OF OBC 2012 (2019 AMENDMENT)
- CSA 086-14
- TPIC 2014

(55 % OF 31.3 P.S.F. G.S.L. PLUS 8.4 P.S.F. RAIN LOAD) EQUALS 25.6 P.S.F. SPECIFIED ROOF LIVE LOAD

ALLOWABLE DEFL.(LL)= L/360 (0.25")
CALCULATED VERT. DEFL.(LL) = L/ 999 (0.03")
ALLOWABLE DEFL.(TL)= L/360 (0.25")
CALCULATED VERT. DEFL.(TL) = L/ 999 (0.06")

CSI: TC=0.25/1.00 (A-B:1) , BC=0.49/1.00 (E-F:1) , WB=0.14/1.00 (C-E:1) , SSI=0.41/1.00 (E-F:1)

DOL LUMBER=1.00 NAIL=1.00 LS BEND=1.00 COMP=1.00 SHEAR=1.00 TENS= 1.00

COMPANION LIVE LOAD FACTOR = 1.00

TRUSS PLATE MANUFACTURER IS NOT RESPONSIBLE FOR QUALITY CONTROL IN THE TRUSS MANUFACTURING PLANT .

NAIL VALUES

| PLATE | GRIP(DRY) (PSI) MAX | MIN | SHEAR (PLI) MAX | MIN | SECTION (PLI) MAX | MIN |
|---|---|---|---|---|---|---|
| MT20 | 650 | 371 | 1747 | 788 | 1987 | 1873 |

PLATE PLACEMENT TOL. = 0.250 inches

PLATE ROTATION TOL. = 5.0 Deg.

JSI GRIP= 0.70 (C) (INPUT = 0.90 )
JSI METAL= 0.21 (A) (INPUT = 1.00 )

LICENSED PROFESSIONAL ENGINEER
I.MATIJEVIC
100528832
PROVINCE OF ONTARIO
APRIL 24, 2023

**READ ALL NOTES ON THIS PAGE AND ON THE ENGINEERING NOTES: TRUSSES. THE NOTE PAGE IS AN INTEGRAL PART OF THIS DRAWING AS IT CONTAINS SPECIFICATIONS AND CRITERIA USED IN THE DESIGN OF THIS COMPONENET.**

CITY OF RICHMOND HILL
BUILDING DIVISION
05/24/2023
KOTT
RECEIVED
Per:_____joshua.nabua_____

| JOB NAME | TRUSS NAME | QUANTITY | PLY | JOB DESC. | DRWG NO. |
|---|---|---|---|---|---|
| IM0423-071 | G08 | 1 | 1 | TRUSS DESC. | |

Version 8.630 S Mar 22 2023 MiTek Industries, Inc. Fri Apr 21 14:13:30 2023 Page 1
ID:Oft3GgR1zRzAGpn6KZ87ljzYiN_-ih4FPceZ_ZcpmCK7LvJbxBtwgjQkc5tR5_sltizOUMp

Scale = 1:38.5

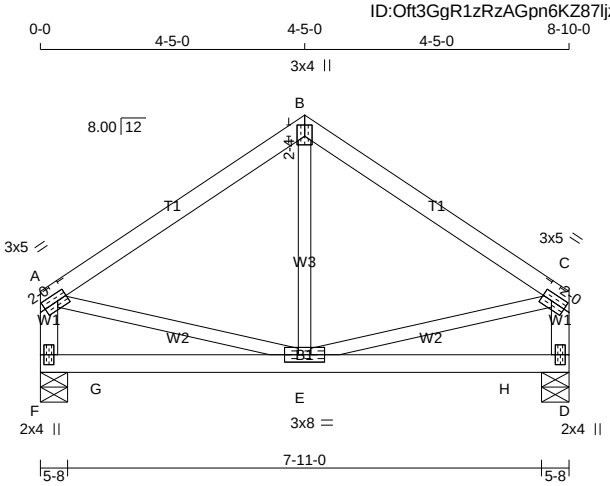


TOTAL WEIGHT = 34 lb

**LUMBER**
N. L. G. A. RULES

| CHORDS | SIZE | | LUMBER | DESCR. |
|---|---|---|---|---|
| A - B | 2x4 | DRY | No.2 | SPF |
| B - C | 2x4 | DRY | No.2 | SPF |
| F - A | 2x4 | DRY | No.2 | SPF |
| D - C | 2x4 | DRY | No.2 | SPF |
| F - D | 2x4 | DRY | No.2 | SPF |
| ALL WEBS EXCEPT | 2x3 | DRY | No.2 | SPF |

DRY: SEASONED LUMBER.

**PLATES (table is in inches)**

| JT | TYPE | PLATES | W | LEN | Y | X |
|---|---|---|---|---|---|---|
| A | TMVW-t | MT20 | 3.0 | 5.0 | 1.50 | 2.00 |
| B | TTW+p | MT20 | 3.0 | 4.0 | 2.25 | 1.50 |
| C | TMVW-t | MT20 | 3.0 | 5.0 | 1.50 | 2.00 |
| D | BMV1+p | MT20 | 2.0 | 4.0 | | |
| E | BMWWW-t | MT20 | 3.0 | 8.0 | | |
| F | BMV1+p | MT20 | 2.0 | 4.0 | | |

**DIMENSIONS, SUPPORTS AND LOADINGS SPECIFIED BY FABRICATOR TO BE VERIFIED BY BUILDING DESIGNER**

**BEARINGS**

| JT | FACTORED GROSS REACTION VERT | HORZ | MAXIMUM FACTORED GROSS REACTION DOWN | HORZ | UPLIFT | INPUT BRG IN-SX | REQRD BRG IN-SX |
|---|---|---|---|---|---|---|---|
| F | 774 | 0 | 774 | 0 | 0 | 5-8 | 1-8 |
| D | 774 | 0 | 774 | 0 | 0 | 5-8 | 1-8 |

**UNFACTORED REACTIONS**

| JT | 1ST LCASE COMBINED | MAX./MIN. COMPONENT REACTIONS SNOW | LIVE | PERM.LIVE | WIND | DEAD | SOIL |
|---|---|---|---|---|---|---|---|
| F | 542 | 386 / 0 | 0 / 0 | 0 / 0 | 0 / 0 | 156 / 0 | 0 / 0 |
| D | 542 | 386 / 0 | 0 / 0 | 0 / 0 | 0 / 0 | 155 / 0 | 0 / 0 |

BEARING MATERIAL TO BE SPF NO.2 OR BETTER AT JOINT(S) F, D

**BRACING**
TOP CHORD TO BE SHEATHED OR MAX. PURLIN SPACING = 6.25 FT.
MAX. UNBRACED BOTTOM CHORD LENGTH = 10.00 FT OR RIGID CEILING DIRECTLY APPLIED.

ALL PITCH BREAKS AND PERIMETER CORNER JOINTS MUST BE LATERALLY RESTRAINED.

**LOADING**
TOTAL LOAD CASES: (4)

CHORDS

| MEMB. FR-TO | MAX. FACTORED FORCE (LBS) | FACTORED VERT. LOAD (PLF) FROM | TO | LC1 | MAX CSI (LC) | MAX. UNBRAC LENGTH |
|---|---|---|---|---|---|---|
| A- B | -638 / 0 | -84.3 | -84.3 | 0.33 (1) | 6.25 | |
| B- C | -638 / 0 | -84.3 | -84.3 | 0.33 (1) | 6.25 | |
| F- A | -663 / 0 | 0.0 | 0.0 | 0.07 (1) | 7.81 | |
| D- C | -663 / 0 | 0.0 | 0.0 | 0.07 (1) | 7.81 | |
| F- G | 0 / 0 | -18.2 | -18.2 | 0.36 (1) | 10.00 | |
| G- E | 0 / 0 | -112.2 | -112.2 | 0.36 (1) | 10.00 | |
| E- H | 0 / 0 | -112.2 | -112.2 | 0.36 (1) | 10.00 | |
| H- D | 0 / 0 | -18.2 | -18.2 | 0.36 (1) | 10.00 | |

WEBS

| MEMB. FR-TO | MAX. FACTORED FORCE (LBS) | MAX CSI (LC) |
|---|---|---|
| E- B | 0 / 336 | 0.08 (1) |
| A- E | 0 / 545 | 0.13 (1) |
| E- C | 0 / 545 | 0.13 (1) |

**DESIGN CRITERIA**

SPECIFIED LOADS:

| | | | | | |
|---|---|---|---|---|---|
| TOP | CH. | LL | = | 25.6 | PSF |
| | | DL | = | 3.0 | PSF |
| BOT | CH. | LL | = | 0.0 | PSF |
| | | DL | = | 7.3 | PSF |
| TOTAL | LOAD | | = | 35.9 | PSF |

**SPACING = 24.0 IN. C/C**

GIRDER TYPE: CStdGirder
START DISTANCE = 1-0-0
START SPAN CARRIED = 5-8-0
END DISTANCE = 7-10-0
END SPAN CARRIED = 5-8-0
END WALL WIDTH = 0-0
APPLIED TO FRONT SIDE OF BOTTOM CHORD.
- ADDT'L LOADS BASED ON 55 % OF GSL.

THIS TRUSS IS DESIGNED FOR RESIDENTIAL OR SMALL BUILDING REQUIREMENTS OF PART 9, NBCC 2015

THIS DESIGN COMPLIES WITH:
- PART 9 OF BCBC 2018 , NBC-2019AE
- PART 9 OF OBC 2012 (2019 AMENDMENT)
- CSA 086-14
- TPIC 2014

(55 % OF 31.3 P.S.F. G.S.L. PLUS 8.4 P.S.F. RAIN LOAD) EQUALS 25.6 P.S.F. SPECIFIED ROOF LIVE LOAD

ALLOWABLE DEFL.(LL)= L/360 (0.29")
CALCULATED VERT. DEFL.(LL) = L/ 999 (0.02")
ALLOWABLE DEFL.(TL)= L/360 (0.29")
CALCULATED VERT. DEFL.(TL) = L/ 999 (0.05")

CSI: TC=0.33/1.00 (A-B:1) , BC=0.36/1.00 (E-F:1) , WB=0.13/1.00 (C-E:1) , SSI=0.25/1.00 (E-F:1)

DOL LUMBER=1.00 NAIL=1.00 LS BEND=1.00 COMP=1.00 SHEAR=1.00 TENS= 1.00

COMPANION LIVE LOAD FACTOR = 1.00

TRUSS PLATE MANUFACTURER IS NOT RESPONSIBLE FOR QUALITY CONTROL IN THE TRUSS MANUFACTURING PLANT .

NAIL VALUES

| PLATE | GRIP(DRY) (PSI) MAX | MIN | SHEAR (PLI) MAX | MIN | SECTION (PLI) MAX | MIN |
|---|---|---|---|---|---|---|
| MT20 | 650 | 371 | 1747 | 788 | 1987 | 1873 |

PLATE PLACEMENT TOL. = 0.250 inches

PLATE ROTATION TOL. = 5.0 Deg.

JSI GRIP= 0.69 (A) (INPUT = 0.90 )
JSI METAL= 0.21 (C) (INPUT = 1.00 )

LICENSED PROFESSIONAL ENGINEER
I.MATIJEVIC
100528832
PROVINCE OF ONTARIO
APRIL 24, 2023

**READ ALL NOTES ON THIS PAGE AND ON THE ENGINEERING NOTES: TRUSSES. THE NOTE PAGE IS AN INTEGRAL PART OF THIS DRAWING AS IT CONTAINS SPECIFICATIONS AND CRITERIA USED IN THE DESIGN OF THIS COMPONENET.**

CITY OF RICHMOND HILL
BUILDING DIVISION
05/24/2023
KOTT
RECEIVED
Per: joshua.nabua

| JOB NAME | TRUSS NAME | QUANTITY | PLY | JOB DESC. | DRWG NO. |
|---|---|---|---|---|---|
| IM0423-071 | G09 | 1 | 1 | TRUSS DESC. | |

Version 8.630 S Mar 22 2023 MiTek Industries, Inc. Fri Apr 21 14:13:31 2023 Page 1
ID:Oft3GgR1zRzAGpn6KZ87ljzYiN_-BtedcyfBltkgOMvJvcqqTPP9g7nnLYNbJebJP8zOUMo

Scale = 1:40.5

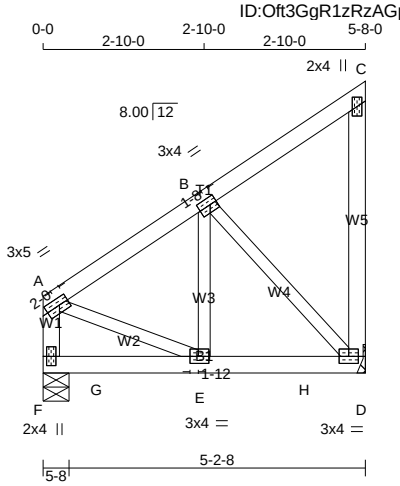


TOTAL WEIGHT = 28 lb

**LUMBER**
N. L. G. A. RULES

| CHORDS | SIZE | | LUMBER | DESCR. |
|---|---|---|---|---|
| F - A | 2x4 | DRY | No.2 | SPF |
| A - C | 2x4 | DRY | No.2 | SPF |
| D - C | 2x4 | DRY | No.2 | SPF |
| F - D | 2x4 | DRY | No.2 | SPF |
| ALL WEBS | 2x3 | DRY | No.2 | SPF |

DRY: SEASONED LUMBER.

**PLATES (table is in inches)**

| JT | TYPE | PLATES | W | LEN | Y | X |
|---|---|---|---|---|---|---|
| A | TMVW-t | MT20 | 3.0 | 5.0 | 1.50 | 2.00 |
| B | TMWW-t | MT20 | 3.0 | 4.0 | 1.50 | 1.50 |
| C | TMV+p | MT20 | 2.0 | 4.0 | | |
| D | BMVW1-t | MT20 | 3.0 | 4.0 | | |
| E | BMWW-t | MT20 | 3.0 | 4.0 | 1.50 | 1.75 |
| F | BMV1+p | MT20 | 2.0 | 4.0 | | |

**DIMENSIONS, SUPPORTS AND LOADINGS SPECIFIED BY FABRICATOR TO BE VERIFIED BY BUILDING DESIGNER**

**BEARINGS**

| JT | FACTORED GROSS REACTION VERT | HORZ | MAXIMUM FACTORED GROSS REACTION DOWN | HORZ | UPLIFT | INPUT BRG | REQRD BRG |
|---|---|---|---|---|---|---|---|
| F | 653 | 0 | 653 | 0 | 0 | 5-8 | 1-8 |
| D | 653 | 0 | 653 | 0 | 0 | MECHANICAL | |

A SUITABLE HANGER/MECHANICAL CONNECTION IS REQUIRED AT JOINT D. MINIMUM BEARING LENGTH AT JOINT D = 1-8.

**UNFACTORED REACTIONS**

| JT | 1ST LCASE COMBINED | MAX./MIN. COMPONENT REACTIONS SNOW | LIVE | PERM.LIVE | WIND | DEAD | SOIL |
|---|---|---|---|---|---|---|---|
| F | 457 | 326 / 0 | 0 / 0 | 0 / 0 | 0 / 0 | 131 / 0 | 0 / 0 |
| D | 457 | 326 / 0 | 0 / 0 | 0 / 0 | 0 / 0 | 131 / 0 | 0 / 0 |

BEARING MATERIAL TO BE SPF NO.2 OR BETTER AT JOINT(S) F

**BRACING**
TOP CHORD TO BE SHEATHED OR MAX. PURLIN SPACING = 6.25 FT.
MAX. UNBRACED BOTTOM CHORD LENGTH = 10.00 FT OR RIGID CEILING DIRECTLY APPLIED.

ALL PITCH BREAKS AND PERIMETER CORNER JOINTS MUST BE LATERALLY RESTRAINED.

**LOADING**
TOTAL LOAD CASES: (4)

CHORDS

| MEMB. FR-TO | MAX. FACTORED FORCE (LBS) | FACTORED VERT. LOAD (PLF) FROM | TO | LC1 MAX CSI (LC) | MAX. UNBRAC LENGTH |
|---|---|---|---|---|---|
| F- A | -563 / 0 | 0.0 | 0.0 | 0.06 (1) | 7.81 |
| A- B | -534 / 0 | -84.3 | -84.3 | 0.12 (1) | 6.25 |
| B- C | -15 / 0 | -84.3 | -84.3 | 0.11 (1) | 6.25 |
| D- C | -93 / 0 | 0.0 | 0.0 | 0.04 (1) | 7.81 |
| F- G | 0 / 0 | -18.2 | -18.2 | 0.23 (1) | 10.00 |
| G- E | 0 / 0 | -215.8 | -215.8 | 0.23 (1) | 10.00 |
| E- H | 0 / 457 | -215.8 | -215.8 | 0.31 (1) | 10.00 |
| H- D | 0 / 457 | -18.2 | -18.2 | 0.31 (1) | 10.00 |

WEBS

| MEMB. FR-TO | MAX. FACTORED FORCE (LBS) | MAX CSI (LC) |
|---|---|---|
| A- E | 0 / 486 | 0.12 (1) |
| E- B | 0 / 483 | 0.12 (1) |
| B- D | -655 / 0 | 0.18 (1) |

**DESIGN CRITERIA**

SPECIFIED LOADS:

| | | | | | |
|---|---|---|---|---|---|
| TOP | CH. | LL | = | 25.6 | PSF |
| | | DL | = | 3.0 | PSF |
| BOT | CH. | LL | = | 0.0 | PSF |
| | | DL | = | 7.3 | PSF |
| TOTAL | LOAD | | = | 35.9 | PSF |

**SPACING = 24.0 IN. C/C**

GIRDER TYPE: CStdGirder
START DISTANCE = 1-0-0
START SPAN CARRIED = 9-8-8
END DISTANCE = 4-8-0
END SPAN CARRIED = 9-8-8
END WALL WIDTH = 0-0
APPLIED TO FRONT SIDE OF BOTTOM CHORD.
- ADDT'L LOADS BASED ON 55 % OF GSL.

THIS TRUSS IS DESIGNED FOR RESIDENTIAL OR SMALL BUILDING REQUIREMENTS OF PART 9, NBCC 2015

THIS DESIGN COMPLIES WITH:
- PART 9 OF BCBC 2018 , NBC-2019AE
- PART 9 OF OBC 2012 (2019 AMENDMENT)
- CSA 086-14
- TPIC 2014

(55 % OF 31.3 P.S.F. G.S.L. PLUS 8.4 P.S.F. RAIN LOAD) EQUALS 25.6 P.S.F. SPECIFIED ROOF LIVE LOAD

ALLOWABLE DEFL.(LL)= L/360 (0.19")
CALCULATED VERT. DEFL.(LL) = L/ 999 (0.01")
ALLOWABLE DEFL.(TL)= L/360 (0.19")
CALCULATED VERT. DEFL.(TL) = L/ 999 (0.02")

CSI: TC=0.12/1.00 (A-B:1) , BC=0.31/1.00 (D-E:1) , WB=0.18/1.00 (B-D:1) , SSI=0.28/1.00 (D-E:1)

DOL LUMBER=1.00 NAIL=1.00 LS BEND=1.00 COMP=1.00 SHEAR=1.00 TENS= 1.00

COMPANION LIVE LOAD FACTOR = 1.00

TRUSS PLATE MANUFACTURER IS NOT RESPONSIBLE FOR QUALITY CONTROL IN THE TRUSS MANUFACTURING PLANT .

NAIL VALUES

| PLATE | GRIP(DRY) (PSI) MAX | MIN | SHEAR (PLI) MAX | MIN | SECTION (PLI) MAX | MIN |
|---|---|---|---|---|---|---|
| MT20 | 650 | 371 | 1747 | 788 | 1987 | 1873 |

PLATE PLACEMENT TOL. = 0.250 inches

PLATE ROTATION TOL. = 5.0 Deg.

JSI GRIP= 0.85 (E) (INPUT = 0.90 )
JSI METAL= 0.17 (A) (INPUT = 1.00 )

LICENSED PROFESSIONAL ENGINEER
I.MATIJEVIC
100528832
PROVINCE OF ONTARIO
APRIL 24, 2023

**READ ALL NOTES ON THIS PAGE AND ON THE ENGINEERING NOTES: TRUSSES. THE NOTE PAGE IS AN INTEGRAL PART OF THIS DRAWING AS IT CONTAINS SPECIFICATIONS AND CRITERIA USED IN THE DESIGN OF THIS COMPONENET.**

CITY OF RICHMOND HILL
BUILDING DIVISION
05/24/2023
KOTT
RECEIVED
Per: joshua.nabua

| JOB NAME | TRUSS NAME | QUANTITY | PLY | JOB DESC. | DRWG NO. |
|---|---|---|---|---|---|
| IM0423-071 | G10 | 2 | 1 | TRUSS DESC. | |

Version 8.630 S Mar 22 2023 MiTek Industries, Inc. Fri Apr 21 14:13:32 2023 Page 1
ID:Oft3GgR1zRzAGpn6KZ87ljzYiN_-f4C?qIgpWAsX0WUVTKL30cyKcX7k40wkYILsybzOUMn

Scale = 1:24.5

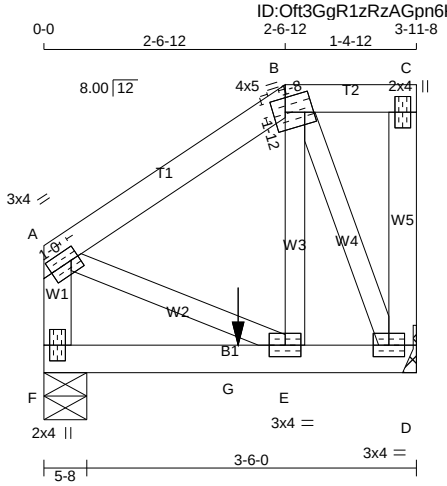


TOTAL WEIGHT = 2 X 20 = 40 lb

**LUMBER**
N. L. G. A. RULES

| CHORDS | SIZE | | LUMBER | DESCR. |
|---|---|---|---|---|
| A - B | 2x4 | DRY | No.2 | SPF |
| B - C | 2x4 | DRY | No.2 | SPF |
| D - C | 2x4 | DRY | No.2 | SPF |
| F - A | 2x4 | DRY | No.2 | SPF |
| F - D | 2x4 | DRY | No.2 | SPF |
| ALL WEBS EXCEPT | 2x3 | DRY | No.2 | SPF |

DRY: SEASONED LUMBER.

**PLATES (table is in inches)**

| JT | TYPE | PLATES | W | LEN | Y | X |
|---|---|---|---|---|---|---|
| A | TMVW-t | MT20 | 3.0 | 4.0 | 1.50 | 1.00 |
| B | TTWW-m | MT20 | 4.0 | 5.0 | 1.75 | 1.50 |
| C | TMV+p | MT20 | 2.0 | 4.0 | | |
| D | BMVW1-t | MT20 | 3.0 | 4.0 | | |
| E | BMWW-t | MT20 | 3.0 | 4.0 | | |
| F | BMV1+p | MT20 | 2.0 | 4.0 | | |

**DIMENSIONS, SUPPORTS AND LOADINGS SPECIFIED BY FABRICATOR TO BE VERIFIED BY BUILDING DESIGNER**

**BEARINGS**

| JT | FACTORED GROSS REACTION VERT | HORZ | MAXIMUM FACTORED GROSS REACTION DOWN | HORZ | UPLIFT | INPUT BRG IN-SX | REQRD BRG IN-SX |
|---|---|---|---|---|---|---|---|
| D | 420 | 0 | 420 | 0 | 0 | MECHANICAL | |
| F | 403 | 0 | 403 | 0 | 0 | 5-8 | 1-8 |

A SUITABLE HANGER/MECHANICAL CONNECTION IS REQUIRED AT JOINT D. MINIMUM BEARING LENGTH AT JOINT D = 1-8.

**UNFACTORED REACTIONS**

| JT | 1ST LCASE COMBINED | MAX./MIN. COMPONENT REACTIONS SNOW | LIVE | PERM.LIVE | WIND | DEAD | SOIL |
|---|---|---|---|---|---|---|---|
| D | 294 | 210 / 0 | 0 / 0 | 0 / 0 | 0 / 0 | 85 / 0 | 0 / 0 |
| F | 282 | 201 / 0 | 0 / 0 | 0 / 0 | 0 / 0 | 81 / 0 | 0 / 0 |

BEARING MATERIAL TO BE SPF NO.2 OR BETTER AT JOINT(S) F

**BRACING**
TOP CHORD TO BE SHEATHED OR MAX. PURLIN SPACING = 6.25 FT.
MAX. UNBRACED BOTTOM CHORD LENGTH = 10.00 FT OR RIGID CEILING DIRECTLY APPLIED.

ALL PITCH BREAKS AND PERIMETER CORNER JOINTS MUST BE LATERALLY RESTRAINED.

**LOADING**
TOTAL LOAD CASES: (4)

| CHORDS MEMB. FR-TO | MAX. FACTORED FORCE (LBS) | FACTORED VERT. LOAD (PLF) FROM | TO | LC1 MAX CSI (LC) | MAX. UNBRAC LENGTH | WEBS MEMB. FR-TO | MAX. FACTORED FORCE (LBS) | MAX CSI (LC) |
|---|---|---|---|---|---|---|---|---|
| A- B | -245 / 0 | -84.3 | -84.3 | 0.10 (1) | 6.25 | E- B | 0 / 402 | 0.10 (1) |
| B- C | 0 / 0 | -84.3 | -84.3 | 0.03 (1) | 10.00 | B- D | -484 / 0 | 0.10 (1) |
| D- C | -59 / 0 | 0.0 | 0.0 | 0.01 (1) | 7.81 | A- E | 0 / 218 | 0.05 (1) |
| F- A | -323 / 0 | 0.0 | 0.0 | 0.04 (1) | 7.81 | | | |
| F- G | 0 / 0 | -18.2 | -18.2 | 0.19 (1) | 10.00 | | | |
| G- E | 0 / 0 | -18.2 | -18.2 | 0.19 (1) | 10.00 | | | |
| E- D | 0 / 219 | -18.2 | -18.2 | 0.20 (1) | 10.00 | | | |

SPECIFIED CONCENTRATED LOADS (LBS)

| JT | LOC. | LC1 | MAX- | MAX+ | FACE | DIR. | TYPE | HEEL | CONN. |
|---|---|---|---|---|---|---|---|---|---|
| G | 2-0-12 | -84 | -84 | --- | FRONT | VERT | DEAD | --- | C1 |
| G | 2-0-12 | -208 | -208 | --- | FRONT | VERT | SNOW | --- | C1 |

**CONNECTION REQUIREMENTS**

1) **C1:** A SUITABLE HANGER/MECHANICAL CONNECTION IS REQUIRED.

**DESIGN CRITERIA**

*** SPECIAL LOADS ANALYSIS ***
GEOMETRY AND/OR BASIC LOADS CHANGED BY USER.
LOADS WERE DERIVED FROM USER INPUT
NO FURTHER MODIFICATIONS WERE MADE

SPECIFIED LOADS:

| | | | | |
|---|---|---|---|---|
| TOP CH. | LL | = | 25.6 | PSF |
| | DL | = | 3.0 | PSF |
| BOT CH. | LL | = | 0.0 | PSF |
| | DL | = | 7.3 | PSF |
| TOTAL LOAD | | = | 35.9 | PSF |

**SPACING = 24.0 IN. C/C**

LOADING IN FLAT SECTION BASED ON A SLOPE OF 8.00/12

*** NON STANDARD GIRDER ***
ADDT'L USER-DEFINED LOADS APPLIED TO ALL LOAD CASES.

THIS TRUSS IS DESIGNED FOR RESIDENTIAL OR SMALL BUILDING REQUIREMENTS OF PART 9, NBCC 2015

THIS DESIGN COMPLIES WITH:
- PART 9 OF BCBC 2018 , NBC-2019AE
- PART 9 OF OBC 2012 (2019 AMENDMENT)
- CSA 086-14
- TPIC 2014

(55 % OF 31.3 P.S.F. G.S.L. PLUS 8.4 P.S.F. RAIN LOAD) EQUALS 25.6 P.S.F. SPECIFIED ROOF LIVE LOAD

ALLOWABLE DEFL.(LL)= L/360 (0.19")
CALCULATED VERT. DEFL.(LL) = L/ 999 (0.01")
ALLOWABLE DEFL.(TL)= L/360 (0.19")
CALCULATED VERT. DEFL.(TL) = L/ 999 (0.02")

CSI: TC=0.10/1.00 (A-B:1) , BC=0.20/1.00 (D-E:1) , WB=0.10/1.00 (B-E:1) , SSI=0.33/1.00 (E-F:1)

DOL LUMBER=1.00 NAIL=1.00 LS BEND=1.00 COMP=1.00 SHEAR=1.00 TENS= 1.00

COMPANION LIVE LOAD FACTOR = 1.00

TRUSS PLATE MANUFACTURER IS NOT RESPONSIBLE FOR QUALITY CONTROL IN THE TRUSS MANUFACTURING PLANT .

NAIL VALUES

| PLATE | GRIP(DRY) (PSI) MAX | MIN | SHEAR (PLI) MAX | MIN | SECTION (PLI) MAX | MIN |
|---|---|---|---|---|---|---|
| MT20 | 650 | 371 | 1747 | 788 | 1987 | 1873 |

PLATE PLACEMENT TOL. = 0.250 inches

PLATE ROTATION TOL. = 5.0 Deg.

JSI GRIP= 0.90 (B) (INPUT = 0.90 )
JSI METAL= 0.20 (B) (INPUT = 1.00 )

LICENSED PROFESSIONAL ENGINEER
I.MATIJEVIC
100528832
PROVINCE OF ONTARIO
APRIL 24, 2023

**READ ALL NOTES ON THIS PAGE AND ON THE ENGINEERING NOTES: TRUSSES. THE NOTE PAGE IS AN INTEGRAL PART OF THIS DRAWING AS IT CONTAINS SPECIFICATIONS AND CRITERIA USED IN THE DESIGN OF THIS COMPONENET.**

CITY OF RICHMOND HILL
BUILDING DIVISION
05/24/2023
RECEIVED
Per: joshua.nabua

| JOB NAME | TRUSS NAME | QUANTITY | PLY | JOB DESC. | DRWG NO. |
|---|---|---|---|---|---|
| IM0423-071 | GE01 | 1 | 1 | TRUSS DESC. | |

Version 8.630 S Mar 22 2023 MiTek Industries, Inc. Fri Apr 21 14:13:33 2023 Page 1
ID:Oft3GgR1zRzAGpn6KZ87ljzYiN_-7GmO1egRHU_Odg3i01sIZqVWIxWopT9uny4PU1zOUMm

Scale = 1:51.4

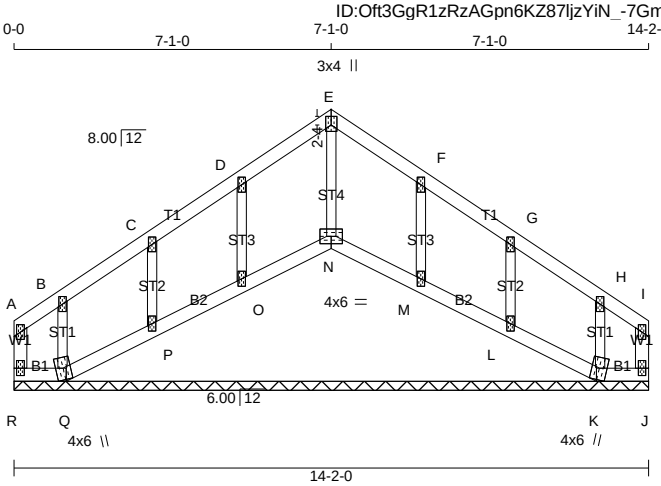


TOTAL WEIGHT = 51 lb
[M]

**LUMBER**
N. L. G. A. RULES

| CHORDS | SIZE | | LUMBER | DESCR. |
|---|---|---|---|---|
| R - A | 2x4 | DRY | No.2 | SPF |
| A - E | 2x4 | DRY | No.2 | SPF |
| E - I | 2x4 | DRY | No.2 | SPF |
| J - I | 2x4 | DRY | No.2 | SPF |
| R - Q | 2x4 | DRY | No.2 | SPF |
| Q - N | 2x4 | DRY | No.2 | SPF |
| N - K | 2x4 | DRY | No.2 | SPF |
| K - J | 2x4 | DRY | No.2 | SPF |
| ALL WEBS | 2x3 | DRY | No.2 | SPF |
| ALL GABLE WEBS | 2x3 | DRY | No.2 | SPF |

DRY: SEASONED LUMBER.

GABLE STUDS SPACED AT 2-0-0 OC.

**PLATES (table is in inches)**

| JT | TYPE | PLATES | W | LEN | Y | X |
|---|---|---|---|---|---|---|
| A | TMV+p | MT20 | 2.0 | 4.0 | | |
| B, C, D, F, G, H | | | | | | |
| B | TMW+w | MT20 | 2.0 | 4.0 | | |
| E | TTW+p | MT20 | 3.0 | 4.0 | 2.25 | 1.50 |
| I | TMV+p | MT20 | 2.0 | 4.0 | | |
| J | BMV1+p | MT20 | 2.0 | 4.0 | | |
| K | BBW1+m | MT20 | 4.0 | 6.0 | Edge | |
| L, M, O, P | | | | | | |
| L | BMW1+w | MT20 | 2.0 | 4.0 | | |
| N | BBW1-p | MT20 | 4.0 | 6.0 | | |
| Q | BBW1+m | MT20 | 4.0 | 6.0 | Edge | |
| R | BMV1+p | MT20 | 2.0 | 4.0 | | |

Edge - INDICATES REFERENCE CORNER OF PLATE TOUCHES EDGE OF CHORD.

**DIMENSIONS, SUPPORTS AND LOADINGS SPECIFIED BY FABRICATOR TO BE VERIFIED BY BUILDING DESIGNER**

**BEARINGS**

THIS TRUSS DESIGNED FOR CONTINUOUS BEARINGS.

THIS TRUSS REQUIRES RIGID SHEATHING ON EXPOSED FACE.

BEVELED PLATE OR SHIM REQUIRED TO PROVIDE FULL BEARING SURFACE WITH TRUSS CHORD AT JT(S): N , O , P , M , L
BEARING MATERIAL TO BE SPF NO.2 OR BETTER AT JOINT(S)

**BRACING**
TOP CHORD TO BE SHEATHED OR MAX. PURLIN SPACING = 6.25 FT.
MAX. UNBRACED BOTTOM CHORD LENGTH = 6.25 FT OR RIGID CEILING DIRECTLY APPLIED.

ALL PITCH BREAKS AND PERIMETER CORNER JOINTS MUST BE LATERALLY RESTRAINED.

**LOADING**
TOTAL LOAD CASES: (4)

CHORDS

| MEMB. FR-TO | MAX. FORCE (LBS) | FACTORED VERT. LOAD (PLF) FROM | TO | LC1 | MAX CSI (LC) | MAX. UNBRAC LENGTH |
|---|---|---|---|---|---|---|
| R- A | -45 / 0 | 0.0 | 0.0 | 0.01 (1) | | 7.81 |
| A- B | -16 / 0 | -84.3 | -84.3 | 0.03 (1) | | 6.25 |
| B- C | -4 / 0 | -84.3 | -84.3 | 0.04 (1) | | 10.00 |
| C- D | 0 / 7 | -84.3 | -84.3 | 0.04 (1) | | 10.00 |
| D- E | 0 / 20 | -84.3 | -84.3 | 0.04 (1) | | 10.00 |
| E- F | 0 / 19 | -84.3 | -84.3 | 0.04 (1) | | 10.00 |
| F- G | 0 / 6 | -84.3 | -84.3 | 0.04 (1) | | 10.00 |
| G- H | -5 / 0 | -84.3 | -84.3 | 0.04 (1) | | 10.00 |
| H- I | -17 / 0 | -84.3 | -84.3 | 0.03 (1) | | 6.25 |
| J- I | -46 / 0 | 0.0 | 0.0 | 0.01 (1) | | 7.81 |
| R- Q | 0 / 18 | -18.2 | -18.2 | 0.01 (1) | | 10.00 |
| Q- P | 0 / 7 | -18.2 | -18.2 | 0.02 (4) | | 10.00 |
| P- O | -7 / 0 | -18.3 | -18.3 | 0.02 (4) | | 10.00 |
| O- N | -18 / 0 | -18.3 | -18.3 | 0.01 (4) | | 6.25 |
| N- M | -18 / 0 | -18.2 | -18.2 | 0.01 (4) | | 6.25 |
| M- L | -6 / 0 | -18.2 | -18.2 | 0.02 (4) | | 10.00 |
| L- K | 0 / 8 | -18.2 | -18.2 | 0.02 (4) | | 10.00 |
| K- J | 0 / 18 | -18.2 | -18.2 | 0.01 (1) | | 10.00 |

WEBS

| MEMB. FR-TO | MAX. FORCE (LBS) | MAX CSI (LC) |
|---|---|---|
| N- E | -198 / 0 | 0.04 (1) |
| O- D | -165 / 0 | 0.03 (1) |
| P- C | -167 / 0 | 0.03 (1) |
| Q- B | -122 / 0 | 0.02 (1) |
| M- F | -165 / 0 | 0.03 (1) |
| L- G | -167 / 0 | 0.03 (1) |
| K- H | -122 / 0 | 0.02 (1) |

**DESIGN CRITERIA**

SPECIFIED LOADS:

| | | | | | |
|---|---|---|---|---|---|
| TOP CH. | LL | = | 25.6 | PSF |
| | DL | = | 3.0 | PSF |
| BOT CH. | LL | = | 0.0 | PSF |
| | DL | = | 7.3 | PSF |
| TOTAL LOAD | | = | 35.9 | PSF |

**SPACING = 24.0 IN. C/C**

THIS TRUSS IS DESIGNED FOR RESIDENTIAL OR SMALL BUILDING REQUIREMENTS OF PART 9, NBCC 2015

THIS DESIGN COMPLIES WITH:
- PART 9 OF BCBC 2018 , NBC-2019AE
- PART 9 OF OBC 2012 (2019 AMENDMENT)
- CSA 086-14
- TPIC 2014

(55 % OF 31.3 P.S.F. G.S.L. PLUS 8.4 P.S.F. RAIN LOAD) EQUALS 25.6 P.S.F. SPECIFIED ROOF LIVE LOAD

CSI: TC=0.04/1.00 (D-E:1) , BC=0.02/1.00 (P-Q:4) , WB=0.04/1.00 (E-N:1) , SSI=0.06/1.00 (G-H:1)

DOL LUMBER=1.00 NAIL=1.00 LS BEND=1.10 COMP=1.10 SHEAR=1.10 TENS= 1.10

COMPANION LIVE LOAD FACTOR = 1.00

TRUSS PLATE MANUFACTURER IS NOT RESPONSIBLE FOR QUALITY CONTROL IN THE TRUSS MANUFACTURING PLANT .

NAIL VALUES

| PLATE | GRIP(DRY) (PSI) MAX | MIN | SHEAR (PLI) MAX | MIN | SECTION (PLI) MAX | MIN |
|---|---|---|---|---|---|---|
| MT20 | 650 | 371 | 1747 | 788 | 1987 | 1873 |

PLATE PLACEMENT TOL. = 0.250 inches

PLATE ROTATION TOL. = 5.0 Deg.

JSI GRIP= 0.20 (N) (INPUT = 0.90 )
JSI METAL= 0.09 (G) (INPUT = 1.00 )

LICENSED PROFESSIONAL ENGINEER
I.MATIJEVIC
100528832
PROVINCE OF ONTARIO
APRIL 24, 2023

**READ ALL NOTES ON THIS PAGE AND ON THE ENGINEERING NOTES: TRUSSES. THE NOTE PAGE IS AN INTEGRAL PART OF THIS DRAWING AS IT CONTAINS SPECIFICATIONS AND CRITERIA USED IN THE DESIGN OF THIS COMPONENET.**

CITY OF RICHMOND HILL
BUILDING DIVISION
05/24/2023
RECEIVED
Per: joshua.nabua

| JOB NAME | TRUSS NAME | QUANTITY | PLY | JOB DESC. | DRWG NO. |
|---|---|---|---|---|---|
| IM0423-071 | GE02 | 1 | 1 | TRUSS DESC. | |

Version 8.630 S Mar 22 2023 MiTek Industries, Inc. Fri Apr 21 14:13:34 2023 Page 1
ID:Oft3GgR1zRzAGpn6KZ87ljzYiN_-bSKmF_h31o6FFqdualOX511gAKs1YwH10bqz0TzOUMl

Scale = 1:40.5

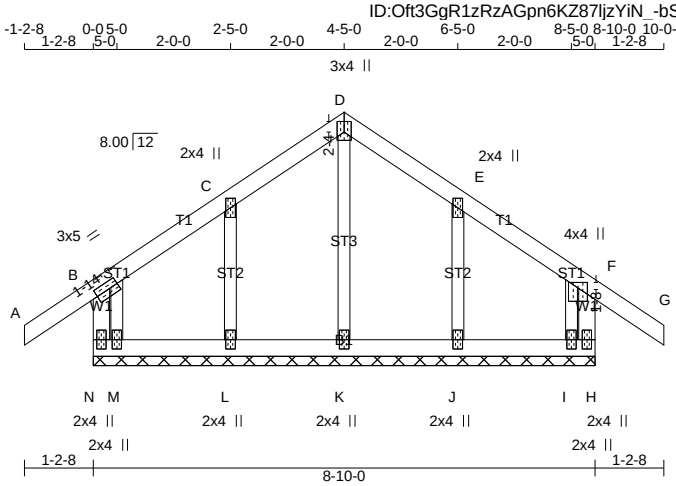


TOTAL WEIGHT = 37 lb

**LUMBER**
N. L. G. A. RULES

| CHORDS | SIZE | | LUMBER | DESCR. |
|---|---|---|---|---|
| N - B | 2x4 | DRY | No.2 | SPF |
| A - D | 2x4 | DRY | No.2 | SPF |
| D - G | 2x4 | DRY | No.2 | SPF |
| H - F | 2x4 | DRY | No.2 | SPF |
| N - H | 2x4 | DRY | No.2 | SPF |
| ALL WEBS | 2x3 | DRY | No.2 | SPF |
| ALL GABLE WEBS | 2x3 | DRY | No.2 | SPF |

DRY: SEASONED LUMBER.

GABLE STUDS SPACED AT 2-0-0 OC.

**PLATES (table is in inches)**

| JT | TYPE | PLATES | W | LEN | Y | X |
|---|---|---|---|---|---|---|
| B | TMVW-t | MT20 | 3.0 | 5.0 | 1.50 | 2.00 |
| C | TMW+w | MT20 | 2.0 | 4.0 | | |
| D | TTW+p | MT20 | 3.0 | 4.0 | 2.25 | 1.50 |
| E | TMW+w | MT20 | 2.0 | 4.0 | | |
| F | TMVW+p | MT20 | 4.0 | 4.0 | 1.50 | 2.00 |
| H | BMV1+p | MT20 | 2.0 | 4.0 | | |
| I, J, K, L, M | | | | | | |
| I | BMW1+w | MT20 | 2.0 | 4.0 | | |
| N | BMV1+p | MT20 | 2.0 | 4.0 | | |

**DIMENSIONS, SUPPORTS AND LOADINGS SPECIFIED BY FABRICATOR TO BE VERIFIED BY BUILDING DESIGNER**

**BEARINGS**

THIS TRUSS DESIGNED FOR CONTINUOUS BEARINGS.

THIS TRUSS REQUIRES RIGID SHEATHING ON EXPOSED FACE.

BEARING MATERIAL TO BE SPF NO.2 OR BETTER AT JOINT(S)

**BRACING**
TOP CHORD TO BE SHEATHED OR MAX. PURLIN SPACING = 6.25 FT.
MAX. UNBRACED BOTTOM CHORD LENGTH = 10.00 FT OR RIGID CEILING DIRECTLY APPLIED.

ALL PITCH BREAKS AND PERIMETER CORNER JOINTS MUST BE LATERALLY RESTRAINED.

**LOADING**
TOTAL LOAD CASES: (4)

CHORDS

| MEMB. FR-TO | MAX. FACTORED FORCE (LBS) | FACTORED VERT. LOAD (PLF) FROM | TO | LC1 | MAX CSI (LC) | MAX. UNBRAC LENGTH |
|---|---|---|---|---|---|---|
| N- B | -192 / 0 | 0.0 | 0.0 | 0.02 (1) | 7.81 | |
| A- B | 0 / 30 | -84.3 | -84.3 | 0.10 (1) | 10.00 | |
| B- C | -14 / 0 | -84.3 | -84.3 | 0.06 (1) | 6.25 | |
| C- D | -7 / 0 | -84.3 | -84.3 | 0.05 (1) | 10.00 | |
| D- E | -7 / 0 | -84.3 | -84.3 | 0.05 (1) | 10.00 | |
| E- F | -14 / 0 | -84.3 | -84.3 | 0.06 (1) | 6.25 | |
| F- G | 0 / 30 | -84.3 | -84.3 | 0.10 (1) | 10.00 | |
| H- F | -192 / 0 | 0.0 | 0.0 | 0.02 (1) | 7.81 | |
| N- M | 0 / 20 | -18.2 | -18.2 | 0.02 (1) | 10.00 | |
| M- L | 0 / 10 | -18.2 | -18.2 | 0.02 (4) | 10.00 | |
| L- K | 0 / 4 | -18.2 | -18.2 | 0.02 (4) | 10.00 | |
| K- J | 0 / 4 | -18.2 | -18.2 | 0.02 (4) | 10.00 | |
| J- I | 0 / 10 | -18.2 | -18.2 | 0.02 (4) | 10.00 | |
| I- H | 0 / 20 | -18.2 | -18.2 | 0.02 (1) | 10.00 | |

WEBS

| MEMB. FR-TO | MAX. FACTORED FORCE (LBS) | MAX CSI (LC) |
|---|---|---|
| K- D | -163 / 0 | 0.04 (1) |
| L- C | -182 / 0 | 0.03 (1) |
| M- B | -27 / 0 | 0.00 (1) |
| J- E | -182 / 0 | 0.03 (1) |
| I- F | -27 / 0 | 0.00 (1) |

**DESIGN CRITERIA**

SPECIFIED LOADS:

| | | | | | |
|---|---|---|---|---|---|
| TOP CH. | LL | = | 25.6 | PSF |
| | DL | = | 3.0 | PSF |
| BOT CH. | LL | = | 0.0 | PSF |
| | DL | = | 7.3 | PSF |
| TOTAL LOAD | | = | 35.9 | PSF |

**SPACING = 24.0 IN. C/C**

THIS TRUSS IS DESIGNED FOR RESIDENTIAL OR SMALL BUILDING REQUIREMENTS OF PART 9, NBCC 2015

THIS DESIGN COMPLIES WITH:
- PART 9 OF BCBC 2018 , NBC-2019AE
- PART 9 OF OBC 2012 (2019 AMENDMENT)
- CSA 086-14
- TPIC 2014

DESIGN ASSUMPTIONS
-OVERHANG NOT TO BE ALTERED OR CUT OFF.

(55 % OF 31.3 P.S.F. G.S.L. PLUS 8.4 P.S.F. RAIN LOAD) EQUALS 25.6 P.S.F. SPECIFIED ROOF LIVE LOAD

CSI: TC=0.10/1.00 (F-G:1) , BC=0.02/1.00 (H-I:1) , WB=0.04/1.00 (D-K:1) , SSI=0.07/1.00 (F-G:1)

DOL LUMBER=1.00 NAIL=1.00 LS BEND=1.10 COMP=1.10 SHEAR=1.10 TENS= 1.10

COMPANION LIVE LOAD FACTOR = 1.00

TRUSS PLATE MANUFACTURER IS NOT RESPONSIBLE FOR QUALITY CONTROL IN THE TRUSS MANUFACTURING PLANT .

NAIL VALUES

| PLATE | GRIP(DRY) (PSI) MAX | MIN | SHEAR (PLI) MAX | MIN | SECTION (PLI) MAX | MIN |
|---|---|---|---|---|---|---|
| MT20 | 650 | 371 | 1747 | 788 | 1987 | 1873 |

PLATE PLACEMENT TOL. = 0.250 inches

PLATE ROTATION TOL. = 0.5 Deg.

JSI GRIP= 0.18 (B) (INPUT = 0.90 )
JSI METAL= 0.09 (C) (INPUT = 1.00 )

LICENSED PROFESSIONAL ENGINEER
I.MATIJEVIC
100528832
PROVINCE OF ONTARIO
APRIL 24, 2023

**READ ALL NOTES ON THIS PAGE AND ON THE ENGINEERING NOTES: TRUSSES. THE NOTE PAGE IS AN INTEGRAL PART OF THIS DRAWING AS IT CONTAINS SPECIFICATIONS AND CRITERIA USED IN THE DESIGN OF THIS COMPONENET.**

CITY OF RICHMOND HILL
BUILDING DIVISION
05/24/2023
RECEIVED
Per: joshua.nabua

| JOB NAME | TRUSS NAME | QUANTITY | PLY | JOB DESC. | DRWG NO. |
|---|---|---|---|---|---|
| IM0423-071 | GE03 | 1 | 1 | TRUSS DESC. | |

Version 8.630 S Mar 22 2023 MiTek Industries, Inc. Fri Apr 21 14:13:35 2023 Page 1
ID:Oft3GgR1zRzAGpn6KZ87ljzYiN_-3fu8SKiio5E6tzC48SvmeFarqkCDHNoAEFZWYvzOUMk

Scale = 1:40.1

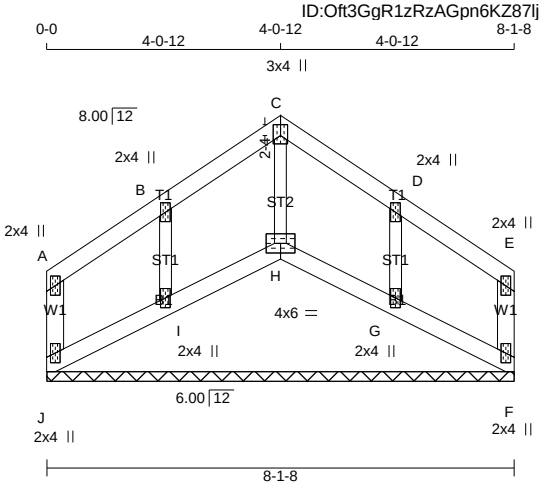


TOTAL WEIGHT = 29 lb

**LUMBER**
N. L. G. A. RULES

| CHORDS | SIZE | | LUMBER | DESCR. |
|---|---|---|---|---|
| J - A | 2x4 | DRY | No.2 | SPF |
| A - C | 2x4 | DRY | No.2 | SPF |
| C - E | 2x4 | DRY | No.2 | SPF |
| F - E | 2x4 | DRY | No.2 | SPF |
| J - H | 2x4 | DRY | No.2 | SPF |
| H - F | 2x4 | DRY | No.2 | SPF |
| ALL WEBS | 2x3 | DRY | No.2 | SPF |
| ALL GABLE WEBS | 2x3 | DRY | No.2 | SPF |

DRY: SEASONED LUMBER.

GABLE STUDS SPACED AT 2-0-0 OC.

**PLATES (table is in inches)**

| JT | TYPE | PLATES | W | LEN | Y | X |
|---|---|---|---|---|---|---|
| A | TMV+p | MT20 | 2.0 | 4.0 | | |
| B | TMW+w | MT20 | 2.0 | 4.0 | | |
| C | TTW+p | MT20 | 3.0 | 4.0 | 2.25 | 1.50 |
| D | TMW+w | MT20 | 2.0 | 4.0 | | |
| E | TMV+p | MT20 | 2.0 | 4.0 | | |
| F | BMV1+p | MT20 | 2.0 | 4.0 | | |
| G | BMW1+w | MT20 | 2.0 | 4.0 | | |
| H | BBW1-p | MT20 | 4.0 | 6.0 | | |
| I | BMW1+w | MT20 | 2.0 | 4.0 | | |
| J | BMV1+p | MT20 | 2.0 | 4.0 | | |

**DIMENSIONS, SUPPORTS AND LOADINGS SPECIFIED BY FABRICATOR TO BE VERIFIED BY BUILDING DESIGNER**

**BEARINGS**

THIS TRUSS DESIGNED FOR CONTINUOUS BEARINGS.

THIS TRUSS REQUIRES RIGID SHEATHING ON EXPOSED FACE.

BEARING MATERIAL TO BE SPF NO.2 OR BETTER AT JOINT(S)

**BRACING**

TOP CHORD TO BE SHEATHED OR MAX. PURLIN SPACING = 6.25 FT.
MAX. UNBRACED BOTTOM CHORD LENGTH = 10.00 FT OR RIGID CEILING DIRECTLY APPLIED.

ALL PITCH BREAKS AND PERIMETER CORNER JOINTS MUST BE LATERALLY RESTRAINED.

**LOADING**

TOTAL LOAD CASES: (4)

CHORDS

| MEMB. FR-TO | MAX. FACTORED FORCE (LBS) | FACTORED VERT. LOAD (PLF) FROM | TO | LC1 CSI (LC) | MAX UNBRAC LENGTH |
|---|---|---|---|---|---|
| J- A | -89 / 0 | 0.0 | 0.0 | 0.03 (1) | 7.81 |
| A- B | -18 / 0 | -84.3 | -84.3 | 0.04 (1) | 6.25 |
| B- C | -5 / 0 | -84.3 | -84.3 | 0.04 (1) | 10.00 |
| C- D | -6 / 0 | -84.3 | -84.3 | 0.04 (1) | 10.00 |
| D- E | -19 / 0 | -84.3 | -84.3 | 0.04 (1) | 6.25 |
| F- E | -90 / 0 | 0.0 | 0.0 | 0.03 (1) | 7.81 |
| J- I | 0 / 20 | -18.3 | -18.3 | 0.02 (4) | 10.00 |
| I- H | 0 / 4 | -18.2 | -18.2 | 0.02 (4) | 10.00 |
| H- G | 0 / 5 | -18.3 | -18.3 | 0.02 (4) | 10.00 |
| G- F | 0 / 20 | -18.3 | -18.3 | 0.02 (4) | 10.00 |

WEBS

| MEMB. FR-TO | MAX. FACTORED FORCE (LBS) | MAX CSI (LC) |
|---|---|---|
| H- C | -168 / 0 | 0.03 (1) |
| I- B | -169 / 0 | 0.03 (1) |
| G- D | -169 / 0 | 0.03 (1) |

**DESIGN CRITERIA**

SPECIFIED LOADS:

| | | | | | |
|---|---|---|---|---|---|
| TOP | CH. | LL | = | 25.6 | PSF |
| | | DL | = | 3.0 | PSF |
| BOT | CH. | LL | = | 0.0 | PSF |
| | | DL | = | 7.3 | PSF |
| TOTAL | LOAD | | = | 35.9 | PSF |

**SPACING = 24.0 IN. C/C**

THIS TRUSS IS DESIGNED FOR RESIDENTIAL OR SMALL BUILDING REQUIREMENTS OF PART 9, NBCC 2015

THIS DESIGN COMPLIES WITH:
- PART 9 OF BCBC 2018 , NBC-2019AE
- PART 9 OF OBC 2012 (2019 AMENDMENT)
- CSA 086-14
- TPIC 2014

(55 % OF 31.3 P.S.F. G.S.L. PLUS 8.4 P.S.F. RAIN LOAD) EQUALS 25.6 P.S.F. SPECIFIED ROOF LIVE LOAD

CSI: TC=0.04/1.00 (A-B:1) , BC=0.02/1.00 (F-G:4) , WB=0.03/1.00 (C-H:1) , SSI=0.06/1.00 (A-B:1)

DOL LUMBER=1.00 NAIL=1.00 LS BEND=1.10 COMP=1.10 SHEAR=1.10 TENS= 1.10

COMPANION LIVE LOAD FACTOR = 1.00

TRUSS PLATE MANUFACTURER IS NOT RESPONSIBLE FOR QUALITY CONTROL IN THE TRUSS MANUFACTURING PLANT .

NAIL VALUES

| PLATE | GRIP(DRY) (PSI) MAX | MIN | SHEAR (PLI) MAX | MIN | SECTION (PLI) MAX | MIN |
|---|---|---|---|---|---|---|
| MT20 | 650 | 371 | 1747 | 788 | 1987 | 1873 |

PLATE PLACEMENT TOL. = 0.250 inches

PLATE ROTATION TOL. = 5.0 Deg.

JSI GRIP= 0.18 (H) (INPUT = 0.90 )
JSI METAL= 0.09 (B) (INPUT = 1.00 )

LICENSED PROFESSIONAL ENGINEER
I.MATIJEVIC
100528832
PROVINCE OF ONTARIO
APRIL 24, 2023

**READ ALL NOTES ON THIS PAGE AND ON THE ENGINEERING NOTES: TRUSSES. THE NOTE PAGE IS AN INTEGRAL PART OF THIS DRAWING AS IT CONTAINS SPECIFICATIONS AND CRITERIA USED IN THE DESIGN OF THIS COMPONENET.**

CITY OF RICHMOND HILL
BUILDING DIVISION
05/24/2023
KOTT
RECEIVED
Per: joshua.nabua

| JOB NAME | TRUSS NAME | QUANTITY | PLY | JOB DESC. | DRWG NO. |
|---|---|---|---|---|---|
| IM0423-071 | GE04 | 1 | 1 | TRUSS DESC. | |

Version 8.630 S Mar 22 2023 MiTek Industries, Inc. Fri Apr 21 14:13:35 2023 Page 1
ID:Oft3GgR1zRzAGpn6KZ87ljzYiN_-3fu8SKiio5E6tzC48SvmeFarpkCFHNVAEFZWYvzOUMk

Scale = 1:52.9

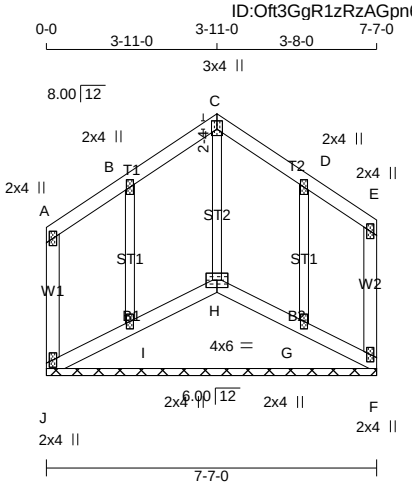


TOTAL WEIGHT = 36 lb

**LUMBER**
N. L. G. A. RULES

| CHORDS | SIZE | | LUMBER | DESCR. |
|---|---|---|---|---|
| J - A | 2x4 | DRY | No.2 | SPF |
| A - C | 2x4 | DRY | No.2 | SPF |
| C - E | 2x4 | DRY | No.2 | SPF |
| F - E | 2x4 | DRY | No.2 | SPF |
| J - H | 2x4 | DRY | No.2 | SPF |
| H - F | 2x4 | DRY | No.2 | SPF |
| ALL WEBS | 2x3 | DRY | No.2 | SPF |
| ALL GABLE WEBS | 2x3 | DRY | No.2 | SPF |

DRY: SEASONED LUMBER.

GABLE STUDS SPACED AT 2-0-0 OC.

**PLATES (table is in inches)**

| JT | TYPE | PLATES | W | LEN | Y | X |
|---|---|---|---|---|---|---|
| A | TMV+p | MT20 | 2.0 | 4.0 | | |
| B | TMW+w | MT20 | 2.0 | 4.0 | | |
| C | TTW+p | MT20 | 3.0 | 4.0 | 2.25 | 1.50 |
| D | TMW+w | MT20 | 2.0 | 4.0 | | |
| E | TMV+p | MT20 | 2.0 | 4.0 | | |
| F | BMV1+p | MT20 | 2.0 | 4.0 | | |
| G | BMW1+w | MT20 | 2.0 | 4.0 | | |
| H | BBW1-p | MT20 | 4.0 | 6.0 | | |
| I | BMW1+w | MT20 | 2.0 | 4.0 | | |
| J | BMV1+p | MT20 | 2.0 | 4.0 | | |

**DIMENSIONS, SUPPORTS AND LOADINGS SPECIFIED BY FABRICATOR TO BE VERIFIED BY BUILDING DESIGNER**

**BEARINGS**

THIS TRUSS DESIGNED FOR CONTINUOUS BEARINGS.

THIS TRUSS REQUIRES RIGID SHEATHING ON EXPOSED FACE.

BEARING MATERIAL TO BE SPF NO.2 OR BETTER AT JOINT(S)

**BRACING**

TOP CHORD TO BE SHEATHED OR MAX. PURLIN SPACING = 10.00 FT.
MAX. UNBRACED BOTTOM CHORD LENGTH = 10.00 FT OR RIGID CEILING DIRECTLY APPLIED.

ALL PITCH BREAKS AND PERIMETER CORNER JOINTS MUST BE LATERALLY RESTRAINED.

**LOADING**

TOTAL LOAD CASES: (4)

CHORDS

| MEMB. FR-TO | MAX. FORCE (LBS) | FACTORED VERT. LOAD (PLF) FROM | TO | LC1 CSI (LC) | MAX UNBRAC LENGTH |
|---|---|---|---|---|---|
| J- A | -71 / 0 | 0.0 | 0.0 | 0.02 (1) | 7.81 |
| A- B | -1 / 0 | -84.3 | -84.3 | 0.04 (1) | 10.00 |
| B- C | 0 / 3 | -84.3 | -84.3 | 0.04 (1) | 10.00 |
| C- D | 0 / 3 | -84.3 | -84.3 | 0.04 (1) | 10.00 |
| D- E | -2 / 0 | -84.3 | -84.3 | 0.03 (1) | 10.00 |
| F- E | -61 / 0 | 0.0 | 0.0 | 0.01 (1) | 7.81 |
| J- I | 0 / 6 | -18.2 | -18.2 | 0.02 (4) | 10.00 |
| I- H | -2 / 0 | -18.3 | -18.3 | 0.02 (4) | 10.00 |
| H- G | -1 / 0 | -18.3 | -18.3 | 0.01 (4) | 10.00 |
| G- F | 0 / 6 | -18.3 | -18.3 | 0.01 (4) | 10.00 |

WEBS

| MEMB. FR-TO | MAX. FORCE (LBS) | MAX CSI (LC) |
|---|---|---|
| H- C | -182 / 0 | 0.05 (1) |
| I- B | -169 / 0 | 0.04 (1) |
| G- D | -156 / 0 | 0.04 (1) |

[M]

**DESIGN CRITERIA**

SPECIFIED LOADS:

| | | | | | |
|---|---|---|---|---|---|
| TOP CH. | LL | = | 25.6 | PSF |
| | DL | = | 3.0 | PSF |
| BOT CH. | LL | = | 0.0 | PSF |
| | DL | = | 7.3 | PSF |
| TOTAL LOAD | | = | 35.9 | PSF |

**SPACING = 24.0 IN. C/C**

THIS TRUSS IS DESIGNED FOR RESIDENTIAL OR SMALL BUILDING REQUIREMENTS OF PART 9, NBCC 2015

THIS DESIGN COMPLIES WITH:
- PART 9 OF BCBC 2018 , NBC-2019AE
- PART 9 OF OBC 2012 (2019 AMENDMENT)
- CSA 086-14
- TPIC 2014

(55 % OF 31.3 P.S.F. G.S.L. PLUS 8.4 P.S.F. RAIN LOAD) EQUALS 25.6 P.S.F. SPECIFIED ROOF LIVE LOAD

CSI: TC=0.04/1.00 (C-D:1) , BC=0.02/1.00 (I-J:4) , WB=0.05/1.00 (C-H:1) , SSI=0.06/1.00 (C-D:1)

DOL LUMBER=1.00 NAIL=1.00 LS BEND=1.10 COMP=1.10 SHEAR=1.10 TENS= 1.10

COMPANION LIVE LOAD FACTOR = 1.00

TRUSS PLATE MANUFACTURER IS NOT RESPONSIBLE FOR QUALITY CONTROL IN THE TRUSS MANUFACTURING PLANT .

NAIL VALUES

| PLATE | GRIP(DRY) (PSI) MAX | MIN | SHEAR (PLI) MAX | MIN | SECTION (PLI) MAX | MIN |
|---|---|---|---|---|---|---|
| MT20 | 650 | 371 | 1747 | 788 | 1987 | 1873 |

PLATE PLACEMENT TOL. = 0.250 inches

PLATE ROTATION TOL. = 5.0 Deg.

JSI GRIP= 0.19 (H) (INPUT = 0.90 )
JSI METAL= 0.09 (B) (INPUT = 1.00 )

LICENSED PROFESSIONAL ENGINEER
I.MATIJEVIC
100528832
PROVINCE OF ONTARIO
APRIL 24, 2023

**READ ALL NOTES ON THIS PAGE AND ON THE ENGINEERING NOTES: TRUSSES. THE NOTE PAGE IS AN INTEGRAL PART OF THIS DRAWING AS IT CONTAINS SPECIFICATIONS AND CRITERIA USED IN THE DESIGN OF THIS COMPONENET.**

CITY OF RICHMOND HILL
BUILDING DIVISION
05/24/2023
RECEIVED
Per: joshua.nabua

| JOB NAME | TRUSS NAME | QUANTITY | PLY | JOB DESC. | DRWG NO. |
|---|---|---|---|---|---|
| IM0423-071 | J01A | 7 | 1 | TRUSS DESC. | |

Version 8.630 S Mar 22 2023 MiTek Industries, Inc. Fri Apr 21 14:13:36 2023 Page 1
ID:Oft3GgR1zRzAGpn6KZ87ljzYiN_-XrSWgfjKZPMzV7nHi9Q?AS7v18Xs0qSKTvJ45MzOUMj

Scale = 1:40.5

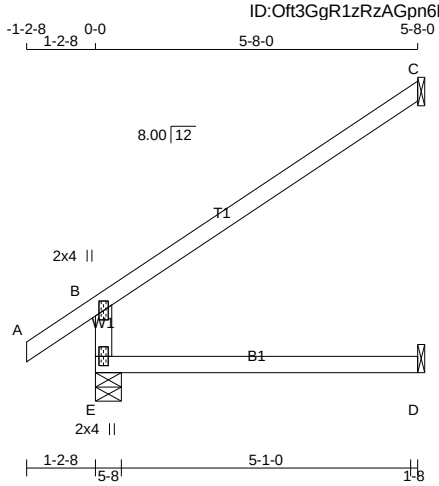


TOTAL WEIGHT = 7 X 17 = 120 lb

[M]

**LUMBER**
N. L. G. A. RULES

| CHORDS | SIZE | | LUMBER | DESCR. |
|---|---|---|---|---|
| E - B | 2x4 | DRY | No.2 | SPF |
| A - C | 2x4 | DRY | No.2 | SPF |
| E - D | 2x4 | DRY | No.2 | SPF |

DRY: SEASONED LUMBER.

**PLATES (table is in inches)**

| JT | TYPE | PLATES | W | LEN | Y | X |
|---|---|---|---|---|---|---|
| B | TMV+p | MT20 | 2.0 | 4.0 | | |
| E | BMV1+p | MT20 | 2.0 | 4.0 | | |

**DIMENSIONS, SUPPORTS AND LOADINGS SPECIFIED BY FABRICATOR TO BE VERIFIED BY BUILDING DESIGNER**

**BEARINGS**

| JT | FACTORED GROSS REACTION VERT | HORZ | MAXIMUM FACTORED GROSS REACTION DOWN | HORZ | UPLIFT | INPUT BRG IN-SX | REQRD BRG IN-SX |
|---|---|---|---|---|---|---|---|
| E | 467 | 0 | 467 | 0 | 0 | 5-8 | 1-8 |
| C | 179 | 0 | 179 | 0 | 0 | 1-8 | 1-8 |
| D | 43 | 0 | 49 | 0 | 0 | 1-8 | 1-8 |

SEE MITEK STANDARD DETAIL MSD2015-H FOR CONNECTION TO JOINT(S) C , D

**UNFACTORED REACTIONS**

| JT | 1ST LCASE COMBINED | MAX./MIN. COMPONENT REACTIONS SNOW | LIVE | PERM.LIVE | WIND | DEAD | SOIL |
|---|---|---|---|---|---|---|---|
| E | 324 | 247 / 0 | 0 / 0 | 0 / 0 | 0 / 0 | 77 / 0 | 0 / 0 |
| C | 122 | 109 / 0 | 0 / 0 | 0 / 0 | 0 / 0 | 13 / 0 | 0 / 0 |
| D | 35 | 0 / 0 | 0 / 0 | 0 / 0 | 0 / 0 | 35 / 0 | 0 / 0 |

BEARING MATERIAL TO BE SPF NO.2 OR BETTER AT JOINT(S) E

**BRACING**
TOP CHORD TO BE SHEATHED OR MAX. PURLIN SPACING = 6.25 FT.
MAX. UNBRACED BOTTOM CHORD LENGTH = 10.00 FT OR RIGID CEILING DIRECTLY APPLIED.

ALL PITCH BREAKS AND PERIMETER CORNER JOINTS MUST BE LATERALLY RESTRAINED.

**LOADING**
TOTAL LOAD CASES: (4)

CHORDS

| MEMB. FR-TO | MAX. FACTORED FORCE (LBS) | FACTORED VERT. LOAD (PLF) FROM | TO | LC1 MAX CSI (LC) | MAX. UNBRAC LENGTH |
|---|---|---|---|---|---|
| E- B | -407 / 0 | 0.0 | 0.0 | 0.11 (4) | 7.81 |
| A- B | 0 / 30 | -84.3 | -84.3 | 0.10 (1) | 10.00 |
| B- C | -33 / 0 | -84.3 | -84.3 | 0.46 (1) | 6.25 |
| E- D | 0 / 0 | -18.2 | -18.2 | 0.12 (4) | 10.00 |

WEBS

| MEMB. FR-TO | MAX. FACTORED FORCE (LBS) | MAX CSI (LC) |
|---|---|---|

**DESIGN CRITERIA**

SPECIFIED LOADS:

| | | | | |
|---|---|---|---|---|
| TOP CH. | LL | = | 25.6 | PSF |
| | DL | = | 3.0 | PSF |
| BOT CH. | LL | = | 0.0 | PSF |
| | DL | = | 7.3 | PSF |
| TOTAL LOAD | | = | 35.9 | PSF |

**SPACING = 24.0 IN. C/C**

THIS TRUSS IS DESIGNED FOR RESIDENTIAL OR SMALL BUILDING REQUIREMENTS OF PART 9, NBCC 2015

THIS DESIGN COMPLIES WITH:
- PART 9 OF BCBC 2018 , NBC-2019AE
- PART 9 OF OBC 2012 (2019 AMENDMENT)
- CSA 086-14
- TPIC 2014

DESIGN ASSUMPTIONS
-OVERHANG NOT TO BE ALTERED OR CUT OFF.

(55 % OF 31.3 P.S.F. G.S.L. PLUS 8.4 P.S.F. RAIN LOAD) EQUALS 25.6 P.S.F. SPECIFIED ROOF LIVE LOAD

ALLOWABLE DEFL.(LL)= L/360 (0.19")
CALCULATED VERT. DEFL.(LL) = L/ 999 (0.00")
ALLOWABLE DEFL.(TL)= L/360 (0.19")
CALCULATED VERT. DEFL.(TL) = L/ 999 (0.03")

CSI: TC=0.46/1.00 (B-C:1) , BC=0.12/1.00 (D-E:4) , WB=0.00/1.00 (n/a:0) , SSI=0.19/1.00 (B-C:1)

DOL LUMBER=1.00 NAIL=1.00 LS BEND=1.10 COMP=1.10 SHEAR=1.10 TENS= 1.10

COMPANION LIVE LOAD FACTOR = 1.00

TRUSS PLATE MANUFACTURER IS NOT RESPONSIBLE FOR QUALITY CONTROL IN THE TRUSS MANUFACTURING PLANT .

NAIL VALUES

| PLATE | GRIP(DRY) (PSI) MAX | MIN | SHEAR (PLI) MAX | MIN | SECTION (PLI) MAX | MIN |
|---|---|---|---|---|---|---|
| MT20 | 650 | 371 | 1747 | 788 | 1987 | 1873 |

PLATE PLACEMENT TOL. = 0.250 inches

PLATE ROTATION TOL. = 0.5 Deg.

JSI GRIP= 0.25 (B) (INPUT = 0.90 )
JSI METAL= 0.21 (B) (INPUT = 1.00 )

LICENSED PROFESSIONAL ENGINEER
I.MATIJEVIC
100528832
PROVINCE OF ONTARIO
APRIL 24, 2023

**READ ALL NOTES ON THIS PAGE AND ON THE ENGINEERING NOTES: TRUSSES. THE NOTE PAGE IS AN INTEGRAL PART OF THIS DRAWING AS IT CONTAINS SPECIFICATIONS AND CRITERIA USED IN THE DESIGN OF THIS COMPONENET.**

CITY OF RICHMOND HILL
BUILDING DIVISION
05/24/2023
KOTT
RECEIVED
Per: joshua.nabua

| JOB NAME | TRUSS NAME | QUANTITY | PLY | JOB DESC. | DRWG NO. |
|---|---|---|---|---|---|
| IM0423-071 | J01B | 11 | 1 | TRUSS DESC. | |

Version 8.630 S Mar 22 2023 MiTek Industries, Inc. Fri Apr 21 14:13:37 2023 Page 1
ID:Oft3GgR1zRzAGpn6KZ87ljzYiN_-?1?ut?jyKjUq6HMTFtxEjgf5yYrslHiTiZ2ddozOUMi

Scale = 1:40.5

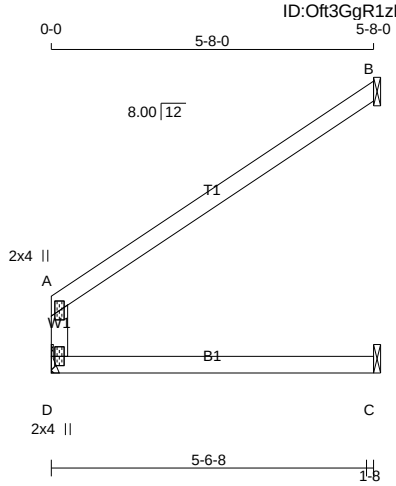


TOTAL WEIGHT = 11 X 15 = 170 lb

**LUMBER**
N. L. G. A. RULES

| CHORDS | SIZE | | LUMBER | DESCR. |
|---|---|---|---|---|
| D - A | 2x4 | DRY | No.2 | SPF |
| A - B | 2x4 | DRY | No.2 | SPF |
| D - C | 2x4 | DRY | No.2 | SPF |

DRY: SEASONED LUMBER.

**PLATES (table is in inches)**

| JT | TYPE | PLATES | W | LEN | Y | X |
|---|---|---|---|---|---|---|
| A | TMV+p | MT20 | 2.0 | 4.0 | | |
| D | BMV1+p | MT20 | 2.0 | 4.0 | | |

**DIMENSIONS, SUPPORTS AND LOADINGS SPECIFIED BY FABRICATOR TO BE VERIFIED BY BUILDING DESIGNER**

**BEARINGS**

| JT | FACTORED GROSS REACTION VERT | HORZ | MAXIMUM FACTORED GROSS REACTION DOWN | HORZ | UPLIFT | INPUT BRG IN-SX | REQRD BRG IN-SX |
|---|---|---|---|---|---|---|---|
| D | 290 | 0 | 290 | 0 | 0 | MECHANICAL | |
| B | 217 | 0 | 217 | 0 | 0 | 1-8 | 1-8 |
| C | 73 | 0 | 73 | 0 | 0 | 1-8 | 1-8 |

A SUITABLE HANGER/MECHANICAL CONNECTION IS REQUIRED AT JOINT D. MINIMUM BEARING LENGTH AT JOINT D = 1-8.

SEE MITEK STANDARD DETAIL MSD2015-H FOR CONNECTION TO JOINT(S) B , C

**UNFACTORED REACTIONS**

| JT | 1ST LCASE COMBINED | MAX./MIN. COMPONENT REACTIONS SNOW | LIVE | PERM.LIVE | WIND | DEAD | SOIL |
|---|---|---|---|---|---|---|---|
| D | 203 | 145 / 0 | 0 / 0 | 0 / 0 | 0 / 0 | 58 / 0 | 0 / 0 |
| B | 148 | 129 / 0 | 0 / 0 | 0 / 0 | 0 / 0 | 19 / 0 | 0 / 0 |
| C | 55 | 16 / 0 | 0 / 0 | 0 / 0 | 0 / 0 | 39 / 0 | 0 / 0 |

**BRACING**
TOP CHORD TO BE SHEATHED OR MAX. PURLIN SPACING = 6.25 FT.
MAX. UNBRACED BOTTOM CHORD LENGTH = 10.00 FT OR RIGID CEILING DIRECTLY APPLIED.

ALL PITCH BREAKS AND PERIMETER CORNER JOINTS MUST BE LATERALLY RESTRAINED.

**LOADING**
TOTAL LOAD CASES: (4)

| CHORDS MEMB. FR-TO | MAX. FACTORED FORCE (LBS) | FACTORED VERT. LOAD LC1 (PLF) FROM | TO | MAX CSI (LC) | WEBS MAX. UNBRAC LENGTH | MEMB. FR-TO | MAX. FACTORED FORCE (LBS) | MAX CSI (LC) |
|---|---|---|---|---|---|---|---|---|
| D- A | -260 / 0 | 0.0 | 0.0 | 0.14 (1) | 7.81 | | | |
| A- B | -12 / 1 | -84.3 | -84.3 | 0.39 (1) | 6.25 | | | |
| D- C | 0 / 0 | -18.2 | -18.2 | 0.20 (1) | 10.00 | | | |

**DESIGN CRITERIA**

SPECIFIED LOADS:

| | | | | | |
|---|---|---|---|---|---|
| TOP | CH. | LL | = | 25.6 | PSF |
| | | DL | = | 3.0 | PSF |
| BOT | CH. | LL | = | 0.0 | PSF |
| | | DL | = | 7.3 | PSF |
| TOTAL | LOAD | | = | 35.9 | PSF |

**SPACING = 24.0 IN. C/C**

THIS TRUSS IS DESIGNED FOR RESIDENTIAL OR SMALL BUILDING REQUIREMENTS OF PART 9, NBCC 2015

THIS DESIGN COMPLIES WITH:
- PART 9 OF BCBC 2018 , NBC-2019AE
- PART 9 OF OBC 2012 (2019 AMENDMENT)
- CSA 086-14
- TPIC 2014

(55 % OF 31.3 P.S.F. G.S.L. PLUS 8.4 P.S.F. RAIN LOAD) EQUALS 25.6 P.S.F. SPECIFIED ROOF LIVE LOAD

ALLOWABLE DEFL.(LL)= L/360 (0.19")
CALCULATED VERT. DEFL.(LL) = L/ 999 (0.04")
ALLOWABLE DEFL.(TL)= L/360 (0.19")
CALCULATED VERT. DEFL.(TL) = L/ 696 (0.10")

CSI: TC=0.39/1.00 (A-B:1) , BC=0.20/1.00 (C-D:1) , WB=0.00/1.00 (n/a:0) , SSI=0.17/1.00 (A-B:1)

DOL LUMBER=1.00 NAIL=1.00 LS BEND=1.10 COMP=1.10 SHEAR=1.10 TENS= 1.10

COMPANION LIVE LOAD FACTOR = 1.00

TRUSS PLATE MANUFACTURER IS NOT RESPONSIBLE FOR QUALITY CONTROL IN THE TRUSS MANUFACTURING PLANT .

NAIL VALUES

| PLATE | GRIP(DRY) (PSI) MAX | MIN | SHEAR (PLI) MAX | MIN | SECTION (PLI) MAX | MIN |
|---|---|---|---|---|---|---|
| MT20 | 650 | 371 | 1747 | 788 | 1987 | 1873 |

PLATE PLACEMENT TOL. = 0.250 inches

PLATE ROTATION TOL. = 5.0 Deg.

JSI GRIP= 0.16 (A) (INPUT = 0.90 )
JSI METAL= 0.13 (A) (INPUT = 1.00 )

LICENSED PROFESSIONAL ENGINEER
I.MATIJEVIC
100528832
PROVINCE OF ONTARIO
APRIL 24, 2023

**READ ALL NOTES ON THIS PAGE AND ON THE ENGINEERING NOTES: TRUSSES. THE NOTE PAGE IS AN INTEGRAL PART OF THIS DRAWING AS IT CONTAINS SPECIFICATIONS AND CRITERIA USED IN THE DESIGN OF THIS COMPONENET.**

CITY OF RICHMOND HILL
BUILDING DIVISION
05/24/2023
RECEIVED
Per: joshua.nabua

| JOB NAME | TRUSS NAME | QUANTITY | PLY | JOB DESC. | DRWG NO. |
|---|---|---|---|---|---|
| IM0423-071 | J02 | 2 | 1 | TRUSS DESC. | |

Version 8.630 S Mar 22 2023 MiTek Industries, Inc. Fri Apr 21 14:13:37 2023 Page 1
ID:Oft3GgR1zRzAGpn6KZ87ljzYiN_-?1?ut?jyKjUq6HMTFtxEjgf98Yt5lHiTiZ2ddozOUMi

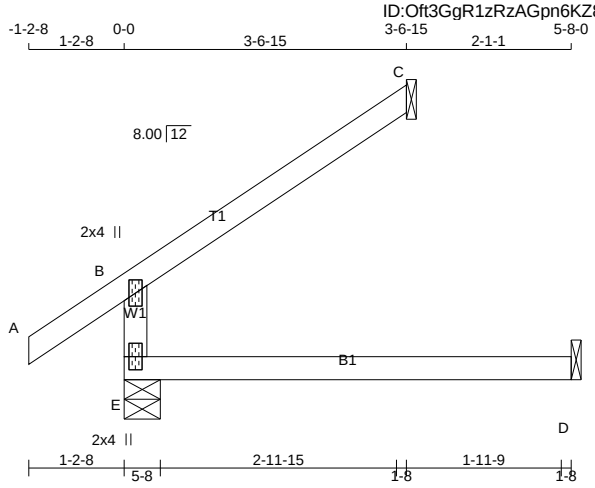


TOTAL WEIGHT = 2 X 14 = 29 lb
[M]

**LUMBER**
N. L. G. A. RULES

| CHORDS | SIZE | | LUMBER | DESCR. |
|---|---|---|---|---|
| E - B | 2x4 | DRY | No.2 | SPF |
| A - C | 2x4 | DRY | No.2 | SPF |
| E - D | 2x4 | DRY | No.2 | SPF |

DRY: SEASONED LUMBER.

**PLATES (table is in inches)**

| JT | TYPE | PLATES | W | LEN | Y | X |
|---|---|---|---|---|---|---|
| B | TMV+p | MT20 | 2.0 | 4.0 | | |
| E | BMV1+p | MT20 | 2.0 | 4.0 | | |

**DIMENSIONS, SUPPORTS AND LOADINGS SPECIFIED BY FABRICATOR TO BE VERIFIED BY BUILDING DESIGNER**

**BEARINGS**

| JT | FACTORED GROSS REACTION VERT | HORZ | MAXIMUM FACTORED GROSS REACTION DOWN | HORZ | UPLIFT | INPUT BRG IN-SX | REQRD BRG IN-SX |
|---|---|---|---|---|---|---|---|
| E | 357 | 0 | 357 | 0 | 0 | 5-8 | 1-8 |
| C | 113 | 0 | 113 | 0 | 0 | 1-8 | 1-8 |
| D | 43 | 0 | 49 | 0 | 0 | 1-8 | 1-8 |

SEE MITEK STANDARD DETAIL MSD2015-H FOR CONNECTION TO JOINT(S) C , D

**UNFACTORED REACTIONS**

| JT | 1ST LCASE COMBINED | MAX./MIN. COMPONENT REACTIONS SNOW | LIVE | PERM.LIVE | WIND | DEAD | SOIL |
|---|---|---|---|---|---|---|---|
| E | 250 | 180 / 0 | 0 / 0 | 0 / 0 | 0 / 0 | 69 / 0 | 0 / 0 |
| C | 77 | 69 / 0 | 0 / 0 | 0 / 0 | 0 / 0 | 8 / 0 | 0 / 0 |
| D | 35 | 0 / 0 | 0 / 0 | 0 / 0 | 0 / 0 | 35 / 0 | 0 / 0 |

BEARING MATERIAL TO BE SPF NO.2 OR BETTER AT JOINT(S) E, C

**BRACING**
TOP CHORD TO BE SHEATHED OR MAX. PURLIN SPACING = 6.25 FT.
MAX. UNBRACED BOTTOM CHORD LENGTH = 10.00 FT OR RIGID CEILING DIRECTLY APPLIED.

ALL PITCH BREAKS AND PERIMETER CORNER JOINTS MUST BE LATERALLY RESTRAINED.

**LOADING**
TOTAL LOAD CASES: (4)

| CHORDS MEMB. FR-TO | MAX. FACTORED FORCE (LBS) | FACTORED VERT. LOAD (PLF) FROM | TO | LC1 MAX CSI (LC) | MAX. UNBRAC LENGTH FR-TO |
|---|---|---|---|---|---|
| E- B | -297 / 0 | 0.0 | 0.0 | 0.11 (4) | 7.81 |
| A- B | 0 / 30 | -84.3 | -84.3 | 0.10 (1) | 10.00 |
| B- C | -21 / 0 | -84.3 | -84.3 | 0.18 (1) | 6.25 |
| E- D | 0 / 0 | -18.2 | -18.2 | 0.12 (4) | 10.00 |

| WEBS MEMB. FR-TO | MAX. FACTORED FORCE (LBS) | MAX CSI (LC) |
|---|---|---|

**DESIGN CRITERIA**

SPECIFIED LOADS:

| | | | | |
|---|---|---|---|---|
| TOP CH. | LL | = | 25.6 | PSF |
| | DL | = | 3.0 | PSF |
| BOT CH. | LL | = | 0.0 | PSF |
| | DL | = | 7.3 | PSF |
| TOTAL LOAD | | = | 35.9 | PSF |

**SPACING = 24.0 IN. C/C**

THIS TRUSS IS DESIGNED FOR RESIDENTIAL OR SMALL BUILDING REQUIREMENTS OF PART 9, NBCC 2015

THIS DESIGN COMPLIES WITH:
- PART 9 OF BCBC 2018 , NBC-2019AE
- PART 9 OF OBC 2012 (2019 AMENDMENT)
- CSA 086-14
- TPIC 2014

DESIGN ASSUMPTIONS
-OVERHANG NOT TO BE ALTERED OR CUT OFF.

(55 % OF 31.3 P.S.F. G.S.L. PLUS 8.4 P.S.F. RAIN LOAD) EQUALS 25.6 P.S.F. SPECIFIED ROOF LIVE LOAD

ALLOWABLE DEFL.(LL)= L/360 (0.19")
CALCULATED VERT. DEFL.(LL) = L/ 999 (0.00")
ALLOWABLE DEFL.(TL)= L/360 (0.19")
CALCULATED VERT. DEFL.(TL) = L/ 999 (0.03")

CSI: TC=0.18/1.00 (B-C:1) , BC=0.12/1.00 (D-E:4) , WB=0.00/1.00 (n/a:0) , SSI=0.12/1.00 (B-C:1)

DOL LUMBER=1.00 NAIL=1.00 LS BEND=1.10 COMP=1.10 SHEAR=1.10 TENS= 1.10

COMPANION LIVE LOAD FACTOR = 1.00

TRUSS PLATE MANUFACTURER IS NOT RESPONSIBLE FOR QUALITY CONTROL IN THE TRUSS MANUFACTURING PLANT .

NAIL VALUES

| PLATE | GRIP(DRY) (PSI) MAX | MIN | SHEAR (PLI) MAX | MIN | SECTION (PLI) MAX | MIN |
|---|---|---|---|---|---|---|
| MT20 | 650 | 371 | 1747 | 788 | 1987 | 1873 |

PLATE PLACEMENT TOL. = 0.250 inches

PLATE ROTATION TOL. = 5.0 Deg.

JSI GRIP= 0.18 (B) (INPUT = 0.90 )
JSI METAL= 0.15 (B) (INPUT = 1.00 )

LICENSED PROFESSIONAL ENGINEER
I.MATIJEVIC
100528832
PROVINCE OF ONTARIO
APRIL 24, 2023

**READ ALL NOTES ON THIS PAGE AND ON THE ENGINEERING NOTES: TRUSSES. THE NOTE PAGE IS AN INTEGRAL PART OF THIS DRAWING AS IT CONTAINS SPECIFICATIONS AND CRITERIA USED IN THE DESIGN OF THIS COMPONENET.**

CITY OF RICHMOND HILL
BUILDING DIVISION
05/24/2023
KOTT
RECEIVED
Per: joshua.nabua

| JOB NAME | TRUSS NAME | QUANTITY | PLY | JOB DESC. | DRWG NO. |
|---|---|---|---|---|---|
| IM0423-071 | J03 | 2 | 1 | TRUSS DESC. | |

Version 8.630 S Mar 22 2023 MiTek Industries, Inc. Fri Apr 21 14:13:38 2023 Page 1
ID:Oft3GgR1zRzAGpn6KZ87ljzYiN_-TEZH4Lka50chkRxfpaSTGtCLAyCCUkydwDoA9EzOUMh

Scale = 1:20.3

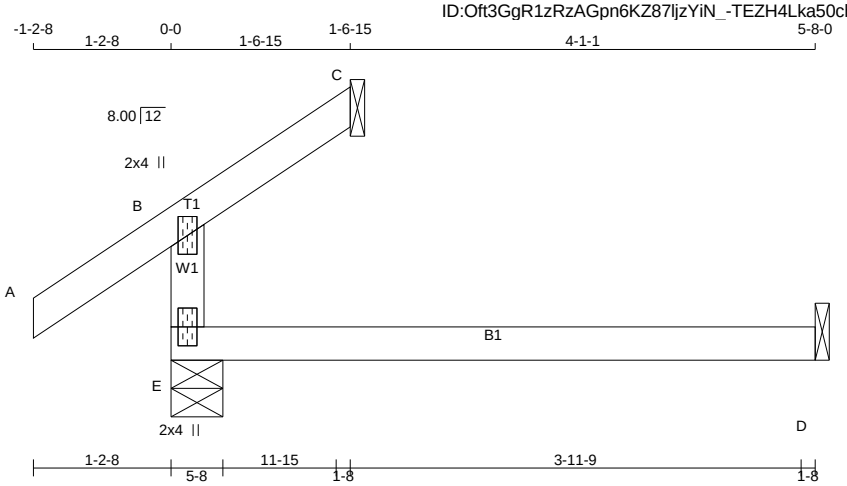


TOTAL WEIGHT = 2 X 12 = 23 lb [M]

**LUMBER**
N. L. G. A. RULES

| CHORDS | SIZE | | LUMBER | DESCR. |
|---|---|---|---|---|
| E - B | 2x4 | DRY | No.2 | SPF |
| A - C | 2x4 | DRY | No.2 | SPF |
| E - D | 2x4 | DRY | No.2 | SPF |

DRY: SEASONED LUMBER.

**PLATES (table is in inches)**

| JT | TYPE | PLATES | W | LEN | Y | X |
|---|---|---|---|---|---|---|
| B | TMV+p | MT20 | 2.0 | 4.0 | | |
| E | BMV1+p | MT20 | 2.0 | 4.0 | | |

**DIMENSIONS, SUPPORTS AND LOADINGS SPECIFIED BY FABRICATOR TO BE VERIFIED BY BUILDING DESIGNER**

**BEARINGS**

| JT | FACTORED GROSS REACTION VERT | HORZ | MAXIMUM FACTORED GROSS REACTION DOWN | HORZ | UPLIFT | INPUT BRG IN-SX | REQRD BRG IN-SX |
|---|---|---|---|---|---|---|---|
| E | 250 | 0 | 250 | 0 | 0 | 5-8 | 1-8 |
| C | 52 | 0 | 52 | 0 | 0 | 1-8 | 1-8 |
| D | 43 | 0 | 50 | 0 | 0 | 1-8 | 1-8 |

SEE MITEK STANDARD DETAIL MSD2015-H FOR CONNECTION TO JOINT(S) C , D

**UNFACTORED REACTIONS**

| JT | 1ST LCASE COMBINED | MAX./MIN. COMPONENT REACTIONS SNOW | LIVE | PERM.LIVE | WIND | DEAD | SOIL |
|---|---|---|---|---|---|---|---|
| E | 174 | 131 / 0 | 0 / 0 | 0 / 0 | 0 / 0 | 42 / 0 | 0 / 0 |
| C | 38 | 17 / 0 | 0 / 0 | 0 / 0 | 0 / 0 | 22 / 0 | 0 / 0 |
| D | 35 | 0 / -1 | 0 / 0 | 0 / 0 | 0 / 0 | 36 / 0 | 0 / 0 |

BEARING MATERIAL TO BE SPF NO.2 OR BETTER AT JOINT(S) E, C

**BRACING**
TOP CHORD TO BE SHEATHED OR MAX. PURLIN SPACING = 10.00 FT.
MAX. UNBRACED BOTTOM CHORD LENGTH = 10.00 FT OR RIGID CEILING DIRECTLY APPLIED.

ALL PITCH BREAKS AND PERIMETER CORNER JOINTS MUST BE LATERALLY RESTRAINED.

**LOADING**
TOTAL LOAD CASES: (4)

| CHORDS MEMB. FR-TO | MAX. FACTORED FORCE (LBS) | FACTORED VERT. LOAD (PLF) FROM | TO | LC1 MAX CSI (LC) | MAX. UNBRAC LENGTH FR-TO |
|---|---|---|---|---|---|
| E- B | -190 / 6 | 0.0 | 0.0 | 0.09 (4) | 7.81 |
| A- B | 0 / 30 | -84.3 | -84.3 | 0.10 (1) | 10.00 |
| B- C | -8 / 13 | -84.3 | -84.3 | 0.08 (4) | 10.00 |
| E- D | 0 / 0 | -18.2 | -18.2 | 0.13 (4) | 10.00 |

| WEBS MEMB. | MAX. FACTORED FORCE (LBS) | MAX CSI (LC) |
|---|---|---|

**DESIGN CRITERIA**

SPECIFIED LOADS:

| | | | | |
|---|---|---|---|---|
| TOP CH. | LL | = | 25.6 | PSF |
| | DL | = | 3.0 | PSF |
| BOT CH. | LL | = | 0.0 | PSF |
| | DL | = | 7.3 | PSF |
| TOTAL LOAD | | = | 35.9 | PSF |

**SPACING = 24.0 IN. C/C**

THIS TRUSS IS DESIGNED FOR RESIDENTIAL OR SMALL BUILDING REQUIREMENTS OF PART 9, NBCC 2015

THIS DESIGN COMPLIES WITH:
- PART 9 OF BCBC 2018 , NBC-2019AE
- PART 9 OF OBC 2012 (2019 AMENDMENT)
- CSA 086-14
- TPIC 2014

DESIGN ASSUMPTIONS
-OVERHANG NOT TO BE ALTERED OR CUT OFF.

(55 % OF 31.3 P.S.F. G.S.L. PLUS 8.4 P.S.F. RAIN LOAD) EQUALS 25.6 P.S.F. SPECIFIED ROOF LIVE LOAD

ALLOWABLE DEFL.(LL)= L/360 (0.19")
CALCULATED VERT. DEFL.(LL) = L/ 999 (0.00")
ALLOWABLE DEFL.(TL)= L/360 (0.19")
CALCULATED VERT. DEFL.(TL) = L/ 999 (0.03")

CSI: TC=0.10/1.00 (A-B:1) , BC=0.13/1.00 (D-E:4) , WB=0.00/1.00 (n/a:0) , SSI=0.08/1.00 (D-E:4)

DOL LUMBER=1.00 NAIL=1.00 LS BEND=1.10 COMP=1.10 SHEAR=1.10 TENS= 1.10

COMPANION LIVE LOAD FACTOR = 1.00

TRUSS PLATE MANUFACTURER IS NOT RESPONSIBLE FOR QUALITY CONTROL IN THE TRUSS MANUFACTURING PLANT .

NAIL VALUES

| PLATE | GRIP(DRY) (PSI) MAX | MIN | SHEAR (PLI) MAX | MIN | SECTION (PLI) MAX | MIN |
|---|---|---|---|---|---|---|
| MT20 | 650 | 371 | 1747 | 788 | 1987 | 1873 |

PLATE PLACEMENT TOL. = 0.250 inches

PLATE ROTATION TOL. = 5.0 Deg.

JSI GRIP= 0.12 (B) (INPUT = 0.90 )
JSI METAL= 0.10 (B) (INPUT = 1.00 )

LICENSED PROFESSIONAL ENGINEER
I.MATIJEVIC
100528832
PROVINCE OF ONTARIO
APRIL 24, 2023

**READ ALL NOTES ON THIS PAGE AND ON THE ENGINEERING NOTES: TRUSSES. THE NOTE PAGE IS AN INTEGRAL PART OF THIS DRAWING AS IT CONTAINS SPECIFICATIONS AND CRITERIA USED IN THE DESIGN OF THIS COMPONENET.**

CITY OF RICHMOND HILL
BUILDING DIVISION
05/24/2023
RECEIVED
Per: joshua.nabua

| JOB NAME | TRUSS NAME | QUANTITY | PLY | JOB DESC. | DRWG NO. |
|---|---|---|---|---|---|
| IM0423-071 | J04 | 2 | 1 | TRUSS DESC. | |

Version 8.630 S Mar 22 2023 MiTek Industries, Inc. Fri Apr 21 14:13:38 2023 Page 1
ID:Oft3GgR1zRzAGpn6KZ87ljzYiN_-TEZH4Lka50chkRxfpaSTGtCKuyE0UkydwDoA9EzOUMh

Scale = 1:29.6

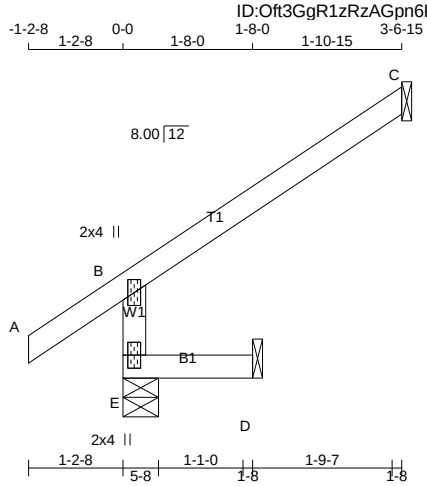


TOTAL WEIGHT = 2 X 10 = 19 lb [M]

**LUMBER**
N. L. G. A. RULES

| CHORDS | SIZE | | LUMBER | DESCR. |
|---|---|---|---|---|
| E - B | 2x4 | DRY | No.2 | SPF |
| A - C | 2x4 | DRY | No.2 | SPF |
| E - D | 2x4 | DRY | No.2 | SPF |

DRY: SEASONED LUMBER.

**PLATES (table is in inches)**

| JT | TYPE | PLATES | W | LEN | Y | X |
|---|---|---|---|---|---|---|
| B | TMV+p | MT20 | 2.0 | 4.0 | | |
| E | BMV1+p | MT20 | 2.0 | 4.0 | | |

**DIMENSIONS, SUPPORTS AND LOADINGS SPECIFIED BY FABRICATOR TO BE VERIFIED BY BUILDING DESIGNER**

**BEARINGS**

| JT | FACTORED GROSS REACTION VERT | HORZ | MAXIMUM FACTORED GROSS REACTION DOWN | HORZ | UPLIFT | INPUT BRG IN-SX | REQRD BRG IN-SX |
|---|---|---|---|---|---|---|---|
| E | 313 | 0 | 313 | 0 | 0 | 5-8 | 1-8 |
| C | 113 | 0 | 113 | 0 | 0 | 1-8 | 1-8 |
| D | 14 | 0 | 16 | 0 | 0 | 1-8 | 1-8 |

SEE MITEK STANDARD DETAIL MSD2015-H FOR CONNECTION TO JOINT(S) C , D

**UNFACTORED REACTIONS**

| JT | 1ST LCASE COMBINED | MAX./MIN. COMPONENT REACTIONS SNOW | LIVE | PERM.LIVE | WIND | DEAD | SOIL |
|---|---|---|---|---|---|---|---|
| E | 215 | 180 / 0 | 0 / 0 | 0 / 0 | 0 / 0 | 34 / 0 | 0 / 0 |
| C | 77 | 69 / 0 | 0 / 0 | 0 / 0 | 0 / 0 | 8 / 0 | 0 / 0 |
| D | 11 | 0 / 0 | 0 / 0 | 0 / 0 | 0 / 0 | 11 / 0 | 0 / 0 |

BEARING MATERIAL TO BE SPF NO.2 OR BETTER AT JOINT(S) E

**BRACING**
TOP CHORD TO BE SHEATHED OR MAX. PURLIN SPACING = 6.25 FT.
MAX. UNBRACED BOTTOM CHORD LENGTH = 10.00 FT OR RIGID CEILING DIRECTLY APPLIED.

ALL PITCH BREAKS AND PERIMETER CORNER JOINTS MUST BE LATERALLY RESTRAINED.

**LOADING**
TOTAL LOAD CASES: (5)

CHORDS

| MEMB. FR-TO | MAX. FACTORED FORCE (LBS) | FACTORED VERT. LOAD (PLF) FROM | TO | LC1 MAX CSI (LC) | MAX. UNBRAC LENGTH |
|---|---|---|---|---|---|
| E- B | -297 / 0 | 0.0 | 0.0 | 0.01 (4) | 7.81 |
| A- B | 0 / 30 | -84.3 | -84.3 | 0.10 (1) | 10.00 |
| B- C | -21 / 0 | -84.3 | -84.3 | 0.18 (1) | 6.25 |
| E- D | 0 / 0 | -18.2 | -18.2 | 0.01 (4) | 10.00 |

WEBS

| MEMB. FR-TO | MAX. FACTORED FORCE (LBS) | MAX CSI (LC) |
|---|---|---|

CANTILEVER ANALYSIS HAS BEEN CONSIDERED IN THIS DESIGN

PATTERN-LOADING CHECK APPLIED TO THIS TRUSS.

**DESIGN CRITERIA**

SPECIFIED LOADS:

| | | | | | |
|---|---|---|---|---|---|
| TOP | CH. | LL | = | 25.6 | PSF |
| | | DL | = | 3.0 | PSF |
| BOT | CH. | LL | = | 0.0 | PSF |
| | | DL | = | 7.3 | PSF |
| TOTAL | LOAD | | = | 35.9 | PSF |

**SPACING = 24.0 IN. C/C**

THIS TRUSS IS DESIGNED FOR RESIDENTIAL OR SMALL BUILDING REQUIREMENTS OF PART 9, NBCC 2015

THIS DESIGN COMPLIES WITH:
- PART 9 OF BCBC 2018 , NBC-2019AE
- PART 9 OF OBC 2012 (2019 AMENDMENT)
- CSA 086-14
- TPIC 2014

DESIGN ASSUMPTIONS
-OVERHANG NOT TO BE ALTERED OR CUT OFF.

(55 % OF 31.3 P.S.F. G.S.L. PLUS 8.4 P.S.F. RAIN LOAD) EQUALS 25.6 P.S.F. SPECIFIED ROOF LIVE LOAD

ALLOWABLE DEFL.(LL)= L/360 (0.19")
CALCULATED VERT. DEFL.(LL) = L/ 999 (0.00")
ALLOWABLE DEFL.(TL)= L/360 (0.19")
CALCULATED VERT. DEFL.(TL) = L/ 999 (0.00")

CSI: TC=0.18/1.00 (B-C:1) , BC=0.01/1.00 (D-E:4) , WB=0.00/1.00 (n/a:0) , SSI=0.12/1.00 (B-C:1)

DOL LUMBER=1.00 NAIL=1.00 LS BEND=1.10 COMP=1.10 SHEAR=1.10 TENS= 1.10

COMPANION LIVE LOAD FACTOR = 1.00

TRUSS PLATE MANUFACTURER IS NOT RESPONSIBLE FOR QUALITY CONTROL IN THE TRUSS MANUFACTURING PLANT .

NAIL VALUES

| PLATE | GRIP(DRY) (PSI) MAX | MIN | SHEAR (PLI) MAX | MIN | SECTION (PLI) MAX | MIN |
|---|---|---|---|---|---|---|
| MT20 | 650 | 371 | 1747 | 788 | 1987 | 1873 |

PLATE PLACEMENT TOL. = 0.250 inches

PLATE ROTATION TOL. = 5.0 Deg.

JSI GRIP= 0.18 (B) (INPUT = 0.90 )
JSI METAL= 0.15 (B) (INPUT = 1.00 )

LICENSED PROFESSIONAL ENGINEER
I.MATIJEVIC
100528832
PROVINCE OF ONTARIO
APRIL 24, 2023

**READ ALL NOTES ON THIS PAGE AND ON THE ENGINEERING NOTES: TRUSSES. THE NOTE PAGE IS AN INTEGRAL PART OF THIS DRAWING AS IT CONTAINS SPECIFICATIONS AND CRITERIA USED IN THE DESIGN OF THIS COMPONENET.**

CITY OF RICHMOND HILL
BUILDING DIVISION
05/24/2023
RECEIVED
Per: joshua.nabua

| JOB NAME | TRUSS NAME | QUANTITY | PLY | JOB DESC. | DRWG NO. |
|---|---|---|---|---|---|
| IM0423-071 | J05 | 2 | 1 | TRUSS DESC. | |

Version 8.630 S Mar 22 2023 MiTek Industries, Inc. Fri Apr 21 14:13:39 2023 Page 1
ID:Oft3GgR1zRzAGpn6KZ87ljzYiN_-yQ7flhlCsKkYMbWsNIzio5lWvLZ?DBBm9tXkhhzOUMg

Scale = 1:20.3

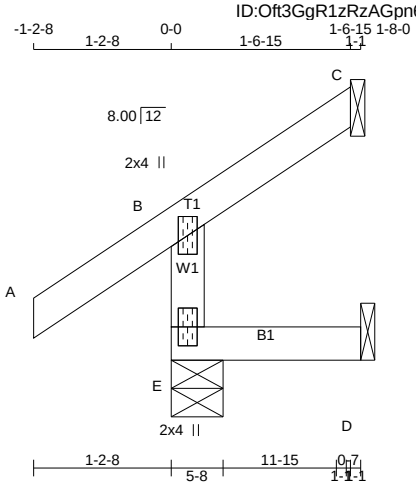


TOTAL WEIGHT = 2 X 7 = 14 lb [M]

**LUMBER**
N. L. G. A. RULES

| CHORDS | SIZE | | LUMBER | DESCR. |
|---|---|---|---|---|
| E - B | 2x4 | DRY | No.2 | SPF |
| A - C | 2x4 | DRY | No.2 | SPF |
| E - D | 2x4 | DRY | No.2 | SPF |

DRY: SEASONED LUMBER.

**PLATES (table is in inches)**

| JT | TYPE | PLATES | W | LEN | Y | X |
|---|---|---|---|---|---|---|
| B | TMV+p | MT20 | 2.0 | 4.0 | | |
| E | BMV1+p | MT20 | 2.0 | 4.0 | | |

**DIMENSIONS, SUPPORTS AND LOADINGS SPECIFIED BY FABRICATOR TO BE VERIFIED BY BUILDING DESIGNER**

**BEARINGS**

| JT | FACTORED GROSS REACTION VERT | HORZ | MAXIMUM FACTORED GROSS REACTION DOWN | HORZ | UPLIFT | INPUT BRG IN-SX | REQRD BRG IN-SX |
|---|---|---|---|---|---|---|---|
| E | 234 | 0 | 234 | 0 | 0 | 5-8 | 1-8 |
| C | 31 | 0 | 31 | 0 | -27 | 1-8 | 1-8 |
| D | 6 | 0 | 15 | 0 | -2 | 1-8 | 1-8 |

SEE MITEK STANDARD DETAIL MSD2015-H FOR CONNECTION TO JOINT(S) C , D

PROVIDE ANCHORAGE AT BEARING JOINT C FOR 150 LBS FACTORED UPLIFT
PROVIDE ANCHORAGE AT BEARING JOINT D FOR 150 LBS FACTORED UPLIFT

**UNFACTORED REACTIONS**

| JT | 1ST LCASE COMBINED | MAX./MIN. COMPONENT REACTIONS SNOW | LIVE | PERM.LIVE | WIND | DEAD | SOIL |
|---|---|---|---|---|---|---|---|
| E | 161 | 133 / 0 | 0 / 0 | 0 / 0 | 0 / 0 | 28 / 0 | 0 / 0 |
| C | 21 | 18 / -19 | 0 / 0 | 0 / 0 | 0 / 0 | 3 / 0 | 0 / 0 |
| D | 6 | 0 / -7 | 0 / 0 | 0 / 0 | 0 / 0 | 11 / 0 | 0 / 0 |

BEARING MATERIAL TO BE SPF NO.2 OR BETTER AT JOINT(S) E, C

**BRACING**
TOP CHORD TO BE SHEATHED OR MAX. PURLIN SPACING = 6.25 FT.
MAX. UNBRACED BOTTOM CHORD LENGTH = 10.00 FT OR RIGID CEILING DIRECTLY APPLIED.

ALL PITCH BREAKS AND PERIMETER CORNER JOINTS MUST BE LATERALLY RESTRAINED.

**LOADING**
TOTAL LOAD CASES: (5)

CHORDS

| MEMB. FR-TO | MAX. FACTORED FORCE (LBS) | FACTORED VERT. LOAD (PLF) FROM | TO | LC1 MAX CSI (LC) | MAX. UNBRAC LENGTH |
|---|---|---|---|---|---|
| E- B | -210 / 0 | 0.0 | 0.0 | 0.03 (5) | 7.81 |
| A- B | 0 / 30 | -84.3 | -84.3 | 0.10 (1) | 10.00 |
| B- C | -19 / 0 | -84.3 | -84.3 | 0.08 (1) | 6.25 |
| E- D | 0 / 0 | -18.2 | -18.2 | 0.03 (5) | 10.00 |

WEBS

| MEMB. FR-TO | MAX. FACTORED FORCE (LBS) | MAX CSI (LC) |
|---|---|---|

CANTILEVER ANALYSIS HAS BEEN CONSIDERED IN THIS DESIGN

PATTERN-LOADING CHECK APPLIED TO THIS TRUSS.

**DESIGN CRITERIA**

SPECIFIED LOADS:

| | | | | | |
|---|---|---|---|---|---|
| TOP CH. | LL | = | 25.6 | PSF |
| | DL | = | 3.0 | PSF |
| BOT CH. | LL | = | 0.0 | PSF |
| | DL | = | 7.3 | PSF |
| TOTAL LOAD | | = | 35.9 | PSF |

**SPACING = 24.0 IN. C/C**

THIS TRUSS IS DESIGNED FOR RESIDENTIAL OR SMALL BUILDING REQUIREMENTS OF PART 9, NBCC 2015

THIS DESIGN COMPLIES WITH:
- PART 9 OF BCBC 2018 , NBC-2019AE
- PART 9 OF OBC 2012 (2019 AMENDMENT)
- CSA 086-14
- TPIC 2014

DESIGN ASSUMPTIONS
-OVERHANG NOT TO BE ALTERED OR CUT OFF.

(55 % OF 31.3 P.S.F. G.S.L. PLUS 8.4 P.S.F. RAIN LOAD) EQUALS 25.6 P.S.F. SPECIFIED ROOF LIVE LOAD

ALLOWABLE DEFL.(LL)= L/360 (0.19")
CALCULATED VERT. DEFL.(LL) = L/ 999 (0.00")
ALLOWABLE DEFL.(TL)= L/360 (0.19")
CALCULATED VERT. DEFL.(TL) = L/ 999 (0.00")

CSI: TC=0.10/1.00 (A-B:1) , BC=0.03/1.00 (D-E:5) , WB=0.00/1.00 (n/a:0) , SSI=0.07/1.00 (A-B:1)

DOL LUMBER=1.00 NAIL=1.00 LS BEND=1.10 COMP=1.10 SHEAR=1.10 TENS= 1.10

COMPANION LIVE LOAD FACTOR = 1.00

TRUSS PLATE MANUFACTURER IS NOT RESPONSIBLE FOR QUALITY CONTROL IN THE TRUSS MANUFACTURING PLANT .

NAIL VALUES

| PLATE | GRIP(DRY) (PSI) MAX | MIN | SHEAR (PLI) MAX | MIN | SECTION (PLI) MAX | MIN |
|---|---|---|---|---|---|---|
| MT20 | 650 | 371 | 1747 | 788 | 1987 | 1873 |

PLATE PLACEMENT TOL. = 0.250 inches

PLATE ROTATION TOL. = 5.0 Deg.

JSI GRIP= 0.13 (B) (INPUT = 0.90 )
JSI METAL= 0.11 (B) (INPUT = 1.00 )

LICENSED PROFESSIONAL ENGINEER
I.MATIJEVIC
100528832
PROVINCE OF ONTARIO
APRIL 24, 2023

**READ ALL NOTES ON THIS PAGE AND ON THE ENGINEERING NOTES: TRUSSES. THE NOTE PAGE IS AN INTEGRAL PART OF THIS DRAWING AS IT CONTAINS SPECIFICATIONS AND CRITERIA USED IN THE DESIGN OF THIS COMPONENET.**

CITY OF RICHMOND HILL
BUILDING DIVISION
05/24/2023
KOTT
RECEIVED
Per: joshua.nabua

| JOB NAME | TRUSS NAME | QUANTITY | PLY | JOB DESC. | DRWG NO. |
|---|---|---|---|---|---|
| IM0423-071 | J06 | 2 | 1 | TRUSS DESC. | |

Version 8.630 S Mar 22 2023 MiTek Industries, Inc. Fri Apr 21 14:13:39 2023 Page 1
ID:Oft3GgR1zRzAGpn6KZ87ljzYiN_-yQ7flhlCsKkYMbWsNIzio5lWvLZADBBm9tXkhhzOUMg

Scale = 1:22.2

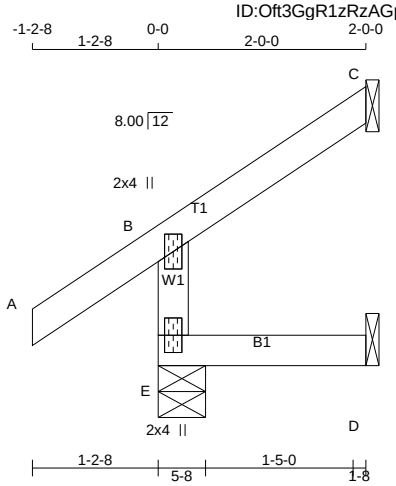


TOTAL WEIGHT = 2 X 8 = 16 lb [M]

**LUMBER**
N. L. G. A. RULES

| CHORDS | SIZE | | LUMBER | DESCR. |
|---|---|---|---|---|
| E - B | 2x4 | DRY | No.2 | SPF |
| A - C | 2x4 | DRY | No.2 | SPF |
| E - D | 2x4 | DRY | No.2 | SPF |

DRY: SEASONED LUMBER.

**PLATES (table is in inches)**

| JT | TYPE | PLATES | W | LEN | Y | X |
|---|---|---|---|---|---|---|
| B | TMV+p | MT20 | 2.0 | 4.0 | | |
| E | BMV1+p | MT20 | 2.0 | 4.0 | | |

**DIMENSIONS, SUPPORTS AND LOADINGS SPECIFIED BY FABRICATOR TO BE VERIFIED BY BUILDING DESIGNER**

**BEARINGS**

| JT | FACTORED GROSS REACTION VERT | HORZ | MAXIMUM FACTORED GROSS REACTION DOWN | HORZ | UPLIFT | INPUT BRG IN-SX | REQRD BRG IN-SX |
|---|---|---|---|---|---|---|---|
| E | 233 | 0 | 233 | 0 | 0 | 5-8 | 1-8 |
| C | 64 | 0 | 64 | 0 | 0 | 1-8 | 1-8 |
| D | 16 | 0 | 18 | 0 | 0 | 1-8 | 1-8 |

SEE MITEK STANDARD DETAIL MSD2015-H FOR CONNECTION TO JOINT(S) C , D

**UNFACTORED REACTIONS**

| JT | 1ST LCASE COMBINED | MAX./MIN. COMPONENT REACTIONS SNOW | LIVE | PERM.LIVE | WIND | DEAD | SOIL |
|---|---|---|---|---|---|---|---|
| E | 161 | 130 / 0 | 0 / 0 | 0 / 0 | 0 / 0 | 31 / 0 | 0 / 0 |
| C | 43 | 39 / 0 | 0 / 0 | 0 / 0 | 0 / 0 | 5 / 0 | 0 / 0 |
| D | 13 | 0 / 0 | 0 / 0 | 0 / 0 | 0 / 0 | 13 / 0 | 0 / 0 |

BEARING MATERIAL TO BE SPF NO.2 OR BETTER AT JOINT(S) E

**BRACING**
TOP CHORD TO BE SHEATHED OR MAX. PURLIN SPACING = 6.25 FT.
MAX. UNBRACED BOTTOM CHORD LENGTH = 10.00 FT OR RIGID CEILING DIRECTLY APPLIED.

ALL PITCH BREAKS AND PERIMETER CORNER JOINTS MUST BE LATERALLY RESTRAINED.

**LOADING**
TOTAL LOAD CASES: (5)

| CHORDS MEMB. FR-TO | MAX. FACTORED FORCE (LBS) | FACTORED VERT. LOAD (PLF) FROM | TO | LC1 MAX CSI (LC) | MAX. UNBRAC LENGTH |
|---|---|---|---|---|---|
| E- B | -213 / 0 | 0.0 | 0.0 | 0.01 (4) | 7.81 |
| A- B | 0 / 30 | -84.3 | -84.3 | 0.10 (1) | 10.00 |
| B- C | -11 / 0 | -84.3 | -84.3 | 0.06 (1) | 6.25 |
| E- D | 0 / 0 | -18.2 | -18.2 | 0.02 (4) | 10.00 |

| WEBS MEMB. FR-TO | MAX. FACTORED FORCE (LBS) | MAX CSI (LC) |
|---|---|---|

CANTILEVER ANALYSIS HAS BEEN CONSIDERED IN THIS DESIGN

PATTERN-LOADING CHECK APPLIED TO THIS TRUSS.

**DESIGN CRITERIA**

SPECIFIED LOADS:

| | | | | |
|---|---|---|---|---|
| TOP CH. | LL | = | 25.6 | PSF |
| | DL | = | 3.0 | PSF |
| BOT CH. | LL | = | 0.0 | PSF |
| | DL | = | 7.3 | PSF |
| TOTAL LOAD | | = | 35.9 | PSF |

**SPACING = 24.0 IN. C/C**

THIS TRUSS IS DESIGNED FOR RESIDENTIAL OR SMALL BUILDING REQUIREMENTS OF PART 9, NBCC 2015

THIS DESIGN COMPLIES WITH:
- PART 9 OF BCBC 2018 , NBC-2019AE
- PART 9 OF OBC 2012 (2019 AMENDMENT)
- CSA 086-14
- TPIC 2014

DESIGN ASSUMPTIONS
-OVERHANG NOT TO BE ALTERED OR CUT OFF.

(55 % OF 31.3 P.S.F. G.S.L. PLUS 8.4 P.S.F. RAIN LOAD) EQUALS 25.6 P.S.F. SPECIFIED ROOF LIVE LOAD

ALLOWABLE DEFL.(LL)= L/360 (0.19")
CALCULATED VERT. DEFL.(LL) = L/ 999 (0.00")
ALLOWABLE DEFL.(TL)= L/360 (0.19")
CALCULATED VERT. DEFL.(TL) = L/ 999 (0.00")

CSI: TC=0.10/1.00 (A-B:1) , BC=0.02/1.00 (D-E:4) , WB=0.00/1.00 (n/a:0) , SSI=0.07/1.00 (A-B:1)

DOL LUMBER=1.00 NAIL=1.00 LS BEND=1.10 COMP=1.10 SHEAR=1.10 TENS= 1.10

COMPANION LIVE LOAD FACTOR = 1.00

TRUSS PLATE MANUFACTURER IS NOT RESPONSIBLE FOR QUALITY CONTROL IN THE TRUSS MANUFACTURING PLANT .

NAIL VALUES

| PLATE | GRIP(DRY) (PSI) MAX | MIN | SHEAR (PLI) MAX | MIN | SECTION (PLI) MAX | MIN |
|---|---|---|---|---|---|---|
| MT20 | 650 | 371 | 1747 | 788 | 1987 | 1873 |

PLATE PLACEMENT TOL. = 0.250 inches

PLATE ROTATION TOL. = 5.0 Deg.

JSI GRIP= 0.13 (B) (INPUT = 0.90 )
JSI METAL= 0.11 (B) (INPUT = 1.00 )

LICENSED PROFESSIONAL ENGINEER
I.MATIJEVIC
100528832
PROVINCE OF ONTARIO
APRIL 24, 2023

**READ ALL NOTES ON THIS PAGE AND ON THE ENGINEERING NOTES: TRUSSES. THE NOTE PAGE IS AN INTEGRAL PART OF THIS DRAWING AS IT CONTAINS SPECIFICATIONS AND CRITERIA USED IN THE DESIGN OF THIS COMPONENET.**

CITY OF RICHMOND HILL
BUILDING DIVISION
05/24/2023
RECEIVED
Per: joshua.nabua

| JOB NAME | TRUSS NAME | QUANTITY | PLY | JOB DESC. | DRWG NO. |
|---|---|---|---|---|---|
| IM0423-071 | T01 | 1 | 1 | TRUSS DESC. | |

Version 8.630 S Mar 22 2023 MiTek Industries, Inc. Fri Apr 21 14:13:40 2023 Page 1
ID:Oft3GgR1zRzAGpn6KZ87ljzYiN_-Qch1V1mqdesPzl52x?UxLIHXclozyWfvOXHHE7zOUMf

Scale = 1:94.1

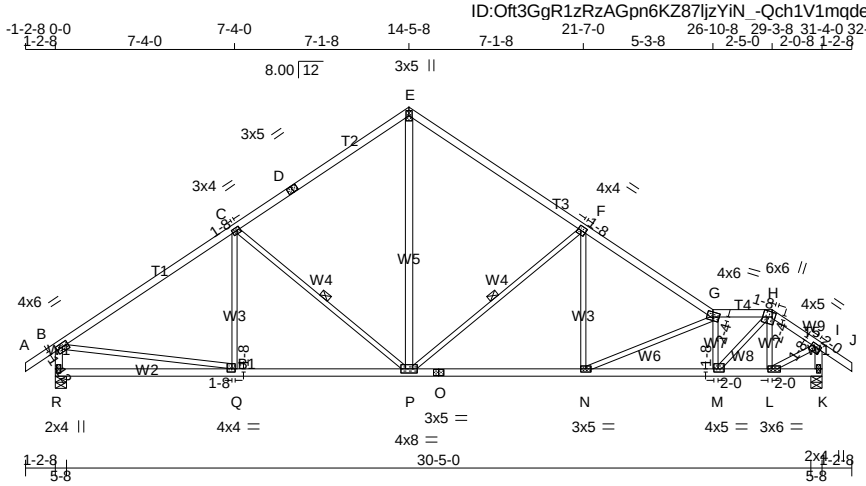


TOTAL WEIGHT = 137 lb
[M][F]

**LUMBER**
N. L. G. A. RULES

| CHORDS | SIZE | | LUMBER | DESCR. |
|---|---|---|---|---|
| A - D | 2x4 | DRY | No.2 | SPF |
| D - E | 2x4 | DRY | No.2 | SPF |
| E - G | 2x4 | DRY | No.2 | SPF |
| G - H | 2x4 | DRY | No.2 | SPF |
| H - J | 2x4 | DRY | No.2 | SPF |
| R - B | 2x4 | DRY | No.2 | SPF |
| K - I | 2x4 | DRY | No.2 | SPF |
| R - O | 2x4 | DRY | No.2 | SPF |
| O - K | 2x4 | DRY | No.2 | SPF |
| ALL WEBS EXCEPT | 2x3 | DRY | No.2 | SPF |
| P - E | 2x4 | DRY | No.2 | SPF |

DRY: SEASONED LUMBER.

**PLATES (table is in inches)**

| JT | TYPE | PLATES | W | LEN | Y | X |
|---|---|---|---|---|---|---|
| B | TMVW-t | MT20 | 4.0 | 6.0 | 1.75 | 3.00 |
| C | TMWW-t | MT20 | 3.0 | 4.0 | 1.50 | 1.50 |
| D | TS-t | MT20 | 3.0 | 5.0 | | |
| E | TTW+p | MT20 | 3.0 | 5.0 | | |
| F | TMWW-t | MT20 | 4.0 | 4.0 | 2.00 | 1.50 |
| G | TTWW-m | MT20 | 4.0 | 6.0 | 2.25 | 3.00 |
| H | TTWW+m | MT20 | 6.0 | 6.0 | 2.25 | 1.50 |
| I | TMVW-t | MT20 | 4.0 | 5.0 | 1.50 | 2.00 |
| K | BMV1+p | MT20 | 2.0 | 4.0 | | |
| L | BMWW-t | MT20 | 3.0 | 6.0 | 1.50 | 2.00 |
| M | BMWW-t | MT20 | 4.0 | 5.0 | 1.50 | 2.00 |
| N | BMWW-t | MT20 | 3.0 | 5.0 | | |
| O | BS-t | MT20 | 3.0 | 5.0 | | |
| P | BMWWW-t | MT20 | 4.0 | 8.0 | | |
| Q | BMWW-t | MT20 | 4.0 | 4.0 | 1.50 | 1.50 |
| R | BMV1+p | MT20 | 2.0 | 4.0 | | |

**DIMENSIONS, SUPPORTS AND LOADINGS SPECIFIED BY FABRICATOR TO BE VERIFIED BY BUILDING DESIGNER**

**BEARINGS**

| JT | FACTORED GROSS REACTION VERT | HORZ | MAXIMUM FACTORED GROSS REACTION DOWN | HORZ | UPLIFT | INPUT BRG IN-SX | REQRD BRG IN-SX |
|---|---|---|---|---|---|---|---|
| R | 1715 | 0 | 1715 | 0 | 0 | 5-8 | 2-1 |
| K | 1715 | 0 | 1715 | 0 | 0 | 5-8 | 2-1 |

**UNFACTORED REACTIONS**

| JT | 1ST LCASE COMBINED | MAX./MIN. COMPONENT REACTIONS SNOW | LIVE | PERM.LIVE | WIND | DEAD | SOIL |
|---|---|---|---|---|---|---|---|
| R | 1198 | 868 / 0 | 0 / 0 | 0 / 0 | 0 / 0 | 330 / 0 | 0 / 0 |
| K | 1198 | 868 / 0 | 0 / 0 | 0 / 0 | 0 / 0 | 330 / 0 | 0 / 0 |

BEARING MATERIAL TO BE SPF NO.2 OR BETTER AT JOINT(S) R, K

**BRACING**
TOP CHORD TO BE SHEATHED OR MAX. PURLIN SPACING = 4.00 FT.
MAX. UNBRACED BOTTOM CHORD LENGTH = 10.00 FT OR RIGID CEILING DIRECTLY APPLIED.

ALL PITCH BREAKS AND PERIMETER CORNER JOINTS MUST BE LATERALLY RESTRAINED.

1 - 1x4 LATERAL BRACE(S) AT 1/ 2 LENGTH OF C-P, F-P. DBS = 20-0-0 . CBF = 118 LBS.

DBS = DIAGONAL BRACE SPACING (MAX). CBF = CUMULATIVE BRACING FORCE (PER BRACE). FASTEN LATERAL BRACE(S) USING (0.122"X3") SPIRAL NAILS : 1 NAIL FOR 2x3 BRACE(S), 2 FOR 1x4, 2x4, 2x5, 3 FOR 2x6, 4 FOR 2x8, 5 FOR 2x10, AND 6 FOR 2x12.

END VERTICAL(S) MUST BE SHEATHED OR HAVE BRACES AS INDICATED IN THE MAX. UNBRACED LENGTH COLUMN OF THE TABLE BELOW

**LOADING**
TOTAL LOAD CASES: (4)

CHORDS

| MEMB. FR-TO | MAX. FACTORED FORCE (LBS) | FACTORED VERT. LOAD LC1 (PLF) FROM | TO | MAX CSI (LC) | MAX. UNBRAC LENGTH |
|---|---|---|---|---|---|
| A- B | 0 / 30 | -84.3 | -84.3 | 0.10 (1) | 10.00 |
| B- C | -1918 / 0 | -84.3 | -84.3 | 0.74 (1) | 4.00 |
| C- D | -1459 / 0 | -84.3 | -84.3 | 0.66 (1) | 4.55 |
| D- E | -1459 / 0 | -84.3 | -84.3 | 0.66 (1) | 4.55 |
| E- F | -1450 / 0 | -84.3 | -84.3 | 0.59 (1) | 4.71 |
| F- G | -2242 / 0 | -84.3 | -84.3 | 0.54 (1) | 4.00 |
| G- H | -2493 / 0 | -84.3 | -84.3 | 0.13 (1) | 4.28 |
| H- I | -1578 / 0 | -84.3 | -84.3 | 0.07 (1) | 5.21 |
| I- J | 0 / 30 | -84.3 | -84.3 | 0.10 (1) | 10.00 |
| R- B | -1659 / 0 | 0.0 | 0.0 | 0.17 (1) | 6.44 |
| K- I | -1703 / 0 | 0.0 | 0.0 | 0.17 (1) | 6.37 |
| R- Q | 0 / 0 | -18.2 | -18.2 | 0.23 (4) | 10.00 |
| Q- P | 0 / 1630 | -18.2 | -18.2 | 0.38 (1) | 10.00 |
| P- O | 0 / 1905 | -18.2 | -18.2 | 0.41 (1) | 10.00 |
| O- N | 0 / 1905 | -18.2 | -18.2 | 0.41 (1) | 10.00 |
| N- M | 0 / 2546 | -18.2 | -18.2 | 0.49 (1) | 10.00 |
| M- L | 0 / 1284 | -18.2 | -18.2 | 0.23 (1) | 10.00 |
| L- K | 0 / 0 | -18.2 | -18.2 | 0.02 (1) | 10.00 |

WEBS

| MEMB. FR-TO | MAX. FACTORED FORCE (LBS) | MAX CSI (LC) |
|---|---|---|
| Q- C | -84 / 102 | 0.05 (1) |
| C- P | -585 / 0 | 0.35 (1) |
| P- E | 0 / 1107 | 0.18 (1) |
| P- F | -943 / 0 | 0.56 (1) |
| N- F | 0 / 418 | 0.09 (1) |
| N- G | -704 / 0 | 0.42 (1) |
| M- G | -1219 / 0 | 0.20 (1) |
| M- H | 0 / 1744 | 0.39 (1) |
| L- H | -563 / 0 | 0.09 (1) |
| B- Q | 0 / 1646 | 0.37 (1) |
| L- I | 0 / 1451 | 0.33 (1) |

**DESIGN CRITERIA**

SPECIFIED LOADS:

| | | | | |
|---|---|---|---|---|
| TOP CH. | LL | = | 25.6 | PSF |
| | DL | = | 3.0 | PSF |
| BOT CH. | LL | = | 0.0 | PSF |
| | DL | = | 7.3 | PSF |
| TOTAL LOAD | | = | 35.9 | PSF |

**SPACING = 24.0 IN. C/C**

LOADING IN ALL FLAT SECTIONS BASED ON A SLOPE OF 8.00/12

THIS TRUSS IS DESIGNED FOR RESIDENTIAL OR SMALL BUILDING REQUIREMENTS OF PART 9, NBCC 2015

THIS DESIGN COMPLIES WITH:
- PART 9 OF BCBC 2018 , NBC-2019AE
- PART 9 OF OBC 2012 (2019 AMENDMENT)
- CSA 086-14
- TPIC 2014

(55 % OF 31.3 P.S.F. G.S.L. PLUS 8.4 P.S.F. RAIN LOAD) EQUALS 25.6 P.S.F. SPECIFIED ROOF LIVE LOAD

ALLOWABLE DEFL.(LL)= L/360 (1.04")
CALCULATED VERT. DEFL.(LL) = L/ 999 (0.11")
ALLOWABLE DEFL.(TL)= L/360 (1.04")
CALCULATED VERT. DEFL.(TL) = L/ 999 (0.22")

CSI: TC=0.74/1.00 (B-C:1) , BC=0.49/1.00 (M-N:1) , WB=0.56/1.00 (F-P:1) , SSI=0.25/1.00 (B-C:1)

DOL LUMBER=1.00 NAIL=1.00 LS BEND=1.10 COMP=1.10 SHEAR=1.10 TENS= 1.10

COMPANION LIVE LOAD FACTOR = 1.00

TRUSS PLATE MANUFACTURER IS NOT RESPONSIBLE FOR QUALITY CONTROL IN THE TRUSS MANUFACTURING PLANT .

NAIL VALUES

| PLATE | GRIP(DRY) (PSI) MAX | MIN | SHEAR (PLI) MAX | MIN | SECTION (PLI) MAX | MIN |
|---|---|---|---|---|---|---|
| MT20 | 650 | 371 | 1747 | 788 | 1987 | 1873 |

PLATE PLACEMENT TOL. = 0.250 inches

PLATE ROTATION TOL. = 5.0 Deg.

JSI GRIP= 0.90 (G) (INPUT = 0.90 )
JSI METAL= 0.56 (O) (INPUT = 1.00 )

LICENSED PROFESSIONAL ENGINEER
I.MATIJEVIC
100528832
PROVINCE OF ONTARIO
APRIL 24, 2023

**READ ALL NOTES ON THIS PAGE AND ON THE ENGINEERING NOTES: TRUSSES. THE NOTE PAGE IS AN INTEGRAL PART OF THIS DRAWING AS IT CONTAINS SPECIFICATIONS AND CRITERIA USED IN THE DESIGN OF THIS COMPONENET.**

CITY OF RICHMOND HILL
BUILDING DIVISION
05/24/2023
KOTT
RECEIVED
Per: joshua.nabua

| JOB NAME | TRUSS NAME | QUANTITY | PLY | JOB DESC. | DRWG NO. |
|---|---|---|---|---|---|
| IM0423-071 | T02 | 1 | 1 | TRUSS DESC. | |

Version 8.630 S Mar 22 2023 MiTek Industries, Inc. Fri Apr 21 14:13:41 2023 Page 1
ID:Oft3GgR1zRzAGpn6KZ87ljzYiN_-uoFPjNnSOx_GbugEUj0AtWqjm99Ihz_3dB0qmZzOUMe

Scale = 1:88.7

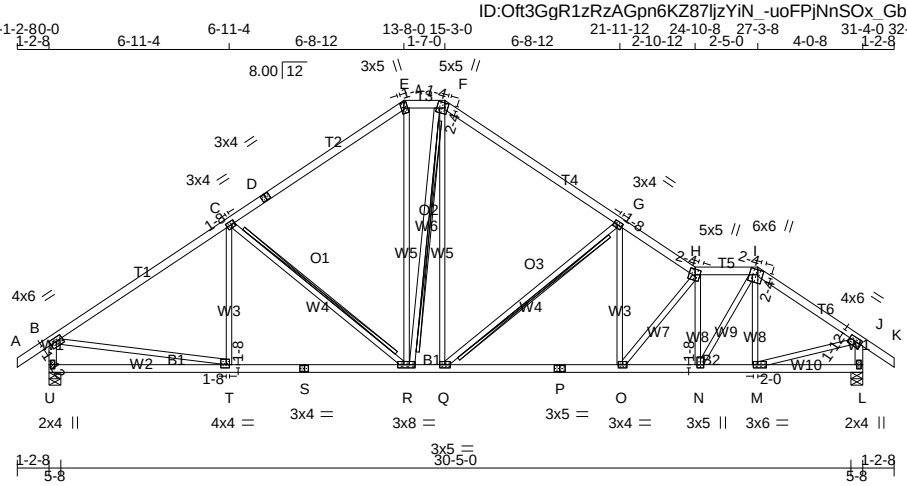


TOTAL WEIGHT = 152 lb
[M][F]

**LUMBER**
N. L. G. A. RULES

| CHORDS | SIZE | | LUMBER | DESCR. |
|---|---|---|---|---|
| A - D | 2x4 | DRY | No.2 | SPF |
| D - E | 2x4 | DRY | No.2 | SPF |
| E - F | 2x4 | DRY | No.2 | SPF |
| F - H | 2x4 | DRY | No.2 | SPF |
| H - I | 2x4 | DRY | No.2 | SPF |
| I - K | 2x4 | DRY | No.2 | SPF |
| U - B | 2x4 | DRY | No.2 | SPF |
| L - J | 2x4 | DRY | No.2 | SPF |
| U - S | 2x4 | DRY | No.2 | SPF |
| S - P | 2x4 | DRY | No.2 | SPF |
| P - L | 2x4 | DRY | No.2 | SPF |
| ALL WEBS EXCEPT | 2x3 | DRY | No.2 | SPF |

DRY: SEASONED LUMBER.

**PLATES (table is in inches)**

| JT | TYPE | PLATES | W | LEN | Y | X |
|---|---|---|---|---|---|---|
| B | TMVW-t | MT20 | 4.0 | 6.0 | 1.75 | 3.00 |
| C | TMWW-t | MT20 | 3.0 | 4.0 | 1.50 | 1.50 |
| D | TS-t | MT20 | 3.0 | 4.0 | | |
| E | TTW+m | MT20 | 3.0 | 5.0 | 2.50 | 1.25 |
| F | TTWW+m | MT20 | 5.0 | 5.0 | 2.25 | 1.25 |
| G | TMWW-t | MT20 | 3.0 | 4.0 | 1.50 | 1.50 |
| H | TTWW+m | MT20 | 5.0 | 5.0 | 2.50 | 2.25 |
| I | TTWW+m | MT20 | 6.0 | 6.0 | 2.25 | 2.25 |
| J | TMVW-t | MT20 | 4.0 | 6.0 | 1.75 | 3.00 |
| L | BMV1+p | MT20 | 2.0 | 4.0 | | |
| M | BMWW-t | MT20 | 3.0 | 6.0 | 1.50 | 2.00 |
| N | BMWW+t | MT20 | 3.0 | 5.0 | 1.50 | 1.50 |
| O | BMWW-t | MT20 | 3.0 | 4.0 | | |
| P | BS-t | MT20 | 3.0 | 5.0 | | |
| Q | BMWW-t | MT20 | 3.0 | 5.0 | | |
| R | BMWWW-t | MT20 | 3.0 | 8.0 | | |
| S | BS-t | MT20 | 3.0 | 4.0 | | |
| T | BMWW-t | MT20 | 4.0 | 4.0 | 1.50 | 1.50 |
| U | BMV1+p | MT20 | 2.0 | 4.0 | | |

**DIMENSIONS, SUPPORTS AND LOADINGS SPECIFIED BY FABRICATOR TO BE VERIFIED BY BUILDING DESIGNER**

**BEARINGS**

| JT | FACTORED GROSS REACTION VERT | HORZ | MAXIMUM FACTORED GROSS REACTION DOWN | HORZ | UPLIFT | INPUT BRG IN-SX | REQRD BRG IN-SX |
|---|---|---|---|---|---|---|---|
| U | 1715 | 0 | 1715 | 0 | 0 | 5-8 | 2-1 |
| L | 1715 | 0 | 1715 | 0 | 0 | 5-8 | 2-1 |

**UNFACTORED REACTIONS**

| JT | 1ST LCASE COMBINED | MAX./MIN. COMPONENT REACTIONS SNOW | LIVE | PERM.LIVE | WIND | DEAD | SOIL |
|---|---|---|---|---|---|---|---|
| U | 1198 | 868 / 0 | 0 / 0 | 0 / 0 | 0 / 0 | 330 / 0 | 0 / 0 |
| L | 1198 | 868 / 0 | 0 / 0 | 0 / 0 | 0 / 0 | 330 / 0 | 0 / 0 |

BEARING MATERIAL TO BE SPF NO.2 OR BETTER AT JOINT(S) U, L

**BRACING**
TOP CHORD TO BE SHEATHED OR MAX. PURLIN SPACING = 4.10 FT.
MAX. UNBRACED BOTTOM CHORD LENGTH = 10.00 FT OR RIGID CEILING DIRECTLY APPLIED.

ALL PITCH BREAKS AND PERIMETER CORNER JOINTS MUST BE LATERALLY RESTRAINED.

2x4 DRY SPF No.2 T-BRACE AT C-R, F-R, G-Q

FASTEN T AND I-BRACES TO NARROW EDGE OF WEB WITH ONE ROW PER PLY OF 3" COMMON WIRE NAILS @ 6" O.C. WITH 3" MINIMUM END DISTANCE. BRACE MUST COVER 90% OF WEB LENGTH.

END VERTICAL(S) MUST BE SHEATHED OR HAVE BRACES AS INDICATED IN THE MAX. UNBRACED LENGTH COLUMN OF THE TABLE BELOW

**LOADING**
TOTAL LOAD CASES: (4)

CHORDS

| MEMB. FR-TO | MAX. FACTORED FORCE (LBS) | FACTORED VERT. LOAD LC1 (PLF) FROM | TO | MAX CSI (LC) | MAX. UNBRAC LENGTH |
|---|---|---|---|---|---|
| A- B | 0 / 30 | -84.3 | -84.3 | 0.10 (1) | 10.00 |
| B- C | -1924 / 0 | -84.3 | -84.3 | 0.65 (1) | 4.14 |
| C- D | -1509 / 0 | -84.3 | -84.3 | 0.59 (1) | 4.63 |
| D- E | -1509 / 0 | -84.3 | -84.3 | 0.59 (1) | 4.63 |
| E- F | -1227 / 0 | -84.3 | -84.3 | 0.04 (1) | 5.76 |
| F- G | -1515 / 0 | -84.3 | -84.3 | 0.52 (1) | 4.74 |
| G- H | -2254 / 0 | -84.3 | -84.3 | 0.42 (1) | 4.10 |
| H- I | -2165 / 0 | -84.3 | -84.3 | 0.11 (1) | 4.55 |
| I- J | -1842 / 0 | -84.3 | -84.3 | 0.22 (1) | 4.75 |
| J- K | 0 / 30 | -84.3 | -84.3 | 0.10 (1) | 10.00 |
| U- B | -1662 / 0 | 0.0 | 0.0 | 0.17 (1) | 6.43 |
| L- J | -1684 / 0 | 0.0 | 0.0 | 0.17 (1) | 6.40 |
| U- T | 0 / 0 | -18.2 | -18.2 | 0.21 (4) | 10.00 |
| T- S | 0 / 1633 | -18.2 | -18.2 | 0.37 (1) | 10.00 |
| S- R | 0 / 1633 | -18.2 | -18.2 | 0.37 (1) | 10.00 |
| R- Q | 0 / 1242 | -18.2 | -18.2 | 0.30 (1) | 10.00 |
| Q- P | 0 / 1935 | -18.2 | -18.2 | 0.39 (1) | 10.00 |
| P- O | 0 / 1935 | -18.2 | -18.2 | 0.39 (1) | 10.00 |
| O- N | 0 / 2194 | -18.2 | -18.2 | 0.42 (1) | 10.00 |
| N- M | 0 / 1522 | -18.2 | -18.2 | 0.29 (1) | 10.00 |
| M- L | 0 / 0 | -18.2 | -18.2 | 0.07 (4) | 10.00 |

WEBS

| MEMB. FR-TO | MAX. FACTORED FORCE (LBS) | MAX CSI (LC) |
|---|---|---|
| T- C | -105 / 94 | 0.06 (1) |
| R- R | -534 / 0 | 0.33 (1) |
| R- E | 0 / 538 | 0.12 (1) |
| R- F | -104 / 0 | 0.09 (1) |
| Q- F | 0 / 631 | 0.14 (1) |
| Q- G | -908 / 0 | 0.56 (1) |
| O- G | 0 / 454 | 0.10 (1) |
| O- H | -423 / 0 | 0.15 (1) |
| N- H | -1049 / 0 | 0.26 (1) |
| N- I | 0 / 1222 | 0.28 (1) |
| M- I | -286 / 0 | 0.07 (1) |
| B- T | 0 / 1651 | 0.37 (1) |
| M- J | 0 / 1576 | 0.35 (1) |

**DESIGN CRITERIA**

SPECIFIED LOADS:

| | | | | |
|---|---|---|---|---|
| TOP CH. | LL | = | 25.6 | PSF |
| | DL | = | 3.0 | PSF |
| BOT CH. | LL | = | 0.0 | PSF |
| | DL | = | 7.3 | PSF |
| TOTAL LOAD | | = | 35.9 | PSF |

**SPACING = 24.0 IN. C/C**

LOADING IN ALL FLAT SECTIONS BASED ON A SLOPE OF 2.00/12 MINIMUM

THIS TRUSS IS DESIGNED FOR RESIDENTIAL OR SMALL BUILDING REQUIREMENTS OF PART 9, NBCC 2015

THIS DESIGN COMPLIES WITH:
- PART 9 OF BCBC 2018 , NBC-2019AE
- PART 9 OF OBC 2012 (2019 AMENDMENT)
- CSA 086-14
- TPIC 2014

(55 % OF 31.3 P.S.F. G.S.L. PLUS 8.4 P.S.F. RAIN LOAD) EQUALS 25.6 P.S.F. SPECIFIED ROOF LIVE LOAD

ALLOWABLE DEFL.(LL)= L/360 (1.04")
CALCULATED VERT. DEFL.(LL) = L/ 999 (0.11")
ALLOWABLE DEFL.(TL)= L/360 (1.04")
CALCULATED VERT. DEFL.(TL) = L/ 999 (0.22")

CSI: TC=0.65/1.00 (B-C:1) , BC=0.42/1.00 (N-O:1) , WB=0.56/1.00 (G-Q:1) , SSI=0.23/1.00 (B-C:1)

DOL LUMBER=1.00 NAIL=1.00 LS BEND=1.10 COMP=1.10 SHEAR=1.10 TENS= 1.10

COMPANION LIVE LOAD FACTOR = 1.00

TRUSS PLATE MANUFACTURER IS NOT RESPONSIBLE FOR QUALITY CONTROL IN THE TRUSS MANUFACTURING PLANT .

NAIL VALUES

| PLATE | GRIP(DRY) (PSI) MAX | MIN | SHEAR (PLI) MAX | MIN | SECTION (PLI) MAX | MIN |
|---|---|---|---|---|---|---|
| MT20 | 650 | 371 | 1747 | 788 | 1987 | 1873 |

PLATE PLACEMENT TOL. = 0.250 inches

PLATE ROTATION TOL. = 5.0 Deg.

JSI GRIP= 0.90 (G) (INPUT = 0.90 )
JSI METAL= 0.67 (P) (INPUT = 1.00 )

LICENSED PROFESSIONAL ENGINEER
I.MATIJEVIC
100528832
PROVINCE OF ONTARIO
APRIL 24, 2023

**READ ALL NOTES ON THIS PAGE AND ON THE ENGINEERING NOTES: TRUSSES. THE NOTE PAGE IS AN INTEGRAL PART OF THIS DRAWING AS IT CONTAINS SPECIFICATIONS AND CRITERIA USED IN THE DESIGN OF THIS COMPONENET.**

CITY OF RICHMOND HILL
BUILDING DIVISION
05/24/2023
RECEIVED
Per: joshua.nabua

| JOB NAME | TRUSS NAME | QUANTITY | PLY | JOB DESC. | DRWG NO. |
|---|---|---|---|---|---|
| IM0423-071 | T03 | 1 | 1 | TRUSS DESC. | |

Version 8.630 S Mar 22 2023 MiTek Industries, Inc. Fri Apr 21 14:13:42 2023 Page 1
ID:Oft3GgR1zRzAGpn6KZ87ljzYiN_-M?pnwjn59F66D2FQ2QXPQjNxEZV3QLNCrrmOI0zOUMd

Scale = 1:77.1

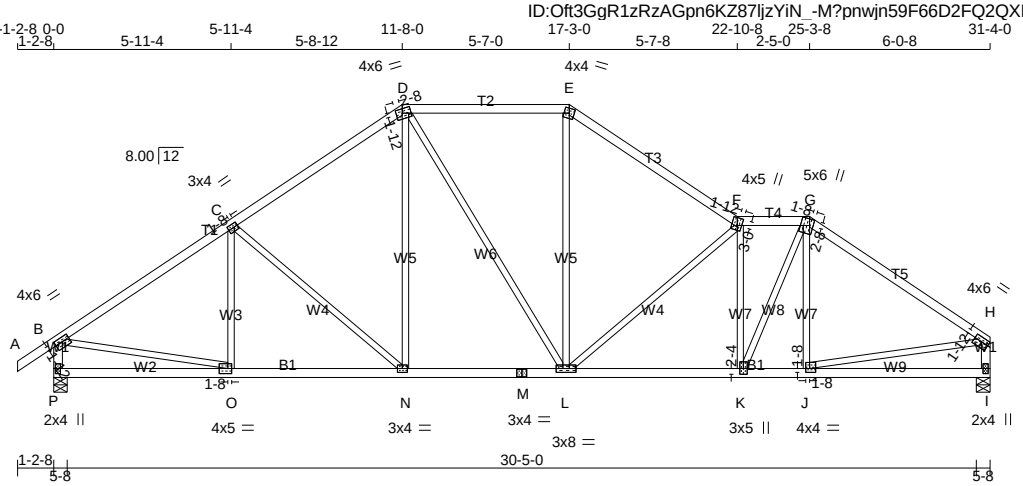


TOTAL WEIGHT = 140 lb
[M][F]

**LUMBER**
N. L. G. A. RULES

| CHORDS | SIZE | | LUMBER | DESCR. |
|---|---|---|---|---|
| A - D | 2x4 | DRY | No.2 | SPF |
| D - E | 2x4 | DRY | No.2 | SPF |
| E - F | 2x4 | DRY | No.2 | SPF |
| F - G | 2x4 | DRY | No.2 | SPF |
| G - H | 2x4 | DRY | No.2 | SPF |
| P - B | 2x4 | DRY | No.2 | SPF |
| I - H | 2x4 | DRY | No.2 | SPF |
| P - M | 2x4 | DRY | No.2 | SPF |
| M - I | 2x4 | DRY | No.2 | SPF |
| ALL WEBS EXCEPT | 2x3 | DRY | No.2 | SPF |

DRY: SEASONED LUMBER.

**PLATES (table is in inches)**

| JT | TYPE | PLATES | W | LEN | Y | X |
|---|---|---|---|---|---|---|
| B | TMVW-t | MT20 | 4.0 | 6.0 | 1.75 | 3.00 |
| C | TMWW-t | MT20 | 3.0 | 4.0 | 1.50 | 1.50 |
| D | TTWW-m | MT20 | 4.0 | 6.0 | 1.75 | 2.50 |
| E | TTW-m | MT20 | 4.0 | 4.0 | | |
| F | TTWW+m | MT20 | 4.0 | 5.0 | 3.00 | 1.75 |
| G | TTWW+m | MT20 | 5.0 | 6.0 | 2.50 | 1.50 |
| H | TMVW-t | MT20 | 4.0 | 6.0 | 1.75 | Edge |
| I | BMV1+p | MT20 | 2.0 | 4.0 | | |
| J | BMWW-t | MT20 | 4.0 | 4.0 | 1.50 | 1.50 |
| K | BMWW+t | MT20 | 3.0 | 5.0 | 2.25 | 1.50 |
| L | BMWWW-t | MT20 | 3.0 | 8.0 | | |
| M | BS-t | MT20 | 3.0 | 4.0 | | |
| N | BMWW-t | MT20 | 3.0 | 4.0 | | |
| O | BMWW-t | MT20 | 4.0 | 5.0 | 2.00 | 1.50 |
| P | BMV1+p | MT20 | 2.0 | 4.0 | | |

Edge - INDICATES REFERENCE CORNER OF PLATE TOUCHES EDGE OF CHORD.

**DIMENSIONS, SUPPORTS AND LOADINGS SPECIFIED BY FABRICATOR TO BE VERIFIED BY BUILDING DESIGNER**

**BEARINGS**

| JT | FACTORED GROSS REACTION VERT | HORZ | MAXIMUM FACTORED GROSS REACTION DOWN | HORZ | UPLIFT | INPUT BRG IN-SX | REQRD BRG IN-SX |
|---|---|---|---|---|---|---|---|
| P | 1715 | 0 | 1715 | 0 | 0 | 5-8 | 2-1 |
| I | 1606 | 0 | 1606 | 0 | 0 | 5-8 | 1-12 |

**UNFACTORED REACTIONS**

| JT | 1ST LCASE COMBINED | MAX./MIN. COMPONENT REACTIONS SNOW | LIVE | PERM.LIVE | WIND | DEAD | SOIL |
|---|---|---|---|---|---|---|---|
| P | 1198 | 868 / 0 | 0 / 0 | 0 / 0 | 0 / 0 | 330 / 0 | 0 / 0 |
| I | 1124 | 802 / 0 | 0 / 0 | 0 / 0 | 0 / 0 | 323 / 0 | 0 / 0 |

BEARING MATERIAL TO BE SPF NO.2 OR BETTER AT JOINT(S) P, I

**BRACING**
TOP CHORD TO BE SHEATHED OR MAX. PURLIN SPACING = 4.40 FT.
MAX. UNBRACED BOTTOM CHORD LENGTH = 10.00 FT OR RIGID CEILING DIRECTLY APPLIED.

ALL PITCH BREAKS AND PERIMETER CORNER JOINTS MUST BE LATERALLY RESTRAINED.

**LOADING**
TOTAL LOAD CASES: (4)

CHORDS

| MEMB. FR-TO | MAX. FACTORED FORCE (LBS) | FACTORED VERT. LOAD (PLF) FROM | TO | LC1 | MAX CSI (LC) | MAX. UNBRAC LENGTH |
|---|---|---|---|---|---|---|
| A- B | 0 / 30 | -84.3 | -84.3 | 0.10 (1) | 10.00 | |
| B- C | -1926 / 0 | -84.3 | -84.3 | 0.46 (1) | 4.40 | |
| C- D | -1639 / 0 | -84.3 | -84.3 | 0.42 (1) | 4.73 | |
| D- E | -1417 / 0 | -84.3 | -84.3 | 0.37 (1) | 5.06 | |
| E- F | -1696 / 0 | -84.3 | -84.3 | 0.40 (1) | 4.69 | |
| F- G | -1940 / 0 | -84.3 | -84.3 | 0.10 (1) | 4.77 | |
| G- H | -1877 / 0 | -84.3 | -84.3 | 0.48 (1) | 4.41 | |
| P- B | -1669 / 0 | 0.0 | 0.0 | 0.17 (1) | 6.42 | |
| I- H | -1559 / 0 | 0.0 | 0.0 | 0.16 (1) | 6.60 | |
| P- O | 0 / 0 | -18.2 | -18.2 | 0.15 (4) | 10.00 | |
| O- N | 0 / 1629 | -18.2 | -18.2 | 0.33 (1) | 10.00 | |
| N- M | 0 / 1338 | -18.2 | -18.2 | 0.29 (1) | 10.00 | |
| M- L | 0 / 1338 | -18.2 | -18.2 | 0.29 (1) | 10.00 | |
| L- K | 0 / 1957 | -18.2 | -18.2 | 0.39 (1) | 10.00 | |
| K- J | 0 / 1557 | -18.2 | -18.2 | 0.33 (1) | 10.00 | |
| J- I | 0 / 0 | -18.2 | -18.2 | 0.14 (4) | 10.00 | |

WEBS

| MEMB. FR-TO | MAX. FACTORED FORCE (LBS) | MAX CSI (LC) |
|---|---|---|
| O- C | -164 / 58 | 0.07 (1) |
| N- D | 0 / 350 | 0.08 (1) |
| D- L | 0 / 149 | 0.03 (1) |
| L- E | 0 / 469 | 0.11 (1) |
| L- F | -728 / 0 | 0.87 (1) |
| K- F | -797 / 0 | 0.34 (1) |
| K- G | 0 / 924 | 0.21 (1) |
| J- G | -153 / 39 | 0.07 (1) |
| B- O | 0 / 1654 | 0.37 (1) |
| J- H | 0 / 1582 | 0.36 (1) |

**DESIGN CRITERIA**

SPECIFIED LOADS:

| | | | | |
|---|---|---|---|---|
| TOP CH. | LL | = | 25.6 | PSF |
| | DL | = | 3.0 | PSF |
| BOT CH. | LL | = | 0.0 | PSF |
| | DL | = | 7.3 | PSF |
| TOTAL LOAD | | = | 35.9 | PSF |

**SPACING = 24.0 IN. C/C**

LOADING IN ALL FLAT SECTIONS BASED ON A SLOPE OF 8.00/12

THIS TRUSS IS DESIGNED FOR RESIDENTIAL OR SMALL BUILDING REQUIREMENTS OF PART 9, NBCC 2015

THIS DESIGN COMPLIES WITH:
- PART 9 OF BCBC 2018 , NBC-2019AE
- PART 9 OF OBC 2012 (2019 AMENDMENT)
- CSA 086-14
- TPIC 2014

(55 % OF 31.3 P.S.F. G.S.L. PLUS 8.4 P.S.F. RAIN LOAD) EQUALS 25.6 P.S.F. SPECIFIED ROOF LIVE LOAD

ALLOWABLE DEFL.(LL)= L/360 (1.04")
CALCULATED VERT. DEFL.(LL) = L/ 999 (0.09")
ALLOWABLE DEFL.(TL)= L/360 (1.04")
CALCULATED VERT. DEFL.(TL) = L/ 999 (0.17")

CSI: TC=0.48/1.00 (G-H:1) , BC=0.39/1.00 (K-L:1) , WB=0.87/1.00 (F-L:1) , SSI=0.20/1.00 (B-C:1)

DOL LUMBER=1.00 NAIL=1.00 LS BEND=1.10 COMP=1.10 SHEAR=1.10 TENS= 1.10

COMPANION LIVE LOAD FACTOR = 1.00

TRUSS PLATE MANUFACTURER IS NOT RESPONSIBLE FOR QUALITY CONTROL IN THE TRUSS MANUFACTURING PLANT .

NAIL VALUES

| PLATE | GRIP(DRY) (PSI) MAX | MIN | SHEAR (PLI) MAX | MIN | SECTION (PLI) MAX | MIN |
|---|---|---|---|---|---|---|
| MT20 | 650 | 371 | 1747 | 788 | 1987 | 1873 |

PLATE PLACEMENT TOL. = 0.250 inches

PLATE ROTATION TOL. = 5.0 Deg.

JSI GRIP= 0.88 (B) (INPUT = 0.90 )
JSI METAL= 0.53 (J) (INPUT = 1.00 )

LICENSED PROFESSIONAL ENGINEER
I.MATIJEVIC
100528832
PROVINCE OF ONTARIO
APRIL 24, 2023

**READ ALL NOTES ON THIS PAGE AND ON THE ENGINEERING NOTES: TRUSSES. THE NOTE PAGE IS AN INTEGRAL PART OF THIS DRAWING AS IT CONTAINS SPECIFICATIONS AND CRITERIA USED IN THE DESIGN OF THIS COMPONENET.**

CITY OF RICHMOND HILL
BUILDING DIVISION
05/24/2023
RECEIVED
Per: joshua.nabua

| JOB NAME | TRUSS NAME | QUANTITY | PLY | JOB DESC. | DRWG NO. |
|---|---|---|---|---|---|
| IM0423-071 | T04 | 1 | 1 | TRUSS DESC. | |

Version 8.630 S Mar 22 2023 MiTek Industries, Inc. Fri Apr 21 14:13:42 2023 Page 1
ID:Oft3GgR1zRzAGpn6KZ87ljzYiN_-M?pnwjn59F66D2FQ2QXPQjNzdZVEQPPCrrmOI0zOUMd

Scale = 1:65.7

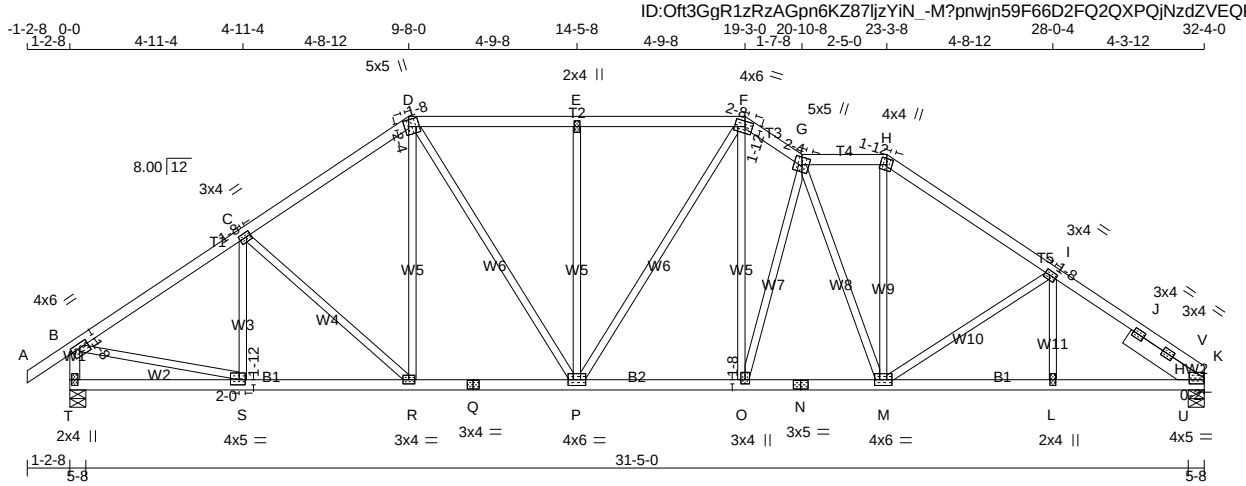


TOTAL WEIGHT = 152 lb
[M][F]

**LUMBER**
N. L. G. A. RULES

| CHORDS | SIZE | | LUMBER | DESCR. |
|---|---|---|---|---|
| A - D | 2x4 | DRY | No.2 | SPF |
| D - F | 2x4 | DRY | No.2 | SPF |
| F - G | 2x4 | DRY | No.2 | SPF |
| G - H | 2x4 | DRY | No.2 | SPF |
| H - K | 2x4 | DRY | No.2 | SPF |
| T - B | 2x4 | DRY | No.2 | SPF |
| T - Q | 2x4 | DRY | No.2 | SPF |
| Q - N | 2x4 | DRY | No.2 | SPF |
| N - K | 2x4 | DRY | No.2 | SPF |
| REINFORCING MEMBERS | | | | |
| HW2 | 2x6 | DRY | No.2 | SPF |
| ALL WEBS EXCEPT | 2x3 | DRY | No.2 | SPF |

DRY: SEASONED LUMBER.

**PLATES (table is in inches)**

| JT | TYPE | PLATES | W | LEN | Y | X |
|---|---|---|---|---|---|---|
| B | TMVW-t | MT20 | 4.0 | 6.0 | 1.50 | 3.00 |
| C | TMWW-t | MT20 | 3.0 | 4.0 | 1.50 | 1.50 |
| D | TTWW+m | MT20 | 5.0 | 5.0 | 2.25 | 1.50 |
| E | TMW+w | MT20 | 2.0 | 4.0 | | |
| F | TTWW-m | MT20 | 4.0 | 6.0 | 1.75 | 2.50 |
| G | TTWW+m | MT20 | 5.0 | 5.0 | 2.50 | 2.25 |
| H | TTW+m | MT20 | 4.0 | 4.0 | 2.00 | 1.75 |
| I | TMWW-t | MT20 | 3.0 | 4.0 | 1.50 | 1.50 |
| K | TMBMR1-l | MT20 | 4.0 | 5.0 | 2.00 | |
| K | RT-t | MT20 | 3.0 | 4.0 | | |
| K | RT-t | MT20 | 3.0 | 4.0 | | |
| L | BMW+w | MT20 | 2.0 | 4.0 | | |
| M | BMWWW-t | MT20 | 4.0 | 6.0 | | |
| N | BS-t | MT20 | 3.0 | 5.0 | | |
| O | BMWW+t | MT20 | 3.0 | 4.0 | 1.50 | 1.50 |
| P | BMWWW-t | MT20 | 4.0 | 6.0 | | |
| Q | BS-t | MT20 | 3.0 | 4.0 | | |
| R | BMWW-t | MT20 | 3.0 | 4.0 | | |
| S | BMWW-t | MT20 | 4.0 | 5.0 | 1.75 | 2.00 |
| T | BMV1+p | MT20 | 2.0 | 4.0 | | |

**DIMENSIONS, SUPPORTS AND LOADINGS SPECIFIED BY FABRICATOR TO BE VERIFIED BY BUILDING DESIGNER**

**BEARINGS**

| JT | FACTORED GROSS REACTION VERT | HORZ | MAXIMUM FACTORED GROSS REACTION DOWN | HORZ | UPLIFT | INPUT BRG | REQRD BRG |
|---|---|---|---|---|---|---|---|
| K | 1657 | 0 | 1657 | 0 | 0 | 5-8 | 1-13 |
| T | 1766 | 0 | 1766 | 0 | 0 | 5-8 | 2-4 |

**UNFACTORED REACTIONS**

| JT | 1ST LCASE COMBINED | MAX./MIN. COMPONENT REACTIONS SNOW | LIVE | PERM.LIVE | WIND | DEAD | SOIL |
|---|---|---|---|---|---|---|---|
| K | 1160 | 827 / 0 | 0 / 0 | 0 / 0 | 0 / 0 | 333 / 0 | 0 / 0 |
| T | 1234 | 893 / 0 | 0 / 0 | 0 / 0 | 0 / 0 | 341 / 0 | 0 / 0 |

BEARING MATERIAL TO BE SPF NO.2 OR BETTER AT JOINT(S) K, T

**BRACING**
TOP CHORD TO BE SHEATHED OR MAX. PURLIN SPACING = 4.44 FT.
MAX. UNBRACED BOTTOM CHORD LENGTH = 10.00 FT OR RIGID CEILING DIRECTLY APPLIED.

ALL PITCH BREAKS AND PERIMETER CORNER JOINTS MUST BE LATERALLY RESTRAINED.

**LOADING**
TOTAL LOAD CASES: (4)

CHORDS

| MEMB. FR-TO | MAX. FACTORED FORCE (LBS) | FACTORED VERT. LOAD (PLF) FROM | TO | LC1 CSI (LC) | MAX UNBRAC LENGTH |
|---|---|---|---|---|---|
| A- B | 0 / 30 | -84.3 | -84.3 | 0.10 (1) | 10.00 |
| B- C | -1975 / 0 | -84.3 | -84.3 | 0.31 (1) | 4.53 |
| C- D | -1834 / 0 | -84.3 | -84.3 | 0.30 (1) | 4.68 |
| D- E | -1800 / 0 | -84.3 | -84.3 | 0.28 (1) | 4.71 |
| E- F | -1800 / 0 | -84.3 | -84.3 | 0.28 (1) | 4.71 |
| F- G | -2062 / 0 | -84.3 | -84.3 | 0.07 (1) | 4.68 |
| G- H | -1702 / 0 | -84.3 | -84.3 | 0.09 (1) | 5.04 |
| H- I | -2042 / 0 | -84.3 | -84.3 | 0.33 (1) | 4.44 |
| I- J | -1888 / 0 | -84.3 | -84.3 | 0.27 (1) | 4.63 |
| J- V | -1888 / 0 | -84.3 | -84.3 | 0.27 (1) | 4.63 |
| V- K | -2215 / 0 | -84.3 | -84.3 | 0.12 (1) | 4.50 |
| T- B | -1726 / 0 | 0.0 | 0.0 | 0.18 (1) | 6.33 |
| T- S | 0 / 0 | -18.2 | -18.2 | 0.10 (4) | 10.00 |
| S- R | 0 / 1665 | -18.2 | -18.2 | 0.31 (1) | 10.00 |
| R- Q | 0 / 1505 | -18.2 | -18.2 | 0.29 (1) | 10.00 |
| Q- P | 0 / 1505 | -18.2 | -18.2 | 0.29 (1) | 10.00 |
| P- O | 0 / 1726 | -18.2 | -18.2 | 0.32 (1) | 10.00 |
| O- N | 0 / 1913 | -18.2 | -18.2 | 0.36 (1) | 10.00 |
| N- M | 0 / 1913 | -18.2 | -18.2 | 0.36 (1) | 10.00 |
| M- L | 0 / 1934 | -18.2 | -18.2 | 0.38 (1) | 10.00 |
| L- U | 0 / 1934 | -18.2 | -18.2 | 0.44 (1) | 10.00 |
| U- K | 0 / 1298 | -18.2 | -18.2 | 0.34 (1) | 10.00 |

WEBS

| MEMB. FR-TO | MAX. FACTORED FORCE (LBS) | MAX CSI (LC) |
|---|---|---|
| S- C | -253 / 15 | 0.08 (1) |
| R- D | 0 / 233 | 0.05 (1) |
| D- P | 0 / 548 | 0.12 (1) |
| P- E | -488 / 0 | 0.55 (1) |
| P- F | 0 / 137 | 0.03 (1) |
| O- F | 0 / 800 | 0.18 (1) |
| O- G | -757 / 0 | 0.61 (1) |
| G- M | -620 / 0 | 0.54 (1) |
| M- H | 0 / 848 | 0.19 (1) |
| M- I | -296 / 0 | 0.17 (1) |
| L- I | 0 / 79 | 0.03 (4) |
| B- S | 0 / 1700 | 0.38 (1) |
| U- V | 0 / 1028 | 0.00 (1) |
| U- J | -1013 / 0 | 0.08 (1) |

**DESIGN CRITERIA**

SPECIFIED LOADS:

| | | | | |
|---|---|---|---|---|
| TOP CH. | LL | = | 25.6 | PSF |
| | DL | = | 3.0 | PSF |
| BOT CH. | LL | = | 0.0 | PSF |
| | DL | = | 7.3 | PSF |
| TOTAL LOAD | | = | 35.9 | PSF |

**SPACING = 24.0 IN. C/C**

LOADING IN ALL FLAT SECTIONS BASED ON A SLOPE OF 8.00/12

THIS TRUSS IS DESIGNED FOR RESIDENTIAL OR SMALL BUILDING REQUIREMENTS OF PART 9, NBCC 2015

THIS DESIGN COMPLIES WITH:
- PART 9 OF BCBC 2018 , NBC-2019AE
- PART 9 OF OBC 2012 (2019 AMENDMENT)
- CSA 086-14
- TPIC 2014

(55 % OF 31.3 P.S.F. G.S.L. PLUS 8.4 P.S.F. RAIN LOAD) EQUALS 25.6 P.S.F. SPECIFIED ROOF LIVE LOAD

ALLOWABLE DEFL.(LL)= L/360 (1.08")
CALCULATED VERT. DEFL.(LL) = L/ 999 (0.10")
ALLOWABLE DEFL.(TL)= L/360 (1.08")
CALCULATED VERT. DEFL.(TL) = L/ 999 (0.19")

CSI: TC=0.33/1.00 (H-I:1) , BC=0.44/1.00 (L-U:1) , WB=0.61/1.00 (G-O:1) , SSI=0.19/1.00 (D-E:1)

DOL LUMBER=1.00 NAIL=1.00 LS BEND=1.10 COMP=1.10 SHEAR=1.10 TENS= 1.10

COMPANION LIVE LOAD FACTOR = 1.00

TRUSS PLATE MANUFACTURER IS NOT RESPONSIBLE FOR QUALITY CONTROL IN THE TRUSS MANUFACTURING PLANT .

NAIL VALUES

| PLATE | GRIP(DRY) (PSI) MAX | MIN | SHEAR (PLI) MAX | MIN | SECTION (PLI) MAX | MIN |
|---|---|---|---|---|---|---|
| MT20 | 650 | 371 | 1747 | 788 | 1987 | 1873 |

PLATE PLACEMENT TOL. = 0.250 inches

PLATE ROTATION TOL. = 5.0 Deg.

JSI GRIP= 0.90 (S) (INPUT = 0.90 )
JSI METAL= 0.57 (N) (INPUT = 1.00 )

LICENSED PROFESSIONAL ENGINEER
I.MATIJEVIC
100528832
PROVINCE OF ONTARIO
APRIL 24, 2023

**READ ALL NOTES ON THIS PAGE AND ON THE ENGINEERING NOTES: TRUSSES. THE NOTE PAGE IS AN INTEGRAL PART OF THIS DRAWING AS IT CONTAINS SPECIFICATIONS AND CRITERIA USED IN THE DESIGN OF THIS COMPONENET.**

CITY OF RICHMOND HILL
BUILDING DIVISION
05/24/2023
KOTT
RECEIVED
Per: joshua.nabua

| JOB NAME | TRUSS NAME | QUANTITY | PLY | JOB DESC. | DRWG NO. |
|---|---|---|---|---|---|
| IM0423-071 | T05 | 1 | 1 | TRUSS DESC. | |

Version 8.630 S Mar 22 2023 MiTek Industries, Inc. Fri Apr 21 14:13:43 2023 Page 1
ID:Oft3GgR1zRzAGpn6KZ87ljzYiN_-qBNA83ojwZEzqCqdc72ezxv0xzrQ9qWM4VVxqSzOUMc

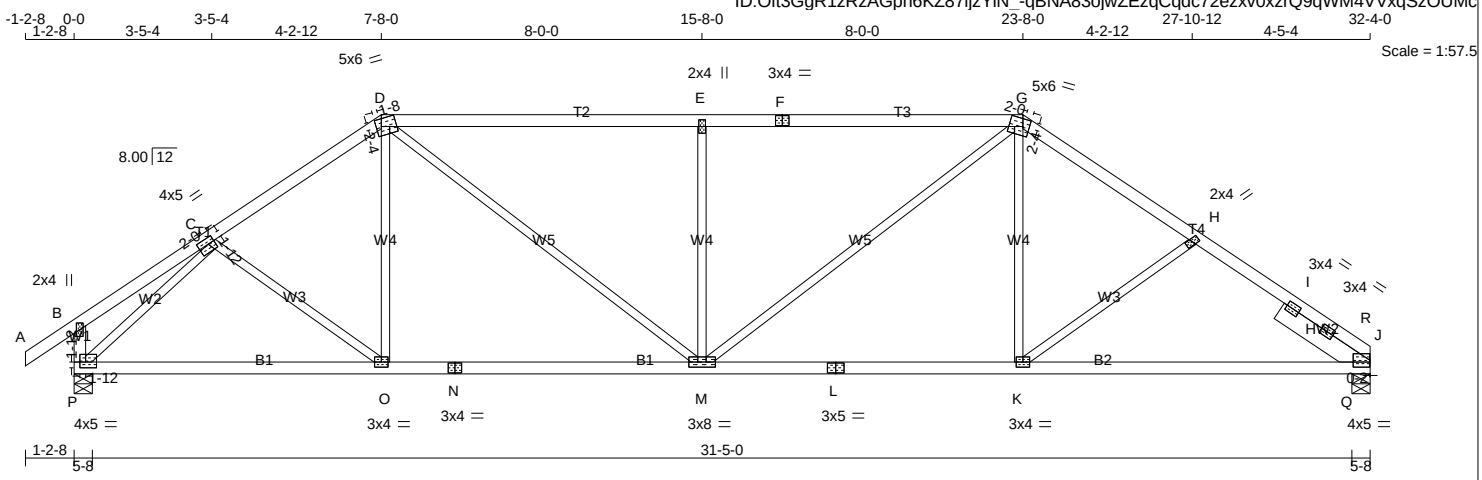


TOTAL WEIGHT = 127 lb
[M][F]

**LUMBER**
N. L. G. A. RULES

| CHORDS | SIZE | | LUMBER | DESCR. |
|---|---|---|---|---|
| A - D | 2x4 | DRY | No.2 | SPF |
| D - F | 2x4 | DRY | No.2 | SPF |
| F - G | 2x4 | DRY | No.2 | SPF |
| G - J | 2x4 | DRY | No.2 | SPF |
| P - B | 2x4 | DRY | No.2 | SPF |
| P - N | 2x4 | DRY | No.2 | SPF |
| N - L | 2x4 | DRY | No.2 | SPF |
| L - J | 2x4 | DRY | No.2 | SPF |
| REINFORCING MEMBERS | | | | |
| HW2 | 2x6 | DRY | No.2 | SPF |
| ALL WEBS EXCEPT | 2x3 | DRY | No.2 | SPF |

DRY: SEASONED LUMBER.

**PLATES (table is in inches)**

| JT | TYPE | PLATES | W | LEN | Y | X |
|---|---|---|---|---|---|---|
| B | TMV+p | MT20 | 2.0 | 4.0 | | |
| C | TMWW-t | MT20 | 4.0 | 5.0 | 1.75 | 2.00 |
| D | TTWW-m | MT20 | 5.0 | 6.0 | 2.25 | 1.50 |
| E | TMW+w | MT20 | 2.0 | 4.0 | | |
| F | TS-t | MT20 | 3.0 | 4.0 | | |
| G | TTWW-m | MT20 | 5.0 | 6.0 | 2.25 | 2.00 |
| H | TMW+w | MT20 | 2.0 | 4.0 | | |
| J | TMBMR1-l | MT20 | 4.0 | 5.0 | 2.00 | |
| J | RT-t | MT20 | 3.0 | 4.0 | | |
| J | RT-t | MT20 | 3.0 | 4.0 | | |
| K | BMWW-t | MT20 | 3.0 | 4.0 | | |
| L | BS-t | MT20 | 3.0 | 5.0 | | |
| M | BMWWW-t | MT20 | 3.0 | 8.0 | | |
| N | BS-t | MT20 | 3.0 | 4.0 | | |
| O | BMWW-t | MT20 | 3.0 | 4.0 | | |
| P | BMVW1-t | MT20 | 4.0 | 5.0 | 1.75 | 1.75 |

**DIMENSIONS, SUPPORTS AND LOADINGS SPECIFIED BY FABRICATOR TO BE VERIFIED BY BUILDING DESIGNER**

**BEARINGS**

| JT | FACTORED GROSS REACTION VERT | HORZ | MAXIMUM FACTORED GROSS REACTION DOWN | HORZ | UPLIFT | INPUT BRG IN-SX | REQRD BRG IN-SX |
|---|---|---|---|---|---|---|---|
| J | 1657 | 0 | 1657 | 0 | 0 | 5-8 | 1-13 |
| P | 1766 | 0 | 1766 | 0 | 0 | 5-8 | 1-15 |

**UNFACTORED REACTIONS**

| JT | 1ST LCASE COMBINED | MAX./MIN. COMPONENT REACTIONS SNOW | LIVE | PERM.LIVE | WIND | DEAD | SOIL |
|---|---|---|---|---|---|---|---|
| J | 1160 | 827 / 0 | 0 / 0 | 0 / 0 | 0 / 0 | 333 / 0 | 0 / 0 |
| P | 1234 | 893 / 0 | 0 / 0 | 0 / 0 | 0 / 0 | 341 / 0 | 0 / 0 |

BEARING MATERIAL TO BE SPF NO.2 OR BETTER AT JOINT(S) J, P

**BRACING**
TOP CHORD TO BE SHEATHED OR MAX. PURLIN SPACING = 3.37 FT.
MAX. UNBRACED BOTTOM CHORD LENGTH = 10.00 FT OR RIGID CEILING DIRECTLY APPLIED.

ALL PITCH BREAKS AND PERIMETER CORNER JOINTS MUST BE LATERALLY RESTRAINED.

**LOADING**
TOTAL LOAD CASES: (4)

CHORDS

| MEMB. FR-TO | MAX. FACTORED FORCE (LBS) | FACTORED VERT. LOAD (PLF) FROM | TO | LC1 MAX CSI (LC) | MAX. UNBRAC LENGTH |
|---|---|---|---|---|---|
| A- B | 0 / 30 | -84.3 | -84.3 | 0.10 (1) | 10.00 |
| B- C | 0 / 23 | -84.3 | -84.3 | 0.19 (1) | 10.00 |
| C- D | -1935 / 0 | -84.3 | -84.3 | 0.23 (1) | 4.64 |
| D- E | -2288 / 0 | -84.3 | -84.3 | 0.87 (1) | 3.37 |
| E- F | -2288 / 0 | -84.3 | -84.3 | 0.87 (1) | 3.38 |
| F- G | -2288 / 0 | -84.3 | -84.3 | 0.87 (1) | 3.38 |
| G- H | -2079 / 0 | -84.3 | -84.3 | 0.28 (1) | 4.46 |
| H- I | -1896 / 0 | -84.3 | -84.3 | 0.24 (1) | 4.68 |
| I- R | -1896 / 0 | -84.3 | -84.3 | 0.24 (1) | 4.68 |
| R- J | -2230 / 0 | -84.3 | -84.3 | 0.11 (1) | 4.50 |
| P- B | -207 / 0 | 0.0 | 0.0 | 0.02 (1) | 7.81 |
| P- O | 0 / 1540 | -18.2 | -18.2 | 0.40 (1) | 10.00 |
| O- N | 0 / 1595 | -18.2 | -18.2 | 0.41 (1) | 10.00 |
| N- M | 0 / 1595 | -18.2 | -18.2 | 0.41 (1) | 10.00 |
| M- L | 0 / 1725 | -18.2 | -18.2 | 0.40 (1) | 10.00 |
| L- K | 0 / 1725 | -18.2 | -18.2 | 0.40 (1) | 10.00 |
| K- Q | 0 / 1917 | -18.2 | -18.2 | 0.45 (1) | 10.00 |
| Q- J | 0 / 1312 | -18.2 | -18.2 | 0.35 (1) | 10.00 |

WEBS

| MEMB. FR-TO | MAX. FACTORED FORCE (LBS) | MAX CSI (LC) |
|---|---|---|
| C- O | 0 / 76 | 0.03 (4) |
| O- D | 0 / 137 | 0.05 (4) |
| D- M | 0 / 875 | 0.20 (1) |
| M- E | -829 / 0 | 0.56 (1) |
| M- G | 0 / 711 | 0.16 (1) |
| K- G | 0 / 294 | 0.07 (1) |
| K- H | -246 / 0 | 0.13 (1) |
| P- C | -2151 / 0 | 0.75 (1) |
| Q- R | 0 / 991 | 0.00 (1) |
| Q- I | -951 / 0 | 0.07 (1) |

**DESIGN CRITERIA**

SPECIFIED LOADS:

| | | | | |
|---|---|---|---|---|
| TOP CH. | LL | = | 25.6 | PSF |
| | DL | = | 3.0 | PSF |
| BOT CH. | LL | = | 0.0 | PSF |
| | DL | = | 7.3 | PSF |
| TOTAL LOAD | | = | 35.9 | PSF |

**SPACING = 24.0 IN. C/C**

LOADING IN FLAT SECTION BASED ON A SLOPE OF 8.00/12

THIS TRUSS IS DESIGNED FOR RESIDENTIAL OR SMALL BUILDING REQUIREMENTS OF PART 9, NBCC 2015

THIS DESIGN COMPLIES WITH:
- PART 9 OF BCBC 2018 , NBC-2019AE
- PART 9 OF OBC 2012 (2019 AMENDMENT)
- CSA 086-14
- TPIC 2014

(55 % OF 31.3 P.S.F. G.S.L. PLUS 8.4 P.S.F. RAIN LOAD) EQUALS 25.6 P.S.F. SPECIFIED ROOF LIVE LOAD

ALLOWABLE DEFL.(LL)= L/360 (1.08")
CALCULATED VERT. DEFL.(LL) = L/ 999 (0.12")
ALLOWABLE DEFL.(TL)= L/360 (1.08")
CALCULATED VERT. DEFL.(TL) = L/ 999 (0.23")

CSI: TC=0.87/1.00 (D-E:1) , BC=0.45/1.00 (K-Q:1) , WB=0.75/1.00 (C-P:1) , SSI=0.33/1.00 (D-E:1)

DOL LUMBER=1.00 NAIL=1.00 LS BEND=1.10 COMP=1.10 SHEAR=1.10 TENS= 1.10

COMPANION LIVE LOAD FACTOR = 1.00

TRUSS PLATE MANUFACTURER IS NOT RESPONSIBLE FOR QUALITY CONTROL IN THE TRUSS MANUFACTURING PLANT .

NAIL VALUES

| PLATE | GRIP(DRY) (PSI) MAX | MIN | SHEAR (PLI) MAX | MIN | SECTION (PLI) MAX | MIN |
|---|---|---|---|---|---|---|
| MT20 | 650 | 371 | 1747 | 788 | 1987 | 1873 |

PLATE PLACEMENT TOL. = 0.250 inches

PLATE ROTATION TOL. = 5.0 Deg.

JSI GRIP= 0.90 (P) (INPUT = 0.90 )
JSI METAL= 0.63 (L) (INPUT = 1.00 )

LICENSED PROFESSIONAL ENGINEER
I.MATIJEVIC
100528832
PROVINCE OF ONTARIO
APRIL 24, 2023

**READ ALL NOTES ON THIS PAGE AND ON THE ENGINEERING NOTES: TRUSSES. THE NOTE PAGE IS AN INTEGRAL PART OF THIS DRAWING AS IT CONTAINS SPECIFICATIONS AND CRITERIA USED IN THE DESIGN OF THIS COMPONENET.**

CITY OF RICHMOND HILL
BUILDING DIVISION
05/24/2023
KOTT
RECEIVED
Per: joshua.nabua

| JOB NAME | TRUSS NAME | QUANTITY | PLY | JOB DESC. | DRWG NO. |
|---|---|---|---|---|---|
| IM0423-071 | T06 | 4 | 1 | TRUSS DESC. | |

Version 8.630 S Mar 22 2023 MiTek Industries, Inc. Fri Apr 21 14:13:44 2023 Page 1
ID:Oft3GgR1zRzAGpn6KZ87ljzYiN_-lNxYLPpLhsNqSMOpArZtV8SD1MC1uNoVJ9FVNuzOUMb

Scale = 1:93.4

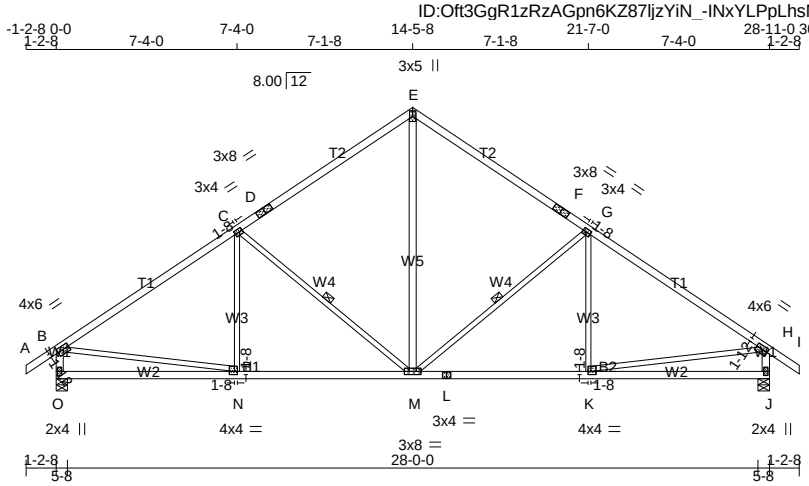


TOTAL WEIGHT = 4 X 125 = 501 lb

**LUMBER**

N. L. G. A. RULES

| CHORDS | SIZE | | LUMBER | DESCR. |
|---|---|---|---|---|
| A - D | 2x4 | DRY | No.2 | SPF |
| D - E | 2x4 | DRY | No.2 | SPF |
| E - F | 2x4 | DRY | No.2 | SPF |
| F - I | 2x4 | DRY | No.2 | SPF |
| O - B | 2x4 | DRY | No.2 | SPF |
| J - H | 2x4 | DRY | No.2 | SPF |
| O - L | 2x4 | DRY | No.2 | SPF |
| L - J | 2x4 | DRY | No.2 | SPF |
| ALL WEBS | 2x3 | DRY | No.2 | SPF |
| EXCEPT | | | | |
| M - E | 2x4 | DRY | No.2 | SPF |

DRY: SEASONED LUMBER.

**PLATES (table is in inches)**

| JT | TYPE | PLATES | W | LEN | Y | X |
|---|---|---|---|---|---|---|
| B | TMVW-t | MT20 | 4.0 | 6.0 | 1.75 | 3.00 |
| C | TMWW-t | MT20 | 3.0 | 4.0 | 1.50 | 1.50 |
| D | TS-t | MT20 | 3.0 | 8.0 | | |
| E | TTW+p | MT20 | 3.0 | 5.0 | | |
| F | TS-t | MT20 | 3.0 | 8.0 | | |
| G | TMWW-t | MT20 | 3.0 | 4.0 | 1.50 | 1.50 |
| H | TMVW-t | MT20 | 4.0 | 6.0 | 1.75 | 3.00 |
| J | BMV1+p | MT20 | 2.0 | 4.0 | | |
| K | BMWW-t | MT20 | 4.0 | 4.0 | 1.50 | 1.50 |
| L | BS-t | MT20 | 3.0 | 4.0 | | |
| M | BMWWW-t | MT20 | 3.0 | 8.0 | | |
| N | BMWW-t | MT20 | 4.0 | 4.0 | 1.50 | 1.50 |
| O | BMV1+p | MT20 | 2.0 | 4.0 | | |

**DIMENSIONS, SUPPORTS AND LOADINGS SPECIFIED BY FABRICATOR TO BE VERIFIED BY BUILDING DESIGNER**

**BEARINGS**

| JT | FACTORED GROSS REACTION VERT | HORZ | MAXIMUM FACTORED GROSS REACTION DOWN | HORZ | UPLIFT | INPUT BRG IN-SX | REQRD BRG IN-SX |
|---|---|---|---|---|---|---|---|
| O | 1591 | 0 | 1591 | 0 | 0 | 5-8 | 1-12 |
| J | 1591 | 0 | 1591 | 0 | 0 | 5-8 | 1-12 |

**UNFACTORED REACTIONS**

| JT | 1ST LCASE COMBINED | MAX./MIN. COMPONENT REACTIONS SNOW | LIVE | PERM.LIVE | WIND | DEAD | SOIL |
|---|---|---|---|---|---|---|---|
| O | 1111 | 806 / 0 | 0 / 0 | 0 / 0 | 0 / 0 | 306 / 0 | 0 / 0 |
| J | 1111 | 806 / 0 | 0 / 0 | 0 / 0 | 0 / 0 | 306 / 0 | 0 / 0 |

BEARING MATERIAL TO BE SPF NO.2 OR BETTER AT JOINT(S) O, J

**BRACING**

TOP CHORD TO BE SHEATHED OR MAX. PURLIN SPACING = 4.19 FT.
MAX. UNBRACED BOTTOM CHORD LENGTH = 10.00 FT OR RIGID CEILING DIRECTLY APPLIED.

ALL PITCH BREAKS AND PERIMETER CORNER JOINTS MUST BE LATERALLY RESTRAINED.

1 - 1x4 LATERAL BRACE(S) AT 1/ 2 LENGTH OF G-M, C-M. DBS = 20-0-0 . CBF = 76 LBS.

DBS = DIAGONAL BRACE SPACING (MAX). CBF = CUMULATIVE BRACING FORCE (PER BRACE). FASTEN LATERAL BRACE(S) USING (0.122"X3") SPIRAL NAILS : 1 NAIL FOR 2x3 BRACE(S), 2 FOR 1x4, 2x4, 2x5, 3 FOR 2x6, 4 FOR 2x8, 5 FOR 2x10, AND 6 FOR 2x12.

END VERTICAL(S) MUST BE SHEATHED OR HAVE BRACES AS INDICATED IN THE MAX. UNBRACED LENGTH COLUMN OF THE TABLE BELOW

**LOADING**

TOTAL LOAD CASES: (4)

CHORDS

| MEMB. FR-TO | MAX. FACTORED FORCE (LBS) | FACTORED VERT. LOAD (PLF) FROM | TO | LC1 MAX CSI (LC) | MAX. UNBRAC LENGTH |
|---|---|---|---|---|---|
| A- B | 0 / 30 | -84.3 | -84.3 | 0.10 (1) | 10.00 |
| B- C | -1734 / 0 | -84.3 | -84.3 | 0.72 (1) | 4.19 |
| C- D | -1257 / 0 | -84.3 | -84.3 | 0.64 (1) | 4.85 |
| D- E | -1257 / 0 | -84.3 | -84.3 | 0.64 (1) | 4.85 |
| E- F | -1257 / 0 | -84.3 | -84.3 | 0.64 (1) | 4.85 |
| F- G | -1257 / 0 | -84.3 | -84.3 | 0.64 (1) | 4.85 |
| G- H | -1734 / 0 | -84.3 | -84.3 | 0.72 (1) | 4.19 |
| H- I | 0 / 30 | -84.3 | -84.3 | 0.10 (1) | 10.00 |
| O- B | -1536 / 0 | 0.0 | 0.0 | 0.16 (1) | 6.64 |
| J- H | -1536 / 0 | 0.0 | 0.0 | 0.16 (1) | 6.64 |
| O- N | 0 / 0 | -18.2 | -18.2 | 0.23 (4) | 10.00 |
| N- M | 0 / 1477 | -18.2 | -18.2 | 0.36 (1) | 10.00 |
| M- L | 0 / 1477 | -18.2 | -18.2 | 0.36 (1) | 10.00 |
| L- K | 0 / 1477 | -18.2 | -18.2 | 0.36 (1) | 10.00 |
| K- J | 0 / 0 | -18.2 | -18.2 | 0.23 (4) | 10.00 |

WEBS

| MEMB. FR-TO | MAX. FACTORED FORCE (LBS) | MAX CSI (LC) |
|---|---|---|
| M- E | 0 / 899 | 0.14 (1) |
| M- G | -606 / 0 | 0.36 (1) |
| K- G | -60 / 110 | 0.04 (4) |
| C- M | -606 / 0 | 0.36 (1) |
| N- C | -60 / 110 | 0.04 (4) |
| B- N | 0 / 1491 | 0.34 (1) |
| K- H | 0 / 1491 | 0.34 (1) |

**DESIGN CRITERIA**

SPECIFIED LOADS:

| | | | | | |
|---|---|---|---|---|---|
| TOP | CH. | LL | = | 25.6 | PSF |
| | | DL | = | 3.0 | PSF |
| BOT | CH. | LL | = | 0.0 | PSF |
| | | DL | = | 7.3 | PSF |
| TOTAL | LOAD | | = | 35.9 | PSF |

**SPACING = 24.0 IN. C/C**

THIS TRUSS IS DESIGNED FOR RESIDENTIAL OR SMALL BUILDING REQUIREMENTS OF PART 9, NBCC 2015

THIS DESIGN COMPLIES WITH:
- PART 9 OF BCBC 2018 , NBC-2019AE
- PART 9 OF OBC 2012 (2019 AMENDMENT)
- CSA 086-14
- TPIC 2014

(55 % OF 31.3 P.S.F. G.S.L. PLUS 8.4 P.S.F. RAIN LOAD) EQUALS 25.6 P.S.F. SPECIFIED ROOF LIVE LOAD

ALLOWABLE DEFL.(LL)= L/360 (0.96")
CALCULATED VERT. DEFL.(LL) = L/ 999 (0.07")
ALLOWABLE DEFL.(TL)= L/360 (0.96")
CALCULATED VERT. DEFL.(TL) = L/ 999 (0.13")

CSI: TC=0.72/1.00 (B-C:1) , BC=0.36/1.00 (K-M:1) , WB=0.36/1.00 (G-M:1) , SSI=0.25/1.00 (B-C:1)

DOL LUMBER=1.00 NAIL=1.00 LS BEND=1.10 COMP=1.10 SHEAR=1.10 TENS= 1.10

COMPANION LIVE LOAD FACTOR = 1.00

TRUSS PLATE MANUFACTURER IS NOT RESPONSIBLE FOR QUALITY CONTROL IN THE TRUSS MANUFACTURING PLANT .

NAIL VALUES

| PLATE | GRIP(DRY) (PSI) MAX | MIN | SHEAR (PLI) MAX | MIN | SECTION (PLI) MAX | MIN |
|---|---|---|---|---|---|---|
| MT20 | 650 | 371 | 1747 | 788 | 1987 | 1873 |

PLATE PLACEMENT TOL. = 0.250 inches

PLATE ROTATION TOL. = 5.0 Deg.

JSI GRIP= 0.85 (M) (INPUT = 0.90 )
JSI METAL= 0.50 (K) (INPUT = 1.00 )

LICENSED PROFESSIONAL ENGINEER
I.MATIJEVIC
100528832
PROVINCE OF ONTARIO
APRIL 24, 2023

**READ ALL NOTES ON THIS PAGE AND ON THE ENGINEERING NOTES: TRUSSES. THE NOTE PAGE IS AN INTEGRAL PART OF THIS DRAWING AS IT CONTAINS SPECIFICATIONS AND CRITERIA USED IN THE DESIGN OF THIS COMPONENET.**

CITY OF RICHMOND HILL
BUILDING DIVISION
05/24/2023
RECEIVED
Per: joshua.nabua

| JOB NAME | TRUSS NAME | QUANTITY | PLY | JOB DESC. | DRWG NO. |
|---|---|---|---|---|---|
| IM0423-071 | T07 | 1 | 1 | TRUSS DESC. | |

Version 8.630 S Mar 22 2023 MiTek Industries, Inc. Fri Apr 21 14:13:45 2023 Page 1
ID:Oft3GgR1zRzAGpn6KZ87ljzYiN_-maUwYkqzSAVh4Wz?jY462M?PDmXidqsfXp_2vKzOUMa

Scale = 1:89.1

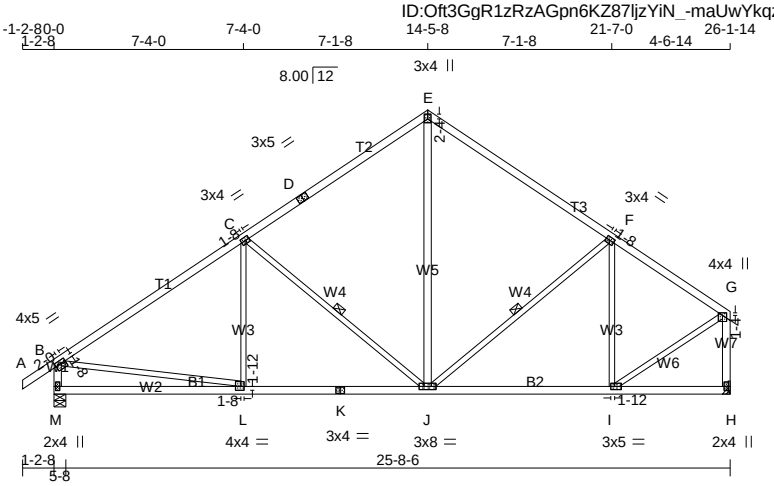


TOTAL WEIGHT = 117 lb
[M][F]

**LUMBER**
N. L. G. A. RULES

| CHORDS | SIZE | | LUMBER | DESCR. |
|---|---|---|---|---|
| A - D | 2x4 | DRY | No.2 | SPF |
| D - E | 2x4 | DRY | No.2 | SPF |
| E - G | 2x4 | DRY | No.2 | SPF |
| M - B | 2x4 | DRY | No.2 | SPF |
| H - G | 2x4 | DRY | No.2 | SPF |
| M - K | 2x4 | DRY | No.2 | SPF |
| K - H | 2x4 | DRY | No.2 | SPF |
| ALL WEBS | 2x3 | DRY | No.2 | SPF |
| EXCEPT | | | | |
| J - E | 2x4 | DRY | No.2 | SPF |

DRY: SEASONED LUMBER.

**PLATES (table is in inches)**

| JT | TYPE | PLATES | W | LEN | Y | X |
|---|---|---|---|---|---|---|
| B | TMVW-t | MT20 | 4.0 | 5.0 | 1.50 | 2.00 |
| C | TMWW-t | MT20 | 3.0 | 4.0 | 1.50 | 1.50 |
| D | TS-t | MT20 | 3.0 | 5.0 | | |
| E | TTW+p | MT20 | 3.0 | 4.0 | 2.25 | 1.50 |
| F | TMWW-t | MT20 | 3.0 | 4.0 | 1.50 | 1.50 |
| G | TMVW+p | MT20 | 4.0 | 4.0 | 1.25 | 2.00 |
| H | BMV1+p | MT20 | 2.0 | 4.0 | | |
| I | BMWW-t | MT20 | 3.0 | 5.0 | 1.50 | 1.75 |
| J | BMWWW-t | MT20 | 3.0 | 8.0 | | |
| K | BS-t | MT20 | 3.0 | 4.0 | | |
| L | BMWW-t | MT20 | 4.0 | 4.0 | 1.75 | 1.50 |
| M | BMV1+p | MT20 | 2.0 | 4.0 | | |

**DIMENSIONS, SUPPORTS AND LOADINGS SPECIFIED BY FABRICATOR TO BE VERIFIED BY BUILDING DESIGNER**

**BEARINGS**

| JT | FACTORED GROSS REACTION VERT | HORZ | MAXIMUM FACTORED GROSS REACTION DOWN | HORZ | UPLIFT | INPUT BRG | REQRD BRG |
|---|---|---|---|---|---|---|---|
| M | 1449 | 0 | 1449 | 0 | 0 | 5-8 | 1-9 |
| H | 1341 | 0 | 1341 | 0 | 0 | MECHANICAL | IN-SX |

A SUITABLE HANGER/MECHANICAL CONNECTION IS REQUIRED AT JOINT H. MINIMUM BEARING LENGTH AT JOINT H = 1-8.

**UNFACTORED REACTIONS**

| JT | 1ST LCASE COMBINED | SNOW | LIVE | PERM.LIVE | WIND | DEAD | SOIL |
|---|---|---|---|---|---|---|---|
| | | MAX./MIN. COMPONENT REACTIONS | | | | | |
| M | 1012 | 735 / 0 | 0 / 0 | 0 / 0 | 0 / 0 | 277 / 0 | 0 / 0 |
| H | 939 | 669 / 0 | 0 / 0 | 0 / 0 | 0 / 0 | 269 / 0 | 0 / 0 |

BEARING MATERIAL TO BE SPF NO.2 OR BETTER AT JOINT(S) M

**BRACING**

TOP CHORD TO BE SHEATHED OR MAX. PURLIN SPACING = 4.44 FT.
MAX. UNBRACED BOTTOM CHORD LENGTH = 10.00 FT OR RIGID CEILING DIRECTLY APPLIED.

ALL PITCH BREAKS AND PERIMETER CORNER JOINTS MUST BE LATERALLY RESTRAINED.

1 - 1x4 LATERAL BRACE(S) AT 1/ 2 LENGTH OF C-J, F-J. DBS = 20-0-0 . CBF = 78 LBS.

DBS = DIAGONAL BRACE SPACING (MAX). CBF = CUMULATIVE BRACING FORCE (PER BRACE). FASTEN LATERAL BRACE(S) USING (0.122"X3") SPIRAL NAILS : 1 NAIL FOR 2x3 BRACE(S), 2 FOR 1x4, 2x4, 2x5, 3 FOR 2x6, 4 FOR 2x8, 5 FOR 2x10, AND 6 FOR 2x12.

END VERTICAL(S) MUST BE SHEATHED OR HAVE BRACES AS INDICATED IN THE MAX. UNBRACED LENGTH COLUMN OF THE TABLE BELOW

**LOADING**

TOTAL LOAD CASES: (4)

CHORDS

| MEMB. FR-TO | MAX. FACTORED FORCE (LBS) | FACTORED VERT. LOAD (PLF) FROM | TO | LC1 MAX CSI (LC) | MAX. UNBRAC LENGTH |
|---|---|---|---|---|---|
| A- B | 0 / 30 | -84.3 | -84.3 | 0.10 (1) | 10.00 |
| B- C | -1524 / 0 | -84.3 | -84.3 | 0.69 (1) | 4.44 |
| C- D | -1027 / 0 | -84.3 | -84.3 | 0.62 (1) | 5.26 |
| D- E | -1027 / 0 | -84.3 | -84.3 | 0.62 (1) | 5.26 |
| E- F | -1017 / 0 | -84.3 | -84.3 | 0.55 (1) | 5.44 |
| F- G | -1072 / 0 | -84.3 | -84.3 | 0.44 (1) | 5.49 |
| M- B | -1394 / 0 | 0.0 | 0.0 | 0.14 (1) | 6.90 |
| H- G | -1312 / 0 | 0.0 | 0.0 | 0.23 (1) | 7.06 |
| M- L | 0 / 0 | -18.2 | -18.2 | 0.23 (4) | 10.00 |
| L- K | 0 / 1302 | -18.2 | -18.2 | 0.33 (1) | 10.00 |
| K- J | 0 / 1302 | -18.2 | -18.2 | 0.33 (1) | 10.00 |
| J- I | 0 / 933 | -18.2 | -18.2 | 0.25 (1) | 10.00 |
| I- H | 0 / 0 | -18.2 | -18.2 | 0.15 (4) | 10.00 |

WEBS

| MEMB. FR-TO | MAX. FACTORED FORCE (LBS) | MAX CSI (LC) |
|---|---|---|
| L- C | -37 / 115 | 0.04 (4) |
| C- J | -627 / 0 | 0.37 (1) |
| J- E | 0 / 625 | 0.10 (1) |
| J- F | -147 / 0 | 0.09 (1) |
| I- F | -468 / 0 | 0.29 (1) |
| B- L | 0 / 1314 | 0.30 (1) |
| I- G | 0 / 1101 | 0.25 (1) |

**DESIGN CRITERIA**

SPECIFIED LOADS:

| | | | | | |
|---|---|---|---|---|---|
| TOP | CH. | LL | = | 25.6 | PSF |
| | | DL | = | 3.0 | PSF |
| BOT | CH. | LL | = | 0.0 | PSF |
| | | DL | = | 7.3 | PSF |
| TOTAL | LOAD | | = | 35.9 | PSF |

**SPACING = 24.0 IN. C/C**

THIS TRUSS IS DESIGNED FOR RESIDENTIAL OR SMALL BUILDING REQUIREMENTS OF PART 9, NBCC 2015

THIS DESIGN COMPLIES WITH:
- PART 9 OF BCBC 2018 , NBC-2019AE
- PART 9 OF OBC 2012 (2019 AMENDMENT)
- CSA 086-14
- TPIC 2014

(55 % OF 31.3 P.S.F. G.S.L. PLUS 8.4 P.S.F. RAIN LOAD) EQUALS 25.6 P.S.F. SPECIFIED ROOF LIVE LOAD

ALLOWABLE DEFL.(LL)= L/360 (0.87")
CALCULATED VERT. DEFL.(LL) = L/ 999 (0.05")
ALLOWABLE DEFL.(TL)= L/360 (0.87")
CALCULATED VERT. DEFL.(TL) = L/ 999 (0.12")

CSI: TC=0.69/1.00 (B-C:1) , BC=0.33/1.00 (J-L:1) , WB=0.37/1.00 (C-J:1) , SSI=0.25/1.00 (B-C:1)

DOL LUMBER=1.00 NAIL=1.00 LS BEND=1.10 COMP=1.10 SHEAR=1.10 TENS= 1.10

COMPANION LIVE LOAD FACTOR = 1.00

TRUSS PLATE MANUFACTURER IS NOT RESPONSIBLE FOR QUALITY CONTROL IN THE TRUSS MANUFACTURING PLANT .

NAIL VALUES

| PLATE | GRIP(DRY) (PSI) MAX | MIN | SHEAR (PLI) MAX | MIN | SECTION (PLI) MAX | MIN |
|---|---|---|---|---|---|---|
| MT20 | 650 | 371 | 1747 | 788 | 1987 | 1873 |

PLATE PLACEMENT TOL. = 0.250 inches

PLATE ROTATION TOL. = 5.0 Deg.

JSI GRIP= 0.89 (B) (INPUT = 0.90 )
JSI METAL= 0.50 (B) (INPUT = 1.00 )

LICENSED PROFESSIONAL ENGINEER
I.MATIJEVIC
100528832
PROVINCE OF ONTARIO
APRIL 24, 2023

**READ ALL NOTES ON THIS PAGE AND ON THE ENGINEERING NOTES: TRUSSES. THE NOTE PAGE IS AN INTEGRAL PART OF THIS DRAWING AS IT CONTAINS SPECIFICATIONS AND CRITERIA USED IN THE DESIGN OF THIS COMPONENET.**

CITY OF RICHMOND HILL
BUILDING DIVISION
05/24/2023
RECEIVED
Per: joshua.nabua

KOTT

| JOB NAME | TRUSS NAME | QUANTITY | PLY | JOB DESC. | DRWG NO. |
|---|---|---|---|---|---|
| IM0423-071 | T08 | 1 | 1 | TRUSS DESC. | |

Version 8.630 S Mar 22 2023 MiTek Industries, Inc. Fri Apr 21 14:13:45 2023 Page 1
ID:Oft3GgR1zRzAGpn6KZ87ljzYiN_-maUwYkqzSAVh4Wz?jY462M?QUmXodq7fXp_2vKzOUMa

Scale = 1:88.7

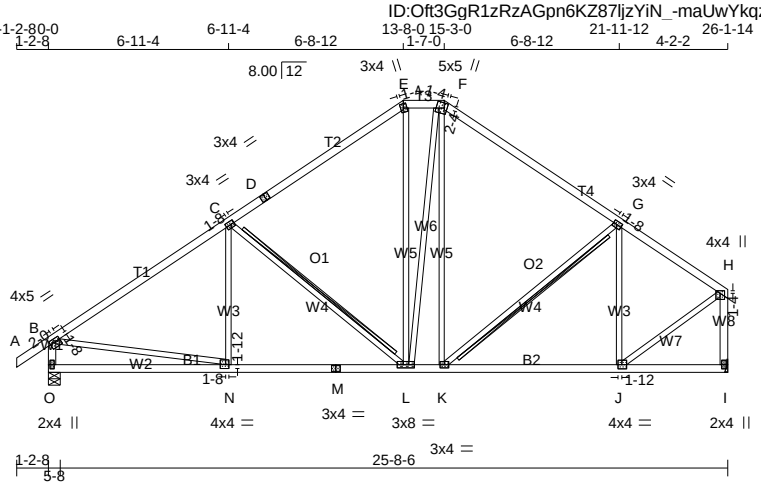


TOTAL WEIGHT = 128 lb
[M][F]

**LUMBER**
N. L. G. A. RULES

| CHORDS | SIZE | | LUMBER | DESCR. |
|---|---|---|---|---|
| A - D | 2x4 | DRY | No.2 | SPF |
| D - E | 2x4 | DRY | No.2 | SPF |
| E - F | 2x4 | DRY | No.2 | SPF |
| F - H | 2x4 | DRY | No.2 | SPF |
| O - B | 2x4 | DRY | No.2 | SPF |
| I - H | 2x4 | DRY | No.2 | SPF |
| O - M | 2x4 | DRY | No.2 | SPF |
| M - I | 2x4 | DRY | No.2 | SPF |
| ALL WEBS EXCEPT | 2x3 | DRY | No.2 | SPF |

DRY: SEASONED LUMBER.

**PLATES (table is in inches)**

| JT | TYPE | PLATES | W | LEN | Y | X |
|---|---|---|---|---|---|---|
| B | TMVW-t | MT20 | 4.0 | 5.0 | 1.50 | 2.00 |
| C | TMWW-t | MT20 | 3.0 | 4.0 | 1.50 | 1.50 |
| D | TS-t | MT20 | 3.0 | 4.0 | | |
| E | TTW+m | MT20 | 3.0 | 4.0 | 2.00 | 1.25 |
| F | TTWW+m | MT20 | 5.0 | 5.0 | 2.25 | 1.25 |
| G | TMWW-t | MT20 | 3.0 | 4.0 | 1.50 | 1.50 |
| H | TMVW+p | MT20 | 4.0 | 4.0 | 1.25 | 2.00 |
| I | BMV1+p | MT20 | 2.0 | 4.0 | | |
| J | BMWW-t | MT20 | 4.0 | 4.0 | 2.00 | 1.75 |
| K | BMWW-t | MT20 | 3.0 | 4.0 | | |
| L | BMWWW-t | MT20 | 3.0 | 8.0 | | |
| M | BS-t | MT20 | 3.0 | 4.0 | | |
| N | BMWW-t | MT20 | 4.0 | 4.0 | 1.75 | 1.50 |
| O | BMV1+p | MT20 | 2.0 | 4.0 | | |

**DIMENSIONS, SUPPORTS AND LOADINGS SPECIFIED BY FABRICATOR TO BE VERIFIED BY BUILDING DESIGNER**

**BEARINGS**

| JT | FACTORED GROSS REACTION VERT | HORZ | MAXIMUM FACTORED GROSS REACTION DOWN | HORZ | UPLIFT | INPUT BRG | REQRD BRG |
|---|---|---|---|---|---|---|---|
| O | 1449 | 0 | 1449 | 0 | 0 | IN-SX | IN-SX |
| I | 1341 | 0 | 1341 | 0 | 0 | MECHANICAL | |

A SUITABLE HANGER/MECHANICAL CONNECTION IS REQUIRED AT JOINT I. MINIMUM BEARING LENGTH AT JOINT I = 1-8.

**UNFACTORED REACTIONS**

| JT | 1ST LCASE COMBINED | MAX./MIN. COMPONENT REACTIONS SNOW | LIVE | PERM.LIVE | WIND | DEAD | SOIL |
|---|---|---|---|---|---|---|---|
| O | 1012 | 735 / 0 | 0 / 0 | 0 / 0 | 0 / 0 | 277 / 0 | 0 / 0 |
| I | 939 | 669 / 0 | 0 / 0 | 0 / 0 | 0 / 0 | 269 / 0 | 0 / 0 |

BEARING MATERIAL TO BE SPF NO.2 OR BETTER AT JOINT(S) O

**BRACING**

TOP CHORD TO BE SHEATHED OR MAX. PURLIN SPACING = 4.57 FT.
MAX. UNBRACED BOTTOM CHORD LENGTH = 10.00 FT OR RIGID CEILING DIRECTLY APPLIED.

ALL PITCH BREAKS AND PERIMETER CORNER JOINTS MUST BE LATERALLY RESTRAINED.

2x4 DRY SPF No.2 T-BRACE AT C-L, G-K

FASTEN T AND I-BRACES TO NARROW EDGE OF WEB WITH ONE ROW PER PLY OF 3" COMMON WIRE NAILS @ 6" O.C. WITH 3" MINIMUM END DISTANCE. BRACE MUST COVER 90% OF WEB LENGTH.

END VERTICAL(S) MUST BE SHEATHED OR HAVE BRACES AS INDICATED IN THE MAX. UNBRACED LENGTH COLUMN OF THE TABLE BELOW

**LOADING**

TOTAL LOAD CASES: (4)

| CHORDS MEMB. FR-TO | MAX. FACTORED FORCE (LBS) | FACTORED VERT. LOAD LC1 (PLF) FROM | TO | MAX CSI (LC) | MAX. UNBRAC LENGTH | WEBS MEMB. FR-TO | MAX. FACTORED FORCE (LBS) | MAX CSI (LC) |
|---|---|---|---|---|---|---|---|---|
| A- B | 0 / 30 | -84.3 | -84.3 | 0.10 (1) | 10.00 | N- C | -51 / 109 | 0.04 (4) |
| B- C | -1535 / 0 | -84.3 | -84.3 | 0.61 (1) | 4.57 | C- L | -580 / 0 | 0.36 (1) |
| C- D | -1077 / 0 | -84.3 | -84.3 | 0.55 (1) | 5.31 | L- E | 0 / 298 | 0.07 (1) |
| D- E | -1077 / 0 | -84.3 | -84.3 | 0.55 (1) | 5.31 | L- F | 0 / 136 | 0.03 (1) |
| E- F | -865 / 0 | -84.3 | -84.3 | 0.03 (1) | 6.25 | K- F | 0 / 133 | 0.03 (4) |
| F- G | -1045 / 0 | -84.3 | -84.3 | 0.48 (1) | 5.51 | K- G | -80 / 0 | 0.05 (1) |
| G- H | -1041 / 0 | -84.3 | -84.3 | 0.39 (1) | 5.65 | J- G | -508 / 0 | 0.28 (1) |
| O- B | -1398 / 0 | 0.0 | 0.0 | 0.14 (1) | 6.88 | B- N | 0 / 1323 | 0.30 (1) |
| I- H | -1316 / 0 | 0.0 | 0.0 | 0.23 (1) | 7.05 | J- H | 0 / 1098 | 0.25 (1) |
| O- N | 0 / 0 | -18.2 | -18.2 | 0.22 (4) | 10.00 | | | |
| N- M | 0 / 1309 | -18.2 | -18.2 | 0.32 (1) | 10.00 | | | |
| M- L | 0 / 1309 | -18.2 | -18.2 | 0.32 (1) | 10.00 | | | |
| L- K | 0 / 845 | -18.2 | -18.2 | 0.21 (1) | 10.00 | | | |
| K- J | 0 / 905 | -18.2 | -18.2 | 0.22 (1) | 10.00 | | | |
| J- I | 0 / 0 | -18.2 | -18.2 | 0.14 (4) | 10.00 | | | |

**DESIGN CRITERIA**

SPECIFIED LOADS:

| | | | | |
|---|---|---|---|---|
| TOP CH. | LL | = | 25.6 | PSF |
| | DL | = | 3.0 | PSF |
| BOT CH. | LL | = | 0.0 | PSF |
| | DL | = | 7.3 | PSF |
| TOTAL LOAD | | = | 35.9 | PSF |

**SPACING = 24.0 IN. C/C**

LOADING IN FLAT SECTION BASED ON A SLOPE OF 2.00/12 MINIMUM

THIS TRUSS IS DESIGNED FOR RESIDENTIAL OR SMALL BUILDING REQUIREMENTS OF PART 9, NBCC 2015

THIS DESIGN COMPLIES WITH:
- PART 9 OF BCBC 2018 , NBC-2019AE
- PART 9 OF OBC 2012 (2019 AMENDMENT)
- CSA 086-14
- TPIC 2014

(55 % OF 31.3 P.S.F. G.S.L. PLUS 8.4 P.S.F. RAIN LOAD) EQUALS 25.6 P.S.F. SPECIFIED ROOF LIVE LOAD

ALLOWABLE DEFL.(LL)= L/360 (0.87")
CALCULATED VERT. DEFL.(LL) = L/ 999 (0.05")
ALLOWABLE DEFL.(TL)= L/360 (0.87")
CALCULATED VERT. DEFL.(TL) = L/ 999 (0.10")

CSI: TC=0.61/1.00 (B-C:1) , BC=0.32/1.00 (L-N:1) , WB=0.36/1.00 (C-L:1) , SSI=0.23/1.00 (B-C:1)

DOL LUMBER=1.00 NAIL=1.00 LS BEND=1.10 COMP=1.10 SHEAR=1.10 TENS= 1.10

COMPANION LIVE LOAD FACTOR = 1.00

TRUSS PLATE MANUFACTURER IS NOT RESPONSIBLE FOR QUALITY CONTROL IN THE TRUSS MANUFACTURING PLANT .

NAIL VALUES

| PLATE | GRIP(DRY) (PSI) MAX | MIN | SHEAR (PLI) MAX | MIN | SECTION (PLI) MAX | MIN |
|---|---|---|---|---|---|---|
| MT20 | 650 | 371 | 1747 | 788 | 1987 | 1873 |

PLATE PLACEMENT TOL. = 0.250 inches

PLATE ROTATION TOL. = 5.0 Deg.

JSI GRIP= 0.89 (J) (INPUT = 0.90 )
JSI METAL= 0.50 (B) (INPUT = 1.00 )

LICENSED PROFESSIONAL ENGINEER
I.MATIJEVIC
100528832
PROVINCE OF ONTARIO
APRIL 24, 2023

**READ ALL NOTES ON THIS PAGE AND ON THE ENGINEERING NOTES: TRUSSES. THE NOTE PAGE IS AN INTEGRAL PART OF THIS DRAWING AS IT CONTAINS SPECIFICATIONS AND CRITERIA USED IN THE DESIGN OF THIS COMPONENET.**

CITY OF RICHMOND HILL
BUILDING DIVISION
05/24/2023
KOTT
RECEIVED
Per: joshua.nabua

| JOB NAME | TRUSS NAME | QUANTITY | PLY | JOB DESC. | DRWG NO. |
|---|---|---|---|---|---|
| IM0423-071 | T09 | 1 | 1 | TRUSS DESC. | |

Version 8.630 S Mar 22 2023 MiTek Industries, Inc. Fri Apr 21 14:13:46 2023 Page 1
ID:Oft3GgR1zRzAGpn6KZ87ljzYiN_-Em2Im4qbDUdYhgYCHGbLaZXe3AudMEpomTkbRnzOUMZ

Scale = 1:72.7

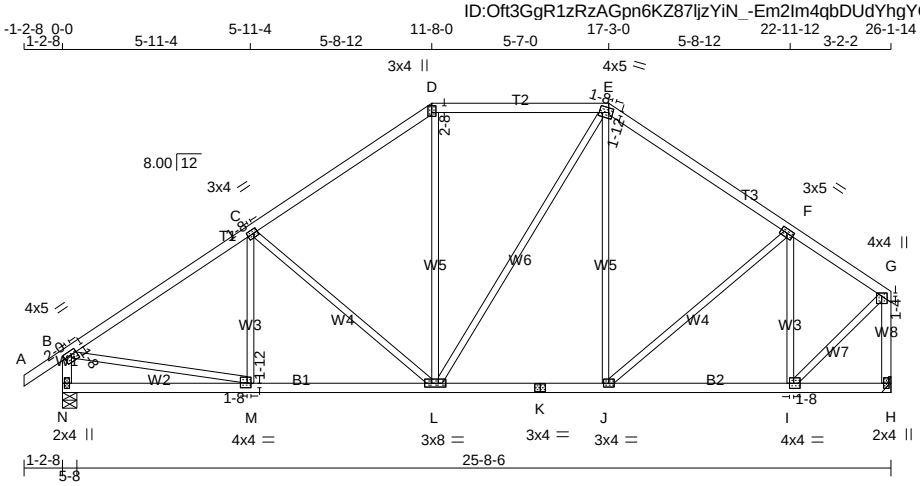


TOTAL WEIGHT = 120 lb
[M][F]

**LUMBER**
N. L. G. A. RULES

| CHORDS | SIZE | | LUMBER | DESCR. |
|---|---|---|---|---|
| A - D | 2x4 | DRY | No.2 | SPF |
| D - E | 2x4 | DRY | No.2 | SPF |
| E - G | 2x4 | DRY | No.2 | SPF |
| N - B | 2x4 | DRY | No.2 | SPF |
| H - G | 2x4 | DRY | No.2 | SPF |
| N - K | 2x4 | DRY | No.2 | SPF |
| K - H | 2x4 | DRY | No.2 | SPF |
| ALL WEBS EXCEPT | 2x3 | DRY | No.2 | SPF |

DRY: SEASONED LUMBER.

**PLATES (table is in inches)**

| JT | TYPE | PLATES | W | LEN | Y | X |
|---|---|---|---|---|---|---|
| B | TMVW-t | MT20 | 4.0 | 5.0 | 1.50 | 2.00 |
| C | TMWW-t | MT20 | 3.0 | 4.0 | 1.50 | 1.50 |
| D | TTW+p | MT20 | 3.0 | 4.0 | 2.50 | 1.50 |
| E | TTWW-m | MT20 | 4.0 | 5.0 | 1.75 | 1.50 |
| F | TMWW-t | MT20 | 3.0 | 5.0 | | |
| G | TMVW+p | MT20 | 4.0 | 4.0 | 1.25 | 2.00 |
| H | BMV1+p | MT20 | 2.0 | 4.0 | | |
| I | BMWW-t | MT20 | 4.0 | 4.0 | 2.00 | 1.50 |
| J | BMWW-t | MT20 | 3.0 | 4.0 | | |
| K | BS-t | MT20 | 3.0 | 4.0 | | |
| L | BMWWW-t | MT20 | 3.0 | 8.0 | | |
| M | BMWW-t | MT20 | 4.0 | 4.0 | 1.75 | 1.50 |
| N | BMV1+p | MT20 | 2.0 | 4.0 | | |

**DIMENSIONS, SUPPORTS AND LOADINGS SPECIFIED BY FABRICATOR TO BE VERIFIED BY BUILDING DESIGNER**

**BEARINGS**

| JT | FACTORED GROSS REACTION VERT | HORZ | MAXIMUM FACTORED GROSS REACTION DOWN | HORZ | UPLIFT | INPUT BRG | REQRD BRG |
|---|---|---|---|---|---|---|---|
| N | 1449 | 0 | 1449 | 0 | 0 | 5-8 | 1-9 |
| H | 1341 | 0 | 1341 | 0 | 0 | MECHANICAL | IN-SX |

A SUITABLE HANGER/MECHANICAL CONNECTION IS REQUIRED AT JOINT H. MINIMUM BEARING LENGTH AT JOINT H = 1-8.

**UNFACTORED REACTIONS**

| JT | 1ST LCASE COMBINED | SNOW | LIVE | PERM.LIVE | WIND | DEAD | SOIL |
|---|---|---|---|---|---|---|---|
| | | MAX./MIN. COMPONENT REACTIONS | | | | | |
| N | 1012 | 735 / 0 | 0 / 0 | 0 / 0 | 0 / 0 | 277 / 0 | 0 / 0 |
| H | 939 | 669 / 0 | 0 / 0 | 0 / 0 | 0 / 0 | 269 / 0 | 0 / 0 |

BEARING MATERIAL TO BE SPF NO.2 OR BETTER AT JOINT(S) N

**BRACING**
TOP CHORD TO BE SHEATHED OR MAX. PURLIN SPACING = 4.83 FT.
MAX. UNBRACED BOTTOM CHORD LENGTH = 10.00 FT OR RIGID CEILING DIRECTLY APPLIED.

ALL PITCH BREAKS AND PERIMETER CORNER JOINTS MUST BE LATERALLY RESTRAINED.

**LOADING**
TOTAL LOAD CASES: (4)

CHORDS

| MEMB. FR-TO | MAX. FACTORED FORCE (LBS) | FACTORED VERT. LOAD (PLF) FROM | TO | LC1 MAX CSI (LC) | MAX. UNBRAC LENGTH |
|---|---|---|---|---|---|
| A- B | 0 / 30 | -84.3 | -84.3 | 0.10 (1) | 10.00 |
| B- C | -1547 / 0 | -84.3 | -84.3 | 0.43 (1) | 4.83 |
| C- D | -1217 / 0 | -84.3 | -84.3 | 0.40 (1) | 5.33 |
| D- E | -986 / 0 | -84.3 | -84.3 | 0.35 (1) | 5.83 |
| E- F | -1106 / 0 | -84.3 | -84.3 | 0.34 (1) | 5.61 |
| F- G | -927 / 0 | -84.3 | -84.3 | 0.27 (1) | 6.08 |
| N- B | -1404 / 0 | 0.0 | 0.0 | 0.14 (1) | 6.87 |
| H- G | -1323 / 0 | 0.0 | 0.0 | 0.23 (1) | 7.03 |
| N- M | 0 / 0 | -18.2 | -18.2 | 0.15 (4) | 10.00 |
| M- L | 0 / 1314 | -18.2 | -18.2 | 0.29 (1) | 10.00 |
| L- K | 0 / 899 | -18.2 | -18.2 | 0.21 (1) | 10.00 |
| K- J | 0 / 899 | -18.2 | -18.2 | 0.21 (1) | 10.00 |
| J- I | 0 / 808 | -18.2 | -18.2 | 0.20 (1) | 10.00 |
| I- H | 0 / 0 | -18.2 | -18.2 | 0.09 (4) | 10.00 |

WEBS

| MEMB. FR-TO | MAX. FACTORED FORCE (LBS) | MAX CSI (LC) |
|---|---|---|
| C- M | -109 / 73 | 0.05 (1) |
| C- L | -436 / 0 | 0.52 (1) |
| L- D | 0 / 242 | 0.05 (1) |
| L- E | 0 / 165 | 0.04 (1) |
| J- E | 0 / 90 | 0.03 (4) |
| J- F | 0 / 119 | 0.03 (1) |
| I- F | -638 / 0 | 0.27 (1) |
| B- M | 0 / 1334 | 0.30 (1) |
| I- G | 0 / 1089 | 0.24 (1) |

**DESIGN CRITERIA**

SPECIFIED LOADS:

| | | | | |
|---|---|---|---|---|
| TOP CH. | LL | = | 25.6 | PSF |
| | DL | = | 3.0 | PSF |
| BOT CH. | LL | = | 0.0 | PSF |
| | DL | = | 7.3 | PSF |
| TOTAL LOAD | | = | 35.9 | PSF |

**SPACING = 24.0 IN. C/C**

LOADING IN FLAT SECTION BASED ON A SLOPE OF 8.00/12

THIS TRUSS IS DESIGNED FOR RESIDENTIAL OR SMALL BUILDING REQUIREMENTS OF PART 9, NBCC 2015

THIS DESIGN COMPLIES WITH:
- PART 9 OF BCBC 2018 , NBC-2019AE
- PART 9 OF OBC 2012 (2019 AMENDMENT)
- CSA 086-14
- TPIC 2014

(55 % OF 31.3 P.S.F. G.S.L. PLUS 8.4 P.S.F. RAIN LOAD) EQUALS 25.6 P.S.F. SPECIFIED ROOF LIVE LOAD

ALLOWABLE DEFL.(LL)= L/360 (0.87")
CALCULATED VERT. DEFL.(LL) = L/ 999 (0.04")
ALLOWABLE DEFL.(TL)= L/360 (0.87")
CALCULATED VERT. DEFL.(TL) = L/ 999 (0.08")

CSI: TC=0.43/1.00 (B-C:1) , BC=0.29/1.00 (L-M:1) , WB=0.52/1.00 (C-L:1) , SSI=0.20/1.00 (B-C:1)

DOL LUMBER=1.00 NAIL=1.00 LS BEND=1.10 COMP=1.10 SHEAR=1.10 TENS= 1.10

COMPANION LIVE LOAD FACTOR = 1.00

TRUSS PLATE MANUFACTURER IS NOT RESPONSIBLE FOR QUALITY CONTROL IN THE TRUSS MANUFACTURING PLANT .

NAIL VALUES

| PLATE | GRIP(DRY) (PSI) MAX | MIN | SHEAR (PLI) MAX | MIN | SECTION (PLI) MAX | MIN |
|---|---|---|---|---|---|---|
| MT20 | 650 | 371 | 1747 | 788 | 1987 | 1873 |

PLATE PLACEMENT TOL. = 0.250 inches

PLATE ROTATION TOL. = 5.0 Deg.

JSI GRIP= 0.89 (B) (INPUT = 0.90 )
JSI METAL= 0.50 (B) (INPUT = 1.00 )

LICENSED PROFESSIONAL ENGINEER
I.MATIJEVIC
100528832
PROVINCE OF ONTARIO
APRIL 24, 2023

**READ ALL NOTES ON THIS PAGE AND ON THE ENGINEERING NOTES: TRUSSES. THE NOTE PAGE IS AN INTEGRAL PART OF THIS DRAWING AS IT CONTAINS SPECIFICATIONS AND CRITERIA USED IN THE DESIGN OF THIS COMPONENET.**

CITY OF RICHMOND HILL
BUILDING DIVISION
05/24/2023
RECEIVED
Per: joshua.nabua

KOTT

| JOB NAME | TRUSS NAME | QUANTITY | PLY | JOB DESC. | DRWG NO. |
|---|---|---|---|---|---|
| IM0423-071 | T10 | 1 | 1 | TRUSS DESC. | |

Version 8.630 S Mar 22 2023 MiTek Industries, Inc. Fri Apr 21 14:13:47 2023 Page 1
ID:Oft3GgR1zRzAGpn6KZ87ljzYiN_-jycgzQrD_nlPJp7Orz6a7n4r0aEE5hhx?7T9zDzOUMY

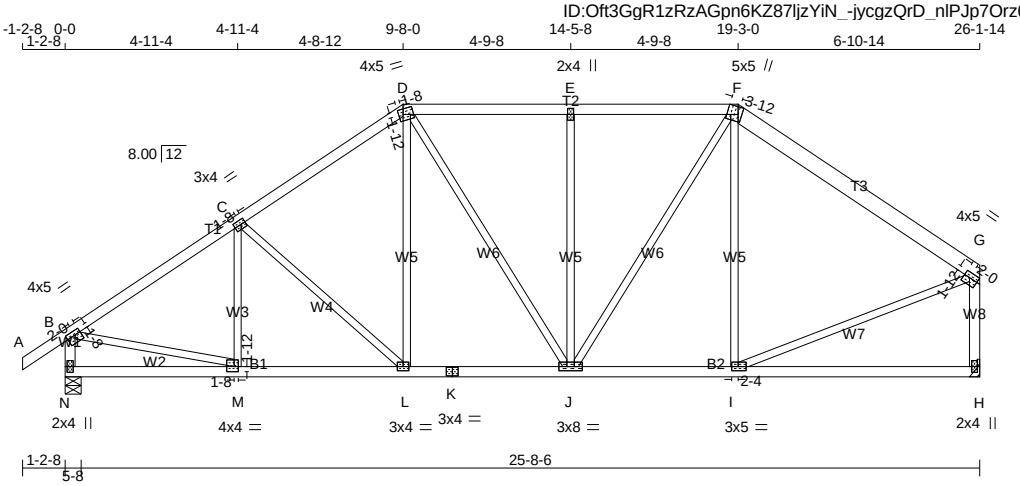


TOTAL WEIGHT = 125 lb
[M][F]

**LUMBER**
N. L. G. A. RULES

| CHORDS | SIZE | | LUMBER | DESCR. |
|---|---|---|---|---|
| A - D | 2x4 | DRY | No.2 | SPF |
| D - F | 2x4 | DRY | No.2 | SPF |
| F - G | 2x6 | DRY | No.2 | SPF |
| N - B | 2x4 | DRY | No.2 | SPF |
| H - G | 2x4 | DRY | No.2 | SPF |
| N - K | 2x4 | DRY | No.2 | SPF |
| K - H | 2x4 | DRY | No.2 | SPF |
| ALL WEBS EXCEPT | 2x3 | DRY | No.2 | SPF |

DRY: SEASONED LUMBER.

**PLATES (table is in inches)**

| JT | TYPE | PLATES | W | LEN | Y | X |
|---|---|---|---|---|---|---|
| B | TMVW-t | MT20 | 4.0 | 5.0 | 1.50 | 2.00 |
| C | TMWW-t | MT20 | 3.0 | 4.0 | 1.50 | 1.50 |
| D | TTWW-m | MT20 | 4.0 | 5.0 | 1.75 | 1.50 |
| E | TMW+w | MT20 | 2.0 | 4.0 | | |
| F | TTWW+m | MT20 | 5.0 | 5.0 | Edge | 3.75 |
| G | TMVW-t | MT20 | 4.0 | 5.0 | 1.75 | Edge |
| H | BMV1+p | MT20 | 2.0 | 4.0 | | |
| I | BMWW-t | MT20 | 3.0 | 5.0 | 1.50 | 2.25 |
| J | BMWWW-t | MT20 | 3.0 | 8.0 | | |
| K | BS-t | MT20 | 3.0 | 4.0 | | |
| L | BMWW-t | MT20 | 3.0 | 4.0 | | |
| M | BMWW-t | MT20 | 4.0 | 4.0 | 1.75 | 1.50 |
| N | BMV1+p | MT20 | 2.0 | 4.0 | | |

Edge - INDICATES REFERENCE CORNER OF PLATE TOUCHES EDGE OF CHORD.

**DIMENSIONS, SUPPORTS AND LOADINGS SPECIFIED BY FABRICATOR TO BE VERIFIED BY BUILDING DESIGNER**

**BEARINGS**

| JT | FACTORED GROSS REACTION VERT | HORZ | MAXIMUM FACTORED GROSS REACTION DOWN | HORZ | UPLIFT | INPUT BRG | REQRD BRG |
|---|---|---|---|---|---|---|---|
| N | 1449 | 0 | 1449 | 0 | 0 | 5-8 | 1-9 |
| H | 1341 | 0 | 1341 | 0 | 0 | MECHANICAL | |

A SUITABLE HANGER/MECHANICAL CONNECTION IS REQUIRED AT JOINT H. MINIMUM BEARING LENGTH AT JOINT H = 1-8.

**UNFACTORED REACTIONS**

| JT | 1ST LCASE COMBINED | MAX./MIN. COMPONENT REACTIONS SNOW | LIVE | PERM.LIVE | WIND | DEAD | SOIL |
|---|---|---|---|---|---|---|---|
| N | 1012 | 735 / 0 | 0 / 0 | 0 / 0 | 0 / 0 | 277 / 0 | 0 / 0 |
| H | 939 | 669 / 0 | 0 / 0 | 0 / 0 | 0 / 0 | 269 / 0 | 0 / 0 |

BEARING MATERIAL TO BE SPF NO.2 OR BETTER AT JOINT(S) N

**BRACING**
TOP CHORD TO BE SHEATHED OR MAX. PURLIN SPACING = 5.02 FT.
MAX. UNBRACED BOTTOM CHORD LENGTH = 10.00 FT OR RIGID CEILING DIRECTLY APPLIED.

ALL PITCH BREAKS AND PERIMETER CORNER JOINTS MUST BE LATERALLY RESTRAINED.

**LOADING**
TOTAL LOAD CASES: (4)

CHORDS

| MEMB. FR-TO | MAX. FACTORED FORCE (LBS) | FACTORED VERT. LOAD (PLF) FROM | TO | LC1 MAX CSI (LC) | MAX. UNBRAC LENGTH |
|---|---|---|---|---|---|
| A- B | 0 / 30 | -84.3 | -84.3 | 0.10 (1) | 10.00 |
| B- C | -1541 / 0 | -84.3 | -84.3 | 0.28 (1) | 5.02 |
| C- D | -1343 / 0 | -84.3 | -84.3 | 0.27 (1) | 5.30 |
| D- E | -1188 / 0 | -84.3 | -84.3 | 0.26 (1) | 5.57 |
| E- F | -1187 / 0 | -84.3 | -84.3 | 0.26 (1) | 5.57 |
| F- G | -1124 / 0 | -84.3 | -84.3 | 0.26 (1) | 6.25 |
| N- B | -1410 / 0 | 0.0 | 0.0 | 0.14 (1) | 6.87 |
| H- G | -1288 / 0 | 0.0 | 0.0 | 0.21 (1) | 7.11 |
| N- M | 0 / 0 | -18.2 | -18.2 | 0.10 (4) | 10.00 |
| M- L | 0 / 1304 | -18.2 | -18.2 | 0.26 (1) | 10.00 |
| L- K | 0 / 1097 | -18.2 | -18.2 | 0.23 (1) | 10.00 |
| K- J | 0 / 1097 | -18.2 | -18.2 | 0.23 (1) | 10.00 |
| J- I | 0 / 928 | -18.2 | -18.2 | 0.26 (1) | 10.00 |
| I- H | 0 / 0 | -18.2 | -18.2 | 0.19 (4) | 10.00 |

WEBS

| MEMB. FR-TO | MAX. FACTORED FORCE (LBS) | MAX CSI (LC) |
|---|---|---|
| M- C | -177 / 35 | 0.06 (1) |
| C- L | -283 / 0 | 0.21 (1) |
| L- D | 0 / 282 | 0.06 (1) |
| D- J | 0 / 169 | 0.04 (1) |
| J- E | -480 / 0 | 0.54 (1) |
| J- F | 0 / 480 | 0.11 (1) |
| I- F | -234 / 41 | 0.27 (1) |
| B- M | 0 / 1332 | 0.30 (1) |
| I- G | 0 / 1001 | 0.23 (1) |

**DESIGN CRITERIA**

SPECIFIED LOADS:

| | | | | |
|---|---|---|---|---|
| TOP CH. | LL | = | 25.6 | PSF |
| | DL | = | 3.0 | PSF |
| BOT CH. | LL | = | 0.0 | PSF |
| | DL | = | 7.3 | PSF |
| TOTAL LOAD | | = | 35.9 | PSF |

**SPACING = 24.0 IN. C/C**

LOADING IN FLAT SECTION BASED ON A SLOPE OF 8.00/12

THIS TRUSS IS DESIGNED FOR RESIDENTIAL OR SMALL BUILDING REQUIREMENTS OF PART 9, NBCC 2015

THIS DESIGN COMPLIES WITH:
- PART 9 OF BCBC 2018 , NBC-2019AE
- PART 9 OF OBC 2012 (2019 AMENDMENT)
- CSA 086-14
- TPIC 2014

(55 % OF 31.3 P.S.F. G.S.L. PLUS 8.4 P.S.F. RAIN LOAD) EQUALS 25.6 P.S.F. SPECIFIED ROOF LIVE LOAD

ALLOWABLE DEFL.(LL)= L/360 (0.87")
CALCULATED VERT. DEFL.(LL) = L/ 999 (0.04")
ALLOWABLE DEFL.(TL)= L/360 (0.87")
CALCULATED VERT. DEFL.(TL) = L/ 999 (0.09")

CSI: TC=0.28/1.00 (B-C:1) , BC=0.26/1.00 (I-J:1) , WB=0.54/1.00 (E-J:1) , SSI=0.19/1.00 (D-E:1)

DOL LUMBER=1.00 NAIL=1.00 LS BEND=1.10 COMP=1.10 SHEAR=1.10 TENS= 1.10

COMPANION LIVE LOAD FACTOR = 1.00

TRUSS PLATE MANUFACTURER IS NOT RESPONSIBLE FOR QUALITY CONTROL IN THE TRUSS MANUFACTURING PLANT .

NAIL VALUES

| PLATE | GRIP(DRY) (PSI) MAX | MIN | SHEAR (PLI) MAX | MIN | SECTION (PLI) MAX | MIN |
|---|---|---|---|---|---|---|
| MT20 | 650 | 371 | 1747 | 788 | 1987 | 1873 |

PLATE PLACEMENT TOL. = 0.250 inches

PLATE ROTATION TOL. = 5.0 Deg.

JSI GRIP= 0.88 (I) (INPUT = 0.90 )
JSI METAL= 0.49 (B) (INPUT = 1.00 )

LICENSED PROFESSIONAL ENGINEER
I.MATIJEVIC
100528832
PROVINCE OF ONTARIO
APRIL 24, 2023

**READ ALL NOTES ON THIS PAGE AND ON THE ENGINEERING NOTES: TRUSSES. THE NOTE PAGE IS AN INTEGRAL PART OF THIS DRAWING AS IT CONTAINS SPECIFICATIONS AND CRITERIA USED IN THE DESIGN OF THIS COMPONENET.**

CITY OF RICHMOND HILL
BUILDING DIVISION
05/24/2023
RECEIVED
Per: joshua.nabua

| JOB NAME | TRUSS NAME | QUANTITY | PLY | JOB DESC. | DRWG NO. |
|---|---|---|---|---|---|
| IM0423-071 | T11 | 1 | 1 | TRUSS DESC. | |

Version 8.630 S Mar 22 2023 MiTek Industries, Inc. Fri Apr 21 14:13:47 2023 Page 1
ID:Oft3GgR1zRzAGpn6KZ87ljzYiN_-jycgzQrD_nlPJp7Orz6a7n4jCaD25eSx?7T9zDzOUMY

Scale = 1:54.4

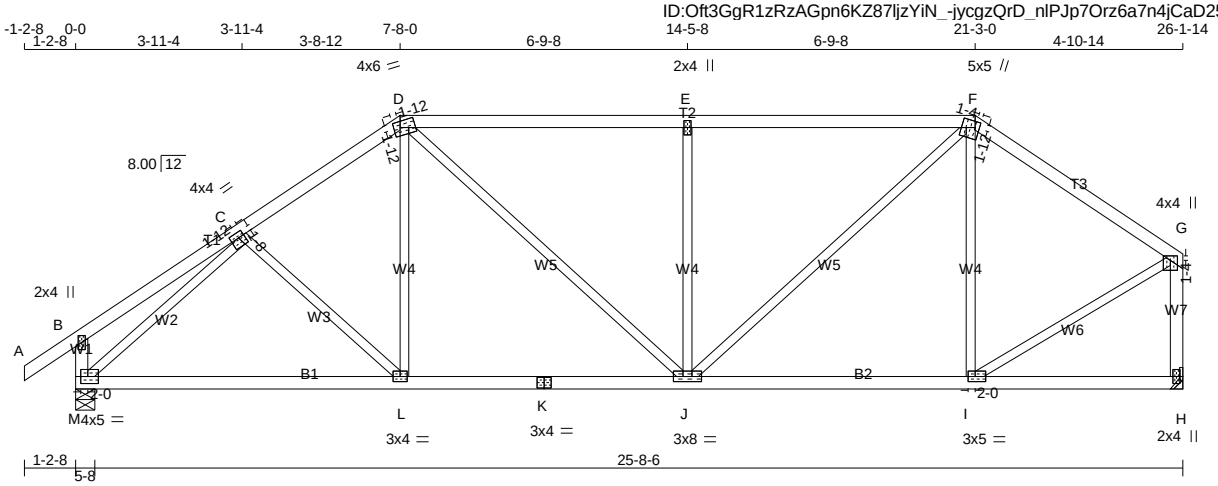


TOTAL WEIGHT = 110 lb

**LUMBER**
N. L. G. A. RULES

| CHORDS | SIZE | | LUMBER | DESCR. |
|---|---|---|---|---|
| A - D | 2x4 | DRY | No.2 | SPF |
| D - F | 2x4 | DRY | No.2 | SPF |
| F - G | 2x4 | DRY | No.2 | SPF |
| M - B | 2x4 | DRY | No.2 | SPF |
| H - G | 2x4 | DRY | No.2 | SPF |
| M - K | 2x4 | DRY | No.2 | SPF |
| K - H | 2x4 | DRY | No.2 | SPF |
| ALL WEBS EXCEPT | 2x3 | DRY | No.2 | SPF |

DRY: SEASONED LUMBER.

**PLATES (table is in inches)**

| JT | TYPE | PLATES | W | LEN | Y | X |
|---|---|---|---|---|---|---|
| B | TMV+p | MT20 | 2.0 | 4.0 | | |
| C | TMWW-t | MT20 | 4.0 | 4.0 | 1.50 | 1.75 |
| D | TTWW-m | MT20 | 4.0 | 6.0 | 1.75 | 1.75 |
| E | TMW+w | MT20 | 2.0 | 4.0 | | |
| F | TTWW+m | MT20 | 5.0 | 5.0 | 1.75 | 1.25 |
| G | TMVW+p | MT20 | 4.0 | 4.0 | 1.25 | 2.00 |
| H | BMV1+p | MT20 | 2.0 | 4.0 | | |
| I | BMWW-t | MT20 | 3.0 | 5.0 | 1.50 | 2.00 |
| J | BMWWW-t | MT20 | 3.0 | 8.0 | | |
| K | BS-t | MT20 | 3.0 | 4.0 | | |
| L | BMWW-t | MT20 | 3.0 | 4.0 | | |
| M | BMVW1-t | MT20 | 4.0 | 5.0 | 2.00 | 2.00 |

**DIMENSIONS, SUPPORTS AND LOADINGS SPECIFIED BY FABRICATOR TO BE VERIFIED BY BUILDING DESIGNER**

**BEARINGS**

| JT | FACTORED GROSS REACTION VERT | HORZ | MAXIMUM FACTORED GROSS REACTION DOWN | HORZ | UPLIFT | INPUT BRG | REQRD BRG |
|---|---|---|---|---|---|---|---|
| M | 1449 | 0 | 1449 | 0 | 0 | 5-8 | 1-9 |
| H | 1341 | 0 | 1341 | 0 | 0 | MECHANICAL | |

A SUITABLE HANGER/MECHANICAL CONNECTION IS REQUIRED AT JOINT H. MINIMUM BEARING LENGTH AT JOINT H = 1-8.

**UNFACTORED REACTIONS**

| JT | 1ST LCASE COMBINED | MAX./MIN. COMPONENT REACTIONS SNOW | LIVE | PERM.LIVE | WIND | DEAD | SOIL |
|---|---|---|---|---|---|---|---|
| M | 1012 | 735 / 0 | 0 / 0 | 0 / 0 | 0 / 0 | 277 / 0 | 0 / 0 |
| H | 939 | 669 / 0 | 0 / 0 | 0 / 0 | 0 / 0 | 269 / 0 | 0 / 0 |

BEARING MATERIAL TO BE SPF NO.2 OR BETTER AT JOINT(S) M

**BRACING**
TOP CHORD TO BE SHEATHED OR MAX. PURLIN SPACING = 4.20 FT.
MAX. UNBRACED BOTTOM CHORD LENGTH = 10.00 FT OR RIGID CEILING DIRECTLY APPLIED.

ALL PITCH BREAKS AND PERIMETER CORNER JOINTS MUST BE LATERALLY RESTRAINED.

**LOADING**
TOTAL LOAD CASES: (4)

CHORDS

| MEMB. FR-TO | MAX. FACTORED FORCE (LBS) | FACTORED VERT. LOAD (PLF) FROM | TO | LC1 MAX CSI (LC) | MAX. UNBRAC LENGTH |
|---|---|---|---|---|---|
| A- B | 0 / 30 | -84.3 | -84.3 | 0.10 (1) | 10.00 |
| B- C | 0 / 19 | -84.3 | -84.3 | 0.19 (1) | 10.00 |
| C- D | -1458 / 0 | -84.3 | -84.3 | 0.22 (1) | 5.18 |
| D- E | -1490 / 0 | -84.3 | -84.3 | 0.78 (1) | 4.20 |
| E- F | -1490 / 0 | -84.3 | -84.3 | 0.78 (1) | 4.20 |
| F- G | -1067 / 0 | -84.3 | -84.3 | 0.39 (1) | 5.58 |
| M- B | -235 / 0 | 0.0 | 0.0 | 0.02 (1) | 7.81 |
| H- G | -1308 / 0 | 0.0 | 0.0 | 0.23 (1) | 7.06 |

WEBS

| MEMB. FR-TO | MAX. FACTORED FORCE (LBS) | MAX CSI (LC) |
|---|---|---|
| C- L | -56 / 41 | 0.03 (1) |
| L- D | 0 / 191 | 0.05 (4) |
| D- J | 0 / 393 | 0.09 (1) |
| J- E | -705 / 0 | 0.48 (1) |
| J- F | 0 / 823 | 0.19 (1) |
| I- F | -385 / 0 | 0.26 (1) |
| M- C | -1693 / 0 | 0.75 (1) |
| I- G | 0 / 1022 | 0.23 (1) |
| M- L | 0 / 1237 | -18.2 -18.2 0.34 (1) 10.00 |
| L- K | 0 / 1198 | -18.2 -18.2 0.33 (4) 10.00 |
| K- J | 0 / 1198 | -18.2 -18.2 0.33 (4) 10.00 |
| J- I | 0 / 880 | -18.2 -18.2 0.23 (1) 10.00 |
| I- H | 0 / 0 | -18.2 -18.2 0.15 (4) 10.00 |

**DESIGN CRITERIA**

SPECIFIED LOADS:

| | | | | | |
|---|---|---|---|---|---|
| TOP | CH. | LL | = | 25.6 | PSF |
| | | DL | = | 3.0 | PSF |
| BOT | CH. | LL | = | 0.0 | PSF |
| | | DL | = | 7.3 | PSF |
| TOTAL | LOAD | | = | 35.9 | PSF |

**SPACING = 24.0 IN. C/C**

LOADING IN FLAT SECTION BASED ON A SLOPE OF 8.00/12

THIS TRUSS IS DESIGNED FOR RESIDENTIAL OR SMALL BUILDING REQUIREMENTS OF PART 9, NBCC 2015

THIS DESIGN COMPLIES WITH:
- PART 9 OF BCBC 2018 , NBC-2019AE
- PART 9 OF OBC 2012 (2019 AMENDMENT)
- CSA 086-14
- TPIC 2014

(55 % OF 31.3 P.S.F. G.S.L. PLUS 8.4 P.S.F. RAIN LOAD) EQUALS 25.6 P.S.F. SPECIFIED ROOF LIVE LOAD

ALLOWABLE DEFL.(LL)= L/360 (0.87")
CALCULATED VERT. DEFL.(LL) = L/ 999 (0.06")
ALLOWABLE DEFL.(TL)= L/360 (0.87")
CALCULATED VERT. DEFL.(TL) = L/ 999 (0.13")

CSI: TC=0.78/1.00 (D-E:1) , BC=0.34/1.00 (L-M:1) , WB=0.75/1.00 (C-M:1) , SSI=0.28/1.00 (D-E:1)

DOL LUMBER=1.00 NAIL=1.00 LS BEND=1.10 COMP=1.10 SHEAR=1.10 TENS= 1.10

COMPANION LIVE LOAD FACTOR = 1.00

TRUSS PLATE MANUFACTURER IS NOT RESPONSIBLE FOR QUALITY CONTROL IN THE TRUSS MANUFACTURING PLANT .

NAIL VALUES

| PLATE | GRIP(DRY) (PSI) MAX | MIN | SHEAR (PLI) MAX | MIN | SECTION (PLI) MAX | MIN |
|---|---|---|---|---|---|---|
| MT20 | 650 | 371 | 1747 | 788 | 1987 | 1873 |

PLATE PLACEMENT TOL. = 0.250 inches

PLATE ROTATION TOL. = 5.0 Deg.

JSI GRIP= 0.88 (J) (INPUT = 0.90 )
JSI METAL= 0.57 (C) (INPUT = 1.00 )

LICENSED PROFESSIONAL ENGINEER
I.MATIJEVIC
100528832
PROVINCE OF ONTARIO
APRIL 24, 2023

**READ ALL NOTES ON THIS PAGE AND ON THE ENGINEERING NOTES: TRUSSES. THE NOTE PAGE IS AN INTEGRAL PART OF THIS DRAWING AS IT CONTAINS SPECIFICATIONS AND CRITERIA USED IN THE DESIGN OF THIS COMPONENET.**

CITY OF RICHMOND HILL
BUILDING DIVISION
05/24/2023
RECEIVED
Per: joshua.nabua

| JOB NAME | TRUSS NAME | QUANTITY | PLY | JOB DESC. | DRWG NO. |
|---|---|---|---|---|---|
| IM0423-071 | T12 | 1 | 1 | TRUSS DESC. | |

Version 8.630 S Mar 22 2023 MiTek Industries, Inc. Fri Apr 21 14:13:48 2023 Page 1
ID:Oft3GgR1zRzAGpn6KZ87ljzYiN_-B9A3Bmsrk5tGxziaPhepg_c?7_ZNqCa5EnDiWfzOUMX

Scale = 1:50.4

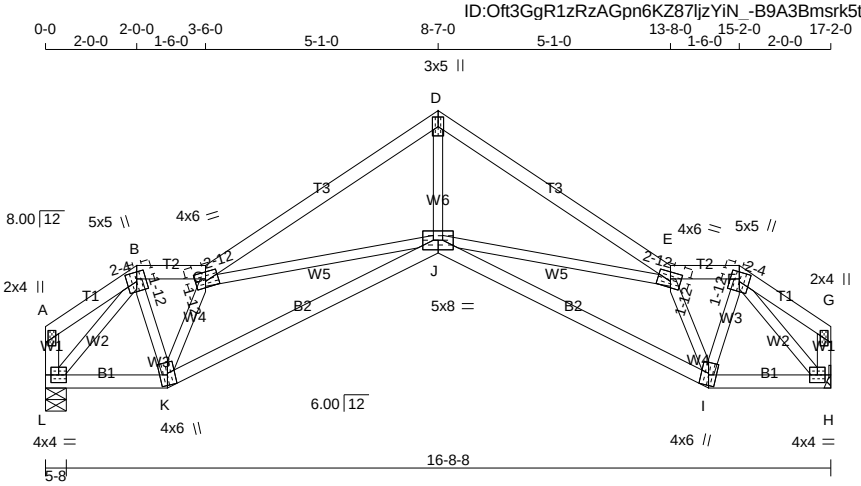


TOTAL WEIGHT = 69 lb

[M][F]

**LUMBER**

N. L. G. A. RULES

| CHORDS | SIZE | | LUMBER | DESCR. |
|---|---|---|---|---|
| A - B | 2x4 | DRY | No.2 | SPF |
| B - C | 2x4 | DRY | No.2 | SPF |
| C - D | 2x4 | DRY | No.2 | SPF |
| D - E | 2x4 | DRY | No.2 | SPF |
| E - F | 2x4 | DRY | No.2 | SPF |
| F - G | 2x4 | DRY | No.2 | SPF |
| L - A | 2x4 | DRY | No.2 | SPF |
| H - G | 2x4 | DRY | No.2 | SPF |
| L - K | 2x4 | DRY | No.2 | SPF |
| K - J | 2x4 | DRY | No.2 | SPF |
| J - I | 2x4 | DRY | No.2 | SPF |
| I - H | 2x4 | DRY | No.2 | SPF |
| ALL WEBS EXCEPT | 2x3 | DRY | No.2 | SPF |

DRY: SEASONED LUMBER.

**PLATES (table is in inches)**

| JT | TYPE | PLATES | W | LEN | Y | X |
|---|---|---|---|---|---|---|
| A | TMV+p | MT20 | 2.0 | 4.0 | | |
| B | TTWW+m | MT20 | 5.0 | 5.0 | 1.75 | 2.25 |
| C | TTWW-m | MT20 | 4.0 | 6.0 | 1.75 | 2.75 |
| D | TTW+p | MT20 | 3.0 | 5.0 | | |
| E | TTWW-m | MT20 | 4.0 | 6.0 | 1.75 | 2.75 |
| F | TTWW+m | MT20 | 5.0 | 5.0 | 1.75 | 2.25 |
| G | TMV+p | MT20 | 2.0 | 4.0 | | |
| H | BMVW1-t | MT20 | 4.0 | 4.0 | | |
| I | BBWW+m | MT20 | 4.0 | 6.0 | Edge | |
| J | BBWWW-p | MT20 | 5.0 | 8.0 | | |
| K | BBWW+m | MT20 | 4.0 | 6.0 | Edge | |
| L | BMVW1-t | MT20 | 4.0 | 4.0 | | |

Edge - INDICATES REFERENCE CORNER OF PLATE TOUCHES EDGE OF CHORD.

**DIMENSIONS, SUPPORTS AND LOADINGS SPECIFIED BY FABRICATOR TO BE VERIFIED BY BUILDING DESIGNER**

**BEARINGS**

| JT | FACTORED GROSS REACTION VERT | HORZ | MAXIMUM FACTORED GROSS REACTION DOWN | HORZ | UPLIFT | INPUT BRG IN-SX | REQRD BRG IN-SX |
|---|---|---|---|---|---|---|---|
| L | 880 | 0 | 880 | 0 | 0 | 5-8 | 1-8 |
| H | 880 | 0 | 880 | 0 | 0 | MECHANICAL | |

A SUITABLE HANGER/MECHANICAL CONNECTION IS REQUIRED AT JOINT H. MINIMUM BEARING LENGTH AT JOINT H = 1-8.

**UNFACTORED REACTIONS**

| JT | 1ST LCASE COMBINED | MAX./MIN. COMPONENT REACTIONS SNOW | LIVE | PERM.LIVE | WIND | DEAD | SOIL |
|---|---|---|---|---|---|---|---|
| L | 616 | 439 / 0 | 0 / 0 | 0 / 0 | 0 / 0 | 177 / 0 | 0 / 0 |
| H | 616 | 439 / 0 | 0 / 0 | 0 / 0 | 0 / 0 | 177 / 0 | 0 / 0 |

BEARING MATERIAL TO BE SPF NO.2 OR BETTER AT JOINT(S) L

**BRACING**

TOP CHORD TO BE SHEATHED OR MAX. PURLIN SPACING = 4.86 FT.
MAX. UNBRACED BOTTOM CHORD LENGTH = 10.00 FT OR RIGID CEILING DIRECTLY APPLIED.

ALL PITCH BREAKS AND PERIMETER CORNER JOINTS MUST BE LATERALLY RESTRAINED.

**LOADING**

TOTAL LOAD CASES: (4)

CHORDS

| MEMB. FR-TO | MAX. FACTORED FORCE (LBS) | FACTORED VERT. LOAD (PLF) FROM | TO | LC1 CSI (LC) | MAX UNBRAC LENGTH |
|---|---|---|---|---|---|
| A- B | 0 / 0 | -84.3 | -84.3 | 0.06 (1) | 10.00 |
| B- C | -827 / 0 | -84.3 | -84.3 | 0.03 (1) | 6.25 |
| C- D | -1633 / 0 | -84.3 | -84.3 | 0.33 (1) | 4.86 |
| D- E | -1633 / 0 | -84.3 | -84.3 | 0.33 (1) | 4.86 |
| E- F | -827 / 0 | -84.3 | -84.3 | 0.03 (1) | 6.25 |
| F- G | 0 / 0 | -84.3 | -84.3 | 0.06 (1) | 10.00 |
| L- A | -84 / 0 | 0.0 | 0.0 | 0.01 (1) | 7.81 |
| H- G | -84 / 0 | 0.0 | 0.0 | 0.01 (1) | 7.81 |
| L- K | 0 / 651 | -18.2 | -18.2 | 0.13 (1) | 10.00 |
| K- J | 0 / 1385 | -18.3 | -18.3 | 0.33 (1) | 10.00 |
| J- I | 0 / 1385 | -18.3 | -18.3 | 0.33 (1) | 10.00 |
| I- H | 0 / 651 | -18.2 | -18.2 | 0.13 (1) | 10.00 |

WEBS

| MEMB. FR-TO | MAX. FACTORED FORCE (LBS) | MAX CSI (LC) |
|---|---|---|
| B- K | 0 / 650 | 0.15 (1) |
| K- C | -1236 / 0 | 0.21 (1) |
| C- J | 0 / 124 | 0.03 (1) |
| J- D | 0 / 1378 | 0.31 (1) |
| J- E | 0 / 124 | 0.03 (1) |
| E- I | -1236 / 0 | 0.21 (1) |
| I- F | 0 / 650 | 0.15 (1) |
| L- B | -1011 / 0 | 0.19 (1) |
| F- H | -1011 / 0 | 0.19 (1) |

**DESIGN CRITERIA**

SPECIFIED LOADS:

| | | | | |
|---|---|---|---|---|
| TOP CH. | LL | = | 25.6 | PSF |
| | DL | = | 3.0 | PSF |
| BOT CH. | LL | = | 0.0 | PSF |
| | DL | = | 7.3 | PSF |
| TOTAL LOAD | | = | 35.9 | PSF |

**SPACING = 24.0 IN. C/C**

LOADING IN ALL FLAT SECTIONS BASED ON A SLOPE OF 2.00/12 MINIMUM

THIS TRUSS IS DESIGNED FOR RESIDENTIAL OR SMALL BUILDING REQUIREMENTS OF PART 9, NBCC 2015

THIS DESIGN COMPLIES WITH:
- PART 9 OF BCBC 2018 , NBC-2019AE
- PART 9 OF OBC 2012 (2019 AMENDMENT)
- CSA 086-14
- TPIC 2014

(55 % OF 31.3 P.S.F. G.S.L. PLUS 8.4 P.S.F. RAIN LOAD) EQUALS 25.6 P.S.F. SPECIFIED ROOF LIVE LOAD

ALLOWABLE DEFL.(LL)= L/360 (0.57")
CALCULATED VERT. DEFL.(LL) = L/ 999 (0.07")
ALLOWABLE DEFL.(TL)= L/360 (0.57")
CALCULATED VERT. DEFL.(TL) = L/ 999 (0.16")

CSI: TC=0.33/1.00 (C-D:1) , BC=0.33/1.00 (J-K:1) , WB=0.31/1.00 (D-J:1) , SSI=0.14/1.00 (C-D:1)

DOL LUMBER=1.00 NAIL=1.00 LS BEND=1.10 COMP=1.10 SHEAR=1.10 TENS= 1.10

COMPANION LIVE LOAD FACTOR = 1.00

AUTOSOLVE HEELS OFF

TRUSS PLATE MANUFACTURER IS NOT RESPONSIBLE FOR QUALITY CONTROL IN THE TRUSS MANUFACTURING PLANT .

NAIL VALUES

| PLATE | GRIP(DRY) (PSI) MAX | MIN | SHEAR (PLI) MAX | MIN | SECTION (PLI) MAX | MIN |
|---|---|---|---|---|---|---|
| MT20 | 650 | 371 | 1747 | 788 | 1987 | 1873 |

PLATE PLACEMENT TOL. = 0.250 inches

PLATE ROTATION TOL. = 5.0 Deg.

JSI GRIP= 0.90 (D) (INPUT = 0.90 )
JSI METAL= 0.48 (C) (INPUT = 1.00 )

LICENSED PROFESSIONAL ENGINEER
I.MATIJEVIC
100528832
PROVINCE OF ONTARIO
APRIL 24, 2023

**READ ALL NOTES ON THIS PAGE AND ON THE ENGINEERING NOTES: TRUSSES. THE NOTE PAGE IS AN INTEGRAL PART OF THIS DRAWING AS IT CONTAINS SPECIFICATIONS AND CRITERIA USED IN THE DESIGN OF THIS COMPONENET.**

CITY OF RICHMOND HILL
BUILDING DIVISION
05/24/2023
RECEIVED
Per: joshua.nabua

KOTT

| JOB NAME | TRUSS NAME | QUANTITY | PLY | JOB DESC. | DRWG NO. |
|---|---|---|---|---|---|
| IM0423-071 | T13 | 3 | 1 | TRUSS DESC. | |

Version 8.630 S Mar 22 2023 MiTek Industries, Inc. Fri Apr 21 14:13:49 2023 Page 1
ID:Oft3GgR1zRzAGpn6KZ87ljzYiN_-fLkRO6tUVP?7Y7HnyO92CC9DXNxhZh0ESRyG26zOUMW

Scale = 1:50.4

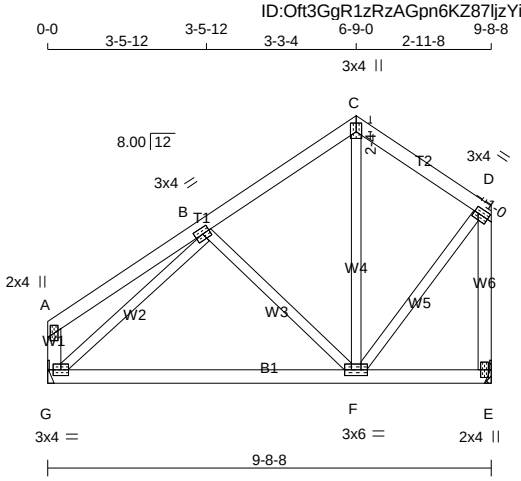


TOTAL WEIGHT = 3 X 45 = 134 lb

**LUMBER**
N. L. G. A. RULES

| CHORDS | SIZE | | LUMBER | DESCR. |
|---|---|---|---|---|
| A - C | 2x4 | DRY | No.2 | SPF |
| C - D | 2x4 | DRY | No.2 | SPF |
| G - A | 2x4 | DRY | No.2 | SPF |
| E - D | 2x4 | DRY | No.2 | SPF |
| G - E | 2x4 | DRY | No.2 | SPF |
| ALL WEBS EXCEPT | 2x3 | DRY | No.2 | SPF |

DRY: SEASONED LUMBER.

**PLATES (table is in inches)**

| JT | TYPE | PLATES | W | LEN | Y | X |
|---|---|---|---|---|---|---|
| A | TMV+p | MT20 | 2.0 | 4.0 | | |
| B | TMWW-t | MT20 | 3.0 | 4.0 | | |
| C | TTW+p | MT20 | 3.0 | 4.0 | 2.25 | 1.50 |
| D | TMVW-t | MT20 | 3.0 | 4.0 | 1.50 | 1.00 |
| E | BMV1+p | MT20 | 2.0 | 4.0 | | |
| F | BMWWW-t | MT20 | 3.0 | 6.0 | | |
| G | BMVW1-t | MT20 | 3.0 | 4.0 | | |

**DIMENSIONS, SUPPORTS AND LOADINGS SPECIFIED BY FABRICATOR TO BE VERIFIED BY BUILDING DESIGNER**

**BEARINGS**

| JT | FACTORED GROSS REACTION VERT | HORZ | MAXIMUM FACTORED GROSS REACTION DOWN | HORZ | UPLIFT | INPUT BRG IN-SX | REQRD BRG IN-SX |
|---|---|---|---|---|---|---|---|
| E | 498 | 0 | 498 | 0 | 0 | MECHANICAL | |
| G | 498 | 0 | 498 | 0 | 0 | MECHANICAL | |

A SUITABLE HANGER/MECHANICAL CONNECTION IS REQUIRED AT JOINT E, G. MINIMUM BEARING LENGTH AT JOINT E = 1-8, JOINT G = 1-8.

**UNFACTORED REACTIONS**

| JT | 1ST LCASE COMBINED | MAX./MIN. COMPONENT REACTIONS SNOW | LIVE | PERM.LIVE | WIND | DEAD | SOIL |
|---|---|---|---|---|---|---|---|
| E | 348 | 248 / 0 | 0 / 0 | 0 / 0 | 0 / 0 | 100 / 0 | 0 / 0 |
| G | 348 | 248 / 0 | 0 / 0 | 0 / 0 | 0 / 0 | 100 / 0 | 0 / 0 |

**BRACING**
TOP CHORD TO BE SHEATHED OR MAX. PURLIN SPACING = 6.25 FT.
MAX. UNBRACED BOTTOM CHORD LENGTH = 10.00 FT OR RIGID CEILING DIRECTLY APPLIED.

ALL PITCH BREAKS AND PERIMETER CORNER JOINTS MUST BE LATERALLY RESTRAINED.

**LOADING**
TOTAL LOAD CASES: (4)

CHORDS

| MEMB. FR-TO | MAX. FACTORED FORCE (LBS) | FACTORED VERT. LOAD LC1 (PLF) FROM | TO | MAX CSI (LC) | MAX. UNBRAC LENGTH |
|---|---|---|---|---|---|
| A- B | 0 / 19 | -84.3 | -84.3 | 0.16 (1) | 10.00 |
| B- C | -257 / 0 | -84.3 | -84.3 | 0.12 (1) | 6.25 |
| C- D | -238 / 0 | -84.3 | -84.3 | 0.09 (1) | 6.25 |
| G- A | -108 / 0 | 0.0 | 0.0 | 0.01 (1) | 7.81 |
| E- D | -495 / 0 | 0.0 | 0.0 | 0.12 (1) | 7.81 |
| G- F | 0 / 348 | -18.2 | -18.2 | 0.20 (4) | 10.00 |
| F- E | 0 / 0 | -18.2 | -18.2 | 0.18 (4) | 10.00 |

WEBS

| MEMB. FR-TO | MAX. FACTORED FORCE (LBS) | MAX CSI (LC) |
|---|---|---|
| B- F | -208 / 0 | 0.08 (1) |
| F- C | 0 / 67 | 0.02 (4) |
| G- B | -485 / 0 | 0.17 (1) |
| F- D | 0 / 310 | 0.07 (1) |

**DESIGN CRITERIA**

SPECIFIED LOADS:

| | | | | | |
|---|---|---|---|---|---|
| TOP | CH. | LL | = | 25.6 | PSF |
| | | DL | = | 3.0 | PSF |
| BOT | CH. | LL | = | 0.0 | PSF |
| | | DL | = | 7.3 | PSF |
| TOTAL | LOAD | | = | 35.9 | PSF |

**SPACING = 24.0 IN. C/C**

THIS TRUSS IS DESIGNED FOR RESIDENTIAL OR SMALL BUILDING REQUIREMENTS OF PART 9, NBCC 2015

THIS DESIGN COMPLIES WITH:
- PART 9 OF BCBC 2018 , NBC-2019AE
- PART 9 OF OBC 2012 (2019 AMENDMENT)
- CSA 086-14
- TPIC 2014

(55 % OF 31.3 P.S.F. G.S.L. PLUS 8.4 P.S.F. RAIN LOAD) EQUALS 25.6 P.S.F. SPECIFIED ROOF LIVE LOAD

ALLOWABLE DEFL.(LL)= L/360 (0.32")
CALCULATED VERT. DEFL.(LL) = L/ 999 (0.00")
ALLOWABLE DEFL.(TL)= L/360 (0.32")
CALCULATED VERT. DEFL.(TL) = L/ 999 (0.06")

CSI: TC=0.16/1.00 (A-B:1) , BC=0.20/1.00 (F-G:4) , WB=0.17/1.00 (B-G:1) , SSI=0.11/1.00 (B-C:1)

DOL LUMBER=1.00 NAIL=1.00 LS BEND=1.10 COMP=1.10 SHEAR=1.10 TENS= 1.10

COMPANION LIVE LOAD FACTOR = 1.00

TRUSS PLATE MANUFACTURER IS NOT RESPONSIBLE FOR QUALITY CONTROL IN THE TRUSS MANUFACTURING PLANT .

NAIL VALUES

| PLATE | GRIP(DRY) (PSI) MAX | MIN | SHEAR (PLI) MAX | MIN | SECTION (PLI) MAX | MIN |
|---|---|---|---|---|---|---|
| MT20 | 650 | 371 | 1747 | 788 | 1987 | 1873 |

PLATE PLACEMENT TOL. = 0.250 inches

PLATE ROTATION TOL. = 5.0 Deg.

JSI GRIP= 0.90 (D) (INPUT = 0.90 )
JSI METAL= 0.15 (B) (INPUT = 1.00 )

LICENSED PROFESSIONAL ENGINEER
I.MATIJEVIC
100528832
PROVINCE OF ONTARIO
APRIL 24, 2023

**READ ALL NOTES ON THIS PAGE AND ON THE ENGINEERING NOTES: TRUSSES. THE NOTE PAGE IS AN INTEGRAL PART OF THIS DRAWING AS IT CONTAINS SPECIFICATIONS AND CRITERIA USED IN THE DESIGN OF THIS COMPONENET.**

CITY OF RICHMOND HILL
BUILDING DIVISION
05/24/2023
KOTT
RECEIVED
Per: joshua.nabua

| JOB NAME | TRUSS NAME | QUANTITY | PLY | JOB DESC. | DRWG NO. |
|---|---|---|---|---|---|
| IM0423-071 | T14 | 1 | 1 | TRUSS DESC. | |

Version 8.630 S Mar 22 2023 MiTek Industries, Inc. Fri Apr 21 14:13:49 2023 Page 1
ID:Oft3GgR1zRzAGpn6KZ87ljzYiN_-fLkRO6tUVP?7Y7HnyO92CC9D8NzPZiIESRyG26zOUMW

Scale = 1:40.1

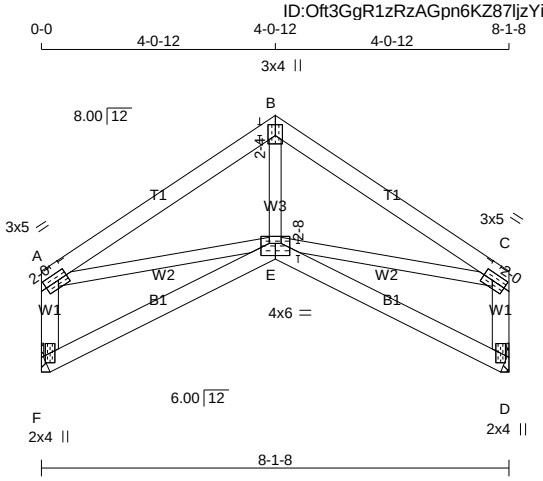


TOTAL WEIGHT = 33 lb

**LUMBER**

N. L. G. A. RULES

| CHORDS | SIZE | | LUMBER | DESCR. |
|---|---|---|---|---|
| A - B | 2x4 | DRY | No.2 | SPF |
| B - C | 2x4 | DRY | No.2 | SPF |
| F - A | 2x4 | DRY | No.2 | SPF |
| D - C | 2x4 | DRY | No.2 | SPF |
| F - E | 2x4 | DRY | No.2 | SPF |
| E - D | 2x4 | DRY | No.2 | SPF |
| ALL WEBS EXCEPT | 2x3 | DRY | No.2 | SPF |

DRY: SEASONED LUMBER.

**PLATES (table is in inches)**

| JT | TYPE | PLATES | W | LEN | Y | X |
|---|---|---|---|---|---|---|
| A | TMVW-t | MT20 | 3.0 | 5.0 | 1.50 | 2.00 |
| B | TTW+p | MT20 | 3.0 | 4.0 | 2.25 | 1.50 |
| C | TMVW-t | MT20 | 3.0 | 5.0 | 1.50 | 2.00 |
| D | BMV1+p | MT20 | 2.0 | 4.0 | | |
| E | BBWWW-p | MT20 | 4.0 | 6.0 | 2.50 | 3.00 |
| F | BMV1+p | MT20 | 2.0 | 4.0 | | |

**DIMENSIONS, SUPPORTS AND LOADINGS SPECIFIED BY FABRICATOR TO BE VERIFIED BY BUILDING DESIGNER**

**BEARINGS**

| JT | FACTORED GROSS REACTION VERT | HORZ | MAXIMUM FACTORED GROSS REACTION DOWN | HORZ | UPLIFT | INPUT BRG IN-SX | REQRD BRG IN-SX |
|---|---|---|---|---|---|---|---|
| F | 416 | 0 | 416 | 0 | 0 | MECHANICAL | |
| D | 416 | 0 | 416 | 0 | 0 | MECHANICAL | |

A SUITABLE HANGER/MECHANICAL CONNECTION IS REQUIRED AT JOINT F, D. MINIMUM BEARING LENGTH AT JOINT F = 1-12, JOINT D = 1-12.

**UNFACTORED REACTIONS**

| JT | 1ST LCASE COMBINED | SNOW | LIVE | PERM.LIVE | WIND | DEAD | SOIL |
|---|---|---|---|---|---|---|---|
| | | MAX./MIN. COMPONENT REACTIONS | | | | | |
| F | 292 | 208 / 0 | 0 / 0 | 0 / 0 | 0 / 0 | 84 / 0 | 0 / 0 |
| D | 292 | 208 / 0 | 0 / 0 | 0 / 0 | 0 / 0 | 84 / 0 | 0 / 0 |

**BRACING**

TOP CHORD TO BE SHEATHED OR MAX. PURLIN SPACING = 6.25 FT.
MAX. UNBRACED BOTTOM CHORD LENGTH = 10.00 FT OR RIGID CEILING DIRECTLY APPLIED.

ALL PITCH BREAKS AND PERIMETER CORNER JOINTS MUST BE LATERALLY RESTRAINED.

**LOADING**

TOTAL LOAD CASES: (4)

CHORDS

| MEMB. FR-TO | MAX. FACTORED FORCE (LBS) | FACTORED VERT. LOAD (PLF) FROM | TO | LC1 MAX CSI (LC) | MAX. UNBRAC LENGTH |
|---|---|---|---|---|---|
| A- B | -470 / 0 | -84.3 | -84.3 | 0.18 (1) | 6.25 |
| B- C | -470 / 0 | -84.3 | -84.3 | 0.18 (1) | 6.25 |
| F- A | -379 / 0 | 0.0 | 0.0 | 0.04 (1) | 7.81 |
| D- C | -379 / 0 | 0.0 | 0.0 | 0.04 (1) | 7.81 |
| F- E | 0 / 0 | -18.2 | -18.2 | 0.09 (4) | 10.00 |
| E- D | 0 / 0 | -18.2 | -18.2 | 0.09 (4) | 10.00 |

WEBS

| MEMB. FR-TO | MAX. FACTORED FORCE (LBS) | MAX CSI (LC) |
|---|---|---|
| E- B | 0 / 179 | 0.04 (1) |
| A- E | 0 / 394 | 0.09 (1) |
| E- C | 0 / 394 | 0.09 (1) |

**DESIGN CRITERIA**

SPECIFIED LOADS:

| | | | | | |
|---|---|---|---|---|---|
| TOP | CH. | LL | = | 25.6 | PSF |
| | | DL | = | 3.0 | PSF |
| BOT | CH. | LL | = | 0.0 | PSF |
| | | DL | = | 7.3 | PSF |
| TOTAL | LOAD | | = | 35.9 | PSF |

**SPACING = 24.0 IN. C/C**

THIS TRUSS IS DESIGNED FOR RESIDENTIAL OR SMALL BUILDING REQUIREMENTS OF PART 9, NBCC 2015

THIS DESIGN COMPLIES WITH:
- PART 9 OF BCBC 2018 , NBC-2019AE
- PART 9 OF OBC 2012 (2019 AMENDMENT)
- CSA 086-14
- TPIC 2014

(55 % OF 31.3 P.S.F. G.S.L. PLUS 8.4 P.S.F. RAIN LOAD) EQUALS 25.6 P.S.F. SPECIFIED ROOF LIVE LOAD

ALLOWABLE DEFL.(LL)= L/360 (0.27")
CALCULATED VERT. DEFL.(LL) = L/ 999 (0.01")
ALLOWABLE DEFL.(TL)= L/360 (0.27")
CALCULATED VERT. DEFL.(TL) = L/ 999 (0.02")

CSI: TC=0.18/1.00 (B-C:1) , BC=0.09/1.00 (D-E:4) , WB=0.09/1.00 (A-E:1) , SSI=0.11/1.00 (B-C:1)

DOL LUMBER=1.00 NAIL=1.00 LS BEND=1.10 COMP=1.10 SHEAR=1.10 TENS= 1.10

COMPANION LIVE LOAD FACTOR = 1.00

TRUSS PLATE MANUFACTURER IS NOT RESPONSIBLE FOR QUALITY CONTROL IN THE TRUSS MANUFACTURING PLANT .

NAIL VALUES

| PLATE | GRIP(DRY) (PSI) MAX | MIN | SHEAR (PLI) MAX | MIN | SECTION (PLI) MAX | MIN |
|---|---|---|---|---|---|---|
| MT20 | 650 | 371 | 1747 | 788 | 1987 | 1873 |

PLATE PLACEMENT TOL. = 0.250 inches

PLATE ROTATION TOL. = 0.5 Deg.

JSI GRIP= 0.65 (E) (INPUT = 0.90 )
JSI METAL= 0.16 (C) (INPUT = 1.00 )

LICENSED PROFESSIONAL ENGINEER
I.MATIJEVIC
100528832
PROVINCE OF ONTARIO
APRIL 24, 2023

**READ ALL NOTES ON THIS PAGE AND ON THE ENGINEERING NOTES: TRUSSES. THE NOTE PAGE IS AN INTEGRAL PART OF THIS DRAWING AS IT CONTAINS SPECIFICATIONS AND CRITERIA USED IN THE DESIGN OF THIS COMPONENET.**

CITY OF RICHMOND HILL
BUILDING DIVISION
05/24/2023
RECEIVED
Per: joshua.nabua

| JOB NAME | TRUSS NAME | QUANTITY | PLY | JOB DESC. | DRWG NO. |
|---|---|---|---|---|---|
| IM0423-071 | T15 | 1 | 1 | TRUSS DESC. | |

Version 8.630 S Mar 22 2023 MiTek Industries, Inc. Fri Apr 21 14:13:50 2023 Page 1
ID:Oft3GgR1zRzAGpn6KZ87ljzYiN_-7XIpcSt6Gi7_AHszW6gHlPiN7nJkIACOh5ipaYzOUMV

Scale = 1:52.9

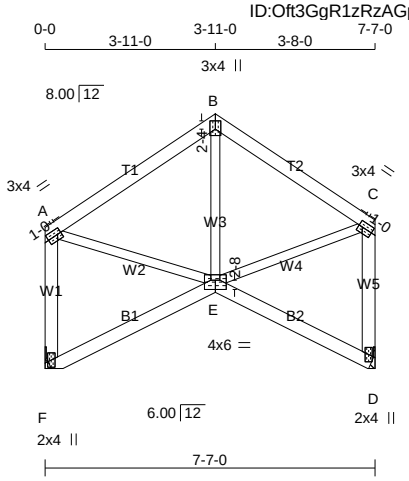


TOTAL WEIGHT = 36 lb

[M][F]

**LUMBER**

N. L. G. A. RULES

| CHORDS | SIZE | | LUMBER | DESCR. |
|---|---|---|---|---|
| A - B | 2x4 | DRY | No.2 | SPF |
| B - C | 2x4 | DRY | No.2 | SPF |
| F - A | 2x4 | DRY | No.2 | SPF |
| D - C | 2x4 | DRY | No.2 | SPF |
| F - E | 2x4 | DRY | No.2 | SPF |
| E - D | 2x4 | DRY | No.2 | SPF |
| ALL WEBS EXCEPT | 2x3 | DRY | No.2 | SPF |

DRY: SEASONED LUMBER.

**PLATES (table is in inches)**

| JT | TYPE | PLATES | W | LEN | Y | X |
|---|---|---|---|---|---|---|
| A | TMVW-t | MT20 | 3.0 | 4.0 | 1.50 | 1.00 |
| B | TTW+p | MT20 | 3.0 | 4.0 | 2.25 | 1.50 |
| C | TMVW-t | MT20 | 3.0 | 4.0 | 1.50 | 1.00 |
| D | BMV1+p | MT20 | 2.0 | 4.0 | | |
| E | BBWWW-p | MT20 | 4.0 | 6.0 | 2.50 | 3.00 |
| F | BMV1+p | MT20 | 2.0 | 4.0 | | |

**DIMENSIONS, SUPPORTS AND LOADINGS SPECIFIED BY FABRICATOR TO BE VERIFIED BY BUILDING DESIGNER**

**BEARINGS**

| JT | FACTORED GROSS REACTION VERT | HORZ | MAXIMUM FACTORED GROSS REACTION DOWN | HORZ | UPLIFT | INPUT BRG IN-SX | REQRD BRG IN-SX |
|---|---|---|---|---|---|---|---|
| F | 389 | 0 | 389 | 0 | 0 | MECHANICAL | |
| D | 389 | 0 | 389 | 0 | 0 | MECHANICAL | |

A SUITABLE HANGER/MECHANICAL CONNECTION IS REQUIRED AT JOINT F, D. MINIMUM BEARING LENGTH AT JOINT F = 1-12, JOINT D = 1-12.

**UNFACTORED REACTIONS**

| JT | 1ST LCASE COMBINED | MAX./MIN. COMPONENT REACTIONS SNOW | LIVE | PERM.LIVE | WIND | DEAD | SOIL |
|---|---|---|---|---|---|---|---|
| F | 272 | 194 / 0 | 0 / 0 | 0 / 0 | 0 / 0 | 78 / 0 | 0 / 0 |
| D | 272 | 194 / 0 | 0 / 0 | 0 / 0 | 0 / 0 | 78 / 0 | 0 / 0 |

**BRACING**

TOP CHORD TO BE SHEATHED OR MAX. PURLIN SPACING = 6.25 FT.
MAX. UNBRACED BOTTOM CHORD LENGTH = 10.00 FT OR RIGID CEILING DIRECTLY APPLIED.

ALL PITCH BREAKS AND PERIMETER CORNER JOINTS MUST BE LATERALLY RESTRAINED.

**LOADING**

TOTAL LOAD CASES: (4)

CHORDS

| MEMB. FR-TO | MAX. FACTORED FORCE (LBS) | FACTORED VERT. LOAD (PLF) FROM | TO | LC1 MAX CSI (LC) | MAX. UNBRAC LENGTH |
|---|---|---|---|---|---|
| A- B | -235 / 0 | -84.3 | -84.3 | 0.17 (1) | 6.25 |
| B- C | -235 / 0 | -84.3 | -84.3 | 0.15 (1) | 6.25 |
| F- A | -353 / 0 | 0.0 | 0.0 | 0.07 (1) | 7.81 |
| D- C | -355 / 0 | 0.0 | 0.0 | 0.07 (1) | 7.81 |
| F- E | 0 / 0 | -18.2 | -18.2 | 0.08 (4) | 10.00 |
| E- D | 0 / 0 | -18.3 | -18.3 | 0.07 (4) | 10.00 |

WEBS

| MEMB. FR-TO | MAX. FACTORED FORCE (LBS) | MAX CSI (LC) |
|---|---|---|
| E- B | -59 / 42 | 0.01 (1) |
| A- E | 0 / 204 | 0.05 (1) |
| E- C | 0 / 208 | 0.05 (1) |

**DESIGN CRITERIA**

SPECIFIED LOADS:

| | | | | | |
|---|---|---|---|---|---|
| TOP | CH. | LL | = | 25.6 | PSF |
| | | DL | = | 3.0 | PSF |
| BOT | CH. | LL | = | 0.0 | PSF |
| | | DL | = | 7.3 | PSF |
| TOTAL | LOAD | | = | 35.9 | PSF |

**SPACING = 24.0 IN. C/C**

THIS TRUSS IS DESIGNED FOR RESIDENTIAL OR SMALL BUILDING REQUIREMENTS OF PART 9, NBCC 2015

THIS DESIGN COMPLIES WITH:
- PART 9 OF BCBC 2018 , NBC-2019AE
- PART 9 OF OBC 2012 (2019 AMENDMENT)
- CSA 086-14
- TPIC 2014

(55 % OF 31.3 P.S.F. G.S.L. PLUS 8.4 P.S.F. RAIN LOAD) EQUALS 25.6 P.S.F. SPECIFIED ROOF LIVE LOAD

ALLOWABLE DEFL.(LL)= L/360 (0.25")
CALCULATED VERT. DEFL.(LL) = L/ 999 (0.00")
ALLOWABLE DEFL.(TL)= L/360 (0.25")
CALCULATED VERT. DEFL.(TL) = L/ 999 (0.01")

CSI: TC=0.17/1.00 (A-B:1) , BC=0.08/1.00 (E-F:4) , WB=0.05/1.00 (C-E:1) , SSI=0.11/1.00 (A-B:1)

DOL LUMBER=1.00 NAIL=1.00 LS BEND=1.10 COMP=1.10 SHEAR=1.10 TENS= 1.10

COMPANION LIVE LOAD FACTOR = 1.00

TRUSS PLATE MANUFACTURER IS NOT RESPONSIBLE FOR QUALITY CONTROL IN THE TRUSS MANUFACTURING PLANT .

NAIL VALUES

| PLATE | GRIP(DRY) (PSI) MAX | MIN | SHEAR (PLI) MAX | MIN | SECTION (PLI) MAX | MIN |
|---|---|---|---|---|---|---|
| MT20 | 650 | 371 | 1747 | 788 | 1987 | 1873 |

PLATE PLACEMENT TOL. = 0.250 inches

PLATE ROTATION TOL. = 5.0 Deg.

JSI GRIP= 0.65 (C) (INPUT = 0.90 )
JSI METAL= 0.15 (D) (INPUT = 1.00 )

LICENSED PROFESSIONAL ENGINEER
I.MATIJEVIC
100528832
PROVINCE OF ONTARIO
APRIL 24, 2023

**READ ALL NOTES ON THIS PAGE AND ON THE ENGINEERING NOTES: TRUSSES. THE NOTE PAGE IS AN INTEGRAL PART OF THIS DRAWING AS IT CONTAINS SPECIFICATIONS AND CRITERIA USED IN THE DESIGN OF THIS COMPONENET.**

CITY OF RICHMOND HILL
BUILDING DIVISION
05/24/2023
RECEIVED
Per: joshua.nabua

| JOB NAME | TRUSS NAME | QUANTITY | PLY | JOB DESC. | DRWG NO. |
|---|---|---|---|---|---|
| IM0423-071 | T16 | 5 | 1 | TRUSS DESC. | |

Version 8.630 S Mar 22 2023 MiTek Industries, Inc. Fri Apr 21 14:13:50 2023 Page 1
ID:Oft3GgR1zRzAGpn6KZ87ljzYiN_-7XIpcSt6Gi7_AHszW6gHlPiMYnFSI7GOh5ipaYzOUMV

Scale = 1:25.8

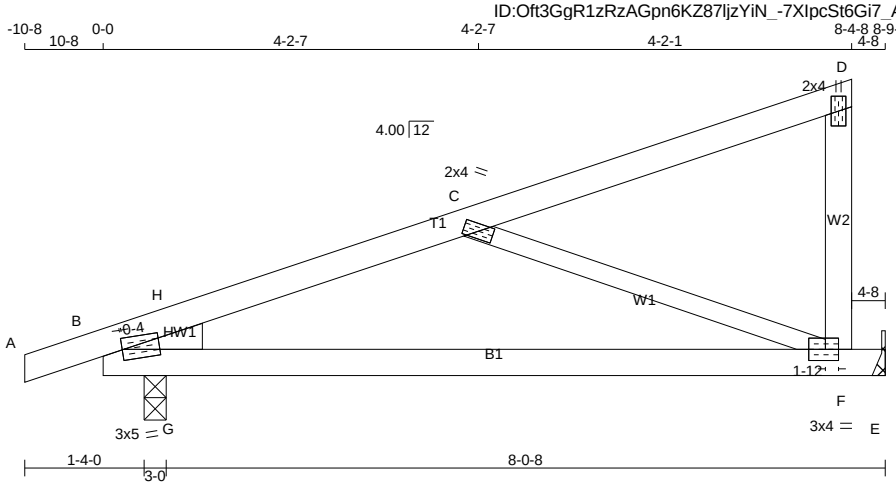


TOTAL WEIGHT = 5 X 29 = 144 lb

[M][F]

**LUMBER**

N. L. G. A. RULES

| CHORDS | SIZE | | LUMBER | DESCR. |
|---|---|---|---|---|
| A - D | 2x4 | DRY | No.2 | SPF |
| F - D | 2x4 | DRY | No.2 | SPF |
| B - E | 2x4 | DRY | No.2 | SPF |
| ALL WEBS | 2x3 | DRY | No.2 | SPF |

DRY: SEASONED LUMBER.

**PLATES (table is in inches)**

| JT | TYPE | PLATES | W | LEN | Y | X |
|---|---|---|---|---|---|---|
| B | TMBH1-m | MT20 | 3.0 | 5.0 | 1.50 | 0.25 |
| C | TMW+w | MT20 | 2.0 | 4.0 | | |
| D | TMV+p | MT20 | 2.0 | 4.0 | | |
| F | BMVW-t | MT20 | 3.0 | 4.0 | 1.50 | 1.75 |

**DIMENSIONS, SUPPORTS AND LOADINGS SPECIFIED BY FABRICATOR TO BE VERIFIED BY BUILDING DESIGNER**

**BEARINGS**

| JT | FACTORED GROSS REACTION VERT | HORZ | MAXIMUM FACTORED GROSS REACTION DOWN | HORZ | UPLIFT | INPUT BRG IN-SX | REQRD BRG IN-SX | HEEL WEDGE |
|---|---|---|---|---|---|---|---|---|
| B | 525 | 0 | 525 | 0 | 0 | 3-0 | 1-8 | 2x4 L |
| E | 418 | 0 | 418 | 0 | 0 | MECHANICAL | | |

A SUITABLE HANGER/MECHANICAL CONNECTION IS REQUIRED AT JOINT E. MINIMUM BEARING LENGTH AT JOINT E = 1-12.

**UNFACTORED REACTIONS**

1ST LCASE MAX./MIN. COMPONENT REACTIONS

| JT | COMBINED | SNOW | LIVE | PERM.LIVE | WIND | DEAD | SOIL |
|---|---|---|---|---|---|---|---|
| B | 366 | 271 / 0 | 0 / 0 | 0 / 0 | 0 / 0 | 96 / 0 | 0 / 0 |
| E | 293 | 205 / 0 | 0 / 0 | 0 / 0 | 0 / 0 | 88 / 0 | 0 / 0 |

BEARING MATERIAL TO BE SPF NO.2 OR BETTER AT JOINT(S) B

**BRACING**

TOP CHORD TO BE SHEATHED OR MAX. PURLIN SPACING = 6.25 FT.
MAX. UNBRACED BOTTOM CHORD LENGTH = 10.00 FT OR RIGID CEILING DIRECTLY APPLIED.

ALL PITCH BREAKS AND PERIMETER CORNER JOINTS MUST BE LATERALLY RESTRAINED.

**LOADING**

TOTAL LOAD CASES: (4)

CHORDS

| MEMB. FR-TO | MAX. FACTORED FORCE (LBS) | FACTORED VERT. LOAD (PLF) FROM | TO | LC1 MAX CSI (LC) | MAX. UNBRAC LENGTH |
|---|---|---|---|---|---|
| A- B | 0 / 4 | -84.3 | -84.3 | 0.05 (1) | 10.00 |
| B- H | -826 / 0 | -84.3 | -84.3 | 0.20 (4) | 6.25 |
| H- C | -645 / 0 | -84.3 | -84.3 | 0.20 (4) | 6.25 |
| C- D | -14 / 0 | -84.3 | -84.3 | 0.20 (1) | 6.25 |
| F- D | -133 / 0 | 0.0 | 0.0 | 0.02 (1) | 7.81 |
| B- G | 0 / 641 | -18.2 | -18.2 | 0.25 (1) | 10.00 |
| G- F | 0 / 641 | -18.2 | -18.2 | 0.36 (1) | 10.00 |
| F- E | 0 / 0 | -18.2 | -18.2 | 0.21 (1) | 10.00 |

WEBS

| MEMB. FR-TO | MAX. FACTORED FORCE (LBS) | MAX CSI (LC) |
|---|---|---|
| C- F | -686 / 0 | 0.23 (1) |
| G- H | 0 / 243 | 0.00 (1) |

**DESIGN CRITERIA**

SPECIFIED LOADS:

| | | | | | |
|---|---|---|---|---|---|
| TOP | CH. | LL | = | 25.6 | PSF |
| | | DL | = | 3.0 | PSF |
| BOT | CH. | LL | = | 0.0 | PSF |
| | | DL | = | 7.3 | PSF |
| TOTAL | LOAD | | = | 35.9 | PSF |

**SPACING = 24.0 IN. C/C**

THIS TRUSS IS DESIGNED FOR RESIDENTIAL OR SMALL BUILDING REQUIREMENTS OF PART 9, NBCC 2015

THIS DESIGN COMPLIES WITH:
- PART 9 OF BCBC 2018 , NBC-2019AE
- PART 9 OF OBC 2012 (2019 AMENDMENT)
- CSA 086-14
- TPIC 2014

(55 % OF 31.3 P.S.F. G.S.L. PLUS 8.4 P.S.F. RAIN LOAD) EQUALS 25.6 P.S.F. SPECIFIED ROOF LIVE LOAD

ALLOWABLE DEFL.(LL)= L/360 (0.29")
CALCULATED VERT. DEFL.(LL) = L/ 999 (0.07")
ALLOWABLE DEFL.(TL)= L/360 (0.29")
CALCULATED VERT. DEFL.(TL) = L/ 464 (0.23")

CSI: TC=0.20/1.00 (C-H:4) , BC=0.36/1.00 (F-G:1) , WB=0.23/1.00 (C-F:1) , SSI=0.33/1.00 (E-F:1)

DOL LUMBER=1.00 NAIL=1.00 LS BEND=1.10 COMP=1.10 SHEAR=1.10 TENS= 1.10

COMPANION LIVE LOAD FACTOR = 1.00

TRUSS PLATE MANUFACTURER IS NOT RESPONSIBLE FOR QUALITY CONTROL IN THE TRUSS MANUFACTURING PLANT .

NAIL VALUES

| PLATE | GRIP(DRY) (PSI) MAX | MIN | SHEAR (PLI) MAX | MIN | SECTION (PLI) MAX | MIN |
|---|---|---|---|---|---|---|
| MT20 | 650 | 371 | 1747 | 788 | 1987 | 1873 |

PLATE PLACEMENT TOL. = 0.250 inches

PLATE ROTATION TOL. = 5.0 Deg.

JSI GRIP= 0.77 (F) (INPUT = 0.90 )
JSI METAL= 0.34 (C) (INPUT = 1.00 )

LICENSED PROFESSIONAL ENGINEER
I.MATIJEVIC
100528832
PROVINCE OF ONTARIO
APRIL 24, 2023

**READ ALL NOTES ON THIS PAGE AND ON THE ENGINEERING NOTES: TRUSSES. THE NOTE PAGE IS AN INTEGRAL PART OF THIS DRAWING AS IT CONTAINS SPECIFICATIONS AND CRITERIA USED IN THE DESIGN OF THIS COMPONENET.**

CITY OF RICHMOND HILL
BUILDING DIVISION
05/24/2023
RECEIVED
Per: joshua.nabua

KOTT

| JOB NAME | TRUSS NAME | QUANTITY | PLY | JOB DESC. | DRWG NO. |
|---|---|---|---|---|---|
| IM0423-071 | T17 | 3 | 1 | TRUSS DESC. | |

Version 8.630 S Mar 22 2023 MiTek Industries, Inc. Fri Apr 21 14:13:51 2023 Page 1
ID:Oft3GgR1zRzAGpn6KZ87ljzYiN_-bksBpouk10FroRR94pBWHdEU9Bbb1cAXwlRM6_zOUMU

Scale = 1:21.9

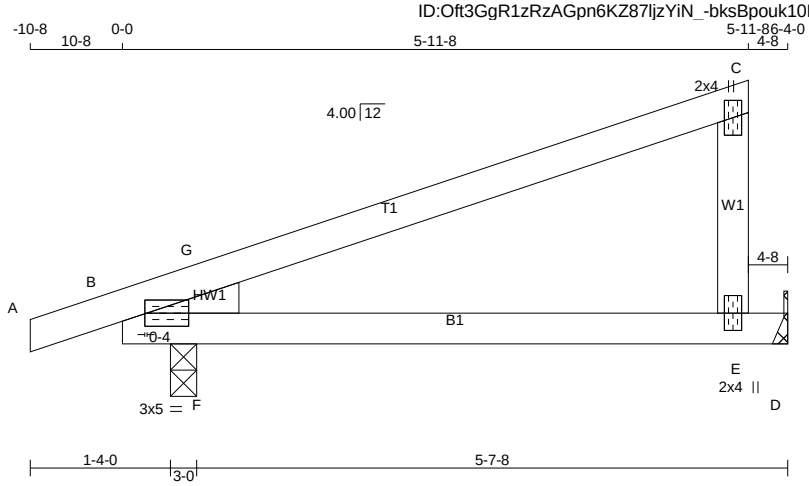


TOTAL WEIGHT = 3 X 19 = 56 lb

**LUMBER**
N. L. G. A. RULES

| CHORDS | SIZE | | LUMBER | DESCR. |
|---|---|---|---|---|
| A - C | 2x4 | DRY | No.2 | SPF |
| E - C | 2x4 | DRY | No.2 | SPF |
| B - D | 2x4 | DRY | No.2 | SPF |

DRY: SEASONED LUMBER.

**PLATES (table is in inches)**

| JT | TYPE | PLATES | W | LEN | Y | X |
|---|---|---|---|---|---|---|
| B | TMBH1-I | MT20 | 3.0 | 5.0 | 1.50 | 0.25 |
| C | TMV+p | MT20 | 2.0 | 4.0 | | |
| E | BMV+p | MT20 | 2.0 | 4.0 | | |

**DIMENSIONS, SUPPORTS AND LOADINGS SPECIFIED BY FABRICATOR TO BE VERIFIED BY BUILDING DESIGNER**

**BEARINGS**

| JT | FACTORED GROSS REACTION VERT | HORZ | MAXIMUM FACTORED GROSS REACTION DOWN | HORZ | UPLIFT | INPUT BRG IN-SX | REQRD BRG IN-SX | HEEL WEDGE |
|---|---|---|---|---|---|---|---|---|
| B | 401 | 0 | 401 | 0 | 0 | 3-0 | 1-8 | 2x4 L |
| D | 294 | 0 | 294 | 0 | 0 | MECHANICAL | | |

A SUITABLE HANGER/MECHANICAL CONNECTION IS REQUIRED AT JOINT D. MINIMUM BEARING LENGTH AT JOINT D = 1-12.

**UNFACTORED REACTIONS**

| JT | 1ST LCASE COMBINED | SNOW | LIVE | PERM.LIVE | WIND | DEAD | SOIL |
|---|---|---|---|---|---|---|---|
| | MAX./MIN. COMPONENT REACTIONS | | | | | | |
| B | 279 | 209 / 0 | 0 / 0 | 0 / 0 | 0 / 0 | 71 / 0 | 0 / 0 |
| D | 206 | 143 / 0 | 0 / 0 | 0 / 0 | 0 / 0 | 63 / 0 | 0 / 0 |

BEARING MATERIAL TO BE SPF NO.2 OR BETTER AT JOINT(S) B

**BRACING**
TOP CHORD TO BE SHEATHED OR MAX. PURLIN SPACING = 6.25 FT.
MAX. UNBRACED BOTTOM CHORD LENGTH = 10.00 FT OR RIGID CEILING DIRECTLY APPLIED.

ALL PITCH BREAKS AND PERIMETER CORNER JOINTS MUST BE LATERALLY RESTRAINED.

**LOADING**
TOTAL LOAD CASES: (4)

| CHORDS MEMB. FR-TO | MAX. FORCE (LBS) | FACTORED VERT. LOAD (PLF) FROM | TO | LC1 MAX CSI (LC) | MAX. UNBRAC LENGTH | WEBS MEMB. FR-TO | MAX. FORCE (LBS) | MAX CSI (LC) |
|---|---|---|---|---|---|---|---|---|
| A- B | 0 / 4 | -84.3 | -84.3 | 0.05 (1) | 10.00 | F- G | -197 / 51 | 0.00 (1) |
| B- G | -33 / 0 | -84.3 | -84.3 | 0.09 (4) | 6.25 | | | |
| G- C | 0 / 3 | -84.3 | -84.3 | 0.40 (1) | 10.00 | | | |
| E- C | -224 / 0 | 0.0 | 0.0 | 0.03 (1) | 7.81 | | | |
| B- F | 0 / 0 | -18.2 | -18.2 | 0.27 (1) | 10.00 | | | |
| F- E | 0 / 0 | -18.2 | -18.2 | 0.30 (1) | 10.00 | | | |
| E- D | 0 / 0 | -18.2 | -18.2 | 0.15 (1) | 10.00 | | | |

**DESIGN CRITERIA**

SPECIFIED LOADS:

| | | | | | |
|---|---|---|---|---|---|
| TOP | CH. | LL | = | 25.6 | PSF |
| | | DL | = | 3.0 | PSF |
| BOT | CH. | LL | = | 0.0 | PSF |
| | | DL | = | 7.3 | PSF |
| TOTAL | LOAD | | = | 35.9 | PSF |

**SPACING = 24.0 IN. C/C**

THIS TRUSS IS DESIGNED FOR RESIDENTIAL OR SMALL BUILDING REQUIREMENTS OF PART 9, NBCC 2015

THIS DESIGN COMPLIES WITH:
- PART 9 OF BCBC 2018 , NBC-2019AE
- PART 9 OF OBC 2012 (2019 AMENDMENT)
- CSA 086-14
- TPIC 2014

(55 % OF 31.3 P.S.F. G.S.L. PLUS 8.4 P.S.F. RAIN LOAD) EQUALS 25.6 P.S.F. SPECIFIED ROOF LIVE LOAD

ALLOWABLE DEFL.(LL)= L/360 (0.21")
CALCULATED VERT. DEFL.(LL) = L/ 718 (0.11")
ALLOWABLE DEFL.(TL)= L/360 (0.21")
CALCULATED VERT. DEFL.(TL) = L/ 380 (0.20")

CSI: TC=0.40/1.00 (C-G:1) , BC=0.30/1.00 (E-F:1) , WB=0.00/1.00 (F-G:1) , SSI=0.23/1.00 (D-E:1)

DOL LUMBER=1.00 NAIL=1.00 LS BEND=1.10 COMP=1.10 SHEAR=1.10 TENS= 1.10

COMPANION LIVE LOAD FACTOR = 1.00

TRUSS PLATE MANUFACTURER IS NOT RESPONSIBLE FOR QUALITY CONTROL IN THE TRUSS MANUFACTURING PLANT .

NAIL VALUES

| PLATE | GRIP(DRY) (PSI) MAX | MIN | SHEAR (PLI) MAX | MIN | SECTION (PLI) MAX | MIN |
|---|---|---|---|---|---|---|
| MT20 | 650 | 371 | 1747 | 788 | 1987 | 1873 |

PLATE PLACEMENT TOL. = 0.250 inches

PLATE ROTATION TOL. = 5.0 Deg.

JSI GRIP= 0.67 (B) (INPUT = 0.90 )
JSI METAL= 0.07 (C) (INPUT = 1.00 )

LICENSED PROFESSIONAL ENGINEER
I.MATIJEVIC
100528832
PROVINCE OF ONTARIO
APRIL 24, 2023

**READ ALL NOTES ON THIS PAGE AND ON THE ENGINEERING NOTES: TRUSSES. THE NOTE PAGE IS AN INTEGRAL PART OF THIS DRAWING AS IT CONTAINS SPECIFICATIONS AND CRITERIA USED IN THE DESIGN OF THIS COMPONENET.**

CITY OF RICHMOND HILL
BUILDING DIVISION
05/24/2023
RECEIVED
Per: joshua.nabua

| JOB NAME | TRUSS NAME | QUANTITY | PLY | JOB DESC. | DRWG NO. |
|---|---|---|---|---|---|
| IM0423-071 | T18 | 2 | 1 | TRUSS DESC. | |

Version 8.630 S Mar 22 2023 MiTek Industries, Inc. Fri Apr 21 14:13:52 2023 Page 1
ID:Oft3GgR1zRzAGpn6KZ87ljzYiN_-3wPZ08vMoKNiPb0LeWilqqnlLb?6m30g8PBwfQzOUMT

Scale = 1:21.9

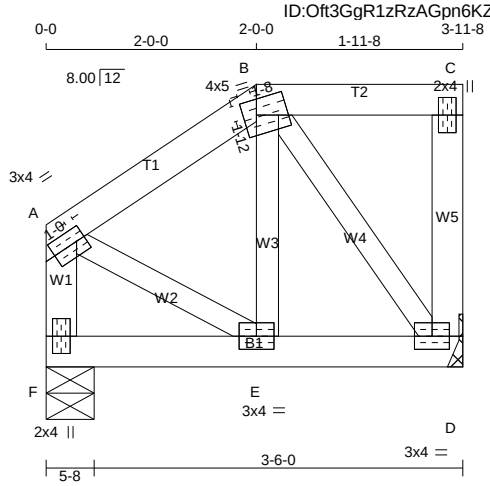


TOTAL WEIGHT = 2 X 18 = 37 lb

**LUMBER**
N. L. G. A. RULES

| CHORDS | SIZE | | LUMBER | DESCR. |
|---|---|---|---|---|
| A - B | 2x4 | DRY | No.2 | SPF |
| B - C | 2x4 | DRY | No.2 | SPF |
| D - C | 2x4 | DRY | No.2 | SPF |
| F - A | 2x4 | DRY | No.2 | SPF |
| F - D | 2x4 | DRY | No.2 | SPF |
| ALL WEBS EXCEPT | 2x3 | DRY | No.2 | SPF |

DRY: SEASONED LUMBER.

**PLATES (table is in inches)**

| JT | TYPE | PLATES | W | LEN | Y | X |
|---|---|---|---|---|---|---|
| A | TMVW-t | MT20 | 3.0 | 4.0 | 1.50 | 1.00 |
| B | TTWW-m | MT20 | 4.0 | 5.0 | 1.75 | 1.50 |
| C | TMV+p | MT20 | 2.0 | 4.0 | | |
| D | BMVW1-t | MT20 | 3.0 | 4.0 | | |
| E | BMWW-t | MT20 | 3.0 | 4.0 | | |
| F | BMV1+p | MT20 | 2.0 | 4.0 | | |

**DIMENSIONS, SUPPORTS AND LOADINGS SPECIFIED BY FABRICATOR TO BE VERIFIED BY BUILDING DESIGNER**

**BEARINGS**

| JT | FACTORED GROSS REACTION VERT | HORZ | MAXIMUM FACTORED GROSS REACTION DOWN | HORZ | UPLIFT | INPUT BRG IN-SX | REQRD BRG IN-SX |
|---|---|---|---|---|---|---|---|
| D | 203 | 0 | 203 | 0 | 0 | MECHANICAL | |
| F | 203 | 0 | 203 | 0 | 0 | 5-8 | 1-8 |

A SUITABLE HANGER/MECHANICAL CONNECTION IS REQUIRED AT JOINT D. MINIMUM BEARING LENGTH AT JOINT D = 1-8.

**UNFACTORED REACTIONS**

| JT | 1ST LCASE COMBINED | MAX./MIN. COMPONENT REACTIONS SNOW | LIVE | PERM.LIVE | WIND | DEAD | SOIL |
|---|---|---|---|---|---|---|---|
| D | 142 | 101 / 0 | 0 / 0 | 0 / 0 | 0 / 0 | 41 / 0 | 0 / 0 |
| F | 142 | 101 / 0 | 0 / 0 | 0 / 0 | 0 / 0 | 41 / 0 | 0 / 0 |

BEARING MATERIAL TO BE SPF NO.2 OR BETTER AT JOINT(S) F

**BRACING**
TOP CHORD TO BE SHEATHED OR MAX. PURLIN SPACING = 6.25 FT.
MAX. UNBRACED BOTTOM CHORD LENGTH = 10.00 FT OR RIGID CEILING DIRECTLY APPLIED.

ALL PITCH BREAKS AND PERIMETER CORNER JOINTS MUST BE LATERALLY RESTRAINED.

**LOADING**
TOTAL LOAD CASES: (4)

| CHORDS MEMB. FR-TO | MAX. FACTORED FORCE (LBS) | FACTORED VERT. LOAD (PLF) FROM | TO | LC1 MAX CSI (LC) | MAX. UNBRAC LENGTH | WEBS MEMB. FR-TO | MAX. FACTORED FORCE (LBS) | MAX CSI (LC) |
|---|---|---|---|---|---|---|---|---|
| A- B | -105 / 0 | -84.3 | -84.3 | 0.04 (1) | 6.25 | E- B | -2 / 36 | 0.01 (4) |
| B- C | 0 / 0 | -84.3 | -84.3 | 0.05 (1) | 10.00 | B- D | -137 / 0 | 0.03 (1) |
| D- C | -82 / 0 | 0.0 | 0.0 | 0.01 (1) | 7.81 | A- E | 0 / 97 | 0.02 (1) |
| F- A | -186 / 0 | 0.0 | 0.0 | 0.02 (1) | 7.81 | | | |
| F- E | 0 / 0 | -18.2 | -18.2 | 0.02 (4) | 10.00 | | | |
| E- D | 0 / 87 | -18.2 | -18.2 | 0.02 (4) | 10.00 | | | |

**DESIGN CRITERIA**

SPECIFIED LOADS:

| | | | | | |
|---|---|---|---|---|---|
| TOP | CH. | LL | = | 25.6 | PSF |
| | | DL | = | 3.0 | PSF |
| BOT | CH. | LL | = | 0.0 | PSF |
| | | DL | = | 7.3 | PSF |
| TOTAL | LOAD | | = | 35.9 | PSF |

**SPACING = 24.0 IN. C/C**

LOADING IN FLAT SECTION BASED ON A SLOPE OF 8.00/12

THIS TRUSS IS DESIGNED FOR RESIDENTIAL OR SMALL BUILDING REQUIREMENTS OF PART 9, NBCC 2015

THIS DESIGN COMPLIES WITH:
- PART 9 OF BCBC 2018 , NBC-2019AE
- PART 9 OF OBC 2012 (2019 AMENDMENT)
- CSA 086-14
- TPIC 2014

(55 % OF 31.3 P.S.F. G.S.L. PLUS 8.4 P.S.F. RAIN LOAD) EQUALS 25.6 P.S.F. SPECIFIED ROOF LIVE LOAD

ALLOWABLE DEFL.(LL)= L/360 (0.19")
CALCULATED VERT. DEFL.(LL) = L/ 999 (0.00")
ALLOWABLE DEFL.(TL)= L/360 (0.19")
CALCULATED VERT. DEFL.(TL) = L/ 999 (0.00")

CSI: TC=0.05/1.00 (B-C:1) , BC=0.02/1.00 (D-E:4) , WB=0.03/1.00 (B-D:1) , SSI=0.06/1.00 (B-C:1)

DOL LUMBER=1.00 NAIL=1.00 LS BEND=1.10 COMP=1.10 SHEAR=1.10 TENS= 1.10

COMPANION LIVE LOAD FACTOR = 1.00

TRUSS PLATE MANUFACTURER IS NOT RESPONSIBLE FOR QUALITY CONTROL IN THE TRUSS MANUFACTURING PLANT .

NAIL VALUES

| PLATE | GRIP(DRY) (PSI) MAX | MIN | SHEAR (PLI) MAX | MIN | SECTION (PLI) MAX | MIN |
|---|---|---|---|---|---|---|
| MT20 | 650 | 371 | 1747 | 788 | 1987 | 1873 |

PLATE PLACEMENT TOL. = 0.250 inches

PLATE ROTATION TOL. = 5.0 Deg.

JSI GRIP= 0.30 (A) (INPUT = 0.90 )
JSI METAL= 0.05 (A) (INPUT = 1.00 )

LICENSED PROFESSIONAL ENGINEER
I.MATIJEVIC
100528832
PROVINCE OF ONTARIO
APRIL 24, 2023

**READ ALL NOTES ON THIS PAGE AND ON THE ENGINEERING NOTES: TRUSSES. THE NOTE PAGE IS AN INTEGRAL PART OF THIS DRAWING AS IT CONTAINS SPECIFICATIONS AND CRITERIA USED IN THE DESIGN OF THIS COMPONENET.**

CITY OF RICHMOND HILL
BUILDING DIVISION
05/24/2023
RECEIVED
Per: joshua.nabua

KOTT

MiTek®

STANDARD DETAIL **MSD2015-H**

Issued: MARCH 1, 2022
Expiry: APRIL 30, 2024

# TOE-NAIL CAPACITY DETAILS

## LATERAL AND WITHDRAWAL RESISTANCE OF BEARING ANCHORAGE BY TOE-NAILS

| NAIL TYPE | Length (in) | Diameter (in) | LATERAL Resistance per nail (Lbs.) | | WITHDRAWAL Resistance per nail (Lbs.) | |
|---|---|---|---|---|---|---|
| | | | SPF | D. FIR | SPF | D. FIR |
| COMMON WIRE | 3.00 | 0.144 | 122 | 139 | 30 | 42 |
| | 3.25 | 0.144 | 127 | 144 | 32 | 45 |
| | 3.50 | 0.160 | 152 | 173 | 38 | 52 |
| COMMON SPIRAL | 3.00 | 0.122 | 96 | 108 | 26 | 36 |
| | 3.25 | 0.122 | 97 | 108 | 28 | 40 |
| | 3.50 | 0.152 | 142 | 161 | 36 | 50 |
| 3.25" Gun nail | 3.25 | 0.120 | 94 | 105 | 28 | 39 |

**Note:** If using truss with D. Fir lumber and SPF bearing plate, use tabulated SPF values in table.

| Nail type: | Common wire | Common spiral | Common wire | Common spiral | Gun Nail |
|---|---|---|---|---|---|
| Diameter (in.) | 0.160 | 0.152 | 0.144 | 0.122 | 0.120 |
| Length (in.) | 3.50 | 3.50 | 3.00 | 3.00 | 3.25 |
| **LUMBER** | **MAXIMUM NUMBER OF TOE-NAILS** | | | | |
| **2x4 SPF** | 2 | 2 | 3 | 3 | 3 |
| **2x6 SPF** | 4 | 4 | 4 | 5 | 5 |
| **2x4 D. FIR** | 2 | 2 | 2 | 2 | 2 |
| **2x6 D. FIR** | 3 | 3 | 3 | 4 | 4 |

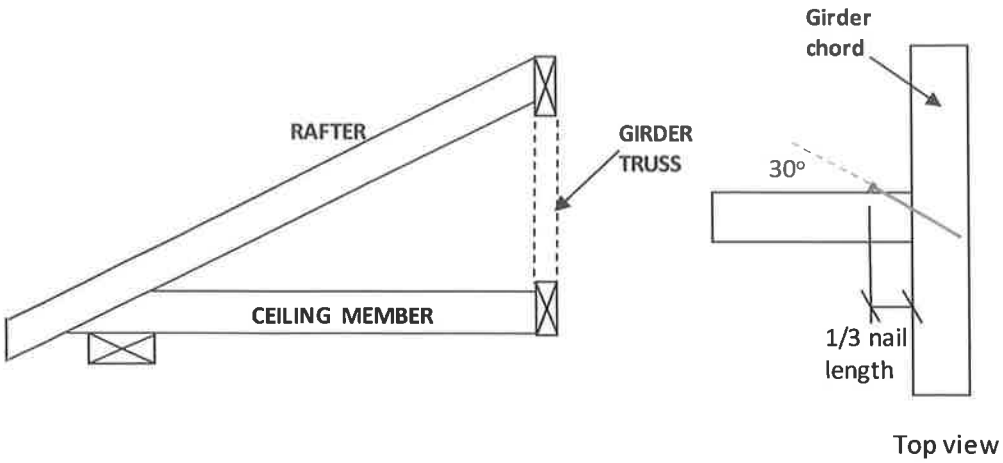


**Figure 1: Toe-Nailing Rafter / Ceiling Member to Girder Truss**

PEO
Certificate No. 10889485

LICENSED PROFESSIONAL ENGINEER
2022-04-05
C. Cordogiannis
90553736
PROVINCE OF ONTARIO

CITY OF RICHMOND HILL
BUILDING DIVISION
05/24/2023
RECEIVED
Per: joshua.nabua


©2020 MiTek Canada Inc., 240 Stirling Crescent, Bradford, Ontario, L3Z 4L5 | (800) 268-3434, www.mitek.ca

MiTek®

STANDARD DETAIL **MSD2015-H**

Issued: MARCH 1, 2022
Expiry: APRIL 30, 2024

# TOE-NAIL CAPACITY DETAILS

**Figure 2: Toe-Nail Anchorage to Bearing Plate for Uplift**

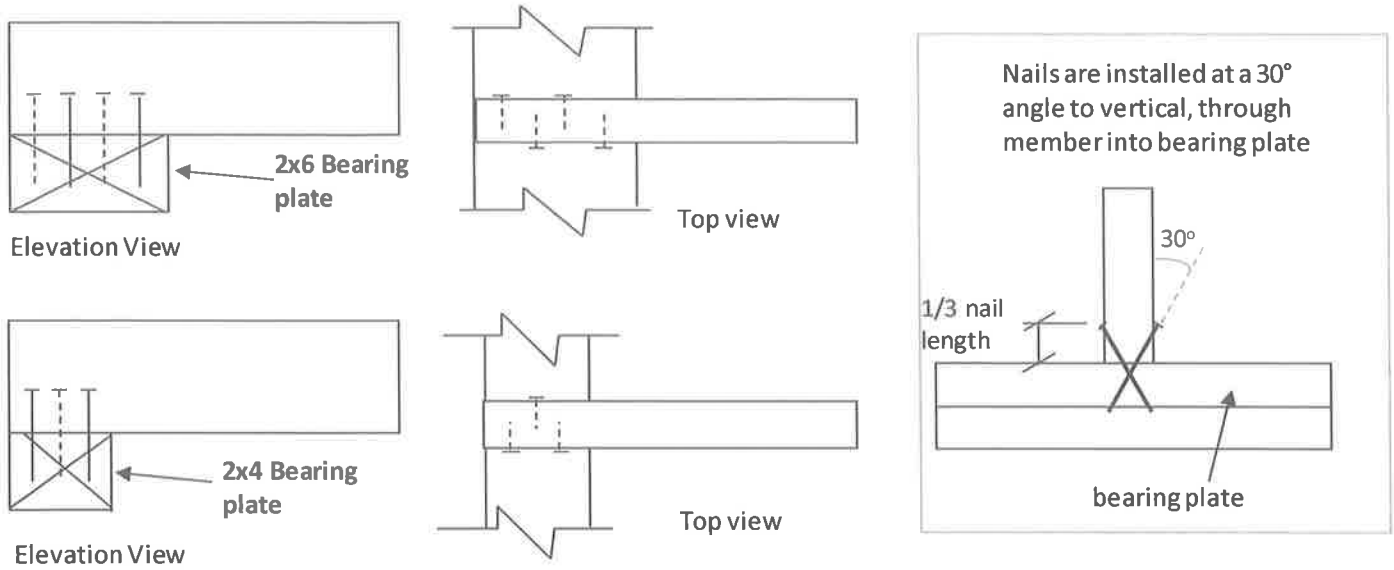


**NOTES:**

1. Rafter and ceiling members may be connected to top and bottom chords of girder truss by toe-nailing the members into the girder chords (see fig. 1), provided the factored vertical reactions of the supported members do not exceed the lateral resistance of the toe-nails. Mechanical connectors (hangers) are required if factored vertical reactions exceed the toe-nail capacity, or if the connection must resist horizontal loads (loads perpendicular to the face of girder or rafter).

2. Trusses, rafters or ceiling members may be anchored to the bearing plate with toe-nails (see fig. 2), provided that the factored uplift reactions due to **wind or earthquake loads** do not exceed the **withdrawal resistance of the toe-nails.** Mechanical anchors (tie-downs) are required for reactions that exceed the toe-nail withdrawal capacity. Toe-nail anchorage to bearing plates is **NOT** permitted if uplift reactions are generated from gravity loads (snow, floor live, dead).

3. Tabulated toe-nail resistances on page 1 are for **one** toe-nail. Multiply unit values by the number of nails used in the connection. Maximum number of nails in a connection shall not exceed the tabulated limits shown on page 1 for a given lumber size /species.

4. Nail values are based on specific gravity of G = 0.42 (SPF) and G = 0.49 (D. Fir).

5. Toe-nails shall be driven at approximately 1/3 the nail length from the edge of the joist/truss chord and driven at an angle of 30° to the grain of the member.

6. For wind / earthquake loads, tabulated lateral resistances may be multiplied by 1.15 ($K_D$ factor). No increases are permitted for tabulated withdrawal resistances.

7. Lumber must be dry (< 19% moisture content) at the time of nail installation.

8. Nail values in this table comply with CSA O86-19, Clause 12.9.

PEO
Certificate No. 10889485

LICENSED PROFESSIONAL ENGINEER
2022-04-05
C. Cordoviannis
90553736
PROVINCE OF ONTARIO

CITY OF RICHMOND HILL
BUILDING DIVISION
05/24/2023
RECEIVED
Per: joshua.nabua


©2020 MiTek Canada Inc., 240 Stirling Crescent, Bradford, Ontario, L3Z 4L5 | (800) 268-3434, www.mitek.ca

MiTek®

# STANDARD DETAIL MSD2015-J

Issued: **MARCH 17, 2021**
Expiry: **APRIL 30, 2023**

## STANDARD HIP END FRAMING

### PLAN VIEW

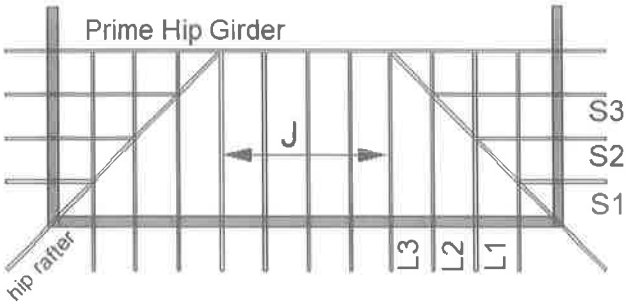


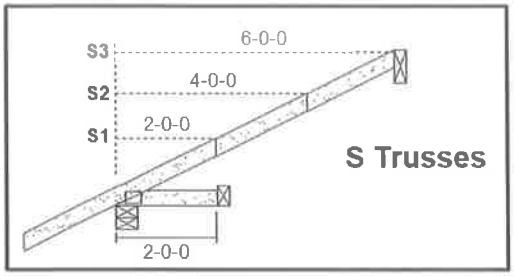


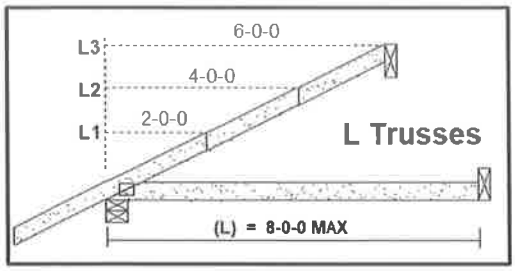


**Specified Load Rating:**

| | |
|---|---|
| Top chord Live: | 51.0 PSF or less |
| Top chord Dead: | 6.0 PSF or less |
| Bottom chord Live: | 0.0 PSF |
| Bottom chord Dead: | 7.3 PSF or less |

**HEEL DETAIL 'A'**
**Standard Heel**

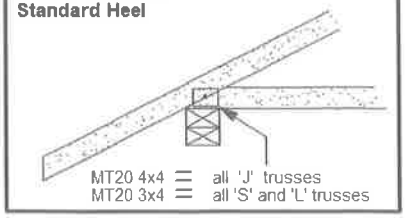


**DETAIL "B":**
**Raised Heel**

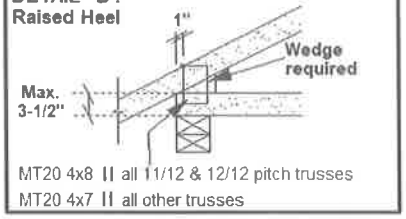


**HEEL DETAIL 'C'**
**Cantilever**

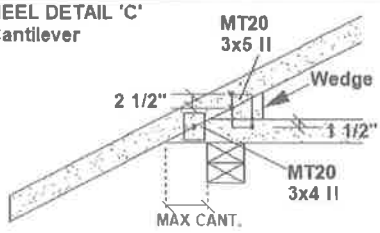


**CANTILEVER DETAIL "C"**

| SLOPE | MAX CANT. | WEDGE PLATE | WEDGE SIZE |
|---|---|---|---|
| 3/12 | 17" | 3 X 5 | 2 X 3 |
| 4/12 | 14" | 3 X 5 | 2 X 3 |
| 5/12 | 12" | 3 X 5 | 2 X 4 |
| 6/12 | 10" | 3 X 5 | 2 X 4 |
| 7/12 | 9" | 3 X 5 | 2 X 6 |
| 8/12 | 8.5" | 3 X 5 | 2 X 6 |
| 9/12 | 8" | 3 X 5 | 2 X 6 |
| 10/12 | 7.5" | 3 X 5 | 2 X 6 |

### J Trusses

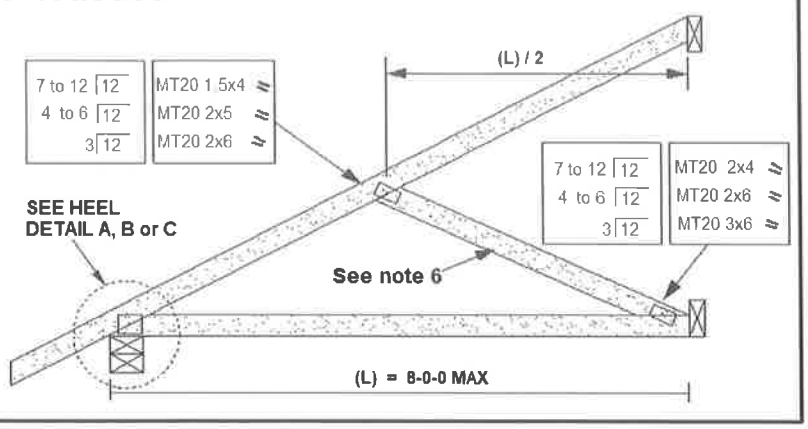


PEO
Certificate No. 10889485

LICENSED PROFESSIONAL ENGINEER
2022-04-27
C. Cordogiannis
90553736
PROVINCE OF ONTARIO

**NOTES:**

1. This detail is valid only for projects conforming to **PART 9 NBCC 2015** that do not require a wind analysis to be incorporated into the design of the trusses.
2. Overhang length shall not exceed 24 inches.
3. All lumber shall be 2x4 SPF (or D-Fir) DRY No. 2 grade or better.
4. All plates specified are MITEK MT20, pressed into both faces of each truss. Heel plates of all trusses shall conform to heel details 'A', 'B' or 'C'.
5. Diagonal hip rafter design shall conform to section 9.23.14.6 of NBCC 2015.
6. For 6.0 ft. or less span, diagonal web on truss 'J" is optional. Girder design must reflect choice of partial jack ('J' with diagonal web) or open jack ('J' without diagonal web)
7. All truss-to-rafter and truss-to-truss connections shall be specified as per MITEK standard detail *'MSD2015-H: Toe-Nail Capacity Details'*

CITY OF RICHMOND HILL
BUILDING DIVISION
05/24/2023
RECEIVED
Per:____joshua.nabua_____


©2021 MiTek Canada Inc.240 Stirling Cr. Bradford Ontario, L3Z 4L5 (800) 268-3434, www.mitek.ca

MiTek®

# STANDARD DETAIL MSD2015-K

Issued: **MARCH 1, 2022**
Expiry: **APRIL 30, 2024**

## STANDARD GABLE END DETAIL

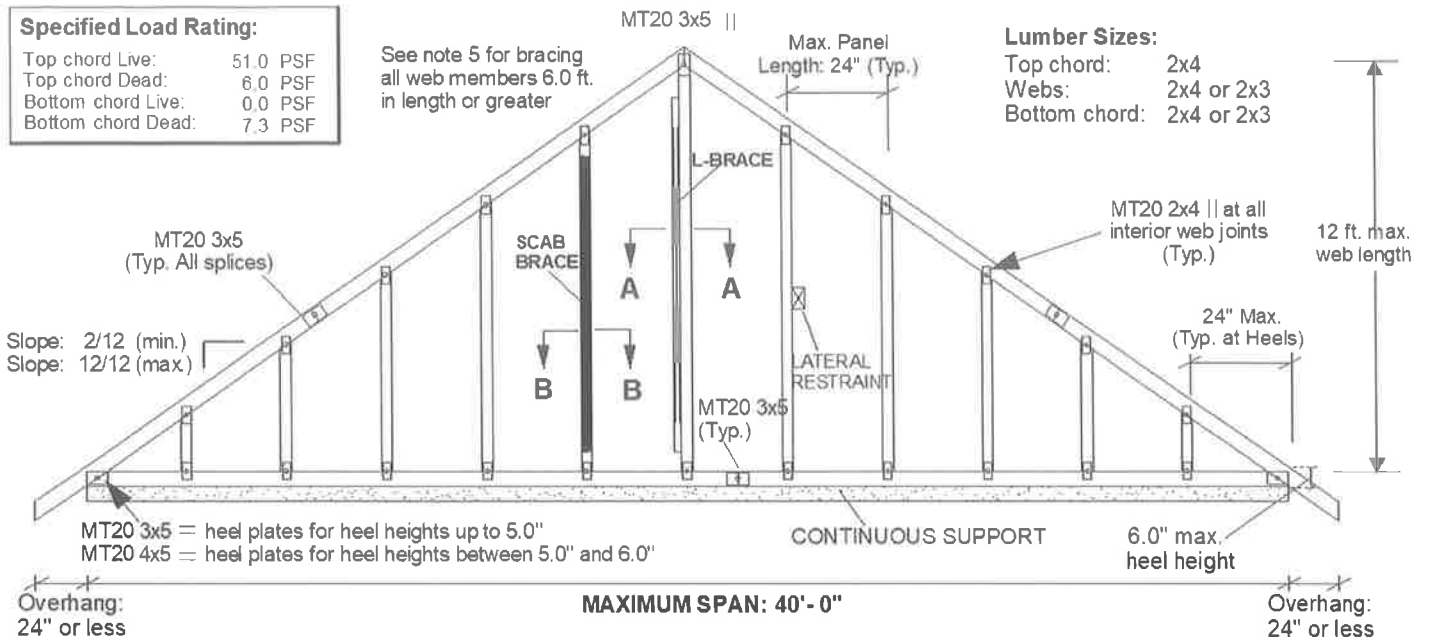


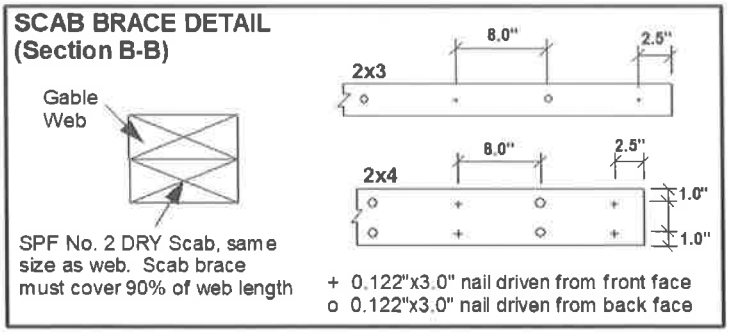


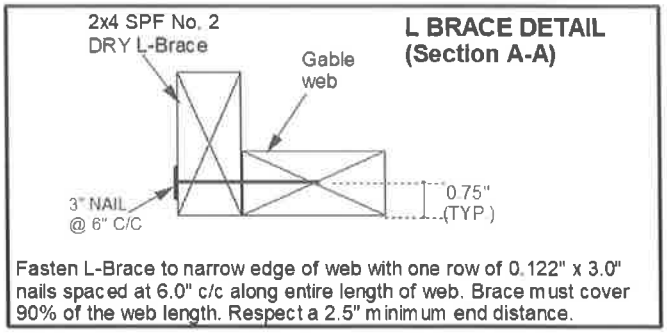


### Notes:

1. This detail is only valid for projects conforming to **Part 9, NBCC 2015** that do not require a wind analysis to be incorporated into the design of the truss.
2. This detail is for vertical (gravity) load rating of the truss only. Truss must be continuously supported over the entire length of bottom chord.
3. Maximum web length not to exceed 12.0 ft. Spacing of gable stud webs in the truss not to exceed 24 inches cc.
4. Splice joints shall not be located in the first panel adjacent to the heel joint or peak joint.
5. Lateral restraint required at half-length of all webs over 6.0 ft. long. Alternatively install an L-Brace or scab brace as shown above. Scab braces shall be limited to 10 ft. long webs or less.
6. All plates are MITEK MT20 pressed into both faces of truss.
7. All lumber to be SPF (or D-Fir) DRY and of No.2 grade or better.
8. Additional building bracing is typically installed to brace the face of the end wall assembly. See BCSI Canada '*Building Designer Responsibilities for Gable End Frame Bracing*' for additional information on building bracing for gable-end assemblies.

PEO
Certificate No. 10889485

LICENSED PROFESSIONAL ENGINEER
2022-04-05
C. Cordogiannis
90553736
PROVINCE OF ONTARIO

CITY OF RICHMOND HILL
BUILDING DIVISION
05/24/2023
RECEIVED
Per: joshua.nabua


©2020 MiTek Canada Inc., 240 Stirling Crescent, Bradford, Ontario, L3Z 4L5 | (800) 268-3434, www.mitek.ca

# Engineering Notes: Trusses

KOTT

**PLEASE READ ALL NOTES PRIOR TO INSTALLATION OF THE COMPONENT**

## RESPONSIBILITIES

THE UNDERSIGNED ENGINEER IS ONLY RESPONSIBLE FOR THE STRUCTURAL INTEGRITY OF THIS BUILDING COMPONENT FOR THE CONDITIONS AND LOADS SHOWN ON CALCULATION PAGE. THE STRUCTURAL INTEGRITY OF THE BUILDING AND THE VERIFICATION OF THE DIMENSIONS AND THE DESIGN LOADS USED ARE THE RESPONSIBILITY OF THE BUILDING DESIGNER.
THE UNDERSIGNED ENGINEER DISCLAIMS ANY RESPONSIBILITY FOR DAMAGES AS A RESULT OF FAULTY OR INCORRECT INFORMATION, SPECIFICATION AND/OR DESIGNS FURNISHED TO THE ENGINEER.
IT IS THE RESPONSIBILITY OF KOTT Inc. TO ENSURE THAT TRUSSES ARE MANUFACTURED IN CONFORMANCE WITH THESE DESIGNS AND WITH THE SPECIFICATIONS OUTLINED BELOW. THE UNDERSIGNED ENGINEER IS NOT RESPONSIBLE FOR QUALITY CONTROL IN THE TRUSS MANUFACTURING PLANT.

## DESIGN INFORMATION

THIS DESIGN IS FOR AN INDIVIDUAL BUILDING COMPONENT AND HAS BEEN BASED ON INFORMATION PROVIDED BY KOTT DESIGN.

1. THE BUILDING USE AND OCCUPANCY TYPE IS AS INDICATED ON THE DRAWING.
2. GEOMETRY OF THE TRUSS AND DIMENSIONS INDICATED ON THE DRAWING ARE IDENTICAL TO THOSE OF THE INSTALLED TRUSS.
3. THE TRUSS LOADING INTENSITY AND DISTRIBUTION AS WELL AS LOAD TRANSFER MECHANISM IS THAT INDICATED ON THE DRAWING. NO BUILDINGS, TREES, PARAPETS OR OTHER PROJECTIONS HIGHER THAN THE ROOF FOR WHICH THE TRUSSES ARE USED ARE LOCATED WITHIN A DISTANCE LESS THAN TEN (10) TIMES THE DIFFERENCE IN HEIGHT, OR FIVE METERS (16 FT) WHICHEVER IS GREATER, UNLESS THE DRAWING INDICATES THAT THE SNOW DRIFTING HAS BEEN TAKEN INTO ACCOUNT.
4. THE TRUSSES ARE TO BE SUPPORTED AT THE BEARING POINTS INDICATED AND ANCHORED TO THE SUPPORTS WHERE CONSIDERED NECESSARY BY THE DESIGNER OF THE OVERALL STRUCTURE. BEARING SIZES SHOWN ARE THE MINIMUM REQUIRED TO PREVENT CRUSHING OF THE TRUSS MEMBERS AND DO NOT NECESSARILY TAKE INTO ACCOUNT STABILITY OF THE OVERALL BUILDING STRUCTURE. ELEVATION OF BEARINGS MUST BE CAREFULLY CHECKED AND SHIMMED TO ALIGNMENT FOR SOLID BEARINGS. ADEQUATE WOOD TRUSS BEARING IS THE RESPONSIBILITY OF THE BUILDING DESIGNER.

## CODE

TRUSSES ARE DESIGNED IN CONFORMANCE WITH THE RELEVANT SECTIONS OF THE NATIONAL BUILDING CODE OF CANADA OR THE CANADIAN CODE FOR FARM BUILDINGS, WHICHEVER APPLIES TO THE BUILDING TYPE INDICATED ON THE DRAWING, THE ONTARIO BUILDING CODE, TPIC AND CANADIAN STANDARDS ASSOCIATION GUIDELINES.

## HANDLING, INSTALLATION AND BRACING

1. THE TRUSSES MUST BE HANDLED AND INSTALLED BY A QUALIFIED PROFESSIONAL AS PER THE SUPPLIED DOCUMENT TITLED INFORMATION FOR TRUSS INSTALLERS AND THE BCSI-B1 AND BCSI-B3 SUMMARY SHEETS.
2. THE COMPRESSION CHORDS ARE LATERALLY BRACED BY CONTINUOUS RIGID DIAPHRAGM SHEATHING OR AS SPECIFIED ON THE DRAWING.
3. TEMPORARY AND PERMANENT BRACING MUST BE INSTALLED AS INDICATED ON THE TRUSS DRAWING AND ACCORDING TO THE BCSI-B1 AND BCSI-B3 SUMMARY SHEETS. BRACING FOR THE LATERAL STABILITY OF THE TRUSS IS TO BE PROVIDED BY THE BUILDING DESIGNER.
4. IT IS RECOMMENDED THAT A PROFESSIONAL ENGINEER'S ADVICE BE OBTAINED FOR THE BRACING OF TRUSSES SPANNING MORE THAN 12.37M (40'-7").

CITY OF RICHMOND HILL
BUILDING DIVISION
05/24/2023
RECEIVED
Per: joshua.nabua