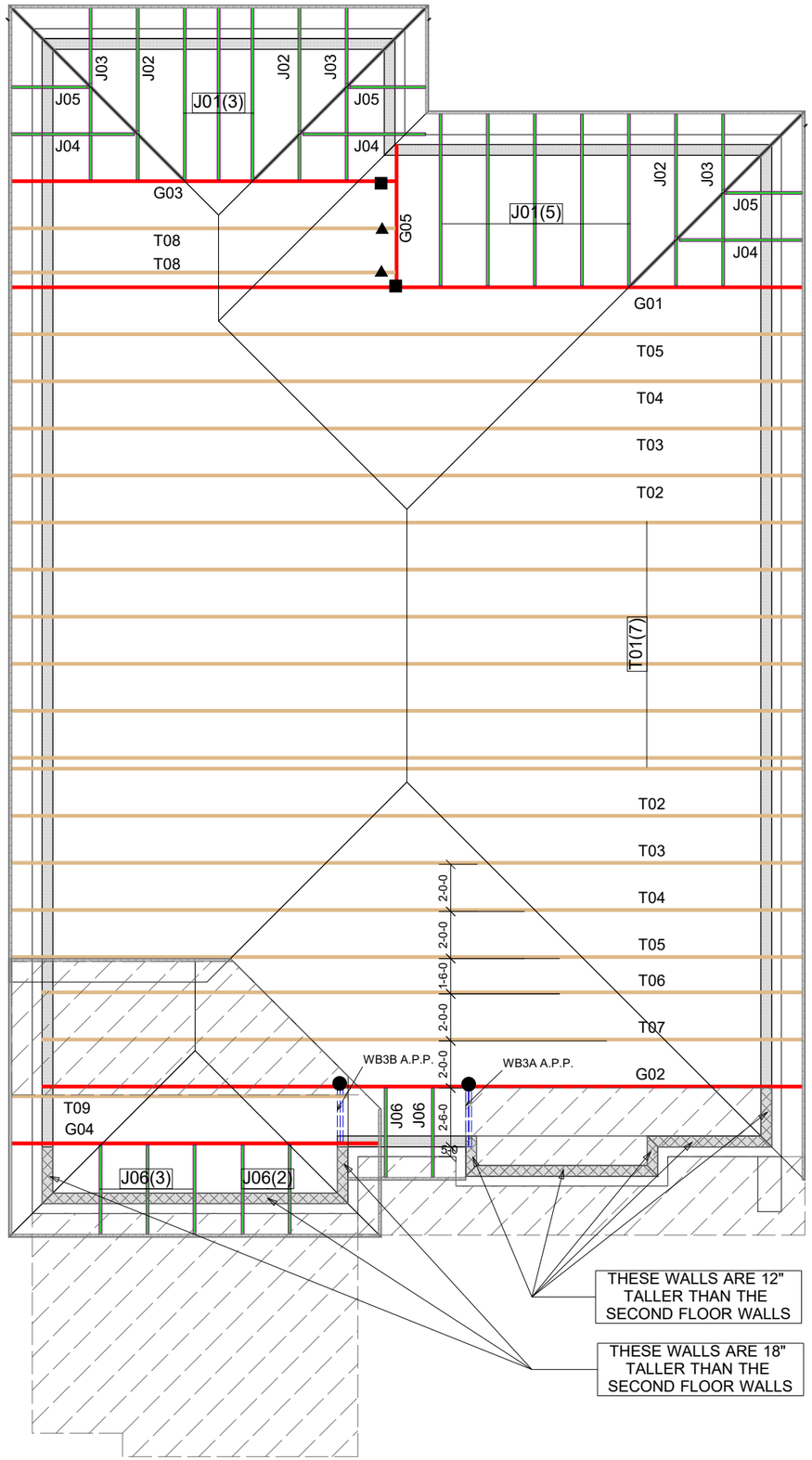

Hanger Name	Symbol	QTY
LUS24	▲	2
LJS26DS	■	2
HGUS26-2	●	2

CONVENTIONAL FRAMING BY OTHERS

ALL CONVENTIONAL FRAMING TO CONFORM WITH PART 9 OF THE OBC. ROOF RAFTERS THAT CROSS OVER TRUSSES TO BE MIN. 2x4 SPF @ 24" C/C WITH A 2x4 VERTICAL POST TO THE TRUSS BELOW. VERTICAL POSTS TO BE LATERALLY BRACED SO THAT UNBRACED LENGTH DOES NOT EXCEED 6'. DESIGN OF CONVENTIONAL FRAMING IS THE RESPONSIBILITY OF THE PROJECT ENGINEER.

JOB INFORMATION

Customer	ROUNDEL HOMES INC
Job #	21-00087R0
Address	PINETREE 3 RICHMOND HILL,ON
Model	38-03 ELEV 3
Sales Rep	RALPH MIRIGELLO
Designer	KR
Date	3/11/2021
Path	C:\MITEK\CA\JOBS\GREENPARK GROUP\ROUNDEL HOMES INC\T-PT38-03-3\

DESIGN INFORMATION

Code	NBCC 2015
Bldg	Residential - HSB (NBCC Part 9)
TC LL	25.6 lb/ft²
TC DL	3.0 lb/ft²
BC LL	0.0 lb/ft²
BC DL	7.3 lb/ft²
Deflection	LL=L/360 TL=L/360
Spacing	24" O/C unless otherwise noted
Complies With	OBC 2012 (2019 Amendment) CSA O86-14 and TPIC 2014

IMPORTANT INFORMATION

Refer to truss drawings in the Truss Engineering Package for ply-to-ply attachment notes

For site-framed valleys: top chords of all roof trusses must be laterally supported using 2x4 continuous bracing @24 O/C - all bracing must be anchored at ends as per TPIC Installation Guidelines

Read all notes on this page in addition to those shown on the KOTT Truss Engineering package

Field erection, handling and bracing are not the responsibility of KOTT, or KOTT Engineering

Unless noted otherwise, hurricane ties are to be installed at the bearings of all trusses > 40 ft clear span, and any girder or beam supporting trusses with a clear span >40 ft. See hanger legend for type.

Unless noted otherwise, for Part 9 bldgs, all trusses are to be anchored to the top of supporting walls as follows: trusses with a clear span <40 ft use 3-1/4" nails @ each bearing, trusses with a clear span >40 ft use 3-1/4" nails @ each bearing in addition to the appropriate hurricane tie.

KOTT Inc.
14 Anderson Blvd.
Uxbridge, ON
905.642.4400

09/22/2022
RECEIVED
Per: joshua.nabua
CITY OF RICHMOND HILL
BUILDING DIVISION

ENGINEERING NOTE PAGE (ENP-1)
PLEASE READ PRIOR TO INSTALLATION

RESPONSIBILITIES

THIS DESIGN IS FOR AN INDIVIDUAL BUILDING COMPONENT AND HAS BEEN BASED ON INFORMATION PROVIDED BY KOTT DESIGN. THE UNDERSIGNED ENGINEER DISCLAIMS ANY RESPONSIBILITY FOR DAMAGES AS A RESULT OF FAULTY OR INCORRECT INFORMATION, SPECIFICATION AND/OR DESIGNS FURNISHED TO THE ENGINEER. THE UNDERSIGNED ENGINEER IS ONLY RESPONSIBLE FOR THE STRUCTURAL INTEGRITY OF THIS BUILDING COMPONENT FOR THE CONDITIONS AND LOADS SHOWN ON THIS DRAWING. THE STRUCTURAL INTEGRITY OF THE BUILDING AND THE VERIFICATION OF THE DIMENSIONS AND THE DESIGN LOADS USED ARE THE RESPONSIBILITY OF THE BUILDING DESIGNER.

TRUSSES ARE DESIGNED IN CONFORMANCE WITH THE RELEVANT SECTIONS OF THE NATIONAL BUILDING CODE OF CANADA OR THE CANADIAN CODE FOR FARM BUILDINGS, WHICHEVER APPLIES TO THE BUILDING TYPE INDICATED ON THE DRAWING

IT IS THE RESPONSIBILITY OF KOTT TO ENSURE THAT TRUSSES ARE MANUFACTURED IN CONFORMANCE WITH THESE DESIGNS AND WITH THE SPECIFICATIONS OUTLINED BELOW. THE UNDERSIGNED ENGINEER IS NOT RESPONSIBLE FOR QUALITY CONTROL IN THE TRUSS MANUFACTURING PLANT.

USE AND OCCUPANCY

- The building is of the type indicated on the drawing

LOADING

- The truss loading intensity and distribution as well as load transfer mechanism is that indicated on the drawing
- No buildings, trees, parapets or other projections higher than the roof for which the trusses are used are located within a distance less than ten (10) times the difference in height, or five metres (16 ft) whichever is greater, unless the drawing indicates that the snow drifting has been taken into account

HANDLING, INSTALLATION AND BRACING

- The trusses must be handled and installed by a qualified professional as per the supplied document titled *Information for Truss Installers* and the BCSI-B1 and BCSI-B3 Summary Sheets
- The compression chords are laterally braced by continuous rigid diaphragm sheathing or as specified on the drawing
- Temporary and permanent bracing must be installed as indicated on the truss drawing and according to the BCSI-B1 and BCSI-B3 Summary Sheets. Bracing for the lateral stability of the truss is to be provided by the building designer
- **It is recommended that a Professional Engineer's advice be obtained for the bracing of trusses spanning more than 12.37m (40'-7")**

SUPPORTS

- The trusses are to be supported at the bearing points indicated and anchored to the supports where considered necessary by the designer of the overall structure
- Bearing sizes shown are the minimum required to prevent crushing of the truss members and do not necessarily take into account stability of the overall building structure
- Elevation of bearings must be carefully checked and shimmed to alignment for solid bearings
- Adequate wood truss bearing is the responsibility of the building designer.

DIMENSIONS

- Geometry of the truss and dimensions indicated on the drawing are identical to those of the installed truss.

KOTT

CITY OF RICHMOND HILL
BUILDING DIVISION
09/22/2022
2020/04/22
RECEIVED
Per:____joshua.nabua_____

JOB NAME	TRUSS NAME	QUANTITY	PLY	JOB DESC.	DRWG NO.
IM0621-171	G01	1	1	TRUSS DESC.	

Version 8.420 S Apr 29 2021 MiTek Industries, Inc. Tue Jun 29 13:09:26 2021 Page 1
ID:OWh2l4vpdPTbcMQK?92PSNzbzpx-w2YaFG4RliZVCQmZLfTZaVW3Uj9mZWhJdRgspFz1Qkt

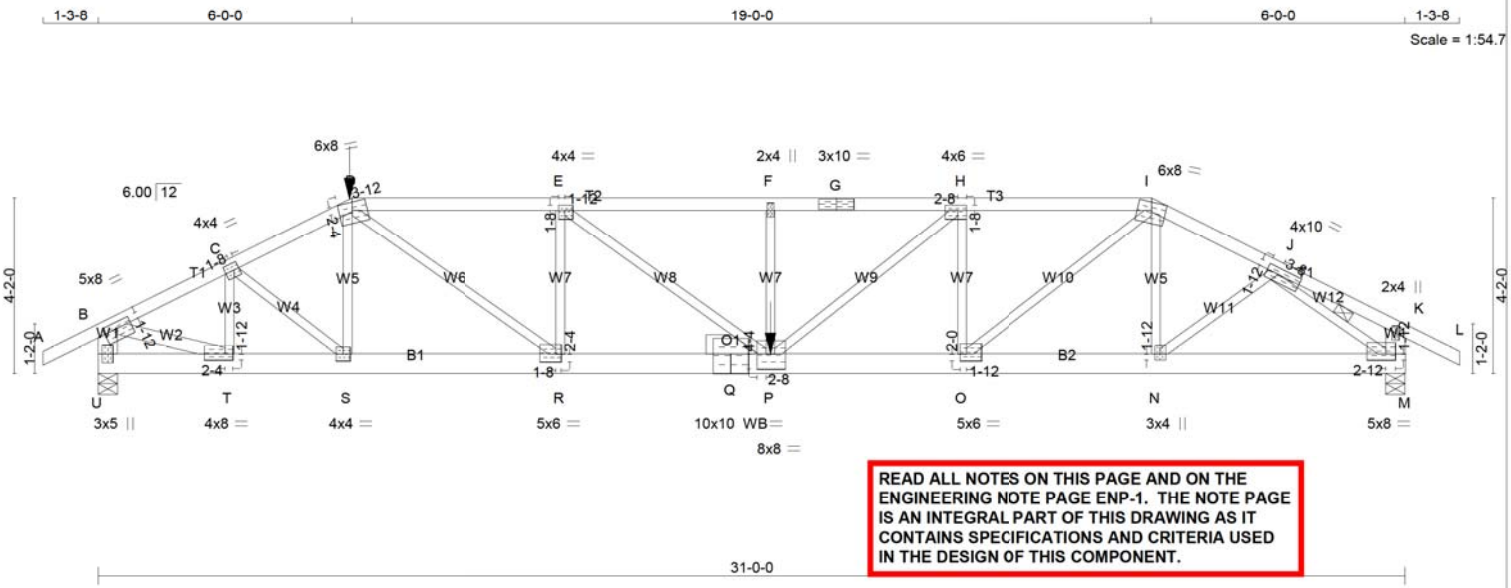

READ ALL NOTES ON THIS PAGE AND ON THE ENGINEERING NOTE PAGE ENP-1. THE NOTE PAGE IS AN INTEGRAL PART OF THIS DRAWING AS IT CONTAINS SPECIFICATIONS AND CRITERIA USED IN THE DESIGN OF THIS COMPONENT.

TOTAL WEIGHT = 146 lb [M]

LUMBER

N. L. G. A. RULES

CHORDS	SIZE		LUMBER	DESCR.
A - D	2x4	DRY	No.2	SPF
D - G	2x4	DRY	2100F 1.8E	SPF
G - I	2x4	DRY	2100F 1.8E	SPF
I - L	2x4	DRY	No.2	SPF
U - B	2x6	DRY	No.2	SPF
M - K	2x6	DRY	No.2	SPF
U - Q	2x6	DRY	2100F 1.8E	SPF
Q - M	2x6	DRY	2100F 1.8E	SPF
ALL WEBS EXCEPT	2x3	DRY	No.2	SPF
B - T	2x4	DRY	No.2	SPF

DRY: SEASONED LUMBER.

PLATES (table is in inches)

JT	TYPE	PLATES	W	LEN	Y	X
B	TMVW-t	MT20	5.0	8.0	1.75	4.00
C	TMWW-t	MT20	4.0	4.0	2.00	1.50
D	TTWW-m	MT20	6.0	8.0	2.25	3.75
E	TMWW-t	MT20	4.0	4.0	1.50	1.75
F	TMW+w	MT20	2.0	4.0		
G	TS-t	MT20	3.0	10.0		
H	TMWW-t	MT20	4.0	6.0	1.50	2.50
I	TTWW-m	MT20	6.0	8.0	Edge	
J	TMWW-t	MT20	4.0	10.0	1.75	3.50
K	TMV+p	MT20	2.0	4.0		
M	BMVW1-t	MT20	5.0	8.0	1.75	2.75
N	BMWW+t	MT20	3.0	4.0	1.75	1.50
O	BMWW-t	MT20	5.0	6.0	2.00	1.75
P	BMWWW-t	MT20	8.0	8.0	4.25	2.50
Q	BS-t	MT20	10.0	10.0		
R	BMWW-t	MT20	5.0	6.0	2.25	1.50
S	BMWW-t	MT20	4.0	4.0		
T	BMWW-t	MT20	4.0	8.0	1.75	2.25
U	BMV1+p	MT20	3.0	5.0		

Edge - INDICATES REFERENCE CORNER OF PLATE TOUCHES EDGE OF CHORD.

WB - INDICATES BLOCKING REQUIRED

LICENSED PROFESSIONAL ENGINEER
I.MATIJEVIC
100528832
PROVINCE OF ONTARIO
June 29, 2021

DIMENSIONS, SUPPORTS AND LOADINGS SPECIFIED BY FABRICATOR TO BE VERIFIED BY BUILDING DESIGNER

BEARINGS

JT	FACTORED GROSS REACTION VERT	HORZ	MAXIMUM FACTORED GROSS REACTION DOWN	HORZ	UPLIFT	INPUT BRG IN-SX	REQRD BRG IN-SX
U	3440	0	3440	0	0	5-8	3-12
M	2910	0	2910	0	0	5-8	3-2

UNFACTORED REACTIONS

JT	1ST LCASE COMBINED	MAX./MIN. COMPONENT REACTIONS SNOW	LIVE	PERM.LIVE	WIND	DEAD	SOIL
U	2409	1718 / 0	0 / 0	0 / 0	0 / 0	690 / 0	0 / 0
M	2035	1467 / 0	0 / 0	0 / 0	0 / 0	567 / 0	0 / 0

BEARING MATERIAL TO BE SPF NO.2 OR BETTER AT JOINT(S) U, M

BRACING

TOP CHORD TO BE SHEATHED OR MAX. PURLIN SPACING = 2.36 FT.
MAX. UNBRACED BOTTOM CHORD LENGTH = 10.00 FT OR RIGID CEILING DIRECTLY APPLIED.

ALL PITCH BREAKS AND PERIMETER CORNER JOINTS MUST BE LATERALLY RESTRAINED.

1 - 1x4 LATERAL BRACE(S) AT 1/ 2 LENGTH OF J-M. DBS = 6-0-0 . CBF = 163 LBS.

DBS = DIAGONAL BRACE SPACING (MAX). CBF = CUMULATIVE BRACING FORCE (PER BRACE). FASTEN LATERAL BRACE(S) USING (0.122"X3") SPIRAL NAILS : 1 NAIL FOR 2x3 BRACE(S), 2 FOR 1x4, 2x4, 2x5, 3 FOR 2x6, 4 FOR 2x8, 5 FOR 2x10, AND 6 FOR 2x12.

END VERTICAL(S) MUST BE SHEATHED OR HAVE BRACES AS INDICATED IN THE MAX. UNBRACED LENGTH COLUMN OF THE TABLE BELOW

LOADING

TOTAL LOAD CASES: (4)

CHORDS

MEMB. FR-TO	MAX. FACTORED FORCE (LBS)	FACTORED VERT. LOAD (PLF) FROM	TO	LC1 MAX CSI (LC)	MAX. UNBRAC LENGTH
A- B	0 / 26	-84.3	-84.3	0.12 (1)	10.00
B- C	-4602 / 0	-84.3	-84.3	0.42 (1)	2.94
C- D	-5299 / 0	-84.3	-84.3	0.48 (1)	2.65
D- E	-7100 / 0	-158.9	-158.9	0.81 (1)	2.62
E- F	-8014 / 0	-158.9	-158.9	0.91 (1)	2.36
F- G	-8014 / 0	-84.3	-84.3	0.54 (1)	2.79
G- H	-8014 / 0	-84.3	-84.3	0.54 (1)	2.79
H- I	-6301 / 0	-84.3	-84.3	0.40 (1)	3.26
I- J	-4414 / 0	-84.3	-84.3	0.38 (1)	3.03
J- K	0 / 6	-84.3	-84.3	0.12 (1)	10.00
K- L	0 / 26	-84.3	-84.3	0.12 (1)	10.00
U- B	-3319 / 0	0.0	0.0	0.23 (1)	5.78
M- K	-228 / 0	0.0	0.0	0.02 (1)	7.81
U- T	0 / 0	-34.4	-34.4	0.08 (1)	10.00
T- S	0 / 4122	-34.4	-34.4	0.30 (1)	10.00
S- R	0 / 4734	-34.4	-34.4	0.29 (1)	10.00
R- Q	0 / 7100	-34.4	-34.4	0.48 (1)	10.00
Q- P	0 / 7100	-34.4	-34.4	0.48 (1)	10.00
P- O	0 / 6301	-18.2	-18.2	0.43 (1)	10.00
O- N	0 / 3946	-18.2	-18.2	0.23 (1)	10.00
N- M	0 / 3472	-18.2	-18.2	0.21 (1)	10.00

WEBS

MEMB. FR-TO	MAX. FACTORED FORCE (LBS)	MAX CSI (LC)
T- C	-1107 / 0	0.19 (1)
C- S	0 / 788	0.19 (1)
S- D	-234 / 67	0.06 (1)
D- R	0 / 2974	0.74 (1)
R- E	-1608 / 0	0.42 (1)
E- P	0 / 1150	0.28 (1)
P- F	-534 / 0	0.14 (1)
P- H	0 / 2233	0.55 (1)
O- H	-1833 / 0	0.48 (1)
O- I	0 / 3069	0.76 (1)
N- I	-271 / 0	0.07 (1)
N- J	0 / 594	0.15 (1)
B- T	0 / 4249	0.75 (1)
J- M	-4355 / 0	0.76 (1)

FACTORED CONCENTRATED LOADS (LBS)

JT	LOC.	LC1	MAX-	MAX+	FACE	DIR.	TYPE	HEEL	CONN.
D	6-0-0	-379	-379	---	FRONT	VERT	TOTAL	---	C1
P	15-11-4	-396	-444	---	FRONT	VERT	DEAD	---	C1
P	15-11-4	-1170	-1170	---	FRONT	VERT	SNOW	---	C1

DESIGN CRITERIA

*** SPECIAL LOADS ANALYSIS ***
GEOMETRY AND/OR BASIC LOADS CHANGED BY USER.
LOADS WERE DERIVED FROM USER INPUT
NO FURTHER MODIFICATIONS WERE MADE

SPECIFIED LOADS:

TOP	CH.	LL	=	25.6	PSF
		DL	=	3.0	PSF
BOT	CH.	LL	=	0.0	PSF
		DL	=	7.3	PSF
TOTAL LOAD			=	35.9	PSF

SPACING = 24.0 IN. C/C

LOADING IN FLAT SECTION BASED ON A SLOPE OF 2.00/12 MINIMUM

GIRDER TYPE: CPrimeHip
SIDE SETBACK = 6-0-0
END SETBACK = 6-0-0
END WALL WIDTH = 5-8
CORNER FRAMING TYPE: CONVENTIONAL
END JACK TYPE: CONVENTIONAL
APPLIED TO FRONT SIDE
- ADDT'L LOADS BASED ON 55 % OF GSL.
LOADS APPLIED TO FIRST 15-11-4 OF SPAN MEASURED FROM THE LEFT.

*** NON STANDARD GIRDER ***
ADDT'L USER-DEFINED LOADS APPLIED TO ALL LOAD CASES.

THIS TRUSS IS DESIGNED FOR RESIDENTIAL OR SMALL BUILDING REQUIREMENTS OF PART 9, NBCC 2015

THIS DESIGN COMPLIES WITH:
- PART 9 OF BCBC 2018 , ABC 2019
- PART 9 OF OBC 2012 (2019 AMENDMENT)
- CSA 086-14
- TPIC 2014

(55 % OF 31.3 P.S.F. G.S.L. PLUS 8.4 P.S.F. RAIN LOAD) EQUALS 25.6 P.S.F. SPECIFIED ROOF LIVE LOAD

ALLOWABLE DEFL.(LL)= L/360 (1.03")
CALCULATED VERT. DEFL.(LL) = L/ 999 (0.34")
ALLOWABLE DEFL.(TL)= L/360 (1.03")
CALCULATED VERT. DEFL.(TL) = L/ 639 (0.58")

CSI: TC=0.91/1.00 (E-F:1) , BC=0.48/1.00 (P-R:1) , WB=0.76/1.00 (J-M:1) , SSI=0.41/1.00 (D-E:1)

DOL LUMBER=1.00 NAIL=1.00 LS BEND=1.00
COMP=1.00 SHEAR=1.00 TENS=1.00

CONTINUED ON PAGE 2

CITY OF RICHMOND HILL
BUILDING DIVISION
09/22/2022
KOTT
RECEIVED
Per: joshua.nabua

JOB NAME	TRUSS NAME	QUANTITY	PLY	JOB DESC.	DRWG NO.
IM0621-171	G01	1	1	TRUSS DESC.	

Version 8.420 S Apr 29 2021 MiTek Industries, Inc. Tue Jun 29 13:09:26 2021 Page 2
ID:OWh2l4vpdPTbcMQK?92PSNzbzpx-w2YaFG4RliZVCQmZLfTZaVW3Uj9mZWhJdRgspFz1Qkt

CONNECTION REQUIREMENTS

1) **C1:** A SUITABLE HANGER/MECHANICAL CONNECTION IS REQUIRED.

COMPANION LIVE LOAD FACTOR = 1.00

TRUSS PLATE MANUFACTURER IS NOT RESPONSIBLE FOR QUALITY CONTROL IN THE TRUSS MANUFACTURING PLANT .

NAIL VALUES

PLATE	GRIP(DRY) (PSI)		SHEAR (PLI)		SECTION (PLI)	
	MAX	MIN	MAX	MIN	MAX	MIN
MT20	650	371	1747	788	1987	1873

PLATE PLACEMENT TOL. = 0.250 inches

PLATE ROTATION TOL. = 5.0 Deg.

JSI GRIP= 0.90 (H) (INPUT = 0.90)
JSI METAL= 1.00 (Q) (INPUT = 1.00)

LICENSED PROFESSIONAL ENGINEER
I.MATIJEVIC
100528832
PROVINCE OF ONTARIO

June 29, 2021

READ ALL NOTES ON THIS PAGE AND ON THE ENGINEERING NOTE PAGE ENP-1. THE NOTE PAGE IS AN INTEGRAL PART OF THIS DRAWING AS IT CONTAINS SPECIFICATIONS AND CRITERIA USED IN THE DESIGN OF THIS COMPONENT.

CITY OF RICHMOND HILL
BUILDING DIVISION
09/22/2022
KOTT
RECEIVED
Per:_____joshua.nabua_____

JOB NAME	TRUSS NAME	QUANTITY	PLY	JOB DESC.	DRWG NO.
IM0621-171	G02	1	1	TRUSS DESC.	

Version 8.420 S Apr 29 2021 MiTek Industries, Inc. Tue Jun 29 13:09:37 2021 Page 1
ID:OWh2I4vpdPTbcMQK?92PSNzbzpx-59jkY1CL94yx176gUTA8XqTxF9sLeSHx9frxi6z1Qki

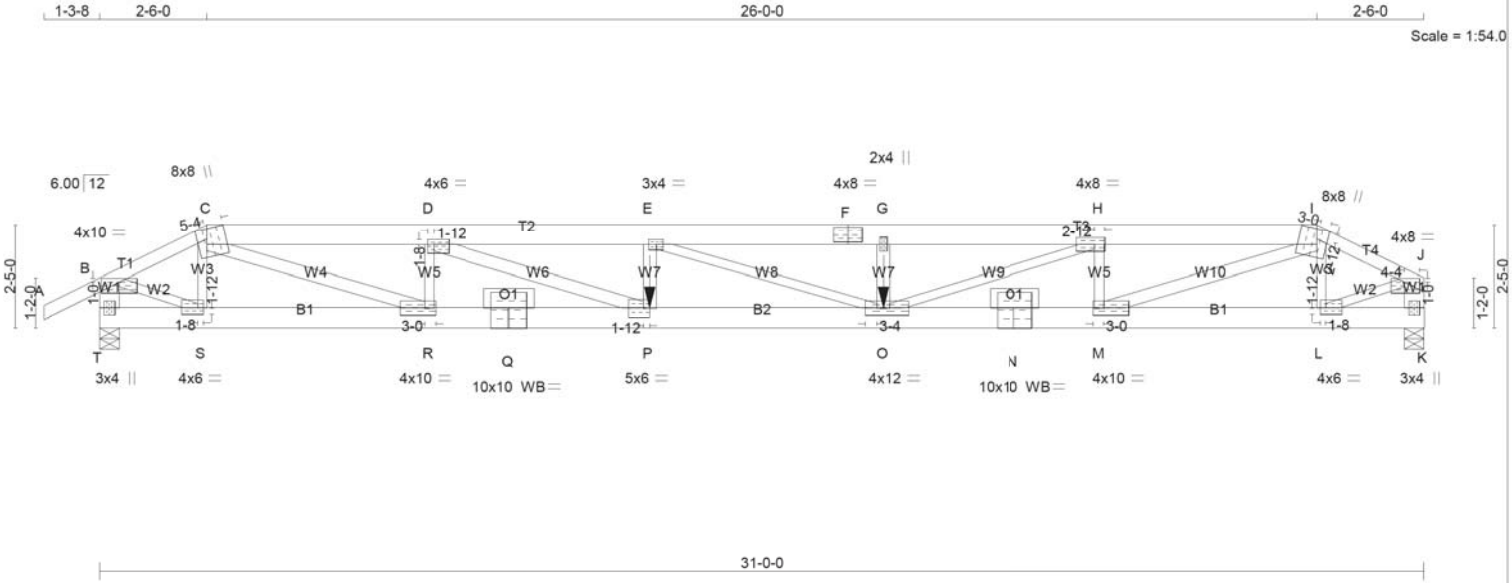

TOTAL WEIGHT = 155 lb
[M]

LUMBER
N. L. G. A. RULES

CHORDS	SIZE		LUMBER	DESCR.
A - C	2x4	DRY	No.2	SPF
C - F	2x6	DRY	2100F 1.8E	SPF
F - I	2x6	DRY	No.2	SPF
I - J	2x4	DRY	No.2	SPF
T - B	2x6	DRY	No.2	SPF
K - J	2x6	DRY	No.2	SPF
T - Q	2x6	DRY	2100F 1.8E	SPF
Q - N	2x6	DRY	2100F 1.8E	SPF
N - K	2x6	DRY	2100F 1.8E	SPF
ALL WEBS	2x3	DRY	No.2	SPF
EXCEPT				
C - R	2x4	DRY	No.2	SPF
D - P	2x4	DRY	No.2	SPF
P - E	2x4	DRY	No.2	SPF
O - G	2x4	DRY	No.2	SPF
M - I	2x4	DRY	No.2	SPF

DRY: SEASONED LUMBER.

PLATES (table is in inches)

JT	TYPE	PLATES	W	LEN	Y	X
B	TMVW-p	MT20	4.0	10.0	1.00	5.00
C	TTWW+m	MT20	8.0	8.0	Edge	5.25
D	TMWW-t	MT20	4.0	6.0	1.50	1.75
E	TMWW-t	MT20	3.0	4.0		
F	TS-t	MT20	4.0	8.0		
G	TMW+w	MT20	2.0	4.0		
H	TMWW-t	MT20	4.0	8.0	2.00	2.75
I	TTWW+m	MT20	8.0	8.0	2.75	3.00
J	TMVW-p	MT20	4.0	8.0	1.00	4.25
K	BMV1+p	MT20	3.0	4.0		
L	BMWW-t	MT20	4.0	6.0	1.75	1.50
M	BMWW-t	MT20	4.0	10.0	2.00	3.00
N	BS-t	MT20	10.0	10.0		
O	BMWWW-t	MT20	4.0	12.0	2.00	3.25
P	BMWW-t	MT20	5.0	6.0	2.50	1.75
Q	BS-t	MT20	10.0	10.0		
R	BMWW-t	MT20	4.0	10.0	2.00	3.00
S	BMWW-t	MT20	4.0	6.0	1.75	1.50
T	BMV1+p	MT20	3.0	4.0		

Edge - INDICATES REFERENCE CORNER OF PLATE TOUCHES EDGE OF CHORD.

WB - INDICATES BLOCKING REQUIRED

LICENSED PROFESSIONAL ENGINEER
I.MATIJEVIC
100528832
PROVINCE OF ONTARIO
June 29, 2021

DIMENSIONS, SUPPORTS AND LOADINGS SPECIFIED BY FABRICATOR TO BE VERIFIED BY BUILDING DESIGNER

BEARINGS

JT	FACTORED GROSS REACTION VERT	HORZ	MAXIMUM FACTORED GROSS REACTION DOWN	HORZ	UPLIFT	INPUT BRG IN-SX	REQRD BRG IN-SX
T	2327	0	2327	0	0	5-8	2-8
K	2204	0	2204	0	0	5-8	2-6

UNFACTORED REACTIONS

JT	1ST LCASE COMBINED	MAX./MIN. COMPONENT REACTIONS SNOW	LIVE	PERM.LIVE	WIND	DEAD	SOIL
T	1633	1146 / 0	0 / 0	0 / 0	0 / 0	487 / 0	0 / 0
K	1547	1080 / 0	0 / 0	0 / 0	0 / 0	467 / 0	0 / 0

BEARING MATERIAL TO BE SPF NO.2 OR BETTER AT JOINT(S) T, K

BRACING
TOP CHORD TO BE SHEATHED OR MAX. PURLIN SPACING = 2.04 FT.
MAX. UNBRACED BOTTOM CHORD LENGTH = 10.00 FT OR RIGID CEILING DIRECTLY APPLIED.

ALL FITCH BREAKS AND PERIMETER CORNER JOINTS MUST BE LATERALLY RESTRAINED.

LOADING
TOTAL LOAD CASES: (4)

CHORDS

MEMB. FR-TO	MAX. FACTORED FORCE (LBS)	FACTORED VERT. LOAD (PLF) FROM	TO	LC1 MAX CSI (LC)	MAX. UNBRAC LENGTH
A- B	0 / 26	-84.3	-84.3	0.12 (1)	10.00
B- C	-2927 / 0	-84.3	-84.3	0.21 (1)	3.86
C- D	-7085 / 0	-84.3	-84.3	0.23 (1)	3.96
D- E	-10121 / 0	-84.3	-84.3	0.36 (1)	3.28
E- F	-9905 / 0	-136.9	-136.9	0.94 (1)	2.04
F- G	-9905 / 0	-136.9	-136.9	0.94 (1)	2.04
G- H	-9905 / 0	-84.3	-84.3	0.89 (1)	2.10
H- I	-7022 / 0	-84.3	-84.3	0.53 (1)	2.94
I- J	-2907 / 0	-84.3	-84.3	0.21 (1)	3.88
T- B	-2352 / 0	0.0	0.0	0.17 (1)	6.67
K- J	-2223 / 0	0.0	0.0	0.16 (1)	6.82
T- S	0 / 0	-18.2	-18.2	0.04 (1)	10.00
S- R	0 / 2668	-18.2	-18.2	0.20 (1)	10.00
R- Q	0 / 7084	-18.2	-18.2	0.47 (1)	10.00
Q- P	0 / 7084	-18.2	-18.2	0.47 (1)	10.00
P- O	0 / 10121	-29.6	-29.6	0.67 (1)	10.00
O- N	0 / 7022	-18.2	-18.2	0.48 (1)	10.00
N- M	0 / 7022	-18.2	-18.2	0.48 (1)	10.00
M- L	0 / 2650	-18.2	-18.2	0.19 (1)	10.00
L- K	0 / 0	-18.2	-18.2	0.04 (1)	10.00

WEBS

MEMB. FR-TO	MAX. FACTORED FORCE (LBS)	MAX CSI (LC)
S- C	-687 / 0	0.11 (1)
C- R	0 / 4731	0.84 (1)
R- D	-1639 / 0	0.27 (1)
D- P	0 / 3246	0.57 (1)
P- E	-519 / 0	0.06 (1)
E- O	-229 / 0	0.13 (1)
O- G	-557 / 0	0.06 (1)
O- H	0 / 3090	0.76 (1)
M- H	-1627 / 0	0.26 (1)
M- I	0 / 4695	0.83 (1)
L- I	-696 / 0	0.11 (1)
B- S	0 / 2766	0.68 (1)
L- J	0 / 2747	0.68 (1)

FACTORED CONCENTRATED LOADS (LBS)

JT	LOC.	LC1	MAX-	MAX+	FACE	DIR.	TYPE	HEEL	CONN.
O	18-4-0	-100	-112	---	FRONT	VERT	DEAD	---	C1
O	18-4-0	-297	-297	---	FRONT	VERT	SNOW	---	C1
P	12-10-8	-196	-220	---	FRONT	VERT	DEAD	---	C1
P	12-10-8	-297	-297	---	FRONT	VERT	SNOW	---	C1

CONNECTION REQUIREMENTS

1) **C1:** A SUITABLE HANGER/MECHANICAL CONNECTION IS REQUIRED.

READ ALL NOTES ON THIS PAGE AND ON THE ENGINEERING NOTE PAGE ENP-1. THE NOTE PAGE IS AN INTEGRAL PART OF THIS DRAWING AS IT CONTAINS SPECIFICATIONS AND CRITERIA USED IN THE DESIGN OF THIS COMPONENT.

DESIGN CRITERIA

*** SPECIAL LOADS ANALYSIS ***
GEOMETRY AND/OR BASIC LOADS CHANGED BY USER.
LOADS WERE DERIVED FROM USER INPUT
NO FURTHER MODIFICATIONS WERE MADE

SPECIFIED LOADS:

TOP	CH.	LL	=	25.6	PSF
		DL	=	3.0	PSF
BOT	CH.	LL	=	0.0	PSF
		DL	=	7.3	PSF
TOTAL	LOAD		=	35.9	PSF

SPACING = 24.0 IN. C/C

LOADING IN FLAT SECTION BASED ON A SLOPE OF 2.00/12 MINIMUM

*** NON STANDARD GIRDER ***
ADDT'L USER-DEFINED LOADS APPLIED TO ALL LOAD CASES.

THIS TRUSS IS DESIGNED FOR RESIDENTIAL OR SMALL BUILDING REQUIREMENTS OF PART 9, NBCC 2015

THIS DESIGN COMPLIES WITH:
- PART 9 OF BCBC 2018 , ABC 2019
- PART 9 OF OBC 2012 (2019 AMENDMENT)
- CSA 086-14
- TPIC 2014

(55 % OF 31.3 P.S.F. G.S.L. PLUS 8.4 P.S.F. RAIN LOAD) EQUALS 25.6 P.S.F. SPECIFIED ROOF LIVE LOAD

ALLOWABLE DEFL.(LL)= L/360 (1.03")
CALCULATED VERT. DEFL.(LL) = L/ 647 (0.58")
ALLOWABLE DEFL.(TL)= L/360 (1.03")
CALCULATED VERT. DEFL.(TL) = L/ 361 (1.03")

CSI: TC=0.94/1.00 (E-G:1) , BC=0.67/1.00 (O-P:1) , WB=0.84/1.00 (C-R:1) , SSI=0.25/1.00 (E-G:1)

DOL LUMBER=1.00 NAIL=1.00 LS BEND=1.00 COMP=1.00 SHEAR=1.00 TENS= 1.00

COMPANION LIVE LOAD FACTOR = 1.00

TRUSS PLATE MANUFACTURER IS NOT RESPONSIBLE FOR QUALITY CONTROL IN THE TRUSS MANUFACTURING PLANT .

CONTINUED ON PAGE 2

CITY OF RICHMOND HILL
BUILDING DIVISION
09/22/2022
KOTT
RECEIVED
Per: joshua.nabua

JOB NAME	TRUSS NAME	QUANTITY	PLY	JOB DESC.	DRWG NO.
IM0621-171	G02	1	1	TRUSS DESC.	

Version 8.420 S Apr 29 2021 MiTek Industries, Inc. Tue Jun 29 13:09:37 2021 Page 2
ID:OWh2I4vpdPTbcMQK?92PSNzbzpx-59jkY1CL94yx176gUTA8XqTxF9sLeSHx9frxi6z1Qki

NAIL VALUES

PLATE	GRIP(DRY) (PSI)		SHEAR (PLI)		SECTION (PLI)	
	MAX	MIN	MAX	MIN	MAX	MIN
MT20	650	371	1747	788	1987	1873

PLATE PLACEMENT TOL. = 0.250 inches

PLATE ROTATION TOL. = 5.0 Deg.

JSI GRIP= 0.90 (O) (INPUT = 0.90)
JSI METAL= 0.98 (Q) (INPUT = 1.00)

LICENSED PROFESSIONAL ENGINEER
I.MATIJEVIC
100528832
PROVINCE OF ONTARIO
June 29, 2021

READ ALL NOTES ON THIS PAGE AND ON THE ENGINEERING NOTE PAGE ENP-1. THE NOTE PAGE IS AN INTEGRAL PART OF THIS DRAWING AS IT CONTAINS SPECIFICATIONS AND CRITERIA USED IN THE DESIGN OF THIS COMPONENT.

CITY OF RICHMOND HILL
BUILDING DIVISION
09/22/2022
KOTT
RECEIVED
Per:____joshua.nabua_____

JOB NAME	TRUSS NAME	QUANTITY	PLY	JOB DESC.	DRWG NO.
IM0621-171	G03	1	1	TRUSS DESC.	

Version 8.420 S Apr 29 2021 MiTek Industries, Inc. Tue Jun 29 13:09:48 2021 Page 1
ID:OWh2I4vpdPTbcMQK?92PSNzbzpx-HGtusnLEZTLNrpSneHtjT8RzLbjSjXmZhs?1bzz1QkX

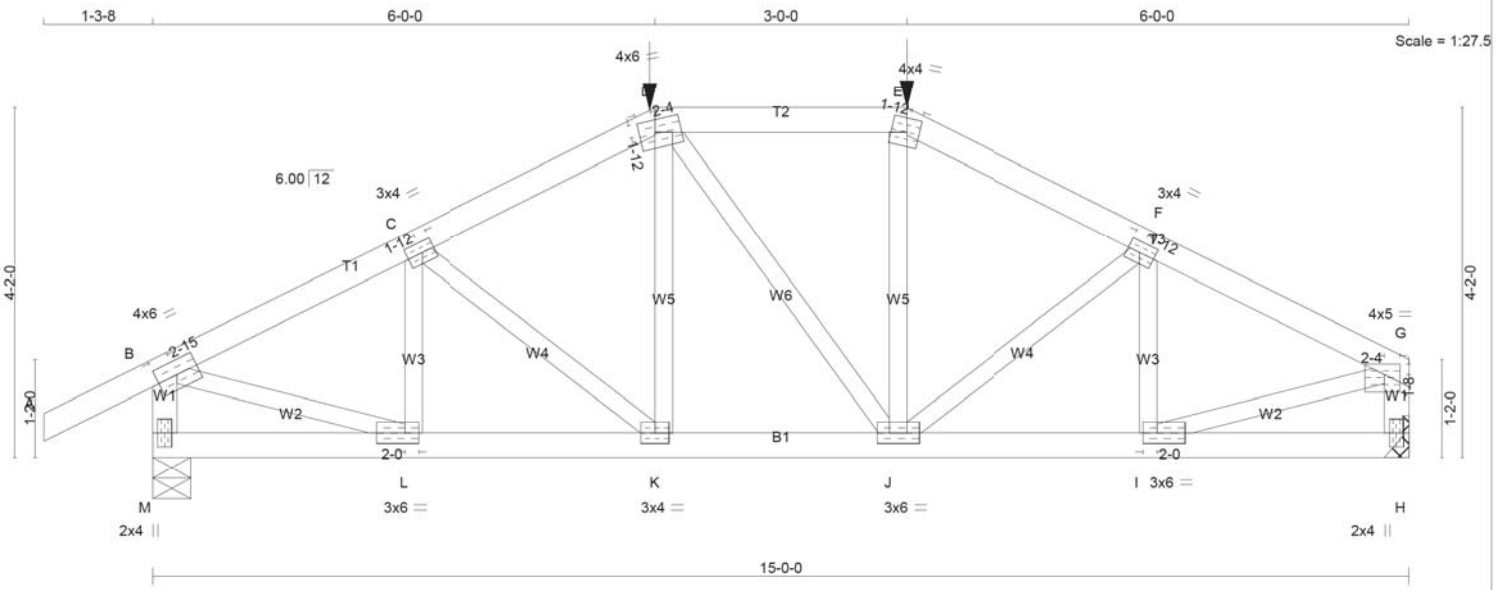

TOTAL WEIGHT = 63 lb
[M]

LUMBER
N. L. G. A. RULES

CHORDS	SIZE		LUMBER	DESCR.
A - D	2x4	DRY	No.2	SPF
D - E	2x4	DRY	No.2	SPF
E - G	2x4	DRY	No.2	SPF
M - B	2x4	DRY	No.2	SPF
H - G	2x4	DRY	No.2	SPF
M - H	2x4	DRY	No.2	SPF
ALL WEBS EXCEPT	2x3	DRY	No.2	SPF

DRY: SEASONED LUMBER.

PLATES (table is in inches)

JT	TYPE	PLATES	W	LEN	Y	X
B	TMVW-t	MT20	4.0	6.0	2.00	3.00
C	TMWW-t	MT20	3.0	4.0	1.50	1.75
D	TTWW-m	MT20	4.0	6.0	1.75	2.25
E	TTW-m	MT20	4.0	4.0	2.00	1.75
F	TMWW-t	MT20	3.0	4.0	1.50	1.75
G	TMVW-p	MT20	4.0	5.0	1.50	2.25
H	BMV1+p	MT20	2.0	4.0		
I	BMWW-t	MT20	3.0	6.0	1.50	2.00
J	BMWWW-t	MT20	3.0	6.0		
K	BMWW-t	MT20	3.0	4.0		
L	BMWW-t	MT20	3.0	6.0	1.50	2.00
M	BMV1+p	MT20	2.0	4.0		

DIMENSIONS, SUPPORTS AND LOADINGS SPECIFIED BY FABRICATOR TO BE VERIFIED BY BUILDING DESIGNER

BEARINGS

JT	FACTORED GROSS REACTION VERT	HORZ	MAXIMUM FACTORED GROSS REACTION DOWN	HORZ	UPLIFT	INPUT BRG IN-SX	REQRD BRG IN-SX
M	1495	0	1495	0	0	5-8	1-10
H	1381	0	1381	0	0	MECHANICAL	

A SUITABLE HANGER/MECHANICAL CONNECTION IS REQUIRED AT JOINT H. MINIMUM BEARING LENGTH AT JOINT H = 1-8.

UNFACTORED REACTIONS

JT	1ST LCASE COMBINED	MAX./MIN. COMPONENT REACTIONS SNOW	LIVE	PERM.LIVE	WIND	DEAD	SOIL
M	1046	751 / 0	0 / 0	0 / 0	0 / 0	295 / 0	0 / 0
H	968	682 / 0	0 / 0	0 / 0	0 / 0	286 / 0	0 / 0

BEARING MATERIAL TO BE SPF NO.2 OR BETTER AT JOINT(S) M

BRACING
TOP CHORD TO BE SHEATHED OR MAX. PURLIN SPACING = 4.83 FT.
MAX. UNBRACED BOTTOM CHORD LENGTH = 10.00 FT OR RIGID CEILING DIRECTLY APPLIED.

ALL FITCH BREAKS AND PERIMETER CORNER JOINTS MUST BE LATERALLY RESTRAINED.

LOADING
TOTAL LOAD CASES: (4)

CHORDS

MEMB. FR-TO	MAX. FACTORED FORCE (LBS)	FACTORED VERT. LOAD (PLF) FROM	TO	LC1 MAX CSI (LC)	MAX. UNBRAC LENGTH
A- B	0 / 26	-84.3	-84.3	0.12 (1)	10.00
B- C	-1750 / 0	-84.3	-84.3	0.15 (1)	4.88
C- D	-1795 / 0	-84.3	-84.3	0.15 (1)	4.83
D- E	-1597 / 0	-158.9	-158.9	0.31 (1)	4.83
E- F	-1795 / 0	-84.3	-84.3	0.15 (1)	4.83
F- G	-1750 / 0	-84.3	-84.3	0.15 (1)	4.88
M- B	-1445 / 0	0.0	0.0	0.16 (1)	6.76
H- G	-1330 / 0	0.0	0.0	0.15 (1)	6.98
M- L	0 / 0	-34.4	-34.4	0.07 (4)	10.00
L- K	0 / 1574	-34.4	-34.4	0.32 (1)	10.00
K- J	0 / 1596	-34.4	-34.4	0.31 (1)	10.00
J- I	0 / 1574	-34.4	-34.4	0.32 (1)	10.00
I- H	0 / 0	-34.4	-34.4	0.07 (4)	10.00

WEBS

MEMB. FR-TO	MAX. FACTORED FORCE (LBS)	MAX CSI (LC)
L- C	-329 / 10	0.06 (1)
C- K	-37 / 25	0.01 (4)
K- D	0 / 131	0.05 (4)
D- J	0 / 1	0.00 (4)
J- E	0 / 132	0.05 (4)
J- F	-35 / 26	0.01 (4)
I- F	-330 / 9	0.06 (1)
B- L	0 / 1633	0.40 (1)
I- G	0 / 1633	0.40 (1)

FACTORED CONCENTRATED LOADS (LBS)

JT	LOC.	LC1	MAX-	MAX+	FACE	DIR.	TYPE	HEEL	CONN.
D	6-0-0	-379	-379	---	FRONT	VERT	TOTAL	---	C1
E	9-0-0	-379	-379	---	FRONT	VERT	TOTAL	---	C1

CONNECTION REQUIREMENTS

1) **C1:** A SUITABLE HANGER/MECHANICAL CONNECTION IS REQUIRED.

DESIGN CRITERIA

SPECIFIED LOADS:

TOP CH.	LL	=	25.6	PSF
	DL	=	3.0	PSF
BOT CH.	LL	=	0.0	PSF
	DL	=	7.3	PSF
TOTAL LOAD		=	35.9	PSF

SPACING = 24.0 IN. C/C

LOADING IN FLAT SECTION BASED ON A SLOPE OF 6.00/12

GIRDER TYPE: CPrimeHip
SIDE SETBACK = 6-0-0
END SETBACK = 6-0-0
END WALL WIDTH = 5-8
CORNER FRAMING TYPE: CONVENTIONAL
END JACK TYPE: CONVENTIONAL
APPLIED TO FRONT SIDE
- ADDT'L LOADS BASED ON 55 % OF GSL.

THIS TRUSS IS DESIGNED FOR RESIDENTIAL OR SMALL BUILDING REQUIREMENTS OF PART 9, NBCC 2015

THIS DESIGN COMPLIES WITH:
- PART 9 OF BCBC 2018 , ABC 2019
- PART 9 OF OBC 2012 (2019 AMENDMENT)
- CSA 086-14
- TPIC 2014

(55 % OF 31.3 P.S.F. G.S.L. PLUS 8.4 P.S.F. RAIN LOAD) EQUALS 25.6 P.S.F. SPECIFIED ROOF LIVE LOAD

ALLOWABLE DEFL.(LL)= L/360 (0.50")
CALCULATED VERT. DEFL.(LL) = L/ 999 (0.04")
ALLOWABLE DEFL.(TL)= L/360 (0.50")
CALCULATED VERT. DEFL.(TL) = L/ 999 (0.07")

CSI: TC=0.31/1.00 (D-E:1) , BC=0.32/1.00 (K-L:1) , WB=0.40/1.00 (B-L:1) , SSI=0.20/1.00 (D-E:1)

DOL LUMBER=1.00 NAIL=1.00 LS BEND=1.00 COMP=1.00 SHEAR=1.00 TENS= 1.00

COMPANION LIVE LOAD FACTOR = 1.00

TRUSS PLATE MANUFACTURER IS NOT RESPONSIBLE FOR QUALITY CONTROL IN THE TRUSS MANUFACTURING PLANT .

NAIL VALUES

PLATE	GRIP(DRY) (PSI) MAX	MIN	SHEAR (PLI) MAX	MIN	SECTION (PLI) MAX	MIN
MT20	650	371	1747	788	1987	1873

CONTINUED ON PAGE 2

LICENSED PROFESSIONAL ENGINEER
I.MATIJEVIC
100528832
PROVINCE OF ONTARIO
June 29, 2021

READ ALL NOTES ON THIS PAGE AND ON THE ENGINEERING NOTE PAGE ENP-1. THE NOTE PAGE IS AN INTEGRAL PART OF THIS DRAWING AS IT CONTAINS SPECIFICATIONS AND CRITERIA USED IN THE DESIGN OF THIS COMPONENT.

CITY OF RICHMOND HILL
BUILDING DIVISION
09/22/2022
KOTT
RECEIVED
Per:_____joshua.nabua_____

JOB NAME	TRUSS NAME	QUANTITY	PLY	JOB DESC.	DRWG NO.
IM0621-171	G03	1	1	TRUSS DESC.	

Version 8.420 S Apr 29 2021 MiTek Industries, Inc. Tue Jun 29 13:09:48 2021 Page 2
ID:OWh2I4vpdPTbcMQK?92PSNzbzpx-HGtusnLEZTLNrpSneHtjT8RzLbjSjXmZhs?1bzz1QkX

PLATE PLACEMENT TOL. = 0.250 inches

PLATE ROTATION TOL. = 5.0 Deg.

JSI GRIP= 0.90 (B) (INPUT = 0.90)
JSI METAL= 0.42 (B) (INPUT = 1.00)

LICENSED PROFESSIONAL ENGINEER
I.MATIJEVIC
100528832
PROVINCE OF ONTARIO

June 29, 2021

READ ALL NOTES ON THIS PAGE AND ON THE ENGINEERING NOTE PAGE ENP-1. THE NOTE PAGE IS AN INTEGRAL PART OF THIS DRAWING AS IT CONTAINS SPECIFICATIONS AND CRITERIA USED IN THE DESIGN OF THIS COMPONENT.

CITY OF RICHMOND HILL
BUILDING DIVISION
09/22/2022
KOTT
RECEIVED
Per:____joshua.nabua_____

JOB NAME	TRUSS NAME	QUANTITY	PLY	JOB DESC.	DRWG NO.
IM0621-171	G04	1	1	TRUSS DESC.	

Version 8.420 S Apr 29 2021 MiTek Industries, Inc. Tue Jun 29 13:09:59 2021 Page 1
ID:OWh2I4vpdPTbcMQK?92PSNzbzpx-SO22AYT8zrjpgVoun4ZIQTOtV1WNoaeAD4A6Urz1QkM

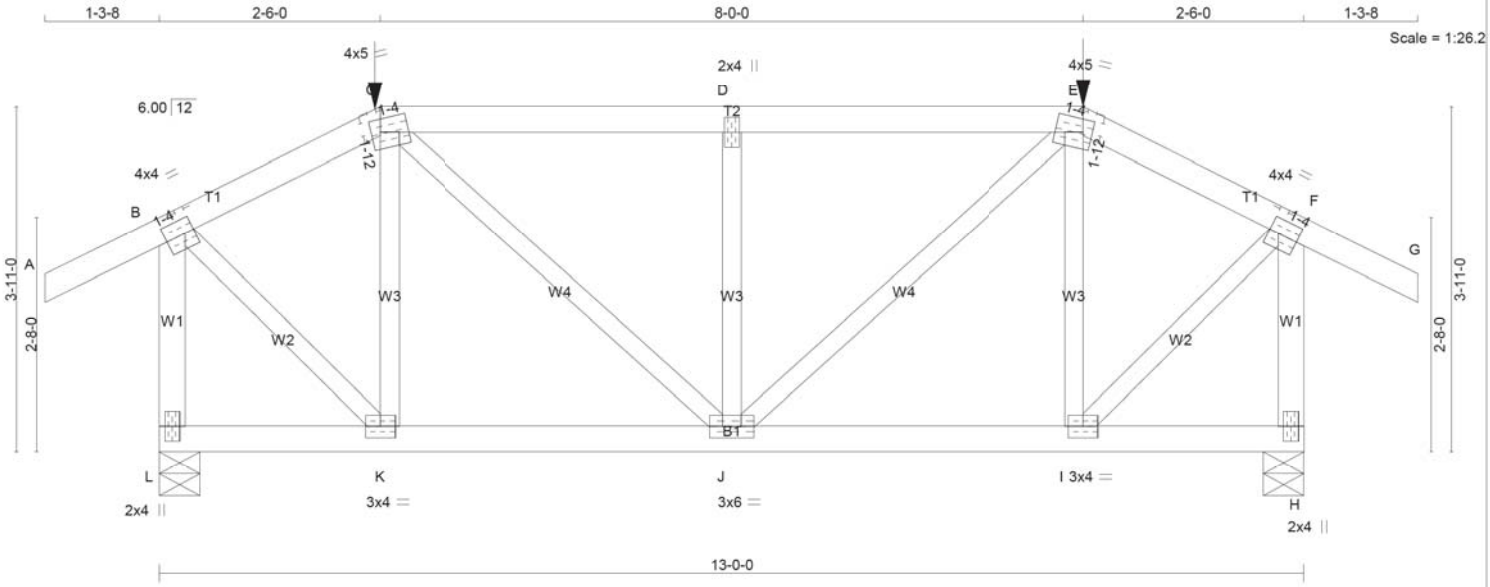

TOTAL WEIGHT = 60 lb
[M]

LUMBER
N. L. G. A. RULES

CHORDS	SIZE		LUMBER	DESCR.
A - C	2x4	DRY	No.2	SPF
C - E	2x4	DRY	No.2	SPF
E - G	2x4	DRY	No.2	SPF
L - B	2x4	DRY	No.2	SPF
H - F	2x4	DRY	No.2	SPF
L - H	2x4	DRY	No.2	SPF
ALL WEBS EXCEPT	2x3	DRY	No.2	SPF

DRY: SEASONED LUMBER.

PLATES (table is in inches)

JT	TYPE	PLATES	W	LEN	Y	X
B	TMVW-t	MT20	4.0	4.0	2.00	1.25
C	TTWW-m	MT20	4.0	5.0	1.75	1.25
D	TMW+w	MT20	2.0	4.0		
E	TTWW-m	MT20	4.0	5.0	1.75	1.25
F	TMVW-t	MT20	4.0	4.0	2.00	1.25
H	BMV1+p	MT20	2.0	4.0		
I	BMWW-t	MT20	3.0	4.0		
J	BMWWW-t	MT20	3.0	6.0		
K	BMWW-t	MT20	3.0	4.0		
L	BMV1+p	MT20	2.0	4.0		

DIMENSIONS, SUPPORTS AND LOADINGS SPECIFIED BY FABRICATOR TO BE VERIFIED BY BUILDING DESIGNER

BEARINGS

JT	FACTORED GROSS REACTION VERT	HORZ	MAXIMUM FACTORED GROSS REACTION DOWN	HORZ	UPLIFT	INPUT BRG IN-SX	REQRD BRG IN-SX
L	820	0	820	0	0	5-8	1-8
H	820	0	820	0	0	5-8	1-8

UNFACTORED REACTIONS

JT	1ST LCASE COMBINED	MAX./MIN. COMPONENT REACTIONS SNOW	LIVE	PERM.LIVE	WIND	DEAD	SOIL
L	571	425 / 0	0 / 0	0 / 0	0 / 0	146 / 0	0 / 0
H	571	425 / 0	0 / 0	0 / 0	0 / 0	146 / 0	0 / 0

BEARING MATERIAL TO BE SPF NO.2 OR BETTER AT JOINT(S) L, H

BRACING
TOP CHORD TO BE SHEATHED OR MAX. PURLIN SPACING = 6.25 FT.
MAX. UNBRACED BOTTOM CHORD LENGTH = 10.00 FT OR RIGID CEILING DIRECTLY APPLIED.

ALL FITCH BREAKS AND PERIMETER CORNER JOINTS MUST BE LATERALLY RESTRAINED.

LOADING
TOTAL LOAD CASES: (4)

CHORDS

MEMB. FR-TO	MAX. FACTORED FORCE (LBS)	FACTORED VERT. LOAD (PLF) FROM	TO	LC1 MAX CSI (LC)	MAX. UNBRAC LENGTH
A- B	0 / 26	-84.3	-84.3	0.12 (1)	10.00
B- C	-465 / 0	-84.3	-84.3	0.10 (1)	6.25
C- D	-674 / 0	-85.1	-85.1	0.25 (1)	6.25
D- E	-674 / 0	-85.1	-85.1	0.25 (1)	6.25
E- F	-465 / 0	-84.3	-84.3	0.10 (1)	6.25
F- G	0 / 26	-84.3	-84.3	0.12 (1)	10.00
L- B	-804 / 0	0.0	0.0	0.12 (1)	7.81
H- F	-804 / 0	0.0	0.0	0.12 (1)	7.81
L- K	0 / 0	-18.4	-18.4	0.05 (4)	10.00
K- J	0 / 406	-18.4	-18.4	0.10 (1)	10.00
J- I	0 / 406	-18.4	-18.4	0.10 (1)	10.00
I- H	0 / 0	-18.4	-18.4	0.05 (4)	10.00

WEBS

MEMB. FR-TO	MAX. FACTORED FORCE (LBS)	MAX CSI (LC)
K- C	-306 / 0	0.08 (1)
C- J	0 / 361	0.09 (1)
J- D	-417 / 0	0.10 (1)
J- E	0 / 361	0.09 (1)
I- E	-306 / 0	0.08 (1)
B- K	0 / 560	0.14 (1)
I- F	0 / 560	0.14 (1)

FACTORED CONCENTRATED LOADS (LBS)

JT	LOC.	LC1	MAX-	MAX+	FACE	DIR.	TYPE	HEEL	CONN.
C	2-6-0	-35	-35	---	FRONT	VERT	TOTAL	---	C1
E	10-6-0	-35	-35	---	FRONT	VERT	TOTAL	---	C1

CONNECTION REQUIREMENTS

1) **C1:** A SUITABLE HANGER/MECHANICAL CONNECTION IS REQUIRED.

DESIGN CRITERIA

SPECIFIED LOADS:

TOP CH.	LL	=	25.6	PSF
	DL	=	3.0	PSF
BOT CH.	LL	=	0.0	PSF
	DL	=	7.3	PSF
TOTAL LOAD		=	35.9	PSF

SPACING = 24.0 IN. C/C

LOADING IN FLAT SECTION BASED ON A SLOPE OF 6.00/12

GIRDER TYPE: CPrimeHip
SIDE SETBACK = 2-6-0
END SETBACK = 2-6-0
END WALL WIDTH = 5-8
CORNER FRAMING TYPE: CONVENTIONAL
END JACK TYPE: CONVENTIONAL
APPLIED TO FRONT SIDE
- ADDT'L LOADS BASED ON 55 % OF GSL.

THIS TRUSS IS DESIGNED FOR RESIDENTIAL OR SMALL BUILDING REQUIREMENTS OF PART 9, NBCC 2015

THIS DESIGN COMPLIES WITH:
- PART 9 OF BCBC 2018 , ABC 2019
- PART 9 OF OBC 2012 (2019 AMENDMENT)
- CSA 086-14
- TPIC 2014

(55 % OF 31.3 P.S.F. G.S.L. PLUS 8.4 P.S.F. RAIN LOAD) EQUALS 25.6 P.S.F. SPECIFIED ROOF LIVE LOAD

ALLOWABLE DEFL.(LL)= L/360 (0.43")
CALCULATED VERT. DEFL.(LL) = L/ 999 (0.01")
ALLOWABLE DEFL.(TL)= L/360 (0.43")
CALCULATED VERT. DEFL.(TL) = L/ 999 (0.02")

CSI: TC=0.25/1.00 (C-D:1) , BC=0.10/1.00 (J-K:1) , WB=0.14/1.00 (B-K:1) , SSI=0.18/1.00 (D-E:1)

DOL LUMBER=1.00 NAIL=1.00 LS BEND=1.00 COMP=1.00 SHEAR=1.00 TENS= 1.00

COMPANION LIVE LOAD FACTOR = 1.00

TRUSS PLATE MANUFACTURER IS NOT RESPONSIBLE FOR QUALITY CONTROL IN THE TRUSS MANUFACTURING PLANT .

NAIL VALUES

PLATE	GRIP(DRY) (PSI) MAX	MIN	SHEAR (PLI) MAX	MIN	SECTION (PLI) MAX	MIN
MT20	650	371	1747	788	1987	1873

CONTINUED ON PAGE 2

LICENSED PROFESSIONAL ENGINEER
I.MATIJEVIC
100528832
PROVINCE OF ONTARIO
June 29, 2021

READ ALL NOTES ON THIS PAGE AND ON THE ENGINEERING NOTE PAGE ENP-1. THE NOTE PAGE IS AN INTEGRAL PART OF THIS DRAWING AS IT CONTAINS SPECIFICATIONS AND CRITERIA USED IN THE DESIGN OF THIS COMPONENT.

CITY OF MISSISSAUGA
BUILDING DIVISION
09/22/2022
KOTT
RECEIVED
Per: joshua.nabua

JOB NAME	TRUSS NAME	QUANTITY	PLY	JOB DESC.	DRWG NO.
IM0621-171	G04	1	1	TRUSS DESC.	

Version 8.420 S Apr 29 2021 MiTek Industries, Inc. Tue Jun 29 13:09:59 2021 Page 2
ID:OWh2I4vpdPTbcMQK?92PSNzbzpx-SO22AYT8zrjpgVoun4ZIQTOtV1WNoaeAD4A6Urz1QkM

PLATE PLACEMENT TOL. = 0.250 inches

PLATE ROTATION TOL. = 5.0 Deg.

JSI GRIP= 0.85 (K) (INPUT = 0.90)
JSI METAL= 0.19 (B) (INPUT = 1.00)

LICENSED PROFESSIONAL ENGINEER
I.MATIJEVIC
100528832
PROVINCE OF ONTARIO

June 29, 2021

READ ALL NOTES ON THIS PAGE AND ON THE ENGINEERING NOTE PAGE ENP-1. THE NOTE PAGE IS AN INTEGRAL PART OF THIS DRAWING AS IT CONTAINS SPECIFICATIONS AND CRITERIA USED IN THE DESIGN OF THIS COMPONENT.

CITY OF RICHMOND HILL
BUILDING DIVISION
09/22/2022
KOTT
RECEIVED
Per:____joshua.nabua_____

JOB NAME	TRUSS NAME	QUANTITY	PLY	JOB DESC.	DRWG NO.
IM0621-171	G05	1	1	TRUSS DESC.	

Version 8.420 S Apr 29 2021 MiTek Industries, Inc. Tue Jun 29 13:10:09 2021 Page 1
ID:OWh2I4vpdPTbcMQK?92PSNzbzpx-9JeqGzbPcv_Ot1ZpMBleqaoa73lE8yKfWebeqGz1QkC

Scale = 1:24.6

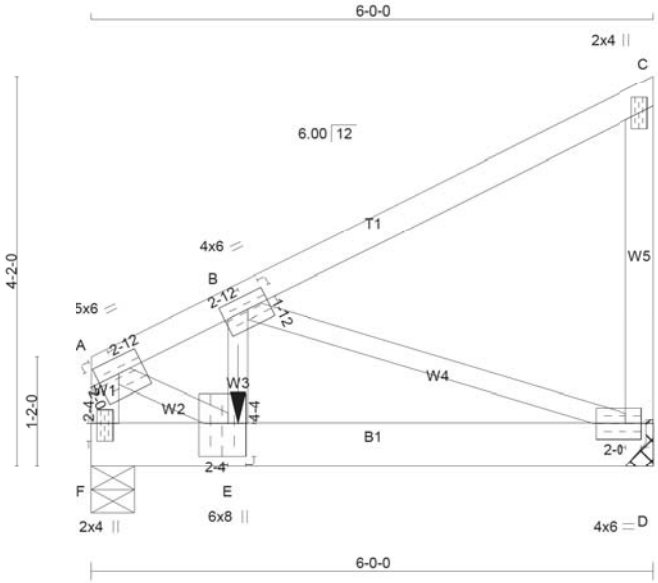

TOTAL WEIGHT = 28 lb
[M]

LUMBER
N. L. G. A. RULES

CHORDS	SIZE		LUMBER	DESCR.
F - A	2x4	DRY	No.2	SPF
A - C	2x4	DRY	No.2	SPF
D - C	2x4	DRY	No.2	SPF
F - D	2x6	DRY	No.2	SPF
ALL WEBS	2x3	DRY	No.2	SPF

DRY: SEASONED LUMBER.

PLATES (table is in inches)

JT	TYPE	PLATES	W	LEN	Y	X
A	TMVW-t	MT20	5.0	6.0	2.00	2.75
B	TMWW-t	MT20	4.0	6.0	1.75	2.75
C	TMV+p	MT20	2.0	4.0		
D	BMVW1-t	MT20	4.0	6.0	2.00	2.00
E	BMWW+t	MT20	6.0	8.0	4.25	2.25
F	BMV1+p	MT20	2.0	4.0	2.25	1.00

DIMENSIONS, SUPPORTS AND LOADINGS SPECIFIED BY FABRICATOR TO BE VERIFIED BY BUILDING DESIGNER

BEARINGS

JT	FACTORED GROSS REACTION VERT	HORZ	MAXIMUM FACTORED GROSS REACTION DOWN	HORZ	UPLIFT	INPUT BRG IN-SX	REQRD BRG IN-SX
F	1856	0	1856	0	0	5-8	2-9
D	1566	0	1566	0	0	MECHANICAL	

A SUITABLE HANGER/MECHANICAL CONNECTION IS REQUIRED AT JOINT D. MINIMUM BEARING LENGTH AT JOINT D = 1-11.

UNFACTORED REACTIONS

JT	1ST LCASE COMBINED	MAX./MIN. COMPONENT REACTIONS SNOW	LIVE	PERM.LIVE	WIND	DEAD	SOIL
F	1300	921 / 0	0 / 0	0 / 0	0 / 0	379 / 0	0 / 0
D	1097	780 / 0	0 / 0	0 / 0	0 / 0	317 / 0	0 / 0

BEARING MATERIAL TO BE SPF NO.2 OR BETTER AT JOINT(S) F

BRACING
TOP CHORD TO BE SHEATHED OR MAX. PURLIN SPACING = 4.30 FT.
MAX. UNBRACED BOTTOM CHORD LENGTH = 10.00 FT OR RIGID CEILING DIRECTLY APPLIED.

ALL PITCH BREAKS AND PERIMETER CORNER JOINTS MUST BE LATERALLY RESTRAINED.

LOADING
TOTAL LOAD CASES: (4)

CHORDS

MEMB. FR-TO	MAX. FACTORED FORCE (LBS)	FACTORED VERT. LOAD (PLF) FROM	TO	LC1 MAX CSI (LC)	MAX. UNBRAC LENGTH
F- A	-2036 / 0	0.0	0.0	0.22 (1)	5.87
A- B	-2257 / 0	-84.3	-84.3	0.22 (1)	4.30
B- C	-10 / 0	-84.3	-84.3	0.24 (1)	6.25
D- C	-164 / 0	0.0	0.0	0.04 (1)	7.81
F- E	0 / 0	-18.2	-18.2	0.22 (1)	10.00
E- D	0 / 2045	-339.6	-339.6	0.77 (1)	10.00

WEBS

MEMB. FR-TO	MAX. FACTORED FORCE (LBS)	MAX CSI (LC)
A- E	0 / 2283	0.57 (1)
E- B	0 / 1398	0.35 (1)
B- D	-2167 / 0	0.76 (1)

FACTORED CONCENTRATED LOADS (LBS)

JT	LOC.	LC1	MAX-	MAX+	FACE	DIR.	TYPE	HEEL	CONN.
E	1-6-12	-358	-400	---	FRONT	VERT	DEAD	---	C1
E	1-6-12	-1023	-1023	---	FRONT	VERT	SNOW	---	C1

CONNECTION REQUIREMENTS

1) **C1:** A SUITABLE HANGER/MECHANICAL CONNECTION IS REQUIRED.

DESIGN CRITERIA

*** SPECIAL LOADS ANALYSIS ***
GEOMETRY AND/OR BASIC LOADS CHANGED BY USER.
LOADS WERE DERIVED FROM USER INPUT
NO FURTHER MODIFICATIONS WERE MADE

SPECIFIED LOADS:

TOP	CH.	LL	=	25.6	PSF
		DL	=	3.0	PSF
BOT	CH.	LL	=	0.0	PSF
		DL	=	7.3	PSF
TOTAL	LOAD		=	35.9	PSF

SPACING = 24.0 IN. C/C

GIRDER TYPE: CStdGirder
START DISTANCE = 1-6-12
START SPAN CARRIED = 15-0-0
END DISTANCE = 6-0-0
END SPAN CARRIED = 15-0-0
END WALL WIDTH = 5-8
APPLIED TO FRONT SIDE OF BOTTOM CHORD.
- ADDT'L LOADS BASED ON 55 % OF GSL.

*** NON STANDARD GIRDER ***
ADDT'L USER-DEFINED LOADS APPLIED TO ALL LOAD CASES.

THIS TRUSS IS DESIGNED FOR RESIDENTIAL OR SMALL BUILDING REQUIREMENTS OF PART 9, NBCC 2015

THIS DESIGN COMPLIES WITH:
- PART 9 OF BCBC 2018 , ABC 2019
- PART 9 OF OBC 2012 (2019 AMENDMENT)
- CSA 086-14
- TPIC 2014

(55 % OF 31.3 P.S.F. G.S.L. PLUS 8.4 P.S.F. RAIN LOAD) EQUALS 25.6 P.S.F. SPECIFIED ROOF LIVE LOAD

ALLOWABLE DEFL.(LL)= L/360 (0.20")
CALCULATED VERT. DEFL.(LL) = L/ 999 (0.05")
ALLOWABLE DEFL.(TL)= L/360 (0.20")
CALCULATED VERT. DEFL.(TL) = L/ 806 (0.09")

CSI: TC=0.24/1.00 (B-C:1) , BC=0.77/1.00 (D-E:1) , WB=0.76/1.00 (B-D:1) , SSI=0.55/1.00 (D-E:1)

DOL LUMBER=1.00 NAIL=1.00 LS BEND=1.00 COMP=1.00 SHEAR=1.00 TENS= 1.00

COMPANION LIVE LOAD FACTOR = 1.00

TRUSS PLATE MANUFACTURER IS NOT RESPONSIBLE FOR QUALITY CONTROL IN THE TRUSS MANUFACTURING PLANT.

CONTINUED ON PAGE 2

LICENSED PROFESSIONAL ENGINEER
I.MATIJEVIC
100528832
PROVINCE OF ONTARIO
June 29, 2021

READ ALL NOTES ON THIS PAGE AND ON THE ENGINEERING NOTE PAGE ENP-1. THE NOTE PAGE IS AN INTEGRAL PART OF THIS DRAWING AS IT CONTAINS SPECIFICATIONS AND CRITERIA USED IN THE DESIGN OF THIS COMPONENT.

CITY OF MISSISSAUGA - HILL BUILDING - DIVISION
09/22/2022
KOTT
RECEIVED
Per:_____joshua.nabua_____

JOB NAME	TRUSS NAME	QUANTITY	PLY	JOB DESC.	DRWG NO.
IM0621-171	G05	1	1	TRUSS DESC.	

Version 8.420 S Apr 29 2021 MiTek Industries, Inc. Tue Jun 29 13:10:09 2021 Page 2
ID:OWh2l4vpdPTbcMQK?92PSNzbzpx-9JeqGzbPcv_Ot1ZpMBleqaoa73lE8yKfWebeqGz1QkC

NAIL VALUES

PLATE	GRIP(DRY) (PSI)		SHEAR (PLI)		SECTION (PLI)	
	MAX	MIN	MAX	MIN	MAX	MIN
MT20	650	371	1747	788	1987	1873

PLATE PLACEMENT TOL. = 0.250 inches

PLATE ROTATION TOL. = 5.0 Deg.

JSI GRIP= 0.87 (F) (INPUT = 0.90)
JSI METAL= 0.61 (E) (INPUT = 1.00)

LICENSED PROFESSIONAL ENGINEER
I.MATIJEVIC
100528832
PROVINCE OF ONTARIO
June 29, 2021

READ ALL NOTES ON THIS PAGE AND ON THE ENGINEERING NOTE PAGE ENP-1. THE NOTE PAGE IS AN INTEGRAL PART OF THIS DRAWING AS IT CONTAINS SPECIFICATIONS AND CRITERIA USED IN THE DESIGN OF THIS COMPONENT.

CITY OF RICHMOND HILL
BUILDING DIVISION
09/22/2022
RECEIVED
Per:____joshua.nabua_____

JOB NAME	TRUSS NAME	QUANTITY	PLY	JOB DESC.	DRWG NO.
IM0621-171	J01	8	1	TRUSS DESC.	

Version 8.420 S Apr 29 2021 MiTek Industries, Inc. Tue Jun 29 13:10:20 2021 Page 1
ID:OWh2I4vpdPTbcMQK?92PSNzbzpx-LQp?akjJ1INrhkuxW?REmulN?VgoC6?G2rmjj7z1Qk1

Scale: 1/2"=1'

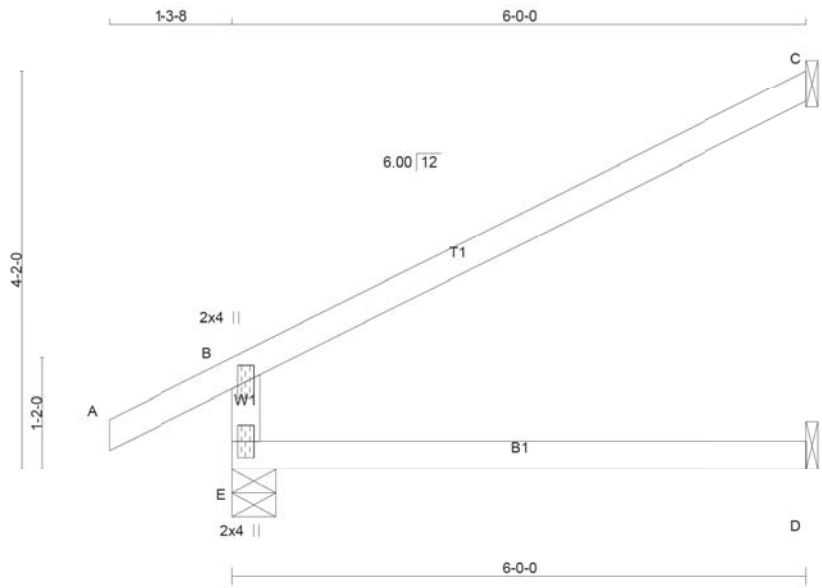

TOTAL WEIGHT = 8 X 17 = 137 lb

LUMBER
N. L. G. A. RULES

CHORDS	SIZE		LUMBER	DESCR.
E - B	2x4	DRY	No.2	SPF
A - C	2x4	DRY	No.2	SPF
E - D	2x4	DRY	No.2	SPF

DRY: SEASONED LUMBER.

PLATES (table is in inches)

JT	TYPE	PLATES	W	LEN	Y	X
B	TMV+p	MT20	2.0	4.0		
E	BMV1+p	MT20	2.0	4.0		

DIMENSIONS, SUPPORTS AND LOADINGS SPECIFIED BY FABRICATOR TO BE VERIFIED BY BUILDING DESIGNER

BEARINGS

JT	FACTORED GROSS REACTION VERT	HORZ	MAXIMUM FACTORED GROSS REACTION DOWN	HORZ	UPLIFT	INPUT BRG IN-SX	REQRD BRG IN-SX
E	495	0	495	0	0	5-8	1-8
C	190	0	190	0	0	1-8	1-8
D	45	0	51	0	0	1-8	1-8

SEE MITEK STANDARD DETAIL MSD2015-H FOR CONNECTION TO JOINT(S) C , D

UNFACTORED REACTIONS

JT	1ST LCASE COMBINED	MAX./MIN. COMPONENT REACTIONS SNOW	LIVE	PERM.LIVE	WIND	DEAD	SOIL
E	343	261 / 0	0 / 0	0 / 0	0 / 0	82 / 0	0 / 0
C	129	115 / 0	0 / 0	0 / 0	0 / 0	14 / 0	0 / 0
D	36	0 / 0	0 / 0	0 / 0	0 / 0	36 / 0	0 / 0

BEARING MATERIAL TO BE SPF NO.2 OR BETTER AT JOINT(S) E, C

BRACING
TOP CHORD TO BE SHEATHED OR MAX. PURLIN SPACING = 6.25 FT.
MAX. UNBRACED BOTTOM CHORD LENGTH = 10.00 FT OR RIGID CEILING DIRECTLY APPLIED.

ALL PITCH BREAKS AND PERIMETER CORNER JOINTS MUST BE LATERALLY RESTRAINED.

LOADING
TOTAL LOAD CASES: (4)

CHORDS MEMB. FR-TO	MAX. FACTORED FORCE (LBS)	FACTORED VERT. LOAD (PLF) FROM	TO	LC1 MAX CSI (LC)	MAX. UNBRAC LENGTH	WEBS MEMB. FR-TO	MAX. FACTORED FORCE (LBS)	MAX CSI (LC)
E- B	-430 / 0	0.0	0.0	0.13 (4)	7.81			
A- B	0 / 26	-84.3	-84.3	0.11 (1)	10.00			
B- C	-28 / 0	-84.3	-84.3	0.52 (1)	6.25			
E- D	0 / 0	-18.2	-18.2	0.13 (4)	10.00			

DESIGN CRITERIA

SPECIFIED LOADS:

TOP CH.	LL	=	25.6	PSF
	DL	=	3.0	PSF
BOT CH.	LL	=	0.0	PSF
	DL	=	7.3	PSF
TOTAL LOAD		=	35.9	PSF

SPACING = 24.0 IN. C/C

THIS TRUSS IS DESIGNED FOR RESIDENTIAL OR SMALL BUILDING REQUIREMENTS OF PART 9, NBCC 2015

THIS DESIGN COMPLIES WITH:
- PART 9 OF BCBC 2018 , ABC 2019
- PART 9 OF OBC 2012 (2019 AMENDMENT)
- CSA 086-14
- TPIC 2014

DESIGN ASSUMPTIONS
-OVERHANG NOT TO BE ALTERED OR CUT OFF.

(55 % OF 31.3 P.S.F. G.S.L. PLUS 8.4 P.S.F. RAIN LOAD) EQUALS 25.6 P.S.F. SPECIFIED ROOF LIVE LOAD

ALLOWABLE DEFL.(LL)= L/360 (0.20")
CALCULATED VERT. DEFL.(LL) = L/ 999 (0.00")
ALLOWABLE DEFL.(TL)= L/360 (0.20")
CALCULATED VERT. DEFL.(TL) = L/ 999 (0.03")

CSI: TC=0.52/1.00 (B-C:1) , BC=0.13/1.00 (D-E:4) , WB=0.00/1.00 (n/a:0) , SSI=0.22/1.00 (B-C:1)

DOL LUMBER=1.00 NAIL=1.00 LS BEND=1.10 COMP=1.10 SHEAR=1.10 TENS= 1.10

COMPANION LIVE LOAD FACTOR = 1.00

TRUSS PLATE MANUFACTURER IS NOT RESPONSIBLE FOR QUALITY CONTROL IN THE TRUSS MANUFACTURING PLANT .

NAIL VALUES

PLATE	GRIP(DRY) (PSI) MAX	MIN	SHEAR (PLI) MAX	MIN	SECTION (PLI) MAX	MIN
MT20	650	371	1747	788	1987	1873

PLATE PLACEMENT TOL. = 0.250 inches

PLATE ROTATION TOL. = 5.0 Deg.

JSI GRIP= 0.24 (B) (INPUT = 0.90)
JSI METAL= 0.18 (B) (INPUT = 1.00)

LICENSED PROFESSIONAL ENGINEER
I.MATIJEVIC
100528832
PROVINCE OF ONTARIO
June 29, 2021

READ ALL NOTES ON THIS PAGE AND ON THE ENGINEERING NOTE PAGE ENP-1. THE NOTE PAGE IS AN INTEGRAL PART OF THIS DRAWING AS IT CONTAINS SPECIFICATIONS AND CRITERIA USED IN THE DESIGN OF THIS COMPONENT.

CITY OF RICHMOND HILL
BUILDING DIVISION
09/22/2022
KOTT
RECEIVED
Per:_____joshua.nabua_____

JOB NAME	TRUSS NAME	QUANTITY	PLY	JOB DESC.	DRWG NO.
IM0621-171	J02	3	1	TRUSS DESC.	

Version 8.420 S Apr 29 2021 MiTek Industries, Inc. Tue Jun 29 13:10:31 2021 Page 1
ID:OWh2I4vpdPTbcMQK?92PSNzbzpx-WY_9uUsDRgmHVQE2fp8pjDjLuwQMH4jua3wob_z1Qjs

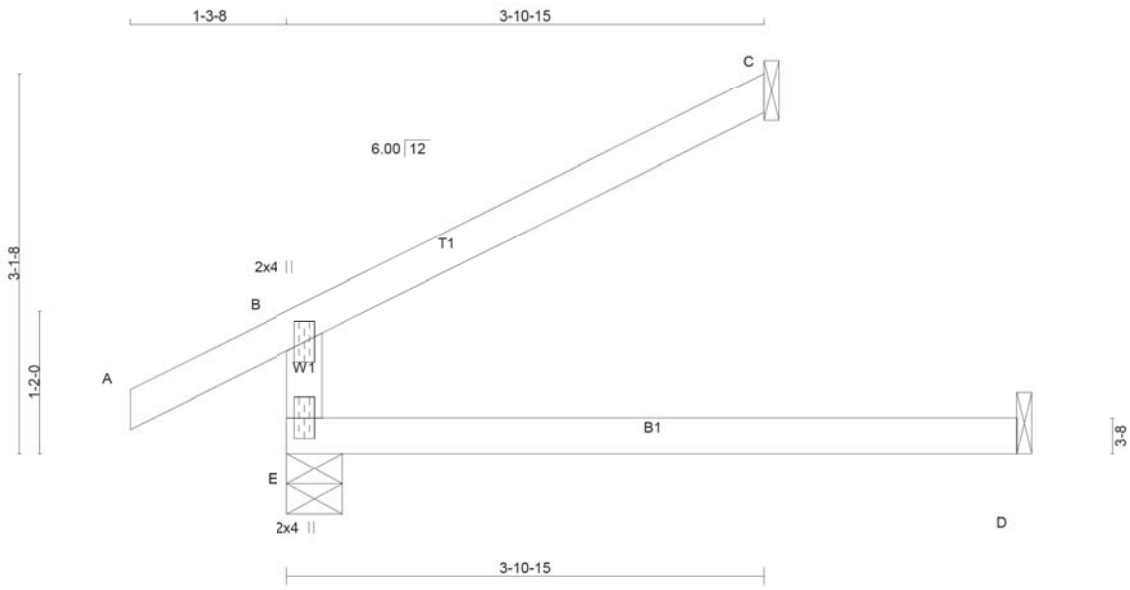

TOTAL WEIGHT = 3 X 14 = 43 lb [M]

LUMBER
N. L. G. A. RULES

CHORDS	SIZE		LUMBER	DESCR.
E - B	2x4	DRY	No.2	SPF
A - C	2x4	DRY	No.2	SPF
E - D	2x4	DRY	No.2	SPF

DRY: SEASONED LUMBER.

PLATES (table is in inches)

JT	TYPE	PLATES	W	LEN	Y	X
B	TMV+p	MT20	2.0	4.0		
E	BMV1+p	MT20	2.0	4.0		

DIMENSIONS, SUPPORTS AND LOADINGS SPECIFIED BY FABRICATOR TO BE VERIFIED BY BUILDING DESIGNER

BEARINGS

JT	FACTORED GROSS REACTION VERT	HORZ	MAXIMUM FACTORED GROSS REACTION DOWN	HORZ	UPLIFT	INPUT BRG IN-SX	REQRD BRG IN-SX
E	385	0	385	0	0	5-8	1-8
C	124	0	124	0	0	1-8	1-8
D	45	0	51	0	0	1-8	1-8

SEE MITEK STANDARD DETAIL MSD2015-H FOR CONNECTION TO JOINT(S) C , D

UNFACTORED REACTIONS

JT	1ST LCASE COMBINED	MAX./MIN. COMPONENT REACTIONS SNOW	LIVE	PERM.LIVE	WIND	DEAD	SOIL
E	269	194 / 0	0 / 0	0 / 0	0 / 0	74 / 0	0 / 0
C	84	75 / 0	0 / 0	0 / 0	0 / 0	9 / 0	0 / 0
D	36	0 / 0	0 / 0	0 / 0	0 / 0	36 / 0	0 / 0

BEARING MATERIAL TO BE SPF NO.2 OR BETTER AT JOINT(S) E, C

BRACING
TOP CHORD TO BE SHEATHED OR MAX. PURLIN SPACING = 6.25 FT.
MAX. UNBRACED BOTTOM CHORD LENGTH = 10.00 FT OR RIGID CEILING DIRECTLY APPLIED.

ALL PITCH BREAKS AND PERIMETER CORNER JOINTS MUST BE LATERALLY RESTRAINED.

LOADING
TOTAL LOAD CASES: (4)

CHORDS

MEMB. FR-TO	MAX. FACTORED FORCE (LBS)	FACTORED VERT. LOAD (PLF) FROM	TO	LC1 MAX CSI (LC)	MAX. UNBRAC LENGTH
E- B	-320 / 0	0.0	0.0	0.13 (4)	7.81
A- B	0 / 26	-84.3	-84.3	0.11 (1)	10.00
B- C	-18 / 0	-84.3	-84.3	0.22 (1)	6.25
E- D	0 / 0	-18.2	-18.2	0.13 (4)	10.00

WEBS

MEMB. FR-TO	MAX. FACTORED FORCE (LBS)	MAX CSI (LC)

DESIGN CRITERIA

SPECIFIED LOADS:

TOP CH.	LL	=	25.6	PSF
	DL	=	3.0	PSF
BOT CH.	LL	=	0.0	PSF
	DL	=	7.3	PSF
TOTAL LOAD		=	35.9	PSF

SPACING = 24.0 IN. C/C

THIS TRUSS IS DESIGNED FOR RESIDENTIAL OR SMALL BUILDING REQUIREMENTS OF PART 9, NBCC 2015

THIS DESIGN COMPLIES WITH:
- PART 9 OF BCBC 2018 , ABC 2019
- PART 9 OF OBC 2012 (2019 AMENDMENT)
- CSA 086-14
- TPIC 2014

DESIGN ASSUMPTIONS
-OVERHANG NOT TO BE ALTERED OR CUT OFF.

(55 % OF 31.3 P.S.F. G.S.L. PLUS 8.4 P.S.F. RAIN LOAD) EQUALS 25.6 P.S.F. SPECIFIED ROOF LIVE LOAD

ALLOWABLE DEFL.(LL)= L/360 (0.20")
CALCULATED VERT. DEFL.(LL) = L/ 999 (0.00")
ALLOWABLE DEFL.(TL)= L/360 (0.20")
CALCULATED VERT. DEFL.(TL) = L/ 999 (0.03")

CSI: TC=0.22/1.00 (B-C:1) , BC=0.13/1.00 (D-E:4) , WB=0.00/1.00 (n/a:0) , SSI=0.14/1.00 (B-C:1)

DOL LUMBER=1.00 NAIL=1.00 LS BEND=1.10 COMP=1.10 SHEAR=1.10 TENS= 1.10

COMPANION LIVE LOAD FACTOR = 1.00

TRUSS PLATE MANUFACTURER IS NOT RESPONSIBLE FOR QUALITY CONTROL IN THE TRUSS MANUFACTURING PLANT .

NAIL VALUES

PLATE	GRIP(DRY) (PSI) MAX	MIN	SHEAR (PLI) MAX	MIN	SECTION (PLI) MAX	MIN
MT20	650	371	1747	788	1987	1873

PLATE PLACEMENT TOL. = 0.250 inches

PLATE ROTATION TOL. = 0.5 Deg.

JSI GRIP= 0.18 (B) (INPUT = 0.90)
JSI METAL= 0.13 (B) (INPUT = 1.00)

LICENSED PROFESSIONAL ENGINEER
I.MATIJEVIC
100528832
PROVINCE OF ONTARIO
June 29, 2021

READ ALL NOTES ON THIS PAGE AND ON THE ENGINEERING NOTE PAGE ENP-1. THE NOTE PAGE IS AN INTEGRAL PART OF THIS DRAWING AS IT CONTAINS SPECIFICATIONS AND CRITERIA USED IN THE DESIGN OF THIS COMPONENT.

CITY OF RICHMOND HILL
BUILDING DIVISION
09/22/2022
KOTT
RECEIVED
Per:____joshua.nabua_____

JOB NAME	TRUSS NAME	QUANTITY	PLY	JOB DESC.	DRWG NO.
IM0621-171	J03	3	1	TRUSS DESC.	

Version 8.420 S Apr 29 2021 MiTek Industries, Inc. Tue Jun 29 13:10:39 2021 Page 1
ID:OWh2I4vpdPTbcMQK?92PSNzbzpx-H4SAZDyEY7m8Tera7UHh1v2jA99E9ii3PIsDtWz1Qjk

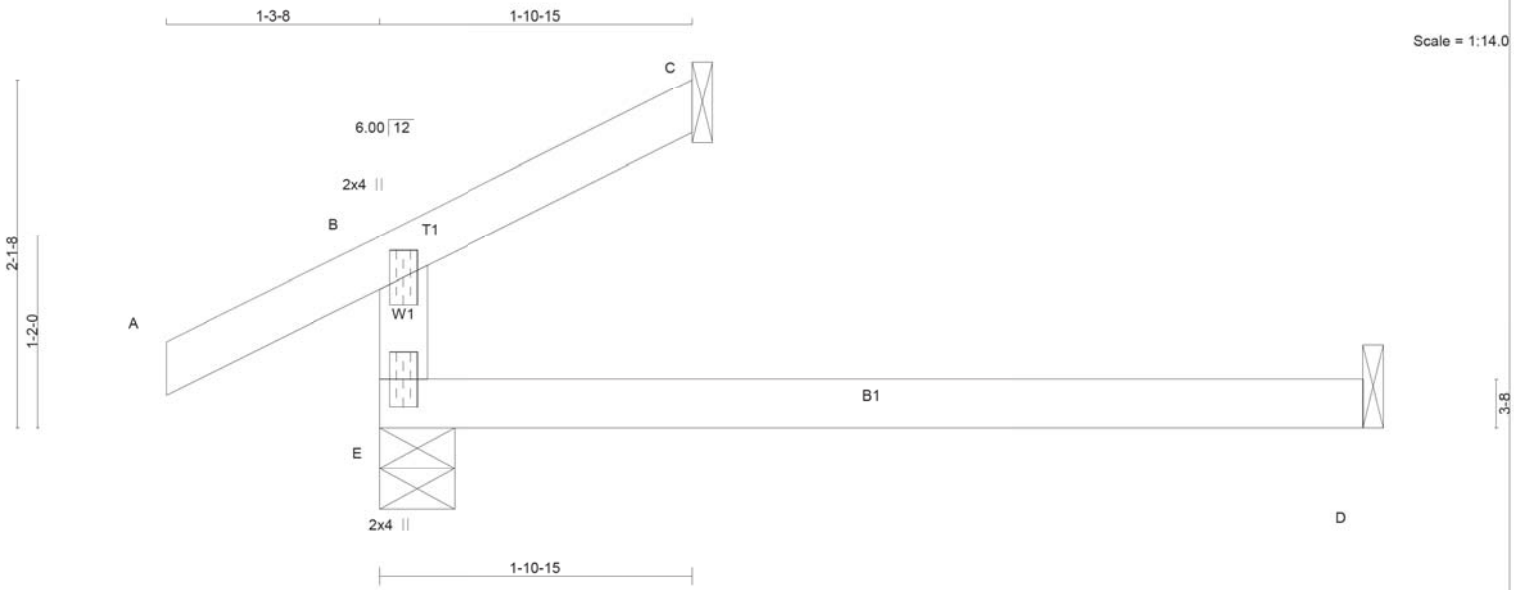

TOTAL WEIGHT = 3 X 12 = 36 lb [M]

LUMBER
N. L. G. A. RULES

CHORDS	SIZE		LUMBER	DESCR.
E - B	2x4	DRY	No.2	SPF
A - C	2x4	DRY	No.2	SPF
E - D	2x4	DRY	No.2	SPF

DRY: SEASONED LUMBER.

PLATES (table is in inches)

JT	TYPE	PLATES	W	LEN	Y	X
B	TMV+p	MT20	2.0	4.0		
E	BMV1+p	MT20	2.0	4.0		

DIMENSIONS, SUPPORTS AND LOADINGS SPECIFIED BY FABRICATOR TO BE VERIFIED BY BUILDING DESIGNER

BEARINGS

JT	FACTORED GROSS REACTION VERT	HORZ	MAXIMUM FACTORED GROSS REACTION DOWN	HORZ	UPLIFT	INPUT BRG IN-SX	REQRD BRG IN-SX
E	279	0	279	0	0	5-8	1-8
C	61	0	61	0	0	1-8	1-8
D	45	0	51	0	0	1-8	1-8

SEE MITEK STANDARD DETAIL MSD2015-H FOR CONNECTION TO JOINT(S) C , D

UNFACTORED REACTIONS

JT	1ST LCASE COMBINED	MAX./MIN. COMPONENT REACTIONS SNOW	LIVE	PERM.LIVE	WIND	DEAD	SOIL
E	197	130 / 0	0 / 0	0 / 0	0 / 0	67 / 0	0 / 0
C	41	37 / 0	0 / 0	0 / 0	0 / 0	4 / 0	0 / 0
D	36	0 / 0	0 / 0	0 / 0	0 / 0	36 / 0	0 / 0

BEARING MATERIAL TO BE SPF NO.2 OR BETTER AT JOINT(S) E, C

BRACING
TOP CHORD TO BE SHEATHED OR MAX. PURLIN SPACING = 10.00 FT.
MAX. UNBRACED BOTTOM CHORD LENGTH = 10.00 FT OR RIGID CEILING DIRECTLY APPLIED.

ALL PITCH BREAKS AND PERIMETER CORNER JOINTS MUST BE LATERALLY RESTRAINED.

LOADING
TOTAL LOAD CASES: (4)

CHORDS

MEMB. FR-TO	MAX. FACTORED FORCE (LBS)	FACTORED VERT. LOAD (PLF) FROM	TO	LC1 MAX CSI (LC)	MAX. UNBRAC LENGTH
E- B	-214 / 0	0.0	0.0	0.13 (4)	7.81
A- B	0 / 26	-84.3	-84.3	0.11 (1)	10.00
B- C	-9 / 0	-84.3	-84.3	0.05 (1)	10.00
E- D	0 / 0	-18.2	-18.2	0.13 (4)	10.00

WEBS

MEMB. FR-TO	MAX. FACTORED FORCE (LBS)	MAX CSI (LC)

DESIGN CRITERIA

SPECIFIED LOADS:

TOP CH.	LL	=	25.6	PSF
	DL	=	3.0	PSF
BOT CH.	LL	=	0.0	PSF
	DL	=	7.3	PSF
TOTAL LOAD		=	35.9	PSF

SPACING = 24.0 IN. C/C

THIS TRUSS IS DESIGNED FOR RESIDENTIAL OR SMALL BUILDING REQUIREMENTS OF PART 9, NBCC 2015

THIS DESIGN COMPLIES WITH:
- PART 9 OF BCBC 2018 , ABC 2019
- PART 9 OF OBC 2012 (2019 AMENDMENT)
- CSA 086-14
- TPIC 2014

DESIGN ASSUMPTIONS
-OVERHANG NOT TO BE ALTERED OR CUT OFF.

(55 % OF 31.3 P.S.F. G.S.L. PLUS 8.4 P.S.F. RAIN LOAD) EQUALS 25.6 P.S.F. SPECIFIED ROOF LIVE LOAD

ALLOWABLE DEFL.(TL)= L/360 (0.20")
CALCULATED VERT. DEFL.(TL) = L/ 999 (0.03")

CSI: TC=0.13/1.00 (B-E:4) , BC=0.13/1.00 (D-E:4) , WB=0.00/1.00 (n/a:0) , SSI=0.09/1.00 (D-E:4)

DOL LUMBER=1.00 NAIL=1.00 LS BEND=1.10 COMP=1.10 SHEAR=1.10 TENS= 1.10

COMPANION LIVE LOAD FACTOR = 1.00

TRUSS PLATE MANUFACTURER IS NOT RESPONSIBLE FOR QUALITY CONTROL IN THE TRUSS MANUFACTURING PLANT .

NAIL VALUES

PLATE	GRIP(DRY) (PSI) MAX	MIN	SHEAR (PLI) MAX	MIN	SECTION (PLI) MAX	MIN
MT20	650	371	1747	788	1987	1873

PLATE PLACEMENT TOL. = 0.250 inches

PLATE ROTATION TOL. = 5.0 Deg.

JSI GRIP= 0.12 (B) (INPUT = 0.90)
JSI METAL= 0.09 (B) (INPUT = 1.00)

LICENSED PROFESSIONAL ENGINEER
I.MATIJEVIC
100528832
PROVINCE OF ONTARIO
June 29, 2021

READ ALL NOTES ON THIS PAGE AND ON THE ENGINEERING NOTE PAGE ENP-1. THE NOTE PAGE IS AN INTEGRAL PART OF THIS DRAWING AS IT CONTAINS SPECIFICATIONS AND CRITERIA USED IN THE DESIGN OF THIS COMPONENT.

CITY OF RICHMOND HILL
BUILDING DIVISION
09/22/2022
KOTT
RECEIVED
Per:_____joshua.nabua_____

JOB NAME	TRUSS NAME	QUANTITY	PLY	JOB DESC.	DRWG NO.
IM0621-171	J04	3	1	TRUSS DESC.	

Version 8.420 S Apr 29 2021 MiTek Industries, Inc. Tue Jun 29 13:10:45 2021 Page 1
ID:OWh2I4vpdPTbcMQK?92PSNzbzpx-6EqRqH1?8zWIBZJkTIO5HAIkLaEUZPByoEJY5Az1Qje

Scale = 1:19.2

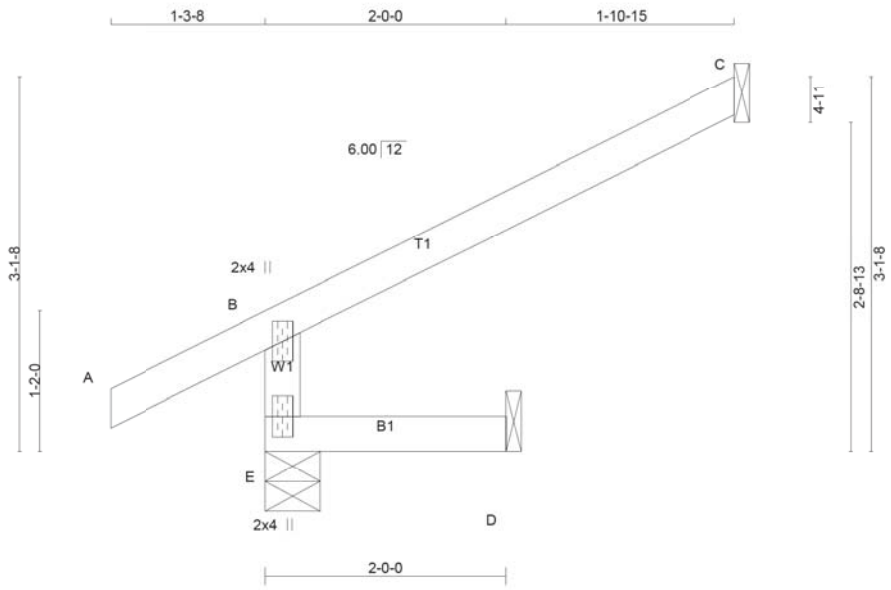

TOTAL WEIGHT = 3 X 10 = 30 lb
[M]

LUMBER
N. L. G. A. RULES

CHORDS	SIZE		LUMBER	DESCR.
E - B	2x4	DRY	No.2	SPF
A - C	2x4	DRY	No.2	SPF
E - D	2x4	DRY	No.2	SPF

DRY: SEASONED LUMBER.

PLATES (table is in inches)

JT	TYPE	PLATES	W	LEN	Y	X
B	TMV+p	MT20	2.0	4.0		
E	BMV1+p	MT20	2.0	4.0		

DIMENSIONS, SUPPORTS AND LOADINGS SPECIFIED BY FABRICATOR TO BE VERIFIED BY BUILDING DESIGNER

BEARINGS

JT	FACTORED GROSS REACTION VERT	HORZ	MAXIMUM FACTORED GROSS REACTION DOWN	HORZ	UPLIFT	INPUT BRG IN-SX	REQRD BRG IN-SX
E	340	0	340	0	0	5-8	1-8
C	124	0	124	0	0	1-8	1-8
D	16	0	18	0	0	1-8	1-8

SEE MITEK STANDARD DETAIL MSD2015-H FOR CONNECTION TO JOINT(S) C , D

UNFACTORED REACTIONS

JT	1ST LCASE COMBINED	MAX./MIN. COMPONENT REACTIONS SNOW	LIVE	PERM.LIVE	WIND	DEAD	SOIL
E	233	194 / 0	0 / 0	0 / 0	0 / 0	39 / 0	0 / 0
C	84	75 / 0	0 / 0	0 / 0	0 / 0	9 / 0	0 / 0
D	13	0 / 0	0 / 0	0 / 0	0 / 0	13 / 0	0 / 0

BEARING MATERIAL TO BE SPF NO.2 OR BETTER AT JOINT(S) E

BRACING
TOP CHORD TO BE SHEATHED OR MAX. PURLIN SPACING = 6.25 FT.
MAX. UNBRACED BOTTOM CHORD LENGTH = 10.00 FT OR RIGID CEILING DIRECTLY APPLIED.

ALL PITCH BREAKS AND PERIMETER CORNER JOINTS MUST BE LATERALLY RESTRAINED.

LOADING
TOTAL LOAD CASES: (5)

CHORDS

MEMB. FR-TO	MAX. FACTORED FORCE (LBS)	FACTORED VERT. LOAD (PLF) FROM	TO	LC1 MAX CSI (LC)	MAX. UNBRAC LENGTH
E- B	-320 / 0	0.0	0.0	0.01 (4)	7.81
A- B	0 / 26	-84.3	-84.3	0.11 (1)	10.00
B- C	-18 / 0	-84.3	-84.3	0.22 (1)	6.25
E- D	0 / 0	-18.2	-18.2	0.02 (4)	10.00

WEBS

MEMB. FR-TO	MAX. FACTORED FORCE (LBS)	MAX CSI (LC)

CANTILEVER ANALYSIS HAS BEEN CONSIDERED IN THIS DESIGN

PATTERN-LOADING CHECK APPLIED TO THIS TRUSS.

DESIGN CRITERIA

SPECIFIED LOADS:

TOP CH.	LL	=	25.6	PSF
	DL	=	3.0	PSF
BOT CH.	LL	=	0.0	PSF
	DL	=	7.3	PSF
TOTAL LOAD		=	35.9	PSF

SPACING = 24.0 IN. C/C

THIS TRUSS IS DESIGNED FOR RESIDENTIAL OR SMALL BUILDING REQUIREMENTS OF PART 9, NBCC 2015

THIS DESIGN COMPLIES WITH:
- PART 9 OF BCBC 2018 , ABC 2019
- PART 9 OF OBC 2012 (2019 AMENDMENT)
- CSA 086-14
- TPIC 2014

DESIGN ASSUMPTIONS
-OVERHANG NOT TO BE ALTERED OR CUT OFF.

(55 % OF 31.3 P.S.F. G.S.L. PLUS 8.4 P.S.F. RAIN LOAD) EQUALS 25.6 P.S.F. SPECIFIED ROOF LIVE LOAD

ALLOWABLE DEFL.(LL)= L/360 (0.19")
CALCULATED VERT. DEFL.(LL) = L/ 999 (0.00")
ALLOWABLE DEFL.(TL)= L/360 (0.19")
CALCULATED VERT. DEFL.(TL) = L/ 999 (0.00")

CSI: TC=0.22/1.00 (B-C:1) , BC=0.02/1.00 (D-E:4) , WB=0.00/1.00 (n/a:0) , SSI=0.14/1.00 (B-C:1)

DOL LUMBER=1.00 NAIL=1.00 LS BEND=1.10 COMP=1.10 SHEAR=1.10 TENS= 1.10

COMPANION LIVE LOAD FACTOR = 1.00

TRUSS PLATE MANUFACTURER IS NOT RESPONSIBLE FOR QUALITY CONTROL IN THE TRUSS MANUFACTURING PLANT .

NAIL VALUES

PLATE	GRIP(DRY) (PSI) MAX	MIN	SHEAR (PLI) MAX	MIN	SECTION (PLI) MAX	MIN
MT20	650	371	1747	788	1987	1873

PLATE PLACEMENT TOL. = 0.250 inches

PLATE ROTATION TOL. = 5.0 Deg.

JSI GRIP= 0.18 (B) (INPUT = 0.90)
JSI METAL= 0.13 (B) (INPUT = 1.00)

LICENSED PROFESSIONAL ENGINEER
I.MATIJEVIC
100528832
PROVINCE OF ONTARIO
June 29, 2021

READ ALL NOTES ON THIS PAGE AND ON THE ENGINEERING NOTE PAGE ENP-1. THE NOTE PAGE IS AN INTEGRAL PART OF THIS DRAWING AS IT CONTAINS SPECIFICATIONS AND CRITERIA USED IN THE DESIGN OF THIS COMPONENT.

CITY OF RICHMOND HILL
BUILDING DIVISION
09/22/2022
KOTT
RECEIVED
Per:_____joshua.nabua_____

JOB NAME	TRUSS NAME	QUANTITY	PLY	JOB DESC.	DRWG NO.
IM0621-171	J05	3	1	TRUSS DESC.	

Version 8.420 S Apr 29 2021 MiTek Industries, Inc. Tue Jun 29 13:10:52 2021 Page 1
ID:OWh2l4vpdPTbcMQK?92PSNzbzpx-Pal5Ig6OU7PIXeL4Oj0k3e4yHOd7iaw PqWPrGz1QjX

Scale = 1:13.9

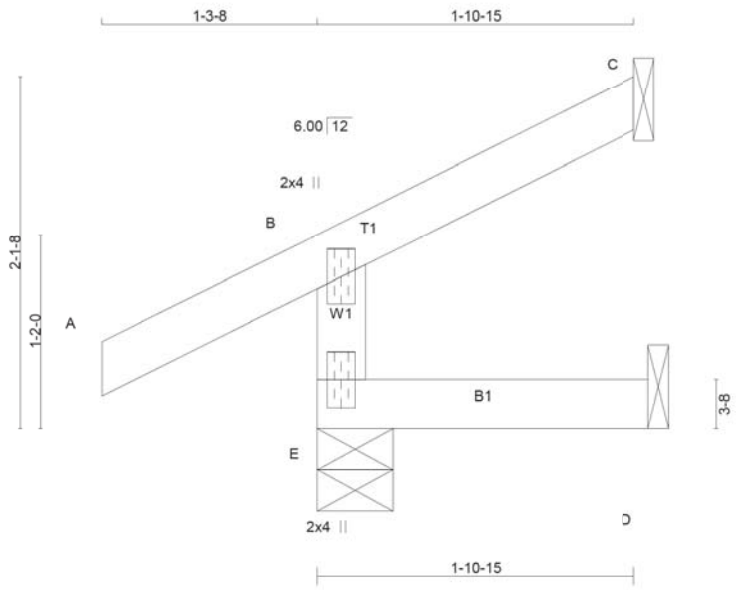

TOTAL WEIGHT = 3 X 7 = 22 lb [M]

LUMBER
N. L. G. A. RULES

CHORDS	SIZE		LUMBER	DESCR.
E - B	2x4	DRY	No.2	SPF
A - C	2x4	DRY	No.2	SPF
E - D	2x4	DRY	No.2	SPF

DRY: SEASONED LUMBER.

PLATES (table is in inches)

JT	TYPE	PLATES	W	LEN	Y	X
B	TMV+p	MT20	2.0	4.0		
E	BMV1+p	MT20	2.0	4.0		

DIMENSIONS, SUPPORTS AND LOADINGS SPECIFIED BY FABRICATOR TO BE VERIFIED BY BUILDING DESIGNER

BEARINGS

JT	FACTORED GROSS REACTION VERT	HORZ	MAXIMUM FACTORED GROSS REACTION DOWN	HORZ	UPLIFT	INPUT BRG IN-SX	REQRD BRG IN-SX
E	235	0	235	0	0	5-8	1-8
C	61	0	61	0	0	1-8	1-8
D	16	0	18	0	0	1-8	1-8

SEE MITEK STANDARD DETAIL MSD2015-H FOR CONNECTION TO JOINT(S) C , D

UNFACTORED REACTIONS

JT	1ST LCASE COMBINED	MAX./MIN. COMPONENT REACTIONS SNOW	LIVE	PERM.LIVE	WIND	DEAD	SOIL
E	162	130 / 0	0 / 0	0 / 0	0 / 0	31 / 0	0 / 0
C	41	37 / 0	0 / 0	0 / 0	0 / 0	4 / 0	0 / 0
D	13	0 / 0	0 / 0	0 / 0	0 / 0	13 / 0	0 / 0

BEARING MATERIAL TO BE SPF NO.2 OR BETTER AT JOINT(S) E, C

BRACING
TOP CHORD TO BE SHEATHED OR MAX. PURLIN SPACING = 10.00 FT.
MAX. UNBRACED BOTTOM CHORD LENGTH = 10.00 FT OR RIGID CEILING DIRECTLY APPLIED.

ALL PITCH BREAKS AND PERIMETER CORNER JOINTS MUST BE LATERALLY RESTRAINED.

LOADING
TOTAL LOAD CASES: (5)

CHORDS

MEMB. FR-TO	MAX. FACTORED FORCE (LBS)	FACTORED VERT. LOAD (PLF) FROM	TO	LC1 MAX CSI (LC)	MAX. UNBRAC LENGTH
E- B	-214 / 0	0.0	0.0	0.01 (4)	7.81
A- B	0 / 26	-84.3	-84.3	0.11 (1)	10.00
B- C	-9 / 0	-84.3	-84.3	0.05 (1)	10.00
E- D	0 / 0	-18.2	-18.2	0.02 (4)	10.00

WEBS

MEMB. FR-TO	MAX. FACTORED FORCE (LBS)	MAX CSI (LC)

CANTILEVER ANALYSIS HAS BEEN CONSIDERED IN THIS DESIGN

PATTERN-LOADING CHECK APPLIED TO THIS TRUSS.

DESIGN CRITERIA

SPECIFIED LOADS:

TOP CH.	LL	=	25.6	PSF
	DL	=	3.0	PSF
BOT CH.	LL	=	0.0	PSF
	DL	=	7.3	PSF
TOTAL LOAD		=	35.9	PSF

SPACING = 24.0 IN. C/C

THIS TRUSS IS DESIGNED FOR RESIDENTIAL OR SMALL BUILDING REQUIREMENTS OF PART 9, NBCC 2015

THIS DESIGN COMPLIES WITH:
- PART 9 OF BCBC 2018 , ABC 2019
- PART 9 OF OBC 2012 (2019 AMENDMENT)
- CSA 086-14
- TPIC 2014

DESIGN ASSUMPTIONS
-OVERHANG NOT TO BE ALTERED OR CUT OFF.

(55 % OF 31.3 P.S.F. G.S.L. PLUS 8.4 P.S.F. RAIN LOAD) EQUALS 25.6 P.S.F. SPECIFIED ROOF LIVE LOAD

ALLOWABLE DEFL.(LL)= L/360 (0.19")
CALCULATED VERT. DEFL.(LL) = L/ 999 (0.00")
ALLOWABLE DEFL.(TL)= L/360 (0.19")
CALCULATED VERT. DEFL.(TL) = L/ 999 (0.00")

CSI: TC=0.11/1.00 (A-B:1) , BC=0.02/1.00 (D-E:4) , WB=0.00/1.00 (n/a:0) , SSI=0.08/1.00 (A-B:1)

DOL LUMBER=1.00 NAIL=1.00 LS BEND=1.10 COMP=1.10 SHEAR=1.10 TENS= 1.10

COMPANION LIVE LOAD FACTOR = 1.00

TRUSS PLATE MANUFACTURER IS NOT RESPONSIBLE FOR QUALITY CONTROL IN THE TRUSS MANUFACTURING PLANT .

NAIL VALUES

PLATE	GRIP(DRY) (PSI) MAX	MIN	SHEAR (PLI) MAX	MIN	SECTION (PLI) MAX	MIN
MT20	650	371	1747	788	1987	1873

PLATE PLACEMENT TOL. = 0.250 inches

PLATE ROTATION TOL. = 5.0 Deg.

JSI GRIP= 0.12 (B) (INPUT = 0.90)
JSI METAL= 0.09 (B) (INPUT = 1.00)

LICENSED PROFESSIONAL ENGINEER
I.MATIJEVIC
100528832
PROVINCE OF ONTARIO
June 29, 2021

READ ALL NOTES ON THIS PAGE AND ON THE ENGINEERING NOTE PAGE ENP-1. THE NOTE PAGE IS AN INTEGRAL PART OF THIS DRAWING AS IT CONTAINS SPECIFICATIONS AND CRITERIA USED IN THE DESIGN OF THIS COMPONENT.

CITY OF RICHMOND HILL
BUILDING DIVISION
09/22/2022
KOTT
RECEIVED
Per:_____joshua.nabua_____

JOB NAME	TRUSS NAME	QUANTITY	PLY	JOB DESC.	DRWG NO.
IM0621-171	J06	7	1	TRUSS DESC.	

Version 8.420 S Apr 29 2021 MiTek Industries, Inc. Tue Jun 29 13:11:00 2021 Page 1
ID:OWh2I4vpdPTbcMQK?92PSNzbzpx-A7E6zPCPcaP9UtydsO9cOKPKGdJAaBu9E3Sr7oz1QjP

Scale = 1:15.4

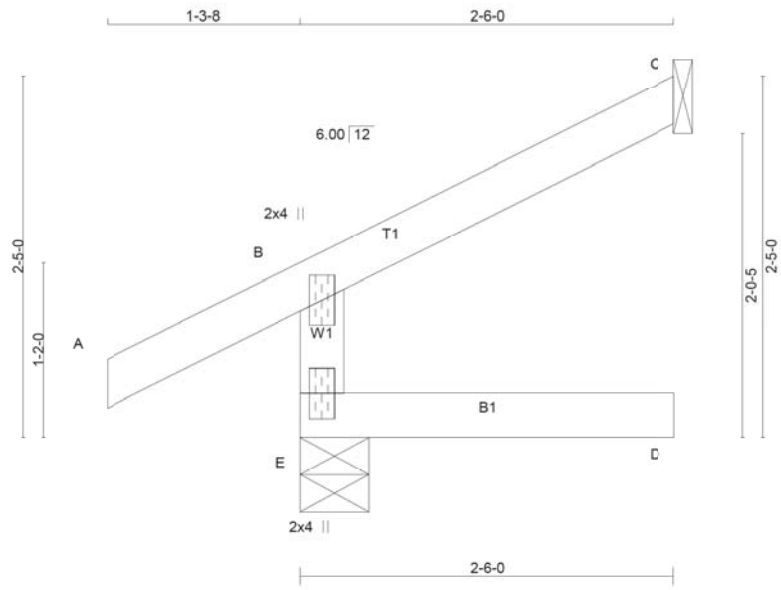

TOTAL WEIGHT = 7 X 9 = 61 lb
[M]

LUMBER
N. L. G. A. RULES

CHORDS	SIZE		LUMBER	DESCR.
E - B	2x4	DRY	No.2	SPF
A - C	2x4	DRY	No.2	SPF
E - D	2x4	DRY	No.2	SPF

DRY: SEASONED LUMBER.

PLATES (table is in inches)

JT	TYPE	PLATES	W	LEN	Y	X
B	TMV+p	MT20	2.0	4.0		
E	BMV1+p	MT20	2.0	4.0		

DIMENSIONS, SUPPORTS AND LOADINGS SPECIFIED BY FABRICATOR TO BE VERIFIED BY BUILDING DESIGNER

BEARINGS

JT	FACTORED GROSS REACTION VERT	HORZ	MAXIMUM FACTORED GROSS REACTION DOWN	HORZ	UPLIFT	INPUT BRG IN-SX	REQRD BRG IN-SX
E	291	0	291	0	0	5-8	1-8
C	79	0	79	0	0	1-8	1-8

SEE MITEK STANDARD DETAIL MSD2015-H FOR CONNECTION TO JOINT(S) C

UNFACTORED REACTIONS

JT	1ST LCASE COMBINED	MAX./MIN. COMPONENT REACTIONS SNOW	LIVE	PERM.LIVE	WIND	DEAD	SOIL
E	203	149 / 0	0 / 0	0 / 0	0 / 0	54 / 0	0 / 0
C	54	48 / 0	0 / 0	0 / 0	0 / 0	6 / 0	0 / 0

BEARING MATERIAL TO BE SPF NO.2 OR BETTER AT JOINT(S) E

BRACING
TOP CHORD TO BE SHEATHED OR MAX. PURLIN SPACING = 6.25 FT.
MAX. UNBRACED BOTTOM CHORD LENGTH = 10.00 FT OR RIGID CEILING DIRECTLY APPLIED.

ALL FITCH BREAKS AND PERIMETER CORNER JOINTS MUST BE LATERALLY RESTRAINED.

LOADING
TOTAL LOAD CASES: (7)

CHORDS MEMB.	MAX. FACTORED FORCE (LBS)	FACTORED VERT. LOAD (PLF) FROM	TO	LC1 MAX CSI (LC)	MAX. UNBRAC LENGTH FR-TO	WEBS MEMB.	MAX. FACTORED FORCE (LBS)	MAX CSI (LC)
FR-TO								
E- B	-246 / 0	0.0	0.0	0.02 (1)	7.81			
A- B	0 / 26	-84.3	-84.3	0.11 (1)	10.00			
B- C	-12 / 0	-84.3	-84.3	0.09 (6)	6.25			
E- D	0 / 0	-18.2	-18.2	0.13 (4)	10.00			

CANTILEVER ANALYSIS HAS BEEN CONSIDERED IN THIS DESIGN

PATTERN-LOADING CHECK APPLIED TO THIS TRUSS.

DESIGN CRITERIA

SPECIFIED LOADS:

TOP CH.	LL	=	25.6	PSF
	DL	=	3.0	PSF
BOT CH.	LL	=	0.0	PSF
	DL	=	7.3	PSF
TOTAL LOAD		=	35.9	PSF

SPACING = 24.0 IN. C/C

THIS TRUSS IS DESIGNED FOR RESIDENTIAL OR SMALL BUILDING REQUIREMENTS OF PART 9, NBCC 2015

THIS DESIGN COMPLIES WITH:
- PART 9 OF BCBC 2018 , ABC 2019
- PART 9 OF OBC 2012 (2019 AMENDMENT)
- CSA 086-14
- TPIC 2014

DESIGN ASSUMPTIONS
-OVERHANG NOT TO BE ALTERED OR CUT OFF.

(55 % OF 31.3 P.S.F. G.S.L. PLUS 8.4 P.S.F. RAIN LOAD) EQUALS 25.6 P.S.F. SPECIFIED ROOF LIVE LOAD

ALLOWABLE DEFL.(TL)= L/360 (0.19")
CALCULATED VERT. DEFL.(TL) = L/ 999 (0.02")

CSI: TC=0.11/1.00 (A-B:1) , BC=0.13/1.00 (D-E:4) , WB=0.00/1.00 (n/a:0) , SSI=0.09/1.00 (B-C:6)

DOL LUMBER=1.00 NAIL=1.00 LS BEND=1.10 COMP=1.10 SHEAR=1.10 TENS= 1.10

COMPANION LIVE LOAD FACTOR = 1.00

TRUSS PLATE MANUFACTURER IS NOT RESPONSIBLE FOR QUALITY CONTROL IN THE TRUSS MANUFACTURING PLANT .

NAIL VALUES

PLATE	GRIP(DRY) (PSI) MAX	MIN	SHEAR (PLI) MAX	MIN	SECTION (PLI) MAX	MIN
MT20	650	371	1747	788	1987	1873

PLATE PLACEMENT TOL. = 0.250 inches

PLATE ROTATION TOL. = 5.0 Deg.

JSI GRIP= 0.14 (B) (INPUT = 0.90)
JSI METAL= 0.10 (B) (INPUT = 1.00)

LICENSED PROFESSIONAL ENGINEER
I.MATIJEVIC
100528832
PROVINCE OF ONTARIO
June 29, 2021

READ ALL NOTES ON THIS PAGE AND ON THE ENGINEERING NOTE PAGE ENP-1. THE NOTE PAGE IS AN INTEGRAL PART OF THIS DRAWING AS IT CONTAINS SPECIFICATIONS AND CRITERIA USED IN THE DESIGN OF THIS COMPONENT.

CITY OF RICHMOND HILL
BUILDING DIVISION
09/22/2022
KOTT
RECEIVED
Per:_____joshua.nabua_____

JOB NAME	TRUSS NAME	QUANTITY	PLY	JOB DESC.	DRWG NO.
IM0621-171	T01	7	1	TRUSS DESC.	

Version 8.420 S Apr 29 2021 MiTek Industries, Inc. Tue Jun 29 13:11:07 2021 Page 1
ID:OWh2I4vpdPTbcMQK?92PSNzbzpx-TT9mRoIoykIAqy_zmMnFAoCKERd9jFCBrfeituz1QjI

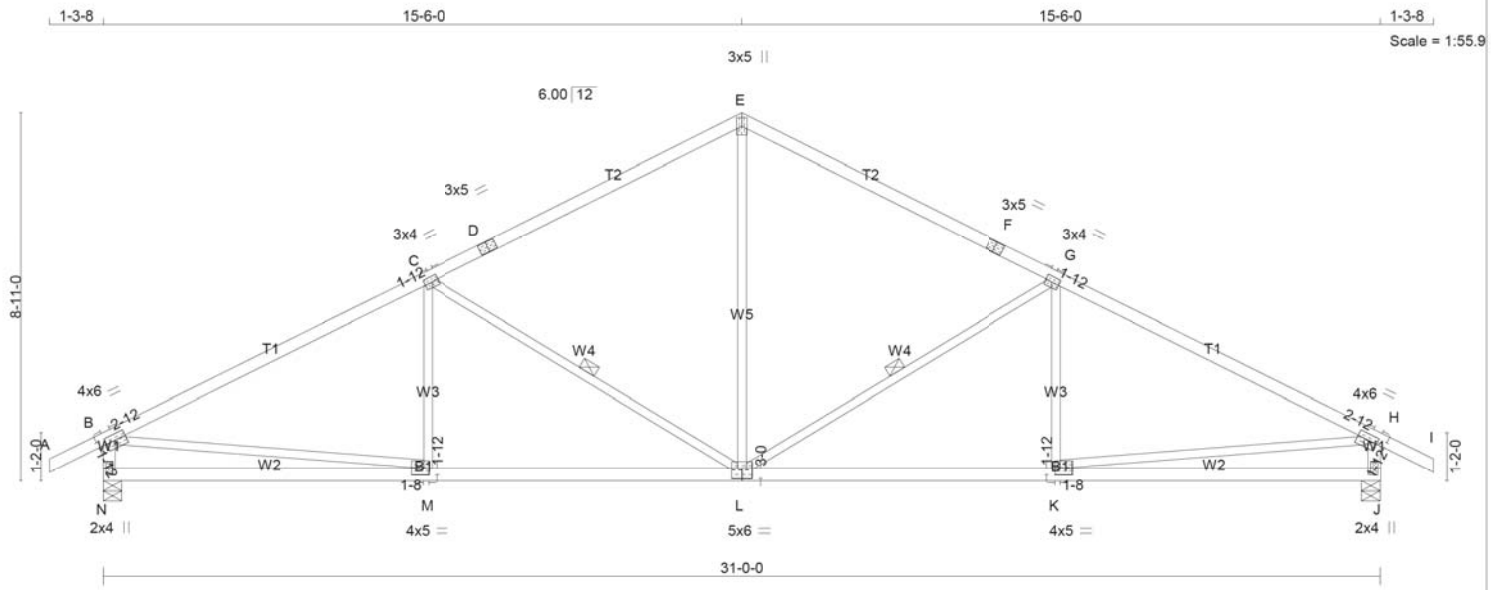

TOTAL WEIGHT = 7 X 121 = 844 lb

LUMBER
N. L. G. A. RULES

CHORDS	SIZE		LUMBER	DESCR.
A - D	2x4	DRY	No.2	SPF
D - E	2x4	DRY	No.2	SPF
E - F	2x4	DRY	No.2	SPF
F - I	2x4	DRY	No.2	SPF
N - B	2x4	DRY	No.2	SPF
J - H	2x4	DRY	No.2	SPF
N - L	2x4	DRY	No.2	SPF
L - J	2x4	DRY	No.2	SPF
ALL WEBS EXCEPT	2x3	DRY	No.2	SPF

DRY: SEASONED LUMBER.

PLATES (table is in inches)

JT	TYPE	PLATES	W	LEN	Y	X
B	TMVW-t	MT20	4.0	6.0	1.75	2.75
C	TMWW-t	MT20	3.0	4.0	1.50	1.75
D	TS-t	MT20	3.0	5.0		
E	TTW+p	MT20	3.0	5.0		
F	TS-t	MT20	3.0	5.0		
G	TMWW-t	MT20	3.0	4.0	1.50	1.75
H	TMVW-t	MT20	4.0	6.0	1.75	2.75
J	BMV1+p	MT20	2.0	4.0		
K	BMWW-t	MT20	4.0	5.0	1.75	1.50
L	BSWWW-I	MT20	5.0	6.0	3.00	3.00
M	BMWW-t	MT20	4.0	5.0	1.75	1.50
N	BMV1+p	MT20	2.0	4.0		

DIMENSIONS, SUPPORTS AND LOADINGS SPECIFIED BY FABRICATOR TO BE VERIFIED BY BUILDING DESIGNER

BEARINGS

JT	FACTORED GROSS REACTION VERT	HORZ	MAXIMUM FACTORED GROSS REACTION DOWN	HORZ	UPLIFT	INPUT BRG IN-SX	REQRD BRG IN-SX
N	1703	0	1703	0	0	5-8	2-1
J	1703	0	1703	0	0	5-8	2-1

UNFACTORED REACTIONS

JT	1ST LCASE COMBINED	MAX./MIN. COMPONENT REACTIONS SNOW	LIVE	PERM.LIVE	WIND	DEAD	SOIL
N	1190	863 / 0	0 / 0	0 / 0	0 / 0	327 / 0	0 / 0
J	1190	863 / 0	0 / 0	0 / 0	0 / 0	327 / 0	0 / 0

BEARING MATERIAL TO BE SPF NO.2 OR BETTER AT JOINT(S) N, J

BRACING
TOP CHORD TO BE SHEATHED OR MAX. PURLIN SPACING = 3.44 FT.
MAX. UNBRACED BOTTOM CHORD LENGTH = 10.00 FT OR RIGID CEILING DIRECTLY APPLIED.

ALL FITCH BREAKS AND PERIMETER CORNER JOINTS MUST BE LATERALLY RESTRAINED.

1 - 1x4 LATERAL BRACE(S) AT 1/ 2 LENGTH OF G-L, C-L. DBS = 20-0-0 . CBF = 99 LBS.

DBS = DIAGONAL BRACE SPACING (MAX). CBF = CUMULATIVE BRACING FORCE (PER BRACE). FASTEN LATERAL BRACE(S) USING (0.122"X3") SPIRAL NAILS : 1 NAIL FOR 2x3 BRACE(S), 2 FOR 1x4, 2x4, 2x5, 3 FOR 2x6, 4 FOR 2x8, 5 FOR 2x10, AND 6 FOR 2x12.

END VERTICAL(S) MUST BE SHEATHED OR HAVE BRACES AS INDICATED IN THE MAX. UNBRACED LENGTH COLUMN OF THE TABLE BELOW

LOADING
TOTAL LOAD CASES: (4)

CHORDS

MEMB. FR-TO	MAX. FACTORED FORCE (LBS)	FACTORED VERT. LOAD (PLF) FROM	TO	LC1	MAX CSI (LC)	MAX. UNBRAC LENGTH
A- B	0 / 26	-84.3	-84.3	0.11 (1)	10.00	
B- C	-2312 / 0	-84.3	-84.3	0.89 (1)	3.44	
C- D	-1635 / 0	-84.3	-84.3	0.76 (1)	4.14	
D- E	-1635 / 0	-84.3	-84.3	0.76 (1)	4.14	
E- F	-1635 / 0	-84.3	-84.3	0.76 (1)	4.14	
F- G	-1635 / 0	-84.3	-84.3	0.76 (1)	4.14	
G- H	-2312 / 0	-84.3	-84.3	0.89 (1)	3.44	
H- I	0 / 26	-84.3	-84.3	0.11 (1)	10.00	
N- B	-1646 / 0	0.0	0.0	0.17 (1)	6.45	
J- H	-1646 / 0	0.0	0.0	0.17 (1)	6.45	
N- M	0 / 0	-18.2	-18.2	0.31 (4)	10.00	
M- L	0 / 2099	-18.2	-18.2	0.49 (1)	10.00	
L- K	0 / 2099	-18.2	-18.2	0.49 (1)	10.00	
K- J	0 / 0	-18.2	-18.2	0.31 (4)	10.00	

WEBS

MEMB. FR-TO	MAX. FACTORED FORCE (LBS)	MAX CSI (LC)
L- E	0 / 947	0.21 (1)
L- G	-789 / 0	0.45 (1)
K- G	-58 / 132	0.05 (4)
C- L	-789 / 0	0.45 (1)
M- C	-58 / 132	0.05 (4)
B- M	0 / 2112	0.48 (1)
K- H	0 / 2112	0.48 (1)

DESIGN CRITERIA

SPECIFIED LOADS:

TOP CH.	LL	=	25.6	PSF
	DL	=	3.0	PSF
BOT CH.	LL	=	0.0	PSF
	DL	=	7.3	PSF
TOTAL LOAD		=	35.9	PSF

SPACING = 24.0 IN. C/C

THIS TRUSS IS DESIGNED FOR RESIDENTIAL OR SMALL BUILDING REQUIREMENTS OF PART 9, NBCC 2015

THIS DESIGN COMPLIES WITH:
- PART 9 OF BCBC 2018 , ABC 2019
- PART 9 OF OBC 2012 (2019 AMENDMENT)
- CSA 086-14
- TPIC 2014

(55 % OF 31.3 P.S.F. G.S.L. PLUS 8.4 P.S.F. RAIN LOAD) EQUALS 25.6 P.S.F. SPECIFIED ROOF LIVE LOAD

ALLOWABLE DEFL.(LL)= L/360 (1.03")
CALCULATED VERT. DEFL.(LL) = L/ 999 (0.12")
ALLOWABLE DEFL.(TL)= L/360 (1.03")
CALCULATED VERT. DEFL.(TL) = L/ 999 (0.27")

CSI: TC=0.89/1.00 (G-H:1) , BC=0.49/1.00 (K-L:1) , WB=0.48/1.00 (H-K:1) , SSI=0.29/1.00 (G-H:1)

DOL LUMBER=1.00 NAIL=1.00 LS BEND=1.10 COMP=1.10 SHEAR=1.10 TENS= 1.10

COMPANION LIVE LOAD FACTOR = 1.00

TRUSS PLATE MANUFACTURER IS NOT RESPONSIBLE FOR QUALITY CONTROL IN THE TRUSS MANUFACTURING PLANT .

NAIL VALUES

PLATE	GRIP(DRY) (PSI) MAX	MIN	SHEAR (PLI) MAX	MIN	SECTION (PLI) MAX	MIN
MT20	650	371	1747	788	1987	1873

PLATE PLACEMENT TOL. = 0.250 inches

PLATE ROTATION TOL. = 5.0 Deg.

JSI GRIP= 0.89 (H) (INPUT = 0.90)
JSI METAL= 0.60 (H) (INPUT = 1.00)

LICENSED PROFESSIONAL ENGINEER
I.MATIJEVIC
100528832
PROVINCE OF ONTARIO
June 29, 2021

READ ALL NOTES ON THIS PAGE AND ON THE ENGINEERING NOTE PAGE ENP-1. THE NOTE PAGE IS AN INTEGRAL PART OF THIS DRAWING AS IT CONTAINS SPECIFICATIONS AND CRITERIA USED IN THE DESIGN OF THIS COMPONENT.

CITY OF RICHMOND HILL
BUILDING DIVISION
09/22/2022
KOTT
RECEIVED
Per:_____joshua.nabua_____

JOB NAME	TRUSS NAME	QUANTITY	PLY	JOB DESC.	DRWG NO.
IM0621-171	T02	2	1	TRUSS DESC.	

Version 8.420 S Apr 29 2021 MiTek Industries, Inc. Tue Jun 29 13:11:16 2021 Page 1
ID:OWh2l4vpdPTbcMQK?92PSNzbzpx-iCC9KtPRrVQuPKAinlSM1i4vw3j?KKQWwZKhhtz1Qj9

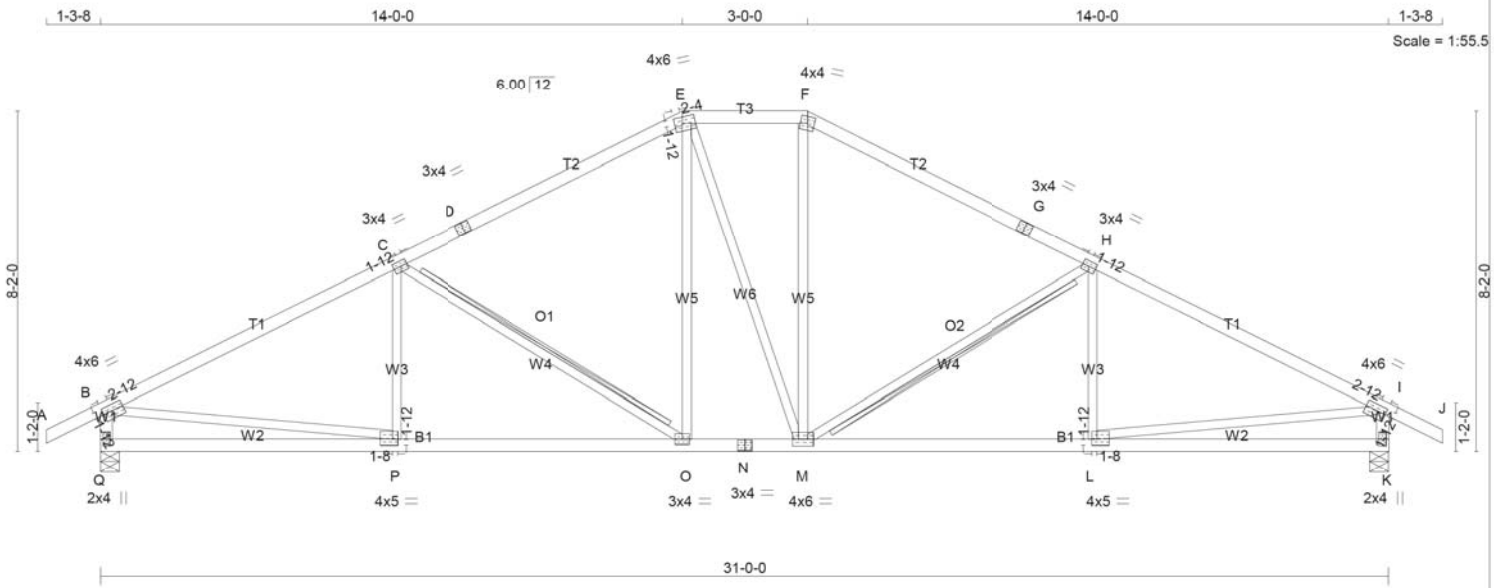

TOTAL WEIGHT = 2 X 129 = 259 lb
[M][F]

LUMBER
N. L. G. A. RULES

CHORDS	SIZE		LUMBER	DESCR.
A - D	2x4	DRY	No.2	SPF
D - E	2x4	DRY	No.2	SPF
E - F	2x4	DRY	No.2	SPF
F - G	2x4	DRY	No.2	SPF
G - J	2x4	DRY	No.2	SPF
Q - B	2x4	DRY	No.2	SPF
K - I	2x4	DRY	No.2	SPF
Q - N	2x4	DRY	No.2	SPF
N - K	2x4	DRY	No.2	SPF
ALL WEBS EXCEPT	2x3	DRY	No.2	SPF

DRY: SEASONED LUMBER.

PLATES (table is in inches)

JT	TYPE	PLATES	W	LEN	Y	X
B	TMVW-t	MT20	4.0	6.0	1.75	2.75
C	TMWW-t	MT20	3.0	4.0	1.50	1.75
D	TS-t	MT20	3.0	4.0		
E	TTWW-m	MT20	4.0	6.0	1.75	2.25
F	TTW-m	MT20	4.0	4.0		
G	TS-t	MT20	3.0	4.0		
H	TMWW-t	MT20	3.0	4.0	1.50	1.75
I	TMVW-t	MT20	4.0	6.0	1.75	2.75
K	BMV1+p	MT20	2.0	4.0		
L	BMWW-t	MT20	4.0	5.0	1.75	1.50
M	BMWWW-t	MT20	4.0	6.0		
N	BS-t	MT20	3.0	4.0		
O	BMWW-t	MT20	3.0	4.0		
P	BMWW-t	MT20	4.0	5.0	1.75	1.50
Q	BMV1+p	MT20	2.0	4.0		

DIMENSIONS, SUPPORTS AND LOADINGS SPECIFIED BY FABRICATOR TO BE VERIFIED BY BUILDING DESIGNER

BEARINGS

JT	FACTORED GROSS REACTION VERT	HORZ	MAXIMUM FACTORED GROSS REACTION DOWN	HORZ	UPLIFT	INPUT BRG IN-SX	REQRD BRG IN-SX
Q	1703	0	1703	0	0	5-8	2-1
K	1703	0	1703	0	0	5-8	2-1

UNFACTORED REACTIONS

JT	1ST LCASE COMBINED	MAX./MIN. COMPONENT REACTIONS SNOW	LIVE	PERM.LIVE	WIND	DEAD	SOIL
Q	1190	863 / 0	0 / 0	0 / 0	0 / 0	327 / 0	0 / 0
K	1190	863 / 0	0 / 0	0 / 0	0 / 0	327 / 0	0 / 0

BEARING MATERIAL TO BE SPF NO.2 OR BETTER AT JOINT(S) Q, K

BRACING
TOP CHORD TO BE SHEATHED OR MAX. PURLIN SPACING = 3.75 FT.
MAX. UNBRACED BOTTOM CHORD LENGTH = 10.00 FT OR RIGID CEILING DIRECTLY APPLIED.

ALL PITCH BREAKS AND PERIMETER CORNER JOINTS MUST BE LATERALLY RESTRAINED.

2x4 DRY SPF No.2 T-BRACE AT C-O, H-M

FASTEN T AND I-BRACES TO NARROW EDGE OF WEB WITH ONE ROW PER PLY OF 3" COMMON WIRE NAILS @ 6" O.C. WITH 3" MINIMUM END DISTANCE. BRACE MUST COVER 90% OF WEB LENGTH.

END VERTICAL(S) MUST BE SHEATHED OR HAVE BRACES AS INDICATED IN THE MAX. UNBRACED LENGTH COLUMN OF THE TABLE BELOW

LOADING
TOTAL LOAD CASES: (4)

CHORDS

MEMB. FR-TO	MAX. FACTORED FORCE (LBS)	FACTORED VERT. LOAD (PLF) FROM	TO	LC1 MAX CSI (LC)	MAX. UNBRAC LENGTH
A- B	0 / 26	-84.3	-84.3	0.11 (1)	10.00
B- C	-2321 / 0	-84.3	-84.3	0.71 (1)	3.75
C- D	-1767 / 0	-84.3	-84.3	0.62 (1)	4.30
D- E	-1767 / 0	-84.3	-84.3	0.62 (1)	4.30
E- F	-1557 / 0	-84.3	-84.3	0.12 (1)	5.18
F- G	-1768 / 0	-84.3	-84.3	0.62 (1)	4.29
G- H	-1768 / 0	-84.3	-84.3	0.62 (1)	4.29
H- I	-2320 / 0	-84.3	-84.3	0.71 (1)	3.75
I- J	0 / 26	-84.3	-84.3	0.11 (1)	10.00
Q- B	-1650 / 0	0.0	0.0	0.17 (1)	6.45
K- I	-1649 / 0	0.0	0.0	0.17 (1)	6.45
Q- P	0 / 0	-18.2	-18.2	0.23 (4)	10.00
P- O	0 / 2104	-18.2	-18.2	0.45 (1)	10.00
O- N	0 / 1556	-18.2	-18.2	0.32 (1)	10.00
N- M	0 / 1556	-18.2	-18.2	0.32 (1)	10.00
M- L	0 / 2103	-18.2	-18.2	0.44 (1)	10.00
L- K	0 / 0	-18.2	-18.2	0.23 (4)	10.00

WEBS

MEMB. FR-TO	MAX. FACTORED FORCE (LBS)	MAX CSI (LC)
P- C	-108 / 97	0.04 (1)
C- O	-654 / 0	0.34 (1)
O- E	0 / 429	0.10 (1)
E- M	0 / 4	0.00 (1)
M- F	0 / 433	0.10 (1)
M- H	-652 / 0	0.34 (1)
L- H	-110 / 96	0.04 (1)
B- P	0 / 2119	0.48 (1)
L- I	0 / 2119	0.48 (1)

DESIGN CRITERIA

SPECIFIED LOADS:

TOP CH.	LL	=	25.6	PSF
	DL	=	3.0	PSF
BOT CH.	LL	=	0.0	PSF
	DL	=	7.3	PSF
TOTAL LOAD		=	35.9	PSF

SPACING = 24.0 IN. C/C

LOADING IN FLAT SECTION BASED ON A SLOPE OF 6.00/12

THIS TRUSS IS DESIGNED FOR RESIDENTIAL OR SMALL BUILDING REQUIREMENTS OF PART 9, NBCC 2015

THIS DESIGN COMPLIES WITH:
- PART 9 OF BCBC 2018 , ABC 2019
- PART 9 OF OBC 2012 (2019 AMENDMENT)
- CSA 086-14
- TPIC 2014

(55 % OF 31.3 P.S.F. G.S.L. PLUS 8.4 P.S.F. RAIN LOAD) EQUALS 25.6 P.S.F. SPECIFIED ROOF LIVE LOAD

ALLOWABLE DEFL.(LL)= L/360 (1.03")
CALCULATED VERT. DEFL.(LL) = L/ 999 (0.11")
ALLOWABLE DEFL.(TL)= L/360 (1.03")
CALCULATED VERT. DEFL.(TL) = L/ 999 (0.22")

CSI: TC=0.71/1.00 (B-C:1) , BC=0.45/1.00 (O-P:1) , WB=0.48/1.00 (B-P:1) , SSI=0.26/1.00 (H-I:1)

DOL LUMBER=1.00 NAIL=1.00 LS BEND=1.10 COMP=1.10 SHEAR=1.10 TENS= 1.10

COMPANION LIVE LOAD FACTOR = 1.00

TRUSS PLATE MANUFACTURER IS NOT RESPONSIBLE FOR QUALITY CONTROL IN THE TRUSS MANUFACTURING PLANT .

NAIL VALUES

PLATE	GRIP(DRY) (PSI) MAX	MIN	SHEAR (PLI) MAX	MIN	SECTION (PLI) MAX	MIN
MT20	650	371	1747	788	1987	1873

PLATE PLACEMENT TOL. = 0.250 inches

PLATE ROTATION TOL. = 5.0 Deg.

JSI GRIP= 0.90 (B) (INPUT = 0.90)
JSI METAL= 0.60 (B) (INPUT = 1.00)

LICENSED PROFESSIONAL ENGINEER
I.MATIJEVIC
100528832
PROVINCE OF ONTARIO
June 29, 2021

READ ALL NOTES ON THIS PAGE AND ON THE ENGINEERING NOTE PAGE ENP-1. THE NOTE PAGE IS AN INTEGRAL PART OF THIS DRAWING AS IT CONTAINS SPECIFICATIONS AND CRITERIA USED IN THE DESIGN OF THIS COMPONENT.

CITY OF RICHMOND HILL
BUILDING DIVISION
09/22/2022
KOTT
RECEIVED
Per:_____joshua.nabua_____

JOB NAME	TRUSS NAME	QUANTITY	PLY	JOB DESC.	DRWG NO.
IM0621-171	T03	2	1	TRUSS DESC.	

Version 8.420 S Apr 29 2021 MiTek Industries, Inc. Tue Jun 29 13:11:25 2021 Page 1
ID:OWh2I4vpdPTbcMQK?92PSNzbzpx-xxEZDyW4jGZc_jNQp86TvbyVvinUxOgq_S?fVsz1Qj0

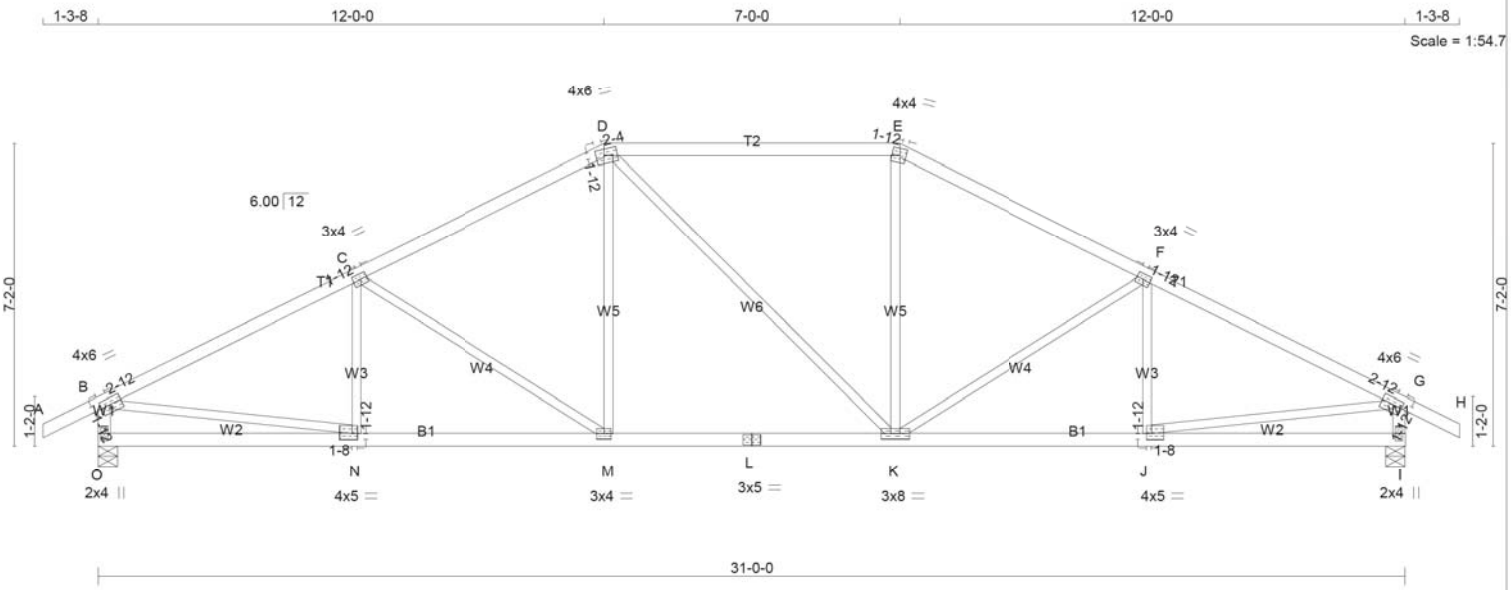

TOTAL WEIGHT = 2 X 124 = 248 lb
[M][F]

LUMBER

N. L. G. A. RULES

CHORDS	SIZE		LUMBER	DESCR.
A - D	2x4	DRY	No.2	SPF
D - E	2x4	DRY	2100F 1.8E	SPF
E - H	2x4	DRY	No.2	SPF
O - B	2x4	DRY	No.2	SPF
I - G	2x4	DRY	No.2	SPF
O - L	2x4	DRY	No.2	SPF
L - I	2x4	DRY	No.2	SPF
ALL WEBS EXCEPT	2x3	DRY	No.2	SPF

DRY: SEASONED LUMBER.

PLATES (table is in inches)

JT	TYPE	PLATES	W	LEN	Y	X
B	TMVW-t	MT20	4.0	6.0	1.75	2.75
C	TMWW-t	MT20	3.0	4.0	1.50	1.75
D	TTWW-m	MT20	4.0	6.0	1.75	2.25
E	TTW-m	MT20	4.0	4.0	2.00	1.75
F	TMWW-t	MT20	3.0	4.0	1.50	1.75
G	TMVW-t	MT20	4.0	6.0	1.75	2.75
I	BMV1+p	MT20	2.0	4.0		
J	BMWW-t	MT20	4.0	5.0	1.75	1.50
K	BMWWW-t	MT20	3.0	8.0		
L	BS-t	MT20	3.0	5.0		
M	BMWW-t	MT20	3.0	4.0		
N	BMWW-t	MT20	4.0	5.0	1.75	1.50
O	BMV1+p	MT20	2.0	4.0		

DIMENSIONS, SUPPORTS AND LOADINGS SPECIFIED BY FABRICATOR TO BE VERIFIED BY BUILDING DESIGNER

BEARINGS

JT	FACTORED GROSS REACTION VERT	HORZ	MAXIMUM FACTORED GROSS REACTION DOWN	HORZ	UPLIFT	INPUT BRG IN-SX	REQRD BRG IN-SX
O	1703	0	1703	0	0	5-8	2-1
I	1703	0	1703	0	0	5-8	2-1

UNFACTORED REACTIONS

JT	1ST LCASE COMBINED	MAX./MIN. COMPONENT REACTIONS SNOW	LIVE	PERM.LIVE	WIND	DEAD	SOIL
O	1190	863 / 0	0 / 0	0 / 0	0 / 0	327 / 0	0 / 0
I	1190	863 / 0	0 / 0	0 / 0	0 / 0	327 / 0	0 / 0

BEARING MATERIAL TO BE SPF NO.2 OR BETTER AT JOINT(S) O, I

BRACING

TOP CHORD TO BE SHEATHED OR MAX. PURLIN SPACING = 4.03 FT.
MAX. UNBRACED BOTTOM CHORD LENGTH = 10.00 FT OR RIGID CEILING DIRECTLY APPLIED.

ALL FITCH BREAKS AND PERIMETER CORNER JOINTS MUST BE LATERALLY RESTRAINED.

LOADING

TOTAL LOAD CASES: (4)

CHORDS

MEMB. FR-TO	MAX. FACTORED FORCE (LBS)	FACTORED VERT. LOAD (PLF) FROM	TO	LC1	MAX CSI (LC)	MAX. UNBRAC LENGTH
A- B	0 / 26	-84.3	-84.3	0.11 (1)	10.00	
B- C	-2316 / 0	-84.3	-84.3	0.50 (1)	4.03	
C- D	-1936 / 0	-84.3	-84.3	0.45 (1)	4.38	
D- E	-1712 / 0	-84.3	-84.3	0.37 (1)	5.61	
E- F	-1936 / 0	-84.3	-84.3	0.45 (1)	4.38	
F- G	-2315 / 0	-84.3	-84.3	0.50 (1)	4.03	
G- H	0 / 26	-84.3	-84.3	0.11 (1)	10.00	
O- B	-1655 / 0	0.0	0.0	0.17 (1)	6.45	
I- G	-1655 / 0	0.0	0.0	0.17 (1)	6.45	
O- N	0 / 0	-18.2	-18.2	0.15 (4)	10.00	
N- M	0 / 2095	-18.2	-18.2	0.42 (1)	10.00	
M- L	0 / 1712	-18.2	-18.2	0.36 (1)	10.00	
L- K	0 / 1712	-18.2	-18.2	0.36 (1)	10.00	
K- J	0 / 2094	-18.2	-18.2	0.42 (1)	10.00	
J- I	0 / 0	-18.2	-18.2	0.14 (4)	10.00	

WEBS

MEMB. FR-TO	MAX. FACTORED FORCE (LBS)	MAX CSI (LC)
N- C	-179 / 53	0.05 (1)
C- M	-464 / 0	0.46 (1)
M- D	0 / 372	0.08 (1)
D- K	0 / 0	0.00 (1)
K- E	0 / 373	0.08 (1)
K- F	-463 / 0	0.46 (1)
J- F	-180 / 52	0.05 (1)
B- N	0 / 2115	0.48 (1)
J- G	0 / 2115	0.48 (1)

DESIGN CRITERIA

SPECIFIED LOADS:

TOP CH.	LL	=	25.6	PSF
	DL	=	3.0	PSF
BOT CH.	LL	=	0.0	PSF
	DL	=	7.3	PSF
TOTAL LOAD		=	35.9	PSF

SPACING = 24.0 IN. C/C

LOADING IN FLAT SECTION BASED ON A SLOPE OF 6.00/12

THIS TRUSS IS DESIGNED FOR RESIDENTIAL OR SMALL BUILDING REQUIREMENTS OF PART 9, NBCC 2015

THIS DESIGN COMPLIES WITH:
- PART 9 OF BCBC 2018 , ABC 2019
- PART 9 OF OBC 2012 (2019 AMENDMENT)
- CSA 086-14
- TPIC 2014

(55 % OF 31.3 P.S.F. G.S.L. PLUS 8.4 P.S.F. RAIN LOAD) EQUALS 25.6 P.S.F. SPECIFIED ROOF LIVE LOAD

ALLOWABLE DEFL.(LL)= L/360 (1.03")
CALCULATED VERT. DEFL.(LL) = L/ 999 (0.10")
ALLOWABLE DEFL.(TL)= L/360 (1.03")
CALCULATED VERT. DEFL.(TL) = L/ 999 (0.20")

CSI: TC=0.50/1.00 (B-C:1) , BC=0.42/1.00 (J-K:1) , WB=0.48/1.00 (B-N:1) , SSI=0.23/1.00 (D-E:1)

DOL LUMBER=1.00 NAIL=1.00 LS BEND=1.10 COMP=1.10 SHEAR=1.10 TENS= 1.10

COMPANION LIVE LOAD FACTOR = 1.00

TRUSS PLATE MANUFACTURER IS NOT RESPONSIBLE FOR QUALITY CONTROL IN THE TRUSS MANUFACTURING PLANT .

NAIL VALUES

PLATE	GRIP(DRY) (PSI) MAX	MIN	SHEAR (PLI) MAX	MIN	SECTION (PLI) MAX	MIN
MT20	650	371	1747	788	1987	1873

PLATE PLACEMENT TOL. = 0.250 inches

PLATE ROTATION TOL. = 5.0 Deg.

JSI GRIP= 0.90 (B) (INPUT = 0.90)
JSI METAL= 0.59 (L) (INPUT = 1.00)

LICENSED PROFESSIONAL ENGINEER
I.MATIJEVIC
100528832
PROVINCE OF ONTARIO
June 29, 2021

READ ALL NOTES ON THIS PAGE AND ON THE ENGINEERING NOTE PAGE ENP-1. THE NOTE PAGE IS AN INTEGRAL PART OF THIS DRAWING AS IT CONTAINS SPECIFICATIONS AND CRITERIA USED IN THE DESIGN OF THIS COMPONENT.

CITY OF RICHMOND HILL
BUILDING DIVISION
09/22/2022
KOTT
RECEIVED
Per:_____joshua.nabua_____

JOB NAME	TRUSS NAME	QUANTITY	PLY	JOB DESC.	DRWG NO.
IM0621-171	T04	2	1	TRUSS DESC.	

Version 8.420 S Apr 29 2021 MiTek Industries, Inc. Tue Jun 29 13:11:32 2021 Page 1
ID:OWh2I4vpdPTbcMQK?92PSNzbzpx-EH9DhLbT3QRdKoPmj6k6h4kjqWAT4ZTsb2CXEyz1Qiv

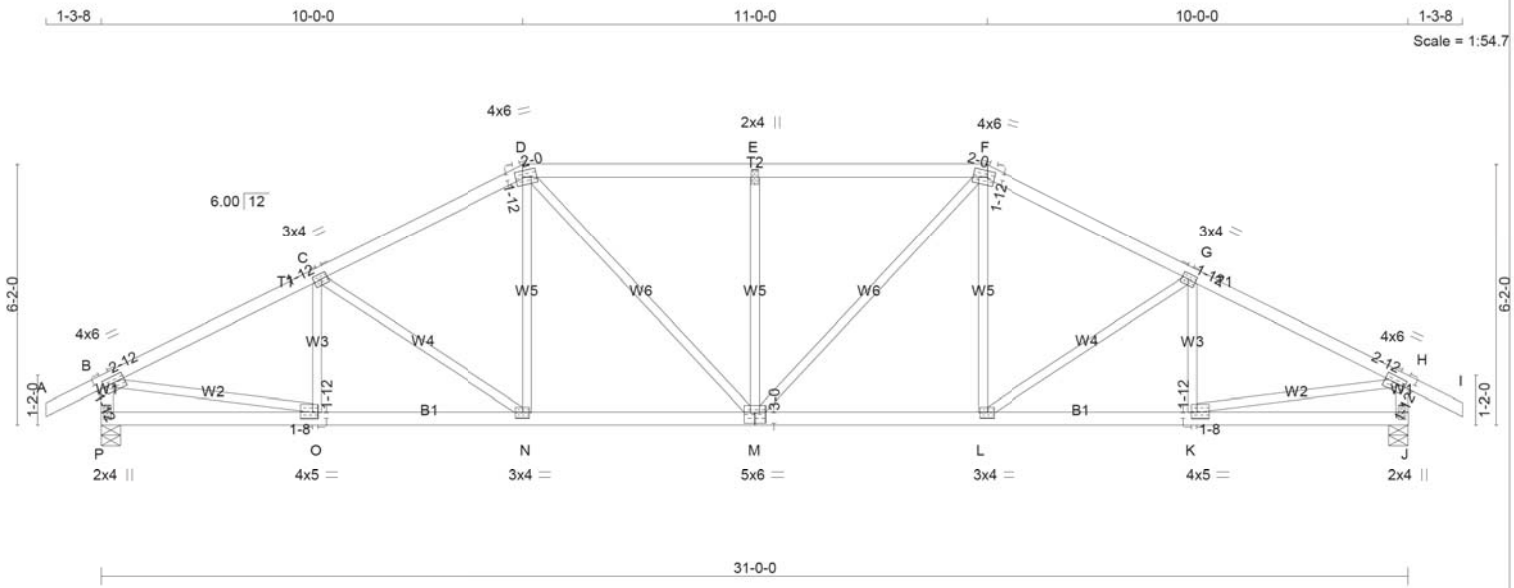

TOTAL WEIGHT = 2 X 127 = 254 lb
[M][F]

LUMBER
N. L. G. A. RULES

CHORDS	SIZE		LUMBER	DESCR.
A - D	2x4	DRY	No.2	SPF
D - F	2x4	DRY	No.2	SPF
F - I	2x4	DRY	No.2	SPF
P - B	2x4	DRY	No.2	SPF
J - H	2x4	DRY	No.2	SPF
P - M	2x4	DRY	No.2	SPF
M - J	2x4	DRY	No.2	SPF
ALL WEBS EXCEPT	2x3	DRY	No.2	SPF

DRY: SEASONED LUMBER.

PLATES (table is in inches)

JT	TYPE	PLATES	W	LEN	Y	X
B	TMVW-t	MT20	4.0	6.0	1.75	2.75
C	TMWW-t	MT20	3.0	4.0	1.50	1.75
D	TTWW-m	MT20	4.0	6.0	1.75	2.00
E	TMW+w	MT20	2.0	4.0		
F	TTWW-m	MT20	4.0	6.0	1.75	2.00
G	TMWW-t	MT20	3.0	4.0	1.50	1.75
H	TMVW-t	MT20	4.0	6.0	1.75	2.75
J	BMV1+p	MT20	2.0	4.0		
K	BMWW-t	MT20	4.0	5.0	1.75	1.50
L	BMWW-t	MT20	3.0	4.0		
M	BSWWW-I	MT20	5.0	6.0	3.00	3.00
N	BMWW-t	MT20	3.0	4.0		
O	BMWW-t	MT20	4.0	5.0	1.75	1.50
P	BMV1+p	MT20	2.0	4.0		

DIMENSIONS, SUPPORTS AND LOADINGS SPECIFIED BY FABRICATOR TO BE VERIFIED BY BUILDING DESIGNER

BEARINGS

JT	FACTORED GROSS REACTION VERT	HORZ	MAXIMUM FACTORED GROSS REACTION DOWN	HORZ	UPLIFT	INPUT BRG IN-SX	REQRD BRG IN-SX
P	1703	0	1703	0	0	5-8	2-1
J	1703	0	1703	0	0	5-8	2-1

UNFACTORED REACTIONS

JT	1ST LCASE COMBINED	MAX./MIN. COMPONENT REACTIONS SNOW	LIVE	PERM.LIVE	WIND	DEAD	SOIL
P	1190	863 / 0	0 / 0	0 / 0	0 / 0	327 / 0	0 / 0
J	1190	863 / 0	0 / 0	0 / 0	0 / 0	327 / 0	0 / 0

BEARING MATERIAL TO BE SPF NO.2 OR BETTER AT JOINT(S) P, J

BRACING
TOP CHORD TO BE SHEATHED OR MAX. PURLIN SPACING = 4.24 FT.
MAX. UNBRACED BOTTOM CHORD LENGTH = 10.00 FT OR RIGID CEILING DIRECTLY APPLIED.

ALL FITCH BREAKS AND PERIMETER CORNER JOINTS MUST BE LATERALLY RESTRAINED.

LOADING
TOTAL LOAD CASES: (4)

CHORDS

MEMB. FR-TO	MAX. FACTORED FORCE (LBS)	FACTORED VERT. LOAD (PLF) FROM	TO	LC1 MAX CSI (LC)	MAX. UNBRAC LENGTH
A- B	0 / 26	-84.3	-84.3	0.11 (1)	10.00
B- C	-2285 / 0	-84.3	-84.3	0.34 (1)	4.24
C- D	-2080 / 0	-84.3	-84.3	0.32 (1)	4.42
D- E	-2147 / 0	-84.3	-84.3	0.39 (1)	4.27
E- F	-2147 / 0	-84.3	-84.3	0.39 (1)	4.27
F- G	-2080 / 0	-84.3	-84.3	0.32 (1)	4.42
G- H	-2285 / 0	-84.3	-84.3	0.34 (1)	4.24
H- I	0 / 26	-84.3	-84.3	0.11 (1)	10.00
P- B	-1660 / 0	0.0	0.0	0.17 (1)	6.44
J- H	-1660 / 0	0.0	0.0	0.17 (1)	6.44
P- O	0 / 0	-18.2	-18.2	0.10 (4)	10.00
O- N	0 / 2062	-18.2	-18.2	0.40 (1)	10.00
N- M	0 / 1844	-18.2	-18.2	0.37 (1)	10.00
M- L	0 / 1844	-18.2	-18.2	0.37 (1)	10.00
L- K	0 / 2062	-18.2	-18.2	0.40 (1)	10.00
K- J	0 / 0	-18.2	-18.2	0.10 (4)	10.00

WEBS

MEMB. FR-TO	MAX. FACTORED FORCE (LBS)	MAX CSI (LC)
O- C	-257 / 12	0.06 (1)
C- N	-269 / 0	0.17 (1)
N- D	0 / 263	0.06 (1)
D- M	0 / 443	0.10 (1)
M- E	-567 / 0	0.34 (1)
M- F	0 / 443	0.10 (1)
L- F	0 / 263	0.06 (1)
L- G	-269 / 0	0.17 (1)
K- G	-257 / 12	0.06 (1)
B- O	0 / 2091	0.47 (1)
K- H	0 / 2091	0.47 (1)

DESIGN CRITERIA

SPECIFIED LOADS:

TOP CH.	LL	=	25.6	PSF
	DL	=	3.0	PSF
BOT CH.	LL	=	0.0	PSF
	DL	=	7.3	PSF
TOTAL LOAD		=	35.9	PSF

SPACING = 24.0 IN. C/C

LOADING IN FLAT SECTION BASED ON A SLOPE OF 6.00/12

THIS TRUSS IS DESIGNED FOR RESIDENTIAL OR SMALL BUILDING REQUIREMENTS OF PART 9, NBCC 2015

THIS DESIGN COMPLIES WITH:
- PART 9 OF BCBC 2018 , ABC 2019
- PART 9 OF OBC 2012 (2019 AMENDMENT)
- CSA 086-14
- TPIC 2014

(55 % OF 31.3 P.S.F. G.S.L. PLUS 8.4 P.S.F. RAIN LOAD) EQUALS 25.6 P.S.F. SPECIFIED ROOF LIVE LOAD

ALLOWABLE DEFL.(LL)= L/360 (1.03")
CALCULATED VERT. DEFL.(LL) = L/ 999 (0.11")
ALLOWABLE DEFL.(TL)= L/360 (1.03")
CALCULATED VERT. DEFL.(TL) = L/ 999 (0.21")

CSI: TC=0.39/1.00 (D-E:1) , BC=0.40/1.00 (K-L:1) , WB=0.47/1.00 (B-O:1) , SSI=0.22/1.00 (D-E:1)

DOL LUMBER=1.00 NAIL=1.00 LS BEND=1.10 COMP=1.10 SHEAR=1.10 TENS= 1.10

COMPANION LIVE LOAD FACTOR = 1.00

TRUSS PLATE MANUFACTURER IS NOT RESPONSIBLE FOR QUALITY CONTROL IN THE TRUSS MANUFACTURING PLANT .

NAIL VALUES

PLATE	GRIP(DRY) (PSI) MAX	MIN	SHEAR (PLI) MAX	MIN	SECTION (PLI) MAX	MIN
MT20	650	371	1747	788	1987	1873

PLATE PLACEMENT TOL. = 0.250 inches

PLATE ROTATION TOL. = 5.0 Deg.

JSI GRIP= 0.89 (B) (INPUT = 0.90)
JSI METAL= 0.58 (B) (INPUT = 1.00)

LICENSED PROFESSIONAL ENGINEER
I.MATIJEVIC
100528832
PROVINCE OF ONTARIO
June 29, 2021

READ ALL NOTES ON THIS PAGE AND ON THE ENGINEERING NOTE PAGE ENP-1. THE NOTE PAGE IS AN INTEGRAL PART OF THIS DRAWING AS IT CONTAINS SPECIFICATIONS AND CRITERIA USED IN THE DESIGN OF THIS COMPONENT.

CITY OF RICHMOND HILL
BUILDING DIVISION
09/22/2022
KOTT
RECEIVED
Per:_____joshua.nabua_____

JOB NAME	TRUSS NAME	QUANTITY	PLY	JOB DESC.	DRWG NO.
IM0621-171	T05	2	1	TRUSS DESC.	

Version 8.420 S Apr 29 2021 MiTek Industries, Inc. Tue Jun 29 13:11:42 2021 Page 1
ID:OWh2l4vpdPTbcMQK?92PSNzbzpx-xCm_nmjljUiCXKAhJDwS5B9KzYaUQzULucd3bNz1Qil

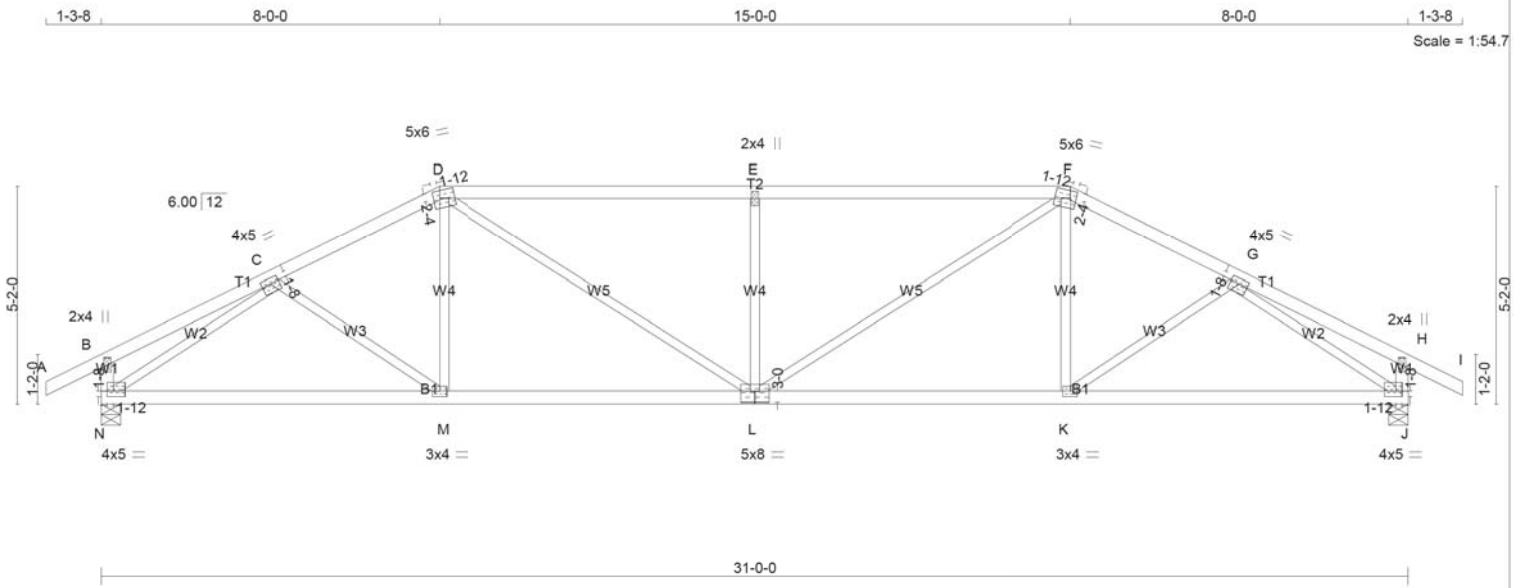

TOTAL WEIGHT = 2 X 118 = 237 lb
[M][F]

LUMBER
N. L. G. A. RULES

CHORDS	SIZE		LUMBER	DESCR.
A - D	2x4	DRY	No.2	SPF
D - F	2x4	DRY	No.2	SPF
F - I	2x4	DRY	No.2	SPF
N - B	2x4	DRY	No.2	SPF
J - H	2x4	DRY	No.2	SPF
N - L	2x4	DRY	No.2	SPF
L - J	2x4	DRY	No.2	SPF
ALL WEBS EXCEPT	2x3	DRY	No.2	SPF

DRY: SEASONED LUMBER.

PLATES (table is in inches)

JT	TYPE	PLATES	W	LEN	Y	X
B	TMV+p	MT20	2.0	4.0		
C	TMWW-t	MT20	4.0	5.0	1.50	2.50
D	TTWW-m	MT20	5.0	6.0	2.25	1.75
E	TMW+w	MT20	2.0	4.0		
F	TTWW-m	MT20	5.0	6.0	2.25	1.75
G	TMWW-t	MT20	4.0	5.0	1.50	2.50
H	TMV+p	MT20	2.0	4.0		
J	BMVW1-t	MT20	4.0	5.0	1.50	1.75
K	BMWW-t	MT20	3.0	4.0		
L	BSWWW-l	MT20	5.0	8.0	3.00	4.00
M	BMWW-t	MT20	3.0	4.0		
N	BMVW1-t	MT20	4.0	5.0	1.50	1.75

DIMENSIONS, SUPPORTS AND LOADINGS SPECIFIED BY FABRICATOR TO BE VERIFIED BY BUILDING DESIGNER

BEARINGS

JT	FACTORED GROSS REACTION VERT	HORZ	MAXIMUM FACTORED GROSS REACTION DOWN	HORZ	UPLIFT	INPUT BRG IN-SX	REQRD BRG IN-SX
N	1703	0	1703	0	0	5-8	1-14
J	1703	0	1703	0	0	5-8	1-14

UNFACTORED REACTIONS

JT	1ST LCASE COMBINED	MAX./MIN. COMPONENT REACTIONS SNOW	LIVE	PERM.LIVE	WIND	DEAD	SOIL
N	1190	863 / 0	0 / 0	0 / 0	0 / 0	327 / 0	0 / 0
J	1190	863 / 0	0 / 0	0 / 0	0 / 0	327 / 0	0 / 0

BEARING MATERIAL TO BE SPF NO.2 OR BETTER AT JOINT(S) N, J

BRACING
TOP CHORD TO BE SHEATHED OR MAX. PURLIN SPACING = 3.36 FT.
MAX. UNBRACED BOTTOM CHORD LENGTH = 10.00 FT OR RIGID CEILING DIRECTLY APPLIED.

ALL FITCH BREAKS AND PERIMETER CORNER JOINTS MUST BE LATERALLY RESTRAINED.

LOADING
TOTAL LOAD CASES: (4)

CHORDS

MEMB. FR-TO	MAX. FACTORED FORCE (LBS)	FACTORED VERT. LOAD (PLF) FROM	TO	LC1	MAX CSI (LC)	MAX. UNBRAC LENGTH
A- B	0 / 26	-84.3	-84.3	0.11 (1)	10.00	
B- C	0 / 15	-84.3	-84.3	0.19 (1)	10.00	
C- D	-2210 / 0	-84.3	-84.3	0.21 (1)	4.43	
D- E	-2643 / 0	-84.3	-84.3	0.79 (1)	3.36	
E- F	-2643 / 0	-84.3	-84.3	0.79 (1)	3.36	
F- G	-2210 / 0	-84.3	-84.3	0.21 (1)	4.43	
G- H	0 / 15	-84.3	-84.3	0.19 (1)	10.00	
H- I	0 / 26	-84.3	-84.3	0.11 (1)	10.00	
N- B	-250 / 0	0.0	0.0	0.03 (1)	7.81	
J- H	-250 / 0	0.0	0.0	0.03 (1)	7.81	
N- M	0 / 1955	-18.2	-18.2	0.48 (1)	10.00	
M- L	0 / 1965	-18.2	-18.2	0.49 (1)	10.00	
L- K	0 / 1965	-18.2	-18.2	0.49 (1)	10.00	
K- J	0 / 1955	-18.2	-18.2	0.48 (1)	10.00	

WEBS

MEMB. FR-TO	MAX. FACTORED FORCE (LBS)	MAX CSI (LC)
C- M	0 / 73	0.03 (4)
M- D	0 / 169	0.05 (4)
D- L	0 / 808	0.18 (1)
L- E	-778 / 0	0.31 (1)
L- F	0 / 808	0.18 (1)
K- F	0 / 169	0.05 (4)
K- G	0 / 73	0.03 (4)
N- C	-2401 / 0	0.95 (1)
G- J	-2401 / 0	0.95 (1)

DESIGN CRITERIA

SPECIFIED LOADS:

TOP CH.	LL	=	25.6	PSF
	DL	=	3.0	PSF
BOT CH.	LL	=	0.0	PSF
	DL	=	7.3	PSF
TOTAL LOAD		=	35.9	PSF

SPACING = 24.0 IN. C/C

LOADING IN FLAT SECTION BASED ON A SLOPE OF 6.00/12

THIS TRUSS IS DESIGNED FOR RESIDENTIAL OR SMALL BUILDING REQUIREMENTS OF PART 9, NBCC 2015

THIS DESIGN COMPLIES WITH:
- PART 9 OF BCBC 2018 , ABC 2019
- PART 9 OF OBC 2012 (2019 AMENDMENT)
- CSA 086-14
- TPIC 2014

(55 % OF 31.3 P.S.F. G.S.L. PLUS 8.4 P.S.F. RAIN LOAD) EQUALS 25.6 P.S.F. SPECIFIED ROOF LIVE LOAD

ALLOWABLE DEFL.(LL)= L/360 (1.03")
CALCULATED VERT. DEFL.(LL) = L/ 999 (0.15")
ALLOWABLE DEFL.(TL)= L/360 (1.03")
CALCULATED VERT. DEFL.(TL) = L/ 999 (0.28")

CSI: TC=0.79/1.00 (D-E:1) , BC=0.49/1.00 (K-L:1) , WB=0.95/1.00 (G-J:1) , SSI=0.31/1.00 (D-E:1)

DOL LUMBER=1.00 NAIL=1.00 LS BEND=1.10 COMP=1.10 SHEAR=1.10 TENS= 1.10

COMPANION LIVE LOAD FACTOR = 1.00

TRUSS PLATE MANUFACTURER IS NOT RESPONSIBLE FOR QUALITY CONTROL IN THE TRUSS MANUFACTURING PLANT .

NAIL VALUES

PLATE	GRIP(DRY) (PSI) MAX	MIN	SHEAR (PLI) MAX	MIN	SECTION (PLI) MAX	MIN
MT20	650	371	1747	788	1987	1873

PLATE PLACEMENT TOL. = 0.250 inches

PLATE ROTATION TOL. = 5.0 Deg.

JSI GRIP= 0.89 (N) (INPUT = 0.90)
JSI METAL= 0.68 (C) (INPUT = 1.00)

LICENSED PROFESSIONAL ENGINEER
I.MATIJEVIC
100528832
PROVINCE OF ONTARIO
June 29, 2021

READ ALL NOTES ON THIS PAGE AND ON THE ENGINEERING NOTE PAGE ENP-1. THE NOTE PAGE IS AN INTEGRAL PART OF THIS DRAWING AS IT CONTAINS SPECIFICATIONS AND CRITERIA USED IN THE DESIGN OF THIS COMPONENT.

CITY OF RICHMOND HILL
BUILDING DIVISION
09/22/2022
KOTT
RECEIVED
Per:_____joshua.nabua_____

JOB NAME	TRUSS NAME	QUANTITY	PLY	JOB DESC.	DRWG NO.
IM0621-171	T06	1	1	TRUSS DESC.	

Version 8.420 S Apr 29 2021 MiTek Industries, Inc. Tue Jun 29 13:11:51 2021 Page 1
ID:OWh2I4vpdPTbcMQK?92PSNzbzpx-AxpOgrqObFrw6jMQLcaZy41u?Adm16JfzVI1PLz1Qic

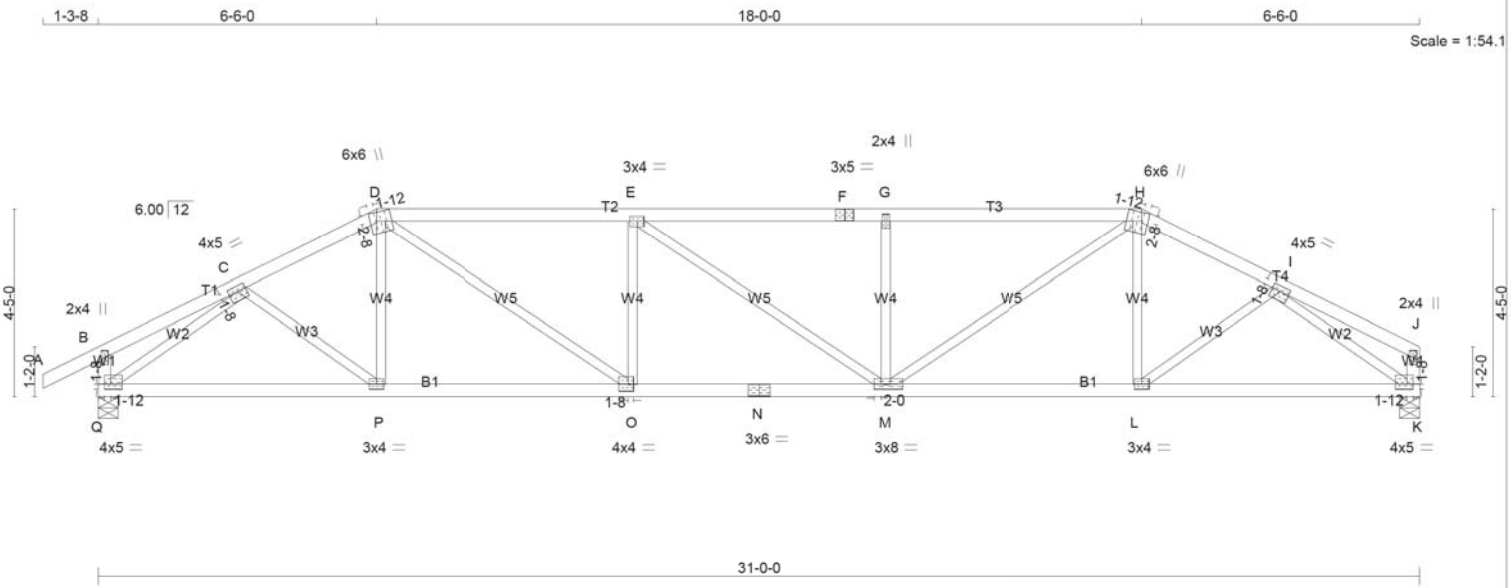

TOTAL WEIGHT = 118 lb
[M]

LUMBER
N. L. G. A. RULES

CHORDS	SIZE		LUMBER	DESCR.
A - D	2x4	DRY	No.2	SPF
D - F	2x4	DRY	No.2	SPF
F - H	2x4	DRY	No.2	SPF
H - J	2x4	DRY	No.2	SPF
Q - B	2x4	DRY	No.2	SPF
K - J	2x4	DRY	No.2	SPF
Q - N	2x4	DRY	No.2	SPF
N - K	2x4	DRY	No.2	SPF
ALL WEBS EXCEPT	2x3	DRY	No.2	SPF

DRY: SEASONED LUMBER.

PLATES (table is in inches)

JT	TYPE	PLATES	W	LEN	Y	X
B	TMV+p	MT20	2.0	4.0		
C	TMWW-t	MT20	4.0	5.0	1.50	2.50
D	TTWW+m	MT20	6.0	6.0	2.50	1.75
E	TMWW-t	MT20	3.0	4.0		
F	TS-t	MT20	3.0	5.0		
G	TMW+w	MT20	2.0	4.0		
H	TTWW+m	MT20	6.0	6.0	2.50	1.75
I	TMWW-t	MT20	4.0	5.0	1.50	2.50
J	TMV+p	MT20	2.0	4.0		
K	BMVW1-t	MT20	4.0	5.0	1.50	1.75
L	BMWW-t	MT20	3.0	4.0		
M	BMWWW-t	MT20	3.0	8.0	1.50	2.00
N	BS-t	MT20	3.0	6.0		
O	BMWW-t	MT20	4.0	4.0	2.00	1.50
P	BMWW-t	MT20	3.0	4.0		
Q	BMVW1-t	MT20	4.0	5.0	1.50	1.75

DIMENSIONS, SUPPORTS AND LOADINGS SPECIFIED BY FABRICATOR TO BE VERIFIED BY BUILDING DESIGNER

BEARINGS

JT	FACTORED GROSS REACTION VERT	HORZ	MAXIMUM FACTORED GROSS REACTION DOWN	HORZ	UPLIFT	INPUT BRG IN-SX	REQRD BRG IN-SX
Q	1703	0	1703	0	0	5-8	1-14
K	1589	0	1589	0	0	5-8	1-12

UNFACTORED REACTIONS

JT	1ST LCASE COMBINED	MAX./MIN. COMPONENT REACTIONS SNOW	LIVE	PERM.LIVE	WIND	DEAD	SOIL
Q	1190	863 / 0	0 / 0	0 / 0	0 / 0	327 / 0	0 / 0
K	1112	793 / 0	0 / 0	0 / 0	0 / 0	319 / 0	0 / 0

BEARING MATERIAL TO BE SPF NO.2 OR BETTER AT JOINT(S) Q, K

BRACING
TOP CHORD TO BE SHEATHED OR MAX. PURLIN SPACING = 3.49 FT.
MAX. UNBRACED BOTTOM CHORD LENGTH = 10.00 FT OR RIGID CEILING DIRECTLY APPLIED.

ALL FITCH BREAKS AND PERIMETER CORNER JOINTS MUST BE LATERALLY RESTRAINED.

LOADING
TOTAL LOAD CASES: (4)

CHORDS

MEMB. FR-TO	MAX. FACTORED FORCE (LBS)	FACTORED VERT. LOAD LC1 (PLF) FROM	TO	MAX CSI (LC)	MAX. UNBRAC LENGTH
A- B	0 / 26	-84.3	-84.3	0.11 (1)	10.00
B- C	0 / 10	-84.3	-84.3	0.11 (1)	10.00
C- D	-2249 / 0	-84.3	-84.3	0.17 (1)	4.42
D- E	-2953 / 0	-84.3	-84.3	0.65 (1)	3.49
E- F	-2952 / 0	-84.3	-84.3	0.64 (1)	3.49
F- G	-2952 / 0	-84.3	-84.3	0.64 (1)	3.49
G- H	-2952 / 0	-84.3	-84.3	0.64 (1)	3.49
H- I	-2249 / 0	-84.3	-84.3	0.17 (1)	4.42
I- J	0 / 10	-84.3	-84.3	0.11 (1)	10.00
Q- B	-229 / 0	0.0	0.0	0.02 (1)	7.81
K- J	-114 / 0	0.0	0.0	0.01 (1)	7.81
Q- P	0 / 1867	-18.2	-18.2	0.39 (1)	10.00
P- O	0 / 2001	-18.2	-18.2	0.42 (1)	10.00
O- N	0 / 2953	-18.2	-18.2	0.54 (1)	10.00
N- M	0 / 2953	-18.2	-18.2	0.54 (1)	10.00
M- L	0 / 2001	-18.2	-18.2	0.42 (1)	10.00
L- K	0 / 1868	-18.2	-18.2	0.40 (1)	10.00

WEBS

MEMB. FR-TO	MAX. FACTORED FORCE (LBS)	MAX CSI (LC)
C- P	0 / 166	0.04 (1)
P- D	0 / 87	0.03 (4)
D- O	0 / 1153	0.26 (1)
O- E	-547 / 0	0.16 (1)
E- M	-2 / 0	0.00 (1)
M- G	-546 / 0	0.16 (1)
M- H	0 / 1151	0.26 (1)
L- H	0 / 87	0.03 (4)
L- I	0 / 166	0.04 (1)
Q- C	-2349 / 0	0.65 (1)
I- K	-2349 / 0	0.65 (1)

DESIGN CRITERIA

SPECIFIED LOADS:

TOP CH.	LL	=	25.6	PSF
	DL	=	3.0	PSF
BOT CH.	LL	=	0.0	PSF
	DL	=	7.3	PSF
TOTAL LOAD		=	35.9	PSF

SPACING = 24.0 IN. C/C

LOADING IN FLAT SECTION BASED ON A SLOPE OF 6.00/12

THIS TRUSS IS DESIGNED FOR RESIDENTIAL OR SMALL BUILDING REQUIREMENTS OF PART 9, NBCC 2015

THIS DESIGN COMPLIES WITH:
- PART 9 OF BCBC 2018 , ABC 2019
- PART 9 OF OBC 2012 (2019 AMENDMENT)
- CSA 086-14
- TPIC 2014

(55 % OF 31.3 P.S.F. G.S.L. PLUS 8.4 P.S.F. RAIN LOAD) EQUALS 25.6 P.S.F. SPECIFIED ROOF LIVE LOAD

ALLOWABLE DEFL.(LL)= L/360 (1.03")
CALCULATED VERT. DEFL.(LL) = L/ 999 (0.17")
ALLOWABLE DEFL.(TL)= L/360 (1.03")
CALCULATED VERT. DEFL.(TL) = L/ 999 (0.32")

CSI: TC=0.65/1.00 (D-E:1) , BC=0.54/1.00 (M-O:1) , WB=0.65/1.00 (I-K:1) , SSI=0.24/1.00 (D-E:1)

DOL LUMBER=1.00 NAIL=1.00 LS BEND=1.10 COMP=1.10 SHEAR=1.10 TENS= 1.10

COMPANION LIVE LOAD FACTOR = 1.00

TRUSS PLATE MANUFACTURER IS NOT RESPONSIBLE FOR QUALITY CONTROL IN THE TRUSS MANUFACTURING PLANT .

NAIL VALUES

PLATE	GRIP(DRY) (PSI) MAX	MIN	SHEAR (PLI) MAX	MIN	SECTION (PLI) MAX	MIN
MT20	650	371	1747	788	1987	1873

PLATE PLACEMENT TOL. = 0.250 inches

PLATE ROTATION TOL. = 5.0 Deg.

JSI GRIP= 0.89 (M) (INPUT = 0.90)
JSI METAL= 0.95 (N) (INPUT = 1.00)

LICENSED PROFESSIONAL ENGINEER
I.MATIJEVIC
100528832
PROVINCE OF ONTARIO
June 29, 2021

READ ALL NOTES ON THIS PAGE AND ON THE ENGINEERING NOTE PAGE ENP-1. THE NOTE PAGE IS AN INTEGRAL PART OF THIS DRAWING AS IT CONTAINS SPECIFICATIONS AND CRITERIA USED IN THE DESIGN OF THIS COMPONENT.

CITY OF RICHMOND HILL
BUILDING DIVISION
09/22/2022
KOTT
RECEIVED
Per:_____joshua.nabua_____

JOB NAME	TRUSS NAME	QUANTITY	PLY	JOB DESC.	DRWG NO.
IM0621-171	T07	1	1	TRUSS DESC.	

Version 8.420 S Apr 29 2021 MiTek Industries, Inc. Tue Jun 29 13:11:59 2021 Page 1
ID:OWh2I4vpdPTbcMQK?92PSNzbzpx-xTIQMawPijro3xzzpHjRHmMG7PK_vmPrplEShuz1QiU

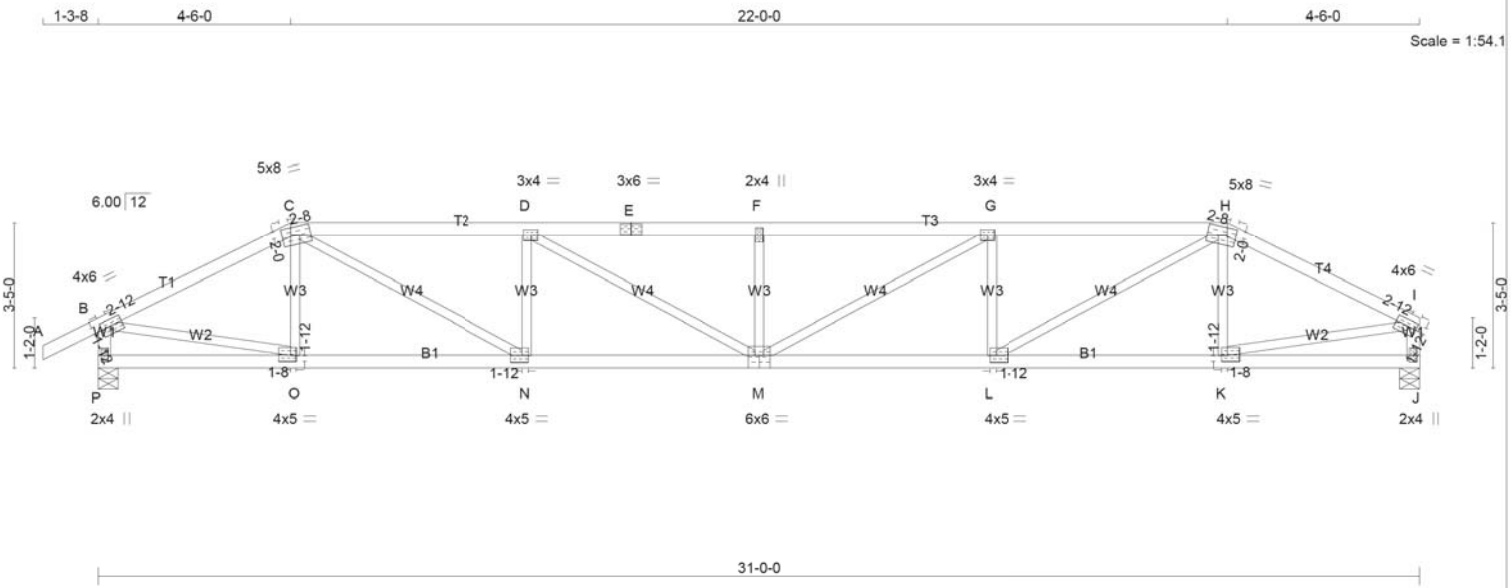

TOTAL WEIGHT = 113 lb
[M]

LUMBER
N. L. G. A. RULES

CHORDS	SIZE		LUMBER	DESCR.
A - C	2x4	DRY	No.2	SPF
C - E	2x4	DRY	No.2	SPF
E - H	2x4	DRY	No.2	SPF
H - I	2x4	DRY	No.2	SPF
P - B	2x4	DRY	No.2	SPF
J - I	2x4	DRY	No.2	SPF
P - M	2x4	DRY	No.2	SPF
M - J	2x4	DRY	No.2	SPF
ALL WEBS EXCEPT	2x3	DRY	No.2	SPF

DRY: SEASONED LUMBER.

PLATES (table is in inches)

JT	TYPE	PLATES	W	LEN	Y	X
B	TMVW-t	MT20	4.0	6.0	1.75	2.75
C	TTWW-m	MT20	5.0	8.0	2.00	2.50
D	TMWW-t	MT20	3.0	4.0		
E	TS-t	MT20	3.0	6.0		
F	TMW+w	MT20	2.0	4.0		
G	TMWW-t	MT20	3.0	4.0		
H	TTWW-m	MT20	5.0	8.0	2.00	2.50
I	TMVW-t	MT20	4.0	6.0	1.75	2.75
J	BMV1+p	MT20	2.0	4.0		
K	BMWW-t	MT20	4.0	5.0	1.75	1.50
L	BMWW-t	MT20	4.0	5.0	2.00	1.75
M	BSWWW-l	MT20	6.0	6.0	Edge	3.00
N	BMWW-t	MT20	4.0	5.0	2.00	1.75
O	BMWW-t	MT20	4.0	5.0	1.75	1.50
P	BMV1+p	MT20	2.0	4.0		

Edge - INDICATES REFERENCE CORNER OF PLATE TOUCHES EDGE OF CHORD.

LICENSED PROFESSIONAL ENGINEER
I.MATIJEVIC
100528832
PROVINCE OF ONTARIO
June 29, 2021

DIMENSIONS, SUPPORTS AND LOADINGS SPECIFIED BY FABRICATOR TO BE VERIFIED BY BUILDING DESIGNER

BEARINGS

JT	FACTORED GROSS REACTION VERT	HORZ	MAXIMUM FACTORED GROSS REACTION DOWN	HORZ	UPLIFT	INPUT BRG IN-SX	REQRD BRG IN-SX
P	1703	0	1703	0	0	5-8	2-1
J	1589	0	1589	0	0	5-8	1-12

UNFACTORED REACTIONS

JT	1ST LCASE COMBINED	MAX./MIN. COMPONENT REACTIONS SNOW	LIVE	PERM.LIVE	WIND	DEAD	SOIL
P	1190	863 / 0	0 / 0	0 / 0	0 / 0	327 / 0	0 / 0
J	1112	793 / 0	0 / 0	0 / 0	0 / 0	319 / 0	0 / 0

BEARING MATERIAL TO BE SPF NO.2 OR BETTER AT JOINT(S) P, J

BRACING
TOP CHORD TO BE SHEATHED OR MAX. PURLIN SPACING = 3.00 FT.
MAX. UNBRACED BOTTOM CHORD LENGTH = 10.00 FT OR RIGID CEILING DIRECTLY APPLIED.

ALL FITCH BREAKS AND PERIMETER CORNER JOINTS MUST BE LATERALLY RESTRAINED.

LOADING
TOTAL LOAD CASES: (4)

CHORDS

MEMB. FR-TO	MAX. FORCE (LBS)	FACTORED VERT. LOAD (PLF) FROM	TO	LC1 MAX CSI (LC)	MAX. UNBRAC LENGTH
A- B	0 / 26	-84.3	-84.3	0.11 (1)	10.00
B- C	-2221 / 0	-84.3	-84.3	0.39 (1)	4.19
C- D	-3541 / 0	-84.3	-84.3	0.64 (1)	3.23
D- E	-3989 / 0	-84.3	-84.3	0.70 (1)	3.00
E- F	-3989 / 0	-84.3	-84.3	0.70 (1)	3.00
F- G	-3989 / 0	-84.3	-84.3	0.70 (1)	3.00
G- H	-3541 / 0	-84.3	-84.3	0.64 (1)	3.23
H- I	-2221 / 0	-84.3	-84.3	0.39 (1)	4.19
P- B	-1670 / 0	0.0	0.0	0.17 (1)	6.42
J- I	-1555 / 0	0.0	0.0	0.16 (1)	6.61
P- O	0 / 0	-18.2	-18.2	0.10 (4)	10.00
O- N	0 / 1976	-18.2	-18.2	0.37 (1)	10.00
N- M	0 / 3541	-18.2	-18.2	0.64 (1)	10.00
M- L	0 / 3541	-18.2	-18.2	0.64 (1)	10.00
L- K	0 / 1976	-18.2	-18.2	0.37 (1)	10.00
K- J	0 / 0	-18.2	-18.2	0.10 (4)	10.00

WEBS

MEMB. FR-TO	MAX. FORCE (LBS)	MAX CSI (LC)
O- C	-267 / 6	0.05 (1)
C- N	0 / 1795	0.40 (1)
N- D	-777 / 0	0.16 (1)
D- M	0 / 517	0.12 (1)
M- F	-424 / 0	0.08 (1)
M- G	0 / 517	0.12 (1)
L- G	-777 / 0	0.16 (1)
L- H	0 / 1795	0.40 (1)
K- H	-267 / 6	0.05 (1)
B- O	0 / 2019	0.45 (1)
K- I	0 / 2019	0.45 (1)

READ ALL NOTES ON THIS PAGE AND ON THE ENGINEERING NOTE PAGE ENP-1. THE NOTE PAGE IS AN INTEGRAL PART OF THIS DRAWING AS IT CONTAINS SPECIFICATIONS AND CRITERIA USED IN THE DESIGN OF THIS COMPONENT.

DESIGN CRITERIA

SPECIFIED LOADS:

TOP CH.	LL	=	25.6	PSF
	DL	=	3.0	PSF
BOT CH.	LL	=	0.0	PSF
	DL	=	7.3	PSF
TOTAL LOAD		=	35.9	PSF

SPACING = 24.0 IN. C/C

LOADING IN FLAT SECTION BASED ON A SLOPE OF 6.00/12

THIS TRUSS IS DESIGNED FOR RESIDENTIAL OR SMALL BUILDING REQUIREMENTS OF PART 9, NBCC 2015

THIS DESIGN COMPLIES WITH:
- PART 9 OF BCBC 2018 , ABC 2019
- PART 9 OF OBC 2012 (2019 AMENDMENT)
- CSA 086-14
- TPIC 2014

(55 % OF 31.3 P.S.F. G.S.L. PLUS 8.4 P.S.F. RAIN LOAD) EQUALS 25.6 P.S.F. SPECIFIED ROOF LIVE LOAD

ALLOWABLE DEFL.(LL)= L/360 (1.03")
CALCULATED VERT. DEFL.(LL) = L/ 999 (0.28")
ALLOWABLE DEFL.(TL)= L/360 (1.03")
CALCULATED VERT. DEFL.(TL) = L/ 769 (0.48")

CSI: TC=0.70/1.00 (F-G:1) , BC=0.64/1.00 (L-M:1) , WB=0.45/1.00 (I-K:1) , SSI=0.22/1.00 (G-H:1)

DOL LUMBER=1.00 NAIL=1.00 LS BEND=1.10 COMP=1.10 SHEAR=1.10 TENS= 1.10

COMPANION LIVE LOAD FACTOR = 1.00

TRUSS PLATE MANUFACTURER IS NOT RESPONSIBLE FOR QUALITY CONTROL IN THE TRUSS MANUFACTURING PLANT .

NAIL VALUES

PLATE	GRIP(DRY) (PSI) MAX	MIN	SHEAR (PLI) MAX	MIN	SECTION (PLI) MAX	MIN
MT20	650	371	1747	788	1987	1873

PLATE PLACEMENT TOL. = 0.250 inches

PLATE ROTATION TOL. = 5.0 Deg.

JSI GRIP= 0.90 (H) (INPUT = 0.90)
JSI METAL= 0.66 (M) (INPUT = 1.00)

CITY OF RICHMOND HILL
BUILDING DIVISION
09/22/2022
KOTT
RECEIVED
Per:_____joshua.nabua_____

JOB NAME	TRUSS NAME	QUANTITY	PLY	JOB DESC.	DRWG NO.
IM0621-171	T08	2	1	TRUSS DESC.	

Version 8.420 S Apr 29 2021 MiTek Industries, Inc. Tue Jun 29 13:12:08 2021 Page 1
ID:OWh2I4vpdPTbcMQK?92PSNzbzpx-ACLqFf13bT_WeK9hqgNY8gEw?1UnWtEAtewRWsz1QiL

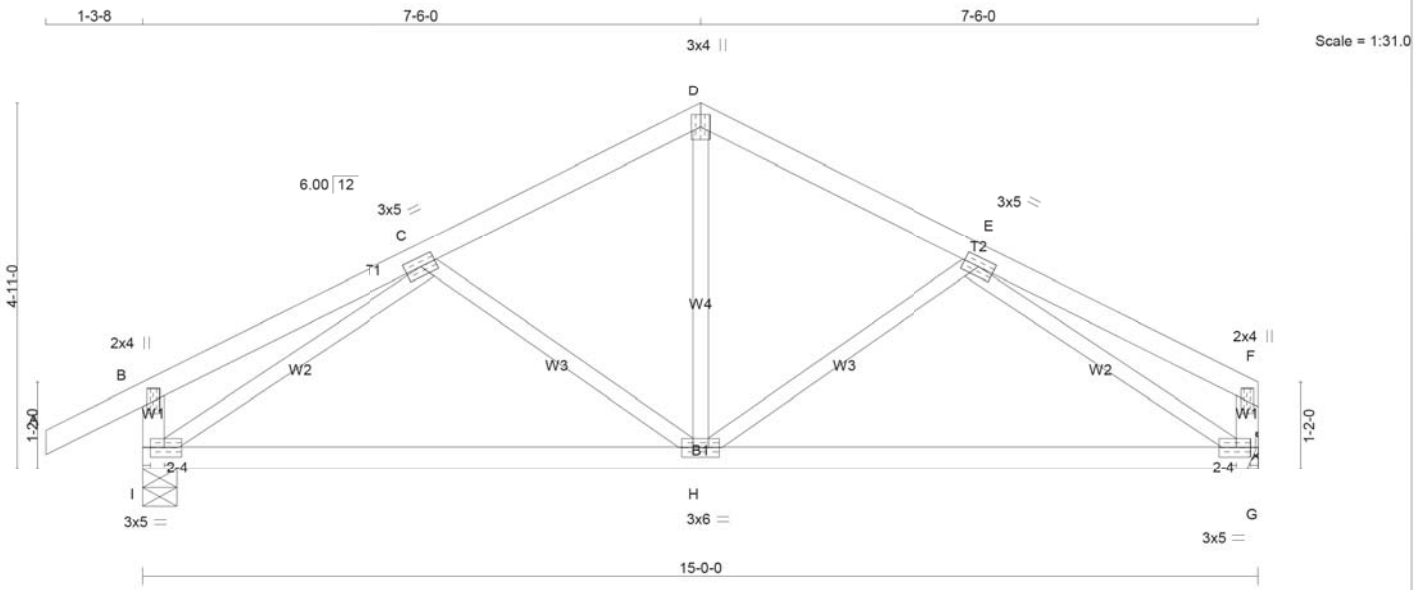

TOTAL WEIGHT = 2 X 57 = 115 lb

LUMBER
N. L. G. A. RULES

CHORDS	SIZE		LUMBER	DESCR.
A - D	2x4	DRY	No.2	SPF
D - F	2x4	DRY	No.2	SPF
I - B	2x4	DRY	No.2	SPF
G - F	2x4	DRY	No.2	SPF
I - G	2x4	DRY	No.2	SPF
ALL WEBS EXCEPT	2x3	DRY	No.2	SPF

DRY: SEASONED LUMBER.

PLATES (table is in inches)

JT	TYPE	PLATES	W	LEN	Y	X
B	TMV+p	MT20	2.0	4.0		
C	TMWW-t	MT20	3.0	5.0		
D	TTW+p	MT20	3.0	4.0		
E	TMWW-t	MT20	3.0	5.0		
F	TMV+p	MT20	2.0	4.0		
G	BMVW1-t	MT20	3.0	5.0	1.50	2.25
H	BMWWW-t	MT20	3.0	6.0		
I	BMVW1-t	MT20	3.0	5.0	1.50	2.25

DIMENSIONS, SUPPORTS AND LOADINGS SPECIFIED BY FABRICATOR TO BE VERIFIED BY BUILDING DESIGNER

BEARINGS

JT	FACTORED GROSS REACTION VERT	HORZ	MAXIMUM FACTORED GROSS REACTION DOWN	HORZ	UPLIFT	INPUT BRG IN-SX	REQRD BRG IN-SX
I	883	0	883	0	0	5-8	1-8
G	769	0	769	0	0	MECHANICAL	

A SUITABLE HANGER/MECHANICAL CONNECTION IS REQUIRED AT JOINT G. MINIMUM BEARING LENGTH AT JOINT G = 1-8.

UNFACTORED REACTIONS

JT	1ST LCASE COMBINED	MAX./MIN. COMPONENT REACTIONS SNOW	LIVE	PERM.LIVE	WIND	DEAD	SOIL
I	616	453 / 0	0 / 0	0 / 0	0 / 0	163 / 0	0 / 0
G	538	384 / 0	0 / 0	0 / 0	0 / 0	155 / 0	0 / 0

BEARING MATERIAL TO BE SPF NO.2 OR BETTER AT JOINT(S) I

BRACING
TOP CHORD TO BE SHEATHED OR MAX. PURLIN SPACING = 6.25 FT.
MAX. UNBRACED BOTTOM CHORD LENGTH = 10.00 FT OR RIGID CEILING DIRECTLY APPLIED.

ALL PITCH BREAKS AND PERIMETER CORNER JOINTS MUST BE LATERALLY RESTRAINED.

LOADING
TOTAL LOAD CASES: (4)

CHORDS

MEMB. FR-TO	MAX. FACTORED FORCE (LBS)	FACTORED VERT. LOAD (PLF) FROM	TO	LC1 MAX CSI (LC)	MAX. UNBRAC LENGTH
A- B	0 / 26	-84.3	-84.3	0.11 (1)	10.00
B- C	0 / 16	-84.3	-84.3	0.18 (1)	10.00
C- D	-744 / 0	-84.3	-84.3	0.14 (1)	6.25
D- E	-744 / 0	-84.3	-84.3	0.14 (1)	6.25
E- F	0 / 16	-84.3	-84.3	0.18 (1)	10.00
I- B	-238 / 0	0.0	0.0	0.02 (1)	7.81
G- F	-124 / 0	0.0	0.0	0.01 (1)	7.81
I- H	0 / 814	-18.2	-18.2	0.34 (4)	10.00
H- G	0 / 814	-18.2	-18.2	0.34 (4)	10.00

WEBS

MEMB. FR-TO	MAX. FACTORED FORCE (LBS)	MAX CSI (LC)
H- D	0 / 406	0.09 (1)
H- E	-201 / 8	0.07 (1)
C- H	-201 / 8	0.07 (1)
I- C	-1006 / 0	0.35 (1)
E- G	-1006 / 0	0.35 (1)

DESIGN CRITERIA

SPECIFIED LOADS:

TOP CH.	LL	=	25.6	PSF
	DL	=	3.0	PSF
BOT CH.	LL	=	0.0	PSF
	DL	=	7.3	PSF
TOTAL LOAD		=	35.9	PSF

SPACING = 24.0 IN. C/C

THIS TRUSS IS DESIGNED FOR RESIDENTIAL OR SMALL BUILDING REQUIREMENTS OF PART 9, NBCC 2015

THIS DESIGN COMPLIES WITH:
- PART 9 OF BCBC 2018 , ABC 2019
- PART 9 OF OBC 2012 (2019 AMENDMENT)
- CSA 086-14
- TPIC 2014

(55 % OF 31.3 P.S.F. G.S.L. PLUS 8.4 P.S.F. RAIN LOAD) EQUALS 25.6 P.S.F. SPECIFIED ROOF LIVE LOAD

ALLOWABLE DEFL.(LL)= L/360 (0.50")
CALCULATED VERT. DEFL.(LL) = L/ 999 (0.02")
ALLOWABLE DEFL.(TL)= L/360 (0.50")
CALCULATED VERT. DEFL.(TL) = L/ 999 (0.08")

CSI: TC=0.18/1.00 (B-C:1) , BC=0.34/1.00 (H-I:4) , WB=0.35/1.00 (C-I:1) , SSI=0.13/1.00 (B-C:1)

DOL LUMBER=1.00 NAIL=1.00 LS BEND=1.10 COMP=1.10 SHEAR=1.10 TENS= 1.10

COMPANION LIVE LOAD FACTOR = 1.00

TRUSS PLATE MANUFACTURER IS NOT RESPONSIBLE FOR QUALITY CONTROL IN THE TRUSS MANUFACTURING PLANT .

NAIL VALUES

PLATE	GRIP(DRY) (PSI) MAX	MIN	SHEAR (PLI) MAX	MIN	SECTION (PLI) MAX	MIN
MT20	650	371	1747	788	1987	1873

PLATE PLACEMENT TOL. = 0.250 inches

PLATE ROTATION TOL. = 5.0 Deg.

JSI GRIP= 0.82 (G) (INPUT = 0.90)
JSI METAL= 0.26 (E) (INPUT = 1.00)

LICENSED PROFESSIONAL ENGINEER
I.MATIJEVIC
100528832
PROVINCE OF ONTARIO
June 29, 2021

READ ALL NOTES ON THIS PAGE AND ON THE ENGINEERING NOTE PAGE ENP-1. THE NOTE PAGE IS AN INTEGRAL PART OF THIS DRAWING AS IT CONTAINS SPECIFICATIONS AND CRITERIA USED IN THE DESIGN OF THIS COMPONENT.

CITY OF RICHMOND HILL
BUILDING DIVISION
09/22/2022
KOTT
RECEIVED
Per:_____joshua.nabua_____

JOB NAME	TRUSS NAME	QUANTITY	PLY	JOB DESC.	DRWG NO.
IM0621-171	T09	1	1	TRUSS DESC.	

Version 8.420 S Apr 29 2021 MiTek Industries, Inc. Tue Jun 29 13:12:16 2021 Page 1
ID:OWh2l4vpdPTbcMQK?92PSNzbzpx-xlqrwO74ix NcYmEIMXQTMZHMFGKOY4LjussoOz1QiD

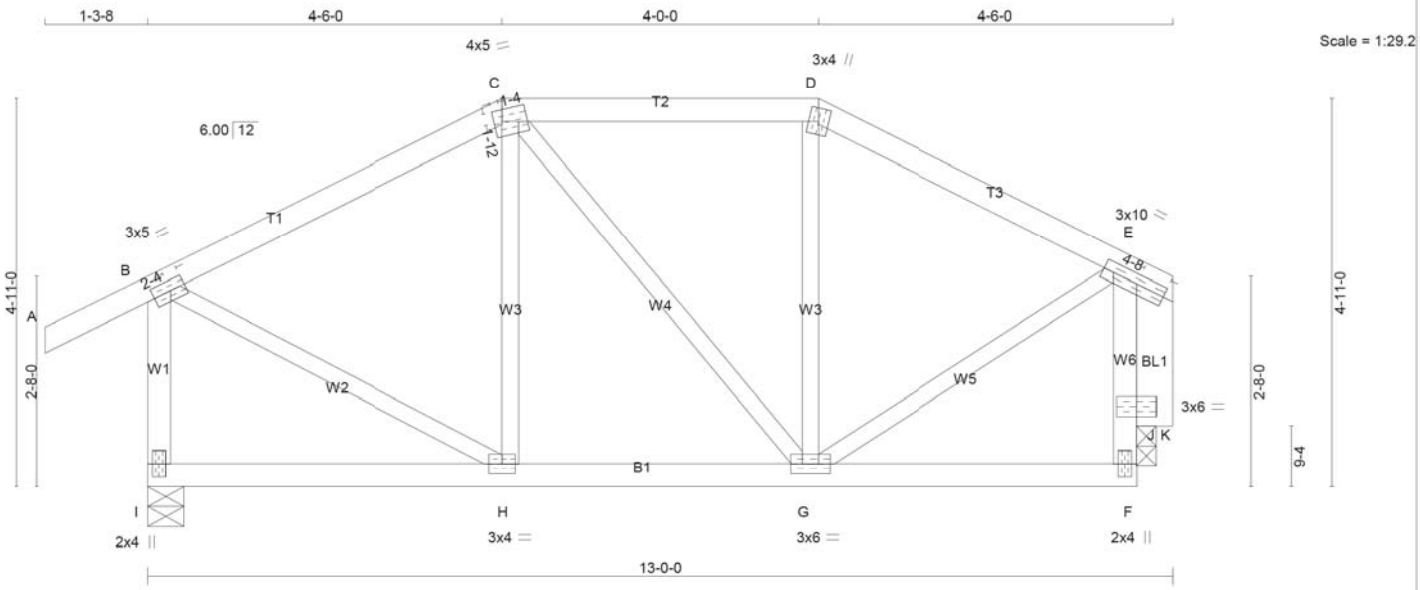

TOTAL WEIGHT = 60 lb
[M][F]

LUMBER
N. L. G. A. RULES

CHORDS	SIZE		LUMBER	DESCR.
A - C	2x4	DRY	No.2	SPF
C - D	2x4	DRY	No.2	SPF
D - E	2x4	DRY	No.2	SPF
I - B	2x4	DRY	No.2	SPF
F - E	2x4	DRY	No.2	SPF
I - F	2x4	DRY	No.2	SPF
BEARING BLOCKS				
BL1	2x6	DRY	No.2	SPF
ALL WEBS EXCEPT	2x3	DRY	No.2	SPF

DRY: SEASONED LUMBER.

BEARING NOTE: GAP BETWEEN INSIDE OF TOP CHORD BEARING AND FIRST DIAGONAL OR VERTICAL WEB SHALL NOT EXCEED 0.5 INCHES.

PLATES (table is in inches)

JT	TYPE	PLATES	W	LEN	Y	X
B	TMVW-t	MT20	3.0	5.0	1.50	2.25
C	TTWW-m	MT20	4.0	5.0	1.75	1.25
D	TTW+m	MT20	3.0	4.0		
E	TMVWK1-t	MT20	3.0	10.0	1.50	4.50
F	BMV+p	MT20	2.0	4.0		
G	BMWWW-t	MT20	3.0	6.0		
H	BMWW-t	MT20	3.0	4.0		
I	BMV1+p	MT20	2.0	4.0		
J	KP-p	MT20	3.0	6.0		

LICENSED PROFESSIONAL ENGINEER
I.MATIJEVIC
100528832
PROVINCE OF ONTARIO
June 29, 2021

DIMENSIONS, SUPPORTS AND LOADINGS SPECIFIED BY FABRICATOR TO BE VERIFIED BY BUILDING DESIGNER

BEARINGS

JT	FACTORED GROSS REACTION VERT	HORZ	MAXIMUM FACTORED GROSS REACTION DOWN	HORZ	UPLIFT	INPUT BRG IN-SX	REQRD BRG IN-SX
K(E)	636	0	636	0	0	3-0	3-0
							(** SEE "BEARING NOTE" **)
I	763	0	763	0	0	5-8	1-8

UNFACTORED REACTIONS

JT	1ST LCASE COMBINED	MAX./MIN. COMPONENT REACTIONS SNOW	LIVE	PERM.LIVE	WIND	DEAD	SOIL
K(E)	446	318 / 0	0 / 0	0 / 0	0 / 0	128 / 0	0 / 0
I	532	393 / 0	0 / 0	0 / 0	0 / 0	139 / 0	0 / 0

BEARING MATERIAL TO BE SPF NO.2 OR BETTER AT JOINT(S) K(E), I

BRACING
TOP CHORD TO BE SHEATHED OR MAX. PURLIN SPACING = 6.25 FT.
MAX. UNBRACED BOTTOM CHORD LENGTH = 10.00 FT OR RIGID CEILING DIRECTLY APPLIED.

ALL FITCH BREAKS AND PERIMETER CORNER JOINTS MUST BE LATERALLY RESTRAINED.

LOADING
TOTAL LOAD CASES: (4)

CHORDS

MEMB. FR-TO	MAX. FACTORED FORCE (LBS)	FACTORED VERT. LOAD (PLF) FROM	TO	LC1 CSI (LC)	MAX UNBRAC LENGTH
A- B	0 / 26	-84.3	-84.3	0.11 (1)	10.00
B- C	-468 / 0	-84.3	-84.3	0.22 (1)	6.25
C- D	-400 / 0	-84.3	-84.3	0.17 (1)	6.25
D- E	-451 / 0	-84.3	-84.3	0.18 (1)	6.25
I- B	-728 / 0	0.0	0.0	0.10 (1)	7.81
F- J	0 / 35	0.0	0.0	0.03 (1)	10.00
J- E	0 / 35	0.0	0.0	0.03 (1)	10.00
I- H	0 / 0	-18.2	-18.2	0.08 (4)	10.00
H- G	0 / 416	-18.2	-18.2	0.11 (4)	10.00
G- F	0 / 31	-18.2	-18.2	0.07 (4)	10.00

WEBS

MEMB. FR-TO	MAX. FACTORED FORCE (LBS)	MAX CSI (LC)
H- C	-129 / 33	0.05 (1)
C- G	-25 / 0	0.02 (1)
G- D	-137 / 25	0.05 (1)
B- H	0 / 470	0.11 (1)
G- E	0 / 438	0.10 (1)
E- K	-638 / 0	0.05 (1)
J- K	0 / 41	0.00 (1)

DESIGN CRITERIA

SPECIFIED LOADS:

TOP CH.	LL	=	25.6	PSF
	DL	=	3.0	PSF
BOT CH.	LL	=	0.0	PSF
	DL	=	7.3	PSF
TOTAL LOAD		=	35.9	PSF

SPACING = 24.0 IN. C/C

LOADING IN FLAT SECTION BASED ON A SLOPE OF 6.00/12

THIS TRUSS IS DESIGNED FOR RESIDENTIAL OR SMALL BUILDING REQUIREMENTS OF PART 9, NBCC 2015

THIS DESIGN COMPLIES WITH:
- PART 9 OF BCBC 2018 , ABC 2019
- PART 9 OF OBC 2012 (2019 AMENDMENT)
- CSA 086-14
- TPIC 2014

(55 % OF 31.3 P.S.F. G.S.L. PLUS 8.4 P.S.F. RAIN LOAD) EQUALS 25.6 P.S.F. SPECIFIED ROOF LIVE LOAD

ALLOWABLE DEFL.(LL)= L/360 (0.42")
CALCULATED VERT. DEFL.(LL) = L/ 999 (0.01")
ALLOWABLE DEFL.(TL)= L/360 (0.42")
CALCULATED VERT. DEFL.(TL) = L/ 999 (0.02")

CSI: TC=0.22/1.00 (B-C:1) , BC=0.11/1.00 (G-H:4) , WB=0.11/1.00 (B-H:1) , SSI=0.13/1.00 (B-C:1)

DOL LUMBER=1.00 NAIL=1.00 LS BEND=1.10 COMP=1.10 SHEAR=1.10 TENS= 1.10

COMPANION LIVE LOAD FACTOR = 1.00

AUTOSOLVE LEFT HEEL ONLY

TRUSS PLATE MANUFACTURER IS NOT RESPONSIBLE FOR QUALITY CONTROL IN THE TRUSS MANUFACTURING PLANT .

NAIL VALUES

PLATE	GRIP(DRY) (PSI) MAX	MIN	SHEAR (PLI) MAX	MIN	SECTION (PLI) MAX	MIN
MT20	650	371	1747	788	1987	1873

PLATE PLACEMENT TOL. = 0.250 inches

PLATE ROTATION TOL. = 5.0 Deg.

JSI GRIP= 0.82 (E) (INPUT = 0.90)
JSI METAL= 0.17 (B) (INPUT = 1.00)

READ ALL NOTES ON THIS PAGE AND ON THE ENGINEERING NOTE PAGE ENP-1. THE NOTE PAGE IS AN INTEGRAL PART OF THIS DRAWING AS IT CONTAINS SPECIFICATIONS AND CRITERIA USED IN THE DESIGN OF THIS COMPONENT.

CITY OF RICHMOND HILL
BUILDING DIVISION
09/22/2022
KOTT
RECEIVED
Per:_____joshua.nabua_____

MiTek®

STANDARD DETAIL MSD2015-H

Issued: **SEPTEMBER 22, 2020**
Expiry: **APRIL 30, 2022**

TOE-NAIL CAPACITY DETAILS

LATERAL AND WITHDRAWAL RESISTANCE OF BEARING ANCHORAGE BY TOE-NAILS

NAIL TYPE	Length (in)	Diameter (in)	LATERAL Resistance per nail (Lbs.)		WITHDRAWAL Resistance per nail (Lbs.)	
			SPF	D. FIR	SPF	D. FIR
COMMON WIRE	3.00	0.144	122	139	30	42
	3.25	0.144	127	144	32	45
	3.50	0.160	152	173	38	52
COMMON SPIRAL	3.00	0.122	96	108	26	36
	3.25	0.122	97	108	28	40
	3.50	0.152	142	161	36	50
3.25" Gun nail	3.25	0.120	94	105	28	39

Note: If using truss with D. Fir lumber and SPF bearing plate, use tabulated SPF values in table.

Nail type:	Common wire	Common spiral	Common wire	Common spiral	Gun Nail
Diameter (in.)	0.160	0.152	0.144	0.122	0.120
Length (in.)	3.50	3.50	3.00	3.00	3.25
LUMBER	**MAXIMUM NUMBER OF TOE-NAILS**				
2x4 SPF	2	2	3	3	3
2x6 SPF	4	4	4	5	5
2x4 D. FIR	2	2	2	2	2
2x6 D. FIR	3	3	3	4	4

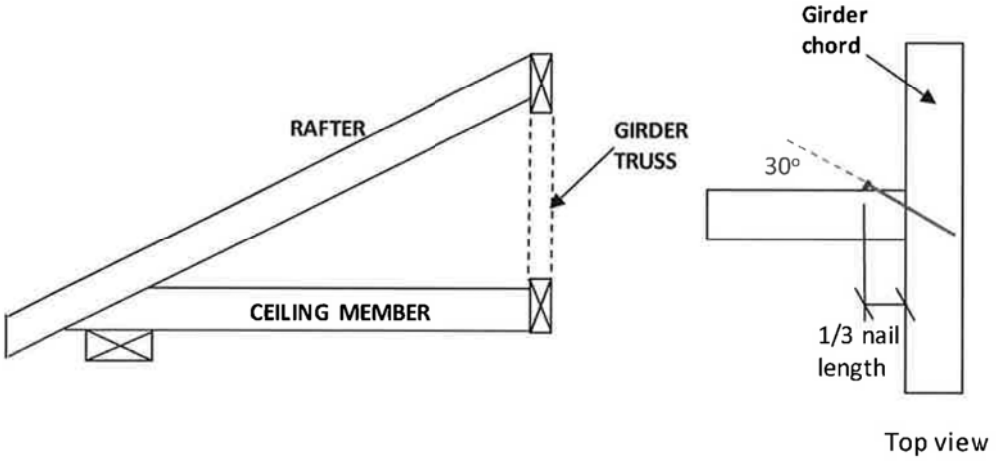

Figure 1: Toe-Nailing Rafter / Ceiling Member to Girder Truss

PEO
Certificate No. 10889485

LICENSED PROFESSIONAL ENGINEER
C. Cordogiannis
90553736
PROVINCE OF ONTARIO

December 21, 2020

CITY OF RICHMOND HILL
BUILDING DIVISION
09/22/2022
RECEIVED
Per: joshua.nabua

©2020 MiTek Canada Inc., 240 Stirling Crescent, Bradford, Ontario, L3Z 4L5 | (800) 268-3434, www.mitek.ca

MiTek®

STANDARD DETAIL MSD2015-H

Issued: **SEPTEMBER 22, 2020**
Expiry: **APRIL 30, 2022**

TOE-NAIL CAPACITY DETAILS

Figure 2: Toe-Nail Anchorage to Bearing Plate for Uplift

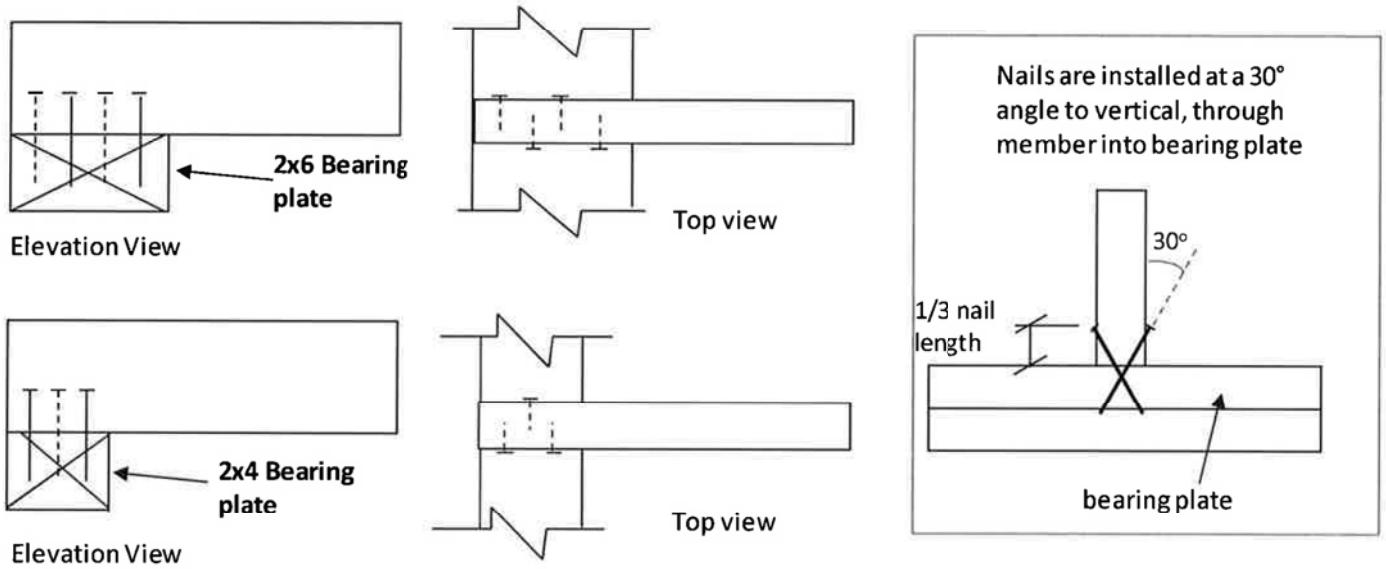

NOTES:

1. Rafter and ceiling members may be connected to top and bottom chords of girder truss by toe-nailing the members into the girder chords (see fig. 1), provided the factored vertical reactions of the supported members do not exceed the lateral resistance of the toe-nails. Mechanical connectors (hangers) are required if factored vertical reactions exceed the toe-nail capacity, or if the connection must resist horizontal loads (loads perpendicular to the face of girder or rafter).

2. Trusses, rafters or ceiling members may be anchored to the bearing plate with toe-nails (see fig. 2), provided that the factored uplift reactions due to **wind or earthquake loads** do not exceed the **withdrawal resistance of the toe-nails.** Mechanical anchors (tie-downs) are required for reactions that exceed the toe-nail withdrawal capacity. Toe-nail anchorage to bearing plates is **NOT** permitted if uplift reactions are generated from gravity loads (snow, floor live, dead).

3. Tabulated toe-nail resistances on page 1 are for **one** toe-nail. Multiply unit values by the number of nails used in the connection. Maximum number of nails in a connection shall not exceed the tabulated limits shown on page 1 for a given lumber size /species.

4. Nail values are based on specific gravity of G = 0.42 (SPF) and G = 0.49 (D. Fir).

5. Toe-nails shall be driven at approximately 1/3 the nail length from the edge of the joist/truss chord and driven at an angle of 30° to the grain of the member.

6. For wind / earthquake loads, tabulated lateral resistances may be multiplied by 1.15 (K_D factor). No increases are permitted for tabulated withdrawal resistances.

7. Lumber must be dry (< 19% moisture content) at the time of nail installation.

8. Nail values in this table comply with CSA O86-19, Clause 12.9.

PEO
Certificate No. 10889485

CITY OF RICHMOND HILL
BUILDING DIVISION
09/22/2022
RECEIVED
Per:____joshua.nabua_____

December 21, 2020

©2020 MiTek Canada Inc., 240 Stirling Crescent, Bradford, Ontario, L3Z 4L5 | (800) 268-3434, www.mitek.ca

MiTek®

STANDARD DETAIL MSD2015-J

Issued: **MARCH 17, 2021**
Expiry: **APRIL 30, 2022**

STANDARD HIP END FRAMING

PLAN VIEW

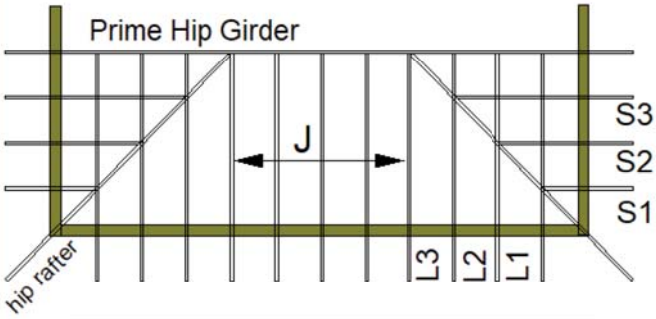

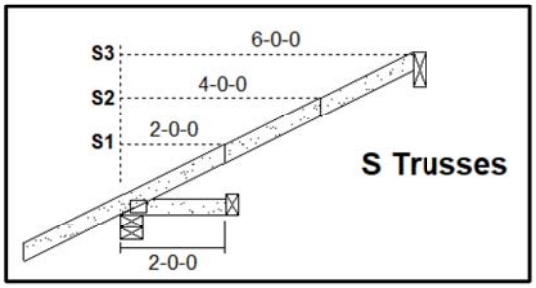

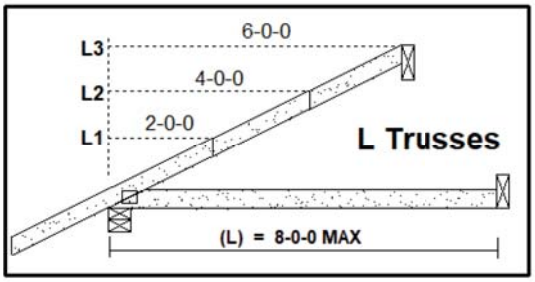

Specified Load Rating:

Top chord Live:	51.0 PSF or less
Top chord Dead:	6.0 PSF or less
Bottom chord Live:	0.0 PSF
Bottom chord Dead:	7.3 PSF or less

HEEL DETAIL 'A'
Standard Heel

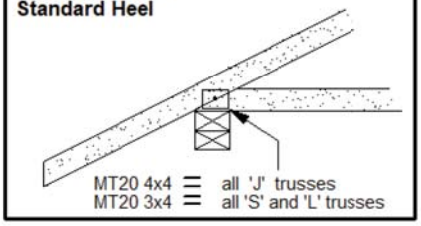

DETAIL "B":
Raised Heel

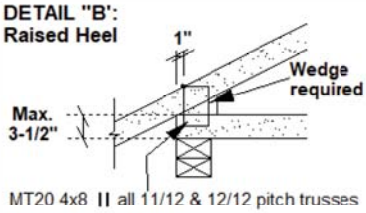

HEEL DETAIL 'C'
Cantilever

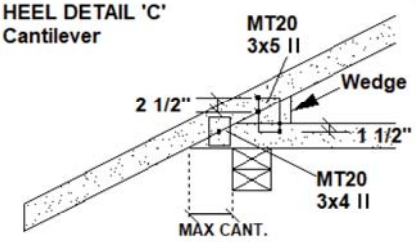

CANTILEVER DETAIL "C"

SLOPE	MAX CANT.	WEDGE PLATE	WEDGE SIZE
3/12	17"	3 X 5	2 X 3
4/12	14"	3 X 5	2 X 3
5/12	12"	3 X 5	2 X 4
6/12	10"	3 X 5	2 X 4
7/12	9"	3 X 5	2 X 6
8/12	8.5"	3 X 5	2 X 6
9/12	8"	3 X 5	2 X 6
10/12	7.5"	3 X 5	2 X 6

J Trusses

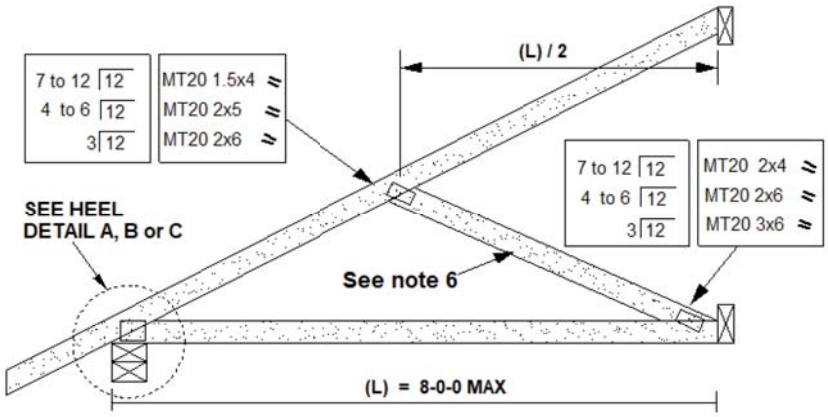

NOTES:

1. This detail is valid only for projects conforming to **PART 9 NBCC 2015** that do not require a wind analysis to be incorporated into the design of the trusses.
2. Overhang length shall not exceed 24 inches.
3. All lumber shall be 2x4 SPF (or D-Fir) DRY No. 2 grade or better.
4. All plates specified are MITEK MT20, pressed into both faces of each truss. Heel plates of all trusses shall conform to heel details 'A', 'B' or 'C'.
5. Diagonal hip rafter design shall conform to section 9.23.14.6 of NBCC 2015.
6. For 6.0 ft. or less span, diagonal web on truss 'J" is optional. Girder design must reflect choice of partial jack ('J' with diagonal web) or open jack ('J' without diagonal web)
7. All truss-to-rafter and truss-to-truss connections shall be specified as per MITEK standard detail *'MSD2015-H: Toe-Nail Capacity Details'*

PEO
Certificate No. 10889485

LICENSED PROFESSIONAL ENGINEER
2021-03-18
C. Cordogiannis
90553736
PROVINCE OF ONTARIO

CITY OF RICHMOND HILL
BUILDING DIVISION
09/22/2022
RECEIVED
Per:____joshua.nabua_____

©2021 MiTek Canada Inc.240 Stirling Cr. Bradford Ontario, L3Z 4L5 (800) 268-3434, www.mitek.ca