THIS STRUCTURE MUST BE CONSTRUCTED TO MEET OR EXCEED THE PROVISIONS OF THE ONTARIO BUILDING CODE

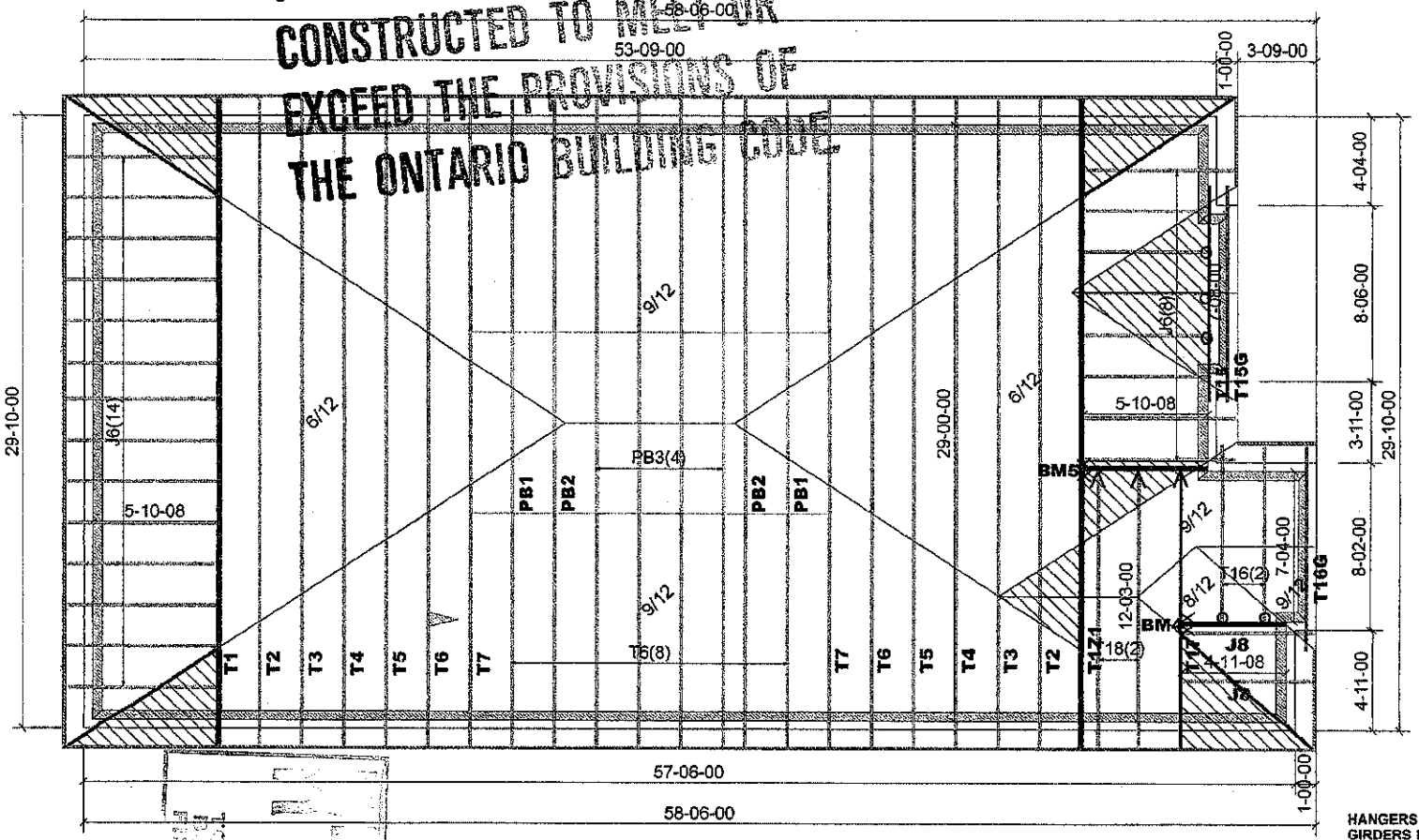

ASPHALT SHINGLES
12" FINISHED OH.
R.T.M.C.
2X6 EXTERIOR WALLS
2X6 FASCIA BOARD

HARDWARE:
LUS24 (o)
LJS26DS (V)
HGUS26-2 (XX)

DENOTES CONV. FRAMING

GSL 37.6 PSF

DESIGN CONFORMS WITH O.B.C. 2012 PART 9
DESIGN LOADS:

TC LIVE	29	PSF
TC DEAD	3	PSF
BC LIVE	10.5	PSF
BC DEAD	7	PSF

BM4,5 = 2 2X10

HANGERS APPLIED TO A 1-PLY GIRDERS REQUIRE A BLOCK SCABBED BEHIND. APPROX. 2' O.C. WITH HANGER

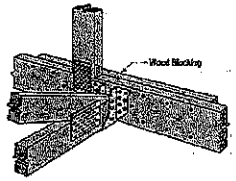

ALL CONV. FRAMINGS TO CONFORM WITH PART 9 OF O.B.C.2012
ROOF RAFTERS THAT CROSS MEET OVER TRUSSES TO BE 2x4 SPF @ 24" O.C. WITH A 2x4 VERT. POST TO THE TRUSS UNDERNEATH AT EACH CROSS PT. VERT. POST LONGER THAN 6' TO HAVE LATERAL BRACING SO THAT THE DISTANCE BETWEEN END PT. & BETWEEN ROWS OF BRACING DOES NOT EXCEED 6'

RECEIVED AUG 2 3 2019 CITY OF CALEDON BUILDING SECTION

APPLICANT COPY

TAMARACK LUMBER INC.	Job Track: 50120	Builder / Location: Greenpark / Caledon	Model / Elevation: Preston 3 / ELV. 2 Lot 17
	Plan Log: 200444	Project: Lamberts Lane Home Corp.	
	Layout ID: 401157	Date: 2019-02-01 Designer: CS/BF	

THESE DRAWINGS CONSTITUTE THE PROPERTY OF TAMARACK ROOF TRUSSES INC., SHALL NOT BE REPRODUCED, PUBLISHED, OR REDISTRIBUTED IN ANY MANNER OR UTILIZED FOR ANY PURPOSE OTHER THAN THE MANUFACTURE OF TRUSSES BY TAMARACK ROOF TRUSSES INC AND WILL BE RETRACTED BY TAMARACK ROOF TRUSSES INC IF UTILIZED FOR ANY OTHER PURPOSE.

Mitek ver 8.2.3.229

DELIVERY SHIPLIST

Lumber Yard:	TAMARACK LUMBER	Job Track:	50120
Builder:	Greenpark	PlanLog:	200444
Project:	Lamberts Lane Home Corp.	Layout ID:	401157
Location:	Caledon	Ref #	
Model:	Preston 3	Page:	1 of 2
Lot #:	17	Date:	02-01-2019
Elevation:	2	Designer:	Brian Faneca
		Sales Rep:	Mario DiCano

Roof Trusses

PROFILE	QTY / PLY	MARK / TYPE	PITCH	SPAN	HEIGHT	LUMBER	OVERHANG LEFT / RIGHT	HEEL HEIGHT LEFT / RIGHT	LBS. / BFT.	BUNDLE # / STACK #	LOAD BY / REMARKS
	1 2-ply	T1 Hip Girder	9 /12	29-00-00	4-01-04	2 x 4 2 x 6	1-03-08 1-03-08	1-06-04 1-06-04	280.72 181.33		
	1 2-ply	T1Z1 Hip Girder	9 /12	29-00-00	4-01-04	2 x 4 2 x 6	1-03-08 1-03-08	1-06-04 1-06-04	280.72 181.33		
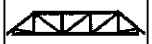	2	T2 Hip	9 /12	29-00-00	5-01-04	2 x 4	1-03-08 1-03-08	1-06-04 1-06-04	233.03 147.33		
	2	T3 Hip	9 /12	29-00-00	6-01-04	2 x 4	1-03-08 1-03-08	1-06-04 1-06-04	254.02 165.33		
	2	T4 Hip	9 /12	29-00-00	7-01-04	2 x 4	1-03-08 1-03-08	1-06-04 1-06-04	256.45 170.33		
	2	T5 Hip	9 /12	29-00-00	8-01-04	2 x 4	1-03-08 1-03-08	1-06-04 1-06-04	269.95 175.33		
	10	T6 Hip	9 /12	29-00-00	9-01-04	2 x 4	1-03-08 1-03-08	1-06-04 1-06-04	1416.85 905.00		
	2	T7 Hip	9 /12	29-00-00	10-01-04	2 x 4	1-03-08 1-03-08	1-06-04 1-06-04	275.24 180.00		
	1	T15 Common Girder	9 /12	7-08-00	4-04-12	2 x 4 2 x 6	1-05-00 1-05-00	1-06-04 1-06-04	40 24.67		
	1	T15G GABLE	9 /12	7-08-00	4-04-12	2 x 4	1-05-00 1-05-00	1-06-04 1-06-04	36.43 24.33		
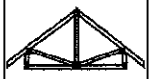	2	T16 Common	9 /12	7-04-00	4-03-04	2 x 4	1-03-08 1-03-08	1-06-04 1-06-04	88.05 46.67		
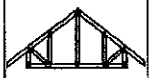	1	T16G GABLE	9 /12	7-04-00	4-03-04	2 x 4	1-05-00 1-03-08	1-06-04 1-06-04	34.88 24.33		
	1	T17 Hip Girder	9 /12	12-03-00	4-08-08	2 x 4 2 x 6	1-03-08 1-03-08	1-06-04 1-06-04	64.68 42.67		
	2	T18 Hip	9 /12	12-03-00	6-01-06	2 x 4	1-03-08 1-03-08	1-06-04 1-06-04	112.92 75.33		

DELIVERY SHIPLIST

Lumber Yard:	TAMARACK LUMBER	Job Track:	50120
Builder:	Greenpark	PlanLog:	200444
Project:	Lamberts Lane Home Corp.	Layout ID:	401157
Location:	Caledon	Ref #	
Model:	Preston 3	Page:	2 of 2
Lot #:	17	Date:	02-01-2019
Elevation:	2	Designer:	Brian Faneca
		Sales Rep:	Mario DiCano

Roof Trusses

PROFILE	QTY PLY	MARK TYPE	PITCH	SPAN	HEIGHT	LUMBER	OVERHANG LEFT RIGHT	HEEL HEIGHT LEFT RIGHT	LBS. BFT.	BUNDLE # STACK #	LOAD BY REMARKS
	2	PB1 Piggyback	9 /12	8-09-05	2-00-00	2 x 4			44.18 30.67		
	2	PB2 Piggyback	9 /12	8-09-05	3-00-00	2 x 4			45.23 29.67		
	4	PB3 Piggyback	9 /12	8-09-05	3-03-08	2 x 4			92.05 59.33		
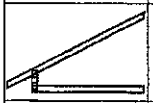	22	J6 Jack-Open	6 /12	5-10-08	4-01-04	2 x 4	1-03-08	1-02-00 4-01-04	369.48 234.67		
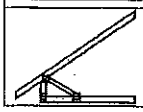	2	J8 Jack-Open	8 /12	4-11-08	4-08-08	2 x 4	1-03-08	1-04-13 4-08-08	34.25 20.67		

TOTAL # TRUSS= **64** TOTAL BFT OF ALL TRUSSES= **2718.99** BFT. TOTAL WEIGHT OF ALL TRSSES **4209.11** LBS

HARDWARE

QTY	TYPE	MODEL	LENGTH
3	Hardware	LJS26DS	
2	Hardware	HGUS26-2	
2	Hardware	LUS24	

TOTAL NUMBER OF ITEMS= **7**

JOB NAME	TRUSS NAME	QUANTITY	PLY	JOB DESC. Preston 3	DRWG NO.
200444-401156	T1	1	2	TRUSS DESC.	T1

Tamarack Roof Truss, Burlington

Version 8.230 S Nov 17 2018 MiTek Industries, Inc. Tue Feb 5 20:29:06 2019 Page 1
ID:4xNdf4mUPyxd3LURX25ZQKyOFG0-gmSKBWjK1NLfTkpaFSADPI4_TrGyOJM9OpOSe4zo5IR

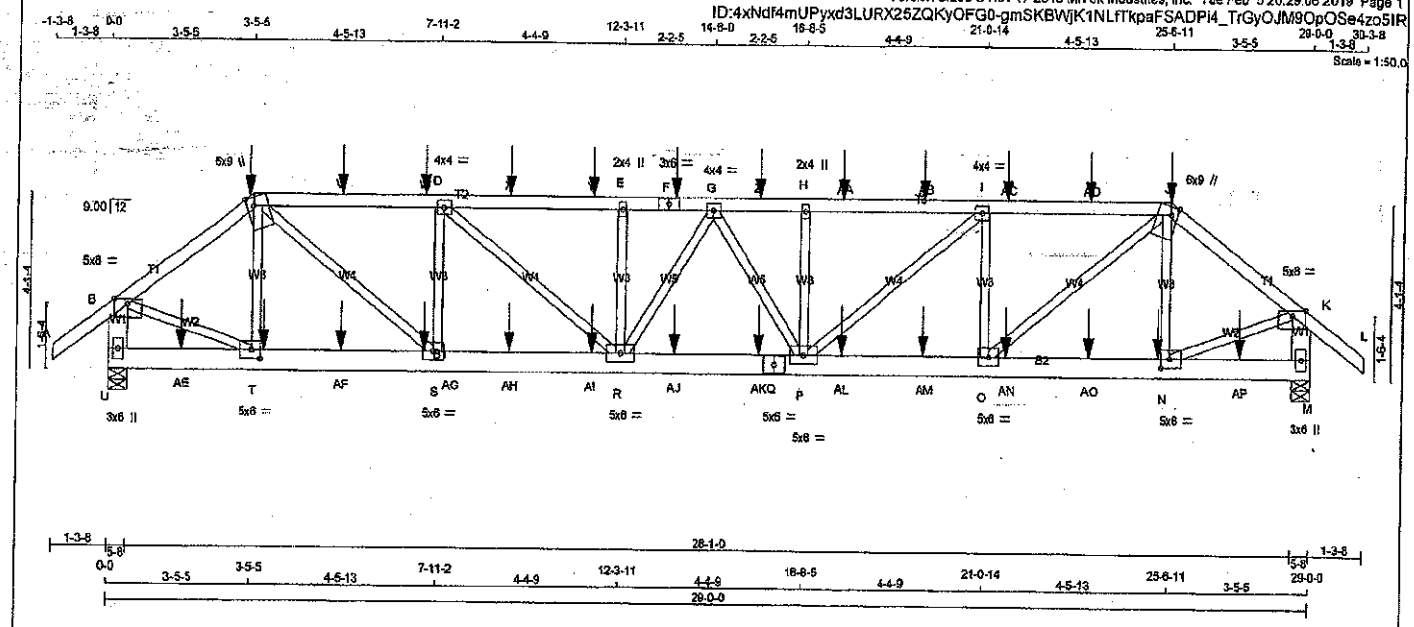

TOTAL WEIGHT = 2 X 140 = 281 lb [M]

LUMBER
N. L. G. A. RULES

CHORDS	SIZE		LUMBER	DESCR.
A - C	2x4	DRY	No.2	SPF
C - F	2x4	DRY	No.2	SPF
F - J	2x4	DRY	No.2	SPF
J - L	2x4	DRY	No.2	SPF
U - B	2x6	DRY	No.2	SPF
M - K	2x6	DRY	No.2	SPF
U - Q	2x6	DRY	No.2	SPF
Q - M	2x6	DRY	No.2	SPF
ALL WEBS EXCEPT	2x3	DRY	No.2	SPF

DRY: SEASONED LUMBER.

DESIGN CONSISTS OF 2 TRUSSES BUILT SEPARATELY THEN FASTENED TOGETHER AS FOLLOWS:

CHORDS	#ROWS	SURFACE SPACING (IN)	LOAD(PLF)
TOP CHORDS : (0.122"X3") SPIRAL NAILS			
A- C	1	12	SIDE(61.0)
C- F	1	12	SIDE(61.0)
F- J	1	12	SIDE(61.0)
J- L	1	12	SIDE(61.0)
U- B	2	12	TOP
M- K	2	12	TOP
BOTTOM CHORDS : (0.122"X3") SPIRAL NAILS			
U- Q	2	12	SIDE(183.1)
Q- M	2	12	SIDE(183.1)
WEBS : (0.122"X3") SPIRAL NAILS			
2x3	1	6	

NAILS TO BE DRIVEN FROM ONE SIDE ONLY.

GIRDER NAILING ASSUMES NAILED HANGERS ARE FASTENED WITH MIN. 3-0 INCH NAILS.

TOP - COMPONENTS ARE LOADED FROM THE TOP AND MUST BE PLACED ON TOP EDGE OF ALL PLIES FOR THE LOAD TO BE TRANSFERRED TO EACH PLY.

SIDE - PLF SHOWN IS THE EQUIVALENT UDL APPLIED TO ONE SIDE THAT THE CORRESPONDING NAILING PATTERN SHALL BE CAPABLE OF TRANSFERING. REMAINING PLF MUST BE APPLIED ON THE OPPOSITE SIDE OR ON THE TOP.

PLATES (table is in inches)

JT	TYPE	PLATES	W	LEN	Y	X
B	TMVW-p	MT20	5.0	6.0	Edge	
C	TTWW+m	MT20	6.0	9.0	Edge	2.00
O, G, I						
D	TMWW-t	MT20	4.0	4.0		
E	TMW+w	MT20	2.0	4.0		
F	TS-t	MT20	3.0	6.0		
H	TMW+w	MT20	2.0	4.0		
J	TTWW+m	MT20	6.0	9.0	Edge	2.00
K	TMVW-p	MT20	5.0	6.0	Edge	
M	BMV1+p	MT20	3.0	6.0		
N	BMWW-t	MT20	5.0	6.0	2.50	2.50
O	BMWW-t	MT20	5.0	6.0		
P	BMWWW-t	MT20	5.0	8.0		
Q	BS-t	MT20	5.0	6.0		
R	BMWWW-t	MT20	5.0	8.0		
S	BMWW-t	MT20	5.0	6.0		
T	BMWW-t	MT20	5.0	6.0	2.50	2.50
U	BMV1+p	MT20	3.0	6.0		

DIMENSIONS, SUPPORTS AND LOADINGS SPECIFIED BY FABRICATOR TO BE VERIFIED BY BUILDING DESIGNER

BEARINGS

JT	FACTORED GROSS REACTION VERT	HORZ	MAXIMUM FACTORED GROSS REACTION DOWN	HORZ	UPLIFT	INPUT BRG IN-SX	REQRD BRG IN-SX
U	3968	0	3968	0	0	5-8	5-8
M	3979	0	3979	0	0	5-8	5-8

UNFACTORED REACTIONS

JT	1ST LCASE COMBINED	MAX./MIN. COMPONENT REACTIONS SNOW	LIVE	PERM.LIVE	-WIND	DEAD	SOIL
U	2933	1718 / 0	513 / 0	0 / 0	0 / 0	702 / 0	0 / 0
M	2942	1722 / 0	515 / 0	0 / 0	0 / 0	704 / 0	0 / 0

BEARING MATERIAL TO BE SPF NO.2 OR BETTER AT JOINT(S) U, M

BRACING
TOP CHORD TO BE SHEATHED OR MAX. PURLIN SPACING = 3.34 FT.
MAX. UNBRACED BOTTOM CHORD LENGTH = 10.00 FT OR RIGID CEILING DIRECTLY APPLIED.

ALL PITCH BREAKS AND PERIMETER CORNER JOINTS MUST BE LATERALLY RESTRAINED.

LOADING
TOTAL LOAD CASES: (4)

CHORDS

MEMB. FR-TO	MAX. FACTORED FORCE (LBS)	FACTORED VERT. LOAD (PLF) FROM	TO	LC1	MAX CSI (LC)	MAX. UNBRAC LENGTH
A- B	0 / 42	-102.1	-102.1	0.08 (1)	10.00	
B- C	-4201 / 0	-102.1	-102.1	0.19 (1)	4.50	
C- V	-5798 / 0	-102.1	-102.1	0.41 (1)	3.70	
V- W	-5798 / 0	-102.1	-102.1	0.41 (1)	3.70	
W- D	-5798 / 0	-102.1	-102.1	0.41 (1)	3.70	
D- X	-6923 / 0	-102.1	-102.1	0.47 (1)	3.35	
X- Y	-6923 / 0	-102.1	-102.1	0.47 (1)	3.35	
Y- E	-6923 / 0	-102.1	-102.1	0.47 (1)	3.35	
E- F	-6923 / 0	-102.1	-102.1	0.27 (1)	3.53	
F- G	-6923 / 0	-102.1	-102.1	0.27 (1)	3.53	
G- Z	-6921 / 0	-102.1	-102.1	0.27 (1)	3.53	
Z- H	-6921 / 0	-102.1	-102.1	0.27 (1)	3.53	
H-AA	-6921 / 0	-102.1	-102.1	0.48 (1)	3.34	
AA-AB	-6921 / 0	-102.1	-102.1	0.48 (1)	3.34	
AB- I	-6921 / 0	-102.1	-102.1	0.48 (1)	3.34	
I-AC	-5806 / 0	-102.1	-102.1	0.42 (1)	3.68	
AC-AD	-5806 / 0	-102.1	-102.1	0.42 (1)	3.68	
AD- J	-5806 / 0	-102.1	-102.1	0.42 (1)	3.68	
J- K	-4215 / 0	-102.1	-102.1	0.19 (1)	4.4[illegible]	
K- L	0 / 42	-102.1	-102.1	0.08 (1)	10.00	
U- B	-3897 / 0	0.0	0.0	0.14 (1)	7.[illegible]	
M- K	-3909 / 0	0.0	0.0	0.14 (1)	7.[illegible]	
U-AE	0 / 0	-38.5	-38.5	0.05 (3)	10.00	
AE- T	0 / 0	-38.5	-38.5	0.05 (3)	10.00	
T-AF	0 / 3332	-38.5	-38.5	0.26 (1)	10.00	
AF-AG	0 / 3332	-38.5	-38.5	0.26 (1)	10.00	
AG- S	0 / 3332	-38.5	-38.5	0.26 (1)	10.00	
S-AH	0 / 5798	-38.5	-38.5	0.44 (1)	10.00	
AH-AI	0 / 5798	-38.5	-38.5	0.44 (1)	10.00	
AI- R	0 / 5798	-38.5	-38.5	0.44 (1)	10.00	
R-AJ	0 / 6995	-38.5	-38.5	0.52 (1)	10.00	
AJ-AK	0 / 6995	-38.5	-38.5	0.52 (1)	10.00	
AK- Q	0 / 6995	-38.5	-38.5	0.52 (1)	10.00	
Q- P	0 / 6995	-38.5	-38.5	0.52 (1)	10.00	
P-AL	0 / 5806	-38.5	-38.5	0.44 (1)	10.00	
AL-AM	0 / 5806	-38.5	-38.5	0.44 (1)	10.00	
AM- O	0 / 5806	-38.5	-38.5	0.44 (1)	10.00	
O-AN	0 / 3343	-38.5	-38.5	0.26 (1)	10.00	
AN-AO	0 / 3343	-38.5	-38.5	0.26 (1)	10.00	

WEBS

MEMB. FR-TO	MAX. FACTORED FORCE (LBS)	MAX CSI (LC)
T- C	-734 / 0	0.09 (1)
C- S	0 / 3201	0.40 (1)
S- D	-1769 / 0	0.22 (1)
D- R	0 / 1478	0.18 (1)
R- E	-554 / 0	0.07 (1)
P- H	-542 / 0	0.07 (1)
P- I	0 / 1465	0.18 (1)
O- I	-1764 / 0	0.22 (1)
C- J	0 / 3197	0.40 (1)
N- J	-733 / 0	0.09 (1)
B- T	0 / 3513	0.43 (1)
N- K	0 / 3524	0.44 (1)
R- G	-1027 / 0	0.09 (1)
G- P	-146 / 0	0.02 (1)

LICENSED PROFESSIONAL ENGINEER
02/05/19
H. J. G. ALVES
100009004
PROVINCE OF ONTARIO

DWG NO. TAM T1702708
STRUCTURAL
COMPONENT ONLY 1/2

DESIGN CRITERIA

*** SPECIAL LOADS ANALYSIS ***
GEOMETRY AND/OR BASIC LOADS CHANGED BY USER.
LOADS WERE DERIVED FROM USER INPUT
NO FURTHER MODIFICATIONS WERE MADE

SPECIFIED LOADS:

TOP CH.	LL =	29.0	PSF
	DL =	6.0	PSF
BOT CH.	LL =	10.5	PSF
	DL =	7.0	PSF
TOTAL LOAD	=	52.5	PSF

SPACING = 24.0 IN. C/C

LOADING IN FLAT SECTION BASED ON A SLOPE OF 6.00/12

*** NON STANDARD GIRDER ***
ADDT'L USER-DEFINED LOADS APPLIED TO ALL LOAD CASES.

THIS TRUSS IS DESIGNED FOR RESIDENTIAL OR SMALL BUILDING REQUIREMENTS OF PART 9, NBCC 2015

THIS DESIGN COMPLIES WITH:
- PART 9 OF BCBC 2018
- CSA 086-14
- TPIC 2014

(55 % OF 37.6 P.S.F. G.S.L. PLUS 8.4 P.S.F. RAIN LOAD) EQUALS 29.0 P.S.F. SPECIFIED ROOF LIVE LOAD

ALLOWABLE DEFL.(LL)= L/360 (0.97")
CALCULATED VERT. DEFL.(LL) = L/ 999 (0.17")
ALLOWABLE DEFL.(TL)= L/360 (0.97")
CALCULATED VERT. DEFL.(TL) = L/ 999 (0.27")

CSI: TC=0.48/1.00 (H-I:1) , BC=0.52/1.00 (P-R:1) , WB=0.44/1.00 (K-N:1) , SSI=0.20/1.00 (C-D:1)

DOL LUMBER=1.00 NAIL=1.00 LS BEND=1.00 COMP=1.00 SHEAR=1.00 TENS= 1.00

COMPANION LIVE LOAD FACTOR = 1.00

TRUSS PLATE MANUFACTURER IS NOT RESPONSIBLE FOR QUALITY CONTROL IN THE TRUSS MANUFACTURING PLANT.

NAIL VALUES

PLATE	GRIP(DRY) (PSI) MAX	MIN	SHEAR (PLI) MAX	MIN	SECTION (PLI) MAX	MIN
MT20	650	371	1747	788	1997	1873

PLATE PLACEMENT TOL. = 0.250 inches

PLATE ROTATION TOL. = 5.0 Deg.

JSI GRIP= 0.84 (C) (INPUT = 0.90)
JSI METAL= 0.64 (Q) (INPUT = 1.00)

CONTINUED ON PAGE 2

JOB NAME	TRUSS NAME	QUANTITY	PLY	JOB DESC. Preston 3	DRWG NO.
200444-401156	T1	1	2	TRUSS DESC.	T1

Tamarack Roof Truss, Burlington

Version 8.230 S Nov 17 2018 MiTek Industries, Inc. Tue Feb 5 20:29:06 2019 Page 2
ID:4xNdf4mUPyxd3LURX25ZQKyOFG0-gmSKBWjK1NLfTkpaFSADPi4_TrGyOJM9OpOSe4zo5IR

Edge - INDICATES REFERENCE CORNER OF PLATE TOUCHES EDGE OF CHORD.

LOADING
TOTAL LOAD CASES: (4)

CHORDS

MEMB. FR-TO	MAX. FORCE (LBS)	FACTORED VERT. LOAD (PLF) FROM	TO	LC1	MAX CSI (LC)
AO- N	0 / 3343	-38.5	-38.5	0.28 (1)	
N-AP	0 / 0	-38.5	-38.5	0.05 (3)	
AP- M	0 / 0	-38.5	-38.5	0.05 (3)	

WEBS

MEMB. FR-TO	MAX. UNBRAC LENGTH	MAX. FORCE (LBS)	MAX CSI (LC)
AO- N	10.00		
N-AP	10.00		
AP- M	10.00		

FACTORED CONCENTRATED LOADS (LBS)

JT	LOC.	LC1	MAX-	MAX+	FACE	DIR.	TYPE	HEEL	CONN.
C	3-5-5	-50	-56	—	FRONT	VERT	DEAD	—	—
C	3-5-5	-460	-460	—	BACK	VERT	TOTAL	—	—
C	3-5-5	-285	-285	—	FRONT	VERT	SNOW	—	—
F	13-7-4	-123	-123	—	BACK	VERT	TOTAL	—	—
J	25-6-11	-50	-56	—	FRONT	VERT	DEAD	—	—
J	25-6-11	-460	-460	—	BACK	VERT	TOTAL	—	—
J	25-6-11	-285	-285	—	FRONT	VERT	SNOW	—	—
N	25-3-4	-55	-70	—	BACK	VERT	TOTAL	—	—
T	3-8-12	-55	-70	—	BACK	VERT	TOTAL	—	—
V	5-7-4	-123	-123	—	BACK	VERT	TOTAL	—	—
W	7-7-4	-123	-123	—	BACK	VERT	TOTAL	—	—
X	9-7-4	-123	-123	—	BACK	VERT	TOTAL	—	—
Y	11-7-4	-123	-123	—	BACK	VERT	TOTAL	—	—
Z	15-7-4	-123	-123	—	BACK	VERT	TOTAL	—	—
AA	17-7-4	-123	-123	—	BACK	VERT	TOTAL	—	—
AB	19-7-4	-123	-123	—	BACK	VERT	TOTAL	—	—
AC	21-7-4	-123	-123	—	BACK	VERT	TOTAL	—	—
AD	23-7-4	-123	-123	—	BACK	VERT	TOTAL	—	—
AE	1-8-12	-55	-70	—	BACK	VERT	TOTAL	—	—
AF	5-7-4	-55	-70	—	BACK	VERT	TOTAL	—	—
AG	7-7-4	-55	-70	—	BACK	VERT	TOTAL	—	—
AH	9-7-4	-55	-70	—	BACK	VERT	TOTAL	—	—
AI	11-7-4	-55	-70	—	BACK	VERT	TOTAL	—	—
AJ	13-7-4	-55	-70	—	BACK	VERT	TOTAL	—	—
AK	15-7-4	-55	-70	—	BACK	VERT	TOTAL	—	—
AL	17-7-4	-55	-70	—	BACK	VERT	TOTAL	—	—
AM	19-7-4	-55	-70	—	BACK	VERT	TOTAL	—	—
AN	21-7-4	-55	-70	—	BACK	VERT	TOTAL	—	—
AO	23-7-4	-55	-70	—	BACK	VERT	TOTAL	—	—
AP	27-3-4	-55	-70	—	BACK	VERT	TOTAL	—	—

LICENSED PROFESSIONAL ENGINEER
04/05/19
H. J. GALVES
100009024
PROVINCE OF ONTARIO

DWG NO. TAM P902708
STRUCTURAL
COMPONENT ONLY 2/2

JOB NAME	TRUSS NAME	QUANTITY	PLY	JOB DESC.	DRWG NO.
200444-401157	T1Z1	1	2	Preston 3 TRUSS DESC.	

Tamarack Roof Truss, Burlington

Version 8.230 S Nov 17 2018 MiTek Industries, Inc. Tue Feb 12 08:53:26 2019 Page 1

ID:Mi06BFa0GpW8aLLBiY39yQyOCh?-TGkFBGt5caz?K_VC_6rtsgJvRInrliYfmv74GzbxqdJ

Scale = 1:50.0

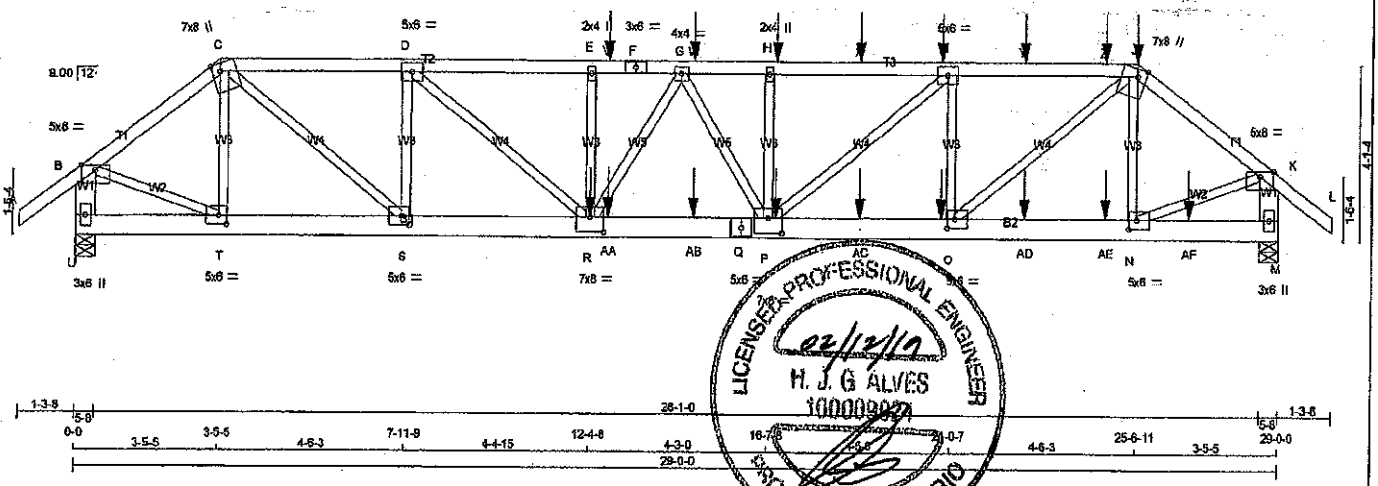

TOTAL WEIGHT = 2 X 140 = 281 lb [M]

LUMBER

N. L. G. A. RULES

CHORDS	SIZE		LUMBER	DESCR.
A - C	2x4	DRY	No.2	SPF
C - F	2x4	DRY	No.2	SPF
F - J	2x4	DRY	No.2	SPF
J - L	2x4	DRY	No.2	SPF
U - B	2x6	DRY	No.2	SPF
M - K	2x6	DRY	No.2	SPF
U - Q	2x6	DRY	No.2	SPF
Q - M	2x6	DRY	No.2	SPF
ALL WEBS EXCEPT	2x3	DRY	No.2	SPF

DRY: SEASONED LUMBER.

DESIGN CONSISTS OF 2 TRUSSES BUILT SEPARATELY THEN FASTENED TOGETHER AS FOLLOWS:

CHORDS	#ROWS	SURFACE SPACING (IN)	LOAD(PLF)
TOP CHORDS : (0.122"X3") SPIRAL NAILS			
A-C	1	12	TOP
C-F	1	12	SIDE(0.0)
F-J	1	12	SIDE(61.0)
J-L	1	12	SIDE(61.0)
U-B	2	12	TOP
M-K	2	12	TOP
BOTTOM CHORDS : (0.122"X3") SPIRAL NAILS			
U-Q	2	12	SIDE(183.1)
Q-M	2	12	SIDE(183.1)
WEBS : (0.122"X3") SPIRAL NAILS			
N-J	1	6	SIDE(51.7)
E-R	1	5	SIDE(364.0)
2x3	1	5	
O-I	1	6	
T-C	1	6	
T-B	1	6	
N-K	1	6	
D-S	1	6	
C-S	1	6	
D-R	1	6	
J-O	1	6	
I-P	1	6	
R-G	1	6	
G-P	1	6	

NAILS TO BE DRIVEN FROM ONE SIDE ONLY.

GIRDER NAILING ASSUMES NAILED HANGERS ARE FASTENED WITH MIN. 3-0 INCH NAILS.

TOP - COMPONENTS ARE LOADED FROM THE TOP AND MUST BE PLACED ON TOP EDGE OF ALL PLIES FOR THE LOAD TO BE TRANSFERRED TO EACH PLY.

SIDE - PLF SHOWN IS THE EQUIVALENT UDL APPLIED TO ONE SIDE THAT THE CORRESPONDING NAILING PATTERN SHALL BE CAPABLE OF TRANSFERING. REMAINING PLF MUST BE APPLIED ON THE OPPOSITE SIDE OR ON THE TOP.

PLATES (table is in inches)

JT	TYPE	PLATES	W	LEN	Y	X
B	TMWW-p	MT20	5.0	8.0	Edge	
C	TTWW+m	MT20	7.0	8.0	Edge	2.50
D	TMWW-t	MT20	5.0	6.0		
E	TMW+w	MT20	2.0	4.0		
F	TS-t	MT20	3.0	6.0		
G	TMWW-t	MT20	4.0	4.0		

DIMENSIONS, SUPPORTS AND LOADINGS SPECIFIED BY FABRICATOR TO BE VERIFIED BY BUILDING DESIGNER

BEARINGS

JT	FACTORED GROSS REACTION VERT	HORZ	MAXIMUM FACTORED GROSS REACTION DOWN	HORZ	UPLIFT	INPUT BRG IN-SX	REQRD BRG IN-SX
U	3904	0	3904	0	0	5-8	5-8
M	4531	0	4531	0	0	5-8	5-8

UNFACTORED REACTIONS

1ST LCASE MAX./MIN. COMPONENT REACTIONS

JT	COMBINED	SNOW	LIVE	PERM.LIVE	WIND	DEAD	SOIL
U	2889	1684 / 0	514 / 0	0 / 0	0 / 0	691 / 0	0 / 0
M	3342	1984 / 0	568 / 0	0 / 0	0 / 0	790 / 0	0 / 0

BEARING MATERIAL TO BE SPF NO.2 OR BETTER AT JOINT(S) U, M

BRACING

TOP CHORD TO BE SHEATHED OR MAX. PURLIN SPACING = 2.81 FT.
MAX. UNBRACED BOTTOM CHORD LENGTH = 10.00 FT OR RIGID CEILING DIRECTLY APPLIED.

ALL PITCH BREAKS AND PERIMETER CORNER JOINTS MUST BE LATERALLY RESTRAINED.

LOADING

TOTAL LOAD CASES: (4)

CHORDS

MEMB. FR-TO	MAX. FACTORED FORCE (LBS)	FACTORED VERT. LOAD LC1 (PLF) FROM	TO	MAX CSI (LC)	MAX. UNBRAC LENGTH
A-B	0 / 42	-102.1	-102.1	0.08 (1)	10.00
B-C	-4161 / 0	-102.1	-102.1	0.19 (1)	4.52
C-D	-6888 / 0	-102.1	-102.1	0.37 (1)	3.48
D-E	-9556 / 0	-102.1	-102.1	0.58 (1)	2.81
E-V	-9556 / 0	-102.1	-102.1	0.36 (1)	2.95
V-F	-9556 / 0	-102.1	-102.1	0.36 (1)	2.95
F-G	-9556 / 0	-102.1	-102.1	0.36 (1)	2.95
G-W	-8915 / 0	-102.1	-102.1	0.34 (1)	3.08
W-H	-8915 / 0	-102.1	-102.1	0.34 (1)	3.08
H-X	-8915 / 0	-102.1	-102.1	0.61 (1)	2.83
X-I	-8915 / 0	-102.1	-102.1	0.61 (1)	2.83
I-Y	-7085 / 0	-102.1	-102.1	0.48 (1)	3.31
Y-Z	-7085 / 0	-102.1	-102.1	0.48 (1)	3.31
Z-J	-7085 / 0	-102.1	-102.1	0.48 (1)	3.31
J-K	-4879 / 0	-102.1	-102.1	0.21 (1)	4.20
K-L	0 / 42	-102.1	-102.1	0.08 (1)	10.00
U-B	-3863 / 0	0.0	0.0	0.14 (1)	7.20
M-K	-4474 / 0	0.0	0.0	0.16 (1)	6.80
U-T	0 / 0	-38.5	-38.5	0.04 (2)	10.00
T-S	0 / 3297	-38.5	-38.5	0.25 (1)	10.00
S-R	0 / 6888	-38.5	-38.5	0.53 (1)	10.00
R-AA	0 / 9327	-38.5	-38.5	0.71 (1)	10.00
AA-AB	0 / 9327	-38.5	-38.5	0.71 (1)	10.00
AB-Q	0 / 9327	-38.5	-38.5	0.71 (1)	10.00
Q-P	0 / 9327	-38.5	-38.5	0.71 (1)	10.00
P-AC	0 / 7085	-38.5	-38.5	0.53 (1)	10.00
AC-O	0 / 7085	-38.5	-38.5	0.53 (1)	10.00
O-AD	0 / 3868	-38.5	-38.5	0.30 (1)	10.00
AD-AE	0 / 3868	-38.5	-38.5	0.30 (1)	10.00
AE-N	0 / 3868	-38.5	-38.5	0.30 (1)	10.00
N-AF	0 / 0	-38.5	-38.5	0.05 (3)	10.00
AF-M	0 / 0	-38.5	-38.5	0.05 (3)	10.00

WEBS

MEMB. FR-TO	MAX. FACTORED FORCE (LBS)	MAX CSI (LC)
T-C	-832 / 0	0.11 (1)
R-E	-393 / 0	0.05 (1)
N-J	-896 / 0	0.11 (1)
B-T	0 / 3479	0.43 (1)
N-K	0 / 4079	0.50 (1)
P-H	-508 / 0	0.06 (1)
S-D	-2765 / 0	0.35 (1)
O-I	-2376 / 0	0.30 (1)
C-S	0 / 4647	0.58 (1)
D-R	0 / 3492	0.43 (1)
O-J	0 / 4163	0.52 (1)
P-I	0 / 2396	0.30 (1)
R-G	0 / 462	0.06 (1)
G-P	-832 / 0	0.13 (1)

FACTORED CONCENTRATED LOADS (LBS)

JT	LOC.	LC1	MAX-	MAX+	FACE	DIR.	TYPE	HEEL	CONN.
H	16-9-12	-123	-123	—	FRONT	VERT	TOTAL	—	—
I	20-9-12	-123	-123	—	FRONT	VERT	TOTAL	—	—
J	25-6-11	-50	-56	—	FRONT	VERT	DEAD	—	—
J	25-6-11	-331	-331	—	FRONT	VERT	TOTAL	—	—

DESIGN CRITERIA

*** SPECIAL LOADS ANALYSIS ***
GEOMETRY AND/OR BASIC LOADS CHANGED BY USER.
LOADS WERE DERIVED FROM USER INPUT NO FURTHER MODIFICATIONS WERE MADE

SPECIFIED LOADS:

TOP CH.	LL	=	29.0	PSF
	DL	=	6.0	PSF
BOT CH.	LL	=	10.5	PSF
	DL	=	7.0	PSF
TOTAL LOAD		=	52.5	PSF

SPACING = 24.0 IN. C/C

LOADING IN FLAT SECTION BASED ON A SLOPE OF 6.00/12

*** NON STANDARD GIRDER ***
ADDT'L USER-DEFINED LOADS APPLIED TO ALL LOAD CASES.

THIS TRUSS IS DESIGNED FOR RESIDENTIAL OR SMALL BUILDING REQUIREMENTS OF PART 9, NBCC 2015

THIS DESIGN COMPLIES WITH:
- PART 9 OF BCBC 2018
- CSA 086-14
- TPIC 2014

(55 % OF 37.6 P.S.F. G.S.L. PLUS 8.4 P.S.F. RAIN LOAD) EQUALS 29.0 P.S.F. SPECIFIED ROOF LIVE LOAD

ALLOWABLE DEFL.(LL)= L/360 (0.97")
CALCULATED VERT. DEFL.(LL)= L/ 999 (0.22")
ALLOWABLE DEFL.(TL)= L/360 (0.97")
CALCULATED VERT. DEFL.(TL)= L/ 961 (0.36")

CSI: TC=0.61/1.00 (H-I:1) , BC=0.71/1.00 (P-R:1) , WB=0.58/1.00 (C-S:1) , SSI=0.17/1.00 (I-J:1)

DOL LUMBER=1.00 NAIL=1.00 LS BEND=1.00 COMP=1.00 SHEAR=1.00 TENS= 1.00

COMPANION LIVE LOAD FACTOR = 1.00

TRUSS PLATE MANUFACTURER IS NOT RESPONSIBLE FOR QUALITY CONTROL IN THE TRUSS MANUFACTURING PLANT.

NAIL VALUES

PLATE	GRIP(DRY) (PSI) MAX	MIN	SHEAR (PLI) MAX	MIN	SECTION (PLI) MAX	MIN
MT20	650	371	1747	788	1987	1873

PLATE PLACEMENT TOL. = 0.250 inches

PLATE ROTATION TOL. = 5.0 Deg.

JSI GRIP= 0.89 (S) (INPUT = 0.90)
JSI METAL= 0.91 (Q) (INPUT = 1.00)

LICENSED PROFESSIONAL ENGINEER
02/12/19
H. J. G ALVES
100009827
PROVINCE OF ONTARIO

DWG NO. TAM T1703211
STRUCTURAL
COMPONENT ONLY
1/2

CONTINUED ON PAGE 2

JOB NAME	TRUSS NAME	QUANTITY	PLY	JOB DESC. Preston 3	DRWG NO.
200444-401157	T1Z1	1	2	TRUSS DESC.	

Tamarack Roof Truss, Burlington

Version 8.230 S Nov 17 2016 MiTek Industries, Inc. Tue Feb 12 08:53:26 2019 Page 2
ID:MI06BFa0GpW8aLLBiY39yQvOCh?-TGkF8Gt5caz?K_VC_8rtsgJvRlnrIiYfrrv74GzlxqdJ

PLATES (table is in inches)

JT	TYPE	PLATES	W	LEN	Y	X
H	TMW+w	MT20	2.0	4.0		
I	TMWW-t	MT20	5.0	6.0		
J	TTWW+m	MT20	7.0	8.0	Edge	2.50
K	TMVW-p	MT20	5.0	8.0	Edge	
M	BMV1+p	MT20	3.0	6.0		
N, O, S, T						
N	BMWW-t	MT20	5.0	6.0	2.50	2.25
P	BMWWW-t	MT20	7.0	8.0	4.25	4.00
Q	BS-t	MT20	5.0	6.0		
R	BMWWW-t	MT20	7.0	8.0	4.25	4.00
U	BMV1+p	MT20	3.0	6.0		

Edge - INDICATES REFERENCE CORNER OF PLATE TOUCHES EDGE OF CHORD.

FACTORED CONCENTRATED LOADS (LBS)

JT	LOC.	LC1	MAX-	MAX+	FACE	DIR.	TYPE	HEEL	CONN.
J	25-6-11	-285	-285	—	FRONT	VERT	SNOW	—	—
O	20-9-12	-55	-70	—	FRONT	VERT	TOTAL	—	—
P	16-9-12	-55	-70	—	FRONT	VERT	TOTAL	—	—
R	12-4-8	-2097	-2097	—	FRONT	VERT	TOTAL	—	—
V	12-9-12	-123	-123	—	FRONT	VERT	TOTAL	—	—
W	14-9-12	-123	-123	—	FRONT	VERT	TOTAL	—	—
X	16-9-12	-123	-123	—	FRONT	VERT	TOTAL	—	—
Y	22-9-12	-123	-123	—	FRONT	VERT	TOTAL	—	—
Z	24-9-12	-136	-136	—	FRONT	VERT	TOTAL	—	—
AA	12-9-12	-55	-70	—	FRONT	VERT	TOTAL	—	—
AB	14-9-12	-55	-70	—	FRONT	VERT	TOTAL	—	—
AC	16-9-12	-55	-70	—	FRONT	VERT	TOTAL	—	—
AD	22-9-12	-55	-70	—	FRONT	VERT	TOTAL	—	—
AE	24-9-12	-55	-70	—	FRONT	VERT	TOTAL	—	—
AF	26-9-12	-55	-70	—	FRONT	VERT	TOTAL	—	—

RECEIVED
AUG 23 2019
TOWN OF OAKVILLE
PLANNING & BUILDING

LICENSED PROFESSIONAL ENGINEER
02/12/19
H. J. G ALVES
100000024
PROVINCE OF ONTARIO

DWG NO. TAM T1903211
STRUCTURAL
COMPONENT ONLY 2/2

JOB NAME	TRUSS NAME	QUANTITY	PLY	JOB DESC. Preston 3	DRWG NO.
200444-401156	T2	1	1	TRUSS DESC.	**T2**

Tamarack Roof Truss, Burlington

Version 8.230 S Nov 17 2018 MiTek Industries, Inc. Tue Feb 5 20:29:07 2019 Page 1
ID:4xNdf4mUPyxd3LURX25ZQKyOFG0-8y0jPskyogTW4uNmoAhSyvd2CEaD7mAJdT8?BWzo5IQ

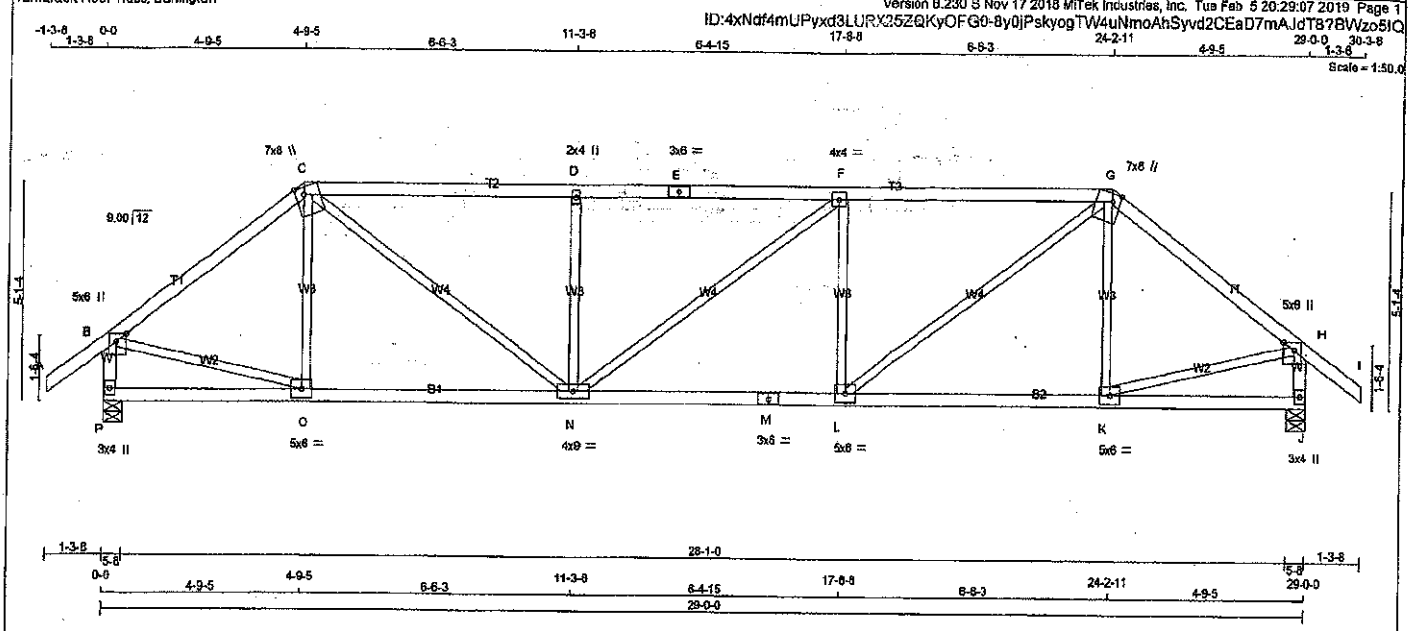

TOTAL WEIGHT = 117 lb [M]

LUMBER
N. L. G. A. RULES

CHORDS	SIZE		LUMBER	DESCR.
A - C	2x4	DRY	No.2	SPF
C - E	2x4	DRY	No.2	SPF
E - G	2x4	DRY	No.2	SPF
G - I	2x4	DRY	No.2	SPF
P - B	2x4	DRY	No.2	SPF
J - H	2x4	DRY	No.2	SPF
P - M	2x4	DRY	No.2	SPF
M - J	2x4	DRY	No.2	SPF
ALL WEBS EXCEPT	2x3	DRY	No.2	SPF

DRY: SEASONED LUMBER.

PLATES (table is in inches)

JT	TYPE	PLATES	W	LEN	Y	X
B	TMWW+p	MT20	5.0	6.0	Edge	3.00
C	TTWW+m	MT20	7.0	8.0	Edge	2.50
D	TMW+w	MT20	2.0	4.0		
E	TS-t	MT20	3.0	6.0		
F	TMWW-t	MT20	4.0	4.0		
G	TTWW+m	MT20	7.0	8.0	Edge	2.50
H	TMWW+p	MT20	5.0	6.0	Edge	3.00
J	BMV1+p	MT20	3.0	4.0		
K, L, O						
K	BMWW-t	MT20	5.0	6.0		
M	BS-t	MT20	3.0	6.0		
N	BMWWW-t	MT20	4.0	9.0		
P	BMV1+p	MT20	3.0	4.0		

Edge - INDICATES REFERENCE CORNER OF PLATE TOUCHES EDGE OF CHORD.

DIMENSIONS, SUPPORTS AND LOADINGS SPECIFIED BY FABRICATOR TO BE VERIFIED BY BUILDING DESIGNER

BEARINGS

JT	FACTORED GROSS REACTION VERT	HORZ	MAXIMUM FACTORED GROSS REACTION DOWN	HORZ	UPLIFT	INPUT BRG IN-SX	REQRD BRG IN-SX
P	2180	0	2180	0	0	5-8	5-8
J	2180	0	2180	0	0	5-8	5-8

UNFACTORED REACTIONS

1ST LCASE MAX./MIN. COMPONENT REACTIONS

JT	COMBINED	SNOW	LIVE	PERM.LIVE	WIND	DEAD	SOIL
P	1620	922 / 0	305 / 0	0 / 0	0 / 0	394 / 0	0 / 0
J	1620	922 / 0	305 / 0	0 / 0	0 / 0	394 / 0	0 / 0

BEARING MATERIAL TO BE SPF NO.2 OR BETTER AT JOINT(S) P, J

BRACING
TOP CHORD TO BE SHEATHED OR MAX. PURLIN SPACING = 3.08 FT.
MAX. UNBRACED BOTTOM CHORD LENGTH = 10.00 FT OR RIGID CEILING DIRECTLY APPLIED.

ALL PITCH BREAKS AND PERIMETER CORNER JOINTS MUST BE LATERALLY RESTRAINED.

LOADING
TOTAL LOAD CASES: (4)

CHORDS

MEMB. FR-TO	MAX. FACTORED FORCE (LBS)	FACTORED VERT. LOAD LC1 (PLF) FROM	TO	MAX CSI (LC)	MAX. UNBRAC LENGTH
A- B	0 / 42	-102.1	-102.1	0.14 (1)	10.00
B- C	-2165 / 0	-102.1	-102.1	0.54 (1)	4.06
C- D	-3030 / 0	-102.1	-102.1	0.92 (1)	3.09
D- E	-3030 / 0	-102.1	-102.1	0.92 (1)	3.08
E- F	-3030 / 0	-102.1	-102.1	0.92 (1)	3.08
F- G	-3031 / 0	-102.1	-102.1	0.93 (1)	3.08
G- H	-2165 / 0	-102.1	-102.1	0.54 (1)	4.06
H- I	0 / 42	-102.1	-102.1	0.14 (1)	10.00
P- B	-2111 / 0	0.0	0.0	0.22 (1)	5.83
J- H	-2110 / 0	0.0	0.0	0.22 (1)	5.83
P- O	0 / 0	-38.5	-38.5	0.23 (3)	10.00
O- N	0 / 1725	-38.5	-38.5	0.45 (2)	10.00
N- M	0 / 3031	-38.5	-38.5	0.65 (1)	10.00
M- L	0 / 3031	-38.5	-38.5	0.65 (1)	10.00
L- K	0 / 1725	-38.5	-38.5	0.46 (2)	10.00
K- J	0 / 0	-38.5	-38.5	0.23 (3)	10.00

WEBS

MEMB. FR-TO	MAX. FACTORED FORCE (LBS)	MAX CSI (LC)
O- C	-179 / 111	0.07 (1)
C- N	0 / 1820	0.36 (1)
N- D	-714 / 0	0.27 (1)
N- F	-2 / 0	0.00 (1)
L- F	-714 / 0	0.27 (1)
L- G	0 / 1622	0.36 (1)
K- G	-180 / 111	0.07 (1)
B- O	0 / 1780	0.40 (1)
K- H	0 / 1780	0.40 (1)

LICENSED PROFESSIONAL ENGINEER
02/05/19
H. J. G. ALVES
100090124
PROVINCE OF ONTARIO

DESIGN CRITERIA

SPECIFIED LOADS:

TOP CH.	LL =	29.0	PSF
	DL =	6.0	PSF
BOT CH.	LL =	10.5	PSF
	DL =	7.0	PSF
TOTAL LOAD	=	52.5	PSF

SPACING = 24.0 IN. C/C

LOADING IN FLAT SECTION BASED ON A SLOPE OF 6.00/12

THIS TRUSS IS DESIGNED FOR RESIDENTIAL OR SMALL BUILDING REQUIREMENTS OF PART 9, NBCC 2015

THIS DESIGN COMPLIES WITH:
- PART 9 OF BCBC 2018
- CSA 086-14
- TPIC 2014

(55 % OF 37.6 P.S.F. G.S.L. PLUS 8.4 P.S.F. RAIN LOAD) EQUALS 29.0 P.S.F. SPECIFIED ROOF LIVE LOAD .

ALLOWABLE DEFL.(LL)= L/360 (0.97")
CALCULATED VERT. DEFL.(LL) = L/ 999 (0.15")
ALLOWABLE DEFL.(TL)= L/360 (0.97")
CALCULATED VERT. DEFL.(TL) = L/ 999 (0.26")

CSI: TC=0.93/1.00 (F-G:1) , BC=0.65/1.00 (L-N:1) , WB=0.40/1.00 (B-O:1) , SSI=0.31/1.00 (F-G:1)

DOL LUMBER=1.00 NAIL=1.00 LS BEND=1.10 COMP=1.10 SHEAR=1.10 TENS= 1.10

COMPANION LIVE LOAD FACTOR = 1.00

TRUSS PLATE MANUFACTURER IS NOT RESPONSIBLE FOR QUALITY CONTROL IN THE TRUSS MANUFACTURING PLANT .

NAIL VALUES

PLATE	GRIP(DRY) (PSI) MAX	MIN	SHEAR (PLI) MAX	MIN	SECTION (PLI) MAX	MIN
MT20	650	371	1747	798	1987	1873

PLATE PLACEMENT TOL. = 0.250 inches

PLATE ROTATION TOL. = 5.0 Deg.

JSI GRIP= 0.90 (B) (INPUT = 0.90)
JSI METAL= 0.95 (M) (INPUT = 1.00)

DWG NO. TAM 17902709
STRUCTURAL
COMPONENT ONLY

JOB NAME	TRUSS NAME	QUANTITY	PLY	JOB DESC.	DRWG NO.
200444-401156	T3	1	1	Preston 3 TRUSS DESC.	T3

Tamarack Roof Truss, Burlington

Version 8.230 S Nov 17 2018 MiTek Industries, Inc. Tue Feb 5 20:29:07 2019 Page 1
ID:4xNdf4mUPyxd3LURX25ZQKyOFG0-8y0jPskyogTW4uNmoAhSyvd55EcK7gfJdT8?BWzo5IQ

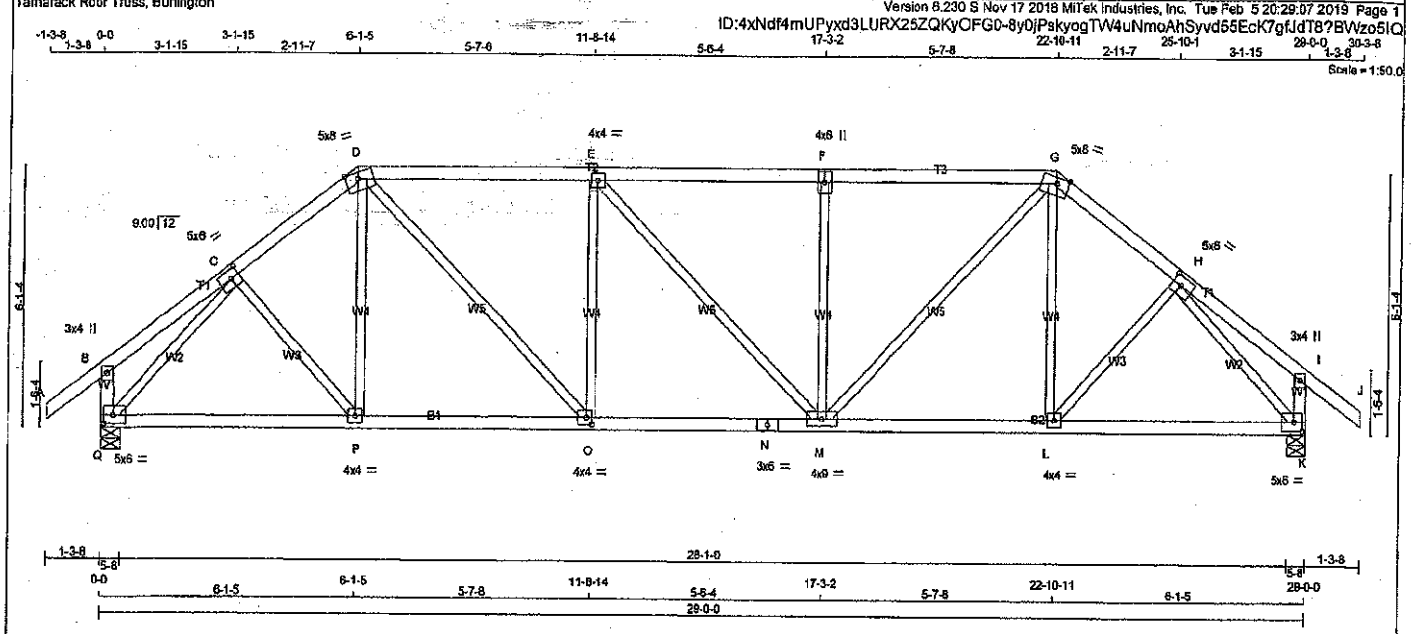

LUMBER
N. L. G. A. RULES

CHORDS	SIZE		LUMBER	DESCR.
A - D	2x4	DRY	No.2	SPF
D - F	2x4	DRY	No.2	SPF
F - G	2x4	DRY	No.2	SPF
G - J	2x4	DRY	No.2	SPF
Q - B	2x4	DRY	No.2	SPF
K - I	2x4	DRY	No.2	SPF
Q - N	2x4	DRY	No.2	SPF
N - K	2x4	DRY	No.2	SPF
ALL WEBS EXCEPT	2x3	DRY	No.2	SPF

DRY: SEASONED LUMBER.

PLATES (table is in inches)

JT	TYPE	PLATES	W	LEN	Y	X
B	TMV+p	MT20	3.0	4.0		
C	TMWW-t	MT20	5.0	6.0	2.50	2.50
D	TTWW-m	MT20	5.0	8.0	Edge	3.50
E	TMWW-t	MT20	4.0	4.0		
F	TSW+t	MT20	4.0	6.0		
G	TTWW-m	MT20	5.0	8.0	Edge	3.50
H	TMWW-t	MT20	5.0	6.0	2.50	2.50
I	TMV+p	MT20	3.0	4.0		
K	BMVW1-t	MT20	5.0	6.0	2.50	2.50
L	BMWW-t	MT20	4.0	4.0		
M	BMWWW-t	MT20	4.0	9.0		
N	BS-t	MT20	3.0	6.0		
O	BMWW-t	MT20	4.0	4.0	2.00	1.50
P	BMWW-t	MT20	4.0	4.0		
Q	BMVW1-t	MT20	5.0	6.0	2.50	2.50

Edge - INDICATES REFERENCE CORNER OF PLATE TOUCHES EDGE OF CHORD.

DIMENSIONS, SUPPORTS AND LOADINGS SPECIFIED BY FABRICATOR TO BE VERIFIED BY BUILDING DESIGNER

BEARINGS

JT	FACTORED GROSS REACTION VERT	HORZ	MAXIMUM FACTORED GROSS REACTION DOWN	HORZ	UPLIFT	INPUT BRG IN-SX	REQRD BRG IN-SX
Q	2180	0	2180	0	0	5-8	5-8
K	2180	0	2180	0	0	5-8	5-8

UNFACTORED REACTIONS
1ST LCASE MAX./MIN. COMPONENT REACTIONS

JT	COMBINED	SNOW	LIVE	PERM.LIVE	WIND	DEAD	SOIL
Q	1620	922 / 0	305 / 0	0 / 0	0 / 0	394 / 0	0 / 0
K	1620	922 / 0	305 / 0	0 / 0	0 / 0	394 / 0	0 / 0

BEARING MATERIAL TO BE SPF NO.2 OR BETTER AT JOINT(S) Q, K

BRACING
TOP CHORD TO BE SHEATHED OR MAX. PURLIN SPACING = 3.50 FT.
MAX. UNBRACED BOTTOM CHORD LENGTH = 10.00 FT OR RIGID CEILING DIRECTLY APPLIED.

ALL PITCH BREAKS AND PERIMETER CORNER JOINTS MUST BE LATERALLY RESTRAINED.

LOADING
TOTAL LOAD CASES: (4)

CHORDS

MEMB. FR-TO	MAX. FACTORED FORCE (LBS)	FACTORED VERT. LOAD LC1 (PLF) FROM	TO	MAX CSI (LC)	MAX. UNBRAC LENGTH
A- B	0 / 42	-102.1	-102.1	0.14 (1)	10.00
B- C	0 / 18	-102.1	-102.1	0.12 (1)	10.00
C- D	-2175 / 0	-102.1	-102.1	0.18 (1)	4.46
D- E	-2530 / 0	-102.1	-102.1	0.71 (1)	3.53
E- F	-2464 / 0	-102.1	-102.1	0.70 (1)	3.56
F- G	-2464 / 0	-102.1	-102.1	0.74 (1)	3.50
G- H	-2175 / 0	-102.1	-102.1	0.18 (1)	4.46
H- I	0 / 18	-102.1	-102.1	0.12 (1)	10.00
I- J	0 / 42	-102.1	-102.1	0.14 (1)	10.00
Q- B	-266 / 0	0.0	0.0	0.03 (1)	7.81
K- I	-266 / 0	0.0	0.0	0.03 (1)	7.81
Q- P	0 / 1569	-38.5	-38.5	0.46 (2)	10.00
P- O	0 / 1723	-38.5	-38.5	0.49 (2)	10.00
O- N	0 / 2530	-38.5	-38.5	0.61 (1)	10.00
N- M	0 / 2530	-38.5	-38.5	0.51 (1)	10.00
M- L	0 / 1723	-38.5	-38.5	0.49 (2)	10.00
L- K	0 / 1569	-38.5	-38.5	0.46 (2)	10.00

WEBS

MEMB. FR-TO	MAX. FACTORED FORCE (LBS)	MAX CSI (LC)
C- P	0 / 212	0.05 (2)
P- D	0 / 202	0.05 (3)
D- O	0 / 1157	0.26 (1)
O- E	-628 / 0	0.37 (1)
E- M	-96 / 0	0.13 (1)
M- F	-492 / 0	0.29 (1)
M- G	0 / 1063	0.24 (1)
L- G	0 / 202	0.05 (3)
L- H	0 / 212	0.05 (2)
Q- C	-2413 / 0	0.62 (1)
H- K	-2413 / 0	0.62 (1)

DESIGN CRITERIA

SPECIFIED LOADS:

TOP CH.	LL =	29.0	PSF
	DL =	6.0	PSF
BOT CH.	LL =	10.5	PSF
	DL =	7.0	PSF
TOTAL LOAD	=	52.5	PSF

SPACING = 24.0 IN. C/C

LOADING IN FLAT SECTION BASED ON A SLOPE OF 6.00/12

THIS TRUSS IS DESIGNED FOR RESIDENTIAL OR SMALL BUILDING REQUIREMENTS OF PART 9, NBCC 2015

THIS DESIGN COMPLIES WITH:
- PART 9 OF BCBC 2018
- CSA 086-14
- TPIC 2014

(55 % OF 37.6 P.S.F. G.S.L. PLUS 8.4 P.S.F. RAIN LOAD) EQUALS 29.0 P.S.F. SPECIFIED ROOF LIVE LOAD

ALLOWABLE DEFL.(LL)= L/360 (0.97")
CALCULATED VERT. DEFL.(LL) = L/ 999 (0.11")
ALLOWABLE DEFL.(TL)= L/360 (0.97")
CALCULATED VERT. DEFL.(TL) = L/ 999 (0.19")

CSI: TC=0.74/1.00 (F-G:1) , BC=0.51/1.00 (M-Q:1) , WB=0.82/1.00 (H-K:1) , SSI=0.26/1.00 (D-E:1)

DOL LUMBER=1.00 NAIL=1.00 LS BEND=1.10 COMP=1.10 SHEAR=1.10 TENS= 1.10

COMPANION LIVE LOAD FACTOR = 1.00

TRUSS PLATE MANUFACTURER IS NOT RESPONSIBLE FOR QUALITY CONTROL IN THE TRUSS MANUFACTURING PLANT.

NAIL VALUES

PLATE	GRIP(DRY) (PSI) MAX	MIN	SHEAR (PLI) MAX	MIN	SECTION (PLI) MAX	MIN
MT20	850	371	1747	768	1987	1873

PLATE PLACEMENT TOL. = 0.250 inches

PLATE ROTATION TOL. = 5.0 Deg.

JSI GRIP= 0.88 (K) (INPUT = 0.90)
JSI METAL= 0.78 (N) (INPUT = 1.00)

LICENSED PROFESSIONAL ENGINEER
02/05/19
H. J. G. ALVES
100009024
PROVINCE OF ONTARIO

DWG NO. TAM 1720 2710
STRUCTURAL
COMPONENT ONLY

JOB NAME	TRUSS NAME	QUANTITY	PLY	JOB DESC. Preston 3	DRWG NO.
200444-401156	T4	1	1	TRUSS DESC.	T4

Tamarack Roof Truss, Burlington

Version 8.230 S Nov 17 2018 MiTek Industries, Inc. Tue Feb 5 20:29:08 2019 Page 1
ID:4xNdf4mUPyxd3LURX25ZQKyOFG0-d9a5cBlaY_bNi2yzMlChU79FSewus7kSs7tZjzzo5IP

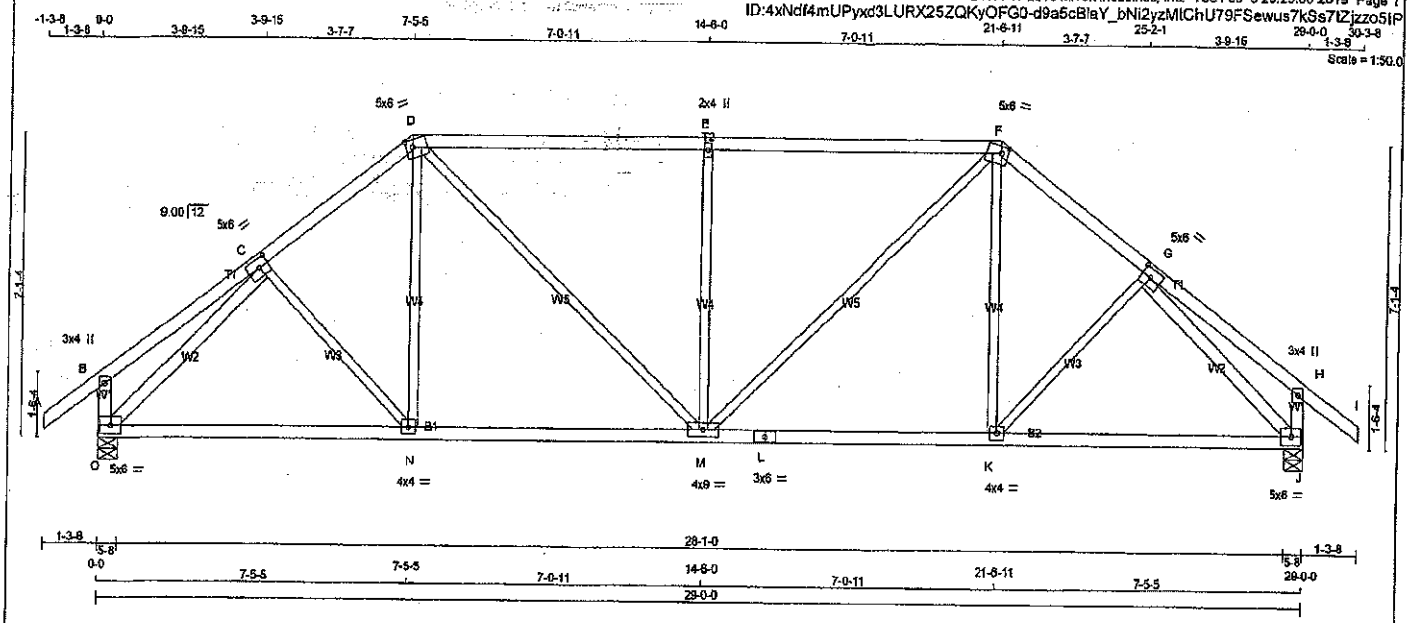

TOTAL WEIGHT = 128 lb (MiTek)

LUMBER
N. L. G. A. RULES

CHORDS	SIZE		LUMBER	DESCR.
A - D	2x4	DRY	No.2	SPF
D - F	2x4	DRY	No.2	SPF
F - I	2x4	DRY	No.2	SPF
O - B	2x4	DRY	No.2	SPF
J - H	2x4	DRY	No.2	SPF
O - L	2x4	DRY	No.2	SPF
L - J	2x4	DRY	No.2	SPF
ALL WEBS EXCEPT	2x3	DRY	No.2	SPF
O - C	2x4	DRY	No.2	SPF
G - J	2x4	DRY	No.2	SPF

DRY: SEASONED LUMBER.

PLATES (table is in inches)

JT	TYPE	PLATES	W	LEN	Y	X
B	TMV+p	MT20	3.0	4.0		
C	TMWW-t	MT20	5.0	8.0	2.50	2.75
D	TTWW-m	MT20	5.0	8.0	2.00	2.00
E	TMW+w	MT20	2.0	4.0		
F	TTWW-m	MT20	5.0	8.0	2.00	2.00
G	TMWW-l	MT20	5.0	8.0	2.50	2.75
H	TMV+p	MT20	3.0	4.0		
J	BMVW1-t	MT20	5.0	6.0		
K	BMWW-t	MT20	4.0	4.0		
L	BS-t	MT20	3.0	6.0		
M	BMWWW-t	MT20	4.0	9.0		
N	BMWW-t	MT20	4.0	4.0		
O	BMVW1-t	MT20	5.0	6.0		

DIMENSIONS, SUPPORTS AND LOADINGS SPECIFIED BY FABRICATOR TO BE VERIFIED BY BUILDING DESIGNER

BEARINGS

JT	FACTORED GROSS REACTION VERT	HORZ	MAXIMUM FACTORED GROSS REACTION DOWN	HORZ	UPLIFT	INPUT BRG IN-SX	REQRD BRG IN-SX
O	2180	0	2180	0	0	5-8	5-8
J	2180	0	2180	0	0	5-8	5-8

UNFACTORED REACTIONS

1ST LCASE — MAX./MIN. COMPONENT REACTIONS

JT	COMBINED	SNOW	LIVE	PERM.LIVE	WIND	DEAD	SOIL
O	1620	922 / 0	305 / 0	0 / 0	0 / 0	394 / 0	0 / 0
J	1620	922 / 0	305 / 0	0 / 0	0 / 0	394 / 0	0 / 0

BEARING MATERIAL TO BE SPF NO.2 OR BETTER AT JOINT(S) O, J

BRACING
TOP CHORD TO BE SHEATHED OR MAX. PURLIN SPACING = 3.54 FT.
MAX. UNBRACED BOTTOM CHORD LENGTH = 10.00 FT OR RIGID CEILING DIRECTLY APPLIED.

ALL PITCH BREAKS AND PERIMETER CORNER JOINTS MUST BE LATERALLY RESTRAINED.

LOADING
TOTAL LOAD CASES: (4)

CHORDS

MEMB. FR-TO	MAX. FACTORED FORCE (LBS)	FACTORED VERT. LOAD (PLF) FROM	TO	LC1	MAX CSI (LC)	MAX. UNBRAC LENGTH
A- B	0 / 42	-102.1	-102.1	0.14 (1)	10.00	
B- C	0 / 25	-102.1	-102.1	0.21 (1)	10.00	
C- D	-2143 / 0	-102.1	-102.1	0.22 (1)	4.47	
D- E	-2276 / 0	-102.1	-102.1	0.77 (1)	3.54	
E- F	-2276 / 0	-102.1	-102.1	0.77 (1)	3.54	
F- G	-2143 / 0	-102.1	-102.1	0.22 (1)	4.47	
G- H	0 / 25	-102.1	-102.1	0.21 (1)	10.00	
H- I	0 / 42	-102.1	-102.1	0.14 (1)	10.00	
O- B	-288 / 0	0.0	0.0	0.03 (1)	7.81	
J- H	-288 / 0	0.0	0.0	0.03 (1)	7.81	
O- N	0 / 1655	-38.5	-38.5	0.61 (2)	10.00	
N- M	0 / 1695	-38.5	-38.5	0.62 (2)	10.00	
M- L	0 / 1695	-38.5	-38.5	0.62 (2)	10.00	
L- K	0 / 1695	-38.5	-38.5	0.62 (2)	10.00	
K- J	0 / 1655	-38.5	-38.5	0.61 (2)	10.00	

WEBS

MEMB. FR-TO	MAX. FACTORED FORCE (LBS)	MAX CSI (LC)
C- N	0 / 129	0.03 (3)
N- D	0 / 343	0.08 (2)
D- M	0 / 807	0.18 (1)
M- E	-884 / 0	0.77 (1)
M- F	0 / 807	0.18 (1)
K- F	0 / 343	0.08 (2)
K- G	0 / 129	0.03 (3)
O- C	-2427 / 0	0.83 (1)
G- J	-2427 / 0	0.83 (1)

DESIGN CRITERIA

SPECIFIED LOADS:

TOP CH.	LL	=	29.0	PSF
	DL	=	6.0	PSF
BOT CH.	LL	=	10.5	PSF
	DL	=	7.0	PSF
TOTAL LOAD		=	52.5	PSF

SPACING = 24.0 IN. C/C

LOADING IN FLAT SECTION BASED ON A SLOPE OF 6.00/12

THIS TRUSS IS DESIGNED FOR RESIDENTIAL OR SMALL BUILDING REQUIREMENTS OF PART 9, NBCC 2015

THIS DESIGN COMPLIES WITH:
- PART 9 OF BCBC 2018
- CSA 086-14
- TPIC 2014

(55 % OF 37.6 P.S.F. G.S.L. PLUS 8.4 P.S.F. RAIN LOAD) EQUALS 29.0 P.S.F. SPECIFIED ROOF LIVE LOAD

ALLOWABLE DEFL.(LL)= L/360 (0.97")
CALCULATED VERT. DEFL.(LL) = L/ 999 (0.13")
ALLOWABLE DEFL.(TL)= L/360 (0.97")
CALCULATED VERT. DEFL.(TL) = L/ 899 (0.22")

CSI: TC=0.77/1.00 (E-F:1) , BC=0.62/1.00 (K-M:2) , WB=0.83/1.00 (G-J:1) , SSI=0.35/1.00 (E-F:1)

DOL LUMBER=1.00 NAIL=1.00 LS BEND=1.10 COMP=1.10 SHEAR=1.10 TENS= 1.10

COMPANION LIVE LOAD FACTOR = 1.00

AUTOSOLVE HEELS OFF

TRUSS PLATE MANUFACTURER IS NOT RESPONSIBLE FOR QUALITY CONTROL IN THE TRUSS MANUFACTURING PLANT.

NAIL VALUES

PLATE	GRIP(DRY) (PSI) MAX	MIN	SHEAR (PLI) MAX	MIN	SECTION (PLI) MAX	MIN
MT20	650	371	1747	788	1987	1873

PLATE PLACEMENT TOL. = 0.250 inches

PLATE ROTATION TOL. = 5.0 Deg.

JSI GRIP= 0.89 (G) (INPUT = 0.90)
JSI METAL= 0.54 (C) (INPUT = 1.00)

AUG 2 5 2020
TOWN OF CALEDON
BUILDING SECTION
FILE

LICENSED PROFESSIONAL ENGINEER
02/05/19
H. J. G ALVES
100009029
PROVINCE OF ONTARIO

DWG NO. TAM 1790 2711
STRUCTURAL
COMPONENT ONLY

JOB NAME	TRUSS NAME	QUANTITY	PLY	JOB DESC. Preston 3	DRWG NO.
200444-401156	T5	1	1	TRUSS DESC.	**T5**

Tamarack Roof Truss, Burlington

Version 8.230 S Nov 17 2018 MiTek Industries, Inc. Tue Feb 5 20:29:09 2019 Page 1
ID:4xNdf4mUPyxd3LURX25ZQKyOFG0-5L7TqXlCJIjEKCX9wajw1KiVf2JPbYrb4nd6FPzo5tO

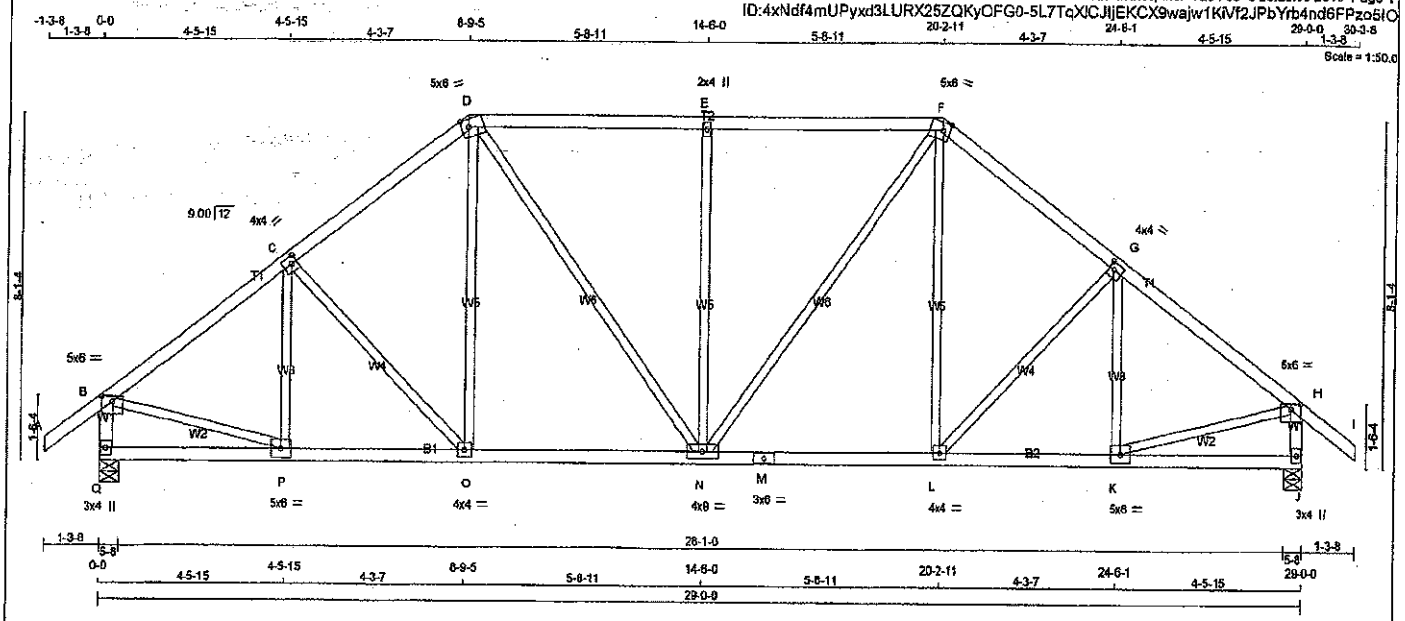

TOTAL WEIGHT = 135 lb
[M][F]

LUMBER
N. L. G. A. RULES

CHORDS	SIZE		LUMBER	DESCR.
A - D	2x4	DRY	No.2	SPF
D - F	2x4	DRY	No.2	SPF
F - I	2x4	DRY	No.2	SPF
Q - B	2x4	DRY	No.2	SPF
J - H	2x4	DRY	No.2	SPF
Q - M	2x4	DRY	No.2	SPF
M - J	2x4	DRY	No.2	SPF
ALL WEBS EXCEPT	2x3	DRY	No.2	SPF

DRY: SEASONED LUMBER.

PLATES (table is in inches)

JT	TYPE	PLATES	W	LEN	Y	X
B	TMWW-p	MT20	5.0	6.0	1.50	3.00
C	TMWW-t	MT20	4.0	4.0	2.00	1.50
D	TTWW-m	MT20	5.0	6.0	Edge	2.00
E	TMW+w	MT20	2.0	4.0		
F	TTWW-m	MT20	5.0	6.0	Edge	2.00
G	TMWW-t	MT20	4.0	4.0	2.00	1.50
H	TMVW-p	MT20	5.0	6.0	1.50	3.00
J	BMV1+p	MT20	3.0	4.0		
K	BMWW-t	MT20	5.0	6.0		
L	BMWW-t	MT20	4.0	4.0		
M	BS-t	MT20	3.0	6.0		
N	BMWWW-t	MT20	4.0	9.0		
O	BMWW-t	MT20	4.0	4.0		
P	BMWW-t	MT20	5.0	6.0		
Q	BMV1+p	MT20	3.0	4.0		

Edge - INDICATES REFERENCE CORNER OF PLATE TOUCHES EDGE OF CHORD.

DIMENSIONS, SUPPORTS AND LOADINGS SPECIFIED BY FABRICATOR TO BE VERIFIED BY BUILDING DESIGNER

BEARINGS

JT	FACTORED GROSS REACTION VERT	HORZ	MAXIMUM FACTORED GROSS REACTION DOWN	HORZ	UPLIFT	INPUT BRG IN-SX	REQRD BRG IN-SX
Q	2180	0	2180	0	0	5-8	5-8
J	2180	0	2180	0	0	5-8	5-8

UNFACTORED REACTIONS

JT	1ST LCASE COMBINED	MAX./MIN. COMPONENT REACTIONS SNOW	LIVE	PERM.LIVE	WIND	DEAD	SOIL
Q	1620	922 / 0	305 / 0	0 / 0	0 / 0	394 / 0	0 / 0
J	1620	922 / 0	305 / 0	0 / 0	0 / 0	394 / 0	0 / 0

BEARING MATERIAL TO BE SPF NO.2 OR BETTER AT JOINT(S) Q, J

BRACING
TOP CHORD TO BE SHEATHED OR MAX. PURLIN SPACING = 4.29 FT.
MAX. UNBRACED BOTTOM CHORD LENGTH = 10.00 FT OR RIGID CEILING DIRECTLY APPLIED.

ALL PITCH BREAKS AND PERIMETER CORNER JOINTS MUST BE LATERALLY RESTRAINED.

LOADING
TOTAL LOAD CASES: (4)

CHORDS

MEMB. FR-TO	MAX. FACTORED FORCE (LBS)	FACTORED VERT. LOAD (PLF) FROM	TO	LC1	MAX CSI (LC)	MAX. UNBRAC LENGTH
A- B	0 / 42	-102.1	-102.1	0.14 (1)	10.00	
B- C	-2168 / 0	-102.1	-102.1	0.31 (1)	4.35	
C- D	-2046 / 0	-102.1	-102.1	0.30 (1)	4.46	
D- E	-1956 / 0	-102.1	-102.1	0.48 (1)	4.29	
E- F	-1956 / 0	-102.1	-102.1	0.48 (1)	4.29	
F- G	-2046 / 0	-102.1	-102.1	0.30 (1)	4.46	
G- H	-2168 / 0	-102.1	-102.1	0.31 (1)	4.35	
H- I	0 / 42	-102.1	-102.1	0.14 (1)	10.00	
Q- B	-2105 / 0	0.0	0.0	0.22 (1)	5.84	
J- H	-2105 / 0	0.0	0.0	0.22 (1)	5.84	
Q- P	0 / 0	-38.5	-38.5	0.13 (3)	10.00	
P- O	0 / 1759	-38.5	-38.5	0.39 (1)	10.00	
O- N	0 / 1613	-38.5	-38.5	0.41 (2)	10.00	
N- M	0 / 1613	-38.5	-38.5	0.41 (2)	10.00	
M- L	0 / 1613	-38.5	-38.5	0.41 (2)	10.00	
L- K	0 / 1759	-38.5	-38.5	0.39 (1)	10.00	
K- J	0 / 0	-38.5	-38.5	0.13 (3)	10.00	

WEBS

MEMB. FR-TO	MAX. FACTORED FORCE (LBS)	MAX CSI (LC)
P- C	-289 / 23	0.10 (1)
C- O	-218 / 0	0.16 (1)
O- D	0 / 375	0.06 (2)
D- N	0 / 581	0.13 (1)
N- E	-712 / 0	0.90 (1)
N- F	0 / 581	0.13 (1)
L- F	0 / 375	0.06 (2)
L- G	-218 / 0	0.16 (1)
K- G	-289 / 23	0.10 (1)
B- P	0 / 1820	0.41 (1)
K- H	0 / 1820	0.41 (1)

LICENSED PROFESSIONAL ENGINEER
02/05/19
H. J G ALVES
100009022
PROVINCE OF ONTARIO

DESIGN CRITERIA

SPECIFIED LOADS:

TOP CH.	LL	=	29.0	PSF
	DL	=	6.0	PSF
BOT CH.	LL	=	10.5	PSF
	DL	=	7.0	PSF
TOTAL LOAD		=	52.5	PSF

SPACING = 24.0 IN. C/C

LOADING IN FLAT SECTION BASED ON A SLOPE OF 6.00/12

THIS TRUSS IS DESIGNED FOR RESIDENTIAL OR SMALL BUILDING REQUIREMENTS OF PART 9, NBCC 2015

THIS DESIGN COMPLIES WITH:
- PART 9 OF BCBC 2018
- CSA 086-14
- TPIC 2014

(55 % OF 37.6 P.S.F. G.S.L. PLUS 8.4 P.S.F. RAIN LOAD) EQUALS 29.0 P.S.F. SPECIFIED ROOF LIVE LOAD

ALLOWABLE DEFL.(LL)= L/360 (0.97")
CALCULATED VERT. DEFL.(LL) = L/ 999 (0.06")
ALLOWABLE DEFL.(TL)= L/360 (0.97")
CALCULATED VERT. DEFL.(TL) = L/ 999 (0.14")

CSI: TC=0.48/1.00 (D-E:1) , BC=0.41/1.00 (L-N:2) , WB=0.90/1.00 (E-N:1) , SSI=0.28/1.00 (D-E:1)

DOL LUMBER=1.00 NAIL=1.00 LS BEND=1.10 COMP=1.10 SHEAR=1.10 TENS= 1.10

COMPANION LIVE LOAD FACTOR = 1.00

TRUSS PLATE MANUFACTURER IS NOT RESPONSIBLE FOR QUALITY CONTROL IN THE TRUSS MANUFACTURING PLANT .

NAIL VALUES

PLATE	GRIP(DRY) (PSI) MAX	MIN	SHEAR (PLI) MAX	MIN	SECTION (PLI) MAX	MIN
MT20	650	371	1747	768	1987	1873

PLATE PLACEMENT TOL. = 0.250 inches

PLATE ROTATION TOL. = 5.0 Deg.

JSI GRIP= 0.88 (K) (INPUT = 0.90)
JSI METAL= 0.51 (M) (INPUT = 1.00)

DWG NO. TAM 17902712
STRUCTURAL
COMPONENT ONLY

JOB NAME	TRUSS NAME	QUANTITY	PLY	JOB DESC.	DRWG NO.
200444-401156	T6	13	1	Preston 3 / TRUSS DESC.	T6

Tamarack Roof Truss, Burlington

Version 8.230 S Nov 17 2018 MiTek Industries, Inc. Tue Feb 5 20:29:10 2019 Page 1
ID:4xNdf4mUPyxd3LURX25ZQKyOFG0-ZXhr1tmr4br5xMSLUIE9ZYFhMSfYK7kIJRMfnrzo5IN

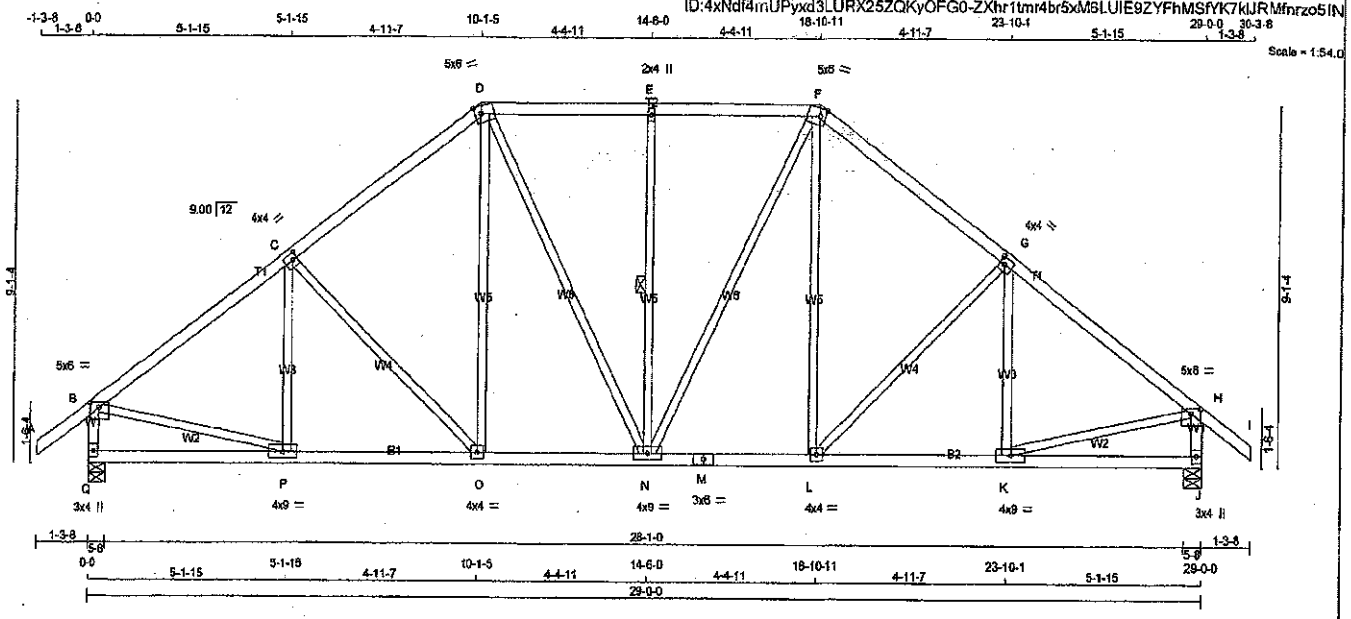

TOTAL WEIGHT = 13 X 142 = 1842 lb
[M][F]

LUMBER
N. L. G. A. RULES

CHORDS	SIZE		LUMBER	DESCR.
A - D	2x4	DRY	No.2	SPF
D - F	2x4	DRY	No.2	SPF
F - I	2x4	DRY	No.2	SPF
Q - B	2x4	DRY	No.2	SPF
J - H	2x4	DRY	No.2	SPF
Q - M	2x4	DRY	No.2	SPF
M - J	2x4	DRY	No.2	SPF
ALL WEBS EXCEPT	2x3	DRY	No.2	SPF

DRY: SEASONED LUMBER.

PLATES (table is in inches)

JT	TYPE	PLATES	W	LEN	Y	X
B	TMW-p	MT20	5.0	6.0	1.50	3.00
C	TMWW-t	MT20	4.0	4.0	2.00	1.50
D	TTWW-m	MT20	5.0	6.0	Edge	2.00
E	TMW+w	MT20	2.0	4.0		
F	TTWW-m	MT20	5.0	6.0	Edge	2.00
G	TMWW-t	MT20	4.0	4.0	2.00	1.50
H	TMW-p	MT20	5.0	6.0	1.50	3.00
J	BMV1+p	MT20	3.0	4.0		
K	BMWW-t	MT20	4.0	9.0		
L	BMWW-t	MT20	4.0	4.0		
M	BS-t	MT20	3.0	6.0		
N	BMWWW-t	MT20	4.0	9.0		
O	BMWW-t	MT20	4.0	4.0		
P	BMWW-t	MT20	4.0	9.0		
Q	BMV1+p	MT20	3.0	4.0		

Edge - INDICATES REFERENCE CORNER OF PLATE TOUCHES EDGE OF CHORD.

DIMENSIONS, SUPPORTS AND LOADINGS SPECIFIED BY FABRICATOR TO BE VERIFIED BY BUILDING DESIGNER

BEARINGS

JT	FACTORED GROSS REACTION VERT	HORZ	MAXIMUM FACTORED GROSS REACTION DOWN	HORZ	UPLIFT	INPUT BRG IN-SX	REQRD BRG IN-SX
Q	2180	0	2180	0	0	5-8	5-8
J	2180	0	2180	0	0	5-8	5-8

UNFACTORED REACTIONS

JT	1ST LCASE COMBINED	SNOW	MAX./MIN. COMPONENT REACTIONS LIVE	PERM.LIVE	WIND	DEAD	SOIL
Q	1620	922 / 0	305 / 0	0 / 0	0 / 0	394 / 0	0 / 0
J	1620	922 / 0	305 / 0	0 / 0	0 / 0	394 / 0	0 / 0

BEARING MATERIAL TO BE SPF NO.2 OR BETTER AT JOINT(S) Q, J

BRACING
TOP CHORD TO BE SHEATHED OR MAX. PURLIN SPACING = 4.21 FT.
MAX. UNBRACED BOTTOM CHORD LENGTH = 10.00 FT OR RIGID CEILING DIRECTLY APPLIED.

ALL PITCH BREAKS AND PERIMETER CORNER JOINTS MUST BE LATERALLY RESTRAINED.

1 LATERAL BRACE(S) AT 1/2 LENGTH OF E-N.

END VERTICAL(S) MUST BE SHEATHED OR HAVE BRACES AS INDICATED IN THE MAX. UNBRACED LENGTH COLUMN OF THE TABLE BELOW

LOADING
TOTAL LOAD CASES: (4)

CHORDS

MEMB. FR-TO	MAX. FACTORED FORCE (LBS)	FACTORED VERT. LOAD LC1 (PLF) FROM	TO	MAX CSI (LC)	MAX. UNBRAC LENGTH
A- B	0 / 42	-102.1	-102.1	0.14 (1)	10.00
B- C	-2198 / 0	-102.1	-102.1	0.42 (1)	4.21
C- D	-1954 / 0	-102.1	-102.1	0.39 (1)	4.44
D- E	-1709 / 0	-102.1	-102.1	0.28 (1)	4.82
E- F	-1709 / 0	-102.1	-102.1	0.28 (1)	4.82
F- G	-1954 / 0	-102.1	-102.1	0.39 (1)	4.44
G- H	-2198 / 0	-102.1	-102.1	0.42 (1)	4.21
H- I	0 / 42	-102.1	-102.1	0.14 (1)	10.00
Q- B	-2098 / 0	0.0	0.0	0.22 (1)	5.84
J- H	-2098 / 0	0.0	0.0	0.22 (1)	5.84
Q- P	0 / 0	-38.5	-38.5	0.19 (3)	10.00
P- O	0 / 1787	-38.5	-38.5	0.42 (2)	10.00
O- N	0 / 1535	-38.5	-38.5	0.34 (1)	10.00
N- M	0 / 1535	-38.5	-38.5	0.34 (1)	10.00
M- L	0 / 1535	-38.5	-38.5	0.34 (1)	10.00
L- K	0 / 1787	-38.5	-38.5	0.42 (2)	10.00
K- J	0 / 0	-38.5	-38.5	0.19 (3)	10.00

WEBS

MEMB. FR-TO	MAX. FACTORED FORCE (LBS)	MAX CSI (LC)
P- C	-194 / 98	0.08 (1)
C- O	-364 / 0	0.36 (1)
O- D	0 / 444	0.10 (2)
D- N	0 / 389	0.09 (1)
N- E	-538 / 0	0.29 (1)
N- F	0 / 389	0.09 (1)
L- F	0 / 444	0.10 (2)
L- G	-364 / 0	0.36 (1)
K- G	-194 / 98	0.08 (1)
B- P	0 / 1834	0.41 (1)
K- H	0 / 1834	0.41 (1)

LICENSED PROFESSIONAL ENGINEER
02/05/19
H. J. G. ALVES
100090024
PROVINCE OF ONTARIO

DESIGN CRITERIA

SPECIFIED LOADS:

TOP CH.	LL =	29.0	PSF
	DL =	6.0	PSF
BOT CH.	LL =	10.5	PSF
	DL =	7.0	PSF
TOTAL LOAD	=	52.5	PSF

SPACING = 24.0 IN. C/C

LOADING IN FLAT SECTION BASED ON A SLOPE OF 6.00/12

THIS TRUSS IS DESIGNED FOR RESIDENTIAL OR SMALL BUILDING REQUIREMENTS OF PART 9, NBCC 2010, NBCC 2015

THIS DESIGN COMPLIES WITH:
- PART 9 OF BCBC 2018 , OBC 2012
- CSA 086-09, CSA 086-14
- TPIC 2011, TPIC 2014

(55 % OF 37.6 P.S.F. G.S.L. PLUS 8.4 P.S.F. RAIN LOAD) EQUALS 29.0 P.S.F. SPECIFIED ROOF LIVE LOAD

ALLOWABLE DEFL.(LL)= L/360 (0.97")
CALCULATED VERT. DEFL.(LL) = L/ 999 (0.07")
ALLOWABLE DEFL.(TL)= L/360 (0.97")
CALCULATED VERT. DEFL.(TL) = L/ 999 (0.12")

CSI: TC=0.42/1.00 (G-H:1) , BC=0.42/1.00 (K-L:2) , WB=0.41/1.00 (H-K:1) , SSI=0.22/1.00 (D-E:1)

DOL LUMBER=1.00 NAIL=1.00 LS BEND=1.10 COMP=1.10 SHEAR=1.10 TENS= 1.10

COMPANION LIVE LOAD FACTOR = 1.00

TRUSS PLATE MANUFACTURER IS NOT RESPONSIBLE FOR QUALITY CONTROL IN THE TRUSS MANUFACTURING PLANT .

NAIL VALUES

PLATE	GRIP(DRY) (PSI) MAX	MIN	SHEAR (PLI) MAX	MIN	SECTION (PLI) MAX	MIN
MT20	616	354	1667	788	1987	1656

PLATE PLACEMENT TOL. = 0.250 inches

PLATE ROTATION TOL. = 5.0 Deg.

JSI GRIP= 0.69 (P) (INPUT = 0.90)
JSI METAL= 0.50 (M) (INPUT = 1.00)

DWG NO. TAM 1790277 13
STRUCTURAL
COMPONENT ONLY

JOB NAME	TRUSS NAME	QUANTITY	PLY	JOB DESC Preston 3	DRWG NO.
200444-401156	T7	1	1	TRUSS DESC.	T7

Tamarack Roof Truss, Burlington

Version 8.230 S Nov 17 2018 MiTek Industries, Inc. Tue Feb 5 20:29:11 2019 Page 1
ID:4xNdf4mUPyxd3LURX25ZQKyOFG0-1kFDFDnTrvzyZVhY1?IO6Inq1s_13WBuY56DKHzo5IM

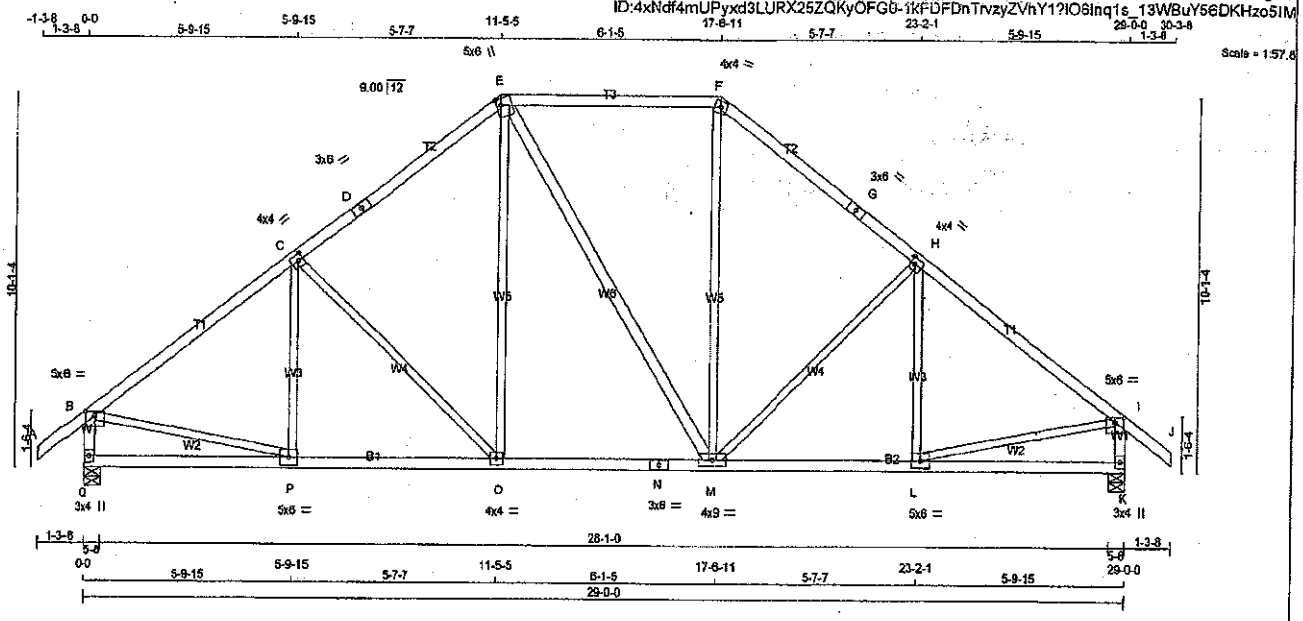

TOTAL WEIGHT = 138 lb
[M][F]

LUMBER
N. L. G. A. RULES

CHORDS	SIZE		LUMBER	DESCR.
A - D	2x4	DRY	No.2	SPF
D - E	2x4	DRY	No.2	SPF
E - F	2x4	DRY	No.2	SPF
F - G	2x4	DRY	No.2	SPF
G - J	2x4	DRY	No.2	SPF
Q - B	2x4	DRY	No.2	SPF
K - I	2x4	DRY	No.2	SPF
Q - N	2x4	DRY	No.2	SPF
N - K	2x4	DRY	No.2	SPF
ALL WEBS EXCEPT	2x3	DRY	No.2	SPF
E - M	2x4	DRY	No.2	SPF

DRY: SEASONED LUMBER.

PLATES (table is in inches)

JT	TYPE	PLATES	W	LEN	Y	X
B	TMVW-p	MT20	5.0	6.0	1.50	3.00
C	TMWW-t	MT20	4.0	4.0	2.00	1.50
D	TS-t	MT20	3.0	6.0		
E	TTWW+m	MT20	5.0	6.0	2.25	1.50
F	TTW-m	MT20	4.0	4.0		
G	TS-t	MT20	3.0	6.0		
H	TMWW-t	MT20	4.0	4.0	2.00	1.50
I	TMVW-p	MT20	5.0	6.0	1.50	3.00
K	BMV1+p	MT20	3.0	4.0		
L	BMWW-t	MT20	5.0	6.0		
M	BMWWW-t	MT20	4.0	9.0		
N	BS-t	MT20	3.0	8.0		
O	BMWW-t	MT20	4.0	4.0		
P	BMWW-t	MT20	5.0	6.0		
Q	BMV1+p	MT20	3.0	4.0		

DIMENSIONS, SUPPORTS AND LOADINGS SPECIFIED BY FABRICATOR TO BE VERIFIED BY BUILDING DESIGNER

BEARINGS

	FACTORED GROSS REACTION		MAXIMUM FACTORED GROSS REACTION			INPUT BRG	REQRD BRG
JT	VERT	HORZ	DOWN	HORZ	UPLIFT	IN-SX	IN-SX
Q	2180	0	2180	0	0	5-8	5-8
K	2180	0	2180	0	0	5-8	5-8

UNFACTORED REACTIONS

	1ST LOASE	MAX./MIN. COMPONENT REACTIONS					
JT	COMBINED	SNOW	LIVE	PERM.LIVE	WIND	DEAD	SOIL
Q	1620	922 / 0	305 / 0	0 / 0	0 / 0	394 / 0	0 / 0
K	1620	922 / 0	305 / 0	0 / 0	0 / 0	394 / 0	0 / 0

BEARING MATERIAL TO BE SPF NO.2 OR BETTER AT JOINT(S) Q, K

BRACING
TOP CHORD TO BE SHEATHED OR MAX. PURLIN SPACING = 4.04 FT.
MAX. UNBRACED BOTTOM CHORD LENGTH = 10.00 FT OR RIGID CEILING DIRECTLY APPLIED.

ALL PITCH BREAKS AND PERIMETER CORNER JOINTS MUST BE LATERALLY RESTRAINED.

LOADING
TOTAL LOAD CASES: (4)

CHORDS

MEMB. FR-TO	MAX. FACTORED FORCE (LBS)	FACTORED VERT. LOAD (PLF) FROM	TO	LC1 MAX CSI (LC)	MAX. UNBRAC LENGTH
A- B	0 / 42	-102.1	-102.1	0.14 (1)	10.00
B- C	-2209 / 0	-102.1	-102.1	0.55 (1)	4.04
C- D	-1855 / 0	-102.1	-102.1	0.50 (1)	4.38
D- E	-1855 / 0	-102.1	-102.1	0.50 (1)	4.38
E- F	-1454 / 0	-102.1	-102.1	0.52 (1)	4.75
F- G	-1856 / 0	-102.1	-102.1	0.50 (1)	4.38
G- H	-1856 / 0	-102.1	-102.1	0.50 (1)	4.38
H- I	-2209 / 0	-102.1	-102.1	0.55 (1)	4.04
I- J	0 / 42	-102.1	-102.1	0.14 (1)	10.00
Q- B	-2088 / 0	0.0	0.0	0.22 (1)	5.86
K- I	-2087 / 0	0.0	0.0	0.22 (1)	5.86
Q- P	0 / 0	-38.5	-38.5	0.24 (3)	10.00
P- O	0 / 1801	-38.5	-38.5	0.46 (2)	10.00
O- N	0 / 1453	-38.5	-38.5	0.39 (2)	10.00
N- M	0 / 1453	-38.5	-38.5	0.39 (2)	10.00
M- L	0 / 1800	-38.5	-38.5	0.46 (2)	10.00
L- K	0 / 0	-38.5	-38.5	0.23 (3)	10.00

WEBS

MEMB. FR-TO	MAX. FACTORED FORCE (LBS)	MAX CSI (LC)
P- C	-123 / 150	0.07 (1)
C- O	-492 / 0	0.65 (1)
O- E	0 / 571	0.13 (2)
E- M	0 / 1	0.00 (2)
M- F	0 / 573	0.13 (2)
M- H	-491 / 0	0.65 (1)
L- H	-125 / 149	0.07 (1)
B- P	0 / 1838	0.41 (1)
L- I	0 / 1838	0.41 (1)

DESIGN CRITERIA

SPECIFIED LOADS:

TOP CH.	LL	=	29.0	PSF
	DL	=	6.0	PSF
BOT CH.	LL	=	10.5	PSF
	DL	=	7.0	PSF
TOTAL LOAD		=	52.5	PSF

SPACING = 24.0 IN C/C

LOADING IN FLAT SECTION BASED ON A SLOPE OF 6.00/12

THIS TRUSS IS DESIGNED FOR RESIDENTIAL OR SMALL BUILDING REQUIREMENTS OF PART 9, NBCC 2015

THIS DESIGN COMPLIES WITH:
- PART 9 OF BCBC 2018
- CSA O86-14
- TPIC 2014

(55 % OF 37.6 P.S.F. G.S.L. PLUS 8.4 P.S.F. RAIN LOAD) EQUALS 29.0 P.S.F. SPECIFIED ROOF LIVE LOAD

ALLOWABLE DEFL.(LL)= L/360 (0.97")
CALCULATED VERT. DEFL.(LL) = L/ 999 (0.08")
ALLOWABLE DEFL.(TL)= L/360 (0.97")
CALCULATED VERT. DEFL.(TL) = L/ 999 (0.14")

CSI: TC=0.55/1.00 (B-C:1) , BC=0.46/1.00 (O-P:2) , WB=0.65/1.00 (C-O:1) , SSI=0.24/1.00 (E-F:1)

DOL LUMBER=1.00 NAIL=1.00 LS BEND=1.10 COMP=1.10 SHEAR=1.10 TENS= 1.10

COMPANION LIVE LOAD FACTOR = 1.00

TRUSS PLATE MANUFACTURER IS NOT RESPONSIBLE FOR QUALITY CONTROL IN THE TRUSS MANUFACTURING PLANT.

NAIL VALUES

PLATE	GRIP(DRY) (PSI) MAX	MIN	SHEAR (PLI) MAX	MIN	SECTION (PLI) MAX	MIN
MT20	650	371	1747	788	1987	1873

PLATE PLACEMENT TOL. = 0.250 inches

PLATE ROTATION TOL. = 5.0 Deg.

JSI GRIP= 0.86 (F) (INPUT = 0.90)
JSI METAL= 0.46 (N) (INPUT = 1.00)

RECEIVED
AUG 29 2019
TOWN OF OAKVILLE
BUILDING SECTION
PLANNING

LICENSED PROFESSIONAL ENGINEER
02/05/19
H. J. G. ALVES
100009820
PROVINCE OF ONTARIO

DWG NO. TAM 179027 14
STRUCTURAL
COMPONENT ONLY

JOB NAME	TRUSS NAME	QUANTITY	PLY	JOB DESC. Preston 3	DRWG NO.
200444-401157	T15	1	1	TRUSS DESC.	T15

Tamarack Roof Truss, Burlington

Version 8.230 S Nov 17 2018 MiTek Industries, Inc. Tue Feb 12 08:53:27 2019 Page 1
ID:Mi06BFa0GpW8aLLBIY39yQyOCh?-ySIdMcukNt5sy84PYqM8Ots9p9Dr1Dup4Vegcizlxqc

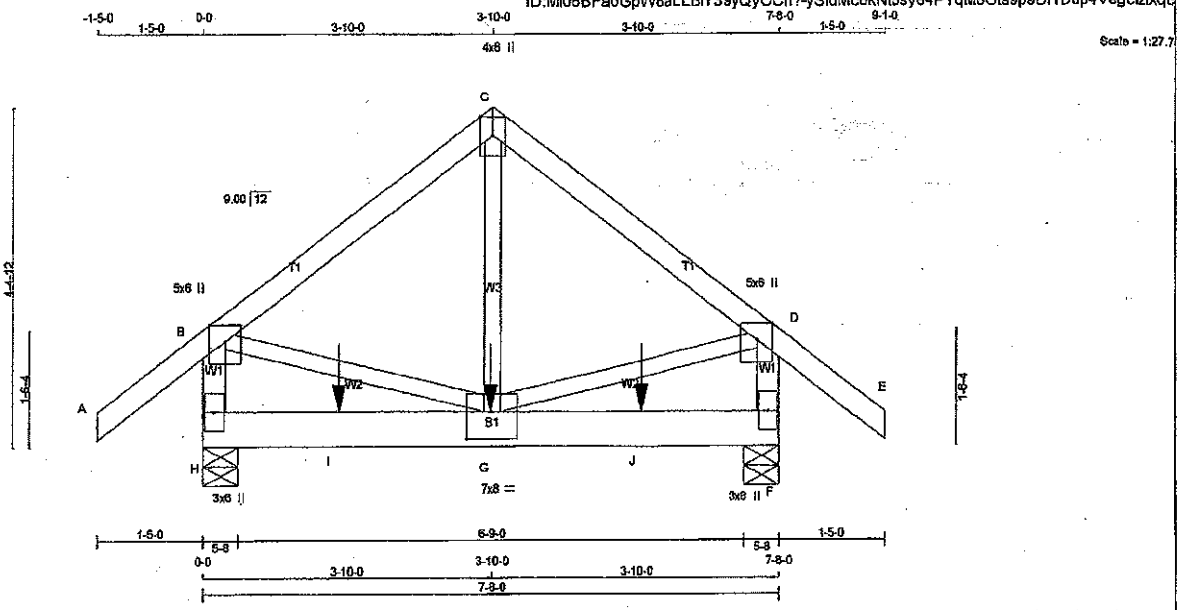

TOTAL WEIGHT = 40 lb

[M]

LUMBER
N. L. G. A. RULES

CHORDS	SIZE		LUMBER	DESCR.
A - C	2x4	DRY	No.2	SPF
C - E	2x4	DRY	No.2	SPF
H - B	2x4	DRY	No.2	SPF
F - D	2x4	DRY	No.2	SPF
H - F	2x6	DRY	No.2	SPF
ALL WEBS EXCEPT	2x3	DRY	No.2	SPF

DRY: SEASONED LUMBER.

PLATES (table is in inches)

JT	TYPE	PLATES	W	LEN	Y	X
B	TMWW+p	MT20	5.0	6.0	Edge	
C	TTW+p	MT20	4.0	6.0	Edge	
D	TMWW+p	MT20	5.0	6.0	Edge	
F	BMV1+p	MT20	3.0	6.0		
G	BMWWW-t	MT20	7.0	8.0	4.25	4.00
H	BMV1+p	MT20	3.0	6.0		

Edge - INDICATES REFERENCE CORNER OF PLATE TOUCHES EDGE OF CHORD.

DIMENSIONS, SUPPORTS AND LOADINGS SPECIFIED BY FABRICATOR TO BE VERIFIED BY BUILDING DESIGNER

BEARINGS

JT	FACTORED GROSS REACTION VERT	HORZ	MAXIMUM FACTORED GROSS REACTION DOWN	HORZ	UPLIFT	INPUT BRG IN-SX	REQRD BRG IN-SX
H	1607	0	1607	0	0	5-8	5-8
F	1601	0	1601	0	0	5-8	5-8

UNFACTORED REACTIONS

JT	1ST LCASE COMBINED	MAX./MIN. COMPONENT REACTIONS SNOW	LIVE	PERM.LIVE	WIND	DEAD	SOIL
H	1167	749 / 0	158 / 0	0 / 0	0 / 0	260 / 0	0 / 0
F	1163	746 / 0	157 / 0	0 / 0	0 / 0	259 / 0	0 / 0

BEARING MATERIAL TO BE SPF NO.2 OR BETTER AT JOINT(S) H, F

BRACING
TOP CHORD TO BE SHEATHED OR MAX. PURLIN SPACING = 5.47 FT.
MAX. UNBRACED BOTTOM CHORD LENGTH = 10.00 FT OR RIGID CEILING DIRECTLY APPLIED.

ALL PITCH BREAKS AND PERIMETER CORNER JOINTS MUST BE LATERALLY RESTRAINED.

LOADING
TOTAL LOAD CASES: (4)

CHORDS

MEMB. FR-TO	MAX. FACTORED FORCE (LBS)	FACTORED VERT. LOAD LC1 (PLF) FROM	TO	MAX CSI (LC)	MAX. UNBRAC LENGTH
A- B	0 / 46	-102.1	-102.1	0.18 (1)	10.00
B- C	-1165 / 0	-102.1	-102.1	0.32 (1)	5.47
C- D	-1165 / 0	-102.1	-102.1	0.32 (1)	5.47
D- E	0 / 46	-102.1	-102.1	0.18 (1)	10.00
H- B	-1318 / 0	0.0	0.0	0.15 (1)	7.00
F- D	-1318 / 0	0.0	0.0	0.15 (1)	7.00
H- I	0 / 0	-38.5	-38.5	0.34 (1)	10.00
I- G	0 / 0	-38.5	-38.5	0.34 (1)	10.00
G- J	0 / 0	-38.5	-38.5	0.34 (1)	10.00
J- F	0 / 0	-38.5	-38.5	0.34 (1)	10.00

WEBS

MEMB. FR-TO	MAX. FACTORED FORCE (LBS)	MAX CSI (LC)
G- C	0 / 1006	0.25 (1)
B- G	0 / 970	0.24 (1)
G- D	0 / 970	0.24 (1)

FACTORED CONCENTRATED LOADS (LBS)

JT	LOC.	LC1	MAX-	MAX+	FACE	DIR.	TYPE	HEEL	CONN.
G	3-9-12	-608	-608	—	BACK	VERT	TOTAL	—	—
I	1-9-12	-608	-608	—	BACK	VERT	TOTAL	—	—
J	5-9-12	-608	-608	—	BACK	VERT	TOTAL	—	—

LICENSED PROFESSIONAL ENGINEER
02/12/19
H. J. G. ALVES
100009029
PROVINCE OF ONTARIO

DESIGN CRITERIA

SPECIFIED LOADS:

TOP CH.	LL	=	29.0	PSF
	DL	=	6.0	PSF
BOT CH.	LL	=	10.5	PSF
	DL	=	7.0	PSF
TOTAL LOAD		=	52.5	PSF

SPACING = 24.0 IN. C/C

THIS TRUSS IS DESIGNED FOR RESIDENTIAL OR SMALL BUILDING REQUIREMENTS OF PART 9, NBCC 2015

THIS DESIGN COMPLIES WITH:
- PART 9 OF BCBC 2018
- CSA 086-14
- TPIC 2014

(55 % OF 37.6 P.S.F. G.S.L. PLUS 8.4 P.S.F. RAIN LOAD) EQUALS 29.0 P.S.F. SPECIFIED ROOF LIVE LOAD

ALLOWABLE DEFL.(LL)= L/360 (0.26")
CALCULATED VERT. DEFL.(LL) = L/ 999 (0.02")
ALLOWABLE DEFL.(TL)= L/360 (0.26")
CALCULATED VERT. DEFL.(TL) = L/ 999 (0.03")

CSI: TC=0.32/1.00 (B-C:1) , BC=0.34/1.00 (G-H:1) , WB=0.25/1.00 (C-G:1) , SSI=0.31/1.00 (F-G:1)

DOL LUMBER=1.00 NAIL=1.00 LS BEND=1.00 COMP=1.00 SHEAR=1.00 TENS= 1.00

COMPANION LIVE LOAD FACTOR = 1.00

TRUSS PLATE MANUFACTURER IS NOT RESPONSIBLE FOR QUALITY CONTROL IN THE TRUSS MANUFACTURING PLANT.

NAIL VALUES

PLATE	GRIP(DRY) (PSI) MAX	MIN	SHEAR (PLI) MAX	MIN	SECTION (PLI) MAX	MIN
MT20	650	371	1747	768	1987	1873

PLATE PLACEMENT TOL. = 0.250 inches

PLATE ROTATION TOL. = 5.0 Deg.

JSI GRIP= 0.65 (B) (INPUT = 0.60)
JSI METAL= 0.49 (D) (INPUT = 1.00)

DWG NO. TAM 7190321 2
STRUCTURAL
COMPONENT ONLY

JOB NAME	TRUSS NAME	QUANTITY	PLY	JOB DESC. Preston 3	DRWG NO.
200444-401157	T15G	1	1	TRUSS DESC.	**T15G**

Tamarack Roof Truss, Burlington

Version 8.230 S Nov 17 2018 MiTek Industries, Inc. Tue Feb 12 08:53:28 2019 Page 1
ID:Mi06BFa0GpW8aLLBfY39yQyOCh?-Qer?ZyvM7BDjalfb5XtLx5PMxYeymjFyl9OD89zlxqb

Scale = 1:27.1

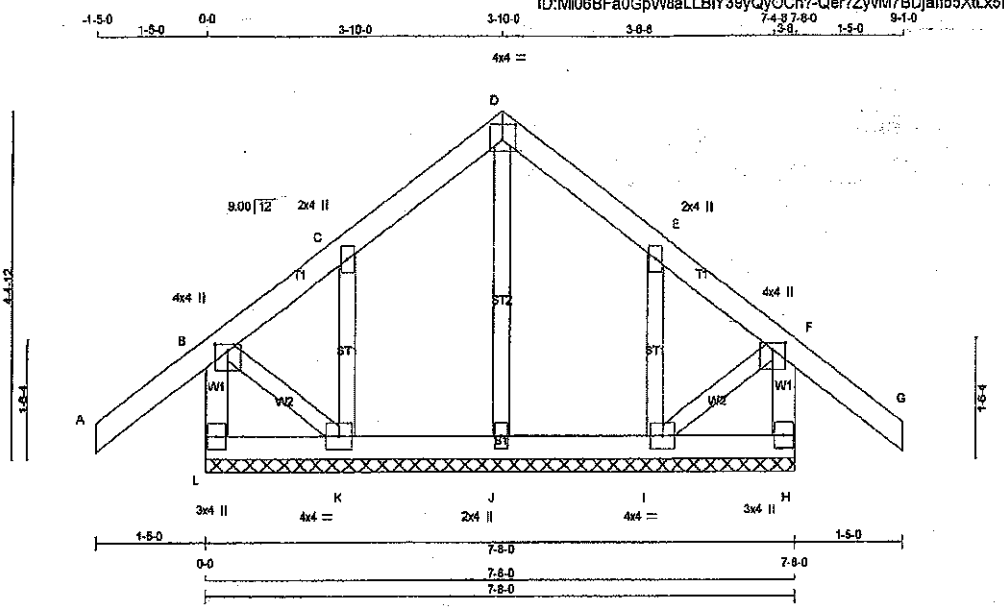

TOTAL WEIGHT = 36 lb

LUMBER
N. L. G. A. RULES

CHORDS	SIZE		LUMBER	DESCR.
L - B	2x4	DRY	No.2	SPF
A - D	2x4	DRY	No.2	SPF
D - G	2x4	DRY	No.2	SPF
H - F	2x4	DRY	No.2	SPF
L - H	2x4	DRY	No.2	SPF
ALL WEBS	2x3	DRY	No.2	SPF
ALL GABLE WEBS	2x3	DRY	No.2	SPF

DRY: SEASONED LUMBER.

GABLE STUDS SPACED AT 2-0-0 OC.

PLATES (table is in inches)

JT	TYPE	PLATES	W	LEN	Y	X
B	TMW+p	MT20	4.0	4.0	1.00	2.00
C	TMW+w	MT20	2.0	4.0		
D	TTW-p	MT20	4.0	4.0	2.25	2.00
E	TMW+w	MT20	2.0	4.0		
F	TMW+p	MT20	4.0	4.0	1.00	2.00
H	BMV1+p	MT20	3.0	4.0		
I	BMWW1-t	MT20	4.0	4.0		
J	BMW1+w	MT20	2.0	4.0		
K	BMWW1-t	MT20	4.0	4.0		
L	BMV1+p	MT20	3.0	4.0		

DIMENSIONS, SUPPORTS AND LOADINGS SPECIFIED BY FABRICATOR TO BE VERIFIED BY BUILDING DESIGNER

BEARINGS

THIS TRUSS DESIGNED FOR CONTINUOUS BEARINGS.

THIS TRUSS REQUIRES RIGID SHEATHING ON EXPOSED FACE.

BEARING MATERIAL TO BE SPF NO.2 OR BETTER AT JOINT(S)

BRACING

TOP CHORD TO BE SHEATHED OR MAX. PURLIN SPACING = 6.25 FT.
MAX. UNBRACED BOTTOM CHORD LENGTH = 10.00 FT OR RIGID CEILING DIRECTLY APPLIED.

ALL PITCH BREAKS AND PERIMETER CORNER JOINTS MUST BE LATERALLY RESTRAINED.

LOADING

TOTAL LOAD CASES: (4)

CHORDS

MEMB. FR-TO	MAX. FACTORED FORCE (LBS)	FACTORED VERT. LOAD (PLF) FROM	TO	LC1	MAX CSI (LC)	MAX. UNBRAC LENGTH
L- B	-313 / 0	0.0	0.0	0.03 (1)	7.81	
A- B	0 / 46	-102.1	-102.1	0.16 (1)	10.00	
B- C	-48 / 0	-102.1	-102.1	0.16 (1)	6.25	
C- D	-15 / 0	-102.1	-102.1	0.06 (1)	6.25	
D- E	-15 / 0	-102.1	-102.1	0.06 (1)	6.25	
E- F	-48 / 0	-102.1	-102.1	0.16 (1)	6.25	
F- G	0 / 46	-102.1	-102.1	0.16 (1)	10.00	
H- F	-313 / 0	0.0	0.0	0.03 (1)	7.81	
L- K	0 / 0	-38.5	-38.5	0.03 (3)	10.00	
K- J	0 / 7	-38.5	-38.5	0.03 (3)	10.00	
J- I	0 / 7	-38.5	-38.5	0.03 (3)	10.00	
I- H	0 / 0	-38.5	-38.5	0.03 (3)	10.00	

WEBS

MEMB. FR-TO	MAX. FACTORED FORCE (LBS)	MAX CSI (LC)
J- D	-181 / 0	0.05 (1)
K- C	-149 / 0	0.03 (1)
I- E	-149 / 0	0.03 (1)
B- K	0 / 15	0.00 (1)
I- F	0 / 15	0.00 (1)

DESIGN CRITERIA

SPECIFIED LOADS:

TOP CH.	LL	=	29.0	PSF
	DL	=	6.0	PSF
BOT CH.	LL	=	10.5	PSF
	DL	=	7.0	PSF
TOTAL LOAD		=	52.5	PSF

SPACING = 24.0 IN. C/C

THIS TRUSS IS DESIGNED FOR RESIDENTIAL OR SMALL BUILDING REQUIREMENTS OF PART 9, NBCC 2015

THIS DESIGN COMPLIES WITH:
- PART 9 OF BCBC 2018
- CSA 086-14
- TPIC 2014

DESIGN ASSUMPTIONS
-OVERHANG NOT TO BE ALTERED OR CUT OFF.

(55 % OF 37.6 P.S.F. G.S.L. PLUS 8.4 P.S.F. RAIN LOAD) EQUALS 29.0 P.S.F. SPECIFIED ROOF LIVE LOAD

CSI: TC=0.16/1.00 (A-B:1) , BC=0.03/1.00 (J-K:3) , WB=0.05/1.00 (D-J:1) , SSI=0.10/1.00 (A-B:1)

DOL LUMBER=1.00 NAIL=1.00 LS BEND=1.10 COMP=1.10 SHEAR=1.10 TENS= 1.10

COMPANION LIVE LOAD FACTOR = 1.00

TRUSS PLATE MANUFACTURER IS NOT RESPONSIBLE FOR QUALITY CONTROL IN THE TRUSS MANUFACTURING PLANT.

NAIL VALUES

PLATE	GRIP(DRY) (PSI) MAX	MIN	SHEAR (PLI) MAX	MIN	SECTION (PLI) MAX	MIN
MT20	650	371	1747	788	1987	1873

PLATE PLACEMENT TOL. = 0.250 inches

PLATE ROTATION TOL. = 5.0 Deg.

JSI GRIP= 0.24 (F) (INPUT = 0.90)
JSI METAL= 0.08 (C) (INPUT = 1.00)

LICENSED PROFESSIONAL ENGINEER
02/12/19
H. J. G ALVES
100089024
PROVINCE OF ONTARIO

AUG 23 2019
TOWN OF OAKVILLE
ENGINEERING SECTION
FILE NO.

DWG NO. TAM 7192032/3
STRUCTURAL
COMPONENT ONLY

JOB NAME	TRUSS NAME	QUANTITY	PLY	JOB DESC. Preston 3	DRWG NO.
200444-401157	T16	2	1	TRUSS DESC.	**T16**

Tamarack Roof Truss, Burlington

Version 8.230.S Nov 17, 2018 MiTek Industries, Inc. Tue Feb 12 08:53:29 2019 Page 1
ID:MI06BFa0GpW8aLLBiY39yOyOCh?-urPNmHv_uVLaBSEnfFOaUlxXVyzoVAL6Xp7nhbzlxqa

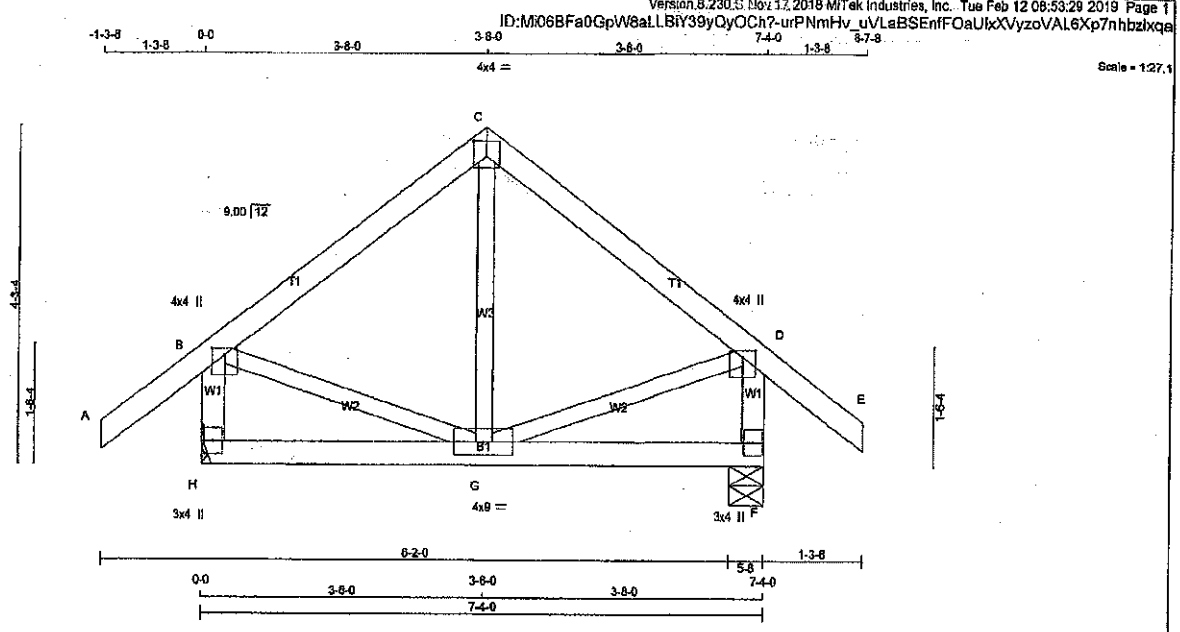

TOTAL WEIGHT = 2 X 34 = 68 lb

[M][F]

LUMBER
N. L. G. A. RULES

CHORDS	SIZE		LUMBER	DESCR.
A - C	2x4	DRY	No.2	SPF
C - E	2x4	DRY	No.2	SPF
H - B	2x4	DRY	No.2	SPF
F - D	2x4	DRY	No.2	SPF
H - F	2x4	DRY	No.2	SPF
ALL WEBS EXCEPT	2x3	DRY	No.2	SPF

DRY: SEASONED LUMBER.

PLATES (table is in inches)

JT	TYPE	PLATES	W	LEN	Y	X
B	TMVW+p	MT20	4.0	4.0	1.00	2.00
C	TTW+p	MT20	4.0	4.0	2.25	2.00
D	TMVW+p	MT20	4.0	4.0	1.00	2.00
F	BMV1+p	MT20	3.0	4.0		
G	BMWWW+t	MT20	4.0	9.0		
H	BMV1+p	MT20	3.0	4.0		

DIMENSIONS, SUPPORTS AND LOADINGS SPECIFIED BY FABRICATOR TO BE VERIFIED BY BUILDING DESIGNER

BEARINGS

JT	FACTORED GROSS REACTION VERT	HORZ	MAXIMUM FACTORED GROSS REACTION DOWN	HORZ	UPLIFT	INPUT BRG IN-SX	REQRD BRG IN-SX
H	656	0	656	0	0	MECHANICAL	
F	656	0	656	0	0	5-8	5-8

A SUITABLE HANGER/MECHANICAL CONNECTION IS REQUIRED AT JOINT H. MINIMUM BEARING LENGTH AT JOINT H = 1-8.

UNFACTORED REACTIONS

JT	1ST LCASE COMBINED	MAX./MIN. COMPONENT REACTIONS SNOW	LIVE	PERM.LIVE	WIND	DEAD	SOIL
H	482	293 / 0	77 / 0	0 / 0	0 / 0	112 / 0	0 / 0
F	482	293 / 0	77 / 0	0 / 0	0 / 0	112 / 0	0 / 0

BEARING MATERIAL TO BE SPF NO.2 OR BETTER AT JOINT(S) F

BRACING
TOP CHORD TO BE SHEATHED OR MAX. PURLIN SPACING = 6.25 FT.
MAX. UNBRACED BOTTOM CHORD LENGTH = 10.00 FT OR RIGID CEILING DIRECTLY APPLIED.

ALL PITCH BREAKS AND PERIMETER CORNER JOINTS MUST BE LATERALLY RESTRAINED.

LOADING
TOTAL LOAD CASES: (4)

CHORDS

MEMB. FR-TO	MAX. FACTORED FORCE (LBS)	FACTORED VERT. LOAD (PLF) FROM	TO	LC1 MAX CSI (LC)	MAX. UNBRAC LENGTH
A- B	0 / 42	-102.1	-102.1	0.14 (1)	10.00
B- C	-318 / 0	-102.1	-102.1	0.18 (1)	6.25
C- D	-318 / 0	-102.1	-102.1	0.18 (1)	6.25
D- E	0 / 42	-102.1	-102.1	0.14 (1)	10.00
H- B	-602 / 0	0.0	0.0	0.06 (1)	7.81
F- D	-602 / 0	0.0	0.0	0.06 (1)	7.81
H- G	0 / 0	-38.5	-38.5	0.12 (3)	10.00
G- F	0 / 0	-38.5	-38.5	0.12 (3)	10.00

WEBS

MEMB. FR-TO	MAX. FACTORED FORCE (LBS)	MAX CSI (LC)
G- C	0 / 139	0.03 (3)
B- G	0 / 268	0.06 (1)
G- D	0 / 268	0.06 (1)

DESIGN CRITERIA

SPECIFIED LOADS:

TOP CH.	LL	=	29.0	PSF
	DL	=	6.0	PSF
BOT CH.	LL	=	10.5	PSF
	DL	=	7.0	PSF
TOTAL LOAD		=	52.5	PSF

SPACING = 24.0 IN. C/C

THIS TRUSS IS DESIGNED FOR RESIDENTIAL OR SMALL BUILDING REQUIREMENTS OF PART 9, NBCC 2015

THIS DESIGN COMPLIES WITH:
- PART 9 OF BCBC 2018
- CSA 086-14
- TPIC 2014

(55 % OF 37.6 P.S.F. G.S.L. PLUS 9.4 P.S.F. RAIN LOAD) EQUALS 29.0 P.S.F. SPECIFIED ROOF LIVE LOAD

ALLOWABLE DEFL.(LL)= L/360 (0.24")
CALCULATED VERT. DEFL.(LL) = L/ 999 (0.01")
ALLOWABLE DEFL.(TL)= L/360 (0.24")
CALCULATED VERT. DEFL.(TL) = L/ 999 (0.01")

CSI: TC=0.18/1.00 (B-C:1) , BC=0.12/1.00 (G-H:3) , WB=0.06/1.00 (D-G:1) , SSI=0.12/1.00 (C-D:1)

DOL LUMBER=1.00 NAIL=1.00 LS BEND=1.10 COMP=1.10 SHEAR=1.10 TENS= 1.10

COMPANION LIVE LOAD FACTOR = 1.00

TRUSS PLATE MANUFACTURER IS NOT RESPONSIBLE FOR QUALITY CONTROL IN THE TRUSS MANUFACTURING PLANT .

NAIL VALUES

PLATE	GRIP(DRY) (PSI) MAX	MIN	SHEAR (PLI) MAX	MIN	SECTION (PLI) MAX	MIN
MT20	650	371	1747	786	1987	1873

PLATE PLACEMENT TOL. = 0.250 inches

PLATE ROTATION TOL. = 5.0 Deg.

JSI GRIP= 0.50 (D) (INPUT = 0.90)
JSI METAL= 0.13 (D) (INPUT = 1.00)

LICENSED PROFESSIONAL ENGINEER
02/12/19
H. J. G ALVES
100009024
PROVINCE OF ONTARIO

DWG NO. TAM T19032/4
STRUCTURAL
COMPONENT ONLY

JOB NAME	TRUSS NAME	QUANTITY	PLY	JOB DESC.	DRWG NO.
200444-401157	T16G	1	1	Preston 3 TRUSS DESC.	**T16G**

Tamarack Roof Truss, Burlington

Version 8.230 S Nov 17 2018 MiTek Industries, Inc. Tue Feb 12 08:53:30 2019 Page 1
ID:MI06BFa0GpW8aLLBIY39yQyOCh?-M1zm_dwcfoTRpcp_Dyvp0WUiQMKTEdnFmTtKD1zlxqZ

Scale = 1:26.4

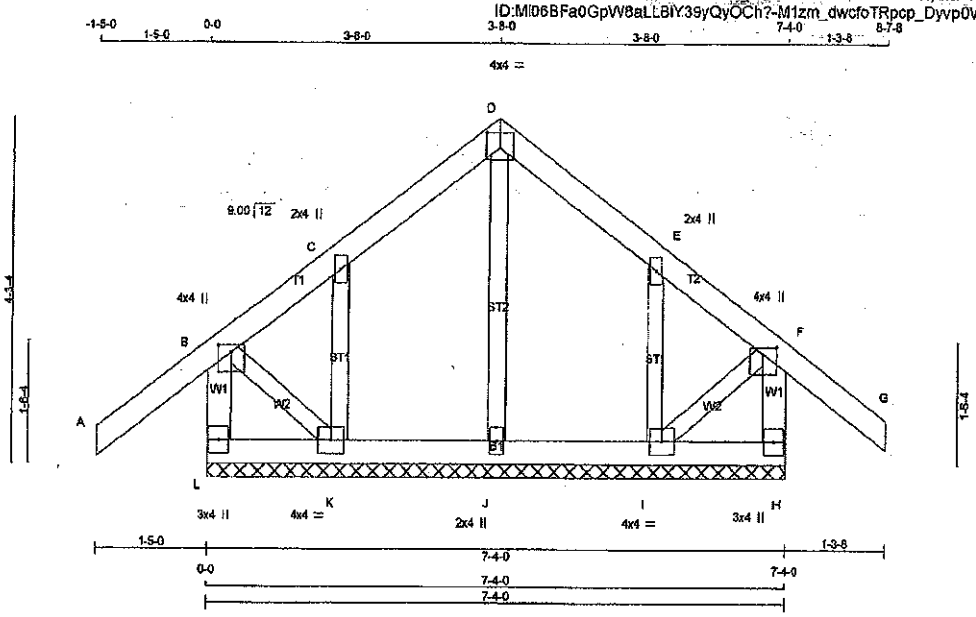

TOTAL WEIGHT = 35 lb
[M]

LUMBER
N. L. G. A. RULES

CHORDS	SIZE		LUMBER	DESCR.
L - B	2x4	DRY	No.2	SPF
A - D	2x4	DRY	No.2	SPF
D - G	2x4	DRY	No.2	SPF
H - F	2x4	DRY	No.2	SPF
L - H	2x4	DRY	No.2	SPF
ALL WEBS	2x3	DRY	No.2	SPF
ALL GABLE WEBS	2x3	DRY	No.2	SPF

DRY: SEASONED LUMBER.

GABLE STUDS SPACED AT 2-0-0 OC.

PLATES (table is in inches)

JT	TYPE	PLATES	W	LEN	Y	X
B	TMVW+p	MT20	4.0	4.0	1.00	2.00
C	TMW+w	MT20	2.0	4.0		
D	TTW-p	MT20	4.0	4.0	2.25	2.00
E	TMW+w	MT20	2.0	4.0		
F	TMVW+p	MT20	4.0	4.0	1.00	2.00
H	BMV1+p	MT20	3.0	4.0		
I	BMWW1-t	MT20	4.0	4.0		
J	BMW1+w	MT20	2.0	4.0		
K	BMWW1-t	MT20	4.0	4.0		
L	BMV1+p	MT20	3.0	4.0		

DIMENSIONS, SUPPORTS AND LOADINGS SPECIFIED BY FABRICATOR TO BE VERIFIED BY BUILDING DESIGNER

BEARINGS

THIS TRUSS DESIGNED FOR CONTINUOUS BEARINGS.

THIS TRUSS REQUIRES RIGID SHEATHING ON EXPOSED FACE.

BEARING MATERIAL TO BE SPF NO.2 OR BETTER AT JOINT(S)

BRACING
TOP CHORD TO BE SHEATHED OR MAX. PURLIN SPACING = 6.25 FT.
MAX. UNBRACED BOTTOM CHORD LENGTH = 10.00 FT OR RIGID CEILING DIRECTLY APPLIED.

ALL PITCH BREAKS AND PERIMETER CORNER JOINTS MUST BE LATERALLY RESTRAINED.

LOADING
TOTAL LOAD CASES: (4)

CHORDS

MEMB. FR-TO	MAX. FACTORED FORCE (LBS)	FACTORED VERT. LOAD LC1 (PLF) FROM	TO	MAX CSI (LC)	MAX. UNBRAC LENGTH
L- B	-311 / 0	0.0	0.0	0.03 (1)	7.81
A- B	0 / 46	-102.1	-102.1	0.16 (1)	10.00
B- C	-50 / 0	-102.1	-102.1	0.16 (1)	6.25
C- D	-14 / 0	-102.1	-102.1	0.06 (1)	6.25
D- E	-16 / 0	-102.1	-102.1	0.06 (1)	6.25
E- F	-43 / 0	-102.1	-102.1	0.13 (1)	6.25
F- G	0 / 42	-102.1	-102.1	0.14 (1)	10.00
H- F	-265 / 0	0.0	0.0	0.03 (1)	7.81
L- K	0 / 0	-38.5	-38.5	0.02 (3)	10.00
K- J	0 / 7	-38.5	-38.5	0.02 (3)	10.00
J- I	0 / 7	-38.5	-38.5	0.02 (3)	10.00
I- H	0 / 0	-38.5	-38.5	0.02 (3)	10.00

WEBS

MEMB. FR-TO	MAX. FACTORED FORCE (LBS)	MAX CSI (LC)
J- D	-181 / 0	0.05 (1)
K- C	-134 / 0	0.02 (1)
I- E	-150 / 0	0.03 (1)
B- K	0 / 14	0.00 (1)
I- F	0 / 15	0.00 (1)

DESIGN CRITERIA

SPECIFIED LOADS:

TOP CH.	LL =	29.0	PSF
	DL =	6.0	PSF
BOT CH.	LL =	10.5	PSF
	DL =	7.0	PSF
TOTAL LOAD	=	52.5	PSF

SPACING = 24.0 IN. C/C

THIS TRUSS IS DESIGNED FOR RESIDENTIAL OR SMALL BUILDING REQUIREMENTS OF PART 9, NBCC 2010, NBCC 2015

THIS DESIGN COMPLIES WITH:
- PART 9 OF BCBC 2018 , OBC 2012
- CSA 086-09, CSA 086-14
- TPIC 2011, TPIC 2014

DESIGN ASSUMPTIONS
-OVERHANG NOT TO BE ALTERED OR CUT OFF.

(55 % OF 37.6 P.S.F. G.S.L. PLUS 8.4 P.S.F. RAIN LOAD) EQUALS 29.0 P.S.F. SPECIFIED ROOF LIVE LOAD

CSI: TC=0.16/1.00 (A-B:1) , BC=0.02/1.00 (K-L:3) , WB=0.05/1.00 (D-J:1) , SSI=0.10/1.00 (A-B:1)

DOL LUMBER=1.00 NAIL=1.00 LS BEND=1.10 COMP=1.10 SHEAR=1.10 TENS= 1.10

COMPANION LIVE LOAD FACTOR = 1.00

TRUSS PLATE MANUFACTURER IS NOT RESPONSIBLE FOR QUALITY CONTROL IN THE TRUSS MANUFACTURING PLANT .

NAIL VALUES

PLATE	GRIP(DRY) (PSI) MAX	MIN	SHEAR (PLI) MAX	MIN	SECTION (PLI) MAX	MIN
MT20	618	354	1667	768	1987	1658

PLATE PLACEMENT TOL. = 0.250 Inches

PLATE ROTATION TOL. = 5.0 Deg.

JSI GRIP= 0.24 (F) (INPUT = 0.90)
JSI METAL= 0.08 (C) (INPUT = 1.00)

LICENSED PROFESSIONAL ENGINEER
02/12/19
H. J. G ALVES
100009024
PROVINCE OF ONTARIO

DWG NO. TAM TR2032 15
STRUCTURAL
COMPONENT ONLY

JOB NAME	TRUSS NAME	QUANTITY.	PLY	JOB DESC. Preston 3	DRWG NO.
200444-401157	T17	1	1	TRUSS DESC.	**T17**

Tamarack Roof Truss, Burlington

Version.8.230 S Nov 17 2018 MiTek Industries, Inc. Tue Feb 12 08:53:30 2019 Page 1

ID:MI06BFa0GpW8aLLBiY39yQyOCh?-M1zm_dwcfoTRpcp_Dyvp0WUdVMFAEWNFmTtKD1zlxqZ

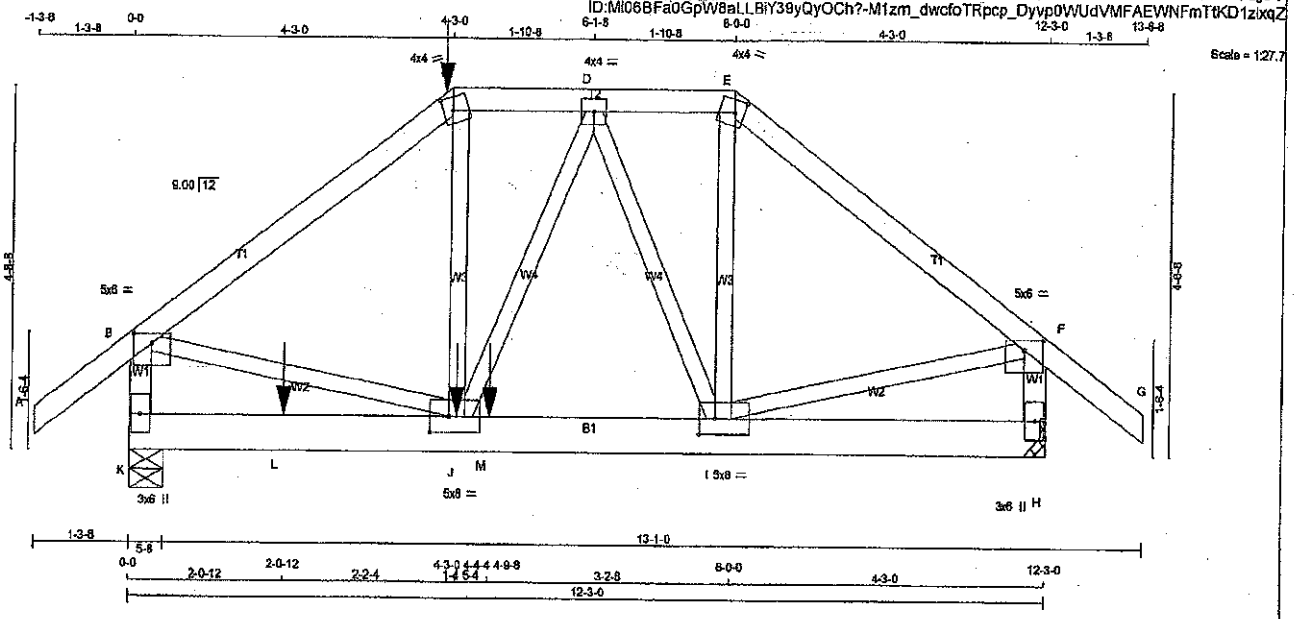

TOTAL WEIGHT = 65 lb

LUMBER

N. L. G. A. RULES

CHORDS	SIZE		LUMBER	DESCR.
A - C	2x4	DRY	No.2	SPF
C - E	2x4	DRY	No.2	SPF
E - G	2x4	DRY	No.2	SPF
K - B	2x4	DRY	No.2	SPF
H - F	2x4	DRY	No.2	SPF
K - H	2x6	DRY	No.2	SPF
ALL WEBS EXCEPT	2x3	DRY	No.2	SPF

DRY: SEASONED LUMBER.

PLATES (table is in inches)

JT	TYPE	PLATES	W	LEN	Y	X
B	TMVW-p	MT20	5.0	6.0	1.50	3.00
C	TTW-m	MT20	4.0	4.0	2.00	1.50
D	TMWW-t	MT20	4.0	4.0		
E	TTW-m	MT20	4.0	4.0	2.00	1.50
F	TMVW-p	MT20	5.0	6.0	1.50	3.00
H	BMV1+p	MT20	3.0	6.0		
I	BMWWW-t	MT20	5.0	8.0	2.50	2.50
J	BMWWW-t	MT20	5.0	8.0	2.50	3.00
K	BMV1+p	MT20	3.0	6.0		

DIMENSIONS, SUPPORTS AND LOADINGS SPECIFIED BY FABRICATOR TO BE VERIFIED BY BUILDING DESIGNER

BEARINGS

JT	FACTORED GROSS REACTION VERT	HORZ	MAXIMUM FACTORED GROSS REACTION DOWN	HORZ	UPLIFT	INPUT BRG	REQRD BRG
K	2257	0	2257	0	0	5-8	5-8
H	1710	0	1710	0	0	MECHANICAL	

A SUITABLE HANGER/MECHANICAL CONNECTION IS REQUIRED AT JOINT H. MINIMUM BEARING LENGTH AT JOINT H = 3-8.

UNFACTORED REACTIONS

JT	1ST LCASE COMBINED	MAX./MIN. COMPONENT REACTIONS SNOW	LIVE	PERM.LIVE	WIND	DEAD	SOIL
K	1649	1025 / 0	245 / 0	0 / 0	0 / 0	379 / 0	0 / 0
H	1251	775 / 0	188 / 0	0 / 0	0 / 0	288 / 0	0 / 0

BEARING MATERIAL TO BE SPF NO.2 OR BETTER AT JOINT(S) K

BRACING

TOP CHORD TO BE SHEATHED OR MAX. PURLIN SPACING = 4.03 FT.
MAX. UNBRACED BOTTOM CHORD LENGTH = 10.00 FT OR RIGID CEILING DIRECTLY APPLIED.

ALL PITCH BREAKS AND PERIMETER CORNER JOINTS MUST BE LATERALLY RESTRAINED.

LOADING

TOTAL LOAD CASES: (4)

CHORDS

MEMB. FR-TO	MAX. FACTORED FORCE (LBS)	FACTORED VERT. LOAD (PLF) FROM	TO	LC1 MAX CSI (LC)	MAX. UNBRAC LENGTH
A- B	0 / 42	-102.1	-102.1	0.15 (1)	10.00
B- C	-2246 / 0	-102.1	-102.1	0.48 (1)	4.03
C- D	-1794 / 0	-102.1	-102.1	0.09 (1)	4.90
D- E	-1304 / 0	-102.1	-102.1	0.07 (1)	5.57
E- F	-1603 / 0	-102.1	-102.1	0.42 (1)	4.69
F- G	0 / 42	-102.1	-102.1	0.15 (1)	10.00
K- B	-2161 / 0	0.0	0.0	0.24 (1)	5.72
H- F	-1645 / 0	0.0	0.0	0.19 (1)	6.42
K- L	0 / 0	-38.5	-38.5	0.12 (3)	10.00
L- J	0 / 0	-38.5	-38.5	0.12 (3)	10.00
J- M	0 / 1586	-38.5	-38.5	0.36 (1)	10.00
M- I	0 / 1586	-38.5	-38.5	0.36 (1)	10.00
I- H	0 / 0	-38.5	-38.5	0.07 (2)	10.00

WEBS

MEMB. FR-TO	MAX. FACTORED FORCE (LBS)	MAX CSI (LC)
J- C	0 / 214	0.06 (3)
J- D	0 / 565	0.14 (1)
D- I	-766 / 0	0.28 (1)
I- E	0 / 653	0.16 (1)
B- J	0 / 1849	0.46 (1)
I- F	0 / 1319	0.33 (1)

FACTORED CONCENTRATED LOADS (LBS)

JT	LOC.	LC1	MAX-	MAX+	FACE	DIR.	TYPE	HEEL	CONN.
C	4-3-0	-50	-56	—	FRONT	VERT	DEAD	—	—
C	4-3-0	-690	-690	—	FRONT	VERT	TOTAL	—	—
C	4-3-0	-285	-285	—	FRONT	VERT	SNOW	—	—
J	4-4-4	-57	-72	—	FRONT	VERT	TOTAL	—	—
L	2-0-12	-57	-72	—	FRONT	VERT	TOTAL	—	—
M	4-9-8	-824	-824	—	FRONT	VERT	TOTAL	—	—

DESIGN CRITERIA

*** SPECIAL LOADS ANALYSIS ***
GEOMETRY AND/OR BASIC LOADS CHANGED BY USER.
LOADS WERE DERIVED FROM USER INPUT
NO FURTHER MODIFICATIONS WERE MADE

SPECIFIED LOADS:

TOP CH.	LL	=	29.0	PSF
	DL	=	6.0	PSF
BOT CH.	LL	=	10.5	PSF
	DL	=	7.0	PSF
TOTAL LOAD		=	52.5	PSF

SPACING = 24.0 IN. C/C

LOADING IN FLAT SECTION BASED ON A SLOPE OF 6.00/12

*** NON STANDARD GIRDER ***
ADDT'L USER-DEFINED LOADS APPLIED TO ALL LOAD CASES.

THIS TRUSS IS DESIGNED FOR RESIDENTIAL OR SMALL BUILDING REQUIREMENTS OF PART 9, NBCC 2015

THIS DESIGN COMPLIES WITH:
- PART 9 OF BCBC 2018
- CSA 086-14
- TPIC 2014

(55 % OF 37.6 P.S.F. G.S.L. PLUS 9.4 P.S.F. RAIN LOAD) EQUALS 29.0 P.S.F. SPECIFIED ROOF LIVE LOAD

ALLOWABLE DEFL.(LL)= L/360 (0.41")
CALCULATED VERT. DEFL.(LL) = L/ 999 (0.03")
ALLOWABLE DEFL.(TL)= L/360 (0.41")
CALCULATED VERT. DEFL.(TL) = L/ 999 (0.05")

CSI: TC=0.48/1.00 (B-C:1) , BC=0.36/1.00 (I-J:1) , WB=0.46/1.00 (B-J:1) , SSI=0.53/1.00 (I-J:1)

DOL LUMBER=1.00 NAIL=1.00 LS BEND=1.00 COMP=1.00 SHEAR=1.00 TENS= 1.00

COMPANION LIVE LOAD FACTOR = 1.00

TRUSS PLATE MANUFACTURER IS NOT RESPONSIBLE FOR QUALITY CONTROL IN THE TRUSS MANUFACTURING PLANT.

NAIL VALUES

PLATE	GRIP(DRY) (PSI) MAX	MIN	SHEAR (PLI) MAX	MIN	SECTION (PLI) MAX	MIN
MT20	650	371	1747	788	1987	1873

PLATE PLACEMENT TOL. = 0.250 Inches

PLATE ROTATION TOL. = 5.0 Deg.

JSI GRIP= 0.86 (I) (INPUT = 0.90)
JSI METAL= 0.43 (F) (INPUT = 1.00)

LICENSED PROFESSIONAL ENGINEER
02/12/19
H. J. G. ALVES
100099024
PROVINCE OF ONTARIO

DWG NO. TAM T1903216
STRUCTURAL
COMPONENT ONLY

JOB NAME	TRUSS NAME	QUANTITY	PLY	JOB DESC. Preston 3	DRWG NO.
200444-401157	T18	2	1	TRUSS DESC.	**T18**

Tamarack Roof Truss, Burlington

Version 8.230 S Nov 17 2018 MiTek Industries, Inc. Tue Feb 12 08:53:31 2019 Page 1
ID:Mi06BFa0GpW8aLBiY39yQyOCh?-qDX8BzxEQ6bIRmOAngQ2Zj1fTmaAz0BP_7culUzixqY

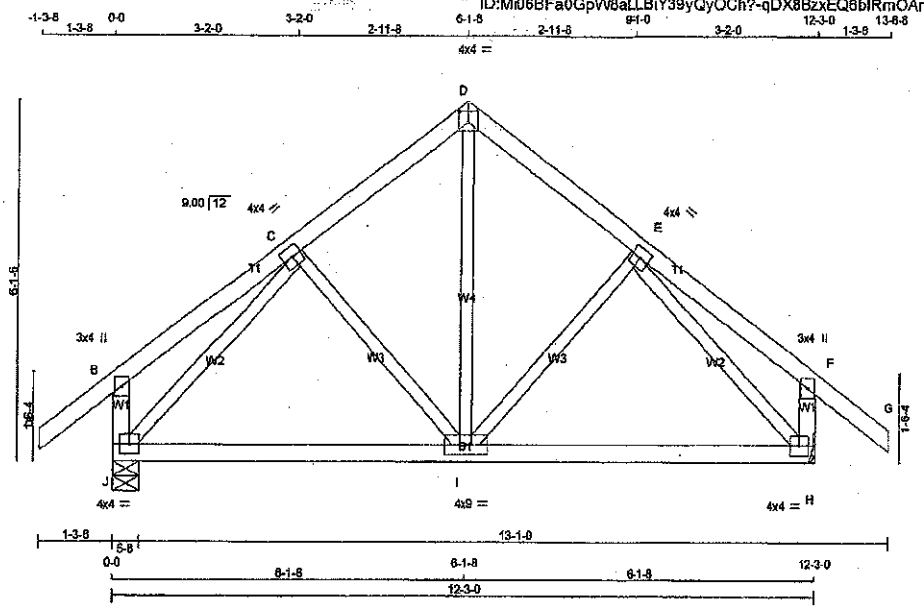

TOTAL WEIGHT = 2 X 56 = 113 lb

[M][F]

LUMBER
N. L. G. A. RULES

CHORDS	SIZE		LUMBER	DESCR.
A - D	2x4	DRY	No.2	SPF
D - G	2x4	DRY	No.2	SPF
J - B	2x4	DRY	No.2	SPF
H - F	2x4	DRY	No.2	SPF
J - H	2x4	DRY	No.2	SPF
ALL WEBS EXCEPT	2x3	DRY	No.2	SPF

DRY: SEASONED LUMBER.

PLATES (table is in inches)

JT	TYPE	PLATES	W	LEN	Y	X
B	TMV+p	MT20	3.0	4.0		
C	TMWW-t	MT20	4.0	4.0		
D	TTW-p	MT20	4.0	4.0	2.25	2.00
E	TMWW-t	MT20	4.0	4.0		
F	TMV+p	MT20	3.0	4.0		
H	BMVW1-t	MT20	4.0	4.0		
I	BMWWW-t	MT20	4.0	9.0		
J	BMVW1-t	MT20	4.0	4.0		

DIMENSIONS, SUPPORTS AND LOADINGS SPECIFIED BY FABRICATOR TO BE VERIFIED BY BUILDING DESIGNER

BEARINGS

JT	FACTORED GROSS REACTION VERT	HORZ	MAXIMUM FACTORED GROSS REACTION DOWN	HORZ	UPLIFT	INPUT BRG IN-SX	REQRD BRG IN-SX
J	1002	0	1002	0	0	5-8	5-8
H	1002	0	1002	0	0	MECHANICAL	

A SUITABLE HANGER/MECHANICAL CONNECTION IS REQUIRED AT JOINT H. MINIMUM BEARING LENGTH AT JOINT H = 1-8.

UNFACTORED REACTIONS

JT	1ST LCASE COMBINED	MAX./MIN. COMPONENT REACTIONS SNOW	LIVE	PERM.LIVE	WIND	DEAD	SOIL
J	740	436 / 0	129 / 0	0 / 0	0 / 0	176 / 0	0 / 0
H	740	436 / 0	129 / 0	0 / 0	0 / 0	176 / 0	0 / 0

BEARING MATERIAL TO BE SPF NO.2 OR BETTER AT JOINT(S) J

BRACING
TOP CHORD TO BE SHEATHED OR MAX. PURLIN SPACING = 6.25 FT.
MAX. UNBRACED BOTTOM CHORD LENGTH = 10.00 FT OR RIGID CEILING DIRECTLY APPLIED.

ALL PITCH BREAKS AND PERIMETER CORNER JOINTS MUST BE LATERALLY RESTRAINED.

LOADING
TOTAL LOAD CASES: (4)

CHORDS

MEMB. FR-TO	MAX. FACTORED FORCE (LBS)	FACTORED VERT. LOAD LC1 (PLF) FROM	TO	MAX CSI (LC)	MAX. UNBRAC LENGTH
A- B	0 / 42	-102.1	-102.1	0.14 (1)	10.00
B- C	0 / 21	-102.1	-102.1	0.15 (1)	10.00
C- D	-627 / 0	-102.1	-102.1	0.11 (1)	6.25
D- E	-627 / 0	-102.1	-102.1	0.11 (1)	6.25
E- F	0 / 21	-102.1	-102.1	0.15 (1)	10.00
F- G	0 / 42	-102.1	-102.1	0.14 (1)	10.00
J- B	-262 / 0	0.0	0.0	0.03 (1)	7.81
H- F	-262 / 0	0.0	0.0	0.03 (1)	7.81
J- I	0 / 569	-36.5	-36.5	0.38 (2)	10.00
I- H	0 / 569	-36.5	-36.5	0.38 (2)	10.00

WEBS

MEMB. FR-TO	MAX. FACTORED FORCE (LBS)	MAX CSI (LC)
I- D	0 / 461	0.11 (1)
I- E	-127 / 29	0.04 (1)
C- I	-127 / 29	0.04 (1)
J- C	-864 / 0	0.29 (1)
E- H	-864 / 0	0.29 (1)

DESIGN CRITERIA

SPECIFIED LOADS:

TOP CH.	LL	=	29.0	PSF
	DL	=	6.0	PSF
BOT CH.	LL	=	10.5	PSF
	DL	=	7.0	PSF
TOTAL LOAD		=	52.5	PSF

SPACING = 24.0 IN. C/C

THIS TRUSS IS DESIGNED FOR RESIDENTIAL OR SMALL BUILDING REQUIREMENTS OF PART 9, NBCC 2015

THIS DESIGN COMPLIES WITH:
- PART 9 OF BCBC 2018
- CSA 086-14
- TPIC 2014

(55 % OF 37.6 P.S.F. G.S.L. PLUS 8.4 P.S.F. RAIN LOAD) EQUALS 29.0 P.S.F. SPECIFIED ROOF LIVE LOAD

ALLOWABLE DEFL.(LL)= L/360 (0.41")
CALCULATED VERT. DEFL.(LL) = L/ 999 (0.04")
ALLOWABLE DEFL.(TL)= L/360 (0.41")
CALCULATED VERT. DEFL.(TL) = L/ 999 (0.07")

CSI: TC=0.15/1.00 (B-C:1) , BC=0.38/1.00 (I-J:2) , WB=0.29/1.00 (C-J:1) , SSI=0.16/1.00 (I-J:3)

DOL LUMBER=1.00 NAIL=1.00 LS BEND=1.10 COMP=1.10 SHEAR=1.10 TENS= 1.10

COMPANION LIVE LOAD FACTOR = 1.00

TRUSS PLATE MANUFACTURER IS NOT RESPONSIBLE FOR QUALITY CONTROL IN THE TRUSS MANUFACTURING PLANT .

NAIL VALUES

PLATE	GRIP(DRY) (PSI) MAX	MIN	SHEAR (PLI) MAX	MIN	SECTION (PLI) MAX	MIN
MT20	650	371	1747	788	1987	1873

PLATE PLACEMENT TOL. = 0.250 Inches

PLATE ROTATION TOL. = 5.0 Deg.

JSI GRIP= 0.85 (C) (INPUT = 0.90)
JSI METAL= 0.28 (C) (INPUT = 1.00)

RECEIVED
AUG 29 2019
TOWN OF CALEDON
BUILDING SECTION

LICENSED PROFESSIONAL ENGINEER
02/12/19
H. J. G. ALVES
100000024
PROVINCE OF ONTARIO

DWG NO. TAM T1903217
STRUCTURAL
COMPONENT ONLY

JOB NAME	TRUSS NAME	QUANTITY	PLY	JOB DESC. Preston 3	DRWG NO.
200444-401156	PB1	1	1	TRUSS DESC.	**PB1**

Tamarack Roof Truss, Burlington

Version 8.230 S Nov 17 2018 MiTek Industries, Inc. Tue Feb 5 20:29:02 2019 Page 1
ID:4xNdf4mUPyxd3LURX25ZQKyOFG0-o?CqM8gpz8rD_7Vp0c5HFsvMkD0CSbIZTBQEVJzo5IV

Scale = 1:16.6

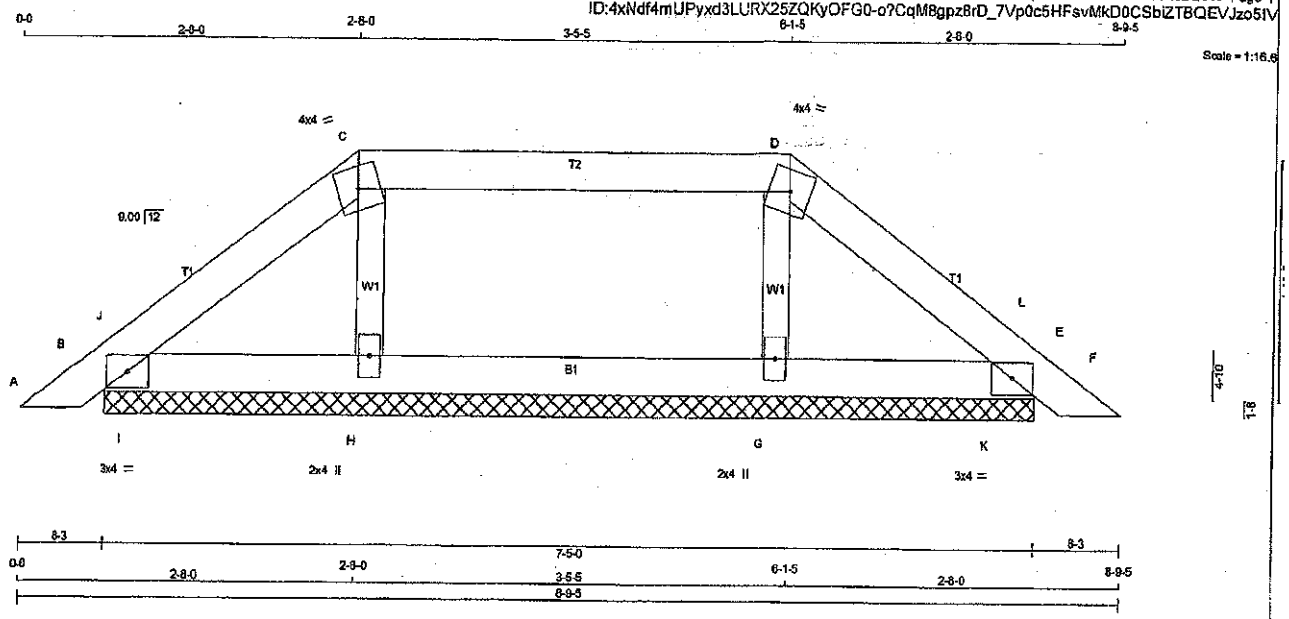

TOTAL WEIGHT = 22 lb

[M]

LUMBER
N. L. G. A. RULES

CHORDS	SIZE		LUMBER	DESCR.
A - C	2x4	DRY	No.2	SPF
C - D	2x4	DRY	No.2	SPF
D - F	2x4	DRY	No.2	SPF
B - E	2x4	DRY	No.2	SPF
ALL WEBS	2x3	DRY	No.2	SPF

DRY: SEASONED LUMBER.

PLATES (table is in inches)

JT	TYPE	PLATES	W	LEN	Y	X
B	TMB1-I	MT20	3.0	4.0		
C	TTW-m	MT20	4.0	4.0		
D	TTW-m	MT20	4.0	4.0		
E	TMB1-I	MT20	3.0	4.0		
G	BMW1+w	MT20	2.0	4.0		
H	BMW1+w	MT20	2.0	4.0		

DIMENSIONS, SUPPORTS AND LOADINGS SPECIFIED BY FABRICATOR TO BE VERIFIED BY BUILDING DESIGNER

BEARINGS

JT	FACTORED GROSS REACTION VERT	HORZ	MAXIMUM FACTORED GROSS REACTION DOWN	HORZ	UPLIFT	INPUT BRG IN-SX	REQRD BRG IN-SX
B	232	0	232	0	0	7-5-0	7-5-0
E	232	0	232	0	0	7-5-0	7-5-0
H	349	0	349	0	0	7-5-0	7-5-0
G	349	0	349	0	0	7-5-0	7-5-0

UNFACTORED REACTIONS

1ST LCASE MAX./MIN. COMPONENT REACTIONS

JT	COMBINED	SNOW	LIVE	PERM.LIVE	WIND	DEAD	SOIL
B	166	117 / 0	15 / 0	0 / 0	0 / 0	34 / 0	0 / 0
E	166	117 / 0	15 / 0	0 / 0	0 / 0	34 / 0	0 / 0
H	266	133 / 0	63 / 0	0 / 0	0 / 0	69 / 0	0 / 0
G	266	133 / 0	63 / 0	0 / 0	0 / 0	69 / 0	0 / 0

BEARING MATERIAL TO BE SPF NO.2 OR BETTER AT JOINT(S) B, E, H, G

BRACING
TOP CHORD TO BE SHEATHED OR MAX. PURLIN SPACING = 6.25 FT.
MAX. UNBRACED BOTTOM CHORD LENGTH = 10.00 FT OR RIGID CEILING DIRECTLY APPLIED.

ALL PITCH BREAKS AND PERIMETER CORNER JOINTS MUST BE LATERALLY RESTRAINED.

LOADING
TOTAL LOAD CASES: (4)

CHORDS

MEMB. FR-TO	MAX. FACTORED FORCE (LBS)	FACTORED VERT. LOAD (PLF) FROM	TO	LC1	MAX CSI (LC)	MAX. UNBRAC LENGTH
A- B	0 / 17	-102.1	-102.1		0.03 (1)	10.00
B- J	-64 / 0	-102.1	-102.1		0.01 (1)	6.25
J- C	-76 / 0	-102.1	-102.1		0.05 (1)	6.25
C- D	-44 / 0	-102.1	-102.1		0.21 (1)	6.25
D- L	-76 / 0	-102.1	-102.1		0.05 (1)	6.25
L- E	-64 / 0	-102.1	-102.1		0.01 (1)	6.25
E- F	0 / 17	-102.1	-102.1		0.03 (1)	10.00
B- I	0 / 58	-38.5	-38.5		0.05 (1)	10.00
I- H	0 / 58	-38.5	-38.5		0.06 (2)	10.00
H- G	0 / 44	-38.5	-38.5		0.06 (2)	10.00
G- K	0 / 58	-38.5	-38.5		0.06 (2)	10.00
K- E	0 / 58	-38.5	-38.5		0.05 (1)	10.00

WEBS

MEMB. FR-TO	MAX. FACTORED FORCE (LBS)	MAX CSI (LC)
H- C	-215 / 0	0.03 (1)
G- D	-215 / 0	0.03 (1)
I- J	-119 / 0	0.00 (1)
K- L	-119 / 0	0.00 (1)

DESIGN CRITERIA

SPECIFIED LOADS:

TOP CH.	LL =	29.0	PSF
	DL =	6.0	PSF
BOT CH.	LL =	10.5	PSF
	DL =	7.0	PSF
TOTAL LOAD	=	52.5	PSF

SPACING = 24.0 IN. C/C

LOADING IN FLAT SECTION BASED ON A SLOPE OF 6.00/12

THIS TRUSS IS DESIGNED FOR RESIDENTIAL OR SMALL BUILDING REQUIREMENTS OF PART 9, NBCC 2010, NBCC 2015

THIS DESIGN COMPLIES WITH:
- PART 9 OF BCBC 2018 , OBC 2012
- CSA 086-09, CSA 086-14
- TPIC 2011, TPIC 2014

(55 % OF 37.6 P.S.F. G.S.L. PLUS 8.4 P.S.F. RAIN LOAD) EQUALS 29.0 P.S.F. SPECIFIED ROOF LIVE LOAD

CSI: TC=0.21/1.00 (C-D:1) , BC=0.06/1.00 (H-I:2) , WB=0.03/1.00 (C-H:1) , SSI=0.14/1.00 (C-D:1)

DOL LUMBER=1.00 NAIL=1.00 LS BEND=1.10 COMP=1.10 SHEAR=1.10 TENS= 1.10

COMPANION LIVE LOAD FACTOR = 1.00

TRUSS PLATE MANUFACTURER IS NOT RESPONSIBLE FOR QUALITY CONTROL IN THE TRUSS MANUFACTURING PLANT .

NAIL VALUES

PLATE	GRIP(DRY) (PSI) MAX	MIN	SHEAR (PLI) MAX	MIN	SECTION (PLI) MAX	MIN
MT20	618	354	1667	788	1987	1656

PLATE PLACEMENT TOL. = 0.250 inches

PLATE ROTATION TOL. = 5.0 Deg.

JSI GRIP= 0.17 (B) (INPUT = 0.90)
JSI METAL= 0.05 (H) (INPUT = 1.00)

LICENSED PROFESSIONAL ENGINEER
02/05/19
H. J. GALVES
100009024
PROVINCE OF ONTARIO

DWG NO. TAM 17902724
STRUCTURAL
COMPONENT ONLY

JOB NAME	TRUSS NAME	QUANTITY	PLY	JOB DESC. Preston 3	DRWG NO.
200444-401156	PB2	1	1	TRUSS DESC.	**PB2**

Tamarack Roof Truss, Burlington

Version 8.230 S Nov 17 2018 MiTek Industries, Inc. Tue Feb 5 20:29:02 2019 Page 1
ID:4xNdf4mUPyxd3LURX25ZQKyOFG0-o?CqM8gpz8rD_7Vp0c5HFsvNID_PSb?ZTBQEVJzo5IV

Scale = 1:20.3

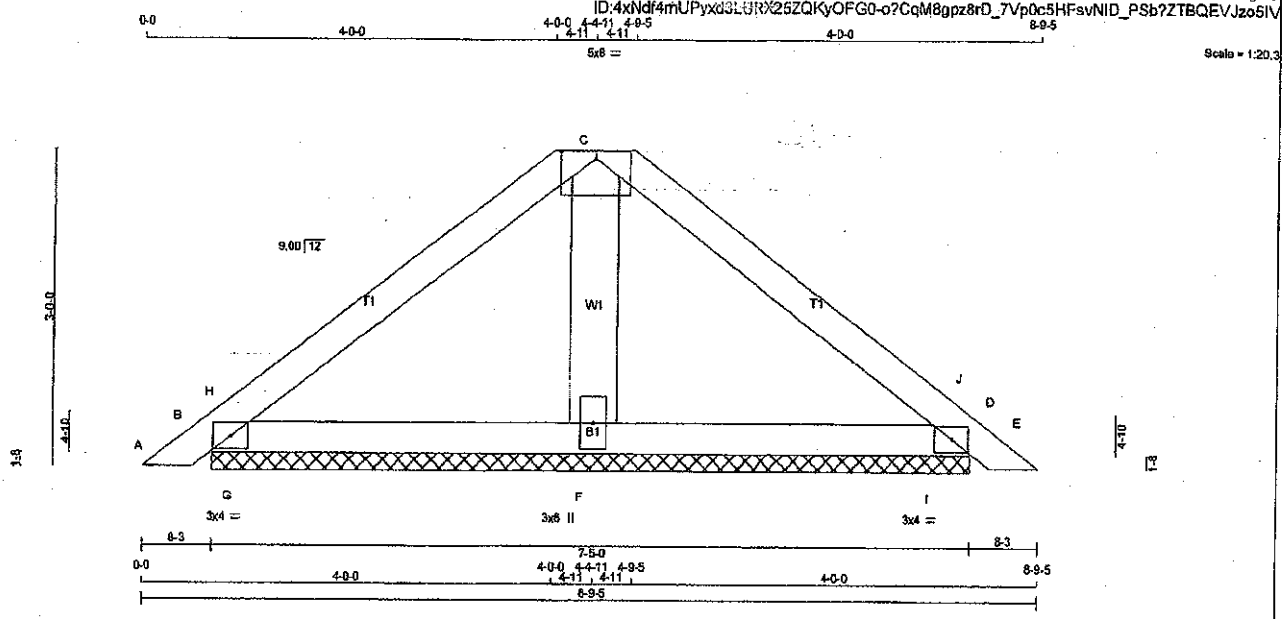

TOTAL WEIGHT = 25 lb
[M]

LUMBER
N. L. G. A. RULES

CHORDS	SIZE		LUMBER	DESCR.
A - C	2x4	DRY	No.2	SPF
C - E	2x4	DRY	No.2	SPF
B - D	2x4	DRY	No.2	SPF
ALL WEBS	2x6	DRY	No.2	SPF

DRY: SEASONED LUMBER.

PLATES (table is in inches)

JT	TYPE	PLATES	W	LEN	Y	X
B	TMB1-I	MT20	3.0	4.0		
C	TMTMWm	MT20	5.0	6.0	0.75	4.00
D	TMB1-I	MT20	3.0	4.0		
F	BMW1+w	MT20	3.0	6.0		

DIMENSIONS, SUPPORTS AND LOADINGS SPECIFIED BY FABRICATOR TO BE VERIFIED BY BUILDING DESIGNER

BEARINGS

JT	FACTORED GROSS REACTION VERT	HORZ	MAXIMUM FACTORED GROSS REACTION DOWN	HORZ	UPLIFT	INPUT BRG IN-SX	REQRD BRG IN-SX
B	373	0	373	0	0	7-5-0	7-5-0
D	373	0	373	0	0	7-5-0	7-5-0
F	416	0	416	0	0	7-5-0	7-5-0

UNFACTORED REACTIONS

JT	1ST LCASE COMBINED	MAX./MIN. COMPONENT REACTIONS SNOW	LIVE	PERM.LIVE	WIND	DEAD	SOIL
B	271	173 / 0	37 / 0	0 / 0	0 / 0	61 / 0	0 / 0
D	271	173 / 0	37 / 0	0 / 0	0 / 0	61 / 0	0 / 0
F	320	153 / 0	81 / 0	0 / 0	0 / 0	86 / 0	0 / 0

BEARING MATERIAL TO BE SPF NO.2 OR BETTER AT JOINT(S) B, D, F

BRACING
TOP CHORD TO BE SHEATHED OR MAX. PURLIN SPACING = 6.25 FT.
MAX. UNBRACED BOTTOM CHORD LENGTH = 10.00 FT OR RIGID CEILING DIRECTLY APPLIED.

ALL PITCH BREAKS AND PERIMETER CORNER JOINTS MUST BE LATERALLY RESTRAINED.

LOADING
TOTAL LOAD CASES: (4)

CHORDS

MEMB. FR-TO	MAX. FACTORED FORCE (LBS)	FACTORED VERT. LOAD LC1 (PLF) FROM	TO	MAX CSI (LC)	MAX. UNBRAC LENGTH
A- B	0 / 17	-102.1	-102.1	0.03 (1)	10.00
B- H	-76 / 0	-102.1	-102.1	0.07 (1)	6.25
H- C	-146 / 0	-102.1	-102.1	0.17 (1)	6.25
C- J	-146 / 0	-102.1	-102.1	0.17 (1)	6.25
J- D	-76 / 0	-102.1	-102.1	0.07 (1)	6.25
D- E	0 / 17	-102.1	-102.1	0.03 (1)	10.00
B- G	0 / 109	-38.5	-38.5	0.16 (1)	10.00
G- F	0 / 109	-38.5	-38.5	0.16 (1)	10.00
F- I	0 / 109	-38.5	-38.5	0.16 (1)	10.00
I- D	0 / 109	-38.5	-38.5	0.16 (1)	10.00

WEBS

MEMB. FR-TO	MAX. FACTORED FORCE (LBS)	MAX CSI (LC)
F- C	-158 / 0	0.01 (1)
G- H	-364 / 24	0.00 (1)
I- J	-364 / 24	0.00 (1)

DESIGN CRITERIA

SPECIFIED LOADS:

TOP CH.	LL =	29.0	PSF
	DL =	6.0	PSF
BOT CH.	LL =	10.5	PSF
	DL =	7.0	PSF
TOTAL LOAD	=	52.5	PSF

SPACING = 24.0 IN. C/C

THIS TRUSS IS DESIGNED FOR RESIDENTIAL OR SMALL BUILDING REQUIREMENTS OF PART 9, NBCC 2010, NBCC 2015

THIS DESIGN COMPLIES WITH:
- PART 9 OF BCBC 2018 , OBC 2012
- CSA 086-09, CSA 086-14
- TPIC 2011, TPIC 2014

(55 % OF 37.6 P.S.F. G.S.L. PLUS 8.4 P.S.F. RAIN LOAD) EQUALS 29.0 P.S.F. SPECIFIED ROOF LIVE LOAD

CSI: TC=0.17/1.00 (C-H:1) , BC=0.18/1.00 (F-I:1) , WB=0.01/1.00 (C-F:1) , SSI=0.31/1.00 (B-G:1)

DOL LUMBER=1.00 NAIL=1.00 LS BEND=1.10 COMP=1.10 SHEAR=1.10 TENS= 1.10

COMPANION LIVE LOAD FACTOR = 1.00

TRUSS PLATE MANUFACTURER IS NOT RESPONSIBLE FOR QUALITY CONTROL IN THE TRUSS MANUFACTURING PLANT .

NAIL VALUES

PLATE	GRIP(DRY) (PSI) MAX	MIN	SHEAR (PLI) MAX	MIN	SECTION (PLI) MAX	MIN
MT20	618	354	1667	788	1987	1656

PLATE PLACEMENT TOL. = 0.250 inches

PLATE ROTATION TOL. = 5.0 Deg.

JSI GRIP= 0.30 (D) (INPUT = 0.90)
JSI METAL= 0.07 (D) (INPUT = 1.00)

LICENSED PROFESSIONAL ENGINEER
02/05/19
H. J. G. ALVES
100009027
PROVINCE OF ONTARIO

DWG NO. TAM 17902725
STRUCTURAL
COMPONENT ONLY

JOB NAME	TRUSS NAME	QUANTITY	PLY	JOB DESC. Preston 3	DRWG NO.
200444-401156	PB3	8	1	TRUSS DESC.	**PB3**

Tamarack Roof Truss, Burlington

Version 8.230 S Nov 17 2018 MiTek Industries, Inc. Tue Feb 5 20:29:03 2019 Page 1
ID:4xNdf4mUPyxd3LURX25ZQKyOFG0-GBmCZUhSkSa4cH49ZKcWn3SY2dKbB24jirAo2lzo5IU

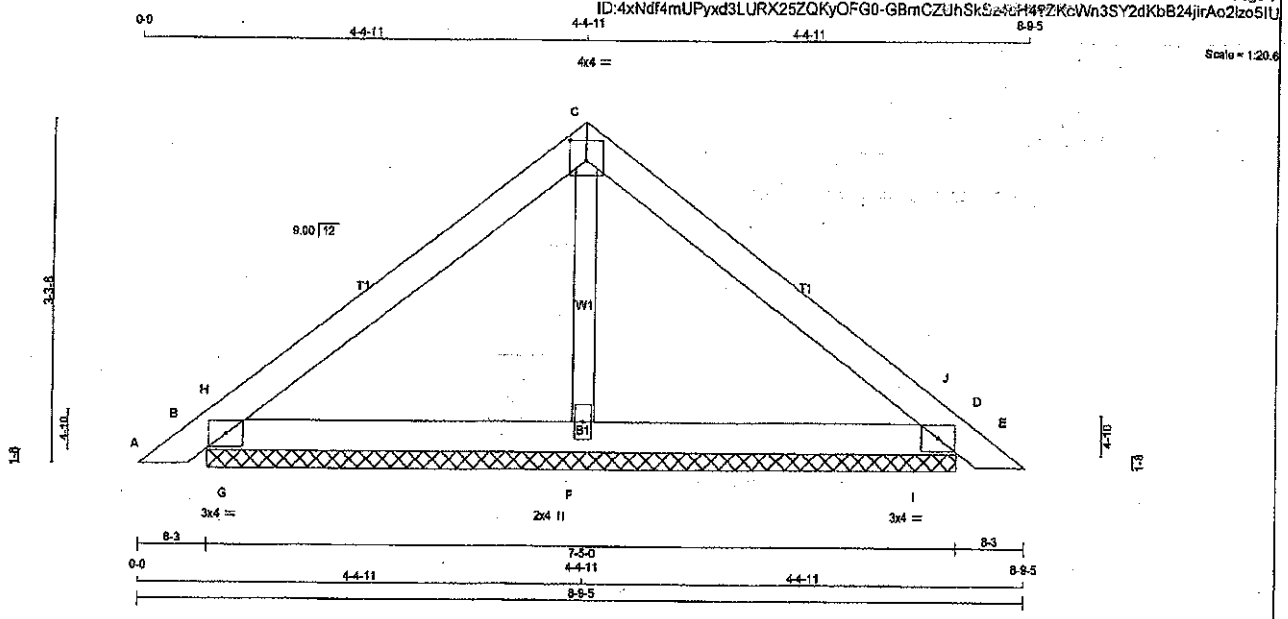

TOTAL WEIGHT = 8 X 23 = 184 lb

LUMBER
N. L. G. A. RULES

CHORDS	SIZE		LUMBER	DESCR.
A - C	2x4	DRY	No.2	SPF
C - E	2x4	DRY	No.2	SPF
B - D	2x4	DRY	No.2	SPF
ALL WEBS	2x3	DRY	No.2	SPF

DRY: SEASONED LUMBER.

PLATES (table is in inches)

JT	TYPE	PLATES	W	LEN	Y	X
B	TMB1-I	MT20	3.0	4.0		
C	TTW-p	MT20	4.0	4.0	2.25	2.00
D	TMB1-I	MT20	3.0	4.0		
F	BMW1+w	MT20	2.0	4.0		

DIMENSIONS, SUPPORTS AND LOADINGS SPECIFIED BY FABRICATOR TO BE VERIFIED BY BUILDING DESIGNER

BEARINGS

JT	FACTORED GROSS REACTION VERT	HORZ	MAXIMUM FACTORED GROSS REACTION DOWN	HORZ	UPLIFT	INPUT BRG IN-SX	REQRD BRG IN-SX
B	385	0	385	0	0	7-5-0	7-5-0
D	385	0	385	0	0	7-5-0	7-5-0
F	394	0	394	0	0	7-5-0	7-5-0

UNFACTORED REACTIONS

JT	1ST LCASE COMBINED	MAX./MIN. COMPONENT REACTIONS SNOW	LIVE	PERM.LIVE	WIND	DEAD	SOIL
B	279	161 / 0	37 / 0	0 / 0	0 / 0	62 / 0	0 / 0
D	279	161 / 0	37 / 0	0 / 0	0 / 0	62 / 0	0 / 0
F	304	138 / 0	82 / 0	0 / 0	0 / 0	63 / 0	0 / 0

BEARING MATERIAL TO BE SPF NO.2 OR BETTER AT JOINT(S) B, D, F

BRACING
TOP CHORD TO BE SHEATHED OR MAX. PURLIN SPACING = 6.25 FT.
MAX. UNBRACED BOTTOM CHORD LENGTH = 10.00 FT OR RIGID CEILING DIRECTLY APPLIED.

ALL PITCH BREAKS AND PERIMETER CORNER JOINTS MUST BE LATERALLY RESTRAINED.

LOADING
TOTAL LOAD CASES: (4)

CHORDS

MEMB. FR-TO	MAX. FACTORED FORCE (LBS)	FACTORED VERT. LOAD (PLF) FROM	TO	LC1	MAX CSI (LC)	MAX. UNBRAC LENGTH
A- B	0 / 17	-102.1	-102.1	0.03 (1)	10.00	
B- H	-77 / 0	-102.1	-102.1	0.07 (1)	6.25	
H- C	-166 / 0	-102.1	-102.1	0.17 (1)	6.25	
C- J	-166 / 0	-102.1	-102.1	0.17 (1)	6.25	
J- D	-77 / 0	-102.1	-102.1	0.07 (1)	6.25	
D- E	0 / 17	-102.1	-102.1	0.03 (1)	10.00	
B- G	0 / 125	-38.5	-38.5	0.16 (1)	10.00	
G- F	0 / 125	-38.5	-38.5	0.16 (1)	10.00	
F- I	0 / 125	-38.5	-38.5	0.16 (1)	10.00	
I- D	0 / 125	-38.5	-38.5	0.16 (1)	10.00	

WEBS

MEMB. FR-TO	MAX. FACTORED FORCE (LBS)	MAX CSI (LC)
F- C	-131 / 0	0.02 (1)
G- H	-382 / 25	0.00 (1)
I- J	-382 / 25	0.00 (1)

DESIGN CRITERIA

SPECIFIED LOADS:

TOP CH.	LL	=	29.0	PSF
	DL	=	6.0	PSF
BOT CH.	LL	=	10.5	PSF
	DL	=	7.0	PSF
TOTAL LOAD		=	52.5	PSF

SPACING = 24.0 IN. C/C

THIS TRUSS IS DESIGNED FOR RESIDENTIAL OR SMALL BUILDING REQUIREMENTS OF PART 9, NBCC 2010, NBCC 2015

THIS DESIGN COMPLIES WITH:
- PART 9 OF BCBC 2018 , OBC 2012
- CSA 086-09, CSA 086-14
- TPIC 2011, TPIC 2014

(55 % OF 37.6 P.S.F. G.S.L. PLUS 8.4 P.S.F. RAIN LOAD) EQUALS 29.0 P.S.F. SPECIFIED ROOF LIVE LOAD

CSI: TC=0.17/1.00 (C-J:1) , BC=0.18/1.00 (F-I:1) , WB=0.02/1.00 (C-F:1) , SSI=0.31/1.00 (D-I:1)

DOL LUMBER=1.00 NAIL=1.00 LS BEND=1.10 COMP=1.10 SHEAR=1.10 TENS= 1.10

COMPANION LIVE LOAD FACTOR = 1.00

TRUSS PLATE MANUFACTURER IS NOT RESPONSIBLE FOR QUALITY CONTROL IN THE TRUSS MANUFACTURING PLANT.

NAIL VALUES

PLATE	GRIP(DRY) (PSI) MAX	MIN	SHEAR (PLI) MAX	MIN	SECTION (PLI) MAX	MIN
MT20	618	354	1667	788	1987	1656

PLATE PLACEMENT TOL. = 0.250 inches

PLATE ROTATION TOL. = 5.0 Deg.

JSI GRIP= 0.31 (B) (INPUT = 0.90)
JSI METAL= 0.08 (B) (INPUT = 1.00)

AUG 2 1 2019
TOWN OF OAKVILLE
BUILDING DIVISION
PLANS

LICENSED PROFESSIONAL ENGINEER
H. J. G ALVES
100008024
PROVINCE OF ONTARIO

DWG NO. TAM 17907726
STRUCTURAL
COMPONENT ONLY

JOB NAME	TRUSS NAME	QUANTITY	PLY	JOB DESC. Preston 3	DRWG NO.
200444-401156	J6	14	1	TRUSS DESC.	J6

Tamarack Roof Truss, Burlington

Version 8.230 S Nov 17 2018 MiTek Industries, Inc. Tue Feb 5 20:29:00 2019 Page 1
ID:4xNdf4mUPyxd3LURX25ZQKyOFG0-sc53xSeZRXbWlptLQuC3pARqx5QIL_hhH0ux8RQzo5IX

Scale = 1:23.6

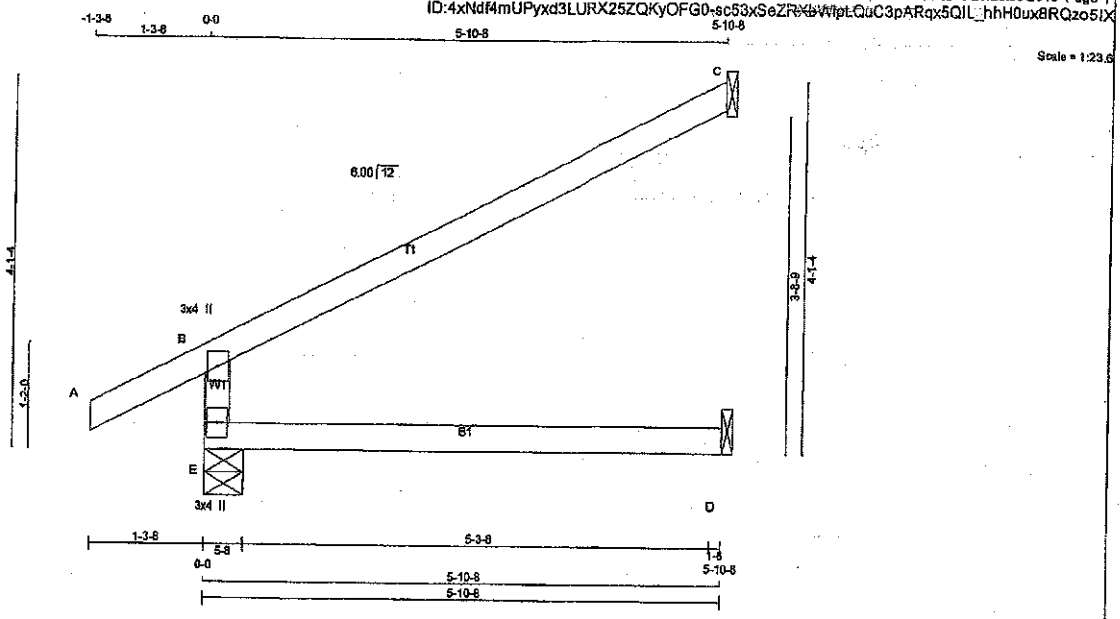

TOTAL WEIGHT = 14 X 17 = 235 lb [M]

LUMBER
N. L. G. A. RULES

CHORDS	SIZE		LUMBER	DESCR.
E - B	2x4	DRY	No.2	SPF
A - C	2x4	DRY	No.2	SPF
E - D	2x4	DRY	No.2	SPF

DRY: SEASONED LUMBER.

PLATES (table is in inches)

JT	TYPE	PLATES	W	LEN Y	X
B	TMV+p	MT20	3.0	4.0	
E	BMV1+p	MT20	3.0	4.0	

DIMENSIONS, SUPPORTS AND LOADINGS SPECIFIED BY FABRICATOR TO BE VERIFIED BY BUILDING DESIGNER

BEARINGS

JT	FACTORED GROSS REACTION VERT	HORZ	MAXIMUM FACTORED GROSS REACTION DOWN	HORZ	UPLIFT	INPUT BRG IN-SX	REQRD BRG IN-SX
E	646	0	646	0	0	5-8	5-8
C	225	0	225	0	0	1-8	1-8
D	93	0	119	0	0	1-8	1-8

SEE MiTEK STANDARD DETAIL B37821H FOR CONNECTION TO JOINT(S) C , D

UNFACTORED REACTIONS

JT	1ST LCASE COMBINED	MAX./MIN. COMPONENT REACTIONS SNOW	LIVE	PERM.LIVE	WIND	DEAD	SOIL
E	473	292 / 0	72 / 0	0 / 0	0 / 0	109 / 0	0 / 0
C	154	128 / 0	0 / 0	0 / 0	0 / 0	26 / 0	0 / 0
D	85	0 / 0	51 / 0	0 / 0	0 / 0	34 / 0	0 / 0

BEARING MATERIAL TO BE SPF NO.2 OR BETTER AT JOINT(S) E

BRACING
TOP CHORD TO BE SHEATHED OR MAX. PURLIN SPACING = 6.25 FT.
MAX. UNBRACED BOTTOM CHORD LENGTH = 10.00 FT OR RIGID CEILING DIRECTLY APPLIED.

ALL PITCH BREAKS AND PERIMETER CORNER JOINTS MUST BE LATERALLY RESTRAINED.

LOADING
TOTAL LOAD CASES: (4)

CHORDS

MEMB. FR-TO	MAX. FACTORED FORCE (LBS)	FACTORED VERT. LOAD LC1 (PLF) FROM	TO	MAX CSI (LC)	MAX. UNBRAC LENGTH
E- B	-513 / 0	0.0	0.0	0.22 (3)	7.81
A- B	0 / 31	-102.1	-102.1	0.13 (1)	10.00
B- C	-34 / 0	-102.1	-102.1	0.60 (1)	6.25
E- D	0 / 0	-38.5	-38.5	0.22 (3)	10.00

WEBS

MEMB. FR-TO	MAX. FACTORED FORCE (LBS)	MAX CSI (LC)

DESIGN CRITERIA

SPECIFIED LOADS:

TOP CH.	LL =	29.0	PSF
	DL =	6.0	PSF
BOT CH.	LL =	10.5	PSF
	DL =	7.0	PSF
TOTAL LOAD	=	52.5	PSF

SPACING = 24.0 IN. C/C

THIS TRUSS IS DESIGNED FOR RESIDENTIAL OR SMALL BUILDING REQUIREMENTS OF PART 9, NBCC 2010, NBCC 2015

THIS DESIGN COMPLIES WITH:
- PART 9 OF BCBC 2018 , OBC 2012
- CSA 086-09, CSA 086-14
- TPIC 2011, TPIC 2014

DESIGN ASSUMPTIONS
-OVERHANG NOT TO BE ALTERED OR CUT OFF.

(55 % OF 37.6 P.S.F. G.S.L. PLUS 8.4 P.S.F. RAIN LOAD) EQUALS 29.0 P.S.F. SPECIFIED ROOF LIVE LOAD

ALLOWABLE DEFL.(LL)= L/360 (0.20")
CALCULATED VERT. DEFL.(LL) = L/ 999 (0.04")
ALLOWABLE DEFL.(TL)= L/360 (0.20")
CALCULATED VERT. DEFL.(TL) = L/ 942 (0.07")

CSI: TC=0.60/1.00 (B-C:1) , BC=0.22/1.00 (D-E:3) , WB=0.00/1.00 (n/a:0) , SSI=0.26/1.00 (B-C:1)

DOL LUMBER=1.00 NAIL=1.00 LS BEND=1.10 COMP=1.10 SHEAR=1.10 TENS= 1.10

COMPANION LIVE LOAD FACTOR = 1.00

AUTOSOLVE RIGHT HEEL ONLY

TRUSS PLATE MANUFACTURER IS NOT RESPONSIBLE FOR QUALITY CONTROL IN THE TRUSS MANUFACTURING PLANT .

NAIL VALUES

PLATE	GRIP(DRY) (PSI) MAX	MIN	SHEAR (PLI) MAX	MIN	SECTION (PLI) MAX	MIN
MT20	618	354	1667	788	1987	1656

PLATE PLACEMENT TOL. = 0.250 inches

PLATE ROTATION TOL. = 5.0 Deg.

JSI GRIP= 0.21 (E) (INPUT = 0.90)
JSI METAL= 0.14 (B) (INPUT = 1.00)

AUG 2 5 2020
TOWN OF OAKVILLE
FILE NO.

LICENSED PROFESSIONAL ENGINEER
02/05/19
H. J. G. ALVES
100009822
PROVINCE OF ONTARIO

DWG NO. TAM 19021730
STRUCTURAL
COMPONENT ONLY

JOB NAME	TRUSS NAME	QUANTITY	PLY	JOB DESC. Preston 3	DRWG NO.
200444-401157	J8	2	1	TRUSS DESC.	J8

Tamarack Roof Truss, Burlington

Version 8.230 S Nov 17 2018 MiTek Industries, Inc. Tue Feb 12 08:55:17 2019 Page 1
ID:MI06BPA0GpW8aLLBiY39yQyOCh?-jcxCRDDkTgyF92UY_wKvs4QwKUoRp00?McIUTKzlxou

Scale = 1:26.9

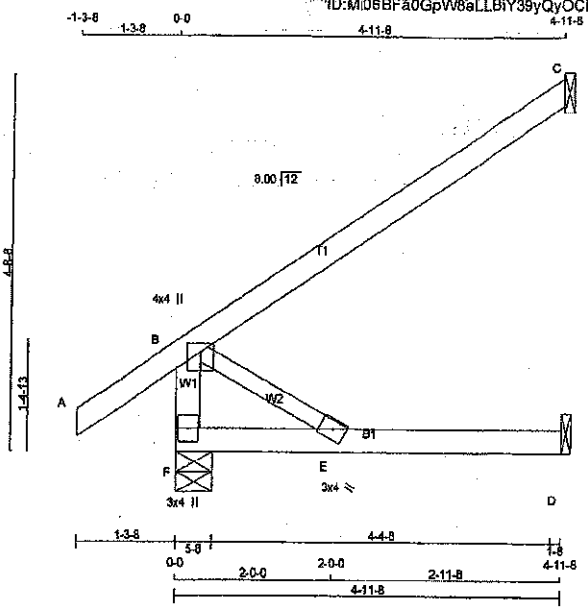

TOTAL WEIGHT = 2 X 17 = 35 lb

LUMBER
N. L. G. A. RULES

CHORDS	SIZE		LUMBER	DESCR.
F - B	2x4	DRY	No.2	SPF
A - C	2x4	DRY	No.2	SPF
F - D	2x4	DRY	No.2	SPF
ALL WEBS	2x3	DRY	No.2	SPF

DRY: SEASONED LUMBER.

PLATES (table is in inches)

JT	TYPE	PLATES	W	LEN	Y	X
B	TMVW+p	MT20	4.0	4.0	1.25	2.00
E	BMW+w	MT20	3.0	4.0		
F	BMV1+p	MT20	3.0	4.0		

DIMENSIONS, SUPPORTS AND LOADINGS SPECIFIED BY FABRICATOR TO BE VERIFIED BY BUILDING DESIGNER

BEARINGS

JT	FACTORED GROSS REACTION VERT	HORZ	MAXIMUM FACTORED GROSS REACTION DOWN	HORZ	UPLIFT	INPUT BRG IN-SX	REQRD BRG IN-SX
F	489	0	489	0	0	5-8	5-8
C	253	0	253	0	0	1-8	1-8
D	95	0	121	0	0	1-8	1-8

SEE MITEK STANDARD DETAIL B37821H FOR CONNECTION TO JOINT(S) C , D

UNFACTORED REACTIONS

JT	1ST LCASE COMBINED	MAX./MIN. COMPONENT REACTIONS SNOW	LIVE	PERM.LIVE	WIND	DEAD	SOIL
F	357	224 / 0	52 / 0	0 / 0	0 / 0	81 / 0	0 / 0
C	174	144 / 0	0 / 0	0 / 0	0 / 0	30 / 0	0 / 0
D	87	0 / 0	52 / 0	0 / 0	0 / 0	35 / 0	0 / 0

BEARING MATERIAL TO BE SPF NO.2 OR BETTER AT JOINT(S) F, C

BRACING
TOP CHORD TO BE SHEATHED OR MAX. PURLIN SPACING = 10.00 FT.
MAX. UNBRACED BOTTOM CHORD LENGTH = 10.00 FT OR RIGID CEILING DIRECTLY APPLIED.

ALL PITCH BREAKS AND PERIMETER CORNER JOINTS MUST BE LATERALLY RESTRAINED.

LOADING
TOTAL LOAD CASES: (4)

CHORDS

MEMB. FR-TO	MAX. FACTORED FORCE (LBS)	FACTORED VERT. LOAD LC1 (PLF) FROM	TO	MAX CSI (LC)	MAX. UNBRAC LENGTH
F- B	-393 / 0	0.0	0.0	0.04 (1)	7.81
A- B	0 / 39	-102.1	-102.1	0.14 (1)	10.00
B- C	0 / 0	-102.1	-102.1	0.43 (1)	10.00
F- E	0 / 0	-38.5	-38.5	0.21 (3)	10.00
E- D	0 / 0	-38.5	-38.5	0.22 (3)	10.00

WEBS

MEMB. FR-TO	MAX. FACTORED FORCE (LBS)	MAX CSI (LC)
B- E	0 / 0	0.00 (1)

DESIGN CRITERIA

SPECIFIED LOADS:

TOP CH.	LL	=	29.0	PSF
	DL	=	6.0	PSF
BOT CH.	LL	=	10.5	PSF
	DL	=	7.0	PSF
TOTAL LOAD		=	52.5	PSF

SPACING = 24.0 **IN. C/C**

THIS TRUSS IS DESIGNED FOR RESIDENTIAL OR SMALL BUILDING REQUIREMENTS OF PART 9, NBCC 2015

THIS DESIGN COMPLIES WITH:
- PART 9 OF BCBC 2018
- CSA 086-14
- TPIC 2014

(55 % OF 37.6 P.S.F. G.S.L. PLUS 8.4 P.S.F. RAIN LOAD) EQUALS 29.0 P.S.F. SPECIFIED ROOF LIVE LOAD

ALLOWABLE DEFL.(LL)= L/360 (0.19")
CALCULATED VERT. DEFL.(LL) = L/ 999 (0.04")
ALLOWABLE DEFL.(TL)= L/360 (0.19")
CALCULATED VERT. DEFL.(TL) = L/ 923 (0.06")

CSI: TC=0.43/1.00 (B-C:1) , BC=0.22/1.00 (D-E:3) , WB=0.00/1.00 (B-E:1) , SSI=0.16/1.00 (B-C:1)

DOL LUMBER=1.00 NAIL=1.00 LS BEND=1.10 COMP=1.10 SHEAR=1.10 TENS= 1.10

COMPANION LIVE LOAD FACTOR = 1.00

AUTOSOLVE RIGHT HEEL ONLY

TRUSS PLATE MANUFACTURER IS NOT RESPONSIBLE FOR QUALITY CONTROL IN THE TRUSS MANUFACTURING PLANT .

NAIL VALUES

PLATE	GRIP(DRY) (PSI) MAX	MIN	SHEAR (PLI) MAX	MIN	SECTION (PLI) MAX	MIN
MT20	650	371	1747	788	1987	1673

PLATE PLACEMENT TOL. = 0.250 inches

PLATE ROTATION TOL. = 5.0 Deg.

JSI GRIP= 0.26 (B) (INPUT = 0.90)
JSI METAL= 0.08 (B) (INPUT = 1.00)

AUG 23 2019
TOWN OF OAKVILLE
BUILDING SECTION
FILE NO

LICENSED PROFESSIONAL ENGINEER
02/12/19
H. J. G ALVES
100009020
PROVINCE OF ONTARIO

DWG NO. TAM 7703218
STRUCTURAL
COMPONENT

Client:	Greenpark Homes	Date:	2019-02-05
Project:	Preston 3	Designer:	Brian
Address:	Caledon	Job Name:	Lamberts Lane Homes Corp.
		Project #:	200444

BM4 S-P-F #2 2.000" X 10.000" 2-Ply - PASSED

Level: Level

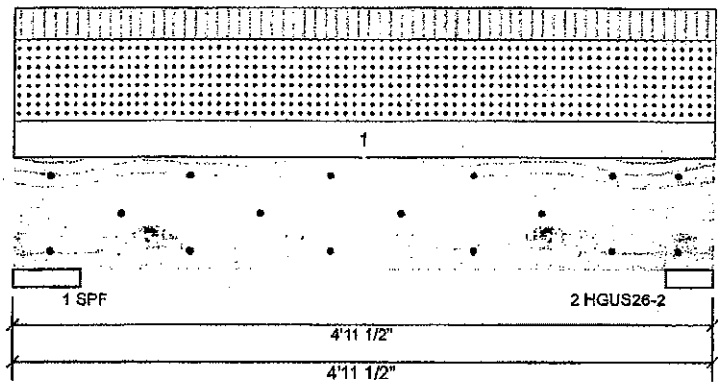

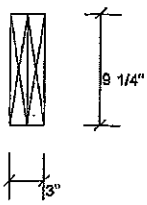

Member Information

Type:	Girder	Application:	Floor (Residential)
Plies:	2	Design Method:	LSD
Moisture Condition:	Dry	Building Code:	NBCC 2015 / OBC 2012
Deflection LL:	360	Load Sharing:	No
Deflection TL:	360	Deck:	Not Checked
Importance:	Normal	Vibration:	Not Checked

Unfactored Reactions UNPATTERNED lb (Uplift)

Brg	Live	Dead	Snow	Wind
1	112	132	295	0
2	106	126	280	0

Bearings and Factored Reactions

Bearing	Length	Cap.	React D/L lb	Total	Ld. Case	Ld. Comb.
1 - SPF	5.500"	7%	165 / 554	719	L	1.25D+1.5S +L
2 - HGUS...	4.000"	9%	157 / 527	684	L	1.25D+1.5S +L

Analysis Results

Analysis	Actual	Location	Allowed	Capacity	Comb.	Case
Moment	652 ft-lb	2'6 1/2"	6039 ft-lb	0.108 (11%)	1.25D+1.5S +L	L
Unbraced	652 ft-lb	2'6 1/2"	5493 ft-lb	0.119 (12%)	1.25D+1.5S +L	L
Shear	607 lb	1'2"	3984 lb	0.152 (15%)	1.25D+1.5S +L	L
Perm Defl in.	0.001 (L/35365)	2'6 1/2"	0.143 (L/360)	0.010 (1%)	D	Uniform
LL Defl inch	0.004 (L/13326)	2'6 1/2"	0.143 (L/360)	0.030 (3%)	S+0.5L	L
TL Defl inch	0.005 (L/9679)	2'6 1/2"	0.143 (L/360)	0.040 (4%)	D+S+0.5L	L

Design Notes

1. Fasten all plies using 3 rows of 10d Box nails (.128x3") at 12" o.c. Maximum end distance not to exceed 6".
2. Refer to last page of calculations for fasteners required for specified loads.
3. Girders are designed to be supported on the bottom edge only.
4. Top braced at bearings.
5. Bottom braced at bearings.
6. Lateral slendemess ratio based on single ply width.

LICENSED PROFESSIONAL ENGINEER
02/05/19
H. J. G. ALVES
100009029
PROVINCE OF ONTARIO

DWG NO. TAM 17902733
STRUCTURAL COMPONENT ONLY
1/2

ID	Load Type	Location	Trib Width	Side	Dead	Live	Snow	Wind	Comments
1	Uniform		4-0-0	Near Face	13 PSF	11 PSF	29 PSF	0 PSF	

Manufacturer Info

TAMARACK LUMBER
3255 NORTH SERVICE RD, ON
CANADA
(905) 335-1115

TAMARACK LUMBER INC
ALPA LUMBER GROUP

This design is valid until 2021-12-11

Version 18.80.245 Powered by iStruct™

isDesign™	Client: Greenpark Homes	Date: 2019-02-05	
	Project: Preston 3	Designer: Brian	
	Address: Caledon	Job Name: Lamberts Lane Homes Corp.	
		Project #: 200444	

BM4 S-P-F #2 2.000" X 10.000" 2-Ply - PASSED

Level: Level

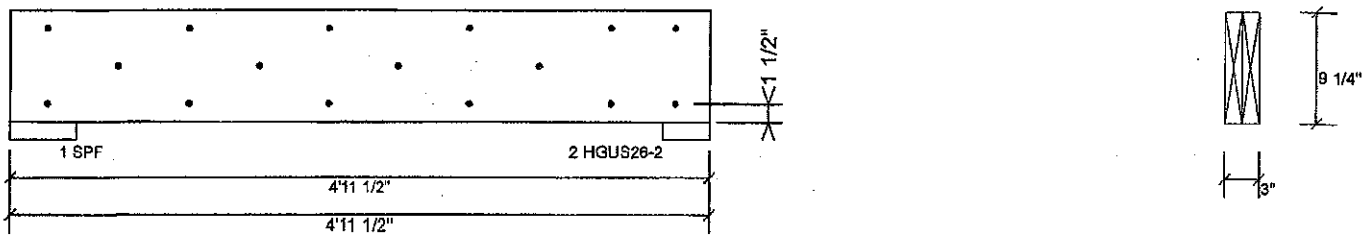

Multi-Ply Analysis

Fasten all plies using 3 rows of 10d Box nails (.128x3") at 12" o.c.. Maximum end distance not to exceed 6"

Capacity	36.9 %
Load	141.5 PLF
Yield Limit per Foot	383.4 PLF
Yield Limit per Fastener	127.8 lb.
Yield Mode	g
Edge Distance	1 1/2"
Min. End Distance	3"
Load Combination	1.25D+1.5S+L
Duration Factor	1.00

RECEIVED
AUG 23 2019
TOWN OF CALEDON
BUILDING SECTION
FILE NO.

LICENSED PROFESSIONAL ENGINEER
02/02/19
H. G. GALVES
100009013
PROVINCE OF ONTARIO

DWG NO. TAM T19027 33
STRUCTURAL
COMPONENT ONLY
2/2

Manufacturer Info	TAMARACK LUMBER 3255 NORTH SERVICE RD, ON CANADA (905) 335-1115

TAMARACK LUMBER INC
ALPA LUMBER GROUP

This design is valid until 2021-12-11

Version 18.80.245 Powered by iStruct™

Client:	Greenpark Homes	Date:	2019-02-05
Project:	Preston 3	Designer:	Brian
Address:	Caledon	Job Name:	Lamberts Lane Homes Corp.
		Project #:	200444

BM5 S-P-F #2 2.000" X 10.000" 2-Ply - PASSED

Level: Level

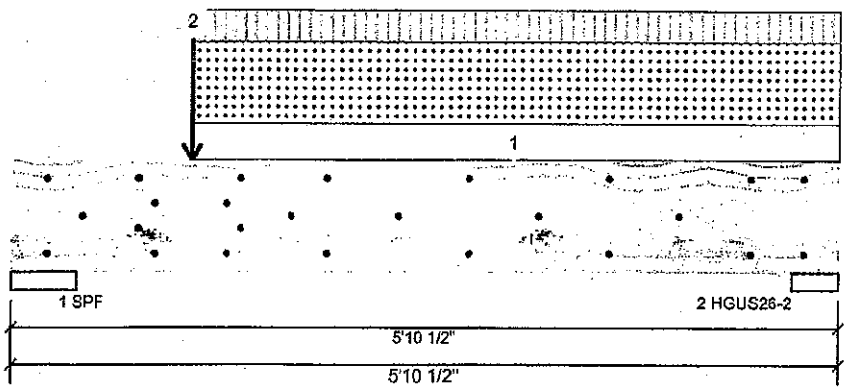

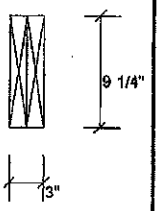

Member Information

Type:	Girder	Application:	Floor (Residential)
Plies:	2	Design Method:	LSD
Moisture Condition:	Dry	Building Code:	NBCC 2015 / OBC 2012
Deflection LL:	360	Load Sharing:	No
Deflection TL:	360	Deck:	Not Checked
Importance:	Normal	Vibration:	Not Checked

Unfactored Reactions UNPATTERNED lb (Uplift)

Brg	Live	Dead	Snow	Wind
1	176	251	642	0
2	62	82	200	0

Bearings and Factored Reactions

Bearing	Length	Cap.	React D/L lb	Total	Ld. Case	Ld. Comb.
1 - SPF	5.500"	14%	314 / 1139	1454	L	1.25D+1.5S +L
2 - HGUS...	4.000"	6%	103 / 363	466	L	1.25D+1.5S +L

Analysis Results

Analysis	Actual	Location	Allowed	Capacity	Comb.	Case
Moment	1272 ft-lb	1'3 1/4"	6039 ft-lb	0.211 (21%)	1.25D+1.5S +L	L
Unbraced	1272 ft-lb	1'3 1/4"	5236 ft-lb	0.243 (24%)	1.25D+1.5S +L	L
Shear	1508 lb	1'2"	3984 lb	0.379 (38%)	1.25D+1.5S +L	L
Perm Defl in.	0.003 (L/19193)	2'8 3/4"	0.174 (L/360)	0.020 (2%)	D	Uniform
LL Defl inch	0.009 (L/6690)	2'8 11/16"	0.174 (L/360)	0.050 (5%)	S+0.5L	L
TL Defl inch	0.013 (L/4961)	2'8 11/16"	0.174 (L/360)	0.070 (7%)	D+S+0.5L	L

Design Notes

1. Fasten all plies using 3 rows of Pneumatic Gun Nail (.120x3.25") at 12" o.c. Maximum end distance not to exceed 6".
2. Refer to last page of calculations for fasteners required for specified loads.
3. Concentrated load fastener specification is in addition to hanger fasteners if a hanger is present.
4. Girders are designed to be supported on the bottom edge only.
5. Top braced at bearings.
6. Bottom braced at bearings.
7. Lateral slenderness ratio based on single ply width.

LICENSED PROFESSIONAL ENGINEER
02/05/19
H. J. G. ALVES
100009024
PROVINCE OF ONTARIO

DWG NO. TAM 7902734
STRUCTURAL
COMPONENT ONLY 1/3

Manufacturer Info	TAMARACK LUMBER 3255 NORTH SERVICE RD, ON CANADA (905) 335-1115

This design is valid until 2021-12-11

TAMARACK LUMBER INC
ALPA LUMBER GROUP

Client:	Greenpark Homes	Date:	2019-02-05
Project:	Preston 3	Designer:	Brian
Address:	Caledon	Job Name:	Lamberts Lane Homes Corp.
		Project #:	200444

BM5 S-P-F #2 2.000" X 10.000" 2-Ply - PASSED

Level: Level

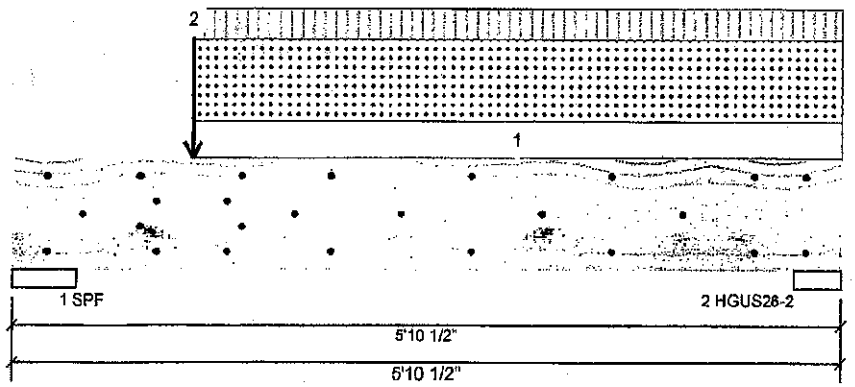

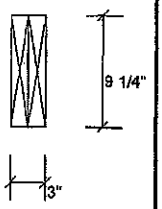

ID	Load Type	Location	Trib Width	Side	Dead	Live	Snow	Wind	Comments
1	Part. Uniform	1-3-4 to 5-10-8		Near Face	13 PLF	11 PLF	29 PLF	0 PLF	
2	Point	1-3-4		Near Face	274 lb	188 lb	709 lb	0 lb	

LICENSED PROFESSIONAL ENGINEER
01/03/19
H. J. G. ALVES
100000024
PROVINCE OF ONTARIO

DWG NO. TAM 19102734
STRUCTURAL
COMPONENT ONLY 2/3

Manufacturer Info

TAMARACK LUMBER
3255 NORTH SERVICE RD, ON
CANADA
(905) 335-1115

TAMARACK LUMBER INC
ALPA LUMBER GROUP

This design is valid until 2021-12-11

Version 18.80.245 Powered by iStruct™

isDesign™	Client: Greenpark Homes	Date: 2019-02-05	
	Project: Preston 3	Designer: Brian	
	Address: Caledon	Job Name: Lamberts Lane Homes Corp.	
		Project #: 200444	

BM5 S-P-F #2 2.000" X 10.000" 2-Ply - PASSED

Level: Level

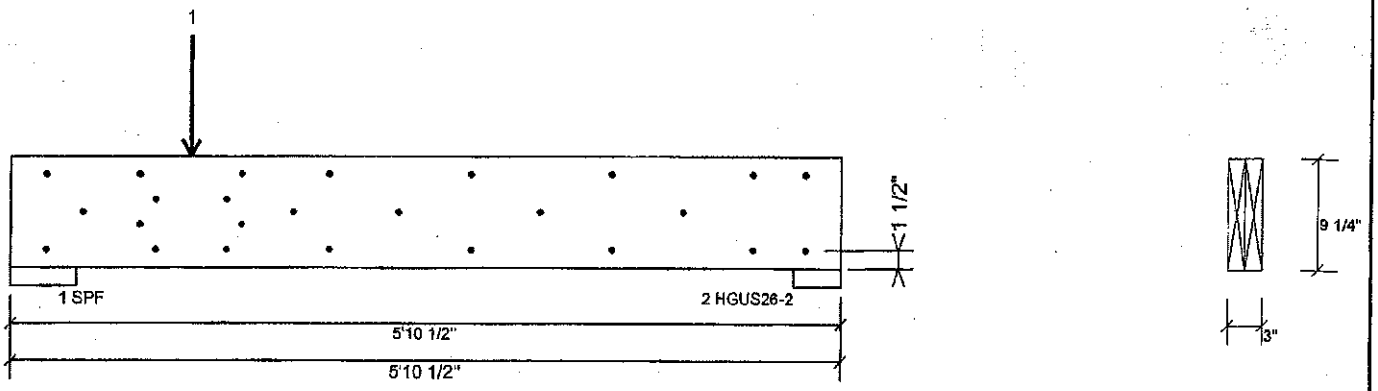

Multi-Ply Analysis

Fasten all plies using 3 rows of Pneumatic Gun Nail (.120x3.25") at 12" o.c.. except for regions covered by concentrated load fastening. Maximum end distance not to exceed 6"

Capacity	10.4 %
Load	35.4 PLF
Yield Limit per Foot	340.0 PLF
Yield Limit per Fastener	113.3 lb.
Yield Mode	g
Edge Distance	1 1/2"
Min. End Distance	3"
Load Combination	1.25D+1.5S+L
Duration Factor	1.00

Concentrated Load

Fasten at concentrated side load at 1-3-4 with a minimum of (8) – Pneumatic Gun Nail (.120x3.25") in the pattern shown.

Capacity	87.9 %
Load	797.0lb.
Total Yield Limit	906.8 lb.
Yield Limit per Fastener	113.3 lb.
Yield Mode	g
Load Combination	1.25D+1.5S+L
Duration Factor	1.00

Min/Max fastener distances for Concentrated Side Loads

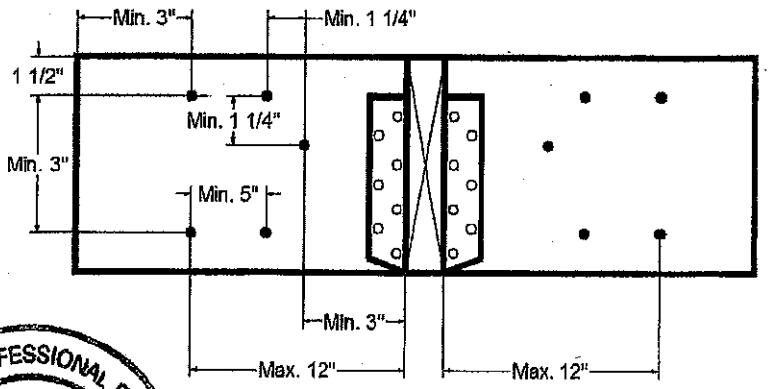

LICENSED PROFESSIONAL ENGINEER
02/07/19
H. J. G. ALVES
100009024
PROVINCE OF ONTARIO

DWG NO. TAM T1902734
STRUCTURAL
COMPONENT ONLY 3/3

This design is valid until 2021-12-11

Manufacturer Info	TAMARACK LUMBER 3255 NORTH SERVICE RD, ON CANADA (905) 335-1115

TAMARACK LUMBER INC
ALPA LUMBER GROUP

Version 18.80.245 Powered by iStruct™

LUL/LUS/LJS/HUS/HHUS/HGUS

Standard and Double-Shear Joist Hangers

This product is preferable to similar connectors because of a) easier installation, b) higher capacities, c) lower installed cost, or a combination of these features.

Most hangers in this series have double-shear nailing — an innovation that distributes the load through two points on each joist nail for greater strength. This allows for fewer nails, faster installation, and the use of all common nails for the same connection. (Do not bend or remove tabs)

Double-shear hangers range from the light capacity LUS hangers to the highest capacity HGUS hangers. For medium load truss applications, the HUS offers a lower cost alternative and easier installation than the HGUS hangers, while providing greater load capacity and bearing than the LUS.

Material: See table on pp. 258–259.

Finish: Galvanized. Some products available in stainless steel or ZMAX® coating; see Corrosion Information, pp.20–24.

Installation:

- Use all specified fasteners; see General Notes.
- Nails must be driven at an angle through the joist or truss into the header to achieve the tabulated resistances (except LUL).
- Where 16d commons are specified, 10d commons may be used at 0.83 of the tabulated factored resistance.
- Not designed for welded or nailer applications.
- With single ply 2x carrying members, use 10d x 1½" nails into the header and 10d commons into the joist, and reduce the resistance to 0.64 of the table value where 16d nails are specified and 0.77 where 10d nails are specified.

Options:

- LUS, LJS, LUL and HUS hangers cannot be modified.
- Other sizes available; consult your Simpson Strong-Tie representative.
- See Hanger Options information on p. 126.

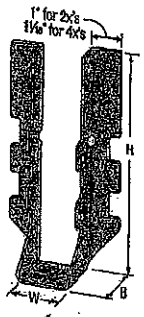

LUS28

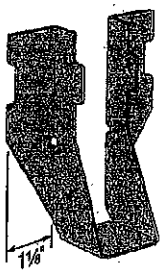

LU26L

HUS210
(HUS26, HUS28, and HHUS similar)

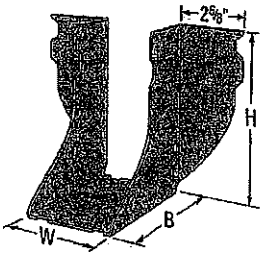

HGUS28-2

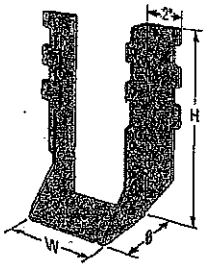

HHUS210-2

Double-Shear Nailing Top View

Double-Shear Nailing Side View; Do not bend tab

Dome Double-Shear Nailing Side View *(available on some models)*

U.S. Patent 6,603,580

Typical HUS26 Installation with Reduced Heel Height

(Truss Designer to provide fastener quantity for connecting multiple members together)

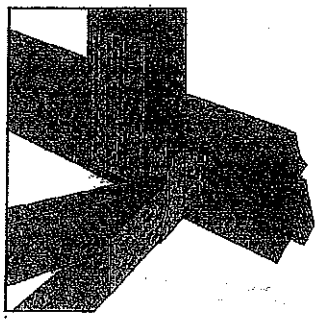

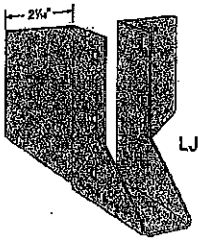

LJS26DS

C-C-CAN2018 ©2017 SIMPSON STRONG-TIE COMPANY INC.

SIMPSON Strong-Tie®

LICENSED PROFESSIONAL ENGINEER 1/15/18 B. D. BUNTING PROVINCE OF ONTARIO

HHUS/HGUS

See Hanger Options information on pp. 125–127.

HHUS — Sloped and/or Skewed Seat

- HHUS hangers can be skewed to a maximum of 45° and/or sloped to a maximum of 45°
- For skew only, maximum factored down resistance is 0.85 of the table value
- For sloped only or sloped and skewed hangers, the maximum factored down resistance is 0.72 of the table value
- Uplift resistances for sloped/skewed conditions are 0.62 of the table value
- The joist must be bevel-cut to allow for double-shear nailing

HGUS — Skewed Seat

- HGUS hangers can be skewed only to a maximum of 45°. Factored resistances are:

HGUS Seat Width	Joist	Down Resistance	Uplift
W < 2"	Bevel or square cut	0.62 of table value	0.46 of table value
2" < W < 6"	Bevel cut	0.67 of table value	0.41 of table value
2" < W < 6"	Square cut	0.46 of table value	0.41 of table value
W > 6"	Bevel cut	0.75 of table value	0.41 of table value

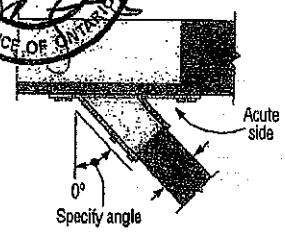

Top View HHUS Hanger Skewed Right
(joist must be bevel cut)
All joist nails installed on the outside angle *(non-acute side)*.

Standard and Double-Shear Joist Hangers (cont.)

These products are available with additional corrosion protection. For more information, see p. 24.

These products are approved for installation with the Strong-Drive® SD Connector screw. See pp. 32–34 for more information.

Model No.	Ga.	Dimensions (in.) W	H	B	d_b[3]	Fasteners Header	Joist	Factored Resistance U.L.S. Uplift (Kd = 1.15) lb. kN	Normal (Kd = 1.00) lb. kN	S.L.S. Uplift (Kd = 1.15) lb. kN	Normal (Kd = 1.00) lb. kN
Single 2x Sizes											
LUS24	18	1⅝	3¼	1¾	2¼	(4) 10d	(2) 10d	710 / 3.16	1625 / 7.23	645 / 2.87	1155 / 5.14
LU24L	22	1⅝	3	1⅝	2 1/16	(4) 10d	(2) 10d x 1½"	360 / 1.60	1020 / 4.54	320 / 1.42	725 / 3.22
LU26L	22	1⅝	5	1⅝	4⅜	(6) 10d	(4) 10d x 1½"	720 / 3.20	1605 / 7.14	645 / 2.87	1140 / 5.07
LUS26	18	1⅝	4¾	1¾	3¾	(4) 10d	(4) 10d	1420 / 6.32	2170 / 9.65	1290 / 5.74	1630 / 7.25
HUS26	16	1⅝	5⅝	3	3 15/16	(14) 16d	(6) 16d	2705 / 12.03	4940 / 21.97	2085 / 9.20	3875 / 17.24
LUS26DS	18	1⅝	5	3½	4⅝	(18) 16d	(6) 16d	2055 / 9.14	4265 / 18.97	1460 / 6.49	4115 / 18.31
HGUS26	12	1⅝	5⅝	5	4⅛	(20) 16d	(8) 16d	2685 / 11.94	6625 / 29.47	2685 / 11.96	5700 / 25.35
LU28L	20	1⅝	6¾	1⅝	5⅞	(8) 10d	(6) 10d x 1½"	1140 / 5.07	2185 / 9.72	1020 / 4.54	1550 / 6.89
LUS28	18	1⅝	6⅝	1¾	3¾	(6) 10d	(4) 10d	1420 / 6.32	2520 / 11.21	1290 / 5.74	1790 / 7.96
HUS28	16	1⅝	7 1/16	3	6⅜	(22) 16d	(8) 16d	3605 / 16.04	5365 / 23.86	2675 / 11.90	4345 / 19.33
HGUS28	12	1⅝	7⅛	5	6⅛	(36) 16d	(12) 16d	3310 / 14.72	7675 / 34.15	3310 / 14.74	6900 / 30.73
LU210L	20	1⅝	8	1⅝	7⅝	(10) 10d	(6) 10d x 1½"	1140 / 5.07	2495 / 11.10	1020 / 4.54	1770 / 7.87
LUS210	18	1⅝	7 11/16	1¾	3⅞	(8) 10d	(4) 10d	1420 / 6.32	2785 / 12.39	1290 / 5.74	2210 / 9.83

1. Factored uplift resistances have been increased 15% for wind or earthquake loading; no further increase is allowed.
2. Designer must ensure that hanger is compatible with truss when reduced heel height is used.
3. d_b is the distance from the bearing seat to the top joist nail.
4. Resistances shown require a minimum 2-ply girder truss. For fastening to single-ply truss request technical bulletin T-C-N10TRSSCN and/or see installation notes.
5. Nails: 16d = 0.162" dia. x 3½" long. See pp. 27–28 for other nail sizes and information.

C-C-CAN2013 ©2017 SIMPSON STRONG-TIE COMPANY INC.

SIMPSON Strong-Tie®

Face-Mount Hangers

These products are available with additional corrosion protection. For more information, see p. 24.

These products are approved for installation with the Strong-Drive® SD Connector screw. See pp. 32–34 for more information.

Model No.	Ga.	Dimensions (in.) W	H	B	d_b[3]	Fasteners Header	Joist	Factored Resistance D.F.-L. Uplift (K_D = 1.15) lb. kN	D.F.-L. Normal (K_D = 1.00) lb. kN	S-P-F. Uplift (K_D = 1.15) lb. kN	S-P-F. Normal (K_D = 1.00) lb. kN
Double 2x Sizes											
LUS24-2	18	3⅛	6⅛	2	1⅛	(4) 16d	(2) 16d	835 / 3.7	2020 / 8.99	590 / 2.62	1435 / 6.38
LUS26-2	18	3⅛	4⅞	2	4	(4) 16d	(4) 16d	1720 / 7.65	2595 / 11.54	1545 / 6.87	1920 / 8.54
HHUS26-2	14	3⁹⁄₁₆	5⅝	3	3¹⁵⁄₁₆	(14) 16d	(6) 16d	2850 / 12.68	7335 / 32.63	2065 / 9.20	5205 / 23.15
HGUS26-2	12	3⁹⁄₁₆	5⁷⁄₁₆	4	4⅛	(20) 16d	(8) 16d	4385 / 19.51	8950 / 39.81	3110 / 13.83	6355 / 28.27
LUS28-2	18	3⅛	7	2	4	(6) 16d	(4) 16d	1720 / 7.65	3325 / 14.79	1545 / 6.87	2575 / 11.45
HHUS28-2	14	3⁹⁄₁₆	7⁹⁄₁₆	3	6⅛	(22) 16d	(8) 16d	3765 / 16.75	8940 / 39.77	2675 / 11.90	6345 / 28.22
HGUS28-2	12	3⁹⁄₁₆	7⁹⁄₁₆	4	6⅛	(36) 16d	(12) 16d	6070 / 27.00	12980 / 57.74	4310 / 19.17	9215 / 40.99
LUS210-2	18	3⅛	9	2	6	(8) 16d	(6) 16d	2580 / 11.48	4500 / 20.02	2320 / 10.32	3195 / 14.21
HHUS210-2	14	3⁹⁄₁₆	9⁹⁄₁₆	3	8	(30) 16d	(10) 16d	4670 / 20.77	9660 / 42.97	4235 / 18.84	7000 / 31.14
HGUS210-2	12	3⁹⁄₁₆	9⁹⁄₁₆	4	8⅛	(46) 16d	(16) 16d	6840 / 30.43	14015 / 62.34	4855 / 21.60	10270 / 45.69
Triple 2x Sizes											
HGUS26-3	12	4¹³⁄₁₆	5½	4	4⅛	(20) 16d	(8) 16d	4385 / 19.51	8950 / 39.81	3110 / 13.83	6355 / 28.27
HGUS28-3	12	4¹³⁄₁₆	7¼	4	6⅛	(36) 16d	(12) 16d	6070 / 27.00	12980 / 57.74	4310 / 19.17	9215 / 40.99
HHUS210-3	14	4¹³⁄₁₆	9	3	7¹⁵⁄₁₆	(30) 16d	(10) 16d	4670 / 20.77	9670 / 43.00	4235 / 18.84	6865 / 30.54
HGUS210-3	12	4¹³⁄₁₆	9¼	4	8⅛	(46) 16d	(16) 16d	6840 / 30.43	14645 / 65.14	4855 / 21.60	10400 / 46.26
Quadruple 2x Sizes											
HGUS26-4	12	6⁹⁄₁₆	5⁷⁄₁₆	4	4⅛	(20) 16d	(8) 16d	4385 / 19.51	8950 / 39.81	3110 / 13.83	6355 / 28.27
HGUS28-4	12	6⁹⁄₁₆	7⁹⁄₁₆	4	6⅛	(36) 16d	(12) 16d	6070 / 27.00	12980 / 57.74	4310 / 19.17	9215 / 40.99
HHUS210-4	14	6⅛	8⅞	3	7¹⁵⁄₁₆	(30) 16d	(10) 16d	4670 / 20.77	10155 / 45.17	4235 / 18.84	7210 / 32.07
HGUS210-4	12	6⁹⁄₁₆	9⁹⁄₁₆	4	8⅛	(46) 16d	(16) 16d	6840 / 30.43	14645 / 65.14	4855 / 21.60	10400 / 46.26
HGUS212-4	12	6⁹⁄₁₆	10⅝	4	10⅛	(56) 16d	(20) 16d	7640 / 33.98	14995 / 66.70	5425 / 24.13	10645 / 47.35
HGUS214-4	12	6⁹⁄₁₆	12⅝	4	11⅛	(66) 16d	(22) 16d	10130 / 45.06	16400 / 72.95	7195 / 32.00	11645 / 51.80
4x Sizes											
LUS46	18	3⁹⁄₁₆	4¼	2	3⁷⁄₁₆	(4) 16d	(4) 16d	1720 / 7.65	2595 / 11.54	1545 / 6.87	1920 / 8.54
HHUS46	14	3⅝	5¼	3	3¹⁵⁄₁₆	(14) 16d	(6) 16d	2540 / 11.30	7335 / 32.63	2065 / 9.20	5205 / 23.15
HGUS46	12	3⅝	5¼	4	4⅛	(20) 16d	(8) 16d	4385 / 19.51	8950 / 39.81	3110 / 13.83	6355 / 28.27
LUS48	18	3⁹⁄₁₆	6¾	2	3⁷⁄₁₆	(6) 16d	(4) 16d	1720 / 7.65	3325 / 14.79	1545 / 6.87	2575 / 11.45
HHUS48	14	3⅝	7⅛	3	6⅛	(22) 16d	(8) 16d	3765 / 16.75	8940 / 39.77	2675 / 11.90	6345 / 28.22
HGUS48	12	3⅝	7⁹⁄₁₆	4	6⅛	(36) 16d	(12) 16d	6070 / 27.00	12980 / 57.74	4310 / 19.17	9215 / 40.99
LUS410	18	3⁹⁄₁₆	8¾	2	5⁹⁄₁₆	(8) 16d	(6) 16d	2580 / 11.48	4500 / 20.02	2320 / 10.32	3195 / 14.21
HGUS410	12	3⅝	9	4	8⁹⁄₁₆	(46) 16d	(16) 16d	6840 / 30.43	14015 / 62.34	4855 / 21.60	10270 / 45.69
HGUS412	12	3⅝	10⁹⁄₁₆	4	10⁹⁄₁₆	(56) 16d	(20) 16d	7640 / 33.98	14995 / 66.70	5425 / 24.13	10645 / 47.35
HGUS414	12	3⅝	12⁹⁄₁₆	4	11⁹⁄₁₆	(66) 16d	(22) 16d	10130 / 45.06	16400 / 72.95	7195 / 32.00	11645 / 51.80

LICENSED PROFESSIONAL ENGINEER 1/15/18 B. D. BUNTING PROVINCE OF ONTARIO

See footnotes on p. 258.

C-C-CAN2018 ©2017 SIMPSON STRONG-TIE COMPANY INC.

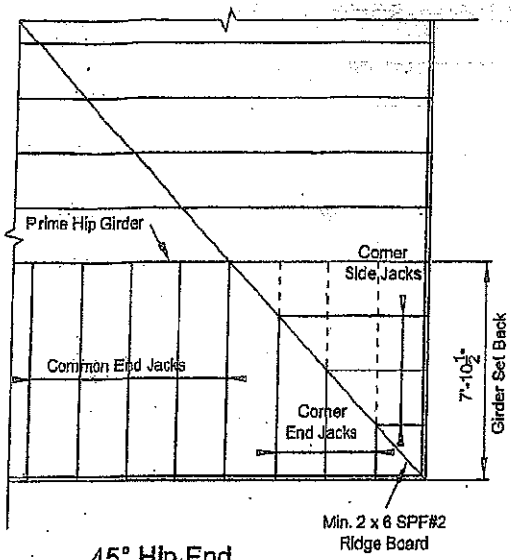

45° Hip End

LUMBER SPECIFICATION

TOP CHORD : 2 x 4 SPF#2
BOTTOM CHORD : 2 x 4 SPF#2
WEBS : 2 x 3 SPF#2
UNLESS OTHERWISE SHOWN

DESIGN LOAD

TOP CHORD SNOW LOAD	: 40.5	P.S.F.
TOP CHORD DEAD LOAD	: 3.0	P.S.F.
BOTTOM CHORD LIVE LOAD	: 0.0	P.S.F.
BOTTOM CHORD DEAD LOAD	: 7.0	P.S.F.
TOTAL LOAD		50.5 P.S.F

LICENSED PROFESSIONAL ENGINEER
06/11/2018
H.J.G. ALVES
PROVINCE OF ONTARIO

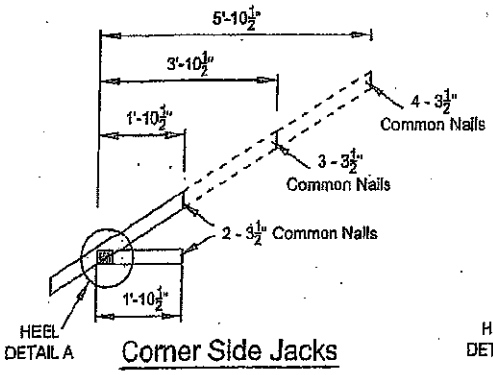

Corner Side Jacks

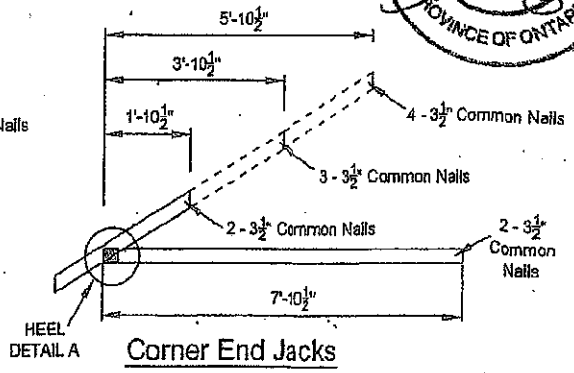

Corner End Jacks

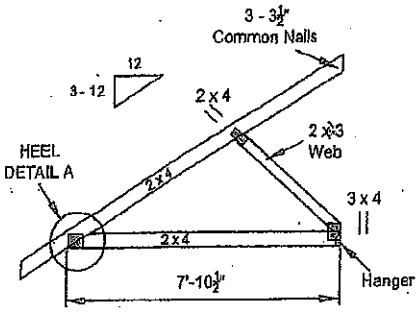

Common End Jacks

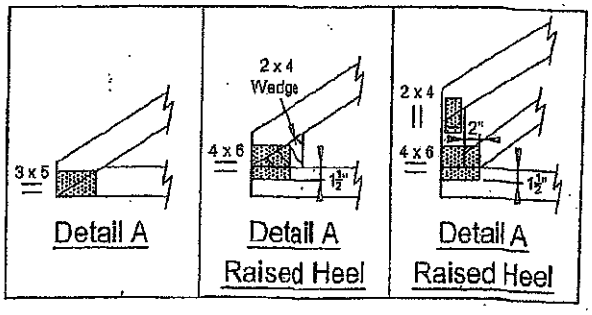

Detail A | Detail A Raised Heel | Detail A Raised Heel

NOTE: DESIGN CONFORMS TO PART 9, O.B.C. 2012 (L.S.D. DESIGN)

T-1800217

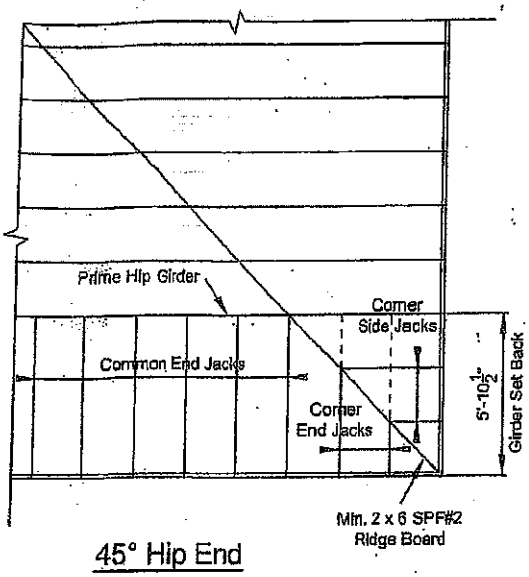

45° Hip End

LUMBER SPECIFICATION

TOP CHORD : 2 x 4 SPF#2
BOTTOM CHORD : 2 x 4 SPF#2
WEBS : 2 x 3 SPF#2
UNLESS OTHERWISE SHOWN

DESIGN LOAD

TOP CHORD SNOW LOAD	:	40.5 P.S.F.
TOP CHORD DEAD LOAD	:	3.0 P.S.F.
BOTTOM CHORD LIVE LOAD	:	0.0 P.S.F.
BOTTOM CHORD DEAD LOAD	:	7.0 P.S.F.
TOTAL LOAD	:	50.5 P.S.F

LICENSED PROFESSIONAL ENGINEER
06/11/18
H.J.G. ALVES
PROVINCE OF ONTARIO

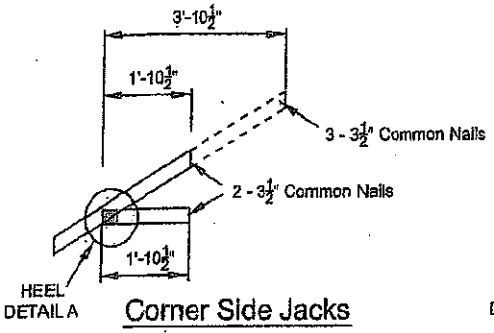

Corner Side Jacks

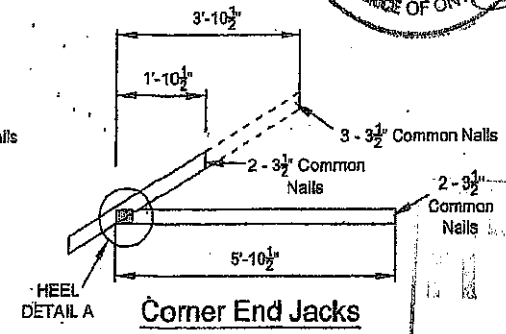

Corner End Jacks

RECEIVED
AUG 23 2019
TOWN OF CALEDON
BUILDING DIVISION
FILE NO.

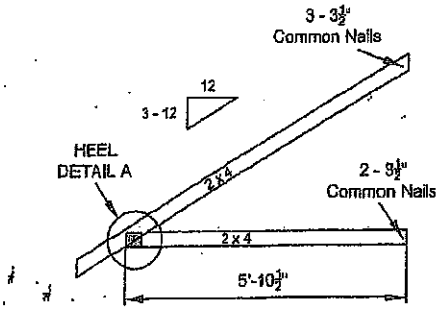

Common End Jacks

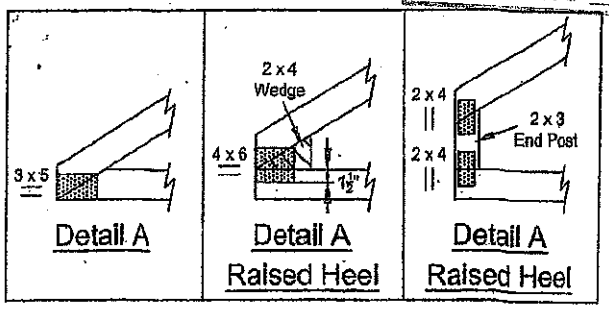

NOTE: DESIGN CONFORMS TO PART 9, O.B.C. 2012 (L.S.D. DESIGN)

T-1800216

ONTARIO WOOD TRUSS
FABRICATORS ASSOCIATION

TECH-NOTES

TN 15-001
Piggyback Bracing

Overview:

Where piggybacks are connected overtop of base trusses, 2x4 purlins must be first added to the flat portion of the base truss at a spacing no more than 24" o/c. These purlins not only provide support for the piggyback trusses above, but are required to laterally support the top chord of the base truss which will not have the sheathing directly connected to the flat portion of the base truss. This ensures the top chord, most often in compression, will not buckle laterally.

Further, the purlins in the plane of the flat portion require diagonal bracing to prevent lateral displacement of the purlins themselves where under certain conditions, the trusses may in fact all buckle in the same direction if this additional bracing is not added in the plane of the purlins.

Detail:

RECEIVED
AUG 23 2019
TOWN OF CALEDON
BUILDING SECTION
FILE NO

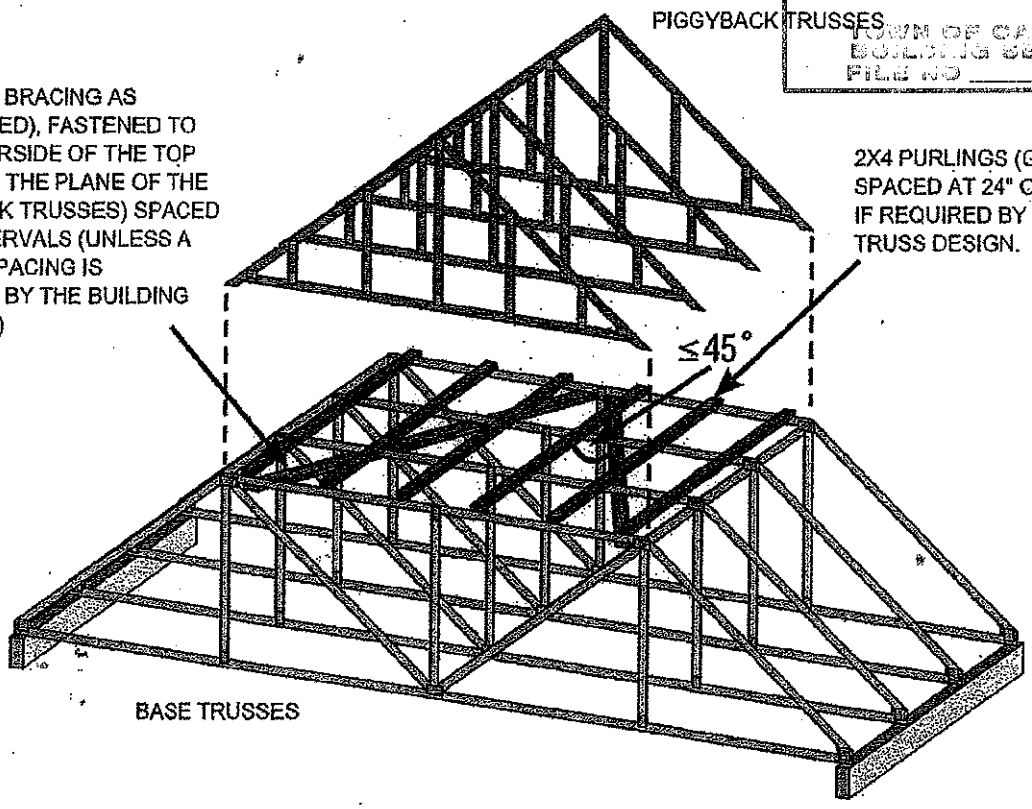

NOTE: THE SLOPED PORTION OF THE TOP CHORD OF THE BASE TRUSS AND PIGGYBACK TRUSS IN THIS SKETCH IS ASSUMED TO BE SHEATHED IN ACCORDANCE WITH THE OBC.

SKETCH FROM BCSI-CANADA 2013

Disclaimer:

OWTFA Tech Notes are intended to provide guidance to the design community both within the membership as well as to third party designers who might benefit from the information. The details have been developed by the OWTFA technical committee and although there may be professional engineers involved in development, the information contained in the tech-note are not intended to be used without having a professional engineer review the information for a specific application. The OWTFA takes no responsibility with respect to the information provided but has developed this tech-note to offer guidance where it is not currently readily available.

Symbols

PLATE LOCATION AND ORIENTATION

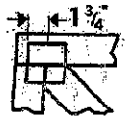

Center plate on joint unless x, y offsets are indicated. Dimensions are in ft-in-sixteenths or mm. Apply plates to both sides of truss and fully embed teeth.

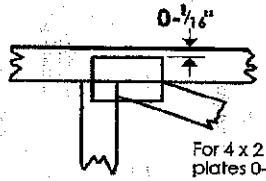

For 4 x 2 orientation, locate plates 0-1/16" from outside edge of truss.

This symbol indicates the required direction of slots in connector plates.

*Plate location details available in MiTek software or upon request.

PLATE SIZE

4 X 4 — The first dimension is the plate width measured perpendicular to slots. Second dimension is the length parallel to slots.

LATERAL BRACING LOCATION

Indicated by symbol shown and/or by text in the bracing section of the output. Use T, I or Eliminator bracing if indicated.

BEARING

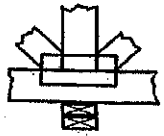

Indicates location where bearings (supports) occur. Icons vary but reaction section indicates joint number where bearings occur.

Industry Standards:

TPIC: Truss Design Procedures and Specifications for Light Metal Plate Connected Wood Trusses
DSB-89: Design Standard for Bracing.
BCSI: Building Component Safety Information, Guide to Good Practice for Handling, Installing & Bracing of Metal Plate Connected Wood Trusses.

Numbering System

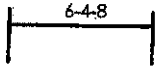

dimensions shown in ft-in-sixteenths or mm (Drawings not to scale)

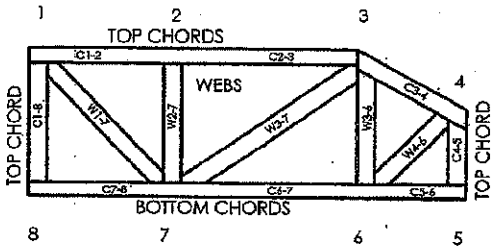

JOINTS ARE GENERALLY NUMBERED/LETTERED CLOCKWISE AROUND THE TRUSS STARTING AT THE JOINT FARTHEST TO THE LEFT.

CHORDS AND WEBS ARE IDENTIFIED BY END JOINT NUMBERS/LETTERS.

PRODUCT CODE APPROVALS

CCMC Reports:

11996-L, 10319-L, 13270-L, 12691-R

© 2007 MiTek® All Rights Reserved

MiTek®
POWER TO PERFORM.™

MiTek Engineering Reference Sheet: MII-7473C rev. 10-'08

General Safety Notes

Failure to Follow Could Cause Property Damage or Personal Injury

1. Additional stability bracing for truss system, e.g. diagonal or X-bracing, is always required. See BCSI.
2. Truss bracing must be designed by an engineer. For wide truss spacing, individual lateral braces themselves may require bracing, or alternative T, I, or Eliminator bracing should be considered.
3. Never exceed the design loading shown and never stack materials on inadequately braced trusses.
4. Provide copies of this truss design to the building designer, erection supervisor, property owner and all other interested parties.
5. Cut members to bear tightly against each other.
6. Place plates on each face of truss at each joint and embed fully. Knots and wane at joint locations are regulated by TPIC.
7. Design assumes trusses will be suitably protected from the environment in accord with TPIC.
8. Unless otherwise noted, moisture content of lumber shall not exceed 19% at time of fabrication.
9. Unless expressly noted, this design is not applicable for use with fire retardant, preservative treated, or green lumber.
10. Camber is a non-structural consideration and is the responsibility of truss fabricator. General practice is to camber for dead load deflection.
11. Plate type, size, orientation and location dimensions indicated are minimum plating requirements.
12. Lumber used shall be of the species and size, and in all respects, equal to or better than that specified.
13. Top chords must be sheathed or purlins provided at spacing indicated on design.
14. Bottom chords require lateral bracing at 10 ft. spacing, or less, if no ceiling is installed, unless otherwise noted.
15. Connections not shown are the responsibility of others.
16. Do not cut or alter truss member or plate without prior approval of an engineer.
17. Install and load vertically unless indicated otherwise.
18. Use of green or treated lumber may pose unacceptable environmental, health or performance risks. Consult with project engineer before use.
19. Review all portions of this design (front, back, words and pictures) before use. Reviewing pictures alone is not sufficient.
20. Design assumes manufacture in accordance with TPIC Quality Criteria.

Alves Engineering Services Inc.
5208 Easton road
Burlington, Ontario L7L 6N6
(289) 259 5455

LICENSED PROFESSIONAL ENGINEER
06/11/12
H.J.G. ALVES
PROVINCE OF ONTARIO

RESPONSABILITIES

1-Alves Engineering Services Inc. is responsible for the design of trusses as individual components

2-It is the responsibility of others to ascertain that the design loads utilized on this drawing meet or exceed the actual dead load imposed by the structure and the live load imposed by the local building code or the authorities having jurisdictions.

3- All dimensions are to be verified by owner, contractor, architect or other authority before manufacture.

4- Alves Engineering Services Inc. bears no responsibility for the erection of the trusses. Persons erecting trusses are cautioned to seek professional advice regarding temporary and permanent bracing system. Bracing shown on Alves Engineering Services Inc. drawings is specified for the truss as a single component and forms an integral part of the truss design, but is not meant to represent the only required bracing for that truss when trusses are installed in a series of trusses forming a roof truss system.

5- It is the manufactures responsibility to ensure that the trusses are manufactured in conformance with Alves Engineering Services Inc. specifications outlined below.

SPECIFICATIONS

1-Truss components sealed by Alves Engineering Services Inc. conform to the relevant sections of the current Building Code of Ontario and Canada (part 4 or part 9) or the current Canadian code for Farm Buildings in accordance with the application specified on the sealed truss component drawing. All truss component design procedures must conform to the current design standard issued by the truss plate institute of Canada (TPIC). All lumber and nailing stresses to conform to the current CSA wood design standard identified on the current Building Code and TPIC.

2- Lumber is to be the sizes and grade specified on the truss drawing.

3- Moist content of lumber is not to exceed 19% in service unless otherwise specified.

4- Plates shall be applied to both faces of the each truss joint and shall be positioned as shown on the truss drawings

5- Lumber used on manufacture of trusses is not to be treated with chemicals unless otherwise specified on the truss drawings.

6- The top chord is assumed to be continuously laterally braced by the roof sheathing or purlins at intervals specified on the truss drawing but not exceeding 24" c/c for (part 9) and not exceeding 48" for (part 4 or farm design)

7- When rigid ceiling is not attached directly to the bottom chord, lateral bracing is required and it should not exceed more than 3m or 10' intervals.

8-Refer to Mitek sheet MII7473C REV.10-08 attached for information on symbols, numbering system and General Safety notes.

T-1800218 Feb 09, 2018