RECEIVED
SEP 16 2019
TOWN OF CALEDON
BUILDING SECTION
FILE NO

HARDWARE:
LUS24 - (O)
LJS26DS - (V)
HGUS26-2 - (XX)

URBAN 2
FRONT ELEV.-1
UNIT 92-4 (LOWES HILL CIRCLE)
405555

URBAN 2
FRONT ELEV.-1
UNIT 92-3 (LOWES HILL CIRCLE)
405555

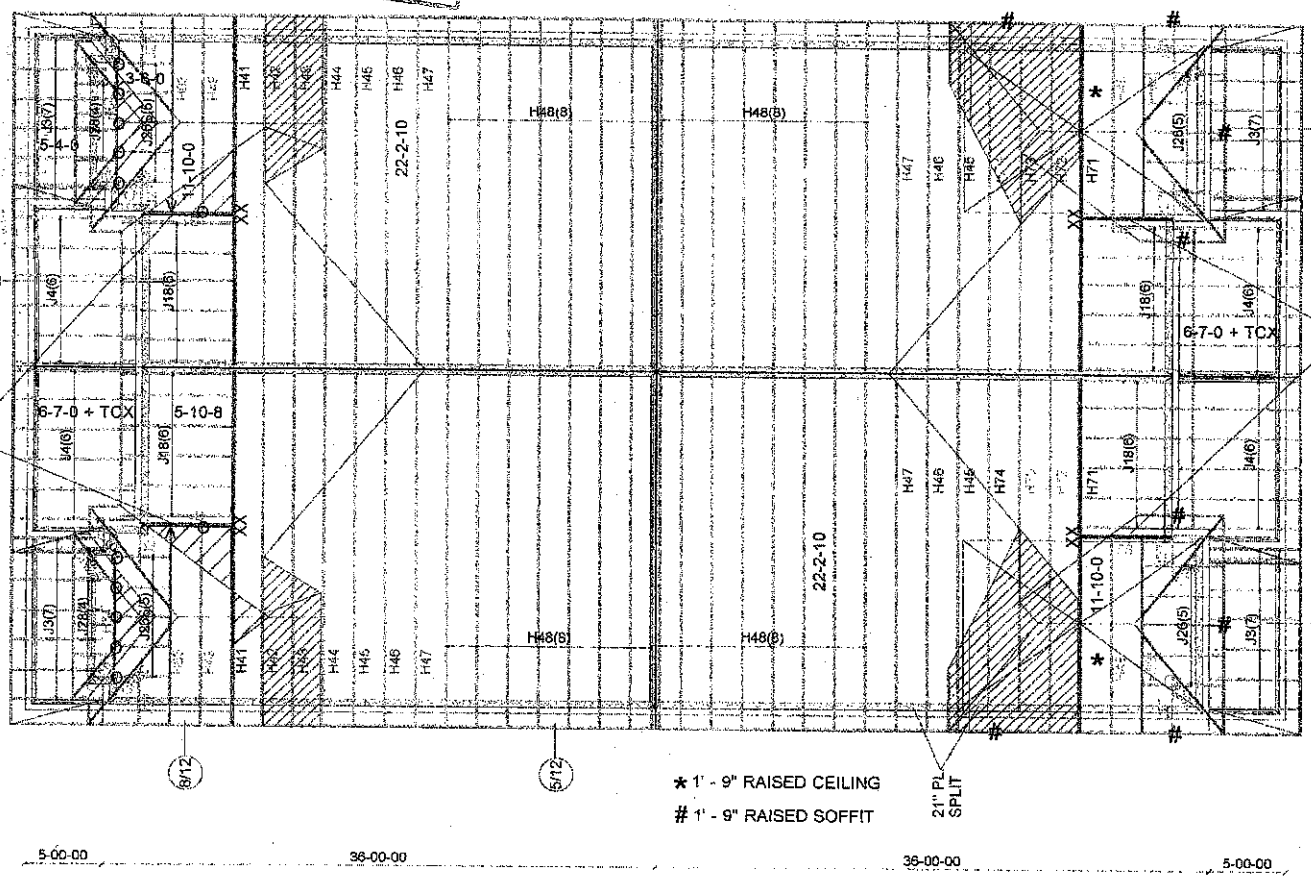

URBAN 2
FRONT ELEV.-3
UNIT 92-2 (DEER RIDGE TRAIL)
405556

URBAN 2
FRONT ELEV.-3
UNIT 92-1 (DEER RIDGE TRAIL)
405556

* 1' - 9" RAISED CEILING

\# 1' - 9" RAISED SOFFIT

ASPHALT SHINGLES
2X6 BRG./BRK
12" FIN. OH.
R.T.M.C
W/ 2X6 FASCIA

PARTY WALL
2-2X4 STUD
W/ 1-2X4 STUD ABOVE

PIGGYBACK TRS
PURLINS BY OTHERS

CALEDON
(29, 6, 0, 7-4)

BY JESSIE

M12634

TAMARACK

Job Track: **50033**	Builder / Location: **GREEN PARK HOMES / CALEDON**		Model / Elevation: **BLOCK 92, 94 / UNITS 92-1 - 92-4, 94-1 - 94-4**
Plan Log: **201727**	Project: **LAMBERT LANE PH.2**		
Layout ID: **405554**	Date: 9/11/2019	Sales: Mario DiCano	Designer: AC

THESE DRAWINGS CONSTITUTE THE PROPERTY OF TAMARACK ROOF TRUSSES INC., SHALL NOT BE REPRODUCED, PUBLISHED, OR REDISTRIBUTED IN ANY MANNER OR UTILIZED FOR ANY PURPOSE OTHER THAN THE MANUFACTURE OF TRUSSES BY TAMARACK ROOF TRUSSES INC AND WILL BE RETRACTED BY TAMARACK ROOF TRUSSES INC IF UTLILZED FOR ANY OTHER PURPOSE.

Mitek ver 8.3.0.234

TAMARACK
ROOF TRUSSES INC.
ALPA LUMBER GROUP

DELIVERY SHIPLIST

Lumber Yard:	TAMARACK LUMBER	Job Track:	50033
Builder:	GREEN PARK HOMES	PlanLog:	201727
Project:	LAMBERT LANE PH.2	Layout ID:	405556
Location:	CALEDON	Ref #	
Model:	BLOCK 92, 94	Page:	1 of 2
Lot #:		Date:	09/11/2019
Elevation:	UNITS 92-1, 92-2	Designer:	Andrew Conway
		Sales Rep:	Mario DiCano

Roof Trusses

PROFILE	QTY PLY	MARK TYPE	PITCH	SPAN	HEIGHT	LUMBER	OVERHANG LEFT RIGHT	HEEL HEIGHT LEFT RIGHT	LBS. BFT.	BUNDLE # STACK #	LOAD BY REMARKS
	1 2-ply	H41 Half Hip Girder	8 /12	**22-02-10**	4-01-04	2 x 4 2 x 6	1-03-08	1-04-13 4-01-04	210.24 132.00		
	1	H42 Half Hip	8 /12	**22-02-10**	5-01-04	2 x 4	1-03-08	1-04-13 5-01-04	92.51 57.67		
	1	H43 Half Hip	5 /12	**22-02-10**	6-01-04	2 x 4	1-03-08	1-00-09 6-01-04	93.88 59.83		
	1	H44 Half Hip	5 /12	**22-02-10**	7-01-04	2 x 4	1-03-08	1-00-09 7-01-04	94.33 59.00		
	2	H45 Half Hip	5 /12	**22-02-10**	8-01-04	2 x 4	1-03-08	1-00-09 8-01-04	197.52 124.33		
	2	H46 Half Hip	5 /12	**22-02-10**	9-01-04	2 x 4	1-03-08	1-00-09 9-01-04	207.8 129.67		
	2	H47 Half Hip	5 /12	**22-02-10**	10-01-04	2 x 4	1-03-08	1-00-09 10-01-04	202.55 125.67		
	16	H48 Monopitch	5 /12	**22-02-10**	10-03-10	2 x 4	1-03-08	1-00-09 10-03-11	1529.7 952.00		
	2	H49 Common	8 /12	**11-10-00**	5-04-02	2 x 4	1-03-08 1-03-08	1-04-13 1-04-13	104.75 63.67		
	2	H63 Hip Girder	8 /12	**11-10-00**	4-10-07	2 x 4	1-03-08 1-03-08	1-04-13 1-04-13	108.49 67.67		
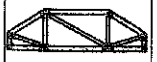	1	H64 Hip Girder	8 /12	**9-00-00**	2-08-03	2 x 4		1-01-08 1-01-08	34.13 23.17		
	1 2-ply	H71 Half Hip Girder	8 /12	**22-02-10**	4-01-04	2 x 4 2 x 6	1-03-08	1-04-13 4-01-04	220.13 141.00		
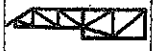	1	H72 Half Hip	8 /12	**22-02-10**	5-01-04	2 x 4	1-03-08	1-04-13 5-01-04	99.4 62.50		
	1	H73 Roof Special	5 /12	**22-02-10**	6-01-04	2 x 4		1-04-00 6-01-04	100.81 65.00		

DELIVERY SHIPLIST

TAMARACK ROOF TRUSSES INC.
ALPA LUMBER GROUP

Lumber Yard:	TAMARACK LUMBER	Job Track:	50033
Builder:	GREEN PARK HOMES	PlanLog:	201727
Project:	LAMBERT LANE PH.2	Layout ID:	405556
Location:	CALEDON	Ref #	
Model:	BLOCK 92, 94	Page:	2 of 2
Lot #:		Date:	09/11/2019
Elevation:	UNITS 92-1, 92-2	Designer:	Andrew Conway
		Sales Rep:	Mario DiCano

Roof Trusses

PROFILE	QTY PLY	MARK TYPE	PITCH	SPAN	HEIGHT	LUMBER	OVERHANG LEFT RIGHT	HEEL HEIGHT LEFT RIGHT	LBS. BFT.	BUNDLE # STACK #	LOAD BY REMARKS
	1	H74 Roof Special	5 /12	**22-02-10**	7-01-04	2 x 4		1-04-00 7-01-04	109.42 71.33		
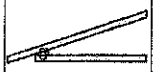	14	J3 Jack-Open	4 /12	**5-04-00**	2-06-03	2 x 4	1-03-08	7-15 2-02-04	206.9 149.33		
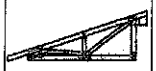	12	J4 Jack-Closed	4 /12	**6-07-00**	3-02-03	2 x 4	1-03-08	7-15 2-10-04	348.21 246.00		
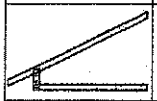	12	J18 Jack-Open	6 /12	**5-10-08**	4-01-04	2 x 4	1-03-08	1-02-00 4-01-04	201.53 128.00		
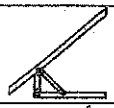	5	J26 Jack-Open	10 /12	**3-10-08**	4-10-07	2 x 4	1-03-08	1-07-11 4-10-07	76.12 48.33		
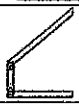	5	J26S Jack-Open	10 /12	**3-06-00**	4-10-07	2 x 4		1-11-07 4-10-07	56 36.67		
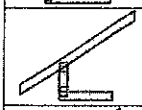	4	J27 Jack-Open	8 /12	**1-10-08**	3-01-10	2 x 4	1-03-08 8-11	1-04-13 2-07-13	35.12 21.33		
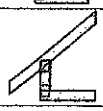	4	J28 Jack-Open	10 /12	**1-08-00**	2-08-03	2 x 4	10-08	1-03-08 2-08-03	27.74 18.67		

TOTAL # TRUSS= **93** TOTAL BFT OF ALL TRUSSES= **2782.84** BFT. TOTAL WEIGHT OF ALL TRSSES **4357.29** LBS

HARDWARE

QTY	TYPE	MODEL	LENGTH
1	Hardware	HGUS26-2	

TOTAL NUMBER OF ITEMS= **1**

DELIVERY SHIPLIST

TAMARACK ROOF TRUSSES INC.
ALPA LUMBER GROUP

Lumber Yard:	TAMARACK LUMBER	Job Track:	50033
Builder:	GREEN PARK HOMES	PlanLog:	201727
Project:	LAMBERT LANE PH.2	Layout ID:	405555
Location:	CALEDON	Ref #	
Model:	BLOCK 92, 94	Page:	1 of 2
Lot #:		Date:	09/11/2019
Elevation:	UNITS 92-3, 92-4	Designer:	Andrew Conway
		Sales Rep:	Mario DiCano

Roof Trusses

PROFILE	QTY PLY	MARK TYPE	PITCH	SPAN	HEIGHT	LUMBER	OVERHANG LEFT RIGHT	HEEL HEIGHT LEFT RIGHT	LBS. BFT.	BUNDLE # STACK #	LOAD BY REMARKS
	1 2-ply	H41 Half Hip Girder	8 /12	**22-02-10**	4-01-04	2 x 4 2 x 6	1-03-08	1-04-13 4-01-04	210.24 132.00		
	1	H42 Half Hip	8 /12	**22-02-10**	5-01-04	2 x 4	1-03-08	1-04-13 5-01-04	92.51 57.67		
	1	H43 Half Hip	5 /12	**22-02-10**	6-01-04	2 x 4	1-03-08	1-00-09 6-01-04	93.88 59.83		
	1	H44 Half Hip	5 /12	**22-02-10**	7-01-04	2 x 4	1-03-08	1-00-09 7-01-04	94.33 59.00		
	2	H45 Half Hip	5 /12	**22-02-10**	8-01-04	2 x 4	1-03-08	1-00-09 8-01-04	197.52 124.33		
	2	H46 Half Hip	5 /12	**22-02-10**	9-01-04	2 x 4	1-03-08	1-00-09 9-01-04	207.8 129.67		
	2	H47 Half Hip	5 /12	**22-02-10**	10-01-04	2 x 4	1-03-08	1-00-09 10-01-04	202.55 125.67		
	16	H48 Monopitch	5 /12	**22-02-10**	10-03-10	2 x 4	1-03-08	1-00-09 10-03-11	1529.7 952.00		
	2	H49 Common	8 /12	**11-10-00**	5-04-02	2 x 4	1-03-08 1-03-08	1-04-13 1-04-13	104.75 63.67		
	2	H63 Hip Girder	8 /12	**11-10-00**	4-10-07	2 x 4	1-03-08 1-03-08	1-04-13 1-04-13	108.49 67.67		
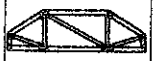	1	H64 Hip Girder	8 /12	**9-00-00**	2-08-03	2 x 4		1-01-08 1-01-08	34.13 23.17		
	1 2-ply	H71 Half Hip Girder	8 /12	**22-02-10**	4-01-04	2 x 4 2 x 6	1-03-08	1-04-13 4-01-04	220.13 141.00		
	1	H72 Half Hip	8 /12	**22-02-10**	5-01-04	2 x 4	1-03-08	1-04-13 5-01-04	99.4 62.50		
	1	H73 Roof Special	5 /12	**22-02-10**	6-01-04	2 x 4		1-04-00 6-01-04	100.81 65.00		

TAMARACK
ROOF TRUSSES INC.
ALPA LUMBER GROUP

DELIVERY SHIPLIST

Lumber Yard:	TAMARACK LUMBER	Job Track:	50033
Builder:	GREEN PARK HOMES	PlanLog:	201727
Project:	LAMBERT LANE PH.2	Layout ID:	405555
Location:	CALEDON	Ref.#	
Model:	BLOCK 92, 94	Page:	2 of 2
Lot #:		Date:	09/11/2019
Elevation:	UNITS 92-3, 92-4	Designer:	Andrew Conway
		Sales Rep:	Mario DiCano

Roof Trusses

PROFILE	QTY PLY	MARK TYPE	PITCH	SPAN	HEIGHT	LUMBER	OVERHANG LEFT RIGHT	HEEL HEIGHT LEFT RIGHT	LBS. BFT.	BUNDLE # STACK #	LOAD BY REMARKS
	1	H74 Roof Special	5 /12	**22-02-10**	7-01-04	2 x 4		1-04-00 7-01-04	109.42 71.33		
	14	J3 Jack-Open	4 /12	**5-04-00**	2-06-03	2 x 4	1-03-08	7-15 2-02-04	206.9 149.33		
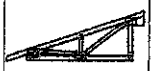	12	J4 Jack-Closed	4 /12	**6-07-00**	3-02-03	2 x 4	1-03-08	7-15 2-10-04	348.21 246.00		
	12	J18 Jack-Open	6 /12	**5-10-08**	4-01-04	2 x 4	1-03-08	1-02-00 4-01-04	201.53 128.00		
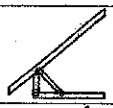	5	J26 Jack-Open	10 /12	**3-10-08**	4-10-07	2 x 4	1-03-08	1-07-11 4-10-07	76.12 48.33		
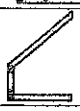	5	J26S Jack-Open	10 /12	**3-06-00**	4-10-07	2 x 4		1-11-07 4-10-07	56 36.67		
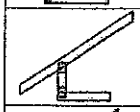	4	J27 Jack-Open	8 /12	**1-10-08**	3-01-10	2 x 4	1-03-08 8-11	1-04-13 2-07-13	35.12 21.33		
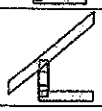	4	J28 Jack-Open	10 /12	**1-08-00**	2-08-03	2 x 4	10-08	1-03-08 2-08-03	27.74 18.67		

TOTAL # TRUSS= **93** TOTAL BFT OF ALL TRUSSES= **2782.84** BFT. TOTAL WEIGHT OF ALL TRSSES **4357.29** LBS

HARDWARE

QTY	TYPE	MODEL	LENGTH
6	Hardware	LUS24	
1	Hardware	LJS26DS	
1	Hardware	HGUS26-2	

TOTAL NUMBER OF ITEMS= **8**

RECEIVED
SEP 16 2019
TOWN OF CALEDON
BUILDING SECTION
FILE NO

JOB NAME	TRUSS NAME	QUANTITY	PLY	JOB DESC	DRWG NO.
405490	H41	4	2	GREEN PARK HOMES TRUSS DESC.	

Tamarack Roof Truss, Burlington

Version 8.300 S May 10 2019 MiTek Industries, Inc. Fri Sep 13 10:59:14 2019 Page 1

ID:08dLJueNb1pNAxJNn9U?SyyCERz-fyUQIdQIIS5NIEzl9oes38pOfm0eSfmPGVqi0gye4Qx

Scale = 1:37.1

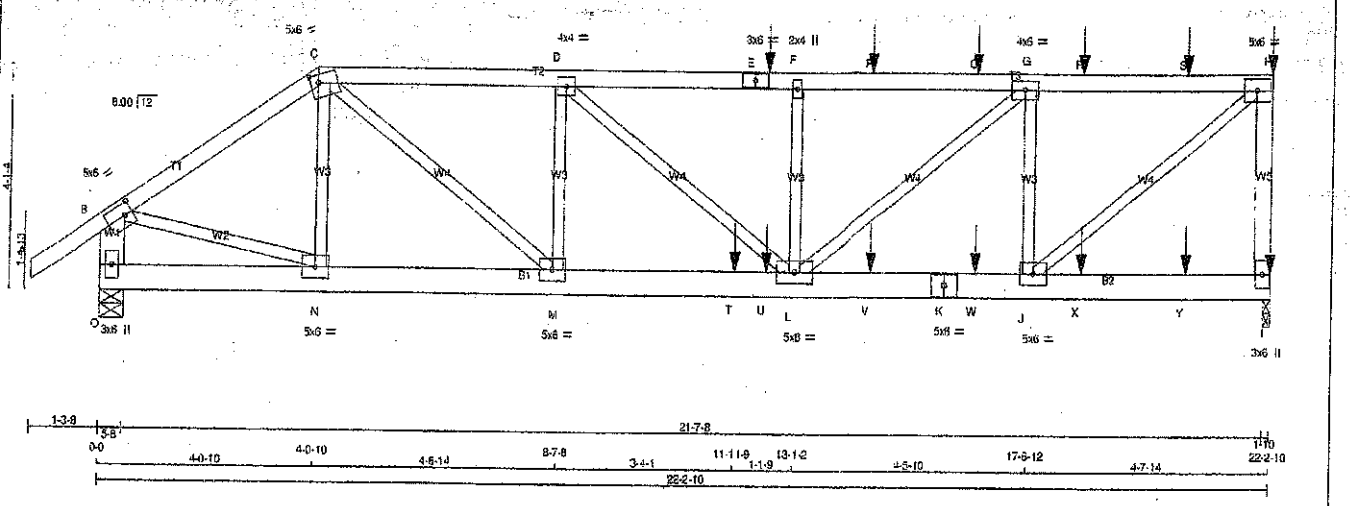

TOTAL WEIGHT = 8 X 105 = 841 lb

LUMBER

N. L. G. A. RULES

CHORDS	SIZE		LUMBER	DESCR.
A - C	2x4	DRY	No.2	SPF
C - E	2x4	DRY	No.2	SPF
E - H	2x4	DRY	No.2	SPF
I - H	2x4	DRY	No.2	SPF
O - B	2x6	DRY	No.2	SPF
O - K	2x6	DRY	No.2	SPF
K - I	2x6	DRY	No.2	SPF
ALL WEBS EXCEPT	2x3	DRY	No.2	SPF

DRY: SEASONED LUMBER.

DESIGN CONSISTS OF 2 TRUSSES BUILT SEPARATELY THEN FASTENED TOGETHER AS FOLLOWS:

CHORDS	#ROWS	SURFACE SPACING (IN)	LOAD(PLF)
TOP CHORDS : (0.122"X3") SPIRAL NAILS			
A-C	1	12	TOP
C-E	1	12	SIDE(0.0)
E-H	1	12	SIDE(51.0)
H-I	1	12	TOP
O-B	2	12	TOP
BOTTOM CHORDS : (0.122"X3") SPIRAL NAILS			
O-K	2	12	SIDE(0.0)
K-I	2	12	SIDE(0.0)
WEBS : (0.122"X3") SPIRAL NAILS			
2x3	1	6	

NAILS TO BE DRIVEN FROM ONE SIDE ONLY.

GIRDER NAILING ASSUMES NAILED HANGERS ARE FASTENED WITH MIN. 3-0 INCH NAILS.

TOP - COMPONENTS ARE LOADED FROM THE TOP AND MUST BE PLACED ON TOP EDGE OF ALL PLIES FOR THE LOAD TO BE TRANSFERRED TO EACH PLY.

SIDE - PLF SHOWN IS THE EQUIVALENT UDL APPLIED TO ONE SIDE THAT THE CORRESPONDING NAILING PATTERN SHALL BE CAPABLE OF TRANSFERING. REMAINING PLF MUST BE APPLIED ON THE OPPOSITE SIDE OR ON THE TOP.

PLATES (table is in inches)

JT	TYPE	PLATES	W	LEN	Y	X
B	TMWW-t	MT20	5.0	6.0	2.50	1.75
C	TTWW-m	MT20	5.0	6.0	1.75	1.75
D	TMWW-t	MT20	4.0	4.0		
E	TS-t	MT20	3.0	6.0		
F	TMW+w	MT20	2.0	4.0		
G	TMWW-t	MT20	4.0	6.0		
H	TMVW-t	MT20	5.0	6.0		
I	BMV1+p	MT20	3.0	6.0		
J, M, N						
J	BMWW-t	MT20	5.0	6.0		
K	BS-t	MT20	5.0	6.0		
L	BMWWW-t	MT20	5.0	8.0		
O	BMV1+p	MT20	3.0	6.0		

DIMENSIONS, SUPPORTS AND LOADINGS SPECIFIED BY FABRICATOR TO BE VERIFIED BY BUILDING DESIGNER

BEARINGS

JT	FACTORED GROSS REACTION VERT	HORZ	MAXIMUM FACTORED GROSS REACTION DOWN	HORZ	UPLIFT	INPUT BRG IN-SX	REQRD BRG IN-SX
I	2721	0	2721	0	0	1-10	1-10
O	2210	0	2210	0	0	5-8	5-8

UNFACTORED REACTIONS

JT	1ST LCASE COMBINED	MAX/MIN. COMPONENT REACTIONS SNOW	LIVE	PERM.LIVE	WIND	DEAD	SOIL
I	1914	1317 / 0	0 / 0	0 / 0	0 / 0	597 / 0	0 / 0
O	1551	1088 / 0	0 / 0	0 / 0	0 / 0	463 / 0	0 / 0

BEARING MATERIAL TO BE SPF NO.2 OR BETTER AT JOINT(S) I, O

BRACING

TOP CHORD TO BE SHEATHED OR MAX. PURLIN SPACING = 4.26 FT.
MAX. UNBRACED BOTTOM CHORD LENGTH = 10.00 FT OR RIGID CEILING DIRECTLY APPLIED.

ALL PITCH BREAKS AND PERIMETER CORNER JOINTS MUST BE LATERALLY RESTRAINED.

LOADING

TOTAL LOAD CASES: (4)

CHORDS

MEMB. FR-TO	MAX. FACTORED FORCE (LBS)	FACTORED VERT. LOAD (PLF) FROM	TO	LC1	MAX CSI (LC)	MAX. UNBRAC LENGTH
A-B	0 / 39	-102.0	-102.0	0.08 (1)	10.00	
B-C	-2407 / 0	-102.0	-102.0	0.19 (1)	5.80	
C-D	-3695 / 0	-102.0	-102.0	0.23 (1)	4.69	
D-E	-4234 / 0	-102.0	-102.0	0.24 (1)	4.43	
E-F	-4234 / 0	-102.0	-102.0	0.24 (1)	4.43	
F-P	-4234 / 0	-102.0	-102.0	0.37 (1)	4.26	
P-Q	-4234 / 0	-102.0	-102.0	0.37 (1)	4.26	
Q-G	-4234 / 0	-102.0	-102.0	0.37 (1)	4.26	
G-R	-2720 / 0	-102.0	-102.0	0.32 (1)	5.16	
R-S	-2720 / 0	-102.0	-102.0	0.32 (1)	5.16	
S-H	-2720 / 0	-102.0	-102.0	0.32 (1)	5.16	
I-H	-2807 / 0	0.0	0.0	0.32 (1)	7.03	
O-B	-2166 / 0	0.0	0.0	0.08 (1)	7.81	
O-N	0 / 0	-18.5	-18.5	0.02 (4)	10.00	
N-M	0 / 1987	-18.5	-18.5	0.20 (1)	10.00	
M-T	0 / 3695	-18.5	-18.5	0.53 (1)	10.00	
T-U	0 / 3695	-18.5	-18.5	0.53 (1)	10.00	
U-L	0 / 3695	-18.5	-18.5	0.53 (1)	10.00	
L-V	0 / 2720	-18.5	-18.5	0.28 (1)	10.00	
V-K	0 / 2720	-18.5	-18.5	0.28 (1)	10.00	
K-W	0 / 2720	-18.5	-18.5	0.28 (1)	10.00	
W-J	0 / 2720	-18.5	-18.5	0.28 (1)	10.00	
J-X	0 / 0	-18.5	-18.5	0.04 (1)	10.00	
X-Y	0 / 0	-18.5	-18.5	0.04 (1)	10.00	
Y-I	0 / 0	-18.5	-18.5	0.04 (1)	10.00	

WEBS

MEMB. FR-TO	MAX. FACTORED FORCE (LBS)	MAX CSI (LC)
N-C	-453 / 0	0.06 (1)
B-N	0 / 2056	0.25 (1)
J-H	0 / 3484	0.43 (1)
C-M	0 / 2201	0.27 (1)
J-G	-2125 / 0	0.27 (1)
M-D	-974 / 0	0.12 (1)
L-G	0 / 1973	0.24 (1)
D-L	0 / 703	0.09 (1)
L-F	-618 / 0	0.08 (1)

FACTORED CONCENTRATED LOADS (LBS)

JT	LOC.	LC1	MAX-	MAX+	FACE	DIR.			
E	12-6-14	-123	-123	---	FRONT	VERT	TOTAL	---	C1
H	22-2-10	-164	-164	---	FRONT	VERT	TOTAL	---	C1
I	22-2-10	-34	-34	---	FRONT	VERT	TOTAL	---	C1
P	14-6-14	-123	-123	---	FRONT	VERT	TOTAL	---	C1
Q	16-6-14	-123	-123	---	FRONT	VERT	TOTAL	---	C1
R	18-6-14	-123	-123	---	FRONT	VERT	TOTAL	---	C1
S	20-6-14	-123	-123	---	FRONT	VERT	TOTAL	---	C1
T	11-11-9	-1170	-1170	---	FRONT	VERT	TOTAL	---	C1
U	12-6-14	-26	-26	---	FRONT	VERT	TOTAL	---	C1
V	14-6-14	-26	-26	---	FRONT	VERT	TOTAL	---	C1
W	16-6-14	-26	-26	---	FRONT	VERT	TOTAL	---	C1
X	18-6-14	-26	-26	---	FRONT	VERT	TOTAL	---	C1
Y	20-6-14	-26	-26	---	FRONT	VERT	TOTAL	---	C1

LICENSED PROFESSIONAL ENGINEER
04/12/19
H. J. G. ALVES
100009024
PROVINCE OF ONTARIO

DESIGN CRITERIA

SPECIFIED LOADS:

TOP CH.	LL =	29.0	PSF
	DL =	6.0	PSF
BOT CH.	LL =	0.0	PSF
	DL =	7.4	PSF
TOTAL LOAD	=	42.4	PSF

SPACING = 29.0 IN. C/C

LOADING IN FLAT SECTION BASED ON A SLOPE OF 8.00/12

THIS TRUSS IS DESIGNED FOR RESIDENTIAL OR SMALL BUILDING REQUIREMENTS OF PART 9, NBCC 2010, NBCC 2015

THIS DESIGN COMPLIES WITH:
- PART 9 OF BCBC 2018 , OBC 2012
- CSA 086-09, CSA 086-14
- TPIC 2011, TPIC 2014

(55 % OF 37.6 P.S.F. G.S.L. PLUS 8.4 P.S.F. RAIN LOAD) EQUALS 29.0 P.S.F. SPECIFIED ROOF LIVE LOAD

ALLOWABLE DEFL.(LL)= L/360 (0.74")
CALCULATED VERT. DEFL.(LL) = L/ 999 (0.09")
ALLOWABLE DEFL.(TL)= L/360 (0.74")
CALCULATED VERT. DEFL.(TL) = L/ 999 (0.15")

CSI: TC=0.37/1.00 (F-G:1) , BC=0.53/1.00 (L-M:1) , WB=0.43/1.00 (H-J:1) , SSI=0.32/1.00 (L-M:1)

DOL LUMBER=1.00 NAIL=1.00 LS BEND=1.00 COMP=1.00 SHEAR=1.00 TENS= 1.00

COMPANION LIVE LOAD FACTOR = 1.00

AUTOSOLVE RIGHT HEEL ONLY

TRUSS PLATE MANUFACTURER IS NOT RESPONSIBLE FOR QUALITY CONTROL IN THE TRUSS MANUFACTURING PLANT .

NAIL VALUES

PLATE	GRIP(DRY) (PSI) MAX	MIN	SHEAR (PLI) MAX	MIN	SECTION (PLI) MAX	MIN
MT20	618	354	1667	788	1887	1656

PLATE PLACEMENT TOL. = 0.250 inches

PLATE ROTATION TOL. = 5.0 Deg.

JSI GRIP= 0.89 (C) (INPUT = 0.90)
JSI METAL= 0.36 (H) (INPUT = 1.00)

Structural component only
DWG# T-1923440

JOB NAME	TRUSS NAME	QUANTITY	PLY	JOB DESC.	DRWG NO.
405490	H42	4	1	GREEN PARK HOMES TRUSS DESC.	

Tamarack Roof Truss, Burlington

Version 8.300 S May 10 2019 MiTek Industries, Inc. Fri Sep 13 10:59:14 2019 Page 1
ID:08dJJueNb1pNAxJNn9U?SyyCERz-IyUQfdQfIS5NIEzI9oes38pJHm4dSgIPGVqi0gye4Qx

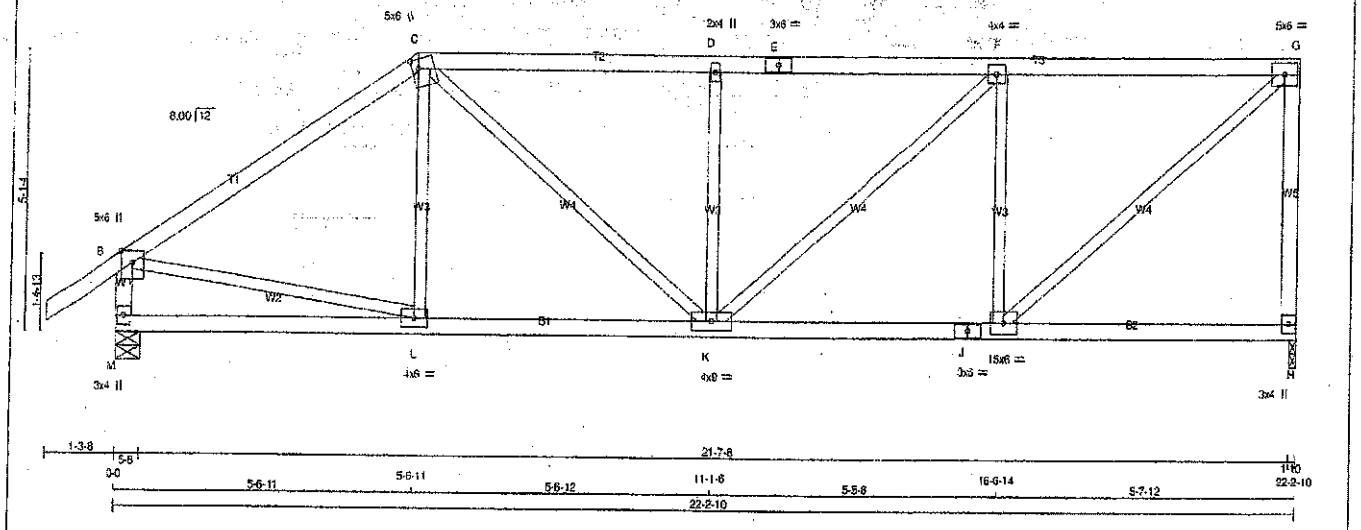

TOTAL WEIGHT = 4 X 93 = 370 lb

LUMBER
N. L. G. A. RULES

CHORDS	SIZE		LUMBER	DESCR.
A - C	2x4	DRY	No.2	SPF
C - E	2x4	DRY	No.2	SPF
E - G	2x4	DRY	No.2	SPF
H - G	2x4	DRY	No.2	SPF
M - B	2x4	DRY	No.2	SPF
M - J	2x4	DRY	No.2	SPF
J - H	2x4	DRY	No.2	SPF
ALL WEBS EXCEPT	2x3	DRY	No.2	SPF

DRY: SEASONED LUMBER.

PLATES (table is in inches)

JT	TYPE	PLATES	W	LEN	Y	X
B	TMVW+p	MT20	5.0	6.0	Edge	
C	TTWW+m	MT20	5.0	6.0	2.00	1.50
D	TMW+w	MT20	2.0	4.0		
E	TS+t	MT20	3.0	6.0		
F	TMWW+t	MT20	4.0	4.0		
G	TMVW+t	MT20	5.0	6.0		
H	BMV1+p	MT20	3.0	4.0		
I	BMWW+t	MT20	5.0	6.0		
J	BS+t	MT20	3.0	6.0		
K	BMWWW+t	MT20	4.0	9.0		
L	BMWW+t	MT20	4.0	6.0		
M	BMV1+p	MT20	3.0	4.0		

Edge - INDICATES REFERENCE CORNER OF PLATE TOUCHES EDGE OF CHORD.

DIMENSIONS, SUPPORTS AND LOADINGS SPECIFIED BY FABRICATOR TO BE VERIFIED BY BUILDING DESIGNER

BEARINGS

JT	FACTORED GROSS REACTION VERT	HORZ	MAXIMUM FACTORED GROSS REACTION DOWN	HORZ	UPLIFT	INPUT BRG IN-SX	REQRD BRG IN-SX
H	1339	0	1339	0	0	1-10	1-10
M	1479	0	1479	0	0	5-8	5-8

UNFACTORED REACTIONS

JT	1ST LCASE COMBINED	MAX./MIN. COMPONENT REACTIONS SNOW	LIVE	PERM.LIVE	WIND	DEAD	SOIL
H	942	844 / 0	0 / 0	0 / 0	0 / 0	298 / 0	0 / 0
M	1038	724 / 0	0 / 0	0 / 0	0 / 0	314 / 0	0 / 0

BEARING MATERIAL TO BE SPF NO.2 OR BETTER AT JOINT(S) H, M

BRACING
TOP CHORD TO BE SHEATHED OR MAX. PURLIN SPACING = 4.59 FT.
MAX. UNBRACED BOTTOM CHORD LENGTH = 10.00 FT OR RIGID CEILING DIRECTLY APPLIED.

ALL PITCH BREAKS AND PERIMETER CORNER JOINTS MUST BE LATERALLY RESTRAINED.

LOADING
TOTAL LOAD CASES: (4)

CHORDS

MEMB. FR-TO	MAX. FACTORED FORCE (LBS)	FACTORED VERT. LOAD LC1 (PLF) FROM	TO	MAX CSI (LC)	MAX. UNBRAC LENGTH
A-B	0 / 39	-102.0	-102.0	0.14 (1)	10.00
B-C	-1418 / 0	-102.0	-102.0	0.65 (1)	4.59
C-D	-1612 / 0	-102.0	-102.0	0.48 (1)	4.62
D-E	-1612 / 0	-102.0	-102.0	0.50 (1)	4.59
E-F	-1612 / 0	-102.0	-102.0	0.50 (1)	4.59
F-G	-1247 / 0	-102.0	-102.0	0.48 (1)	5.10
H-G	-1296 / 0	0.0	0.0	0.57 (1)	7.09
M-B	-1437 / 0	0.0	0.0	0.15 (1)	6.81
M-L	0 / 0	-18.5	-18.5	0.14 (4)	10.00
L-K	0 / 1176	-18.5	-18.5	0.27 (1)	10.00
K-J	0 / 1247	-18.5	-18.5	0.27 (1)	10.00
J-I	0 / 1247	-18.5	-18.5	0.27 (1)	10.00
I-H	0 / 0	-18.5	-18.5	0.14 (4)	10.00

WEBS

MEMB. FR-TO	MAX. FACTORED FORCE (LBS)	MAX CSI (LC)
L-C	-108 / 60	0.04 (1)
B-L	0 / 1199	0.27 (1)
I-G	0 / 1638	0.37 (1)
C-K	0 / 576	0.13 (1)
I-F	-946 / 0	0.36 (1)
K-D	-608 / 0	0.23 (1)
K-F	0 / 487	0.11 (1)

LICENSED PROFESSIONAL ENGINEER
09/13/19
H. J/G ALVES
100090024
PROVINCE OF ONTARIO

DESIGN CRITERIA

SPECIFIED LOADS:

TOP CH.	LL =	29.0	PSF
	DL =	6.0	PSF
BOT CH.	LL =	0.0	PSF
	DL =	7.4	PSF
TOTAL LOAD	=	42.4	PSF

SPACING = 24.0 IN. C/C

LOADING IN FLAT SECTION BASED ON A SLOPE OF 6.00/12

THIS TRUSS IS DESIGNED FOR RESIDENTIAL OR SMALL BUILDING REQUIREMENTS OF PART 9, NBCC 2010, NBCC 2015

THIS DESIGN COMPLIES WITH:
- PART 9 OF BCBC 2018 , OBC 2012
- CSA 086-09, CSA 086-14
- TPIC 2011, TPIC 2014

(55 % OF 37.6 P.S.F. G.S.L. PLUS 8.4 P.S.F. RAIN LOAD) EQUALS 29.0 P.S.F. SPECIFIED ROOF LIVE LOAD

ALLOWABLE DEFL.(LL)= L/360 (0.74")
CALCULATED VERT. DEFL.(LL) = L/ 999 (0.06")
ALLOWABLE DEFL.(TL)= L/360 (0.74")
CALCULATED VERT. DEFL.(TL) = L/ 999 (0.11")

CSI: TC=0.65/1.00 (B-C:1) , BC=0.27/1.00 (I-K:1)
WB=0.37/1.00 (G-I:1) , SSI=0.27/1.00 (F-G:1)

DOL LUMBER=1.00 NAIL=1.00 LS BEND=1.10
COMP=1.10 SHEAR=1.10 TENS= 1.10

COMPANION LIVE LOAD FACTOR = 1.00

TRUSS PLATE MANUFACTURER IS NOT RESPONSIBLE FOR QUALITY CONTROL IN THE TRUSS MANUFACTURING PLANT.

NAIL VALUES

PLATE	GRIP(DRY) (PSI) MAX	MIN	SHEAR (PLI) MAX	MIN	SECTION (PLI) MAX	MIN
MT20	618	354	1667	788	1987	1656

PLATE PLACEMENT TOL. = 0.250 inches

PLATE ROTATION TOL. = 5.0 Deg.

JSI GRIP = 0.89 (B) (INPUT = 0.90)
JSI METAL= 0.61 (B) (INPUT = 1.00)

Structural component only
DWG# T-1923441

JOB NAME	TRUSS NAME	QUANTITY	PLY	JOB DESC	DRWG NO.
405490	H43	4	1	GREEN PARK HOMES TRUSS DESC.	

Tamarack Roof Truss, Burlington

Version 8.300 S May 10 2019 MiTek Industries, Inc. Fri Sep 13 10:59:15 2019 Page 1

ID:08dJJueNb1pNAxJNn9U?SyyCERz-D82oVzRwWIDENOYx|W95cMMQV9PRB3vZV9ZFY6ye4Ow

Scale = 1:36.9

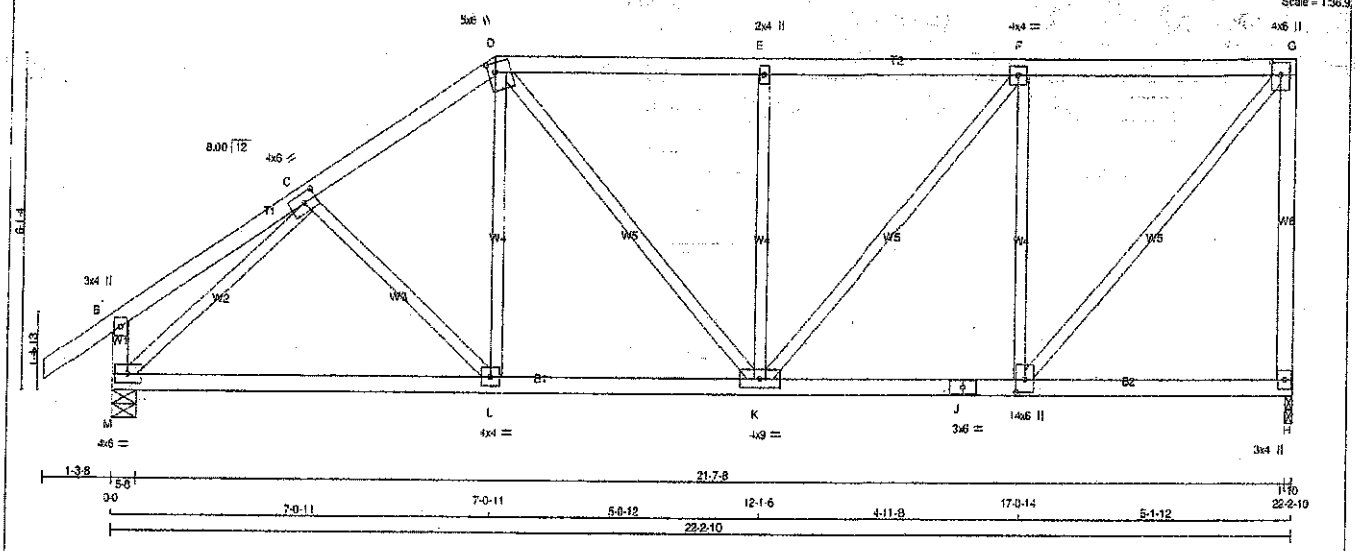

TOTAL WEIGHT = 4 X 100 = 402 lb

LUMBER

N. L. G. A. RULES

CHORDS	SIZE		LUMBER	DESCR.
A - D	2x4	DRY	No.2	SPF
D - G	2x4	DRY	No.2	SPF
H - G	2x4	DRY	No.2	SPF
M - B	2x4	DRY	No.2	SPF
M - J	2x4	DRY	No.2	SPF
J - H	2x4	DRY	No.2	SPF
ALL WEBS EXCEPT	2x3	DRY	No.2	SPF

DRY: SEASONED LUMBER.

PLATES (table is in inches)

JT	TYPE	PLATES	W	LEN	Y	X
B	TMV+p	MT20	3.0	4.0		
C	TMWW-t	MT20	4.0	6.0	2.00	2.75
D	TTWW+m	MT20	5.0	6.0	2.00	1.50
E	TMW+w	MT20	2.0	4.0		
F	TMWW-t	MT20	4.0	4.0		
G	TMVW+p	MT20	4.0	6.0	2.75	2.00
H	BMV1+p	MT20	3.0	4.0		
I	BMWW+t	MT20	4.0	6.0	2.75	2.00
J	BS-t	MT20	3.0	6.0		
K	BMWWW-t	MT20	4.0	9.0		
L	BMWW-t	MT20	4.0	4.0		
M	BMVW1-t	MT20	4.0	6.0		

DIMENSIONS, SUPPORTS AND LOADINGS SPECIFIED BY FABRICATOR TO BE VERIFIED BY BUILDING DESIGNER

BEARINGS

JT	FACTORED GROSS REACTION VERT	HORZ	MAXIMUM FACTORED GROSS REACTION DOWN	HORZ	UPLIFT	INPUT BRG IN-SX	REQRD BRG IN-SX
H	1339	0	1339	0	0	1-10	1-10
M	1479	0	1479	0	0	5-8	5-8

UNFACTORED REACTIONS

JT	1ST LCASE COMBINED	MAX/MIN. COMPONENT REACTIONS SNOW	LIVE	PERM.LIVE	WIND	DEAD	SOIL
H	942	644 / 0	0 / 0	0 / 0	0 / 0	298 / 0	0 / 0
M	1038	724 / 0	0 / 0	0 / 0	0 / 0	314 / 0	0 / 0

BEARING MATERIAL TO BE SPF NO.2 OR BETTER AT JOINT(S) H, M

BRACING

TOP CHORD TO BE SHEATHED OR MAX. PURLIN SPACING = 5.13 FT.
MAX. UNBRACED BOTTOM CHORD LENGTH = 10.00 FT OR RIGID CEILING DIRECTLY APPLIED.

ALL PITCH BREAKS AND PERIMETER CORNER JOINTS MUST BE LATERALLY RESTRAINED.

LOADING

TOTAL LOAD CASES: (4)

CHORDS

MEMB. FR-TO	MAX. FACTORED FORCE (LBS)	FACTORED VERT. LOAD (PLF) FROM	TO	MAX CSI (LC)	MAX. UNBRAC LENGTH
A- B	0 / 39	-102.0	-102.0	0.14 (1)	10.00
B- C	0 / 22	-102.0	-102.0	0.19 (1)	10.00
C- D	-1375 / 0	-102.0	-102.0	0.22 (1)	5.30
D- E	-1313 / 0	-102.0	-102.0	0.38 (1)	5.19
E- F	-1313 / 0	-102.0	-102.0	0.39 (1)	5.13
F- G	-963 / 0	-102.0	-102.0	0.38 (1)	5.80
H- G	-1301 / 0	0.0	0.0	0.94 (1)	7.08
M- B	-260 / 0	0.0	0.0	0.03 (1)	7.81
M- L	0 / 1175	-18.5	-18.5	0.30 (1)	10.00
L- K	0 / 1127	-18.5	-18.5	0.29 (4)	10.00
K- J	0 / 963	-18.5	-18.5	0.22 (1)	10.00
J- I	0 / 963	-18.5	-18.5	0.22 (1)	10.00
I- H	0 / 0	-18.5	-18.5	0.12 (4)	10.00

WEBS

MEMB. FR-TO	MAX. FACTORED FORCE (LBS)	MAX CSI (LC)
C- L	-70 / 28	0.03 (1)
L- D	0 / 185	0.05 (4)
M- C	-1639 / 0	0.63 (1)
I- G	0 / 1453	0.33 (1)
D- K	0 / 283	0.06 (1)
I- F	-978 / 0	0.57 (1)
K- E	-553 / 0	0.32 (1)
K- F	0 / 539	0.12 (1)

LICENSED PROFESSIONAL ENGINEER
09/13/19
H. J. G. ALVES
100009024
PROVINCE OF ONTARIO

DESIGN CRITERIA

SPECIFIED LOADS:

TOP CH.	LL	=	29.0	PSF
	DL	=	6.0	PSF
BOT CH.	LL	=	0.0	PSF
	DL	=	7.4	PSF
TOTAL LOAD		=	42.4	PSF

SPACING = 24.0 IN. C/C

LOADING IN FLAT SECTION BASED ON A SLOPE OF 6.00/12

THIS TRUSS IS DESIGNED FOR RESIDENTIAL OR SMALL BUILDING REQUIREMENTS OF PART 9, NBCC 2010, NBCC 2015

THIS DESIGN COMPLIES WITH:
- PART 9 OF BCBC 2018 , OBC 2012
- CSA 086-09, CSA 086-14
- TPIC 2011, TPIC 2014

(55 % OF 37.6 P.S.F. G.S.L. PLUS 8.4 P.S.F. RAIN LOAD) EQUALS 29.0 P.S.F. SPECIFIED ROOF LIVE LOAD

ALLOWABLE DEFL.(LL)= L/360 (0.74")
CALCULATED VERT. DEFL.(LL) = L/999 (0.05")
ALLOWABLE DEFL.(TL)= L/360 (0.74")
CALCULATED VERT. DEFL.(TL) = L/999 (0.11")

CSI: TC=0.94/1.00 (G-H:1) , BC=0.30/1.00 (L-M:1) , WB=0.63/1.00 (C-M:1) , SSI=0.24/1.00 (F-G:1)

DOL LUMBER=1.00 NAIL=1.00 LS BEND=1.10 COMP=1.10 SHEAR=1.10 TENS= 1.10

COMPANION LIVE LOAD FACTOR = 1.00

TRUSS PLATE MANUFACTURER IS NOT RESPONSIBLE FOR QUALITY CONTROL IN THE TRUSS MANUFACTURING PLANT.

NAIL VALUES

PLATE	GRIP(DRY) (PSI) MAX	MIN	SHEAR (PLI) MAX	MIN	SECTION (PLI) MAX	MIN
MT20	518	354	1867	788	1987	1656

PLATE PLACEMENT TOL. = 0.250 inches

PLATE ROTATION TOL. = 5.0 Deg.

JSI GRIP= 0.90 (M) (INPUT = 0.90)
JSI METAL= 0.43 (G) (INPUT = 1.00)

Structural component only
DWG# T-1923442

JOB NAME	TRUSS NAME	QUANTITY	PLY	JOB DESC.	DRWG NO.
405490	H44	4	1	GREEN PARK HOMES TRUSS DESC.	

Tamarack Roof Truss, Burlington

Version 8.300 S May 10 2019 MiTek Industries, Inc. Fri Sep 13 10:59:16 2019 Page 1

ID:08dJJueNb1pNAxJNn9U?SyyCERz-ikcBjJRYH3L5_X78HDgK8ZucqZiJwXkikpJp4Yye4Qv

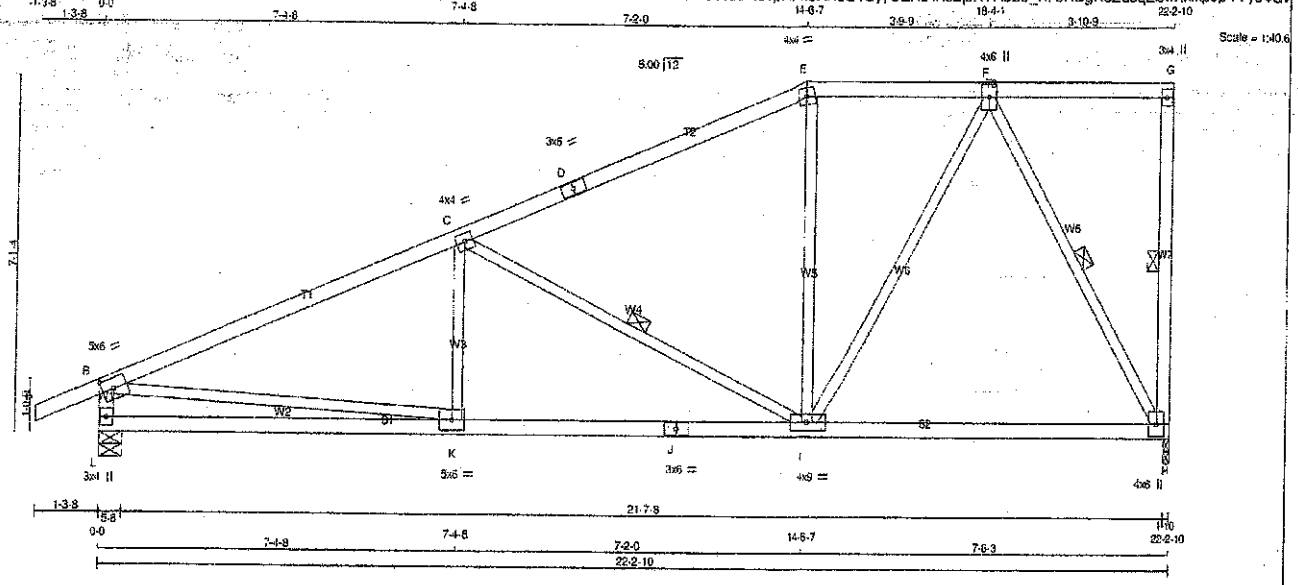

TOTAL WEIGHT = 4 X 94 = 377 lb

M[F]

LUMBER

N. L. G. A. RULES

CHORDS	SIZE		LUMBER	DESCR.
A - D	2x4	DRY	No.2	SPF
D - E	2x4	DRY	No.2	SPF
E - G	2x4	DRY	No.2	SPF
H - G	2x4	DRY	No.2	SPF
L - B	2x4	DRY	No.2	SPF
L - J	2x4	DRY	No.2	SPF
J - H	2x4	DRY	No.2	SPF
ALL WEBS EXCEPT	2x3	DRY	No.2	SPF

DRY: SEASONED LUMBER.

PLATES (table is in inches)

JT	TYPE	PLATES	W	LEN	Y	X
B	TMWW-t	MT20	5.0	6.0	2.50	2.75
C	TMWW-t	MT20	4.0	4.0		
D	TS-t	MT20	3.0	6.0		
E	TTW-m	MT20	4.0	4.0		
F	TMWW+t	MT20	4.0	6.0		
G	TMV+p	MT20	3.0	4.0		
H	BMVW1+p	MT20	4.0	6.0		
I	BMWWW-t	MT20	4.0	9.0		
J	BS-t	MT20	3.0	6.0		
K	BMWW-t	MT20	5.0	6.0		
L	BMV1+p	MT20	3.0	4.0		

DIMENSIONS, SUPPORTS AND LOADINGS SPECIFIED BY FABRICATOR TO BE VERIFIED BY BUILDING DESIGNER

BEARINGS

JT	FACTORED GROSS REACTION VERT	HORZ	MAXIMUM FACTORED GROSS REACTION DOWN	HORZ	UPLIFT	INPUT BRG IN-SX	REQRD BRG IN-SX
H	1339	0	1339	0	0	1-10	1-10
L	1476	0	1476	0	0	5-8	5-8

UNFACTORED REACTIONS

JT	1ST LCASE COMBINED	MAX./MIN. COMPONENT REACTIONS SNOW	LIVE	PERM.LIVE	WIND	DEAD	SOIL
H	942	644 / 0	0 / 0	0 / 0	0 / 0	298 / 0	0 / 0
L	1037	723 / 0	0 / 0	0 / 0	0 / 0	314 / 0	0 / 0

BEARING MATERIAL TO BE SPF NO.2 OR BETTER AT JOINT(S) H, L

BRACING

TOP CHORD TO BE SHEATHED OR MAX. PURLIN SPACING = 3.58 FT.
MAX. UNBRACED BOTTOM CHORD LENGTH = 10.00 FT OR RIGID CEILING DIRECTLY APPLIED.

ALL PITCH BREAKS AND PERIMETER CORNER JOINTS MUST BE LATERALLY RESTRAINED.

1 LATERAL BRACE(S) AT 1/ 2 LENGTH OF G-H, C-I, F-H.

END VERTICAL(S) MUST BE SHEATHED OR HAVE BRACES AS INDICATED IN THE MAX. UNBRACED LENGTH COLUMN OF THE TABLE BELOW

LOADING

TOTAL LOAD CASES: (4)

CHORDS

MEMB. FR-TO	MAX. FACTORED FORCE (LBS)	FACTORED VERT. LOAD LC) (PLF) FROM	TO	MAX CSI (LC)	MAX. UNBRAC LENGTH
A- B	0 / 26	-102.0	-102.0	0.13 (1)	10.00
B- C	-2045 / 0	-102.0	-102.0	0.84 (1)	3.58
C- D	-1114 / 0	-102.0	-102.0	0.73 (1)	4.79
D- E	-1114 / 0	-102.0	-102.0	0.73 (1)	4.79
E- F	-995 / 0	-102.0	-102.0	0.20 (1)	6.02
F- G	0 / 0	-102.0	-102.0	0.25 (1)	10.00
H- G	-151 / 0	0.0	0.0	0.03 (1)	6.25
L- B	-1418 / 0	0.0	0.0	0.14 (1)	6.85
L- K	0 / 0	-18.5	-18.5	0.21 (4)	10.00
K- J	0 / 1919	-18.5	-18.5	0.45 (1)	10.00
J- I	0 / 1919	-18.5	-18.5	0.45 (1)	10.00
I- H	0 / 645	-18.5	-18.5	0.29 (4)	10.00

WEBS

MEMB. FR-TO	MAX. FACTORED FORCE (LBS)	MAX CSI (LC)
K- C	-52 / 104	0.04 (4)
C- I	-1043 / 0	0.48 (1)
I- E	-6 / 64	0.02 (4)
B- K	0 / 1929	0.43 (1)
I- F	0 / 735	0.17 (1)
F- H	-1302 / 0	0.53 (1)

DESIGN CRITERIA

SPECIFIED LOADS:

TOP CH.	LL =	29.0	PSF
	DL =	6.0	PSF
BOT CH.	LL =	0.0	PSF
	DL =	7.4	PSF
TOTAL LOAD	=	42.4	PSF

SPACING = 24.0 IN. C/C

LOADING IN FLAT SECTION BASED ON A SLOPE OF 6.00/12

THIS TRUSS IS DESIGNED FOR RESIDENTIAL OR SMALL BUILDING REQUIREMENTS OF PART 9, NBCC 2010, NBCC 2015

THIS DESIGN COMPLIES WITH:
- PART 9 OF BCSC 2018 , OBC 2012
- CSA 086-09, CSA 086-14
- TPIC 2011, TPIC 2014

(55 % OF 37.6 P.S.F. G.S.L. PLUS 8.4 P.S.F. RAIN LOAD) EQUALS 29.0 P.S.F. SPECIFIED ROOF LIVE LOAD

ALLOWABLE DEFL.(LL)= L/360 (0.74")
CALCULATED VERT. DEFL.(LL) = L/ 999 (0.08")
ALLOWABLE DEFL.(TL)= L/360 (0.74")
CALCULATED VERT. DEFL.(TL) = L/ 999 (0.16")

CSI: TC=0.84/1.00 (B-C:1) , BC=0.45/1.00 (I-K:1) , WB=0.53/1.00 (F-H:1) , SSI=0.33/1.00 (B-C:1)

DOL LUMBER=1.00 NAIL=1.00 LS BEND=1.10 COMP=1.10 SHEAR=1.10 TENS= 1.10

COMPANION LIVE LOAD FACTOR = 1.00

TRUSS PLATE MANUFACTURER IS NOT RESPONSIBLE FOR QUALITY CONTROL IN THE TRUSS MANUFACTURING PLANT .

NAIL VALUES

PLATE	GRIP(DRY) (PSI) MAX	MIN	SHEAR (PLI) MAX	MIN	SECTION (PLI) MAX	MIN
MT20	618	354	1667	788	1967	1856

PLATE PLACEMENT TOL. = 0.250 inches

PLATE ROTATION TOL. = 5.0 Deg.

JSI GRIP= 0.82 (B) (INPUT = 0.90)
JSI METAL= 0.60 (J) (INPUT = 1.00)

LICENSED PROFESSIONAL ENGINEER
09/13/19
H. J. G. ALVES
100009024
PROVINCE OF ONTARIO

RECEIVED
SEP 16 2019
TOWN OF CALEDON
BUILDING SECTION
FILE NO

Structural component only
DWG# T-1923443

JOB NAME	TRUSS NAME	QUANTITY	PLY	JOB DESC.	DRWG NO.
405490	H45	4	1	GREEN PARK HOMES TRUSS DESC.	

Tamarack Roof Truss, Burlington

Version 8.300 S May 10 2019 MiTek Industries, Inc. Fri Sep 13 10:59:17 2019 Page 1

ID:08dJJueNb1pNAxjNn9U?SyyCERz-AWAZwfSB2NTychiKqxBZhnRtKz4uf0PsyT2Md_ye4Qu

Scale = 1:44.8

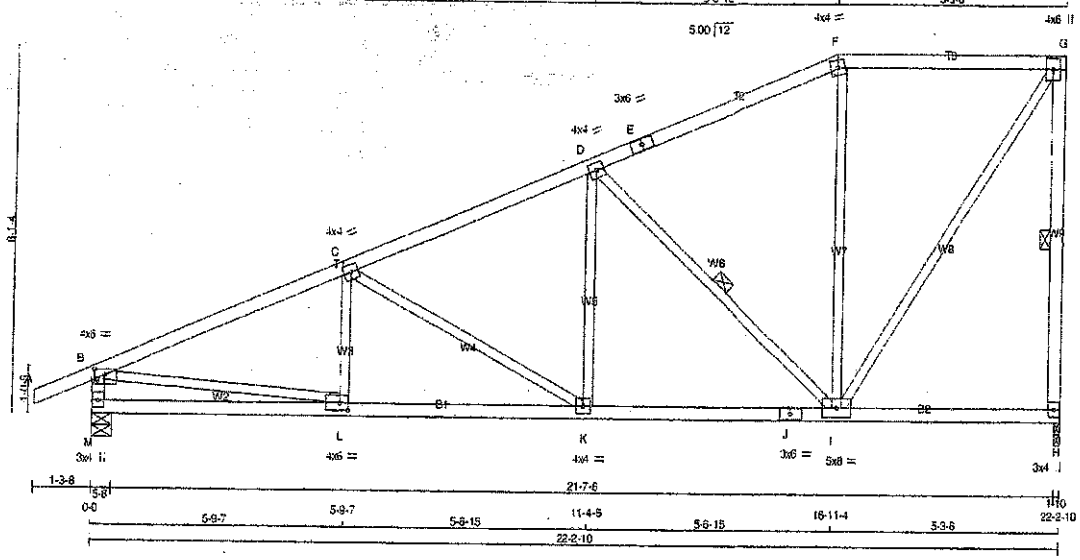

TOTAL WEIGHT = 4 X 99 = 395 lb

LUMBER

N. L. G. A. RULES

CHORDS	SIZE		LUMBER	DESCR.
A - E	2x4	DRY	No.2	SPF
E - F	2x4	DRY	No.2	SPF
F - G	2x4	DRY	No.2	SPF
H - G	2x4	DRY	No.2	SPF
M - B	2x4	DRY	No.2	SPF
M - J	2x4	DRY	No.2	SPF
J - H	2x4	DRY	No.2	SPF
ALL WEBS EXCEPT	2x3	DRY	No.2	SPF

DRY: SEASONED LUMBER.

PLATES (table is in inches)

JT	TYPE	PLATES	W	LEN	Y	X
B	TMVW-p	MT20	4.0	6.0	1.50	2.75
C	TMWW-t	MT20	4.0	4.0		
D	TMWW-t	MT20	4.0	4.0		
E	TS-t	MT20	3.0	6.0		
F	TTW-m	MT20	4.0	4.0		
G	TMVW+p	MT20	4.0	6.0		
H	BMV1+p	MT20	3.0	4.0		
I	BMWWW-t	MT20	5.0	8.0		
J	BS-t	MT20	3.0	6.0		
K	BMWW-t	MT20	4.0	4.0		
L	BMWW-t	MT20	4.0	6.0	2.00	2.25
M	BMV1+p	MT20	3.0	4.0		

DIMENSIONS, SUPPORTS AND LOADINGS SPECIFIED BY FABRICATOR TO BE VERIFIED BY BUILDING DESIGNER

BEARINGS

JT	FACTORED GROSS REACTION VERT	HORZ	MAXIMUM FACTORED GROSS REACTION DOWN	HORZ	UPLIFT	INPUT BRG IN-SX	REQRD BRG IN-SX
H	1339	0	1339	0	0	1-10	1-10
M	1476	0	1476	0	0	5-8	5-8

UNFACTORED REACTIONS

JT	1ST LCASE COMBINED	MAX./MIN. COMPONENT REACTIONS SNOW	LIVE	PERM.LIVE	WIND	DEAD	SOIL
H	942	644 / 0	0 / 0	0 / 0	0 / 0	298 / 0	0 / 0
M	1037	723 / 0	0 / 0	0 / 0	0 / 0	314 / 0	0 / 0

BEARING MATERIAL TO BE SPF NO.2 OR BETTER AT JOINT(S) H, M

BRACING

TOP CHORD TO BE SHEATHED OR MAX. PURLIN SPACING = 4.24 FT.
MAX. UNBRACED BOTTOM CHORD LENGTH = 10.00 FT OR RIGID CEILING DIRECTLY APPLIED.

ALL PITCH BREAKS AND PERIMETER CORNER JOINTS MUST BE LATERALLY RESTRAINED.

1 LATERAL BRACE(S) AT 1/2 LENGTH OF G-H, D-I.

END VERTICAL(S) MUST BE SHEATHED OR HAVE BRACES AS INDICATED IN THE MAX. UNBRACED LENGTH COLUMN OF THE TABLE BELOW

LOADING

TOTAL LOAD CASES: (4)

CHORDS

MEMB. FR-TO	MAX. FACTORED FORCE (LBS)	FACTORED VERT. LOAD LC1 (PLF) FROM	TO	MAX CSI (LC)	MAX. UNBRAC LENGTH
A-B	0 / 26	-102.0	-102.0	0.13 (1)	10.00
B-C	-2066 / 0	-102.0	-102.0	0.47 (1)	4.24
C-D	-1540 / 0	-102.0	-102.0	0.37 (1)	4.90
D-E	-766 / 0	-102.0	-102.0	0.37 (1)	6.25
E-F	-766 / 0	-102.0	-102.0	0.37 (1)	6.25
F-G	-664 / 0	-102.0	-102.0	0.37 (1)	6.25
H-G	-1301 / 0	0.0	0.0	0.39 (1)	5.66
M-B	-1429 / 0	0.0	0.0	0.14 (1)	6.83
M-L	0 / 0	-18.5	-18.5	0.13 (4)	10.00
L-K	0 / 1925	-18.5	-18.5	0.35 (1)	10.00
K-J	0 / 1422	-18.5	-18.5	0.30 (1)	10.00
J-I	0 / 1422	-18.5	-18.5	0.30 (1)	10.00
I-H	0 / 0	-18.5	-18.5	0.13 (4)	10.00

WEBS

MEMB. FR-TO	MAX. FACTORED FORCE (LBS)	MAX CSI (LC)
L-C	-137 / 54	0.03 (1)
C-K	-580 / 0	0.43 (1)
K-D	0 / 388	0.09 (1)
D-I	-1021 / 0	0.43 (1)
I-F	-212 / 9	0.27 (1)
I-G	0 / 1238	0.28 (1)
B-L	0 / 1942	0.44 (1)

DESIGN CRITERIA

SPECIFIED LOADS:

TOP CH.	LL =	29.0	PSF
	DL =	6.0	PSF
BOT CH.	LL =	0.0	PSF
	DL =	7.4	PSF
TOTAL LOAD	=	42.4	PSF

SPACING = 24.0 IN. C/C

LOADING IN FLAT SECTION BASED ON A SLOPE OF 6.00/12

THIS TRUSS IS DESIGNED FOR RESIDENTIAL OR SMALL BUILDING REQUIREMENTS OF PART 9, NBCC 2010, NBCC 2015

THIS DESIGN COMPLIES WITH:
- PART 9 OF BCBC 2018 , OBC 2012
- CSA 086-09, CSA 086-14
- TPIC 2011, TPIC 2014

(55 % OF 37.6 P.S.F. G.S.L. PLUS 8.4 P.S.F RAIN LOAD) EQUALS 29.0 P.S.F. SPECIFIED ROOF LIVE LOAD

ALLOWABLE DEFL.(LL)= L/360 (0.74")
CALCULATED VERT. DEFL.(LL) = L/999 (0.07")
ALLOWABLE DEFL.(TL)= L/360 (0.74")
CALCULATED VERT. DEFL.(TL) = L/999 (0.14")

CSI: TC=0.47/1.00 (B-C:1) , BC=0.36/1.00 (K-L:1) , WB=0.44/1.00 (B-L:1) , SSI=0.25/1.00 (B-C:1)

DOL LUMBER=1.00 NAIL=1.00 LS BEND=1.10 COMP=1.10 SHEAR=1.10 TENS= 1.10

COMPANION LIVE LOAD FACTOR = 1.00

TRUSS PLATE MANUFACTURER IS NOT RESPONSIBLE FOR QUALITY CONTROL IN THE TRUSS MANUFACTURING PLANT.

NAIL VALUES

PLATE	GRIP(DRY) (PSI) MAX	MIN	SHEAR (PLI) MAX	MIN	SECTION (PLI) MAX	MIN
MT20	618	354	1667	769	1987	1656

PLATE PLACEMENT TOL. = 0.250 inches

PLATE ROTATION TOL. = 5.0 Deg.

JSI GRIP = 0.89 (B) (INPUT = 0.90)
JSI METAL = 0.48 (L) (INPUT = 1.00)

LICENSED PROFESSIONAL ENGINEER
09/12/19
H. J. G ALVES
100009024
PROVINCE OF ONTARIO

Structural component only
DWG# T-1923444

JOB NAME	TRUSS NAME	QUANTITY	PLY	JOB DESC. GREEN PARK HOMES	DRWG NO.
405490	H46	4	1	TRUSS DESC.	

Tamarack Roof Truss, Burlington

Version 8.300 S May 10 2019 MiTek Industries, Inc. Fri Sep 13 10:59:18 2019 Page 1

ID:08dJJueNb1pNAxJNn9U?SyyCERz-ejjx8?TppgbpErHWOeioD__0nNPgONN?B7ov9Rye4Qt

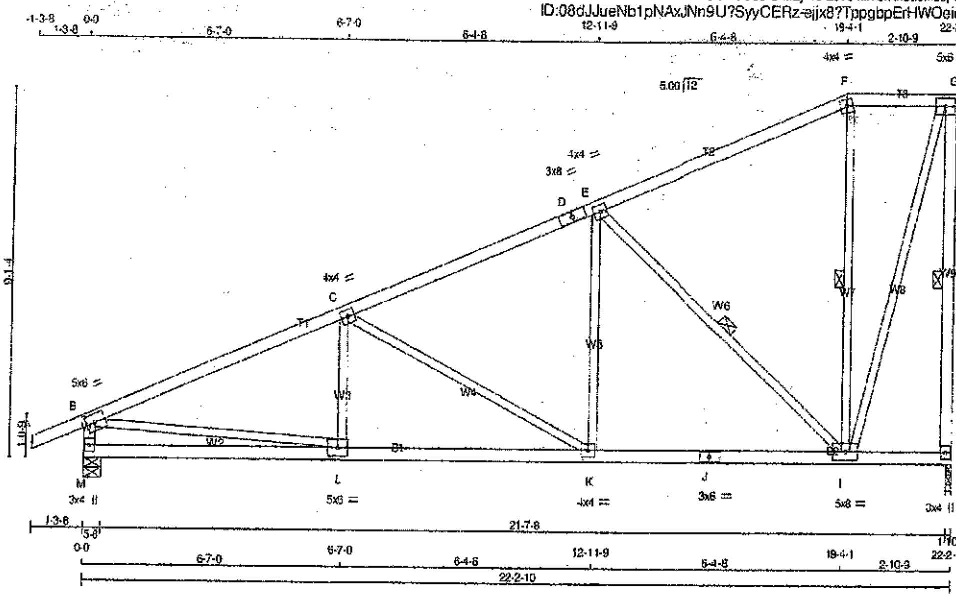

TOTAL WEIGHT = 4 X 104 = 416 lb. [M][F]

LUMBER

N. L. G. A. RULES

CHORDS	SIZE		LUMBER	DESCR.
A - D	2x4	DRY	No.2	SPF
D - F	2x4	DRY	No.2	SPF
F - G	2x4	DRY	No.2	SPF
H - G	2x4	DRY	No.2	SPF
M - B	2x4	DRY	No.2	SPF
M - J	2x4	DRY	No.2	SPF
J - H	2x4	DRY	No.2	SPF
ALL WEBS EXCEPT	2x3	DRY	No.2	SPF

DRY: SEASONED LUMBER.

PLATES (table is in inches)

JT	TYPE	PLATES	W	LEN	Y	X
B	TMVW-I	MT20	5.0	6.0	2.50	2.75
C	TMWW-I	MT20	4.0	4.0		
D	TS-I	MT20	3.0	8.0		
E	TMWW-I	MT20	4.0	4.0		
F	TTW-m	MT20	4.0	4.0		
G	TMVW-t	MT20	5.0	6.0		
H	BMV1+p	MT20	3.0	4.0		
I	BMWWW-I	MT20	5.0	8.0		
J	BS-I	MT20	3.0	6.0		
K	BMWW-I	MT20	4.0	4.0		
L	BMWW-I	MT20	5.0	6.0		
M	BMV1+p	MT20	3.0	4.0		

DIMENSIONS, SUPPORTS AND LOADINGS SPECIFIED BY FABRICATOR TO BE VERIFIED BY BUILDING DESIGNER

BEARINGS

JT	FACTORED GROSS REACTION VERT	HORZ	MAXIMUM FACTORED GROSS REACTION DOWN	HORZ	UPLIFT	INPUT BRG IN-SX	REQRD BRG IN-SX
H	1339	0	1339	0	0	1-10	1-10
M	1476	0	1476	0	0	5-8	5-8

UNFACTORED REACTIONS

JT	1ST LCASE COMBINED	SNOW	LIVE	PERM.LIVE	WIND	DEAD	SOIL
		MAX./MIN. COMPONENT REACTIONS					
H	942	644 / 0	0 / 0	0 / 0	0 / 0	298 / 0	0 / 0
M	1037	723 / 0	0 / 0	0 / 0	0 / 0	314 / 0	0 / 0

BEARING MATERIAL TO BE SPF NO.2 OR BETTER AT JOINT(S) H, M

BRACING

TOP CHORD TO BE SHEATHED OR MAX. PURLIN SPACING = 4.05 FT.
MAX. UNBRACED BOTTOM CHORD LENGTH = 10.00 FT OR RIGID CEILING DIRECTLY APPLIED.

ALL PITCH BREAKS AND PERIMETER CORNER JOINTS MUST BE LATERALLY RESTRAINED.

1 LATERAL BRACE(S) AT 1/ 2 LENGTH OF G-H, E-I, F-I.

END VERTICAL(S) MUST BE SHEATHED OR HAVE BRACES AS INDICATED IN THE MAX. UNBRACED LENGTH COLUMN OF THE TABLE BELOW

LOADING

TOTAL LOAD CASES: (4)

CHORDS

MEMB. FR-TO	MAX. FACTORED FORCE (LBS)	FACTORED VERT. LOAD LC1 (PLF) FROM	TO	MAX CSI (LC)	MAX. UNBRAC LENGTH
A- B	0 / 26	-102.0	-102.0	0.13 (1)	10.00
B- C	-2048 / 0	-102.0	-102.0	0.62 (1)	4.05
C- D	-1359 / 0	-102.0	-102.0	0.47 (1)	4.99
D- E	-1359 / 0	-102.0	-102.0	0.47 (1)	4.99
E- F	-431 / 0	-102.0	-102.0	0.48 (1)	6.25
F- G	-372 / 0	-102.0	-102.0	0.11 (1)	6.25
H- G	-1325 / 0	0.0	0.0	0.51 (1)	5.62
M- B	-1424 / 0	0.0	0.0	0.14 (1)	6.84
M- L	0 / 0	-18.5	-18.5	0.17 (4)	10.00
L- K	0 / 1913	-18.5	-18.5	0.39 (1)	10.00
K- J	0 / 1254	-18.5	-18.5	0.29 (1)	10.00
J- I	0 / 1254	-18.5	-18.5	0.29 (1)	10.00
I- H	0 / 0	-18.5	-18.5	0.11 (4)	10.00

WEBS

MEMB. FR-TO	MAX. FACTORED FORCE (LBS)	MAX CSI (LC)
L- C	-89 / 82	0.03 (4)
C- K	-751 / 0	0.78 (1)
K- E	0 / 485	0.11 (1)
E- I	-1212 / 0	0.67 (1)
I- F	-262 / 0	0.14 (1)
I- G	0 / 1236	0.28 (1)
B- L	0 / 1925	0.43 (1)

DESIGN CRITERIA

SPECIFIED LOADS:

TOP CH.	LL =	29.0	PSF
	DL =	6.0	PSF
BOT CH.	LL =	0.0	PSF
	DL =	7.4	PSF
TOTAL LOAD	=	42.4	PSF

SPACING = 24.0 IN. C/C

LOADING IN FLAT SECTION BASED ON A SLOPE OF 6.00/12

THIS TRUSS IS DESIGNED FOR RESIDENTIAL OR SMALL BUILDING REQUIREMENTS OF PART 9. NBCC 2010, NBCC 2015

THIS DESIGN COMPLIES WITH:
- PART 9 OF BCBC 2018 , OBC 2012
- CSA 086-09, CSA 086-14
- TPIC 2011, TPIC 2014

(55 % OF 37.6 P.S.F. G.S.L. PLUS 8.4 P.S.F. RAIN LOAD) EQUALS 29.0 P.S.F. SPECIFIED ROOF LIVE LOAD

ALLOWABLE DEFL.(LL)= L/360 (0.74")
CALCULATED VERT. DEFL.(LL) = L/ 999 (0.08")
ALLOWABLE DEFL.(TL)= L/360 (0.74")
CALCULATED VERT. DEFL.(TL) = L/ 999 (0.15")

CSI: TC=0.62/1.00 (B-C:1) , BC=0.39/1.00 (K-L:1) , WB=0.78/1.00 (C-K:1) , SSI=0.29/1.00 (B-C:1)

DOL LUMBER=1.00 NAIL=1.00 LS BEND=1.10 COMP=1.10 SHEAR=1.10 TENS= 1.10

COMPANION LIVE LOAD FACTOR = 1.00

TRUSS PLATE MANUFACTURER IS NOT RESPONSIBLE FOR QUALITY CONTROL IN THE TRUSS MANUFACTURING PLANT .

NAIL VALUES

PLATE	GRIP(DRY) (PSI) MAX	MIN	SHEAR (PLI) MAX	MIN	SECTION (PLI) MAX	MIN
MT20	818	354	1667	788	1987	1656

PLATE PLACEMENT TOL. = 0.250 inches

PLATE ROTATION TOL. = 5.0 Deg.

JSI GRIP= 0.83 (L) (INPUT = 0.90)
JSI METAL= 0.56 (B) (INPUT = 1.00)

LICENSED PROFESSIONAL ENGINEER
09/13/19
H. J. G ALVES
100009824
PROVINCE OF ONTARIO

Structural component only
DWG# T-1923445

JOB NAME	TRUSS NAME	QUANTITY	PLY	JOB DESC.	DRWG NO.
405490	H47	4	1	GREEN PARK HOMES TRUSS DESC.	

Tamarack Roof Truss, Burlington

Version 8.300 S May 10 2019 MiTek Industries, Inc. Fri Sep 13 10:59:19 2019 Page 1
ID:08dJJueNb1pNAxJNn9U?SyyCERz-6vHJLLURa_jgr?riyLD1mCW9pnlK7rx8QnXThtye4Qs

Scale = 1:55.3

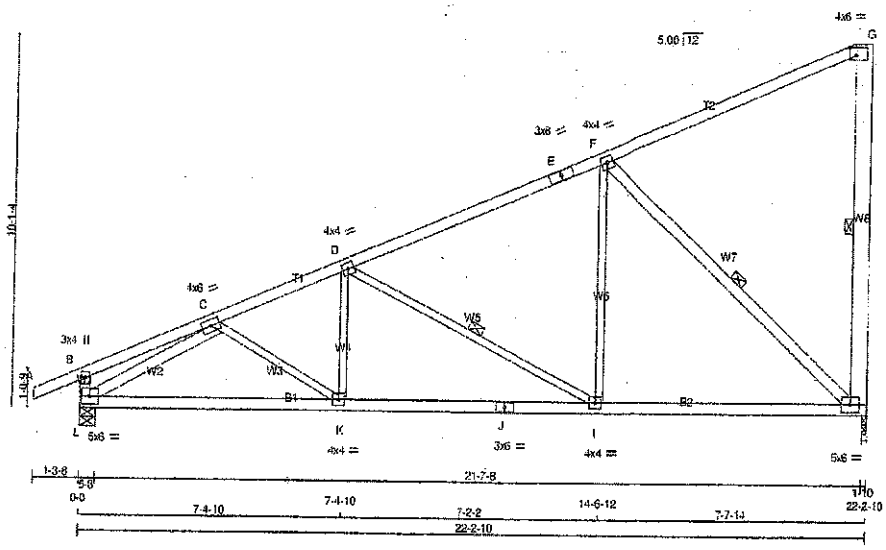

TOTAL WEIGHT = 4 X 106 = 423 lb

[MLF]

LUMBER

N. L. G. A. RULES

CHORDS	SIZE		LUMBER	DESCR.
A - E	2x4	DRY	No.2	SPF
E - G	2x4	DRY	No.2	SPF
H - G	2x6	DRY	No.2	SPF
L - B	2x4	DRY	No.2	SPF
L - J	2x4	DRY	No.2	SPF
J - H	2x4	DRY	No.2	SPF
ALL WEBS EXCEPT	2x3	DRY	No.2	SPF
F - H	2x4	DRY	No.2	SPF
L - C	2x4	DRY	No.2	SPF

DRY: SEASONED LUMBER.

PLATES (table is in inches)

JT	TYPE	PLATES	W	LEN	Y	X
B	TMV-p	MT20	3.0	4.0		
C	TMWW-t	MT20	4.0	6.0		
D	TMWW-t	MT20	4.0	4.0		
E	TS-t	MT20	3.0	8.0		
F	TMWW-t	MT20	4.0	4.0		
G	TVM-p	MT20	4.0	6.0	2.50	2.25
H	BMVW1-t	MT20	5.0	6.0		
I	BMWW-t	MT20	4.0	4.0		
J	BS-t	MT20	3.0	6.0		
K	BMWW-t	MT20	4.0	4.0		
L	BMVW1-t	MT20	5.0	6.0		

DIMENSIONS, SUPPORTS AND LOADINGS SPECIFIED BY FABRICATOR TO BE VERIFIED BY BUILDING DESIGNER

BEARINGS

JT	FACTORED GROSS REACTION VERT	HORZ	MAXIMUM FACTORED GROSS REACTION DOWN	HORZ	UPLIFT	INPUT BRG IN-SX	REQRD BRG IN-SX
H	1339	0	1339	0	0	1-10	1-10
L	1476	0	1476	0	0	5-8	5-8

UNFACTORED REACTIONS

JT	1ST LCASE COMBINED	MAX./MIN. COMPONENT REACTIONS SNOW	LIVE	PERM.LIVE	WIND	DEAD	SOIL
H	942	644 / 0	0 / 0	0 / 0	0 / 0	298 / 0	0 / 0
L	1037	723 / 0	0 / 0	0 / 0	0 / 0	314 / 0	0 / 0

BEARING MATERIAL TO BE SPF NO.2 OR BETTER AT JOINT(S) H, L

BRACING

TOP CHORD TO BE SHEATHED OR MAX. PURLIN SPACING = 4.53 FT.
MAX. UNBRACED BOTTOM CHORD LENGTH = 10.00 FT OR RIGID CEILING DIRECTLY APPLIED.

ALL PITCH BREAKS AND PERIMETER CORNER JOINTS MUST BE LATERALLY RESTRAINED.

1 LATERAL BRACE(S) AT 1/ 2 LENGTH OF G-H, D-I, F-H.

END VERTICAL(S) MUST BE SHEATHED OR HAVE BRACES AS INDICATED IN THE MAX. UNBRACED LENGTH COLUMN OF THE TABLE BELOW

LOADING

TOTAL LOAD CASES: (4)

CHORDS

MEMB. FR-TO	MAX. FACTORED FORCE (LBS)	FACTORED VERT. LOAD (PLF) FROM	TO	LC1	MAX CSI (LC)	MAX. UNBRAC LENGTH
A- B	0 / 26	-102.0	-102.0	0.13 (1)	10.00	
B- C	0 / 8	-102.0	-102.0	0.19 (1)	10.00	
C- D	-1947 / 0	-102.0	-102.0	0.32 (1)	4.53	
D- E	-1166 / 0	-102.0	-102.0	0.71 (1)	4.76	
E- F	-1166 / 0	-102.0	-102.0	0.71 (1)	4.76	
F- G	-32 / 0	-102.0	-102.0	0.73 (1)	6.25	
H- G	-307 / 0	0.0	0.0	0.10 (1)	6.25	
L- B	-306 / 0	0.0	0.0	0.03 (1)	7.81	
L- K	0 / 1806	-18.5	-18.5	0.41 (1)	10.00	
K- J	0 / 1814	-18.5	-18.5	0.43 (1)	10.00	
J- I	0 / 1814	-18.5	-18.5	0.43 (1)	10.00	
I- H	0 / 1095	-18.5	-18.5	0.33 (4)	10.00	

WEBS

MEMB. FR-TO	MAX. FACTORED FORCE (LBS)	MAX CSI (LC)
K- D	0 / 137	0.05 (4)
D- I	-814 / 0	0.37 (1)
I- F	0 / 537	0.12 (1)
F- H	-1468 / 0	0.76 (1)
C- K	0 / 55	0.02 (4)
L- C	-2121 / 0	0.48 (1)

DESIGN CRITERIA

SPECIFIED LOADS:

TOP CH.	LL =	29.0	PSF
	DL =	6.0	PSF
BOT CH.	LL =	0.0	PSF
	DL =	7.4	PSF
TOTAL LOAD	=	42.4	PSF

SPACING = 24.0 IN. C/C

THIS TRUSS IS DESIGNED FOR RESIDENTIAL OR SMALL BUILDING REQUIREMENTS OF PART 9, NBCC 2010, NBCC 2015

THIS DESIGN COMPLIES WITH:
- PART 9 OF BCBC 2018 , OBC 2012
- CSA 086-09, CSA 086-14
- TPIC 2011, TPIC 2014

(55 % OF 37.6 P.S.F. G.S.L. PLUS 8.4 P.S.F. RAIN LOAD) EQUALS 29.0 P.S.F. SPECIFIED ROOF LIVE LOAD

ALLOWABLE DEFL.(LL)= L/360 (0.74")
CALCULATED VERT. DEFL.(LL) = L/ 999 (0.07")
ALLOWABLE DEFL.(TL)= L/360 (0.74")
CALCULATED VERT. DEFL.(TL) = L/ 999 (0.15")

CSI: TC=0.73/1.00 (F-G:1) , BC=0.43/1.00 (I-K:1) , WB=0.76/1.00 (F-H:1) , SSI=0.34/1.00 (F-G:1)

DOL LUMBER=1.00 NAIL=1.00 LS BEND=1.10 COMP=1.10 SHEAR=1.10 TENS= 1.10

COMPANION LIVE LOAD FACTOR = 1.00

AUTOSOLVE RIGHT HEEL ONLY

TRUSS PLATE MANUFACTURER IS NOT RESPONSIBLE FOR QUALITY CONTROL IN THE TRUSS MANUFACTURING PLANT .

NAIL VALUES

PLATE	GRIP(DRY) (PSI) MAX	MIN	SHEAR (PLI) MAX	MIN	SECTION (PLI) MAX	MIN
MT20	518	354	1867	788	1987	1656

PLATE PLACEMENT TOL. = 0.250 inches

PLATE ROTATION TOL. = 5.0 Deg.

JSI GRIP= 0.86 (F) (INPUT = 0.90)
JSI METAL= 0.59 (J) (INPUT = 1.00)

LICENSED PROFESSIONAL ENGINEER
09/13/19
H. J. G. ALVES
100009024
PROVINCE OF ONTARIO

Structural component only
DWG# T-1923446

JOB NAME	TRUSS NAME	QUANTITY	PLY	JOB DESC.	DRWG NO.
405490	H48	32	1	GREEN PARK HOMES TRUSS DESC.	

Tamarack Roof Truss, Burlington

Version 8.300 S May 10 2019 MiTek Industries, Inc. Fri Sep 13 10:59:21 2019 Page 1

ID:08dJJueNb1pNAxJNn9U?SyyCERz-2IP4m1Vh6b_O5J?53mGVrdcWmaQtbIPRt40Zmmye4Qo

Scale = 1:55.4

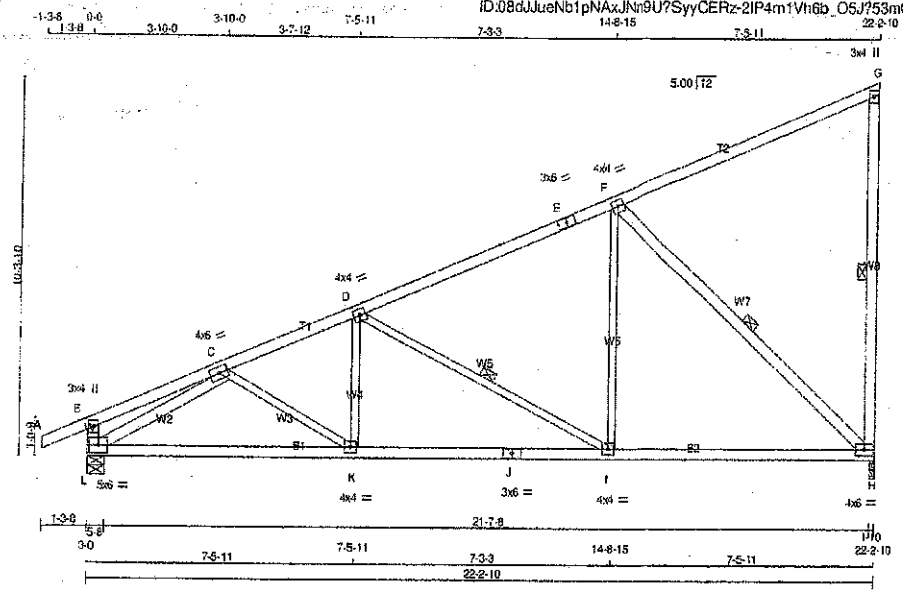

TOTAL WEIGHT = 32 X 100 = 3205 lb

LUMBER

N. L. G. A. RULES

CHORDS	SIZE		LUMBER	DESCR.
A - E	2x4	DRY	No.2	SPF
E - G	2x4	DRY	No.2	SPF
H - G	2x4	DRY	No.2	SPF
L - B	2x4	DRY	No.2	SPF
L - J	2x4	DRY	No.2	SPF
J - H	2x4	DRY	No.2	SPF
ALL WEBS EXCEPT	2x3	DRY	No.2	SPF
F - H	2x4	DRY	No.2	SPF
L - C	2x4	DRY	No.2	SPF

DRY: SEASONED LUMBER.

PLATES (table is in inches)

JT	TYPE	PLATES	W	LEN Y	X
B	TMV+p	MT20	3.0	4.0	
C	TMWW-t	MT20	4.0	6.0	
D	TMWW-t	MT20	4.0	4.0	
E	TS-t	MT20	3.0	6.0	
F	TMWW-t	MT20	4.0	4.0	
G	TMV+p	MT20	3.0	4.0	
H	BMWW1-t	MT20	4.0	6.0	
I	BMWW-t	MT20	4.0	4.0	
J	BS-t	MT20	3.0	6.0	
K	BMWW-t	MT20	4.0	4.0	
L	BMWW1-t	MT20	5.0	6.0	

DIMENSIONS, SUPPORTS AND LOADINGS SPECIFIED BY FABRICATOR TO BE VERIFIED BY BUILDING DESIGNER

BEARINGS

JT	FACTORED GROSS REACTION VERT	HORZ	MAXIMUM FACTORED GROSS REACTION DOWN	HORZ	UPLIFT	INPUT BRG IN-SX	REQRD BRG IN-SX
H	1339	0	1339	0	0	1-10	1-10
L	1478	0	1476	0	0	5-8	5-8

UNFACTORED REACTIONS

JT	1ST LCASE COMBINED	MAX./MIN. COMPONENT REACTIONS SNOW	LIVE	PERM.LIVE	WIND	DEAD	SOIL
H	942	644 / 0	0 / 0	0 / 0	0 / 0	298 / 0	0 / 0
L	1037	723 / 0	0 / 0	0 / 0	0 / 0	314 / 0	0 / 0

BEARING MATERIAL TO BE SPF NO.2 OR BETTER AT JOINT(S) H, L

BRACING

TOP CHORD TO BE SHEATHED OR MAX. PURLIN SPACING = 4.50 FT.
MAX. UNBRACED BOTTOM CHORD LENGTH = 10.00 FT OR RIGID CEILING DIRECTLY APPLIED.

ALL PITCH BREAKS AND PERIMETER CORNER JOINTS MUST BE LATERALLY RESTRAINED.

1 LATERAL BRACE(S) AT 1/ 2 LENGTH OF G-H, D-I, F-H.

END VERTICAL(S) MUST BE SHEATHED OR HAVE BRACES AS INDICATED IN THE MAX. UNBRACED LENGTH COLUMN OF THE TABLE BELOW

LOADING

TOTAL LOAD CASES: (4)

CHORDS

MEMB. FR-TO	MAX. FACTORED FORCE (LBS)	FACTORED VERT. LOAD (PLF) FROM	TO	LC1 MAX CSI (LC)	MAX. UNBRAC LENGTH
A- B	0 / 26	-102.0	-102.0	0.13 (1)	10.00
B- C	0 / 8	-102.0	-102.0	0.20 (1)	10.00
C- D	-1944 / 0	-102.0	-102.0	0.33 (1)	4.50
D- E	-1140 / 0	-102.0	-102.0	0.69 (1)	4.86
E- F	-1140 / 0	-102.0	-102.0	0.69 (1)	4.86
F- G	-32 / 0	-102.0	-102.0	0.70 (1)	6.25
H- G	-298 / 0	0.0	0.0	0.16 (1)	6.25
L- B	-308 / 0	0.0	0.0	0.03 (1)	7.81
L- K	0 / 1808	-18.5	-18.5	0.42 (1)	10.00
K- J	0 / 1812	-18.5	-18.5	0.43 (1)	10.00
J- I	0 / 1812	-18.5	-18.5	0.43 (1)	10.00
I- H	0 / 1069	-18.5	-18.5	0.32 (4)	10.00

WEBS

MEMB. FR-TO	MAX. FACTORED FORCE (LBS)	MAX CSI (LC)
K- D	0 / 142	0.05 (4)
D- I	-841 / 0	0.39 (1)
I- F	0 / 546	0.12 (1)
F- H	-1454 / 0	0.78 (1)
C- K	0 / 54	0.02 (4)
L- C	-2122 / 0	0.50 (1)

DESIGN CRITERIA

SPECIFIED LOADS:

TOP CH.	LL =	29.0	PSF
	DL =	6.0	PSF
BOT CH.	LL =	0.0	PSF
	DL =	7.4	PSF
TOTAL LOAD	=	42.4	PSF

SPACING = 24.0 IN. C/C

THIS TRUSS IS DESIGNED FOR RESIDENTIAL OR SMALL BUILDING REQUIREMENTS OF PART 9, NBCC 2010, NBCC 2015

THIS DESIGN COMPLIES WITH:
- PART 9 OF BCBC 2018 , OBC 2012
- CSA 086-09, CSA 086-14
- TPIC 2011, TPIC 2014

(55 % OF 37.8 P.S.F. G.S.L. PLUS 8.4 P.S.F. RAIN LOAD) EQUALS 29.0 P.S.F. SPECIFIED ROOF LIVE LOAD

ALLOWABLE DEFL.(LL)= L/360 (0.74")
CALCULATED VERT. DEFL.(LL) = L/ 999 (0.07")
ALLOWABLE DEFL.(TL)= L/360 (0.74")
CALCULATED VERT. DEFL.(TL) = L/ 999 (0.15")

CSI: TC=0.70/1.00 (F-G:1) , BC=0.43/1.00 (I-K:1) , WB=0.76/1.00 (F-H:1) , SSI=0.33/1.00 (F-G:1)

DOL LUMBER=1.00 NAIL=1.00 LS BEND=1.10 COMP=1.10 SHEAR=1.10 TENS= 1.10

COMPANION LIVE LOAD FACTOR = 1.00

AUTOSOLVE RIGHT HEEL ONLY

TRUSS PLATE MANUFACTURER IS NOT RESPONSIBLE FOR QUALITY CONTROL IN THE TRUSS MANUFACTURING PLANT .

NAIL VALUES

PLATE	GRIP(DRY) (PSI) MAX	MIN	SHEAR (PLI) MAX	MIN	SECTION (PLI) MAX	MIN
MT20	618	354	1667	788	1967	1656

PLATE PLACEMENT TOL. = 0.250 inches

PLATE ROTATION TOL. = 5.0 Deg.

JSI GRIP= 0.88 (F) (INPUT = 0.90)
JSI METAL= 0.57 (J) (INPUT = 1.00)

LICENSED PROFESSIONAL ENGINEER
09/13/19
H. J. G. ALVES
100069024
PROVINCE OF ONTARIO

Structural component only
DWG# T-1923447

JOB NAME	TRUSS NAME	QUANTITY	PLY	JOB DESC.	DRWG NO.
405490	H49-Cond1	6	1	GREEN PARK HOMES TRUSS DESC.	

Tamarack Roof Truss, Burlington

Version 6.300 S May 10 2019 MiTek Industries, Inc. Fri Sep 13 10:59:22 2019 Page 1

ID:08dJJueNb1pNAxJNn9U7SyyCERz-WUzSzNWJtv6FiSaHdUnkOq8pG_pHKK0b6km7ICye4Qp

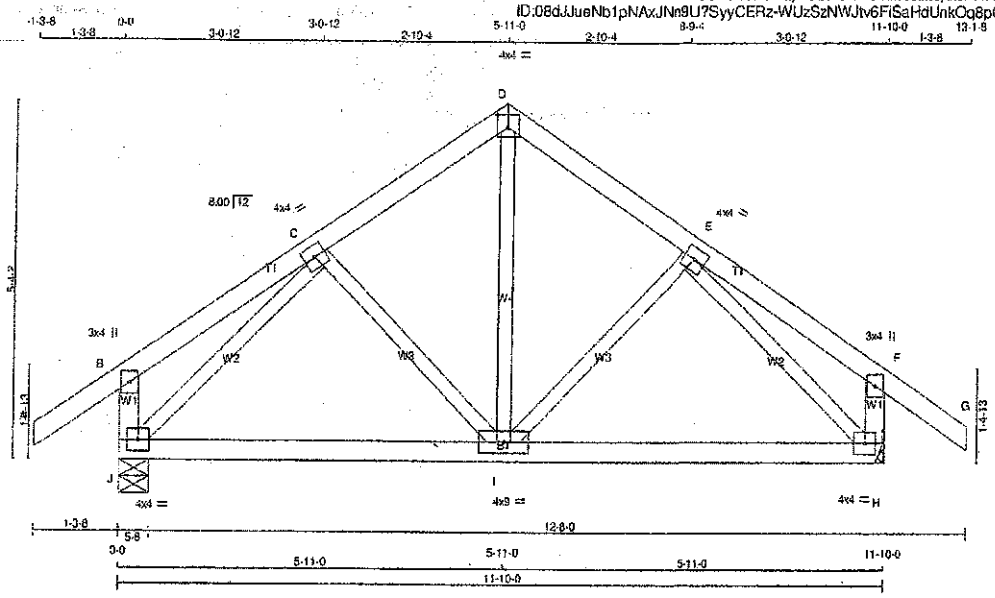

TOTAL WEIGHT = 6 X 52 = 314 lb

LUMBER

N. L. G. A. RULES

CHORDS	SIZE		LUMBER	DESCR.
A - D	2x4	DRY	No.2	SPF
D - G	2x4	DRY	No.2	SPF
J - B	2x4	DRY	No.2	SPF
H - F	2x4	DRY	No.2	SPF
J - H	2x4	DRY	No.2	SPF
ALL WEBS EXCEPT	2x3	DRY	No.2	SPF

DRY: SEASONED LUMBER.

PLATES (table is in inches)

JT	TYPE	PLATES	W	LEN	Y	X
B	TMV+p	MT20	3.0	4.0		
C	TMWW-t	MT20	4.0	4.0		
D	TTW-p	MT20	4.0	4.0	2.25	2.00
E	TMWW-t	MT20	4.0	4.0		
F	TMV+p	MT20	3.0	4.0		
H	BMWW1-t	MT20	4.0	4.0		
I	BMWWW-t	MT20	4.0	9.0		
J	BMWW1-t	MT20	4.0	4.0		

DIMENSIONS, SUPPORTS AND LOADINGS SPECIFIED BY FABRICATOR TO BE VERIFIED BY BUILDING DESIGNER

BEARINGS

JT	FACTORED GROSS REACTION VERT	HORZ	MAXIMUM FACTORED GROSS REACTION DOWN	HORZ	UPLIFT	INPUT BRG IN-SX	REQRD BRG IN-SX
J	853	0	853	0	0	5-8	5-8
H	853	0	853	0	0	MECHANICAL	

A SUITABLE HANGER/MECHANICAL CONNECTION IS REQUIRED AT JOINT H. MINIMUM BEARING LENGTH AT JOINT H = 1-8.

UNFACTORED REACTIONS

JT	1ST LCASE COMBINED	MAX./MIN. COMPONENT REACTIONS SNOW	LIVE	PERM.LIVE	WIND	DEAD	SOIL
J	598	423 / 0	0 / 0	0 / 0	0 / 0	175 / 0	0 / 0
H	598	423 / 0	0 / 0	0 / 0	0 / 0	175 / 0	0 / 0

BEARING MATERIAL TO BE SPF NO.2 OR BETTER AT JOINT(S) J

BRACING

TOP CHORD TO BE SHEATHED OR MAX. PURLIN SPACING = 8.25 FT.
MAX. UNBRACED BOTTOM CHORD LENGTH = 10.00 FT OR RIGID CEILING DIRECTLY APPLIED.

ALL PITCH BREAKS AND PERIMETER CORNER JOINTS MUST BE LATERALLY RESTRAINED.

LOADING

TOTAL LOAD CASES: (4)

CHORDS

MEMB FR-TO	MAX. FACTORED FORCE (LBS)	FACTORED VERT. LOAD (PLF) FROM	TO	LC1	MAX CSI (LC)	MAX. UNBRAC LENGTH
A- B	0 / 39	-102.0	-102.0	0.14 (1)	10.00	
B- C	0 / 18	-102.0	-102.0	0.14 (1)	10.00	
C- D	-540 / 0	-102.0	-102.0	0.11 (1)	6.25	
D- E	-540 / 0	-102.0	-102.0	0.11 (1)	6.25	
E- F	0 / 18	-102.0	-102.0	0.14 (1)	10.00	
F- G	0 / 39	-102.0	-102.0	0.14 (1)	10.00	
J- B	-257 / 0	0.0	0.0	0.03 (1)	7.81	
H- F	-257 / 0	0.0	0.0	0.03 (1)	7.81	
J- I	0 / 536	-18.5	-18.5	0.22 (4)	10.00	
I- H	0 / 536	-18.5	-18.5	0.22 (4)	10.00	

WEBS

MEMB. FR-TO	MAX. FACTORED FORCE (LBS)	MAX CSI (LC)
I- D	0 / 342	0.08 (1)
I- E	-145 / 0	0.04 (1)
C- I	-145 / 0	0.04 (1)
J- C	-770 / 0	0.22 (1)
E- H	-770 / 0	0.22 (1)

DESIGN CRITERIA

SPECIFIED LOADS:

TOP CH.	LL =	29.0	PSF
	DL =	6.0	PSF
BOT CH.	LL =	0.0	PSF
	DL =	7.4	PSF
TOTAL LOAD	=	42.4	PSF

SPACING = 24.0 IN. C/C

THIS TRUSS IS DESIGNED FOR RESIDENTIAL OR SMALL BUILDING REQUIREMENTS OF PART 9, NBCC 2010, NBCC 2015

THIS DESIGN COMPLIES WITH:
- PART 9 OF BCBC 2018 , OBC 2012
- CSA 086-09, CSA 086-14
- TPIC 2011, TPIC 2014

(55 % OF 37.6 P.S.F. G.S.L. PLUS 8.4 P.S.F. RAIN LOAD) EQUALS 29.0 P.S.F. SPECIFIED ROOF LIVE LOAD

ALLOWABLE DEFL.(LL)= L/360 (0.39")
CALCULATED VERT. DEFL.(LL) = L/ 999 (0.01")
ALLOWABLE DEFL.(TL)= L/360 (0.39")
CALCULATED VERT. DEFL.(TL) = L/ 999 (0.04")

CSI: TC=0.14/1.00 (F-G:1) , BC=0.22/1.00 (I-J:4) , WB=0.22/1.00 (C-J:1) , SSI=0.12/1.00 (C-D:1)

DOL LUMBER=1.00 NAIL=1.00 LS BEND=1.10 COMP=1.10 SHEAR=1.10 TENS= 1.10

COMPANION LIVE LOAD FACTOR = 1.00

TRUSS PLATE MANUFACTURER IS NOT RESPONSIBLE FOR QUALITY CONTROL IN THE TRUSS MANUFACTURING PLANT.

NAIL VALUES

PLATE	GRIP(DRY) (PSI) MAX	MIN	SHEAR (PLI) MAX	MIN	SECTION (PLI) MAX	MIN
MT20	618	354	1667	788	1987	1656

PLATE PLACEMENT TOL. = 0.250 inches

PLATE ROTATION TOL. = 5.0 Deg.

JSI GRIP= 0.70 (E) (INPUT = 0.90)
JSI METAL= 0.27 (E) (INPUT = 1.00)

LICENSED PROFESSIONAL ENGINEER
09/12/19
H. J G ALVES
100009024
PROVINCE OF ONTARIO

Structural component only
DWG# T-1923448

JOB NAME	TRUSS NAME	QUANTITY	PLY	JOB DESC.	DRWG NO.
405490	H49-Cond2	6	1	GREEN PARK HOMES TRUSS DESC.	

Tamarack Roof Truss, Burlington

Version 8.300 S May 10 2019 MiTek Industries, Inc. Fri Sep 13 10:59:22 2019 Page 1

ID:08dJJueNb1pNAxJNn9U?SyyCERz-WUzSzNWJtv6FiSaHdUnkOq8pG_pHKK0b6km7ICye4Qp

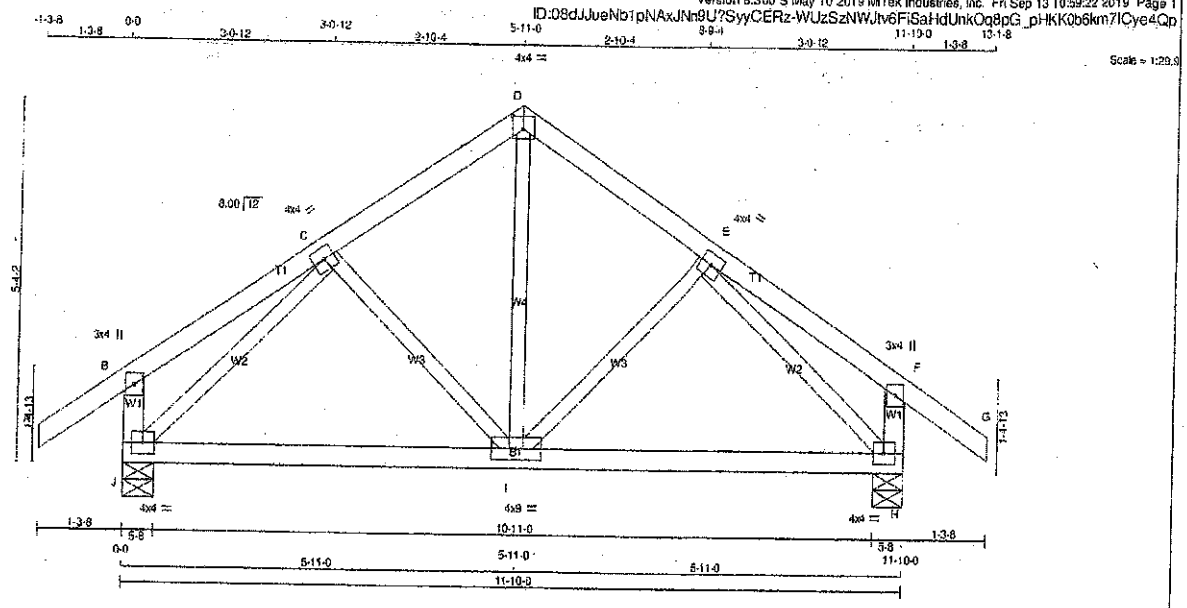

LUMBER
N. L. G. A. RULES

CHORDS	SIZE		LUMBER	DESCR.
A - D	2x4	DRY	No.2	SPF
D - G	2x4	DRY	No.2	SPF
J - B	2x4	DRY	No.2	SPF
H - F	2x4	DRY	No.2	SPF
J - H	2x4	DRY	No.2	SPF
ALL WEBS EXCEPT	2x3	DRY	No.2	SPF

DRY: SEASONED LUMBER.

PLATES (table is in inches)

JT	TYPE	PLATES	W	LEN	Y	X
B	TMV+p	MT20	3.0	4.0		
C	TMWW-t	MT20	4.0	4.0		
D	TTW-p	MT20	4.0	4.0	2.25	2.00
E	TMWW-t	MT20	4.0	4.0		
F	TMV+p	MT20	3.0	4.0		
H	BMVW1-t	MT20	4.0	4.0		
I	BMWWW-t	MT20	4.0	9.0		
J	BMVW1-t	MT20	4.0	4.0		

DIMENSIONS, SUPPORTS AND LOADINGS SPECIFIED BY FABRICATOR TO BE VERIFIED BY BUILDING DESIGNER

BEARINGS

JT	FACTORED GROSS REACTION VERT	HORZ	MAXIMUM FACTORED GROSS REACTION DOWN	HORZ	UPLIFT	INPUT BRG IN-SX	REQRD BRG IN-SX
J	853	0	853	0	0	5-8	5-8
H	853	0	853	0	0	5-8	5-8

UNFACTORED REACTIONS

JT	1ST LCASE COMBINED	MAX./MIN. COMPONENT REACTIONS SNOW	LIVE	PERM.LIVE	WIND	DEAD	SOIL
J	598	423 / 0	0 / 0	0 / 0	0 / 0	175 / 0	0 / 0
H	598	423 / 0	0 / 0	0 / 0	0 / 0	175 / 0	0 / 0

BEARING MATERIAL TO BE SPF NO.2 OR BETTER AT JOINT(S) J, H

BRACING
TOP CHORD TO BE SHEATHED OR MAX. PURLIN SPACING = 6.25 FT.
MAX. UNBRACED BOTTOM CHORD LENGTH = 10.00 FT OR RIGID CEILING DIRECTLY APPLIED.

ALL PITCH BREAKS AND PERIMETER CORNER JOINTS MUST BE LATERALLY RESTRAINED.

LOADING
TOTAL LOAD CASES: (4)

CHORDS

MEMB. FR-TO	MAX. FACTORED FORCE (LBS)	FACTORED VERT. LOAD LC1 (PLF) FROM	TO	MAX CSI (LC)	MAX. UNBRAC LENGTH
A- B	0 / 39	-102.0	-102.0	0.14 (1)	10.00
B- C	0 / 18	-102.0	-102.0	0.14 (1)	10.00
C- D	-540 / 0	-102.0	-102.0	0.11 (1)	6.25
D- E	-540 / 0	-102.0	-102.0	0.11 (1)	6.25
E- F	0 / 18	-102.0	-102.0	0.14 (1)	10.00
F- G	0 / 39	-102.0	-102.0	0.14 (1)	10.00
J- B	-257 / 0	0.0	0.0	0.03 (1)	7.81
H- F	-257 / 0	0.0	0.0	0.03 (1)	7.81
J- I	0 / 536	-18.5	-18.5	0.22 (4)	10.00
I- H	0 / 536	-18.5	-18.5	0.22 (4)	10.00

WEBS

MEMB. FR-TO	MAX. FACTORED FORCE (LBS)	MAX CSI (LC)
I- D	0 / 342	0.08 (1)
I- E	-145 / 0	0.04 (1)
C- I	-145 / 0	0.04 (1)
J- C	-770 / 0	0.22 (1)
E- H	-770 / 0	0.22 (1)

TOTAL WEIGHT = 6 X 52 = 314 lb

[M][F]

DESIGN CRITERIA

SPECIFIED LOADS:

TOP CH.	LL =	29.0	PSF
	DL =	6.0	PSF
BOT CH.	LL =	0.0	PSF
	DL =	7.4	PSF
TOTAL LOAD	=	42.4	PSF

SPACING = 24.0 IN. C/C

THIS TRUSS IS DESIGNED FOR RESIDENTIAL OR SMALL BUILDING REQUIREMENTS OF PART 9. NBCC 2010, NBCC 2015

THIS DESIGN COMPLIES WITH:
- PART 9 OF BCBC 2018 , OBC 2012
- CSA 086-09, CSA 086-14
- TPIC 2011, TPIC 2014

(55 % OF 37.6 P.S.F. G.S.L. PLUS 8.4 P.S.F. RAIN LOAD) EQUALS 29.0 P.S.F. SPECIFIED ROOF LIVE LOAD

ALLOWABLE DEFL.(LL)= L/360 (0.39")
CALCULATED VERT. DEFL.(LL) = L/ 999 (0.01")
ALLOWABLE DEFL.(TL)= L/360 (0.39")
CALCULATED VERT. DEFL.(TL) = L/ 999 (0.04")

CSI: TC=0.14/1.00 (F-G:1) , BC=0.22/1.00 (I-J:4) , WB=0.22/1.00 (C-J:1) , SSI=0.12/1.00 (C-D:1)

DOL LUMBER=1.00 NAIL=1.00 LS BEND=1.10 COMP=1.10 SHEAR=1.10 TENS= 1.10

COMPANION LIVE LOAD FACTOR = 1.00

TRUSS PLATE MANUFACTURER IS NOT RESPONSIBLE FOR QUALITY CONTROL IN THE TRUSS MANUFACTURING PLANT.

NAIL VALUES

PLATE	GRIP(DRY) (PSI) MAX	MIN	SHEAR (PLI) MAX	MIN	SECTION (PLI) MAX	MIN
MT20	618	354	1667	788	1987	1656

PLATE PLACEMENT TOL. = 0.250 inches

PLATE ROTATION TOL. = 5.0 Deg.

JSI GRIP= 0.70 (E) (INPUT = 0.90)
JSI METAL= 0.27 (E) (INPUT = 1.00)

RECEIVED
SEP 16 2019
TOWN OF CALEDON
BUILDING SECTION
FILE NO

LICENSED PROFESSIONAL ENGINEER
09/13/19
H. J/G ALVES
100008024
PROVINCE OF ONTARIO

Structural component only
DWG# T-1923449

JOB NAME	TRUSS NAME	QUANTITY	PLY	JOB DESC.	DRWG NO.
405532	H63	4	1	GREEN PARK HOMES TRUSS DESC.	

Tamarack Roof Truss, Burlington

Version 8.300 S May 10 2019 MiTek Industries, Inc. Fri Sep 13 11:22:47 2019 Page 1

ID:08dJJueNb1pNAxJNn9U?SyyCERz-unMbsnWd_b7umNUJR3UDq6qoLLf0m2OBqcy6Gye44s

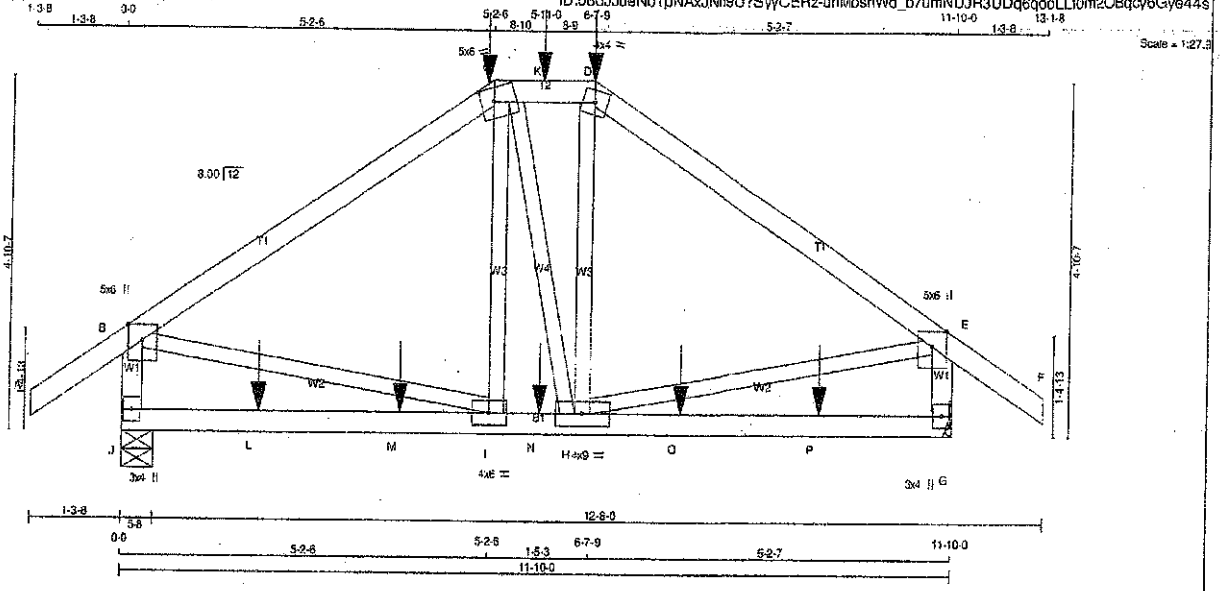

TOTAL WEIGHT = 4 X 54 = 217 lb [M]

LUMBER

N. L. G. A. RULES

CHORDS	SIZE		LUMBER	DESCR.
A - C	2x4	DRY	No.2	SPF
C - D	2x4	DRY	No.2	SPF
D - F	2x4	DRY	No.2	SPF
J - B	2x4	DRY	No.2	SPF
G - E	2x4	DRY	No.2	SPF
J - G	2x4	DRY	No.2	SPF
ALL WEBS EXCEPT	2x3	DRY	No.2	SPF

DRY: SEASONED LUMBER.

PLATES (table is in inches)

JT	TYPE	PLATES	W	LEN	Y	X
B	TMVW+p	MT20	5.0	6.0	Edge	
C	TTWW-m	MT20	5.0	6.0	2.25	2.25
D	TTW-m	MT20	4.0	4.0		
E	TMVW+p	MT20	5.0	6.0	Edge	
G	BMV1+p	MT20	3.0	4.0		
H	BMWWW-t	MT20	4.0	9.0		
I	BMWW-t	MT20	4.0	6.0		
J	BMV1+p	MT20	3.0	4.0		

Edge - INDICATES REFERENCE CORNER OF PLATE TOUCHES EDGE OF CHORD.

LICENSED PROFESSIONAL ENGINEER
09/13/19
H. J. G ALVES
100009024
PROVINCE OF ONTARIO

DIMENSIONS, SUPPORTS AND LOADINGS SPECIFIED BY FABRICATOR TO BE VERIFIED BY BUILDING DESIGNER

BEARINGS

JT	FACTORED GROSS REACTION VERT	HORZ	MAXIMUM FACTORED GROSS REACTION DOWN	HORZ	UPLIFT	INPUT BRG	REQRD BRG
J	1175	0	1175	0	0	5-8	5-8
G	1175	0	1175	0	0	MECHANICAL	

A SUITABLE HANGER/MECHANICAL CONNECTION IS REQUIRED AT JOINT G. MINIMUM BEARING LENGTH AT JOINT G = 1-8.

UNFACTORED REACTIONS

JT	1ST LCASE COMBINED	MAX./MIN. COMPONENT REACTIONS SNOW	LIVE	PERM.LIVE	WIND	DEAD	SOIL
J	924	582 / 0	0 / 0	0 / 0	0 / 0	242 / 0	0 / 0
G	824	582 / 0	0 / 0	0 / 0	0 / 0	242 / 0	0 / 0

BEARING MATERIAL TO BE SPF NO.2 OR BETTER AT JOINT(S) J

BRACING

TOP CHORD TO BE SHEATHED OR MAX. PURLIN SPACING = 5.33 FT.
MAX. UNBRACED BOTTOM CHORD LENGTH = 10.00 FT OR RIGID CEILING DIRECTLY APPLIED.

ALL PITCH BREAKS AND PERIMETER CORNER JOINTS MUST BE LATERALLY RESTRAINED.

LOADING

TOTAL LOAD CASES: (4)

CHORDS

MEMB. FR-TO	MAX. FACTORED FORCE (LBS)	FACTORED VERT. LOAD (PLF) FROM	TO	LC1	MAX CSI (LC)	MAX. UNBRAC LENGTH
A- B	0 / 39	-102.0	-102.0	0.15 (1)	10.00	
B- C	-993 / 0	-102.0	-102.0	0.58 (1)	5.33	
C- K	-824 / 0	-102.0	-102.0	0.10 (1)	6.25	
K- D	-824 / 0	-102.0	-102.0	0.10 (1)	6.25	
D- E	-996 / 0	-102.0	-102.0	0.58 (1)	5.33	
E- F	0 / 39	-102.0	-102.0	0.15 (1)	10.00	
J- B	-1126 / 0	0.0	0.0	0.13 (1)	7.45	
G- E	-1124 / 0	0.0	0.0	0.13 (1)	7.45	
J- L	0 / 0	-18.5	-18.5	0.16 (4)	10.00	
L- M	0 / 0	-18.5	-18.5	0.16 (4)	10.00	
M- I	0 / 0	-18.5	-18.5	0.16 (4)	10.00	
I- N	0 / 823	-18.5	-18.5	0.24 (4)	10.00	
N- H	0 / 823	-18.5	-18.5	0.24 (4)	10.00	
H- O	0 / 0	-18.5	-18.5	0.18 (4)	10.00	
O- P	0 / 0	-18.5	-18.5	0.18 (4)	10.00	
P- G	0 / 0	-18.5	-18.5	0.18 (4)	10.00	

WEBS

MEMB. FR-TO	MAX. FACTORED FORCE (LBS)	MAX CSI (LC)
I- C	-78 / 47	0.03 (1)
C- H	0 / 7	0.00 (4)
H- D	-75 / 53	0.03 (1)
B- I	0 / 842	0.21 (1)
H- E	0 / 844	0.21 (1)

FACTORED CONCENTRATED LOADS (LBS)

JT	LOC.	LC1	MAX-	MAX+	FACE	DIR.	TYPE	HEEL	CONN.
C	5-2-8	-238	-238	---	BACK	VERT	TOTAL	---	C1
D	6-7-9	-238	-238	---	BACK	VERT	TOTAL	---	C1
K	5-11-0	-105	-105	---	BACK	VERT	TOTAL	---	C1
L	1-11-4	-13	-13	---	BACK	VERT	TOTAL	---	C1
M	3-11-4	-13	-13	---	BACK	VERT	TOTAL	---	C1
N	5-11-0	-13	-13	---	BACK	VERT	TOTAL	---	C1
O	7-10-12	-13	-13	---	BACK	VERT	TOTAL	---	C1
P	9-10-12	-13	-13	---	BACK	VERT	TOTAL	---	C1

CONNECTION REQUIREMENTS

1) C1: A SUITABLE HANGER/MECHANICAL CONNECTION IS REQUIRED.

DESIGN CRITERIA

SPECIFIED LOADS:

TOP CH.	LL =	29.0	PSF
	DL =	8.0	PSF
BOT CH.	LL =	0.0	PSF
	DL =	7.4	PSF
TOTAL LOAD	=	42.4	PSF

SPACING = 24.0 IN C/C

LOADING IN FLAT SECTION BASED ON A SLOPE OF 8.00/12

THIS TRUSS IS DESIGNED FOR RESIDENTIAL OR SMALL BUILDING REQUIREMENTS OF PART 9, NBCC 2010, NBCC 2015

THIS DESIGN COMPLIES WITH:
- PART 9 OF BCBC 2018 , OBC 2012
- CSA 086-09, CSA 086-14
- TPIC 2011, TPIC 2014

(55 % OF 37.8 P.S.F. G.S.L. PLUS 8.4 P.S.F. RAIN LOAD) EQUALS 29.0 P.S.F. SPECIFIED ROOF LIVE LOAD

ALLOWABLE DEFL.(LL)= L/360 (0.39")
CALCULATED VERT. DEFL.(LL) = L/999 (0.01")
ALLOWABLE DEFL.(TL)= L/360 (0.39")
CALCULATED VERT. DEFL.(TL) = L/999 (0.05")

CSI: TC=0.58/1.00 (D-E:1) , BC=0.24/1.00 (H-I:4) , WB=0.21/1.00 (E-H:1) , SSI=0.19/1.00 (D-E:1)

DOL LUMBER=1.00 NAIL=1.00 LS BEND=1.00 COMP=1.00 SHEAR=1.00 TENS= 1.00

COMPANION LIVE LOAD FACTOR = 1.00

TRUSS PLATE MANUFACTURER IS NOT RESPONSIBLE FOR QUALITY CONTROL IN THE TRUSS MANUFACTURING PLANT .

NAIL VALUES

PLATE	GRIP(DRY) (PSI) MAX	MIN	SHEAR (PLI) MAX	MIN	SECTION (PLI) MAX	MIN
MT20	618	354	1667	788	1987	1856

PLATE PLACEMENT TOL. = 0.250 inches

PLATE ROTATION TOL. = 5.0 Deg.

JSI GRIP = 0.62 (E) (INPUT = 0.90)
JSI METAL = 0.45 (E) (INPUT = 1.00)

Structural component only
DWG# T-1923460

JOB NAME	TRUSS NAME	QUANTITY	PLY	JOB DESC.	DRWG NO.
405532	H64	4	1	GREEN PARK HOMES TRUSS DESC.	

Tamarack Roof Truss, Burlington

Version 8.300 S May 10 2019 MiTek Industries, Inc. Fri Sep 13 11:22:49 2019 Page 1

ID:08dJJueNb1pNAxJNn9U?SyyCERz-qAUMGTYtWCNc?heiYTWhvXwCO91LUfXhe853A9ye44q

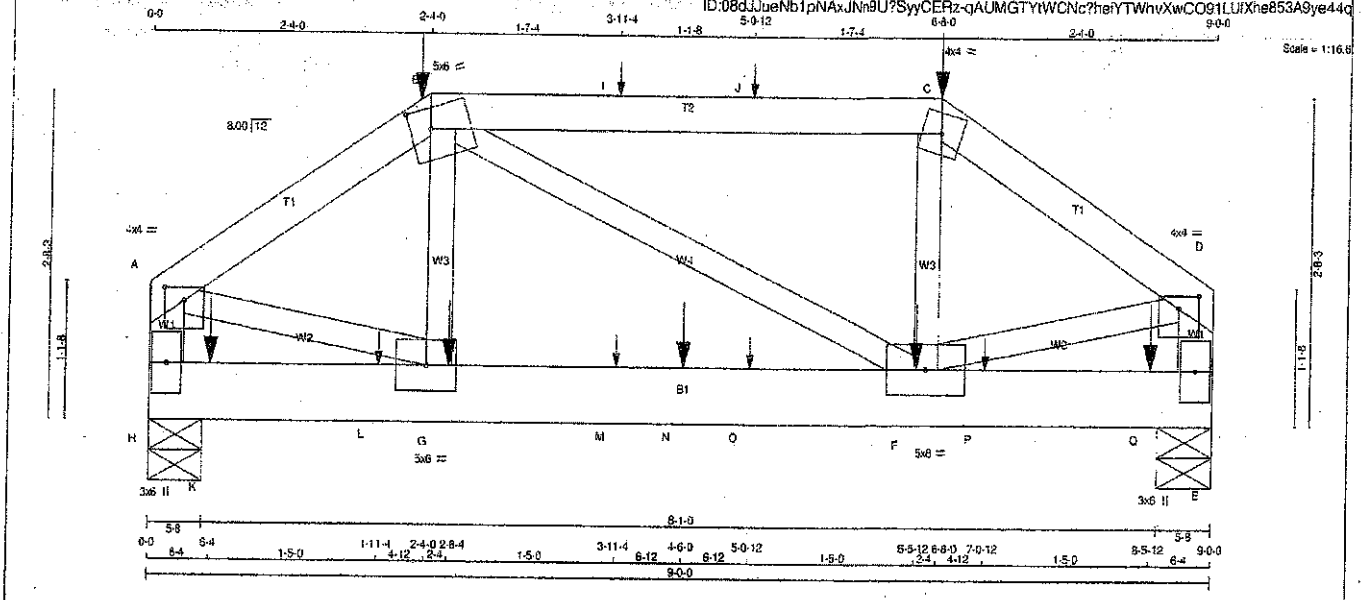

TOTAL WEIGHT = 4 X 39 = 157 lb [M]

LUMBER

N. L. G. A. RULES

CHORDS	SIZE		LUMBER	DESCR.
A - B	2x4	DRY	No.2	SPF
B - C	2x4	DRY	No.2	SPF
C - D	2x4	DRY	No.2	SPF
H - A	2x4	DRY	No.2	SPF
E - D	2x4	DRY	No.2	SPF
H - E	2x6	DRY	No.2	SPF
ALL WEBS EXCEPT	2x3	DRY	No.2	SPF

DRY: SEASONED LUMBER.

PLATES (table is in inches)

JT	TYPE	PLATES	W	LEN	Y	X
A	TMVW-p	MT20	4.0	4.0	1.25	2.00
B	TTWW-m	MT20	5.0	6.0	2.00	2.00
C	TTW-m	MT20	4.0	4.0		
D	TMVW-p	MT20	4.0	4.0	1.25	2.00
E	BMV1+p	MT20	3.0	6.0		
F	BMWWW-t	MT20	5.0	8.0		
G	BMWW-t	MT20	5.0	6.0		
H	BMV1+p	MT20	3.0	6.0		

DIMENSIONS, SUPPORTS AND LOADINGS SPECIFIED BY FABRICATOR TO BE VERIFIED BY BUILDING DESIGNER

BEARINGS

JT	FACTORED GROSS REACTION VERT	HORZ	MAXIMUM FACTORED GROSS REACTION DOWN	HORZ	UPLIFT	INPUT BRG IN-SX	REQRD BRG IN-SX
H	1055	0	1055	0	0	5-8	5-8
E	1050	0	1050	0	0	5-8	5-8

UNFACTORED REACTIONS

JT	1ST LCASE COMBINED	MAX/MIN COMPONENT REACTIONS SNOW	LIVE	PERM.LIVE	WIND	DEAD	SOIL
H	737	532 / 0	0 / 0	0 / 0	0 / 0	206 / 0	0 / 0
E	734	529 / 0	0 / 0	0 / 0	0 / 0	205 / 0	0 / 0

BEARING MATERIAL TO BE SPF NO.2 OR BETTER AT JOINT(S) H, E

BRACING

TOP CHORD TO BE SHEATHED OR MAX. PURLIN SPACING = 6.09 FT.
MAX. UNBRACED BOTTOM CHORD LENGTH = 10.00 FT OR RIGID CEILING DIRECTLY APPLIED.

ALL PITCH BREAKS AND PERIMETER CORNER JOINTS MUST BE LATERALLY RESTRAINED.

LOADING

TOTAL LOAD CASES: (4)

CHORDS

MEMB. FR-TO	MAX. FACTORED FORCE (LBS)	FACTORED VERT. LOAD (PLF) FROM	TO	LC1	MAX CSI (LC)	MAX. UNBRAC LENGTH
A-B	-977 / 0	-102.0	-102.0	0.12 (1)	6.14	
B-I	-828 / 0	-102.0	-102.0	0.36 (1)	6.09	
I-J	-828 / 0	-102.0	-102.0	0.38 (1)	6.09	
J-C	-828 / 0	-102.0	-102.0	0.38 (1)	6.09	
C-D	-978 / 0	-102.0	-102.0	0.12 (1)	6.14	
H-A	-904 / 0	0.0	0.0	0.10 (1)	7.81	
E-D	-893 / 0	0.0	0.0	0.10 (1)	7.81	
H-K	0 / 0	-18.5	-18.5	0.06 (1)	10.00	
K-L	0 / 0	-18.5	-18.5	0.06 (1)	10.00	
L-G	0 / 0	-18.5	-18.5	0.06 (1)	10.00	
G-M	0 / 818	-18.5	-18.5	0.23 (1)	10.00	
M-N	0 / 818	-18.5	-18.5	0.23 (1)	10.00	
N-O	0 / 818	-18.5	-18.5	0.23 (1)	10.00	
O-F	0 / 818	-18.5	-18.5	0.23 (1)	10.00	
F-P	0 / 0	-18.5	-18.5	0.06 (1)	10.00	
P-Q	0 / 0	-18.5	-18.5	0.06 (1)	10.00	
Q-E	0 / 0	-18.5	-18.5	0.06 (1)	10.00	

WEBS

MEMB. FR-TO	MAX. FACTORED FORCE (LBS)	MAX CSI (LC)
G-B	0 / 173	0.04 (1)
B-F	0 / 12	0.00 (1)
F-C	0 / 179	0.04 (1)
A-G	0 / 845	0.21 (1)
F-D	0 / 843	0.21 (1)

FACTORED CONCENTRATED LOADS (LBS)

JT	LOC.	LC1	MAX-	MAX+	FACE	DIR.	TYPE	HEEL	CONN.
B	2-4-0	-27	-27	---	FRONT	VERT	TOTAL	---	C1
C	6-8-0	-27	-27	---	FRONT	VERT	TOTAL	---	C1
F	6-5-12	-191	-191	---	BACK	VERT	TOTAL	---	C1
G	2-6-4	-191	-191	---	BACK	VERT	TOTAL	---	C1
I	3-11-4	1	1	---	FRONT	VERT	TOTAL	---	C1
J	5-0-12	1	1	---	FRONT	VERT	TOTAL	---	C1
K	6-4	-196	-196	---	BACK	VERT	TOTAL	---	C1
L	1-11-4	1	1	---	FRONT	VERT	TOTAL	---	C1
M	3-11-4	1	1	---	FRONT	VERT	TOTAL	---	C1
N	4-6-0	-191	-191	---	BACK	VERT	TOTAL	---	C1
O	5-0-12	1	1	---	FRONT	VERT	TOTAL	---	C1
P	7-0-12	1	1	---	FRONT	VERT	TOTAL	---	C1
Q	8-5-12	-196	-196	---	BACK	VERT	TOTAL	---	C1

CONNECTION REQUIREMENTS

1) C1: A SUITABLE HANGER/MECHANICAL CONNECTION IS REQUIRED.

DESIGN CRITERIA

SPECIFIED LOADS:

TOP CH.	LL =	29.0	PSF
	DL =	6.0	PSF
BOT CH.	LL =	0.0	PSF
	DL =	7.4	PSF
TOTAL LOAD	=	42.4	PSF

SPACING = 24.0 IN. C/C

LOADING IN FLAT SECTION BASED ON A SLOPE OF 6.00/12

THIS TRUSS IS DESIGNED FOR RESIDENTIAL OR SMALL BUILDING REQUIREMENTS OF PART 9, NBCC 2010, NBCC 2015

THIS DESIGN COMPLIES WITH:
- PART 9 OF BCBC 2018 , OBC 2012
- CSA 086-09, CSA 086-14
- TPIC 2011, TPIC 2014

(55 % OF 37.6 P.S.F. G.S.L. PLUS 8.4 P.S.F. RAIN LOAD) EQUALS 29.0 P.S.F. SPECIFIED ROOF LIVE LOAD

ALLOWABLE DEFL.(LL)= L/360 (0.30")
CALCULATED VERT. DEFL.(LL) = L/999 (0.01")
ALLOWABLE DEFL.(TL)= L/360 (0.30")
CALCULATED VERT. DEFL.(TL) = L/999 (0.03")

CSI: TC=0.38/1.00 (B-C:1) , BC=0.23/1.00 (F-G:1) , WB=0.21/1.00 (A-G:1) , SSI=0.19/1.00 (B-C:1)

DOL LUMBER=1.00 NAIL=1.00 LS BEND=1.00
COMP=1.00 SHEAR=1.00 TENS= 1.00

COMPANION LIVE LOAD FACTOR = 1.00

TRUSS PLATE MANUFACTURER IS NOT RESPONSIBLE FOR QUALITY CONTROL IN THE TRUSS MANUFACTURING PLANT .

NAIL VALUES

PLATE	GRIP(DRY) (PSI) MAX	MIN	SHEAR (PLI) MAX	MIN	SECTION (PLI) MAX	MIN
MT20	618	354	1667	788	1987	1656

PLATE PLACEMENT TOL. = 0.250 inches

PLATE ROTATION TOL. = 5.0 Deg.

JSI GRIP= 0.79 (A) (INPUT = 0.90)
JSI METAL= 0.28 (D) (INPUT = 1.00)

LICENSED PROFESSIONAL ENGINEER
09/13/19
H. J. G. ALVES
100009024
PROVINCE OF ONTARIO

Structural component only
DWG# T-1923461

JOB NAME	TRUSS NAME	QUANTITY	PLY	JOB DESC.	DRWG NO.
405554	H71	2	2	GREEN PARK HOMES TRUSS DESC.	

Tamarack Roof Truss, Burlington

Version 8.300 S May 10 2019 MiTek Industries, Inc. Fri Sep 13 12:04:44 2019 Page 1

ID:08dJJueNb1pNAxJNn9U?SyyCERz-h0y76R_SExEmEBP3NA8SLvatRzKrG0ptzwqfytye3TX

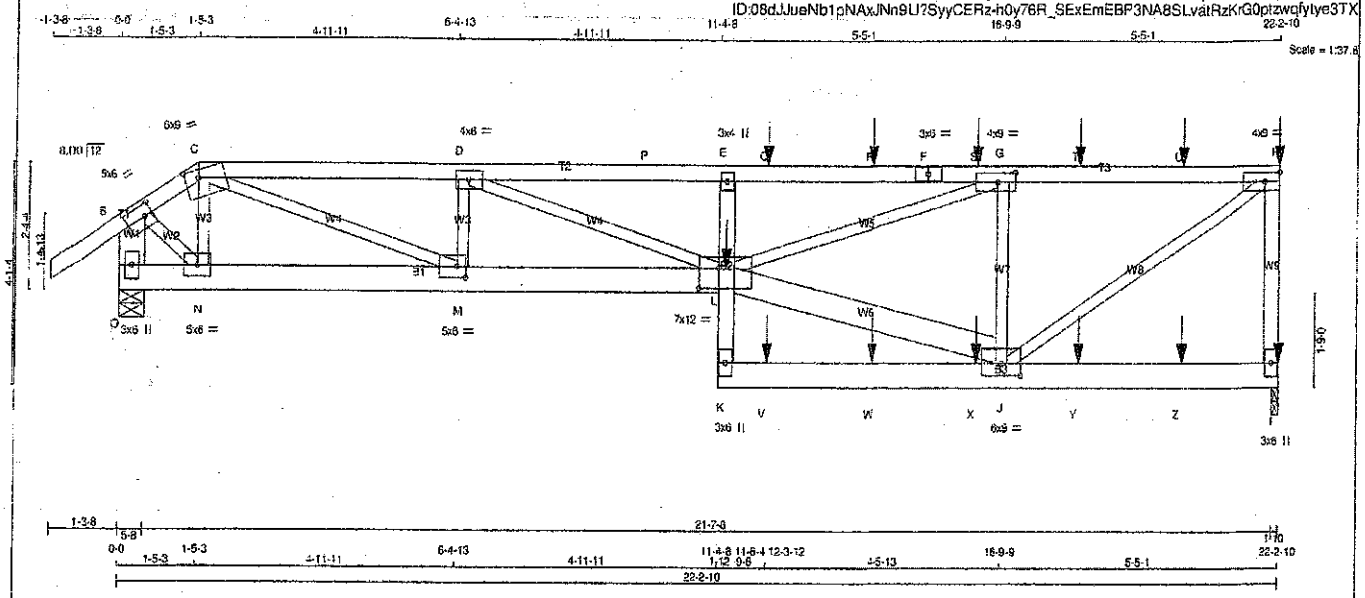

TOTAL WEIGHT = 4 X 110 = 440 lb

[M]

LUMBER

N. L. G. A. RULES

CHORDS	SIZE		LUMBER	DESCR.
A - C	2x4	DRY	No.2	SPF
C - F	2x4	DRY	No.2	SPF
F - H	2x4	DRY	No.2	SPF
I - H	2x4	DRY	No.2	SPF
O - B	2x6	DRY	No.2	SPF
O - L	2x6	DRY	No.2	SPF
K - E	2x4	DRY	No.2	SPF
K - I	2x6	DRY	No.2	SPF
ALL WEBS EXCEPT	2x3	DRY	No.2	SPF
L - J	2x6	DRY	No.2	SPF

DRY: SEASONED LUMBER.

DESIGN CONSISTS OF 2 TRUSSES BUILT SEPARATELY THEN FASTENED TOGETHER AS FOLLOWS:

CHORDS	#ROWS	SURFACE SPACING (IN)	LOAD(PLF)
TOP CHORDS : (0.122"X3") SPIRAL NAILS			
A-C	1	12	SIDE(5.8)
C-F	1	12	SIDE(7.0)
F-H	1	12	SIDE(61.0)
H-I	1	12	TOP
O-B	2	12	TOP
BOTTOM CHORDS : (0.122"X3") SPIRAL NAILS			
O-L	2	12	SIDE(61.0)
K-I	2	12	SIDE(0.0)
E-K	1	8	SIDE(256.0)
WEBS : (0.122"X3") SPIRAL NAILS			
2x3	1	6	
2x6	2	6	

NAILS TO BE DRIVEN FROM ONE SIDE ONLY.

GIRDER NAILING ASSUMES NAILED HANGERS ARE FASTENED WITH MIN. 3-0 INCH NAILS.

TOP - COMPONENTS ARE LOADED FROM THE TOP AND MUST BE PLACED ON TOP EDGE OF ALL PLIES FOR THE LOAD TO BE TRANSFERRED TO EACH PLY.

SIDE - PLF SHOWN IS THE EQUIVALENT UDL APPLIED TO ONE SIDE THAT THE CORRESPONDING NAILING PATTERN SHALL BE CAPABLE OF TRANSFERING. REMAINING PLF MUST BE APPLIED ON THE OPPOSITE SIDE OR ON THE TOP.

PLATES (table is in inches)

JT	TYPE	PLATES	W	LEN	Y	X
B	TMVW-t	MT20	5.0	6.0	2.50	1.75
C	TTWW-m	MT20	6.0	9.0	1.75	3.00
D	TMWW-t	MT20	4.0	6.0		
E	TMV+p	MT20	3.0	4.0		
F	TS-t	MT20	3.0	6.0		
G	TMWW-t	MT20	4.0	9.0	2.00	4.00
H	TMVW-t	MT20	4.0	9.0		Edge
I	BMV1+p	MT20	3.0	6.0		
J	BMWWW-:	MT20	6.0	9.0	2.75	4.50
K	BMV+p	MT20	3.0	6.0		
L	BVMWWW-t	MT20	7.0	12.0	4.50	4.50
M	BMWW-t	MT20	5.0	6.0	2.50	2.90
N	BMWW-t	MT20	5.0	6.0		
O	BMVt+p	MT20	3.0	6.0		

Edge - INDICATES REFERENCE CORNER OF PLATE TOUCHES EDGE OF CHORD.

DIMENSIONS, SUPPORTS AND LOADINGS SPECIFIED BY FABRICATOR TO BE VERIFIED BY BUILDING DESIGNER

BEARINGS

JT	FACTORED GROSS REACTION VERT	HORZ	MAXIMUM FACTORED GROSS REACTION DOWN	HORZ	UPLIFT	INPUT BRG IN-SX	REQRD BRG IN-SX
I	2739	0	2739	0	0	1-10	1-10
O	2364	0	2364	0	0	5-8	5-8

UNFACTORED REACTIONS

JT	1ST LCASE COMBINED	MAX./MIN. COMPONENT REACTIONS SNOW	LIVE	PERM.LIVE	WIND	DEAD	SOIL
I	1931	1299 / 0	0 / 0	0 / 0	0 / 0	632 / 0	0 / 0
O	1670	1105 / 0	0 / 0	0 / 0	0 / 0	565 / 0	0 / 0

BEARING MATERIAL TO BE SPF NO.2 OR BETTER AT JOINT(S) I, O

BRACING

TOP CHORD TO BE SHEATHED OR MAX. PURLIN SPACING = 2.67 FT.
MAX. UNBRACED BOTTOM CHORD LENGTH = 7.81 FT OR RIGID CEILING DIRECTLY APPLIED.

ALL PITCH BREAKS AND PERIMETER CORNER JOINTS MUST BE LATERALLY RESTRAINED.

LOADING

TOTAL LOAD CASES: (4)

CHORDS

MEMB. FR-TO	MAX. FACTORED FORCE (LBS)	FACTORED VERT. LOAD LC1 (PLF) FROM	TO	MAX CSI (LC)	MAX. UNBRAC LENGTH
A- B	0 / 39	-102.0	-102.0	0.08 (1)	10.00
B- C	-2066 / 0	-114.5	-114.5	0.09 (1)	6.04
C- D	-5840 / 0	-114.5	-114.5	0.39 (1)	3.74
D- P	-8496 / 0	-114.5	-114.5	0.58 (1)	2.98
P- E	-8496 / 0	-102.0	-102.0	0.58 (1)	2.98
E- Q	-8338 / 0	-102.0	-102.0	0.84 (1)	2.67
Q- R	-8338 / 0	-102.0	-102.0	0.84 (1)	2.67
R- F	-8338 / 0	-102.0	-102.0	0.84 (1)	2.67
F- S	-8338 / 0	-102.0	-102.0	0.84 (1)	2.67
S- G	-8338 / 0	-102.0	-102.0	0.84 (1)	2.67
G- T	-3127 / 0	-102.0	-102.0	0.49 (1)	4.64
T- U	-3127 / 0	-102.0	-102.0	0.49 (1)	4.64
U- H	-3127 / 0	-102.0	-102.0	0.49 (1)	4.64
I- H	-2843 / 0	0.0	0.0	0.33 (1)	7.00
O- B	-2539 / 0	0.0	0.0	0.09 (1)	7.81
O- N	0 / 0	-18.5	-18.5	0.11 (1)	10.00
N- M	0 / 1657	-18.5	-18.5	0.21 (1)	10.00
M- L	0 / 5840	-18.5	-18.5	0.46 (1)	10.00
K- L	0 / 80	0.0	0.0	0.24 (1)	10.00
L- E	-596 / 0	0.0	0.0	0.24 (1)	7.81
K- V	0 / 179	-18.5	-18.5	0.07 (4)	10.00
V- W	0 / 179	-18.5	-18.5	0.07 (4)	10.00
W- X	0 / 179	-18.5	-18.5	0.07 (4)	10.00
X- J	0 / 179	-18.5	-18.5	0.07 (4)	10.00
J- Y	0 / 0	-18.5	-18.5	0.06 (4)	10.00
Y- Z	0 / 0	-18.5	-18.5	0.06 (4)	10.00
Z- I	0 / 0	-18.5	-18.5	0.06 (4)	10.00

WEBS

MEMB. FR-TO	MAX. FACTORED FORCE (LBS)	MAX CSI (LC)
N- C	-741 / 0	0.06 (1)
C- M	0 / 4465	0.56 (1)
M- D	-1693 / 0	0.14 (1)
D- L	0 / 2856	0.35 (1)
J- G	-2983 / 0	0.38 (1)
J- H	0 / 3817	0.47 (1)
B- N	0 / 2023	0.25 (1)
L- J	0 / 3179	0.21 (1)
L- G	0 / 5486	0.68 (1)

FACTORED CONCENTRATED LOADS (LBS)

JT	LOC.	LC1	MAX-	MAX+	FACE	DIR.	TYPE	HEEL	CONN.
H	22-2-10	-164	-164	---	FRONT	VERT	TOTAL	---	C1
I	22-2-10	-34	-34	---	FRONT	VERT	TOTAL	---	C1
L	11-6-4	-1215	-1215	---	FRONT	VERT	TOTAL	---	C1
Q	12-3-12	-123	-123	---	FRONT	VERT	TOTAL	---	C1
R	14-3-12	-123	-123	---	FRONT	VERT	TOTAL	---	C1
S	16-3-12	-123	-123	---	FRONT	VERT	TOTAL	---	C1
T	18-3-12	-123	-123	---	FRONT	VERT	TOTAL	---	C1
U	20-3-12	-123	-123	---	FRONT	VERT	TOTAL	---	C1
V	12-3-12	-28	-28	---	FRONT	VERT	TOTAL	---	C1
W	14-3-12	-26	-26	---	FRONT	VERT	TOTAL	---	C1
X	16-3-12	-26	-26	---	FRONT	VERT	TOTAL	---	C1

DESIGN CRITERIA

*** SPECIAL LOADS ANALYSIS ***
GEOMETRY AND/OR BASIC LOADS CHANGED BY USER.
LOADS WERE DERIVED FROM USER INPUT
NO FURTHER MODIFICATIONS WERE MADE

SPECIFIED LOADS:

TOP CH.	LL	=	29.0	PSF
	DL	=	6.0	PSF
BOT CH.	LL	=	0.0	PSF
	DL	=	7.4	PSF
TOTAL LOAD		=	42.4	PSF

SPACING = 24.0 IN. C/C

LOADING IN FLAT SECTION BASED ON A SLOPE OF 8.00/12

*** NON STANDARD GIRDER ***
ADDT'L USER-DEFINED LOADS APPLIED TO ALL LOAD CASES.

THIS TRUSS IS DESIGNED FOR RESIDENTIAL OR SMALL BUILDING REQUIREMENTS OF PART 9, NBCC 2010, NBCC 2015

THIS DESIGN COMPLIES WITH:
- PART 9 OF BCBC 2018 , OBC 2012
- CSA 086-09, CSA 086-14
- TPIC 2011, TPIC 2014

DESIGN ASSUMPTIONS
-OVERHANG NOT TO BE ALTERED OR CUT OFF.

(55 % OF 37.6 P.S.F. G.S.L. PLUS 8.4 P.S.F. RAIN LOAD) EQUALS 29.0 P.S.F. SPECIFIED ROOF LIVE LOAD

ALLOWABLE DEFL.(LL)= L/360 (0.74")
CALCULATED VERT. DEFL.(LL) = L/ 999 (0.22")
ALLOWABLE DEFL.(TL)= L/360 (0.74")
CALCULATED VERT. DEFL.(TL) = L/ 657 (0.41")

CSI: TC=0.84/1.00 (E-G:1) , BC=0.48/1.00 (L-M:1) , WB=0.68/1.00 (G-L:1) , SSI=0.23/1.00 (E-G:1)

DOL LUMBER=1.00 NAIL=1.00 LS BEND=1.00 COMP=1.00 SHEAR=1.00 TENS= 1.00

COMPANION LIVE LOAD FACTOR = 1.00

AUTOSOLVE RIGHT HEEL ONLY

TRUSS PLATE MANUFACTURER IS NOT RESPONSIBLE FOR QUALITY CONTROL IN THE TRUSS MANUFACTURING PLANT .

NAIL VALUES

PLATE	GRIP(DRY) (PSI) MAX	MIN	SHEAR (PLI) MAX	MIN	SECTION (PLI) MAX	MIN
MT20	618	354	1867	785	1987	1656

PLATE PLACEMENT TOL. = 0.250 inches

PLATE ROTATION TOL. = 5.0 Deg.

LICENSED PROFESSIONAL ENGINEER
09/13/19
H. J. G. ALVES
100090024
PROVINCE OF ONTARIO

Structural component only 1/2
DWG# T-1923478 CONTINUED ON PAGE 2

JOB NAME	TRUSS NAME	QUANTITY	PLY	JOB DESC.	DRWG NO.
405554	H71	2	2	GREEN PARK HOMES TRUSS DESC.	

Tamarack Roof Truss, Burlington

ID:08dJJueNb1pNAxJNn9U?SyyCERz-h0y76R_SExEmEBP3NA8SLvaIRzKrG0ptzwqfytve3TX

FACTORED CONCENTRATED LOADS (LBS)

JT	LOC.	LC1	MAX-	MAX+	FACE	DIR.	TYPE	HEEL	CONN.
Y	18-3-12	-26	-26	---	FRONT	VERT	TOTAL	---	C1
Z	20-3-12	-26	-26	---	FRONT	VERT	TOTAL	---	C1

CONNECTION REQUIREMENTS

1) C1: A SUITABLE HANGER/MECHANICAL CONNECTION IS REQUIRED.

JSI GRIP= 0.90 (D) (INPUT = 0.90)
JSI METAL= 0.52 (M) (INPUT = 1.00)

LICENSED PROFESSIONAL ENGINEER
09/12/19
H. J. G. ALVES
100008024
PROVINCE OF ONTARIO

Structural component only
DWG# T-1923478

JOB NAME	TRUSS NAME	QUANTITY	PLY	JOB DESC.	DRWG NO.
405554	H72	2	1	GREEN PARK HOMES TRUSS DESC.	

Tamarack Roof Truss, Burlington

Version 8.300 S May 10 2019 MiTek Industries, Inc. Fri Sep 13 12:04:45 2019 Page 1

ID:08dJJueNb1pNAxJNn9U?SyyCERz-9CWVKn?4?FMdsL_FxIfhI675yNgG?V10CaZCUJye3TW

Scale = 1:37.6

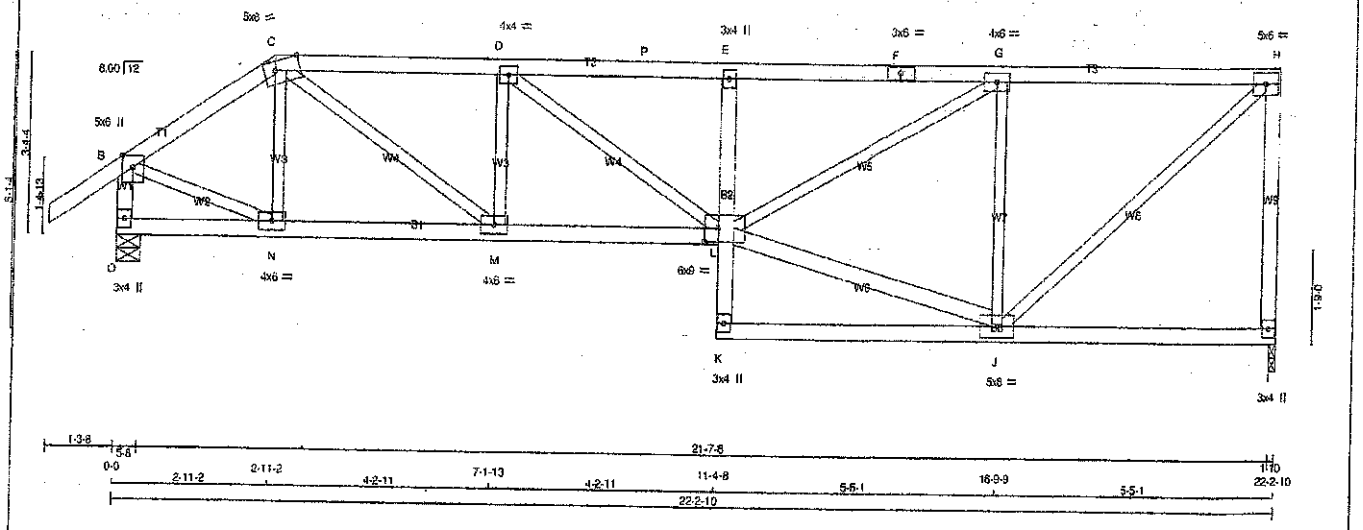

TOTAL WEIGHT = 2 X 99 = 199 lb

LUMBER

N. L. G. A. RULES

CHORDS	SIZE		LUMBER	DESCR.
A - C	2x4	DRY	No.2	SPF
C - F	2x4	DRY	No.2	SPF
F - H	2x4	DRY	No.2	SPF
I - H	2x4	DRY	No.2	SPF
O - B	2x4	DRY	No.2	SPF
O - L	2x4	DRY	No.2	SPF
K - E	2x4	DRY	No.2	SPF
K - I	2x4	DRY	No.2	SPF
ALL WEBS EXCEPT	2x3	DRY	No.2	SPF
L - J	2x4	DRY	No.2	SPF

DRY: SEASONED LUMBER.

PLATES (table is in inches)

JT	TYPE	PLATES	W	LEN	Y	X
B	TMVW+p	MT20	5.0	6.0	Edge	
C	TTWW-m	MT20	5.0	8.0	Edge	5.50
D	TMWW-t	MT20	4.0	4.0		
E	TMV+p	MT20	3.0	4.0		
F	TS-t	MT20	3.0	6.0		
G	TMWW-t	MT20	4.0	6.0		
H	TMVW-t	MT20	5.0	6.0		
I	BMV1+p	MT20	3.0	4.0		
J	BMWWW-t	MT20	5.0	8.0		
K	BMV+p	MT20	3.0	4.0		
L	BVMWWW-t	MT20	6.0	9.0	3.00	3.00
M	BMWW-t	MT20	4.0	6.0		
N	BMWW-t	MT20	4.0	6.0		
O	BMV1+p	MT20	3.0	4.0		

Edge - INDICATES REFERENCE CORNER OF PLATE TOUCHES EDGE OF CHORD.

DIMENSIONS, SUPPORTS AND LOADINGS SPECIFIED BY FABRICATOR TO BE VERIFIED BY BUILDING DESIGNER

BEARINGS

JT	FACTORED GROSS REACTION VERT	HORZ	MAXIMUM GROSS REACTION DOWN	HORZ	UPLIFT	INPUT BRG IN-SX	REQRD BRG IN-SX
I	1367	0	1367	0	0	1-10	1-10
O	1576	0	1576	0	0	5-8	5-8

UNFACTORED REACTIONS

JT	1ST LOADE COMBINED	MAX./MIN. COMPONENT REACTIONS SNOW	LIVE	PERM.LIVE	WIND	DEAD	SOIL
I	965	644 / 0	0 / 0	0 / 0	0 / 0	320 / 0	0 / 0
O	1116	724 / 0	0 / 0	0 / 0	0 / 0	392 / 0	0 / 0

BEARING MATERIAL TO BE SPF NO.2 OR BETTER AT JOINT(S) I, O

BRACING

TOP CHORD TO BE SHEATHED OR MAX. PURLIN SPACING = 3.54 FT.
MAX. UNBRACED BOTTOM CHORD LENGTH = 7.81 FT OR RIGID CEILING DIRECTLY APPLIED.

ALL PITCH BREAKS AND PERIMETER CORNER JOINTS MUST BE LATERALLY RESTRAINED.

LOADING

TOTAL LOAD CASES: (4)

CHORDS

MEMB. FR-TO	MAX. FACTORED FORCE (LBS)	FACTORED VERT. LOAD (PLF) FROM	TO	LC1	MAX CSI (LC)	MAX. UNBRAC LENGTH
A- B	0 / 39	-102.0	-102.0	0.15 (1)	10.00	
B- C	-1463 / 0	-114.5	-114.5	0.22 (1)	5.14	
C- D	-2327 / 0	-114.5	-114.5	0.41 (1)	4.03	
D- P	-2571 / 0	-114.5	-114.5	0.43 (1)	3.84	
P- E	-2571 / 0	-102.0	-102.0	0.43 (1)	3.84	
E- F	-2549 / 0	-102.0	-102.0	0.67 (1)	3.54	
F- G	-2549 / 0	-102.0	-102.0	0.67 (1)	3.54	
G- H	-1233 / 0	-102.0	-102.0	0.54 (1)	4.98	
I- H	-1328 / 0	0.0	0.0	0.60 (1)	6.99	
O- B	-1558 / 0	0.0	0.0	0.18 (1)	6.56	
O- N	0 / 0	-18.5	-18.5	0.06 (4)	10.00	
N- M	0 / 1203	-18.5	-18.5	0.25 (1)	10.00	
M- L	0 / 2328	-18.5	-18.5	0.47 (1)	10.00	
K- L	0 / 42	0.0	0.0	0.11 (1)	10.00	
L- E	-452 / 0	0.0	0.0	0.11 (1)	7.81	
K- J	0 / 38	-18.5	-18.5	0.17 (4)	10.00	
J- I	0 / 0	-18.5	-18.5	0.16 (4)	10.00	

WEBS

MEMB. FR-TO	MAX. FACTORED FORCE (LBS)	MAX CSI (LC)
N- C	-354 / 0	0.07 (1)
C- M	0 / 1376	0.34 (1)
M- D	-714 / 0	0.15 (1)
D- L	0 / 299	0.07 (1)
J- G	-1388 / 0	0.55 (1)
J- H	0 / 1659	0.41 (1)
B- N	0 / 1289	0.32 (1)
L- J	0 / 1280	0.23 (1)
L- G	0 / 1496	0.37 (1)

DESIGN CRITERIA

*** SPECIAL LOADS ANALYSIS ***
GEOMETRY AND/OR BASIC LOADS CHANGED BY USER.
LOADS WERE DERIVED FROM USER INPUT
NO FURTHER MODIFICATIONS WERE MADE

SPECIFIED LOADS:

TOP CH.	LL	=	29.0	PSF
	DL	=	6.0	PSF
BOT CH.	LL	=	0.0	PSF
	DL	=	7.4	PSF
TOTAL LOAD		=	42.4	PSF

SPACING = 24.0 IN. C/C

LOADING IN FLAT SECTION BASED ON A SLOPE OF 6.00/12

*** NON STANDARD GIRDER ***
ADDT'L USER-DEFINED LOADS APPLIED TO ALL LOAD CASES.

THIS TRUSS IS DESIGNED FOR RESIDENTIAL OR SMALL BUILDING REQUIREMENTS OF PART 9, NBCC 2010, NBCC 2015

THIS DESIGN COMPLIES WITH:
- PART 9 OF BCBC 2018 , OBC 2012
- CSA 086-09, CSA 086-14
- TPIC 2011, TPIC 2014

(55 % OF 37.6 P.S.F. G.S.L. PLUS 8.4 P.S.F. RAIN LOAD) EQUALS 29.0 P.S.F. SPECIFIED ROOF LIVE LOAD

ALLOWABLE DEFL.(LL)= L/360 (0.74")
CALCULATED VERT. DEFL.(LL) = L/ 999 (0.11")
ALLOWABLE DEFL.(TL)= L/360 (0.74")
CALCULATED VERT. DEFL.(TL) = L/ 999 (0.20")

CSI: TC=0.67/1.00 (E-G:1) , BC=0.47/1.00 (L-M:1) , WB=0.55/1.00 (G-J:1) , SSI=0.29/1.00 (G-H:1)

DOL LUMBER=1.00 NAIL=1.00 LS BEND=1.00 COMP=1.00 SHEAR=1.00 TENS= 1.00

COMPANION LIVE LOAD FACTOR = 1.00

TRUSS PLATE MANUFACTURER IS NOT RESPONSIBLE FOR QUALITY CONTROL IN THE TRUSS MANUFACTURING PLANT .

NAIL VALUES

PLATE	GRIP(DRY) (PSI) MAX	MIN	SHEAR (PLI) MAX	MIN	SECTION (PLI) MAX	MIN
MT20	618	354	1667	788	1967	1656

PLATE PLACEMENT TOL. = 0.250 inches

PLATE ROTATION TOL. = 5.0 Deg.

JSI GRIP= 0.90 (C) (INPUT = 0.90)
JSI METAL= 0.60 (B) (INPUT = 1.00)

LICENSED PROFESSIONAL ENGINEER
09/13/19
H. J. G ALVES
100009024
PROVINCE OF ONTARIO

Structural component only
DWG# T-1923479

JOB NAME	TRUSS NAME	QUANTITY	PLY	JOB DESC. GREEN PARK HOMES	DRWG NO.
405554	H73	2	1	TRUSS DESC.	

Tamarack Roof Truss, Burlington

Version 8.300 S May 10 2019 MiTek Industries, Inc. Fri Sep 13 12:04:46 2019 Page 1

ID:08dJJueNb1pNAxJNn9U?SyyCERz-dO4uX7?imZUUTVZSVoAwQKgBpn_Ukl0AREJm1mye3TV

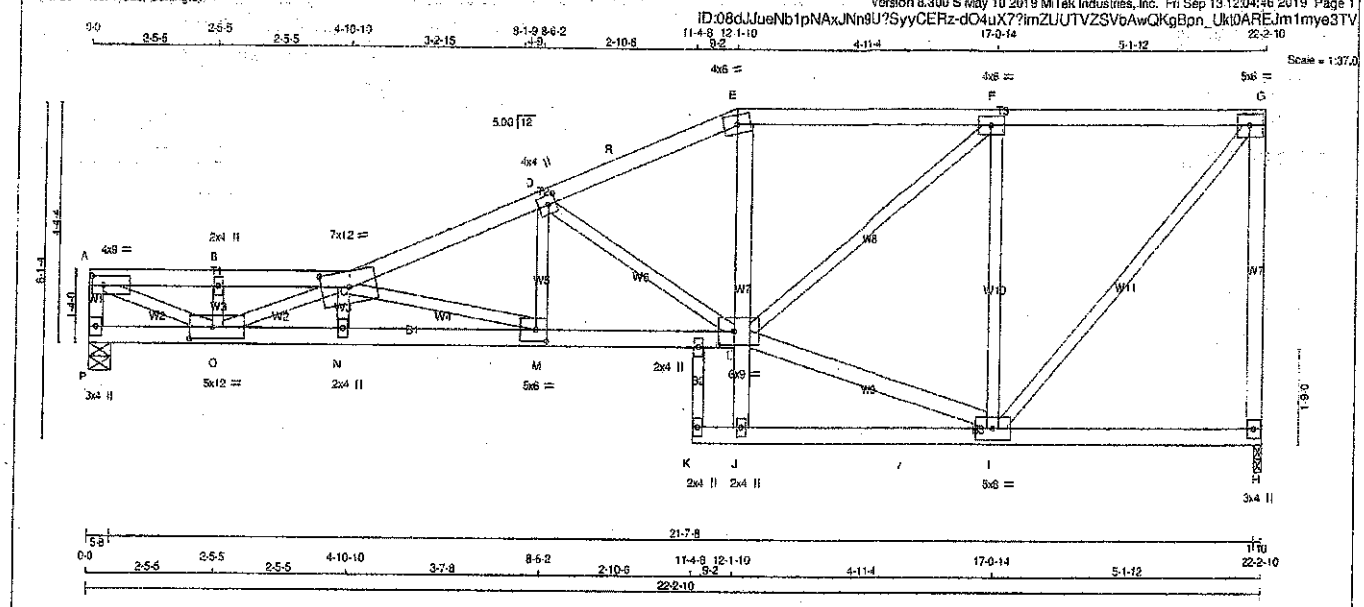

TOTAL WEIGHT = 2 X 101 = 202 lb

LUMBER

N. L. G. A. RULES

CHORDS	SIZE		LUMBER	DESCR.
P - A	2x4	DRY	No.2	SPF
A - C	2x4	DRY	No.2	SPF
C - E	2x4	DRY	No.2	SPF
E - G	2x4	DRY	No.2	SPF
H - G	2x4	DRY	No.2	SPF
P - L	2x4	DRY	2100F 1.8E	SPF
K - H	2x4	DRY	No.2	SPF
ALL WEBS EXCEPT	2x3	DRY	No.2	SPF
J - E	2x4	DRY	No.2	SPF
L - I	2x4	DRY	No.2	SPF

DRY: SEASONED LUMBER.

PLATES (table is in inches)

JT	TYPE	PLATES	W	LEN	Y	X
A	TMWW-t	MT20	4.0	9.0	2.00	2.75
B	TMW+w	MT20	2.0	4.0		
C	TTWWW-m	MT20	7.0	12.0	3.50	6.00
D	TMWW+t	MT20	4.0	4.0	2.00	1.75
E	TTW-m	MT20	4.0	6.0		
F	TMWW-t	MT20	4.0	6.0		
G	TMW+t	MT20	5.0	6.0		
H	BMV14p	MT20	3.0	4.0		
I	BMWWW+t	MT20	5.0	8.0		
J	BMW+w	MT20	2.0	4.0		
K	NP+w	MT20	2.0	4.0		
L	BWMWWW+t	MT20	6.0	9.0	3.00	3.50
M	BMWW-t	MT20	5.0	6.0	2.50	2.50
N	BMW+w	MT20	2.0	4.0		
O	BMWWW+t	MT20	5.0	12.0	2.50	5.00
P	BMVt+p	MT20	3.0	4.0		
Q	NP+w	MT20	2.0	4.0		

DIMENSIONS, SUPPORTS AND LOADINGS SPECIFIED BY FABRICATOR TO BE VERIFIED BY BUILDING DESIGNER

BEARINGS

JT	FACTORED GROSS REACTION VERT	HORZ	MAXIMUM FACTORED GROSS REACTION DOWN	HORZ	UPLIFT	INPUT BRG IN-SX	REQRD BRG IN-SX
P	1443	0	1443	0	0	5-8	5-8
H	1376	0	1376	0	0	1-10	1-10

UNFACTORED REACTIONS

JT	1ST LCASE COMBINED	MAX./MIN. COMPONENT REACTIONS SNOW	LIVE	PERM.LIVE	WIND	DEAD	SOIL
P	1025	644 / 0	0 / 0	0 / 0	0 / 0	381 / 0	0 / 0
H	972	644 / 0	0 / 0	0 / 0	0 / 0	327 / 0	0 / 0

BEARING MATERIAL TO BE SPF NO.2 OR BETTER AT JOINT(S) P, H

BEARING SIZE FACTOR = 1.15 AT JNT(S) P (BASED ON SUPPORT DEPTH = 1-8)

BRACING

TOP CHORD TO BE SHEATHED OR MAX. PURLIN SPACING = 3.47 FT.

MAX. UNBRACED BOTTOM CHORD LENGTH = 10.00 FT OR RIGID CEILING DIRECTLY APPLIED.

MAX. UNBRACED INTERIOR CHORD LENGTH = 10.00 FT

ALL PITCH BREAKS AND PERIMETER CORNER JOINTS MUST BE LATERALLY RESTRAINED.

LOADING

TOTAL LOAD CASES: (4)

CHORDS

MEMB. FR-TO	MAX. FACTORED FORCE (LBS)	FACTORED VERT. LOAD (PLF) FROM	TO	LC1 MAX CSI (LC)	MAX. UNBRAC LENGTH
P- A	-1400 / 0	0.0	0.0	0.16 (1)	6.84
A- B	-3007 / 0	-114.5	-114.5	0.25 (1)	3.77
B- C	-3007 / 0	-114.5	-114.5	0.24 (1)	3.78
C- D	-3250 / 0	-114.5	-114.5	0.41 (1)	3.47
D- R	-2066 / 0	-114.5	-114.5	0.32 (1)	4.36
R- E	-2066 / 0	-102.0	-102.0	0.32 (1)	4.36
E- F	-1890 / 0	-102.0	-102.0	0.56 (1)	4.14
F- G	-992 / 0	-102.0	-102.0	0.50 (1)	5.47
H- G	-1339 / 0	0.0	0.0	0.98 (1)	6.97
P- O	0 / 0	-18.5	-18.5	0.05 (1)	10.00
O- N	0 / 5102	-18.5	-18.5	0.60 (1)	10.00
N- M	0 / 5108	-18.5	-18.5	0.60 (1)	10.00
M- L	0 / 3017	-18.5	-18.5	0.29 (1)	10.00
K- J	0 / 0	-18.5	-18.5	0.02 (4)	10.00
J- I	0 / 24	-18.5	-18.5	0.14 (4)	10.00
I- H	0 / 0	-18.5	-18.5	0.14 (4)	10.00

WEBS

MEMB. FR-TO	MAX. FACTORED FORCE (LBS)	MAX CSI (LC)
A- O	0 / 3260	0.61 (1)
O- B	-276 / 0	0.04 (1)
O- C	-2282 / 0	0.42 (1)
N- C	-58 / 19	0.01 (1)
I- F	-1377 / 0	0.83 (1)
I- G	0 / 1509	0.37 (1)
J- L	0 / 97	0.07 (1)
L- E	0 / 454	0.14 (1)
L- I	0 / 1045	0.18 (1)
L- F	0 / 1152	0.29 (1)
C- M	-2174 / 0	0.60 (1)
M- D	0 / 734	0.18 (1)
D- L	-1366 / 0	0.48 (1)

LICENSED PROFESSIONAL ENGINEER
09/13/19
H. J. G. ALVES
100009924
PROVINCE OF ONTARIO

DESIGN CRITERIA

*** SPECIAL LOADS ANALYSIS ***
GEOMETRY AND/OR BASIC LOADS CHANGED BY USER.
LOADS WERE DERIVED FROM USER INPUT
NO FURTHER MODIFICATIONS WERE MADE

SPECIFIED LOADS:

TOP CH.	LL =	29.0	PSF
	DL =	6.0	PSF
BOT CH.	LL =	0.0	PSF
	DL =	7.4	PSF
TOTAL LOAD	=	42.4	PSF

SPACING = 24.0 IN. C/C

LOADING IN ALL FLAT SECTIONS BASED ON A SLOPE OF 6.00/12

*** NON STANDARD GIRDER ***
ADDTL USER-DEFINED LOADS APPLIED TO ALL LOAD CASES.

THIS TRUSS IS DESIGNED FOR RESIDENTIAL OR SMALL BUILDING REQUIREMENTS OF PART 9, NBCC 2010, NBCC 2015

THIS DESIGN COMPLIES WITH:
- PART 9 OF BCBC 2018 , OBC 2012
- CSA 086-09, CSA 086-14
- TPIC 2011, TPIC 2014

(65 % OF 37.6 P.S.F. G.S.L. PLUS 8.4 P.S.F. RAIN LOAD) EQUALS 29.0 P.S.F. SPECIFIED ROOF LIVE LOAD

ALLOWABLE DEFL.(LL)= L/360 (0.74")
CALCULATED VERT. DEFL.(LL) = L/ 999 (0.20")
ALLOWABLE DEFL.(TL)= L/360 (0.74")
CALCULATED VERT. DEFL.(TL) = L/ 712 (0.37")

CSI: TC=0.98/1.00 (G-H:1) , BC=0.60/1.00 (M-N:1) , WB=0.83/1.00 (F-I:1) , SSI=0.28/1.00 (F-G:1)

DOL LUMBER=1.00 NAIL=1.00 LS BEND=1.00 COMP=1.00 SHEAR=1.00 TENS= 1.00

COMPANION LIVE LOAD FACTOR = 1.00

TRUSS PLATE MANUFACTURER IS NOT RESPONSIBLE FOR QUALITY CONTROL IN THE TRUSS MANUFACTURING PLANT .

NAIL VALUES

PLATE	GRIP(DRY) (PSI) MAX	MIN	SHEAR (PLI) MAX	MIN	SECTION (PLI) MAX	MIN
MT20	618	354	1667	788	1987	1656

PLATE PLACEMENT TOL. = 0.250 inches

PLATE ROTATION TOL. = 5.0 Deg.

JSI GRIP= 0.89 (C) (INPUT = 0.90)
JSI METAL= 0.79 (C) (INPUT = 1.00)

Structural component only
DWG# T-1923480

JOB NAME	TRUSS NAME	QUANTITY	PLY	JOB DESC.	DRWG NO.
405554	H74	2	1	GREEN PARK HOMES TRUSS DESC.	

Tamarack Roof Truss, Burlington

Version 8.300 S May 10 2019 MiTek Industries, Inc. Fri Sep 13 12:04:47 2019 Page 1

ID:08dJJueNb1pNAxJNn9U?SyyCERz-5bdGlT0KXscK5e8e3hAzXCW2AKnTHUfu2JZCye3TU

Scale = 1:40.3

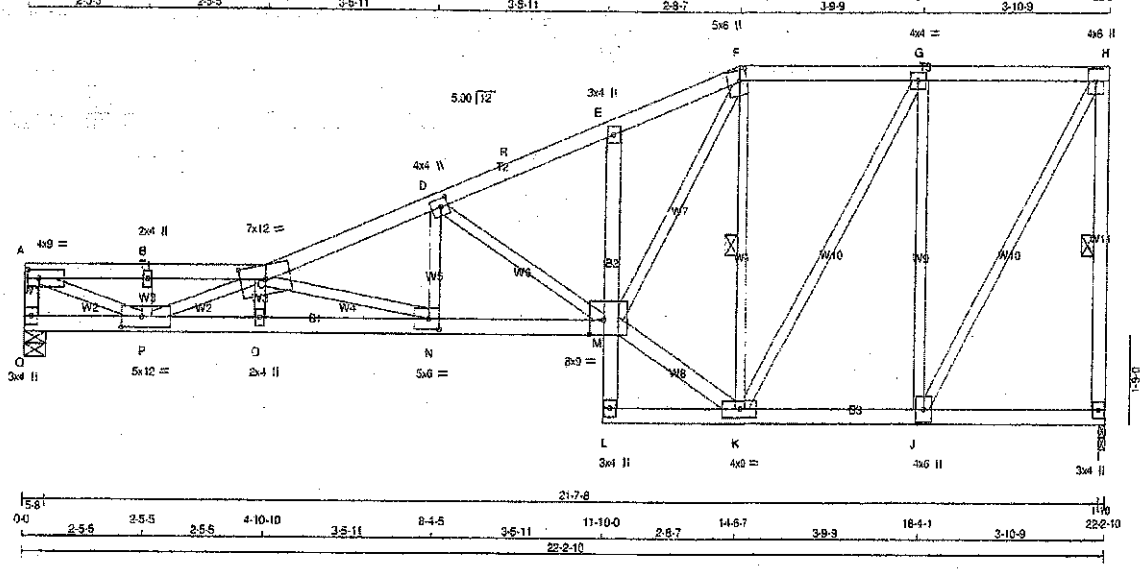

TOTAL WEIGHT = 2 X 109 = 219 lb

LUMBER

N. L. G. A. RULES

CHORDS	SIZE		LUMBER	DESCR.
Q - A	2x4	DRY	No.2	SPF
A - C	2x4	DRY	No.2	SPF
C - F	2x4	DRY	No.2	SPF
F - H	2x4	DRY	No.2	SPF
I - H	2x4	DRY	No.2	SPF
Q - M	2x4	DRY	2100F 1.8E	SPF
L - E	2x4	DRY	No.2	SPF
L - I	2x4	DRY	No.2	SPF
ALL WEBS EXCEPT	2x3	DRY	No.2	SPF
M - K	2x4	DRY	No.2	SPF

DRY: SEASONED LUMBER.

PLATES (table is in inches)

JT	TYPE	PLATES	W	LEN	Y	X
A	TMVW-t	MT20	4.0	9.0	2.00	2.75
B	TMW+w	MT20	2.0	4.0		
C	TTWWW-m	MT20	7.0	12.0	3.50	6.00
D	TMWW+l	MT20	4.0	4.0	2.00	1.75
E	TMV+p	MT20	3.0	4.0		
F	TTWW+m	MT20	5.0	6.0	2.50	2.00
G	TMWW-t	MT20	4.0	4.0		
H	TMVW+p	MT20	4.0	6.0		
I	BMV1+p	MT20	3.0	4.0		
J	BMWW+l	MT20	4.0	6.0		
K	BMWWW-t	MT20	4.0	9.0		
L	BMV+p	MT20	3.0	4.0		
M	BVMWWW-l	MT20	8.0	9.0	Edge	3.50
N	BMWW-t	MT20	5.0	6.0	2.50	2.50
O	BMW+w	MT20	2.0	4.0		
P	BMWWW-l	MT20	5.0	12.0	2.50	5.00
Q	BMV1+p	MT20	3.0	4.0		

Edge - INDICATES REFERENCE CORNER OF PLATE TOUCHES EDGE OF CHORD.

DIMENSIONS, SUPPORTS AND LOADINGS SPECIFIED BY FABRICATOR TO BE VERIFIED BY BUILDING DESIGNER

BEARINGS

JT	FACTORED GROSS REACTION VERT	HORZ	MAXIMUM FACTORED GROSS REACTION DOWN	HORZ	UPLIFT	INPUT BRG IN-SX	REQRD BRG IN-SX
Q	1436	0	1436	0	0	5-8	5-8
I	1367	0	1367	0	0	1-10	1-10

UNFACTORED REACTIONS

JT	1ST LCASE COMBINED	MAX./MIN. COMPONENT REACTIONS SNOW	LIVE	PERM.LIVE	WIND	DEAD	SOIL
Q	1020	644 / 0	0 / 0	0 / 0	0 / 0	375 / 0	0 / 0
I	965	644 / 0	0 / 0	0 / 0	0 / 0	320 / 0	0 / 0

BEARING MATERIAL TO BE SPF NO.2 OR BETTER AT JOINT(S) Q, I
BEARING SIZE FACTOR = 1.15 AT JNT(S) Q (BASED ON SUPPORT DEPTH = 1-8)

BRACING

TOP CHORD TO BE SHEATHED OR MAX. PURLIN SPACING = 3.50 FT.
MAX. UNBRACED BOTTOM CHORD LENGTH = 7.81 FT OR RIGID CEILING DIRECTLY APPLIED.

ALL PITCH BREAKS AND PERIMETER CORNER JOINTS MUST BE LATERALLY RESTRAINED.

1 LATERAL BRACE(S) AT 1/ 2 LENGTH OF H-I, F-K.

END VERTICAL(S) MUST BE SHEATHED OR HAVE BRACES AS INDICATED IN THE MAX. UNBRACED LENGTH COLUMN OF THE TABLE BELOW

LOADING

TOTAL LOAD CASES: (4)

CHORDS

MEMB. FR-TO	MAX. FACTORED FORCE (LBS)	FACTORED VERT. LOAD LC1 (PLF) FROM	TO	MAX CSI (LC)	MAX. UNBRAC LENGTH
Q- A	-1393 / 0	0.0	0.0	0.16 (1)	6.86
A- B	-2990 / 0	-114.5	-114.5	0.25 (1)	3.78
B- C	-2990 / 0	-114.5	-114.5	0.24 (1)	3.80
C- D	-3275 / 0	-114.5	-114.5	0.37 (1)	3.50
D- R	-2118 / 0	-114.5	-114.5	0.28 (1)	4.36
R- E	-2118 / 0	-102.0	-102.0	0.28 (1)	4.36
E- F	-2096 / 0	-102.0	-102.0	0.15 (1)	4.53
F- G	-1015 / 0	-102.0	-102.0	0.29 (1)	5.79
G- H	-675 / 0	-102.0	-102.0	0.28 (1)	6.25
I- H	-1336 / 0	0.0	0.0	0.32 (1)	5.58
Q- P	0 / 0	-18.5	-18.5	0.05 (1)	10.00
P- O	0 / 5070	-18.5	-18.5	0.59 (1)	10.00
O- N	0 / 5076	-18.5	-18.5	0.59 (1)	10.00
N- M	0 / 3039	-18.5	-18.5	0.28 (1)	10.00
L- M	0 / 19	0.0	0.0	0.10 (1)	10.00
M- E	-318 / 0	0.0	0.0	0.11 (1)	7.81
L- K	0 / 37	-18.5	-18.5	0.05 (4)	10.00
K- J	0 / 675	-18.5	-18.5	0.16 (1)	10.00
J- I	0 / 0	-18.5	-18.5	0.07 (4)	10.00

WEBS

MEMB. FR-TO	MAX. FACTORED FORCE (LBS)	MAX CSI (LC)
A- P	0 / 3242	0.80 (1)
P- B	-277 / 0	0.04 (1)
P- C	-2265 / 0	0.41 (1)
O- C	-59 / 17	0.01 (1)
C- N	-2125 / 0	0.56 (1)
N- D	0 / 742	0.18 (1)
D- M	-1325 / 0	0.43 (1)
K- F	-1212 / 0	0.40 (1)
M- K	0 / 1193	0.21 (1)
M- F	0 / 1973	0.49 (1)
J- H	0 / 1364	0.34 (1)
J- G	-1111 / 0	0.99 (1)
K- G	0 / 712	0.18 (1)

LICENSED PROFESSIONAL ENGINEER
09/13/19
H. J. G. ALVES
100008024
PROVINCE OF ONTARIO

DESIGN CRITERIA

*** SPECIAL LOADS ANALYSIS ***
GEOMETRY AND/OR BASIC LOADS CHANGED BY USER.
LOADS WERE DERIVED FROM USER INPUT
NO FURTHER MODIFICATIONS WERE MADE

SPECIFIED LOADS:

TOP CH.	LL =	29.0	PSF
	DL =	6.0	PSF
BOT CH.	LL =	0.0	PSF
	DL =	7.4	PSF
TOTAL LOAD	=	42.4	PSF

SPACING = 24.0 IN. C/C

LOADING IN ALL FLAT SECTIONS BASED ON A SLOPE OF 6.00/12

*** NON STANDARD GIRDER ***
ADDTL USER-DEFINED LOADS APPLIED TO ALL LOAD CASES.

THIS TRUSS IS DESIGNED FOR RESIDENTIAL OR SMALL BUILDING REQUIREMENTS OF PART 9, NBCC 2010, NBCC 2015

THIS DESIGN COMPLIES WITH:
- PART 9 OF BCBC 2018 , OBC 2012
- CSA 086-09, CSA 086-14
- TPIC 2011, TPIC 2014

(55 % OF 37.6 P.S.F. G.S.L. PLUS 8.4 P.S.F. RAIN LOAD) EQUALS 29.0 P.S.F. SPECIFIED ROOF LIVE LOAD

ALLOWABLE DEFL.(LL)= L/360 (0.74")
CALCULATED VERT. DEFL.(LL) = L/ 999 (0.20")
ALLOWABLE DEFL.(TL)= L/360 (0.74")
CALCULATED VERT. DEFL.(TL) = L/ 693 (0.38")

CSI: TC=0.37/1.00 (C-D:1) , BC=0.59/1.00 (N-O:1) , WB=0.99/1.00 (G-J:1) , SSI=0.21/1.00 (G-H:1)

DOL LUMBER=1.00 NAIL=1.00 LS BEND=1.00 COMP=1.00 SHEAR=1.00 TENS= 1.00

COMPANION LIVE LOAD FACTOR = 1.00

TRUSS PLATE MANUFACTURER IS NOT RESPONSIBLE FOR QUALITY CONTROL IN THE TRUSS MANUFACTURING PLANT .

NAIL VALUES

PLATE	GRIP(DRY) (PSI) MAX	MIN	SHEAR (PLI) MAX	MIN	SECTION (PLI) MAX	MIN
MT20	618	354	1667	788	1987	1656

PLATE PLACEMENT TOL. = 0.250 inches

PLATE ROTATION TOL. = 5.0 Deg.

JSI GRIP= 0.90 (M) (INPUT = 0.90)
JSI METAL= 0.78 (C) (INPUT = 1.00)

Structural component only
DWG# T-1923481

JOB NAME	TRUSS NAME	QUANTITY	PLY	JOB DESC.	DRWG NO.
405481	J3	42	1	GREEN PARK HOMES TRUSS DESC.	

Tamarack Roof Truss, Burlington

Version 8.300 S May 10 2019 MiTek Industries, Inc. Fri Sep 13 12:22:17 2019 Page 1
ID:08dJJueNb1pNAxJNn9U?SyyCERz-Mb4C7VjyFTvM30PRZpXOWyhw9RoJUP5s6FOsQLye3D4

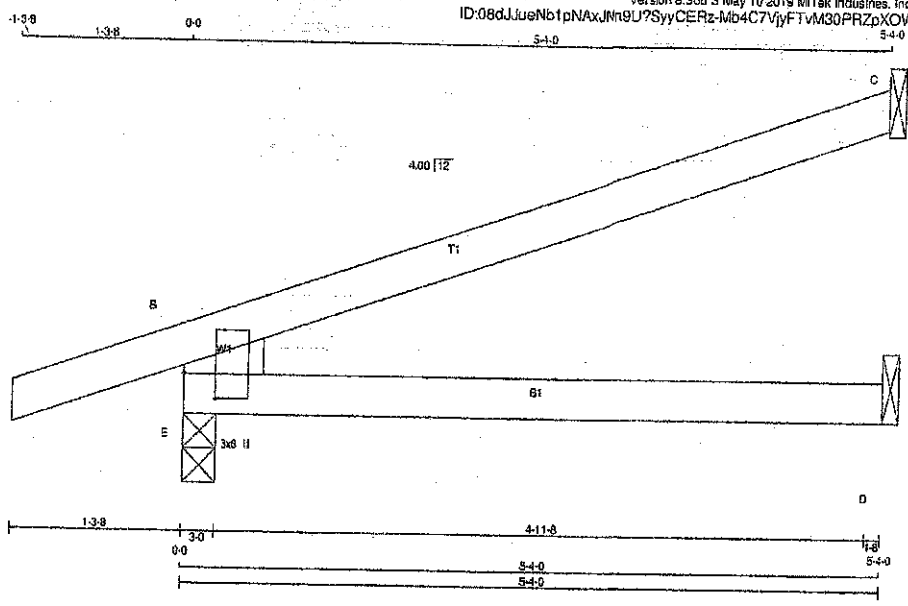

TOTAL WEIGHT = 42 X 15 = 621 lb
[M]

LUMBER
N. L. G. A. RULES

CHORDS	SIZE		LUMBER	DESCR.
E - B	2x6	DRY	No.2	SPF
A - C	2x4	DRY	No.2	SPF
E - D	2x4	DRY	No.2	SPF

DRY: SEASONED LUMBER.

PLATES (table is in inches)

JT	TYPE	PLATES	W	LEN	Y	X
B						
E						
E	TMBMV1+p	MT20	3.0	6.0	2.25	2.75

DIMENSIONS, SUPPORTS AND LOADINGS SPECIFIED BY FABRICATOR TO BE VERIFIED BY BUILDING DESIGNER

BEARINGS

JT	FACTORED GROSS REACTION VERT	HORZ	MAXIMUM FACTORED GROSS REACTION DOWN	HORZ	UPLIFT	INPUT BRG IN-SX	REQRD BRG IN-SX
E	538	0	538	0	0	3-0	3-0
C	204	0	204	0	0	1-8	1-8
D	37	0	42	0	0	1-8	1-8

SEE MITEK STANDARD DETAIL B97791H FOR CONNECTION TO JOINT(S) C, D

UNFACTORED REACTIONS

JT	1ST LCASE COMBINED	MAX./MIN. COMPONENT REACTIONS SNOW	LIVE	PERM.LIVE	WIND	DEAD	SOIL
E	376	271 / 0	0 / 0	0 / 0	0 / 0	105 / 0	0 / 0
C	140	116 / 0	0 / 0	0 / 0	0 / 0	24 / 0	0 / 0
D	30	0 / 0	0 / 0	0 / 0	0 / 0	30 / 0	0 / 0

BEARING MATERIAL TO BE SPF NO.2 OR BETTER AT JOINT(S) E, C

BRACING
TOP CHORD TO BE SHEATHED OR MAX. PURLIN SPACING = 8.25 FT.
MAX. UNBRACED BOTTOM CHORD LENGTH = 10.00 FT OR RIGID CEILING DIRECTLY APPLIED.

ALL PITCH BREAKS AND PERIMETER CORNER JOINTS MUST BE LATERALLY RESTRAINED.

LOADING
TOTAL LOAD CASES: (4)

CHORDS

MEMB. FR-TO	MAX. FACTORED FORCE (LBS)	FACTORED VERT. LOAD (PLF) FROM	TO	LC1 MAX CSI (LC)	MAX. UNBRAC LENGTH
E- B	-477 / 0	0.0	0.0	0.05 (4)	7.81
A- B	0 / 22	-102.0	-102.0	0.13 (1)	10.00
B- C	-22 / 0	-102.0	-102.0	0.49 (1)	6.25
E- D	0 / 0	-18.5	-18.5	0.15 (4)	10.00

WEBS

MEMB. FR-TO	MAX. FACTORED FORCE (LBS)	MAX CSI (LC)

DESIGN CRITERIA

SPECIFIED LOADS:

TOP CH.	LL =	28.0	PSF
	DL =	6.0	PSF
BOT CH.	LL =	0.0	PSF
	DL =	7.4	PSF
TOTAL LOAD	=	42.4	PSF

SPACING = 24.0 IN. O/C

THIS TRUSS IS DESIGNED FOR RESIDENTIAL OR SMALL BUILDING REQUIREMENTS OF PART 9, NBCC 2010, NBCC 2015

THIS DESIGN COMPLIES WITH:
- PART 9 OF BCBC 2018 , OBC 2012
- CSA 086-09, CSA 086-14
- TPIC 2011, TPIC 2014

DESIGN ASSUMPTIONS
-OVERHANG NOT TO BE ALTERED OR CUT OFF.

(55 % OF 37.6 P.S.F. G.S.L. PLUS 8.4 P.S.F. RAIN LOAD) EQUALS 29.0 P.S.F. SPECIFIED ROOF LIVE LOAD

ALLOWABLE DEFL.(TL)= L/360 (0.19")
CALCULATED VERT. DEFL.(TL) = L/ 999 (0.02")

CSI: TC=0.49/1.00 (B-C:1) , BC=0.15/1.00 (D-E:4) , WB=0.00/1.00 (n/a:0) , SSI=0.25/1.00 (B-C:1)

DOL LUMBER=1.00 NAIL=1.00 LS BEND=1.10 COMP=1.10 SHEAR=1.10 TENS= 1.10

COMPANION LIVE LOAD FACTOR = 1.00

AUTOSOLVE RIGHT HEEL ONLY

TRUSS PLATE MANUFACTURER IS NOT RESPONSIBLE FOR QUALITY CONTROL IN THE TRUSS MANUFACTURING PLANT .

NAIL VALUES

PLATE	GRIP(DRY) (PSI) MAX	MIN	SHEAR (PLI) MAX	MIN	SECTION (PLI) MAX	MIN
MT20	618	354	1667	788	1987	1656

PLATE PLACEMENT TOL. = 0.250 inches

PLATE ROTATION TOL. = 5.0 Deg.

JSI GRIP= 0.24 (E) (INPUT = 0.90)
JSI METAL= 0.09 (E) (INPUT = 1.00)

RECEIVED
SEP 16 2019
TOWN OF CALEDON
BUILDING SECTION
FILE NO

LICENSED PROFESSIONAL ENGINEER
09/13/19
H. J. G. ALVES
100009024
PROVINCE OF ONTARIO

Structural component only
DWG# T-1923560

JOB NAME	TRUSS NAME	QUANTITY	PLY	JOB DESC.	DRWG NO.
405481	J4	12	1	GREEN PARK HOMES TRUSS DESC.	

Tamarack Roof Truss, Burlington

Version 8.300 S May 10 2019 MiTek Industries, Inc. Fri Sep 13 12:22:19 2019 Page 1
ID:08dJJueNb1pNAxJNn9U?SyyCERz-I_CyXAIDn593JZqhEZsbNnLPFVWyHa9ZZtzUDye3D2

Scale = 1:18.4

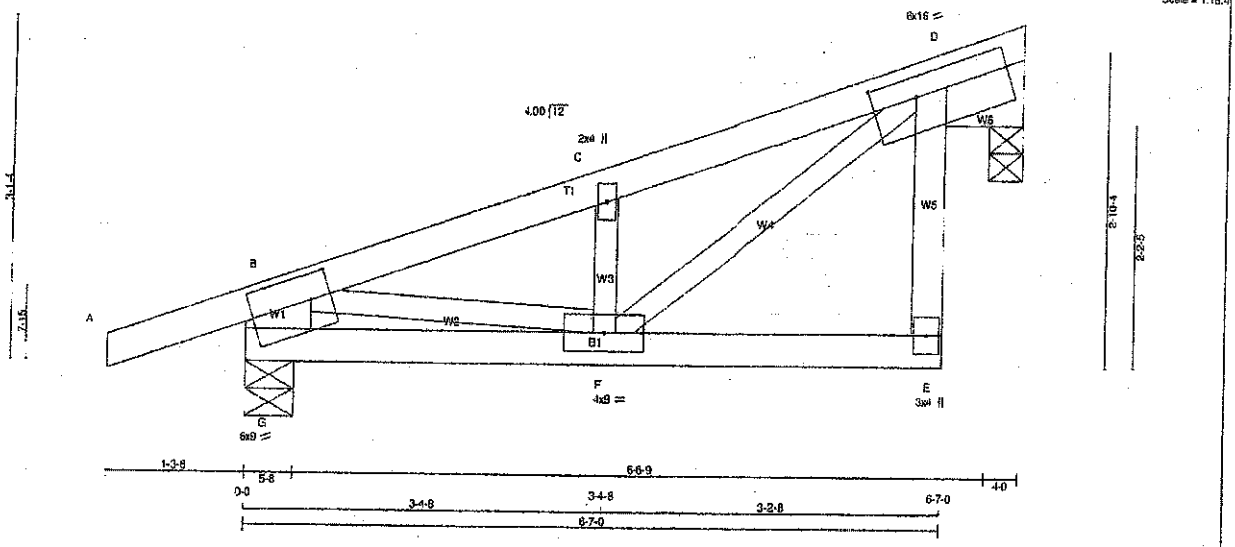

TOTAL WEIGHT = 12 X 29 = 348 lb

LUMBER
N. L. G. A. RULES

CHORDS	SIZE		LUMBER	DESCR.
A - D	2x4	DRY	No.2	SPF
E - D	2x4	DRY	No.2	SPF
G - E	2x4	DRY	No.2	SPF
ALL WEBS EXCEPT	2x3	DRY	No.2	SPF
G - B	2x8	DRY	No.2	SPF

DRY: SEASONED LUMBER.

PLATES (table is in inches)

JT	TYPE	PLATES	W	LEN	Y	X
B						
C	TMW+w	MT20	2.0	4.0		
D	TMWWW1-t	MT20	6.0	16.0	2.25	5.00
E	BMV+p	MT20	3.0	4.0		
F	BMWWW-t	MT20	4.0	9.0		
G						
G	TMBMWW1-t	MT20	6.0	9.0	2.75	2.25

DIMENSIONS, SUPPORTS AND LOADINGS SPECIFIED BY FABRICATOR TO BE VERIFIED BY BUILDING DESIGNER

BEARINGS

JT	FACTORED GROSS REACTION VERT	HORZ	MAXIMUM FACTORED GROSS REACTION DOWN	HORZ	UPLIFT	INPUT BRG IN-SX	REQRD BRG IN-SX
D	379	0	379	0	0	4-0 (3-15)	4-0
G	546	0	546	0	0	5-8	5-8

VALUE IN PARENTHESIS INDICATES EFFECTIVE BEARING LENGTH

BEVELED PLATE OR SHIM REQUIRED TO PROVIDE FULL BEARING SURFACE WITH TRUSS CHORD AT JT(S): D

UNFACTORED REACTIONS

JT	1ST LCASE COMBINED	MAX./MIN. COMPONENT REACTIONS SNOW	LIVE	PERM.LIVE	WIND	DEAD	SOIL
D	266	182 / 0	0 / 0	0 / 0	0 / 0	84 / 0	0 / 0
G	381	277 / 0	0 / 0	0 / 0	0 / 0	104 / 0	0 / 0

BEARING MATERIAL TO BE SPF NO.2 OR BETTER AT JOINT(S) D, G

BRACING
TOP CHORD TO BE SHEATHED OR MAX. PURLIN SPACING = 6.25 FT.
MAX. UNBRACED BOTTOM CHORD LENGTH = 10.00 FT OR RIGID CEILING DIRECTLY APPLIED.

ALL PITCH BREAKS AND PERIMETER CORNER JOINTS MUST BE LATERALLY RESTRAINED.

LOADING
TOTAL LOAD CASES: (4)

CHORDS

MEMB. FR-TO	MAX. FACTORED FORCE (LBS)	FACTORED VERT. LOAD LC1 (PLF) FROM	TO	MAX CSI (LC)	MAX. UNBRAC LENGTH
A- B	0 / 26	-102.0	-102.0	0.19 (1)	10.00
B- C	-494 / 0	-102.0	-102.0	0.15 (1)	6.25
C- D	-479 / 0	-102.0	-102.0	0.15 (1)	6.25
E- D	0 / 29	0.0	0.0	0.01 (4)	10.00
G- F	0 / 0	-18.5	-18.5	0.04 (4)	10.00
F- E	0 / 0	-18.5	-18.5	0.04 (4)	10.00

WEBS

MEMB. FR-TO	MAX. FACTORED FORCE (LBS)	MAX CSI (LC)
G- B	-517 / 0	0.02 (1)
B- F	0 / 484	0.11 (1)
F- C	-377 / 0	0.05 (1)
F- D	0 / 575	0.13 (1)

DESIGN CRITERIA

SPECIFIED LOADS:

TOP CH.	LL =	29.0	PSF
	DL =	6.0	PSF
BOT CH.	LL =	0.0	PSF
	DL =	7.4	PSF
TOTAL LOAD	=	42.4	PSF

SPACING = 24.0 IN. C/C

THIS TRUSS IS DESIGNED FOR RESIDENTIAL OR SMALL BUILDING REQUIREMENTS OF PART 9, NBCC 2010, NBCC 2015

THIS DESIGN COMPLIES WITH:
- PART 9 OF BCBC 2018 , OBC 2012
- CSA 086-09, CSA 086-14
- TPIC 2011, TPIC 2014

(55 % OF 37.6 P.S.F. G.S.L. PLUS 8.4 P.S.F. RAIN LOAD) EQUALS 29.0 P.S.F. SPECIFIED ROOF LIVE LOAD

ALLOWABLE DEFL.(LL)= L/360 (0.21")
CALCULATED VERT. DEFL.(LL) = L/ 999 (0.01")
ALLOWABLE DEFL.(TL)= L/360 (0.21")
CALCULATED VERT. DEFL.(TL) = L/ 999 (0.01")

CSI: TC=0.19/1.00 (A-B:1) , BC=0.04/1.00 (E-F:4) , WB=0.13/1.00 (D-F:1) , SSI=0.15/1.00 (C-D:1)

DOL LUMBER=1.00 NAIL=1.00 LS BEND=1.10 COMP=1.10 SHEAR=1.10 TENS= 1.10

COMPANION LIVE LOAD FACTOR = 1.00

AUTOSOLVE HEELS OFF

TRUSS PLATE MANUFACTURER IS NOT RESPONSIBLE FOR QUALITY CONTROL IN THE TRUSS MANUFACTURING PLANT .

NAIL VALUES

PLATE	GRIP(DRY) (PSI) MAX	MIN	SHEAR (PLI) MAX	MIN	SECTION (PLI) MAX	MIN
MT20	618	354	1687	788	1987	1656

PLATE PLACEMENT TOL. = 0.250 inches

PLATE ROTATION TOL. = 5.0 Deg.

JSI GRIP= 0.42 (G) (INPUT = 0.90)
JSI METAL= 0.13 (F) (INPUT = 1.00)

LICENSED PROFESSIONAL ENGINEER
09/13/19
H. J. G. ALVES
100009024
PROVINCE OF ONTARIO

Structural component only
DWG# T-1923561

JOB NAME	TRUSS NAME	QUANTITY	PLY	JOB DESC.	DRWG NO.
405490	J18	24	1	GREEN PARK HOMES TRUSS DESC.	

Tamarack Roof Truss, Burlington

Version 8.300 S May 10 2019 MiTek Industries, Inc. Fri Sep 13 10:59:27 2019 Page 1
ID:08dJJueNb1pNAxJNn9U?SyyCERz-ISmL14aShRkXpETFQ1Nv5urYl?Yl?djKF0TuzPye4Qk

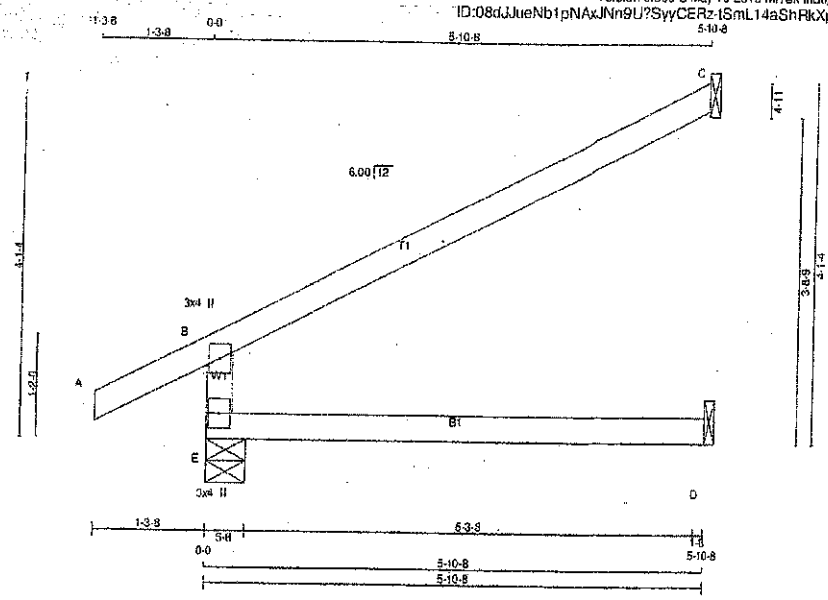

TOTAL WEIGHT = 24 X 17 = 403 lb (M)

LUMBER
N. L. G. A. RULES

CHORDS	SIZE		LUMBER	DESCR.
E - B	2x4	DRY	No.2	SPF
A - C	2x4	DRY	No.2	SPF
E - D	2x4	DRY	No.2	SPF

DRY: SEASONED LUMBER.

PLATES (table is in inches)

JT	TYPE	PLATES	W	LEN	Y	X
B	TMV+p	MT20	3.0	4.0		
E	BMV1+p	MT20	3.0	4.0		

DIMENSIONS, SUPPORTS AND LOADINGS SPECIFIED BY FABRICATOR TO BE VERIFIED BY BUILDING DESIGNER

BEARINGS

JT	FACTORED GROSS REACTION VERT	HORZ	MAXIMUM FACTORED GROSS REACTION DOWN	HORZ	UPLIFT	INPUT BRG IN-SX	REQRD BRG IN-SX
E	577	0	577	0	0	5-8	5-8
C	225	0	225	0	0	1-8	1-8
D	45	0	50	0	0	1-8	1-8

SEE MITEK STANDARD DETAIL B977914 FOR CONNECTION TO JOINT(S) C , D

UNFACTORED REACTIONS

JT	1ST LCASE COMBINED	MAX/MIN. COMPONENT REACTIONS SNOW	LIVE	PERM.LIVE	WIND	DEAD	SOIL
E	403	292 / 0	0 / 0	0 / 0	0 / 0	111 / 0	0 / 0
C	154	128 / 0	0 / 0	0 / 0	0 / 0	26 / 0	0 / 0
D	36	0 / 0	0 / 0	0 / 0	0 / 0	36 / 0	0 / 0

BEARING MATERIAL TO BE SPF NO.2 OR BETTER AT JOINT(S) E

BRACING
TOP CHORD TO BE SHEATHED OR MAX. PURLIN SPACING = 6.25 FT.
MAX. UNBRACED BOTTOM CHORD LENGTH = 10.00 FT OR RIGID CEILING DIRECTLY APPLIED.

ALL PITCH BREAKS AND PERIMETER CORNER JOINTS MUST BE LATERALLY RESTRAINED.

LOADING
TOTAL LOAD CASES: (4)

CHORDS

MEMB. FR-TO	MAX. FACTORED FORCE (LBS)	FACTORED VERT. LOAD (PLF) FROM	TO	LC1 MAX CSI (LC)	MAX. UNBRAC LENGTH
E- B	-513 / 0	0.0	0.0	0.13 (4)	7.81
A- B	0 / 31	-102.0	-102.0	0.13 (1)	10.00
B- C	-33 / 0	-102.0	-102.0	0.60 (1)	6.25
E- D	0 / 0	-18.5	-18.5	0.13 (4)	10.00

WEBS

MEMB. FR-TO	MAX. FACTORED FORCE (LBS)	MAX CSI (LC)

DESIGN CRITERIA

SPECIFIED LOADS:

TOP CH.	LL	=	29.0	PSF
	DL	=	6.0	PSF
BOT CH.	LL	=	0.0	PSF
	DL	=	7.4	PSF
TOTAL LOAD		=	42.4	PSF

SPACING = 24.0 IN. C/C

THIS TRUSS IS DESIGNED FOR RESIDENTIAL OR SMALL BUILDING REQUIREMENTS OF PART 9, NBCC 2010, NBCC 2015

THIS DESIGN COMPLIES WITH:
- PART 9 OF BCBC 2018 , OBC 2012
- CSA 086-09, CSA 086-14
- TPIC 2011, TPIC 2014

DESIGN ASSUMPTIONS
-OVERHANG NOT TO BE ALTERED OR CUT OFF.

(55 % OF 37.6 P.S.F. G.S.L. PLUS 8.4 P.S.F. RAIN LOAD) EQUALS 29.0 P.S.F. SPECIFIED ROOF LIVE LOAD

ALLOWABLE DEFL.(LL)= L/360 (0.20")
CALCULATED VERT. DEFL.(LL) = L/ 999 (0.00")
ALLOWABLE DEFL.(TL)= L/360 (0.20")
CALCULATED VERT. DEFL.(TL) = L/ 999 (0.03")

CSI: TC=0.60/1.00 (B-C:1) , BC=0.13/1.00 (D-E:4) , WB=0.00/1.00 (n/a:0) , SSI=0.28/1.00 (B-C:1)

DOL LUMBER=1.00 NAIL=1.00 LS BEND=1.10 COMP=1.10 SHEAR=1.10 TENS=1.10

COMPANION LIVE LOAD FACTOR = 1.00

AUTOSOLVE RIGHT HEEL ONLY

TRUSS PLATE MANUFACTURER IS NOT RESPONSIBLE FOR QUALITY CONTROL IN THE TRUSS MANUFACTURING PLANT .

NAIL VALUES

PLATE	GRIP(DRY) (PSI) MAX	MIN	SHEAR (PLI) MAX	MIN	SECTION (PLI) MAX	MIN
MT20	618	354	1667	788	1987	1656

PLATE PLACEMENT TOL. = 0.250 inches

PLATE ROTATION TOL. = 5.0 Deg.

JSI GRIP= 0.21 (E) (INPUT = 0.90)
JSI METAL= 0.14 (B) (INPUT = 1.00)

LICENSED PROFESSIONAL ENGINEER
09/13/19
H. J. G. ALVES
100009024
PROVINCE OF ONTARIO

Structural component only
DWG# T-1923454

JOB NAME	TRUSS NAME	QUANTITY	PLY	JOB DESC.	DRWG NO.
405554	J26	10	1	GREEN PARK HOMES TRUSS DESC.	

Tamarack Roof Truss, Burlington

Version 8.300 S May 10 2019 MiTek Industries, Inc. Fri Sep 13 12:11:09 2019 Page 1

ID:08dJJueNb1pNAxJNn9U?SyyCERz-v4jgw4eyZEk8wML3RXYIS51pO9q6zHjYVKaXz3ye3NW

Scale = 1:27.3

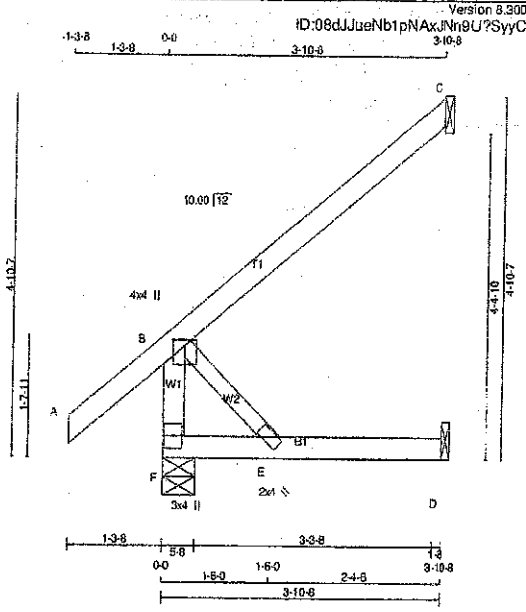

TOTAL WEIGHT = 10 X 15 = 152 lb (M)

LUMBER

N. L. G. A. RULES

CHORDS	SIZE		LUMBER	DESCR.
F - B	2x4	DRY	No.2	SPF
A - C	2x4	DRY	No.2	SPF
F - D	2x4	DRY	No.2	SPF
ALL WEBS	2x3	DRY	No.2	SPF

DRY: SEASONED LUMBER

PLATES (table is in inches)

JT	TYPE	PLATES	W	LEN	Y	X
B	TMWW+p	MT20	4.0	4.0	1.00	2.00
E	BMW+w	MT20	2.0	4.0		
F	BMV1+p	MT20	3.0	4.0		

DIMENSIONS, SUPPORTS AND LOADINGS SPECIFIED BY FABRICATOR TO BE VERIFIED BY BUILDING DESIGNER

BEARINGS

JT	FACTORED GROSS REACTION VERT	HORZ	MAXIMUM FACTORED GROSS REACTION DOWN	HORZ	UPLIFT	INPUT BRG IN-SX	REQRD BRG IN-SX
F	375	0	375	0	0	5-8	5-8
C	198	0	198	0	0	1-8	1-8
D	38	0	40	0	0	1-8	1-8

SEE MITEK STANDARD DETAIL B97791H FOR CONNECTION TO JOINT(S) C , D

UNFACTORED REACTIONS

JT	1ST LCASE COMBINED	MAX./MIN. COMPONENT REACTIONS SNOW	LIVE	PERM.LIVE	WIND	DEAD	SOIL
F	261	193 / 0	0 / 0	0 / 0	0 / 0	69 / 0	0 / 0
C	136	112 / 0	0 / 0	0 / 0	0 / 0	23 / 0	0 / 0
D	29	0 / 0	0 / 0	0 / 0	0 / 0	29 / 0	0 / 0

BEARING MATERIAL TO BE SPF NO.2 OR BETTER AT JOINT(S) F

BRACING

TOP CHORD TO BE SHEATHED OR MAX. PURLIN SPACING = 10.00 FT.
MAX. UNBRACED BOTTOM CHORD LENGTH = 10.00 FT OR RIGID CEILING DIRECTLY APPLIED.

ALL PITCH BREAKS AND PERIMETER CORNER JOINTS MUST BE LATERALLY RESTRAINED.

LOADING

TOTAL LOAD CASES: (5)

CHORDS

MEMB. FR-TO	MAX. FACTORED FORCE (LBS)	FACTORED VERT. LOAD (PLF) FROM	TO	MAX CSI (LC)	MAX. UNBRAC LENGTH
F- B	-339 / 0	0.0	0.0	0.04 (1)	7.81
A- B	0 / 45	-102.0	-102.0	0.15 (5)	10.00
B- C	0 / 0	-102.0	-102.0	0.26 (1)	10.00
F- E	0 / 0	-18.5	-18.5	0.08 (4)	10.00
E- D	0 / 0	-18.5	-18.5	0.08 (4)	10.00

WEBS

MEMB. FR-TO	MAX. FACTORED FORCE (LBS)	MAX CSI (LC)
B- E	0 / 0	0.00 (1)

CANTILEVER ANALYSIS HAS BEEN CONSIDERED IN THIS DESIGN

DESIGN CRITERIA

SPECIFIED LOADS:

TOP CH.	LL	=	29.0	PSF
	DL	=	6.0	PSF
BOT CH.	LL	=	0.0	PSF
	DL	=	7.4	PSF
TOTAL LOAD		=	42.4	PSF

SPACING = 24.0 IN. C/C

THIS TRUSS IS DESIGNED FOR RESIDENTIAL OR SMALL BUILDING REQUIREMENTS OF PART 9, NBCC 2010, NBCC 2015

THIS DESIGN COMPLIES WITH:
- PART 9 OF BCBC 2018 , OBC 2012
- CSA 086-09, CSA 086-14
- TPIC 2011, TPIC 2014

(55 % OF 37.6 P.S.F. G.S.L. PLUS 6.4 P.S.F. RAIN LOAD) EQUALS 29.0 P.S.F. SPECIFIED ROOF LIVE LOAD

ALLOWABLE DEFL.(LL)= L/360 (0.19")
CALCULATED VERT. DEFL.(LL) = L/ 999 (0.00")
ALLOWABLE DEFL.(TL)= L/360 (0.19")
CALCULATED VERT. DEFL.(TL) = L/ 999 (0.01")

CSI: TC=0.26/1.00 (B-C:1) , BC=0.08/1.00 (D-E:4) , WB=0.00/1.00 (B-E:1) , SSI=0.12/1.00 (B-C:1)

DOL LUMBER=1.00 NAIL=1.00 LS BEND=1.10 COMP=1.10 SHEAR=1.10 TENS= 1.10

COMPANION LIVE LOAD FACTOR = 1.00

AUTOSOLVE RIGHT HEEL ONLY

TRUSS PLATE MANUFACTURER IS NOT RESPONSIBLE FOR QUALITY CONTROL IN THE TRUSS MANUFACTURING PLANT .

NAIL VALUES

PLATE	GRIP(DRY) (PSI) MAX	MIN	SHEAR (PLI) MAX	MIN	SECTION (PLI) MAX	MIN
MT20	618	354	1567	788	1987	1656

PLATE PLACEMENT TOL. = 0.250 inches

PLATE ROTATION TOL. = 5.0 Deg.

JSI GRIP= 0.26 (B) (INPUT = 0.90)
JSI METAL= 0.07 (B) (INPUT = 1.00)

LICENSED PROFESSIONAL ENGINEER
09/13/19
H. J. G. ALVES
100009824
PROVINCE OF ONTARIO

Structural component only
DWG# T-1923462

JOB NAME	TRUSS NAME	QUANTITY	PLY	JOB DESC. GREEN PARK HOMES	DRWG NO.
405554	J26S	10	1	TRUSS DESC.	

Tamarack Roof Truss, Burlington

Version 8.300 S May 10 2019 MiTek Industries, Inc. Fri Sep 13 12:04:47 2019 Page 1

ID:08dJJueNb1pNAxJNn9U?SyyCERz-5bdGIT0KXscK5e8e3IhAzXCYYAS_TW9Jfu2JZCye3TU

Scale = 1:27.3

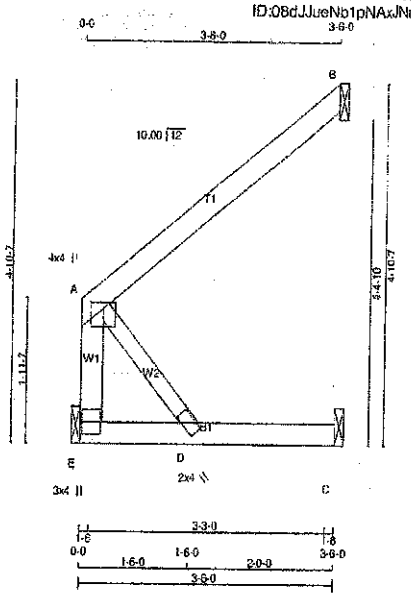

TOTAL WEIGHT = 10 X 13 = 129 lb

LUMBER

N. L. G. A. RULES

CHORDS	SIZE		LUMBER	DESCR.
E - A	2x4	DRY	No.2	SPF
A - B	2x4	DRY	No.2	SPF
E - C	2x4	DRY	No.2	SPF
ALL WEBS	2x3	DRY	No.2	SPF

DRY: SEASONED LUMBER.

PLATES (table is in inches)

JT	TYPE	PLATES	W	LEN	Y	X
A	TMVW+p	MT20	4.0	4.0	1.00	2.00
D	BMW+w	MT20	2.0	4.0		
E	BMV1+p	MT20	3.0	4.0		

DIMENSIONS, SUPPORTS AND LOADINGS SPECIFIED BY FABRICATOR TO BE VERIFIED BY BUILDING DESIGNER

BEARINGS

JT	FACTORED GROSS REACTION VERT	HORZ	MAXIMUM FACTORED GROSS REACTION DOWN	HORZ	UPLIFT	INPUT BRG IN-SX	REQRD BRG IN-SX
E	211	0	211	0	0	1-8	1-8
B	179	0	179	0	0	1-8	1-8
C	32	0	36	0	0	1-8	1-8

SEE MITEK STANDARD DETAIL B97791H FOR CONNECTION TO JOINT(S) E , B , C

UNFACTORED REACTIONS

JT	1ST LCASE COMBINED	MAX./MIN. COMPONENT REACTIONS SNOW	LIVE	PERM.LIVE	WIND	DEAD	SOIL
E	148	102 / 0	0 / 0	0 / 0	0 / 0	47 / 0	0 / 0
B	123	102 / 0	0 / 0	0 / 0	0 / 0	21 / 0	0 / 0
C	26	0 / 0	0 / 0	0 / 0	0 / 0	26 / 0	0 / 0

BRACING

TOP CHORD TO BE SHEATHED OR MAX. PURLIN SPACING = 10.00 FT.

MAX. UNBRACED BOTTOM CHORD LENGTH = 10.00 FT OR RIGID CEILING DIRECTLY APPLIED.

ALL PITCH BREAKS AND PERIMETER CORNER JOINTS MUST BE LATERALLY RESTRAINED.

LOADING

TOTAL LOAD CASES: (4)

CHORDS

MEMB. FR-TO	MAX. FACTORED FORCE (LBS)	FACTORED VERT. LOAD (PLF) FROM	TO	LC1	MAX CSI (LC)	MAX. UNBRAC LENGTH
E- A	-179 / 0	0.0	0.0	0.02 (1)	7.81	
A- B	0 / 0	-102.0	-102.0	0.21 (1)	10.00	
E- D	0 / 0	-18.5	-18.5	0.07 (4)	10.00	
D- C	0 / 0	-18.5	-18.5	0.07 (4)	10.00	

WEBS

MEMB. FR-TO	MAX. FACTORED FORCE (LBS)	MAX CSI (LC)
A- D	0 / 0	0.00 (1)

DESIGN CRITERIA

SPECIFIED LOADS:

TOP CH.	LL	=	29.0	PSF
	DL	=	6.0	PSF
BOT CH.	LL	=	0.0	PSF
	DL	=	7.4	PSF
TOTAL LOAD		=	42.4	PSF

SPACING = 24.0 IN. C/C

THIS TRUSS IS DESIGNED FOR RESIDENTIAL OR SMALL BUILDING REQUIREMENTS OF PART 9, NBCC 2010, NBCC 2015

THIS DESIGN COMPLIES WITH:
- PART 9 OF BCBC 2018 , OBC 2012
- CSA 086-09, CSA 086-14
- TPIC 2011, TPIC 2014

(55 % OF 37.8 P.S.F. G.S.L. PLUS 8.4 P.S.F. RAIN LOAD) EQUALS 29.0 P.S.F. SPECIFIED ROOF LIVE LOAD

ALLOWABLE DEFL.(LL)= L/360 (0.19")
CALCULATED VERT. DEFL.(LL) = L/ 999 (0.00")
ALLOWABLE DEFL.(TL)= L/360 (0.19")
CALCULATED VERT. DEFL.(TL) = L/ 999 (0.01")

CSI: TC=0.21/1.00 (A-B:1) , BC=0.07/1.00 (C-D:4) , WB=0.00/1.00 (A-D:1) , SSI=0.11/1.00 (A-B:1)

DOL LUMBER=1.00 NAIL=1.00 LS BEND=1.10 COMP=1.10 SHEAR=1.10 TENS= 1.10

COMPANION LIVE LOAD FACTOR = 1.00

TRUSS PLATE MANUFACTURER IS NOT RESPONSIBLE FOR QUALITY CONTROL IN THE TRUSS MANUFACTURING PLANT .

NAIL VALUES

PLATE	GRIP(DRY) (PSI) MAX	MIN	SHEAR (PLI) MAX	MIN	SECTION (PLI) MAX	MIN
MT20	618	354	1667	786	1987	1656

PLATE PLACEMENT TOL. = 0.250 inches

PLATE ROTATION TOL. = 5.0 Deg.

JSI GRIP= 0.14 (A) (INPUT = 0.90)
JSI METAL= 0.04 (A) (INPUT = 1.00)

LICENSED PROFESSIONAL ENGINEER
09/13/19
H. J. G. ALVES
100089024
PROVINCE OF ONTARIO

Structural component only
DWG# T-1923482

JOB NAME	TRUSS NAME	QUANTITY	PLY	JOB DESC.	DRWG NO.
405532	J27	8	1	GREEN PARK HOMES TRUSS DESC.	

Tamarack Roof Truss, Burlington

Version 8.300 S May 10 2019 MiTek Industries, Inc. Fri Sep 13 11:22:52 2019 Page 1

ID:08dJJueNb1pNAxJNn9U?SyyCERz-EIAUvVamp7IBs8NHDc4OXAYmQM5Nh3X7L6JjnTye44n

Scale = 1:18.7

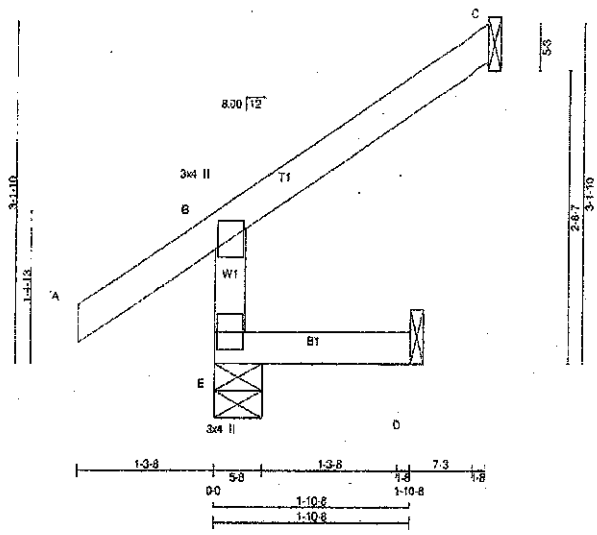

TOTAL WEIGHT = 8 X 9 = 70 lb

LUMBER
N.L. G. A. RULES

CHORDS	SIZE		LUMBER	DESCR.
E - B	2x4	DRY	No.2	SPF
A - C	2x4	DRY	No.2	SPF
E - D	2x4	DRY	No.2	SPF

DRY: SEASONED LUMBER.

PLATES (table is in inches)

JT	TYPE	PLATES	W	LEN	Y	X
B	TMV+p	MT20	3.0	4.0		
E	BMV1+p	MT20	3.0	4.0		

DIMENSIONS, SUPPORTS AND LOADINGS SPECIFIED BY FABRICATOR TO BE VERIFIED BY BUILDING DESIGNER

BEARINGS

JT	FACTORED GROSS REACTION VERT	HORZ	MAXIMUM FACTORED GROSS REACTION DOWN	HORZ	UPLIFT	INPUT BRG IN-SX	REQRD BRG IN-SX
E	324	0	324	0	0	5-8	5-8
C	100	0	100	0	0	1-8	1-8
D	16	0	18	0	0	1-8	1-8

SEE MITEK STANDARD DETAIL B97791H FOR CONNECTION TO JOINT(S) C , D

UNFACTORED REACTIONS

JT	1ST LCASE COMBINED	MAX/MIN COMPONENT REACTIONS SNOW	LIVE	PERM.LIVE	WIND	DEAD	SOIL
E	225	174 / 0	0 / 0	0 / 0	0 / 0	51 / 0	0 / 0
C	69	57 / 0	0 / 0	0 / 0	0 / 0	12 / 0	0 / 0
D	13	0 / 0	0 / 0	0 / 0	0 / 0	13 / 0	0 / 0

BEARING MATERIAL TO BE SPF NO.2 OR BETTER AT JOINT(S) E

BRACING
TOP CHORD TO BE SHEATHED OR MAX. PURLIN SPACING = 6.25 FT.
MAX. UNBRACED BOTTOM CHORD LENGTH = 10.00 FT OR RIGID CEILING DIRECTLY APPLIED.

ALL PITCH BREAKS AND PERIMETER CORNER JOINTS MUST BE LATERALLY RESTRAINED.

LOADING
TOTAL LOAD CASES: (5)

CHORDS

MEMB. FR-TO	MAX. FACTORED FORCE (LBS)	FACTORED VERT. LOAD (PLF) FROM	TO	LC1	MAX CSI (LC)
E- B	-305 / 0	0.0	0.0	0.01 (4)	7.81
A- B	0 / 39	-102.0	-102.0	0.14 (1)	10.00
B- C	-18 / 0	-102.0	-102.0	0.12 (1)	6.25
E- D	0 / 0	-18.5	-18.5	0.02 (4)	10.00

WEBS

MEMB. FR-TO	MAX. FACTORED FORCE (LBS)	MAX CSI (LC)

MAX. UNBRAC LENGTH

CANTILEVER ANALYSIS HAS BEEN CONSIDERED IN THIS DESIGN

LICENSED PROFESSIONAL ENGINEER
09/13/19
H. J. G. ALVES
100009024
PROVINCE OF ONTARIO

[M]

DESIGN CRITERIA

SPECIFIED LOADS:

TOP CH.	LL =	29.0	PSF
	DL =	6.0	PSF
BOT CH.	LL =	0.0	PSF
	DL =	7.4	PSF
TOTAL LOAD	=	42.4	PSF

SPACING = 24.0 IN. C/C

THIS TRUSS IS DESIGNED FOR RESIDENTIAL OR SMALL BUILDING REQUIREMENTS OF PART 9, NBCC 2010. NBCC 2015

THIS DESIGN COMPLIES WITH:
- PART 9 OF BCBC 2018 , OBC 2012
- CSA 086-09, CSA 086-14
- TPIC 2011, TPIC 2014

DESIGN ASSUMPTIONS
-OVERHANG NOT TO BE ALTERED OR CUT OFF.

(55 % OF 37.6 P.S.F. G.S.L. PLUS 8.4 P.S.F. RAIN LOAD) EQUALS 29.0 P.S.F. SPECIFIED ROOF LIVE LOAD

ALLOWABLE DEFL.(LL)= L/360 (0.19")
CALCULATED VERT. DEFL.(LL) = L/ 999 (0.00")
ALLOWABLE DEFL.(TL)= L/360 (0.19")
CALCULATED VERT. DEFL.(TL) = L/ 999 (0.00")

CSI: TC=0.14/1.00 (A-B:1) , BC=0.02/1.00 (D-E:4) , WB=0.00/1.00 (n/a:0) , SSI=0.11/1.00 (B-C:1)

DOL LUMBER=1.00 NAIL=1.00 LS BEND=1.10 COMP=1.10 SHEAR=1.10 TENS= 1.10

COMPANION LIVE LOAD FACTOR = 1.00

AUTOSOLVE RIGHT HEEL ONLY

TRUSS PLATE MANUFACTURER IS NOT RESPONSIBLE FOR QUALITY CONTROL IN THE TRUSS MANUFACTURING PLANT .

NAIL VALUES

PLATE	GRIP(DRY) (PSI) MAX	MIN	SHEAR (PLI) MAX	MIN	SECTION (PLI) MAX	MIN
MT20	618	354	1667	798	1987	1658

PLATE PLACEMENT TOL. = 0.250 Inches

PLATE ROTATION TOL. = 5.0 Deg.

JSI GRIP= 0.13 (B) (INPUT = 0.90)
JSI METAL= 0.10 (B) (INPUT = 1.00)

Structural component only
DWG# T-1923463

JOB NAME	TRUSS NAME	QUANTITY	PLY	JOB DESC.	DRWG NO.
405532	J28	16	1	GREEN PARK HOMES TRUSS DESC.	

Tamarack Roof Truss, Burlington

Version 8.300 S May 10 2019 MiTek Industries, Inc. Fri Sep 13 11:22:53 2019 Page 1
ID:08dJJueNb1pNAxJNn9U?SyyCERz-ixs6rbOaRt2UlyTnJbd4N4yCmRfQWnHZm3HJwye44m

Scale = 1:16.4

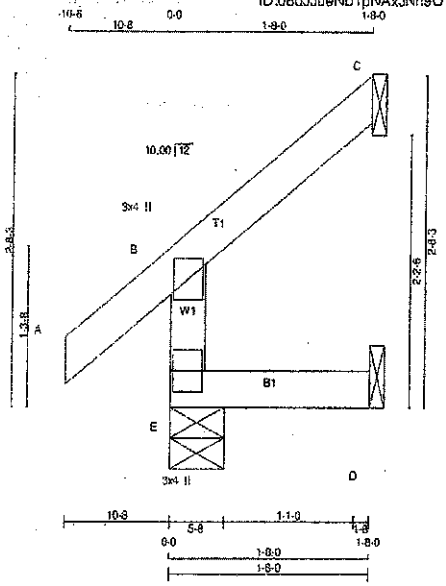

TOTAL WEIGHT = 16 X 7 = 111 lb

LUMBER
N. L. G. A. RULES

CHORDS	SIZE		LUMBER	DESCR.
E - B	2x4	DRY	No.2	SPF
A - C	2x4	DRY	No.2	SPF
E - D	2x4	DRY	No.2	SPF

DRY: SEASONED LUMBER.

PLATES (table is in inches)

JT	TYPE	PLATES	W	LEN Y	X
B	TMV+p	MT20	3.0	4.0	
E	BMV1+p	MT20	3.0	4.0	

DIMENSIONS, SUPPORTS AND LOADINGS SPECIFIED BY FABRICATOR TO BE VERIFIED BY BUILDING DESIGNER

BEARINGS

JT	FACTORED GROSS REACTION VERT	HORZ	MAXIMUM FACTORED GROSS REACTION DOWN	HORZ	UPLIFT	INPUT BRG IN-SX	REQRD BRG IN-SX
E	221	0	221	0	0	5-8	5-8
C	65	0	65	0	0	1-8	1-8
D	14	0	16	0	0	1-8	1-8

SEE MITEK STANDARD DETAIL B97791H FOR CONNECTION TO JOINT(S) C , D

UNFACTORED REACTIONS

JT	1ST LCASE COMBINED	MAX./MIN. COMPONENT REACTIONS SNOW	LIVE	PERM.LIVE	WIND	DEAD	SOIL
E	154	116 / 0	0 / 0	0 / 0	0 / 0	37 / 0	0 / 0
C	44	37 / 0	0 / 0	0 / 0	0 / 0	8 / 0	0 / 0
D	11	0 / 0	0 / 0	0 / 0	0 / 0	11 / 0	0 / 0

BEARING MATERIAL TO BE SPF NO.2 OR BETTER AT JOINT(S) E

BRACING
TOP CHORD TO BE SHEATHED OR MAX. PURLIN SPACING = 6.25 FT.
MAX. UNBRACED BOTTOM CHORD LENGTH = 10.00 FT OR RIGID CEILING DIRECTLY APPLIED.

ALL PITCH BREAKS AND PERIMETER CORNER JOINTS MUST BE LATERALLY RESTRAINED.

LOADING
TOTAL LOAD CASES: (5)

CHORDS

MEMB. FR-TO	MAX. FACTORED FORCE (LBS)	FACTORED VERT. LOAD (PLF) FROM	TO	MAX LC1 CSI (LC)	MAX. UNBRAC LENGTH
E- B	-204 / 0	0.0	0.0	0.01 (4)	7.81
A- B	0 / 32	-102.0	-102.0	0.07 (1)	10.00
B- C	-13 / 0	-102.0	-102.0	0.05 (1)	6.25
E- D	0 / 0	-16.5	-16.5	0.01 (4)	10.00

WEBS

MEMB. FR-TO	MAX. FACTORED FORCE (LBS)	MAX CSI (LC)

CANTILEVER ANALYSIS HAS BEEN CONSIDERED IN THIS DESIGN

LICENSED PROFESSIONAL ENGINEER
09/13/19
H. J. G. ALVES
100009024
PROVINCE OF ONTARIO

DESIGN CRITERIA

SPECIFIED LOADS:

TOP CH.	LL =	29.0	PSF
	DL =	6.0	PSF
BOT CH.	LL =	0.0	PSF
	DL =	7.4	PSF
TOTAL LOAD	=	42.4	PSF

SPACING = 24.0 IN. C/C

THIS TRUSS IS DESIGNED FOR RESIDENTIAL OR SMALL BUILDING REQUIREMENTS OF PART 9, NBCC 2010, NBCC 2015

THIS DESIGN COMPLIES WITH:
- PART 9 OF BCBC 2018 , OBC 2012
  CSA 086-09, CSA 086-14
- TPIC 2011, TPIC 2014

DESIGN ASSUMPTIONS
-OVERHANG NOT TO BE ALTERED OR CUT OFF.

(55 % OF 37.6 P.S.F. G.S.L. PLUS 8.4 P.S.F. RAIN LOAD) EQUALS 29.0 P.S.F. SPECIFIED ROOF LIVE LOAD

ALLOWABLE DEFL.(LL)= L/360 (0.19")
CALCULATED VERT. DEFL.(LL) = L/ 999 (0.00")
ALLOWABLE DEFL.(TL)= L/360 (0.19")
CALCULATED VERT. DEFL.(TL) = L/ 999 (0.00")

CSI: TC=0.07/1.00 (A-B:1) , BC=0.01/1.00 (D-E:4) , WB=0.00/1.00 (e/a:0) , SSI=0.06/1.00 (B-C:1)

DOL LUMBER=1.00 NAIL=1.00 LS BEND=1.10 COMP=1.10 SHEAR=1.10 TENS= 1.10

COMPANION LIVE LOAD FACTOR = 1.00

AUTOSOLVE RIGHT HEEL ONLY

TRUSS PLATE MANUFACTURER IS NOT RESPONSIBLE FOR QUALITY CONTROL IN THE TRUSS MANUFACTURING PLANT.

NAIL VALUES

PLATE	GRIP(DRY) (PSI) MAX	MIN	SHEAR (PLI) MAX	MIN	SECTION (PLI) MAX	MIN
MT20	618	354	1667	788	1987	1658

PLATE PLACEMENT TOL. = 0.250 inches

PLATE ROTATION TOL. = 5.0 Deg.

JSI GRIP = 0.10 (B) (INPUT = 0.90)
JSI METAL = 0.07 (B) (INPUT = 1.00)

Structural component only
DWG# T-1923464

isDesign™

Client:
Project:
Address:

Date: 2/2019
Designer:
Job Name: 405554
Project #:

B1 S-P-F #2 2.000" X 10.000" 2-Ply - PASSED

Level: Level

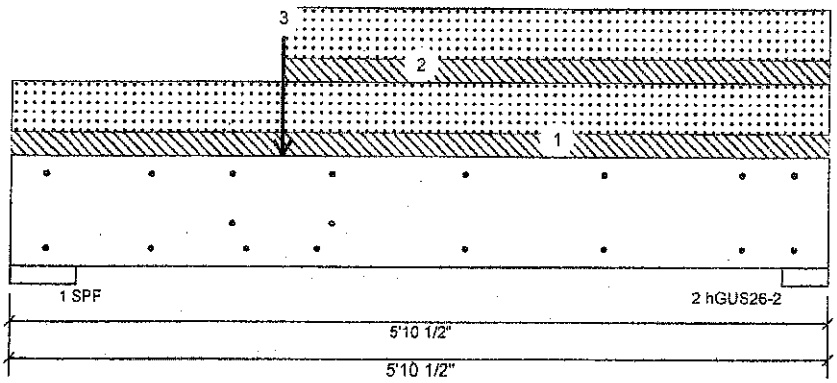

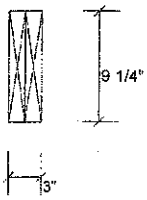

Member Information

Type:	Girder	Application:	Roof (Residential)
Plies:	2	Slope:	0/12
Moisture Condition:	Dry	Design Method:	LSD
Deflection LL:	360	Building Code:	NBCC 2015 / OBC 2012
Deflection TL:	360	Load Sharing:	No
Importance:	Normal	Deck:	Not Checked
		Vibration:	Not Checked

Unfactored Reactions UNPATTERNED lb (Uplift)

Brg	Live	Dead	Snow	Wind
1	0	322	682	0
2	0	324	694	0

Bearings and Factored Reactions

Bearing	Length	Cap.	React D/L lb	Total	Ld. Case	Ld. Comb.
1 - SPF	5.500"	14%	403 / 1022	1425	L	1.25D+1.5S
2 - hGUS...	4.000"	20%	405 / 1042	1446	L	1.25D+1.5S

Analysis Results

Analysis	Actual	Location	Allowed	Capacity	Comb.	Case
Moment	2134 ft-lb	2'4 7/8"	6039 ft-lb	0.353 (35%)	1.25D+1.5S	L
Unbraced	2134 ft-lb	2'4 7/8"	5236 ft-lb	0.408 (41%)	1.25D+1.5S	L
Shear	1676 lb	1'2"	3984 lb	0.421 (42%)	1.25D+1.5S	L
LL Defl inch	0.018 (L/3492)	2'11 1/16"	0.174 (L/360)	0.100 (10%)	S	L
TL Defl inch	0.026 (L/2375)	2'11 1/16"	0.174 (L/360)	0.150 (15%)	D+S	L

Design Notes

1. Fasten all plies using 2 rows of Pneumatic Gun Nail (.120x3.25") at 12" o.c. Maximum end distance not to exceed 6".
2. Refer to last page of calculations for fasteners required for specified loads.
3. Concentrated load fastener specification is in addition to hanger fasteners if a hanger is present.
4. Girders are designed to be supported on the bottom edge only.
5. Top braced at bearings.
6. Bottom braced at bearings.
7. Lateral slenderness ratio based on single ply width.

LICENSED PROFESSIONAL ENGINEER
05/12/19
H. J. G. ALVES
100009024
PROVINCE OF ONTARIO

DWG NO. TAM 71923483 1/2
STRUCTURAL
COMPONENT ONLY

ID	Load Type	Location	Trib Width	Side	Dead	Live	Snow	Wind	Comments
1	Uniform		1-0-0	Far Face	13.4 PSF	0 PSF	29 PSF	0 PSF	
2	Part. Uniform	1-11-4 to 5-10-8	5-11-0	Near Face	13.4 PSF	0 PSF	29 PSF	0 PSF	
3	Point	1-11-4		Near Face	255 lb	0 lb	530 lb	0 lb	

Manufacturer Info

Tamarack Roof Trusses
3255 North Service Road, ON
L7N 3G2
905-335-1115

This design is valid until 12/11/2021

isDesign™

Client:
Project:
Address:

Date: 2/2019
Designer:
Job Name: 405554
Project #:

RECEIVED
SEP 16 2019
TOWN OF CALEDON
BUILDING SECTION
FILE NO

Level: Level

B1 S-P-F #2 2.000" X 10.000" 2-Ply - PASSED

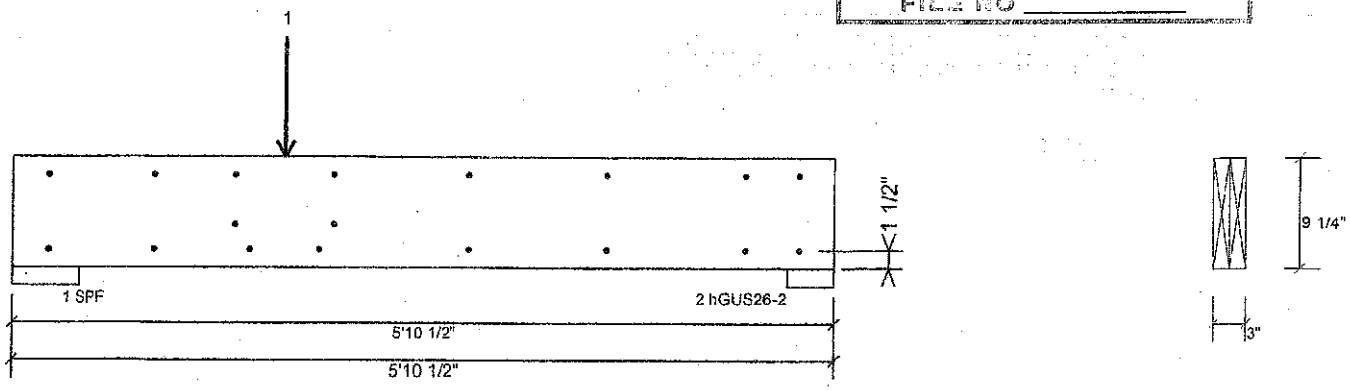

Multi-Ply Analysis

Fasten all plies using 2 rows of Pneumatic Gun Nail (.120x3.25") at 12" o.c. except for regions covered by concentrated load fastening. Maximum end distance not to exceed 6"

Capacity	78.6 %
Load	178.2 PLF
Yield Limit per Foot	226.7 PLF
Yield Limit per Fastener	113.3 lb.
Yield Mode	g
Edge Distance	1 1/2"
Min. End Distance	3"
Load Combination	1.25D+1.5S
Duration Factor	1.00

Concentrated Load

Fasten at concentrated side load at 1-11-4 with a minimum of (6) – Pneumatic Gun Nail (.120x3.25") in the pattern shown.

Capacity	81.9 %
Load	556.9lb.
Total Yield Limit	680.1 lb.
Yield Limit per Fastener	113.3 lb.
Yield Mode	g
Load Combination	1.25D+1.5S
Duration Factor	1.00

Min/Max fastener distances for Concentrated Side Loads

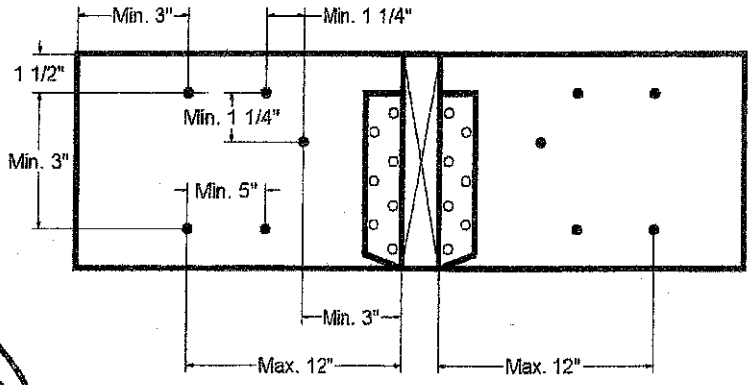

LICENSED PROFESSIONAL ENGINEER
26/12/19
H. J. GALVES
100009024
PROVINCE OF ONTARIO

DWG NO. TAM 19423483 2/2
STRUCTURAL COMPONENT ONLY

This design is valid until 12/11/2021

Manufacturer info

Tamarack Roof Trusses
3255 North Service Road, ON
L7N 3G2
905-335-1115

TAMARACK LUMBER INC
ALPA LUMBER GROUP

isDesign™

Client:
Project:
Address:

Date: 2/2019
Designer:
Job Name: 405554
Project #:

B2 S-P-F #2 2.000" X 10.000" 2-Ply - PASSED

Level: Level

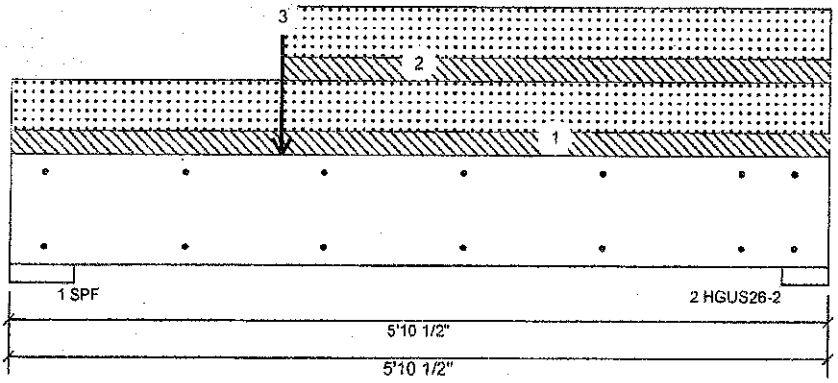

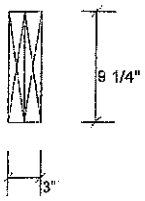

Member Information

Type:	Girder	Application:	Roof (Residential)
Plies:	2	Slope:	0/12
Moisture Condition:	Dry	Design Method:	LSD
Deflection LL:	360	Building Code:	NBCC 2015 / OBC 2012
Deflection TL:	360	Load Sharing:	No
Importance:	Normal	Deck:	Not Checked
		Vibration:	Not Checked

Unfactored Reactions UNPATTERNED lb (Uplift)

Brg	Live	Dead	Snow	Wind
1	0	322	682	0
2	0	324	694	0

Bearings and Factored Reactions

Bearing	Length	Cap.	React D/L lb	Total	Ld. Case	Ld. Comb.
1 - SPF	5.500"	14%	403 / 1022	1425	L	1.25D+1.5S
2 - HGUS...	4.000"	20%	405 / 1042	1446	L	1.25D+1.5S

Analysis Results

Analysis	Actual	Location	Allowed	Capacity	Comb.	Case
Moment	2134 ft-lb	2'4 7/8"	6039 ft-lb	0.353 (35%)	1.25D+1.5S	L
Unbraced	2134 ft-lb	2'4 7/8"	5236 ft-lb	0.408 (41%)	1.25D+1.5S	L
Shear	1401 lb	1'2"	3984 lb	0.352 (35%)	1.25D+1.5S	L
LL Defl inch	0.018 (L/3492)	2'11 1/16"	0.174 (L/360)	0.100 (10%)	S	L
TL Defl inch	0.026 (L/2375)	2'11 1/16"	0.174 (L/360)	0.150 (15%)	D+S	L

Design Notes

1. Fasten all plies using 2 rows of 10d Box nails (.128x3") at 12" o.c. Maximum end distance not to exceed 6".
2. Refer to last page of calculations for fasteners required for specified loads.
3. Girders are designed to be supported on the bottom edge only.
4. Top loads must be supported equally by all plies.
5. Top braced at bearings.
6. Bottom braced at bearings.
7. Lateral slenderness ratio based on single ply width.

LICENSED PROFESSIONAL ENGINEER
09/12/19
H. J. G. ALVES
100009024
PROVINCE OF ONTARIO

DWG NO. TAM 7923484
STRUCTURAL 1/2
COMPONENT ONLY

ID	Load Type	Location	Trib Width	Side	Dead	Live	Snow	Wind	Comments
1	Uniform		1-0-0	Far Face	13.4 PSF	0 PSF	29 PSF	0 PSF	
2	Part. Uniform	1-11-4 to 5-10-8	5-11-0	Top	13.4 PSF	0 PSF	29 PSF	0 PSF	
3	Point	1-11-4		Top	255 lb	0 lb	530 lb	0 lb	

Manufacturer Info

Tamarack Roof Trusses
3255 North Service Road, ON
L7N 3G2
905-335-1115

TAMARACK LUMBER INC
ALPA LUMBER GROUP

This design is valid until 12/11/2021

isDesign™

Client:
Project:
Address:

Date: 2/2019
Designer:
Job Name: 405554
Project #:

B2 S-P-F #2 2.000" X 10.000" 2-Ply - PASSED

Level: Level

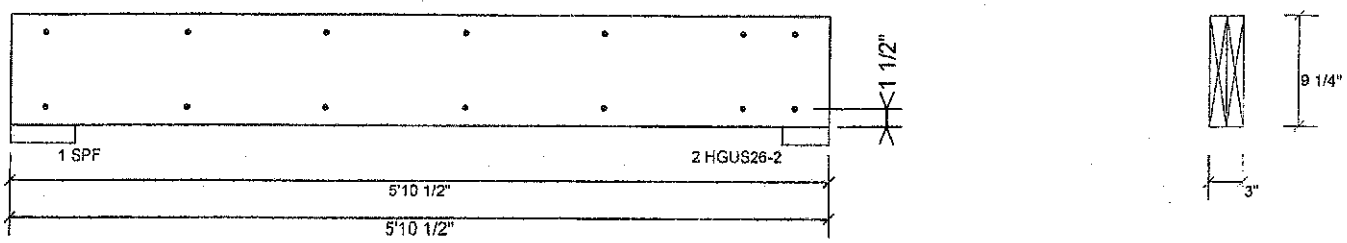

Multi-Ply Analysis

Fasten all plies using 2 rows of 10d Box nails (.128x3") at 12" o.c.. Maximum end distance not to exceed 6"

Capacity	11.8 %
Load	30.1 PLF
Yield Limit per Foot	255.6 PLF
Yield Limit per Fastener	127.8 lb.
Yield Mode	g
Edge Distance	1 1/2"
Min. End Distance	3"
Load Combination	1.25D+1.5S
Duration Factor	1.00

LICENSED PROFESSIONAL ENGINEER
09/01/21
H. J. G. ALVES
100009024
PROVINCE OF ONTARIO

DWG NO. TAM 79234 84
STRUCTURAL 2/2
COMPONENT ONLY

Manufacturer Info	Tamarack Roof Trusses 3255 North Service Road, ON L7N 3G2 905-335-1115

TAMARACK LUMBER INC.
ALPA LUMBER GROUP

This design is valid until 12/11/2021

LUL/LUS/LJS/HUS/HHUS/HGUS

SIMPSON Strong-Tie®

Standard and Double-Shear Joist Hangers

This product is preferable to similar connectors because of a) easier installation, b) higher capacities, c) lower installed cost, or a combination of these features.

Most hangers in this series have double-shear nailing — an innovation that distributes the load through two points on each joist nail for greater strength. This allows for fewer nails, faster installation, and the use of all common nails for the same connection. (Do not bend or remove tabs)

Double-shear hangers range from the light capacity LUS hangers to the highest capacity HGUS hangers. For medium load truss applications, the HUS offers a lower cost alternative and easier installation than the HGUS hangers, while providing greater load capacity and bearing than the LUS.

Material: See table on pp. 258–259.

Finish: Galvanized. Some products available in stainless steel or ZMAX® coating; see Corrosion Information, pp. 20–24.

Installation:

- Use all specified fasteners; see General Notes.
- Nails must be driven at an angle through the joist or truss into the header to achieve the tabulated resistances (except LUL).
- Where 16d commons are specified, 10d commons may be used at 0.83 of the tabulated factored resistance.
- Not designed for welded or nailer applications.
- With single ply 2x carrying members, use 10d x 1½" nails into the header and 10d commons into the joist, and reduce the resistance to 0.64 of the table value where 16d nails are specified and 0.77 where 10d nails are specified.

Options:

- LUS, LJS, LUL and HUS hangers cannot be modified.
- Other sizes available; consult your Simpson Strong-Tie representative.
- See Hanger Options information on p. 126.

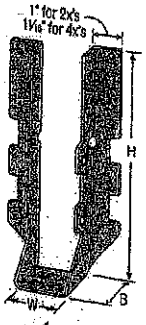

LUS28

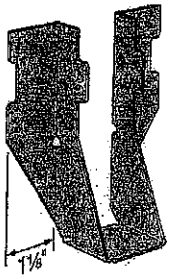

LU26L

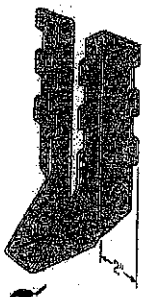

HUS210
(HUS26, HUS28, and HHUS similar)

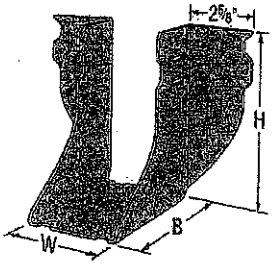

HGUS28-2

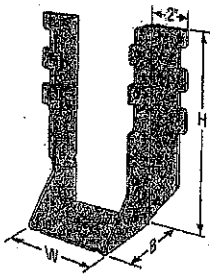

HHUS210-2

Double-Shear Nailing Top View

Double-Shear Nailing Side View; Do not bend tab

Dome Double-Shear Nailing Side View *(available on some models)*

U.S. Patent 5,603,580

Typical HUS26 Installation with Reduced Heel Height

(Truss Designer to provide fastener quantity for connecting multiple members together)

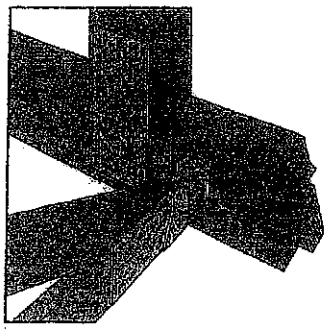

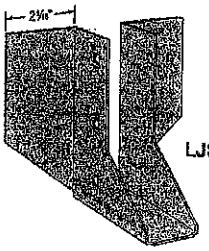

LJS26DS

Plated Truss Connectors

C-C-CAN2018 ©2017 SIMPSON STRONG-TIE COMPANY INC.

LUL/LUS/LJS/HUS/HHUS/HGUS

SIMPSON Strong-Tie®

LICENSED PROFESSIONAL ENGINEER 1/15/18 B. D. BUNTING PROVINCE OF ONTARIO

HHUS/HGUS

See Hanger Options information on pp. 125–127.

HHUS — Sloped and/or Skewed Seat

- HHUS hangers can be skewed to a maximum of 45° and/or sloped to a maximum of 45°
- For skew only, maximum factored down resistance is 0.85 of the table value
- For sloped only or sloped and skewed hangers, the maximum factored down resistance is 0.72 of the table value
- Uplift resistances for sloped/skewed conditions are 0.62 of the table value
- The joist must be bevel-cut to allow for double-shear nailing

HGUS — Skewed Seat

- HGUS hangers can be skewed only to a maximum of 45°. Factored resistances are:

HGUS Seat Width	Joist	Down Resistance	Uplift
W < 2"	Bevel or square cut	0.62 of table value	0.46 of table value
2" < W < 6"	Bevel cut	0.67 of table value	0.41 of table value
2" < W < 6"	Square cut	0.46 of table value	0.41 of table value
W > 6"	Bevel cut	0.75 of table value	0.41 of table value

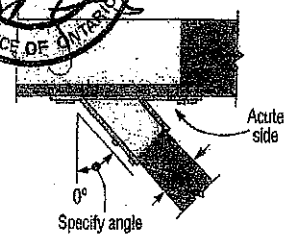

Top View HHUS Hanger Skewed Right
(joist must be bevel cut)
All joist nails installed on the outside angle *(non-acute side)*.

Standard and Double-Shear Joist Hangers (cont.)

These products are available with additional corrosion protection. For more information, see p. 24.

These products are approved for installation with the Strong-Drive® SD Connector screw. See pp. 32–34 for more information.

Model No.	Ga.	Dimensions (in.) W	H	B	d_e[2]	Fasteners Header	Joist	Factored Resistance D.F.+S.P. Uplift (Kᴅ = 1.15) lb. kN	D.F.+S.P. Normal (Kᴅ = 1.00) lb. kN	S-P-F Uplift (Kᴅ = 1.15) lb. kN	S-P-F Normal (Kᴅ = 1.00) lb. kN
Single 2x Sizes											
LUS24	18	1⅝	3⅛	1¾	2⅞	(4) 10d	(2) 10d	710 / 3.16	1625 / 7.23	645 / 2.87	1155 / 5.14
LU24L	22	1⅝	3	1⅝	2 11/16	(4) 10d	(2) 10d x 1½"	360 / 1.60	1020 / 4.54	320 / 1.42	725 / 3.22
LU26L	22	1⅝	5	1⅝	4⅝	(6) 10d	(4) 10d x 1½"	720 / 3.20	1605 / 7.14	645 / 2.87	1140 / 5.07
LUS26	18	1⅝	4¾	1¾	3¾	(4) 10d	(4) 10d	1420 / 6.32	2170 / 9.65	1290 / 5.74	1630 / 7.25
HUS26	16	1⅝	5¾	3	3 15/16	(14) 16d	(6) 16d	2705 / 12.03	4940 / 21.97	2065 / 9.20	3875 / 17.24
LJS26BS	18	1⅝	5	3½	4⅝	(16) 10d	(6) 10d	2055 / 9.14	4265 / 18.97	1460 / 6.49	4115 / 18.31
HGUS26	12	1⅝	5⅝	5	4⅞	(26) 16d	(8) 16d	2685 / 11.95	6825 / 30.36	2685 / 11.96	5700 / 25.35
LU28L	20	1⅝	6¾	1⅝	5⅞	(8) 10d	(6) 10d x 1½"	1140 / 5.07	2185 / 9.72	1020 / 4.54	1550 / 6.89
LUS28	18	1⅝	6⅝	1¾	3¾	(8) 10d	(4) 10d	1420 / 6.32	2520 / 11.21	1290 / 5.74	1790 / 7.96
HUS28	16	1⅝	7 1/16	3	6 1/16	(22) 16d	(8) 16d	3605 / 16.04	5365 / 23.86	2675 / 11.90	4345 / 19.33
HGUS28	12	1⅝	7⅛	5	6⅛	(36) 16d	(12) 16d	3310 / 14.72	7675 / 34.13	3310 / 14.74	6900 / 30.73
LU210L	20	1⅝	8	1⅝	7⅝	(10) 10d	(6) 10d x 1½"	1140 / 5.07	2495 / 11.10	1020 / 4.54	1770 / 7.87
LUS210	18	1⅝	7 13/16	1¾	3⅞	(8) 10d	(4) 10d	1420 / 6.32	2785 / 12.39	1290 / 5.74	2210 / 9.83

1. Factored uplift resistances have been increased 15% for wind or earthquake loading; no further increase is allowed.
2. Designer must ensure that hanger is compatible with truss when reduced heel height is used.
3. d_e is the distance from the bearing seat to the top joist nail.
4. Resistances shown require a minimum 2-ply girder truss. For fastening to single-ply truss request technical bulletin T-C-N10TRSSCN and/or see installation notes.
5. Nails: 16d = 0.162" dia. x 3½" long. See pp. 27–28 for other nail sizes and information.

C-C-CAN2018 ©2017 SIMPSON STRONG-TIE COMPANY INC.

RECEIVED
SEP 16 2019
TOWN OF CALEDON

SIMPSON Strong-Tie®

Face-Mount Hangers

These products are available with additional corrosion protection. For more information, see p. 24.

These products are approved for installation with the Strong-Drive® SD Connector screw. See pp. 32–34 for more information.

Model No.	Ga.	Dimensions (in.) W	H	B	d_B[3]	Fasteners Header	Joist	Factored Resistance D.Fir-L Uplift (K_D = 1.15) lb. kN	D.Fir-L Normal (K_D = 1.00) lb. kN	S-P-F Uplift (K_D = 1.15) lb. kN	S-P-F Normal (K_D = 1.00) lb. kN
Double 2x Sizes											
LUS24-2	18	3⅛	3⅛	2	1½	(4) 16d	(2) 16d	835 / 3.71	2020 / 8.99	590 / 2.62	1435 / 6.38
LUS26-2	18	3⅛	4⅞	2	4	(4) 16d	(4) 16d	1720 / 7.65	2595 / 11.54	1545 / 6.87	1920 / 8.54
HHUS26-2	14	3⅝	5⅜	3	3 15/16	(14) 16d	(6) 16d	2850 / 12.68	7335 / 32.63	2065 / 9.20	5205 / 23.15
HGUS26-2	12	3⅝	5⅞	4	4⅛	(20) 16d	(8) 16d	4385 / 19.51	8950 / 39.81	3110 / 13.83	6355 / 28.27
LUS28-2	18	3⅛	7	2	4	(6) 16d	(4) 16d	1720 / 7.65	3325 / 14.79	1545 / 6.87	2575 / 11.45
HHUS28-2	14	3⅝	7⅝	3	6⅛	(22) 16d	(8) 16d	3765 / 16.75	8940 / 39.77	2675 / 11.90	6345 / 28.22
HGUS28-2	12	3⅝	7⅞	4	6⅛	(36) 16d	(12) 16d	6070 / 27.00	12980 / 57.74	4310 / 19.17	9215 / 40.99
LUS210-2	18	3⅛	9	2	6	(8) 16d	(6) 16d	2580 / 11.48	4500 / 20.02	2320 / 10.32	3195 / 14.21
HHUS210-2	14	3⅝	9 9/16	3	8	(30) 16d	(10) 16d	4670 / 20.77	9860 / 43.87	4235 / 18.84	7000 / 31.14
HGUS210-2	12	3⅝	9 9/16	4	8⅛	(46) 16d	(16) 16d	6840 / 30.43	14015 / 62.34	4855 / 21.60	10270 / 45.69
Triple 2x Sizes											
HGUS26-3	12	4 15/16	5⅛	4	4⅛	(20) 16d	(8) 16d	4385 / 19.51	8950 / 39.81	3110 / 13.83	6355 / 28.27
HGUS28-3	12	4 15/16	7¼	4	6⅛	(36) 16d	(12) 16d	6070 / 27.00	12980 / 57.74	4310 / 19.17	9215 / 40.99
HHUS210-3	14	4 15/16	9	3	7 15/16	(30) 16d	(10) 16d	4670 / 20.77	9670 / 43.02	4235 / 18.84	6865 / 30.54
HGUS210-3	12	4 15/16	9¼	4	8⅛	(46) 16d	(16) 16d	6840 / 30.43	14645 / 65.14	4855 / 21.60	10400 / 46.26
Quadruple 2x Sizes											
HGUS26-4	12	6 9/16	5 7/16	4	4⅛	(20) 16d	(8) 16d	4385 / 19.51	8950 / 39.81	3110 / 13.83	6355 / 28.27
HGUS28-4	12	6 9/16	7 9/16	4	6⅛	(36) 16d	(12) 16d	6070 / 27.00	12980 / 57.74	4310 / 19.17	9215 / 40.99
HHUS210-4	14	6⅞	8⅞	3	7 13/16	(30) 16d	(10) 16d	4670 / 20.77	10165 / 45.22	4235 / 18.84	7210 / 32.07
HGUS210-4	12	6 9/16	9 3/16	4	8⅛	(46) 16d	(16) 16d	6840 / 30.43	14645 / 65.14	4855 / 21.60	10400 / 46.26
HGUS212-4	12	6 9/16	10⅝	4	10⅛	(56) 16d	(20) 16d	7640 / 33.98	14995 / 66.70	5425 / 24.13	10645 / 47.35
HGUS214-4	12	6 9/16	12⅝	4	11⅞	(66) 16d	(22) 16d	10130 / 45.06	16400 / 72.95	7195 / 32.00	11645 / 51.80
4x Sizes											
LUS46	18	3 9/16	4¾	2	3⅞	(4) 16d	(4) 16d	1720 / 7.65	2595 / 11.54	1545 / 6.87	1920 / 8.54
HHUS46	14	3⅝	5¼	3	3 15/16	(14) 16d	(6) 16d	2540 / 11.30	7335 / 32.63	2065 / 9.20	5205 / 23.15
HGUS46	12	3⅝	5¼	4	4⅛	(20) 16d	(8) 16d	4385 / 19.51	8950 / 39.81	3110 / 13.83	6355 / 28.27
LUS48	18	3 9/16	6¾	2	3 7/16	(6) 16d	(4) 16d	1720 / 7.65	3325 / 14.79	1545 / 6.87	2575 / 11.45
HHUS48	14	3⅝	7⅛	3	6⅛	(22) 16d	(8) 16d	3765 / 16.75	8940 / 39.77	2675 / 11.90	6345 / 28.22
HGUS48	12	3⅝	7 1/16	4	6⅛	(36) 16d	(12) 16d	6070 / 27.00	12980 / 57.74	4310 / 19.17	9215 / 40.99
LUS410	18	3 9/16	8¾	2	5 9/16	(8) 16d	(6) 16d	2580 / 11.48	4500 / 20.02	2320 / 10.32	3195 / 14.21
HGUS410	12	3⅝	9	4	8 1/16	(46) 16d	(16) 16d	6840 / 30.43	14015 / 62.34	4855 / 21.60	10270 / 45.69
HGUS412	12	3⅝	10 7/16	4	10 7/16	(56) 16d	(20) 16d	7640 / 33.98	14995 / 66.70	5425 / 24.13	10645 / 47.35
HGUS414	12	3⅝	12 7/16	4	11 15/16	(66) 16d	(22) 16d	10130 / 45.06	16400 / 72.95	7195 / 32.00	11645 / 51.80

LICENSED PROFESSIONAL ENGINEER 1/15/18 B. D. BUNTING PROVINCE OF ONTARIO

Plated Truss Connectors

See footnotes on p. 258.

C-C-CAN2018 ©2017 SIMPSON STRONG-TIE COMPANY INC.

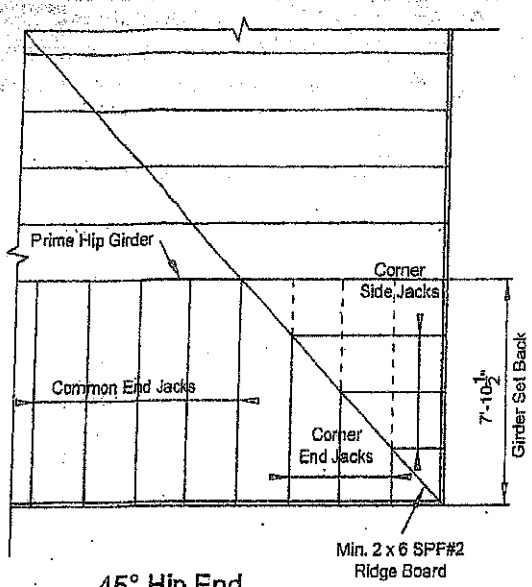

45° Hip End

LUMBER SPECIFICATION

TOP CHORD : 2 x 4 SPF#2
BOTTOM CHORD : 2 x 4 SPF#2
WEBS : 2 x 3 SPF#2
UNLESS OTHERWISE SHOWN

DESIGN LOAD

TOP CHORD SNOW LOAD	:	40.5 P.S.F.
TOP CHORD DEAD LOAD	:	3.0 P.S.F.
BOTTOM CHORD LIVE LOAD	:	0.0 P.S.F.
BOTTOM CHORD DEAD LOAD	:	7.0 P.S.F.
TOTAL LOAD		50.5 P.S.F

LICENSED PROFESSIONAL ENGINEER
06/11/2018
H.J.G. ALVES
PROVINCE OF ONTARIO

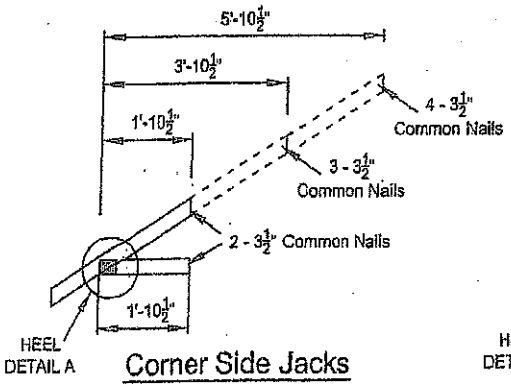

Corner Side Jacks

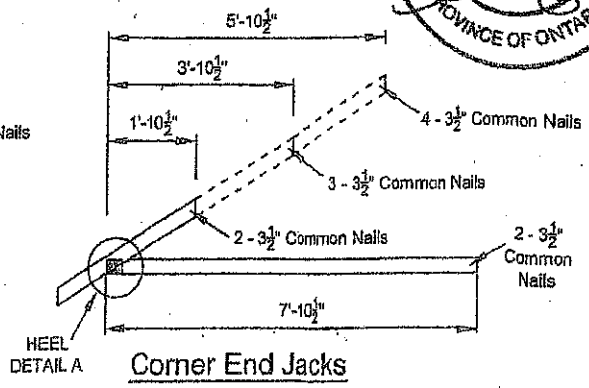

Corner End Jacks

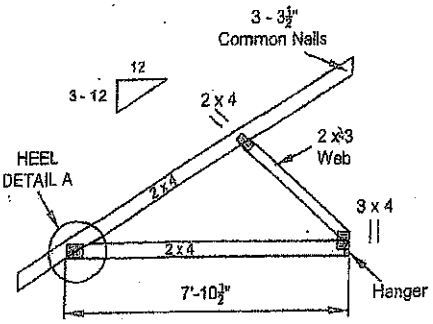

Common End Jacks

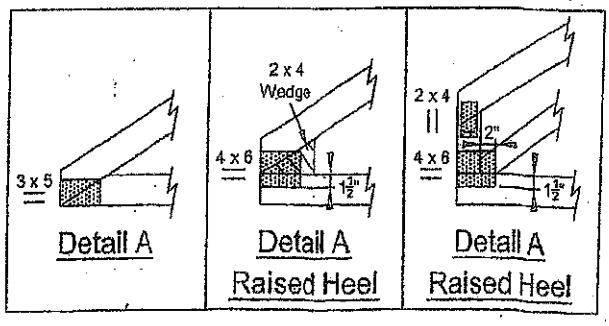

NOTE: DESIGN CONFORMS TO PART 9, O.B.C. 2012 (L.S.D. DESIGN)

T-1800217

RECEIVED
SEP 16 2019
TOWN OF CALEDON
BUILDING SECTION
FILE NO

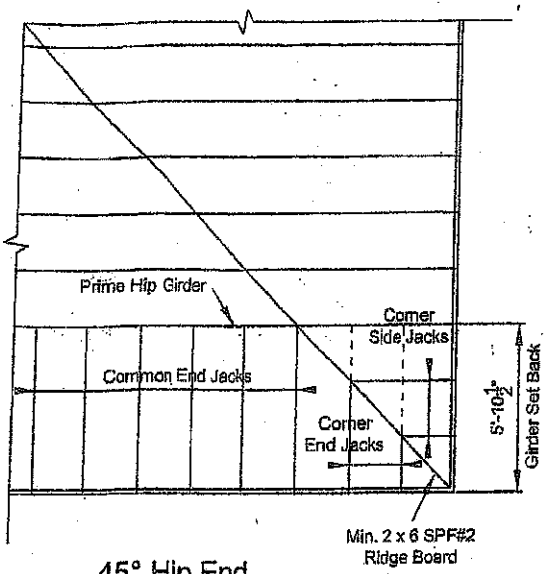

45° Hip End

LUMBER SPECIFICATION

TOP CHORD : 2 x 4 SPF#2
BOTTOM CHORD : 2 x 4 SPF#2
WEBS : 2 x 3 SPF#2
UNLESS OTHERWISE SHOWN

DESIGN LOAD

TOP CHORD SNOW LOAD	:	40.5 P.S.F.
TOP CHORD DEAD LOAD	:	3.0 P.S.F.
BOTTOM CHORD LIVE LOAD	:	0.0 P.S.F.
BOTTOM CHORD DEAD LOAD	:	7.0 P.S.F.
TOTAL LOAD	:	50.5 P.S.F

LICENSED PROFESSIONAL ENGINEER
06/11/18
H.J.G. ALVES
PROVINCE OF ONTARIO

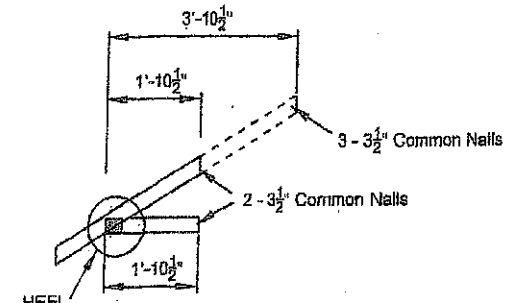

Corner Side Jacks

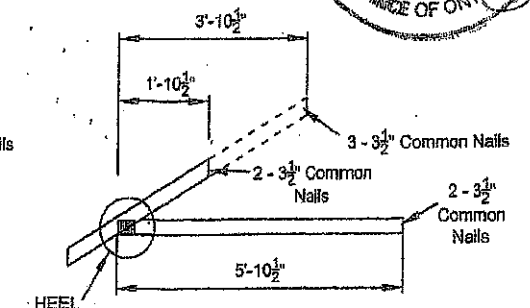

Corner End Jacks

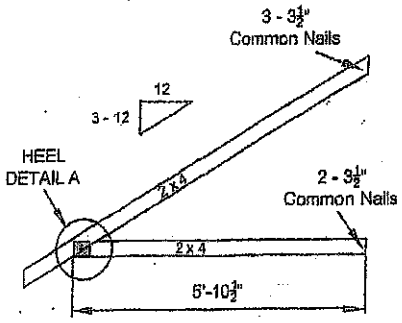

Common End Jacks

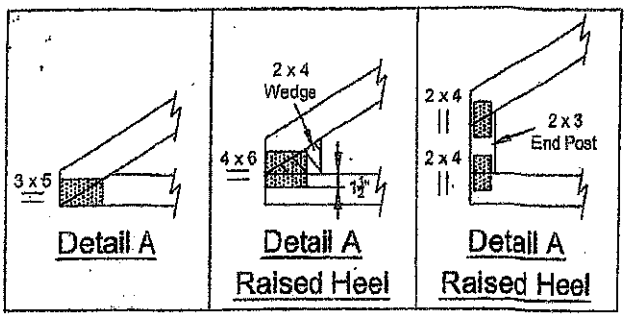

NOTE: DESIGN CONFORMS TO PART 9, O.B.C. 2012 (L.S.D. DESIGN)

T-1800216

SEP 16 2019

Symbols

PLATE LOCATION AND ORIENTATION

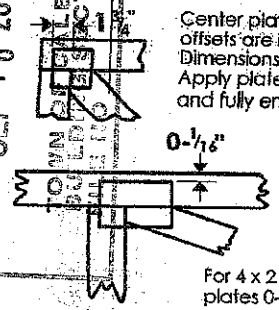

Center plate on joint unless x, y offsets are indicated. Dimensions are in ft-in-sixteenths or mm. Apply plates to both sides of truss and fully embed teeth.

For 4 x 2 orientation, locate plates 0-1/16" from outside edge of truss.

This symbol indicates the required direction of slots in connector plates.

*Plate location details available in MiTek software or upon request.

PLATE SIZE

4 x 4

The first dimension is the plate width measured perpendicular to slots. Second dimension is the length parallel to slots.

LATERAL BRACING LOCATION

Indicated by symbol shown and/or by text in the bracing section of the output. Use T, I or Eliminator bracing if indicated.

BEARING

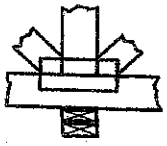

Indicates location where bearings (supports) occur. Icons vary but reaction section indicates joint number where bearings occur.

Industry Standards:

TPIC: Truss Design Procedures and Specifications for Light Metal Plate Connected Wood Trusses
DSB-89: Design Standard for Bracing.
BCSI: Building Component Safety Information, Guide to Good Practice for Handling, Installing & Bracing of Metal Plate Connected Wood Trusses.

Numbering System

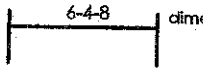

dimensions shown in ft-in-sixteenths or mm (Drawings not to scale)

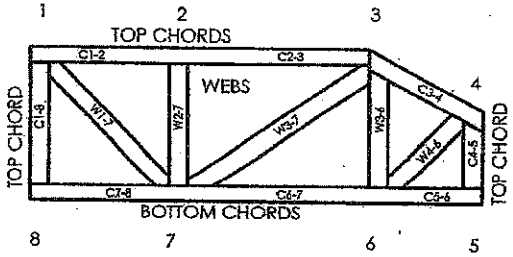

JOINTS ARE GENERALLY NUMBERED/LETTERED CLOCKWISE AROUND THE TRUSS STARTING AT THE JOINT FARTHEST TO THE LEFT.

CHORDS AND WEBS ARE IDENTIFIED BY END JOINT NUMBERS/LETTERS.

PRODUCT CODE APPROVALS

CCMC Reports:

11996-L, 10319-L, 13270-L, 12691-R

© 2007 MiTek® All Rights Reserved

MiTek®
POWER TO PERFORM.™

MiTek Engineering Reference Sheet: MII-7473C rev. 10-'08

General Safety Notes

Failure to Follow Could Cause Property Damage or Personal Injury

1. Additional stability bracing for truss system, e.g. diagonal or X-bracing, is always required. See BCSI.
2. Truss bracing must be designed by an engineer. For wide truss spacing, individual lateral braces themselves may require bracing, or alternative T, I, or Eliminator bracing should be considered.
3. Never exceed the design loading shown and never stack materials on inadequately braced trusses.
4. Provide copies of this truss design to the building designer, erection supervisor, property owner and all other interested parties.
5. Cut members to bear tightly against each other.
6. Place plates on each face of truss at each joint and embed fully. Knots and wane at joint locations are regulated by TPIC.
7. Design assumes trusses will be suitably protected from the environment in accord with TPIC.
8. Unless otherwise noted, moisture content of lumber shall not exceed 19% at time of fabrication.
9. Unless expressly noted, this design is not applicable for use with fire retardant, preservative treated, or green lumber.
10. Camber is a non-structural consideration and is the responsibility of truss fabricator. General practice is to camber for dead load deflection.
11. Plate type, size, orientation and location dimensions indicated are minimum plating requirements.
12. Lumber used shall be of the species and size, and in all respects, equal to or better than that specified.
13. Top chords must be sheathed or purlins provided at spacing indicated on design.
14. Bottom chords require lateral bracing at 10 ft. spacing, or less, if no ceiling is installed, unless otherwise noted.
15. Connections not shown are the responsibility of others.
16. Do not cut or alter truss member or plate without prior approval of an engineer.
17. Install and load vertically unless indicated otherwise.
18. Use of green or treated lumber may pose unacceptable environmental, health or performance risks. Consult with project engineer before use.
19. Review all portions of this design (front, back, words and pictures) before use. Reviewing pictures alone is not sufficient.
20. Design assumes manufacture in accordance with TPIC Quality Criteria.

RECEIVED
SEP 16 2019
TOWN OF CALEDON
BUILDING SECTION

Alves Engineering Services Inc.
5208 Easton road
Burlington, Ontario L7L 6N6
(289) 259 5455

LICENSED PROFESSIONAL ENGINEER
06/11/19
H.J.G. ALVES
PROVINCE OF ONTARIO

RESPONSABILITIES

1-Alves Engineering Services Inc. is responsible for the design of trusses as individual components

2-It is the responsibility of others to ascertain that the design loads utilized on this drawing meet or exceed the actual dead load imposed by the structure and the live load imposed by the local building code or the authorities having jurisdictions.

3- All dimensions are to be verified by owner, contractor, architect or other authority before manufacture.

4- Alves Engineering Services Inc. bears no responsibility for the erection of the trusses. Persons erecting trusses are cautioned to seek professional advice regarding temporary and permanent bracing system. Bracing shown on Alves Engineering Services Inc. drawings is specified for the truss as a single component and forms an integral part of the truss design, but is not meant to represent the only required bracing for that truss when trusses are installed in a series of trusses forming a roof truss system.

5- It is the manufactures responsibility to ensure that the trusses are manufactured in conformance with Alves Engineering Services Inc. specifications outlined below.

SPECIFICATIONS

1-Truss components sealed by Alves Engineering Services Inc. conform to the relevant sections of the current Building Code of Ontario and Canada (part 4 or part 9) or the current Canadian code for Farm Buildings in accordance with the application specified on the sealed truss component drawing. All truss component design procedures must conform to the current design standard issued by the truss plate institute of Canada (TPIC). All lumber and nailing stresses to conform to the current CSA wood design standard identified on the current Building Code and TPIC.

2- Lumber is to be the sizes and grade specified on the truss drawing.

3- Moist content of lumber is not to exceed 19% in service unless otherwise specified.

4- Plates shall be applied to both faces of the each truss joint and shall be positioned as shown on the truss drawings

5- Lumber used on manufacture of trusses is not to be treated with chemicals unless otherwise specified on the truss drawings.

6- The top chord is assumed to be continuously laterally braced by the roof sheathing or purlins at intervals specified on the truss drawing but not exceeding 24" c/c for (part 9) and not exceeding 48" for (part 4 or farm design)

7- When rigid ceiling is not attached directly to the bottom chord, lateral bracing is required and it should not exceed more than 3m or 10' intervals.

8-Refer to Mitek sheet MII7473C REV.10-08 attached for information on symbols, numbering system and General Safety notes.

T-1900215 Feb 09, 2018