ASPHALT SHINGLES
12" FINISH O.H
R.T.M.C.
2x6 EXTERIOR WALLS
2X6 FASCIA BOARD

9/12 PITCHES (TYP.)
UNLESS NOTED

HARDWARE:

HUS26-2 -(XX)
LJS26DS -(V)
LUS24 -(O)

DENOTE:

ALL B- 2-2X10 (FLUSH)

* -24" RAISED FASCIA ONLY

H -24" RAISED CEILING

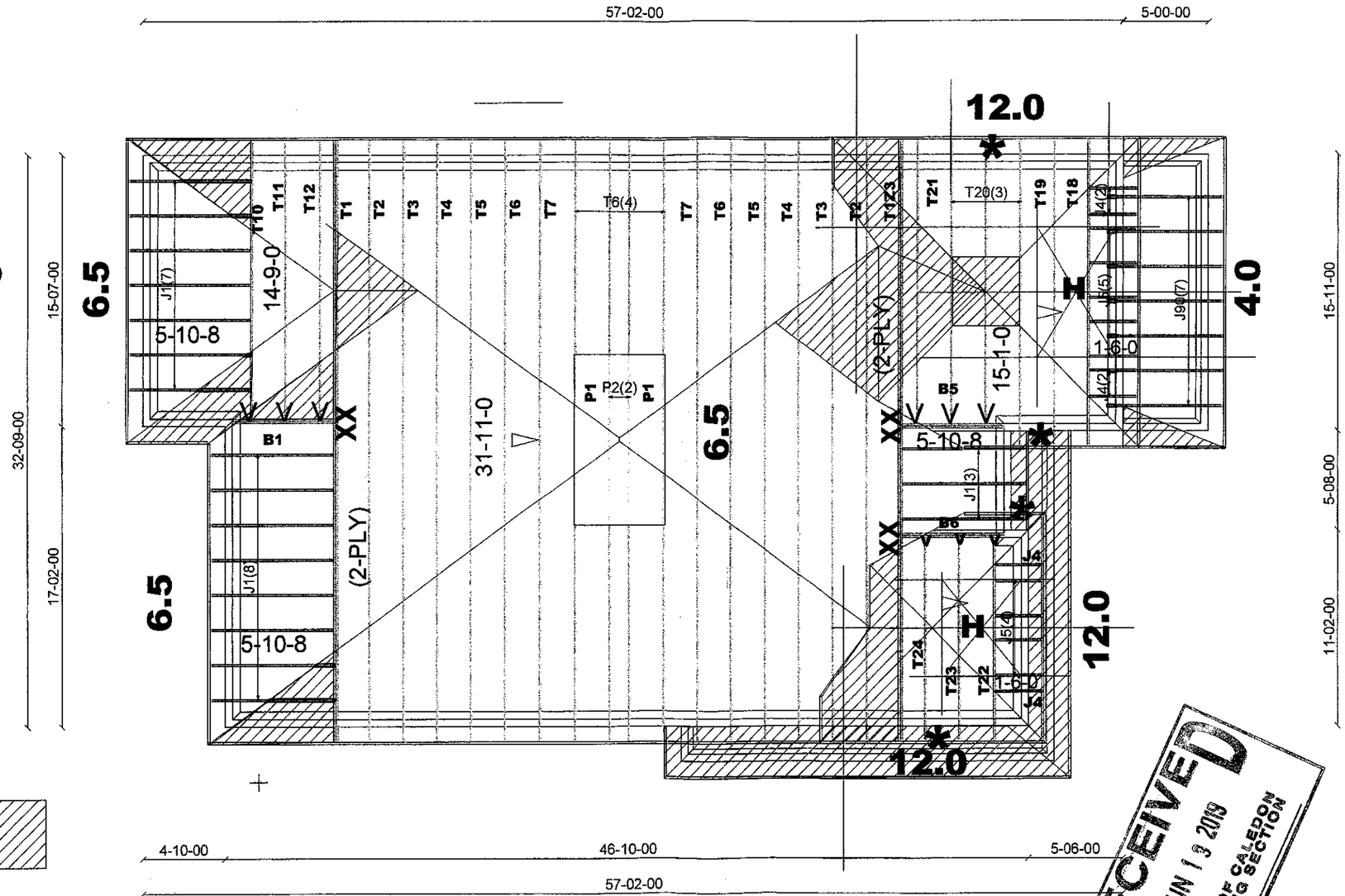

DENOTES:
CONVENTIONAL FRAMING

ALL CONVENTIONAL ROOF FRAMING TO CONFORM TO PART9 OF THE OBC.LATEST EDITION
ROOF RAFTERS THAT MEET OR CROSS OVER TRUSSES ARE TO BE 2"X4"SPF@24"o.c.
WITH A 2"X4"SPF VERTICAL POST TO THE TRUSS UNDER AT EACH CROSS POINT.
POSTS LONGER THAN 6' TO BE LATERALLY BRACED SO THAT THE DISTANCE
BETWEEN END POINTS AND BETWEEN ROWS OF BRACING DOES NOT EXCEED 6'.

DESIGN LOADS:

GROUND SNOW LOAD Ss= 1.8kPa
TC DEAD 6 PSF
BC LIVE 10.5 PSF
BC DEAD 7 PSF

THIS STRUCTURE MUST BE CONSTRUCTED TO MEET OR EXCEED THE PROVISIONS OF THE ONTARIO BUILDING CODE

RECEIVED
JUN 19 2019
TOWN OF CALEDON
BUILDING SECTION
FILE NO

M62256

TAMARACK LUMBER INC.
ALPA LUMBER GROUP

Job Track: 50120	Builder / Location: GREEN PARK HOMES / Caledon	Model / Elevation: KINMOUNT 6A/3	Mitek ver 8.2.3.229
Plan Log: 200598	Project: LAMBERTS LANE HOME CORP.		
Layout ID: 403060	Date: 5/9/2019 Sales: Mario DiCano Designer: Sunny Jane		

THESE DRAWINGS CONSTITUTE THE PROPERTY OF TAMARACK ROOF TRUSSES INC., SHALL NOT BE REPRODUCED, PUBLISHED, OR REDISTRIBUTED IN ANY MANNER OR UTILIZED FOR ANY PURPOSE OTHER THAN THE MANUFACTURE OF TRUSSES BY TAMARACK ROOF TRUSSES INC AND WILL BE RETRACTED BY TAMARACK ROOF TRUSSES INC IF UTLILZED FOR ANY OTHER PURPOSE.

DELIVERY SHIPLIST

Lumber Yard:	TAMARACK LUMBER	Job Track:	50120
Builder:	GREEN PARK HOMES	PlanLog:	200598
Project:	LAMBERTS LANE HOME CORP.	Layout ID:	403060
Location:	Caledon	Ref #	
Model:	KINMOUNT 6A	Page:	1 of 2
Lot #:		Date:	05/09/2019
Elevation:	3	Designer:	
		Sales Rep:	Mario DiCano

Roof Trusses

PROFILE	QTY PLY	MARK TYPE	PITCH	SPAN	HEIGHT	LUMBER	OVERHANG LEFT RIGHT	HEEL HEIGHT LEFT RIGHT	LBS. BFT.	BUNDLE # STACK #	LOAD BY REMARKS
	1 2-ply	T1 Hip Girder	9 /12	**31-11-00**	4-05-02	2 x 6	1-03-08 1-03-08	1-06-04 1-06-04	339.54 204.00		
	1 2-ply	T1Z3 Hip Girder	9 /12	**31-11-00**	4-05-02	2 x 6	1-03-08 1-03-08	1-06-04 1-06-04	339.54 204.00		
	2	T2 Hip	9 /12	**31-11-00**	5-05-14	2 x 4	1-03-08 1-03-08	1-06-04 1-06-04	254.66 160.33		
	2	T3 Hip	9 /12	**31-11-00**	6-06-14	2 x 4	1-03-08 1-03-08	1-06-04 1-06-04	283.12 177.00		
	2	T4 Hip	9 /12	**31-11-00**	7-07-14	2 x 4	1-03-08 1-03-08	1-06-04 1-06-04	294.24 187.33		
	2	T5 Hip	9 /12	**31-11-00**	8-08-14	2 x 4	1-03-08 1-03-08	1-06-04 1-06-04	307.46 193.00		
	6	T6 Hip	9 /12	**31-11-00**	9-09-14	2 x 4	1-03-08 1-03-08	1-06-04 1-06-04	966.5 610.00		
	2	T7 Hip	9 /12	**31-11-00**	10-10-14	2 x 4	1-03-08 1-03-08	1-06-04 1-06-04	334.92 208.00		
	1	T10 Hip Girder	9 /12	**14-09-00**	4-04-14	2 x 4 2 x 6	1-03-08 1-03-08	1-06-04 1-06-04	73.14 47.67		
	1	T11 Hip	9 /12	**14-09-00**	5-05-14	2 x 4	1-03-08 1-03-08	1-06-04 1-06-04	64.66 42.50		
	1	T12 Hip	9 /12	**14-09-00**	6-06-14	2 x 4	1-03-08 1-03-08	1-06-04 1-06-04	69.72 46.67		
	1	T18 Hip Girder	12 /12	**15-01-00**	5-04-08	2 x 4	1-03-08 1-03-08	3-10-08 3-10-08	94.69 61.50		
	1	T19 Hip	12 /12	**15-01-00**	7-04-08	2 x 4	1-03-08 1-03-08	3-10-08 3-10-08	94.02 60.83		
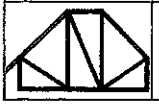	3	T20 Hip	12 /12	**15-01-00**	9-04-08	2 x 4	1-03-08	3-10-08 3-10-08	247.52 159.00		

DELIVERY SHIPLIST

Lumber Yard:	TAMARACK LUMBER	Job Track:	50120
Builder:	GREEN PARK HOMES	PlanLog:	200598
Project:	LAMBERTS LANE HOME CORP.	Layout ID:	403060
Location:	Caledon	Ref #	
Model:	KINMOUNT 6A	Page:	2 of 2
Lot #:		Date:	05/09/2019
Elevation:	3	Designer:	
		Sales Rep:	Mario DiCano

Roof Trusses

PROFILE	QTY PLY	MARK TYPE	PITCH	SPAN	HEIGHT	LUMBER	OVERHANG LEFT RIGHT	HEEL HEIGHT LEFT RIGHT	LBS. BFT.	BUNDLE # STACK #	LOAD BY REMARKS
	1	T21 Hip	12 /12	**15-01-00**	7-04-08	2 x 4	1-03-08	3-10-08 3-10-08	85.26 54.83		
	1	T22 Hip Girder	12 /12	**10-04-00**	5-04-08	2 x 4	1-03-08 1-03-08	3-10-08 3-10-08	69.54 46.33		
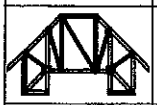	1	T23 Hip	12 /12	**10-04-00**	7-04-08	2 x 4	1-03-08 1-03-08	3-10-08 3-10-08	81.01 53.67		
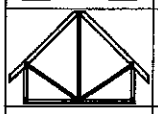	1	T24 Hip	12 /12	**10-04-00**	8-07-00	2 x 6 2 x 4	1-03-08 1-03-08	3-10-08 3-10-08	68.34 43.17		
	2	P1 Piggyback	9 /12	**9-09-05**	2-02-00	2 x 4			55.84 36.00		
	2	P2 Piggyback	9 /12	**9-09-05**	3-03-00	2 x 4			54.88 36.67		
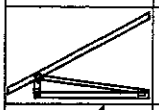	18	J1 Jack-Open	6.5 /12	**5-10-08**	4-04-14	2 x 4	1-03-08	1-02-11 4-04-14	389.3 246.00		
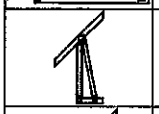	6	J4 Jack-Open	12 /12	**1-06-00**	5-04-08	2 x 4	1-03-08	3-10-08 5-04-08	81.06 56.00		
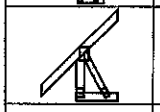	9	J5 Jack-Open	12 /12	**1-06-00**	3-04-08	2 x 4	1-03-08	1-10-08 3-04-08	86.6 63.00		
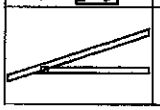	7	J90 Jack-Open	4 /12	**5-05-08**	2-06-11	2 x 4	1-03-08	3-15 2-01-12	101.14 65.33		

TOTAL # TRUSS= **76** TOTAL BFT OF ALL TRUSSES= **3062.83** BFT. TOTAL WEIGHT OF ALL TRSSES **4836.7** LBS

HARDWARE

QTY	TYPE	MODEL	LENGTH
3	Hardware	HGUS26-2	
9	Hardware	LJS26DS	

TOTAL NUMBER OF ITEMS= **12**

JOB NAME	TRUSS NAME	QUANTITY	PLY	JOB DESC.	DRWG NO.
403045	T1	1	2	GREEN PARK HOMES TRUSS DESC.	

Tamarack Roof Truss, Burlington

Version 8.300 S Apr 23 2019 MiTek Industries, Inc. Tue May 14 10:41:19 2019 Page 1
ID:D7ulPnW9?DzGkx1HTFaFreyNCCH-TNB_NexVTbRnTACJOf0coKmGXziCVuKB9bFN6zGdDk

Scale = 1:53.3

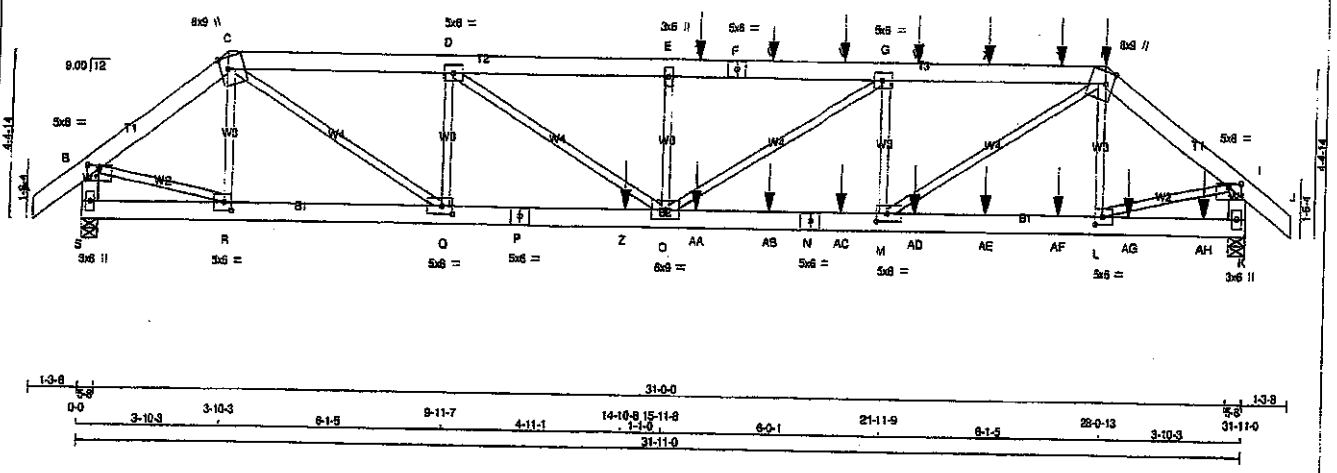

TOTAL WEIGHT = 2 X 170 = 340 lb [M]

LUMBER
N. L. G. A. RULES

CHORDS	SIZE		LUMBER	DESCR.
A - C	2x6	DRY	No.2	SPF
C - F	2x6	DRY	No.2	SPF
F - H	2x6	DRY	No.2	SPF
H - J	2x6	DRY	No.2	SPF
S - B	2x6	DRY	No.2	SPF
K - I	2x6	DRY	No.2	SPF
S - P	2x6	DRY	1650F 1.5E	SPF
P - N	2x6	DRY	1650F 1.5E	SPF
N - K	2x6	DRY	1650F 1.5E	SPF
ALL WEBS EXCEPT	2x3	DRY	No.2	SPF

DRY: SEASONED LUMBER.

DESIGN CONSISTS OF 2 TRUSSES BUILT SEPARATELY THEN FASTENED TOGETHER AS FOLLOWS:

CHORDS	#ROWS	SURFACE SPACING (IN)	LOAD(PLF)
TOP CHORDS : (0.122"X3") SPIRAL NAILS			
A-C	2	12	TOP
C-F	2	12	SIDE(0.0)
F-H	2	12	SIDE(61.0)
H-J	2	12	SIDE(122.0)
S-B	2	12	TOP
K-I	2	12	TOP
BOTTOM CHORDS : (0.122"X3") SPIRAL NAILS			
S-P	2	12	TOP
P-N	2	12	SIDE(0.0)
N-K	2	12	SIDE(0.0)
WEBS : (0.122"X3") SPIRAL NAILS			
2x3	1	6	

NAILS TO BE DRIVEN FROM ONE SIDE ONLY.

GIRDER NAILING ASSUMES NAILED HANGERS ARE FASTENED WITH MIN. 3-0 INCH NAILS.

TOP - COMPONENTS ARE LOADED FROM THE TOP AND MUST BE PLACED ON TOP EDGE OF ALL PLIES FOR THE LOAD TO BE TRANSFERRED TO EACH PLY.

SIDE - PLF SHOWN IS THE EQUIVALENT UDL APPLIED TO ONE SIDE THAT THE CORRESPONDING NAILING PATTERN SHALL BE CAPABLE OF TRANSFERING. REMAINING PLF MUST BE APPLIED ON THE OPPOSITE SIDE OR ON THE TOP.

PLATES (table is in inches)

JT	TYPE	PLATES	W	LEN	Y	X
B	TMWW-p	MT20	5.0	8.0	1.25	4.00
C	TTWW+m	MT20	8.0	9.0	3.75	2.50
D	TMWW-t	MT20	5.0	6.0		
E	TMW+w	MT20	3.0	6.0		
F	TS-t	MT20	5.0	6.0		
G	TMWW-t	MT20	5.0	6.0		
H	TTWW+m	MT20	8.0	9.0	3.75	2.50
I	TMVW-p	MT20	5.0	8.0	1.25	4.00
K	BMV1+p	MT20	3.0	6.0		
L	BMWW-t	MT20	5.0	6.0	2.50	2.50
M	BMWW-t	MT20	5.0	8.0	2.50	3.50
N	BS-t	MT20	5.0	9.0		
O	BMWWW-t	MT20	6.0	9.0		
P	BS-t	MT20	5.0	6.0		
Q	BMWW-t	MT20	5.0	8.0	2.50	3.50
R	BMWW-t	MT20	5.0	6.0	2.50	2.50
S	BMV1+p	MT20	3.0	6.0		

DIMENSIONS, SUPPORTS AND LOADINGS SPECIFIED BY FABRICATOR TO BE VERIFIED BY BUILDING DESIGNER

BEARINGS

JT	FACTORED GROSS REACTION VERT	HORZ	MAXIMUM GROSS REACTION DOWN	HORZ	UPLIFT	INPUT BRG IN-SX	REQRD BRG IN-SX
S	4021	0	4021	0	0	5-8	5-8
K	4602	0	4602	0	0	5-8	5-8

UNFACTORED REACTIONS

JT	1ST LCASE COMBINED	MAX./MIN. COMPONENT REACTIONS SNOW	LIVE	PERM.LIVE	WIND	DEAD	SOIL
S	2981	1720 / 0	543 / 0	0 / 0	0 / 0	718 / 0	0 / 0
K	3421	1946 / 0	543 / 0	0 / 0	0 / 0	831 / 0	0 / 0

BEARING MATERIAL TO BE SPF NO.2 OR BETTER AT JOINT(S) S, K

BRACING
TOP CHORD TO BE SHEATHED OR MAX. PURLIN SPACING = 3.44 FT.
MAX. UNBRACED BOTTOM CHORD LENGTH = 10.00 FT OR RIGID CEILING DIRECTLY APPLIED.

ALL PITCH BREAKS AND PERIMETER CORNER JOINTS MUST BE LATERALLY RESTRAINED.

LOADING
TOTAL LOAD CASES: (4)

CHORDS

MEMB. FR-TO	MAX. FACTORED FORCE (LBS)	FACTORED VERT. LOAD (PLF) FROM	TO	LC1	MAX CSI (LC)	MAX. UNBRAC LENGTH
A-B	0 / 44	-102.1	-102.1	0.04 (1)	10.00	
B-C	-4484 / 0	-102.1	-102.1	0.10 (1)	5.35	
C-D	-8178 / 0	-102.1	-102.1	0.26 (1)	4.07	
D-E	-10720 / 0	-102.1	-102.1	0.32 (1)	3.57	
E-T	-10720 / 0	-102.1	-102.1	0.44 (1)	3.44	
T-F	-10720 / 0	-102.1	-102.1	0.44 (1)	3.44	
F-U	-10720 / 0	-102.1	-102.1	0.44 (1)	3.44	
U-V	-10720 / 0	-102.1	-102.1	0.44 (1)	3.44	
V-G	-10720 / 0	-102.1	-102.1	0.44 (1)	3.44	
G-W	-8463 / 0	-102.1	-102.1	0.35 (1)	3.91	
W-X	-8463 / 0	-102.1	-102.1	0.35 (1)	3.91	
X-Y	-8463 / 0	-102.1	-102.1	0.35 (1)	3.91	
Y-H	-8463 / 0	-102.1	-102.1	0.35 (1)	3.91	
H-I	-5213 / 0	-102.1	-102.1	0.11 (1)	5.04	
I-J	0 / 44	-102.1	-102.1	0.04 (1)	10.00	
S-B	-3959 / 0	0.0	0.0	0.14 (1)	7.13	
K-I	-4547 / 0	0.0	0.0	0.16 (1)	6.78	
S-R	0 / 0	-38.5	-38.5	0.03 (3)	10.00	
R-Q	0 / 3554	-38.5	-38.5	0.25 (1)	10.00	
Q-P	0 / 8178	-38.5	-38.5	0.70 (1)	10.00	
P-Z	0 / 8178	-38.5	-38.5	0.70 (1)	10.00	
Z-O	0 / 8178	-38.5	-38.5	0.70 (1)	10.00	
O-AA	0 / 8463	-38.5	-38.5	0.55 (1)	10.00	
AA-AB	0 / 8463	-38.5	-38.5	0.55 (1)	10.00	
AB-N	0 / 8463	-38.5	-38.5	0.55 (1)	10.00	
N-AC	0 / 8463	-38.5	-38.5	0.55 (1)	10.00	
AC-M	0 / 8463	-38.5	-38.5	0.55 (1)	10.00	
M-AD	0 / 4140	-38.5	-38.5	0.24 (1)	10.00	
AD-AE	0 / 4140	-38.5	-38.5	0.24 (1)	10.00	
AE-AF	0 / 4140	-38.5	-38.5	0.24 (1)	10.00	
AF-L	0 / 4140	-38.5	-38.5	0.24 (1)	10.00	
L-AG	0 / 0	-38.5	-38.5	0.08 (2)	10.00	
AG-AH	0 / 0	-38.5	-38.5	0.08 (2)	10.00	
AH-K	0 / 0	-38.5	-38.5	0.08 (2)	10.00	

WEBS

MEMB. FR-TO	MAX. FACTORED FORCE (LBS)	MAX CSI (LC)
R-C	-763 / 0	0.10 (1)
C-Q	0 / 5495	0.68 (1)
Q-D	-2320 / 0	0.31 (1)
D-O	0 / 3041	0.38 (1)
O-E	-709 / 0	0.09 (1)
O-G	0 / 2701	0.33 (1)
M-G	-2599 / 0	0.35 (1)
M-H	0 / 5137	0.64 (1)
L-H	-586 / 38	0.08 (1)
S-R	0 / 3688	0.46 (1)
L-I	0 / 4268	0.53 (1)

FACTORED CONCENTRATED LOADS (LBS)

JT	LOC.	LC1	MAX-	MAX+	FACE	DIR.	TYPE	HEEL	CONN.
H	28-0-13	-49	-55	---	FRONT	VERT	DEAD	--	--
H	28-0-13	-282	-282	---	FRONT	VERT	SNOW	--	--
T	16-9-12	-123	-123	---	FRONT	VERT	TOTAL	--	--
U	18-9-12	-123	-123	---	FRONT	VERT	TOTAL	--	--

DESIGN CRITERIA

*** SPECIAL LOADS ANALYSIS ***
GEOMETRY AND/OR BASIC LOADS CHANGED BY USER.
LOADS WERE DERIVED FROM USER INPUT
NO FURTHER MODIFICATIONS WERE MADE

SPECIFIED LOADS:

TOP CH.	LL	=	29.0	PSF
	DL	=	6.0	PSF
BOT CH.	LL	=	10.5	PSF
	DL	=	7.0	PSF
TOTAL LOAD		=	52.5	PSF

SPACING = 24.0 IN C/C

LOADING IN FLAT SECTION BASED ON A SLOPE OF 2.00/12 MINIMUM

*** NON STANDARD GIRDER ***
ADDTL USER-DEFINED LOADS APPLIED TO ALL LOAD CASES.

THIS TRUSS IS DESIGNED FOR RESIDENTIAL OR SMALL BUILDING REQUIREMENTS OF PART 9, NBCC 2010, NBCC 2015

THIS DESIGN COMPLIES WITH:
- PART 9 OF BCBC 2018 , CSC 2012
- CSA 086-09, CSA 086-14
- TPIC 2011, TPIC 2014

(65 % OF 37.6 P.S.F. G.S.L. PLUS 8.4 P.S.F. RAIN LOAD) EQUALS 29.0 P.S.F. SPECIFIED ROOF LIVE LOAD

ALLOWABLE DEFL.(LL)= L/360 (1.06")
CALCULATED VERT. DEFL.(LL) = L/ 999 (0.25")
ALLOWABLE DEFL.(TL)= L/360 (1.06")
CALCULATED VERT. DEFL.(TL) = L/ 921 (0.42")

CSI: TC=0.44/1.00 (6-G:1) , BC=0.70/1.00 (O-Q:1) , WB=0.68/1.00 (C-Q:1) , SSI=0.69/1.00 (O-Q:1)

COL LUMBER=1.00 NAIL=1.00 LS BEND=1.00 COMP=1.00 SHEAR=1.00 TENS= 1.00

COMPANION LIVE LOAD FACTOR = 1.00

AUTOSOLVE HEELS OFF

TRUSS PLATE MANUFACTURER IS NOT RESPONSIBLE FOR QUALITY CONTROL IN THE TRUSS MANUFACTURING PLANT .

NAIL VALUES

PLATE	GRIP(DRY) (PSI) MAX	MIN	SHEAR (PLI) MAX	MIN	SECTION (PLI) MAX	MIN
MT20	618	354	1667	788	1987	1856

PLATE PLACEMENT TOL. = 0.250 Inches

PLATE ROTATION TOL. = 5.0 Deg.

JSI GRIP= 0.90 (L) (INPUT = 0.90)
JSI METAL= 0.91 (N) (INPUT = 1.00)

LICENSED PROFESSIONAL ENGINEER
05/14/19
H. J. G. ALVES
100009020
PROVINCE OF ONTARIO

Structural component only
DWG# T-1911482 CONTINUED ON PAGE 2

JOB NAME	TRUSS NAME	QUANTITY	PLY	JOB DESC.	DRWG NO.
403045	T1	1	2	GREEN PARK HOMES TRUSS DESC.	

Tamarack Roof Truss, Burlington

ID:D7ulPnW9?DzGlxfHTFaFrevNCCH-TNB_NexVTbRnTACJOlr0coKmGXziCVuKB9bFN8zGdDk

FACTORED CONCENTRATED LOADS (LBS)

JT	LOC.	LC1	MAX-	MAX+	FACE	DIR.	TYPE	HEEL	CONN.
V	20-9-12	-123	-123	---	FRONT	VERT	TOTAL	--	--
W	22-9-12	-123	-123	---	FRONT	VERT	TOTAL	--	--
X	24-9-12	-123	-123	---	FRONT	VERT	TOTAL	--	--
Y	26-9-12	-123	-123	---	FRONT	VERT	TOTAL	--	--
Z	14-10-8	-2332	-2332	---	FRONT	VERT	TOTAL	--	--
AA	16-9-12	-55	-70	---	FRONT	VERT	TOTAL	--	--
AB	18-9-12	-55	-70	---	FRONT	VERT	TOTAL	--	--
AC	20-9-12	-55	-70	---	FRONT	VERT	TOTAL	--	--
AD	22-9-12	-55	-70	---	FRONT	VERT	TOTAL	--	--
AE	24-9-12	-55	-70	---	FRONT	VERT	TOTAL	--	--
AF	26-9-12	-55	-70	---	FRONT	VERT	TOTAL	--	--
AG	28-9-12	-55	-70	---	FRONT	VERT	TOTAL	--	--
AH	30-9-12	-55	-70	---	FRONT	VERT	TOTAL	--	--

LICENSED PROFESSIONAL ENGINEER
05/14/19
H. J. G. ALVES
100008084
PROVINCE OF ONTARIO

Structural component only
DWG# T-1911482

JOB NAME	TRUSS NAME	QUANTITY	PLY	JOB DESC.	DRWG NO.
403060	T1Z3	1	2	GREEN PARK HOMES TRUSS DESC.	

Tamarack Roof Truss, Burlington

Version 8.300 S Apr 23 2019 MiTek Industries, Inc. Tue May 14 11:25:32 2019 Page 1

ID:D7ulPnW9?DzGkx1HTFaFreyNCCH-Hn_x8n2dgjhMFuWCJKx8dGi7n_TilLVqFPi8?rzGcal-I

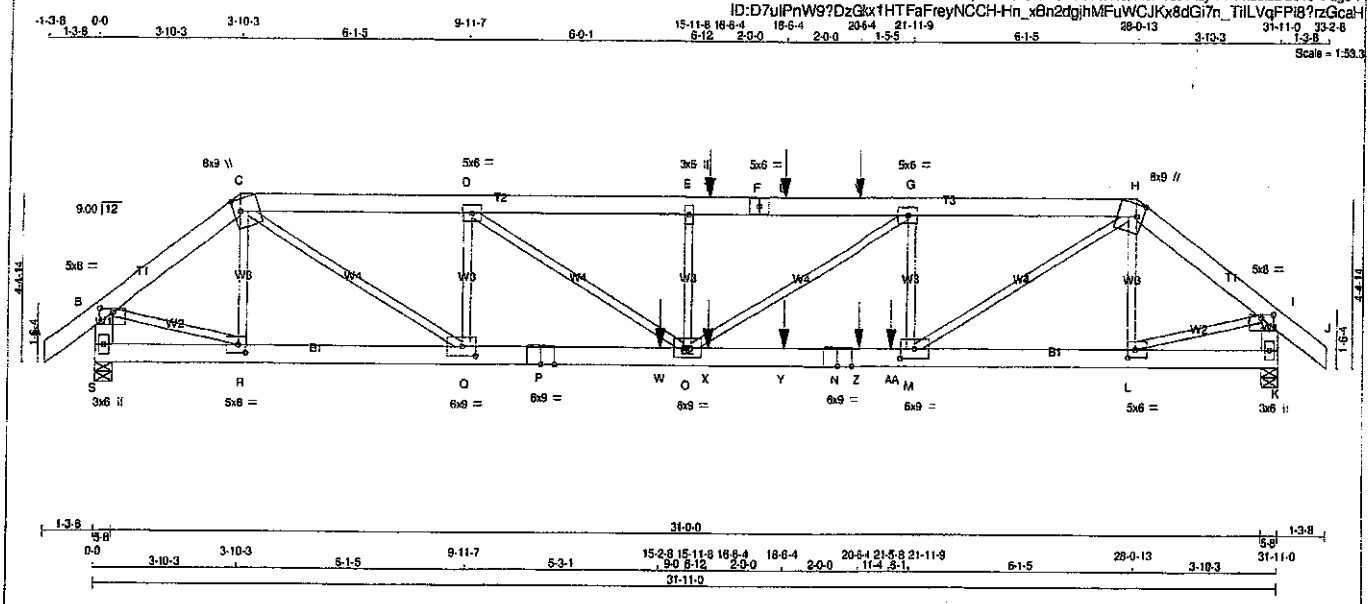

TOTAL WEIGHT = 2 X 170 = 340 lb

LUMBER

N. L. G. A. RULES

CHORDS	SIZE		LUMBER	DESCR.
A - C	2x6	DRY	No.2	SPF
C - F	2x6	DRY	No.2	SPF
F - H	2x6	DRY	No.2	SPF
H - J	2x6	DRY	No.2	SPF
S - B	2x6	DRY	No.2	SPF
K - I	2x6	DRY	No.2	SPF
S - P	2x6	DRY	1650F 1.5E	SPF
P - N	2x6	DRY	1650F 1.5E	SPF
N - K	2x6	DRY	1650F 1.5E	SPF
ALL WEBS EXCEPT	2x3	DRY	No.2	SPF

DRY: SEASONED LUMBER.

DESIGN CONSISTS OF 2 TRUSSES BUILT SEPARATELY THEN FASTENED TOGETHER AS FOLLOWS:

CHORDS	#ROWS	SURFACE SPACING (IN)	LOAD(PLF)
TOP CHORDS : (0.122"X3") SPIRAL NAILS			
A- C	2	12	TOP
C- F	2	12	SIDE(0.0)
F- H	2	12	SIDE(0.0)
H- J	2	12	TOP
S- B	2	12	TOP
K- I	2	12	TOP
BOTTOM CHORDS : (0.122"X3") SPIRAL NAILS			
S- P	2	12	TOP
P- N	2	12	SIDE(0.0)
N- K	2	12	SIDE(0.0)
WEBS : (0.122"X3") SPIRAL NAILS			
2x3	1	6	

NAILS TO BE DRIVEN FROM ONE SIDE ONLY.

GIRDER NAILING ASSUMES NAILED HANGERS ARE FASTENED WITH MIN. 3-0 INCH NAILS.

TOP - COMPONENTS ARE LOADED FROM THE TOP AND MUST BE PLACED ON TOP EDGE OF ALL PLIES FOR THE LOAD TO BE TRANSFERRED TO EACH PLY.

SIDE - PLF SHOWN IS THE EQUIVALENT UDL APPLIED TO ONE SIDE THAT THE CORRESPONDING NAILING PATTERN SHALL BE CAPABLE OF TRANSFERING. REMAINING PLF MUST BE APPLIED ON THE OPPOSITE SIDE OR ON THE TOP.

PLATES (table is in inches)

JT	TYPE	PLATES	W	LEN	Y	X
B	TMVW-p	MT20	5.0	8.0	1.25	4.00
C	TTWW+m	MT20	8.0	9.0	3.75	2.00
D	TMWW-t	MT20	5.0	6.0		
E	TMW+w	MT20	3.0	6.0		
F	TS-t	MT20	5.0	6.0		
G	TMWW-t	MT20	5.0	6.0		
H	TTWW+m	MT20	8.0	9.0	3.75	2.00
I	TMVW-p	MT20	5.0	8.0	1.25	4.00
K	BMV1+p	MT20	3.0	6.0		
L	BMWW-t	MT20	5.0	6.0	2.50	2.25
M	BMWW-t	MT20	6.0	9.0	3.00	4.25
N	BS-t	MT20	6.0	9.0		
O	BMWWW-t	MT20	6.0	9.0		
P	BS-t	MT20	6.0	9.0		
Q	BMWW-t	MT20	6.0	9.0	3.00	4.25
R	BMWW-t	MT20	5.0	6.0	2.50	2.25
S	BMV1+p	MT20	3.0	6.0		

DIMENSIONS, SUPPORTS AND LOADINGS SPECIFIED BY FABRICATOR TO BE VERIFIED BY BUILDING DESIGNER

BEARINGS

JT	FACTORED GROSS REACTION VERT	HORZ	MAXIMUM FACTORED GROSS REACTION DOWN	HORZ	UPLIFT	INPUT BRG IN-SX	REQRD BRG IN-SX
S	4185	0	4185	0	0	5-8	5-8
K	4678	0	4678	0	0	5-8	5-8

UNFACTORED REACTIONS

JT	1ST LCASE COMBINED	MAX./MIN. COMPONENT REACTIONS SNOW	LIVE	PERM.LIVE	WIND	DEAD	SOIL
S	3103	1791 / 0	565 / 0	0 / 0	0 / 0	747 / 0	0 / 0
K	3465	2010 / 0	624 / 0	0 / 0	0 / 0	831 / 0	0 / 0

BEARING MATERIAL TO BE SPF NO.2 OR BETTER AT JOINT(S) S, K

BRACING

TOP CHORD TO BE SHEATHED OR MAX. PURLIN SPACING = 3.25 FT.
MAX. UNBRACED BOTTOM CHORD LENGTH = 10.00 FT OR RIGID CEILING DIRECTLY APPLIED.

ALL PITCH BREAKS AND PERIMETER CORNER JOINTS MUST BE LATERALLY RESTRAINED.

LOADING

TOTAL LOAD CASES: (4)

CHORDS

MEMB. FR-TO	MAX. FACTORED FORCE (LBS)	FACTORED VERT. LOAD (PLF) FROM	TO	LCI CSI (LC)	MAX	MAX. UNBRAC LENGTH
A- B	0 / 44	-102.1	-102.1	0.04 (1)		10.00
B- C	-4707 / 0	-102.1	-102.1	0.10 (1)		5.25
C- D	-8534 / 0	-102.1	-102.1	0.28 (1)		3.98
D- E	-11632 / 0	-102.1	-102.1	0.35 (1)		3.42
E- T	-11632 / 0	-102.1	-102.1	0.50 (1)		3.25
T- F	-11632 / 0	-102.1	-102.1	0.50 (1)		3.25
F- U	-11632 / 0	-102.1	-102.1	0.50 (1)		3.25
U- V	-11632 / 0	-102.1	-102.1	0.50 (1)		3.25
V- G	-11632 / 0	-102.1	-102.1	0.50 (1)		3.25
G- H	-9799 / 0	-102.1	-102.1	0.34 (1)		3.69
H- I	-5329 / 0	-102.1	-102.1	0.11 (1)		4.99
I- J	0 / 44	-102.1	-102.1	0.04 (1)		10.00
S- B	-4139 / 0	0.0	0.0	0.15 (1)		7.01
K- I	-4641 / 0	0.0	0.0	0.17 (1)		6.70
S- R	0 / 0	-38.5	-38.5	0.04 (2)		10.00
R- Q	0 / 3732	-38.5	-38.5	0.20 (1)		10.00
Q- P	0 / 8534	-38.5	-38.5	0.55 (1)		10.00
P- W	0 / 8534	-38.5	-38.5	0.55 (1)		10.00
W- O	0 / 8534	-38.5	-38.5	0.55 (1)		10.00
O- X	0 / 9799	-38.5	-38.5	0.55 (1)		10.00
X- Y	0 / 9799	-38.5	-38.5	0.55 (1)		10.00
Y- N	0 / 9799	-38.5	-38.5	0.55 (1)		10.00
N- Z	0 / 9799	-38.5	-38.5	0.55 (1)		10.00
Z- AA	0 / 9799	-38.5	-38.5	0.55 (1)		10.00
AA- M	0 / 9799	-38.5	-38.5	0.55 (1)		10.00
M- L	0 / 4226	-38.5	-38.5	0.21 (1)		10.00
L- K	0 / 0	-38.5	-38.5	0.04 (2)		10.00

WEBS

MEMB. FR-TO	MAX. FACTORED FORCE (LBS)	MAX CSI (LC)
R- C	-747 / 0	0.10 (1)
Q- D	-2659 / 0	0.35 (1)
D- O	0 / 3708	0.46 (1)
O- E	-922 / 0	0.12 (1)
O- G	0 / 2194	0.27 (1)
M- G	-2127 / 0	0.28 (1)
M- H	0 / 6622	0.82 (1)
L- H	-846 / 0	0.11 (1)
B- R	67 / 3672	0.46 (1)
L- I	[illegible]	[illegible] (1)

FACTORED CONCENTRATED LOADS (LBS)

JT	LOC.	LC1	MAX-	MAX+	FACE	DIR.	TYPE	HEEL	CONN.
T	16-6-4	-198	-198	---	BACK	VERT	TOTAL	--	--
U	18-6-4	-198	-198	---	BACK	VERT	TOTAL	--	--
V	20-6-4	-198	-198	---	BACK	VERT	TOTAL	--	--
W	15-2-8	-1961	-1961	---	TOP	VERT	TOTAL	--	--
X	18-6-4	-67	-85	---	BACK	VERT	TOTAL	--	--
Y	18-6-4	-67	-85	---	BACK	VERT	TOTAL	--	--
Z	20-6-4	-67	-85	---	BACK	VERT	TOTAL	--	--
AA	21-5-8	-1328	-1328	---	TOP	VERT	TOTAL	--	--

DESIGN CRITERIA

"" SPECIAL LOADS ANALYSIS ""
GEOMETRY AND/OR BASIC LOADS CHANGED BY USER.
LOADS WERE DERIVED FROM USER INPUT
NO FURTHER MODIFICATIONS WERE MADE

SPECIFIED LOADS:

TOP CH.	LL	=	29.0	PSF
	DL	=	6.0	PSF
BOT CH.	LL	=	10.5	PSF
	DL	=	7.0	PSF
TOTAL LOAD		=	52.5	PSF

SPACING = 24.0 IN. C/C

LOADING IN FLAT SECTION BASED ON A SLOPE OF 6.00/12

THIS TRUSS IS DESIGNED FOR RESIDENTIAL OR SMALL BUILDING REQUIREMENTS OF PART 9, NBCC 2010, NBCC 2015

THIS DESIGN COMPLIES WITH:
- PART 9 OF BCBC 2018 , OBC 2012
- CSA 086-09, CSA 086-14
- TPIC 2011, TPIC 2014

(65 % OF 37.6 P.S.F. G.S.L. PLUS 8.4 P.S.F. RAIN LOAD) EQUALS 29.0 P.S.F. SPECIFIED ROOF LIVE LOAD

ALLOWABLE DEFL.(LL)= L/360 (1.06")
CALCULATED VERT. DEFL.(LL) = L/ 999 (0.25")
ALLOWABLE DEFL.(TL)= L/360 (1.06")
CALCULATED VERT. DEFL.(TL) = L/ 919 (0.42")

CSI: TC=0.50/1.00 (E-G:1) , BC=0.55/1.00 (O-Q:1) , WB=0.82/1.00 (H-M:1) , SSI=0.83/1.00 (O-Q:1)

DOL LUMBER=1.00 NAIL=1.00 LS BEND=1.00 COMP=1.00 SHEAR=1.00 TENS= 1.00

COMPANION LIVE LOAD FACTOR = 1.00

AUTOSOLVE HEELS OFF

TRUSS PLATE MANUFACTURER IS NOT RESPONSIBLE FOR QUALITY CONTROL IN THE TRUSS MANUFACTURING PLANT .

NAIL VALUES

PLATE	GRIP(DRY) (PSI) MAX	MIN	SHEAR (PLI) MAX	MIN	SECTION (PLI) MAX	MIN
MT20	618	354	1667	788	1987	1656

PLATE PLACEMENT TOL. = 0.250 Inches

PLATE ROTATION TOL. = 5.0 Deg.

JSI GRIP= 0.89 (G) (INPUT = 0.90)
JSI METAL= 0.85 (P) (INPUT = 1.00)

LICENSED PROFESSIONAL ENGINEER
H. J. G. ALVES
100009024
PROVINCE OF ONTARIO

Structural component only
DWG# T-1911508 CONTINUED ON PAGE 2

JOB NAME	TRUSS NAME	QUANTITY	PLY	JOB DESC.	DRWG NO.
403045	T2	2	1	GREEN PARK HOMES TRUSS DESC.	

Tamarack Roof Trusses, Burlington

Version 8.300 S Apr 23 2019 MiTek Industries, Inc. Tue May 14 10:41:21 2019 Page 1
ID:D7uIPnW97DzGfox1HTFzFreyNCCH-PmIioJzl?CiVjUMiW4tUhDP0CLgigT1deT4MR?zGdDi

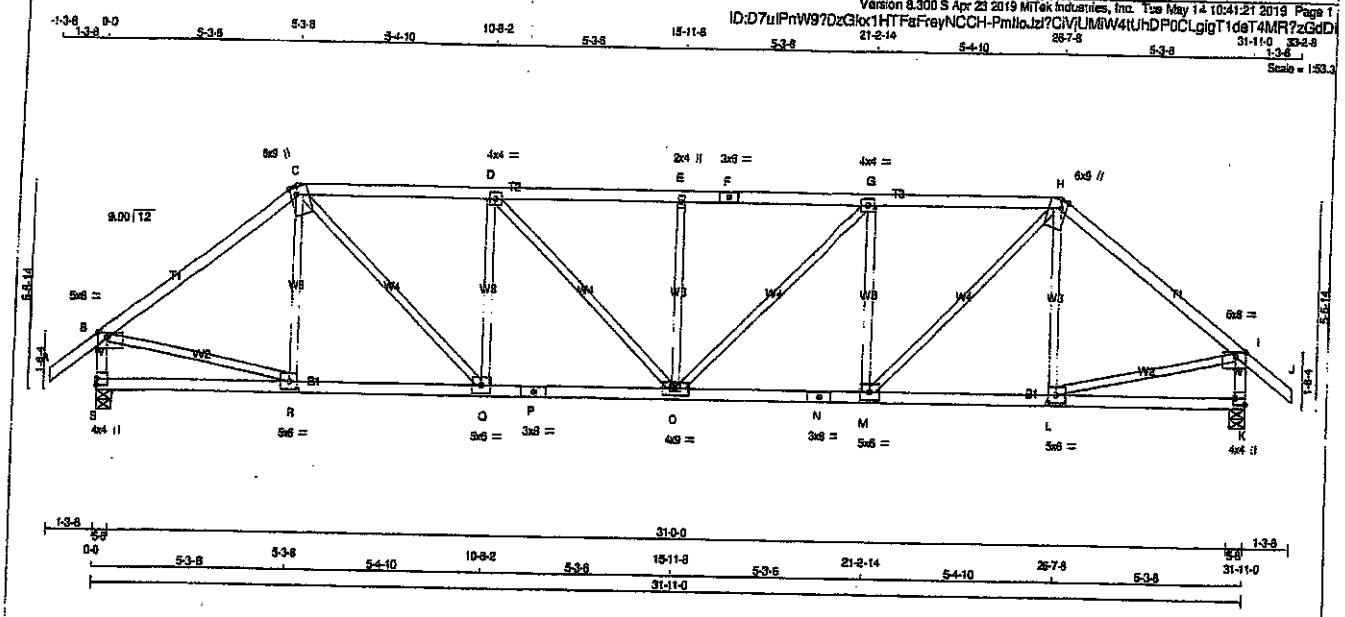

TOTAL WEIGHT = 2 X 134 = 268 lb (M)

LUMBER

N. L. G. A. RULES

CHORDS	SIZE		LUMBER	DESCR.
A - C	2x4	DRY	No.2	SPF
C - F	2x4	DRY	No.2	SPF
F - H	2x4	DRY	No.2	SPF
H - J	2x4	DRY	No.2	SPF
S - B	2x4	DRY	No.2	SPF
K - I	2x4	DRY	No.2	SPF
S - P	2x4	DRY	No.2	SPF
P - N	2x4	DRY	No.2	SPF
N - K	2x4	DRY	No.2	SPF
ALL WEBS EXCEPT	2x3	DRY	No.2	SPF

DRY: SEASONED LUMBER.

PLATES (table is in inches)

JT	TYPE	PLATES	W	LEN	Y	X
B	TMWW-p	MT20	5.0	8.0	1.50	3.50
C	TTWW+m	MT20	8.0	9.0	Edge	2.00
D	TMWW-t	MT20	4.0	4.0		
E	TMW+w	MT20	2.0	4.0		
F	TS-t	MT20	3.0	8.0		
G	TMWW-t	MT20	4.0	4.0		
H	TTWW+m	MT20	6.0	9.0	Edge	2.00
I	TMWW-p	MT20	5.0	8.0	1.50	3.50
K	BMV1+p	MT20	4.0	4.0	2.00	Edge
L	BMWW-t	MT20	5.0	8.0	2.50	2.75
M	BMWW-t	MT20	5.0	6.0		
N	BS-t	MT20	3.0	8.0		
O	BMWWW-t	MT20	4.0	9.0		
P	BS-t	MT20	3.0	8.0		
Q	BMWW-t	MT20	5.0	6.0		
R	BMWW-t	MT20	5.0	6.0	2.50	2.75
S	BMV1+p	MT20	4.0	4.0		

Edge - INDICATES REFERENCE CORNER OF PLATE TOUCHES EDGE OF CHORD.

DIMENSIONS, SUPPORTS AND LOADINGS SPECIFIED BY FABRICATOR TO BE VERIFIED BY BUILDING DESIGNER

BEARINGS

JT	FACTORED GROSS REACTION VERT	HORZ	MAXIMUM FACTORED GROSS REACTION DOWN	HORZ	UPLIFT	INPUT BRG IN-SX	REQRD BRG IN-SX
S	2385	0	2385	0	0	5-8	5-8
K	2385	0	2385	0	0	5-8	5-8

UNFACTORED REACTIONS

JT	1ST LOASE COMBINED	MAX./MIN. COMPONENT REACTIONS SNOW	LIVE	PERM.LIVE	WIND	DEAD	SOIL
S	1773	1007 / 0	335 / 0	0 / 0	0 / 0	431 / 0	0 / 0
K	1773	1007 / 0	335 / 0	0 / 0	0 / 0	431 / 0	0 / 0

BEARING MATERIAL TO BE SPF NO.2 OR BETTER AT JOINT(S) S, K

BRACING

TOP CHORD TO BE SHEATHED OR MAX. PURLIN SPACING = 3.14 FT.
MAX. UNBRACED BOTTOM CHORD LENGTH = 10.00 FT OR RIGID CEILING DIRECTLY APPLIED.

ALL PITCH BREAKS AND PERIMETER CORNER JOINTS MUST BE LATERALLY RESTRAINED.

LOADING

TOTAL LOAD CASES: (4)

CHORDS

MEMB. FR-TO	MAX. FACTORED FORCE (LBS)	FACTORED VERT. LOAD (PLF) FROM	TO	LC1	MAX CSI (LC)	MAX. UNBRAC LENGTH
A-B	0 / 42	-102.1	-102.1	0.14 (1)	10.00	
B-C	-2429 / 0	-102.1	-102.1	0.73 (1)	3.67	
C-D	-3138 / 0	-102.1	-102.1	0.85 (1)	3.34	
D-E	-3494 / 0	-102.1	-102.1	0.69 (1)	3.14	
E-F	-3494 / 0	-102.1	-102.1	0.69 (1)	3.14	
F-G	-3494 / 0	-102.1	-102.1	0.69 (1)	3.14	
G-H	-3138 / 0	-102.1	-102.1	0.85 (1)	3.34	
H-I	-2429 / 0	-102.1	-102.1	0.73 (1)	3.67	
I-J	0 / 42	-102.1	-102.1	0.14 (1)	10.00	
S-B	-2301 / 0	0.0	0.0	0.24 (1)	5.62	
K-I	-2301 / 0	0.0	0.0	0.24 (1)	5.62	
S-R	0 / 0	-38.5	-38.5	0.21 (3)	10.00	
R-Q	0 / 1936	-38.5	-38.5	0.47 (2)	10.00	
Q-P	0 / 3138	-38.5	-38.5	0.80 (1)	10.00	
P-O	0 / 3138	-38.5	-38.5	0.80 (1)	10.00	
O-N	0 / 3138	-38.5	-38.5	0.80 (1)	10.00	
N-M	0 / 3138	-38.5	-38.5	0.80 (1)	10.00	
M-L	0 / 1936	-38.5	-38.5	0.47 (2)	10.00	
L-K	0 / 0	-38.5	-38.5	0.21 (3)	10.00	

WEBS

MEMB. FR-TO	MAX. FACTORED FORCE (LBS)	MAX CSI (LC)
R-C	-195 / 98	0.09 (1)
C-Q	0 / 1667	0.38 (1)
Q-D	-961 / 0	0.43 (1)
D-O	0 / 500	0.11 (1)
O-E	-497 / 0	0.22 (1)
E-G	0 / 500	0.11 (1)
G-M	-961 / 0	0.43 (1)
M-H	0 / 1667	0.38 (1)
L-H	-195 / 98	0.09 (1)
B-R	0 / 1987	0.45 (1)
L-I	0 / 1987	0.45 (1)

DESIGN CRITERIA

SPECIFIED LOADS:

TOP CH.	LL =	29.0	PSF
	DL =	6.0	PSF
BOT CH.	LL =	10.5	PSF
	DL =	7.0	PSF
TOTAL LOAD	=	52.5	PSF

SPACING = 24.0 IN. C/C

LOADING IN FLAT SECTION BASED ON A SLOPE OF 6.00/12

THIS TRUSS IS DESIGNED FOR RESIDENTIAL OR SMALL BUILDING REQUIREMENTS OF PART 9, NBCC 2010, NBCC 2015

THIS DESIGN COMPLIES WITH:
- PART 9 OF BCBC 2018 , OBC 2012
- CSA 086-09, CSA 086-14
- TPIC 2011, TPIC 2014

(55 % OF 37.6 P.S.F. G.S.L. PLUS 8.4 P.S.F. RAIN LOAD) EQUALS 29.0 P.S.F. SPECIFIED ROOF LIVE LOAD

ALLOWABLE DEFL.(LL)= L/360 (1.06")
CALCULATED VERT. DEFL.(LL) = L/ 999 (0.18")
ALLOWABLE DEFL.(TL)= L/360 (1.06")
CALCULATED VERT. DEFL.(TL) = L/ 999 (0.29")

CSI: TC=0.73/1.00 (H-I:1) , BC=0.80/1.00 (O-Q:1) , WB=0.45/1.00 (H-L:1) , SSI=0.28/1.00 (C-D:1)

DOL LUMBER=1.00 NAIL=1.00 LS BEND=1.10 COMP=1.10 SHEAR=1.10 TENS= 1.10

COMPANION LIVE LOAD FACTOR = 1.00

TRUSS PLATE MANUFACTURER IS NOT RESPONSIBLE FOR QUALITY CONTROL IN THE TRUSS MANUFACTURING PLANT .

NAIL VALUES

PLATE	GRIP(DRY) (PSI) MAX	MIN	SHEAR (PLI) MAX	MIN	SECTION (PLI) MAX	MIN
MT20	618	354	1667	786	1987	1656

PLATE PLACEMENT TOL. = 0.250 inches

PLATE ROTATION TOL. = 5.0 Deg.

JSI GRIP= 0.88 (L) (INPUT = 0.90)
JSI METAL= 0.98 (P) (INPUT = 1.00)

LICENSED PROFESSIONAL ENGINEER
05/14/19
H. J. G. ALVES
100009024
PROVINCE OF ONTARIO

Structural component only
DWG# T-1911484

JOB NAME	TRUSS NAME	QUANTITY	PLY	JOB DESC.	DRWG NO.
403045	T3	2	1	GREEN PARK HOMES TRUSS DESC.	

Tamarack Roof Truss, Burlington

Version 8.300 S Apr 23 2019 MiTek Industries, Inc. Tue May 14 10:41:22 2019 Page 1
ID:D7ulPnWS?DzGlox1HTFaFreyNCCH-tys7?fzNlWqMKexu4nOjERyA?l0DPrHmf7qv_RzGdDh

Scale = 1:53.3

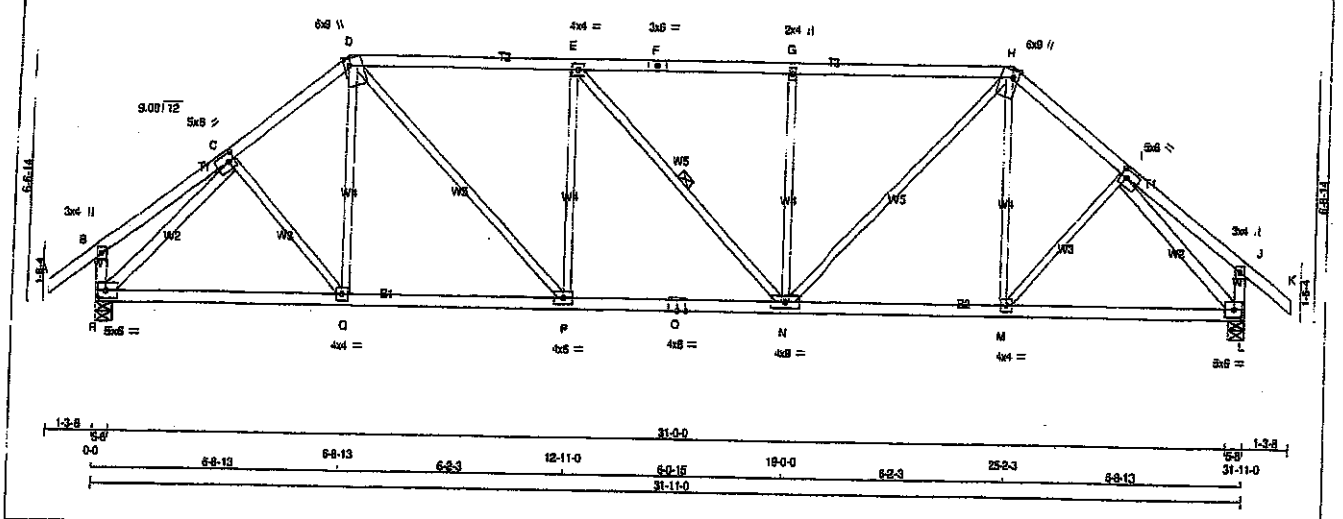

TOTAL WEIGHT = 2 X 142 = 283 lb

LUMBER
N. L. G. A. RULES

CHORDS	SIZE		LUMBER	DESCR.
A - D	2x4	DRY	No.2	SPF
D - F	2x4	DRY	No.2	SPF
F - H	2x4	DRY	No.2	SPF
H - K	2x4	DRY	No.2	SPF
R - B	2x4	DRY	No.2	SPF
L - J	2x4	DRY	No.2	SPF
R - O	2x4	DRY	No.2	SPF
O - L	2x4	DRY	No.2	SPF
ALL WEBS	2x3	DRY	No.2	SPF
EXCEPT				
R - C	2x4	DRY	No.2	SPF
I - L	2x4	DRY	No.2	SPF

DRY: SEASONED LUMBER.

PLATES (table is in inches)

JT	TYPE	PLATES	W	LEN	Y	X
B	TMW+p	MT20	3.0	4.0		
C	TMWW-t	MT20	5.0	6.0	2.50	2.00
D	TTWW+m	MT20	6.0	9.0	Edge	2.00
E	TMWW-t	MT20	4.0	4.0		
F	TS-t	MT20	3.0	6.0		
G	TMW+w	MT20	2.0	4.0		
H	TTWW+m	MT20	6.0	9.0	Edge	2.00
I	TMWW-t	MT20	5.0	6.0	2.50	2.00
J	TMV+p	MT20	3.0	4.0		
L	BMWW-t	MT20	5.0	6.0	2.50	2.75
M	BMWW-t	MT20	4.0	4.0		
N	BMWWW-t	MT20	4.0	9.0		
O	BS-t	MT20	4.0	6.0		
P	BMWW-t	MT20	4.0	6.0		
Q	BMWW-t	MT20	4.0	4.0		
R	BMW1-t	MT20	5.0	6.0	2.50	2.75

Edge - INDICATES REFERENCE CORNER OF PLATE TOUCHES EDGE OF CHORD.

DIMENSIONS, SUPPORTS AND LOADINGS SPECIFIED BY FABRICATOR TO BE VERIFIED BY BUILDING DESIGNER

BEARINGS

JT	FACTORED GROSS REACTION VERT	HORZ	MAXIMUM FACTORED GROSS REACTION DOWN	HORZ	UPLIFT	INPUT BRG IN-SX	REQRD BRG IN-SX
R	2385	0	2385	0	0	5-8	5-8
L	2385	0	2385	0	0	5-8	5-8

UNFACTORED REACTIONS

1ST LCASE MAX./MIN. COMPONENT REACTIONS

JT	COMBINED	SNOW	LIVE	PERM.LIVE	WIND	DEAD	SOIL
R	1773	1007 / 0	335 / 0	0 / 0	0 / 0	431 / 0	0 / 0
L	1773	1007 / 0	335 / 0	0 / 0	0 / 0	431 / 0	0 / 0

BEARING MATERIAL TO BE SPF NO.2 OR BETTER AT JOINT(S) R, L

BRACING
TOP CHORD TO BE SHEATHED OR MAX. PURLIN SPACING = 3.34 FT.
MAX. UNBRACED BOTTOM CHORD LENGTH = 10.00 FT OR RIGID CEILING DIRECTLY APPLIED.

ALL PITCH BREAKS AND PERIMETER CORNER JOINTS MUST BE LATERALLY RESTRAINED.

1 LATERAL BRACE(S) AT 1/ 2 LENGTH OF E-N.

END VERTICAL(S) MUST BE SHEATHED OR HAVE BRACES AS INDICATED IN THE MAX. UNBRACED LENGTH COLUMN OF THE TABLE BELOW

LOADING
TOTAL LOAD CASES: (4)

CHORDS

MEMB. FR-TO	MAX. FACTORED FORCE (LBS)	FACTORED VERT. LOAD LC1 (PLF) FROM	TO	MAX CSI (LC)	MAX. UNBRAC LENGTH
A- B	0 / 42	-102.1	-102.1	0.14 (1)	10.00
B- C	0 / 21	-102.1	-102.1	0.16 (1)	10.00
C- D	-2441 / 0	-102.1	-102.1	0.25 (1)	4.19
D- E	-2822 / 0	-102.1	-102.1	0.79 (1)	3.34
E- F	-2820 / 0	-102.1	-102.1	0.78 (1)	3.34
F- G	-2820 / 0	-102.1	-102.1	0.78 (1)	3.34
G- H	-2820 / 0	-102.1	-102.1	0.78 (1)	3.36
H- I	-2441 / 0	-102.1	-102.1	0.25 (1)	4.19
I- J	0 / 21	-102.1	-102.1	0.16 (1)	10.00
J- K	0 / 42	-102.1	-102.1	0.14 (1)	10.00
R- B	-276 / 0	0.0	0.0	0.03 (1)	7.81
L- J	-276 / 0	0.0	0.0	0.03 (1)	7.81
R- Q	0 / 1809	-38.5	-38.5	0.55 (2)	10.00
Q- P	0 / 1933	-38.5	-38.5	0.57 (2)	10.00
P- O	0 / 2822	-38.5	-38.5	0.59 (1)	10.00
O- N	0 / 2822	-38.5	-38.5	0.59 (1)	10.00
N- M	0 / 1934	-38.5	-38.5	0.57 (2)	10.00
M- L	0 / 1809	-38.5	-38.5	0.55 (2)	10.00

WEBS

MEMB. FR-TO	MAX. FACTORED FORCE (LBS)	MAX CSI (LC)
C- Q	0 / 201	0.05 (2)
Q- D	0 / 237	0.06 (3)
D- P	0 / 1265	0.28 (1)
P- E	-677 / 0	0.48 (1)
E- N	-2 / 0	0.00 (1)
N- G	-676 / 0	0.48 (1)
N- H	0 / 1262	0.28 (1)
M- H	0 / 237	0.06 (3)
M- I	0 / 201	0.05 (2)
R- C	-2698 / 0	0.77 (1)
I- L	-2698 / 0	0.77 (1)

LICENSED PROFESSIONAL ENGINEER
05/14/19
H. J. G. ALWES
100009024
PROVINCE OF ONTARIO

DESIGN CRITERIA

SPECIFIED LOADS:

TOP CH.	LL =	29.0	PSF
	DL =	6.0	PSF
BOT CH.	LL =	10.5	PSF
	DL =	7.0	PSF
TOTAL LOAD	=	52.5	PSF

SPACING = 24.0 IN. C/C

LOADING IN FLAT SECTION BASED ON A SLOPE OF 6.00/12

THIS TRUSS IS DESIGNED FOR RESIDENTIAL OR SMALL BUILDING REQUIREMENTS OF PART 9, NBCC 2010, NBCC 2015

THIS DESIGN COMPLIES WITH:
- PART 9 OF BCBC 2018 , OBC 2012
- CSA 086-09, CSA 086-14
- TPIC 2011, TPIC 2014

(55 % OF 37.8 P.S.F. G.S.L. PLUS 8.4 P.S.F. RAIN LOAD) EQUALS 29.0 P.S.F. SPECIFIED ROOF LIVE LOAD

ALLOWABLE DEFL.(LL)= L/360 (1.06")
CALCULATED VERT. DEFL.(LL) = L/ 999 (0.14")
ALLOWABLE DEFL.(TL)= L/360 (1.06")
CALCULATED VERT. DEFL.(TL) = L/ 999 (0.24")

CSI: TC=0.79/1.00 (D-E:1) , BC=0.59/1.00 (N-P:1) , WB=0.77/1.00 (I-L:1) , SSI=0.29/1.00 (D-E:1)

DOL LUMBER=1.00 NAIL=1.00 LS BEND=1.10 COMP=1.10 SHEAR=1.10 TENS= 1.10

COMPANION LIVE LOAD FACTOR = 1.00

AUTOSOLVE HEELS OFF

TRUSS PLATE MANUFACTURER IS NOT RESPONSIBLE FOR QUALITY CONTROL IN THE TRUSS MANUFACTURING PLANT .

NAIL VALUES

PLATE	GRIP(DRY) (PSI) MAX	MIN	SHEAR (PLI) MAX	MIN	SECTION (PLI) MAX	MIN
MT20	618	354	1667	788	1987	1656

PLATE PLACEMENT TOL. = 0.250 inches

PLATE ROTATION TOL. = 5.0 Deg.

SI GRIP= 0.89 (P) (INPUT = 0.90)
SI METAL= 0.73 (O) (INPUT = 1.00)

Structural component only
DWG# T-1911485

JOB NAME	TRUSS NAME	QUANTITY	PLY	JOB DESC.	DRWG NO.
403045	T4	2	1	GREEN PARK HOMES TRUSS DESC.	

Tamarack Roof Truss, Burlington

Version 8.300 S Apr 23 2019 MiTek Industries, Inc. Tue May 14 10:41:23 2019 Page 1

ID:D7uiPnW9?DzGkx1HTFaFreyNCCH-L9QVD?_?WpyDyoV4dUvymeVIT9Ms8MRw6nZSWtzGdDg

Scale = 1:53.3

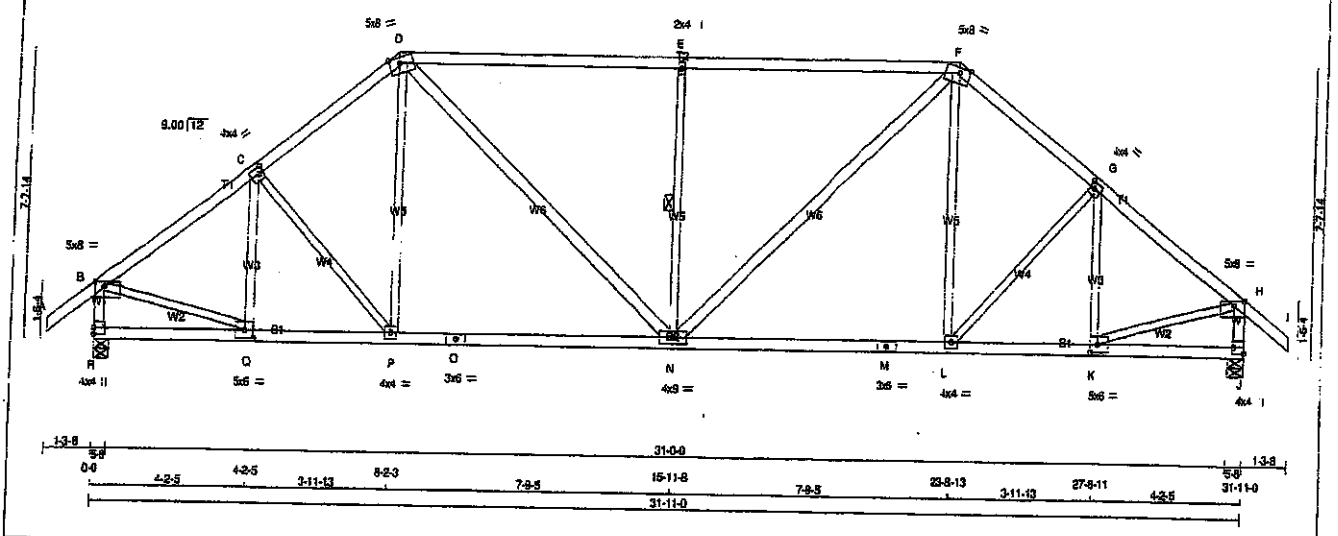

TOTAL WEIGHT = 2 X 147 = 294 lb

LUMBER

N. L. G. A. RULES

CHORDS	SIZE		LUMBER	DESCR.
A - D	2x4	DRY	No.2	SPF
D - F	2x4	DRY	No.2	SPF
F - I	2x4	DRY	No.2	SPF
R - B	2x4	DRY	No.2	SPF
J - H	2x4	DRY	No.2	SPF
R - O	2x4	DRY	No.2	SPF
O - M	2x4	DRY	No.2	SPF
M - J	2x4	DRY	No.2	SPF
ALL WEBS EXCEPT	2x3	DRY	No.2	SPF
D - N	2x4	DRY	No.2	SPF
N - F	2x4	DRY	No.2	SPF

DRY: SEASONED LUMBER.

PLATES (table is in inches)

JT	TYPE	PLATES	W	LEN	Y	X
B	TMWW-p	MT20	5.0	8.0	1.50	3.50
C	TMWW-t	MT20	4.0	4.0	2.00	1.50
D	TTWW-m	MT20	5.0	8.0	Edge	3.50
E	TMW+w	MT20	2.0	4.0		
F	TTWW-m	MT20	5.0	8.0	Edge	3.50
G	TMWW-t	MT20	4.0	4.0	2.00	1.50
H	TMW-p	MT20	5.0	8.0	1.50	3.50
J	BMV1+p	MT20	4.0	4.0	2.00	Edge
K	BMWW-t	MT20	5.0	6.0	2.50	2.50
L	BMWW-t	MT20	4.0	4.0		
M	BS-t	MT20	3.0	6.0		
N	BMWWW-t	MT20	4.0	9.0		
O	BS-t	MT20	3.0	6.0		
P	BMWW-t	MT20	4.0	4.0		
Q	BMWW-t	MT20	5.0	6.0	2.50	2.50
R	BMV1+p	MT20	4.0	4.0		

Edge - INDICATES REFERENCE CORNER OF PLATE TOUCHES EDGE OF CHORD.

DIMENSIONS, SUPPORTS AND LOADINGS SPECIFIED BY FABRICATOR TO BE VERIFIED BY BUILDING DESIGNER

BEARINGS

JT	FACTORED GROSS REACTION VERT	HORZ	MAXIMUM FACTORED GROSS REACTION DOWN	HORZ	UPLIFT	INPUT BRG IN-SX	REQRD BRG IN-SX
R	2365	0	2365	0	0	5-8	5-8
J	2365	0	2365	0	0	5-8	5-8

UNFACTORED REACTIONS

1ST LCASE MAX/MIN. COMPONENT REACTIONS

JT	COMBINED	SNOW	LIVE	PERM.LIVE	WIND	DEAD	SOIL
R	1773	1007 / 0	335 / 0	0 / 0	0 / 0	431 / 0	0 / 0
J	1773	1007 / 0	335 / 0	0 / 0	0 / 0	431 / 0	0 / 0

BEARING MATERIAL TO BE SPF NO.2 OR BETTER AT JOINT(S) R, J

BRACING

TOP CHORD TO BE SHEATHED OR MAX. PURLIN SPACING = 2.73 FT.
MAX. UNBRACED BOTTOM CHORD LENGTH = 10.00 FT OR RIGID CEILING DIRECTLY APPLIED.

ALL PITCH BREAKS AND PERIMETER CORNER JOINTS MUST BE LATERALLY RESTRAINED.

1 LATERAL BRACE(S) AT 1/ 2 LENGTH OF E-N.

END VERTICAL(S) MUST BE SHEATHED OR HAVE BRACES AS INDICATED IN THE MAX. UNBRACED LENGTH COLUMN OF THE TABLE BELOW

LOADING

TOTAL LOAD CASES: (4)

CHORDS

MEMB. FR-TO	MAX. FACTORED FORCE (LBS)	FACTORED VERT. LOAD (PLF) FROM	TO	LC1	MAX CSI (LC)	MAX. UNBRAC LENGTH
A- B	0 / 42	-102.1	-102.1	0.14 (1)	10.00	
B- C	-2391 / 0	-102.1	-102.1	0.29 (1)	4.21	
C- D	-2377 / 0	-102.1	-102.1	0.28 (1)	4.22	
D- E	-2561 / 0	-102.1	-102.1	1.00 (1)	2.73	
E- F	-2561 / 0	-102.1	-102.1	1.00 (1)	2.73	
F- G	-2377 / 0	-102.1	-102.1	0.28 (1)	4.22	
G- H	-2391 / 0	-102.1	-102.1	0.29 (1)	4.21	
H- I	0 / 42	-102.1	-102.1	0.14 (1)	10.00	
R- B	-2311 / 0	0.0	0.0	0.24 (1)	5.82	
J- H	-2311 / 0	0.0	0.0	0.24 (1)	5.82	
R- Q	0 / 0	-38.5	-38.5	0.12 (3)	10.00	
Q- P	0 / 1935	-38.5	-38.5	0.50 (2)	10.00	
P- O	0 / 1879	-38.5	-38.5	0.62 (2)	10.00	
O- N	0 / 1879	-38.5	-38.5	0.62 (2)	10.00	
N- M	0 / 1879	-38.5	-38.5	0.62 (2)	10.00	
M- L	0 / 1879	-38.5	-38.5	0.62 (2)	10.00	
L- K	0 / 1935	-38.5	-38.5	0.50 (2)	10.00	
K- J	0 / 0	-38.5	-38.5	0.12 (3)	10.00	

WEBS

MEMB. FR-TO	MAX. FACTORED FORCE (LBS)	MAX CSI (LC)
Q- C	-410 / 0	0.13 (1)
C- P	-89 / 0	0.05 (1)
P- D	0 / 353	0.08 (2)
D- N	0 / 939	0.15 (1)
N- E	-977 / 0	0.36 (1)
N- F	0 / 939	0.15 (1)
L- F	0 / 353	0.08 (2)
L- G	-89 / 0	0.05 (1)
K- G	-410 / 0	0.13 (1)
B- Q	0 / 2012	0.45 (1)
K- H	0 / 2012	0.45 (1)

LICENSED PROFESSIONAL ENGINEER
05/14/19
H. J. G. ALVES
100089031
PROVINCE OF ONTARIO

DESIGN CRITERIA

SPECIFIED LOADS:

TOP CH.	LL =	29.0	PSF
	DL =	6.0	PSF
BOT CH.	LL =	10.5	PSF
	DL =	7.0	PSF
TOTAL LOAD	=	52.5	PSF

SPACING = 24.0 IN. C/C

LOADING IN FLAT SECTION BASED ON A SLOPE OF 6.00/12

THIS TRUSS IS DESIGNED FOR RESIDENTIAL OR SMALL BUILDING REQUIREMENTS OF PART 9, NBCC 2010, NBCC 2015

THIS DESIGN COMPLIES WITH:
- PART 9 OF BCBC 2018 , OBC 2012
- CSA 086-09, CSA 086-14
- TPIC 2011, TPIC 2014

(55 % OF 37.8 P.S.F. G.S.L. PLUS 8.4 P.S.F. RAIN LOAD) EQUALS 29.0 P.S.F. SPECIFIED ROOF LIVE LOAD

ALLOWABLE DEFL.(LL)= L/360 (1.06")
CALCULATED VERT. DEFL.(LL) = L/ 999 (0.13")
ALLOWABLE DEFL.(TL)= L/360 (1.06")
CALCULATED VERT. DEFL.(TL) = L/ 999 (0.23")

CSI: TC=1.00/1.00 (E-F:1) , BC=0.62/1.00 (N-P:2) , WB=0.45/1.00 (B-Q:1) , SSI=0.39/1.00 (E-F:1)

DOL LUMBER=1.00 NAIL=1.00 LS BEND=1.10 COMP=1.10 SHEAR=1.10 TENS= 1.10

COMPANION LIVE LOAD FACTOR = 1.00

TRUSS PLATE MANUFACTURER IS NOT RESPONSIBLE FOR QUALITY CONTROL IN THE TRUSS MANUFACTURING PLANT .

NAIL VALUES

PLATE	GRIP(DRY) (PSI) MAX	MIN	SHEAR (PLI) MAX	MIN	SECTION (PLI) MAX	MIN
MT20	618	354	1667	766	1987	1656

PLATE PLACEMENT TOL. = 0.250 inches

PLATE ROTATION TOL. = 5.0 Deg.

JSI GRIP= 0.89 (K) (INPUT = 0.90)
JSI METAL= 0.65 (O) (INPUT = 1.00)

Structural component only
DWG# T-1911486

JOB NAME	TRUSS NAME	QUANTITY	PLY	JOB DESC.	DRWG NO.
403045	T5	2	1	GREEN PARK HOMES TRUSS DESC.	

Tamarack Roof Truss, Burlington

Version 8.300 S Apr 23 2019 MiTek Industries, Inc. Tue May 14 10:41:24 2019 Page 1
ID:D7uIPnW9?DzGkx1HTFaFreyNCCH-pL_tQL?dH744ax4HBCQBJs1ZFYjGtpa3LRJ02JzGdDf

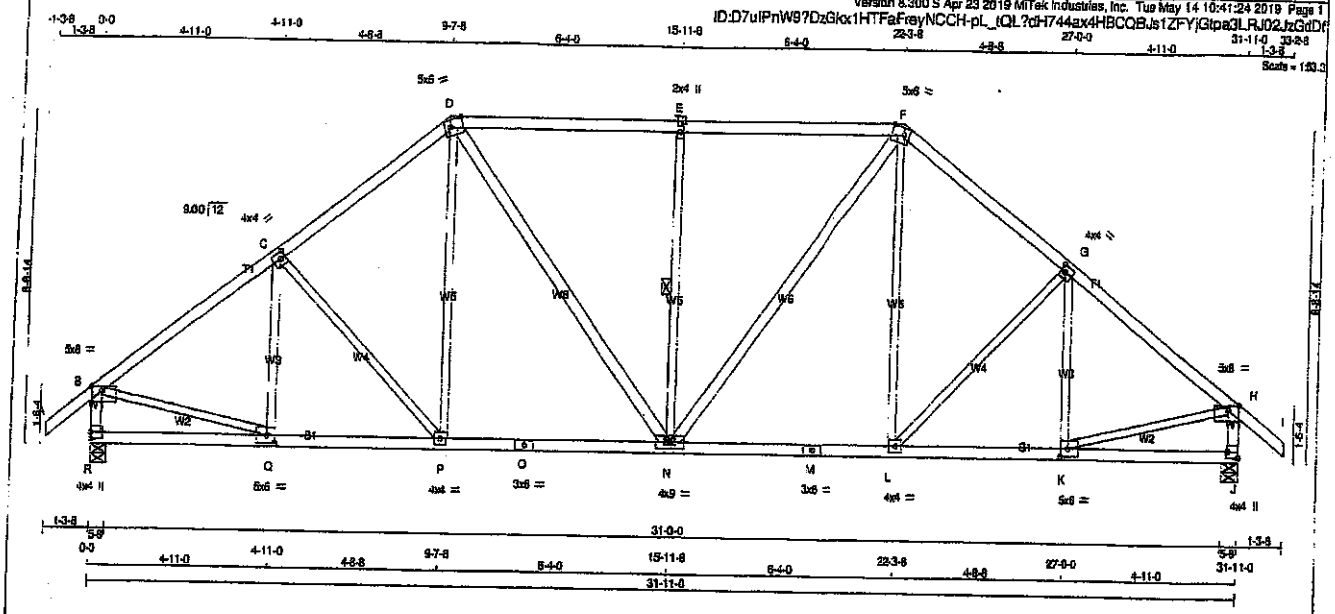

LUMBER
N. L. G. A. RULES

CHORDS	SIZE		LUMBER	DESCR.
A - D	2x4	DRY	No.2	SPF
D - F	2x4	DRY	No.2	SPF
F - I	2x4	DRY	No.2	SPF
R - B	2x4	DRY	No.2	SPF
J - H	2x4	DRY	No.2	SPF
R - O	2x4	DRY	No.2	SPF
O - M	2x4	DRY	No.2	SPF
M - J	2x4	DRY	No.2	SPF
ALL WEBS EXCEPT	2x3	DRY	No.2	SPF
D - N	2x4	DRY	No.2	SPF
N - F	2x4	DRY	No.2	SPF

DRY: SEASONED LUMBER.

PLATES (table is in inches)

JT	TYPE	PLATES	W	LEN	Y	X
B	TMWW-p	MT20	5.0	8.0	1.50	3.50
C	TMWW-t	MT20	4.0	4.0	2.00	1.50
D	TTWW-m	MT20	5.0	6.0	Edge	4.25
E	TMW+w	MT20	2.0	4.0		
F	TTWW-m	MT20	5.0	6.0	Edge	4.25
G	TMWW-t	MT20	4.0	4.0	2.00	1.50
H	TMWW-p	MT20	5.0	8.0	1.50	3.50
J	BMV1+p	MT20	4.0	4.0	2.00	Edge
K	BMWW-t	MT20	5.0	6.0	2.50	2.50
L	BMWW-t	MT20	4.0	4.0		
M	BS-t	MT20	3.0	6.0		
N	BMWWW-t	MT20	4.0	9.0		
O	BS-t	MT20	3.0	6.0		
P	BMWW-t	MT20	4.0	4.0		
Q	BMWW-t	MT20	5.0	6.0	2.50	2.50
R	BMV1+p	MT20	4.0	4.0		

Edge - INDICATES REFERENCE CORNER OF PLATE TOUCHES EDGE OF CHORD.

DIMENSIONS, SUPPORTS AND LOADINGS SPECIFIED BY FABRICATOR TO BE VERIFIED BY BUILDING DESIGNER

BEARINGS

JT	FACTORED GROSS REACTION VERT	HORZ	MAXIMUM FACTORED GROSS REACTION DOWN	HORZ	UPLIFT	INPUT BRG IN-SX	REQRD BRG IN-SX
R	2385	0	2385	0	0	5-8	5-8
J	2385	0	2385	0	0	5-8	5-8

UNFACTORED REACTIONS
1ST LOASE MAX./MIN. COMPONENT REACTIONS

JT	COMBINED	SNOW	LIVE	PERM.LIVE	WIND	DEAD	SOIL
R	1773	1007 / 0	335 / 0	0 / 0	0 / 0	431 / 0	0 / 0
J	1773	1007 / 0	335 / 0	0 / 0	0 / 0	431 / 0	0 / 0

BEARING MATERIAL TO BE SPF NO.2 OR BETTER AT JOINT(S) R, J

BRACING
TOP CHORD TO BE SHEATHED OR MAX. PURLIN SPACING = 3.89 FT.
MAX. UNBRACED BOTTOM CHORD LENGTH = 10.00 FT OR RIGID CEILING DIRECTLY APPLIED.

ALL PITCH BREAKS AND PERIMETER CORNER JOINTS MUST BE LATERALLY RESTRAINED.

1 LATERAL BRACE(S) AT 1/ 2 LENGTH OF E-N.

END VERTICAL(S) MUST BE SHEATHED OR HAVE BRACES AS INDICATED IN THE MAX. UNBRACED LENGTH COLUMN OF THE TABLE BELOW

LOADING
TOTAL LOAD CASES: (4)

CHORDS

MEMB. FR-TO	MAX. FACTORED FORCE (LBS)	FACTORED VERT. LOAD (PLF) FROM	TO	LC1	MAX CSI (LC)	MAX. UNBRAC LENGTH
A-B	0 / 42	-102.1	-102.1	0.14 (1)	10.00	
B-C	-2445 / 0	-102.1	-102.1	0.40 (1)	4.05	
C-D	-2286 / 0	-102.1	-102.1	0.38 (1)	4.18	
D-E	-2193 / 0	-102.1	-102.1	0.61 (1)	3.89	
E-F	-2193 / 0	-102.1	-102.1	0.61 (1)	3.89	
F-G	-2286 / 0	-102.1	-102.1	0.38 (1)	4.18	
G-H	-2445 / 0	-102.1	-102.1	0.40 (1)	4.05	
H-I	0 / 42	-102.1	-102.1	0.14 (1)	10.00	
R-B	-2304 / 0	0.0	0.0	0.24 (1)	5.62	
J-H	-2304 / 0	0.0	0.0	0.24 (1)	5.62	
R-Q	0 / 0	-38.5	-38.5	0.15 (3)	10.00	
Q-P	0 / 1863	-38.5	-38.5	0.45 (1)	10.00	
P-O	0 / 1602	-38.5	-38.5	0.49 (2)	10.00	
O-N	0 / 1602	-38.5	-38.5	0.49 (2)	10.00	
N-M	0 / 1602	-38.5	-38.5	0.49 (2)	10.00	
M-L	0 / 1602	-38.5	-38.5	0.49 (2)	10.00	
L-K	0 / 1863	-38.5	-38.5	0.45 (1)	10.00	
K-J	0 / 0	-38.5	-38.5	0.15 (3)	10.00	

WEBS

MEMB. FR-TO	MAX. FACTORED FORCE (LBS)	MAX CSI (LC)
Q-C	-285 / 38	0.11 (1)
C-P	-285 / 0	0.23 (1)
P-D	0 / 425	0.10 (2)
D-N	0 / 652	0.10 (1)
N-E	-791 / 0	0.39 (1)
N-F	0 / 652	0.10 (1)
L-F	0 / 425	0.10 (2)
L-G	-285 / 0	0.23 (1)
K-G	-285 / 38	0.11 (1)
B-O	0 / 2041	0.46 (1)
K-H	0 / 2041	0.46 (1)

LICENSED PROFESSIONAL ENGINEER
05/14/19
H. J. G. ALVES
100000024
PROVINCE OF ONTARIO

(M)F

DESIGN CRITERIA

SPECIFIED LOADS:

TOP CH.	LL	=	29.0	PSF
	DL	=	6.0	PSF
BOT CH.	LL	=	10.5	PSF
	DL	=	7.0	PSF
TOTAL LOAD		=	52.5	PSF

SPACING = 24.0 IN. C/C

LOADING IN FLAT SECTION BASED ON A SLOPE OF 3.00/12

THIS TRUSS IS DESIGNED FOR RESIDENTIAL OR SMALL BUILDING REQUIREMENTS OF PART 9, NBCC 2010, NBCC 2015

THIS DESIGN COMPLIES WITH:
- PART 9 OF BCBC 2019 , OBC 2012
- CSA 086-09, CSA 086-14
- TPIC 2011, TPIC 2014

(55 % OF 37.8 P.S.F. G.S.L. PLUS 8.4 P.S.F. RAIN LOAD) EQUALS 29.0 P.S.F. SPECIFIED ROOF LIVE LOAD

ALLOWABLE DEFL.(LL)= L/360 (1.06")
CALCULATED VERT. DEFL.(LL) = L/ 999 (0.10")
ALLOWABLE DEFL.(TL)= L/360 (1.06")
CALCULATED VERT. DEFL.(TL) = L/ 989 (0.17")

CSI: TC=0.61/1.00 (D-E:1) , BC=0.49/1.00 (N-P:2) , WB=0.46/1.00 (H-K:1) , SSI=0.31/1.00 (E-F:1)

DOL LUMBER=1.00 NAIL=1.00 LS BEND=1.10 COMP=1.10 SHEAR=1.10 TENS= 1.10

COMPANION LIVE LOAD FACTOR = 1.00

TRUSS PLATE MANUFACTURER IS NOT RESPONSIBLE FOR QUALITY CONTROL IN THE TRUSS MANUFACTURING PLANT .

NAIL VALUES

PLATE	GRIP(DRY) (PSI) MAX	MIN	SHEAR (PLI) MAX	MIN	SECTION (PLI) MAX	MIN
MT20	618	354	1667	788	1667	1656

PLATE PLACEMENT TOL. = 0.250 Inches

PLATE ROTATION TOL. = 5.0 Deg.

JSI GRIP= 0.86 (O) (INPUT = 0.90)
JSI METAL= 0.68 (O) (INPUT = 1.00)

Structural component only
DWG# T-1911487

JOB NAME	TRUSS NAME	QUANTITY	PLY	JOB DESC.	DRWG NO.
403045	T6	6	1	GREEN PARK HOMES TRUSS DESC.	

Tamarack Roof Truss, Burlington

Version 8.300 S Apr 23 2019 MiTek Industries, Inc. Tue May 14 10:41:25 2019 Page 1
ID:D7ulPnW9?DzGkx1HTFaFreyNCCH-HXYGeh0F2RCxB5fTlvyQr3al6y3XcFxCZ52ZamzGdDe

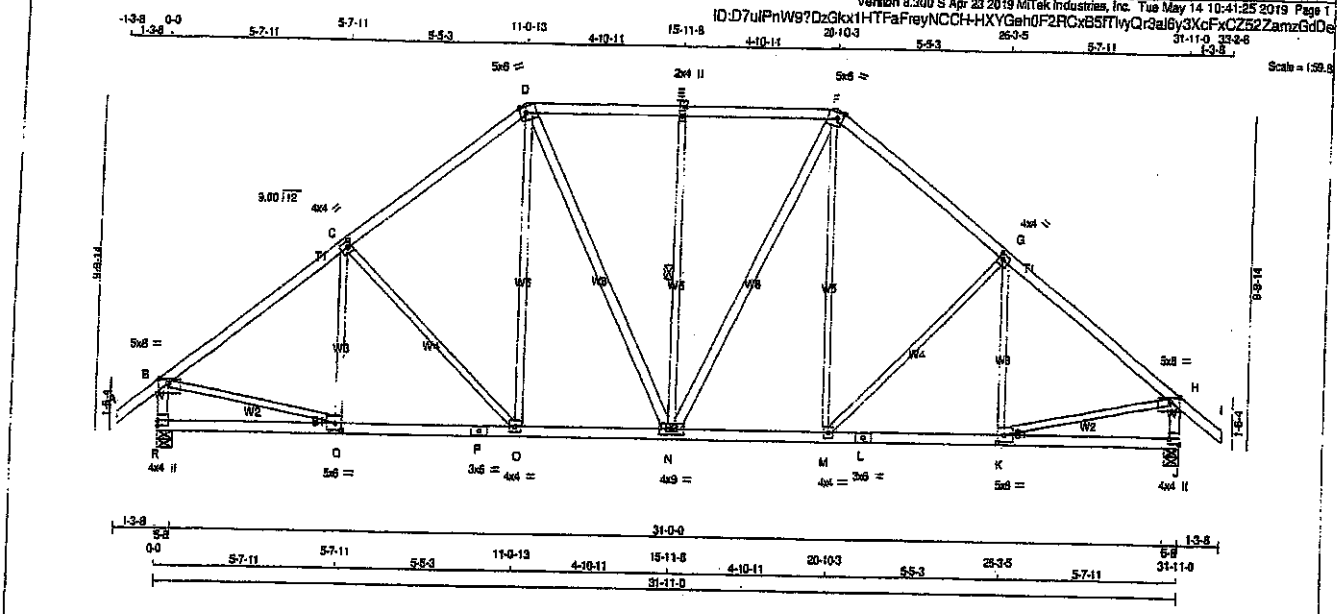

TOTAL WEIGHT = 6 X 161 = 966 lb

LUMBER

N. L. G. A. RULES

CHORDS	SIZE		LUMBER	DESCR.
A - D	2x4	DRY	No.2	SPF
D - F	2x4	DRY	No.2	SPF
F - I	2x4	DRY	No.2	SPF
R - B	2x4	DRY	No.2	SPF
J - H	2x4	DRY	No.2	SPF
R - P	2x4	DRY	No.2	SPF
P - L	2x4	DRY	No.2	SPF
L - J	2x4	DRY	No.2	SPF
ALL WEBS EXCEPT	2x3	DRY	No.2	SPF
D - N	2x4	DRY	No.2	SPF
N - F	2x4	DRY	No.2	SPF

DRY: SEASONED LUMBER.

PLATES (table is in inches)

JT	TYPE	PLATES	W	LEN	Y	X
B	TMWW-p	MT20	5.0	6.0	1.50	3.50
C	TMWW-t	MT20	4.0	4.0	2.00	1.50
D	TTWW-m	MT20	5.0	6.0	Edge	2.00
E	TMW+w	MT20	2.0	4.0		
F	TTWW-m	MT20	5.0	6.0	Edge	2.00
G	TMWW-t	MT20	4.0	4.0	2.00	1.50
H	TMWW-p	MT20	5.0	6.0	1.50	3.50
J	BMV1+p	MT20	4.0	4.0	2.00	Edge
K	BMWW-t	MT20	5.0	6.0	2.50	2.50
L	BS-t	MT20	3.0	6.0		
M	BMWW-t	MT20	4.0	4.0		
N	BMWWW-t	MT20	4.0	9.0		
O	BMWW-t	MT20	4.0	4.0		
P	BS-t	MT20	3.0	6.0		
Q	BMWW-t	MT20	5.0	6.0	2.50	2.50
R	BMV1+p	MT20	4.0	4.0		

Edge - INDICATES REFERENCE CORNER OF PLATE TOUCHES EDGE OF CHORD.

DIMENSIONS, SUPPORTS AND LOADINGS SPECIFIED BY FABRICATOR TO BE VERIFIED BY BUILDING DESIGNER

BEARINGS

JT	FACTORED GROSS REACTION VERT	HORZ	MAXIMUM FACTORED GROSS REACTION DOWN	HORZ	UPLIFT	INPUT BRG IN-SX	REQRD BRG IN-SX
R	2385	0	2385	0	0	5-8	5-8
J	2385	0	2385	0	0	5-8	5-8

UNFACTORED REACTIONS

MAX./MIN. COMPONENT REACTIONS

JT	1ST LCASE COMBINED	SNOW	LIVE	PERM.LIVE	WIND	DEAD	SOIL
R	1773	1007 / 0	335 / 0	0 / 0	0 / 0	431 / 0	0 / 0
J	1773	1007 / 0	335 / 0	0 / 0	0 / 0	431 / 0	0 / 0

BEARING MATERIAL TO BE SPF NO.2 OR BETTER AT JOINT(S) R, J

BRACING

TOP CHORD TO BE SHEATHED OR MAX. PURLIN SPACING = 3.88 FT.
MAX. UNBRACED BOTTOM CHORD LENGTH = 10.00 FT OR RIGID CEILING DIRECTLY APPLIED.

ALL PITCH BREAKS AND PERIMETER CORNER JOINTS MUST BE LATERALLY RESTRAINED.

1 LATERAL BRACE(S) AT 1/ 2 LENGTH OF E-N.

END VERTICAL(S) MUST BE SHEATHED OR HAVE BRACES AS INDICATED IN THE MAX. UNBRACED LENGTH COLUMN OF THE TABLE BELOW

LOADING

TOTAL LOAD CASES: (4)

CHORDS

MEMB. FR-TO	MAX. FACTORED FORCE (LBS)	FACTORED VERT. LOAD (PLF) FROM	TO	LC1	MAX CSI (LC)	MAX. UNBRAC LENGTH
A-B	0 / 42	-102.1	-102.1	0.14 (1)	10.00	
B-C	-2474 / 0	-102.1	-102.1	0.54 (1)	3.88	
C-D	-2181 / 0	-102.1	-102.1	0.49 (1)	4.13	
D-E	-1916 / 0	-102.1	-102.1	0.35 (1)	4.50	
E-F	-1916 / 0	-102.1	-102.1	0.35 (1)	4.50	
F-G	-2181 / 0	-102.1	-102.1	0.49 (1)	4.13	
G-H	-2474 / 0	-102.1	-102.1	0.54 (1)	3.88	
H-I	0 / 42	-102.1	-102.1	0.14 (1)	10.00	
R-B	-2296 / 0	0.0	0.0	0.24 (1)	5.63	
J-H	-2296 / 0	0.0	0.0	0.24 (1)	5.63	
R-Q	0 / 0	-38.5	-38.5	0.22 (3)	10.00	
Q-P	0 / 2011	-38.5	-38.5	0.48 (2)	10.00	
P-O	0 / 2011	-38.5	-38.5	0.48 (2)	10.00	
O-N	0 / 1715	-38.5	-38.5	0.38 (1)	10.00	
N-M	0 / 1715	-38.5	-38.5	0.38 (1)	10.00	
M-L	0 / 2011	-38.5	-38.5	0.48 (2)	10.00	
L-K	0 / 2011	-38.5	-38.5	0.48 (2)	10.00	
K-J	0 / 0	-38.5	-38.5	0.22 (3)	10.00	

WEBS

MEMB. FR-TO	MAX. FACTORED FORCE (LBS)	MAX CSI (LC)
Q-C	-185 / 119	0.09 (1)
C-O	-422 / 0	0.52 (1)
O-D	0 / 498	0.11 (2)
D-N	0 / 440	0.07 (1)
N-E	-603 / 0	0.39 (1)
N-F	0 / 440	0.07 (1)
M-F	0 / 498	0.11 (2)
M-G	-422 / 0	0.52 (1)
K-G	-185 / 119	0.09 (1)
B-Q	0 / 2055	0.46 (1)
K-H	0 / 2055	0.46 (1)

LICENSED PROFESSIONAL ENGINEER
05/14/19
H. J. G. ALVES
100008988
PROVINCE OF ONTARIO

DESIGN CRITERIA

SPECIFIED LOADS:

TOP CH.	LL =	29.0	PSF
	DL =	8.0	PSF
BOT CH.	LL =	10.5	PSF
	DL =	7.0	PSF
TOTAL LOAD	=	52.5	PSF

SPACING = 24.0 IN. C/C

LOADING IN FLAT SECTION BASED ON A SLOPE OF 6.00/12

THIS TRUSS IS DESIGNED FOR RESIDENTIAL OR SMALL BUILDING REQUIREMENTS OF PART 9, NBCC 2010, NBCC 2015

THIS DESIGN COMPLIES WITH:
- PART 9 OF BCBC 2018 , OBC 2012
- CSA 086-09, CSA 086-14
- TPIC 2011, TPIC 2014

(65 % OF 37.5 P.S.F. G.S.L. PLUS 8.4 P.S.F. RAIN LOAD) EQUALS 29.0 P.S.F. SPECIFIED ROOF LIVE LOAD

ALLOWABLE DEFL.(LL)= L/360 (1.06")
CALCULATED VERT. DEFL.(LL) = L/ 999 (0.09")
ALLOWABLE DEFL.(TL)= L/360 (1.06")
CALCULATED VERT. DEFL.(TL) = L/ 999 (0.15")

CSI: TC=0.54/1.00 (B-C:1) , BC=0.48/1.00 (O-Q:2) , WB=0.52/1.00 (C-O:1) , SBI=0.24/1.00 (D-E:1)

DOL LUMBER=1.00 NAIL=1.00 LS BEND=1.10 COMP=1.10 SHEAR=1.10 TENS= 1.10

COMPANION LIVE LOAD FACTOR = 1.00

TRUSS PLATE MANUFACTURER IS NOT RESPONSIBLE FOR QUALITY CONTROL IN THE TRUSS MANUFACTURING PLANT .

NAIL VALUES

PLATE	GRIP(DRY) (PSI) MAX	MIN	SHEAR (PLI) MAX	MIN	SECTION (PLI) MAX	MIN
MT20	618	354	1667	788	1987	1656

PLATE PLACEMENT TOL. = 0.250 inches

PLATE ROTATION TOL. = 5.0 Deg.

JS GRIP= 0.85 (B) (INPUT = 0.90)
JS METAL= 0.80 (P) (INPUT = 1.00)

Structural component only
DWG# T-1911488

JOB NAME	TRUSS NAME	QUANTITY	PLY	JOB DESC.	DRWG NO.
403045	T7	2	1	GREEN PARK HOMES TRUSS DESC.	

Tamarack Roof Truss, Burlington

Version 8.300 S Apr 23 2019 MiTek Industries, Inc. Tue May 14 10:41:25 2019 Page 1

ID:D7ulPnW9?DzGlox1HTFaFreyNCCH-HXYGeh0F2RCxB5fTlwyQrdaiKy2hcGnCZ52ZamzGdDe

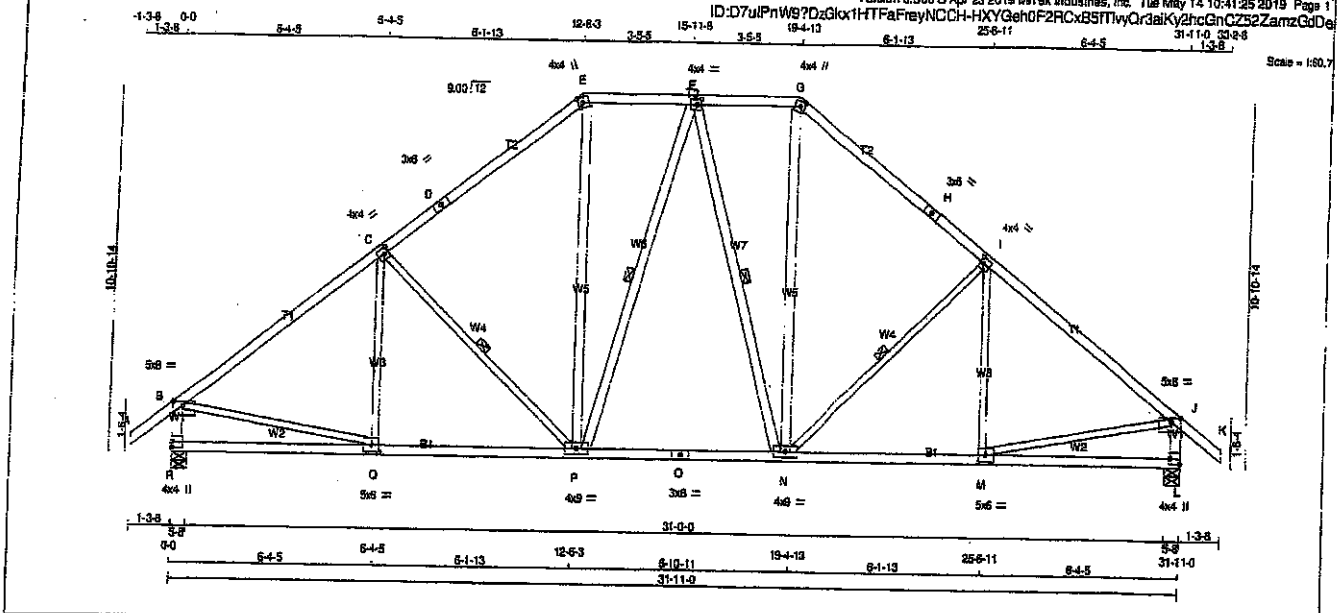

TOTAL WEIGHT = 2 X 167 = 335 lb

[M][F]

LUMBER

N. L. G. A. RULES

CHORDS	SIZE		LUMBER	DESCR.
A - D	2x4	DRY	No.2	SPF
D - E	2x4	DRY	No.2	SPF
E - G	2x4	DRY	No.2	SPF
G - H	2x4	DRY	No.2	SPF
H - K	2x4	DRY	No.2	SPF
R - B	2x4	DRY	No.2	SPF
L - J	2x4	DRY	No.2	SPF
R - O	2x4	DRY	No.2	SPF
O - L	2x4	DRY	No.2	SPF
ALL WEBS	2x3	DRY	No.2	SPF
EXCEPT				
P - E	2x4	DRY	No.2	SPF
P - F	2x4	DRY	No.2	SPF
F - N	2x4	DRY	No.2	SPF
N - G	2x4	DRY	No.2	SPF

DRY: SEASONED LUMBER.

PLATES (table is in inches)

JT	TYPE	PLATES	W	LEN	Y	X
B	TMVW-p	MT20	5.0	8.0	1.50	3.50
C	TMWW-t	MT20	4.0	4.0	2.00	1.50
D	TS-t	MT20	3.0	6.0		
E	TTW+m	MT20	4.0	4.0	2.00	1.75
F	TMWW-t	MT20	4.0	4.0	2.00	1.75
G	TTW+m	MT20	4.0	4.0	2.00	1.75
H	TS-t	MT20	3.0	6.0		
I	TMWW-t	MT20	4.0	4.0	2.00	1.50
J	TMVW-p	MT20	5.0	8.0	1.50	3.50
L	BMV1+p	MT20	4.0	4.0	2.00	Edge
M	BMWW-t	MT20	5.0	5.0	2.50	2.75
N	BMWWW-t	MT20	4.0	9.0		
O	BS-t	MT20	3.0	6.0		
P	BMWWW-t	MT20	4.0	9.0		
Q	BMWW-t	MT20	5.0	6.0	2.50	2.75
R	BMV1+p	MT20	4.0	4.0		

Edge - INDICATES REFERENCE CORNER OF PLATE TOUCHES EDGE OF CHORD.

DIMENSIONS, SUPPORTS AND LOADINGS SPECIFIED BY FABRICATOR TO BE VERIFIED BY BUILDING DESIGNER

BEARINGS

JT	FACTORED GROSS REACTION VERT	HORZ	MAXIMUM FACTORED GROSS REACTION DOWN	HORZ	UPLIFT	INPUT BRG IN-SX	REQRD BRG IN-SX
R	2385	0	2385	0	0	5-8	5-8
L	2385	0	2385	0	0	5-8	5-8

UNFACTORED REACTIONS

1ST LCASE MAX./MIN. COMPONENT REACTIONS

JT	COMBINED	SNOW	LIVE	PERM.LIVE	WIND	DEAD	SOIL
R	1773	1007 / 0	335 / 0	0 / 0	0 / 0	431 / 0	0 / 0
L	1773	1007 / 0	335 / 0	0 / 0	0 / 0	431 / 0	0 / 0

BEARING MATERIAL TO BE SPF NO.2 OR BETTER AT JOINT(S) R, L

BRACING

TOP CHORD TO BE SHEATHED OR MAX. PURLIN SPACING = 3.65 FT.
MAX. UNBRACED BOTTOM CHORD LENGTH = 10.00 FT OR RIGID CEILING DIRECTLY APPLIED.

ALL PITCH BREAKS AND PERIMETER CORNER JOINTS MUST BE LATERALLY RESTRAINED.

1 LATERAL BRACE(S) AT 1/2 LENGTH OF C-P, F-P, F-N, I-N.

END VERTICAL(S) MUST BE SHEATHED OR HAVE BRACES AS INDICATED IN THE MAX. UNBRACED LENGTH COLUMN OF THE TABLE BELOW

LOADING

TOTAL LOAD CASES: (4)

CHORDS

MEMB. FR-TO	MAX. FACTORED FORCE (LBS)	FACTORED VERT. LOAD (PLF) FROM	TO	LC1	MAX CSI (LC)	MAX. UNBRAC LENGTH
A-B	0 / 42	-102.1	-102.1	0.14 (1)	10.00	
B-C	-2461 / 0	-102.1	-102.1	0.72 (1)	3.65	
C-D	-2070 / 0	-102.1	-102.1	0.84 (1)	4.02	
D-E	-2070 / 0	-102.1	-102.1	0.84 (1)	4.02	
E-F	-1627 / 0	-102.1	-102.1	0.16 (1)	5.04	
F-G	-1627 / 0	-102.1	-102.1	0.16 (1)	5.04	
G-H	-2070 / 0	-102.1	-102.1	0.84 (1)	4.02	
H-I	-2070 / 0	-102.1	-102.1	0.84 (1)	4.02	
I-J	-2461 / 0	-102.1	-102.1	0.72 (1)	3.65	
J-K	0 / 42	-102.1	-102.1	0.14 (1)	10.00	
R-B	-2284 / 0	0.0	0.0	0.24 (1)	5.64	
L-J	-2284 / 0	0.0	0.0	0.24 (1)	5.64	
R-Q	0 / 0	-38.5	-38.5	0.28 (3)	10.00	
Q-P	0 / 2022	-38.5	-38.5	0.54 (2)	10.00	
P-O	0 / 1691	-38.5	-38.5	0.46 (2)	10.00	
O-N	0 / 1691	-38.5	-38.5	0.46 (2)	10.00	
N-M	0 / 2022	-38.5	-38.5	0.54 (2)	10.00	
M-L	0 / 0	-38.5	-38.5	0.28 (3)	10.00	

WEBS

MEMB. FR-TO	MAX. FACTORED FORCE (LBS)	MAX CSI (LC)
Q-C	-111 / 174	0.07 (1)
C-P	-559 / 0	0.29 (1)
P-E	0 / 832	0.13 (1)
P-F	-212 / 0	0.15 (1)
F-N	-216 / 0	0.15 (1)
N-G	0 / 837	0.13 (1)
N-I	-559 / 0	0.29 (1)
I-M	-111 / 174	0.07 (1)
B-Q	0 / 2057	0.46 (1)
M-J	0 / 2057	0.46 (1)

DESIGN CRITERIA

SPECIFIED LOADS:

TOP CH.	LL	=	29.0	PSF
	DL	=	6.0	PSF
BOT CH.	LL	=	10.5	PSF
	DL	=	7.0	PSF
TOTAL LOAD		=	52.5	PSF

SPACING = 24.0 IN. O/C

LOADING IN FLAT SECTION BASED ON A SLOPE OF 6.00/12

THIS TRUSS IS DESIGNED FOR RESIDENTIAL OR SMALL BUILDING REQUIREMENTS OF PART 9, NBCC 2010, NBCC 2015

THIS DESIGN COMPLIES WITH:
- PART 9 OF BCBC 2018 , OBC 2012
- CSA 086-09, CSA 086-14
- TPIC 2011, TPIC 2014

(55 % OF 37.6 P.S.F. G.S.L. PLUS 8.4 P.S.F. RAIN LOAD) EQUALS 29.0 P.S.F. SPECIFIED ROOF LIVE LOAD

ALLOWABLE DEFL.(LL)= L/360 (1.06")
CALCULATED VERT. DEFL.(LL) = L/ 999 (0.10")
ALLOWABLE DEFL.(TL)= L/360 (1.06")
CALCULATED VERT. DEFL.(TL) = L/ 999 (0.18")

CSI: TC=0.72/1.00 (B-C:1) , BC=0.54/1.00 (P-Q:2) , WB=0.46/1.00 (B-Q:1) , SSI=0.25/1.00 (B-C:1)

DOL LUMBER=1.00 NAIL=1.00 LS BEND=1.10 COMP=1.10 SHEAR=1.10 TENS= 1.10

COMPANION LIVE LOAD FACTOR = 1.00

TRUSS PLATE MANUFACTURER IS NOT RESPONSIBLE FOR QUALITY CONTROL IN THE TRUSS MANUFACTURING PLANT.

NAIL VALUES

PLATE	GRIP(DRY) (PSI) MAX	MIN	SHEAR (PLI) MAX	MIN	SECTION (PLI) MAX	MIN
MT20	618	354	1667	788	1987	1656

PLATE PLACEMENT TOL. = 0.250 inches

PLATE ROTATION TOL. = 5.0 Deg.

IS GRIP= 0.88 (C) (INPUT = 0.90)
IS METAL= 0.89 (C) (INPUT = 1.00)

LICENSED PROFESSIONAL ENGINEER
05/14/19
H. J. G ALVES
100009024
PROVINCE OF ONTARIO

Structural component only
DWG# T-1911489

JOB NAME	TRUSS NAME	QUANTITY	PLY	JOB DESC.	DRWG NO.
403045	T10	1	1	GREEN PARK HOMES TRUSS DESC.	

Tamarack Roof Truss, Burlington

Version 8.300 S Apr 23 2019 MiTek Industries, Inc. Tue May 14 10:41:28 2019 Page 1

ID:D7ulPnW9?DzGkx1HTFaFreyNCCH-i6DOQj28LLaV2ZO2G2V7TCIfA6lpeIF2HDB5zGdDb

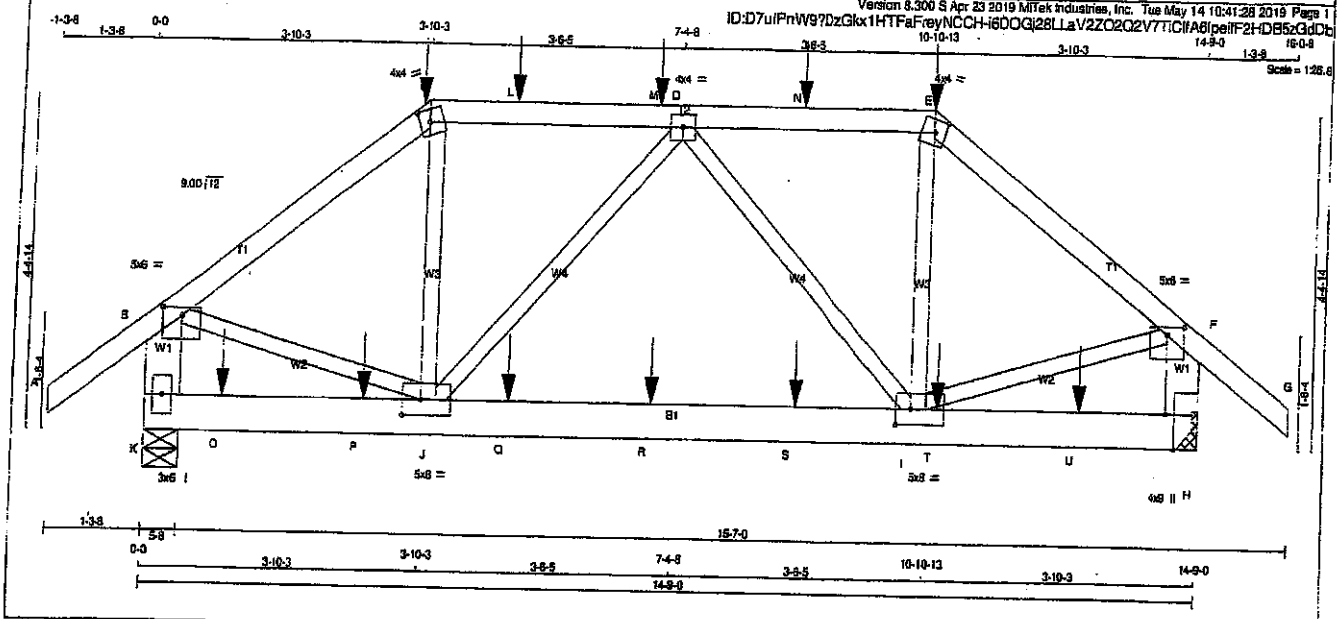

TOTAL WEIGHT = 73 lb

[M]

LUMBER

N. L. G. A. RULES

CHORDS	SIZE		LUMBER	DESCR.
A - C	2x4	DRY	No.2	SPF
C - E	2x4	DRY	No.2	SPF
E - G	2x4	DRY	No.2	SPF
K - B	2x6	DRY	No.2	SPF
H - F	2x6	DRY	No.2	SPF
K - H	2x6	DRY	No.2	SPF
ALL WEBS EXCEPT	2x3	DRY	No.2	SPF

DRY: SEASONED LUMBER.

PLATES (table is in inches)

JT	TYPE	PLATES	W	LEN	Y	X
B	TMVW-p	MT20	5.0	6.0	1.25	3.00
C	TTW-m	MT20	4.0	4.0	2.00	1.75
D	TMWW-t	MT20	4.0	4.0		
E	TTW-m	MT20	4.0	4.0	2.00	1.75
F	TMVW-p	MT20	5.0	6.0	1.25	3.00
H	BMV1+l	MT20	4.0	9.0	Edge	1.50
I	BMWWW-l	MT20	5.0	8.0	2.50	2.50
J	BMWWW-t	MT20	5.0	8.0	2.50	3.00
K	BMV1+p	MT20	3.0	6.0		

Edge - INDICATES REFERENCE CORNER OF PLATE TOUCHES EDGE OF CHORD.

DIMENSIONS, SUPPORTS AND LOADINGS SPECIFIED BY FABRICATOR TO BE VERIFIED BY BUILDING DESIGNER

BEARINGS

JT	FACTORED GROSS REACTION VERT	HORZ	MAXIMUM FACTORED GROSS REACTION DOWN	HORZ	UPLIFT	INPUT BRG	REQRD BRG
K	1936	0	1936	0	0	5-8	5-8
H	1966	0	1966	0	0	MECHANICAL	

A SUITABLE HANGER/MECHANICAL CONNECTION IS REQUIRED AT JOINT H. MINIMUM BEARING LENGTH AT JOINT H = 3-8.

UNFACTORED REACTIONS

JT	1ST LCASE COMBINED	MAX./MIN. COMPONENT REACTIONS SNOW	LIVE	PERM.LIVE	WIND	DEAD	SOIL
K	1437	824 / 0	266 / 0	0 / 0	0 / 0	348 / 0	0 / 0
H	1454	848 / 0	256 / 0	0 / 0	0 / 0	350 / 0	0 / 0

BEARING MATERIAL TO BE SPF NO.2 OR BETTER AT JOINT(S) K

BRACING

TOP CHORD TO BE SHEATHED OR MAX. PURLIN SPACING = 4.47 FT.
MAX. UNBRACED BOTTOM CHORD LENGTH = 10.00 FT OR RIGID CEILING DIRECTLY APPLIED.

ALL PITCH BREAKS AND PERIMETER CORNER JOINTS MUST BE LATERALLY RESTRAINED.

LOADING

TOTAL LOAD CASES: (4)

CHORDS

MEMB. FR-TO	MAX. FACTORED FORCE (LBS)	FACTORED VERT. LOAD LC1 (PLF) FROM	TO	MAX CSI (LC)	MAX. UNBRAC LENGTH
A- B	0 / 42	-102.1	-102.1	0.15 (1)	10.00
B- C	-1837 / 0	-102.1	-102.1	0.36 (1)	4.52
C- L	-1482 / 0	-102.1	-102.1	0.39 (1)	4.85
L- M	-1482 / 0	-102.1	-102.1	0.39 (1)	4.85
M- D	-1482 / 0	-102.1	-102.1	0.39 (1)	4.85
D- N	-1522 / 0	-102.1	-102.1	0.39 (1)	4.80
N- E	-1522 / 0	-102.1	-102.1	0.39 (1)	4.80
E- F	-1891 / 0	-102.1	-102.1	0.37 (1)	4.47
F- G	0 / 42	-102.1	-102.1	0.15 (1)	10.00
K- B	-1849 / 0	0.0	0.0	0.13 (1)	7.32
H- F	-1893 / 0	0.0	0.0	0.14 (1)	7.26
K- O	0 / 0	-38.5	-38.5	0.20 (3)	10.00
O- P	0 / 0	-38.5	-38.5	0.20 (3)	10.00
P- J	0 / 0	-38.5	-38.5	0.20 (3)	10.00
J- Q	0 / 1791	-38.5	-38.5	0.39 (1)	10.00
Q- R	0 / 1791	-38.5	-38.5	0.39 (1)	10.00
R- S	0 / 1791	-38.5	-38.5	0.39 (1)	10.00
S- I	0 / 1791	-38.5	-38.5	0.39 (1)	10.00
I- T	0 / 0	-38.5	-38.5	0.19 (3)	10.00
T- U	0 / 0	-38.5	-38.5	0.19 (3)	10.00
U- H	0 / 0	-38.5	-38.5	0.19 (3)	10.00

WEBS

MEMB. FR-TO	MAX. FACTORED FORCE (LBS)	MAX CSI (LC)
J- C	0 / 427	0.11 (2)
I- E	0 / 379	0.10 (3)
B- J	0 / 1521	0.38 (1)
I- F	0 / 1568	0.39 (1)
J- D	-463 / 0	0.23 (1)
D- I	-420 / 0	[illegible]

FACTORED CONCENTRATED LOADS (LBS)

JT	LOC.	LC1	MAX-	MAX+	FACE	DIR.	TYPE	HEEL	CONN.
C	3-10-3	-49	-55	---	FRONT	VERT	DEAD	--	--
C	3-10-3	-282	-282	---	FRONT	VERT	SNOW	--	--
E	10-10-13	-49	-55	---	FRONT	VERT	DEAD	--	--
E	10-10-13	-129	-129	---	FRONT	VERT	TOTAL	--	--
E	10-10-13	-282	-282	---	FRONT	VERT	SNOW	--	--
L	5-0-12	-123	-123	---	FRONT	VERT	TOTAL	--	--
M	7-0-12	-123	-123	---	FRONT	VERT	TOTAL	--	--
N	9-0-12	-123	-123	---	FRONT	VERT	TOTAL	--	--
O	1-0-12	-55	-70	---	FRONT	VERT	TOTAL	--	--
P	3-0-12	-55	-70	---	FRONT	VERT	TOTAL	--	--
Q	5-0-12	-55	-70	---	FRONT	VERT	TOTAL	--	--
R	7-0-12	-55	-70	---	FRONT	VERT	TOTAL	--	--
S	9-0-12	-55	-70	---	FRONT	VERT	TOTAL	--	--

DESIGN CRITERIA

*** SPECIAL LOADS ANALYSIS ***
GEOMETRY AND/OR BASIC LOADS CHANGED BY USER.
LOADS WERE DERIVED FROM USER INPUT
NO FURTHER MODIFICATIONS WERE MADE

SPECIFIED LOADS:

TOP CH.	LL =	29.0	PSF
	DL =	6.0	PSF
BOT CH.	LL =	10.5	PSF
	DL =	7.0	PSF
TOTAL LOAD	=	52.5	PSF

SPACING = 24.0 IN. O/C

LOADING IN FLAT SECTION BASED ON A SLOPE OF 2.00/12 MINIMUM

*** NON STANDARD GIRDER ***
ADDT'L USER-DEFINED LOADS APPLIED TO ALL LOAD CASES.

THIS TRUSS IS DESIGNED FOR RESIDENTIAL OR SMALL BUILDING REQUIREMENTS OF PART 9, NBCC 2010, NBCC 2015

THIS DESIGN COMPLIES WITH:
- PART 9 OF BCBC 2018 , OBC 2012
- CSA 086-09, CSA 086-14
- TPIC 2011, TPIC 2014

(55 % OF 37.8 P.S.F. G.S.L. PLUS 8.4 P.S.F. RAIN LOAD) EQUALS 29.0 P.S.F. SPECIFIED ROOF LIVE LOAD

ALLOWABLE DEFL.(LL)= L/360 (0.49")
CALCULATED VERT. DEFL.(LL) = L/ 999 (0.04")
ALLOWABLE DEFL.(TL)= L/360 (0.49")
CALCULATED VERT. DEFL.(TL) = L/ 999 (0.08")

CSI: TC=0.39/1.00 (D-E:1) , BC=0.39/1.00 (I-J:1) , WB=0.39/1.00 (F-I:1) , SSI=0.34/1.00 (C-D:1)

BOLD LUMBER=1.00 NAIL=1.00 LS BEND=1.00 PLATE COMP=1.00 SHEAR=1.00 TENS=1.00

COMPANION LIVE LOAD FACTOR = 1.00

AUTOSOLVE HEELS OFF

TRUSS PLATE MANUFACTURER IS NOT RESPONSIBLE FOR QUALITY CONTROL IN THE TRUSS MANUFACTURING PLANT.

NAIL VALUES

PLATE	GRIP(DRY) (PSI) MAX	MIN	SHEAR (PLI) MAX	MIN	SECTION (PLI) MAX	MIN
MT20	618	354	1557	786	1987	1658

PLATE PLACEMENT TOL. = 0.250 inches

PLATE ROTATION TOL. = 5.0 Deg.

JSI GRIP = 0.83 (I) (INPUT = 0.90)
JSI METAL = 0.41 (F) (INPUT = 1.00)

LICENSED PROFESSIONAL ENGINEER
05/14/19
H. J. G. ALVES
100009824
PROVINCE OF ONTARIO

Structural component only
DWG# T-1911492

CONTINUED ON PAGE 2

JOB NAME	TRUSS NAME	QUANTITY	PLY	JOB DESC.	DRWG NO.
403045	T10	1	1	GREEN PARK HOMES TRUSS DESC.	

Tamarack Roof Truss, Burlington

Version 8.300 S Apr 23 2019 MiTek Industries, Inc. Tue May 14 10:41:28 2019 Page 2

ID:D7uIPnW9?0zGkx1HTFaFreyNCCH-i6DOGi28LLaV2ZO2Q2V7TiCIfA6ipeifF2HDB5zGdDb

FACTORED CONCENTRATED LOADS (LBS)

JT	LOC.	LC1	MAX-	MAX+	FACE	DIR.	TYPE	HEEL	CONN.
T	11-0-12	-55	-70	---	FRONT	VERT	TOTAL	---	---
U	13-0-12	-55	-70	---	FRONT	VERT	TOTAL	---	---

LICENSED PROFESSIONAL ENGINEER
05/14/19
H. J. G. ALVES
100009924
PROVINCE OF ONTARIO

Structural component only
DWG# T-1911492

JOB NAME	TRUSS NAME	QUANTITY	PLY	JOB DESC.	DRWG NO.
403045	T11	1	1	GREEN PARK HOMES TRUSS DESC.	

Tamarack Roof Truss, Burlington

Version 8.300 S Apr 23 2019 MiTek Industries, Inc. Tue May 14 10:41:29 2019 Page 1
ID:D7uIPnW97DzGIkx1HTFaFreyNCCH-AJnmU33m6iMgjzE_l0M0vIUbZU?Y9UoUi0njXzGdDa

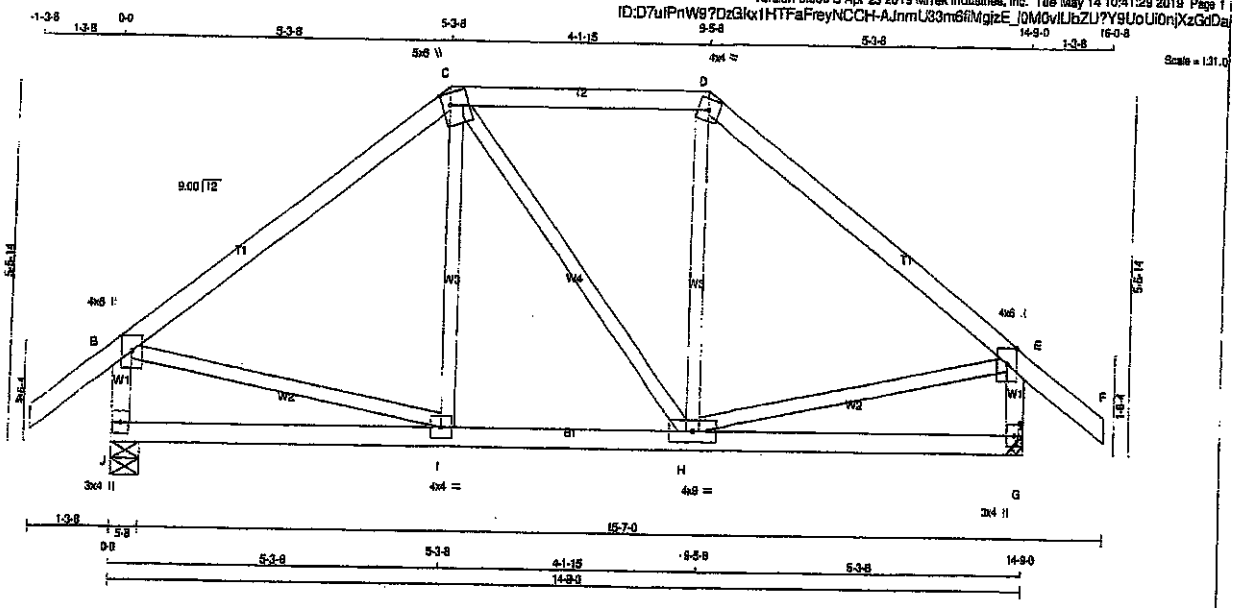

TOTAL WEIGHT = 65 lb
[MQF]

LUMBER
N. L. G. A. RULES

CHORDS	SIZE		LUMBER	DESCR.
A - C	2x4	DRY	No.2	SPF
C - D	2x4	DRY	No.2	SPF
D - F	2x4	DRY	No.2	SPF
J - B	2x4	DRY	No.2	SPF
G - E	2x4	DRY	No.2	SPF
J - G	2x4	DRY	No.2	SPF
ALL WEBS EXCEPT	2x3	DRY	No.2	SPF

DRY: SEASONED LUMBER.

PLATES (table is in inches)

JT	TYPE	PLATES	W	LEN	Y	X
B	TMVW+p	MT20	4.0	6.0	Edge	
C	TTWW+m	MT20	5.0	6.0	2.25	1.50
D	TTW-m	MT20	4.0	4.0		
E	TMVW+p	MT20	4.0	6.0	Edge	
G	BMV1+p	MT20	3.0	4.0		
H	BMWWW-t	MT20	4.0	9.0		
I	BMWW-t	MT20	4.0	4.0		
J	BMV1+p	MT20	3.0	4.0		

Edge - INDICATES REFERENCE CORNER OF PLATE TOUCHES EDGE OF CHORD.

DIMENSIONS, SUPPORTS AND LOADINGS SPECIFIED BY FABRICATOR TO BE VERIFIED BY BUILDING DESIGNER

BEARINGS

JT	FACTORED GROSS REACTION VERT	HORZ	MAXIMUM FACTORED GROSS REACTION DOWN	HORZ	UPLIFT	INPUT BRG	REQRD BRG
J	1178	0	1178	0	0	5-8	5-8
G	1178	0	1178	0	0	MECHANICAL	

A SUITABLE HANGER/MECHANICAL CONNECTION IS REQUIRED AT JOINT G. MINIMUM BEARING LENGTH AT JOINT G = 3-8.

UNFACTORED REACTIONS

JT	1ST LCASE COMBINED	MAX/MIN. COMPONENT REACTIONS SNOW	LIVE	PERM.LIVE	WIND	DEAD	SOIL
J	872	508 / 0	155 / 0	0 / 0	0 / 0	208 / 0	0 / 0
G	872	508 / 0	155 / 0	0 / 0	0 / 0	208 / 0	0 / 0

BEARING MATERIAL TO BE SPF NO.2 OR BETTER AT JOINT(S) J

BRACING
TOP CHORD TO BE SHEATHED OR MAX. PURLIN SPACING = 6.05 FT.
MAX. UNBRACED BOTTOM CHORD LENGTH = 10.00 FT OR RIGID CEILING DIRECTLY APPLIED.

ALL PITCH BREAKS AND PERIMETER CORNER JOINTS MUST BE LATERALLY RESTRAINED.

LOADING
TOTAL LOAD CASES: (4)

CHORDS

MEMB. FR-TO	MAX. FACTORED FORCE (LBS)	FACTORED VERT. LOAD (PLF) FROM	TO	LC1	MAX CSI (LC)	MAX. UNBRAC LENGTH
A-B	0 / 42	-102.1	-102.1	0.14 (1)	10.00	
B-C	-872 / 0	-102.1	-102.1	0.38 (1)	6.05	
C-D	-699 / 0	-102.1	-102.1	0.23 (1)	6.25	
D-E	-873 / 0	-102.1	-102.1	0.38 (1)	6.05	
E-F	0 / 42	-102.1	-102.1	0.14 (1)	10.00	
J-B	-1090 / 0	0.0	0.0	0.11 (1)	7.57	
G-E	-1089 / 0	0.0	0.0	0.11 (1)	7.57	
J-I	0 / 0	-38.5	-38.5	0.18 (3)	10.00	
I-H	0 / 697	-38.5	-38.5	0.26 (2)	10.00	
H-G	0 / 0	-38.5	-38.5	0.19 (3)	10.00	

WEBS

MEMB. FR-TO	MAX. FACTORED FORCE (LBS)	MAX CSI (LC)
I-C	0 / 174	0.04 (3)
C-H	0 / 4	0.00 (3)
H-D	0 / 177	0.04 (3)
B-I	0 / 713	0.16 (1)
H-E	0 / 714	0.16 (1)

DESIGN CRITERIA

SPECIFIED LOADS:

TOP CH.	LL	=	29.0	PSF
	DL	=	6.0	PSF
BOT CH.	LL	=	10.5	PSF
	DL	=	7.0	PSF
TOTAL LOAD		=	52.5	PSF

SPACING = 24.0 IN. C/C

LOADING IN FLAT SECTION BASED ON A SLOPE OF 2.00/12 MINIMUM

THIS TRUSS IS DESIGNED FOR RESIDENTIAL OR SMALL BUILDING REQUIREMENTS OF PART 9, NBCC 2010, NBCC 2015

THIS DESIGN COMPLIES WITH:
- PART 9 OF BCBC 2018 , OBC 2012
- CSA 086-09, CSA 086-14
- TPIC 2011, TPIC 2014

(55 % OF 37.5 P.S.F. G.S.L. PLUS 8.4 P.S.F. RAIN LOAD) EQUALS 29.0 P.S.F. SPECIFIED ROOF LIVE LOAD

ALLOWABLE DEFL.(LL)= L/360 (0.49")
CALCULATED VERT. DEFL.(LL) = L/ 999 (0.04")
ALLOWABLE DEFL.(TL)= L/360 (0.49")
CALCULATED VERT. DEFL.(TL) = L/ 999 (0.07")

CSI: TC=0.38/1.00 (D-E:1) , BC=0.28/1.00 (H-I:2) , WB=0.18/1.00 (E-H:1) , SSI=0.17/1.00 (D-E:1)

DOL LUMBER=1.00 NAIL=1.00 LS BEND=1.10 COMP=1.10 SHEAR=1.10 TENS= 1.10

COMPANION LIVE LOAD FACTOR = 1.00

TRUSS PLATE MANUFACTURER IS NOT RESPONSIBLE FOR QUALITY CONTROL IN THE TRUSS MANUFACTURING PLANT .

NAIL VALUES

PLATE	GRIP(DRY) (PSI) MAX	MIN	SHEAR (PLI) MAX	MIN	SECTION (PLI) MAX	MIN
MT20	618	354	1867	798	1987	1656

PLATE PLACEMENT TOL. = 0.250 inches

PLATE ROTATION TOL. = 5.0 Deg.

SI GRIP= 0.82 (I) (INPUT = 0.90)
SI METAL= 0.49 (E) (INPUT = 1.00)

LICENSED PROFESSIONAL ENGINEER
05/14/19
H. J. G. ALVES
100000024
PROVINCE OF ONTARIO

Structural component only
DWG# T-1911493

JOB NAME	TRUSS NAME	QUANTITY	PLY	JOB DESC.	DRWG NO.
403045	T12	1	1	GREEN PARK HOMES TRUSS DESC.	

Tamarack Roof Truss, Burlington

Version 8.300 S Apr 23 2019 MiTek Industries, Inc. Tue May 14 10:41:30 2019 Page 1
ID:D7ulPnW9?DzGkx1HTFaFreyNCCH-eVL9hO3OtzqDtsYQYTXbY7HTzmoHXZxjMmKGzzGdDZ

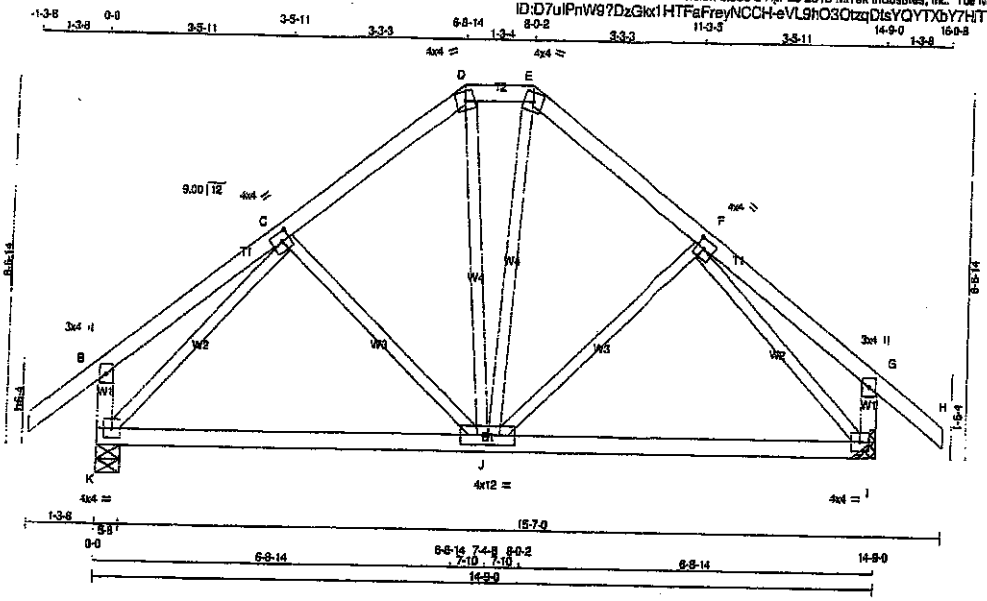

TOTAL WEIGHT = 70 lb (MF)

LUMBER
N. L. G. A. RULES

CHORDS	SIZE		LUMBER	DESCR.
A - D	2x4	DRY	No.2	SPF
D - E	2x4	DRY	No.2	SPF
E - H	2x4	DRY	No.2	SPF
K - B	2x4	DRY	No.2	SPF
I - G	2x4	DRY	No.2	SPF
K - I	2x4	DRY	No.2	SPF
ALL WEBS EXCEPT	2x3	DRY	No.2	SPF

DRY: SEASONED LUMBER.

PLATES (table is in inches)

JT	TYPE	PLATES	W	LEN	Y	X
B	TMW+p	MT20	3.0	4.0		
C	TMWW-t	MT20	4.0	4.0	2.00	1.75
D	TTW-m	MT20	4.0	4.0		
E	TTW-m	MT20	4.0	4.0		
F	TMWW-t	MT20	4.0	4.0	2.00	1.75
G	TMV+p	MT20	3.0	4.0		
I	BMWW1-t	MT20	4.0	4.0		
J	BMWWWW-t	MT20	4.0	12.0		
K	BMVW1-t	MT20	4.0	4.0		

DIMENSIONS, SUPPORTS AND LOADINGS SPECIFIED BY FABRICATOR TO BE VERIFIED BY BUILDING DESIGNER

BEARINGS

JT	FACTORED GROSS REACTION VERT	HORZ	MAXIMUM FACTORED GROSS REACTION DOWN	HORZ	UPLIFT	INPUT BRG IN-SX	REQRD BRG IN-SX
K	1178	0	1178	0	0	5-8	5-8
I	1178	0	1178	0	0	MECHANICAL	

A SUITABLE HANGER/MECHANICAL CONNECTION IS REQUIRED AT JOINT I. MINIMUM BEARING LENGTH AT JOINT I = 5-8.

UNFACTORED REACTIONS

JT	1ST LCASE COMBINED	MAX./MIN. COMPONENT REACTIONS SNOW	LIVE	PERM.LIVE	WIND	DEAD	SOIL
K	872	508 / 0	155 / 0	0 / 0	0 / 0	208 / 0	0 / 0
I	872	508 / 0	155 / 0	0 / 0	0 / 0	208 / 0	0 / 0

BEARING MATERIAL TO BE SPF NO.2 OR BETTER AT JOINT(S) K

BRACING
TOP CHORD TO BE SHEATHED OR MAX. PURLIN SPACING = 6.25 FT.
MAX. UNBRACED BOTTOM CHORD LENGTH = 10.00 FT OR RIGID CEILING DIRECTLY APPLIED.

ALL PITCH BREAKS AND PERIMETER CORNER JOINTS MUST BE LATERALLY RESTRAINED.

LOADING
TOTAL LOAD CASES: (4)

CHORDS

MEMB. FR-TO	MAX. FACTORED FORCE (LBS)	FACTORED VERT. LOAD (PLF) FROM	TO	LC1	MAX CSI (LC)	MAX. UNBRAC LENGTH
A-B	0 / 42	-102.1	-102.1	0.14 (1)	10.00	
B-C	0 / 23	-102.1	-102.1	0.18 (1)	10.00	
C-D	-800 / 0	-102.1	-102.1	0.14 (1)	6.25	
D-E	-847 / 0	-102.1	-102.1	0.03 (1)	6.25	
E-F	-800 / 0	-102.1	-102.1	0.14 (1)	6.25	
F-G	0 / 23	-102.1	-102.1	0.18 (1)	10.00	
G-H	0 / 42	-102.1	-102.1	0.14 (1)	10.00	
K-B	-273 / 0	0.0	0.0	0.03 (1)	7.81	
I-G	-273 / 0	0.0	0.0	0.03 (1)	7.81	
K-J	0 / 721	-38.5	-38.5	0.54 (2)	10.00	
J-I	0 / 721	-38.5	-38.5	0.54 (2)	10.00	

WEBS

MEMB. FR-TO	MAX. FACTORED FORCE (LBS)	MAX CSI (LC)
C-J	-137 / 33	0.07 (1)
J-F	-137 / 33	0.07 (1)
K-C	-1074 / 0	0.43 (1)
F-I	-1074 / 0	0.43 (1)
D-J	0 / 275	0.06 (2)
J-E	0 / 275	0.06 (2)

DESIGN CRITERIA

SPECIFIED LOADS:

TOP CH.	LL =	39.0	PSF
	DL =	6.0	PSF
BOT CH.	LL =	10.5	PSF
	DL =	7.0	PSF
TOTAL LOAD	=	52.5	PSF

SPACING = 24.0 IN. O/C

LOADING IN FLAT SECTION BASED ON A SLOPE OF 2.00/12 MINIMUM

THIS TRUSS IS DESIGNED FOR RESIDENTIAL OR SMALL BUILDING REQUIREMENTS OF PART 9, NBCC 2010, NBCC 2015

THIS DESIGN COMPLIES WITH:
- PART 9 OF BCBC 2018 , OBC 2012
- CSA 086-09, CSA 086-14
- TPIC 2011, TPIC 2014

(55 % OF 37.8 P.S.F. G.S.L. PLUS 8.4 P.S.F. RAIN LOAD) EQUALS 29.0 P.S.F. SPECIFIED ROOF LIVE LOAD

ALLOWABLE DEFL.(LL)= L/360 (0.49")
CALCULATED VERT. DEFL.(LL) = L/999 (0.09")
ALLOWABLE DEFL.(TL)= L/360 (0.49")
CALCULATED VERT. DEFL.(TL) = L/999 (0.14")

CSI: TC=0.18/1.00 (B-C:1) , BC=0.54/1.00 (J-K:2) , WB=0.43/1.00 (C-K:1) , SSI=0.19/1.00 (J-K:3)

DOL LUMBER=1.00 NAIL=1.00 LS BEND=1.10 COMP=1.10 SHEAR=1.10 TENS= 1.10

COMPANION LIVE LOAD FACTOR = 1.00

TRUSS PLATE MANUFACTURER IS NOT RESPONSIBLE FOR QUALITY CONTROL IN THE TRUSS MANUFACTURING PLANT.

NAIL VALUES

PLATE	GRIP(DRY) (PSI) MAX	MIN	SHEAR (PLI) MAX	MIN	SECTION (PLI) MAX	MIN
MT20	818	354	1697	788	1987	1656

PLATE PLACEMENT TOL. = 0.250 inches

PLATE ROTATION TOL. = 5.0 Deg.

JSI GRIP= 0.87 (K) (INPUT = 0.90)
JSI METAL= 0.39 (F) (INPUT = 1.00)

LICENSED PROFESSIONAL ENGINEER
May 14/19
H. J. G. ALVES
100009024
PROVINCE OF ONTARIO

Structural component only
DWG# T-1911494

JOB NAME	TRUSS NAME	QUANTITY	PLY	JOB DESC.	DRWG NO.
403060	T18	1	1	GREEN PARK HOMES TRUSS DESC.	

Tamarack Roof Truss, Burlington

Version 8.300 S Apr 23 2019 MiTek Industries, Inc. Tue May 14 11:25:33 2019 Page 1

ID:vk_f5VXL54fY8brNpe87hIyMICK-fzYJO73FR1pDt15OI2SNATFLPNIH1v_zT3VhXHzGcaG

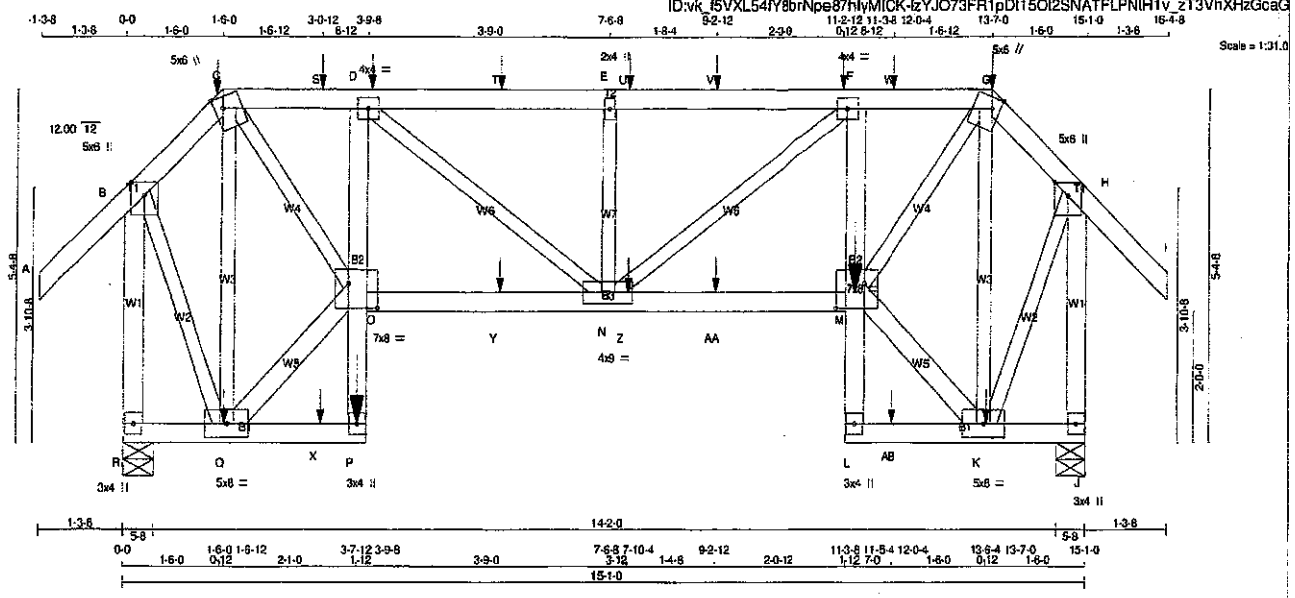

TOTAL WEIGHT = 95 lb

LUMBER

N. L. G. A. RULES

CHORDS	SIZE		LUMBER	DESCR.
A - C	2x4	DRY	No.2	SPF
C - G	2x4	DRY	No.2	SPF
G - I	2x4	DRY	No.2	SPF
R - B	2x4	DRY	No.2	SPF
J - H	2x4	DRY	No.2	SPF
R - P	2x4	DRY	No.2	SPF
P - D	2x4	DRY	No.2	SPF
O - M	2x4	DRY	No.2	SPF
L - F	2x4	DRY	No.2	SPF
L - J	2x4	DRY	No.2	SPF
ALL WEBS EXCEPT	2x3	DRY	No.2	SPF
Q - O	2x4	DRY	No.2	SPF
M - K	2x4	DRY	No.2	SPF

DRY: SEASONED LUMBER.

PLATES (table is in inches)

JT	TYPE	PLATES	W	LEN	Y	X
B	TMVW+p	MT20	5.0	6.0	Edge	
C	TTWW+m	MT20	5.0	6.0	2.00	1.50
D	TMVW-t	MT20	4.0	4.0		
E	TMW+w	MT20	2.0	4.0		
F	TMVW-t	MT20	4.0	4.0		
G	TTWW+m	MT20	5.0	6.0	2.00	1.50
H	TMVW+p	MT20	5.0	6.0	Edge	
J	BMV1+p	MT20	3.0	4.0		
K	BMWWW-t	MT20	5.0	8.0		
L	BMV+p	MT20	3.0	4.0		
M	BVMWW-t	MT20	7.0	8.0	4.50	5.50
N	BMWWW-t	MT20	4.0	9.0		
O	BVMWW-t	MT20	7.0	8.0	4.50	5.50
P	BMV+p	MT20	3.0	4.0		
Q	BMWWW-t	MT20	5.0	8.0		
R	BMV1+p	MT20	3.0	4.0		

Edge - INDICATES REFERENCE CORNER OF PLATE TOUCHES EDGE OF CHORD.

DIMENSIONS, SUPPORTS AND LOADINGS SPECIFIED BY FABRICATOR TO BE VERIFIED BY BUILDING DESIGNER

BEARINGS

JT	FACTORED GROSS REACTION VERT	HORZ	MAXIMUM FACTORED GROSS REACTION DOWN	HORZ	UPLIFT	INPUT BRG IN-SX	REQRD BRG IN-SX
R	1208	0	1208	0	0	5-8	5-8
J	1208	0	1208	0	0	5-8	5-8

UNFACTORED REACTIONS

JT	1ST LCASE COMBINED	MAX./MIN. COMPONENT REACTIONS SNOW	LIVE	PERM.LIVE	WIND	DEAD	SOIL
R	895	519 / 0	161 / 0	0 / 0	0 / 0	215 / 0	0 / 0
J	895	519 / 0	161 / 0	0 / 0	0 / 0	215 / 0	0 / 0

BEARING MATERIAL TO BE SPF NO.2 OR BETTER AT JOINT(S) R, J

BRACING

TOP CHORD TO BE SHEATHED OR MAX. PURLIN SPACING = 5.32 FT.
MAX. UNBRACED BOTTOM CHORD LENGTH = 7.81 FT OR RIGID CEILING DIRECTLY APPLIED.

ALL PITCH BREAKS AND PERIMETER CORNER JOINTS MUST BE LATERALLY RESTRAINED.

LOADING

TOTAL LOAD CASES: (7)

CHORDS

MEMB. FR-TO	MAX. FACTORED FORCE (LBS)	FACTORED VERT. LOAD (PLF) FROM	TO	LC1	MAX CSI (LC)	MAX. UNBRAC LENGTH
A- B	0 / 50	-102.1	-102.1	0.16 (1)	10.00	
B- C	-448 / 0	-102.1	-102.1	0.15 (1)	6.25	
C- S	-1016 / 0	-102.1	-102.1	0.14 (1)	6.02	
S- D	-1016 / 0	-102.1	-102.1	0.14 (1)	6.02	
D- T	-1332 / 0	-102.1	-102.1	0.23 (1)	5.32	
T- E	-1332 / 0	-102.1	-102.1	0.23 (1)	5.32	
E- U	-1332 / 0	-102.1	-102.1	0.23 (1)	5.32	
U- V	-1332 / 0	-102.1	-102.1	0.23 (1)	5.32	
V- F	-1332 / 0	-102.1	-102.1	0.23 (1)	5.32	
F- W	-1016 / 0	-102.1	-102.1	0.14 (1)	6.02	
W- G	-1016 / 0	-102.1	-102.1	0.14 (1)	6.02	
G- H	-448 / 0	-102.1	-102.1	0.15 (1)	6.25	
H- I	0 / 50	-102.1	-102.1	0.16 (1)	10.00	
R- B	-1187 / 0	0.0	0.0	0.31 (1)	7.29	
J- H	-1187 / 0	0.0	0.0	0.31 (1)	7.29	
R- Q	0 / 0	-38.5	-38.5	0.03 (3)	10.00	
Q- X	0 / 15	-38.5	-38.5	0.03 (2)	10.00	
X- P	0 / 15	-38.5	-38.5	0.03 (2)	10.00	
P- O	0 / 47	0.0	0.0	0.06 (1)	10.00	
Q- D	-563 / 0	0.0	0.0	0.06 (1)	7.81	
O- Y	0 / 1029	-38.5	-38.5	0.28 (2)	10.00	
Y- N	0 / 1029	-38.5	-38.5	0.28 (2)	10.00	
N- Z	0 / 1029	-38.5	-38.5	0.28 (2)	10.00	
Z-AA	0 / 1029	-38.5	-38.5	0.28 (2)	10.00	
AA- M	0 / 1029	-38.5	-38.5	0.28 (2)	10.00	
L- M	0 / 41	0.0	0.0	0.05 (1)	10.00	
M- F	-563 / 0	0.0	0.0	0.06 (1)	7.81	
L-AB	0 / 15	-38.5	-38.5	0.03 (2)	10.00	
AB- K	0 / 15	-38.5	-38.5	0.03 (2)	10.00	
K- J	0 / 0	-38.5	-38.5	0.03 (3)	10.00	

WEBS

MEMB. FR-TO	MAX. FACTORED FORCE (LBS)	MAX CSI (LC)
Q- C	-800 / 0	0.36 (1)
Q- O	0 / 369	0.07 (1)
C- O	0 / 1245	0.31 (1)
D- N	0 / 388	0.10 (1)
N- E	-422 / 0	0.09 (1)
N- F	0 / 388	0.10 (1)
M- K	0 / 369	0.07 (1)
M- G	0 / 1245	0.31 (1)
K- G	-800 / 0	0.36 (1)
B- Q	0 / 677	0.17 (1)
K- H	0 / 677	0.17 (1)

FACTORED CONCENTRATED LOADS (LBS)

JT	LOC.	LC1	MAX-	MAX+	FACE	DIR.	TYPE	HEEL	CONN.
C	1-6-0	1	1	144	BACK	VERT	TOTAL	---	---
D	3-10-4	1	1	144	BACK	VERT	TOTAL	---	---
F	11-2-12	1	1	144	BACK	VERT	TOTAL	---	---
G	13-7-0	1	1	144	BACK	VERT	TOTAL	---	---
K	13-6-4	1	1	---	BACK	VERT	TOTAL	---	---
M	11-5-4	-6	-7	---	BACK	VERT	TOTAL	---	---
P	3-7-12	-6	-7	---	BACK	VERT	TOTAL	---	---
Q	1-6-12	1	1	---	BACK	VERT	TOTAL	---	---

DESIGN CRITERIA

SPECIFIED LOADS:

TOP CH.	LL =	29.0	PSF
	DL =	6.0	PSF
BOT CH.	LL =	10.5	PSF
	DL =	7.0	PSF
TOTAL LOAD	=	52.5	PSF

SPACING = 24.0 IN. C/C

LOADING IN FLAT SECTION BASED ON A SLOPE OF 2.00/12 MINIMUM

THIS TRUSS IS DESIGNED FOR RESIDENTIAL OR SMALL BUILDING REQUIREMENTS OF PART 9, NBCC 2010, NBCC 2015

THIS DESIGN COMPLIES WITH:
- PART 9 OF BCBC 2018 , OBC 2012
- CSA 086-09, CSA 086-14
- TPIC 2011, TPIC 2014

DESIGN ASSUMPTIONS
-OVERHANG NOT TO BE ALTERED OR CUT OFF.

(55 % OF 37.6 P.S.F. G.S.L. PLUS 8.4 P.S.F. RAIN LOAD) EQUALS 29.0 P.S.F. SPECIFIED ROOF LIVE LOAD

ALLOWABLE DEFL.(LL)= L/360 (0.50")
CALCULATED VERT. DEFL.(LL) = L/ 999 (0.04")
ALLOWABLE DEFL.(TL)= L/360 (0.50")
CALCULATED VERT. DEFL.(TL) = L/ 999 (0.07")

CSI: TC=0.31/1.00 (B-R:1) , BC=0.28/1.00 (N-O:2) , WB=0.36/1.00 (G-K:1) , SSI=0.18/1.00 (D-E:1)

COL LUMBER=1.00 NAIL=1.00 LS BEND=1.00
COMP=1.00 SHEAR=1.00 TENS= 1.00

COMPANION LIVE LOAD FACTOR = 1.00

TRUSS PLATE MANUFACTURER IS NOT RESPONSIBLE FOR QUALITY CONTROL IN THE TRUSS MANUFACTURING PLANT .

NAIL VALUES

PLATE	GRIP(DRY) (PSI) MAX	MIN	SHEAR (PLI) MAX	MIN	SECTION (PLI) MAX	MIN
MT20	618	354	1667	788	1987	1656

PLATE PLACEMENT TOL. = 0.250 inches

PLATE ROTATION TOL. = 5.0 Deg.

JSI GRIP= 0.83 (G) (INPUT = 0.90)
JSI METAL= 0.32 (C) (INPUT = 1.00)

LICENSED PROFESSIONAL ENGINEER
05/14/19
H. J. G. ALVES
100089024
PROVINCE OF ONTARIO

Structural component only
DWG# T-1911509

CONTINUED ON PAGE 2

JOB NAME	TRUSS NAME	QUANTITY	PLY	JOB DESC.	DRWG NO.
403060	T18	1	1	GREEN PARK HOMES TRUSS DESC.	

Tamarack Roof Truss, Burlington

Version 8.300 S Apr 23 2019 MiTek Industries, Inc. Tue May 14 11:25:33 2019 Page 2

ID:vk_f5VXL54fY8brNpe87hIyMICK-lzYJO73FR1pDt15Ot2SNATFLPNtH1v_zT3VhXHzGcaG

FACTORED CONCENTRATED LOADS (LBS)

JT	LOC.	LC1	MAX-	MAX+	FACE	DIR.	TYPE	HEEL	CONN.
S	3-0-12	1	1	144	BACK	VERT	TOTAL	---	---
T	5-10-4	1	1	144	BACK	VERT	TOTAL	---	---
U	7-10-4	1	1	144	BACK	VERT	TOTAL	---	---
V	9-2-12	1	1	144	BACK	VERT	TOTAL	---	---
W	12-0-4	1	1	144	BACK	VERT	TOTAL	---	---
X	3-0-12	1	1	---	BACK	VERT	TOTAL	---	---
Y	5-10-4	1	1	---	BACK	VERT	TOTAL	---	---
Z	7-10-4	1	1	---	BACK	VERT	TOTAL	---	---
AA	9-2-12	1	1	---	BACK	VERT	TOTAL	---	---
AB	12-0-4	1	1	---	BACK	VERT	TOTAL	---	---

LICENSED PROFESSIONAL ENGINEER
05/14/19
H. J. G ALVES
100009084
PROVINCE OF ONTARIO

Structural component only
DWG# T-1911509-2

JOB NAME	TRUSS NAME	QUANTITY	PLY	JOB DESC.	DRWG NO.
403060	T19	1	1	GREEN PARK HOMES TRUSS DESC.	

Tamarack Roof Truss, Burlington

Version 8.300 S Apr 23 2019 MiTek Industries, Inc. Tue May 14 11:25:34 2019 Page 1

ID:vk_f5VXL54fY6brNpe87hIyMICK-D96hcT3tCKy3VBgaRIzcjhoWZnEmmOS7ijEF3jzGcaF

Scale = 1:41.0

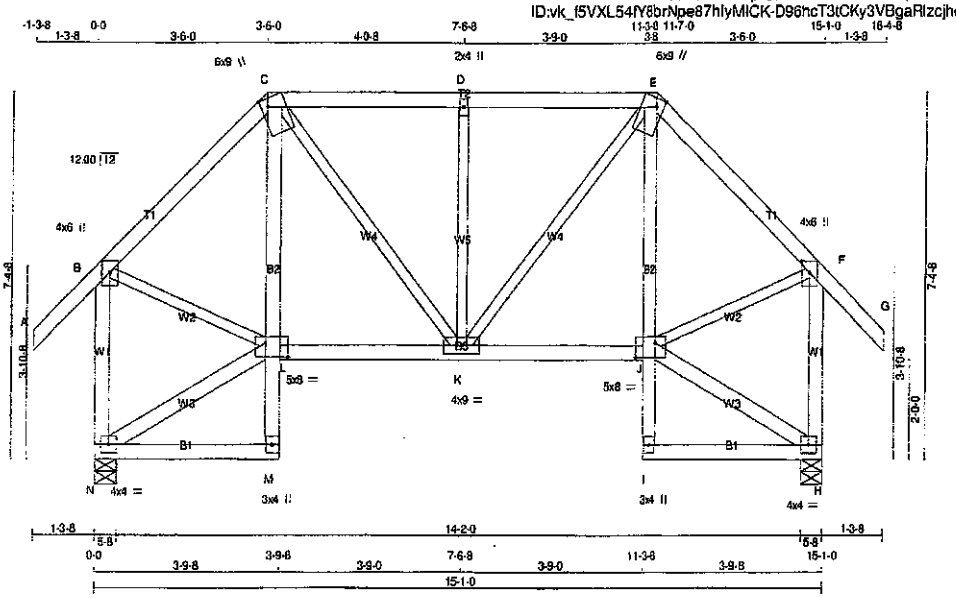

TOTAL WEIGHT = 94 lb

LUMBER

N. L. G. A. RULES

CHORDS	SIZE		LUMBER	DESCR.
A - C	2x4	DRY	No.2	SPF
C - E	2x4	DRY	No.2	SPF
E - G	2x4	DRY	No.2	SPF
N - B	2x4	DRY	No.2	SPF
H - F	2x4	DRY	No.2	SPF
N - M	2x4	DRY	No.2	SPF
M - C	2x4	DRY	No.2	SPF
L - J	2x4	DRY	No.2	SPF
I - E	2x4	DRY	No.2	SPF
I - H	2x4	DRY	No.2	SPF
ALL WEBS EXCEPT	2x3	DRY	No.2	SPF
N - L	2x4	DRY	No.2	SPF
J - H	2x4	DRY	No.2	SPF

DRY: SEASONED LUMBER.

PLATES (table is in inches)

JT	TYPE	PLATES	W	LEN	Y	X
B	TMVW+p	MT20	4.0	6.0	2.75	2.00
C	TTVW+m	MT20	6.0	9.0	Edge	1.75
D	TMW+w	MT20	2.0	4.0		
E	TTVW+m	MT20	6.0	9.0	Edge	1.75
F	TMVW+p	MT20	4.0	6.0	2.75	2.00
H	BMVW1-t	MT20	4.0	4.0		
I	BMV+p	MT20	3.0	4.0		
J	BVMWW-I	MT20	5.0	8.0	3.50	5.50
K	BMWWW-I	MT20	4.0	9.0		
L	BVMWW-I	MT20	5.0	8.0	3.50	5.50
M	BMV+p	MT20	3.0	4.0		
N	BMVW1-t	MT20	4.0	4.0		

Edge - INDICATES REFERENCE CORNER OF PLATE TOUCHES EDGE OF CHORD.

DIMENSIONS, SUPPORTS AND LOADINGS SPECIFIED BY FABRICATOR TO BE VERIFIED BY BUILDING DESIGNER

BEARINGS

JT	FACTORED GROSS REACTION VERT	HORZ	MAXIMUM FACTORED GROSS REACTION DOWN	HORZ	UPLIFT	INPUT BRG IN-SX	REQRD BRG IN-SX
N	1203	0	1203	0	0	5-8	5-8
H	1203	0	1203	0	0	5-8	5-8

UNFACTORED REACTIONS

JT	1ST LCASE COMBINED	MAX./MIN. COMPONENT REACTIONS SNOW	LIVE	PERM.LIVE	WIND	DEAD	SOIL
N	890	519 / 0	158 / 0	0 / 0	0 / 0	213 / 0	0 / 0
H	890	519 / 0	158 / 0	0 / 0	0 / 0	213 / 0	0 / 0

BEARING MATERIAL TO BE SPF NO.2 OR BETTER AT JOINT(S) N, H

BRACING

TOP CHORD TO BE SHEATHED OR MAX. PURLIN SPACING = 6.25 FT.
MAX. UNBRACED BOTTOM CHORD LENGTH = 7.81 FT OR RIGID CEILING DIRECTLY APPLIED.

ALL PITCH BREAKS AND PERIMETER CORNER JOINTS MUST BE LATERALLY RESTRAINED.

LOADING

TOTAL LOAD CASES: (4)

CHORDS

MEMB. FR-TO	MAX. FACTORED FORCE (LBS)	FACTORED VERT. LOAD (PLF) FROM	TO	LC1 CSI (LC)	MAX UNBRAC LENGTH
A- B	0 / 50	-102.1	-102.1	0.14 (1)	10.00
B- C	-823 / 0	-102.1	-102.1	0.23 (1)	6.25
C- D	-837 / 0	-102.1	-102.1	0.28 (1)	6.25
D- E	-837 / 0	-102.1	-102.1	0.28 (1)	6.25
E- F	-823 / 0	-102.1	-102.1	0.23 (1)	6.25
F- G	0 / 50	-102.1	-102.1	0.14 (1)	10.00
N- B	-1130 / 0	0.0	0.0	0.29 (1)	7.46
H- F	-1130 / 0	0.0	0.0	0.29 (1)	7.46
N- M	0 / 4	-38.5	-38.5	0.12 (3)	10.00
M- L	0 / 89	0.0	0.0	0.02 (2)	10.00
L- C	-82 / 67	0.0	0.0	0.02 (3)	7.81
L- K	0 / 578	-38.5	-38.5	0.20 (2)	10.00
K- J	0 / 578	-38.5	-38.5	0.20 (2)	10.00
I- J	0 / 89	0.0	0.0	0.02 (2)	10.00
J- E	-82 / 67	0.0	0.0	0.02 (3)	7.81
I- H	0 / 4	-38.5	-38.5	0.12 (3)	10.00

WEBS

MEMB. FR-TO	MAX. FACTORED FORCE (LBS)	MAX CSI (LC)
N- L	-5 / 0	0.00 (1)
B- L	0 / 621	0.14 (1)
J- H	-5 / 0	0.00 (1)
J- F	0 / 621	0.14 (1)
K- D	-496 / 0	0.21 (1)
C- K	0 / 414	0.09 (1)
K- E	0 / 414	0.09 (1)

LICENSED PROFESSIONAL ENGINEER
05/14/19
H. J. G. ALVES
100009084
PROVINCE OF ONTARIO

DESIGN CRITERIA

SPECIFIED LOADS:

TOP CH.	LL =	29.0	PSF
	DL =	6.0	PSF
BOT CH.	LL =	10.5	PSF
	DL =	7.0	PSF
TOTAL LOAD	=	52.5	PSF

SPACING = 24.0 IN. C/C

LOADING IN FLAT SECTION BASED ON A SLOPE OF 2.00/12 MINIMUM

THIS TRUSS IS DESIGNED FOR RESIDENTIAL OR SMALL BUILDING REQUIREMENTS OF PART 9, NBCC 2010, NBCC 2015

THIS DESIGN COMPLIES WITH:
- PART 9 OF BCBC 2018 , OBC 2012
- CSA 086-09, CSA 086-14
- TPIC 2011, TPIC 2014

(55 % OF 37.6 P.S.F. G.S.L. PLUS 8.4 P.S.F. RAIN LOAD) EQUALS 29.0 P.S.F. SPECIFIED ROOF LIVE LOAD

ALLOWABLE DEFL.(LL)= L/360 (0.50")
CALCULATED VERT. DEFL.(LL) = L/ 999 (0.02")
ALLOWABLE DEFL.(TL)= L/360 (0.50")
CALCULATED VERT. DEFL.(TL) = L/ 999 (0.03")

CSI: TC=0.29/1.00 (B-N:1) , BC=0.20/1.00 (J-K:2) , WB=0.21/1.00 (D-K:1) , SSI=0.20/1.00 (D-E:1)

DOL LUMBER=1.00 NAIL=1.00 LS BEND=1.10 COMP=1.10 SHEAR=1.10 TENS= 1.10

COMPANION LIVE LOAD FACTOR = 1.00

AUTOSOLVE HEELS OFF

TRUSS PLATE MANUFACTURER IS NOT RESPONSIBLE FOR QUALITY CONTROL IN THE TRUSS MANUFACTURING PLANT .

NAIL VALUES

PLATE	GRIP(DRY) (PSI) MAX	MIN	SHEAR (PLI) MAX	MIN	SECTION (PLI) MAX	MIN
MT20	618	354	1667	788	1987	1656

PLATE PLACEMENT TOL. = 0.250 inches

PLATE ROTATION TOL. = 3.0 Deg.

CSI GRIP= 0.79 (F) (INPUT = 0.90)
CSI METAL= 0.39 (F) (INPUT = 1.00)

Structural component only
DWG# T-1911510

JOB NAME	TRUSS NAME	QUANTITY	PLY	JOB DESC.	DRWG NO.
403060	T20	3	1	GREEN PARK HOMES TRUSS DESC.	

Tamarack Roof Truss, Burlington

Version 8.300 S Apr 23 2019 MiTek Industries, Inc. Tue May 14 11:25:35 2019 Page 1

ID:vk_f5VXL54fY8brNpe87hIyMICK-hMg3pp4Wze4w6LFn_SUrFuKfTBaWVtHGxN_ob9zGcaE

Scale = 1:50.9

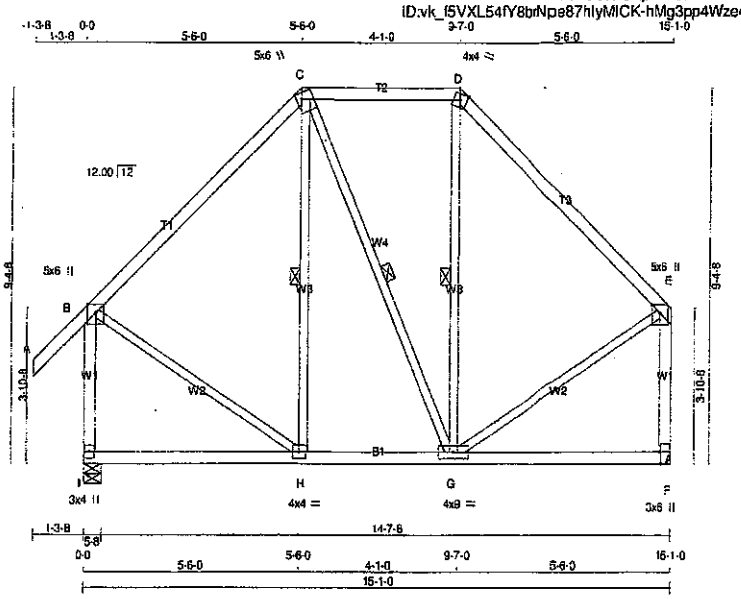

TOTAL WEIGHT = 3 X 83 = 248 lb

LUMBER

N. L. G. A. RULES

CHORDS	SIZE		LUMBER	DESCR.
A - C	2x4	DRY	No.2	SPF
C - D	2x4	DRY	No.2	SPF
D - E	2x4	DRY	No.2	SPF
I - B	2x4	DRY	No.2	SPF
F - E	2x4	DRY	No.2	SPF
I - F	2x4	DRY	No.2	SPF
ALL WEBS EXCEPT	2x3	DRY	No.2	SPF

DRY: SEASONED LUMBER.

PLATES (table is in inches)

JT	TYPE	PLATES	W	LEN	Y	X
B	TMVW+p	MT20	5.0	6.0	Edge	
C	TTWW+m	MT20	5.0	6.0	2.00	1.50
D	TTW+m	MT20	4.0	4.0	Edge	
E	TMVW+p	MT20	5.0	6.0	Edge	
F	BMV1+l	MT20	3.0	6.0	Edge	0.50
G	BMWWW+l	MT20	4.0	9.0		
H	BMWW+l	MT20	4.0	4.0		
I	BMV1+p	MT20	3.0	4.0		

Edge - INDICATES REFERENCE CORNER OF PLATE TOUCHES EDGE OF CHORD.

DIMENSIONS, SUPPORTS AND LOADINGS SPECIFIED BY FABRICATOR TO BE VERIFIED BY BUILDING DESIGNER

BEARINGS

JT	FACTORED GROSS REACTION VERT	HORZ	MAXIMUM FACTORED GROSS REACTION DOWN	HORZ	UPLIFT	INPUT BRG IN-SX	REQRD BRG IN-SX
I	1203	0	1203	0	0	5-8	5-8
F	1060	0	1060	0	0	MECHANICAL	

A SUITABLE HANGER/MECHANICAL CONNECTION IS REQUIRED AT JOINT F. MINIMUM BEARING LENGTH AT JOINT F = 1-8.

UNFACTORED REACTIONS

JT	1ST LCASE COMBINED	MAX./MIN. COMPONENT REACTIONS SNOW	LIVE	PERM.LIVE	WIND	DEAD	SOIL
I	890	519 / 0	158 / 0	0 / 0	0 / 0	213 / 0	0 / 0
F	792	438 / 0	158 / 0	0 / 0	0 / 0	196 / 0	0 / 0

BEARING MATERIAL TO BE SPF NO.2 OR BETTER AT JOINT(S) I

BRACING

TOP CHORD TO BE SHEATHED OR MAX. PURLIN SPACING = 6.25 FT.
MAX. UNBRACED BOTTOM CHORD LENGTH = 10.00 FT OR RIGID CEILING DIRECTLY APPLIED.

ALL PITCH BREAKS AND PERIMETER CORNER JOINTS MUST BE LATERALLY RESTRAINED.

1 LATERAL BRACE(S) AT 1/ 2 LENGTH OF C-H, C-G, D-G.

END VERTICAL(S) MUST BE SHEATHED OR HAVE BRACES AS INDICATED IN THE MAX. UNBRACED LENGTH COLUMN OF THE TABLE BELOW

LOADING

TOTAL LOAD CASES: (4)

CHORDS

MEMB. FR-TO	MAX. FACTORED FORCE (LBS)	FACTORED VERT. LOAD (PLF) FROM	TO	LC1	MAX CSI (LC)	MAX. UNBRAC LENGTH
A- B	0 / 50	-102.1	-102.1	0.14 (1)	10.00	
B- C	-598 / 0	-102.1	-102.1	0.40 (1)	6.25	
C- D	-421 / 0	-102.1	-102.1	0.22 (1)	6.25	
D- E	-598 / 0	-102.1	-102.1	0.40 (1)	6.25	
I- B	-1112 / 0	0.0	0.0	0.28 (1)	7.51	
F- E	-969 / 0	0.0	0.0	0.25 (1)	7.81	
I- H	0 / 0	-38.5	-38.5	0.20 (3)	10.00	
H- G	0 / 421	-38.5	-38.5	0.23 (2)	10.00	
G- F	0 / 0	-38.5	-38.5	0.20 (3)	10.00	

WEBS

MEMB. FR-TO	MAX. FACTORED FORCE (LBS)	MAX CSI (LC)
H- C	-65 / 128	0.04 (1)
C- G	0 / 0	0.00 (1)
G- D	-66 / 129	0.04 (1)
B- H	0 / 498	0.11 (1)
G- E	0 / 498	0.11 (1)

DESIGN CRITERIA

SPECIFIED LOADS:

TOP CH.	LL =	29.0	PSF
	DL =	6.0	PSF
BOT CH.	LL =	10.5	PSF
	DL =	7.0	PSF
TOTAL LOAD	=	52.5	PSF

SPACING = 24.0 IN. C/C

LOADING IN FLAT SECTION BASED ON A SLOPE OF 6.00/12

THIS TRUSS IS DESIGNED FOR RESIDENTIAL OR SMALL BUILDING REQUIREMENTS OF PART 9, NBCC 2010, NBCC 2015

THIS DESIGN COMPLIES WITH:
- PART 9 OF BCBC 2018 , OBC 2012
- CSA 086-09, CSA 086-14
- TPIC 2011, TPIC 2014

(55 % OF 37.6 P.S.F. G.S.L. PLUS 8.4 P.S.F. RAIN LOAD) EQUALS 29.0 P.S.F. SPECIFIED ROOF LIVE LOAD

ALLOWABLE DEFL.(LL)= L/360 (0.50")
CALCULATED VERT. DEFL.(LL) = L/ 999 (0.04")
ALLOWABLE DEFL.(TL)= L/360 (0.50")
CALCULATED VERT. DEFL.(TL) = L/ 999 (0.07")

CSI: TC=0.40/1.00 (B-C:1) , BC=0.23/1.00 (G-H:2) , WB=0.11/1.00 (B-H:1) , SSI=0.18/1.00 (C-D:1)

DOL LUMBER=1.00 NAIL=1.00 LS BEND=1.10 COMP=1.10 SHEAR=1.10 TENS= 1.10

COMPANION LIVE LOAD FACTOR = 1.00

TRUSS PLATE MANUFACTURER IS NOT RESPONSIBLE FOR QUALITY CONTROL IN THE TRUSS MANUFACTURING PLANT .

NAIL VALUES

PLATE	GRIP(DRY) (PSI) MAX	MIN	SHEAR (PLI) MAX	MIN	SECTION (PLI) MAX	MIN
MT20	618	354	1667	788	1987	1656

PLATE PLACEMENT TOL. = 0.250 Inches

PLATE ROTATION TOL. = 5.0 Deg.

JSI GRIP= 0.57 (B) (INPUT = 0.90)
JSI METAL= 0.27 (B) (INPUT = 1.00)

LICENSED PROFESSIONAL ENGINEER
05/14/19
H. J. G. ALVES
100009604
PROVINCE OF ONTARIO

Structural component only
DWG# T-1911511

JOB NAME	TRUSS NAME	QUANTITY	PLY	JOB DESC.	DRWG NO.
403060	T21	1	1	GREEN PARK HOMES TRUSS DESC.	

Tamarack Roof Truss, Burlington

Version 6.300 S Apr 23 2019 MiTek Industries, Inc. - Tue May 14 11:25:36 2019 Page 1
ID:vk_f5VXL54fY8brNpe87hIyMICK-AYES1958kyCnkVqzYA74o6Is_bwqEDjP91jM8czGcaD

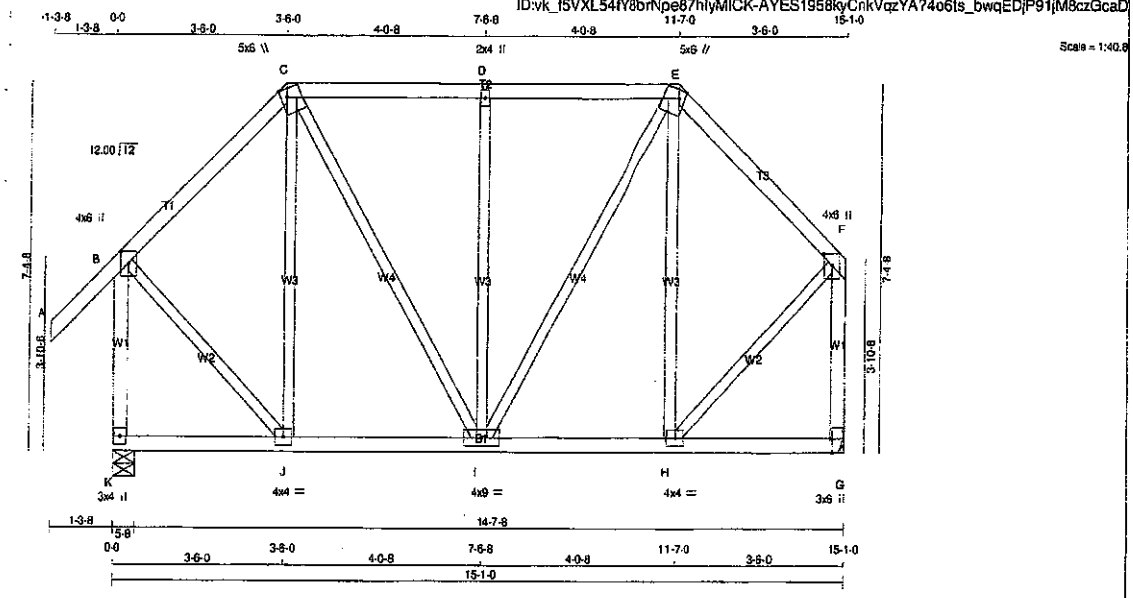

TOTAL WEIGHT = 85 lb

LUMBER
N. L. G. A. RULES

CHORDS	SIZE		LUMBER	DESCR.
A - C	2x4	DRY	No.2	SPF
C - E	2x4	DRY	No.2	SPF
E - F	2x4	DRY	No.2	SPF
K - B	2x4	DRY	No.2	SPF
G - F	2x4	DRY	No.2	SPF
K - G	2x4	DRY	No.2	SPF
ALL WEBS EXCEPT	2x3	DRY	No.2	SPF

DRY: SEASONED LUMBER.

PLATES (table is in inches)

JT	TYPE	PLATES	W	LEN	Y	X
B	TMVW+p	MT20	4.0	6.0	2.75	2.00
C	TTWW+m	MT20	5.0	6.0	2.00	1.50
D	TMW+w	MT20	2.0	4.0		
E	TTWW+m	MT20	5.0	6.0	2.00	1.50
F	TMVW+p	MT20	4.0	6.0	2.75	2.00
G	BMV1+l	MT20	3.0	6.0	Edge	0.50
H	BMWW+t	MT20	4.0	4.0		
I	BMWWW+t	MT20	4.0	9.0		
J	BMWW+t	MT20	4.0	4.0		
K	BMV1+p	MT20	3.0	4.0		

Edge - INDICATES REFERENCE CORNER OF PLATE TOUCHES EDGE OF CHORD.

DIMENSIONS, SUPPORTS AND LOADINGS SPECIFIED BY FABRICATOR TO BE VERIFIED BY BUILDING DESIGNER

BEARINGS

JT	FACTORED GROSS REACTION VERT	HORZ	MAXIMUM FACTORED GROSS REACTION DOWN	HORZ	UPLIFT	INPUT BRG IN-SX	REQRD BRG IN-SX
K	1203	0	1203	0	0	5-8	5-8
G	1060	0	1060	0	0	MECHANICAL	

A SUITABLE HANGER/MECHANICAL CONNECTION IS REQUIRED AT JOINT G. MINIMUM BEARING LENGTH AT JOINT G = 1-8.

UNFACTORED REACTIONS

JT	1ST LCASE COMBINED	MAX./MIN. COMPONENT REACTIONS SNOW	LIVE	PERM.LIVE	WIND	DEAD	SOIL
K	890	519 / 0	159 / 0	0 / 0	0 / 0	213 / 0	0 / 0
G	792	438 / 0	158 / 0	0 / 0	0 / 0	196 / 0	0 / 0

BEARING MATERIAL TO BE SPF NO.2 OR BETTER AT JOINT(S) K

BRACING
TOP CHORD TO BE SHEATHED OR MAX. PURLIN SPACING = 6.25 FT.
MAX. UNBRACED BOTTOM CHORD LENGTH = 10.00 FT OR RIGID CEILING DIRECTLY APPLIED.

ALL PITCH BREAKS AND PERIMETER CORNER JOINTS MUST BE LATERALLY RESTRAINED.

LOADING
TOTAL LOAD CASES: (4)

CHORDS

MEMB. FR-TO	MAX. FACTORED FORCE (LBS)	FACTORED VERT. LOAD LC1 (PLF) FROM	TO	MAX CSI (LC)	MAX. UNBRAC LENGTH
A- B	0 / 50	-102.1	-102.1	0.14 (1)	10.00
B- C	-593 / 0	-102.1	-102.1	0.22 (1)	6.25
C- D	-596 / 0	-102.1	-102.1	0.27 (1)	6.25
D- E	-596 / 0	-102.1	-102.1	0.27 (1)	6.25
E- F	-593 / 0	-102.1	-102.1	0.22 (1)	6.25
K- B	-1150 / 0	0.0	0.0	0.29 (1)	7.42
G- F	-1007 / 0	0.0	0.0	0.26 (1)	7.80
K- J	0 / 0	-38.5	-38.5	0.10 (3)	10.00
J- I	0 / 414	-38.5	-38.5	0.16 (2)	10.00
I- H	0 / 414	-38.5	-38.5	0.16 (2)	10.00
H- G	0 / 0	-38.5	-38.5	0.10 (3)	10.00

WEBS

MEMB. FR-TO	MAX. FACTORED FORCE (LBS)	MAX CSI (LC)
J- C	-240 / 17	0.23 (1)
C- I	0 / 368	0.08 (1)
I- D	-500 / 0	0.48 (1)
I- E	0 / 368	0.08 (1)
H- E	-240 / 17	0.23 (1)
B- J	0 / 583	0.13 (1)
H- F	0 / 583	0.13 (1)

LICENSED PROFESSIONAL ENGINEER
05/14/19
H. O. G ALVES
100009024
PROVINCE OF ONTARIO

DESIGN CRITERIA

SPECIFIED LOADS:

TOP CH.	LL	=	29.0	PSF
	DL	=	6.0	PSF
BOT CH.	LL	=	10.5	PSF
	DL	=	7.0	PSF
TOTAL LOAD		=	52.5	PSF

SPACING = 24.0 IN. C/C

LOADING IN FLAT SECTION BASED ON A SLOPE OF 6.00/12

THIS TRUSS IS DESIGNED FOR RESIDENTIAL OR SMALL BUILDING REQUIREMENTS OF PART 9, NBCC 2010, NBCC 2015

THIS DESIGN COMPLIES WITH:
- PART 9 OF SCBC 2018 , OBC 2012
- CSA 086-09, CSA 086-14
- TPIC 2011, TPIC 2014

(55 % OF 37.6 P.S.F. G.S.L. PLUS 8.4 P.S.F. RAIN LOAD) EQUALS 29.0 P.S.F. SPECIFIED ROOF LIVE LOAD

ALLOWABLE DEFL.(LL)= L/360 (0.50")
CALCULATED VERT. DEFL.(LL) = L/ 999 (0.02")
ALLOWABLE DEFL.(TL)= L/360 (0.50")
CALCULATED VERT. DEFL.(TL) = L/ 999 (0.03")

CSI: TC=0.29/1.00 (B-K:1) , BC=0.16/1.00 (H-I:2) , WB=0.48/1.00 (D-I:1) , SSI=0.20/1.00 (C-D:1)

DOL LUMBER=1.00 NAIL=1.00 LS BEND=1.10 COMP=1.10 SHEAR=1.10 TENS= 1.10

COMPANION LIVE LOAD FACTOR = 1.00

TRUSS PLATE MANUFACTURER IS NOT RESPONSIBLE FOR QUALITY CONTROL IN THE TRUSS MANUFACTURING PLANT .

NAIL VALUES

PLATE	GRIP(DRY) (PSI) MAX	MIN	SHEAR (PLI) MAX	MIN	SECTION (PLI) MAX	MIN
MT20	618	354	1887	788	1987	1656

PLATE PLACEMENT TOL. = 0.250 inches

PLATE ROTATION TOL. = 5.0 Deg.

JSI GRIP= 0.81 (F) (INPUT = 0.90)
JSI METAL= 0.30 (B) (INPUT = 1.00)

Structural component only
DWG# T-1911512

JOB NAME	TRUSS NAME	QUANTITY	PLY	JOB DESC.	DRWG NO.
403060	T22	1	1	GREEN PARK HOMES TRUSS DESC.	

Tamarack Roof Truss, Burlington

Version 8.300 S Apr 23 2019 MiTek Industries, Inc. Tue May 14 11:25:37 2019 Page 1

ID:vk_f5VXL54fY8brNpe87hIyMICK-eknqEV6mVFKeMfP96IXJKJQ2S?ALzIWZOhTvg2zGcaC

Scale = 1:30.3

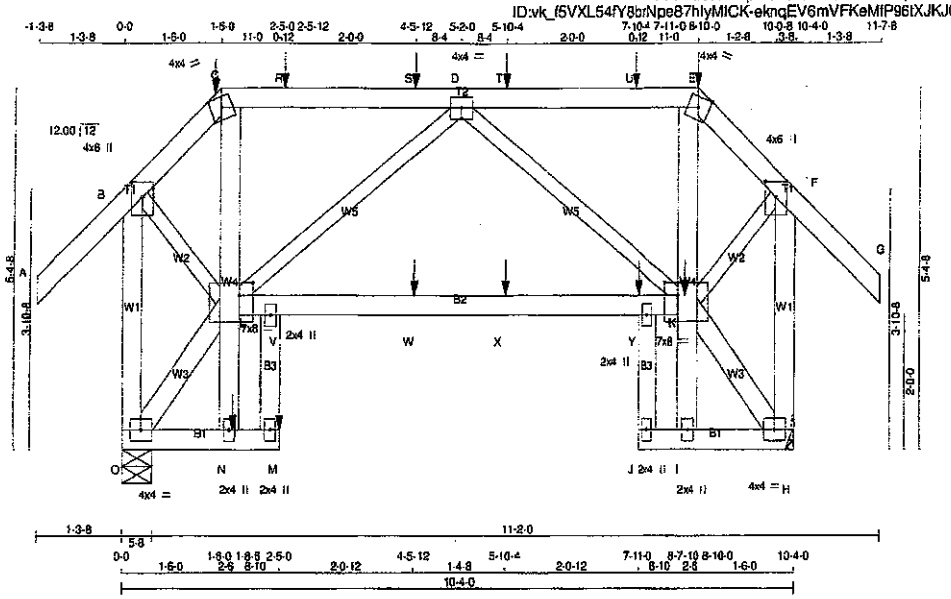

TOTAL WEIGHT = 70 lb

LUMBER

N. L. G. A. RULES

CHORDS	SIZE		LUMBER	DESCR.
A - C	2x4	DRY	No.2	SPF
C - E	2x4	DRY	No.2	SPF
E - G	2x4	DRY	No.2	SPF
O - B	2x4	DRY	No.2	SPF
H - F	2x4	DRY	No.2	SPF
O - M	2x4	DRY	No.2	SPF
L - K	2x4	DRY	No.2	SPF
J - H	2x4	DRY	No.2	SPF
ALL WEBS	2x4	DRY	No.2	SPF
EXCEPT				
B - L	2x3	DRY	No.2	SPF
K - F	2x3	DRY	No.2	SPF
L - D	2x3	DRY	No.2	SPF
D - K	2x3	DRY	No.2	SPF

DRY: SEASONED LUMBER.

PLATES (table is in inches)

JT	TYPE	PLATES	W	LEN	Y	X
B	TMVW+p	MT20	4.0	6.0	2.75	2.00
C	TTW-m	MT20	4.0	4.0	Edge	
D	TMWW-t	MT20	4.0	4.0		
E	TTW-m	MT20	4.0	4.0	Edge	
F	TMVW+p	MT20	4.0	6.0	2.75	2.00
H	BMVW1-t	MT20	4.0	4.0		
I	BMW+w	MT20	2.0	4.0		
J, M, P, Q						
J	NP+w	MT20	2.0	4.0		
K	BWMWWW*-t	MT20	7.0	8.0	2.25	2.50
L	BWMWWW*-t	MT20	7.0	8.0	2.25	2.50
N	BMW+w	MT20	2.0	4.0		
O	BMVW1-t	MT20	4.0	4.0		

Edge - INDICATES REFERENCE CORNER OF PLATE TOUCHES EDGE OF CHORD.

LICENSED PROFESSIONAL ENGINEER
05/14/19
H. J. G. ALVES
100009024
PROVINCE OF ONTARIO

DIMENSIONS, SUPPORTS AND LOADINGS SPECIFIED BY FABRICATOR TO BE VERIFIED BY BUILDING DESIGNER

BEARINGS

JT	FACTORED GROSS REACTION VERT	HORZ	MAXIMUM GROSS REACTION DOWN	HORZ	UPLIFT	INPUT BRG IN-SX	REQRD BRG IN-SX
O	897	0	897	0	0	5-8	5-8
H	897	0	897	0	0	MECHANICAL	

A SUITABLE HANGER/MECHANICAL CONNECTION IS REQUIRED AT JOINT H. MINIMUM BEARING LENGTH AT JOINT H = 1-8.

UNFACTORED REACTIONS

JT	1ST LCASE COMBINED	MAX./MIN. COMPONENT REACTIONS SNOW	LIVE	PERM LIVE	WIND	DEAD	SOIL
O	666	381 / 0	124 / 0	0 / 0	0 / 0	161 / 0	0 / 0
H	666	381 / 0	124 / 0	0 / 0	0 / 0	161 / 0	0 / 0

BEARING MATERIAL TO BE SPF NO.2 OR BETTER AT JOINT(S) O

BRACING

TOP CHORD TO BE SHEATHED OR MAX. PURLIN SPACING = 6.25 FT.
MAX. UNBRACED BOTTOM CHORD LENGTH = 10.00 FT OR RIGID CEILING DIRECTLY APPLIED.

MAX. UNBRACED INTERIOR CHORD LENGTH = 10.00 FT

ALL PITCH BREAKS AND PERIMETER CORNER JOINTS MUST BE LATERALLY RESTRAINED.

LOADING

TOTAL LOAD CASES: (7)

CHORDS

MEMB. FR-TO	MAX. FACTORED FORCE (LBS)	FACTORED VERT. LOAD LC1 (PLF) FROM	TO	MAX CSI (LC)	MAX. UNBRAC LENGTH
A- B	0 / 50	-102.1	-102.1	0.16 (1)	10.00
B- C	-472 / 0	-102.1	-102.1	0.15 (1)	6.25
C- R	-311 / 0	-102.1	-102.1	0.25 (1)	6.25
R- S	-311 / 0	-102.1	-102.1	0.25 (1)	6.25
S- D	-311 / 0	-102.1	-102.1	0.25 (1)	6.25
D- T	-311 / 0	-102.1	-102.1	0.25 (1)	6.25
T- U	-311 / 0	-102.1	-102.1	0.25 (1)	6.25
U- E	-311 / 0	-102.1	-102.1	0.25 (1)	6.25
E- F	-472 / 0	-102.1	-102.1	0.15 (1)	6.25
F- G	0 / 50	-102.1	-102.1	0.16 (1)	10.00
O- B	-856 / 0	0.0	0.0	0.23 (1)	7.81
H- F	-856 / 0	0.0	0.0	0.23 (1)	7.81
O- N	0 / 8	-38.5	-38.5	0.03 (3)	10.00
N- M	0 / 0	-38.5	-38.5	0.02 (3)	10.00
L- V	0 / 568	-38.5	-38.5	0.52 (2)	10.00
V- W	0 / 568	-38.5	-38.5	0.52 (2)	10.00
W- X	0 / 568	-38.5	-38.5	0.52 (2)	10.00
X- Y	0 / 568	-38.5	-38.5	0.52 (2)	10.00
Y- K	0 / 568	-38.5	-38.5	0.52 (2)	10.00
J- I	0 / 0	-38.5	-38.5	0.02 (3)	10.00
I- H	0 / 8	-38.5	-38.5	0.03 (3)	10.00

WEBS

MEMB. FR-TO	MAX. FACTORED FORCE (LBS)	MAX CSI (LC)
N- L	0 / 78	0.03 (2)
L- C	0 / 172	0.04 (2)
I- K	0 / 78	0.03 (2)
K- E	0 / 172	0.04 (2)
O- L	-12 / 0	0.00 (1)
B- L	0 / 400	0.10 (1)
K- H	-12 / 0	0.00 (1)
K- F	0 / 400	0.10 (1)
L- D	-344 / 0	0.13 (1)
D- K	-344 / 0	0.13 (1)

FACTORED CONCENTRATED LOADS (LBS)

JT	LOC.	LC1	MAX-	MAX+	FACE	DIR.	TYPE	HEEL	CONN.
C	1-6-0	1	1	144	FRONT	VERT	TOTAL	---	---
E	8-10-0	1	1	144	FRONT	VERT	TOTAL	---	---
K	8-7-10	1	1	---	FRONT	VERT	TOTAL	---	---
M	2-5-0	1	1	---	FRONT	VERT	TOTAL	---	---
N	1-8-6	1	1	---	FRONT	VERT	TOTAL	---	---
R	2-5-12	1	1	143	FRONT	VERT	TOTAL	---	---
S	4-5-12	1	1	144	FRONT	VERT	TOTAL	---	---
T	5-10-4	1	1	144	FRONT	VERT	TOTAL	---	---
U	7-10-4	1	1	143	FRONT	VERT	TOTAL	---	---
W	4-5-12	1	1	---	FRONT	VERT	TOTAL	---	---
X	5-10-4	1	1	---	FRONT	VERT	TOTAL	---	---

DESIGN CRITERIA

SPECIFIED LOADS:

TOP CH.	LL	=	29.0	PSF
	DL	=	6.0	PSF
BOT CH.	LL	=	10.5	PSF
	DL	=	7.0	PSF
TOTAL LOAD		=	52.5	PSF

SPACING = 24.0 IN. C/C

LOADING IN FLAT SECTION BASED ON A SLOPE OF 2.00/12 MINIMUM

THIS TRUSS IS DESIGNED FOR RESIDENTIAL OR SMALL BUILDING REQUIREMENTS OF PART 9, NBCC 2010, NBCC 2015

THIS DESIGN COMPLIES WITH:
- PART 9 OF BCBC 2018 , OBC 2012
- CSA 086-09, CSA 086-14
- TPIC 2011, TPIC 2014

DESIGN ASSUMPTIONS
-OVERHANG NOT TO BE ALTERED OR CUT OFF.

(55 % OF 37.6 P.S.F. G.S.L. PLUS 8.4 P.S.F. RAIN LOAD) EQUALS 29.0 P.S.F. SPECIFIED ROOF LIVE LOAD

ALLOWABLE DEFL.(LL)= L/360 (0.34")
CALCULATED VERT. DEFL.(LL) = L/ 814 (0.15")
ALLOWABLE DEFL.(TL)= L/360 (0.34")
CALCULATED VERT. DEFL.(TL) = L/ 488 (0.25")

CSI: TC=0.25/1.00 (C-D:1) , BC=0.52/1.00 (K-L:2) , WB=0.13/1.00 (D-K:1) , SSI=0.20/1.00 (C-D:1)

DOL LUMBER=1.00 NAIL=1.00 LS BEND=1.00 COMP=1.00 SHEAR=1.00 TENS= 1.00

COMPANION LIVE LOAD FACTOR = 1.00

AUTOSOLVE HEELS OFF

TRUSS PLATE MANUFACTURER IS NOT RESPONSIBLE FOR QUALITY CONTROL IN THE TRUSS MANUFACTURING PLANT .

NAIL VALUES

PLATE	GRIP(DRY) (PSI) MAX	MIN	SHEAR (PLI) MAX	MIN	SECTION (PLI) MAX	MIN
MT20	618	354	1667	788	1987	1656

PLATE PLACEMENT TOL. = 0.250 inches

PLATE ROTATION TOL. = 5.0 Deg.

JSI GRIP= 0.60 (B) (INPUT = 0.90)
JSI METAL= 0.23 (B) (INPUT = 1.00)

Structural component only
DWG# T-1911513

CONTINUED ON PAGE 2

JOB NAME	TRUSS NAME	QUANTITY	PLY	JOB DESC. GREEN PARK HOMES	DRWG NO.
403060	T22	1	1	TRUSS DESC.	

Tamarack Roof Truss, Burlington

Version 8.300 S Apr 23 2019 MiTek Industries, Inc. Tue May 14 11:25:37 2019 Page 2

ID:vk f5VXL54fY8biNpe87hIyMICK-ekngEV6mVFKeMIP96tXJKJQ2S?ALzIWZOhTvq2zGcaC

FACTORED CONCENTRATED LOADS (LBS)

JT	LOC.	LC1	MAX-	MAX+	FACE	DIR.	TYPE	HEEL	CONN.
Y	7-11-0	1	1	---	FRONT	VERT	TOTAL	---	---

LICENSED PROFESSIONAL ENGINEER
05/14/19
H. J. G ALVES
100009024
PROVINCE OF ONTARIO

Structural component only
DWG# T-1911513 -2

JOB NAME	TRUSS NAME	QUANTITY	PLY	JOB DESC.	DRWG NO.
403060	T23	1	1	GREEN PARK HOMES TRUSS DESC.	

Tamarack Roof Truss, Burlington

Version 8.300 S Apr 23 2019 MiTek Industries, Inc. Tue May 14 11:25:37 2019 Page 1

ID:vk_f5VXL54fY8brNpe87hlyMICK-eknqEV6mVFKeMIP96tXJKJQ22?H?zm2ZOhTvg2zGcaC

Scale = 1:40.5

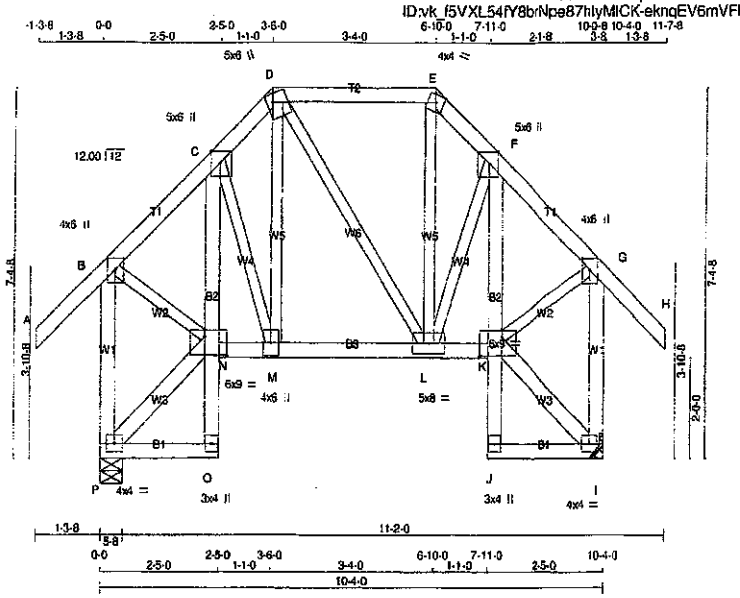

TOTAL WEIGHT = 81 lb

LUMBER

N. L. G. A. RULES

CHORDS	SIZE		LUMBER	DESCR.
A - D	2x4	DRY	No.2	SPF
D - E	2x4	DRY	No.2	SPF
E - H	2x4	DRY	No.2	SPF
P - B	2x4	DRY	No.2	SPF
I - G	2x4	DRY	No.2	SPF
P - O	2x4	DRY	No.2	SPF
O - C	2x4	DRY	No.2	SPF
N - K	2x4	DRY	No.2	SPF
J - F	2x4	DRY	No.2	SPF
J - I	2x4	DRY	No.2	SPF
ALL WEBS	2x3	DRY	No.2	SPF
EXCEPT				
P - N	2x4	DRY	No.2	SPF
K - I	2x4	DRY	No.2	SPF

DRY: SEASONED LUMBER.

PLATES (table is in inches)

JT	TYPE	PLATES	W	LEN	Y	X
B	TMVW+p	MT20	4.0	6.0	2.75	2.00
C	TMVW+p	MT20	5.0	8.0	Edge	2.25
D	TTWW+m	MT20	5.0	6.0	2.00	1.50
E	TTW-m	MT20	4.0	4.0	Edge	
F	TMVW+p	MT20	5.0	8.0	Edge	2.25
G	TMVW+p	MT20	4.0	6.0	2.75	2.00
I	BMVW1-t	MT20	4.0	4.0		
J	BMV+p	MT20	3.0	4.0		
K	BVMWW-I	MT20	6.0	9.0	4.50	5.50
L	BMWWW-I	MT20	5.0	8.0		
M	BMWW+t	MT20	4.0	6.0		
N	BVMWW-I	MT20	6.0	9.0	4.50	5.50
O	BMV+p	MT20	3.0	4.0		
P	BMVW1-t	MT20	4.0	4.0		

Edge - INDICATES REFERENCE CORNER OF PLATE TOUCHES EDGE OF CHORD.

DIMENSIONS, SUPPORTS AND LOADINGS SPECIFIED BY FABRICATOR TO BE VERIFIED BY BUILDING DESIGNER

BEARINGS

JT	FACTORED GROSS REACTION VERT	HORZ	MAXIMUM FACTORED DOWN	HORZ	UPLIFT	INPUT BRG IN-SX	REQRD BRG IN-SX
P	869	0	869	0	0	5-8	5-8
I	869	0	869	0	0	MECHANICAL	

A SUITABLE HANGER/MECHANICAL CONNECTION IS REQUIRED AT JOINT I. MINIMUM BEARING LENGTH AT JOINT I = 3-8.

UNFACTORED REACTIONS

JT	1ST LCASE COMBINED	MAX./MIN. COMPONENT REACTIONS SNOW	LIVE	PERM.LIVE	WIND	DEAD	SOIL
P	641	381 / 0	109 / 0	0 / 0	0 / 0	151 / 0	0 / 0
I	641	381 / 0	109 / 0	0 / 0	0 / 0	151 / 0	0 / 0

BEARING MATERIAL TO BE SPF NO.2 OR BETTER AT JOINT(S) P

BRACING

TOP CHORD TO BE SHEATHED OR MAX. PURLIN SPACING = 6.25 FT.
MAX. UNBRACED BOTTOM CHORD LENGTH = 7.81 FT OR RIGID CEILING DIRECTLY APPLIED.

ALL PITCH BREAKS AND PERIMETER CORNER JOINTS MUST BE LATERALLY RESTRAINED.

LOADING

TOTAL LOAD CASES: (4)

CHORDS

MEMB. FR-TO	MAX. FACTORED FORCE (LBS)	FACTORED VERT. LOAD (PLF) FROM	TO	LC1	MAX CSI (LC)	MAX. UNBRAC LENGTH
A- B	0 / 50	-102.1	-102.1	0.14 (1)	10.00	
B- C	-509 / 0	-102.1	-102.1	0.06 (1)	6.25	
C- D	-502 / 0	-102.1	-102.1	0.04 (1)	6.25	
D- E	-339 / 0	-102.1	-102.1	0.15 (1)	6.25	
E- F	-504 / 0	-102.1	-102.1	0.04 (1)	6.25	
F- G	-508 / 0	-102.1	-102.1	0.06 (1)	6.25	
G- H	0 / 50	-102.1	-102.1	0.14 (1)	10.00	
P- B	-821 / 0	0.0	0.0	0.21 (1)	7.81	
I- G	-821 / 0	0.0	0.0	0.21 (1)	7.81	
P- O	0 / 4	-38.5	-38.5	0.05 (3)	10.00	
O- N	0 / 56	0.0	0.0	0.02 (2)	10.00	
N- C	-102 / 0	0.0	0.0	0.01 (1)	7.81	
N- M	0 / 373	-38.5	-38.5	0.09 (2)	10.00	
M- L	0 / 338	-38.5	-38.5	0.09 (2)	10.00	
L- K	0 / 372	-38.5	-38.5	0.10 (2)	10.00	
J- K	0 / 56	0.0	0.0	0.02 (2)	10.00	
K- F	-105 / 0	0.0	0.0	0.01 (1)	7.81	
J- I	0 / 4	-38.5	-38.5	0.05 (3)	10.00	

WEBS

MEMB. FR-TO	MAX. FACTORED FORCE (LBS)	MAX CSI (LC)
C- M	-106 / 0	0.03 (1)
M- D	0 / 153	0.03 (2)
D- L	0 / 2	0.00 (2)
L- E	0 / 155	0.03 (2)
L- F	-103 / 0	0.03 (1)
P- N	-5 / 0	0.00 (1)
B- N	0 / 425	0.10 (1)
K- I	-5 / 0	0.00 (1)
K- G	0 / 425	0.10 (1)

LICENSED PROFESSIONAL ENGINEER
05/14/19
H. J. G. ALVES
100009084
PROVINCE OF ONTARIO

DESIGN CRITERIA

SPECIFIED LOADS:

TOP CH.	LL	=	29.0	PSF
	DL	=	6.0	PSF
BOT CH.	LL	=	10.5	PSF
	DL	=	7.0	PSF
TOTAL LOAD		=	52.5	PSF

SPACING = 24.0 IN. C/C

LOADING IN FLAT SECTION BASED ON A SLOPE OF 2.00/12 MINIMUM

THIS TRUSS IS DESIGNED FOR RESIDENTIAL OR SMALL BUILDING REQUIREMENTS OF PART 9, NBCC 2010, NBCC 2015

THIS DESIGN COMPLIES WITH:
- PART 9 OF BCBC 2018 , OBC 2012
- CSA 086-09, CSA 086-14
- TPIC 2011, TPIC 2014

(55 % OF 37.6 P.S.F. G.S.L. PLUS 8.4 P.S.F. RAIN LOAD) EQUALS 29.0 P.S.F. SPECIFIED ROOF LIVE LOAD

ALLOWABLE DEFL.(LL)= L/360 (0.34")
CALCULATED VERT. DEFL.(LL) = L/ 999 (0.01")
ALLOWABLE DEFL.(TL)= L/360 (0.34")
CALCULATED VERT. DEFL.(TL) = L/ 999 (0.01")

CSI: TC=0.21/1.00 (G-I:1) , BC=0.10/1.00 (K-L:2) , WB=0.10/1.00 (G-K:1) , SSI=0.13/1.00 (D-E:1)

DOL LUMBER=1.00 NAIL=1.00 LS BEND=1.10 COMP=1.10 SHEAR=1.10 TENS= 1.10

COMPANION LIVE LOAD FACTOR = 1.00

AUTOSOLVE HEELS OFF

TRUSS PLATE MANUFACTURER IS NOT RESPONSIBLE FOR QUALITY CONTROL IN THE TRUSS MANUFACTURING PLANT .

NAIL VALUES

PLATE	GRIP(DRY) (PSI) MAX	MIN	SHEAR (PLI) MAX	MIN	SECTION (PLI) MAX	MIN
MT20	618	354	1667	788	1987	1656

PLATE PLACEMENT TOL. = 0.250 inches

PLATE ROTATION TOL. = 5.0 Deg.

SI GRIP= 0.58 (G) (INPUT = 0.90)
SI METAL= 0.26 (G) (INPUT = 1.00)

Structural component only
DWG# T-1911514

JOB NAME	TRUSS NAME	QUANTITY	PLY	JOB DESC. GREEN PARK HOMES	DRWG NO.
403060	T24	1	1	TRUSS DESC.	

Tamarack Roof Truss, Burlington

Version 8.300 S Apr 23 2019 MiTek Industries, Inc. Tue May 14 11:25:38 2019 Page 1

ID:vk_f5VXL54fY8bNpe87hIyMICK-6xLCRr6OGZSV_pzMgb2YtXyDDOb4iEpidLCSCUzGcaE

Scale = 1:51.4

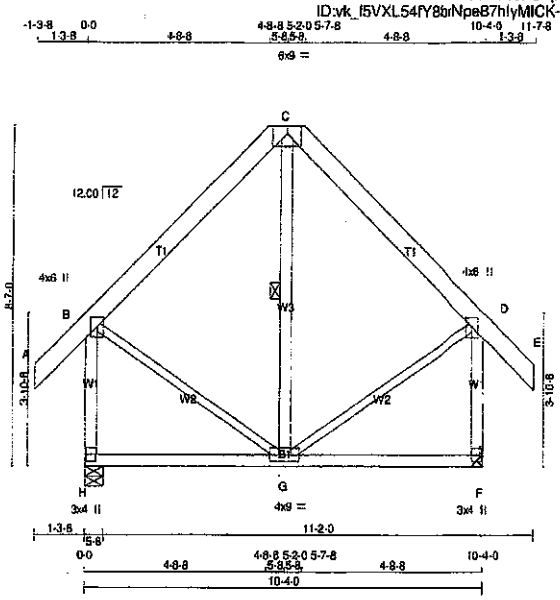

TOTAL WEIGHT = 71 lb

[MiTek]

LUMBER

N. L. G. A. RULES

CHORDS	SIZE		LUMBER	DESCR.
A - C	2x6	DRY	No.2	SPF
C - E	2x6	DRY	No.2	SPF
H - B	2x4	DRY	No.2	SPF
F - D	2x4	DRY	No.2	SPF
H - F	2x4	DRY	No.2	SPF
ALL WEBS EXCEPT	2x3	DRY	No.2	SPF
G - C	2x4	DRY	No.2	SPF

DRY: SEASONED LUMBER.

PLATES (table is in inches)

JT	TYPE	PLATES	W	LEN	Y	X
B	TMVW+p	MT20	4.0	6.0	2.75	2.00
C	TMTMWm	MT20	6.0	9.0	2.25	4.50
D	TMVW+p	MT20	4.0	6.0	2.75	2.00
F	BMV1+p	MT20	3.0	4.0		
G	BMWWW-I	MT20	4.0	9.0		
H	BMV1+p	MT20	3.0	4.0		

DIMENSIONS, SUPPORTS AND LOADINGS SPECIFIED BY FABRICATOR TO BE VERIFIED BY BUILDING DESIGNER

BEARINGS

JT	FACTORED GROSS REACTION VERT	HORZ	MAXIMUM FACTORED GROSS REACTION DOWN	HORZ	UPLIFT	INPUT BRG IN-SX	REQRD BRG IN-SX
H	875	0	875	0	0	5-8	5-8
F	875	0	875	0	0	MECHANICAL	

A SUITABLE HANGER/MECHANICAL CONNECTION IS REQUIRED AT JOINT F. MINIMUM BEARING LENGTH AT JOINT F = 3-8.

UNFACTORED REACTIONS

JT	1ST LCASE COMBINED	MAX./MIN. COMPONENT REACTIONS SNOW	LIVE	PERM.LIVE	WIND	DEAD	SOIL
H	645	384 / 0	109 / 0	0 / 0	0 / 0	152 / 0	0 / 0
F	645	384 / 0	109 / 0	0 / 0	0 / 0	152 / 0	0 / 0

BEARING MATERIAL TO BE SPF NO.2 OR BETTER AT JOINT(S) H

BRACING

TOP CHORD TO BE SHEATHED OR MAX. PURLIN SPACING = 6.25 FT.
MAX. UNBRACED BOTTOM CHORD LENGTH = 10.00 FT OR RIGID CEILING DIRECTLY APPLIED.

ALL PITCH BREAKS AND PERIMETER CORNER JOINTS MUST BE LATERALLY RESTRAINED.

(LATERAL BRACE(S) AT 1/ 2 LENGTH OF C-G.

END VERTICAL(S) MUST BE SHEATHED OR HAVE BRACES AS INDICATED IN THE MAX. UNBRACED LENGTH COLUMN OF THE TABLE BELOW

LOADING

TOTAL LOAD CASES: (4)

CHORDS

MEMB. FR-TO	MAX. FACTORED FORCE (LBS)	FACTORED VERT. LOAD (PLF) FROM	TO	LC1	MAX CSI (LC)	MAX. UNBRAC LENGTH
A- B	0 / 52	-102.1	-102.1	0.08 (1)	10.00	
B- C	-330 / 0	-102.1	-102.1	0.17 (1)	6.25	
C- D	-330 / 0	-102.1	-102.1	0.17 (1)	6.25	
D- E	0 / 52	-102.1	-102.1	0.08 (1)	10.00	
H- B	-799 / 0	0.0	0.0	0.18 (1)	7.81	
F- D	-799 / 0	0.0	0.0	0.18 (1)	7.81	
H- G	0 / 0	-38.5	-38.5	0.24 (3)	10.00	
G- F	0 / 0	-38.5	-38.5	0.24 (3)	10.00	

WEBS

MEMB. FR-TO	MAX. FACTORED FORCE (LBS)	MAX CSI (LC)
B- G	0 / 280	0.06 (1)
G- D	0 / 280	0.06 (1)
G- C	-61 / 159	0.03 (3)

DESIGN CRITERIA

SPECIFIED LOADS:

TOP CH.	LL	=	29.0	PSF
	DL	=	6.0	PSF
BOT CH.	LL	=	10.5	PSF
	DL	=	7.0	PSF
TOTAL LOAD		=	52.5	PSF

SPACING = 24.0 IN. C/C

THIS TRUSS IS DESIGNED FOR RESIDENTIAL OR SMALL BUILDING REQUIREMENTS OF PART 9, NBCC 2010, NBCC 2015

THIS DESIGN COMPLIES WITH:
- PART 9 OF BCBC 2018 , OBC 2012
- CSA 086-09, CSA 086-14
- TPIC 2011, TPIC 2014

(55 % OF 37.6 P.S.F. G.S.L. PLUS 8.4 P.S.F. RAIN LOAD) EQUALS 29.0 P.S.F. SPECIFIED ROOF LIVE LOAD

ALLOWABLE DEFL.(LL)= L/360 (0.34")
CALCULATED VERT. DEFL.(LL) = L/ 999 (0.02")
ALLOWABLE DEFL.(TL)= L/360 (0.34")
CALCULATED VERT. DEFL.(TL) = L/ 999 (0.04")

CSI: TC=0.18/1.00 (B-H:1) , BC=0.24/1.00 (G-H:3) , WB=0.06/1.00 (B-G:1) , SSI=0.13/1.00 (F-G:3)

DOL LUMBER=1.00 NAIL=1.00 LS BEND=1.10 COMP=1.10 SHEAR=1.10 TENS= 1.10

COMPANION LIVE LOAD FACTOR = 1.00

AUTOSOLVE HEELS OFF

TRUSS PLATE MANUFACTURER IS NOT RESPONSIBLE FOR QUALITY CONTROL IN THE TRUSS MANUFACTURING PLANT .

NAIL VALUES

PLATE	GRIP(DRY) (PSI) MAX	MIN	SHEAR (PLI) MAX	MIN	SECTION (PLI) MAX	MIN
MT20	618	354	1667	798	1987	1656

PLATE PLACEMENT TOL. = 0.250 inches

PLATE ROTATION TOL. = 5.0 Deg.

ISI GRIP= 0.56 (B) (INPUT = 0.90)
ISI METAL= 0.23 (D) (INPUT = 1.00)

LICENSED PROFESSIONAL ENGINEER
05/14/19
H. J. G ALVES
100009024
PROVINCE OF ONTARIO

Structural component only
DWG# T-1911515

JOB NAME	TRUSS NAME	QUANTITY	PLY	JOB DESC.	DRWG NO.
403045	P1	2	1	GREEN PARK HOMES TRUSS DESC.	

Tamarack Roof Truss, Burlington

Version 8.300 S Apr 23 2019 MiTek Industries, Inc. Tue May 14 10:41:17 2019 Page 1
ID:D7ufPnW97DzGkx1HTFaFreyNCCH-W?3EyyvExzB3Et2xHEoYXNFSDkRvkR1kr68IDzGdDm

Scale = 1:17.9

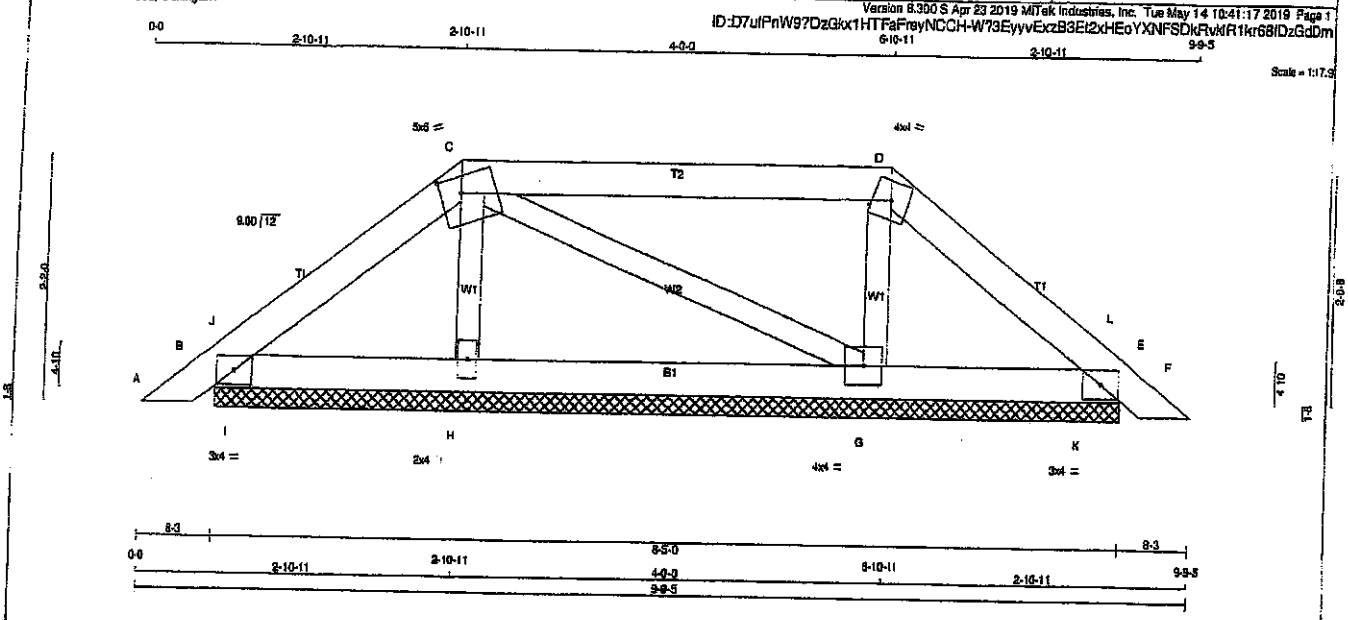

TOTAL WEIGHT = 2 X 28 = 56 lb. [M]

LUMBER
N. L. G. A. RULES

CHORDS	SIZE		LUMBER	DESCR.
A - C	2x4	DRY	No.2	SPF
C - D	2x4	DRY	No.2	SPF
D - F	2x4	DRY	No.2	SPF
B - E	2x4	DRY	No.2	SPF
ALL WEBS	2x3	DRY	No.2	SPF

DRY: SEASONED LUMBER.

PLATES (table is in inches)

JT	TYPE	PLATES	W	LEN	Y	X
B	TMB1-I	MT20	3.0	4.0		
C	TTWW-m	MT20	5.0	6.0	1.75	2.25
D	TTW-m	MT20	4.0	4.0		
E	TMB1-I	MT20	3.0	4.0		
G	BMWW1-t	MT20	4.0	4.0		
H	BMW1-w	MT20	2.0	4.0		

DIMENSIONS, SUPPORTS AND LOADINGS SPECIFIED BY FABRICATOR TO BE VERIFIED BY BUILDING DESIGNER

BEARINGS

JT	FACTORED GROSS REACTION VERT	HORZ	MAXIMUM FACTORED GROSS REACTION DOWN	HORZ	UPLIFT	INPUT BRG IN-SX	REQRD BRG IN-SX
B	257	0	257	0	0	8-5-0	8-5-0
E	243	0	243	0	0	8-5-0	8-5-0
H	366	0	366	0	0	8-5-0	8-5-0
G	417	0	417	0	0	8-5-0	8-5-0

UNFACTORED REACTIONS

JT	1ST LCASE COMBINED	MAX/MIN. COMPONENT REACTIONS SNOW	LIVE	PERM.LIVE	WIND	DEAD	SOIL
B	183	130 / 0	16 / 0	0 / 0	0 / 0	37 / 0	0 / 0
E	173	122 / 0	16 / 0	0 / 0	0 / 0	36 / 0	0 / 0
H	295	144 / 0	73 / 0	0 / 0	0 / 0	78 / 0	0 / 0
G	316	161 / 0	73 / 0	0 / 0	0 / 0	82 / 0	0 / 0

BEARING MATERIAL TO BE SPF NO.2 OR BETTER AT JOINT(S) B, E, H, G

BRACING
TOP CHORD TO BE SHEATHED OR MAX. PURLIN SPACING = 6.25 FT.
MAX. UNBRACED BOTTOM CHORD LENGTH = 10.00 FT OR RIGID CEILING DIRECTLY APPLIED.

ALL PITCH BREAKS AND PERIMETER CORNER JOINTS MUST BE LATERALLY RESTRAINED.

LOADING
TOTAL LOAD CASES: (4)

CHORDS

MEMB. FR-TO	MAX. FACTORED FORCE (LBS)	FACTORED VERT. LOAD (PLF) FROM	TO	LC1	MAX CSI (LC)	MAX. UNBRAC LENGTH
A- B	0 / 17	-102.1	-102.1	0.03 (1)	10.00	
B- J	-75 / 0	-102.1	-102.1	0.02 (1)	6.25	
J- C	-98 / 0	-102.1	-102.1	0.06 (1)	6.25	
C- D	-42 / 0	-102.1	-102.1	0.28 (1)	6.25	
D- L	-75 / 0	-102.1	-102.1	0.06 (1)	6.25	
L- E	-51 / 0	-102.1	-102.1	0.02 (1)	6.25	
E- F	0 / 17	-102.1	-102.1	0.03 (1)	10.00	
B- I	0 / 75	-38.5	-38.5	0.07 (1)	10.00	
I- H	0 / 75	-38.5	-38.5	0.08 (2)	10.00	
H- G	0 / 81	-38.5	-38.5	0.08 (2)	10.00	
G- K	0 / 57	-38.5	-38.5	0.08 (2)	10.00	
K- E	0 / 57	-38.5	-38.5	0.08 (1)	10.00	

WEBS

MEMB. FR-TO	MAX. FACTORED FORCE (LBS)	MAX CSI (LC)
H- C	-232 / 0	0.03 (1)
C- G	-21 / 0	0.01 (1)
G- D	-255 / 0	0.04 (1)
I- J	-148 / 0	0.00 (1)
K- L	-148 / 0	0.00 (1)

DESIGN CRITERIA

SPECIFIED LOADS:

TOP CH.	LL =	29.0	PSF
	DL =	6.0	PSF
BOT CH.	LL =	10.5	PSF
	DL =	7.0	PSF
TOTAL LOAD	=	52.5	PSF

SPACING = 24.0 IN. C/C

LOADING IN FLAT SECTION BASED ON A SLOPE OF 6.00/12

THIS TRUSS IS DESIGNED FOR RESIDENTIAL OR SMALL BUILDING REQUIREMENTS OF PART 9, NBCC 2010, NBCC 2015

THIS DESIGN COMPLIES WITH:
- PART 9 OF BCBC 2018 , OBC 2012
- CSA 086-09, CSA 086-14
- TPIC 2011, TPIC 2014

(55 % OF 37.6 P.S.F. G.S.L. PLUS 8.4 P.S.F. RAIN LOAD) EQUALS 29.0 P.S.F. SPECIFIED ROOF LIVE LOAD

CSI: TC=0.28/1.00 (C-D:1) , BC=0.08/1.00 (H-I:2) , WB=0.04/1.00 (D-G:1) , SSI=0.18/1.00 (C-D:1)

DOL LUMBER=1.00 NAIL=1.00 LS BEND=1.10 COMP=1.10 SHEAR=1.10 TENS= 1.10

COMPANION LIVE LOAD FACTOR = 1.00

TRUSS PLATE MANUFACTURER IS NOT RESPONSIBLE FOR QUALITY CONTROL IN THE TRUSS MANUFACTURING PLANT .

NAIL VALUES

PLATE	GRIP(DRY) (PSI) MAX	MIN	SHEAR (PLI) MAX	MIN	SECTION (PLI) MAX	MIN
MT20	618	354	1667	788	1987	1656

PLATE PLACEMENT TOL. = 0.250 inches

PLATE ROTATION TOL. = 5.0 Deg.

JSI GRIP= 0.20 (B) (INPUT = 0.90)
JSI METAL= 0.05 (H) (INPUT = 1.00)

LICENSED PROFESSIONAL ENGINEER
05/14/19
H. J. G. ALVES
100009024
PROVINCE OF ONTARIO

Structural component only
DWG# T-1911479

JOB NAME	TRUSS NAME	QUANTITY	PLY	JOB DESC.	DRWG NO.
403045	P2	2	1	GREEN PARK HOMES TRUSS DESC.	

Tamarack Roof Truss, Burlington

Version 8.300 S Apr 23 2019 MiTek Industries, Inc. Tue May 14 10:41:17 2019 Page 1

ID:D7ufPnW9?DzGlcx1HTFaFreyNCCH-W?3EyyvExzB3Et2xHEoYXNFUpkP9klf1kr68IDzGdDm

Scale = 1:18.7

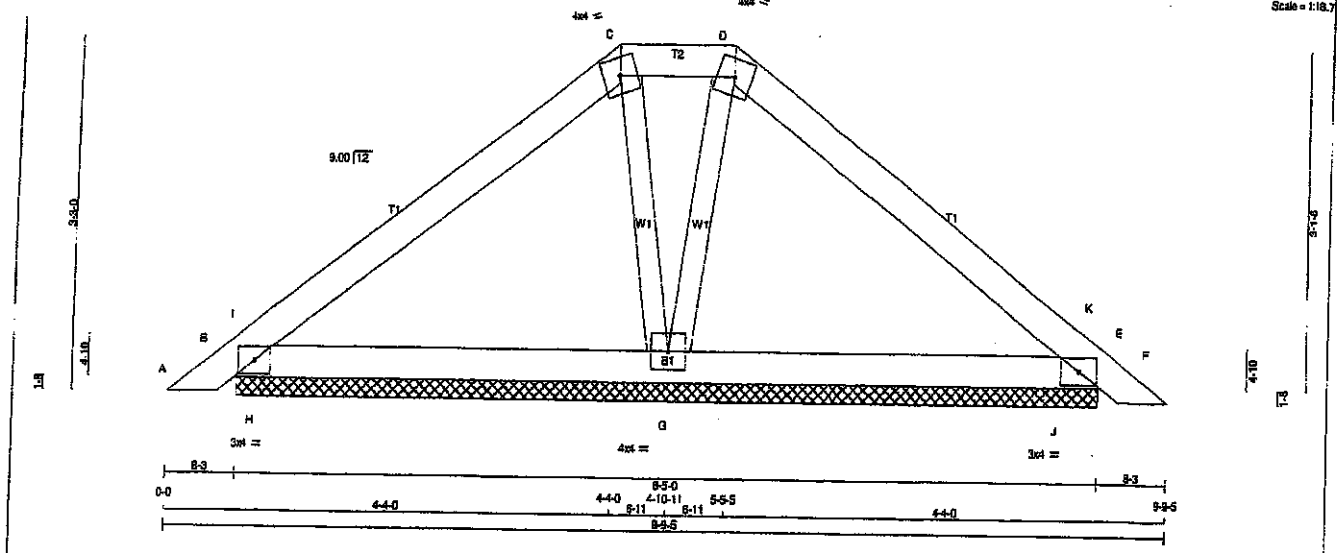

TOTAL WEIGHT = 2 X 27 = 55 lb

LUMBER

N. L. G. A. RULES

CHORDS	SIZE		LUMBER	DESCR.
A - C	2x4	DRY	No.2	SPF
C - D	2x4	DRY	No.2	SPF
D - F	2x4	DRY	No.2	SPF
B - E	2x4	DRY	No.2	SPF
ALL WEBS	2x3	DRY	No.2	SPF

DRY: SEASONED LUMBER.

PLATES (table is in inches)

JT	TYPE	PLATES	W	LEN	Y	X
B	TMB1-I	MT20	3.0	4.0		
C	TTW-m	MT20	4.0	4.0		
D	TTW-m	MT20	4.0	4.0		
E	TMB1-I	MT20	3.0	4.0		
G	BMWW1-I	MT20	4.0	4.0		

DIMENSIONS, SUPPORTS AND LOADINGS SPECIFIED BY FABRICATOR TO BE VERIFIED BY BUILDING DESIGNER

BEARINGS

JT	FACTORED GROSS REACTION VERT	HORZ	MAXIMUM FACTORED GROSS REACTION DOWN	HORZ	UPLIFT	INPUT BRG IN-SX	REQRD BRG IN-SX
B	401	0	401	0	0	8-5-0	8-5-0
E	390	0	390	0	0	8-5-0	8-5-0
G	514	0	514	0	0	8-5-0	8-5-0

UNFACTORED REACTIONS

JT	1ST LOADE COMBINED	MAX/MIN. COMPONENT REACTIONS SNOW	LIVE	PERM.LIVE	WIND	DEAD	SOIL
B	293	182 / 0	43 / 0	0 / 0	0 / 0	67 / 0	0 / 0
E	285	179 / 0	42 / 0	0 / 0	0 / 0	65 / 0	0 / 0
G	390	197 / 0	92 / 0	0 / 0	0 / 0	102 / 0	0 / 0

BEARING MATERIAL TO BE SPF NO.2 OR BETTER AT JOINT(S) B, E, G

BRACING

TOP CHORD TO BE SHEATHED OR MAX. PURLIN SPACING = 6.25 FT.
MAX. UNBRACED BOTTOM CHORD LENGTH = 10.00 FT OR RIGID CEILING DIRECTLY APPLIED.

ALL PITCH BREAKS AND PERIMETER CORNER JOINTS MUST BE LATERALLY RESTRAINED.

LOADING

TOTAL LOAD CASES: (4)

CHORDS

MEMB. FR-TO	MAX. FACTORED FORCE (LBS)	FACTORED VERT. LOAD (PLF) FROM	TO	LC1	MAX CSI (LC)	MAX. UNBRAC LENGTH
A-B	0 / 17	-102.1	-102.1	0.03 (1)	10.00	
B-I	-117 / 0	-102.1	-102.1	0.05 (1)	6.25	
I-C	-165 / 0	-102.1	-102.1	0.18 (1)	6.25	
C-D	-98 / 0	-102.1	-102.1	0.02 (1)	6.25	
D-K	-157 / 0	-102.1	-102.1	0.17 (1)	6.25	
K-E	-103 / 0	-102.1	-102.1	0.06 (1)	6.25	
E-F	0 / 17	-102.1	-102.1	0.03 (1)	10.00	
B-H	0 / 126	-38.5	-38.5	0.14 (1)	10.00	
H-G	0 / 128	-38.5	-38.5	0.20 (2)	10.00	
G-J	0 / 119	-38.5	-38.5	0.19 (2)	10.00	
J-E	0 / 119	-38.5	-38.5	0.15 (1)	10.00	

WEBS

MEMB. FR-TO	MAX. FACTORED FORCE (LBS)	MAX CSI (LC)
C-G	-127 / 0	0.02 (1)
G-D	-129 / 0	0.02 (1)
H-I	-304 / 78	0.00 (1)
J-K	-327 / 56	0.00 (1)

DESIGN CRITERIA

SPECIFIED LOADS:

TOP CH.	LL =	29.0	PSF
	DL =	6.0	PSF
BOT CH.	LL =	10.5	PSF
	DL =	7.0	PSF
TOTAL LOAD	=	52.5	PSF

SPACING = 24.0 IN. C/C

LOADING IN FLAT SECTION BASED ON A SLOPE OF 6.00/12

THIS TRUSS IS DESIGNED FOR RESIDENTIAL OR SMALL BUILDING REQUIREMENTS OF PART 9, NBCC 2010, NBCC 2015

THIS DESIGN COMPLIES WITH:
- PART 9 OF BCBC 2018 , OBC 2012
- CSA 086-09, CSA 086-14
- TPIC 2011; TPIC 2014

(55 % OF 37.6 P.S.F. G.S.L. PLUS 8.4 P.S.F. RAIN LOAD) EQUALS 29.0 P.S.F. SPECIFIED ROOF LIVE LOAD

CSI: TC=0.18/1.00 (C-I:1) , BC=0.20/1.00 (G-H:2) , WB=0.02/1.00 (D-G:1) , SSI=0.28/1.00 (E-J:1)

DOL LUMBER=1.00 NAIL=1.00 LS BEND=1.10 COMP=1.10 SHEAR=1.10 TENS= 1.10

COMPANION LIVE LOAD FACTOR = 1.00

TRUSS PLATE MANUFACTURER IS NOT RESPONSIBLE FOR QUALITY CONTROL IN THE TRUSS MANUFACTURING PLANT .

NAIL VALUES

PLATE	GRIP(DRY) (PSI) MAX	MIN	SHEAR (PLI) MAX	MIN	SECTION (PLI) MAX	MIN
MT20	618	354	1667	788	1987	1656

PLATE PLACEMENT TOL. = 0.250 inches

PLATE ROTATION TOL. = 5.0 Deg.

JSI GRIP= 0.30 (B) (INPUT = 0.90)
JSI METAL= 0.08 (B) (INPUT = 1.00)

LICENSED PROFESSIONAL ENGINEER
H. J. G ALVES
100009024
PROVINCE OF ONTARIO

Structural component only
DWG# T-1911480

JOB NAME	TRUSS NAME	QUANTITY	PLY	JOB DESC.	DRWG NO.
403045	J1	17	1	GREEN PARK HOMES TRUSS DESC.	

Tamarack Roof Truss, Burlington

Version 8.300 S Apr 23 2019 MiTek Industries, Inc. Tue May 14 10:41:14 2019 Page 1
ID:D7uIPnW9?DzGkx1HTFaFreyNCCH-6QN5KwtMe2pVNPJMc6FrvIdsxWNBXOHb1tuUhvzGdDp

Scale = 1:24.6

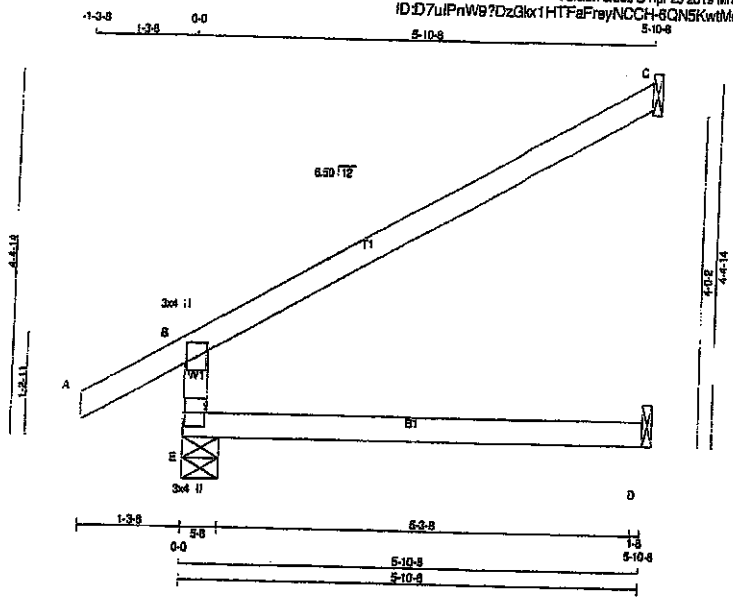

TOTAL WEIGHT = 17 X 17 = 290 lb

LUMBER
N. L. G. A. RULES

CHORDS	SIZE		LUMBER	DESCR.
E - B	2x4	DRY	No.2	SPF
A - C	2x4	DRY	No.2	SPF
E - D	2x4	DRY	No.2	SPF

DRY: SEASONED LUMBER.

PLATES (table is in inches)

JT	TYPE	PLATES	W	LEN	Y	X
B	TMV+p	MT20	3.0	4.0		
E	BMV1+p	MT20	3.0	4.0		

DIMENSIONS, SUPPORTS AND LOADINGS SPECIFIED BY FABRICATOR TO BE VERIFIED BY BUILDING DESIGNER

BEARINGS

JT	FACTORED GROSS REACTION VERT	HORZ	MAXIMUM FACTORED GROSS REACTION DOWN	HORZ	UPLIFT	INPUT BRG IN-SX	REQRD BRG IN-SX
E	646	0	646	0	0	5-8	5-8
C	225	0	225	0	0	1-8	1-8
D	94	0	119	0	0	1-8	1-8

SEE MITEK STANDARD DETAIL B97791H FOR CONNECTION TO JOINT(S) C , D

UNFACTORED REACTIONS

JT	1ST LCASE COMBINED	MAX/MIN. COMPONENT REACTIONS SNOW	LIVE	PERM.LIVE	WIND	DEAD	SOIL
E	473	292 / 0	72 / 0	0 / 0	0 / 0	109 / 0	0 / 0
C	154	128 / 0	0 / 0	0 / 0	0 / 0	26 / 0	0 / 0
D	85	0 / 0	51 / 0	0 / 0	0 / 0	34 / 0	0 / 0

BEARING MATERIAL TO BE SPF NO.2 OR BETTER AT JOINT(S) E

BRACING
TOP CHORD TO BE SHEATHED OR MAX. PURLIN SPACING = 6.25 FT.
MAX. UNBRACED BOTTOM CHORD LENGTH = 10.00 FT OR RIGID CEILING DIRECTLY APPLIED.

ALL PITCH BREAKS AND PERIMETER CORNER JOINTS MUST BE LATERALLY RESTRAINED.

LOADING
TOTAL LOAD CASES: (4)

CHORDS

MEMB. FR-TO	MAX. FACTORED FORCE (LBS)	FACTORED VERT. LOAD (PLF) FROM	TO	MAX CSI (LC)	MAX. UNBRAC LENGTH
E-B	-514 / 0	0.0	0.0	0.21 (3)	7.81
A-B	0 / 33	-102.1	-102.1	0.13 (1)	10.00
B-C	-36 / 0	-102.1	-102.1	0.60 (1)	6.25
E-D	0 / 0	-38.5	-38.5	0.21 (3)	10.00

WEBS

MEMB. FR-TO	MAX. FACTORED FORCE (LBS)	MAX CSI (LC)

DESIGN CRITERIA

SPECIFIED LOADS:

TOP CH.	LL =	29.0	PSF
	DL =	8.0	PSF
BOT CH.	LL =	10.5	PSF
	DL =	7.0	PSF
TOTAL LOAD	=	52.5	PSF

SPACING = 24.0 IN. C/C

THIS TRUSS IS DESIGNED FOR RESIDENTIAL OR SMALL BUILDING REQUIREMENTS OF PART 9, NBCC 2010, NBCC 2015

THIS DESIGN COMPLIES WITH:
- PART 9 OF BCBC 2018 , OBC 2012
- CSA 086-09, CSA 086-14
- TPIC 2011, TPIC 2014

DESIGN ASSUMPTIONS
-OVERHANG NOT TO BE ALTERED OR CUT OFF.

(65 % OF 37.8 P.S.F. G.S.L. PLUS 8.4 P.S.F. RAIN LOAD) EQUALS 29.0 P.S.F. SPECIFIED ROOF LIVE LOAD

ALLOWABLE DEFL.(LL)= L/360 (0.20")
CALCULATED VERT. DEFL.(LL) = L/ 999 (0.05")
ALLOWABLE DEFL.(TL)= L/360 (0.20")
CALCULATED VERT. DEFL.(TL) = L/ 930 (0.08")

CSI: TC=0.60/1.00 (B-C:1) , BC=0.21/1.00 (D-E:3) , WB=0.00/1.00 (n/a:0) , SSI=0.28/1.00 (B-C:1)

DOL LUMBER=1.00 NAIL=1.00 LS BEND=1.10 COMP=1.10 SHEAR=1.10 TENS= 1.10

COMPANION LIVE LOAD FACTOR = 1.00

AUTOSOLVE RIGHT HEEL ONLY

TRUSS PLATE MANUFACTURER IS NOT RESPONSIBLE FOR QUALITY CONTROL IN THE TRUSS MANUFACTURING PLANT .

NAIL VALUES

PLATE	GRIP(DRY) (PSI) MAX	MIN	SHEAR (PLI) MAX	MIN	SECTION (PLI) MAX	MIN
MT20	618	354	1667	788	1987	1656

PLATE PLACEMENT TOL. = 0.250 inches

PLATE ROTATION TOL. = 5.0 Deg.

JSI GRIP= 0.22 (E) (INPUT = 0.90)
JSI METAL= 0.15 (B) (INPUT = 1.00)

LICENSED PROFESSIONAL ENGINEER
05/14/19
H. J. G. ALVES
100009024
PROVINCE OF ONTARIO

Structural component only
DWG# T-1911476

JOB NAME	TRUSS NAME	QUANTITY	PLY	JOB DESC.	DRWG NO.
403060	J4	6	1	GREEN PARK HOMES TRUSS DESC.	

Tamarack Roof Truss, Burlington

Version 8.300 S Apr 23 2019 MiTek Industries, Inc. Tue May 14 11:25:30 2019 Page 1

ID:vk_f5VXL54fY8brNpe87hlyMICK-LOsAm60N96Re0aMpCvvgYrdspAvYqdoXn5G1wyzGcaJ

Scale = 1:30.3

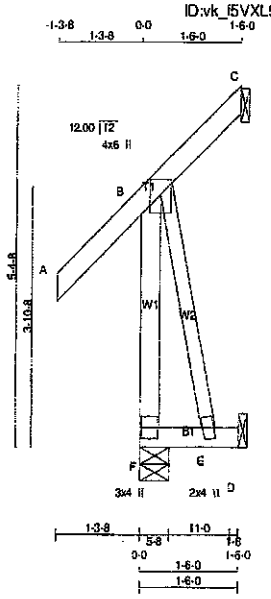

TOTAL WEIGHT = 6 X 14 = 81 lb

[M]

LUMBER

N. L. G. A. RULES

CHORDS	SIZE		LUMBER	DESCR.
F - B	2x4	DRY	No.2	SPF
A - C	2x4	DRY	No.2	SPF
F - D	2x4	DRY	No.2	SPF
ALL WEBS	2x3	DRY	No.2	SPF

DRY: SEASONED LUMBER.

PLATES (table is in inches)

JT	TYPE	PLATES	W	LEN	Y	X
B	TMVW+p	MT20	4.0	6.0	2.75	2.00
E	BMW+w	MT20	2.0	4.0		
F	BMV1+p	MT20	3.0	4.0		

DIMENSIONS, SUPPORTS AND LOADINGS SPECIFIED BY FABRICATOR TO BE VERIFIED BY BUILDING DESIGNER

BEARINGS

JT	FACTORED GROSS REACTION VERT	HORZ	MAXIMUM FACTORED GROSS REACTION DOWN	HORZ	UPLIFT	INPUT BRG IN-SX	REQRD BRG IN-SX
F	314	0	314	0	0	5-8	5-8
C	10	0	10	0	-58 ✓	1-8	1-8
D	29	0	37	0	0	1-8	1-8

SEE MITEK STANDARD DETAIL B97791H FOR CONNECTION TO JOINT(S) C , D

PROVIDE ANCHORAGE AT BEARING JOINT C FOR 150 LBS. FACTORED UPLIFT JK w/ Co MKHMM

UNFACTORED REACTIONS

JT	1ST LCASE COMBINED	MAX./MIN. COMPONENT REACTIONS SNOW	LIVE	PERM.LIVE	WIND	DEAD	SOIL
F	222	162 / 0	16 / 0	0 / 0	0 / 0	44 / 0	0 / 0
C	7	6 / -38	0 / 0	0 / 0	0 / 0	1 / 0	0 / 0
D	26	0 / 0	16 / 0	0 / 0	0 / 0	11 / 0	0 / 0

BEARING MATERIAL TO BE SPF NO.2 OR BETTER AT JOINT(S) F, C

BRACING

TOP CHORD TO BE SHEATHED OR MAX. PURLIN SPACING = 6.25 FT.
MAX. UNBRACED BOTTOM CHORD LENGTH = 10.00 FT OR RIGID CEILING DIRECTLY APPLIED.

ALL PITCH BREAKS AND PERIMETER CORNER JOINTS MUST BE LATERALLY RESTRAINED.

LOADING

TOTAL LOAD CASES: (5)

CHORDS

MEMB. FR-TO	MAX. FACTORED FORCE (LBS)	FACTORED VERT. LOAD (PLF) FROM	TO	LC1	MAX CSI (LC)	MAX. UNBRAC LENGTH
F- B	-285 / 0	0.0	0.0	0.07 (1)	7.81	
A- B	0 / 50	-102.1	-102.1	0.14 (1)	10.00	
B- C	-47 / 0	-102.1	-102.1	0.14 (1)	6.25	
F- E	0 / 0	-38.5	-38.5	0.02 (3)	10.00	
E- D	0 / 0	-38.5	-38.5	0.02 (3)	10.00	

WEBS

MEMB. FR-TO	MAX. FACTORED FORCE (LBS)	MAX CSI (LC)
B- E	0 / 0	0.00 (1)

CANTILEVER ANALYSIS HAS BEEN CONSIDERED IN THIS DESIGN

LICENSED PROFESSIONAL ENGINEER
05/14/19
H. O. G. ALVES
100008924
PROVINCE OF ONTARIO

DESIGN CRITERIA

SPECIFIED LOADS:

TOP CH.	LL =	29.0	PSF
	DL =	8.0	PSF
BOT CH.	LL =	10.5	PSF
	DL =	7.0	PSF
TOTAL LOAD	=	52.5	PSF

SPACING = 24.0 IN. C/C

THIS TRUSS IS DESIGNED FOR RESIDENTIAL OR SMALL BUILDING REQUIREMENTS OF PART 9, NBCC 2010, NBCC 2015

THIS DESIGN COMPLIES WITH:
- PART 9 OF BCBC 2018 , OBC 2012
- CSA 086-09, CSA 086-14
- TPIC 2011, TPIC 2014

DESIGN ASSUMPTIONS
-OVERHANG NOT TO BE ALTERED OR CUT OFF.

(55 % OF 37.6 P.S.F. G.S.L. PLUS 8.4 P.S.F. RAIN LOAD) EQUALS 29.0 P.S.F. SPECIFIED ROOF LIVE LOAD

ALLOWABLE DEFL.(LL)= L/360 (0.19")
CALCULATED VERT. DEFL.(LL) = L/ 999 (0.00")
ALLOWABLE DEFL.(TL)= L/360 (0.19")
CALCULATED VERT. DEFL.(TL) = L/ 999 (0.00")

CSI: TC=0.14/1.00 (A-B:1) , BC=0.02/1.00 (E-F:3) , WB=0.00/1.00 (B-E:1) , SSI=0.09/1.00 (B-C:1)

DOL LUMBER=1.00 NAIL=1.00 LS BEND=1.10 COMP=1.10 SHEAR=1.10 TENS= 1.10

COMPANION LIVE LOAD FACTOR = 1.00

TRUSS PLATE MANUFACTURER IS NOT RESPONSIBLE FOR QUALITY CONTROL IN THE TRUSS MANUFACTURING PLANT .

NAIL VALUES

PLATE	GRIP(DRY) (PSI) MAX	MIN	SHEAR (PLI) MAX	MIN	SECTION (PLI) MAX	MIN
MT20	618	354	1667	788	1987	1656

PLATE PLACEMENT TOL. = 0.250 Inches

PLATE ROTATION TOL. = 5.0 Deg.

JSI GRIP= 0.20 (B) (INPUT = 0.80)
JSI METAL= 0.07 (B) (INPUT = 1.00)

Structural component only
DWG# T-1911506

JOB NAME	TRUSS NAME	QUANTITY	PLY	JOB DESC.	DRWG NO.
403060	U5	9	1	GREEN PARK HOMES TRUSS DESC.	

Tamarack Roof Truss, Burlington

Version 8.300 S Apr 23 2019 MiTek Industries, Inc. Tue May 14 11:25:31 2019 Page 1

ID:vk_f5VXL54fY8brNpe87hlyMICK-paQZzS1?wPZVekx0ldQv52A1YaFnZ42g0l0bSOzGca

Scale = 1:20.0

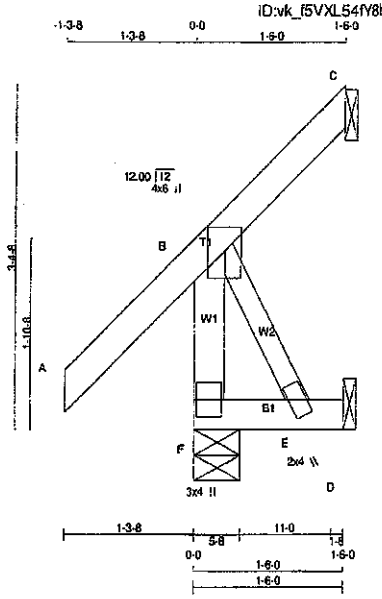

TOTAL WEIGHT = 9 X 10 = 87 lb

LUMBER

N. L. G. A. RULES

CHORDS	SIZE		LUMBER	DESCR.
F - B	2x4	DRY	No.2	SPF
A - C	2x4	DRY	No.2	SPF
F - D	2x4	DRY	No.2	SPF
ALL WEBS	2x3	DRY	No.2	SPF

DRY: SEASONED LUMBER.

PLATES (table is in inches)

JT	TYPE	PLATES	W	LEN	Y	X
B	TMVW+p	MT20	4.0	6.0	2.75	2.00
E	BMW+w	MT20	2.0	4.0		
F	BMV1+p	MT20	3.0	4.0		

DIMENSIONS, SUPPORTS AND LOADINGS SPECIFIED BY FABRICATOR TO BE VERIFIED BY BUILDING DESIGNER

BEARINGS

JT	FACTORED GROSS REACTION VERT	HORZ	MAXIMUM FACTORED GROSS REACTION DOWN	HORZ	UPLIFT	INPUT BRG IN-SX	REQRD BRG IN-SX
F	314	0	314	0	0	5-8	5-8
C	10	0	10	0	-58 ✓	1-8	1-8
D	29	0	37	0	0	1-8	1-8

SEE MITEK STANDARD DETAIL B97791H FOR CONNECTION TO JOINT(S) C , D

PROVIDE ANCHORAGE AT BEARING JOINT C FOR 150 LBS FACTORED UPLIFT ok w/ tpe NAILING

UNFACTORED REACTIONS

JT	1ST LCASE COMBINED	MAX./MIN. COMPONENT REACTIONS SNOW	LIVE	PERM.LIVE	WIND	DEAD	SOIL
F	222	162 / 0	16 / 0	0 / 0	0 / 0	44 / 0	0 / 0
C	7	6 / -38	0 / 0	0 / 0	0 / 0	1 / 0	0 / 0
D	26	0 / 0	16 / 0	0 / 0	0 / 0	11 / 0	0 / 0

BEARING MATERIAL TO BE SPF NO.2 OR BETTER AT JOINT(S) F, C

BRACING

TOP CHORD TO BE SHEATHED OR MAX. PURLIN SPACING = 6.25 FT.
MAX. UNBRACED BOTTOM CHORD LENGTH = 10.00 FT OR RIGID CEILING DIRECTLY APPLIED.

ALL PITCH BREAKS AND PERIMETER CORNER JOINTS MUST BE LATERALLY RESTRAINED.

LOADING

TOTAL LOAD CASES: (5)

CHORDS

MEMB. FR-TO	MAX. FACTORED FORCE (LBS)	FACTORED VERT. LOAD LC((PLF) FROM	TO	MAX CSI (LC)	MAX. UNBRAC LENGTH
F- B	-285 / 0	0.0	0.0	0.03 (1)	7.81
A- B	0 / 50	-102.1	-102.1	0.14 (1)	10.00
B- C	-47 / 0	-102.1	-102.1	0.14 (1)	6.25
F- E	0 / 0	-38.5	-38.5	0.02 (3)	10.00
E- D	0 / 0	-38.5	-38.5	0.02 (3)	10.00

WEBS

MEMB. FR-TO	MAX. FACTORED FORCE (LBS)	MAX CSI (LC)
B- E	0 / 0	0.00 (1)

CANTILEVER ANALYSIS HAS BEEN CONSIDERED IN THIS DESIGN

LICENSED PROFESSIONAL ENGINEER
05/14/19
H. J. G. ALVES
100069734
PROVINCE OF ONTARIO

DESIGN CRITERIA

SPECIFIED LOADS:

TOP CH.	LL =	29.0	PSF
	DL =	6.0	PSF
BOT CH.	LL =	10.5	PSF
	DL =	7.0	PSF
TOTAL LOAD	=	52.5	PSF

SPACING = 24.0 IN. C/C

THIS TRUSS IS DESIGNED FOR RESIDENTIAL OR SMALL BUILDING REQUIREMENTS OF PART 9, NBCC 2010, NBCC 2015

THIS DESIGN COMPLIES WITH:
- PART 9 OF BCBC 2018 , OBC 2012
- CSA 086-09, CSA 086-14
- TPIC 2011, TPIC 2014

DESIGN ASSUMPTIONS
-OVERHANG NOT TO BE ALTERED OR CUT OFF.

(55 % OF 37.6 P.S.F. G.S.L. PLUS 8.4 P.S.F. RAIN LOAD) EQUALS 29.0 P.S.F. SPECIFIED ROOF LIVE LOAD

ALLOWABLE DEFL.(LL)= L/360 (0.19")
CALCULATED VERT. DEFL.(LL) = L/ 999 (0.00")
ALLOWABLE DEFL.(TL)= L/360 (0.19")
CALCULATED VERT. DEFL.(TL) = L/ 999 (0.00")

CSI: TC=0.14/1.00 (A-B:1) , BC=0.02/1.00 (E-F:3) , WB=0.00/1.00 (B-E:1) , SSI=0.08/1.00 (B-C:1)

DOL LUMBER=1.00 NAIL=1.00 LS BEND=1.10 COMP=1.10 SHEAR=1.10 TENS= 1.10

COMPANION LIVE LOAD FACTOR = 1.00

AUTOSOLVE RIGHT HEEL ONLY

TRUSS PLATE MANUFACTURER IS NOT RESPONSIBLE FOR QUALITY CONTROL IN THE TRUSS MANUFACTURING PLANT .

NAIL VALUES

PLATE	GRIP(DRY) (PSI) MAX	MIN	SHEAR (PLI) MAX	MIN	SECTION (PLI) MAX	MIN
MT20	618	354	1667	788	1987	1656

PLATE PLACEMENT TOL. = 0.250 inches

PLATE ROTATION TOL. = 5.0 Deg.

JSI GRIP= 0.20 (B) (INPUT = 0.90)
JSI METAL= 0.07 (B) (INPUT = 1.00)

Structural component only
DWG# T-1911507

JOB NAME	TRUSS NAME	QUANTITY	PLY	JOB DESC.	DRWG NO.
403045	J90	4	1	GREEN PARK HOMES TRUSS DESC.	

Tamarack Roof Truss, Burlington

Version 8.300 S Apr 23 2019 MiTek Industries, Inc. Tue May 14 10:41:15 2019 Page 1
ID:D7ulPnW9?DzGlx1HTFaFreyNCCH-acxUXGu_PMxL?ZuY9pm4Sy94YwiqGrXkGXd1ELzGdDc

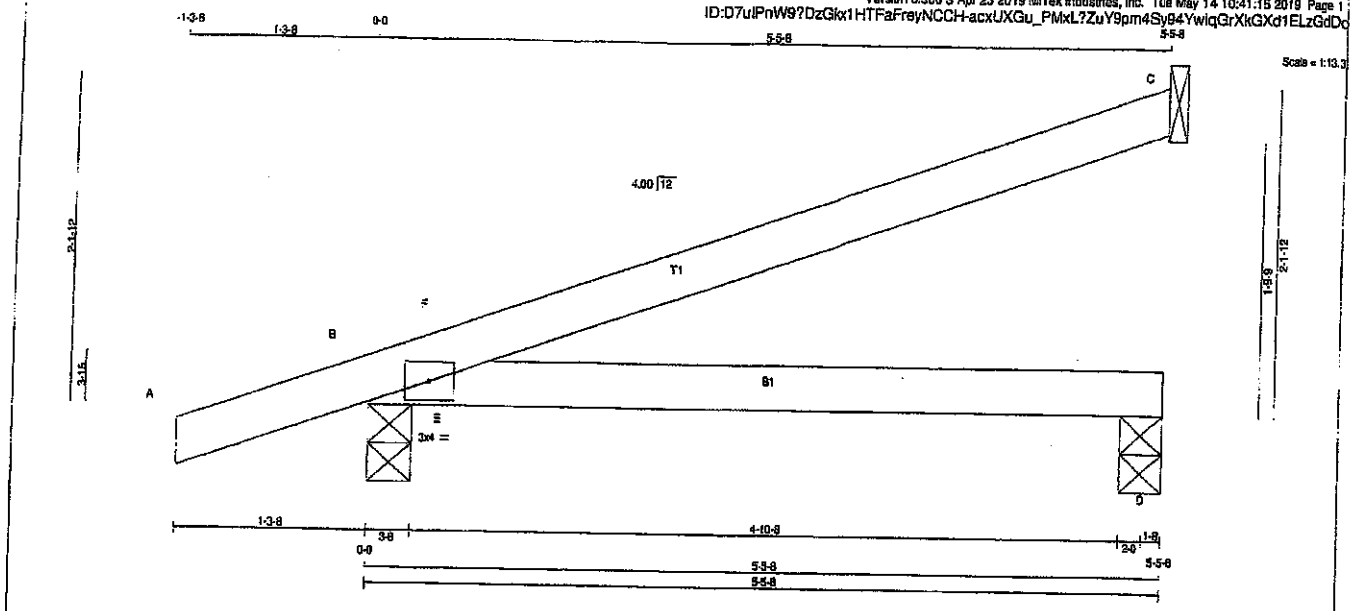

TOTAL WEIGHT = 4 X 14 = 58 (b)

LUMBER
N. L. G. A. RULES

CHORDS	SIZE		LUMBER	DESCR.
A - C	2x4	DRY	No.2	SPF
B - D	2x4	DRY	No.2	SPF

DRY: SEASONED LUMBER.

PLATES (table is in inches)

JT	TYPE	PLATES	W	LEN	Y	X
B	TMB1-I	MT20	3.0	4.0		

DIMENSIONS, SUPPORTS AND LOADINGS SPECIFIED BY FABRICATOR TO BE VERIFIED BY BUILDING DESIGNER

BEARINGS

JT	FACTORED GROSS REACTION VERT	HORZ	MAXIMUM FACTORED GROSS REACTION DOWN	HORZ	UPLIFT	INPUT BRG IN-SX	REQRD BRG IN-SX
C	250	0	250	0	0	1-8	1-8
B	520	0	520	0	0	3-8	3-8
D	133	0	145	0	0	3-8	3-8

SEE MITEK STANDARD DETAIL B9779 1H FOR CONNECTION TO JOINT(S) C

UNFACTORED REACTIONS

JT	1ST LCASE COMBINED	MAX/MIN. COMPONENT REACTIONS SNOW	LIVE	PERM.LIVE	WIND	DEAD	SOIL
C	175	133 / 0	9 / 0	0 / 0	0 / 0	33 / 0	0 / 0
B	380	236 / 0	57 / 0	0 / 0	0 / 0	87 / 0	0 / 0
D	111	25 / 0	49 / 0	0 / 0	0 / 0	36 / 0	0 / 0

BEARING MATERIAL TO BE SPF NO.2 OR BETTER AT JOINT(S) B, D

BRACING
TOP CHORD TO BE SHEATHED OR MAX. PURLIN SPACING = 6.25 FT.
MAX. UNBRACED BOTTOM CHORD LENGTH = 10.00 FT OR RIGID CEILING DIRECTLY APPLIED.

ALL PITCH BREAKS AND PERIMETER CORNER JOINTS MUST BE LATERALLY RESTRAINED.

LOADING
TOTAL LOAD CASES: (4)

CHORDS

MEMB. FR-TO	MAX. FACTORED FORCE (LBS)	FACTORED VERT. LOAD (PLF) FROM	TO	LC1	MAX CSI (LC)	MAX. UNBRAC LENGTH
A- B	0 / 20	-102.1	-102.1	0.13 (1)	10.00	
B- F	-51 / 0	-102.1	-102.1	0.13 (3)	6.25	
F- C	0 / 6	-102.1	-102.1	0.42 (1)	10.00	
B- E	0 / 0	-38.5	-38.5	0.28 (1)	10.00	
E- D	0 / 0	-38.5	-38.5	0.31 (1)	10.00	

WEBS

MEMB. FR-TO	MAX. FACTORED FORCE (LBS)	MAX CSI (LC)
E- F	-254 / 122	0.09 (1)

DESIGN CRITERIA

SPECIFIED LOADS:

TOP CH.	LL =	29.0	PSF
	DL =	6.0	PSF
BOT CH.	LL =	10.5	PSF
	DL =	7.0	PSF
TOTAL LOAD	=	52.5	PSF

SPACING = 24.0 IN. C/C

THIS TRUSS IS DESIGNED FOR RESIDENTIAL OR SMALL BUILDING REQUIREMENTS OF PART 9, NBCC 2010, NBCC 2015

THIS DESIGN COMPLIES WITH:
- PART 9 OF BCBC 2018 , OBC 2012
- CSA 086-09, CSA 086-14
- TPIC 2011, TPIC 2014

(55 % OF 37.8 P.S.F. G.S.L. PLUS 8.4 P.S.F. RAIN LOAD) EQUALS 29.0 P.S.F. SPECIFIED ROOF LIVE LOAD

ALLOWABLE DEFL.(LL)= L/360 (0.19")
CALCULATED VERT. DEFL.(LL) = L/ 842 (0.08")
ALLOWABLE DEFL.(TL)= L/360 (0.19")
CALCULATED VERT. DEFL.(TL) = L/ 489 (0.13")

CSI: TC=0.42/1.00 (C-F:1) , BC=0.31/1.00 (D-E:1) , WB=0.00/1.00 (E-F:1) , SSI=0.26/1.00 (B-E:1)

DOL LUMBER=1.00 NAIL=1.00 LS BEND=1.10 COMP=1.10 SHEAR=1.10 TENS= 1.10

COMPANION LIVE LOAD FACTOR = 1.00

TRUSS PLATE MANUFACTURER IS NOT RESPONSIBLE FOR QUALITY CONTROL IN THE TRUSS MANUFACTURING PLANT .

NAIL VALUES

PLATE	GRIP(DRY) (PSI) MAX	MIN	SHEAR (PLI) MAX	MIN	SECTION (PLI) MAX	MIN
MT20	618	354	1667	788	1987	1656

PLATE PLACEMENT TOL. = 0.250 inches

PLATE ROTATION TOL. = 5.0 Deg.

JSI GRIP= 0.31 (B) (INPUT = 0.90)
JSI METAL= 0.09 (B) (INPUT = 1.00)

LICENSED PROFESSIONAL ENGINEER
05/14/19
H. J. G. ALVES
100009
PROVINCE OF ONTARIO

Structural component only
DWG# T-1911477

isDesign™

Client:
Project:
Address:

Date: 5/14/2019
Designer:
Job Name: 200598
Project #:

B1 S-P-F #2 2.000" X 10.000" 2-Ply - PASSED

Level: Level

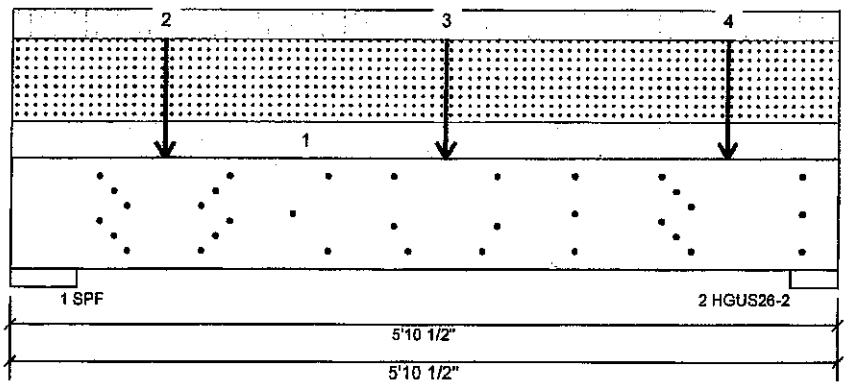

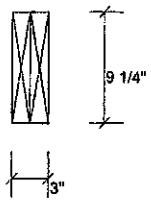

Member Information

Type:	Girder	Application:	Roof (Residential)
Plies:	2	Slope:	0/12
Moisture Condition:	Dry	Design Method:	LSD
Deflection LL:	360	Building Code:	NBCC 2015
Deflection TL:	360	Load Sharing:	No
Importance:	Normal	Deck:	Not Checked
		Vibration:	Not Checked

Unfactored Reactions UNPATTERNED lb (Uplift)

Brg	Live	Dead	Snow	Wind
1	376	503	1210	0
2	314	415	1001	0

Bearings and Factored Reactions

Bearing	Length	Cap.	React D/L lb	Total	Ld. Case	Ld. Comb.
1 - SPF	5.500"	28%	629 / 2190	2819	L	1.25D+1.5S +L
2 - HGUS...	4.000"	32%	519 / 1815	2334	L	1.25D+1.5S +L

Analysis Results

Analysis	Actual	Location	Allowed	Capacity	Comb.	Case
Moment	2982 ft-lb	3'1"	6039 ft-lb	0.494 (49%)	1.25D+1.5S +L	L
Unbraced	2982 ft-lb	3'1"	5236 ft-lb	0.570 (57%)	1.25D+1.5S +L	L
Shear	2763 lb	1'2"	3984 lb	0.694 (69%)	1.25D+1.5S +L	L
LL Defl inch	0.025 (L/2459)	2'11 9/16"	0.174 (L/360)	0.150 (15%)	S+0.5L	L
TL Defl inch	0.035 (L/1809)	2'11 9/16"	0.174 (L/360)	0.200 (20%)	D+S+0.5L	L

Design Notes

1. Fasten all plies using 3 rows of Pneumatic Gun Nail (.120x3.25") at 12" o.c. Maximum end distance not to exceed 6".
2. Refer to last page of calculations for fasteners required for specified loads.
3. Concentrated load fastener specification is in addition to hanger fasteners if a hanger is present.
4. Girders are designed to be supported on the bottom edge only.
5. Top braced at bearings.
6. Bottom braced at bearings.
7. Lateral slendemess ratio based on single ply width.

LICENSED PROFESSIONAL ENGINEER
05/14/19
H. J. G. ALVES
100009824
PROVINCE OF ONTARIO

DWG NO. TAM T1911517
STRUCTURAL COMPONENT ONLY 1/3

ID	Load Type	Location	Trib Width	Side	Dead	Live	Snow	Wind	Comments
1	Uniform		2-0-0	Near Face	13 PSF	10.5 PSF	29.5 PSF	0 PSF	
2	Point	1-1-0		Far Face	350 lb	256 lb	848 lb	0 lb	
3	Point	3-1-0		Far Face	208 lb	155 lb	508 lb	0 lb	
4	Point	5-1-0		Far Face	208 lb	155 lb	508 lb	0 lb	

Manufacturer Info

Tamarack Roof Trusses
3269 North Service Rd., ON
Canada
L7N3G2
(905) 335-1115

TAMARACK LUMBER INC
ALPA LUMBER GROUP

This design is valid until 12/11/2021

isDesign™

Client:
Project:
Address:

Date: 5/14/2019
Designer:
Job Name: 200598
Project #:

B1 S-P-F #2 2.000" X 10.000" 2-Ply - PASSED

Level: Level

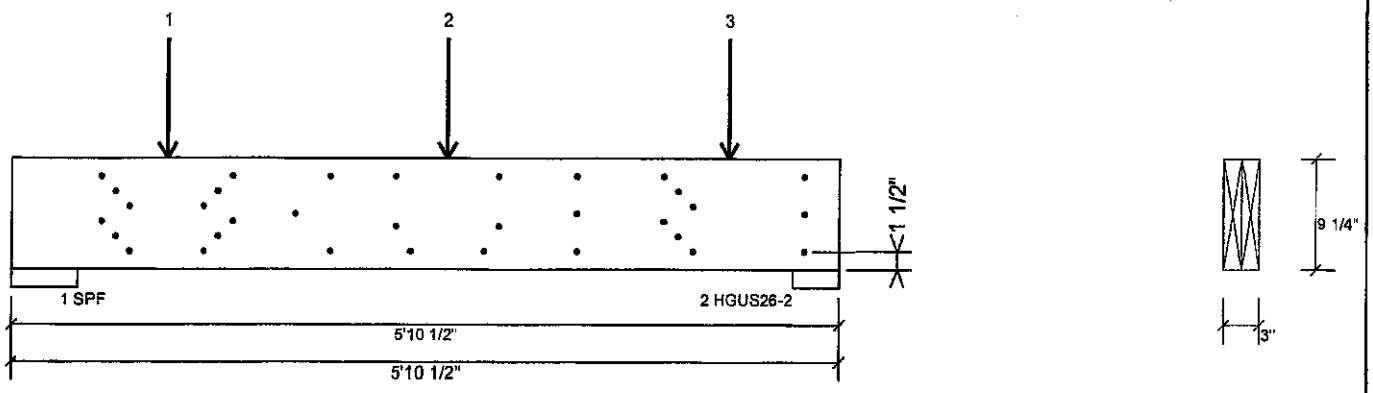

Multi-Ply Analysis

Fasten all plies using 3 rows of Pneumatic Gun Nail (.120x3.25") at 12" o.c.. except for regions covered by concentrated load fastening. Maximum end distance not to exceed 6"

Capacity	20.9 %
Load	71.0 PLF
Yield Limit per Foot	340.0 PLF
Yield Limit per Fastener	113.3 lb.
Yield Mode	g
Edge Distance	1 1/2"
Min. End Distance	3"
Load Combination	1.25D+1.5S+L
Duration Factor	1.00

Concentrated Load

Fasten at concentrated side load at 1-1-0 with a minimum of (12) – Pneumatic Gun Nail (.120x3.25") in the pattern shown.

Capacity	72.3 %
Load	982.8lb.
Total Yield Limit	1360.2 lb.
Yield Limit per Fastener	113.3 lb.
Yield Mode	g
Load Combination	1.25D+1.5S+L
Duration Factor	1.00

Concentrated Load

Fasten at concentrated side load at 3-1-0 with a minimum of (6) – Pneumatic Gun Nail (.120x3.25") in the pattern shown.

Capacity	86.5 %
Load	588.5lb.
Total Yield Limit	680.1 lb.
Yield Limit per Fastener	113.3 lb.
Yield Mode	g
Load Combination	1.25D+1.5S+L
Duration Factor	1.00

Min/Max fastener distances for Concentrated Side Loads

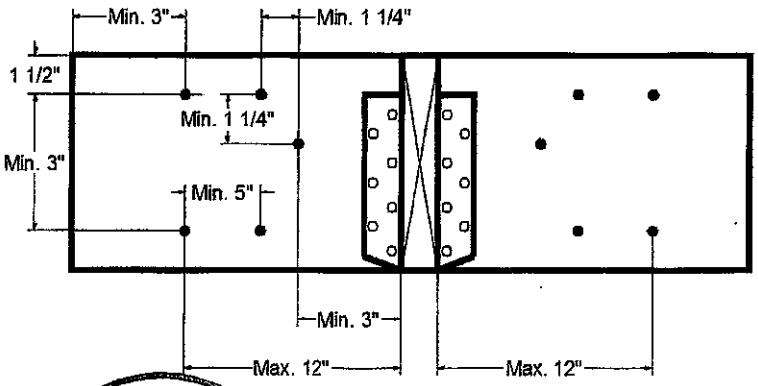

LICENSED PROFESSIONAL ENGINEER
05/14/19
H. J. G. ALVES
100009024
PROVINCE OF ONTARIO

DWG NO. TAM 7911517
STRUCTURAL COMPONENT ONLY 2/3

Manufacturer Info

Tamarack Roof Trusses
3269 North Service Rd., ON
Canada
L7N3G2
(905) 335-1115

TAMARACK LUMBER INC
ALPA LUMBER GROUP

This design is valid until 12/11/2021

isDesign™

Client:
Project:
Address:

Date: 5/14/2019
Designer:
Job Name: 200598
Project #:

B1 S-P-F #2 2.000" X 10.000" 2-Ply - PASSED

Level: Level

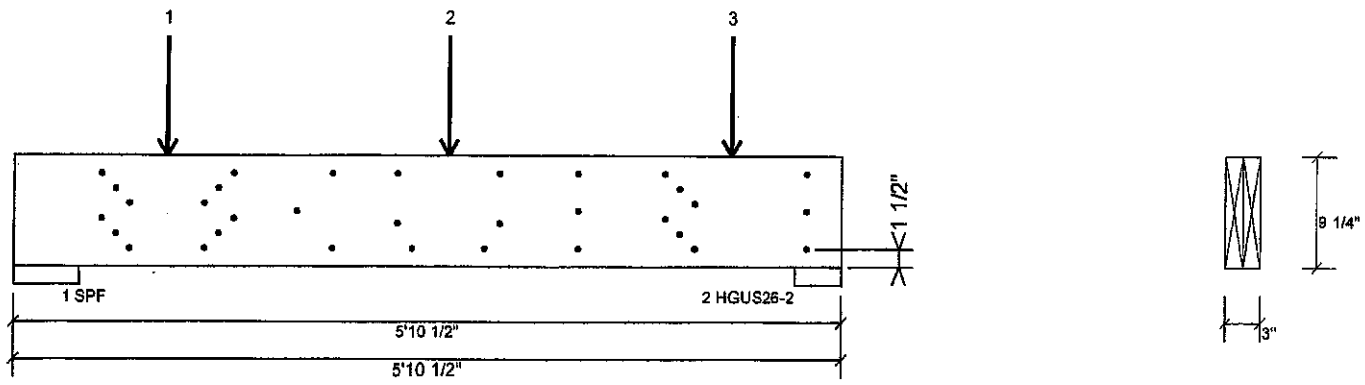

Multi-Ply Analysis

Fasten all plies using 3 rows of Pneumatic Gun Nail (.120x3.25") at 12" o.c.. except for regions covered by concentrated load fastening. Maximum end distance not to exceed 6"

Capacity	20.9 %
Load	71.0 PLF
Yield Limit per Foot	340.0 PLF
Yield Limit per Fastener	113.3 lb.
Yield Mode	g
Edge Distance	1 1/2"
Min. End Distance	3"
Load Combination	1.25D+1.5S+L
Duration Factor	1.00

Concentrated Load

Fasten at concentrated side load at 5-1-0 with a minimum of (6) – Pneumatic Gun Nail (.120x3.25") in the pattern shown.

Capacity	86.5 %
Load	588.5lb.
Total Yield Limit	680.1 lb.
Yield Limit per Fastener	113.3 lb.
Yield Mode	g
Load Combination	1.25D+1.5S+L
Duration Factor	1.00

Min/Max fastener distances for Concentrated Side Loads

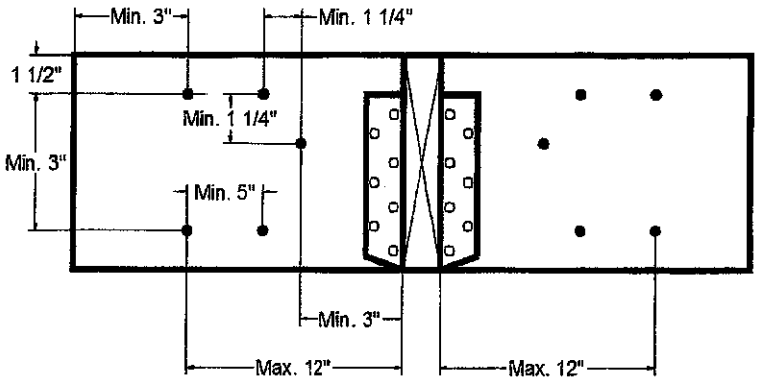

LICENSED PROFESSIONAL ENGINEER
05/14/19
H. J. G. ALVES
100009024
PROVINCE OF ONTARIO

DWG NO. TAM T191517
STRUCTURAL COMPONENT ONLY 3/3

Manufacturer Info	Tamarack Roof Trusses 3269 North Service Rd., ON Canada L7N3G2 (905) 335-1115

TAMARACK LUMBER INC
ALPA LUMBER GROUP

This design is valid until 12/11/2021

isDesign™

Client:
Project:
Address:

Date: 5/14/2019
Designer:
Job Name: 200598
Project #:

B5 S-P-F #2 2.000" X 10.000" 2-Ply - PASSED

Level: Level

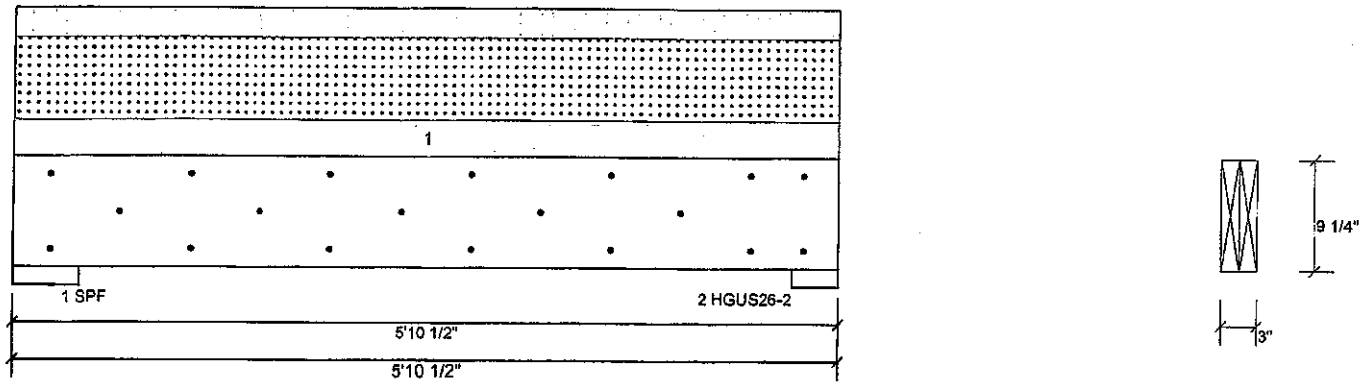

Member Information

Type:	Girder	Application:	Roof (Residential)
Plies:	2	Slope:	0/12
Moisture Condition:	Dry	Design Method:	LSD
Deflection LL:	360	Building Code:	NBCC 2015
Deflection TL:	360	Load Sharing:	No
Importance:	Normal	Deck:	Not Checked
		Vibration:	Not Checked

Unfactored Reactions UNPATTERNED lb (Uplift)

Brg	Live	Dead	Snow	Wind
1	269	333	756	0
2	258	319	724	0

Bearings and Factored Reactions

Bearing	Length	Cap.	React D/L lb	Total	Ld. Case	Ld. Comb.
1 - SPF	5.500"	18%	416 / 1403	1819	L	1.25D+1.5S +L
2 - HGUS...	4.000"	24%	399 / 1345	1744	L	1.25D+1.5S +L

Analysis Results

Analysis	Actual	Location	Allowed	Capacity	Comb.	Case
Moment	2056 ft-lb	3'	6039 ft-lb	0.341 (34%)	1.25D+1.5S +L	L
Unbraced	2056 ft-lb	3'	5236 ft-lb	0.393 (39%)	1.25D+1.5S +L	L
Shear	1579 lb	1'2"	3984 lb	0.396 (40%)	1.25D+1.5S +L	L
LL Defl inch	0.018 (L/3466)	3'	0.174 (L/360)	0.100 (10%)	S+0.5L	L
TL Defl inch	0.025 (L/2523)	3'	0.174 (L/360)	0.140 (14%)	D+S+0.5L	L

Design Notes

1. Fasten all plies using 3 rows of Pneumatic Gun Nail (.120x3.25") at 12" o.c. Maximum end distance not to exceed 6".
2. Refer to last page of calculations for fasteners required for specified loads.
3. Girders are designed to be supported on the bottom edge only.
4. Top braced at bearings.
5. Bottom braced at bearings.
6. Lateral slenderness ratio based on single ply width.

LICENSED PROFESSIONAL ENGINEER
05/14/19
H. J. G. ALVES
100009024
PROVINCE OF ONTARIO

DWG NO. TAM T194521
STRUCTURAL
COMPONENT ONLY 1/2

ID	Load Type	Location	Trib Width	Side	Dead	Live	Snow	Wind	Comments
1	Uniform		8-6-8	Near Face	13 PSF	10.5 PSF	29.5 PSF	0 PSF	

Manufacturer Info

Tamarack Roof Trusses
3289 North Service Rd., ON
Canada
L7N3G2
(905) 335-1115

TAMARACK LUMBER INC
ALPA LUMBER GROUP

This design is valid until 12/11/2021

isDesign™

Client:
Project:
Address:

Date: 5/14/2019
Designer:
Job Name: 200598
Project #:

B5 S-P-F #2 2.000" X 10.000" 2-Ply - PASSED

Level: Level

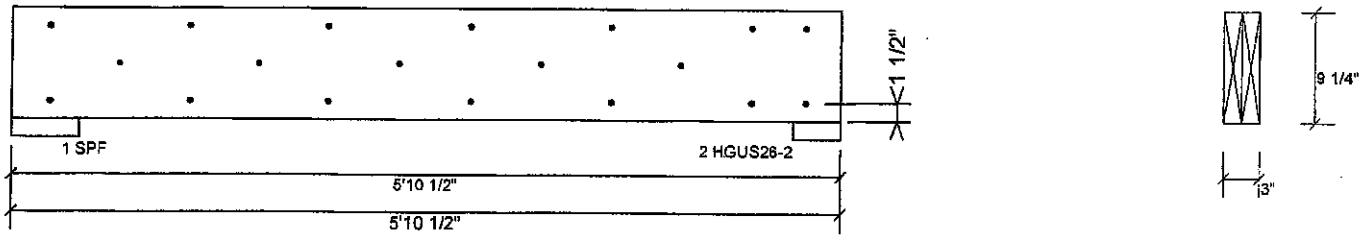

Multi-Ply Analysis

Fasten all plies using 3 rows of Pneumatic Gun Nail (.120x3.25") at 12" o.c.. Maximum end distance not to exceed 6"

Capacity	89.2 %
Load	303.2 PLF
Yield Limit per Foot	340.0 PLF
Yield Limit per Fastener	113.3 lb.
Yield Mode	g
Edge Distance	1 1/2"
Min. End Distance	3"
Load Combination	1.25D+1.5S+L
Duration Factor	1.00

LICENSED PROFESSIONAL ENGINEER
5/14/19
H. J. G. ALVES
100008024
PROVINCE OF ONTARIO

DWG NO. TAM 17911521
STRUCTURAL
COMPONENT ONLY 2/2

Manufacturer Info	Tamarack Roof Trusses 3269 North Service Rd., ON Canada L7N3G2 (905) 335-1115

TAMARACK LUMBER INC
ALPA LUMBER GROUP

This design is valid until 12/11/2021

isDesign™

Client:
Project:
Address:

Date: 5/14/2019
Designer:
Job Name: 200598
Project #:

B6 S-P-F #2 2.000" X 10.000" 2-Ply - PASSED

Level: Level

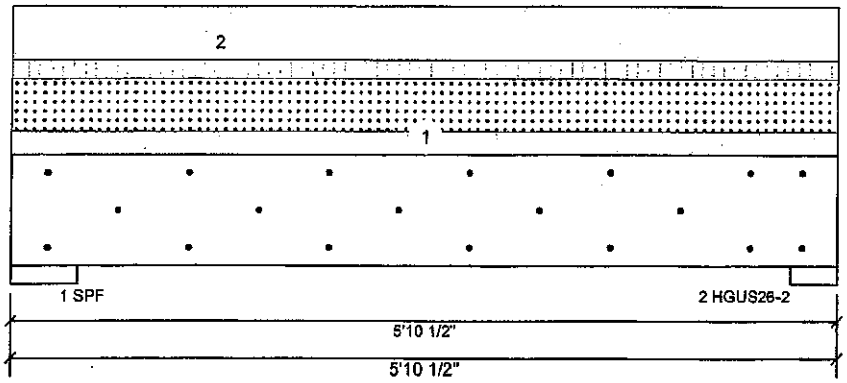

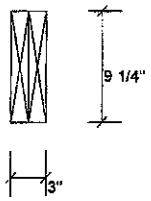

Member Information

Type:	Girder	Application:	Roof (Residential)
Plies:	2	Slope:	0/12
Moisture Condition:	Dry	Design Method:	LSD
Deflection LL:	360	Building Code:	NBCC 2015
Deflection TL:	360	Load Sharing:	No
Importance:	Normal	Deck:	Not Checked
		Vibration:	Not Checked

Unfactored Reactions UNPATTERNED lb (Uplift)

Brg	Live	Dead	Snow	Wind
1	194	331	546	0
2	186	317	523	0

Bearings and Factored Reactions

Bearing	Length	Cap.	React D/L lb	Total	Ld. Case	Ld. Comb.
1 - SPF	5.500"	14%	413 / 1013	1426	L	1.25D+1.5S +L
2 - HGUS...	4.000"	19%	396 / 971	1367	L	1.25D+1.5S +L

Analysis Results

Analysis	Actual	Location	Allowed	Capacity	Comb.	Case
Moment	1612 ft-lb	3'	6039 ft-lb	0.267 (27%)	1.25D+1.5S +L	L
Unbraced	1612 ft-lb	3'	5236 ft-lb	0.308 (31%)	1.25D+1.5S +L	L
Shear	1209 lb	1'2"	3984 lb	0.303 (30%)	1.25D+1.5S +L	L
LL Defl inch	0.013 (L/4801)	3'	0.174 (L/360)	0.070 (7%)	S+0.5L	L
TL Defl inch	0.020 (L/3171)	3'	0.174 (L/360)	0.110 (11%)	D+S+0.5L	L

Design Notes

1. Fasten all plies using 3 rows of Pneumatic Gun Nail (.120x3.25") at 12" o.c. Maximum end distance not to exceed 6".
2. Refer to last page of calculations for fasteners required for specified loads.
3. Girders are designed to be supported on the bottom edge only.
4. Top loads must be supported equally by all plies.
5. Top braced at bearings.
6. Bottom braced at bearings.
7. Lateral slendemess ratio based on single ply width.

LICENSED PROFESSIONAL ENGINEER
05/14/19
H. O. GALVES
100009024
PROVINCE OF ONTARIO

DWG NO. TAM 7911520
STRUCTURAL
COMPONENT ONLY 1/2

ID	Load Type	Location	Trib Width	Side	Dead	Live	Snow	Wind	Comments
1	Uniform		6-2-0	Near Face	13 PSF	10.5 PSF	29.5 PSF	0 PSF	
2	Uniform			Top	30 PLF	0 PLF	0 PLF	0 PLF	

Manufacturer Info

Tamarack Roof Trusses
3269 North Service Rd., ON
Canada
L7N3G2
(905) 335-1115

TAMARACK LUMBER INC
ALPA LUMBER GROUP

This design is valid until 12/11/2021

isDesign™

Client:
Project:
Address:

Date: 5/14/2019
Designer:
Job Name: 200598
Project #:

B6 S-P-F #2 2.000" X 10.000" 2-Ply - PASSED

Level: Level

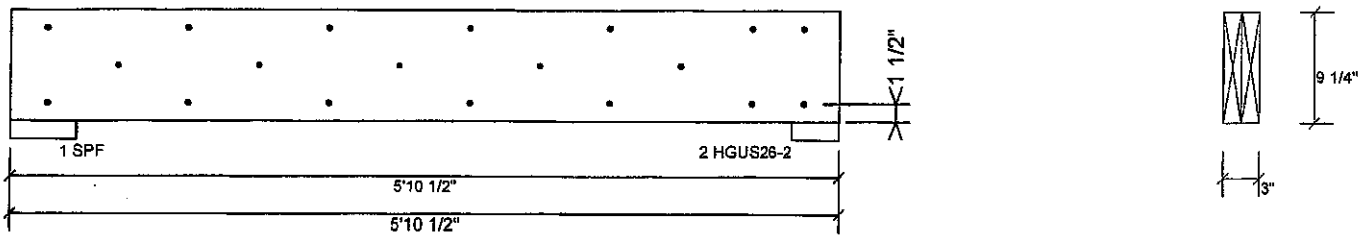

Multi-Ply Analysis

Fasten all plies using 3 rows of Pneumatic Gun Nail (.120x3.25") at 12" o.c.. Maximum end distance not to exceed 6"

Capacity	64.4 %
Load	218.9 PLF
Yield Limit per Foot	340.0 PLF
Yield Limit per Fastener	113.3 lb.
Yield Mode	g
Edge Distance	1 1/2"
Min. End Distance	3"
Load Combination	1.25D+1.5S+L
Duration Factor	1.00

LICENSED PROFESSIONAL ENGINEER
05/14/19
H. J. G. ALVES
100069824
PROVINCE OF ONTARIO

DWG NO. TAM T171520
STRUCTURAL
COMPONENT ONLY 2/2

Manufacturer Info	Tamarack Roof Trusses 3269 North Service Rd., ON Canada L7N3G2 (905) 335-1115

TAMARACK LUMBER INC
ALPA LUMBER GROUP

This design is valid until 12/11/2021

ONTARIO WOOD TRUSS
FABRICATORS ASSOCIATION

TECH-NOTES

TN 15-001
Piggyback Bracing

Overview:

Where piggybacks are connected overtop of base trusses, 2x4 purlins must be first added to the flat portion of the base truss at a spacing no more than 24" o/c. These purlins not only provide support for the piggyback trusses above, but are required to laterally support the top chord of the base truss which will not have the sheathing directly connected to the flat portion of the base truss. This ensures the top chord, most often in compression, will not buckle laterally.

Further, the purlins in the plane of the flat portion require diagonal bracing to prevent lateral displacement of the purlins themselves where under certain conditions, the trusses may in fact all buckle in the same direction if this additional bracing is not added in the plane of the purlins.

Detail:

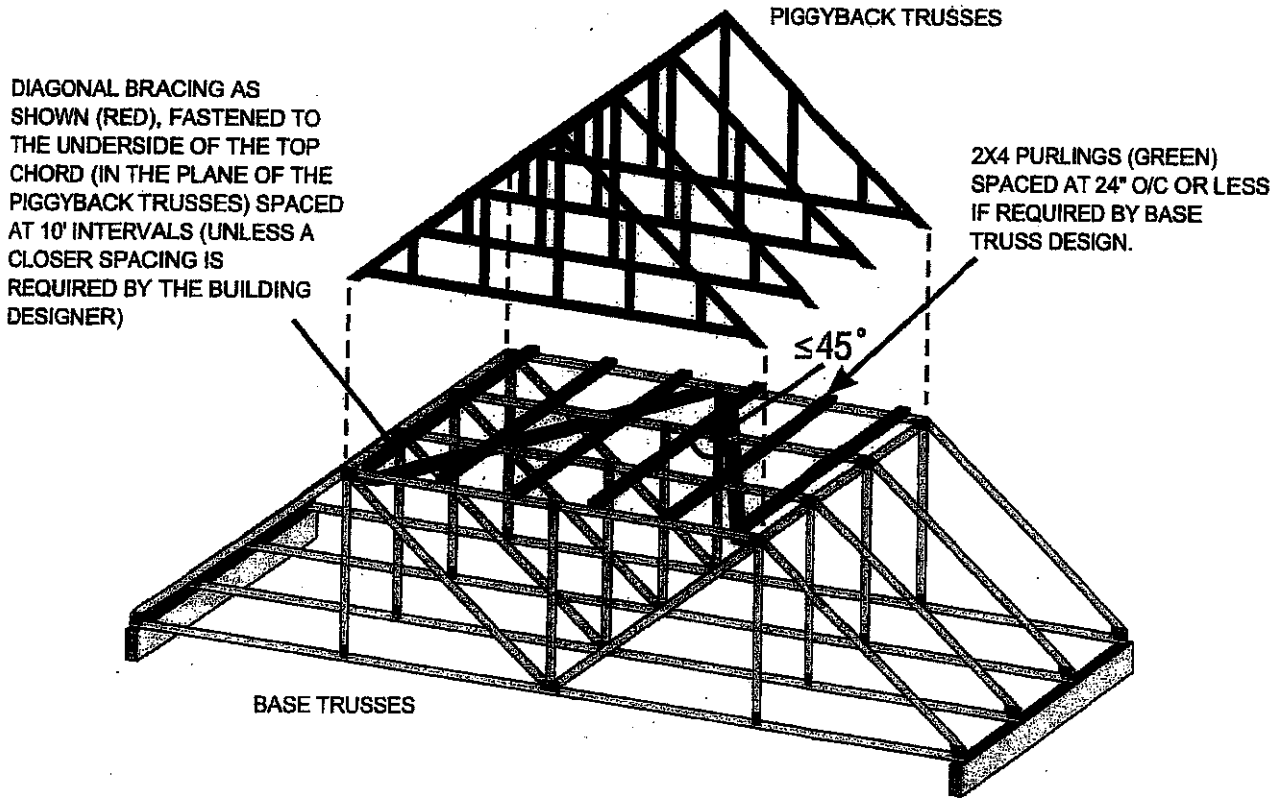

NOTE: THE SLOPED PORTION OF THE TOP CHORD OF THE BASE TRUSS AND PIGGYBACK TRUSS IN THIS SKETCH IS ASSUMED TO BE SHEATHED IN ACCORDANCE WITH THE OBC.

SKETCH FROM BCSI-CANADA 2013

Disclaimer:

OWTFA Tech Notes are intended to provide guidance to the design community both within the membership as well as to third party designers who might benefit from the information. The details have been developed by the OWTFA technical committee and although there may be professional engineers involved in development, the information contained in the tech-note are not intended to be used without having a professional engineer review the information for a specific application. The OWTFA takes no responsibility with respect to the information provided but has developed this tech-note to offer guidance where it is not currently readily available.

LUS – Double Shear Joist Hangers

SIMPSON Strong-Tie®

All LUS hangers have double shear nailing. This patented innovation distributes the load through two points on each joist nail for greater strength. It also allows the use of fewer nails, faster installation and the use of common nails for all connections.

Material: 18 gauge

Finish: G90 galvanized

Design:

- Factored resistances are in accordance with CSA O86-14.
- Uplift resistances have been increased 15%. No further increase is permitted.
- Wood shear is not considered in the factored resistances given. The specifier must ensure that the joist and header capacities are capable of withstanding these loads.

Installation:

- Use all specified fasteners.
- Nails: 16d = 0.162" dia. x 3½" long common wire, 10d = 0.148" x 3" long common wire.
- Double shear nails must be driven at an angle through the joist or truss into the header to achieve the table loads.
- Not designed for welded or nailer applications.

Options:

- These hangers cannot be modified

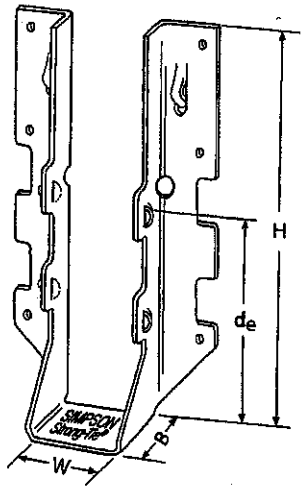

LUS28

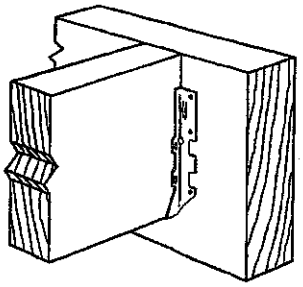

Typical LUS Installation

Model No.	Ga.	Dimensions (in.)				Fasteners		Factored Resistance (lb.)			
								D.Fir-L		S-P-F	
		W	H	B	d_e[1]	Face	Joist	Uplift (K_D=1.15)	Normal (K_D=1.00)	Uplift (K_D=1.15)	Normal (K_D=1.00)
LUS24	18	1 9/16	3 1/8	1 3/4	1 15/16	(4) 10d	(2) 10d	710	1630	645	1155
LUS24-2	18	3 1/8	3 1/8	2	1 13/16	(4) 16d	(2) 16d	835	2020	590	1435
LUS26	18	1 9/16	4 3/4	1 3/4	3 5/8	(4) 10d	(4) 10d	1420	2170	1290	1630
LUS26-2	18	3 1/8	4 7/8	2	4	(4) 16d	(4) 16d	1720	2595	1545	1920
LUS26-3	18	4 5/8	4 3/16	2	3 1/4	(4) 16d	(4) 16d	1720	2595	1545	2340
LUS28	18	1 9/16	6 5/8	1 3/4	3 3/4	(6) 10d	(6) 10d	1420	2520	1290	1790
LUS28-2	18	3 1/8	7	2	4	(6) 16d	(4) 16d	1720	3325	1545	2575
LUS28-3	18	4 5/8	6 1/4	2	3 1/4	(6) 16d	(4) 16d	1720	3325	1545	2375
LUS210	18	1 9/16	7 13/16	1 3/4	3 7/8	(8) 10d	(4) 10d	1420	2785	1290	2210
LUS210-2	18	3 1/8	9	2	6	(8) 16d	(6) 16d	2580	4500	2320	3195
LUS210-3	18	4 5/8	8 3/16	2	5 1/4	(8) 16d	(6) 16d	2580	3345	2320	2375

1. d_e is the distance from the seat of the hanger to the highest joist nail.

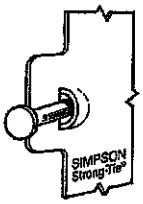

Dome Double Shear Nailing prevents tabs breaking off (available on some models).

U.S. Patent 5,603,580

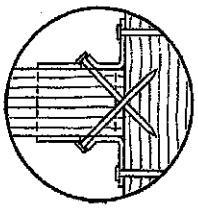

Double Shear Nailing Top View.

LICENSED PROFESSIONAL ENGINEER
4/5/2017
B. D. BUNTING
PROVINCE OF ONTARIO

UNITED STATES DESIGN

This report contains information compiled June 30, 2016. Some of the information is valid until March 1, 2017. While information is reviewed periodically, product availability and specifications are subject to change without notice. Contact Simpson Strong-Tie® Connectors for current information and limited warranty. See strongtie.com.

© 2017 Simpson Strong-Tie Company Inc.

(800) 999-5099
strongtie.com

HUS/LJS – Double Shear Joist Hangers

SIMPSON Strong-Tie®

All hangers have double shear nailing. This patented innovation distributes the load through two points on each joist nail for greater strength. It also allows the use of fewer nails, faster installation and the use of common nails for all connections. Do not bend or remove tabs.

Material: See table

Finish: G90 galvanized

Design:

- Factored resistances are in accordance with CSA O86-14.
- Uplift resistances have been increased 15%. No further increase is permitted.
- Wood shear is not considered in the factored resistances given. The specifier must ensure that the joist and header capacities are capable of withstanding these loads.

Installation:

- Use all specified fasteners
- Nails: 16d = 0.162" dia. x 3½" long common wire
- Double shear nails must be driven at an angle through the joist or truss into the header to achieve the table loads
- Not designed for welded or nailer applications

Options:

- See current catalogue for options

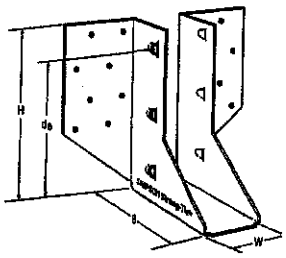

LJS26DS

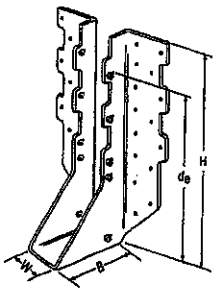

HUS210
(HUS26, HUS28, similar)

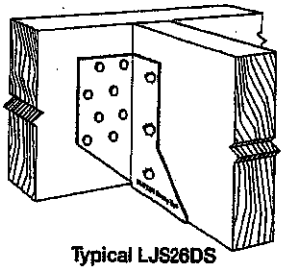

Typical LJS26DS Installation

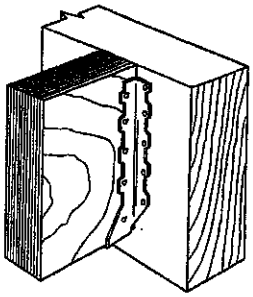

Typical HUS Installation

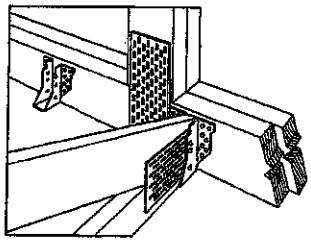

Typical HUS Installation
(Truss Designer to provide fastener quantity for connecting multiple members together)

Model No.	Ga.	Dimensions (in.)				Fasteners		Factored Resistance (lb.)			
								D.Fir-L		S-P-F	
		W	H	B	d_e[1]	Face	Joist	Uplift (K_D=1.15) lb.	Normal (K_D=1.00) lb.	Uplift (K_D=1.15) lb.	Normal (K_D=1.00) lb.
LJS26DS	18	1 9/16	5	3½	4⅝	(16) 16d	(6) 16d	2055	4265	1460	4115
HUS26	16	1⅝	5⅜	3	3 15/16	(14) 16d	(6) 16d	2705	4940	2065	3875
HUS28	16	1⅝	7 3/32	3	6 3/32	(22) 16d	(8) 16d	3605	5365	2675	4345
HUS210	16	1⅝	9 3/32	3	7 31/32	(30) 16d	(10) 16d	4505	5795	4010	4740
HUS1.81/10	16	1 13/16	9	3	8	(30) 16d	(10) 16d	4505	6450	4010	5200

1. d_e is the distance from the seat of the hanger to the highest joist nail.

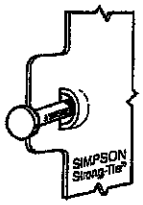

Dome Double Shear Nailing prevents tabs breaking off (available on some models).

U.S. Patent 5,603,580

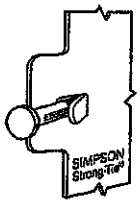

Double Shear Nailing Side View. Do not bend tab back.

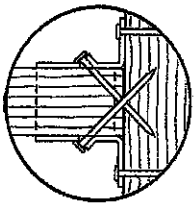

Double Shear Nailing Top View.

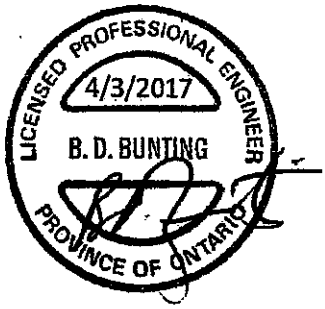

The technical bulletin is effective only if the software and product information available as of March 2017 is installed. Supplement your calculation software with the latest product information available at www.strongtie.com. Contact Simpson Strong-Tie for current information. Warranty and terms and conditions apply.

© 2017 Simpson Strong-Tie Canada Inc. ESSEWHUSLT-17 exp. 6/19

(800) 999-5099
strongtie.com

HGUS – Double Shear Joist Hangers

SIMPSON Strong-Tie®

All HGUS hangers have double shear nailing. This patented innovation distributes the load through two points on each joist nail for greater strength. It also allows the use of fewer nails, faster installation and the use of common nails for all connections. Do not bend or remove tabs.

Material: 12 gauge

Finish: G90 galvanized

Design:

- Factored resistances are in accordance with CSA O86-14.
- Uplift resistances have been increased 15%. No further increase is permitted.
- Wood shear is not considered in the factored resistances given. The specifier must ensure that the joist and header capacities are capable of withstanding these loads.

Installation:

- Use all specified fasteners
- Nails: 16d = 0.162" dia x 3½" long common wire
- Double shear nails must be driven at an angle through the joist or truss into the header to achieve the table loads
- Not designed for welded or nailer applications

Options:

- See current catalogue for options

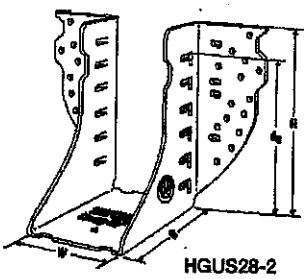

HGUS28-2

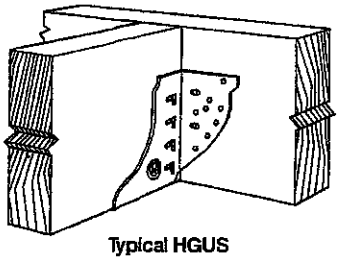

Typical HGUS Installation

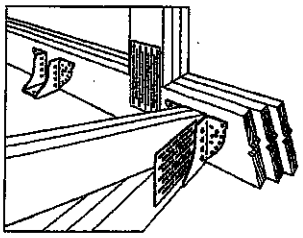

Typical HGUS Installation (Truss Designer to provide fastener quantity for connecting multiple members together)

Model No.	Ga.	Dimensions (in.)				Fasteners		Factored Resistance (lb.)			
								D.Fir-L.		S-P-F	
		W	H	B	d_e[1]	Face	Joist	Uplift (K_D=1.15)	Normal (K_D=1.00)	Uplift (K_D=1.15)	Normal (K_D=1.00)
HGUS26	12	1⅝	5⅜	5	4 5/32	(20) 16d	(8) 16d	2685	6625	2685	5700
HGUS26-2	12	3 9/16	5 7/16	4	4⅛	(20) 16d	(8) 16d	4385	8950	3100	6355
HGUS26-3	12	4 15/16	5½	4	4⅛	(20) 16d	(8) 16d	4385	8950	3100	6355
HGUS26-4	12	6 9/16	5 7/16	4	4⅛	(20) 16d	(8) 16d	4385	8950	3100	6355
HGUS28	12	1⅝	7⅛	5	6⅛	(36) 16d	(12) 16d	3310	7675	3100	6900
HGUS28-2	12	3 9/16	7 3/16	4	6⅛	(36) 16d	(12) 16d	6070	12980	4310	9215
HGUS28-3	12	4 15/16	7¼	4	6⅜	(36) 16d	(12) 16d	6070	12980	4310	9215
HGUS28-4	12	6 9/16	7 3/16	4	6⅛	(36) 16d	(12) 16d	6070	12980	4310	9215
HGUS210-2	12	3 9/16	9 3/16	4	8⅛	(46) 16d	(16) 16d	6840	14645	4855	10400
HGUS210-3	12	4 15/16	9¼	4	8⅜	(46) 16d	(16) 16d	6840	14645	4855	10400
HGUS210-4	12	6 9/16	9 3/16	4	8⅛	(46) 16d	(16) 16d	6840	14645	4855	10400
HGUS212-4	12	6 9/16	10⅝	4	10⅛	(56) 16d	(20) 16d	7640	14995	5425	10645
HGUS214-4	12	6 9/16	12⅝	4	11⅛	(66) 16d	(22) 16d	10130	16400	7195	11645

1. d_e is the distance from the seat of the hanger to the highest joist nail.

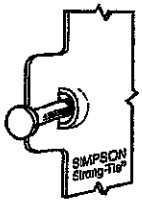

Dome Double Shear Nailing prevents tabs breaking off (available on some models).

U.S. Patent 5,603,580

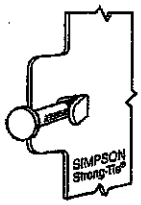

Double Shear Nailing Side View. Do not bend tab back.

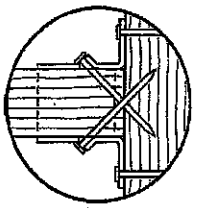

Double Shear Nailing Top View.

LICENSED PROFESSIONAL ENGINEER
4/10/2017
B. D. BUNTING
PROVINCE OF ONTARIO

© 2017 Simpson Strong-Tie Company Inc.

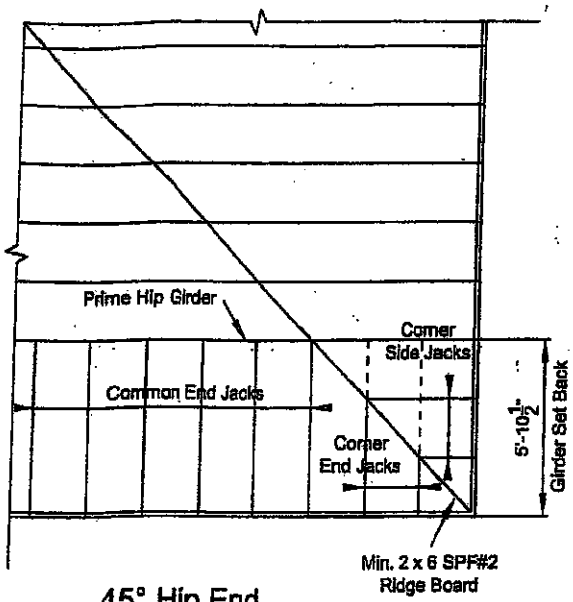

45° Hip End

LUMBER SPECIFICATION

TOP CHORD	:	2 x 4 SPF#2
BOTTOM CHORD	:	2 x 4 SPF#2
WEBS	:	2 x 3 SPF#2

UNLESS OTHERWISE SHOWN

DESIGN LOAD

TOP CHORD SNOW LOAD	:	40.5 P.S.F.
TOP CHORD DEAD LOAD	:	3.0 P.S.F.
BOTTOM CHORD LIVE LOAD	:	0.0 P.S.F.
BOTTOM CHORD DEAD LOAD	:	7.0 P.S.F.
TOTAL LOAD	:	50.5 P.S.F

LICENSED PROFESSIONAL ENGINEER
06/11/18
H.J.G. ALVES
PROVINCE OF ONTARIO

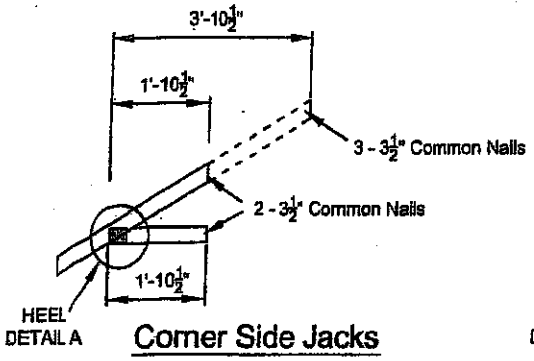

Corner Side Jacks

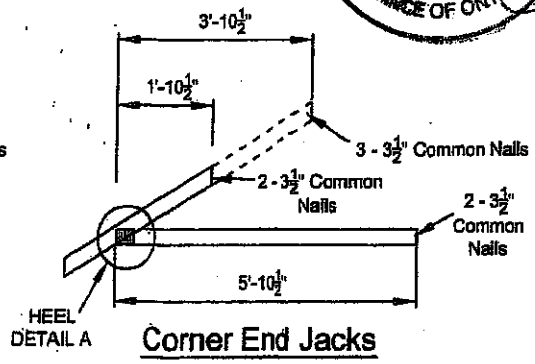

Corner End Jacks

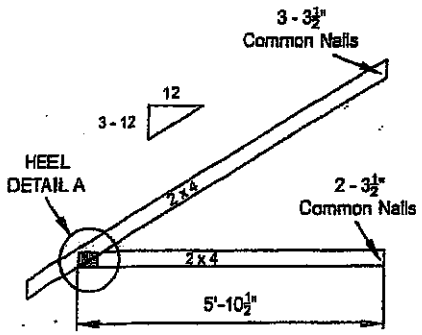

Common End Jacks

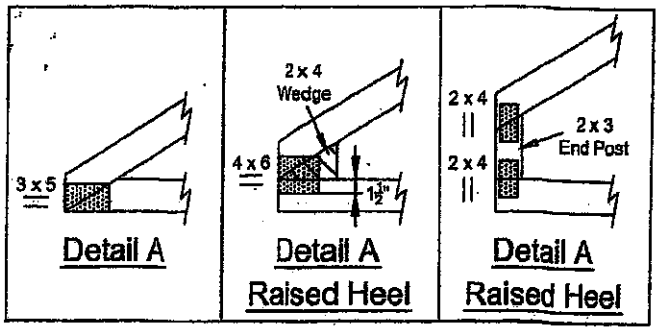

NOTE: DESIGN CONFORMS TO PART 9, O.B.C. 2012 (L.S.D. DESIGN)

T-1800216

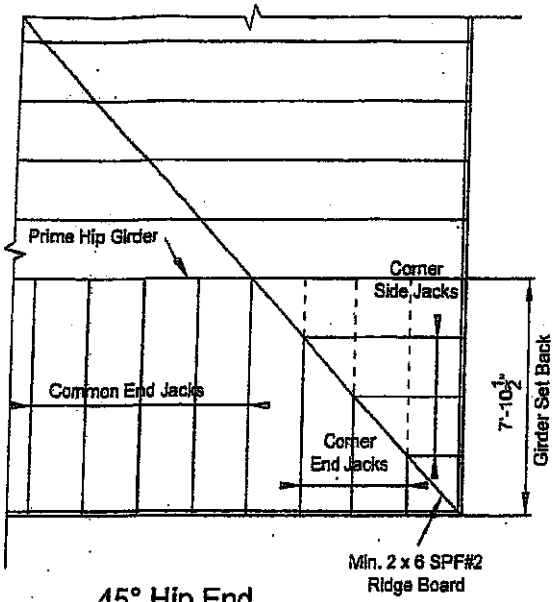

45° Hip End

LUMBER SPECIFICATION

TOP CHORD	:	2 x 4 SPF#2
BOTTOM CHORD	:	2 x 4 SPF#2
WEBS	:	2 x 3 SPF#2

UNLESS OTHERWISE SHOWN

DESIGN LOAD

TOP CHORD SNOW LOAD	:	40.5 P.S.F.
TOP CHORD DEAD LOAD	:	3.0 P.S.F.
BOTTOM CHORD LIVE LOAD	:	0.0 P.S.F.
BOTTOM CHORD DEAD LOAD	:	7.0 P.S.F.
TOTAL LOAD		50.5 P.S.F

LICENSED PROFESSIONAL ENGINEER
06/11/2018
H.J.G. ALVES
PROVINCE OF ONTARIO

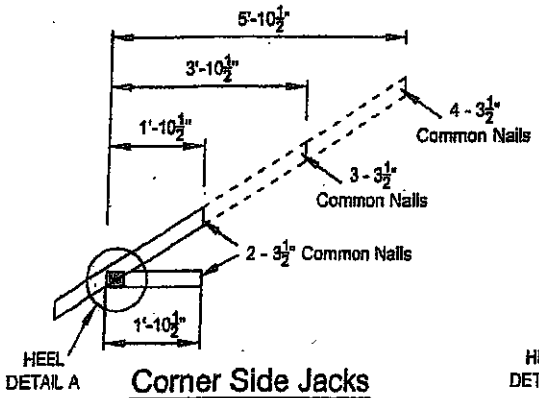

Corner Side Jacks

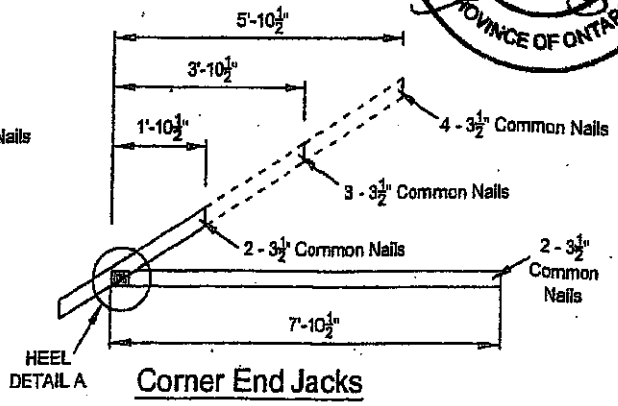

Corner End Jacks

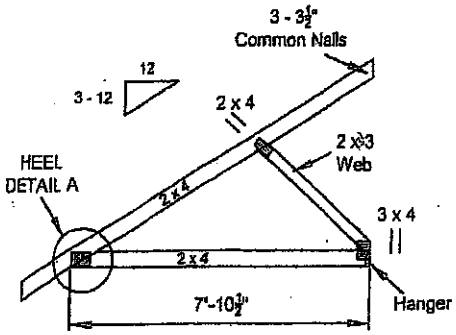

Common End Jacks

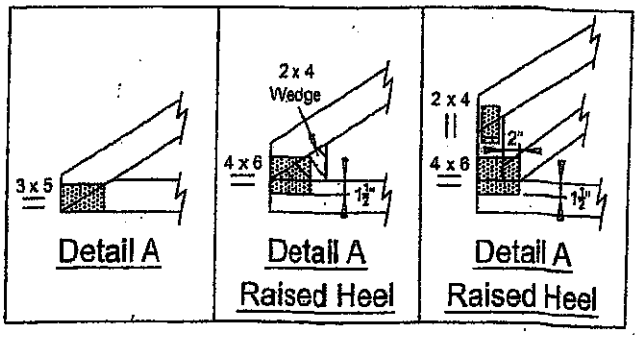

NOTE: DESIGN CONFORMS TO PART 9, O.B.C. 2012 (L.S.D. DESIGN)

T-1800217

Symbols

PLATE LOCATION AND ORIENTATION

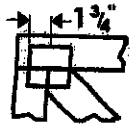

Center plate on joint unless x, y offsets are indicated. Dimensions are in ft-in-sixteenths or mm. Apply plates to both sides of truss and fully embed teeth.

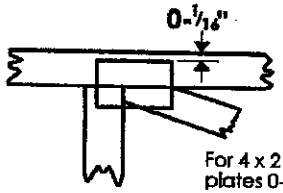

For 4 x 2 orientation, locate plates 0-1/16" from outside edge of truss.

This symbol indicates the required direction of slots in connector plates.

*Plate location details available in MiTek software or upon request.

PLATE SIZE

4 x 4

The first dimension is the plate width measured perpendicular to slots. Second dimension is the length parallel to slots.

LATERAL BRACING LOCATION

Indicated by symbol shown and/or by text in the bracing section of the output. Use T, I or Eliminator bracing if indicated.

BEARING

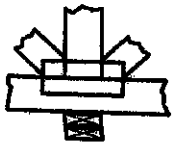

Indicates location where bearings (supports) occur. Icons vary but reaction section indicates joint number where bearings occur.

Industry Standards:

TPIC: Truss Design Procedures and Specifications for Light Metal Plate Connected Wood Trusses

DSB-89: Design Standard for Bracing.

BCSI: Building Component Safety Information, Guide to Good Practice for Handling, Installing & Bracing of Metal Plate Connected Wood Trusses.

Numbering System

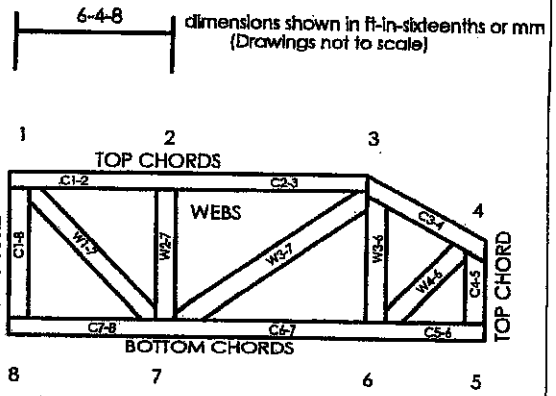

JOINTS ARE GENERALLY NUMBERED/LETTERED CLOCKWISE AROUND THE TRUSS STARTING AT THE JOINT FARTHEST TO THE LEFT.

CHORDS AND WEBS ARE IDENTIFIED BY END JOINT NUMBERS/LETTERS.

PRODUCT CODE APPROVALS

CCMC Reports:

11996-L, 10319-L, 13270-L, 12691-R

© 2007 MiTek® All Rights Reserved

MiTek®

POWER TO PERFORM.™

MiTek Engineering Reference Sheet: MII-7473C rev. 10-'08

General Safety Notes

Failure to Follow Could Cause Property Damage or Personal Injury

1. Additional stability bracing for truss system, e.g. diagonal or X-bracing, is always required. See BCSI.
2. Truss bracing must be designed by an engineer. For wide truss spacing, individual lateral braces themselves may require bracing, or alternative T, I, or Eliminator bracing should be considered.
3. Never exceed the design loading shown and never stack materials on inadequately braced trusses.
4. Provide copies of this truss design to the building designer, erection supervisor, property owner and all other interested parties.
5. Cut members to bear tightly against each other.
6. Place plates on each face of truss at each joint and embed fully. Knots and wane at joint locations are regulated by TPIC.
7. Design assumes trusses will be suitably protected from the environment in accord with TPIC.
8. Unless otherwise noted, moisture content of lumber shall not exceed 19% at time of fabrication.
9. Unless expressly noted, this design is not applicable for use with fire retardant, preservative treated, or green lumber.
10. Camber is a non-structural consideration and is the responsibility of truss fabricator. General practice is to camber for dead load deflection.
11. Plate type, size, orientation and location dimensions indicated are minimum plating requirements.
12. Lumber used shall be of the species and size, and in all respects, equal to or better than that specified.
13. Top chords must be sheathed or purlins provided at spacing indicated on design.
14. Bottom chords require lateral bracing at 10 ft. spacing, or less, if no ceiling is installed, unless otherwise noted.
15. Connections not shown are the responsibility of others.
16. Do not cut or alter truss member or plate without prior approval of an engineer.
17. Install and load vertically unless indicated otherwise.
18. Use of green or treated lumber may pose unacceptable environmental, health or performance risks. Consult with project engineer before use.
19. Review all portions of this design (front, back, words and pictures) before use. Reviewing pictures alone is not sufficient.
20. Design assumes manufacture in accordance with TPIC Quality Criteria.

Alves Engineering Services Inc.
5208 Easton road
Burlington, Ontario L7L 6N6
(289) 259 5455

LICENSED PROFESSIONAL ENGINEER
06/11/19
H.J.G. ALVES
PROVINCE OF ONTARIO

RESPONSABILITIES

1-Alves Engineering Services Inc. is responsible for the design of trusses as individual components

2-It is the responsibility of others to ascertain that the design loads utilized on this drawing meet or exceed the actual dead load imposed by the structure and the live load imposed by the local building code or the authorities having jurisdictions.

3- All dimensions are to be verified by owner, contractor, architect or other authority before manufacture.

4- Alves Engineering Services Inc. bears no responsibility for the erection of the trusses. Persons erecting trusses are cautioned to seek professional advice regarding temporary and permanent bracing system. Bracing shown on Alves Engineering Services Inc. drawings is specified for the truss as a single component and forms an integral part of the truss design, but is not meant to represent the only required bracing for that truss when trusses are installed in a series of trusses forming a roof truss system.

5- It is the manufactures responsibility to ensure that the trusses are manufactured in conformance with Alves Engineering Services Inc. specifications outlined below.

SPECIFICATIONS

1-Truss components sealed by Alves Engineering Services Inc. conform to the relevant sections of the current Building Code of Ontario and Canada (part 4 or part 9) or the current Canadian code for Farm Buildings in accordance with the application specified on the sealed truss component drawing. All truss component design procedures must conform to the current design standard issued by the truss plate institute of Canada (TPIC). All lumber and nailing stresses to conform to the current CSA wood design standard identified on the current Building Code and TPIC.

2- Lumber is to be the sizes and grade specified on the truss drawing.

3- Moist content of lumber is not to exceed 19% in service unless otherwise specified.

4- Plates shall be applied to both faces of the each truss joint and shall be positioned as shown on the truss drawings

5- Lumber used on manufacture of trusses is not to be treated with chemicals unless otherwise specified on the truss drawings.

6- The top chord is assumed to be continuously laterally braced by the roof sheathing or purlins at intervals specified on the truss drawing but not exceeding 24" c/c for (part 9) and not exceeding 48" for (part 4 or farm design)

7- When rigid ceiling is not attached directly to the bottom chord, lateral bracing is required and it should not exceed more than 3m or 10' intervals.

8-Refer to Mitek sheet MII7473C REV.10-08 attached for information on symbols, numbering system and General Safety notes.

T-1800218 Feb 09, 2018