CONSTRUCTION NOTES (UNLESS OTHERWISE NOTED)

ALL CONSTRUCTION TO ADHERE TO THESE PLANS AND SPEC'S AND TO CONFORM TO THE ONTARIO BUILDING CODE AND ALL OTHER APPLICABLE CODES AND AUTHORITIES HAVING JURISDICTION. THESE REQUIREMENTS ARE TO BE TAKEN AS MINIMUM SPECIFICATIONS. ONT. REG. 332/12 - 2012 OBC.

1 ROOF CONSTRUCTION (*SEE OBC 9.19.)

NO. 210 (10.25kg/m2) ASHPHALT SHINGLES. 10mm (3/8") PLYWOOD SHEATHING WITH "H" CLIPS. APPROVED WOOD TRUSSES @600mm 24° o.c. MAX. APPROVED EAVE PROTECTION TO EXTEND 900mm (3'-0") FROM EDGE OF ROOF AND MIN. 300mm (12") BEYOND INNER FACE OF EXTERIOR WALL, 38x89 (2"x4") TRUSS BRACING @ 1830mm (6'-0") o.c. AT BOTTOM CHORD. PREFIN. ALUM. EAVESTROUGH, FASCIA, RAIL & VENTED SOFFIT. PROVIDE ICE & WATER SHIELD TO ALL ROOF / WALL SURFACES SUSCEPTIBLE TO DAMMING. ROOF SHEATHING TO BE FASTENED 150 (6") c.c. ALONG EDGES & INTERMEDIATE SUPPORTS WHEN TRUSSES SPACED GREATER THAN 406 (16"). ATTIC VENTILATION 1:300 OF INSULATED CEILING AREA WITH 50% AT EAVES.

2 FRAME WALL CONSTRUCTION (2"x6")

SIDING, HARDIE BOARD, STUCCATO BOARD OR EQUAL AS PER ELEVATION, 19X64 (1"x3") VERTICAL WOOD FURRING, APPROVED SHEATHING PAPER, MIN. RSI 0.88 (R-5) RIGID INSULATION. 38X140 (2"X6") STUDS @ 400MM (16") O.C. FILLED WITH MIN. RSI 3.87 (R-22) BATT INSULATION, TOTAL MIN. RSI 4.75 (R-21). APPROVED DIAGONAL WALL BRACING, VAPOUR BARRIER AND CONT. AIR BARRIER, 13mm (1/2") INT. DRYWALL FINISH.

3 BRICK VENEER CONSTRUCTION (2"x6")

90mm (4") FACE BRICK 25mm (1") AIR SPACE, 22x180x0.76mm (7/8"x7"x0.03") GALV. METAL TIES @ 400mm (16") o.c. HORIZONTAL 600mm (24") o.c. VERTICAL. APPROVED SHEATHING PAPER, MIN. RSI 0.88 (R-5) RIGID INSULATION. 38X140 (2"X6") STUDS @ 400MM (16") O.C. FILLED WITH MIN. RSI 3.87 (R-22) BATT INSULATION, TOTAL MIN. RSI 4.75 (R-21). APPROVED DIAGONAL WALL BRACING, VAPOUR BARRIER AND CONT. AIR BARRIER, 13mm (1/2") INT. DRYWALL FINISH. PROVIDE WEEP HOLES @ 800mm (32") o.c. BOTTOM COURSE AND OVER OPENINGS. PROVIDE BASE FLASHING UP MIN. 150mm (6") BEHIND BUILDING PAPER.

3A STUCCO WALL CONSTRUCTION (2"x6")

STUCCO CLADDING SYSTEM CONFIRMING TO OBC9.27.1.1.(2) & 9.28 THAT EMPLOY A MINIMUM 6mm (1/4") DRAINAGE CAVITY BEHIND THE CLADDING WITH POSITIVE DRAINAGE TO THE EXTERIOR AND APPLIED AS PER MANUFACTURERS SPECIFICATION ON 25mm (1") MINIMUM EXTRUDED OR EXPANDED RIGID INSULATION, APPROVED SHEATHING PAPER, MIN. RSI 0.88 (R-5) RIGID INSULATION. 38X140 (2"X6") STUDS @ 400MM (16") O.C. FILLED WITH MIN. RSI 3.87 (R-22) BATT INSULATION, TOTAL MIN. RSI 4.75 (R-21). APPROVED DIAGONAL WALL BRACING, VAPOUR BARRIER AND CONT. AIR BARRIER, 13mm (1/2") INT. DRYWALL FINISH. STUCCO TO BE MIN.200mm (8") ABOVE FINISH GRADE.

4 INTERIOR STUD PARTITIONS

(*SEE OBC 9.23.10.&9.23.11.)

BEARING PARTITION 38x89 (2"x4") @ 400mm (16") o.c. FOR 2 STOREYS AND 300mm (12") o.c. FOR 3 STOREYS. NON-BEARING PARTITIONS 38x89 (2"x4") @ 600mm (24") o.c.. PROVIDE 38x89 (2"x4") BOTTOM PLATE AND 2/38x89 (2-2"x4") TOP PLATE. 13mm (1/2") INTERIOR DRYWALL BOTH SIDES OF STUD, PROVIDE 38x140 (2"x6") STUDS/PLATES WHERE NOTED.

5 FOUNDATION WALL/FOOTINGS:

(*SEE OBC 9.15.3 & 9.15.4.)

200mm (8") OR 255mm (10")POURED CONC. FDTN. WALL 15MPa (2200psi) WITH BITUMENOUS DAMPROOFING AND DRAINAGE LAYER. BRACE FOUNDATION WALL PRIOR TO BACKFILLING ON CONC. FOOTINGS C/W CONT. FORMED KEYWAY AND REST ON NATURAL UNDISTURBED SOIL WITH MINIMUM BEARING CAPACITY OF 100kPa (1.45 psi) OR GREATER. FOR FOOTING SIZES SEE ARCHITECTURAL DRAWINGS.

6 WEEPING TILE (* SEE OBC 9.14.3.)

100mm (4") DIA. WEEPING TILE 150mm (6") CRUSHED STONE OVER AND AROUND WEEPING TILES.

7 BASEMENT SLAB (*SEE OBC 9.16.-)

80mm (3") MIN. 25MPa (3600psi) CONC. SLAB ON 100mm (4") COARSE GRANULAR FILL, OR 15MPa (2200psi) CONC. WITH DAMPROOFING BELOW SLAB.

STRUDET INC.
REGISTERED PROFESSIONAL ENGINEER
B. MARINKOVIC
PROVINCE OF ONTARIO
FOR STRUCTURE ONLY

8 WOOD SUBFLOORS (*SEE OBC 9.23.14. & 9.30.2.)

19mm (3/4") T&G SUBFLOOR UNDER GROUND FLOOR FINISH FLOOR. 16mm (5/8") T&G SUBFLOOR UNDER SECOND FLOOR FINISH FLOOR. 16mm (5/8") PANEL-TYPE UNDERLAY FOR CERAMIC TILE APPLICATION. 6mm (1/4") PANEL-TYPE UNDERLAY UNDER RESILIENT & PARQUET FLOORING.

9 ROOF INSULATION

RSI 10.56 (R60) ROOF INSULATION AND APPROVED VAPOUR BARRIER, 16mm (5/8") INT. DRYWALL FINISH OR APPROVED EQUAL.

10 ALL STAIRS/EXTERIOR STAIRS (*SEE OBC 9.8.-)

MAX. RISE	=200	(7-7/8")
MIN. RUN	=210	(8-1/4")
MIN. TREAD	=235	(9-1/4")
MAX. NOSING	=25	(1")
MIN. HEADROOM	=1950	(6'-5")
RAIL @ LANDING	=900	(2'-11")
RAIL @ STAIR	=865	(2'-10") TO 965 (3'-2")
MIN. STAIR WIDTH	=860	(2'-10")
FOR CURVED STAIRS		
MIN. AVG. RUN	= 200	(8")
MIN. RUN	= 150	(6")

11 RAILING (*SEE OBC 9.8.8.)

FINISHED RAILING ON PICKETS SPACED MAXIMUM 100mm (4") BETWEEN PICKETS.

INTERIOR GUARDS: = 900mm (2'-11") MIN.
EXTERIOR GUARDS: = 1070mm (3'-6") MIN.

12 SILL PLATE (*SEE OBC 9.23.6 & 9.23.7.)

38x89 (2"x4") SILL PLATE WITH 13mm (1/2") DIA. ANCHOR BOLTS 200mm (8") LONG, EMBEDDED MIN. 100mm (4") INTO CONC. @ 2400mm (7'-10") o.c. CAULKING OR 25 (1") MIN. MINERAL WOOL BETWEEN PLATE AND TOP OF FDTN. WALL. USE MORTAR TO LEVEL SILL PLATE WHEN REQUIRED.

13 BASEMENT INSULATION (*SEE OBC 12.3.)

FOUNDATION WALLS ENCLOSING HEATED SPACE SHALL BE INSULATED FROM THE UNDERSIDE OF THE SUBFLOOR TO NOT MORE THAN 152mm (6") ABOVE THE FINISHED FLOOR OF THE BASEMENT AND NOT LESS THAN 50mm (2") TO THE SLAB.
FOUNDATION WALL INSULATION SHALL BE MINIMUM RSI3.52 (R20) INSULATION BLANKET OR BATTS WITH 38x89 (2X4) STUD WALL, APPROVED VAPOUR BARRIER, DAMPROOFING WELDS. PAPER BETWEEN THE FDTN. AND INSUL.

14 BASEMENT BEARING STUD PARTITION (2"X4")

(*SEE OBC 9.23.10.)

38x89 (2"x4") STUDS @400mm (16") o.c. 38x89 (2"x4") SILL PLATE ON DAMPROOFING MATERIAL, 13mm (1/2") DIA. ANCHOR BOLTS 200mm (8") LONG, EMBEDDED MIN. 100mm (4") INTO CONC. @ 2400mm (7'-10") o.c. (4") HIGH CONC. CURB ON 305x155 (12"x6") CONC. FOOTING. ADD HORIZ. BLOCKING AT MID-HEIGHT IF WALL IS UNFINISHED.

14A BASEMENT BEARING STUD PARTITION (2"x6")

38x140 (2"x6") STUDS @400mm (16") o.c. 38x140 (2"x6") SILL PLATE ON DAMPROOFING MATERIAL, 13mm (1/2") DIA. ANCHOR BOLTS 200mm (8") LONG, EMBEDDED MIN. 100mm (4") INTO CONC. @ 2400mm (7'-10") o.c. (4") HIGH CONC. CURB ON 400x155 (16"x6") CONC. FOOTING. ADD HORIZ. BLOCKING AT MID-HEIGHT IF WALL IS UNFINISHED.

15 STEEL BASEMENT COLUMN (* SEE OBC 9.17.3.)

90mm (3-1/2") DIA. x 4.78mm (.188) STL. COL. WITH 150x150x9.5mm (6"x6"x3/8") STL. TOP & BOTTOM PLATE.

15A STEEL COLUMN (* SEE OBC 9.17.3.)

90mm (3-1/2") DIA. x 4.78mm (.188) STL. COLUMN WITH 100x100x6.4mm (4"x4"x1/4") STEEL TOP & BOTTOM PLATE. FIELD WELD BOTTOM PLATE TO 250x100x12.5mm (10"x4"x1/2") BASE PLATE C/W 2-13mm (1/2") DIA. x 300mm (12") LONG x 50mm (2") HOOK ANCHORS.

16 NIB WALLS (* SEE OBC 9.23.8.)

BEAM POCKET OR 200x200 (8"x8") POURED CONCRETE NIB WALLS. MINIMUM BEARING 90mm (3-1/2")

17 STEEL BEAM STRAPPING (* SEE OBC 9.23.4.3.(3)(c))

19x38 (1"x2") CONTINUOUS WOOD STRAPPING BOTH SIDES OF STEEL BEAM.

18 GARAGE SLAB (*SEE OBC 9.16.-)

100mm (4") 32MPa (4640psi) CONC. SLAB WITH 5-8% AIR ENTRAINMENT ON OPT. 100 (4") COARSE GRANULAR FILL WITH COMPACTED SUB-BASE OR COMPACTED NATIVE FILL. SLOPE TO FRONT 1% MIN.

19 INTERIOR GARAGE WALLS & CEILINGS

(*SEE OBC 9.10.9.16.)

13mm (1/2") GYPSUM BOARD ON WALL AND CEILING BETWEEN HOUSE AND GARAGE. MIN. RSI 0.88 (R-5) RIGID INSULATION W/ MIN. RSI 3.87 (R-22) BATT INSULATION, TOTAL MIN. RSI 4.75 (R-21) IN WALLS. RSI 5.46 (R31) IN CEILING. TAPE AND SEAL ALL JOINTS GAS TIGHT.

19A EXTERIOR GARAGE WALLS (UN-INSULATED)

(*SEE OBC 9.23.10.1.)

EXTERIOR FINISH AS PER NOTES 2 3 & 3A
APPROVED SHEATHING PAPER
7/16" O.S.B. EXTERIOR SHEATHING
38X 89 (2"X4") STUDS @ 400MM (16") O.C.
FOR MAX. 3.0M (9'-10") HEIGHT
38X140 (2"X6") STUDS @ 400MM (16") O.C.
FOR MAX. 3.6M (11'-10") HEIGHT
13mm (1/2") INT. DRYWALL FINISH.

20 GARAGE DOOR GASPROOFING

(*SEE OBC 9.10.13.15.)

DOOR AND FRAME GASPROOFING. DOOR EQUIPPED WITH SELF CLOSING DEVICE AND WEATHER STRIPPING.

21 EXTERIOR STEP

(*SEE OBC 9.8.9.2, 9.8.9.3 & 9.8.10.)

PRECAST CONCRETE STEP OR WD. STEP WHERE NOT EXPOSED TO WEATHER MAX. RISE 200mm (7-7/8"); MINIMUM TREAD 250mm (9-1/2")

22 DRYER VENT (*SEE OBC 6.2.3.8.(7))

CAPPED DRYER EXHAUST VENTED TO EXTERIOR. USE 100mm (4") DIA. SMOOTH WALL VENT PIPE.

23 ATTIC ACCESS (*SEE OBC 9.19.2.)

ATTIC ACCESS HATCH 545x700 (22"x28") WITH WEATHERSTRIPPING. RSI 3.52 (R20) RIGID INSULATION BACKING.

24 FIREPLACE CHIMNEYS (*OBC 9.21.-)

TOP OF FIREPLACE CHIMNEY SHALL BE 915mm (3-0") ABOVE THE HIGHEST POINT AT WHICH IT COMES IN CONTACT WITH THE ROOF AND 610mm (2'-0") ABOVE THE ROOF SURFACE WITHIN A HORIZ. DISTANCE OF 3050mm (10'-0") FROM THE CHIMNEY.

25 LINEN CLOSET

4 SHELVES MIN. 350mm (14") DEEP.

26 MECHANICAL EXHAUST

(*SEE OBC 9.32.3.5, 9.32.3.10.)

MECHANICAL EXHAUST FAN VENTED TO EXTERIOR.

27 STEEL BEARING PLATE FOR MASONRY WALLS

280x280x16 (11"x11"x5/8") STL. PLATE FOR STL BEAMS AND 280x280x12 (11"x11"x1/2") STL. PLATE FOR WOOD BEAMS BEARING ON CONC. BLOCK PARTYWALL, ANCHORED W/ 2-19mm (3/4") x200mm (8") LONG GALV. ANCHORS WITHIN SOLID BLOCK COURSE. LEVEL WITH NON-SHRINK GROUT.

28 CLASS "B" VENT

U.L.C. RATED CLASS "B" VENT 610mm (2'-0") ABOVE THE POINT IN CONTACT WITH THE ROOF FOR SLOPES UP TO 9/12, REFER TO THE ONTARIO GAS UTILIZATION CODE.

29 WOOD BASEMENT POST (*OBC 9.17.4.)

3-38x140 (3-2"x6") BUILT-UP POST ON METAL BASE SHOE ANCHORED TO CONC. WITH 12.7 (1/2") DIA. BOLT ON 406x406x203 (16"x16"x8") CONC. FOOTING.

30 STEP FOOTINGS (*OBC 9.15.3.9.)

MIN. HORIZ. STEP = 610mm (24"). MAX. VERT. STEP = 610mm (24")

31 SLAB ON GRADE (*SEE OBC 9.16.-)

100mm (4") 32MPa (4640psi) CONC. SLAB WITH 5-8% AIR ENTRAINMENT ON OPT. 100 (4") COARSE GRANULAR FILL WITH COMPACTED SUB-BASE OR COMPACTED NATIVE FILL. REINFORCED W/ 6x6-W2.9xW2.9 MESH PLACED NEAR MID-DEPTH OF SLAB.

32 DIRECT VENT FURNACE

DIRECT VENT FURNACE TERMINAL MIN. 900mm (36") FROM A GAS REGULATOR. MIN 300mm (12") ABOVE FIN. GRADE, FROM ALL OPENINGS, EXHAUST & INTAKE VENTS. HRV INTAKE TO BE A MIN. OF 1830mm (6'-0") FROM ALL EXHAUST TERMINALS. REFER TO GAS UTILIZATION CODE.

33 DIRECT VENT GAS FIREPLACE

DIRECT VENT GAS FIREPLACE. VENT TO BE A MINIMUM 300mm (12") FROM ANY OPENING AND ABOVE FIN. GRADE. REFER TO GAS UTILIZATION CODE

34 JOIST STRAPPING & BRIDGING (*SEE OBC 23.9.4.)

ALL FLOOR JOISTS TO BE BRIDGED WITH 38x38 (2"x2") CROSS BRACING OR SOLID BLOCKING @2100mm (6'-11") o.c. MAX. 19x64 (1"x3") @2100mm (6'-11") o.c. UNLESS A PANEL TYPE CEILING FINISH IS APPLIED.

35 EXPOSED BUILDING FACE (* SEE OBC 9.10.15.)

EXTERIOR WALLS TO HAVE A FIRE RESISTANCE RATING OF NOT LESS THAN 45min. WHERE LIMITING DISTANCE IS LESS THAN 1.2M (3'-11") WHERE THE LIMITING DISTANCE IS LESS THAN 600mm (1'-11") THE EXPOSING FACE SHALL BE CLAD IN NON-COMBUSTABLE MATERIAL.

36 COLD CELLAR PORCH SLAB (* SEE OBC 9.40.)

FOR MAX. 2500mm (8'-2") PORCH DEPTH, 125mm (5") 32Mpa (4640 psi) CONC. SLAB WITH 5-8% AIR ENTRAINMENT. REINF. WITH 10M BARS @200mm (8") o.c. EACH WAY IN BOTTOM THIRD OF SLAB, ANCHORED IN PERIMETER FDTN. WALLS W/ 610x610 (24"x24") 10M @600mm (24") o.c. DOWELS. SLOPE SLAB MIN. 1.0% FROM DOOR. SLAB TO HAVE A MIN. 75mm (3") BEARING ON FDTN. WALLS. PROVIDE (WLI) LINTELS OVER CELLAR DOOR.

37 FDTN. WALL REDUCTION IN THICKNESS

(*SEE OBC 9.15.4.7.)

FDTN. WALL SHALL NOT BE REDUCED TO LESS THAN 90mm (3-1/2") THICK TO A MAX. DEPTH OF 660mm (26") FOR 8" FDTN. WALL. 10" FDTN. WALL WHEN REDUCTION IN THICNESS IS GREATER THAN 26". FDTN. WALL SHALL BE TIED TO THE FACING MATERIAL WITH METAL TIES SPACED 200mm (8")o.c. VERTICALLY AND 900mm (36")o.c. HORIZONTALLY. FILL SPACE BETWEEN WALL AND FACING SOLID WITH MORTAR.

38 CONVENTIONAL ROOF FRAMING

(*SEE OBC 9.23.4.2.(1))

FOR MAX. 2240mm (7'-4") SPAN, 38x89 (2"x4") RAFTERS @400mm (16") o.c.. FOR MAX. 3350mm (11'-7") SPAN, 38x140 (2"x6") RAFTERS @400mm (16") o.c.. RIDGE BOARD TO BE 51mm (2") DEEPER. 38x89 (2"x4") COLLAR TIES AT MIDSPANS. CEILING JOISTS TO BE 38x89 (2"x4") @400mm (16") o.c. FOR MAX. 2830mm (9'-3") SPAN & 38x140 (2"x6") @ 400 (16") o.c. FOR MAX. 4450mm (14'-7") SPAN. RAFTERS FOR BUILT-UP ROOF TO BE 38x89 (2"x4") @600mm (24") o.c. WITH A 38x89 (2"x4") CENTER POST TO THE TRUSS BELOW, LATERALLY BRACED @1800mm (6'-0") o.c. VERTICALLY.

39 TWO STOREY VOLUME SPACES

FOR A MAXIMUM 5440mm (18'-0") HEIGHT, PROVIDE 2-38x140 (2-2"x6") CONTINUOUS STUDS @300mm (12") o.c. FOR BRICK AND 400mm (16") o.c. FOR SIDING. PROVIDE SOLID WOOD BLOCKING BETWEEN STUDS @1220mm (4'-0") o.c. VERT. 7/16" EXT. PLYWOOD.

40 EXPOSED FLOOR TO EXTERIOR

PROVIDE RSI 5.46 (R31) INSULATION, APPROVED VAPOUR BARRIER AND CONTINUOUS AIR BARRIER, FINISHED SOFFIT.

41 PARTYWALLS

TYPICAL 1 HOUR RATED PARTYWALL. REFER TO DETAILS FOR TYPE AND SPECIFICATIONS.

42 EXTERIOR WALLS FOR WALK-OUT CONDITION

THE EXTERIOR BASEMENT STUD WALL TO BE 38x140mm (2"x6") STUDS @400mm (16") o.c. MATCH FLOOR JOIST SPACING WHEN PARALEL WITH FLOOR JOISTS.

43 SMOKE ALARM (*OBC 9.10.19)

WITHIN DWELLING UNITS, SUFFICIENT SMOKE ALARMS SHALL BE INSTALLED SO THAT,

a. THERE IS AT LEAST ONE SMOKE ALARM INSTALLED ON EACH STOREY, INCLUDING BASEMENTS AND
b. ON ANY STOREY OF A DWELLING UNIT CONTAINING SLEEPING ROOMS, A SMOKE ALARM IS INSTALLED,
   1. IN EACH SLEEPING ROOM, AND
   2. IN A LOCATION BETWEEN THE SLEEPING ROOMS AND THE REMAINDER OF THE STOREY , AND IF THE SLEEPING ROOMS ARE SERVED BY A HALLWAY, THE SMOKE ALARM SHALL BE LOCATED IN THE HALLWAY.

A SMOKE ALARM SHALL HAVE A VISUAL SIGNALING COMPONENT CONFORMING TO THE REQUIREMENTS IN 18.5.3. (LIGHT, COLOR AND PULSE CHARACTERISTIC) OF NFPA 72, "NATIONAL FIRE ALARM AND SIGNALING CODE".

A SMOKE ALARM SHALL BE INSTALLED IN CONFORMANCE WITH CAN/ULC-S553, "INSTALLATION OF SMOKE ALARMS".

SMOKE ALARMS SHALL BE INSTALLED ON OR NEAR THE CEILING.

44 CARBON MONOXIDE ALARM (*OBC 9.33.4.)

WHERE A FUEL-BURNING APPLIANCE IS INSTALLED IN A SUITE OF RESIDENTIAL OCCUPANCY, A CARBON MONOXIDE ALARM SHALL BE INSTALLED TO EACH SLEEPING AREA IN THE SUITE.

THE CARBON MONOXIDE ALARM SHALL

a. BE PERMANENTLY CONNECTED TO AN ELECTRICAL CIRCUIT AND SHALL HAVE NO DISCONNECT SWITCH BETWEEN THE OVERCURRENT DEVICE AND THE CARBON MONOXIDE ALARM,
b. BE EQUIPPED WITH AN ALARM THAT IS AUDIBLE WITHIN BEDROOMS WHEN THE INTERVENING DOORS ARE CLOSED, WHERE LOCATED ADJACENT TO A SLEEPING AREA, AND
c. CONFORM TO
   1. CAN/CSA-6.19, "RESIDENTIAL CARBON MONOXIDE ALARMING DEVICES", OR
   2. UL2034, "SINGLE AND MULTIPLE STATION CARBON MONOXIDE ALARMS"

45 SOIL GAS CONTROL (*OBC 9.13.4.)

PROVIDE CONSTRUCTION TO PREVENT LEAKAGE OF SOIL GAS INTO THE BUILDING AS REQUIRED.

PROVIDE SWITCHES CONTROLLING LIGHTS OVER STAIRS AS PER OBC. DIV.B. 9.34.2.3.

PROVIDE LIGHTS IN THE UNFINISHED BASEMENT AS PER OBC. DIV.B. 9.34.2.4.

PROVIDE WATERPROOF WALL FINISHES IN THE WASHROOMS AS PER OBC.DIV.B.9.29.2.1.

FEB 1 1 2019

ENERGY STAR V-17 ESCC MODEL

5.		
4.		
3.		
2.		
1.	REVISED FROM TRINAR HALL HOMES INC.	FEB 19

REVISIONS

The undersigned has reviewed and takes responsibility for this design, and has the qualifications and meets the requirements set out in the Ontario Building Code to be a designer.

QUALIFICATION INFORMATION
Required unless design is exempt under Division C, Subsection 3.2.5 of the building code

NAME	SIGNATURE	BCIN
VIKAS GAJJAR		28770

REGION DESIGN INC.
8700 DUFFERIN ST.
CONCORD, ONTARIO
L4K 4S5
P (416) 736-4096
F (905) 660-0746

REGION DESIGN INC.

SHEET TITLE: GENERAL NOTES

CONTRACTOR SHALL CHECK ALL DIMENSIONS AND ELEVATIONS BEFORE COMMENCING WITH WORK AND REPORT ANY DISCREPANCIES TO THE DESIGNER. PRINTS ARE NOT TO BE SCALED.

SCALE	BY	AREA	PAGE No.
N.T.S.			1
DATE FEB 2019	TYPE	PROJECT 00-00-00	

Greenpark

PROJECT NAME: STANDARD NOTES LAMBERTS LANE II

Revision B 2019-2-13-10 PM M:\STANDARD\DETAIL SUB B & M\1T S.F.D\ENERGY STAR\0198 LAMBERTS LANE II\17B 1.dwg - STANDARD NOTES ENERGY STAR DWG

WINDOWS - CANADA ZONE C

(1) MINIMUM BEDROOM WINDOW (*OBC 9.9.10.1.)

AT LEAST ONE BEDROOM WINDOW ON A GIVEN FLOOR IS TO HAVE MIN. 0.35m2 (3.8 SQ.FT.) UNOBSTRUCTED GLAZED OPENABLE AREA WITH MIN. CLEAR WIDTH OF 380mm (1'-3")

GLASS AREA NOT MORE THAN 17% OF GROSS PERIPHERAL WALL AREA.
MAXIMUM U-VALUE 1.67 & MIN ER-VALUE 29

(2) WINDOW GUARDS (*OBC 9.8.8.1(6))

A GUARD IS REQUIRED WHERE THE TOP OF THE WINDOW SILL IS LOCATED LESS THAN 480mm (1'-6") ABOVE FIN. FLOOR AND THE DISTANCE FROM THE FIN. FLOOR TO THE ADJACENT GRADE IS GREATER THAN 1800mm (5'-11")

GENERAL:

(1) MECHANICAL VENTILATION

MECHANICAL VENTILATION IS REQUIRED TO PROVIDE 0.3 AIR CHANGES PER HOUR AVERAGED OVER 24 HOURS. SEE MECHANICAL DRAWINGS.

(2) REINFORCEMENT FOR GRAB BARS (*OBC 9.5.2.3.)

REINFORCEMENT OF STUD WALLS FOR FUTURE GRAB BARS SHALL BE INSTALLED ADJACENT TO WATER CLOSETS AND SHOWER OR BATHTUB IN MAIN BATHROOM. SEE DETAIL.

LUMBER:

1.) ALL LUMBER SHALL BE SPRUCE-PINE-FIR No.1&2 GRADE, UNLESS NOTED OTHERWISE.

2.) LUMBER EXPOSED TO THE EXTERIOR TO BE SPRUCE-PINE-FIR No.1&2 GRADE PRESSURE TREATED OR CEDAR, UNLESS NOTED OTHERWISE.

3.) ALL BEAMS, GIRDER TRUSSES, AND METAL HANGER CONNECTIONS SUPPORTING ROOF FRAMING TO BE DESIGNED & CERTIFIED BY TRUSS MANUFACTURER.

4.) LVL BEAMS SHALL BE VERSA-LAM 2.0E (Fb=2800psi MIN.) OR EQUIVALENT. NAIL EACH PLY OF LVL WITH 89mm (3-1/2") LONG COMMON WIRE NAILS @300mm (12") o.c. STAGGERED IN 2 ROWS FOR 184, 240, & 300mm (7-1/4",9-1/2",11-7/8") DEPTHS AND STAGGERED IN 3 ROWS FOR GREATER DEPTHS AND FOR 4 PLY MEMBERS ADD 1/2" (13mm) DIA. GALVANIZED BOLTS BOLTED AT MID-DEPTH OF BEAM @ 915mm (3'-0")o.c.

5.) PROVIDE TOP MOUNT BEAM HANGERS FOR ALL LVL BEAM TO BEAM CONNECTIONS UNLESS NOTED OTHERWISE.

6.) PROVIDE METAL JOIST HANGERS FOR ALL JOISTS AND BULIT-UP WOOD MEMBERS INTERSECTING FLUSH BUILT-UP WOOD MEMBERS.

7.) WOOD FRAMING NOT TREATED WITH A WOOD PRESERVATIVE, IN CONTACT WITH CONCRETE, SHALL BE SEPARATED FROM THE CONC. BY AT LEAST 2mil. POLYETHYLENE FILM, No.50 (45lbs) ROLL ROOFING OR OTHER DAMPROOFING MATERIAL, EXCEPT WHERE THE WOOD MEMBER IS AT LEAST 150mm (6") ABOVE THE GROUND.

STEEL:

STRUCTURAL STEEL AND HOLLOW STRUCTURAL SECTIONS SHALL CONFORM TO CAN/CSA-G40-21 GRADE 350W.

REINFORCING STEEL SHALL CONFORM TO CSA-G30-18M GRADE 400R.

ELECTRIC VEHICLE CHARGING SYSTEM (EVCS):

ROUGH-IN FOR FUTURE VEHICLE SUPPLY EQUIPMENT (CHARGING SYSTEM) TO BE INSTALLED. ROUGH-IN SHALL INCLUDE:

- A MINIMUM 200amp PANEL BOARD,
- CONDUIT THAT IS NOT LESS THAN 1 1/16" (27mm) TRADE SIZE,
- A SQUARE 4 11/16" (119mm) TRADE SIZE ELECTRICAL OUTLET BOX,
- FUME-PROFFED ELECTRICAL OUTLET BOX TO BE INSTALLED IN THE GARAGE OR CARPORT OR ADJACENT TO DRIVEWAY.

REFER TO 2012 O.B.C. 9.34.4

STABILITY OF NARROW (20'-25') & TALL (±30') HOUSES

BUILDER TO PROVIDE SUFFICIENT TEMPORARY BRACING TO RESIST WIND LOADING WHEN UNDER CONSTRUCTION. FURTHER RECOMMENDATIONS,

1.) REDUCE THE FOUNDATION WALL SILL PLATE ANCHOR BOLT SPACING FROM 2400mm o.c. (7'-10") TO 1220mm o.c. (4'-0") FOR STANDARD CONDITIONS.

2.) USE 9.5mm (3/8") THICK PLYWOOD OR WAFERBOARD FOR THE EXTERIOR WALL SHEATHING.

3.) TO STIFFEN THE STRUCTURE IN TRANSVERSE DIRECTION USE 9.5mm (3/8") THICK PLYWOOD NAILED TO THE INTERIOR PARTITIONS ON EACH FLOOR FOR A MINIMUM 2 INTERIOR PARTITION WALLS ON BOTH SIDES AND PERPENDICULAR TO THE LONG WALLS.

BRICK VENEER LINTELS

WL1 = 3-1/2"x3-1/2"x1/4"L (90x90x6.0L) + 2-2"x8" SPR. No.2
WL2 = 4"x3-1/2"x5/16"L (100x90x8.0L) + 2-2"x8" SPR. No.2
WL3 = 5"x3-1/2"x5/16"L (125x90x8.0L) + 2-2"x10" SPR. No.2
WL4 = 6"x3-1/2"x3/8"L (150x90x10.0L) + 2-2"x12" SPR. No.2
WL5 = 6"x4"x3/8"L (150x100x10.0L) + 2-2"x12" SPR. No.2
WL6 = 5"x3-1/2"x5/16"L (125x90x8.0L) + 2-2"x12" SPR. No.2
WL7 = 5"x3-1/2"x5/16"L (125x90x8.0L) + 3-2"x10" SPR. No.2
WL8 = 5"x3-1/2"x5/16"L (125x90x8.0L) + 3-2"x12" SPR. No.2
WL9 = 6"x4"x3/8"L (150x100x10.0L) + 3-2"x12" SPR. No.2

WOOD LINTELS AND BEAMS

WB1 = 2-2"x8" SPR. No.2 (2-38x184 SPR. No.2)
WB2 = 3-2"x8" SPR. No.2 (3-38x184 SPR. No.2)
WB3 = 2-2"x10" SPR. No.2 (2-38x235 SPR. No.2)
WB4 = 3-2"x10" SPR. No.2 (3-38x235 SPR. No.2)
WB5 = 2-2"x12" SPR. No.2 (2-38x286 SPR. No.2)
WB6 = 3-2"x12" SPR. No.2 (3-38x286 SPR. No.2)
WB7 = 5-2"x12" SPR. No.2 (5-38x286 SPR. No.2)
WB11 = 4-2"x10" SPR. No.2 (4-38x235 SPR. No.2)
WB12= 4-2"x12" SPR. No.2 (4-38x286 SPR. No.2)

LOOSE STEEL LINTELS

L1 = 3-1/2"x3-1/2"x1/4"L (90x90x6.0L)
L2 = 4"x3-1/2"x5/16"L (100x90x8.0L)
L3 = 5"x3-1/2"x5/16"L (125x90x8.0L)
L4 = 6"x3-1/2"x3/8"L (150x90x10.0L)
L5 = 6"x4"x3/8"L (150x100x10.0L)
L6 = 7"x4"x3/8"L (175x100x10.0L)

LAMINATED VENEER LUMBER (LVL) BEAMS

LVL1A = 1-1 3/4" x 7 1/4" (1-45x184)
LVL1 = 2-1 3/4" x 7 1/4" (2-45x184)
LVL2 = 3-1 3/4" x 7 1/4" (3-45x184)
LVL3 = 4-1 3/4" x 7 1/4" (4-45x184)
LVL4A = 1-1 3/4" x 9 1/2" (1-45x240)
LVL4 = 2-1 3/4" x 9 1/2" (2-45x240)
LVL5 = 3-1 3/4" x 9 1/2" (3-45x240)
LVL5A = 4-1 3/4" x 9 1/2" (4-45x240)
LVL6A = 1-1 3/4" x 11 7/8" (1-45x300)
LVL6 = 2-1 3/4" x 11 7/8" (2-45x300)
LVL7 = 3-1 3/4" x 11 7/8" (3-45x300)
LVL7A = 4-1 3/4" x 11 7/8" (4-45x300)
LVL8 = 2-1 3/4" x 14" (2-45x356)
LVL9 = 3-1 3/4" x 14" (3-45x356)
LVL10 = 2-1 3/4" x 18" (2-45x456)

DOOR SCHEDULE

1 = 2'-10" x 6'-8" (865x2033) - INSULATED ENTRANCE DOOR
1a = 2'-8" x 6'-8" (815x2033) - INSULATED FRONT DOORS
2 = 2'-8" x 6'-8" (815x2033) - WOOD & GLASS DOOR
3 = 2'-8" x 6'-8 x 1-3/4" (815x2033x45) - EXTERIOR SLAB DOOR
4 = 2'-8" x 6'-8" x 1-3/8" (815x2033x35) - INTERIOR SLAB DOOR
5 = 2'-6" x 6'-8" x 1-3/8" (760x2033x35) - INTERIOR SLAB DOOR
6 = 2'-2" x 6'-8" x 1-3/8" (660x2033x35) - INTERIOR SLAB DOOR
7 = 1'-6" x 6'-8" x 1-3/8" (460x2033x35) - INTERIOR SLAB DOOR

LEGEND

DJ	DOUBLE JOIST
TJ	TRIPLE JOIST
GT	GIRDER TRUSS
PL 3/8	POINT LOAD
	SOLID WOOD BEARING. SOLID BEARING TO BE WIDE AT LEAST AS SUPPORTED MEMBER. MIN. 3 PIECES.
	LOAD-BEARING WALL
	TWO-STOREY WALL. SEE NOTE 39
	FLAT ARCH
F.D.	FLOOR DRAIN
SA	SMOKE ALARM. SEE NOTE 43
SA CMA	SMOKE ALARM & CARBON MONOXIDE ALARM. SEE NOTE 44

THIS STRUCTURE MUST BE CONSTRUCTED TO MEET OR EXCEED THE PROVISIONS OF THE ONTARIO BUILDING CODE

RECEIVED JUN 13 2019 TOWN OF CALEDON BUILDING SECTION FILE NO

FEB 1

STRUDET INC.

REGISTERED PROFESSIONAL ENGINEER B. MARINKOVIC PROVINCE OF ONTARIO

FOR STRUCTURE ONLY

ENERGY STAR V-17 ESCC MODEL

5.		
4.		
3.		
2.		
1.	REVISED FROM TRINAR	FEB 19

REVISIONS

The undersigned has reviewed and takes responsibility for this design, and has the qualifications and meets the requirements set out in the Ontario Building Code to be a designer.
QUALIFICATION INFORMATION
Required unless design is exempt under Division C, Subsection 3.2.5 of the building code

NAME	SIGNATURE	BCIN
VIKAS GAJJAR		28770

REGION DESIGN INC.
8700 DUFFERIN ST.
CONCORD, ONTARIO
L4K 4S6
P (416) 736-4096
F (905) 660-0748

REGION DESIGN INC.

SHEET TITLE: LAMBERTS LANE II

CONTRACTOR SHALL CHECK ALL DIMENSIONS AND ELEVATIONS BEFORE COMMENCING WITH WORK AND REPORT ANY DISCREPANCIES TO THE DESIGNER. PRINTS ARE NOT TO BE SCALED.

SCALE	BY	AREA	PAGE No.
N.T.S.			2
DATE FEB 2019	TYPE	PROJECT 00-00-00	

Greenpark

PROJECT NAME: STANDARD NOTES LAMBERTS LANE II

Exhibit 9 2019 9-09-07 PM M:\STANDARD DETAIL SHEETS\MISC\ AMSER275 | AMSER II JATP 189 - STANDARD NOTES ENERGY STAR

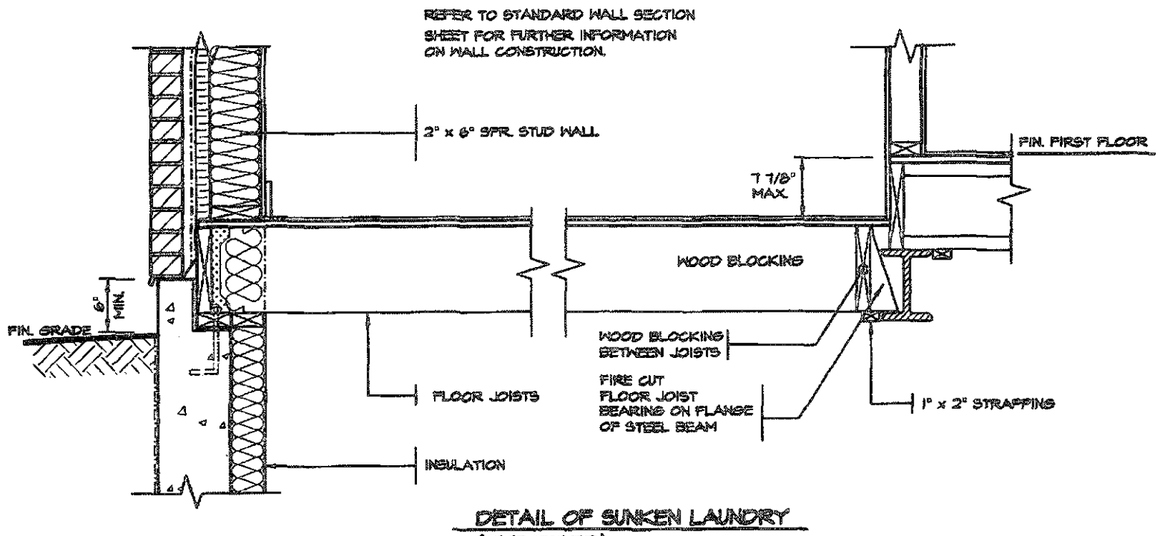

DETAIL OF SUNKEN LAUNDRY
(ONE RISER)

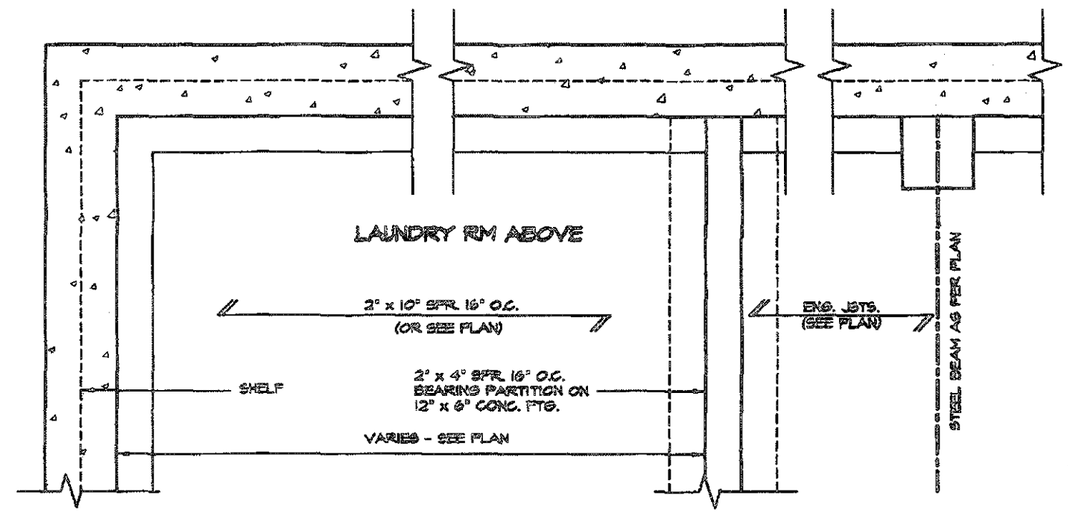

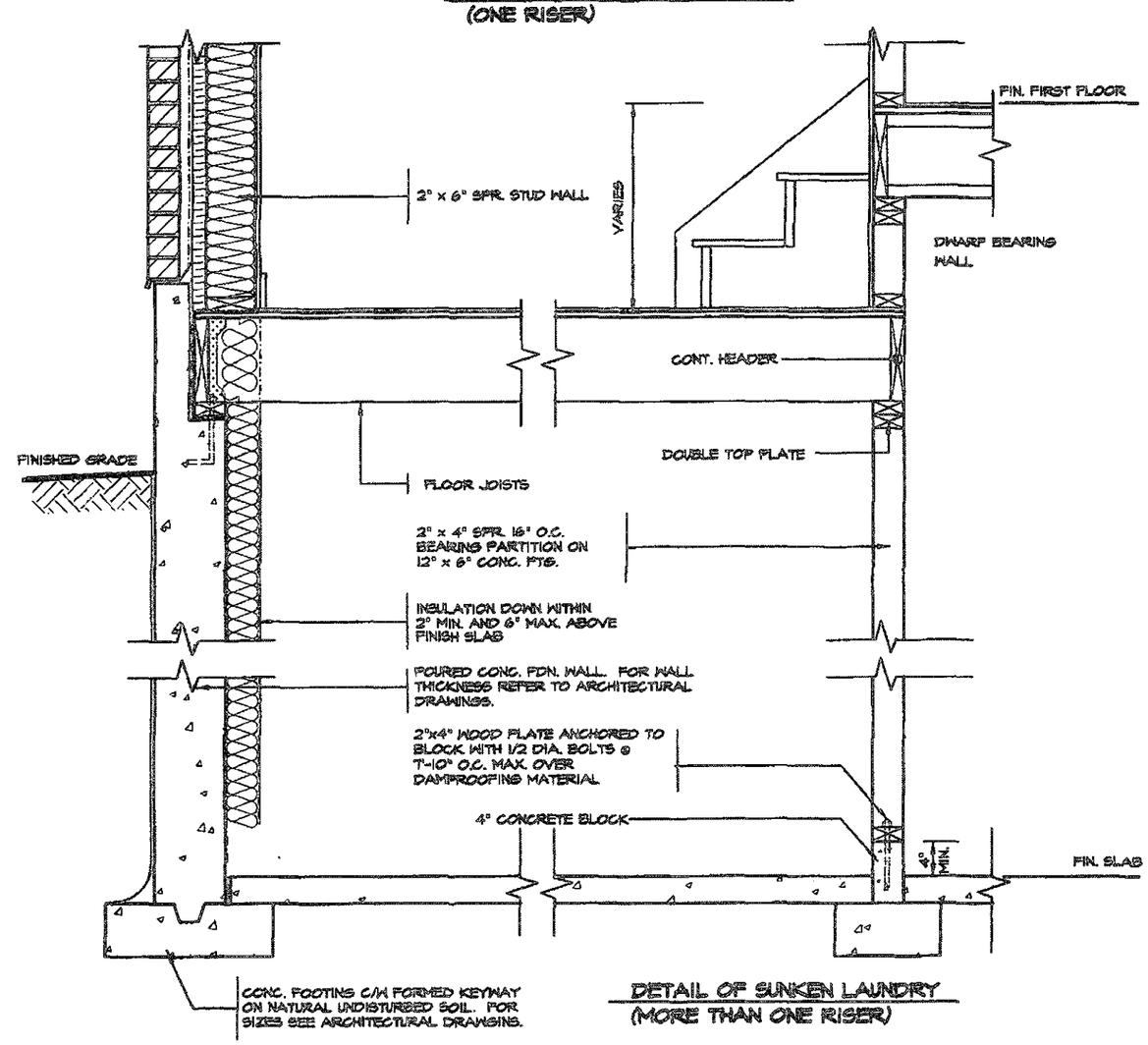

DETAIL OF SUNKEN LAUNDRY
(MORE THAN ONE RISER)

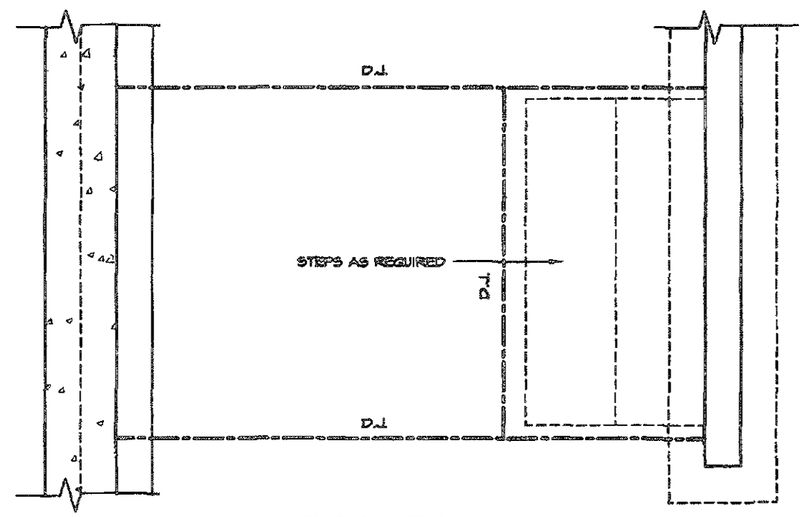

PARTIAL PLAN

This structure must be constructed to meet or exceed the provisions of the Ontario Building Code

RECEIVED
JUN 13 2019
TOWN OF CALEDON
BUILDING SECTION
FILE NO.

STRUDET INC.
REGISTERED PROFESSIONAL ENGINEER
B. MARINKOVIC
PROVINCE OF ONTARIO
FOR STRUCTURE ONLY

ESCC MODEL

5.		
4.		
3.		
2.		
1.	REVISED FROM TRINAR HALL HOMES INC.	FEB 2019

REVISIONS

The undersigned has reviewed and takes responsibility for this design, and has the qualifications and meets the requirements set out in the Ontario Building Code to be a designer.
QUALIFICATION INFORMATION
Required unless design is exempt under Division C, Subsection 3.2.5 of the building code

NAME	SIGNATURE	BCIN
VIKAS GAJJAR		28770

REGION DESIGN INC.
8700 DUFFERIN ST.
CONCORD, ONTARIO
L4K 4S6
P (416) 736-4096
F (905) 660-0746

REGION DESIGN INC.

SHEET TITLE: SUNKEN LAUNDRY DETAILS

CONTRACTOR SHALL CHECK ALL DIMENSIONS AND ELEVATIONS BEFORE COMMENCING WITH WORK AND REPORT ANY DISCREPANCIES TO THE DESIGNER. PRINTS ARE NOT TO BE SCALED.

SCALE	BY	AREA	PAGE No.
3/4"=1'-0"			4
DATE: FEB 2019	TYPE	PROJECT	

Greenpark™

PROJECT NAME: STANDARD DETAILS LAMBERTS LANE II

February 8, 2019 3:55:09 PM M:\STANDARD DETAILS\P E R M I T S E TENERGY STAR\2019 LAMBERTS LANE II -V17\P 4 - SUNKEN LAUNDRY ROOM ENERGY STAR.DWG

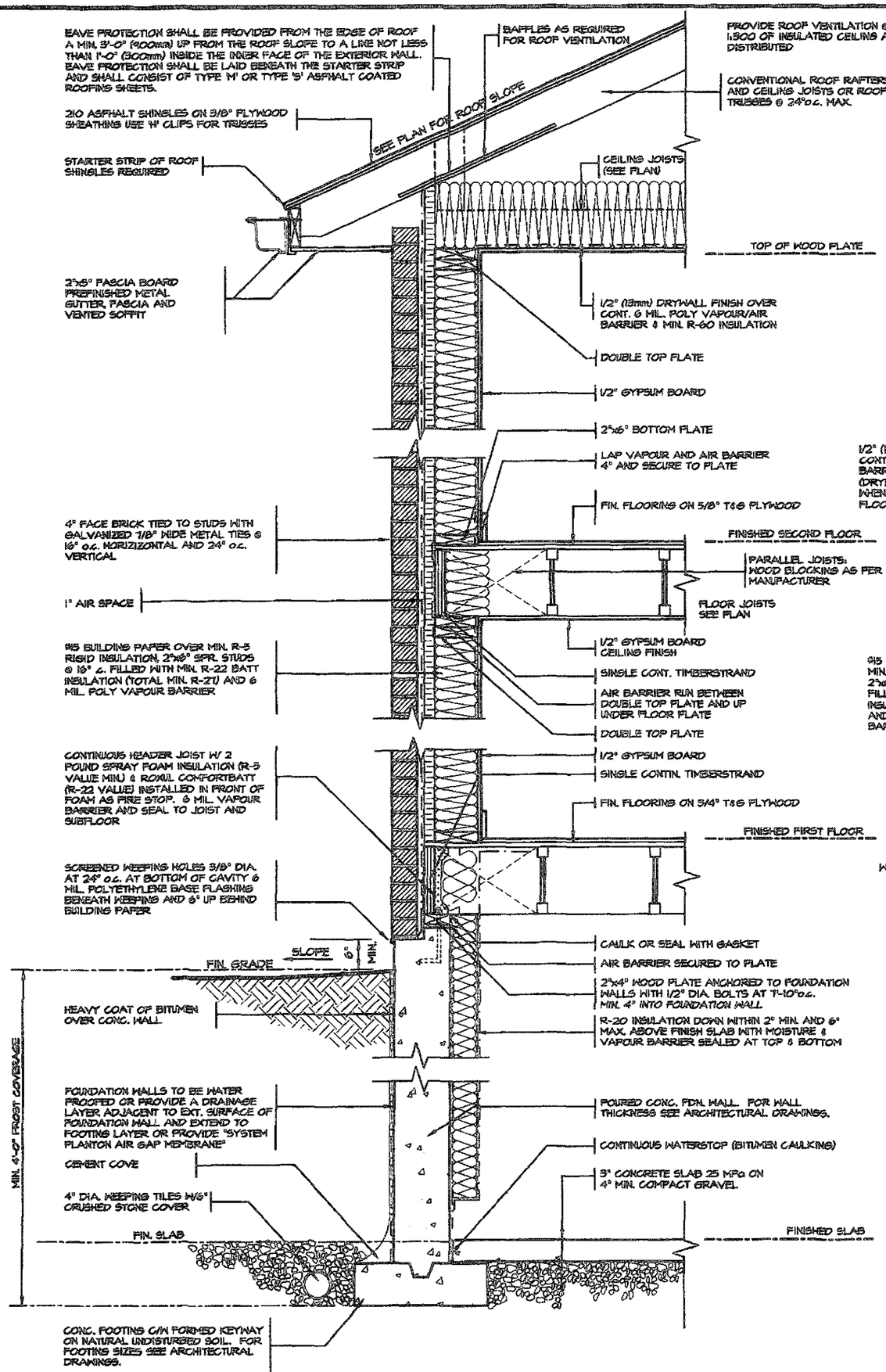

DETAIL FOR INTERIOR GARAGE WALLS & CEILINGS

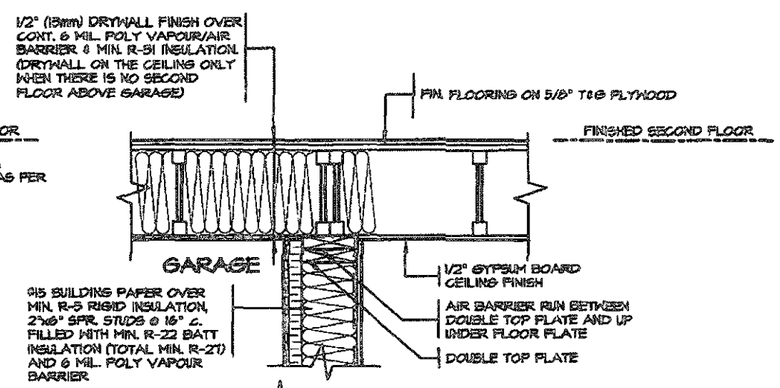

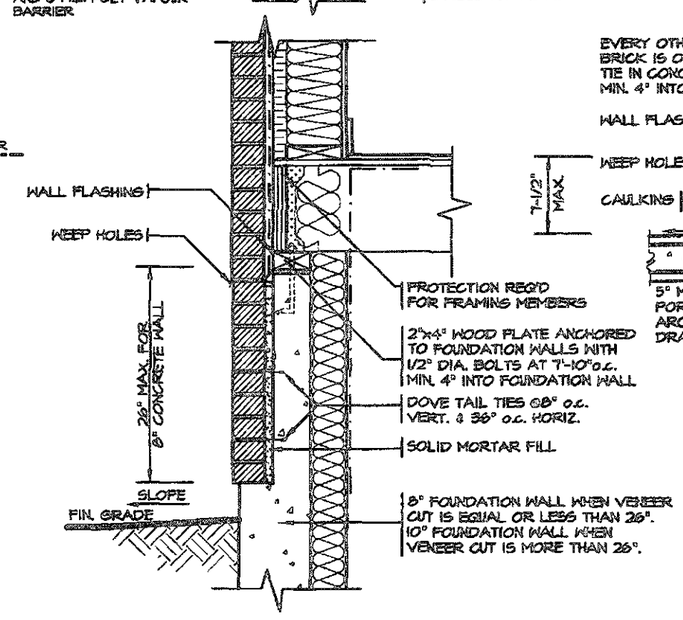

DETAIL FOR CONCRETE VENEER DROPPED GRADE

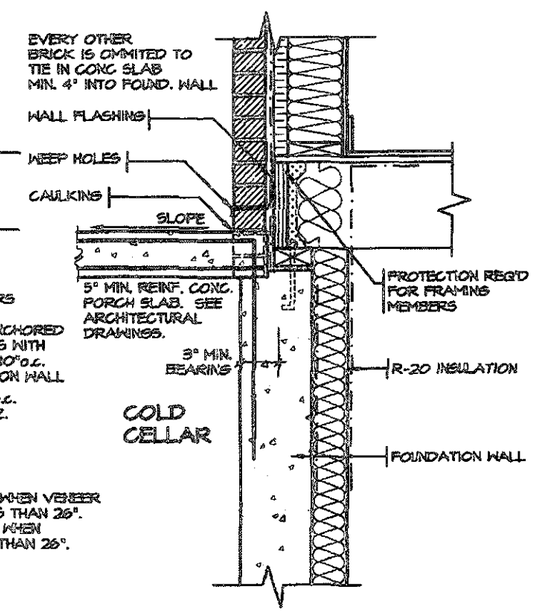

DETAIL FOR COLD CELLAR PORCH SLAB

THIS STRUCTURE MUST BE CONSTRUCTED TO MEET OR EXCEED THE PROVISIONS OF THE ONTARIO BUILDING CODE

STRUDET INC.

REGISTERED PROFESSIONAL ENGINEER
B. MARINKOVIC
PROVINCE OF ONTARIO

FOR STRUCTURE ONLY

RECEIVED
JUN 13 2019
TOWN OF CALEDON
BUILDING SECTION
FILE NO.

FEB 1 1 2019

ESCC MODEL

5.		
4.		
3.		
2.		
1.	REVISED FROM TRINAR HALL HOMES INC.	FEB 2019

REVISIONS

The undersigned has reviewed and takes responsibility for this design, and has the qualifications and meets the requirements set out in the Ontario Building Code to be a designer.

QUALIFICATION INFORMATION

Required unless design is exempt under Division C, Subsection 3.2.5 of the building code

NAME	SIGNATURE	BCIN
VIKAS GAJJAR		28770

REGION DESIGN INC.
8700 DUFFERIN ST.
CONCORD, ONTARIO
L4K 4S6
P (416) 736-4095
F (905) 660-0748

REGION DESIGN INC.

SHEET TITLE
2 STOREY SECTION
2"x6" BRICK VENEER
ENERGY STAR

CONTRACTOR SHALL CHECK ALL DIMENSIONS AND ELEVATIONS BEFORE COMMENCING WITH WORK AND REPORT ANY DISCREPANCIES TO THE DESIGNER. PRINTS ARE NOT TO BE SCALED.

SCALE	BY	AREA	PAGE No.
3/4"=1'-0"			5
DATE: FEB 2019	TYPE	PROJECT	

Greenpark

PROJECT NAME
STANDARD DETAILS
LAMBERTS LANE II

February 11 2019 2:16:34 PM M:\STANDARD DETAILS\P E R M I T S E T\ENERGY STAR\2019 LAMBERTS LANE II-V1\P 5 - 2 STOREY SECTION 2x6 - ENERGY STAR.DWG

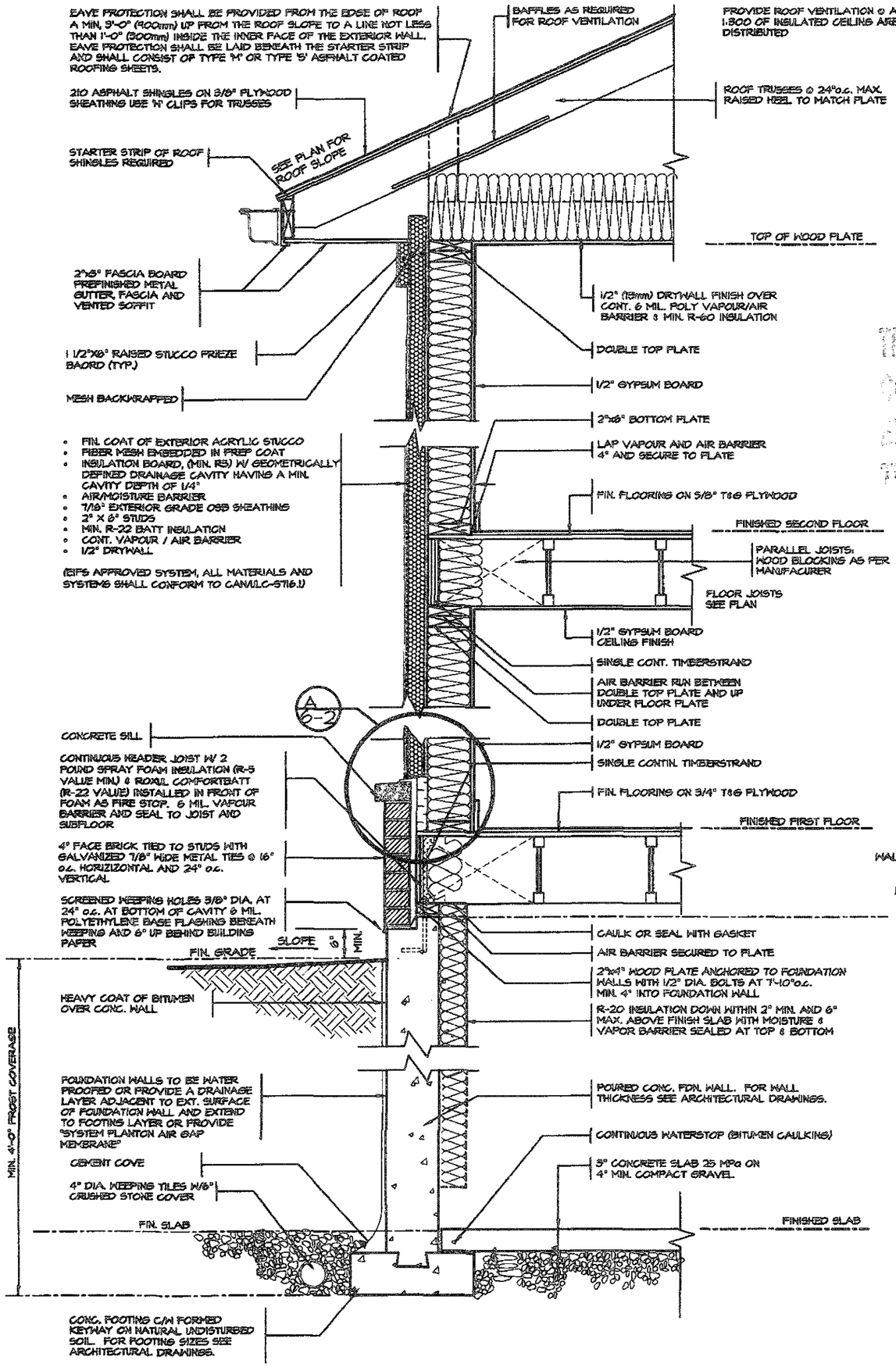

STRUDET INC.

REGISTERED PROFESSIONAL ENGINEER
B. MARINKOVIC
PROVINCE OF ONTARIO

FOR STRUCTURE ONLY

THIS STRUCTURE MUST BE CONSTRUCTED TO MEET OR EXCEED THE PROVISIONS OF THE ONTARIO BUILDING CODE

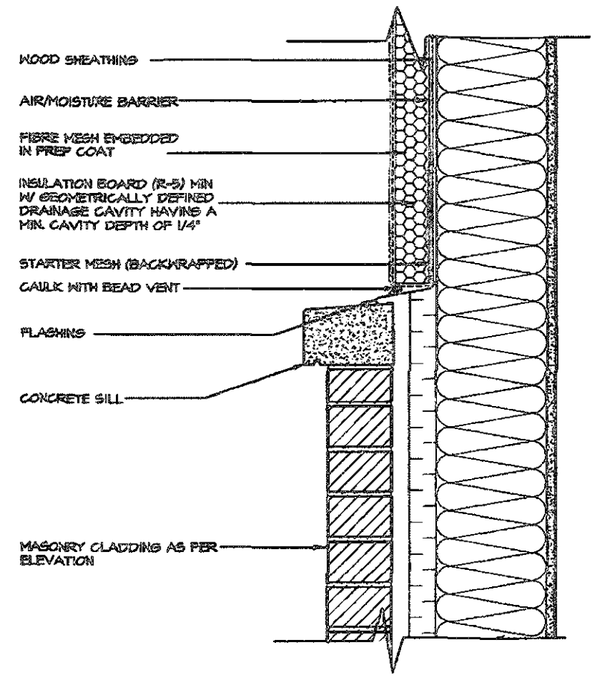

A. TERMINATION AT MASONRY CLADDING WITH SEALANT 1

1 1/2"=1'0"

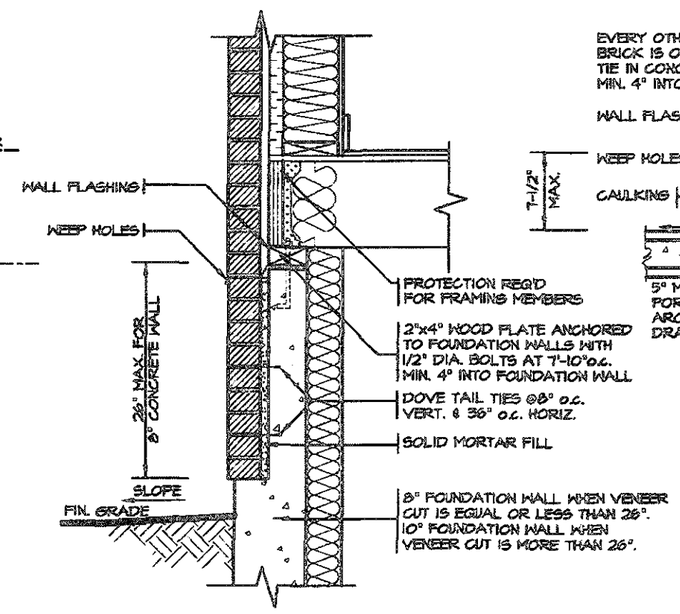

DETAIL FOR CONCRETE VENEER DROPPED GRADE

3/4"=1'0"

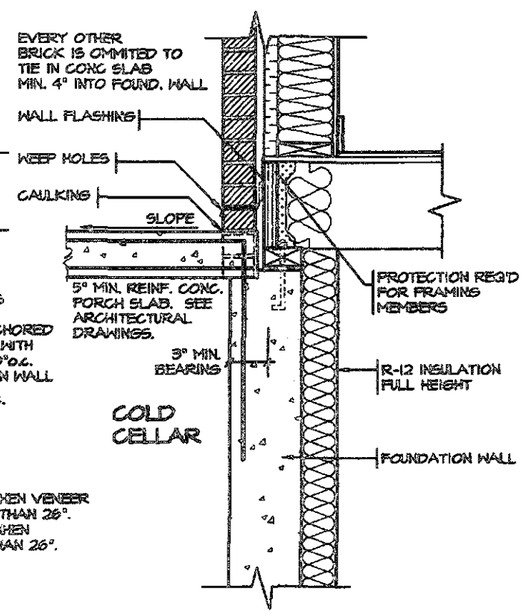

DETAIL FOR COLD CELLAR PORCH SLAB

3/4"=1'0"

ESCC MODEL

5.		
4.		
3.		
2.		
1.	REVISED FROM TRINAR HALL HOMES INC.	FEB 2019

REVISIONS

The undersigned has reviewed and takes responsibility for this design, and has the qualifications and meets the requirements set out in the Ontario Building Code to be a designer.

QUALIFICATION INFORMATION

Required unless design is exempt under Division C, Subsection 3.2.5 of the building code

NAME	SIGNATURE	BCIN
VIKAS GAJJAR		28770

REGION DESIGN INC.
8700 DUFFERIN ST.
CONCORD, ONTARIO
L4K 4S6
P (416) 736-4086
F (905) 660-0746

REGION DESIGN INC.

SHEET TITLE: 2"X6" STUCCO WALL
2 STOREY SECTION

CONTRACTOR SHALL CHECK ALL DIMENSIONS AND ELEVATIONS BEFORE COMMENCING WITH WORK AND REPORT ANY DISCREPANCIES TO THE DESIGNER. PRINTS ARE NOT TO BE SCALED.

SCALE	BY	AREA	PAGE No.
AS NOTED			5-2
DATE FEB 2019	TYPE	PROJECT 00-00-00	

Greenpark

PROJECT NAME: STANDARD DETAILS
LAMBERTS LANE II

February 11, 2019 2:18:21 PM M:\STANDARD\DETAIL\SP FOR NIT R.F TEMPERGY STAGE\2018 LAMBERTS LANE II_V17\P 5-2 - 2 STOREY SECTION FOR ENERGY STAR PROJ

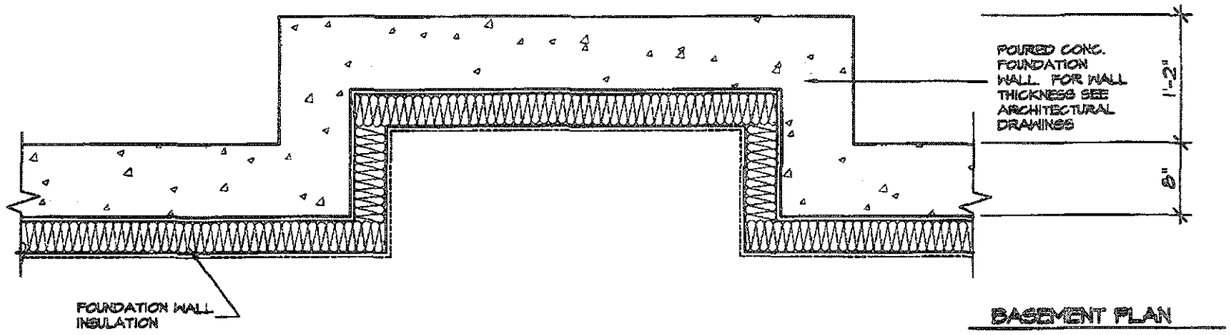

BASEMENT PLAN

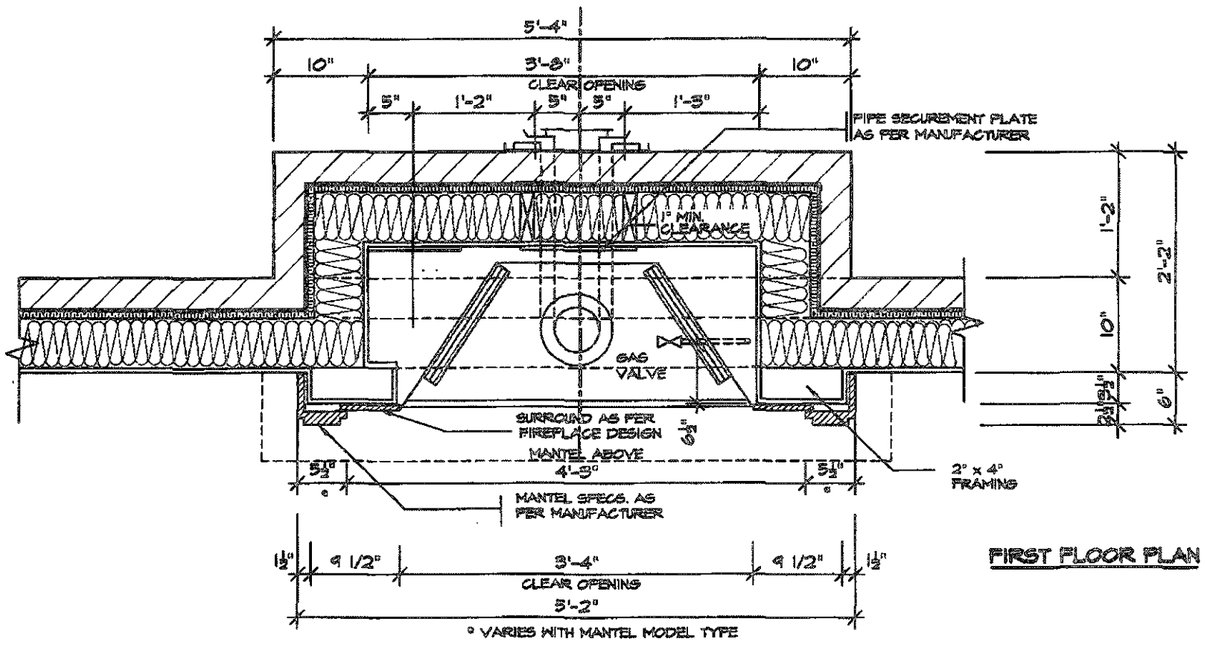

FIRST FLOOR PLAN

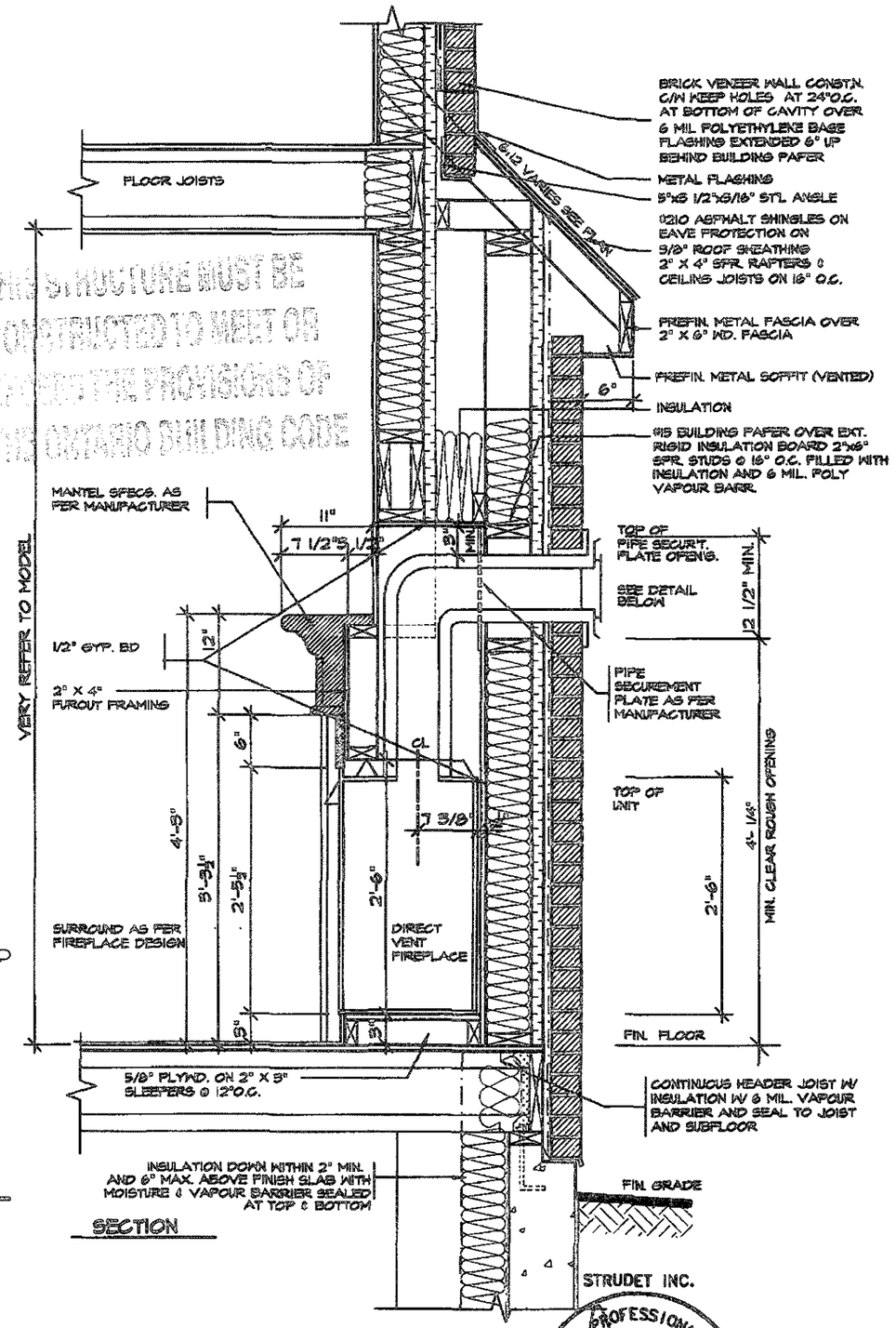

SECTION

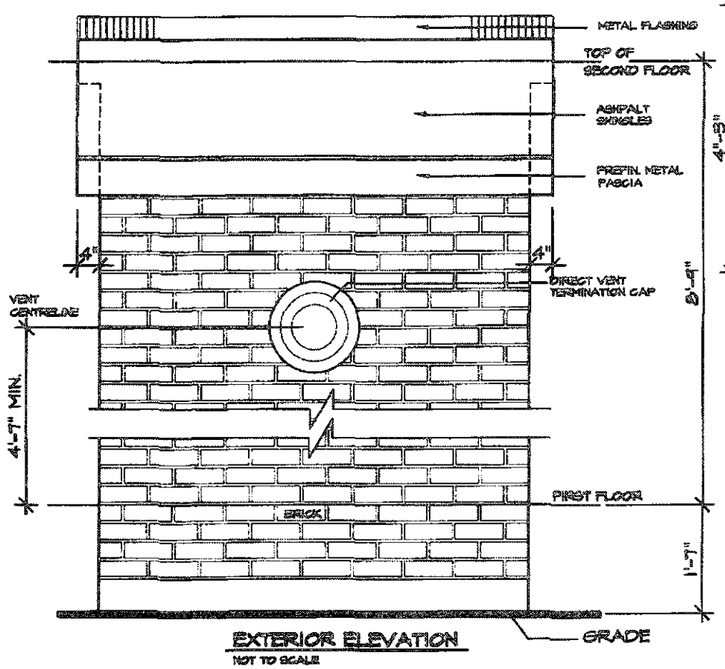

EXTERIOR ELEVATION

NOT TO SCALE

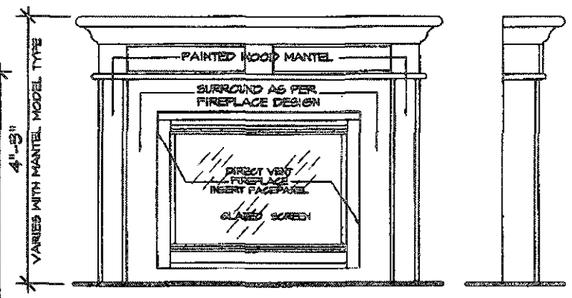

FRONT/SIDE ELEVATION

NOT TO SCALE

GENERAL INSTALLATION NOTES

1.0 UNIT INSTALLATION TO STRICTLY CONFORM TO MANUFACTURERS INSTALLATION MANUAL AND ALL APPLICABLE CODES OF LOCAL AUTHORTIES HAVING JURISDICTION INCLUDING CAN/CSA-B149.1 & 2.

2.0 INSTALL WITH THE FOLLOWING MINIMUM CLEARANCES TO COMBUSTIBLES.
- FROM TOP OF UNIT 0"
- FROM BACK OF UNIT 1/2"
- FROM SIDES OF UNIT 1/2"
- FROM TOP OF HORIZ.VENT 3"
- FROM SIDES TO VENT 1"

3.0 THE DIRECT VENT UNIT ILLUSTRATED IS THE SC150 MODEL AS MANUFACTURED BY HEATILATOR.

4.0 THE MANTEL ILLUSTRATED IS THE S-2 GB AS SUPPLIED BY GREATER TORONTO FIREPLACE.

RECEIVED
JUN 13 2019
TOWN OF CALEDON
BUILDING SECTION
FILE NO.

REGISTERED PROFESSIONAL ENGINEER
B. MARINKOVIC
PROVINCE OF ONTARIO

STRUDET INC.

FOR STRUCTURE ONLY

ESCC MODEL

5.		
4.		
3.		
2.		
1.	REVISED FROM TRINAR HALL HOMES INC.	FEB 2019

REVISIONS

The undersigned has reviewed and takes responsibility for this design, and has the qualifications and meets the requirements set out in the Ontario Building Code to be a designer.

QUALIFICATION INFORMATION

Required unless design is exempt under Division C, Subsection 3.2.5 of the building code

NAME	SIGNATURE	BCIN
VIKAS GAJJAR		28770

REGION DESIGN INC.
8700 DUFFERIN ST.
CONCORD, ONTARIO
L4K 4S6
P (416) 736-4096
F (905) 660-0746

REGION DESIGN INC.

SHEET TITLE: DIRECT VENT FIREPLACE

CONTRACTOR SHALL CHECK ALL DIMENSIONS AND ELEVATIONS BEFORE COMMENCING WITH WORK AND REPORT ANY DISCREPANCIES TO THE DESIGNER. PRINTS ARE NOT TO BE SCALED.

SCALE	BY	AREA	PAGE No.
3/4"=1'-0"			6
DATE: FEB 2019	TYPE	PROJECT	

Greenpark

PROJECT NAME: STANDARD DETAILS LAMBERTS LANE II

February 11 2019 11:49:52 AM M:\STANDARD DETAILS\P E R M I T S E T\ENERGY STAR\2018 LAMBERTS LANE II -V17\P 6 - DIRECT VENT FIRE PLACE ENERGY STAR.DWG

RECEIVED
JUN 13 2019
TOWN OF CALEDON
BUILDING SECTION
FILE NO.

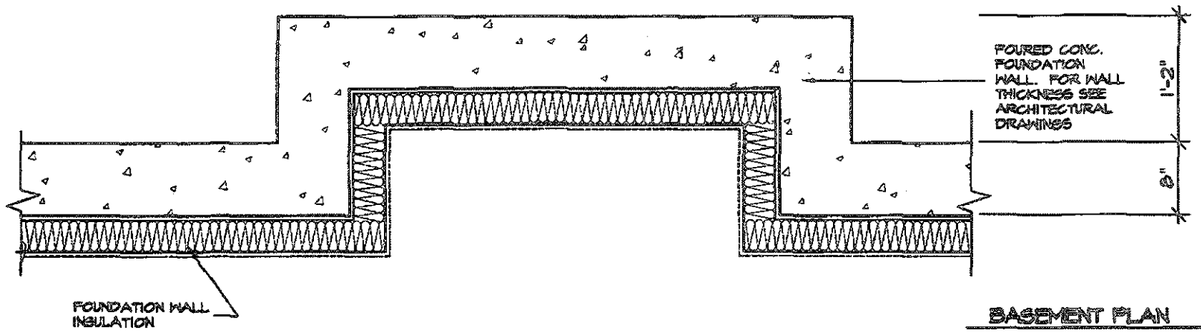

BASEMENT PLAN

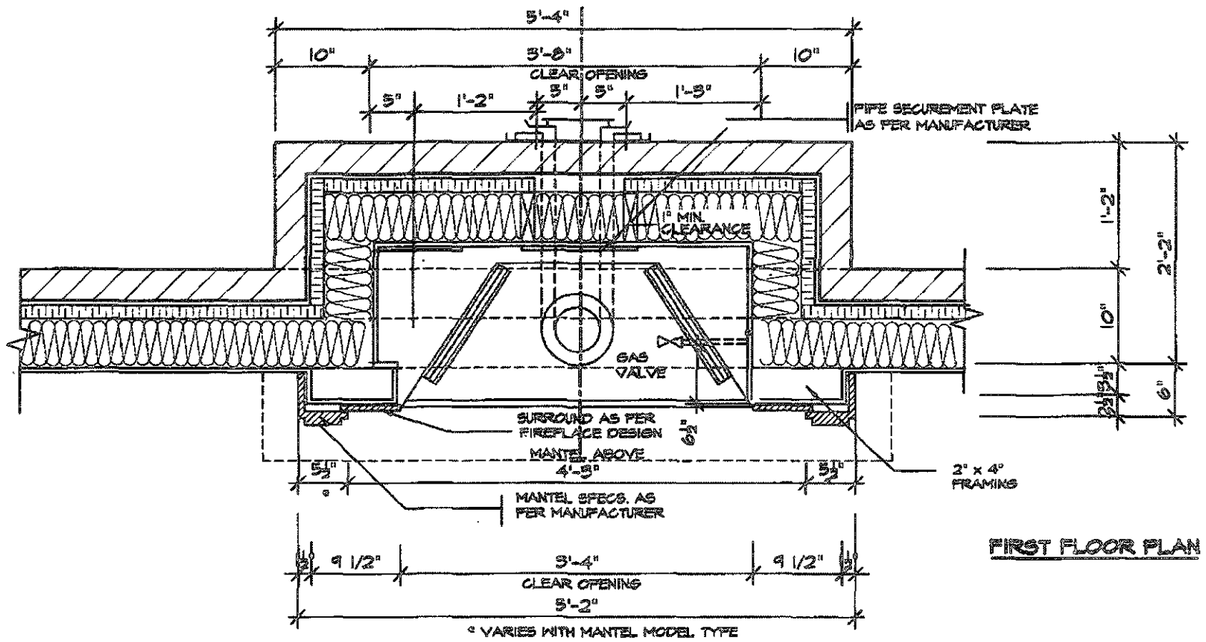

FIRST FLOOR PLAN

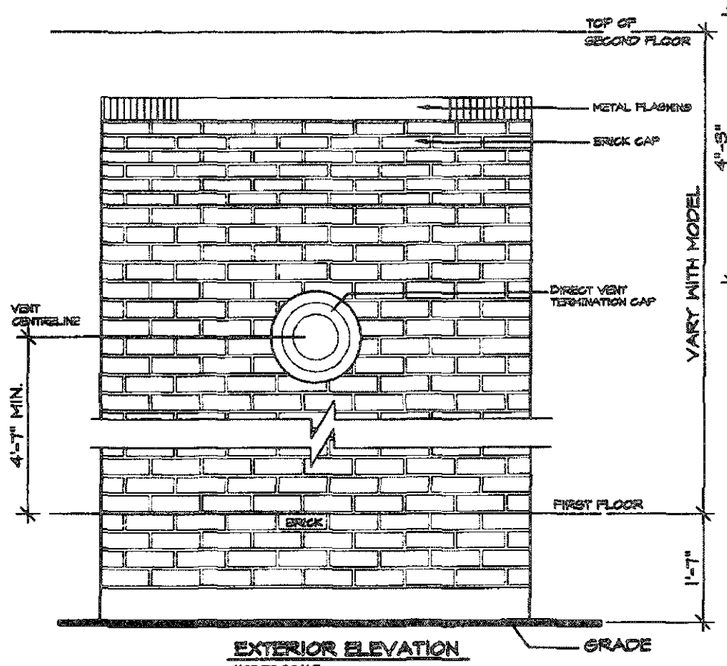

EXTERIOR ELEVATION
NOT TO SCALE

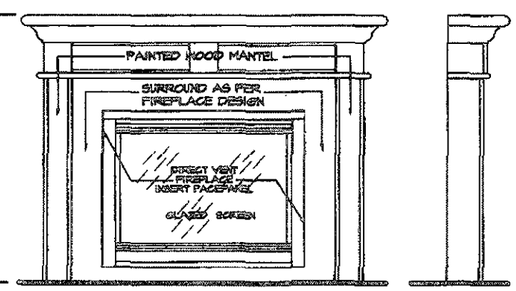

FRONT/SIDE ELEVATION
NOT TO SCALE

GENERAL INSTALLATION NOTES

1.0 UNIT INSTALLATION TO STRICTLY CONFORM TO MANUFACTURERS INSTALLATION MANUAL AND ALL APPLICABLE CODES OF LOCAL AUTHORITIES HAVING JURISDICTION INCLUDING CAN/CSA-B149.1 & 2.
2.0 INSTALL WITH THE FOLLOWING MINIMUM CLEARANCES TO COMBUSTIBLES:
- FROM TOP OF UNIT 0"
- FROM BACK OF UNIT 1/2"
- FROM SIDES OF UNIT 1/2"
- FROM TOP OF HORIZ.VENT 3"
- FROM SIDES TO VENT 1"

3.0 THE DIRECT VENT UNIT ILLUSTRATED IS THE SCI50 MODEL AS MANUFACTURED BY HEATILATOR.
4.0 THE MANTEL ILLUSTRATED IS THE S-2 GB AS SUPPLIED BY GREATER TORONTO FIREPLACE.

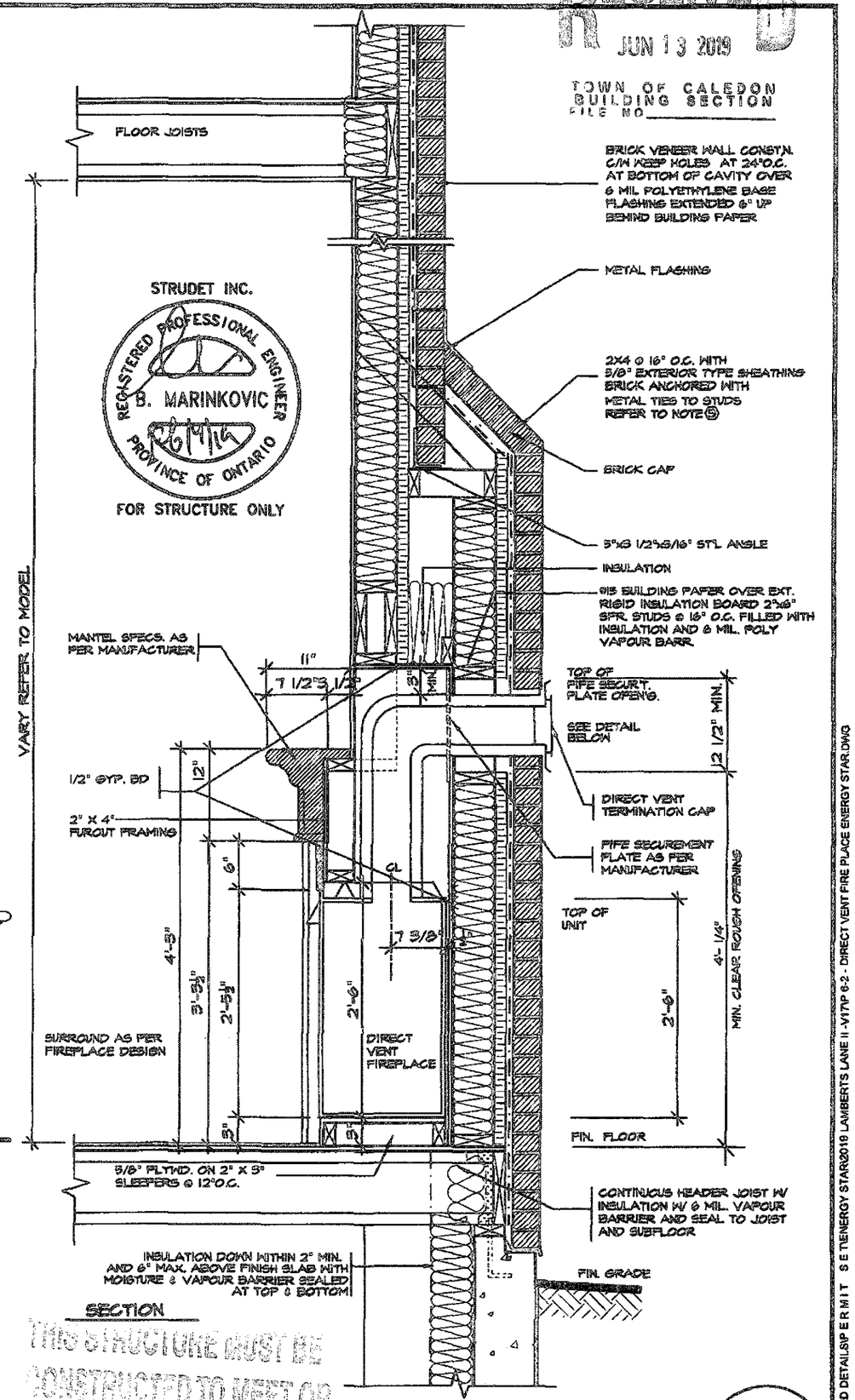

SECTION

STRUDET INC.
REGISTERED PROFESSIONAL ENGINEER
B. MARINKOVIC
PROVINCE OF ONTARIO
FOR STRUCTURE ONLY

THIS STRUCTURE MUST BE CONSTRUCTED TO MEET OR EXCEED THE PROVISIONS OF THE ONTARIO BUILDING CODE

ESCC MODEL

5.		
4.		
3.		
2.		
1.	REVISED FROM TRINAR HALL HOMES INC.	FEB 2019

REVISIONS

The undersigned has reviewed and takes responsibility for this design, and has the qualifications and meets the requirements set out in the Ontario Building Code to be a designer.
QUALIFICATION INFORMATION
Required unless design is exempt under Division C, Subsection 3.2.5 of the building code

NAME	SIGNATURE	BCIN
VIKAS GAJJAR		28770

REGION DESIGN INC.
8700 DUFFERIN ST.
CONCORD, ONTARIO
L4K 4S6
P (416) 738-4096
F (905) 660-0746

REGION DESIGN INC.

SHEET TITLE: DIRECT VENT FIREPLACE WITH BRICK CAP

CONTRACTOR SHALL CHECK ALL DIMENSIONS AND ELEVATIONS BEFORE COMMENCING WITH WORK AND REPORT ANY DISCREPANCIES TO THE DESIGNER. PRINTS ARE NOT TO BE SCALED.

SCALE	BY	AREA	PAGE No.
3/4"=1'-0"			6-2
DATE: FEB 2019	TYPE	PROJECT	

Greenpark

PROJECT NAME: STANDARD DETAILS LAMBERTS LANE II

February 11 2019 11:48:39 AM M:\STANDARD DETAILS\P E R M I T S E T\ENERGY STAR\2019 LAMBERTS LANE II -V17\P 6-2 - DIRECT VENT FIRE PLACE ENERGY STAR.DWG

THIS STRUCTURE MUST BE CONSTRUCTED TO MEET OR EXCEED THE PROVISIONS OF THE ONTARIO BUILDING CODE

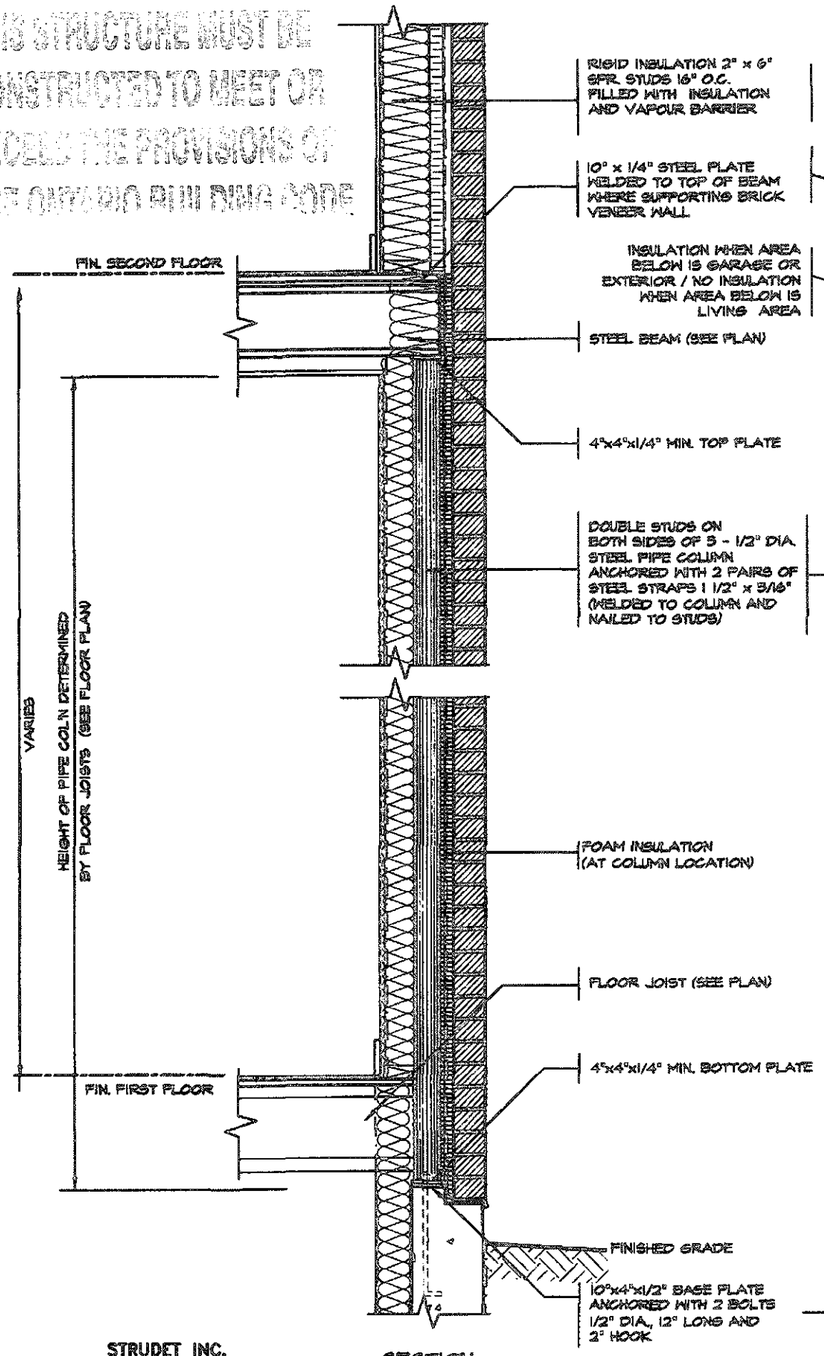

SECTION

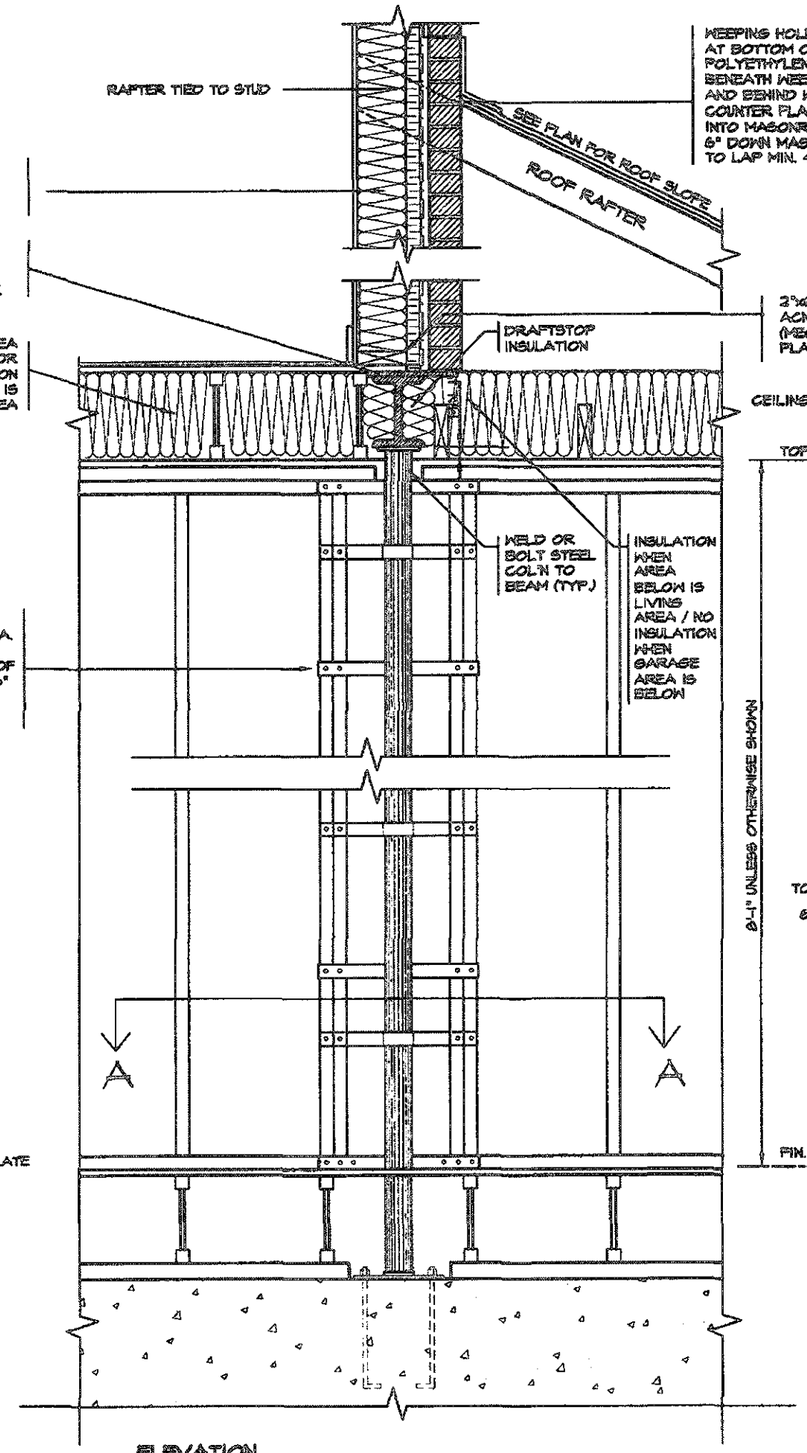

ELEVATION

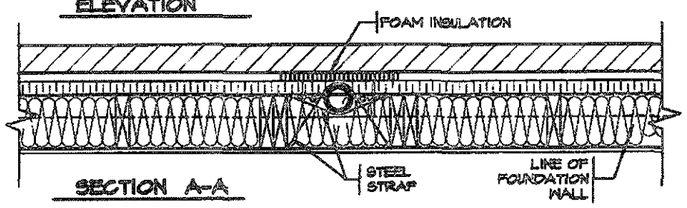

SECTION A-A

SECTION THROUGH STEEL BEAM SUPPORTING MASONRY & BEARING STUD PARTITION

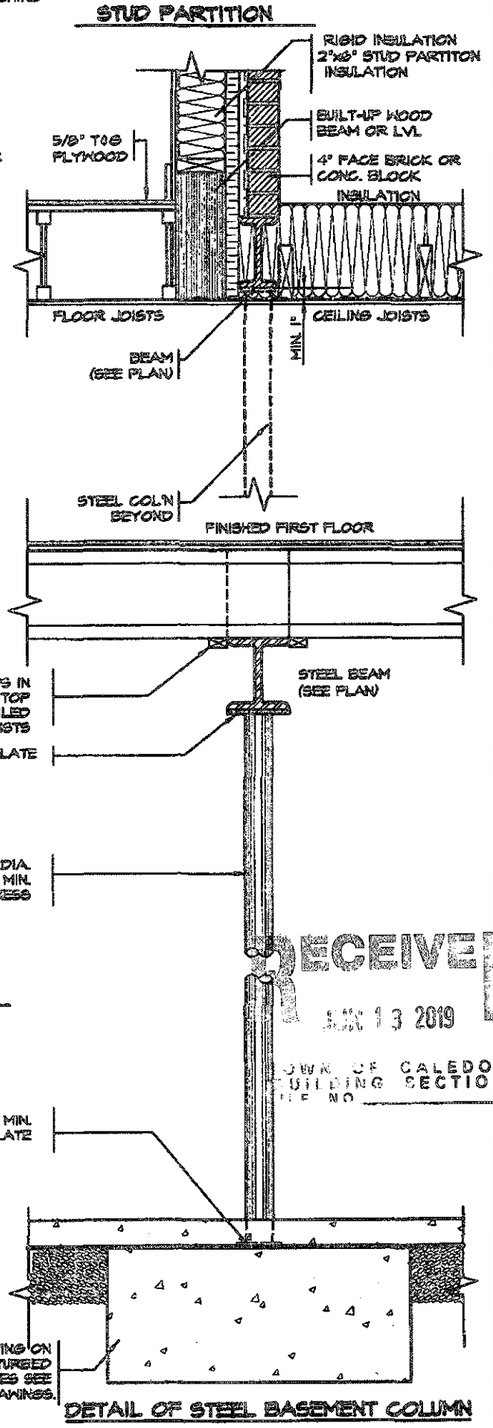

DETAIL OF STEEL BASEMENT COLUMN

RECEIVED
JUN 13 2019
TOWN OF CALEDON
BUILDING SECTION
FILE NO.

STRUDET INC.

REGISTERED PROFESSIONAL ENGINEER
B. MARINKOVIC
PROVINCE OF ONTARIO

FOR STRUCTURE ONLY

ESCC MODEL

5.		
4.		
3.		
2.		
1.	REVISED FROM TRINAR HALL HOMES INC.	FEB 2019

REVISIONS

The undersigned has reviewed and takes responsibility for this design, and has the qualifications and meets the requirements set out in the Ontario Building Code to be a designer.

QUALIFICATION INFORMATION

Required unless design is exempt under Division C, Subsection 3.2.5 of the building code

NAME	SIGNATURE	BCIN
VIKAS GAJJAR		28770

REGION DESIGN INC.
8700 DUFFERIN ST.
CONCORD, ONTARIO
L4K 4S6
P (416) 736-4093
F (905) 660-0743

REGION DESIGN INC.

SHEET TITLE: STEEL COLUMN DETAILS

CONTRACTOR SHALL CHECK ALL DIMENSIONS AND ELEVATIONS BEFORE COMMENCING WITH WORK AND REPORT ANY DISCREPANCIES TO THE DESIGNER. PRINTS ARE NOT TO BE SCALED.

SCALE	BY	AREA	PAGE No.
3/4"=1'-0"			7
DATE: FEB 2019	TYPE	PROJECT	

Greenpark

PROJECT NAME: STANDARD DETAILS LAMBERTS LANE II

February 11 2019 1:24:47 PM M:\STANDARD DETAILS\P E R M I T S E TENERGY STAR\2019 LAMBERTS LANE II - VITAP 7 - STEEL COLUMN DETAILS ENERGY STAR.DWG

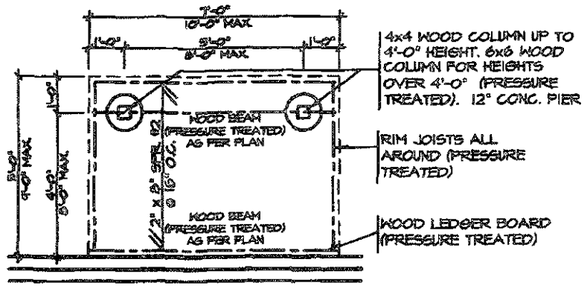

TYPICAL DECK LAYOUT

SCALE: 1/4"=1'-0"

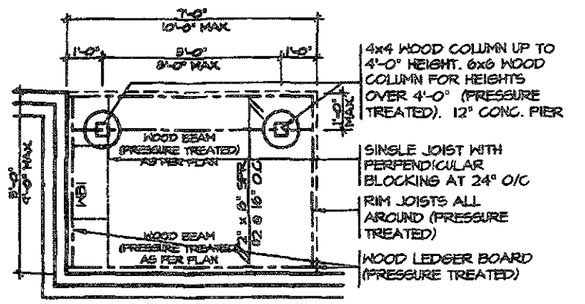

TYPICAL DECK LAYOUT

SCALE: 1/4"=1'-0"

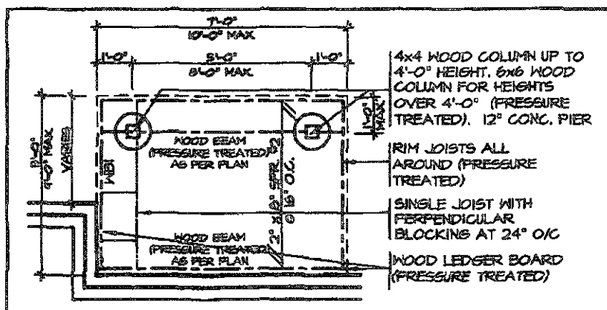

TYPICAL DECK LAYOUT

SCALE: 1/4"=1'-0"

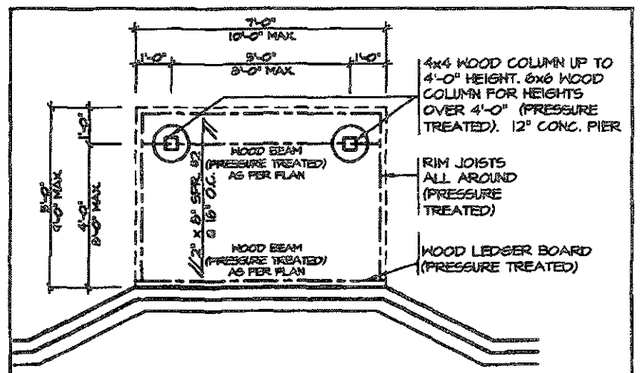

TYPICAL DECK LAYOUT

SCALE: 1/4"=1'-0"

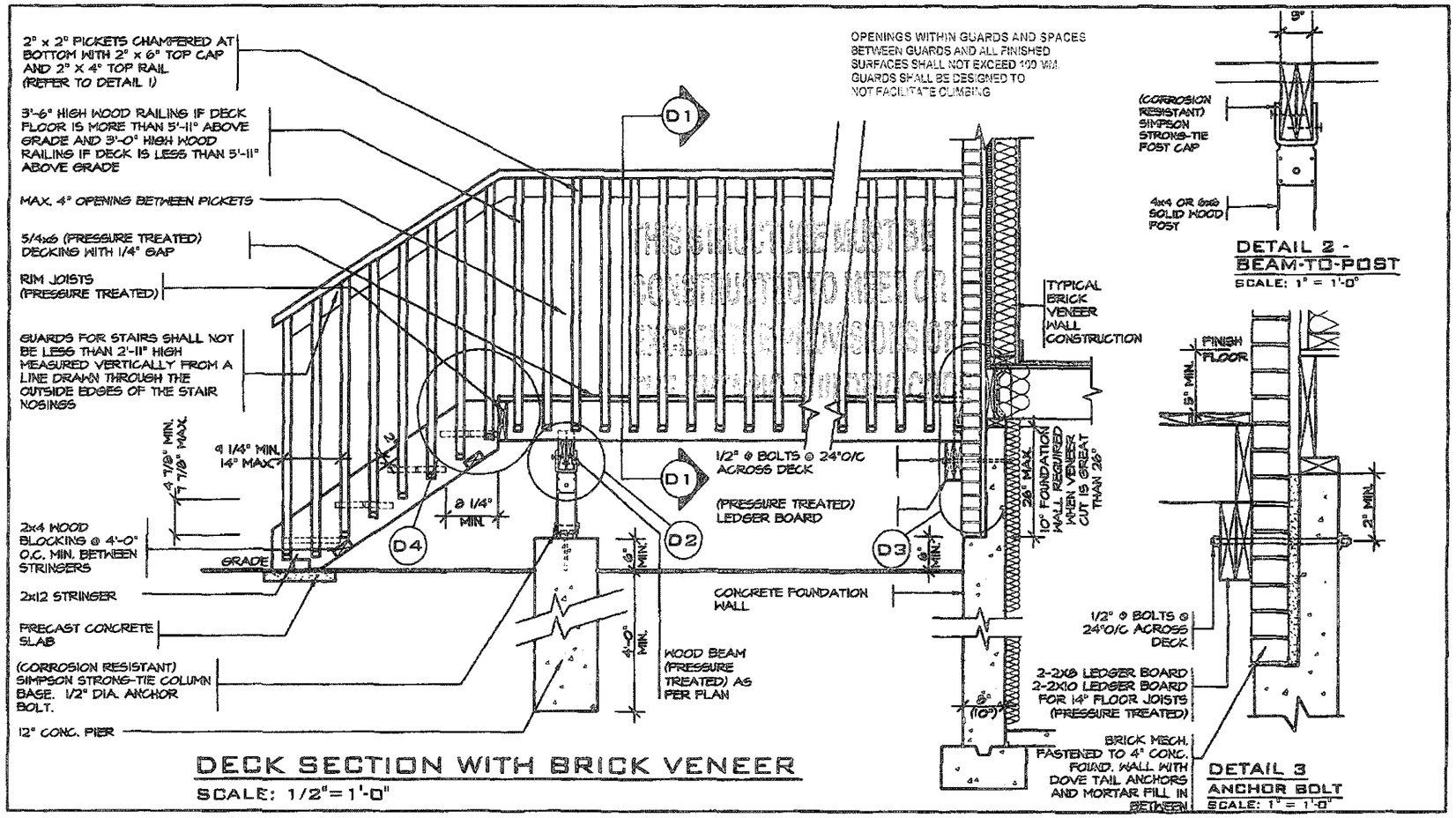

DECK SECTION WITH BRICK VENEER

SCALE: 1/2"=1'-0"

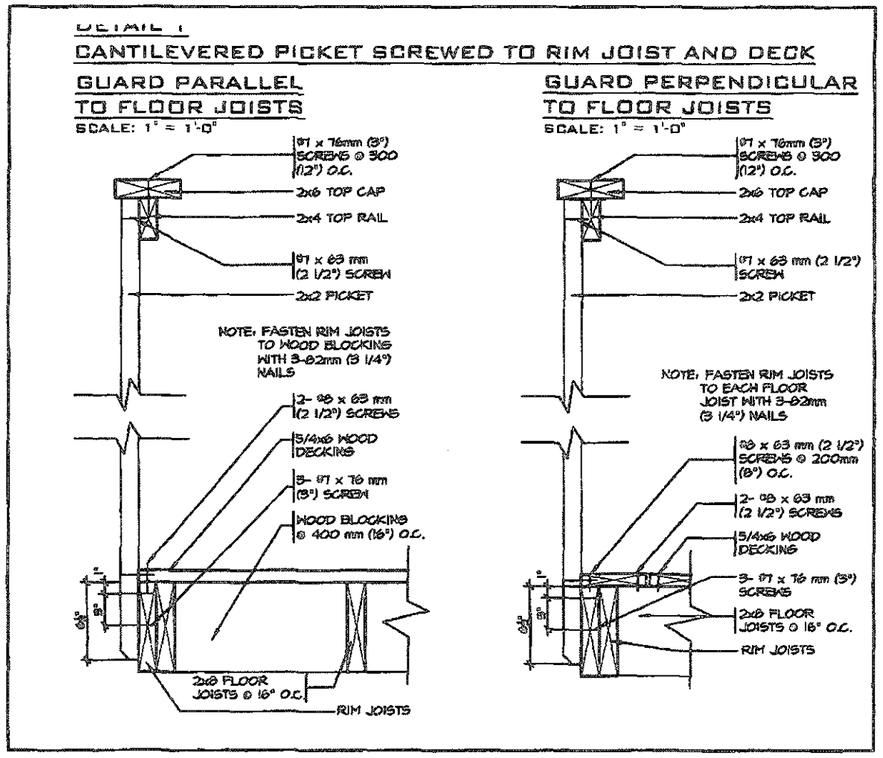

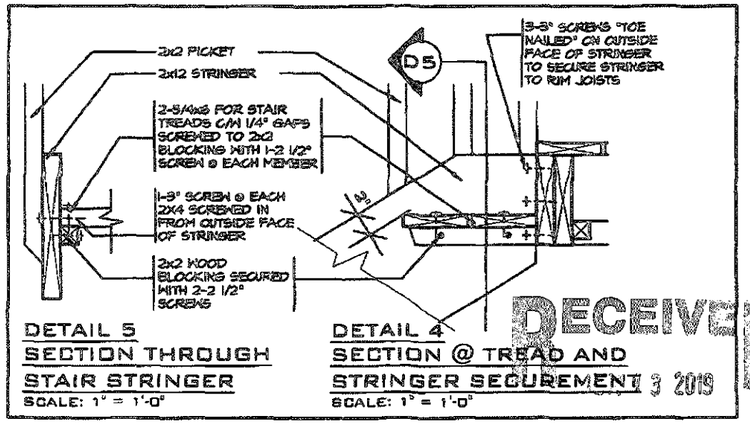

RECEIVED
3 2019

GENERAL NOTES

1. BRICK TO BE COMPRESSIVE STRENGTH OF 15 MPA (2200 p.s.i)MIN. UNITS TO BE LAID WITH FULL HEAD AND BED JOINTS.
2. MORTAR TO BE TYPE S WITH JOINT THICKNESS OF 10mm (3/8")MIN. AND 20mm (3/4") MAX.
3. ALL NAILS AND SCREWS TO BE GALVANIZED.
4. WOOD FOR CANTILEVERED PICKETS SHALL BE DOUGLAS FIR-LARCH, SPRUCE-PINE-FIR, OR HEM-FIR SPECIES.

STRUDET INC.

REGISTERED PROFESSIONAL ENGINEER
B. MARINKOVIC
PROVINCE OF ONTARIO

FOR STRUCTURE ONLY

ESCC MODEL

5.		
4.		
3.		
2.		
1.	REVISED FROM TRINAR HALL HOMES INC.	JAN 18

REVISIONS

The undersigned has reviewed and takes responsibility for this design, and has the qualifications and meets the requirements set out in the Ontario Building Code to be a designer.

QUALIFICATION INFORMATION

Required unless design is exempt under Division C, Subsection 3.2.5 of the building code

VIKAS GAJJAR		28770
NAME	SIGNATURE	BCIN

REGION DESIGN INC.
8700 DUFFERIN ST.
CONCORD, ONTARIO
L4K 4S6
P (416) 736-4086
F (905) 660-0748

REGION DESIGN INC.

SHEET TITLE: WOOD DECK DETAIL

CONTRACTOR SHALL CHECK ALL DIMENSIONS AND ELEVATIONS BEFORE COMMENCING WITH WORK AND REPORT ANY DISCREPANCIES TO THE DESIGNER. PRINTS ARE NOT TO BE SCALED.

SCALE	BY	AREA	PAGE No.
AS SHOWN			8
DATE: FEB 2019	TYPE	PROJECT: 00-00-00	

Greenpark

PROJECT NAME: STANDARD DETAILS LAMBERTS LANE II

February 11, 2019 1:27:15 PM M:\STANDARD DETAIL SHEETS\LAMBERTS LANE II - MYRA R. DECK DETAIL ENERGY STAR.DWG

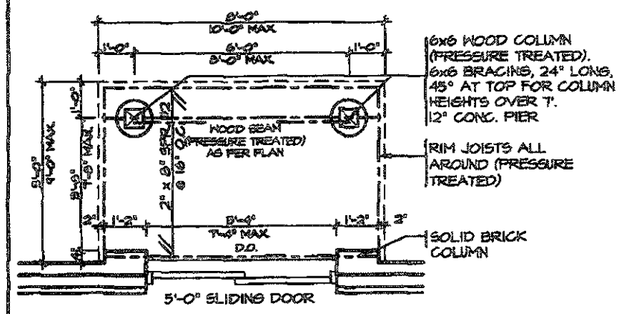

TYPICAL DECK LAYOUT

SCALE: 1/4"=1'-0"

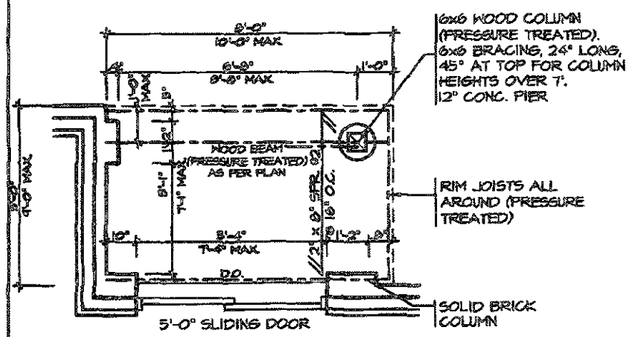

TYPICAL DECK LAYOUT

SCALE: 1/4"=1'-0"

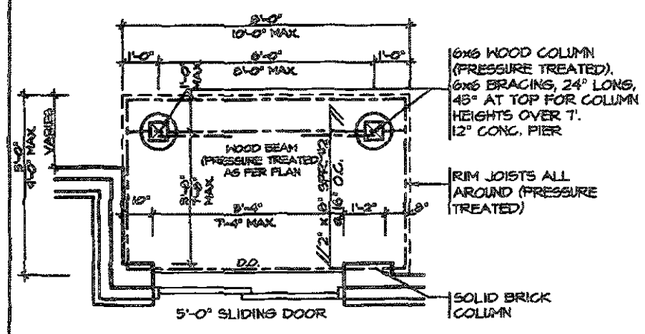

TYPICAL DECK LAYOUT

SCALE: 1/4"=1'-0"

THIS STRUCTURE MUST BE CONSTRUCTED TO MEET OR EXCEED THE PROVISIONS OF THE ONTARIO BUILDING CODE

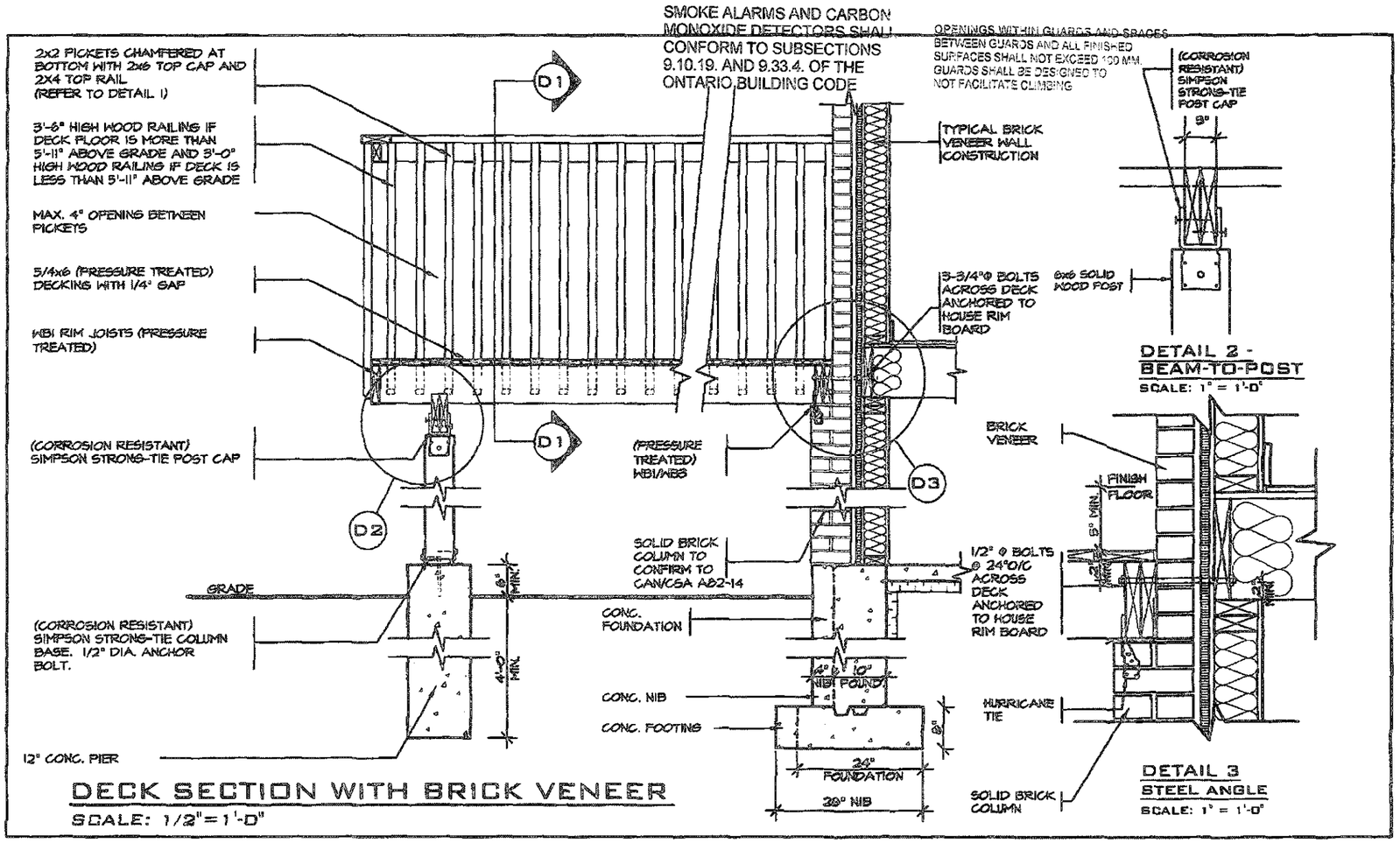

DECK SECTION WITH BRICK VENEER

SCALE: 1/2"=1'-0"

DETAIL 2 - BEAM-TO-POST

SCALE: 1" = 1'-0"

DETAIL 3 STEEL ANGLE

SCALE: 1" = 1'-0"

DETAIL 1 CANTILEVERED PICKET SCREWED TO RIM JOIST AND DECK

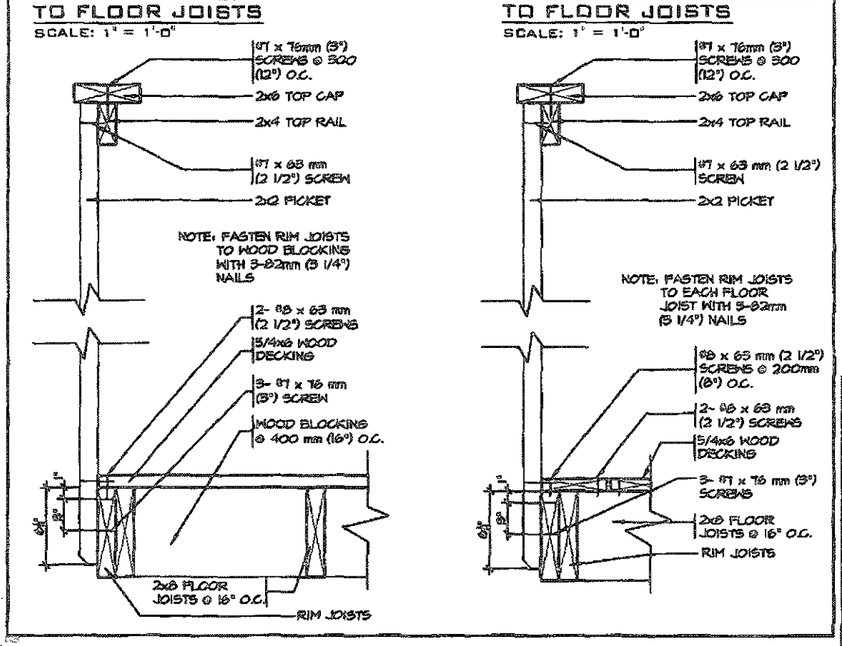

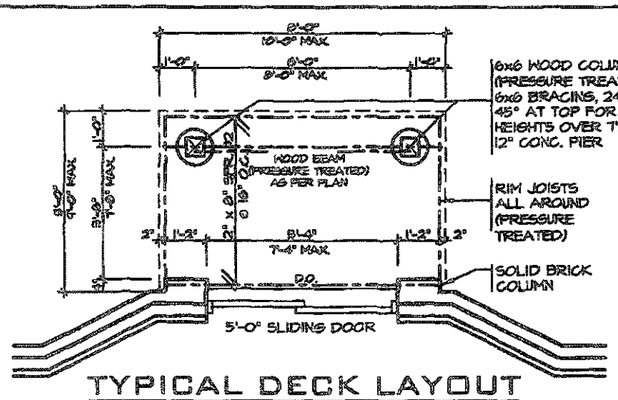

TYPICAL DECK LAYOUT

SCALE: 1/4"=1'-0"

GENERAL NOTES

1. BRICK TO BE COMPRESSIVE STRENGTH OF 15 mPA (2200 p.s.i.)MIN. UNITS TO BE LAID WITH FULL HEAD AND BED JOINTS.
2. MORTAR TO BE TYPE S WITH JOINT THICKNESS OF 10mm (3/8")MIN. AND 20mm (3/4") MAX.
3. ALL NAILS AND SCREWS TO BE GALVANIZED.
4. WBI = 2- 2 x 8 (PRESSURE TREATED)
   WBB = 2- 2 x 10 (PRESSURE TREATED)
5. WOOD FOR CANTILEVERED PICKETS SHALL BE DOUGLAS FIR-LARCH, SPRUCE-PINE-FIR, OR HEM-FIR SPECIES.

RECEIVED
STRUDET INC.
JAN 13 2019
BUILDING SECTION

REGISTERED PROFESSIONAL ENGINEER
B. MARINKOVIC
PROVINCE OF ONTARIO

FOR STRUCTURE ONLY

ESCC MODEL

5.		
4.		
3.		
2.		
1.	REVISED FROM TRINAR HALL HOMES INC.	FEB 2019

REVISIONS

The undersigned has reviewed and takes responsibility for this design, and has the qualifications and meets the requirements set out in the Ontario Building Code to be a designer.

QUALIFICATION INFORMATION

Required unless design is exempt under Division C, Subsection 3.2.5 of the building code

NAME	SIGNATURE	BCIN
VIKAS GAJJAR		28770

REGION DESIGN INC.
8700 DUFFERIN ST.
CONCORD, ONTARIO
L4K 4S6
P (416) 736-4096
F (905) 660-0746

REGION DESIGN INC.

SHEET TITLE: WALK-OUT DECK DETAILS

CONTRACTOR SHALL CHECK ALL DIMENSIONS AND ELEVATIONS BEFORE COMMENCING WITH WORK AND REPORT ANY DISCREPANCIES TO THE DESIGNER. PRINTS ARE NOT TO BE SCALED.

SCALE	BY	AREA	PAGE No.
AS SHOWN			8-2
DATE: FEB 2019	TYPE	PROJECT: 00-00-00	

Greenpark

PROJECT NAME: STANDARD DETAILS LAMBERTS LANE II

February 11, 2010 1:28:51 PM M:\STANDARD DETAIL REPORT\STANDARD DETAILS LAMBERTS LANE II\JV170 R.C.-WALK-OUT DECK DETAIL ENERGY STAR.DWG

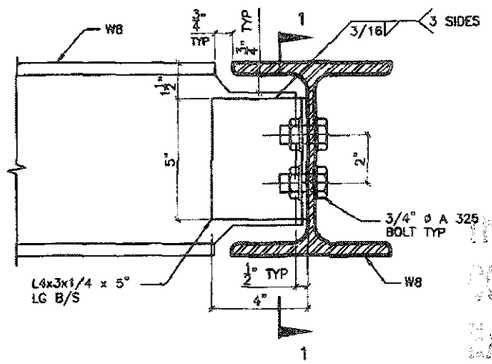

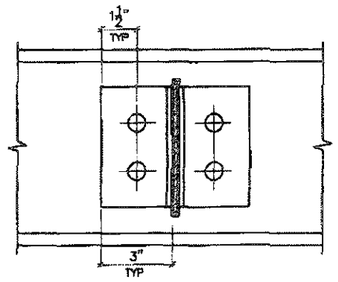

DETAIL 1.

W8
TO
W8
CONNECTION

SECTION 1–1

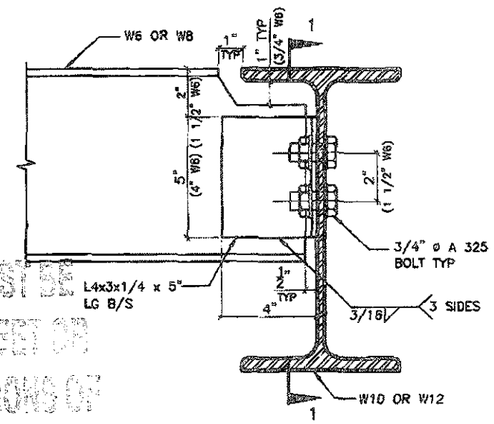

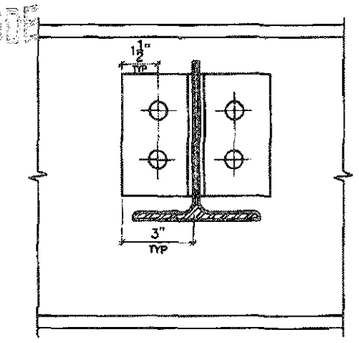

DETAIL 2.

W6(W8)
TO
W10(W12)
CONNECTION

SECTION 1–1

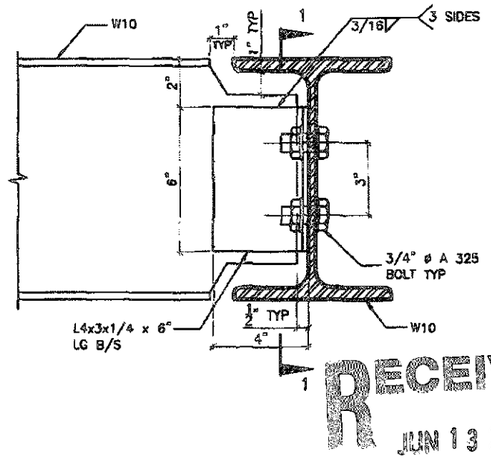

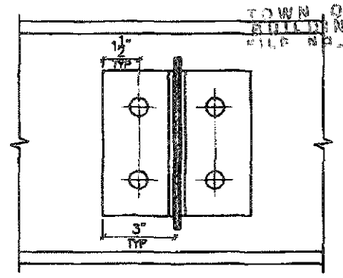

DETAIL 3.

W10
TO
W10
CONNECTION

SECTION 1–1

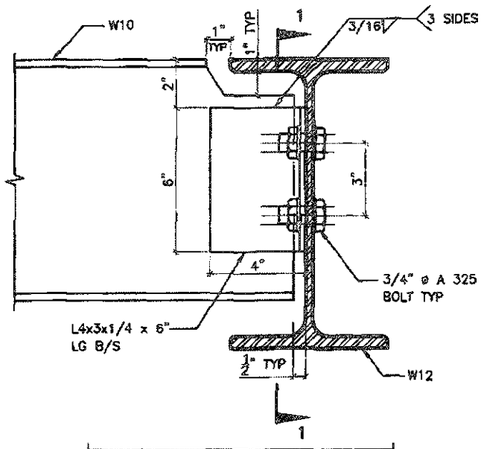

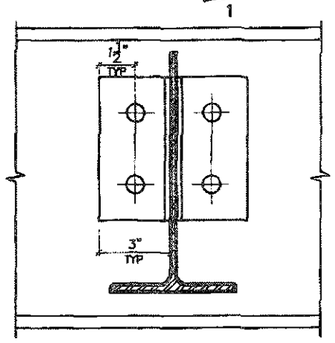

DETAIL 4.

W10
TO
W12
CONNECTION

SECTION 1–1

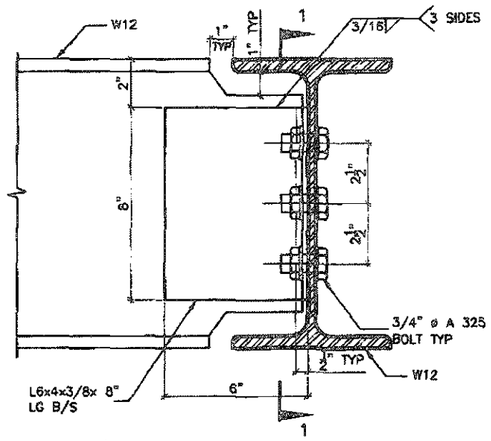

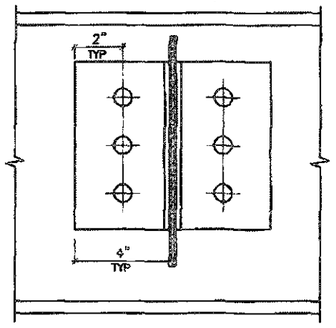

DETAIL 5.

W12
TO
W12
CONNECTION

SECTION 1–1

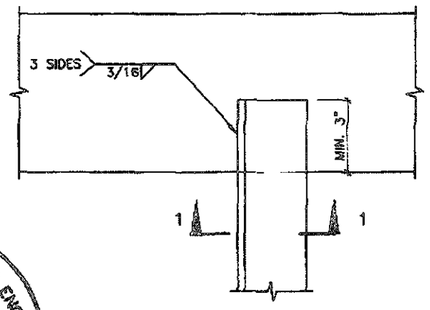

PLAN VIEW

STRUDET INC.

REGISTERED PROFESSIONAL ENGINEER
B. MARINKOVIC
PROVINCE OF ONTARIO

FOR STRUCTURE ONLY

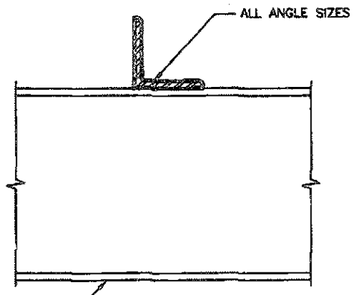

SECTION 1–1

DETAIL 6.

ANGLE
TO
BEAM
CONNECTION

ESCC MODEL

THIS STRUCTURE MUST BE CONSTRUCTED TO MEET OR EXCEED THE PROVISIONS OF THE ONTARIO BUILDING CODE

RECEIVED
JUN 13 2019
TOWN OF CALEDON
BUILDING SECTION
FILE No.

5.		
4.		
3.		
2.		
1.	REVISED FROM TRINAR HALL HOMES INC.	FEB 2019

REVISIONS

The undersigned has reviewed and takes responsibility for this design, and has the qualifications and meets the requirements set out in the Ontario Building Code to be a designer.

QUALIFICATION INFORMATION
Required unless design is exempt under Division C, Subsection 3.2.5 of the building code

NAME	SIGNATURE	BCIN
VIKAS GAJJAR		28770

REGION DESIGN INC.
8700 DUFFERIN ST.
CONCORD, ONTARIO
L4K 4S6
P (416) 736-4088
F (905) 660-0746

REGION DESIGN INC.

SHEET TITLE: STEEL BEAM DETAILS

CONTRACTOR SHALL CHECK ALL DIMENSIONS AND ELEVATIONS BEFORE COMMENCING WITH WORK AND REPORT ANY DISCREPANCIES TO THE DESIGNER. PRINTS ARE NOT TO BE SCALED.

SCALE	BY	AREA	PAGE No.
N.T.S.			9
DATE: FEB 2019	TYPE	PROJECT: 00-00-00	

Greenpark

PROJECT NAME: STANDARD DETAILS LAMBERTS LANE II

February 14, 2019 1:41:38 PM \\MASTANDARD\NETCAD SHP E B 8 1 T S F TVENERGY STAR\2018 | AMBERTS | ANE II \ 4TYP 8 - BEAM CONNECTIONS ENERGY STAR.DWG

THIS STRUCTURE MUST BE CONSTRUCTED TO MEET OR EXCEED THE PROVISIONS OF THE ONTARIO BUILDING CODE

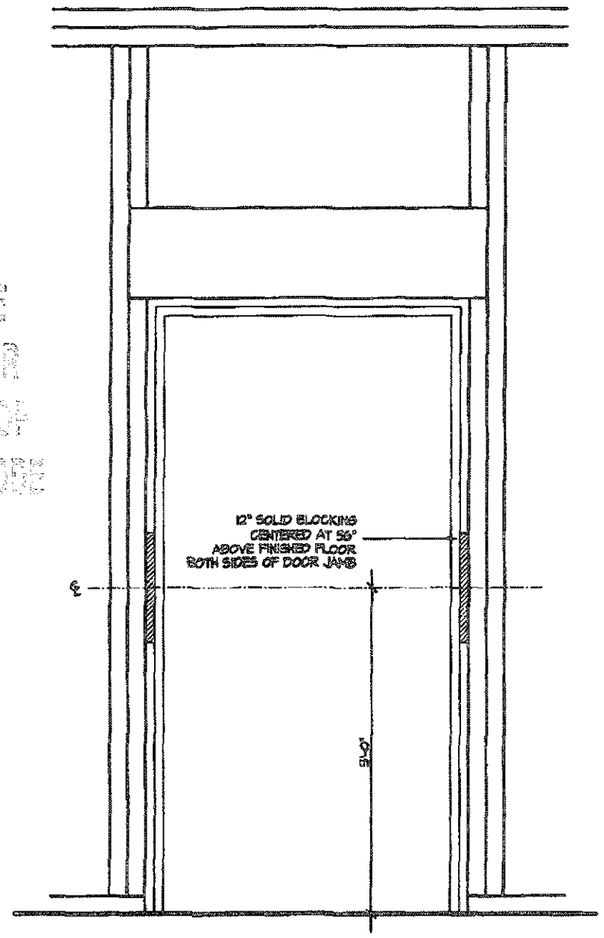

RESISTANCE TO FORCED ENTRY (OBC 9.6.8.)

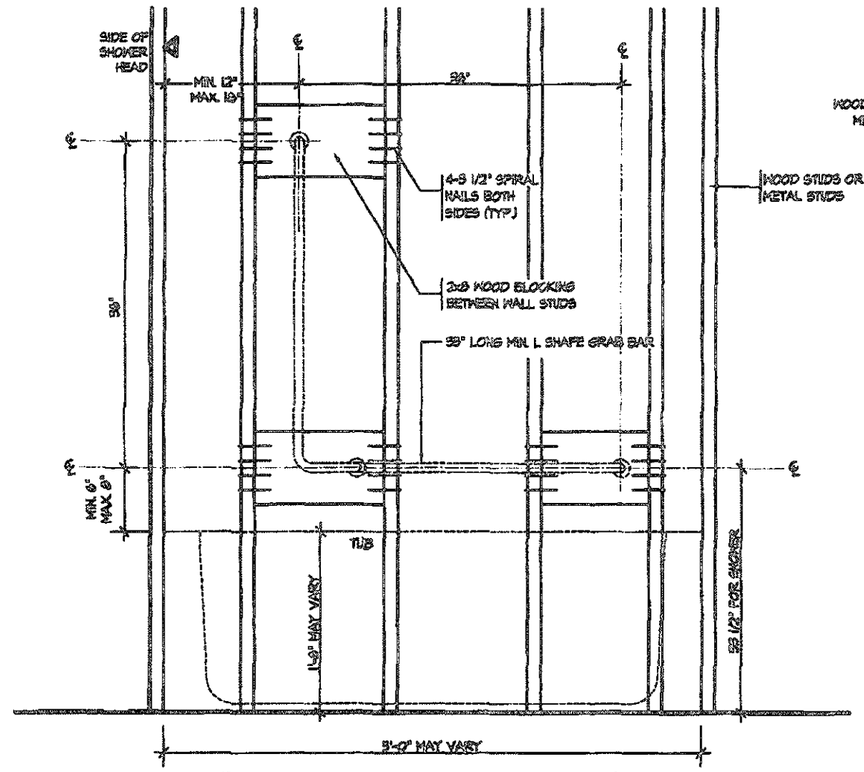

BATH TUB OR SHOWER FRONT ELEVATION

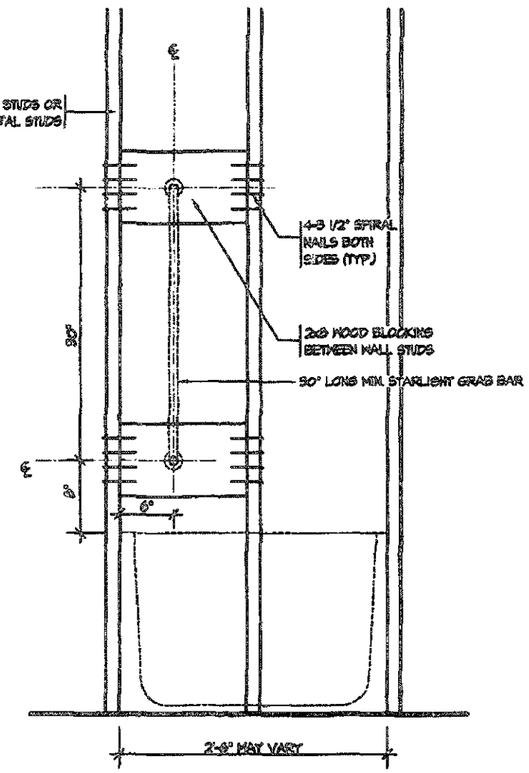

BATH TUB SHOWER HEAD SIDE ELEVATION

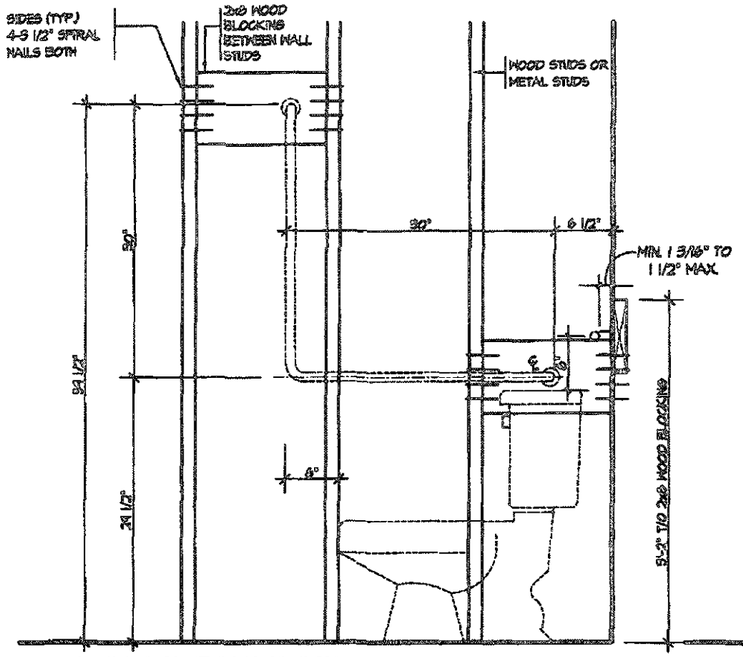

TOILET SIDE ELEVATION

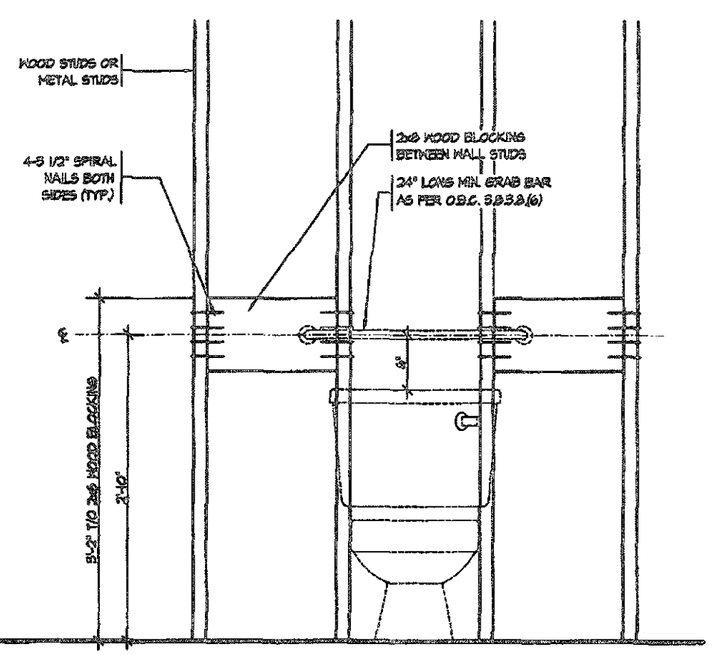

STRUCTURAL REINFORCEMENT FOR GRAB BAR (OBC 9.5.2.3.)

FOR MAIN BATH ONLY

RECEIVED
JUN 13 2019
TOWN OF CALEDON
BUILDING SECTION
FILE NO

STRUDET INC.
REGISTERED PROFESSIONAL ENGINEER
B. MARINKOVIC
PROVINCE OF ONTARIO
FOR STRUCTURE ONLY

ESCC MODEL

5.		
4.		
3.		
2.		
1.	REVISED FROM TRINAR HALL HOMES INC.	FEB 2019

REVISIONS

The undersigned has reviewed and takes responsibility for this design, and has the qualifications and meets the requirements set out in the Ontario Building Code to be a designer.

QUALIFICATION INFORMATION

Required unless design is exempt under Division C, Subsection 3.2.5 of the building code

NAME	SIGNATURE	BCIN
VIKAS GAJJAR		28770

REGION DESIGN INC.
8700 DUFFERIN ST.
CONCORD, ONTARIO
L4K 4S6
P (416) 738-4098
F (905) 660-0746

REGION DESIGN INC.

SHEET TITLE
BLOCKING
FORCED ENTRY & GRAB BAR

CONTRACTOR SHALL CHECK ALL DIMENSIONS AND ELEVATIONS BEFORE COMMENCING WITH WORK AND REPORT ANY DISCREPANCIES TO THE DESIGNER. PRINTS ARE NOT TO BE SCALED.

SCALE	BY	AREA	PAGE No.
3/4"=1'0"			10
DATE FEB 2019	TYPE	PROJECT 00-00-00	

Greenpark

PROJECT NAME
STANDARD DETAILS
LAMBERTS LANE II

February 11, 2010 1:33:19 PM M:\STANDARD DETAIL SHEETS\ AMPERTS LANE II\TYP 101-R1 OCCUPANT ENERGY STAR.DWG

THIS STRUCTURE MUST BE CONSTRUCTED TO MEET OR EXCEED THE PROVISIONS OF THE ONTARIO BUILDING CODE

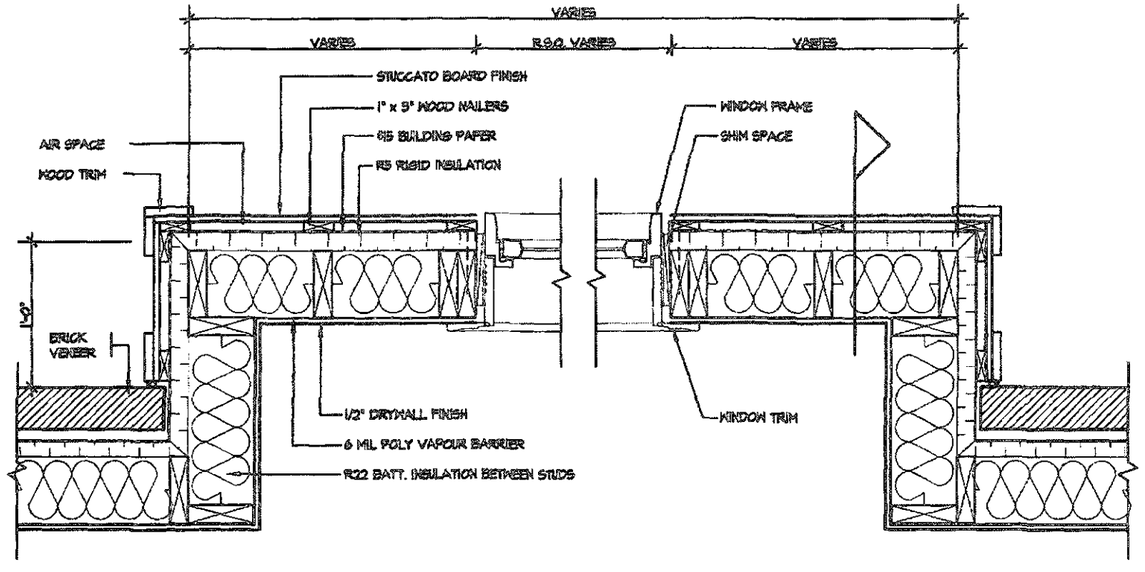

PLAN VIEW

STUCCATO BOARD FINISH CLADDING OR EQUAL (OBC 9.27.)

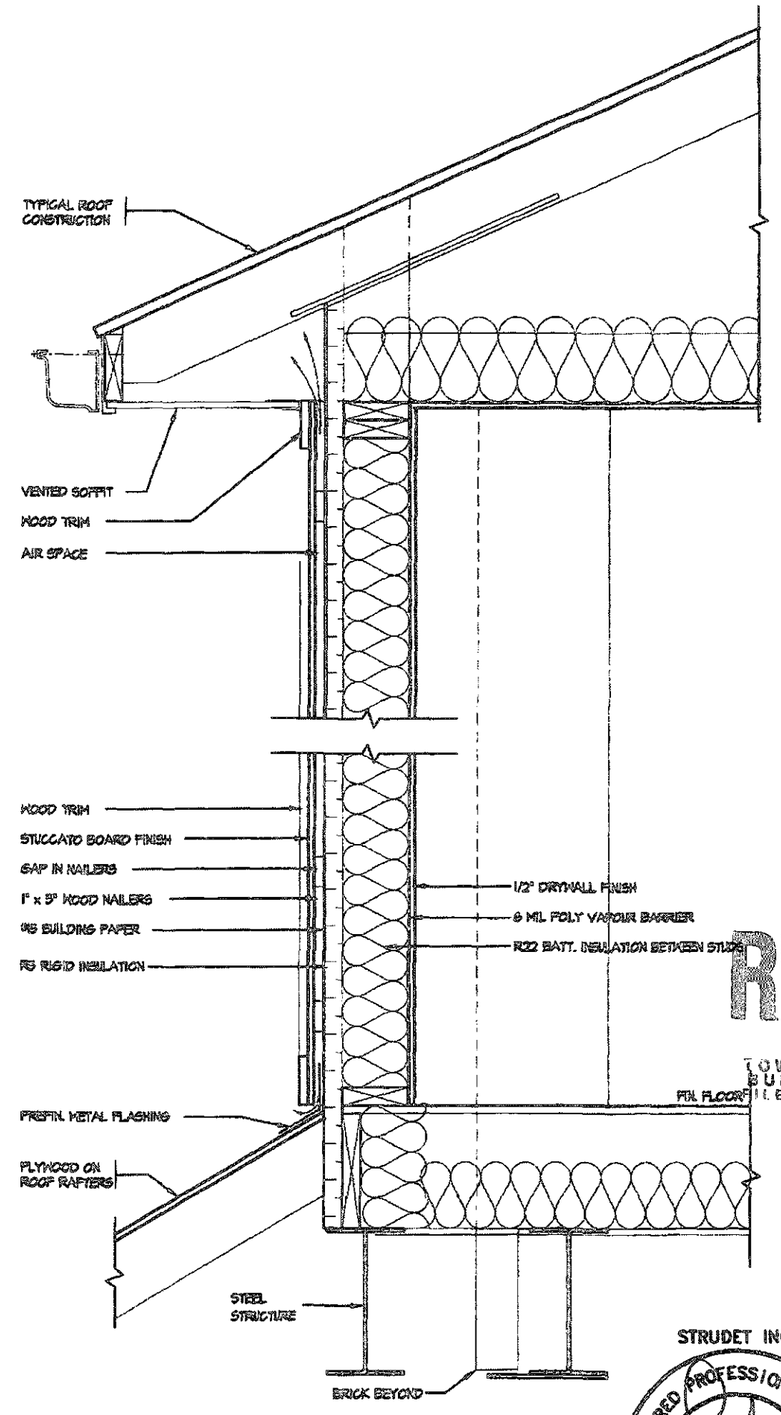

CROSS SECTION

RECEIVED
JUN 13 2019
TOWN OF CALEDON
BUILDING SECTION
FILE NO

STRUDET INC.

REGISTERED PROFESSIONAL ENGINEER
B. MARINKOVIC
26/4/19
PROVINCE OF ONTARIO

FOR STRUCTURE ONLY

ESCC MODEL

5.		
4.		
3.		
2.		
1.	REVISED FROM TRINAR HALL HOMES INC.	FEB 2019

REVISIONS

The undersigned has reviewed and takes responsibility for this design, and has the qualifications and meets the requirements set out in the Ontario Building Code to be a designer.

QUALIFICATION INFORMATION

Required unless design is exempt under Division C, Subsection 3.2.5 of the building code

VIKAS GAJJAR — 28770

NAME — SIGNATURE — BCIN

REGION DESIGN INC.
8700 DUFFERIN ST.
CONCORD, ONTARIO
L4K 4S6
P (416) 736-4086
F (905) 660-0746

REGION DESIGN INC.

SHEET TITLE: STUCCATO BOARD FINISH CLADDING

CONTRACTOR SHALL CHECK ALL DIMENSIONS AND ELEVATIONS BEFORE COMMENCING WITH WORK AND REPORT ANY DISCREPANCIES TO THE DESIGNER. PRINTS ARE NOT TO BE SCALED.

SCALE	BY	AREA	PAGE No.
1/2"=1'0"			11
DATE: FEB 2019	TYPE	PROJECT: 00-00-00	

Greenpark

PROJECT NAME: STANDARD DETAILS LAMBERTS LANE II

February 14, 2019 4:26:24 PM M:\STANDARD DETAIL SHEETS\ISSUED\LAMBERTS LANE II - 00-00-00 STUCCATO BOARD FINISH CLADDING.DWG

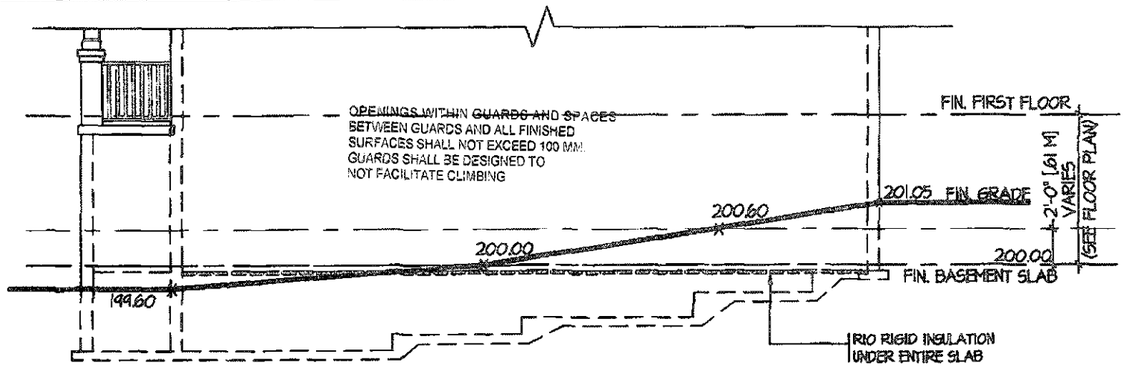

TYPICAL RIGHT SIDE ELEVATION

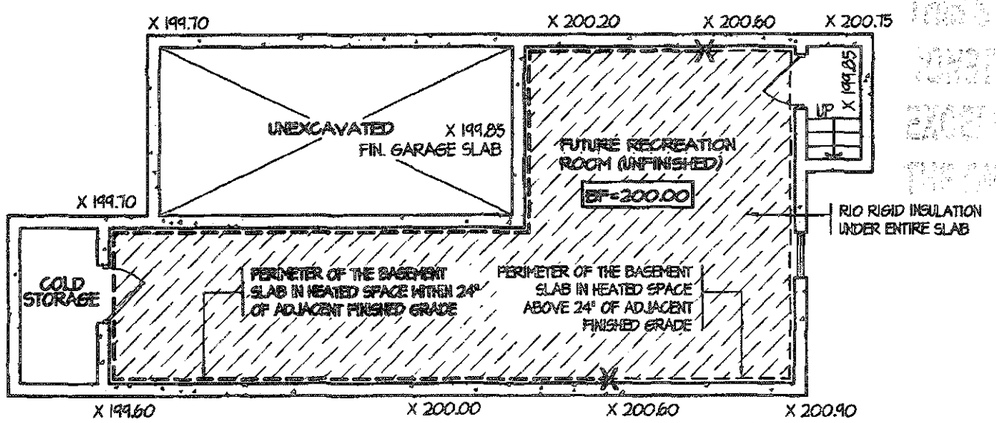

TYPICAL BASEMENT PLAN

NOTES:
1. LEVELS SHOWN ON THE PLANS ARE FOR ILLUSTRATION PURPOSE ONLY, SEE FINAL GRADING PLAN FOR ACTUAL LEVELS
2. ALL LEVELS ARE SHOWN IN METRIC

SLAB ON GRADE CONDITION

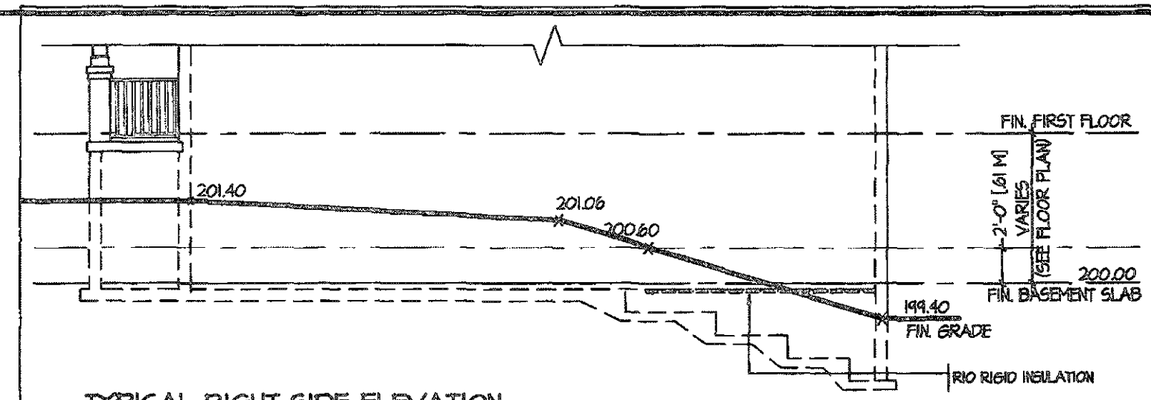

TYPICAL RIGHT SIDE ELEVATION

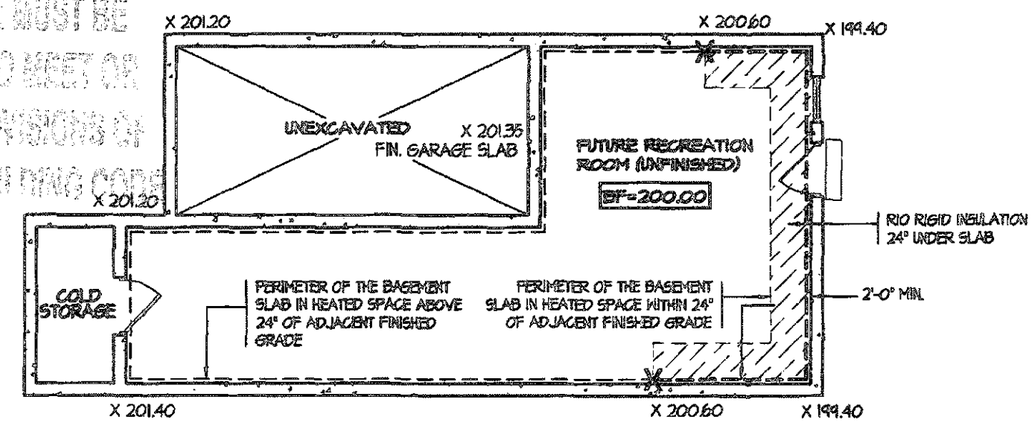

TYPICAL BASEMENT PLAN

NOTES:
1. LEVELS SHOWN ON THE PLANS ARE FOR ILLUSTRATION PURPOSE ONLY, SEE FINAL GRADING PLAN FOR ACTUAL LEVELS
2. ALL LEVELS ARE SHOWN IN METRIC

WALK OUT BASEMENT CONDITION

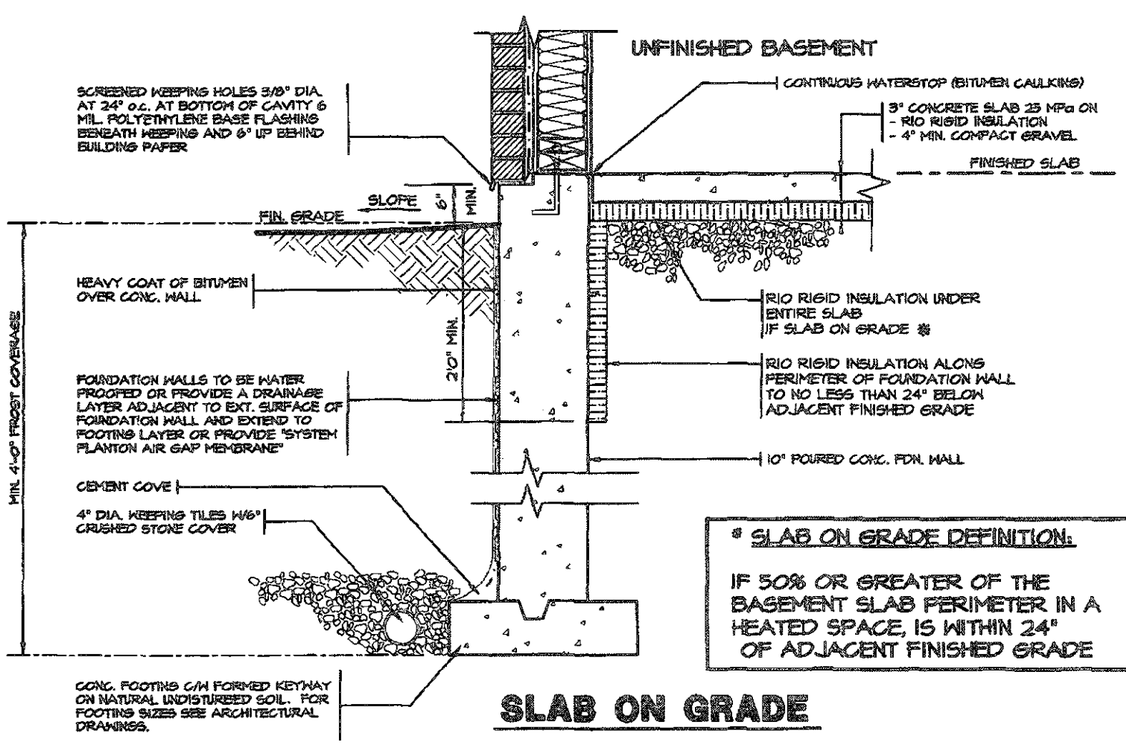

* SLAB ON GRADE DEFINITION:

IF 50% OR GREATER OF THE BASEMENT SLAB PERIMETER IN A HEATED SPACE, IS WITHIN 24" OF ADJACENT FINISHED GRADE

SLAB ON GRADE

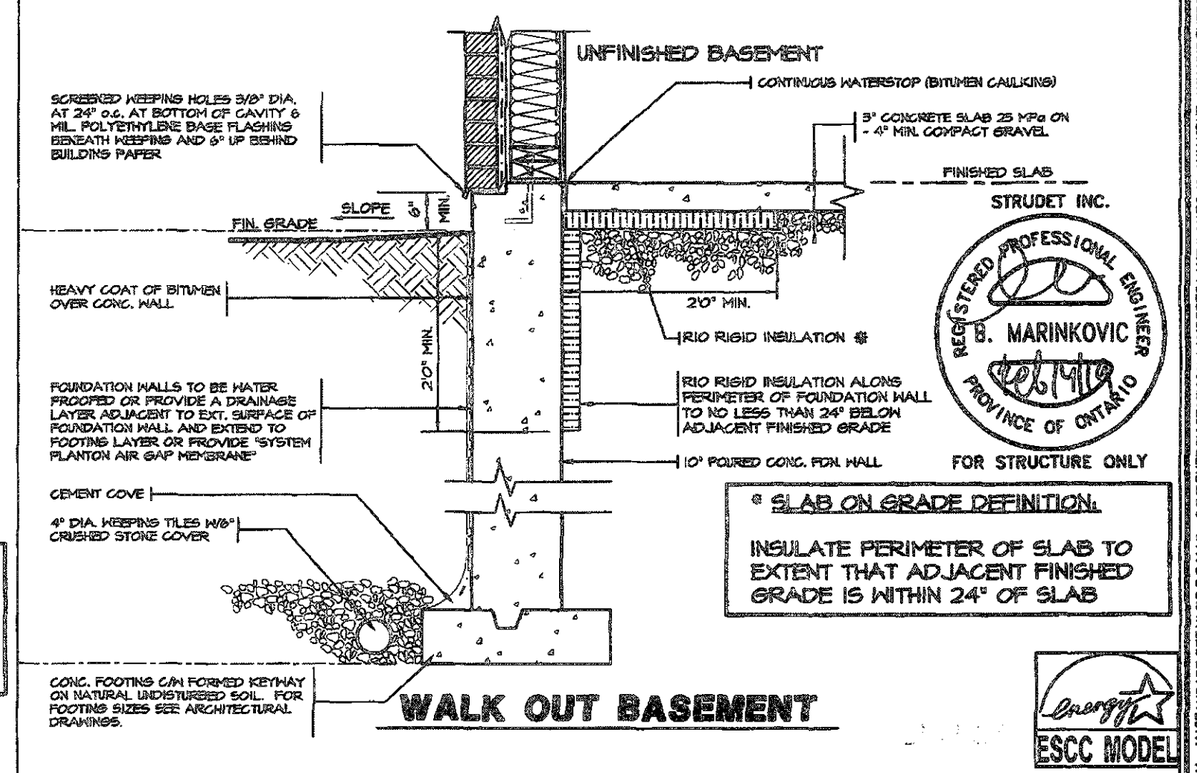

STRUDET INC.

REGISTERED PROFESSIONAL ENGINEER B. MARINKOVIC PROVINCE OF ONTARIO

FOR STRUCTURE ONLY

* SLAB ON GRADE DEFINITION:

INSULATE PERIMETER OF SLAB TO EXTENT THAT ADJACENT FINISHED GRADE IS WITHIN 24" OF SLAB

WALK OUT BASEMENT

ESCC MODEL

5.		
4.		
3.		
2.		
1.	REVISED FROM TRINAR HALL HOMES INC.	FEB 2019

REVISIONS

The undersigned has reviewed and takes responsibility for this design, and has the qualifications and meets the requirements set out in the Ontario Building Code to be a designer.

QUALIFICATION INFORMATION

Required unless design is exempt under Division C, Subsection 3.2.5 of the building code

VIKAS GAJJAR — 28770

NAME — SIGNATURE — BCIN

REGION DESIGN INC.
8700 DUFFERIN ST.
CONCORD, ONTARIO
L4K 4S6
P (416) 736-4096
F (905) 660-0748

REGION DESIGN INC.

SHEET TITLE: SLAB ON GRADE / WALKOUT BASEMENT

CONTRACTOR SHALL CHECK ALL DIMENSIONS AND ELEVATIONS BEFORE COMMENCING WITH WORK AND REPORT ANY DISCREPANCIES TO THE DESIGNER. PRINTS ARE NOT TO BE SCALED.

SCALE	BY	AREA	PAGE No.
N.T.S.			12
DATE: FEB 2019	TYPE	PROJECT: 00-00-00	

Greenpark

PROJECT NAME: STANDARD DETAILS LAMBERTS LANE II

THIS DOCUMENT MUST BE CONSTRUCTED TO MEET OR EXCEED THE DIMENSIONS OF THE ONTARIO BUILDING CODE

Edmonton, 11 09 10 1:47:17 PM M:\STANDARD DETAIL SIP PERMIT S.F.T\PERRY STAIR\2019 | AMBERTS LANE II - 17-19 - WALKOUT ENERGY STAIR.DWG

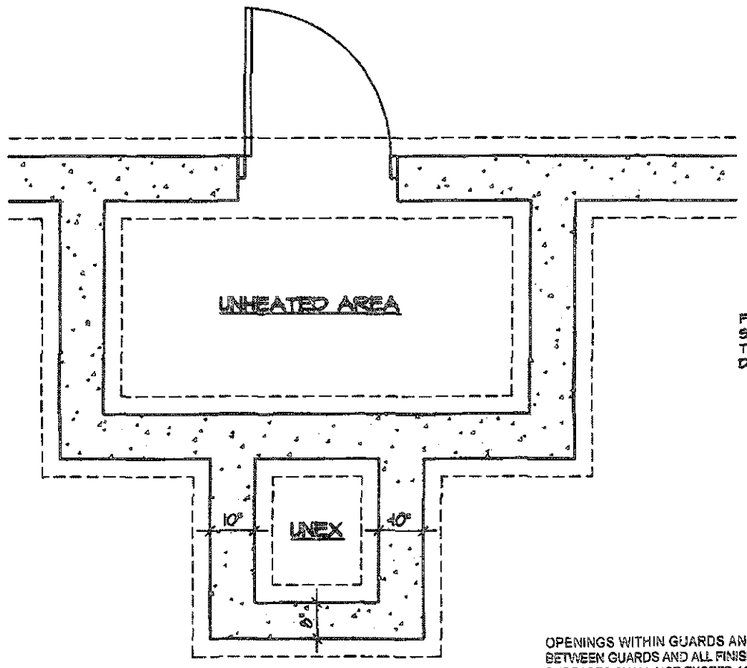

FOUNDATION PLAN

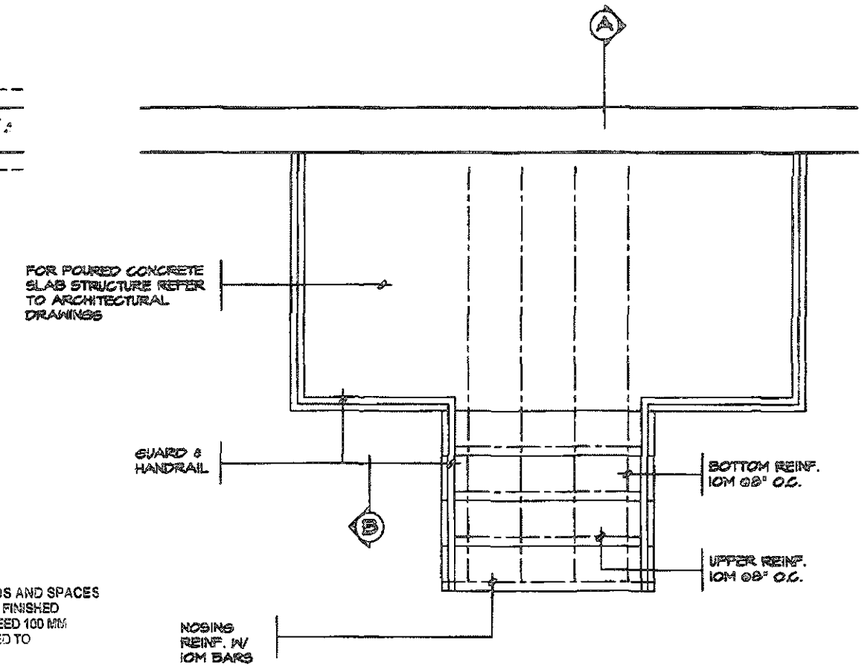

OPENINGS WITHIN GUARDS AND SPACES BETWEEN GUARDS AND ALL FINISHED SURFACES SHALL NOT EXCEED 100 MM GUARDS SHALL BE DESIGNED TO NOT FACILITATE CLIMBING

GROUND FLOOR PLAN

GENERAL NOTES

1. EXTERIOR STAIRS

   7 7/8" RISE MAXIMUM
   8 1/4" RUN MINIMUM
   9 1/4" TREAD MINIMUM

2. MASONRY TIES

   WHEN BRICK FACING IS USED ABOVE GROUND LEVEL, PROVIDE 3/16" DIA. CORROSION RESISTANT METAL TIES @ 36" HORIZONTAL & 8" VERTICAL

3. GUARDS

   ARE REQUIRED AROUND CONCRETE SLAB IF MORE THAN 2'-0" ABOVE GRADE & ON BOTH SIDES OF STAIRS CONTAINING MORE THAN 6 RISERS. MINIMUM 31" HIGH FOR STAIRS MINIMUM 36" HIGH FOR PORCHES UP TO 5'-11" ABOVE GRADE. MINIMUM 42" HIGH FOR GREATER HTS.

4. HANDRAIL

   ARE REQUIRED WHERE STEPS HAVE MORE THAN 3 RISERS . HANDRAIL HEIGHT 31" - 36".

5. FOUNDATION WALLS

   THICKNESS OF FOUNDATION WALLS IS DEPENDANT UPON VENEER CUT 8" FOR UP TO 28" VENEER CUT HEIGHT 10" FOR VENEER CUT OVER 28" HIGH

6. CONCRETE

   MINIMUM CONCRETE STRENGTH SHALL BE 4650 PSI [32MPa] W/ 5%-8% AIR ENTRAINMENT MINIMUM CONCRETE SLAB THICKNESS 5"

7. CONCRETE COVER

   PROVIDE MINIMUM 3/4" CLEAR CONCRETE COVER TO REINFORCING BARS

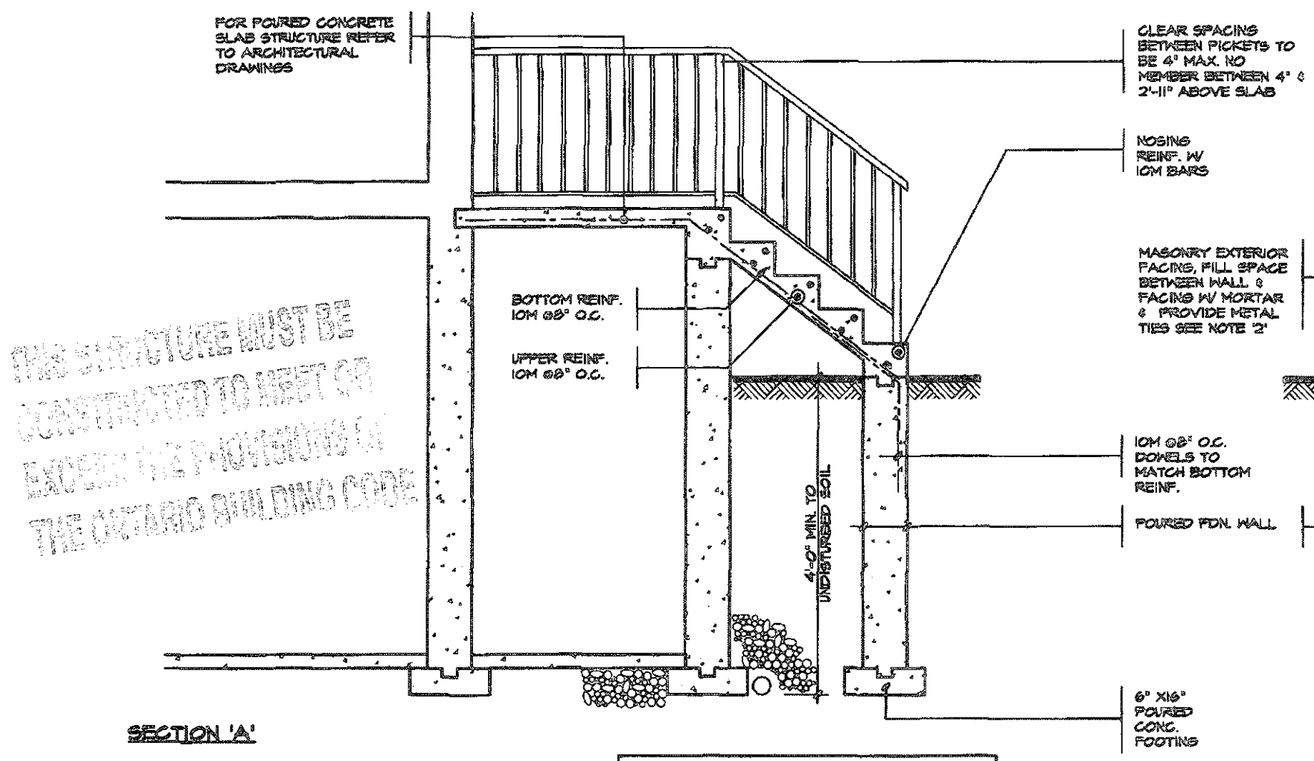

SECTION 'A'

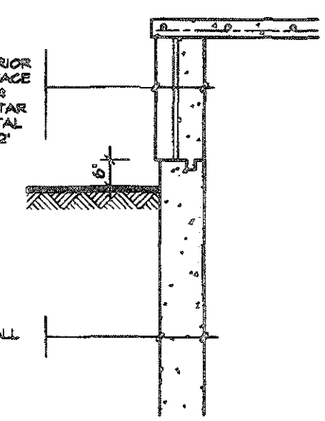

SECTION 'B'

NOTE: FOR MORE THAN 8 RISERS

THIS STRUCTURE MUST BE CONSTRUCTED TO MEET OR EXCEED THE PROVISIONS OF THE ONTARIO BUILDING CODE

RECEIVED
JUN 13 2019
TOWN OF CALEDON
BUILDING SECTION
FILE NO.

STRUDET INC.
REGISTERED PROFESSIONAL ENGINEER
B. MARINKOVIC
June 7/19
PROVINCE OF ONTARIO
FOR STRUCTURE ONLY

ESCC MODEL

5.		
4.		
3.		
2.		
1.	REVISED FROM TRINAR HALL HOMES INC.	FEB 2019

REVISIONS

The undersigned has reviewed and takes responsibility for this design, and has the qualifications and meets the requirements set out in the Ontario Building Code to be a designer.
QUALIFICATION INFORMATION
Required unless design is exempt under Division C, Subsection 3.2.5 of the building code

VIKAS GAJJAR		28770
NAME	SIGNATURE	BCIN

REGION DESIGN INC.
8700 DUFFERIN ST.
CONCORD, ONTARIO
P (416) 736-4096
F (905) 660-0748

REGION DESIGN INC.

SHEET TITLE: POURED CONCRETE STAIRS

CONTRACTOR SHALL CHECK ALL DIMENSIONS AND ELEVATIONS BEFORE COMMENCING WITH WORK AND REPORT ANY DISCREPANCIES TO THE DESIGNER. PRINTS ARE NOT TO BE SCALED.

SCALE	BY	AREA	PAGE No.
3/8"=1'-0"			13
DATE FEB 2019	TYPE	PROJECT 00-00-00	

Greenpark

PROJECT NAME: STANDARD DETAILS LAMBERTS LANE II

February 11, 2019 1:08:48 PM M:\STANDARD DETAIL SHEETS\ARCHIVE\STANDARD\LAMBERTS LANE II\VT0919_DETAILS CONCRETE STAIRS.DWG