ASPHALT SHINGLES
12"FINISH O.H.
R.T.M.C
2X6 EXTERIOR WALLS
2X6 FASCIA BOARD

8/12 PITCHES (TYP.)
UNLESS NOTED

HARDWARE:

HGUS26-2 -(XX)
LJS26DS -(V)
LUS24 -(O)

DENOTES:

H -16" RAISED PLATE

ALL B- 2-2X10 BEAMS (FLUSH)

DB-DROPPED BEAM

T-170534

DENOTES:
CONVENTIONAL FRAMING

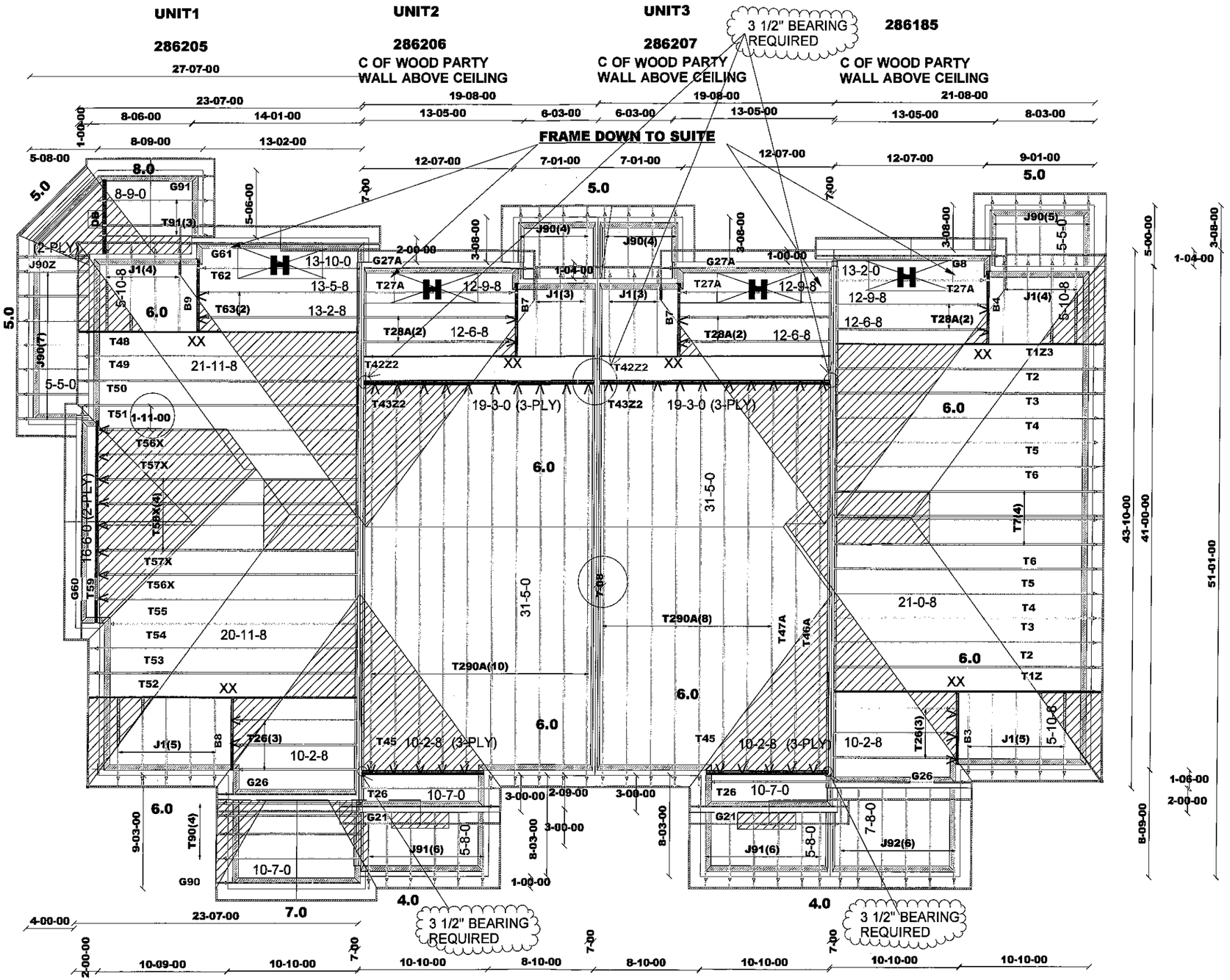

ALL CONVENTIONAL ROOF FRAMING TO CONFORM TO PART9 OF THE OBC.LATEST EDITION
ROOF RAFTERS THAT MEET OR CROSS OVER TRUSSES ARE TO BE 2"X4"SPF@24"o.c.
WITH A 2"X4"SPF VERTICAL POST TO THE TRUSS UNDER AT EACH CROSS POINT.
POSTS LONGER THAN 6' TO BE LATERALLY BRACED SO THAT THE DISTANCE
BETWEEN END POINTS AND BETWEEN ROWS OF BRACING DOES NOT EXCEED 6'.

DESIGN LOADS:

SNOW LOAD 25.6 PSF
TC DEAD 3 PSF
BC LIVE 10.5 PSF
BC DEAD 7 PSF

TAMARACK LUMBER INC. ALPA LUMBER GROUP	Job Track: 43954	Builder / Location: GREENPARK HOMES/ WATERDOWN	Model / Elevation: BLOCK215 / UNIT1TO4	Mitek ver 7.4.2 C:\MITEK\CA742AU OBS\B13000000006
	Layout ID: 286204	Project: RUSSEL GARDENS PH.2	THESE DRAWINGS CONSTITUTE THE PROPERTY OF TAMARACK ROOF TRUSSES INC., SHALL NOT BE REPRODUCED, PUBLISHED, OR REDISTRIBUTED IN ANY MANNER OR UTILIZED FOR ANY PURPOSE OTHER THAN THE MANUFACTURE OF TRUSSES BY TAMARACK ROOF TRUSSES INC AND WILL BE RETRACTED BY TAMARACK ROOF TRUSSES INC IF UTLILZED FOR ANY OTHER PURPOSE.	
	Plan Log: 93446	Date: 8/2/2017 Designer: sonny		

DATE	09/12/17
SALES REP	Mario

TAMARACK LUMBER INC.
ALPA LUMBER GROUP

Delivery Shiplist

JOB TRACK:43954 LAYOUT ID: 286205 LOCATION:
BUILDER: GREENPARK - RUSSELL GARDENS PH 2 SUB-BUILDER:
MODEL: DEWBERRY 12 ELEVATION: 1-UNIT1

ROOF TRUSSES

ROOF TRUSS SPACING:24.0 IN. O.C. (TYP.)

PROFILE	QTY / PLY	MARK / TYPE	PITCH TC / BC	SPAN	TRUSS HEIGHT	LUMBER TOP	LUMBER BOT	OVERHANG LEFT / RIGHT	HEEL HEIGHT LEFT / RIGHT	LBS. / BFT.	BUNDLE # / STACK #	LOAD BY: / REMARKS
	1	T48 HALF HIP	8.00 / 0.00	21-11-08	04-01-04	2 X 6	2 X 6	01-03-08 / 00-00-00	01-04-13 / 04-01-04	125.43 / 77.34		
	1	T49 HALF HIP	8.00 / 0.00	21-11-08	05-01-04	2 X 4	2 X 4	01-03-08 / 00-00-00	01-04-13 / 05-01-04	91.76 / 57.67		
	1	T50 HALF HIP	8.00 / 0.00	21-11-08	06-01-04	2 X 4	2 X 4	01-03-08 / 00-00-00	01-04-13 / 06-01-04	92.22 / 57.33		
	1	T51 HALF HIP	8.00 / 0.00	21-11-08	07-01-04	2 X 4	2 X 4	01-03-08 / 00-00-00	01-04-13 / 07-01-04	96.97 / 61.67		
	1	T52 HALF HIP	8.00 / 0.00	20-11-08	04-01-04	2 X 6	2 X 6	01-03-08 / 00-00-00	01-04-13 / 04-01-04	120.87 / 74.34		
	1	T53 HALF HIP	8.00 / 0.00	20-11-08	05-01-04	2 X 4	2 X 4	01-03-08 / 00-00-00	01-04-13 / 05-01-04	88.87 / 56.33		
	1	T54 HALF HIP	8.00 / 0.00	20-11-08	06-01-04	2 X 4	2 X 4	01-03-08 / 00-00-00	01-04-13 / 06-01-04	89.31 / 56.00		
	1	T55 HALF HIP	8.00 / 0.00	20-11-08	07-01-04	2 X 4	2 X 4	00-00-00 / 00-00-00	01-04-13 / 07-01-04	92.37 / 58.00		
	2	T56X HALF HIP	8.00 / 0.00	21-06-08	08-01-04	2 X 4	2 X 4	00-00-00 / 00-00-00	01-00-02 / 08-01-04	201.60 / 127.34		
	2	T57X HALF HIP	8.00 / 0.00	21-08-08	09-01-04	2 X 4	2 X 4	00-00-00 / 00-00-00	01-00-02 / 09-01-04	212.90 / 133.00		
	4	T58X HALF HIP	8.00 / 0.00	21-06-08	10-01-04	2 X 4	2 X 4	00-00-00 / 00-00-00	01-00-02 / 10-01-04	445.04 / 277.32		
	1 / 2 Ply	T59 COMMON	8.00 / 0.00	16-06-00	06-10-13	2 X 6	2 X 6	00-00-00 / 00-00-00	01-04-13 / 01-04-13	205.74 / 128.86		
	1	G60 COMMON	8.00 / 0.00	16-06-00	06-10-13	2 X 4	2 X 4	01-03-08 / 01-03-08	01-04-13 / 01-04-13	73.97 / 47.17		
	1	G61 COMMON	8.00 / 0.00	13-10-00	06-00-02	2 X 4	2 X 4	01-03-08 / 01-03-08	01-04-13 / 01-04-13	58.80 / 38.33		
	1	T62 MONOPITCH	8.00 / 0.00	13-05-08	10-04-08	2 X 4	2 X 4	00-00-00 / 00-00-00	01-04-13 / 10-04-08	62.47 / 39.00		
	2	T63 MONOPITCH	8.00 / 0.00	13-02-08	11-08-08	2 X 4	2 X 4	00-00-00 / 00-00-00	02-10-13 / 11-08-08	134.34 / 85.34		
	3	T26 MONOPITCH	8.00 / 0.00	10-02-08	08-02-08	2 X 4	2 X 4	01-03-08 / 00-00-00	01-04-13 / 08-02-08	149.52 / 95.49		
	1	G26 MONOPITCH	8.00 / 0.00	10-02-08	08-02-08	2 X 4	2 X 4	01-03-08 / 00-00-00	01-04-13 / 08-02-08	53.02 / 34.33		

DATE	09/12/17
SALES REP	Mario

TAMARACK LUMBER INC.
ALPA LUMBER GROUP

Delivery Shiplist

JOB TRACK: 43954 LAYOUT ID: 286205 LOCATION:
BUILDER: GREENPARK - RUSSELL GARDENS PH 2 SUB-BUILDER:
MODEL: DEWBERRY 12 ELEVATION: 1-UNIT1

ROOF TRUSSES

ROOF TRUSS SPACING: 24.0 IN. O.C. (TYP.)

PROFILE	QTY / PLY	MARK / TYPE	PITCH TC / BC	SPAN	TRUSS HEIGHT	LUMBER TOP	LUMBER BOT	OVERHANG LEFT / RIGHT	HEEL HEIGHT LEFT / RIGHT	LBS. / BFT.	BUNDLE # / STACK #	LOAD BY: / REMARKS
	4	T90 COMMON	7.00 / 0.00	10-07-00	03-09-04	2 X 4	2 X 4	01-03-08 / 01-03-08	00-08-03 / 00-08-03	172.28 / 104.00		
	1	G90 GABLE	7.00 / 0.00	10-07-00	03-09-04	2 X 4	2 X 4	01-03-08 / 01-03-08	00-08-03 / 00-08-03	38.29 / 26.00		
	3	T91 COMMON	8.00 / 0.00	08-09-00	03-05-05	2 X 4	2 X 4	00-10-08 / 00-10-08	00-06-05 / 00-06-05	88.68 / 56.49		
	1	G91 GABLE	8.00 / 0.00	08-09-00	03-05-05	2 X 4	2 X 4	00-10-08 / 00-10-08	00-06-05 / 00-06-05	32.06 / 20.83		
	9	J1 JACK-OPEN	6.00 / 0.00	05-10-08	04-01-04	2 X 4	2 X 4	01-03-08 / 00-00-00	01-02-00 / 04-01-04	151.11 / 96.03		
	7	J90 JACK	5.00 / 0.00	05-05-00	02-08-07	2 X 4	2 X 4	01-03-08 / 00-00-00	00-05-06 / 02-08-07	107.80 / 70.00		
	1 / 2 Ply	J90Z JACK	5.00 / 0.00	05-05-00	02-08-07	2 X 4	2 X 4	01-03-08 / 00-00-00	00-05-06 / 02-08-07	30.80 / 20.00		

TOTAL # TRUSS= 54.00 TOTAL BFT OF ALL TRUSSES= 1898.01 BFT. TOTAL WEIGHT OF ALL TRUSSES= 3016.22 LBS.

HARDWARE

QTY	ITEM TYPE	MODEL	LENGTH FT-IN-16
2	Hangers	HGUS26-2	
12	Hangers	LJS26DS	

TOTAL # ITEMS= 14.00

DATE	09/12/17
SALES REP	Mario

TAMARACK LUMBER INC.
ALPA LUMBER GROUP

Delivery Shiplist

JOB TRACK: 43954 LAYOUT ID: 286206 LOCATION:
BUILDER: GREENPARK - RUSSELL GARDENS PH 2 SUB-BUILDER:
MODEL: DEWBERRY 1 ELEVATION: 1(REV)-UNIT2

ROOF TRUSSES

ROOF TRUSS SPACING: 24.0 IN. O.C. (TYP.)

PROFILE	QTY / PLY	MARK / TYPE	PITCH TC / BC	SPAN	TRUSS HEIGHT	LUMBER TOP	LUMBER BOT	OVERHANG LEFT / RIGHT	HEEL HEIGHT LEFT / RIGHT	LBS. / BFT.	BUNDLE # / STACK #	LOAD BY: / REMARKS
	10	T290A COMMON	6.00 / 0.00	31-05-00	11-01-00	2 X 4	2 X 4	01-03-08 / 00-00-00	01-02-00 / 05-03-08	1451.10 / 900.00		
	1	T42Z2 FLAT GIRDER	0.00 / 0.00	19-03-00	04-01-04	2 X 6	2 X 6	00-00-00 / 00-00-00	04-01-04 / 04-01-04	115.97 / 72.00		
	1 / 3 Ply	T43Z2 FLAT GIRDER	0.00 / 0.00	19-03-00	05-01-04	2 X 6	2 X 6	00-00-00 / 00-00-00	05-01-04 / 05-01-04	377.70 / 236.01		
	1	T27A MONOPITCH	8.00 / 0.00	12-09-08	09-11-02	2 X 4	2 X 4	01-03-08 / 00-00-00	01-04-13 / 09-11-02	61.29 / 38.50		
	1	G27A GABLE	8.00 / 0.00	12-09-08	09-11-02	2 X 4	2 X 4	01-03-08 / 00-00-00	01-04-13 / 09-11-02	70.52 / 45.50		
	2	T28A MONOPITCH	8.00 / 0.00	12-06-08	11-03-02	2 X 4	2 X 4	00-00-00 / 00-00-00	02-10-13 / 11-03-02	128.48 / 80.34		
	1	G21 GABLE	8.00 / 0.00	10-07-00	04-11-02	2 X 4	2 X 4	01-03-08 / 01-03-08	01-04-13 / 01-04-13	46.02 / 31.17		
	1	T26 MONOPITCH	8.00 / 0.00	10-02-08	08-02-08	2 X 4	2 X 4	01-03-08 / 00-00-00	01-04-13 / 08-02-08	49.84 / 31.83		
	1 / 3 Ply	T45 MONOPITCH	8.00 / 0.00	10-02-08	08-02-08	2 X 6	2 X 6	00-00-00 / 00-00-00	01-04-13 / 08-02-08	200.52 / 129.00		
	3	J1 JACK-OPEN	6.00 / 0.00	05-10-08	04-01-04	2 X 4	2 X 4	01-03-08 / 00-00-00	01-02-00 / 04-01-04	50.37 / 32.01		
	4	J90 JACK	5.00 / 0.00	05-05-00	02-08-07	2 X 4	2 X 4	01-03-08 / 00-00-00	00-05-06 / 02-08-07	61.60 / 40.00		
	6	J91 JACK	4.00 / 0.00	05-08-00	02-02-10	2 X 4	2 X 4	01-03-08 / 00-00-00	00-03-15 / 02-02-10	89.64 / 55.98		

TOTAL # TRUSS= **36.00** TOTAL BFT OF ALL TRUSSES= **1692.34** BFT. TOTAL WEIGHT OF ALL TRUSSES= **2703.05** LBS.

HARDWARE

QTY	ITEM TYPE	MODEL	LENGTH FT-IN-16
1	Hangers	HGUS26-2	
17	Hangers	LJS28DS	

TOTAL # ITEMS= **18.00**

DATE	09/12/17
SALES REP	Mario

TAMARACK LUMBER INC.
ALPA LUMBER GROUP

Delivery Shiplist

JOB TRACK: 43954 LAYOUT ID: 286207 LOCATION:
BUILDER: GREENPARK - RUSSELL GARDENS PH 2 SUB-BUILDER:
MODEL: DEWBERRY 1 ELEVATION: 1-UNIT3

ROOF TRUSSES

ROOF TRUSS SPACING: 24.0 IN. O.C. (TYP.)

PROFILE	QTY / PLY	MARK / TYPE	PITCH TC / BC	SPAN	TRUSS HEIGHT	LUMBER TOP	LUMBER BOT	OVERHANG LEFT / RIGHT	HEEL HEIGHT LEFT / RIGHT	LBS. / BFT.	BUNDLE # / STACK #	LOAD BY: / REMARKS
	8	T290A COMMON	6.00 / 0.00	31-05-00	11-01-00	2 X 4	2 X 4	01-03-08 / 00-00-00	01-02-00 / 05-03-08	1160.88 / 720.00		
	1	T47A HIP	6.00 / 0.00	31-05-00	10-03-08	2 X 4	2 X 4	00-00-00 / 00-00-00	01-02-00 / 05-03-08	153.61 / 95.67		
	1	T46A HIP	6.00 / 0.00	31-05-00	08-11-08	2 X 4	2 X 4	00-00-00 / 00-00-00	01-02-00 / 05-03-08	139.70 / 87.67		
	1	T42Z2 FLAT GIRDER	0.00 / 0.00	19-03-00	04-01-04	2 X 6	2 X 6	00-00-00 / 00-00-00	04-01-04 / 04-01-04	115.97 / 72.00		
	1 / 3 Ply	T43Z2 FLAT GIRDER	0.00 / 0.00	19-03-00	05-01-04	2 X 6	2 X 6	00-00-00 / 00-00-00	05-01-04 / 05-01-04	377.70 / 236.01		
	1	G27A GABLE	8.00 / 0.00	12-09-08	09-11-02	2 X 4	2 X 4	01-03-08 / 00-00-00	01-04-13 / 09-11-02	70.52 / 45.50		
	1	T27A MONOPITCH	8.00 / 0.00	12-09-08	09-11-02	2 X 4	2 X 4	01-03-08 / 00-00-00	01-04-13 / 09-11-02	61.29 / 38.50		
	2	T28A MONOPITCH	8.00 / 0.00	12-06-08	11-03-02	2 X 4	2 X 4	00-00-00 / 00-00-00	02-10-13 / 11-03-02	128.48 / 80.34		
	1	G21 GABLE	8.00 / 0.00	10-07-00	04-11-02	2 X 4	2 X 4	01-03-08 / 01-03-08	01-04-13 / 01-04-13	46.02 / 31.17		
	1	T26 MONOPITCH	8.00 / 0.00	10-02-08	08-02-08	2 X 4	2 X 4	01-03-08 / 00-00-00	01-04-13 / 08-02-08	49.84 / 31.83		
	1 / 3 Ply	T45 MONOPITCH	8.00 / 0.00	10-02-08	08-02-08	2 X 6	2 X 6	00-00-00 / 00-00-00	01-04-13 / 08-02-08	200.52 / 129.00		
	3	J1 JACK-OPEN	6.00 / 0.00	05-10-08	04-01-04	2 X 4	2 X 4	01-03-08 / 00-00-00	01-02-00 / 04-01-04	50.37 / 32.01		
	4	J90 JACK	5.00 / 0.00	05-05-00	02-08-07	2 X 4	2 X 4	01-03-08 / 00-00-00	00-05-06 / 02-08-07	61.60 / 40.00		
	6	J91 JACK	4.00 / 0.00	05-08-00	02-02-10	2 X 4	2 X 4	01-03-08 / 00-00-00	00-03-15 / 02-02-10	89.64 / 55.98		

TOTAL # TRUSS= 36.00 TOTAL BFT OF ALL TRUSSES= 1695.68 BFT. TOTAL WEIGHT OF ALL TRUSSES= 2706.14 LBS.

HARDWARE

QTY	ITEM TYPE	MODEL	LENGTH FT-IN-16
1	Hangers	HGUS26-2	
18	Hangers	LJS26DS	

TOTAL # ITEMS= 19.00

DATE	09/12/17
SALES REP	Mario

TAMARACK LUMBER INC.
ALPA LUMBER GROUP

Delivery Shiplist

JOB TRACK: 43954 LAYOUT ID: 286185 LOCATION:
BUILDER: GREENPARK - RUSSELL GARDENS PH2 SUB-BUILDER:
MODEL: DEWBERRY 2E ELEVATION: 1(REV)-UNIT4

ROOF TRUSSES

ROOF TRUSS SPACING: 24.0 IN. O.C. (TYP.)

PROFILE	QTY / PLY	MARK / TYPE	PITCH TC / BC	SPAN	TRUSS HEIGHT	LUMBER TOP	LUMBER BOT	OVERHANG LEFT / RIGHT	HEEL HEIGHT LEFT / RIGHT	LBS. / BFT.	BUNDLE # / STACK #	LOAD BY: / REMARKS
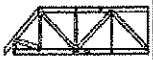	1	T1Z HALF HIP	8.00 / 0.00	21-00-08	04-01-04	2 X 6	2 X 6	01-03-08 / 00-00-00	01-04-13 / 04-01-04	121.25 / 75.34		
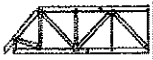	1	T1Z3 HALF HIP	8.00 / 0.00	21-00-08	04-01-04	2 X 6	2 X 6	01-03-08 / 00-00-00	01-04-13 / 04-01-04	121.25 / 75.34		
	2	T2 HALF HIP	8.00 / 0.00	21-00-08	05-01-04	2 X 4	2 X 4	01-03-08 / 00-00-00	01-04-13 / 05-01-04	178.24 / 112.66		
	2	T3 HALF HIP	8.00 / 0.00	21-00-08	06-01-04	2 X 4	2 X 4	01-03-08 / 00-00-00	01-04-13 / 06-01-04	179.12 / 112.00		
	2	T4 HALF HIP	8.00 / 0.00	21-00-08	07-01-04	2 X 4	2 X 4	01-03-08 / 00-00-00	01-04-13 / 07-01-04	188.76 / 118.68		
	2	T5 HALF HIP	8.00 / 0.00	21-00-08	08-01-04	2 X 4	2 X 4	01-03-08 / 00-00-00	01-04-13 / 08-01-04	203.36 / 127.66		
	2	T6 HALF HIP	8.00 / 0.00	21-00-08	09-01-04	2 X 4	2 X 4	01-03-08 / 00-00-00	01-04-13 / 09-01-04	214.60 / 134.34		
	4	T7 HALF HIP	8.00 / 0.00	21-00-08	10-01-04	2 X 4	2 X 4	01-03-08 / 00-00-00	01-04-13 / 10-01-04	448.48 / 280.00		
	1	G8 COMMON	8.00 / 0.00	13-02-00	05-09-08	2 X 4	2 X 4	01-03-08 / 01-03-08	01-04-13 / 01-04-13	55.88 / 36.00		
	1	T27A MONOPITCH	8.00 / 0.00	12-09-08	09-11-02	2 X 4	2 X 4	01-03-08 / 00-00-00	01-04-13 / 09-11-02	61.29 / 38.50		
	2	T28A MONOPITCH	8.00 / 0.00	12-06-08	11-03-02	2 X 4	2 X 4	00-00-00 / 00-00-00	02-10-13 / 11-03-02	128.48 / 80.34		
	3	T26 MONOPITCH	8.00 / 0.00	10-02-08	08-02-08	2 X 4	2 X 4	01-03-08 / 00-00-00	01-04-13 / 08-02-08	149.52 / 95.49		
	1	G26 MONOPITCH	8.00 / 0.00	10-02-08	08-02-08	2 X 4	2 X 4	01-03-08 / 00-00-00	01-04-13 / 08-02-08	51.35 / 32.83		
	9	J1 JACK-OPEN	6.00 / 0.00	05-10-08	04-01-04	2 X 4	2 X 4	01-03-08 / 00-00-00	01-02-00 / 00-04-11	151.11 / 96.03		
	5	J90 JACK	5.00 / 0.00	05-05-00	02-08-07	2 X 4	2 X 4	01-03-08 / 00-00-00	00-05-06 / 02-08-07	77.00 / 50.00		
	6	J92 JACK	4.00 / 0.00	07-08-00	02-10-10	2 X 4	2 X 4	01-03-08 / 00-00-00	00-03-15 / 02-10-10	136.62 / 87.00		

TOTAL # TRUSS= 44.00 TOTAL BFT OF ALL TRUSSES= 1552.21 BFT. TOTAL WEIGHT OF ALL TRUSSES= 2466.31 LBS.

HARDWARE

QTY	ITEM TYPE	MODEL	LENGTH FT-IN-16

DATE	09/12/17
SALES REP	Mario

TAMARACK LUMBER INC.
ALPA LUMBER GROUP

Delivery Shiplist

JOB TRACK: 43954 LAYOUT ID: 286185 LOCATION:
BUILDER: GREENPARK - RUSSELL GARDENS PH 2 SUB-BUILDER:
MODEL: DEWBERRY 2E ELEVATION: 1(REV)-UNIT4

HARDWARE

QTY	ITEM TYPE	MODEL	LENGTH FT-IN-16
2	Hangers	HGUS26-2	
5	Hangers	LJS26DS	

TOTAL # ITEMS= 7.00

JOB NAME	TRUSS NAME	QUANTITY	PLY	JOB DESC. 43954	DRWG NO.
286185	T1Z	1	1	TRUSS DESC.	

Version 8.200 S Dec 12 2017 MiTek Industries, Inc. Tue Jan 23 08:32:11 2018 Page 1

Tamarack Roof Truss, Burlington

ID:LjPBf7XlyxdQBIYCH4AXRGyehXO-iUZX6EHNILMgfh0NWnQKMHU4mUmblgLWgJEHEAzsY0Y

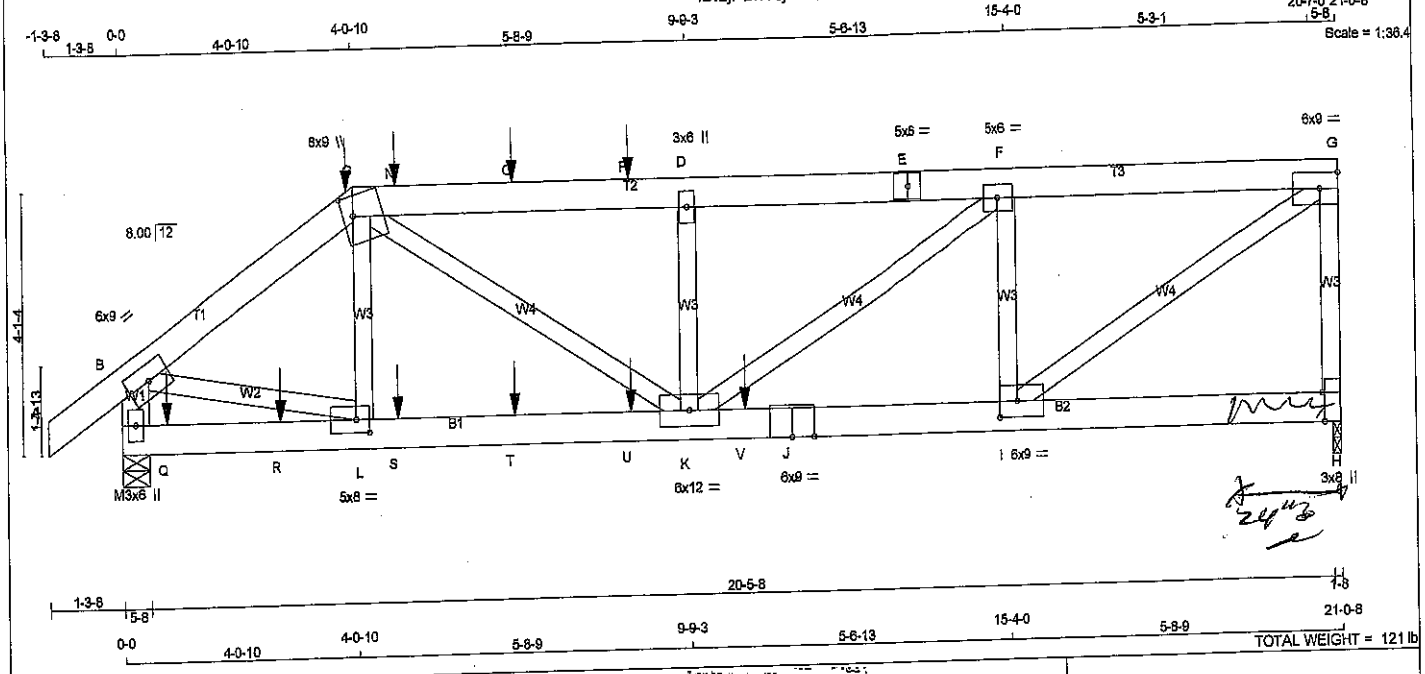

LUMBER

N. L. G. A. RULES

CHORDS	SIZE		LUMBER	DESCR.
A - C	2x6	DRY	No.2	SPF
C - E	2x6	DRY	No.2	SPF
E - G	2x6	DRY	No.2	SPF
H - G	2x4	DRY	No.2	SPF
M - B	2x6	DRY	No.2	SPF
M - J	2x6	DRY	2100F 1.8E	SPF
J - H	2x6	DRY	2100F 1.8E	SPF
ALL WEBS EXCEPT	2x4	DRY	No.2	SPF

DRY: SEASONED LUMBER.

PLATES (table is in inches)

JT	TYPE	PLATES	W	LEN	Y	X
B	TMVW-t	MT20	6.0	9.0		
C	TTWW+m	MT20	8.0	9.0	3.75	2.00
D	TMW+w	MT20	3.0	6.0		
E	TS-t	MT20	5.0	6.0		
F	TMWW-t	MT20	5.0	6.0		
G	TMVW-t	MT20	8.0	9.0		Edge
H	BMV1+p	MT20	3.0	6.0	Edge	0.50
I	BMWW-t	MT20	6.0	9.0	3.00	3.50
J	BS-t	MT20	6.0	9.0		
K	BMWWW-t	MT20	6.0	12.0		
L	BMWW-t	MT20	5.0	8.0	2.50	2.75
M	BMV1+p	MT20	3.0	6.0		

Edge - INDICATES REFERENCE CORNER OF PLATE TOUCHES EDGE OF CHORD.

HANGERS NOTES

1) SPECIAL HANGER(S) OR CONNECTION(S) REQUIRED TO SUPPORT CONCENTRATED LOAD(S) 113.4 lbs FACTORED DOWN AT 4-9-4, 101.4 lbs FACTORED DOWN AT 6-9-4, AND 101.4 lbs FACTORED DOWN AT 8-9-4, AND 493.4 lbs FACTORED DOWN AT 4-0-10 ON TOP CHORD, AND 75.5 lbs FACTORED DOWN AT 9-4, 69.9 lbs FACTORED DOWN AT 2-9-4, 69.9 lbs FACTORED DOWN AT 4-9-4, 69.9 lbs FACTORED DOWN AT 6-9-4, AND 69.9 lbs FACTORED DOWN AT 8-9-4, AND 1147.2 lbs FACTORED DOWN AT 10-8-8 ON BOTTOM CHORD. DESIGN FOR UNSPECIFIED CONNECTION(S) IS DELEGATED TO THE BUILDING DESIGNER.

SCAB JOINT #H & #___ WITH 2 X 6 #2 SPF 24" LONG 1 SIDE(S) USING 2 ROW(S) 3½" ARDOX SPIRAL/~~COMMON/BARE~~ NAILS AT 2" O/C STAGGERED (16 NAILS/SCAB). REQUIRED FOR 1½" BRG PROVISION.

DIMENSIONS, SUPPORTS AND LOADINGS SPECIFIED BY FABRICATOR TO BE VERIFIED BY BUILDING DESIGNER

BEARINGS

JT	FACTORED GROSS REACTION VERT	HORZ	MAXIMUM FACTORED GROSS REACTION DOWN	HORZ	UPLIFT	INPUT BRG IN-SX	REQRD BRG IN-SX
H	3070	0	3070	0	0	1-8	1-8
M	3444	0	3444	0	0	5-8	5-8

UNFACTORED REACTIONS

JT	1ST LCASE COMBINED	SNOW	MAX./MIN. COMPONENT REACTIONS LIVE	PERM.LIVE	WIND	DEAD	SOIL
H	2492	1430 / 0	537 / 0	0 / 0	0 / 0	526 / 0	0 / 0
M	2808	1591 / 0	618 / 0	0 / 0	0 / 0	599 / 0	0 / 0

BEARING MATERIAL TO BE SPF NO.2 OR BETTER AT JOINT(S) H, M

BRACING

TOP CHORD TO BE SHEATHED OR MAX. PURLIN SPACING = 2.86 FT.
MAX. UNBRACED BOTTOM CHORD LENGTH = 10.00 FT OR RIGID CEILING DIRECTLY APPLIED.

ALL PITCH BREAKS AND PERIMETER CORNER JOINTS MUST BE LATERALLY RESTRAINED.

LOADING

TOTAL LOAD CASES: (5)

CHORDS

MEMB. FR-TO	MAX. FACTORED FORCE (LBS)	FACTORED VERT. LOAD (PLF) FROM	TO	LC1	MAX CSI (LC)	MAX. UNBRAC LENGTH
A-B	0 / 33	-84.3	-84.3	0.07 (5)	10.00	
B-C	-4097 / 0	-84.3	-84.3	0.22 (1)	4.06	
C-N	-5658 / 0	-162.4	-162.4	0.74 (1)	2.86	
N-O	-5658 / 0	-162.4	-162.4	0.74 (1)	2.86	
O-P	-5658 / 0	-162.4	-162.4	0.74 (1)	2.86	
P-D	-5658 / 0	-162.4	-162.4	0.74 (1)	2.86	
D-E	-5658 / 0	-162.4	-162.4	0.60 (1)	3.11	
E-F	-5658 / 0	-162.4	-162.4	0.60 (1)	3.11	
F-G	-4028 / 0	-162.4	-162.4	0.47 (1)	3.81	
H-G	-2961 / 0	0.0	0.0	0.66 (1)	4.94	
M-B	-3302 / 0	0.0	0.0	0.23 (1)	5.79	
M-Q	0 / 0	-54.0	-54.0	0.11 (3)	10.00	
Q-R	0 / 0	-54.0	-54.0	0.11 (3)	10.00	
R-L	0 / 0	-54.0	-54.0	0.11 (3)	10.00	
L-S	0 / 3384	-54.0	-54.0	0.32 (1)	10.00	
S-T	0 / 3384	-54.0	-54.0	0.32 (1)	10.00	
T-U	0 / 3384	-54.0	-54.0	0.32 (1)	10.00	
U-K	0 / 3384	-54.0	-54.0	0.32 (1)	10.00	
K-V	0 / 4026	-54.0	-54.0	0.46 (1)	10.00	
V-J	0 / 4028	-54.0	-54.0	0.46 (1)	10.00	
J-I	0 / 4028	-54.0	-54.0	0.46 (1)	10.00	
I-H	0 / 0	-54.0	-54.0	0.14 (2)	10.00	

WEBS

MEMB. FR-TO	MAX. FACTORED FORCE (LBS)	MAX CSI (LC)
L-C	-392 / 343	0.07 (1)
C-K	0 / 2692	0.48 (1)
K-D	-1135 / 0	0.19 (1)
K-F	0 / 1949	0.34 (1)
I-F	-2046 / 0	0.35 (1)
I-G	0 / 4778	0.84 (1)
B-L	0 / 3477	0.61 (1)

FACTORED CONCENTRATED LOADS (LBS)

JT	LOC.	LC1	MAX-	MAX+	FACE	DIR.	TYPE
C	4-0-10	-249	-249	—	FRONT	VERT	TOTAL
C	4-0-10	-23	-25	—	FRONT	VERT	DEAD
C	4-0-10	-222	-222	—	FRONT	VERT	SNOW
N	4-9-4	-113	-113	—	FRONT	VERT	TOTAL
O	6-9-4	-101	-101	—	FRONT	VERT	TOTAL
P	6-9-4	-101	-101	—	FRONT	VERT	TOTAL
Q	9-4	-43	-76	—	FRONT	VERT	TOTAL
R	2-9-4	-40	-70	—	FRONT	VERT	TOTAL
S	4-9-4	-40	-70	—	FRONT	VERT	TOTAL
T	6-9-4	-40	-70	—	FRONT	VERT	TOTAL
U	8-9-4	-40	-70	—	FRONT	VERT	TOTAL
V	10-8-8	-1147	-1147	—	FRONT	VERT	TOTAL

[M]

DESIGN CRITERIA

*** SPECIAL LOADS ANALYSIS ***
GEOMETRY AND/OR BASIC LOADS CHANGED BY USER.
LOADS WERE DERIVED FROM USER INPUT
NO FURTHER MODIFICATIONS WERE MADE

SPECIFIED LOADS:

TOP CH.	LL	=	25.6	PSF
	DL	=	3.0	PSF
BOT CH.	LL	=	10.5	PSF
	DL	=	7.0	PSF
TOTAL LOAD		=	46.1	PSF

SPACING = 24.0 IN. C/C

LOADING IN FLAT SECTION BASED ON A SLOPE OF 6.00/12

GIRDER TYPE: CPrimeHip
LEFT SETBACK = 4-0-10
RIGHT SETBACK = 0-0
END SETBACK = 5-10-8
END WALL WIDTH = 2-0
CORNER FRAMING TYPE: CONVENTIONAL
END JACK TYPE: CONVENTIONAL
APPLIED TO FRONT SIDE
- ADDT'L LOADS BASED ON 55 % OF GSL.

*** NON STANDARD GIROER ***
ADDT'L USER-DEFINED LOADS APPLIED TO ALL LOAD CASES.

THIS TRUSS IS DESIGNED FOR RESIDENTIAL OR SMALL BUILDING REQUIREMENTS OF PART 9, NBCC 2010

THIS DESIGN COMPLIES WITH:
- PART 9 OF OBC 2012 , BCBC 2012 , ABC 2014
- CSA 086-09
- TPIC 2011

(55 % OF 31.3 P.S.F. G.S.L. PLUS 8.4 P.S.F. RAIN LOAD) EQUALS 25.6 P.S.F. SPECIFIED ROOF LIVE LOAD

ALLOWABLE DEFL.(LL)= L/360 (0.70")
CALCULATED VERT. DEFL.(LL) = L/999 (0.16")
ALLOWABLE DEFL.(TL)= L/360 (0.70")
CALCULATED VERT. DEFL.(TL) = L/891 (0.26")

CSI: TC=0.74/1.00 (C-D:1) , BC=0.48/1.00 (I-K:1) , WB=0.84/1.00 (G-I:1) , SSI=0.74/1.00 (I-K:1)

DOL LUMBER=1.00 NAIL=1.00 LS BEND=1.00
COMP=1.00 SHEAR=1.00 TENS= 1.00

COMPANION LIVE LOAD FACTOR = 0.50

TRUSS PLATE MANUFACTURER IS NOT RESPONSIBLE FOR QUALITY CONTROL IN THE TRUSS MANUFACTURING PLANT.

DWG NO. TAM 5099-18
STRUCTURAL COMPONENT ONLY

CONTINUED ON PAGE 2

LICENSED PROFESSIONAL ENGINEER
S. KATSOULAKOS
PROVINCE OF ONTARIO

JOB NAME	TRUSS NAME	QUANTITY	PLY	JOB DESC. 43954	DRWG NO.
286185	T1Z	1	1	TRUSS DESC.	

Tamarack Roof Truss, Burlington

Version 8.200 S Dec 12 2017 MiTek Industries, Inc. Tue Jan 23 08:32:11 2018 Page 2
ID:LjPBf7XlyxdQBIYCH4AXRGyehX0-lUZX6EHNILMgfh0NWnQKMHU4mUmblgLWgJEHEAzsY0Y

NAIL VALUES

PLATE	GRIP(DRY) (PSI)		SHEAR (PLI)		SECTION (PLI)	
	MAX	MIN	MAX	MIN	MAX	MIN
MT20	618	354	1667	822	2284	1656

PLATE PLACEMENT TOL. = 0.250 Inches

PLATE ROTATION TOL. = 5.0 Deg.

JSI GRIP= 0.90 (L) (INPUT = 0.90)
JSI METAL= 0.87 (J) (INPUT = 1.00)

LICENSED PROFESSIONAL ENGINEER
12416
S. KATSOULAKOS
PROVINCE OF ONTARIO

DWG NO. TAM5099-18
STRUCTURAL
COMPONENT ONLY

JOB NAME	TRUSS NAME	QUANTITY	PLY	JOB DESC. 43954	DRWG NO.
286185	T1Z3	1	1	TRUSS DESC.	

Version 8.200 S Dec 12 2017 MiTek Industries, Inc. Tue Jan 23 08:32:11 2018 Page 1

Tamarack Roof Truss, Burlington

ID:LjPBf7XlyxdQBIYCH4AXRGyehXO-lUZX6EHNILMgfh0NWnQKMHU9qUltImgWgJEHEAzsY0Y

Scale = 1:36.4

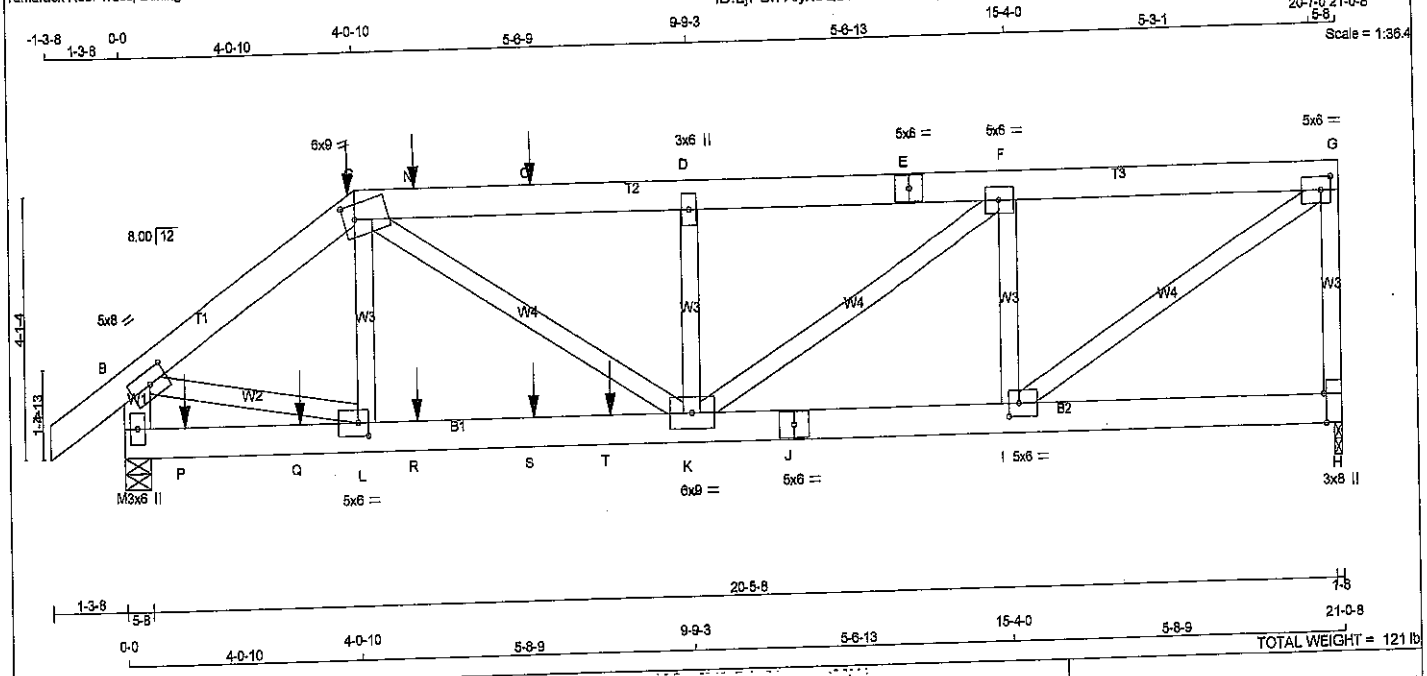

TOTAL WEIGHT = 121 lb

LUMBER

N. L. G. A. RULES

CHORDS	SIZE		LUMBER	DESCR.
A - C	2x6	DRY	No.2	SPF
C - E	2x6	DRY	No.2	SPF
E - G	2x6	DRY	No.2	SPF
H - G	2x4	DRY	No.2	SPF
M - B	2x6	DRY	No.2	SPF
M - J	2x6	DRY	2100F 1.8E	SPF
J - H	2x6	DRY	2100F 1.8E	SPF
ALL WEBS EXCEPT	2x4	DRY	No.2	SPF

DRY: SEASONED LUMBER.

PLATES (table is in inches)

JT	TYPE	PLATES	W	LEN	Y	X
B	TMWW-t	MT20	5.0	8.0	2.50	3.75
C	TTWW-m	MT20	6.0	9.0	2.75	2.25
D	TMW+w	MT20	3.0	6.0		
E	TS-t	MT20	5.0	6.0		
F	TMWW-t	MT20	5.0	6.0		
G	TMWW-t	MT20	5.0	6.0	2.50	2.00
H	BMV1+p	MT20	3.0	8.0	Edge	0.50
I	BMWW-t	MT20	5.0	6.0	2.50	2.00
J	BS-t	MT20	5.0	6.0		
K	BMWWW-t	MT20	6.0	9.0		
L	BMWW-t	MT20	5.0	6.0	2.50	2.00
M	BMV1+p	MT20	3.0	6.0		

Edge - INDICATES REFERENCE CORNER OF PLATE TOUCHES EDGE OF CHORD.

HANGERS NOTES

1) SPECIAL HANGER(S) OR CONNECTION(S) REQUIRED TO SUPPORT CONCENTRATED LOAD(S) 244.5 lbs FACTORED DOWN AT 4-0-11, AND 101.4 lbs FACTORED DOWN AT 5-0-12, AND 101.4 lbs FACTORED DOWN AT 7-0-12 ON TOP CHORD, AND 69.9 lbs FACTORED DOWN AT 1-0-12, 69.9 lbs FACTORED DOWN AT 3-0-12, 69.9 lbs FACTORED DOWN AT 5-0-12, AND 69.9 lbs FACTORED DOWN AT 7-0-12, AND 1278.2 lbs FACTORED DOWN AT 8-4-8 ON BOTTOM CHORD. DESIGN FOR UNSPECIFIED CONNECTION(S) IS DELEGATED TO THE BUILDING DESIGNER.

DIMENSIONS, SUPPORTS AND LOADINGS SPECIFIED BY FABRICATOR TO BE VERIFIED BY BUILDING DESIGNER

BEARINGS

JT	FACTORED GROSS REACTION VERT	HORZ	MAXIMUM FACTORED GROSS REACTION DOWN	HORZ	UPLIFT	INPUT BRG IN-SX	REQRD BRG IN-SX
H	1826	0	1826	0	0	1-8	1-8
M	2541	0	2541	0	0	5-8	5-8

UNFACTORED REACTIONS

MAX./MIN. COMPONENT REACTIONS

JT	1ST LCASE COMBINED	SNOW	LIVE	PERM.LIVE	WIND	DEAD	SOIL
H	1486	846 / 0	324 / 0	0 / 0	0 / 0	316 / 0	0 / 0
M	2059	1167 / 0	439 / 0	0 / 0	0 / 0	432 / 0	0 / 0

BEARING MATERIAL TO BE SPF NO.2 OR BETTER AT JOINT(S) H, M

BRACING

TOP CHORD TO BE SHEATHED OR MAX. PURLIN SPACING = 3.94 FT.
MAX. UNBRACED BOTTOM CHORD LENGTH = 10.00 FT OR RIGID CEILING DIRECTLY APPLIED.

ALL PITCH BREAKS AND PERIMETER CORNER JOINTS MUST BE LATERALLY RESTRAINED.

LOADING

TOTAL LOAD CASES: (4)

CHORDS

MEMB. FR-TO	MAX. FACTORED FORCE (LBS)	FACTORED VERT. LOAD LC1 (PLF) FROM	TO	MAX CSI (LC)	MAX. UNBRAC LENGTH
A- B	0 / 33	-84.3	-84.3	0.07 (1)	10.00
B- C	-3066 / 0	-84.3	-84.3	0.18 (1)	4.64
C- N	-3889 / 0	-84.3	-84.3	0.42 (1)	3.94
N- O	-3889 / 0	-84.3	-84.3	0.42 (1)	3.94
O- D	-3889 / 0	-84.3	-84.3	0.42 (1)	3.94
D- E	-3889 / 0	-84.3	-84.3	0.29 (1)	4.10
E- F	-3889 / 0	-84.3	-84.3	0.29 (1)	4.10
F- G	-2400 / 0	-84.3	-84.3	0.22 (1)	5.08
H- G	-1734 / 0	0.0	0.0	0.40 (1)	6.28
M- B	-2544 / 0	0.0	0.0	0.18 (1)	6.45
M- P	0 / 0	-28.0	-28.0	0.17 (1)	10.00
P- Q	0 / 0	-28.0	-28.0	0.17 (1)	10.00
Q- L	0 / 0	-28.0	-28.0	0.17 (1)	10.00
L- R	0 / 2545	-28.0	-28.0	0.53 (1)	10.00
R- S	0 / 2548	-28.0	-28.0	0.53 (1)	10.00
S- T	0 / 2548	-28.0	-28.0	0.53 (1)	10.00
T- K	0 / 2548	-28.0	-28.0	0.53 (1)	10.00
K- J	0 / 2400	-28.0	-28.0	0.32 (1)	10.00
J- I	0 / 2400	-28.0	-28.0	0.32 (1)	10.00
I- H	0 / 0	-28.0	-28.0	0.07 (2)	10.00

WEBS

MEMB. FR-TO	MAX. FACTORED FORCE (LBS)	MAX CSI (LC)
L- C	0 / 366	0.06 (3)
C- K	0 / 1587	0.28 (1)
K- D	-578 / 0	0.10 (1)
K- F	0 / 1780	0.31 (1)
I- F	-1485 / 0	0.25 (1)
I- G	0 / 2847	0.50 (1)
B- L	0 / 2602	0.46 (1)

FACTORED CONCENTRATED LOADS (LBS)

JT	LOC.	LC1	MAX-	MAX+	FACE	DIR.	TYPE
C	4-0-11	-23	-25	—	FRONT	VERT	DEAD
C	4-0-11	-222	-222	—	FRONT	VERT	SNOW
N	5-0-12	-101	-101	—	BACK	VERT	TOTAL
O	7-0-12	-101	-101	—	BACK	VERT	TOTAL
P	1-0-12	-40	-70	—	BACK	VERT	TOTAL
Q	3-0-12	-40	-70	—	BACK	VERT	TOTAL
R	5-0-12	-40	-70	—	BACK	VERT	TOTAL
S	7-0-12	-40	-70	—	BACK	VERT	TOTAL
T	8-4-8	-1278	-1278	—	BACK	VERT	TOTAL

LICENSED PROFESSIONAL ENGINEER
S. KATSOULAKOS
PROVINCE OF ONTARIO

DWG NO. TAM 5100 -18
STRUCTURAL COMPONENT ONLY

DESIGN CRITERIA

*** SPECIAL LOADS ANALYSIS ***
GEOMETRY AND/OR BASIC LOADS CHANGED BY USER.
LOADS WERE DERIVED FROM USER INPUT
NO FURTHER MODIFICATIONS WERE MADE

SPECIFIED LOADS:

TOP CH.	LL	=	25.6	PSF
	DL	=	3.0	PSF
BOT CH.	LL	=	10.5	PSF
	DL	=	7.0	PSF
TOTAL LOAD		=	46.1	PSF

SPACING = 24.0 IN. C/C

LOADING IN FLAT SECTION BASED ON A SLOPE OF 6.00/12

*** NON STANDARD GIRDER ***
ADDT'L USER-DEFINED LOADS APPLIED TO ALL LOAD CASES.

THIS TRUSS IS DESIGNED FOR RESIDENTIAL OR SMALL BUILDING REQUIREMENTS OF PART 9, NBCC 2010

THIS DESIGN COMPLIES WITH:
- PART 9 OF OBC 2012 , BCBC 2012 , ABC 2014
- CSA 086-09
- TPIC 2011

(55 % OF 31.3 P.S.F. G.S.L. PLUS 8.4 P.S.F. RAIN LOAD) EQUALS 25.6 P.S.F. SPECIFIED ROOF LIVE LOAD

ALLOWABLE DEFL.(LL)= L/360 (0.70")
CALCULATED VERT. DEFL.(LL) = L/ 999 (0.14")
ALLOWABLE DEFL.(TL)= L/360 (0.70")
CALCULATED VERT. DEFL.(TL) = L/ 999 (0.22")

CSI: TC=0.42/1.00 (C-D:1) , BC=0.53/1.00 (K-L:1) , WB=0.50/1.00 (G-I:1) , SSI=0.71/1.00 (K-L:1)

DOL LUMBER=1.00 NAIL=1.00 LS BEND=1.00 COMP=1.00 SHEAR=1.00 TENS= 1.00

COMPANION LIVE LOAD FACTOR = 0.50

TRUSS PLATE MANUFACTURER IS NOT RESPONSIBLE FOR QUALITY CONTROL IN THE TRUSS MANUFACTURING PLANT .

NAIL VALUES

PLATE	GRIP(DRY) (PSI) MAX	MIN	SHEAR (PLI) MAX	MIN	SECTION (PLI) MAX	MIN
MT20	618	354	1667	822	2284	1656

PLATE PLACEMENT TOL. = 0.250 Inches

PLATE ROTATION TOL. = 5.0 Deg.

JSI GRIP= 0.88 (L) (INPUT = 0.90)
JSI METAL= 0.64 (L) (INPUT = 1.00)

JOB NAME	TRUSS NAME	QUANTITY	PLY	JOB DESC. 43954	DRWG NO.
286185	T2	2	1	TRUSS DESC.	

Version 8.200 S Dec 12 2017 MiTek Industries, Inc. Tue Jan 23 08:32:12 2018 Page 1

Tamarack Roof Truss, Burlington

ID:LjPBf7XlyxdQBIYCH4AXRGyehXO-Ag7vJaI?3fUXHrbZ4UxZvU0Ixu8AUGufuzzqmczsY0X

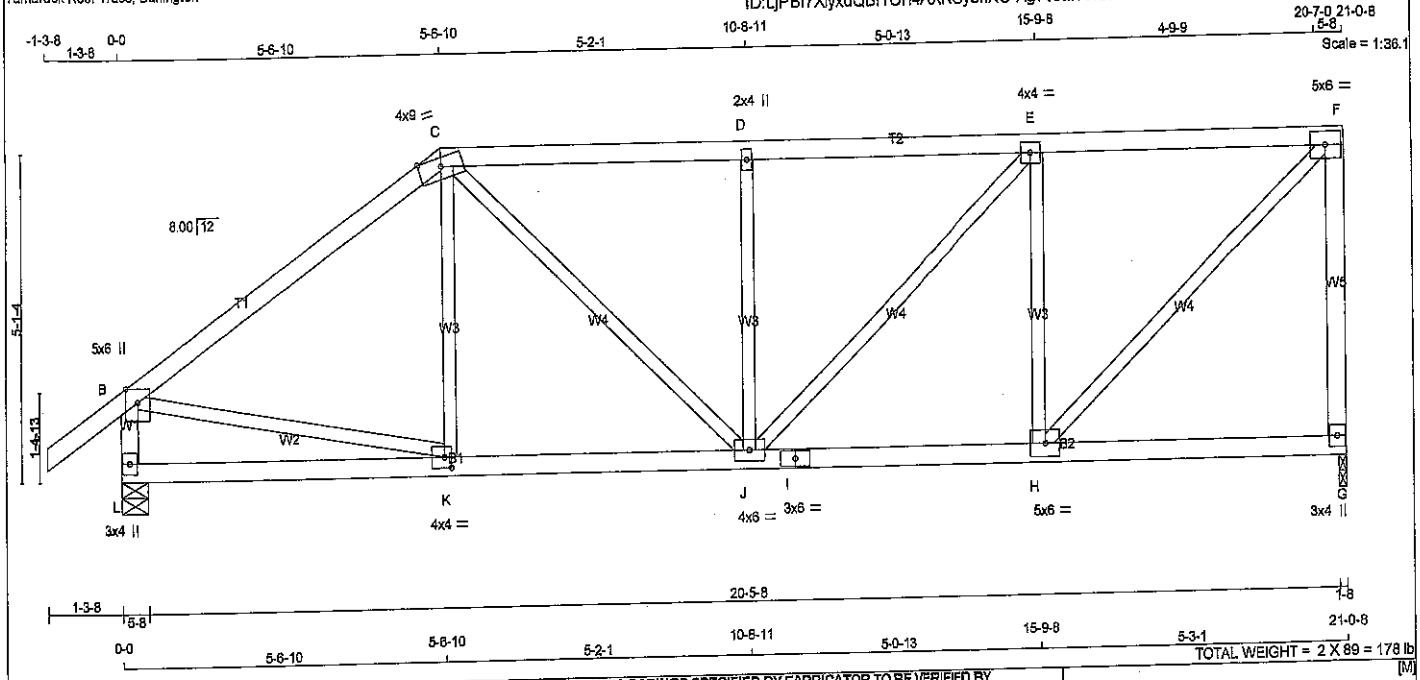

TOTAL WEIGHT = 2 X 89 = 178 lb [M]

LUMBER

N. L. G. A. RULES

CHORDS	SIZE		LUMBER	DESCR.
A - C	2x4	DRY	No.2	SPF
C - F	2x4	DRY	No.2	SPF
G - F	2x4	DRY	No.2	SPF
L - B	2x4	DRY	No.2	SPF
L - I	2x4	DRY	No.2	SPF
I - G	2x4	DRY	No.2	SPF
ALL WEBS EXCEPT	2x3	DRY	No.2	SPF

DRY: SEASONED LUMBER.

PLATES (table is in inches)

JT	TYPE	PLATES	W	LEN	Y	X
B	TMWW+p	MT20	5.0	6.0	Edge	
C	TTWW-m	MT20	4.0	9.0	Edge	
D	TMW+w	MT20	2.0	4.0		
E	TMWW-t	MT20	4.0	4.0		
F	TMWW-t	MT20	5.0	6.0		
G	BMV1+p	MT20	3.0	4.0		
H	BMWW-t	MT20	5.0	6.0		
I	BS-t	MT20	3.0	6.0		
J	BMWWW-t	MT20	4.0	6.0		
K	BMWW-t	MT20	4.0	4.0	2.00	1.50
L	BMV1+p	MT20	3.0	4.0		

Edge - INDICATES REFERENCE CORNER OF PLATE TOUCHES EDGE OF CHORD.

DIMENSIONS, SUPPORTS AND LOADINGS SPECIFIED BY FABRICATOR TO BE VERIFIED BY BUILDING DESIGNER

BEARINGS

JT	FACTORED GROSS REACTION VERT	HORZ	MAXIMUM FACTORED GROSS REACTION DOWN	HORZ	UPLIFT	INPUT BRG IN-SX	REQRD BRG IN-SX
G	1181	0	1181	0	0	1-8	1-8
L	1297	0	1297	0	0	5-8	5-8

UNFACTORED REACTIONS

JT	1ST LCASE COMBINED	MAX/MIN. COMPONENT REACTIONS SNOW	LIVE	PERM.LIVE	WIND	DEAD	SOIL
G	970	538 / 0	221 / 0	0 / 0	0 / 0	210 / 0	0 / 0
L	1048	609 / 0	221 / 0	0 / 0	0 / 0	219 / 0	0 / 0

BEARING MATERIAL TO BE SPF NO.2 OR BETTER AT JOINT(S) G, L

BRACING

TOP CHORD TO BE SHEATHED OR MAX. PURLIN SPACING = 5.08 FT.
MAX. UNBRACED BOTTOM CHORD LENGTH = 10.00 FT OR RIGID CEILING DIRECTLY APPLIED.

ALL PITCH BREAKS AND PERIMETER CORNER JOINTS MUST BE LATERALLY RESTRAINED.

LOADING

TOTAL LOAD CASES: (4)

CHORDS

MEMB. FR-TO	MAX. FACTORED FORCE (LBS)	FACTORED VERT. LOAD LC1 (PLF) FROM	TO	MAX CSI (LC)	MAX. UNBRAC LENGTH
A- B	0 / 32	-84.3	-84.3	0.11 (1)	10.00
B- C	-1235 / 0	-84.3	-84.3	0.52 (1)	5.08
C- D	-1341 / 0	-84.3	-84.3	0.33 (1)	5.20
D- E	-1341 / 0	-84.3	-84.3	0.34 (1)	5.18
E- F	-1028 / 0	-84.3	-84.3	0.33 (1)	5.74
G- F	-1122 / 0	0.0	0.0	0.49 (1)	7.49
L- B	-1232 / 0	0.0	0.0	0.13 (1)	7.23
L- K	0 / 0	-28.0	-28.0	0.21 (3)	10.00
K- J	0 / 1026	-28.0	-28.0	0.33 (2)	10.00
J- I	0 / 1028	-28.0	-28.0	0.31 (2)	10.00
I- H	0 / 1028	-28.0	-28.0	0.31 (2)	10.00
H- G	0 / 0	-28.0	-28.0	0.19 (3)	10.00

WEBS

MEMB. FR-TO	MAX. FACTORED FORCE (LBS)	MAX CSI (LC)
K- C	-21 / 202	0.05 (3)
B- K	0 / 1045	0.24 (1)
H- F	0 / 1394	0.31 (1)
C- J	0 / 430	0.10 (1)
H- E	-776 / 0	0.30 (1)
J- D	-486 / 0	0.18 (1)
J- E	0 / 432	0.10 (1)

DESIGN CRITERIA

SPECIFIED LOADS:

TOP CH.	LL	=	25.6	PSF
	DL	=	3.0	PSF
BOT CH.	LL	=	10.5	PSF
	DL	=	7.0	PSF
TOTAL LOAD		=	46.1	PSF

SPACING = 24.0 IN. C/C

LOADING IN FLAT SECTION BASED ON A SLOPE OF 8.00/12

THIS TRUSS IS DESIGNED FOR RESIDENTIAL OR SMALL BUILDING REQUIREMENTS OF PART 9, NBCC 2010

THIS DESIGN COMPLIES WITH:
- PART 9 OF OBC 2012 , BCBC 2012 , ABC 2014
- CSA 086-09
- TPIC 2011

(55 % OF 31.3 P.S.F. G.S.L. PLUS 8.4 P.S.F. RAIN LOAD) EQUALS 25.6 P.S.F. SPECIFIED ROOF LIVE LOAD

ALLOWABLE DEFL.(LL)= L/360 (0.70")
CALCULATED VERT. DEFL.(LL) = L/ 999 (0.05")
ALLOWABLE DEFL.(TL)= L/360 (0.70")
CALCULATED VERT. DEFL.(TL) = L/ 999 (0.09")

CSI: TC=0.52/1.00 (B-C:1) , BC=0.33/1.00 (J-K:2) , WB=0.31/1.00 (F-H:1) , SSI=0.21/1.00 (E-F:1)

DOL LUMBER=1.00 NAIL=1.00 LS BEND=1.10 COMP=1.10 SHEAR=1.10 TENS= 1.10

COMPANION LIVE LOAD FACTOR = 0.50

TRUSS PLATE MANUFACTURER IS NOT RESPONSIBLE FOR QUALITY CONTROL IN THE TRUSS MANUFACTURING PLANT .

NAIL VALUES

PLATE	GRIP(DRY) (PSI) MAX	MIN	SHEAR (PLI) MAX	MIN	SECTION (PLI) MAX	MIN
MT20	618	354	1667	822	2284	1656

PLATE PLACEMENT TOL. = 0.250 inches

PLATE ROTATION TOL. = 5.0 Deg.

JSI GRIP= 0.86 (K) (INPUT = 0.90)
JSI METAL= 0.38 (K) (INPUT = 1.00)

LICENSED PROFESSIONAL ENGINEER
S. KATSOULAKOS
PROVINCE OF ONTARIO

DWG NO. TAM 5101 -18
STRUCTURAL COMPONENT ONLY

JOB NAME	TRUSS NAME	QUANTITY	PLY	JOB DESC. 43954	DRWG NO.
286185	T3	2	1	TRUSS DESC.	

Version 8.200 S Dec 12 2017 MiTek Industries, Inc. Tue Jan 23 08:32:12 2018 Page 1

Tamarack Roof Truss, Burlington

ID:LjPBf7XlyxdQBiYCH4AXRGyehXO-Ag7vJaI?3fUXHrbZ4UxZvU0Eku7RUCKfuzzqmczsY0X

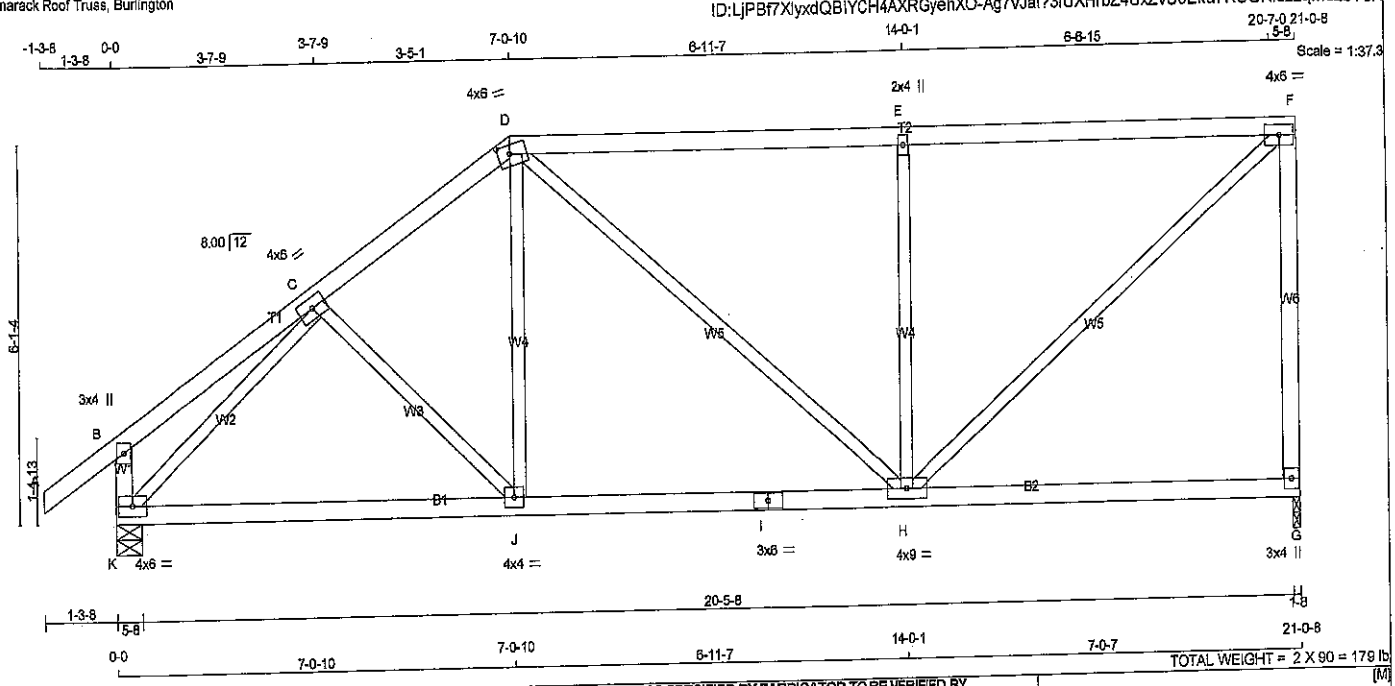

LUMBER

N. L. G. A. RULES

CHORDS	SIZE		LUMBER	DESCR.
A - D	2x4	DRY	No.2	SPF
D - F	2x4	DRY	No.2	SPF
G - F	2x4	DRY	No.2	SPF
K - B	2x4	DRY	No.2	SPF
K - I	2x4	DRY	No.2	SPF
I - G	2x4	DRY	No.2	SPF
ALL WEBS EXCEPT	2x3	DRY	No.2	SPF

DRY: SEASONED LUMBER.

PLATES (table is in inches)

JT	TYPE	PLATES	W	LEN	Y	X
B	TMV+p	MT20	3.0	4.0		
C	TMWW-t	MT20	4.0	6.0		
D	TTWW-m	MT20	4.0	6.0	1.75	2.50
E	TMW+w	MT20	2.0	4.0		
F	TMVW-t	MT20	4.0	6.0		
G	BMV1+p	MT20	3.0	4.0		
H	BMWWW-t	MT20	4.0	9.0		
I	BS-t	MT20	3.0	6.0		
J	BMWW-t	MT20	4.0	4.0		
K	BMVW1-t	MT20	4.0	6.0		

DIMENSIONS, SUPPORTS AND LOADINGS SPECIFIED BY FABRICATOR TO BE VERIFIED BY BUILDING DESIGNER

BEARINGS

JT	FACTORED GROSS REACTION VERT	HORZ	MAXIMUM FACTORED GROSS REACTION DOWN	HORZ	UPLIFT	INPUT BRG IN-SX	REQRD BRG IN-SX
G	1181	0	1181	0	0	1-8	1-8
K	1297	0	1297	0	0	5-8	5-8

UNFACTORED REACTIONS

JT	1ST LCASE COMBINED	MAX./MIN. COMPONENT REACTIONS SNOW	LIVE	PERM.LIVE	WIND	DEAD	SOIL
G	970	538 / 0	221 / 0	0 / 0	0 / 0	210 / 0	0 / 0
K	1048	609 / 0	221 / 0	0 / 0	0 / 0	219 / 0	0 / 0

BEARING MATERIAL TO BE SPF NO.2 OR BETTER AT JOINT(S) G, K

BRACING

TOP CHORD TO BE SHEATHED OR MAX. PURLIN SPACING = 4.74 FT.
MAX. UNBRACED BOTTOM CHORD LENGTH = 10.00 FT OR RIGID CEILING DIRECTLY APPLIED.

ALL PITCH BREAKS AND PERIMETER CORNER JOINTS MUST BE LATERALLY RESTRAINED.

LOADING

TOTAL LOAD CASES: (4)

CHORDS

MEMB. FR-TO	MAX. FACTORED FORCE (LBS)	FACTORED VERT. LOAD LC1 (PLF) FROM	TO	MAX CSI (LC)	MAX. UNBRAC LENGTH
A- B	0 / 32	-84.3	-84.3	0.11 (1)	10.00
B- C	0 / 18	-84.3	-84.3	0.16 (1)	10.00
C- D	-1192 / 0	-84.3	-84.3	0.18 (1)	5.65
D- E	-1059 / 0	-84.3	-84.3	0.78 (1)	4.74
E- F	-1059 / 0	-84.3	-84.3	0.78 (1)	4.74
G- F	-1100 / 0	0.0	0.0	0.79 (1)	7.54
K- B	-232 / 0	0.0	0.0	0.02 (1)	7.61
K- J	0 / 1010	-28.0	-28.0	0.44 (2)	10.00
J- I	0 / 980	-28.0	-28.0	0.44 (2)	10.00
I- H	0 / 980	-28.0	-28.0	0.44 (2)	10.00
H- G	0 / 0	-28.0	-28.0	0.31 (3)	10.00

WEBS

MEMB. FR-TO	MAX. FACTORED FORCE (LBS)	MAX CSI (LC)
C- J	-47 / 93	0.02 (3)
J- D	0 / 336	0.08 (2)
K- C	-1409 / 0	0.54 (1)
H- F	0 / 1374	0.31 (1)
D- H	0 / 103	0.02 (1)
H- E	-731 / 0	0.43 (1)

DESIGN CRITERIA

SPECIFIED LOADS:

TOP CH.	LL	=	25.6	PSF
	DL	=	3.0	PSF
BOT CH.	LL	=	10.5	PSF
	DL	=	7.0	PSF
TOTAL LOAD		=	46.1	PSF

SPACING = 24.0 IN. C/C

LOADING IN FLAT SECTION BASED ON A SLOPE OF 6.00/12

THIS TRUSS IS DESIGNED FOR RESIDENTIAL OR SMALL BUILDING REQUIREMENTS OF PART 9, NBCC 2010

THIS DESIGN COMPLIES WITH:
- PART 9 OF OBC 2012 , BCBC 2012 , ABC 2014
- CSA 086-09
- TPIC 2011

(55 % OF 31.3 P.S.F. G.S.L. PLUS 8.4 P.S.F. RAIN LOAD) EQUALS 25.6 P.S.F. SPECIFIED ROOF LIVE LOAD

ALLOWABLE DEFL.(LL)= L/360 (0.70")
CALCULATED VERT. DEFL.(LL) = L/ 999 (0.11")
ALLOWABLE DEFL.(TL)= L/360 (0.70")
CALCULATED VERT. DEFL.(TL) = L/ 999 (0.18")

CSI: TC=0.79/1.00 (F-G:1) , BC=0.44/1.00 (H-J:2) , WB=0.54/1.00 (C-K:1) , SSI=0.29/1.00 (E-F:1)

DOL LUMBER=1.00 NAIL=1.00 LS BEND=1.10 COMP=1.10 SHEAR=1.10 TENS= 1.10

COMPANION LIVE LOAD FACTOR = 0.50

TRUSS PLATE MANUFACTURER IS NOT RESPONSIBLE FOR QUALITY CONTROL IN THE TRUSS MANUFACTURING PLANT .

NAIL VALUES

PLATE	GRIP(DRY) (PSI) MAX	MIN	SHEAR (PLI) MAX	MIN	SECTION (PLI) MAX	MIN
MT20	618	354	1667	822	2284	1658

PLATE PLACEMENT TOL. = 0.250 inches

PLATE ROTATION TOL. = 5.0 Deg.

JSI GRIP= 0.87 (F) (INPUT = 0.90)
JSI METAL= 0.34 (C) (INPUT = 1.00)

LICENSED PROFESSIONAL ENGINEER
S. KATSOULAKOS
PROVINCE OF ONTARIO

DWG NO. TAM 5/02-18
STRUCTURAL
COMPONENT ONLY

JOB NAME	TRUSS NAME	QUANTITY	PLY	JOB DESC. 43954	DRWG NO.
286185	T4	2	1	TRUSS DESC.	

Version 8.200 S Dec 12 2017 MiTek Industries, Inc. Tue Jan 23 08:32:12 2018 Page 1

Tamarack Roof Truss, Burlington

ID:LjPBf7XlyxdQBIYCH4AXRGyehXO-Ag7vJaI?3fUXHrbZ4UxZvU0Huu5iU8afuzzqmczsY0X

Scale = 1:41.7

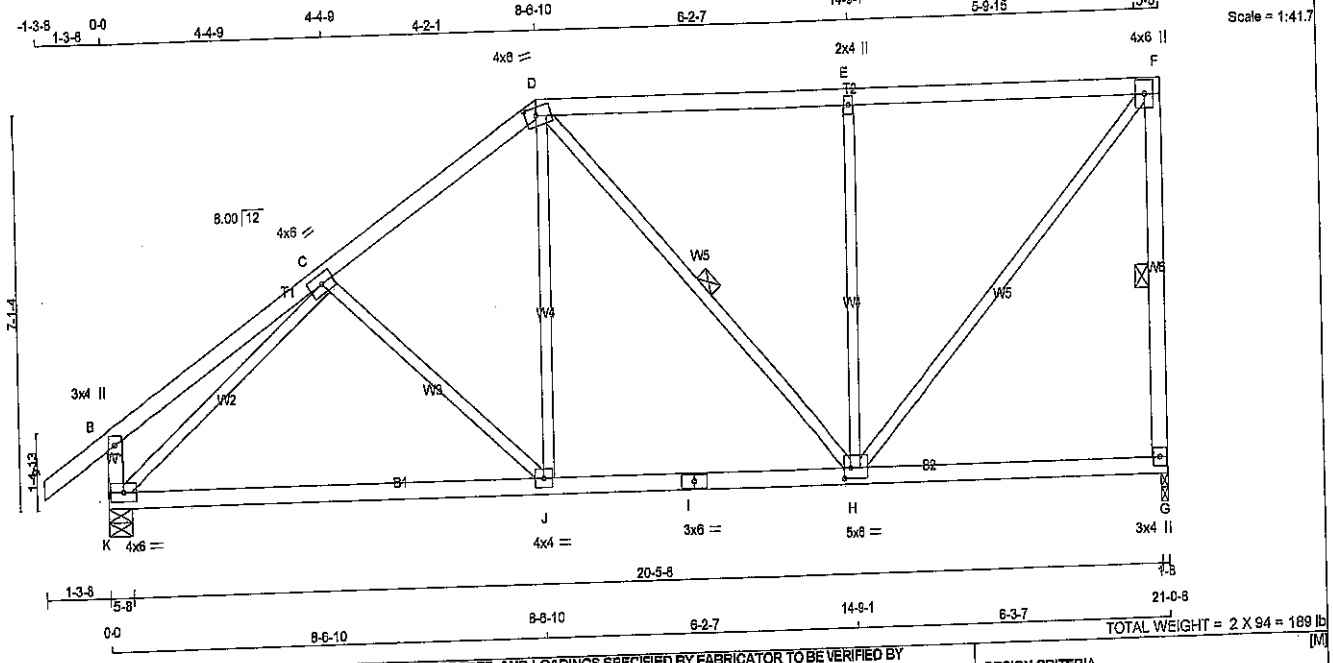

TOTAL WEIGHT = 2 X 94 = 189 lb [M]

LUMBER

N. L. G. A. RULES

CHORDS	SIZE		LUMBER	DESCR.
A - D	2x4	DRY	No.2	SPF
D - F	2x4	DRY	No.2	SPF
G - F	2x4	DRY	No.2	SPF
K - B	2x4	DRY	No.2	SPF
K - I	2x4	DRY	No.2	SPF
I - G	2x4	DRY	No.2	SPF
ALL WEBS EXCEPT	2x3	DRY	No.2	SPF

DRY: SEASONED LUMBER.

PLATES (table is in inches)

JT	TYPE	PLATES	W	LEN	Y	X
B	TMV+p	MT20	3.0	4.0		
C	TMWW-t	MT20	4.0	6.0		
D	TTWW-m	MT20	4.0	6.0	1.75	2.50
E	TMW+w	MT20	2.0	4.0		
F	TMVW+p	MT20	4.0	6.0		
G	BMV1+p	MT20	3.0	4.0		
H	BMWWW-t	MT20	5.0	6.0	2.25	1.50
I	BS-t	MT20	3.0	6.0		
J	BMWW-t	MT20	4.0	4.0		
K	BMVW1-t	MT20	4.0	6.0		

DIMENSIONS, SUPPORTS AND LOADINGS SPECIFIED BY FABRICATOR TO BE VERIFIED BY BUILDING DESIGNER

BEARINGS

JT	FACTORED GROSS REACTION VERT	HORZ	MAXIMUM FACTORED GROSS REACTION DOWN	HORZ	UPLIFT	INPUT BRG IN-SX	REQRD BRG IN-SX
G	1181	0	1181	0	0	1-8	1-8
K	1297	0	1297	0	0	5-8	5-8

UNFACTORED REACTIONS

JT	1ST LCASE COMBINED	MAX./MIN. COMPONENT REACTIONS SNOW	LIVE	PERM.LIVE	WIND	DEAD	SOIL
G	970	536 / 0	221 / 0	0 / 0	0 / 0	210 / 0	0 / 0
K	1048	609 / 0	221 / 0	0 / 0	0 / 0	219 / 0	0 / 0

BEARING MATERIAL TO BE SPF NO.2 OR BETTER AT JOINT(S) G, K

BRACING

TOP CHORD TO BE SHEATHED OR MAX. PURLIN SPACING = 5.67 FT.
MAX. UNBRACED BOTTOM CHORD LENGTH = 10.00 FT OR RIGID CEILING DIRECTLY APPLIED.

ALL PITCH BREAKS AND PERIMETER CORNER JOINTS MUST BE LATERALLY RESTRAINED.

1 LATERAL BRACE(S) AT 1/ 2 LENGTH OF F-G, D-H.

END VERTICAL(S) MUST BE SHEATHED OR HAVE BRACES AS INDICATED IN THE MAX. UNBRACED LENGTH COLUMN OF THE TABLE BELOW

LOADING

TOTAL LOAD CASES: (4)

CHORDS

MEMB. FR-TO	MAX. FACTORED FORCE (LBS)	FACTORED VERT. LOAD LC1 (PLF) FROM	TO	MAX CSI (LC)	MAX. UNBRAC LENGTH
A- B	0 / 32	-84.3	-84.3	0.11 (1)	10.00
B- C	0 / 23	-84.3	-84.3	0.24 (1)	10.00
C- D	-1112 / 0	-84.3	-84.3	0.27 (1)	5.67
D- E	-834 / 0	-84.3	-84.3	0.59 (1)	5.68
E- F	-835 / 0	-84.3	-84.3	0.59 (1)	5.68
G- F	-1106 / 0	0.0	0.0	0.25 (1)	6.02
K- B	-254 / 0	0.0	0.0	0.03 (1)	7.81
K- J	0 / 1025	-28.0	-28.0	0.55 (2)	10.00
J- I	0 / 910	-28.0	-28.0	0.55 (2)	10.00
I- H	0 / 910	-28.0	-28.0	0.55 (2)	10.00
H- G	0 / 0	-28.0	-28.0	0.24 (2)	10.00

WEBS

MEMB. FR-TO	MAX. FACTORED FORCE (LBS)	MAX CSI (LC)
C- J	-160 / 63	0.10 (1)
J- D	0 / 428	0.10 (2)
K- C	-1392 / 0	0.78 (1)
H- F	0 / 1231	0.28 (1)
D- H	-137 / 0	0.08 (2)
H- E	-652 / 0	0.57 (1)

LICENSED PROFESSIONAL ENGINEER
S. KATSOULAKOS
PROVINCE OF ONTARIO

DESIGN CRITERIA

SPECIFIED LOADS:

TOP CH.	LL	=	25.6	PSF
	DL	=	3.0	PSF
BOT CH.	LL	=	10.5	PSF
	DL	=	7.0	PSF
TOTAL LOAD		=	45.1	PSF

SPACING = 24.0 IN. C/C

LOADING IN FLAT SECTION BASED ON A SLOPE OF 6.00/12

THIS TRUSS IS DESIGNED FOR RESIDENTIAL OR SMALL BUILDING REQUIREMENTS OF PART 9, NBCC 2010

THIS DESIGN COMPLIES WITH:
- PART 9 OF OBC 2012 , BCBC 2012 , ABC 2014
- CSA 086-09
- TPIC 2011

(55 % OF 31.3 P.S.F. G.S.L. PLUS 8.4 P.S.F. RAIN LOAD) EQUALS 25.6 P.S.F. SPECIFIED ROOF LIVE LOAD

ALLOWABLE DEFL.(LL)= L/360 (0.70")
CALCULATED VERT. DEFL.(LL) = L/ 999 (0.22")
ALLOWABLE DEFL.(TL)= L/360 (0.70")
CALCULATED VERT. DEFL.(TL) = L/ 678 (0.37")

CSI: TC=0.59/1.00 (E-F:1) , BC=0.55/1.00 (H-J:2) , WB=0.78/1.00 (C-K:1) , SSI=0.26/1.00 (E-F:1)

DOL LUMBER=1.00 NAIL=1.00 LS BEND=1.10 COMP=1.10 SHEAR=1.10 TENS= 1.10

COMPANION LIVE LOAD FACTOR = 0.50

TRUSS PLATE MANUFACTURER IS NOT RESPONSIBLE FOR QUALITY CONTROL IN THE TRUSS MANUFACTURING PLANT .

NAIL VALUES

PLATE	GRIP(DRY) (PSI) MAX	MIN	SHEAR (PLI) MAX	MIN	SECTION (PLI) MAX	MIN
MT20	618	354	1667	822	2284	1656

PLATE PLACEMENT TOL. = 0.250 inches

PLATE ROTATION TOL. = 5.0 Deg.

JSI GRIP= 0.67 (H) (INPUT = 0.90)
JSI METAL= 0.33 (C) (INPUT = 1.00)

DWG NO. TAM 5/03 -18
STRUCTURAL COMPONENT ONLY

JOB NAME	TRUSS NAME	QUANTITY	PLY	JOB DESC. 43954	DRWG NO.
286185	T5	2	1	TRUSS DESC.	

Tamarack Roof Truss, Burlington

Version 8.200 S Dec 12 2017 MiTek Industries, Inc. Tue Jan 23 08:32:12 2018 Page 1
ID:LjPBf7XlyxdQBIYCH4AXRGyehXO-Ag7vJaI?3fUXHrbZ4UxZvU0KFu9cU9SfuzzqmczsY0X

Scale = 1:46.5

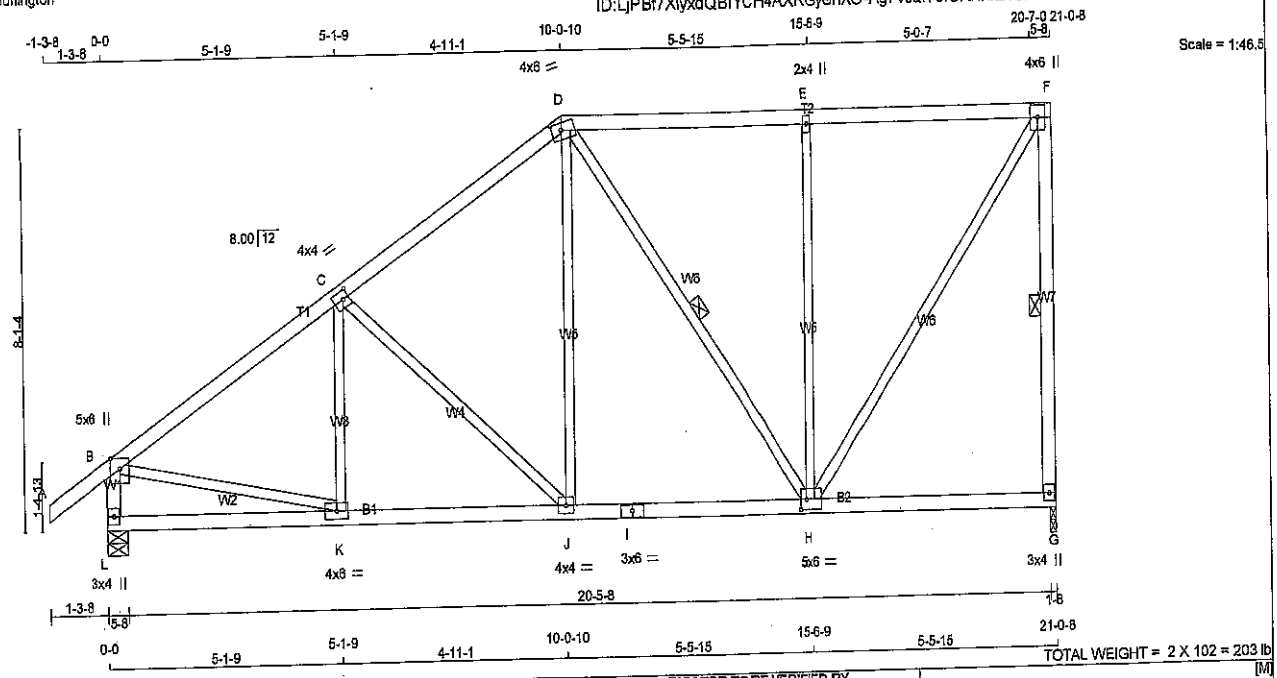

TOTAL WEIGHT = 2 X 102 = 203 lb [M]

LUMBER
N. L. G. A. RULES

CHORDS	SIZE		LUMBER	DESCR.
A - D	2x4	DRY	No.2	SPF
D - F	2x4	DRY	No.2	SPF
G - F	2x4	DRY	No.2	SPF
L - B	2x4	DRY	No.2	SPF
L - I	2x4	DRY	No.2	SPF
I - G	2x4	DRY	No.2	SPF
ALL WEBS EXCEPT	2x3	DRY	No.2	SPF

DRY: SEASONED LUMBER.

PLATES (table is in inches)

JT	TYPE	PLATES	W	LEN	Y	X
B	TMVW+p	MT20	5.0	6.0	Edge	
C	TMWW-t	MT20	4.0	4.0	2.00	1.50
D	TTWW-m	MT20	4.0	6.0	1.75	2.50
E	TMW+w	MT20	2.0	4.0		
F	TMVW+p	MT20	4.0	6.0		
G	BMV1+p	MT20	3.0	4.0		
H	BMWWW-t	MT20	5.0	6.0	2.50	1.50
I	BS-t	MT20	3.0	6.0		
J	BMWW-t	MT20	4.0	4.0		
K	BMWW-t	MT20	4.0	6.0		
L	BMV1+p	MT20	3.0	4.0		

Edge - INDICATES REFERENCE CORNER OF PLATE TOUCHES EDGE OF CHORD.

DIMENSIONS, SUPPORTS AND LOADINGS SPECIFIED BY FABRICATOR TO BE VERIFIED BY BUILDING DESIGNER

BEARINGS

JT	FACTORED GROSS REACTION VERT	HORZ	MAXIMUM FACTORED GROSS REACTION DOWN	HORZ	UPLIFT	INPUT BRG IN-SX	REQRD BRG IN-SX
G	1181	0	1181	0	0	1-8	1-8
L	1297	0	1297	0	0	5-8	5-8

UNFACTORED REACTIONS

JT	1ST LCASE COMBINED	MAX /MIN COMPONENT REACTIONS SNOW	LIVE	PERM.LIVE	WIND	DEAD	SOIL
G	970	538 / 0	221 / 0	0 / 0	0 / 0	210 / 0	0 / 0
L	1048	809 / 0	221 / 0	0 / 0	0 / 0	219 / 0	0 / 0

BEARING MATERIAL TO BE SPF NO.2 OR BETTER AT JOINT(S) G, L

BRACING
TOP CHORD TO BE SHEATHED OR MAX. PURLIN SPACING = 5.19 FT.
MAX. UNBRACED BOTTOM CHORD LENGTH = 10.00 FT OR RIGID CEILING DIRECTLY APPLIED.

ALL PITCH BREAKS AND PERIMETER CORNER JOINTS MUST BE LATERALLY RESTRAINED.

1 LATERAL BRACE(S) AT 1/ 2 LENGTH OF F-G, D-H.

END VERTICAL(S) MUST BE SHEATHED OR HAVE BRACES AS INDICATED IN THE MAX. UNBRACED LENGTH COLUMN OF THE TABLE BELOW

LOADING
TOTAL LOAD CASES: (4)

CHORDS

MEMB. FR-TO	MAX. FACTORED FORCE (LBS)	FACTORED VERT. LOAD (PLF) FROM	TO	LC1 CSI (LC)	MAX UNBRAC LENGTH
A- B	0 / 32	-84.3	-84.3	0.11 (1)	10.00
B- C	-1281 / 0	-84.3	-84.3	0.41 (1)	5.19
C- D	-988 / 0	-84.3	-84.3	0.39 (1)	5.74
D- E	-666 / 0	-84.3	-84.3	0.44 (1)	6.25
E- F	-666 / 0	-84.3	-84.3	0.44 (1)	6.25
G- F	-1118 / 0	0.0	0.0	0.33 (1)	5.99
L- B	-1237 / 0	0.0	0.0	0.13 (1)	7.22
L- K	0 / 0	-28.0	-28.0	0.17 (3)	10.00
K- J	0 / 1089	-28.0	-28.0	0.30 (2)	10.00
J- I	0 / 803	-28.0	-28.0	0.30 (2)	10.00
I- H	0 / 803	-28.0	-28.0	0.30 (2)	10.00
H- G	0 / 0	-28.0	-28.0	0.21 (3)	10.00

WEBS

MEMB. FR-TO	MAX. FACTORED FORCE (LBS)	MAX CSI (LC)
K- C	-72 / 167	0.04 (3)
C- J	-391 / 0	0.33 (1)
J- D	0 / 418	0.09 (2)
D- H	-238 / 0	0.15 (1)
H- E	-573 / 0	0.73 (1)
H- F	0 / 1153	0.28 (1)
B- K	0 / 1113	0.25 (1)

DESIGN CRITERIA

SPECIFIED LOADS:

TOP CH.	LL	=	25.6	PSF
	DL	=	3.0	PSF
BOT CH.	LL	=	10.5	PSF
	DL	=	7.0	PSF
TOTAL LOAD		=	46.1	PSF

SPACING = 24.0 IN. C/C

LOADING IN FLAT SECTION BASED ON A SLOPE OF 6.00/12

THIS TRUSS IS DESIGNED FOR RESIDENTIAL OR SMALL BUILDING REQUIREMENTS OF PART 9, NBCC 2010

THIS DESIGN COMPLIES WITH:
- PART 9 OF OBC 2012 , BCBC 2012 , ABC 2014
- CSA 086-09
- TPIC 2011

(55 % OF 31.3 P.S.F. G.S.L. PLUS 8.4 P.S.F. RAIN LOAD) EQUALS 25.6 P.S.F. SPECIFIED ROOF LIVE LOAD

ALLOWABLE DEFL.(LL)= L/360 (0.70")
CALCULATED VERT. DEFL.(LL) = L/ 999 (0.04")
ALLOWABLE DEFL.(TL)= L/360 (0.70")
CALCULATED VERT. DEFL.(TL) = L/ 999 (0.07")

CSI: TC=0.44/1.00 (E-F:1) , BC=0.30/1.00 (H-J:2) , WB=0.73/1.00 (E-H:1) , SSI=0.23/1.00 (E-F:1)

DOL LUMBER=1.00 NAIL=1.00 LS BEND=1.10 COMP=1.10 SHEAR=1.10 TENS= 1.10

COMPANION LIVE LOAD FACTOR = 0.50

TRUSS PLATE MANUFACTURER IS NOT RESPONSIBLE FOR QUALITY CONTROL IN THE TRUSS MANUFACTURING PLANT .

NAIL VALUES

PLATE	GRIP(DRY) (PSI) MAX	MIN	SHEAR (PLI) MAX	MIN	SECTION (PLI) MAX	MIN
MT20	618	354	1667	822	2284	1656

PLATE PLACEMENT TOL. = 0.250 inches

PLATE ROTATION TOL. = 5.0 Deg.

JSI GRIP= 0.89 (H) (INPUT = 0.90)
JSI METAL= 0.27 (K) (INPUT = 1.00)

LICENSED PROFESSIONAL ENGINEER
S. KATSOULAKOS
PROVINCE OF ONTARIO

DWG NO. TAM 5104 -18
STRUCTURAL
COMPONENT ONLY

JOB NAME	TRUSS NAME	QUANTITY	PLY	JOB DESC. 43954	DRWG NO.
286185	T6	2	1	TRUSS DESC.	

Tamarack Roof Truss, Burlington

Version 8.200 S Dec 12 2017 MiTek Industries, Inc. Tue Jan 23 08:32:13 2018 Page 1
!D:LjPBf7XlyxdQB!YCH4AXRGyehXO-eshHXwJeqzcOu?AleCSoRiZV6!UuDdcp7djOJ2zsY0W

Scale = 1:52.1

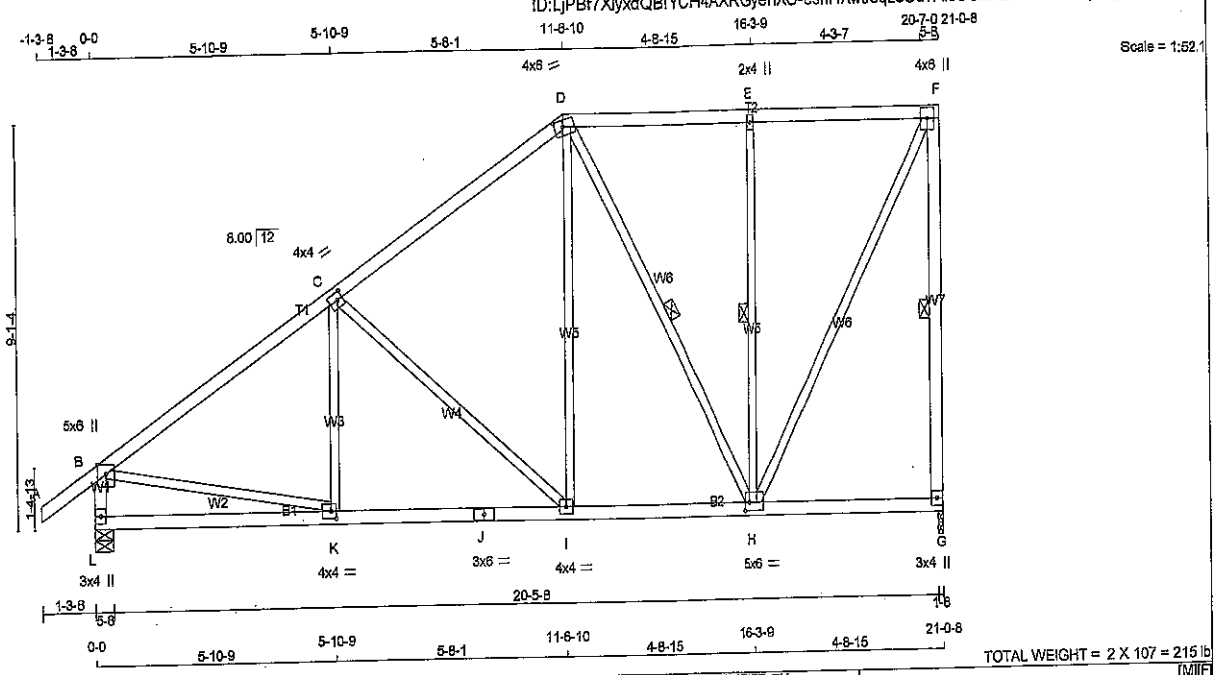

TOTAL WEIGHT = 2 X 107 = 215 lb

[M][F]

LUMBER
N. L. G. A. RULES

CHORDS	SIZE		LUMBER	DESCR.
A - D	2x4	DRY	No.2	SPF
D - F	2x4	DRY	No.2	SPF
G - F	2x4	DRY	No.2	SPF
L - B	2x4	DRY	No.2	SPF
L - J	2x4	DRY	No.2	SPF
J - G	2x4	DRY	No.2	SPF
ALL WEBS EXCEPT	2x3	DRY	No.2	SPF

DRY: SEASONED LUMBER.

PLATES (table is in inches)

JT	TYPE	PLATES	W	LEN	Y	X
B	TMWW+p	MT20	5.0	6.0	Edge	
C	TMWW-t	MT20	4.0	4.0	2.00	1.50
D	TTWW-m	MT20	4.0	6.0	1.75	2.50
E	TMW+w	MT20	2.0	4.0		
F	TMWW+p	MT20	4.0	6.0		
G	BMV1+p	MT20	3.0	4.0		
H	BMWWW-t	MT20	5.0	6.0	2.25	1.50
I	BMWW-t	MT20	4.0	4.0		
J	BS-t	MT20	3.0	6.0		
K	BMWW-t	MT20	4.0	4.0	2.00	1.50
L	BMV1+p	MT20	3.0	4.0		

Edge - INDICATES REFERENCE CORNER OF PLATE TOUCHES EDGE OF CHORD.

DIMENSIONS, SUPPORTS AND LOADINGS SPECIFIED BY FABRICATOR TO BE VERIFIED BY BUILDING DESIGNER

BEARINGS

JT	FACTORED GROSS REACTION VERT	HORZ	MAXIMUM FACTORED GROSS REACTION DOWN	HORZ	UPLIFT	INPUT BRG IN-SX	REQRD BRG IN-SX
G	1181	0	1181	0	0	1-8	1-8
L	1297	0	1297	0	0	5-8	5-8

UNFACTORED REACTIONS

JT	1ST LCASE COMBINED	MAX./MIN. COMPONENT REACTIONS SNOW	LIVE	PERM.LIVE	WIND	DEAD	SOIL
G	970	538 / 0	221 / 0	0 / 0	0 / 0	210 / 0	0 / 0
L	1048	609 / 0	221 / 0	0 / 0	0 / 0	219 / 0	0 / 0

BEARING MATERIAL TO BE SPF NO.2 OR BETTER AT JOINT(S) G, L

BRACING
TOP CHORD TO BE SHEATHED OR MAX. PURLIN SPACING = 5.24 FT.
MAX. UNBRACED BOTTOM CHORD LENGTH = 10.00 FT OR RIGID CEILING DIRECTLY APPLIED.

ALL PITCH BREAKS AND PERIMETER CORNER JOINTS MUST BE LATERALLY RESTRAINED.

1 LATERAL BRACE(S) AT 1/ 2 LENGTH OF F-G, D-H, E-H.

END VERTICAL(S) MUST BE SHEATHED OR HAVE BRACES AS INDICATED IN THE MAX. UNBRACED LENGTH COLUMN OF THE TABLE BELOW

LOADING
TOTAL LOAD CASES: (4)

CHORDS

MEMB. FR-TO	MAX. FACTORED FORCE (LBS)	FACTORED VERT. LOAD (PLF) FROM	TO	LC1	MAX CSI (LC)	MAX. UNBRAC LENGTH
A- B	0 / 32	-84.3	-84.3	0.11 (1)	10.00	
B- C	-1275 / 0	-84.3	-84.3	0.40 (1)	5.24	
C- D	-876 / 0	-84.3	-84.3	0.37 (1)	6.05	
D- E	-527 / 0	-84.3	-84.3	0.24 (1)	6.25	
E- F	-527 / 0	-84.3	-84.3	0.24 (1)	6.25	
G- F	-1126 / 0	0.0	0.0	0.43 (1)	5.98	
L- B	-1230 / 0	0.0	0.0	0.13 (1)	7.23	
L- K	0 / 0	-28.0	-28.0	0.24 (3)	10.00	
K- J	0 / 1087	-28.0	-28.0	0.37 (2)	10.00	
J- I	0 / 1087	-28.0	-28.0	0.37 (2)	10.00	
I- H	0 / 708	-28.0	-28.0	0.23 (2)	10.00	
H- G	0 / 0	-28.0	-28.0	0.15 (3)	10.00	

WEBS

MEMB. FR-TO	MAX. FACTORED FORCE (LBS)	MAX CSI (LC)
K- C	-14 / 231	0.05 (3)
C- I	-512 / 0	0.60 (1)
I- D	0 / 475	0.11 (2)
D- H	-379 / 0	0.27 (1)
H- E	-493 / 0	0.27 (1)
H- F	0 / 1105	0.25 (1)
B- K	0 / 1106	0.25 (1)

DESIGN CRITERIA

SPECIFIED LOADS:

TOP CH.	LL	=	25.6	PSF
	DL	=	3.0	PSF
BOT CH.	LL	=	10.5	PSF
	DL	=	7.0	PSF
TOTAL LOAD		=	46.1	PSF

SPACING = 24.0 IN. C/C

LOADING IN FLAT SECTION BASED ON A SLOPE OF 6.00/12

THIS TRUSS IS DESIGNED FOR RESIDENTIAL OR SMALL BUILDING REQUIREMENTS OF PART 9, NBCC 2010

THIS DESIGN COMPLIES WITH:
- PART 9 OF OBC 2012 , BCBC 2012 , ABC 2014
- CSA 086-09
- TPIC 2011

(55 % OF 31.3 P.S.F. G.S.L. PLUS 8.4 P.S.F. RAIN LOAD) EQUALS 25.6 P.S.F. SPECIFIED ROOF LIVE LOAD

ALLOWABLE DEFL.(LL)= L/360 (0.70")
CALCULATED VERT. DEFL.(LL) = L/ 999 (0.05")
ALLOWABLE DEFL.(TL)= L/360 (0.70")
CALCULATED VERT. DEFL.(TL) = L/ 999 (0.09")

CSI: TC=0.43/1.00 (F-G:1) , BC=0.37/1.00 (I-K:2) , WB=0.60/1.00 (C-I:1) , SSI=0.20/1.00 (B-C:1)

DOL LUMBER=1.00 NAIL=1.00 LS BEND=1.10 COMP=1.10 SHEAR=1.10 TENS= 1.10

COMPANION LIVE LOAD FACTOR = 0.50

TRUSS PLATE MANUFACTURER IS NOT RESPONSIBLE FOR QUALITY CONTROL IN THE TRUSS MANUFACTURING PLANT .

NAIL VALUES

PLATE	GRIP(DRY) (PSI) MAX	MIN	SHEAR (PLI) MAX	MIN	SECTION (PLI) MAX	MIN
MT20	618	354	1667	822	2284	1656

PLATE PLACEMENT TOL. = 0.250 inches

PLATE ROTATION TOL. = 5.0 Deg.

JSI GRIP= 0.90 (K) (INPUT = 0.90)
JSI METAL= 0.41 (K) (INPUT = 1.00)

LICENSED PROFESSIONAL ENGINEER
12446
S. KATSOULAKOS
PROVINCE OF ONTARIO

DWG NO. TAM 5/05 -18
STRUCTURAL COMPONENT ONLY

JOB NAME	TRUSS NAME	QUANTITY	PLY	JOB DESC. 43954	DRWG NO.
286185	T7	4	1	TRUSS DESC.	

Tamarack Roof Truss, Burlington

Version 8.200 S Dec 12 2017 MiTek Industries, Inc. Tue Jan 23 08:32:13 2018 Page 1
ID:LjPBf7XlyxdQBIYCH4AXRGyehXO-esfHXwJeqzcOu?AleCSoRiZThISgDdNp7djOJ2zsY0W

Scale = 1:57.5

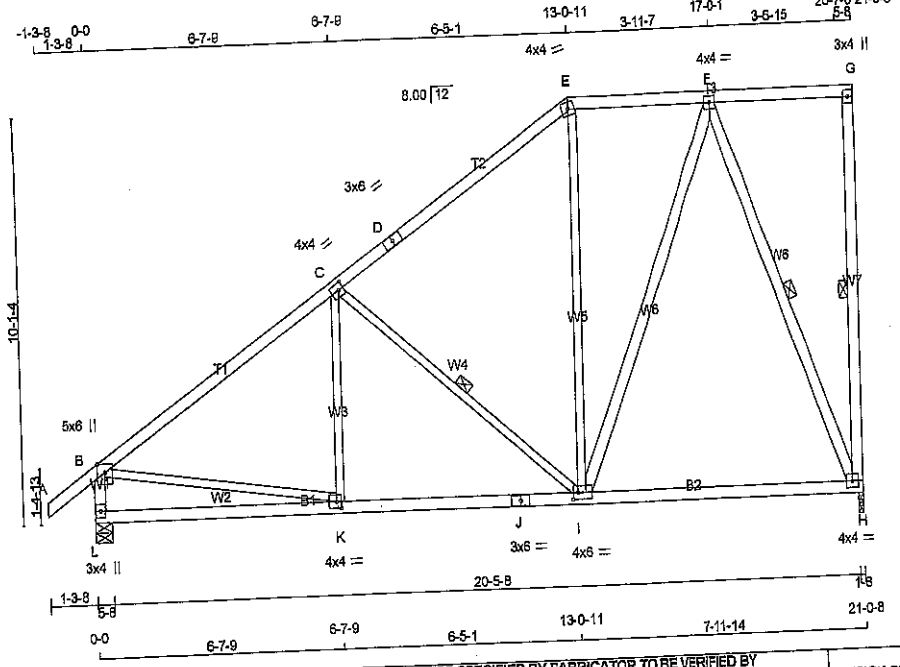

TOTAL WEIGHT = 4 X 112 = 448 lb
[M][F]

LUMBER
N. L. G. A. RULES

CHORDS	SIZE		LUMBER	DESCR.
A - D	2x4	DRY	No.2	SPF
D - E	2x4	DRY	No.2	SPF
E - G	2x4	DRY	No.2	SPF
H - G	2x4	DRY	No.2	SPF
L - B	2x4	DRY	No.2	SPF
L - J	2x4	DRY	No.2	SPF
J - H	2x4	DRY	No.2	SPF
ALL WEBS EXCEPT	2x3	DRY	No.2	SPF
I - F	2x4	DRY	No.2	SPF
F - H	2x4	DRY	No.2	SPF

DRY: SEASONED LUMBER.

PLATES (table is in inches)

JT	TYPE	PLATES	W	LEN	Y	X
B	TMWW+p	MT20	5.0	6.0	Edge	
C	TMWW-t	MT20	4.0	4.0	2.00	1.50
D	TS-t	MT20	3.0	6.0		
E	TTW-m	MT20	4.0	4.0		
F	TMWW-t	MT20	4.0	4.0		
G	TMV+p	MT20	3.0	4.0		
H	BMWW1-t	MT20	4.0	4.0		
I	BMWWW-t	MT20	4.0	6.0	2.00	1.50
J	BS-t	MT20	3.0	6.0		
K	BMWW-t	MT20	4.0	4.0	2.00	1.50
L	BMV1+p	MT20	3.0	4.0		

Edge - INDICATES REFERENCE CORNER OF PLATE TOUCHES EDGE OF CHORD.

DIMENSIONS, SUPPORTS AND LOADINGS SPECIFIED BY FABRICATOR TO BE VERIFIED BY BUILDING DESIGNER

BEARINGS

JT	FACTORED GROSS REACTION VERT	HORZ	MAXIMUM FACTORED GROSS REACTION DOWN	HORZ	UPLIFT	INPUT BRG IN-SX	REORD BRG IN-SX
H	1181	0	1181	0	0	1-8	1-8
L	1297	0	1297	0	0	5-8	5-8

UNFACTORED REACTIONS

JT	1ST LCASE COMBINED	MAX /MIN. COMPONENT REACTIONS SNOW	LIVE	PERM.LIVE	WIND	DEAD	SOIL
H	970	538 / 0	221 / 0	0 / 0	0 / 0	210 / 0	0 / 0
L	1048	609 / 0	221 / 0	0 / 0	0 / 0	219 / 0	0 / 0

BEARING MATERIAL TO BE SPF NO.2 OR BETTER AT JOINT(S) H, L

BRACING
TOP CHORD TO BE SHEATHED OR MAX. PURLIN SPACING = 5.07 FT.
MAX. UNBRACED BOTTOM CHORD LENGTH = 10.00 FT OR RIGID CEILING DIRECTLY APPLIED.

ALL PITCH BREAKS AND PERIMETER CORNER JOINTS MUST BE LATERALLY RESTRAINED.

1 LATERAL BRACE(S) AT 1/ 2 LENGTH OF G-H, C-I, F-H.

END VERTICAL(S) MUST BE SHEATHED OR HAVE BRACES AS INDICATED IN THE MAX. UNBRACED LENGTH COLUMN OF THE TABLE BELOW

LOADING
TOTAL LOAD CASES: (4)

CHORDS

MEMB. FR-TO	MAX. FACTORED FORCE (LBS)	FACTORED VERT. LOAD LC1 (PLF) FROM	TO	MAX CSI (LC)	MAX. UNBRAC LENGTH
A- B	0 / 32	-84.3	-84.3	0.11 (1)	10.00
B- C	-1253 / 0	-84.3	-84.3	0.52 (1)	5.07
C- D	-770 / 0	-84.3	-84.3	0.48 (1)	6.14
D- E	-770 / 0	-84.3	-84.3	0.48 (1)	6.14
E- F	-609 / 0	-84.3	-84.3	0.18 (1)	6.25
F- G	0 / 0	-84.3	-84.3	0.22 (1)	10.00
H- G	-129 / 0	0.0	0.0	0.06 (1)	6.25
L- B	-1219 / 0	0.0	0.0	0.13 (1)	7.26
L- K	0 / 0	-28.0	-28.0	0.26 (3)	10.00
K- J	0 / 1073	-28.0	-28.0	0.51 (2)	10.00
J- I	0 / 1073	-28.0	-28.0	0.51 (2)	10.00
I- H	0 / 395	-28.0	-28.0	0.43 (2)	10.00

WEBS

MEMB. FR-TO	MAX. FACTORED FORCE (LBS)	MAX CSI (LC)
K- C	0 / 250	0.06 (3)
C- I	-608 / 0	0.30 (1)
I- E	0 / 187	0.04 (3)
I- F	0 / 586	0.09 (1)
F- H	-1040 / 0	0.62 (1)
B- K	0 / 1087	0.24 (1)

DESIGN CRITERIA

SPECIFIED LOADS:

TOP CH.	LL	=	25.6	PSF
	DL	=	3.0	PSF
BOT CH.	LL	=	10.5	PSF
	DL	=	7.0	PSF
TOTAL LOAD		=	46.1	PSF

SPACING = 24.0 · IN. C/C

LOADING IN FLAT SECTION BASED ON A SLOPE OF 6.00/12

THIS TRUSS IS DESIGNED FOR RESIDENTIAL OR SMALL BUILDING REQUIREMENTS OF PART 9, NBCC 2010

THIS DESIGN COMPLIES WITH:
- PART 9 OF OBC 2012 , BCBC 2012 , ABC 2014
- CSA 086-09
- TPIC 2011

(55 % OF 31.3 P.S.F. G.S.L. PLUS 8.4 P.S.F. RAIN LOAD) EQUALS 25.6 P.S.F. SPECIFIED ROOF LIVE LOAD

ALLOWABLE DEFL.(LL)= L/360 (0.70")
CALCULATED VERT. DEFL.(LL) = L/ 999 (0.15")
ALLOWABLE DEFL.(TL)= L/360 (0.70")
CALCULATED VERT. DEFL.(TL) = L/ 999 (0.25")

CSI: TC=0.52/1.00 (B-C:1) , BC=0.51/1.00 (I-K:2) , WB=0.62/1.00 (F-H:1) , SSI=0.22/1.00 (B-C:1)

DOL LUMBER=1.00 NAIL=1.00 LS BEND=1.10 COMP=1.10 SHEAR=1.10 TENS= 1.10

COMPANION LIVE LOAD FACTOR = 0.50

TRUSS PLATE MANUFACTURER IS NOT RESPONSIBLE FOR QUALITY CONTROL IN THE TRUSS MANUFACTURING PLANT .

NAIL VALUES

PLATE	GRIP(DRY) (PSI) MAX	MIN	SHEAR (PLI) MAX	MIN	SECTION (PLI) MAX	MIN
MT20	618	354	1667	822	2284	1656

PLATE FLACEMENT TOL. = 0.250 inches

PLATE ROTATION TOL. = 5.0 Deg.

JSI GRIP= 0.86 (K) (INPUT = 0.90)
JSI METAL= 0.40 (K) (INPUT = 1.00)

LICENSED PROFESSIONAL ENGINEER
12416
S. KATSOULAKOS
PROVINCE OF ONTARIO

DWG NO. TAM5406-18
STRUCTURAL COMPONENT ONLY

JOB NAME	TRUSS NAME	QUANTITY	PLY	JOB DESC. 43954	DRWG NO.
286204	G8	1	1	TRUSS DESC.	

Temarack Roof Truss, Burlington

Version 8.030 S Oct 5 2016 MiTek Industries, Inc. Tue Sep 12 12:44:25 2017 Page 1

ID:LJPBf7XiyxdQBIYCH4AXRGyehXO-OTZ3FWI3qgXmZT7G0_IX_kGpCOtOz?I0qoTrzFyeO_K

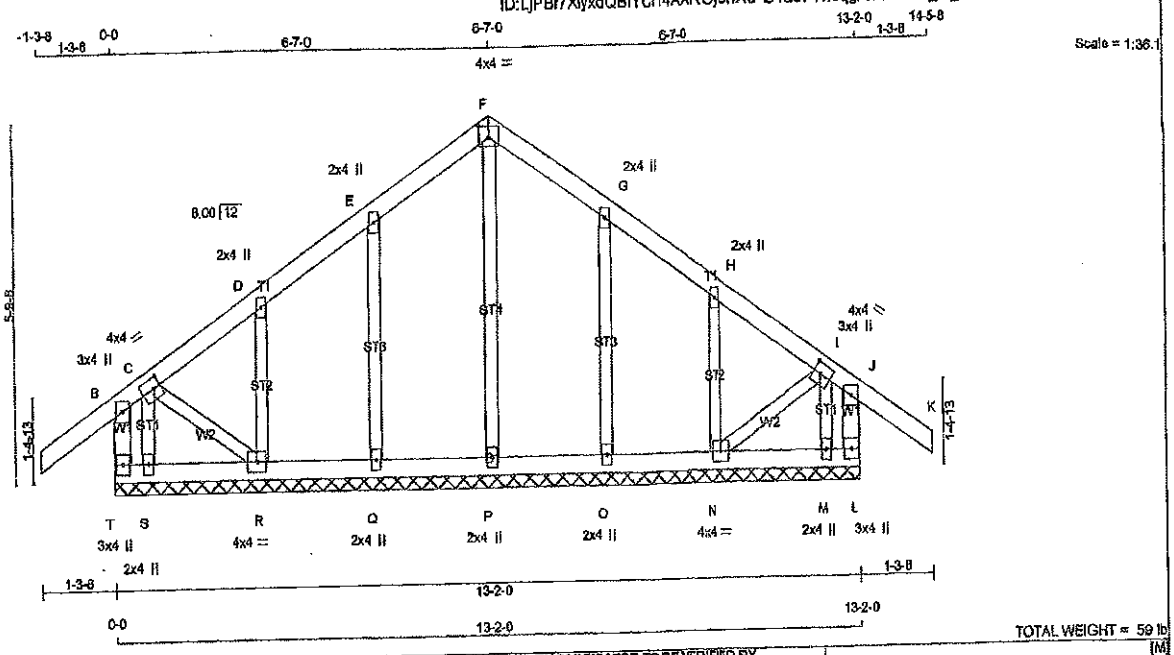

TOTAL WEIGHT = 59 lb (M)

LUMBER

N. L. G. A. RULES

CHORDS	SIZE		LUMBER	DESCR.
T - B	2x4	DRY	No.2	SPF
A - F	2x4	DRY	No.2	SPF
F - K	2x4	DRY	No.2	SPF
L - J	2x4	DRY	No.2	SPF
T - L	2x4	DRY	No.2	SPF
ALL WEBS	2x3	DRY	No.2	SPF
ALL GABLE WEBS	2x3	DRY	No.2	SPF

DRY: SEASONED LUMBER.

GABLE STUDS SPACED AT 2-0-0 OC.

PLATES (table is in inches)

JT	TYPE	PLATES	W	LEN	Y	X
B	TMV+p	MT20	3.0	4.0		
C	TMWW-t	MT20	4.0	4.0	2.00	1.50
D, E, G, H						
D	TMW+w	MT20	2.0	4.0		
F	TTW-p	MT20	4.0	4.0	2.25	2.00
I	TMWW-t	MT20	4.0	4.0	2.00	1.50
J	TMV+p	MT20	3.0	4.0		
L	BMV1+p	MT20	3.0	4.0		
M, O, P, Q, S						
M	BMW1+w	MT20	2.0	4.0		
N	BMWW1-t	MT20	4.0	4.0		
R	BMWW1-t	MT20	4.0	4.0		
T	BMV1+p	MT20	3.0	4.0		

DIMENSIONS, SUPPORTS AND LOADINGS SPECIFIED BY FABRICATOR TO BE VERIFIED BY BUILDING DESIGNER

BEARINGS

THIS TRUSS DESIGNED FOR CONTINUOUS BEARINGS.

THIS TRUSS REQUIRES RIGID SHEATHING ON EXPOSED FACE.

BEARING MATERIAL TO BE SPF NO.2 OR BETTER AT JOINT(S)

BRACING

TOP CHORD TO BE SHEATHED OR MAX. PURLIN SPACING = 6.25 FT.
MAX. UNBRACED BOTTOM CHORD LENGTH = 10.00 FT. OR RIGID CEILING DIRECTLY APPLIED.

ALL PITCH BREAKS AND PERIMETER CORNER JOINTS MUST BE LATERALLY RESTRAINED.

LOADING

TOTAL LOAD CASES: (4)

CHORDS

MEMB. FR-TO	MAX. FACTORED FORCE (LBS)	FACTORED VERT. LOAD (PLF) FROM	TO	LC1 MAX CSI (LC)	MAX. UNBRAC LENGTH
T- B	-249 / 0	0.0	0.0	0.03 (1)	7.81
A- B	0 / 32	-84.3	-84.3	0.11 (1)	10.00
B- C	-61 / 0	-84.3	-84.3	0.11 (1)	6.25
C- D	-31 / 0	-84.3	-84.3	0.04 (1)	6.25
D- E	-26 / 0	-84.3	-84.3	0.05 (1)	6.25
E- F	-33 / 0	-84.3	-84.3	0.05 (1)	6.25
F- G	-33 / 0	-84.3	-84.3	0.05 (1)	6.25
G- H	-26 / 0	-84.3	-84.3	0.05 (1)	6.25
H- I	-31 / 0	-84.3	-84.3	0.04 (1)	6.25
I- J	-61 / 0	-84.3	-84.3	0.11 (1)	6.25
J- K	0 / 32	-84.3	-84.3	0.11 (1)	10.00
L- J	-249 / 0	0.0	0.0	0.03 (1)	7.81
T- S	0 / 0	-26.0	-26.0	0.02 (2)	10.00
S- R	0 / 0	-26.0	-26.0	0.02 (2)	10.00
R- O	0 / 24	-26.0	-26.0	0.03 (2)	10.00
Q- P	0 / 20	-26.0	-26.0	0.02 (2)	10.00
P- O	0 / 20	-26.0	-26.0	0.02 (2)	10.00
O- N	0 / 24	-26.0	-26.0	0.03 (2)	10.00
N- M	0 / 0	-26.0	-26.0	0.02 (2)	10.00
M- L	0 / 0	-26.0	-26.0	0.02 (2)	10.00

WEBS

MEMB. FR-TO	MAX. FACTORED FORCE (LBS)	MAX CSI (LC)
P- F	-115 / 0	0.06 (1)
Q- E	-191 / 0	0.06 (1)
R- D	-164 / 0	0.03 (1)
S- C	-30 / 0	0.00 (1)
O- G	-191 / 0	0.06 (1)
N- H	-164 / 0	0.03 (1)
M- I	-30 / 0	0.00 (1)
C- R	0 / 35	0.01 (1)
N- I	0 / 35	0.01 (1)

DESIGN CRITERIA

SPECIFIED LOADS:

TOP CH.	LL	=	25.6	PSF
	DL	=	3.0	PSF
BOT CH.	LL	=	10.5	PSF
	DL	=	7.0	PSF
TOTAL LOAD		=	46.1	PSF

SPACING = 24.0 IN. C/C

THIS TRUSS IS DESIGNED FOR RESIDENTIAL OR SMALL BUILDING REQUIREMENTS OF PART 9, NBCC 2010

THIS DESIGN COMPLIES WITH:
- PART 9 OF OBC 2012 , BCBC 2012 , ABC 2014
- CSA 086-09
- TPIC 2011

DESIGN ASSUMPTIONS
-OVERHANG NOT TO BE ALTERED OR CUT OFF.

(55 % OF 31.3 P.S.F. G.S.L. PLUS 8.4 P.S.F. RAIN LOAD) EQUALS 25.6 P.S.F. SPECIFIED ROOF LIVE LOAD

CSI: TC=0.11 (A-B:1) , BC=0.03 (N-O:2) , WB=0.06 (F-P:1) , SSI=0.09 (B-C:1)

DOL LUMBER=1.00 NAIL=1.00 LS BEND=1.10 COMP=1.10 SHEAR=1.10 TENS= 1.10

COMPANION LIVE LOAD FACTOR = 0.50

TRUSS PLATE MANUFACTURER IS NOT RESPONSIBLE FOR QUALITY CONTROL IN THE TRUSS MANUFACTURING PLANT .

NAIL VALUES

PLATE	GRIP(DRY) (PSI) MAX	MIN	SHEAR (PLI) MAX	MIN	SECTION (PLI) MAX	MIN
MT20	618	354	1667	822	2284	1656

PLATE PLACEMENT TOL. = 0.250 inches

PLATE ROTATION TOL. = 5.0 Deg.

JSI GRIP= 0.13 (E) (INPUT = 0.90)
JSI METAL= 0.05 (E) (INPUT = 1.00)

LICENSED PROFESSIONAL ENGINEER
S. KATSOULAKOS
PROVINCE OF ONTARIO

DWG NO. TAM46240-17
STRUCTURAL
COMPONENT ONLY

JOB NAME	TRUSS NAME	QUANTITY	PLY	JOB DESC. 43954	DRWG NO.
286204	G21	2	1	TRUSS DESC.	

Tamarack Roof Truss, Burlington

Version 8.030 S Oct 5 2016 MiTek Industries, Inc. Tue Sep 12 12:44:26 2017 Page 1

ID:LjPBf7XlyxdQBIYCH4AXRGyehXO-sf7RSsIhb_gdBdiSZiDmWyp_yoDfiS993SDOWhyeO_J

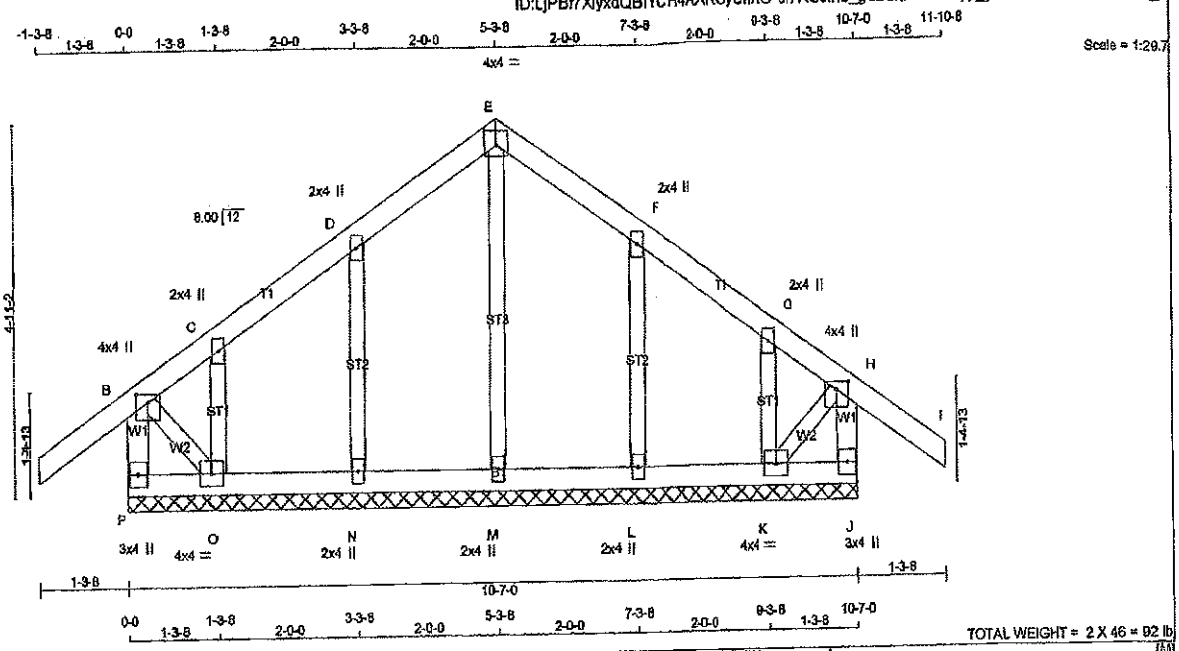

TOTAL WEIGHT = 2 X 46 = 92 lb

LUMBER
N. L. G. A. RULES

CHORDS	SIZE		LUMBER	DESCR.
A - E	2x4	DRY	No.2	SPF
E - I	2x4	DRY	No.2	SPF
P - B	2x4	DRY	No.2	SPF
J - H	2x4	DRY	No.2	SPF
P - J	2x4	DRY	No.2	SPF
ALL WEBS	2x3	DRY	No.2	SPF
ALL GABLE WEBS	2x3	DRY	No.2	SPF

DRY: SEASONED LUMBER.

GABLE STUDS SPACED AT 2-0-0 OC.

PLATES (table is in inches)

JT	TYPE	PLATES	W	LEN	Y	X
B	TMVW+p	MT20	4.0	4.0	1.25	2.00
C, D, F, G						
C	TMW+w	MT20	2.0	4.0		
E	TTW-p	MT20	4.0	4.0	2.25	2.00
H	TMVW+p	MT20	4.0	4.0	1.25	2.00
J	BMV1+p	MT20	3.0	4.0		
K	BMWW1-t	MT20	4.0	4.0		
L, M, N						
I	BMW1+w	MT20	2.0	4.0		
O	BMWW1-t	MT20	4.0	4.0		
P	BMV1+p	MT20	3.0	4.0		

DIMENSIONS, SUPPORTS AND LOADINGS SPECIFIED BY FABRICATOR TO BE VERIFIED BY BUILDING DESIGNER

BEARINGS

THIS TRUSS DESIGNED FOR CONTINUOUS BEARINGS.

THIS TRUSS REQUIRES RIGID SHEATHING ON EXPOSED FACE.

BEARING MATERIAL TO BE SPF NO.2 OR BETTER AT JOINT(S)

BRACING

TOP CHORD TO BE SHEATHED OR MAX. PURLIN SPACING = 6.25 FT.
MAX. UNBRACED BOTTOM CHORD LENGTH = 10.00 FT. OR RIGID CEILING DIRECTLY APPLIED.

ALL PITCH BREAKS AND PERIMETER CORNER JOINTS MUST BE LATERALLY RESTRAINED.

LOADING

TOTAL LOAD CASES: (4)

CHORDS

MEMB. FR-TO	MAX. FACTORED FORCE (LBS)	FACTORED VERT. LOAD LC1 (PLF) FROM	TO	MAX CSI (LC)	MAX. UNBRAC LENGTH
A- B	0 / 32	-84.3	-84.3	0.11 (1)	10.00
B- C	-45 / 0	-84.3	-84.3	0.11 (1)	6.25
C- D	0 / 0	-84.3	-84.3	0.05 (1)	10.00
D- E	-14 / 0	-84.3	-84.3	0.05 (1)	6.25
E- F	-14 / 0	-84.3	-84.3	0.05 (1)	6.25
F- G	0 / 0	-84.3	-84.3	0.05 (1)	10.00
G- H	-45 / 0	-84.3	-84.3	0.11 (1)	6.25
H- I	0 / 32	-84.3	-84.3	0.11 (1)	10.00
P- B	-241 / 0	0.0	0.0	0.02 (1)	7.81
J- H	-241 / 0	0.0	0.0	0.02 (1)	7.81
P- O	0 / 0	-28.0	-28.0	0.02 (3)	10.00
O- N	0 / 8	-28.0	-28.0	0.02 (2)	10.00
N- M	0 / 3	-28.0	-28.0	0.02 (3)	10.00
M- L	0 / 3	-28.0	-28.0	0.02 (3)	10.00
L- K	0 / 8	-28.0	-28.0	0.02 (2)	10.00
K- J	0 / 0	-28.0	-28.0	0.02 (3)	10.00

WEBS

MEMB. FR-TO	MAX. FACTORED FORCE (LBS)	MAX CSI (LC)
M- E	-133 / 0	0.05 (1)
N- D	-205 / 0	0.04 (1)
O- C	-57 / 0	0.01 (1)
L- F	-205 / 0	0.04 (1)
K- G	-57 / 0	0.01 (1)
B- O	0 / 13	0.00 (1)
K- H	0 / 13	0.00 (1)

DESIGN CRITERIA

SPECIFIED LOADS:

TOP CH.	LL	=	25.6	PSF
	DL	=	3.0	PSF
BOT CH.	LL	=	10.5	PSF
	DL	=	7.0	PSF
TOTAL LOAD		=	46.1	PSF

SPACING = 24.0 IN. C/C

THIS TRUSS IS DESIGNED FOR RESIDENTIAL OR SMALL BUILDING REQUIREMENTS OF PART 9, NBCC 2010

THIS DESIGN COMPLIES WITH:
- PART 9 OF OBC 2012 , BCBC 2012 , ABC 2014
- CSA 086-09
- TPIC 2011

DESIGN ASSUMPTIONS
-OVERHANG NOT TO BE ALTERED OR CUT OFF.

(55 % OF 31.3 P.S.F. G.S.L. PLUS 8.4 P.S.F. RAIN LOAD) EQUALS 25.6 P.S.F. SPECIFIED ROOF LIVE LOAD

CSI: TC=0.11 (A-B:1) , BC=0.02 (N-O:2) , WB=0.05 (E-M:1) , SSI=0.08 (A-B:1)

DOL LUMBER=1.00 NAIL=1.00 LS BEND=1.10 COMP=1.10 SHEAR=1.10 TENS= 1.10

COMPANION LIVE LOAD FACTOR = 0.50

TRUSS PLATE MANUFACTURER IS NOT RESPONSIBLE FOR QUALITY CONTROL IN THE TRUSS MANUFACTURING PLANT .

NAIL VALUES

PLATE	GRIP(DRY) (PSI) MAX	MIN	SHEAR (PLI) MAX	MIN	SECTION (PLI) MAX	MIN
MT20	616	354	1667	822	2284	1656

PLATE PLACEMENT TOL. = 0.250 inches

PLATE ROTATION TOL. = 5.0 Deg.

JSI GRIP= 0.17 (H) (INPUT = 0.90)
JSI METAL= 0.05 (D) (INPUT = 1.00)

LICENSED PROFESSIONAL ENGINEER
S. KATSOULAKOS
PROVINCE OF ONTARIO

DWG NO. TAM46241-17
STRUCTURAL
COMPONENT ONLY

JOB NAME	TRUSS NAME	QUANTITY	PLY	JOB DESC. 43954	DRWG NO.
286185	T26	3	1	TRUSS DESC.	

Version 8.200 S Dec 12 2017 MiTek Industries, Inc. Tue Jan 23 08:32:14 2018 Page 1

Tamarack Roof Truss, Burlington

ID:iwZQpw3SSbuVOx5Ih3kDeHyeg6K-63FgkFJGbGkFW9kyBvz1_v6iAisry7RyMHSxrVzsY0V

Scale = 1:45.4

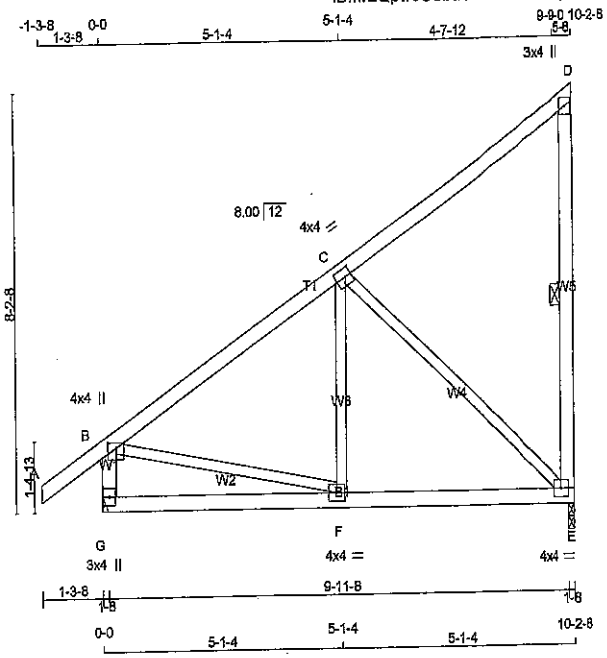

TOTAL WEIGHT = 3 X 50 = 150 lb

[M][F]

LUMBER

N. L. G. A. RULES

CHORDS	SIZE		LUMBER	DESCR.
A - D	2x4	DRY	No.2	SPF
E - D	2x4	DRY	No.2	SPF
G - B	2x4	DRY	No.2	SPF
G - E	2x4	DRY	No.2	SPF
ALL WEBS EXCEPT	2x3	DRY	No.2	SPF

DRY: SEASONED LUMBER.

PLATES (table is in inches)

JT	TYPE	PLATES	W	LEN	Y	X
B	TMVW+p	MT20	4.0	4.0	1.25	2.00
C	TMWW-t	MT20	4.0	4.0	2.00	1.50
D	TMV+p	MT20	3.0	4.0		
E	BMVW1-t	MT20	4.0	4.0		
F	BMWW-t	MT20	4.0	4.0		
G	BMV1+p	MT20	3.0	4.0		

DIMENSIONS, SUPPORTS AND LOADINGS SPECIFIED BY FABRICATOR TO BE VERIFIED BY BUILDING DESIGNER

BEARINGS

JT	FACTORED GROSS REACTION VERT	HORZ	MAXIMUM FACTORED GROSS REACTION DOWN	HORZ	UPLIFT	INPUT BRG IN-SX	REQRD BRG IN-SX
E	573	0	573	0	0	1-8	1-8
G	689	0	689	0	0	HANGER BY OTHERS	
						MIN. SEAT SIZE: 1-8	

UNFACTORED REACTIONS

JT	1ST LCASE COMBINED	MAX./MIN. COMPONENT REACTIONS SNOW	LIVE	PERM.LIVE	WIND	DEAD	SOIL
E	470	261 / 0	107 / 0	0 / 0	0 / 0	102 / 0	0 / 0
G	549	331 / 0	107 / 0	0 / 0	0 / 0	110 / 0	0 / 0

BEARING MATERIAL TO BE SPF NO.2 OR BETTER AT JOINT(S) E

BRACING

TOP CHORD TO BE SHEATHED OR MAX. PURLIN SPACING = 6.25 FT.
MAX. UNBRACED BOTTOM CHORD LENGTH = 10.00 FT OR RIGID CEILING DIRECTLY APPLIED.

ALL PITCH BREAKS AND PERIMETER CORNER JOINTS MUST BE LATERALLY RESTRAINED.

1 LATERAL BRACE(S) AT 1/ 2 LENGTH OF D-E.

END VERTICAL(S) MUST BE SHEATHED OR HAVE BRACES AS INDICATED IN THE MAX. UNBRACED LENGTH COLUMN OF THE TABLE BELOW

LOADING

TOTAL LOAD CASES: (4)

CHORDS

MEMB. FR-TO	MAX. FACTORED FORCE (LBS)	FACTORED VERT. LOAD LC1 (PLF) FROM	TO	MAX CSI (LC)	MAX. UNBRAC LENGTH
A- B	0 / 32	-84.3	-84.3	0.11 (1)	10.00
B- C	-457 / 0	-84.3	-84.3	0.29 (1)	6.25
C- D	-29 / 0	-84.3	-84.3	0.28 (1)	6.25
E- D	-162 / 0	0.0	0.0	0.05 (1)	6.25
G- B	-633 / 0	0.0	0.0	0.07 (1)	7.81
G- F	0 / 0	-28.0	-28.0	0.21 (3)	10.00
F- E	0 / 405	-28.0	-28.0	0.26 (2)	10.00

WEBS

MEMB. FR-TO	MAX. FACTORED FORCE (LBS)	MAX CSI (LC)
F- C	0 / 268	0.06 (3)
C- E	-539 / 0	0.44 (1)
B- F	0 / 414	0.09 (1)

DESIGN CRITERIA

SPECIFIED LOADS:

TOP CH.	LL =	25.6	PSF
	DL =	3.0	PSF
BOT CH.	LL =	10.5	PSF
	DL =	7.0	PSF
TOTAL LOAD	=	46.1	PSF

SPACING = 24.0 IN. C/C

THIS TRUSS IS DESIGNED FOR RESIDENTIAL OR SMALL BUILDING REQUIREMENTS OF PART 9, NBCC 2010

THIS DESIGN COMPLIES WITH:
- PART 9 OF OBC 2012 , BCBC 2012 , ABC 2014
- CSA 086-09
- TPIC 2011

(55 % OF 31.3 P.S.F. G.S.L. PLUS 8.4 P.S.F. RAIN LOAD) EQUALS 25.6 P.S.F. SPECIFIED ROOF LIVE LOAD

ALLOWABLE DEFL.(LL)= L/360 (0.34")
CALCULATED VERT. DEFL.(LL) = L/ 999 (0.02")
ALLOWABLE DEFL.(TL)= L/360 (0.34")
CALCULATED VERT. DEFL.(TL) = L/ 999 (0.04")

CSI: TC=0.29/1.00 (B-C:1) , BC=0.28/1.00 (E-F:2) , WB=0.44/1.00 (C-E:1) , SSI=0.17/1.00 (C-D:1)

DOL LUMBER=1.00 NAIL=1.00 LS BEND=1.10 COMP=1.10 SHEAR=1.10 TENS= 1.10

COMPANION LIVE LOAD FACTOR = 0.50

AUTOSOLVE RIGHT HEEL ONLY

TRUSS PLATE MANUFACTURER IS NOT RESPONSIBLE FOR QUALITY CONTROL IN THE TRUSS MANUFACTURING PLANT .

NAIL VALUES

PLATE	GRIP(DRY) (PSI) MAX	MIN	SHEAR (PLI) MAX	MIN	SECTION (PLI) MAX	MIN
MT20	618	354	1667	822	2284	1656

PLATE PLACEMENT TOL. = 0.250 inches

PLATE ROTATION TOL. = 5.0 Deg.

JSI GRIP= 0.51 (B) (INPUT = 0.90)
JSI METAL= 0.15 (F) (INPUT = 1.00)

LICENSED PROFESSIONAL ENGINEER
S. KATSOULAKOS
PROVINCE OF ONTARIO

DWG NO. TAM 5/0 7-18
STRUCTURAL
COMPONENT ONLY

JOB NAME	TRUSS NAME	QUANTITY	PLY	JOB DESC. 43954	DRWG NO.
286204	G26	2	1	TRUSS DESC.	

Tamarack Roof Truss, Burlington

Version 8.030 S Oct 5 2016 MiTek Industries, Inc. Tue Sep 12 12:44:26 2017 Page 1
ID:lwZQpw3SSbuVOx5lh3kDeHysg6K-sf7RSslhb_gdBdiSZIDmWyp_yoDWiQW93SDOWhyeO_J

Scale = 1:48.0

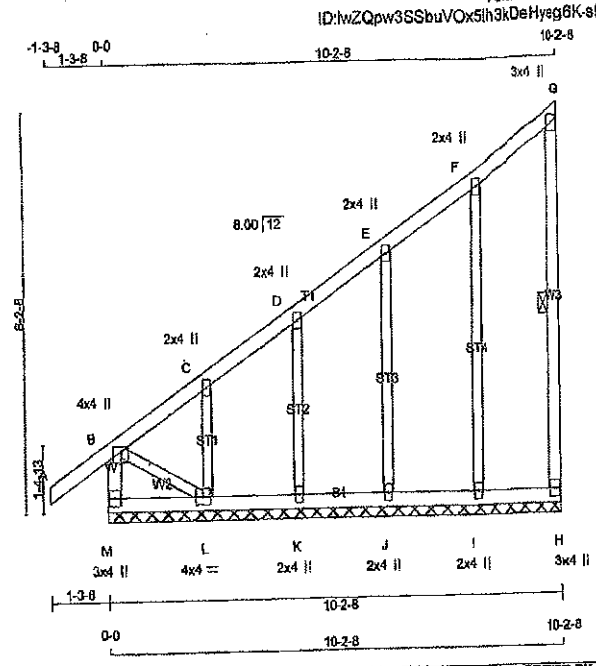

TOTAL WEIGHT = 2 X 53 = 106 lb

LUMBER
N. L. G. A. RULES

CHORDS	SIZE		LUMBER	DESCR.
M - B	2x4	DRY	No.2	SPF
A - G	2x4	DRY	No.2	SPF
H - G	2x4	DRY	No.2	SPF
M - H	2x4	DRY	No.2	SPF
ALL WEBS	2x3	DRY	No.2	SPF
ALL GABLE WEBS	2x3	DRY	No.2	SPF

DRY: SEASONED LUMBER.

GABLE STUDS SPACED AT 2-0-0 OC.

PLATES (table is in inches)

JT	TYPE	PLATES	W	LEN	Y	X
B	TMWV+p	MT20	4.0	4.0	1.25	2.00
C, D, E, F						
C	TMW+w	MT20	2.0	4.0		
G	TMV+p	MT20	3.0	4.0		
H	BMV1+p	MT20	3.0	4.0		
I, J, K						
I	BMW1+w	MT20	2.0	4.0		
L	BMWW1-t	MT20	4.0	4.0		
M	BMV1+p	MT20	3.0	4.0		

DIMENSIONS, SUPPORTS AND LOADINGS SPECIFIED BY FABRICATOR TO BE VERIFIED BY BUILDING DESIGNER

BEARINGS

THIS TRUSS DESIGNED FOR CONTINUOUS BEARINGS.

THIS TRUSS REQUIRES RIGID SHEATHING ON EXPOSED FACE.

BEARING MATERIAL TO BE SPF NO.2 OR BETTER AT JOINT(S)

BRACING
TOP CHORD TO BE SHEATHED OR MAX. PURLIN SPACING = 6.25 FT.
MAX. UNBRACED BOTTOM CHORD LENGTH = 10.00 FT. OR RIGID CEILING DIRECTLY APPLIED.

ALL PITCH BREAKS AND PERIMETER CORNER JOINTS MUST BE LATERALLY RESTRAINED.

1 LATERAL BRACE(S) AT 1/ 2 LENGTH OF G-H.

END VERTICAL(S) MUST BE SHEATHED OR HAVE BRACES AS INDICATED IN THE MAX. UNBRACED LENGTH COLUMN OF THE TABLE BELOW

LOADING
TOTAL LOAD CASES: (4)

CHORDS

MEMB. FR-TO	MAX. FACTORED FORCE (LBS)	FACTORED VERT. LOAD LC1 (PLF) FROM	TO	MAX CSI (LC)	MAX. UNBRAC LENGTH
M-B	-204 / 0	0.0	0.0	0.02 (1)	7.81
A-B	0 / 32	-84.3	-84.3	0.11 (1)	10.00
B-C	-8 / 0	-84.3	-84.3	0.05 (1)	10.00
C-D	-13 / 0	-84.3	-84.3	0.05 (1)	6.25
D-E	-5 / 0	-84.3	-84.3	0.04 (1)	10.00
E-F	-1 / 0	-84.3	-84.3	0.05 (1)	10.00
F-G	-9 / 0	-84.3	-84.3	0.05 (1)	10.00
H-G	-72 / 0	0.0	0.0	0.02 (1)	6.25
M-L	0 / 0	-28.0	-28.0	0.03 (2)	10.00
L-K	0 / 8	-28.0	-28.0	0.03 (2)	10.00
K-J	0 / 5	-28.0	-28.0	0.02 (2)	10.00
J-I	0 / 2	-28.0	-28.0	0.03 (2)	10.00
I-H	0 / 0	-28.0	-28.0	0.03 (2)	10.00

WEBS

MEMB. FR-TO	MAX. FACTORED FORCE (LBS)	MAX CSI (LC)
I-F	-169 / 0	0.15 (1)
J-E	-165 / 0	0.08 (1)
K-D	-159 / 0	0.04 (1)
L-C	-194 / 0	0.03 (1)
B-L	0 / 16	0.00 (1)

DESIGN CRITERIA

SPECIFIED LOADS:

TOP CH.	LL	=	25.8	PSF
	DL	=	3.0	PSF
BOT CH.	LL	=	10.5	PSF
	DL	=	7.0	PSF
TOTAL LOAD		=	46.1	PSF

SPACING = 24.0 IN.C/C

THIS TRUSS IS DESIGNED FOR RESIDENTIAL OR SMALL BUILDING REQUIREMENTS OF PART 9, NBCC 2010

THIS DESIGN COMPLIES WITH:
- PART 9 OF OBC 2012 , BCBC 2012 , ABC 2014
- CSA 086-09
- TPIC 2011

(55 % OF 31.8 P.S.F. G.S.L. PLUS 8.4 P.S.F. RAIN LOAD) EQUALS 25.6 P.S.F. SPECIFIED ROOF LIVE LOAD

CSI: TC=0.11 (A-B:1) , BC=0.08 (K-L:2) , WB=0.15 (F-I:1) , SSI=0.08 (A-B:1)

DOL LUMBER=1.00 NAIL=1.00 LS BEND=1.10 COMP=1.10 SHEAR=1.10 TENS= 1.10

COMPANION LIVE LOAD FACTOR = 0.50

TRUSS PLATE MANUFACTURER IS NOT RESPONSIBLE FOR QUALITY CONTROL IN THE TRUSS MANUFACTURING PLANT .

NAIL VALUES

PLATE	GRIP(DRY) (PSI) MAX	MIN	SHEAR (PLI) MAX	MIN	SECTION (PLI) MAX	MIN
MT20	618	354	1687	822	2284	1656

PLATE PLACEMENT TOL. = 0.250 Inches

PLATE ROTATION TOL. = 5.0 Deg.

JSI GRIP= 0.14 (B) (INPUT = 0.80)
JSI METAL= 0.05 (C) (INPUT = 1.00)

LICENSED PROFESSIONAL ENGINEER
S. KATSOULAKOS
PROVINCE OF ONTARIO

DWG NO. TAM46242-17
STRUCTURAL
COMPONENT ONLY

JOB NAME	TRUSS NAME	QUANTITY	PLY	JOB DESC. 43954	DRWG NO.
286185	T27A	1	1	TRUSS DESC.	

Tamarack Roof Truss, Burlington

Version 8.200 S Dec 12 2017 MiTek Industries, Inc. Tue Jan 23 08:32:14 2018 Page 1

ID:iwZQpw3SSbuVOx5Ih3kDeHyeg6K-63FgkFJGbGkFW9kyBvz1_v6fQipgy9KyMHSxrVzsY0V

Scale = 1:54.7

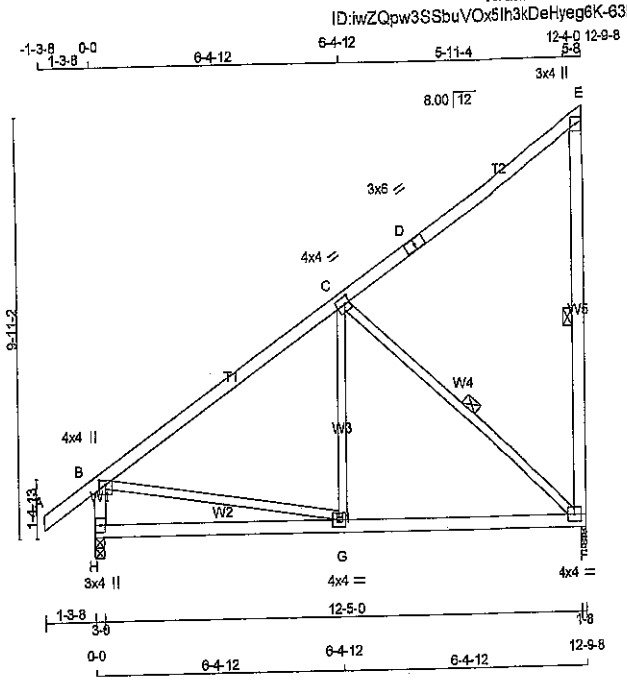

TOTAL WEIGHT = 61 lb

[M][F]

LUMBER

N. L. G. A. RULES

CHORDS	SIZE		LUMBER	DESCR.
A - D	2x4	DRY	No.2	SPF
D - E	2x4	DRY	No.2	SPF
F - E	2x4	DRY	No.2	SPF
H - B	2x4	DRY	No.2	SPF
H - F	2x4	DRY	No.2	SPF
ALL WEBS EXCEPT	2x3	DRY	No.2	SPF

DRY: SEASONED LUMBER.

PLATES (table is in inches)

JT	TYPE	PLATES	W	LEN	Y	X
B	TMVW+p	MT20	4.0	4.0	1.25	2.00
C	TMWW-t	MT20	4.0	4.0	2.00	1.50
D	TS-t	MT20	3.0	6.0		
E	TMV+p	MT20	3.0	4.0		
F	BMVW1-t	MT20	4.0	4.0		
G	BMWW-t	MT20	4.0	4.0		
H	BMV1+p	MT20	3.0	4.0		

DIMENSIONS, SUPPORTS AND LOADINGS SPECIFIED BY FABRICATOR TO BE VERIFIED BY BUILDING DESIGNER

BEARINGS

JT	FACTORED GROSS REACTION VERT	HORZ	MAXIMUM FACTORED GROSS REACTION DOWN	HORZ	UPLIFT	INPUT BRG IN-SX	REQRD BRG IN-SX
F	718	0	718	0	0	1-8	1-8
H	834	0	834	0	0	3-0	3-0

UNFACTORED REACTIONS

JT	1ST LCASE COMBINED	MAX./MIN. COMPONENT REACTIONS SNOW	LIVE	PERM.LIVE	WIND	DEAD	SOIL
F	589	327 / 0	134 / 0	0 / 0	0 / 0	128 / 0	0 / 0
H	668	397 / 0	134 / 0	0 / 0	0 / 0	136 / 0	0 / 0

BEARING MATERIAL TO BE SPF NO.2 OR BETTER AT JOINT(S) F, H

BRACING

TOP CHORD TO BE SHEATHED OR MAX. PURLIN SPACING = 6.25 FT.
MAX. UNBRACED BOTTOM CHORD LENGTH = 10.00 FT OR RIGID CEILING DIRECTLY APPLIED.

ALL PITCH BREAKS AND PERIMETER CORNER JOINTS MUST BE LATERALLY RESTRAINED.

1 LATERAL BRACE(S) AT 1/ 2 LENGTH OF E-F, C-F.

END VERTICAL(S) MUST BE SHEATHED OR HAVE BRACES AS INDICATED IN THE MAX. UNBRACED LENGTH COLUMN OF THE TABLE BELOW

LOADING

TOTAL LOAD CASES: (4)

CHORDS

MEMB. FR-TO	MAX. FACTORED FORCE (LBS)	FACTORED VERT. LOAD LC1 (PLF) FROM	TO	MAX CSI (LC)	MAX. UNBRAC LENGTH
A- B	0 / 32	-84.3	-84.3	0.11 (1)	10.00
B- C	-605 / 0	-84.3	-84.3	0.46 (1)	6.25
C- D	-37 / 0	-84.3	-84.3	0.45 (1)	6.25
D- E	-37 / 0	-84.3	-84.3	0.45 (1)	6.25
F- E	-203 / 0	0.0	0.0	0.10 (1)	6.25
H- B	-765 / 0	0.0	0.0	0.08 (1)	7.81
H- G	0 / 0	-28.0	-28.0	0.33 (3)	10.00
G- F	0 / 534	-28.0	-28.0	0.39 (2)	10.00

WEBS

MEMB. FR-TO	MAX. FACTORED FORCE (LBS)	MAX CSI (LC)
G- C	0 / 345	0.08 (3)
C- F	-697 / 0	0.32 (1)
B- G	0 / 542	0.12 (1)

DESIGN CRITERIA

SPECIFIED LOADS:

TOP CH.	LL	=	25.6	PSF
	DL	=	3.0	PSF
BOT CH.	LL	=	10.5	PSF
	DL	=	7.0	PSF
TOTAL LOAD		=	46.1	PSF

SPACING = 24.0 IN. C/C

THIS TRUSS IS DESIGNED FOR RESIDENTIAL OR SMALL BUILDING REQUIREMENTS OF PART 9, NBCC 2010

THIS DESIGN COMPLIES WITH:
- PART 9 OF OBC 2012 , BCBC 2012 , ABC 2014
- CSA 086-09
- TPIC 2011

(55 % OF 31.3 P.S.F. G.S.L. PLUS 8.4 P.S.F. RAIN LOAD) EQUALS 25.6 P.S.F. SPECIFIED ROOF LIVE LOAD

ALLOWABLE DEFL.(LL)= L/360 (0.43")
CALCULATED VERT. DEFL.(LL) = L/ 999 (0.05")
ALLOWABLE DEFL.(TL)= L/360 (0.43")
CALCULATED VERT. DEFL.(TL) = L/ 999 (0.09")

CSI: TC=0.46/1.00 (B-C:1) , BC=0.39/1.00 (F-G:2) , WB=0.32/1.00 (C-F:1) , SSI=0.22/1.00 (B-C:1)

DOL LUMBER=1.00 NAIL=1.00 LS BEND=1.10 COMP=1.10 SHEAR=1.10 TENS= 1.10

COMPANION LIVE LOAD FACTOR = 0.50

AUTOSOLVE RIGHT HEEL ONLY

TRUSS PLATE MANUFACTURER IS NOT RESPONSIBLE FOR QUALITY CONTROL IN THE TRUSS MANUFACTURING PLANT .

NAIL VALUES

PLATE	GRIP(DRY) (PSI) MAX	MIN	SHEAR (PLI) MAX	MIN	SECTION (PLI) MAX	MIN
MT20	618	354	1867	822	2284	1656

PLATE PLACEMENT TOL. = 0.250 inches

PLATE ROTATION TOL. = 5.0 Deg.

JSI GRIP= 0.64 (B) (INPUT = 0.90)
JSI METAL= 0.20 (G) (INPUT = 1.00)

LICENSED PROFESSIONAL ENGINEER
1/28/18
S. KATSOULAKOS
PROVINCE OF ONTARIO

DWG NO. TAM 5108-18
STRUCTURAL
COMPONENT ONLY

JOB NAME	TRUSS NAME	QUANTITY	PLY	JOB DESC. 43954	DRWG NO.
286204	G27A	2	1	TRUSS DESC.	

Tamarack Roof Truss, Burlington

Version 8.030 S Oct 5 2016 MiTek Industries, Inc. Tue Sep 12 12:44:26 2017 Page 1

ID:iwZQpw3SSbuVOx5lh3kDeHyeg6K-sf7RSslhb_gdBdiSZlDmWyp_yoDaIQU93SDOWhyeO_J

Scale = 1:58.2

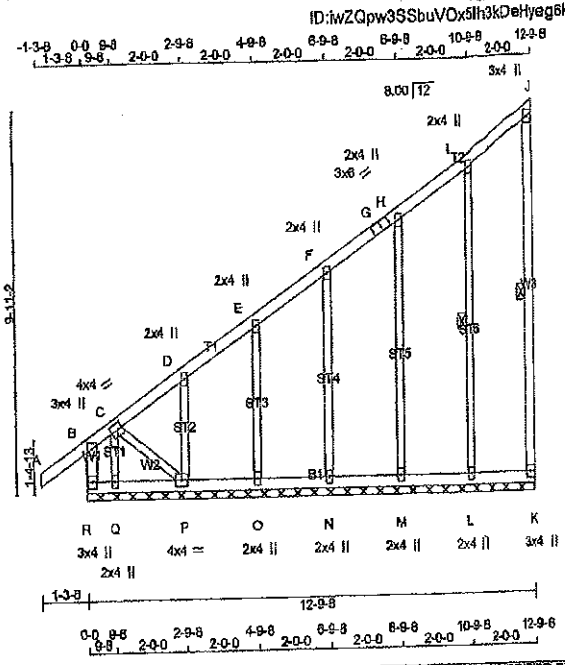

TOTAL WEIGHT = 2 X 71 = 141 lb

[M]

LUMBER

N. L. G. A. RULES

CHORDS	SIZE		LUMBER	DESCR.
A - G	2x4	DRY	No.2	SPF
G - J	2x4	DRY	No.2	SPF
K - J	2x4	DRY	No.2	SPF
R - B	2x4	DRY	No.2	SPF
R - K	2x4	DRY	No.2	SPF
ALL WEBS	2x3	DRY	No.2	SPF
ALL GABLE WEBS	2x3	DRY	No.2	SPF

DRY: SEASONED LUMBER.

GABLE STUDS SPACED AT 2-0-0 OC.

PLATES (table is in inches)

JT	TYPE	PLATES	W	LEN	Y	X
B	TMV+p	MT20	3.0	4.0		
C	TMWW-t	MT20	4.0	4.0	2.00	1.50
D, E, F, H, I						
D	TMW+w	MT20	2.0	4.0		
G	TS-t	MT20	3.0	6.0		
J	TMV+p	MT20	3.0	4.0		
K	BMV1+p	MT20	3.0	4.0		
L, M, N, O, Q						
L	BMW1+w	MT20	2.0	4.0		
P	BMWW1-t	MT20	4.0	4.0		
R	BMV1+p	MT20	3.0	4.0		

DIMENSIONS, SUPPORTS AND LOADINGS SPECIFIED BY FABRICATOR TO BE VERIFIED BY BUILDING DESIGNER

BEARINGS

THIS TRUSS DESIGNED FOR CONTINUOUS BEARINGS.

THIS TRUSS REQUIRES RIGID SHEATHING ON EXPOSED FACE.

BEARING MATERIAL TO BE SPF NO.2 OR BETTER AT JOINT(S)

BRACING

TOP CHORD TO BE SHEATHED OR MAX. PURLIN SPACING = 6.25 FT.
MAX. UNBRACED BOTTOM CHORD LENGTH = 10.00 FT. OR RIGID CEILING DIRECTLY APPLIED.

ALL PITCH BREAKS AND PERIMETER CORNER JOINTS MUST BE LATERALLY RESTRAINED.

1 LATERAL BRACE(S) AT 1/ 2 LENGTH OF J-K, I-L.

END VERTICAL(S) MUST BE SHEATHED OR HAVE BRACES AS INDICATED IN THE MAX. UNBRACED LENOTH COLUMN OF THE TABLE BELOW

LOADING

TOTAL LOAD CASES: (4)

CHORDS

MEMB. FR-TO	MAX. FACTORED FORCE (LBS)	FACTORED VERT. LOAD LC1 (PLF) FROM	TO	MAX CSI (L.C)	MAX. UNBRAC LENGTH
A-B	0 / 32	-84.3	-84.3	0.11 (1)	10.00
B-C	-48 / 0	-84.3	-84.3	0.11 (1)	6.25
C-D	-12 / 0	-84.3	-84.3	0.04 (1)	6.25
D-E	-12 / 0	-84.3	-84.3	0.04 (1)	6.25
E-F	-7 / 0	-84.3	-84.3	0.04 (1)	10.00
F-G	-5 / 0	-84.3	-84.3	0.04 (1)	10.00
G-H	-5 / 0	-84.3	-84.3	0.04 (1)	10.00
H-I	0 / 0	-84.3	-84.3	0.04 (1)	10.00
I-J	-9 / 0	-84.3	-84.3	0.04 (1)	10.00
K-J	-72 / 0	0.0	0.0	0.03 (1)	6.25
R-B	-238 / 0	0.0	0.0	0.02 (1)	7.81
R-Q	0 / 0	-28.0	-28.0	0.02 (2)	10.00
Q-P	0 / 0	-28.0	-28.0	0.02 (2)	10.00
P-O	0 / 9	-28.0	-28.0	0.02 (2)	10.00
O-N	0 / 6	-28.0	-28.0	0.02 (2)	10.00
N-M	0 / 4	-28.0	-28.0	0.02 (2)	10.00
M-L	0 / 2	-28.0	-28.0	0.03 (2)	10.00
L-K	0 / 0	-28.0	-28.0	0.03 (2)	10.00

WEBS

MEMB. FR-TO	MAX. FACTORED FORCE (LBS)	MAX CSI (L.C)
L-I	-169 / 0	0.09 (1)
M-H	-164 / 0	0.15 (1)
N-F	-167 / 0	0.09 (1)
O-E	-165 / 0	0.05 (1)
P-D	-173 / 0	0.03 (1)
Q-C	-39 / 0	0.01 (1)
C-P	0 / 18	0.00 (1)

DESIGN CRITERIA

SPECIFIED LOADS:

TOP CH.	LL	=	25.6	PSF
	DL	=	3.0	PSF
BOT CH.	LL	=	10.5	PSF
	DL	=	7.0	PSF
TOTAL LOAD		=	46.1	PSF

SPACING = 24.0 IN. C/C

THIS TRUSS IS DESIGNED FOR RESIDENTIAL OR SMALL BUILDING REQUIREMENTS OF PART 9, NBCC 2010

THIS DESIGN COMPLIES WITH:
- PART 9 OF OBC 2012 , BCBC 2012 , ABC 2014
- CSA 086-09
- TPIC 2011

DESIGN ASSUMPTIONS
-OVERHANG NOT TO BE ALTERED OR CUT OFF.

(55 % OF 31.3 P.S.F. G.S.L. PLUS 8.4 P.S.F. RAIN LOAD) EQUALS 25.6 P.S.F. SPECIFIED ROOF LIVE LOAD

CSI: TC=0.11 (A-B:1) , BC=0.03 (L-M:2) , WB=0.15 (H-M:1) , SSI=0.08 (B-C:1)

DOL LUMBER=1.00 NAIL=1.00 LS BEND=1.10 COMP=1.10 SHEAR=1.10 TENS=1.10

COMPANION LIVE LOAD FACTOR = 0.50

AUTOSOLVE RIGHT HEEL ONLY

TRUSS PLATE MANUFACTURER IS NOT RESPONSIBLE FOR QUALITY CONTROL IN THE TRUSS MANUFACTURING PLANT .

NAIL VALUES

PLATE	GRIP(DRY) (PSI) MAX	MIN	SHEAR (PLI) MAX	MIN	SECTION (PLI) MAX	MIN
MT20	618	354	1667	822	2284	1658

PLATE PLACEMENT TOL. = 0.250 Inches

PLATE ROTATION TOL. = 5.0 Deg.

JSI GRIP= 0.13 (I) (INPUT = 0.90)
JSI METAL= 0.05 (I) (INPUT = 1.00)

LICENSED PROFESSIONAL ENGINEER
S. KATSOULAKOS
PROVINCE OF ONTARIO

DWG NO. TAM46243-17
STRUCTURAL
COMPONENT ONLY

JOB NAME	TRUSS NAME	QUANTITY	PLY	JOB DESC. 43954	DRWG NO.
286185	T28A	2	1	TRUSS DESC.	

Tamarack Roof Truss, Burlington

Version 8.200 S Dec 12 2017 MiTek Industries, Inc. Tue Jan 23 08:32:14 2018 Page 1
ID:iwZQpw3SSbuVOx5Ih3kDeHyeg6K-63FgkFJGbGkFW9kyBvz1_v6gniq5y8uyMHSxrVzsY0V

Scale = 1:61.9

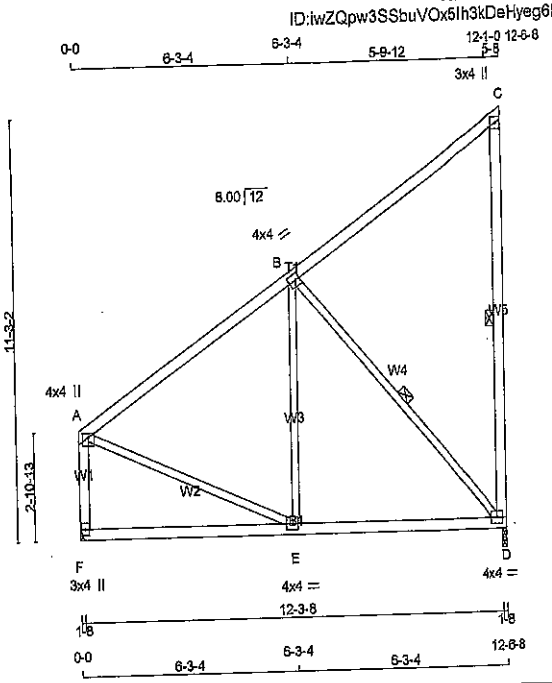

TOTAL WEIGHT = 2 X 64 = 128 lb
[M][F]

LUMBER
N. L. G. A. RULES

CHORDS	SIZE		LUMBER	DESCR.
A - C	2x4	DRY	No.2	SPF
D - C	2x4	DRY	No.2	SPF
F - A	2x4	DRY	No.2	SPF
F - D	2x4	DRY	No.2	SPF
ALL WEBS EXCEPT	2x3	DRY	No.2	SPF

DRY: SEASONED LUMBER.

PLATES (table is in inches)

JT	TYPE	PLATES	W	LEN	Y	X
A	TMVW+p	MT20	4.0	4.0	1.25	2.00
B	TMWW-t	MT20	4.0	4.0	2.00	1.50
C	TMV+p	MT20	3.0	4.0		
D	BMVW1-t	MT20	4.0	4.0		
E	BMWW-t	MT20	4.0	4.0		
F	BMV1+p	MT20	3.0	4.0		

DIMENSIONS, SUPPORTS AND LOADINGS SPECIFIED BY FABRICATOR TO BE VERIFIED BY BUILDING DESIGNER

BEARINGS

JT	FACTORED GROSS REACTION VERT	HORZ	MAXIMUM FACTORED GROSS REACTION DOWN	HORZ	UPLIFT	INPUT BRG	REQRD BRG
D	704	0	704	0	0	1-8	1-8
F	704	0	704	0	0	IN-SX	IN-SX

HANGER BY OTHERS
MIN. SEAT SIZE: 1-8

UNFACTORED REACTIONS

MAX./MIN. COMPONENT REACTIONS

JT	1ST LCASE COMBINED	SNOW	LIVE	PERM.LIVE	WIND	DEAD	SOIL
D	578	321 / 0	132 / 0	0 / 0	0 / 0	125 / 0	0 / 0
F	576	321 / 0	132 / 0	0 / 0	0 / 0	125 / 0	0 / 0

BEARING MATERIAL TO BE SPF NO.2 OR BETTER AT JOINT(S) D

BRACING
TOP CHORD TO BE SHEATHED OR MAX. PURLIN SPACING = 6.25 FT.
MAX. UNBRACED BOTTOM CHORD LENGTH = 10.00 FT OR RIGID CEILING DIRECTLY APPLIED.

ALL PITCH BREAKS AND PERIMETER CORNER JOINTS MUST BE LATERALLY RESTRAINED.

1 LATERAL BRACE(S) AT 1/2 LENGTH OF C-D, B-D.

END VERTICAL(S) MUST BE SHEATHED OR HAVE BRACES AS INDICATED IN THE MAX. UNBRACED LENGTH COLUMN OF THE TABLE BELOW

LOADING
TOTAL LOAD CASES: (4)

CHORDS

MEMB. FR-TO	MAX. FACTORED FORCE (LBS)	FACTORED VERT. LOAD LC1 (PLF) FROM	TO	MAX CSI (LC)	MAX. UNBRAC LENGTH
A- B	-452 / 0	-84.3	-84.3	0.44 (1)	6.25
B- C	-36 / 0	-84.3	-84.3	0.43 (1)	6.25
D- C	-199 / 0	0.0	0.0	0.13 (1)	6.25
F- A	-837 / 0	0.0	0.0	0.10 (1)	7.81
F- E	0 / 0	-28.0	-28.0	0.32 (3)	10.00
E- D	0 / 407	-28.0	-28.0	0.37 (2)	10.00

WEBS

MEMB. FR-TO	MAX. FACTORED FORCE (LBS)	MAX CSI (LC)
E- B	0 / 299	0.07 (3)
B- D	-598 / 0	0.34 (1)
A- E	0 / 440	0.10 (1)

DESIGN CRITERIA

SPECIFIED LOADS:

TOP CH.	LL	=	25.6	PSF
	DL	=	3.0	PSF
BOT CH.	LL	=	10.5	PSF
	DL	=	7.0	PSF
TOTAL LOAD		=	46.1	PSF

SPACING = 24.0 IN. C/C

THIS TRUSS IS DESIGNED FOR RESIDENTIAL OR SMALL BUILDING REQUIREMENTS OF PART 9, NBCC 2010

THIS DESIGN COMPLIES WITH:
- PART 9 OF OBC 2012 , BCBC 2012 , ABC 2014
- CSA 086-09
- TPIC 2011

(55 % OF 31.3 P.S.F. G.S.L. PLUS 8.4 P.S.F. RAIN LOAD) EQUALS 25.6 P.S.F. SPECIFIED ROOF LIVE LOAD

ALLOWABLE DEFL.(LL)= L/360 (0.42")
CALCULATED VERT. DEFL.(LL) = L/ 999 (0.05")
ALLOWABLE DEFL.(TL)= L/360 (0.42")
CALCULATED VERT. DEFL.(TL) = L/ 999 (0.08")

CSI: TC=0.44/1.00 (A-B:1) , BC=0.37/1.00 (D-E:2) , WB=0.34/1.00 (B-D:1) , SSI=0.21/1.00 (A-B:1)

DOL LUMBER=1.00 NAIL=1.00 LS BEND=1.10 COMP=1.10 SHEAR=1.10 TENS= 1.10

COMPANION LIVE LOAD FACTOR = 0.50

AUTOSOLVE RIGHT HEEL ONLY

TRUSS PLATE MANUFACTURER IS NOT RESPONSIBLE FOR QUALITY CONTROL IN THE TRUSS MANUFACTURING PLANT .

NAIL VALUES

PLATE	GRIP(DRY) (PSI) MAX	MIN	SHEAR (PLI) MAX	MIN	SECTION (PLI) MAX	MIN
MT20	618	354	1667	822	2284	1656

PLATE PLACEMENT TOL. = 0.250 Inches

PLATE ROTATION TOL. = 5.0 Deg.

JSI GRIP= 0.50 (E) (INPUT = 0.90)
JSI METAL= 0.15 (E) (INPUT = 1.00)

LICENSED PROFESSIONAL ENGINEER
S. KATSOULAKOS
PROVINCE OF ONTARIO

DWG NO. TAM 5109-28
STRUCTURAL
COMPONENT ONLY

JOB NAME	TRUSS NAME	QUANTITY	PLY	JOB DESC.	DRWG NO.
286206	T42Z2	1	1	TRUSS DESC.	

Tamarack Roof Truss, Burlington

Version 8.200 S Dec 12 2017 MiTek Industries, Inc. Tue Feb 6 11:16:05 2018 Page 1
ID:iwZQpw3SSbuVOx5Ih3kDeHyeg6K-5ZXuZ1uWtUBBNZ3qRit7DGlkQkrXCZ8X4ARMFwznulu

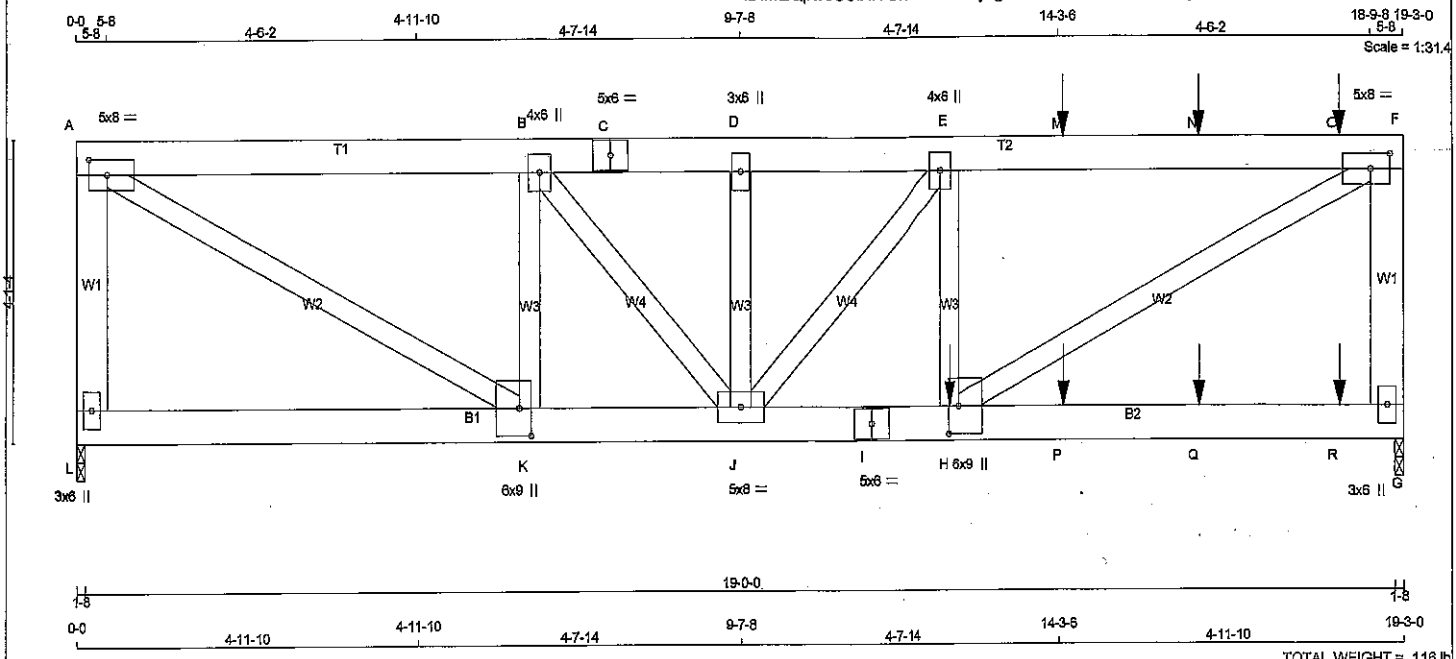

TOTAL WEIGHT = 116 lb

LUMBER
N. L. G. A. RULES

CHORDS	SIZE		LUMBER	DESCR.
L - A	2x6	DRY	No.2	SPF
A - C	2x6	DRY	No.2	SPF
C - F	2x6	DRY	No.2	SPF
G - F	2x6	DRY	No.2	SPF
L - I	2x6	DRY	No.2	SPF
I - G	2x6	DRY	No.2	SPF
ALL WEBS	2x4	DRY	No.2	SPF

DRY: SEASONED LUMBER.

PLATES (table is in inches)

JT	TYPE	PLATES	W	LEN	Y	X
A	TMWW-t	MT20	5.0	8.0	2.50	3.25
B	TMWW+t	MT20	4.0	6.0		
C	TS-t	MT20	5.0	6.0		
D	TMW+w	MT20	3.0	6.0		
E	TMWW+t	MT20	4.0	8.0		
F	TMWW-t	MT20	5.0	8.0	2.50	3.25
G	BMV1+p	MT20	3.0	6.0		
H	BMWW+t	MT20	6.0	8.0	4.50	2.00
I	BS-t	MT20	5.0	8.0		
J	BMWWW-t	MT20	5.0	8.0		
K	BMWW+t	MT20	6.0	9.0	4.50	2.00
L	BMV1+p	MT20	3.0	6.0		

HANGERS NOTES

1) SPECIAL HANGER(S) OR CONNECTION(S) REQUIRED TO SUPPORT CONCENTRATED LOAD(S) 101.4 lbs FACTORED DOWN AT 14-4-4, AND 101.4 lbs FACTORED DOWN AT 16-4-4, AND 105.8 lbs FACTORED DOWN AT 18-4-4 ON TOP CHORD, AND 1278.2 lbs FACTORED DOWN AT 12-8-0, 69.9 lbs FACTORED DOWN AT 14-4-4, AND 69.9 lbs FACTORED DOWN AT 16-4-4, AND 72.5 lbs FACTORED DOWN AT 18-4-4 ON BOTTOM CHORD. DESIGN FOR UNSPECIFIED CONNECTION(S) IS DELEGATED TO THE BUILDING DESIGNER.

DIMENSIONS, SUPPORTS AND LOADINGS SPECIFIED BY FABRICATOR TO BE VERIFIED BY BUILDING DESIGNER

BEARINGS

JT	FACTORED GROSS REACTION VERT	HORZ	MAXIMUM FACTORED GROSS REACTION DOWN	HORZ	UPLIFT	INPUT BRG IN-SX	REQRD BRG IN-SX
L	1582	0	1582	0	0	1-8	1-8
G	2287	0	2287	0	0	1-8	2-8

UNFACTORED REACTIONS

JT	1ST LCASE COMBINED	MAX./MIN. COMPONENT REACTIONS SNOW	LIVE	PERM.LIVE	WIND	DEAD	SOIL
L	1290	730 / 0	285 / 0	0 / 0	0 / 0	275 / 0	0 / 0
G	1866	1055 / 0	412 / 0	0 / 0	0 / 0	399 / 0	0 / 0

BEARING MATERIAL TO BE SPF NO.2 OR BETTER AT JOINT(S) L, G

BRACING

TOP CHORD TO BE SHEATHED OR MAX. PURLIN SPACING = 4.17 FT.
MAX. UNBRACED BOTTOM CHORD LENGTH = 10.00 FT OR RIGID CEILING DIRECTLY APPLIED.

ALL PITCH BREAKS AND PERIMETER CORNER JOINTS MUST BE LATERALLY RESTRAINED.

LOADING

TOTAL LOAD CASES: (4)

CHORDS

MEMB. FR-TO	MAX. FACTORED FORCE (LBS)	FACTORED VERT. LOAD LC1 (PLF) FROM	TO	MAX CSI (LC)	MAX. UNBRAC LENGTH
L- A	-1498 / 0	0.0	0.0	0.22 (1)	7.81
A- B	-2261 / 0	-84.3	-84.3	0.29 (1)	5.10
B- C	-2703 / 0	-84.3	-84.3	0.25 (1)	4.79
C- D	-2703 / 0	-84.3	-84.3	0.25 (1)	4.79
D- E	-2703 / 0	-84.3	-84.3	0.36 (1)	4.65
E- M	-3157 / 0	-84.3	-84.3	0.51 (1)	4.17
M- N	-3157 / 0	-84.3	-84.3	0.51 (1)	4.17
N- O	-3157 / 0	-84.3	-84.3	0.51 (1)	4.17
O- F	-3157 / 0	-84.3	-84.3	0.51 (1)	4.17
G- F	-2136 / 0	0.0	0.0	0.31 (1)	6.93
L- K	0 / 0	-26.0	-26.0	0.14 (2)	10.00
K- J	0 / 2261	-26.0	-26.0	0.34 (1)	10.00
J- I	0 / 3157	-26.0	-26.0	0.47 (2)	10.00
I- H	0 / 3157	-26.0	-26.0	0.47 (2)	10.00
H- P	0 / 0	-26.0	-26.0	0.26 (2)	10.00
P- Q	0 / 0	-26.0	-26.0	0.26 (2)	10.00
Q- R	0 / 0	-26.0	-26.0	0.26 (2)	10.00
R- G	0 / 0	-26.0	-26.0	0.26 (2)	10.00

WEBS

MEMB. FR-TO	MAX. FACTORED FORCE (LBS)	MAX CSI (LC)
H- F	0 / 3608	0.64 (1)
A- K	0 / 2808	0.46 (1)
H- E	-234 / 210	0.04 (1)
K- B	-1084 / 0	0.19 (1)
J- E	-708 / 0	0.18 (1)
B- J	0 / 859	0.12 (1)
J- D	-25 / 46	0.01 (1)

FACTORED CONCENTRATED LOADS (LBS)

JT	LOC.	LC1	MAX-	MAX+	FACE	DIR.	TYPE
H	12-8-0	-1278	-1278	—	BACK	VERT	TOTAL
M	14-4-4	-101	-101	—	BACK	VERT	TOTAL
N	16-4-4	-101	-101	—	BACK	VERT	TOTAL
O	18-4-4	-106	-106	—	BACK	VERT	TOTAL
P	14-4-4	-40	-70	—	BACK	VERT	TOTAL
Q	16-4-4	-40	-70	—	BACK	VERT	TOTAL
R	18-4-4	-41	-72	—	BACK	VERT	TOTAL

[M]

DESIGN CRITERIA

SPECIFIED LOADS:

TOP CH.	LL	=	25.6	PSF
	DL	=	3.0	PSF
BOT CH.	LL	=	10.5	PSF
	DL	=	7.0	PSF
TOTAL LOAD		=	46.1	PSF

SPACING = 24.0 IN. C/C

LOADING IN FLAT SECTION BASED ON A SLOPE OF 6.00/12

THIS TRUSS IS DESIGNED FOR RESIDENTIAL OR SMALL BUILDING REQUIREMENTS OF PART 9, NBCC 2010

THIS DESIGN COMPLIES WITH:
- PART 9 OF OBC 2012 , BCBC 2012 , ABC 2014
- CSA 086-09
- TPIC 2011

(55 % OF 31.3 P.S.F. G.S.L. PLUS 8.4 P.S.F. RAIN LOAD) EQUALS 25.6 P.S.F. SPECIFIED ROOF LIVE LOAD

ALLOWABLE DEFL.(LL)= L/360 (0.64")
CALCULATED VERT. DEFL.(LL) = L/ 999 (0.09")
ALLOWABLE DEFL.(TL)= L/360 (0.64")
CALCULATED VERT. DEFL.(TL) = L/ 999 (0.15")

CSI: TC=0.51/1.00 (E-F:1) , BC=0.47/1.00 (H-J:2) , WB=0.64/1.00 (F-H:1) , SSI=0.32/1.00 (E-F:1)

DOL LUMBER=1.00 NAIL=1.00 LS BEND=1.00 COMP=1.00 SHEAR=1.00 TENS= 1.00

COMPANION LIVE LOAD FACTOR = 0.50

TRUSS PLATE MANUFACTURER IS NOT RESPONSIBLE FOR QUALITY CONTROL IN THE TRUSS MANUFACTURING PLANT .

NAIL VALUES

PLATE	GRIP(DRY) (PSI) MAX	MIN	SHEAR (PLI) MAX	MIN	SECTION (PLI) MAX	MIN
MT20	618	354	1667	822	2284	1656

PLATE PLACEMENT TOL. = 0.250 inches

PLATE ROTATION TOL. = 5.0 Deg.

USI GRIP= 0.88 (K) (INPUT = 0.90)
USI METAL= 0.69 (K) (INPUT = 1.00)

LICENSED PROFESSIONAL ENGINEER
S. KATSOULAKOS
PROVINCE OF ONTARIO

DWG NO. TAM 8072-18
STRUCTURAL COMPONENT ONLY

JOB NAME	TRUSS NAME	QUANTITY	PLY	JOB DESC.	DRWG NO.
286206	T43Z2	1	3	TRUSS DESC.	

Tamarack Roof Truss, Burlington

Version 8.200 S Dec 12 2017 MiTek Industries, Inc. Tue Feb 6 11:16:06 2018 Page 1
ID:iwZQpw3SSbuVOx5lh3kDeHyeg6K-al4GnNu8eoJ2_je0?QOMITHtk8DCx?EgJqAwnMznult

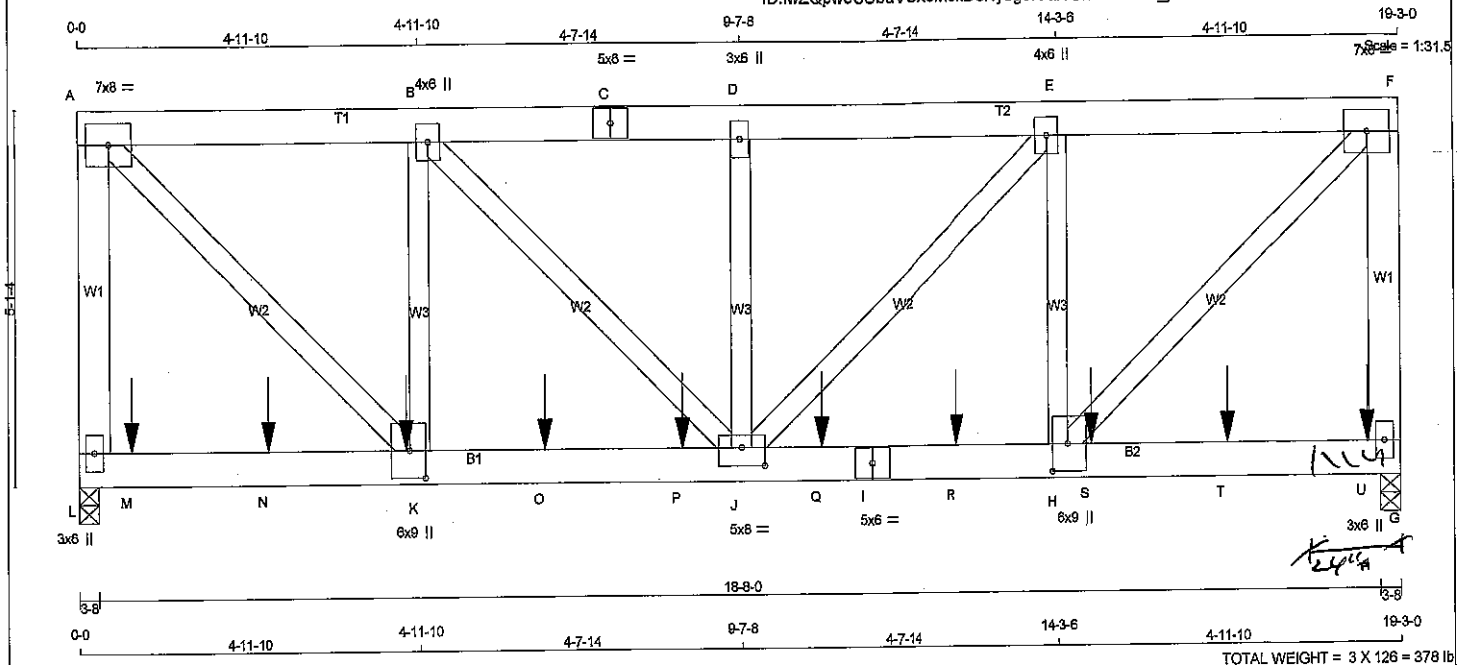

TOTAL WEIGHT = 3 X 126 = 378 lb

LUMBER
N. L. G. A. RULES

CHORDS	SIZE		LUMBER	DESCR.
L - A	2x6	DRY	No.2	SPF
A - C	2x6	DRY	2100F 1.8E	SPF
C - F	2x6	DRY	2100F 1.8E	SPF
G - F	2x6	DRY	No.2	SPF
L - I	2x6	DRY	2100F 1.8E	SPF
I - G	2x6	DRY	2100F 1.8E	SPF
ALL WEBS	2x4	DRY	No.2	SPF

DRY: SEASONED LUMBER.

DESIGN CONSISTS OF 3 TRUSSES BUILT SEPARATELY THEN FASTENED TOGETHER AS FOLLOWS:

CHORDS	#ROWS	SURFACE SPACING (IN)	LOAD(PLF)
TOP CHORDS : (0.122"X3") SPIRAL NAILS			
L- A	2	12	TOP
A- C	2	12	TOP
C- F	2	12	TOP
F- G	2	12	SIDE(78.7)
BOTTOM CHORDS : (0.122"X3") SPIRAL NAILS			
L- I	2	8	SIDE(579.7)
I- G	2	8	SIDE(452.7)
WEBS : (0.122"X3") SPIRAL NAILS			
2x4	1	6	

STAGGER NAILS BY HALF THE SURFACE SPACING IN ADJACENT PLIES.

GIRDER NAILING ASSUMES NAILED HANGERS ARE FASTENED WITH MIN. 3-0 INCH NAILS.

TOP - COMPONENTS ARE LOADED FROM THE TOP AND MUST BE PLACED ON TOP EDGE OF ALL PLIES FOR THE LOAD TO BE TRANSFERRED TO EACH PLY.

SIDE - PLF SHOWN IS THE EQUIVALENT UDL APPLIED TO ONE SIDE THAT THE CORRESPONDING NAILING PATTERN SHALL BE CAPABLE OF TRANSFERING. REMAINING PLF MUST BE APPLIED ON THE OPPOSITE SIDE OR ON THE TOP.

PLATES (table is in inches)

JT	TYPE	PLATES	W	LEN	Y	X
A	TMWW-t	MT20	7.0	6.0		
B	TMWW+t	MT20	4.0	6.0		
C	TS-t	MT20	5.0	6.0		
D	TMW+w	MT20	3.0	6.0		
E	TMWW+t	MT20	4.0	6.0		
F	TMWW-t	MT20	7.0	8.0		
G	BMV1+p	MT20	3.0	6.0		
H	BMWW+t	MT20	6.0	9.0	4.50	2.75
I	BS-t	MT20	5.0	6.0		
J	BMWWW-t	MT20	5.0	8.0	3.00	4.00
K	BMWW+t	MT20	6.0	9.0	4.50	2.75
L	BMV1+p	MT20	3.0	6.0		

HANGERS NOTES

SCAB JOINT # G &# WITH 2 X 6 #2
SPF 24" LONG 1 SIDE(S) USING 2
ROW(S) 3½" ARDOX SPIRAL/~~COMMON WIRE~~
NAILS AT 4" O/C STAGGERED (11 NAILS/SCAB).
REQUIRED FOR 3½" BRG PROVISION.

DIMENSIONS, SUPPORTS AND LOADINGS SPECIFIED BY FABRICATOR TO BE VERIFIED BY BUILDING DESIGNER

BEARINGS

JT	FACTORED GROSS REACTION VERT	HORZ	MAXIMUM FACTORED GROSS REACTION DOWN	HORZ	UPLIFT	INPUT BRG IN-SX	REQRD BRG IN-SX
L	9611	0	9611	0	0	3-8	3-8
G	9914	0	9914	0	0	3-8	3-8

UNFACTORED REACTIONS

JT	1ST LCASE COMBINED	MAX./MIN. COMPONENT REACTIONS SNOW	LIVE	PERM.LIVE	WIND	DEAD	SOIL
L	7834	4442 / 0	1722 / 0	0 / 0	0 / 0	1669 / 0	0 / 0
G	8082	4581 / 0	1779 / 0	0 / 0	0 / 0	1723 / 0	0 / 0

BEARING MATERIAL TO BE SPF NO.2 OR BETTER AT JOINT(S) L, G

BRACING
TOP CHORD TO BE SHEATHED OR MAX. PURLIN SPACING = 5.55 FT.
MAX. UNBRACED BOTTOM CHORD LENGTH = 10.00 FT OR RIGID CEILING DIRECTLY APPLIED.

ALL PITCH BREAKS AND PERIMETER CORNER JOINTS MUST BE LATERALLY RESTRAINED.

LOADING
TOTAL LOAD CASES: (4)

CHORDS

MEMB. FR-TO	MAX. FACTORED FORCE (LBS)	FACTORED VERT. LOAD LC1 (PLF) FROM	TO	MAX CSI (LC)	MAX. UNBRAC LENGTH
L- A	-7662 / 0	0.0	0.0	0.60 (1)	6.49
A- B	-7961 / 0	-84.3	-84.3	0.05 (1)	8.06
B- C	-10063 / 0	-84.3	-84.3	0.05 (1)	5.55
C- D	-10063 / 0	-84.3	-84.3	0.05 (1)	5.55
D- E	-10063 / 0	-84.3	-84.3	0.05 (1)	5.55
E- F	-7946 / 0	-84.3	-84.3	0.05 (1)	6.07
G- F	-7647 / 0	0.0	0.0	0.60 (1)	6.50
L- M	0 / 0	-28.0	-28.0	0.22 (1)	10.00
M- N	0 / 0	-28.0	-28.0	0.22 (1)	10.00
N- K	0 / 0	-28.0	-28.0	0.22 (1)	10.00
K- O	0 / 7961	-28.0	-28.0	0.34 (1)	10.00
O- P	0 / 7961	-28.0	-28.0	0.34 (1)	10.00
P- J	0 / 7961	-28.0	-28.0	0.34 (1)	10.00
J- O	0 / 7946	-28.0	-28.0	0.38 (1)	10.00
O- I	0 / 7946	-28.0	-28.0	0.38 (1)	10.00
I- R	0 / 7946	-28.0	-28.0	0.38 (1)	10.00
R- H	0 / 7946	-28.0	-28.0	0.38 (1)	10.00
H- S	0 / 0	-28.0	-28.0	0.25 (1)	10.00
S- T	0 / 0	-28.0	-28.0	0.25 (1)	10.00
T- U	0 / 0	-28.0	-28.0	0.25 (1)	10.00
U- G	0 / 0	-28.0	-28.0	0.25 (1)	10.00

WEBS

MEMB. FR-TO	MAX. FACTORED FORCE (LBS)	MAX CSI (LC)
H- F	0 / 10879	0.58 (1)
A- K	0 / 10899	0.58 (1)
H- E	-2503 / 0	0.20 (1)
K- B	-2488 / 0	0.20 (1)
J- E	0 / 2991	0.16 (1)
B- J	0 / 2970	0.16 (1)
J- D	-405 / 0	0.03 (1)

FACTORED CONCENTRATED LOADS (LBS)

JT	LOC.	LC1	MAX-	MAX+	FACE	DIR.	TYPE
K	4-9-4	-1735	-1735	---	FRONT	VERT	TOTAL
M	9-4	-1739	-1739	---	FRONT	VERT	TOTAL
N	2-9-4	-1735	-1735	---	FRONT	VERT	TOTAL
O	5-9-4	-1735	-1735	---	FRONT	VERT	TOTAL
P	8-9-4	-1735	-1735	---	FRONT	VERT	TOTAL
Q	10-9-4	-1735	-1735	---	FRONT	VERT	TOTAL
R	12-9-4	-1735	-1735	---	FRONT	VERT	TOTAL
S	14-9-4	-1735	-1735	---	FRONT	VERT	TOTAL
T	16-9-4	-1735	-1735	---	FRONT	VERT	TOTAL
U	18-9-4	-1743	-1743	---	FRONT	VERT	TOTAL

[M]

DESIGN CRITERIA

SPECIFIED LOADS:

TOP CH.	LL	=	25.6	PSF
	DL	=	3.0	PSF
BOT CH.	LL	=	10.5	PSF
	DL	=	7.0	PSF
TOTAL LOAD		=	46.1	PSF

SPACING = 24.0 IN. C/C

LOADING IN FLAT SECTION BASED ON A SLOPE OF 6.00/12

THIS TRUSS IS DESIGNED FOR RESIDENTIAL OR SMALL BUILDING REQUIREMENTS OF PART 9, NBCC 2010

THIS DESIGN COMPLIES WITH:
- PART 9 OF OBC 2012 , BCBC 2012 , ABC 2014
- CSA 086-09
- TPIC 2011

(55 % OF 31.3 P.S.F. G.S.L. PLUS 8.4 P.S.F. RAIN LOAD) EQUALS 25.6 P.S.F. SPECIFIED ROOF LIVE LOAD

ALLOWABLE DEFL.(LL)= L/360 (0.64")
CALCULATED VERT. DEFL.(LL) = L/ 999 (0.08")
ALLOWABLE DEFL.(TL)= L/360 (0.64")
CALCULATED VERT. DEFL.(TL) = L/ 999 (0.13")

CSI: TC=0.60/1.00 (A-L:1) , BC=0.38/1.00 (H-J:1) , WB=0.58/1.00 (A-K:1) , SSI=0.62/1.00 (G-H:1)

DOL LUMBER=1.00 NAIL=1.00 LS BEND=1.10 COMP=1.10 SHEAR=1.10 TENS= 1.10

COMPANION LIVE LOAD FACTOR = 0.50

TRUSS PLATE MANUFACTURER IS NOT RESPONSIBLE FOR QUALITY CONTROL IN THE TRUSS MANUFACTURING PLANT .

NAIL VALUES

PLATE	GRIP(DRY) (PSI) MAX	MIN	SHEAR (PLI) MAX	MIN	SECTION (PLI) MAX	MIN
MT20	618	354	1667	822	2284	1656

PLATE PLACEMENT TOL. = 0.250 inches

PLATE ROTATION TOL. = 5.0 Deg.

JS GRIP= 0.86 (J) (INPUT = 0.90)
JS METAL= 0.60 (I) (INPUT = 1.00)

LICENSED PROFESSIONAL ENGINEER
S. KATSOULAKOS
PROVINCE OF ONTARIO

DWG NO. TAM B073 -18
STRUCTURAL COMPONENT ONLY

CONTINUED ON PAGE 2

JOB NAME	TRUSS NAME	QUANTITY	PLY	JOB DESC.	DRWG NO.
286206	T43Z2	1	3	TRUSS DESC.	

Tamarack Roof Truss, Burlington

Version 8.200 S Dec 12 2017 MiTek Industries, Inc. Tue Feb 6 11:16:08 2018 Page 2
ID:iwZQpw3SSbuVOx5ih3kDeHyeg6K-al4GnNu8eoJ2_je0?QOMITHtk8DCx?EgJqAwnMznuIt

HANGERS NOTES

1) SPECIAL HANGER(S) OR CONNECTION(S) REQUIRED TO SUPPORT CONCENTRATED LOAD(S) 1738.5 lbs FACTORED DOWN AT 9-4, 1735.3 lbs FACTORED DOWN AT 2-9-4, 1735.3 lbs FACTORED DOWN AT 4-9-4, 1735.3 lbs FACTORED DOWN AT 6-9-4, 1735.3 lbs FACTORED DOWN AT 8-9-4, 1735.3 lbs FACTORED DOWN AT 10-9-4, 1735.3 lbs FACTORED DOWN AT 12-9-4, 1735.3 lbs FACTORED DOWN AT 14-9-4, AND 1735.3 lbs FACTORED DOWN AT 16-9-4, AND 1742.6 lbs FACTORED DOWN AT 18-9-4 ON BOTTOM CHORD. DESIGN FOR UNSPECIFIED CONNECTION(S) IS DELEGATED TO THE BUILDING DESIGNER.

LICENSED PROFESSIONAL ENGINEER
S. KATSOULAKOS
PROVINCE OF ONTARIO

DWG NO. TAM 8073

STRUCTURAL
COMPONENT ONLY

JOB NAME	TRUSS NAME	QUANTITY	PLY	JOB DESC.	DRWG NO.
286206	T45	1	3	TRUSS DESC.	

Tamarack Roof Truss, Burlington

Version 8.200 S Dec 12 2017 MiTek Industries, Inc. Tue Feb 6 11:16:06 2018 Page 1
ID:zBB7Ev1dAuzyzMrqV1CPA1yeR9e-al4GnNu8eoJ2_je0?QOMITH?086pxxXgJqAwnMznuIt

Scale = 1:45.2

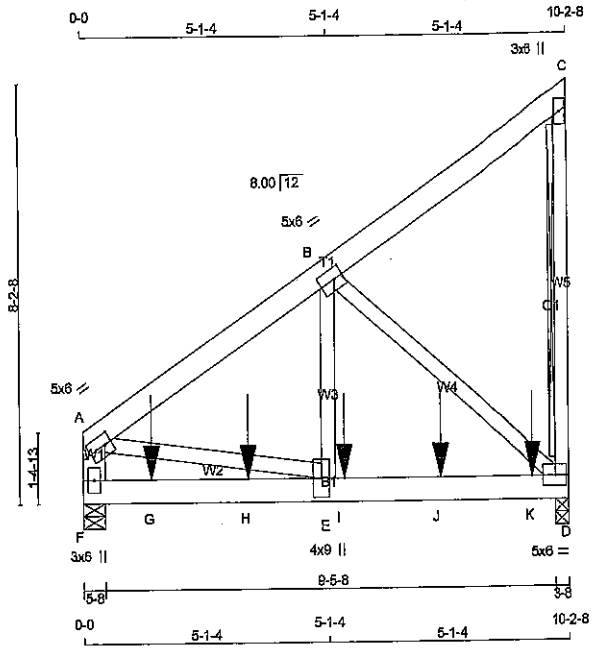

TOTAL WEIGHT = 3 X 67 = 201 lb

[M

LUMBER

N. L. G. A. RULES

CHORDS	SIZE		LUMBER	DESCR.
A - C	2x6	DRY	No.2	SPF
D - C	2x4	DRY	No.2	SPF
F - A	2x6	DRY	No.2	SPF
F - D	2x6	DRY	No.2	SPF
ALL WEBS EXCEPT	2x4	DRY	No.2	SPF

DRY: SEASONED LUMBER.

DESIGN CONSISTS OF 3 TRUSSES BUILT SEPARATELY THEN FASTENED TOGETHER AS FOLLOWS:

CHORDS	#ROWS	SURFACE SPACING (IN)	LOAD(PLF)
TOP CHORDS : (0.122"X3") SPIRAL NAILS			
A- C	2	12	TOP
F- A	2	12	TOP
C- D	1	12	TOP
BOTTOM CHORDS : (0.122"X3") SPIRAL NAILS			
F- D	2	6	SIDE(640.9)
WEBS : (0.122"X3") SPIRAL NAILS			
2x4	1	6	

STAGGER NAILS BY HALF THE SURFACE SPACING IN ADJACENT PLIES.

GIRDER NAILING ASSUMES NAILED HANGERS ARE FASTENED WITH MIN. 3-0 INCH NAILS.

TOP - COMPONENTS ARE LOADED FROM THE TOP AND MUST BE PLACED ON TOP EDGE OF ALL PLIES FOR THE LOAD TO BE TRANSFERRED TO EACH PLY.

SIDE - PLF SHOWN IS THE EQUIVALENT UDL APPLIED TO ONE SIDE THAT THE CORRESPONDING NAILING PATTERN SHALL BE CAPABLE OF TRANSFERING. REMAINING PLF MUST BE APPLIED ON THE OPPOSITE SIDE OR ON THE TOP.

PLATES (table is in inches)

JT	TYPE	PLATES	W	LEN	Y	X
A	TMWW-t	MT20	5.0	6.0	2.50	1.75
B	TMWW-t	MT20	5.0	6.0	2.50	2.25
C	TMV+p	MT20	3.0	6.0		
D	BMVW1-t	MT20	5.0	6.0		
E	BMWW+t	MT20	4.0	9.0		
F	BMV1+p	MT20	3.0	6.0		

HANGERS NOTES

1) SPECIAL HANGER(S) OR CONNECTION(S) REQUIRED TO SUPPORT CONCENTRATED LOAD(S) 1849.6 lbs FACTORED DOWN AT 1-5-4, 1849.6 lbs FACTORED DOWN AT 3-5-4, 1849.6 lbs FACTORED DOWN AT 5-5-4, AND 1849.6 lbs FACTORED DOWN AT 7-5-4, AND 1852.8 lbs FACTORED DOWN AT 9-5-4 ON BOTTOM CHORD. DESIGN FOR UNSPECIFIED CONNECTION(S) IS DELEGATED TO THE BUILDING DESIGNER.

DIMENSIONS, SUPPORTS AND LOADINGS SPECIFIED BY FABRICATOR TO BE VERIFIED BY BUILDING DESIGNER

BEARINGS

JT	FACTORED GROSS REACTION VERT	HORZ	MAXIMUM FACTORED GROSS REACTION DOWN	HORZ	UPLIFT	INPUT BRG IN-SX	REQRD BRG IN-SX
D	5502	0	5502	0	0	3-8	3-8
F	4895	0	4895	0	0	5-8	5-8

UNFACTORED REACTIONS

JT	1ST LCASE COMBINED	MAX./MIN. COMPONENT REACTIONS SNOW	LIVE	PERM.LIVE	WIND	DEAD	SOIL
D	4444	2567 / 0	932 / 0	0 / 0	0 / 0	925 / 0	0 / 0
F	3953	2301 / 0	829 / 0	0 / 0	0 / 0	823 / 0	0 / 0

BEARING MATERIAL TO BE SPF NO.2 OR BETTER AT JOINT(S) D, F

BRACING

TOP CHORD TO BE SHEATHED OR MAX. PURLIN SPACING = 6.23 FT.
MAX. UNBRACED BOTTOM CHORD LENGTH = 10.00 FT OR RIGID CEILING DIRECTLY APPLIED.

ALL PITCH BREAKS AND PERIMETER CORNER JOINTS MUST BE LATERALLY RESTRAINED.

2x6 DRY SPF No.2 T-BRACE AT C-D

FASTEN T AND I-BRACES TO NARROW EDGE OF WEB WITH ONE ROW PER PLY OF 3" COMMON WIRE NAILS @ 6" O.C. WITH 3" MINIMUM END DISTANCE. BRACE MUST COVER 90% OF WEB LENGTH.

END VERTICAL(S) MUST BE SHEATHED OR HAVE BRACES AS INDICATED IN THE MAX. UNBRACED LENGTH COLUMN OF THE TABLE BELOW

LOADING

TOTAL LOAD CASES: (4)

CHORDS

MEMB. FR-TO	MAX. FACTORED FORCE (LBS)	FACTORED VERT. LOAD LC1 (PLF) FROM	TO	MAX CSI (LC)	MAX. UNBRAC LENGTH
A- B	-4639 / 0	-84.3	-84.3	0.06 (1)	6.23
B- C	-15 / 4	-84.3	-84.3	0.05 (1)	6.25
D- C	-187 / 0	0.0	0.0	0.01 (1)	7.81
F- A	-3449 / 0	0.0	0.0	0.07 (1)	7.81
F- G	0 / 0	-28.0	-28.0	0.64 (1)	10.00
G- H	0 / 0	-28.0	-28.0	0.64 (1)	10.00
H- E	0 / 0	-28.0	-28.0	0.64 (1)	10.00
E- I	0 / 3872	-28.0	-28.0	0.79 (1)	10.00
I- J	0 / 3872	-28.0	-28.0	0.79 (1)	10.00
J- K	0 / 3872	-28.0	-28.0	0.79 (1)	10.00
K- D	0 / 3872	-28.0	-28.0	0.79 (1)	10.00

WEBS

MEMB. FR-TO	MAX. FACTORED FORCE (LBS)	MAX CSI (LC)
E- B	0 / 5358	0.29 (1)
B- D	-5063 / 0	0.88 (1)
A- E	0 / 3932	0.21 (1)

FACTORED CONCENTRATED LOADS (LBS)

JT	LOC.	LC1	MAX-	MAX+	FACE	DIR.	TYPE
G	1-5-4	-1850	-1850	—	FRONT	VERT	TOTAL
H	3-5-4	-1850	-1850	—	FRONT	VERT	TOTAL
I	5-5-4	-1850	-1850	—	FRONT	VERT	TOTAL
J	7-5-4	-1850	-1850	—	FRONT	VERT	TOTAL
K	9-5-4	-1853	-1853	—	FRONT	VERT	TOTAL

DESIGN CRITERIA

SPECIFIED LOADS:

TOP CH.	LL	=	25.6	PSF
	DL	=	3.0	PSF
BOT CH.	LL	=	10.5	PSF
	DL	=	7.0	PSF
TOTAL LOAD		=	46.1	PSF

SPACING = 24.0 IN. C/C

THIS TRUSS IS DESIGNED FOR RESIDENTIAL OR SMALL BUILDING REQUIREMENTS OF PART 9, NBCC 2010

THIS DESIGN COMPLIES WITH:
- PART 9 OF OBC 2012 , BCBC 2012 , ABC 2014
- CSA 086-09
- TPIC 2011

(55 % OF 31.3 P.S.F. G.S.L. PLUS 6.4 P.S.F. RAIN LOAD) EQUALS 25.6 P.S.F. SPECIFIED ROOF LIVE LOAD

ALLOWABLE DEFL.(LL)= L/360 (0.34")
CALCULATED VERT. DEFL.(LL) = L/ 999 (0.06")
ALLOWABLE DEFL.(TL)= L/360 (0.34")
CALCULATED VERT. DEFL.(TL) = L/ 999 (0.09")

CSI: TC=0.07/1.00 (A-F:1) , BC=0.79/1.00 (D-E:1) , WB=0.88/1.00 (B-D:1) , SSI=0.73/1.00 (D-E:1)

DOL LUMBER=1.00 NAIL=1.00 LS BEND=1.10 COMP=1.10 SHEAR=1.10 TENS= 1.10

COMPANION LIVE LOAD FACTOR = 0.50

TRUSS PLATE MANUFACTURER IS NOT RESPONSIBLE FOR QUALITY CONTROL IN THE TRUSS MANUFACTURING PLANT .

NAIL VALUES

PLATE	GRIP(DRY) (PSI) MAX	MIN	SHEAR (PLI) MAX	MIN	SECTION (PLI) MAX	MIN
MT20	618	354	1667	822	2284	1656

PLATE PLACEMENT TOL. = 0.250 inches

PLATE ROTATION TOL. = 5.0 Deg.

JSI GRIP= 0.67 (A) (INPUT = 0.90)
JSI METAL= 0.42 (E) (INPUT = 1.00)

LICENSED PROFESSIONAL ENGINEER
S. KATSOULAKOS
PROVINCE OF ONTARIO

DWG NO. TAM 8074 -B
STRUCTURAL COMPONENT ONLY

JOB NAME	TRUSS NAME	QUANTITY	PLY	JOB DESC. 43954	DRWG NO.
286204	T46A	1	1	TRUSS DESC.	

Tamarack Roof Truss, Burlington

Version 8.030 S Oct 5 2016 MiTek Industries, Inc. Tue Sep 12 12:44:34 2017 Page 1
ID:zB87Ev1dAuzyzMrqV1CPA1yeR9e-dCcS8bPiiRgU8sJ?1NNere89j1nFawvLvh9poDyeO_B

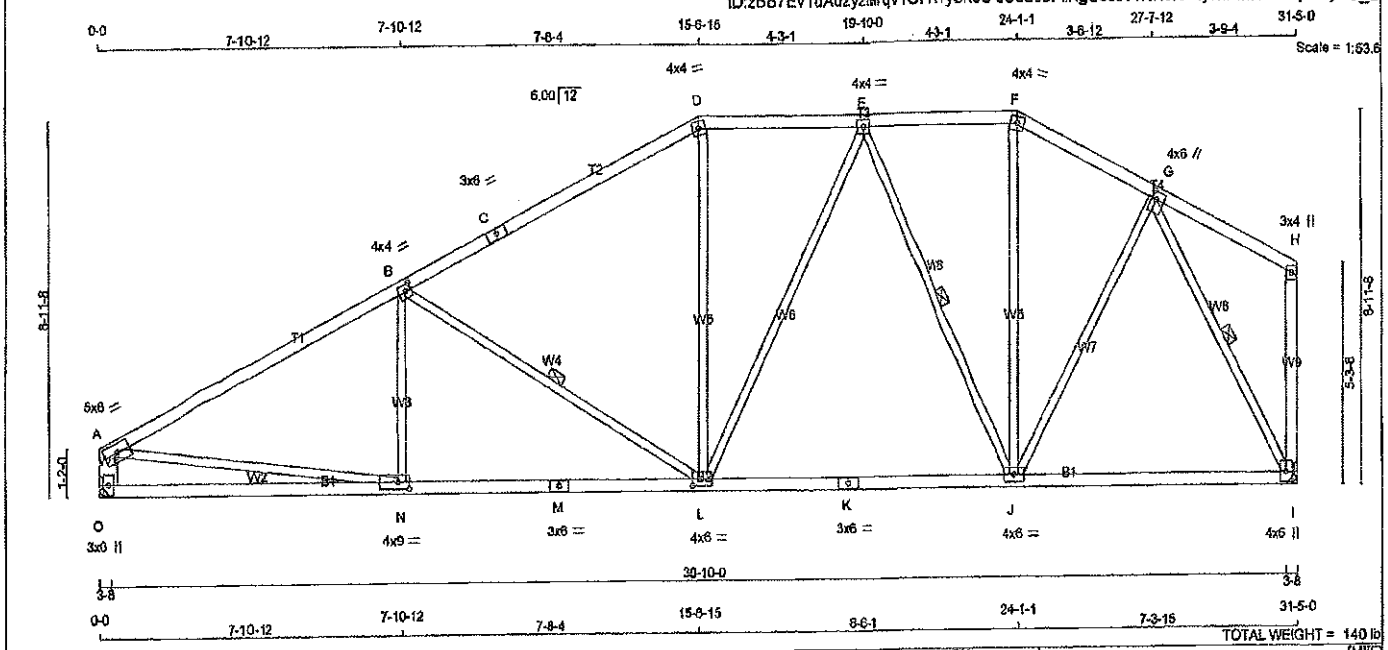

TOTAL WEIGHT = 140 lb [MI]F

LUMBER
N. L. G. A. RULES

CHORDS	SIZE		LUMBER	DESCR.
A - C	2x4	DRY	No.2	SPF
C - D	2x4	DRY	No.2	SPF
D - F	2x4	DRY	No.2	SPF
F - H	2x4	DRY	No.2	SPF
O - A	2x6	DRY	No.2	SPF
I - H	2x4	DRY	No.2	SPF
O - M	2x4	DRY	No.2	SPF
M - K	2x4	DRY	No.2	SPF
K - I	2x4	DRY	No.2	SPF
ALL WEBS EXCEPT	2x3	DRY	No.2	SPF

DRY: SEASONED LUMBER.

PLATES (table is in inches)

JT	TYPE	PLATES	W	LEN	Y	X
A	TMWW-t	MT20	5.0	8.0		
B	TMWW-t	MT20	4.0	4.0	2.00	1.75
C	TS-t	MT20	3.0	6.0		
D	TTW-m	MT20	4.0	4.0		
E	TMWW-t	MT20	4.0	4.0		
F	TTW-m	MT20	4.0	4.0		
G	TMWW+t	MT20	4.0	6.0	2.25	1.50
H	TMV+p	MT20	3.0	4.0		
I	BMVW1+p	MT20	4.0	6.0		
J	BMWWW-t	MT20	4.0	6.0		
K	BS-t	MT20	3.0	6.0		
L	BMWWW-t	MT20	4.0	6.0	2.00	2.00
M	BS-t	MT20	3.0	6.0		
N	BMWW-t	MT20	4.0	9.0	2.00	3.50
O	BMV1+p	MT20	3.0	6.0		

DIMENSIONS, SUPPORTS AND LOADINGS SPECIFIED BY FABRICATOR TO BE VERIFIED BY BUILDING DESIGNER

BEARINGS

JT	FACTORED GROSS REACTION VERT	HORZ	MAXIMUM FACTORED GROSS REACTION DOWN	HORZ	UPLIFT	INPUT BRG IN-SX	REQRD BRG IN-SX
O	1763	0	1763	0	0	HANGER BY OTHERS MIN. SEAT SIZE: 3-8	
I	1763	0	1763	0	0	HANGER BY OTHERS MIN. SEAT SIZE: 3-8	

UNFACTORED REACTIONS

JT	1ST LCASE COMBINED	MAX/MIN. COMPONENT REACTIONS SNOW	LIVE	PERM.LIVE	WIND	DEAD	SOIL
O	1448	804 / 0	330 / 0	0 / 0	0 / 0	314 / 0	0 / 0
I	1448	804 / 0	330 / 0	0 / 0	0 / 0	314 / 0	0 / 0

BRACING
TOP CHORD TO BE SHEATHED OR MAX. PURLIN SPACING = 3.21 FT.
MAX. UNBRACED BOTTOM CHORD LENGTH = 10.00 FT. OR RIGID CEILING DIRECTLY APPLIED.

ALL PITCH BREAKS AND PERIMETER CORNER JOINTS MUST BE LATERALLY RESTRAINED.

1 LATERAL BRACE(S) AT 1/2 LENGTH OF B-L, E-J, G-I.

END VERTICAL(S) MUST BE SHEATHED OR HAVE BRACES AS INDICATED IN THE MAX. UNBRACED LENGTH COLUMN OF THE TABLE BELOW

LOADING
TOTAL LOAD CASES: (4)

CHORDS

MEMB. FR-TO	MAX. FACTORED FORCE (LBS)	FACTORED VERT. LOAD LC1 (PLF) FROM	TO	MAX CSI (LC)	MAX. UNBRAC LENGTH
A- B	-2571 / 0	-84.3	-84.3	0.96 (1)	3.21
B- C	-1636 / 0	-84.3	-84.3	0.80 (1)	3.89
C- D	-1638 / 0	-84.3	-84.3	0.80 (1)	3.89
D- E	-1614 / 0	-84.3	-84.3	0.22 (1)	5.00
E- F	-1175 / 0	-84.3	-84.3	0.20 (1)	5.66
F- G	-1326 / 0	-84.3	-84.3	0.15 (1)	5.47
G- H	0 / 15	-84.3	-84.3	0.17 (1)	10.00
O- A	-1673 / 0	0.0	0.0	0.11 (1)	7.64
I- H	-120 / 0	0.0	0.0	0.08 (1)	7.81
O- N	0 / 0	-28.0	-28.0	0.41 (3)	10.00
N- M	0 / 2331	-28.0	-28.0	0.68 (2)	10.00
M- L	0 / 2331	-28.0	-28.0	0.68 (2)	10.00
L- K	0 / 1499	-28.0	-28.0	0.60 (2)	10.00
K- J	0 / 1499	-28.0	-28.0	0.60 (2)	10.00
J- I	0 / 840	-28.0	-28.0	0.52 (2)	10.00

WEBS

MEMB. FR-TO	MAX. FACTORED FORCE (LBS)	MAX CSI (LC)
N- B	-11 / 305	0.07 (3)
B- L	-848 / 0	0.50 (1)
L- D	0 / 443	0.10 (2)
L- E	0 / 273	0.06 (2)
E- J	-751 / 0	0.50 (1)
J- F	0 / 335	0.08 (2)
J- G	0 / 683	0.15 (1)
A- N	0 / 2345	0.53 (1)
G- I	-1774 / 0	0.70 (1)

DESIGN CRITERIA

SPECIFIED LOADS:

TOP CH.	LL	=	25.6	PSF
	DL	=	3.0	PSF
BOT CH.	LL	=	10.5	PSF
	DL	=	7.0	PSF
TOTAL LOAD		=	46.1	PSF

SPACING = 24.0 IN. C/C

LOADING IN FLAT SECTION BASED ON A SLOPE OF 6.00/12

THIS TRUSS IS DESIGNED FOR RESIDENTIAL OR SMALL BUILDING REQUIREMENTS OF PART 9, NBCC 2010

THIS DESIGN COMPLIES WITH:
- PART 9 OF OBC 2012 , BCBC 2012 , ABC 2014
- CSA 086-09
- TPIC 2011

(55 % OF 31.3 P.S.F. G.S.L. PLUS 8.4 P.S.F. RAIN LOAD) EQUALS 25.6 P.S.F. SPECIFIED ROOF LIVE LOAD

ALLOWABLE DEFL.(LL)= L/360 (1.05")
CALCULATED VERT. DEFL.(LL) = L/999 (0.18")
ALLOWABLE DEFL.(TL)= L/360 (1.05")
CALCULATED VERT. DEFL.(TL) = L/999 (0.26")

CSI: TC=0.96 (A-B:1) , BC=0.68 (L-N:2) , WB=0.70 (G-I:1) , SSI=0.29 (A-B:1)

DOL LUMBER=1.00 NAIL=1.00 LS BEND=1.10 COMP=1.10 SHEAR=1.10 TENS= 1.10

COMPANION LIVE LOAD FACTOR = 0.50

AUTOSOLVE HEELS OFF

TRUSS PLATE MANUFACTURER IS NOT RESPONSIBLE FOR QUALITY CONTROL IN THE TRUSS MANUFACTURING PLANT .

NAIL VALUES

PLATE	GRIP(DRY) (PSI) MAX	MIN	SHEAR (PLI) MAX	MIN	SECTION (PLI) MAX	MIN
MT20	618	354	1667	822	2264	1658

PLATE PLACEMENT TOL. = 0.250 inches

PLATE ROTATION TOL. = 5.0 Deg.

JSI GRIP= 0.90 (K) (INPUT = 0.90)
JSI METAL= 0.72 (M) (INPUT = 1.00)

LICENSED PROFESSIONAL ENGINEER
S. KATSOULAKOS
PROVINCE OF ONTARIO

DWG NO. TAM 46221-17
STRUCTURAL
COMPONENT ONLY

JOB NAME	TRUSS NAME	QUANTITY	PLY	JOB DESC. 43954	DRWG NO.
286204	T47A	1	1	TRUSS DESC.	

Tamarack Roof Truss, Burlington

Version 8.030 S Oct 5 2016 MiTek Industries, Inc. Tue Sep 12 12:44:34 2017 Page 1

ID:zBB7Ev1dAuzyzMrqVfCPA1yeR9e-dCcS8bPiiRgU8sJ?1NNere8As1q?as4Lvh9poDyeO_B

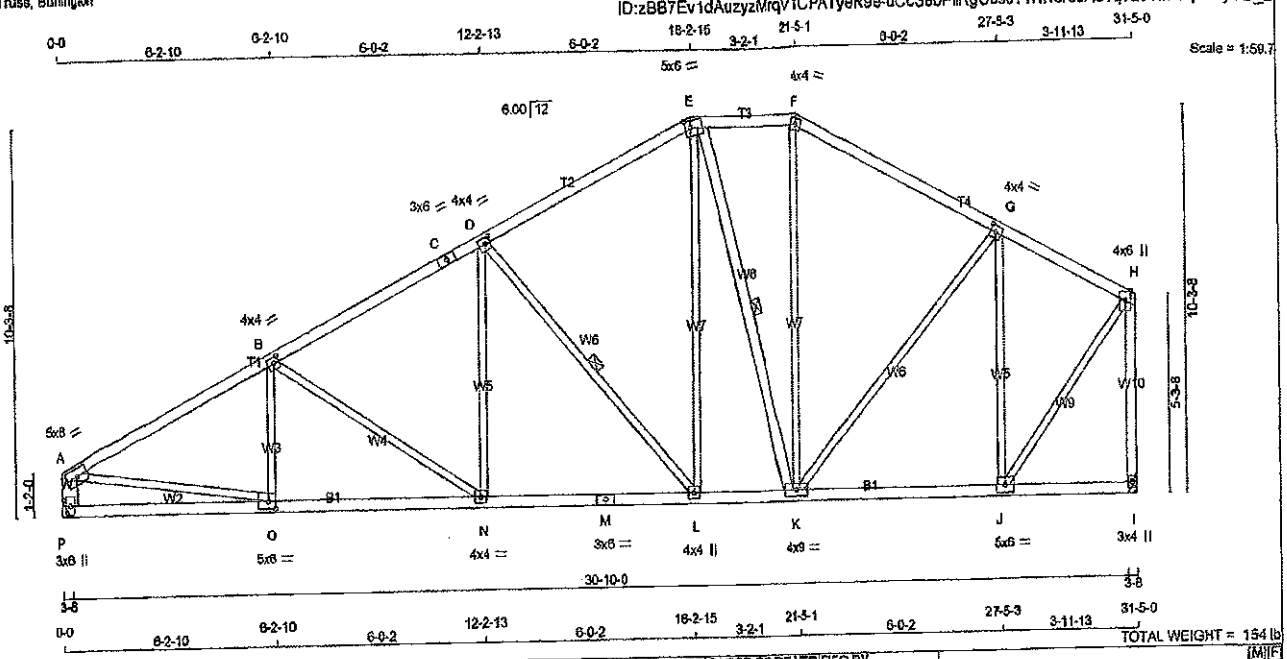

TOTAL WEIGHT = 154 lb

(M)(F)

LUMBER

N. L. G. A. RULES

CHORDS	SIZE		LUMBER	DESCR.
A - C	2x4	DRY	No.2	SPF
C - E	2x4	DRY	No.2	SPF
E - F	2x4	DRY	No.2	SPF
F - H	2x4	DRY	No.2	SPF
P - A	2x6	DRY	No.2	SPF
I - H	2x4	DRY	No.2	SPF
P - M	2x4	DRY	No.2	SPF
M - I	2x4	DRY	No.2	SPF
ALL WEBS	2x3	DRY	No.2	SPF
EXCEPT				
E - K	2x4	DRY	No.2	SPF

DRY: SEASONED LUMBER.

PLATES (table is in inches)

JT	TYPE	PLATES	W	LEN	Y	X
A	TMWW-t	MT20	5.0	8.0		
B, O, G						
B	TMWW-t	MT20	4.0	4.0	2.00	1.75
C	TS-t	MT20	3.0	6.0		
E	TTWW-m	MT20	5.0	6.0	2.25	1.75
F	TTW-m	MT20	4.0	4.0		
H	TMWW+p	MT20	4.0	6.0	Edge	
I	BMV1+p	MT20	3.0	4.0		
J	BMWW-t	MT20	5.0	6.0		
K	BMWWW-t	MT20	4.0	9.0		
L	BMWW+t	MT20	4.0	4.0		
M	BS-t	MT20	3.0	6.0		
N	BMWW-t	MT20	4.0	4.0		
O	BMWW-t	MT20	5.0	6.0	2.50	2.50
P	BMV1+p	MT20	3.0	6.0		

Edge - INDICATES REFERENCE CORNER OF PLATE TOUCHES EDGE OF CHORD.

DIMENSIONS, SUPPORTS AND LOADINGS SPECIFIED BY FABRICATOR TO BE VERIFIED BY BUILDING DESIGNER

BEARINGS

JT	FACTORED GROSS REACTION VERT	HORZ	MAXIMUM FACTORED GROSS REACTION DOWN	HORZ	UPLIFT	INPUT BRG IN-SX	REQRD BRG IN-SX
P	1763	0	1763	0	0	HANGER BY OTHERS MIN. SEAT SIZE: 3-8	
I	1763	0	1763	0	0	HANGER BY OTHERS MIN. SEAT SIZE: 3-8	

UNFACTORED REACTIONS

JT	1ST LCASE COMBINED	MAX./MIN. COMPONENT REACTIONS SNOW	LIVE	PERM.LIVE	WIND	DEAD	SOIL
P	1448	804 / 0	330 / 0	0 / 0	0 / 0	314 / 0	0 / 0
I	1448	804 / 0	330 / 0	0 / 0	0 / 0	314 / 0	0 / 0

BRACING

TOP CHORD TO BE SHEATHED OR MAX. PURLIN SPACING = 3.87 FT.
MAX. UNBRACED BOTTOM CHORD LENGTH = 10.00 FT. OR RIGID CEILING DIRECTLY APPLIED.

ALL PITCH BREAKS AND PERIMETER CORNER JOINTS MUST BE LATERALLY RESTRAINED.

1 LATERAL BRACE(S) AT 1/2 LENGTH OF D-L, E-K.

END VERTICAL(S) MUST BE SHEATHED OR HAVE BRACES AS INDICATED IN THE MAX. UNBRACED LENGTH COLUMN OF THE TABLE BELOW

LOADING

TOTAL LOAD CASES: (4)

CHORDS

MEMB. FR-TO	MAX. FACTORED FORCE (LBS)	FACTORED VERT. LOAD (PLF) FROM	TO	LC1	MAX CSI (LC)	MAX. UNBRAC LENGTH
A- B	-2566 / 0	-84.3	-84.3	0.51 (1)	3.87	
B- C	-2173 / 0	-84.3	-84.3	0.43 (1)	4.24	
C- D	-2173 / 0	-84.3	-84.3	0.43 (1)	4.24	
D- E	-1529 / 0	-84.3	-84.3	0.40 (1)	4.88	
E- F	-1215 / 0	-84.3	-84.3	0.12 (1)	5.69	
F- G	-1376 / 0	-84.3	-84.3	0.39 (1)	5.10	
G- H	-1009 / 0	-84.3	-84.3	0.31 (1)	5.83	
P- A	-1691 / 0	0.0	0.0	0.11 (1)	7.81	
I- H	-1726 / 0	0.0	0.0	0.09 (1)	6.33	
P- O	0 / 0	-28.0	-28.0	0.24 (3)	10.00	
O- N	0 / 2314	-28.0	-28.0	0.50 (2)	10.00	
N- M	0 / 1944	-28.0	-28.0	0.44 (2)	10.00	
M- L	0 / 1944	-28.0	-28.0	0.44 (2)	10.00	
L- K	0 / 1355	-28.0	-28.0	0.32 (2)	10.00	
K- J	0 / 931	-28.0	-28.0	0.29 (2)	10.00	
J- I	0 / 0	-28.0	-28.0	0.19 (3)	10.00	

WEBS

MEMB. FR-TO	MAX. FACTORED FORCE (LBS)	MAX CSI (LC)
O- B	-140 / 169	0.04 (3)
B- N	-439 / 0	0.45 (1)
N- D	0 / 482	0.11 (2)
D- L	-906 / 0	0.55 (1)
L- E	0 / 794	0.18 (1)
E- K	-476 / 0	0.27 (1)
K- F	0 / 313	0.07 (2)
K- G	0 / 427	0.10 (1)
J- G	-1004 / 0	0.95 (1)
A- O	0 / 2337	0.53 (1)
J- H	0 / 1499	0.34 (1)

LICENSED PROFESSIONAL ENGINEER
S. KATSOULAKOS
PROVINCE OF ONTARIO

DWG NO. TAM 46222-17
STRUCTURAL
COMPONENT ONLY

DESIGN CRITERIA

SPECIFIED LOADS:

TOP CH.	LL	=	25.6	PSF
	DL	=	3.0	PSF
BOT CH.	LL	=	10.5	PSF
	DL	=	7.0	PSF
TOTAL LOAD		=	46.1	PSF

SPACING = 24.0 IN. C/C

LOADING IN FLAT SECTION BASED ON A SLOPE OF 6.00/12

THIS TRUSS IS DESIGNED FOR RESIDENTIAL OR SMALL BUILDING REQUIREMENTS OF PART 9, NBCC 2010

THIS DESIGN COMPLIES WITH:
- PART 9 OF OBC 2012 , BCBC 2012 , ABC 2014
- CSA 086-09
- TPIC 2011

(55 % OF 31.3 P.S.F. G.S.L. PLUS 8.4 P.S.F. RAIN LOAD) EQUALS 25.6 P.S.F. SPECIFIED ROOF LIVE LOAD

ALLOWABLE DEFL.(LL)= L/360 (1.05")
CALCULATED VERT. DEFL.(LL) = L/ 999 (0.13")
ALLOWABLE DEFL.(TL)= L/360 (1.05")
CALCULATED VERT. DEFL.(TL) = L/ 990 (0.22")

CSI: TC=0.89 (H-I:1) , BC=0.50 (N-O:2) , WB=0.95 (G-J:1) , SSI=0.21 (A-B:1)

DOL LUMBER=1.00 NAIL=1.00 LS BEND=1.10 COMP=1.10 SHEAR=1.10 TENS= 1.10

COMPANION LIVE LOAD FACTOR = 0.50

AUTOSOLVE RIGHT HEEL ONLY

TRUSS PLATE MANUFACTURER IS NOT RESPONSIBLE FOR QUALITY CONTROL IN THE TRUSS MANUFACTURING PLANT .

NAIL VALUES

PLATE	GRIP(DRY) (PSI) MAX	MIN	SHEAR (PLI) MAX	MIN	SECTION (PLI) MAX	MIN
MT20	618	354	1667	822	2284	1658

PLATE PLACEMENT TOL. = 0.250 Inches

PLATE ROTATION TOL. = 5.0 Deg.

JSI GRIP= 0.87 (O) (INPUT = 0.90)
JSI METAL= 0.53 (M) (INPUT = 1.00)

JOB NAME	TRUSS NAME	QUANTITY	PLY	JOB DESC. 43954	DRWG NO.
286205	T48	1	1	TRUSS DESC.	

Tamarack Roof Truss, Burlington

Version 8.200 S Dec 12 2017 MiTek Industries, Inc. Tue Feb 6 16:53:41 2018 Page 1
ID:zBB7Ev1dAuzyzMrqV1CPA1yeR9e-0UTVsF0PZ8E6VTbt3qHEArhL73A3Dj11xcCDCsznpMO

Scale = 1:37.8

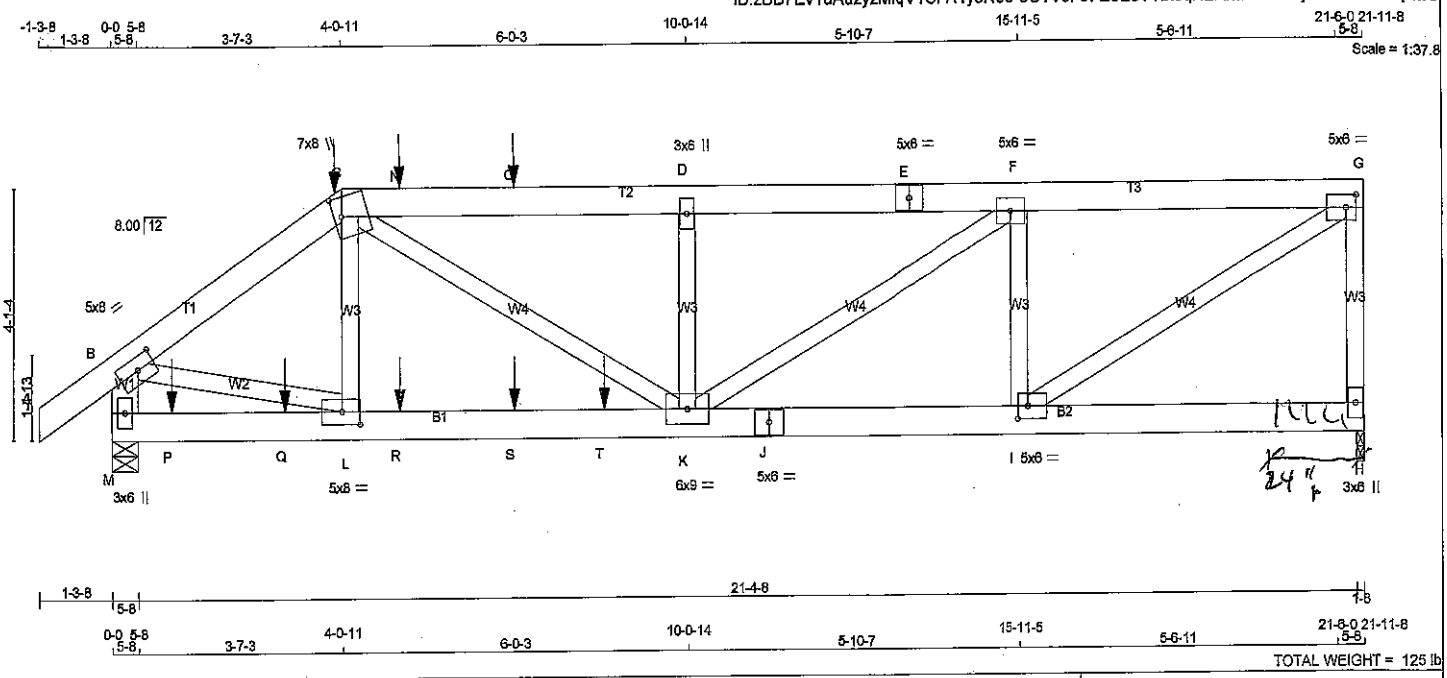

TOTAL WEIGHT = 125 lb

LUMBER
N. L. G. A. RULES

CHORDS	SIZE		LUMBER	DESCR.
A - C	2x6	DRY	No.2	SPF
C - E	2x6	DRY	No.2	SPF
E - G	2x6	DRY	No.2	SPF
H - G	2x4	DRY	No.2	SPF
M - B	2x6	DRY	No.2	SPF
M - J	2x6	DRY	2100F 1.8E	SPF
J - H	2x6	DRY	2100F 1.8E	SPF
ALL WEBS EXCEPT	2x4	DRY	No.2	SPF

DRY: SEASONED LUMBER.

PLATES (table is in inches)

JT	TYPE	PLATES	W	LEN	Y	X
B	TMVW-t	MT20	5.0	8.0	2.50	3.75
C	TTWW+m	MT20	7.0	8.0	3.75	1.50
D	TMW+w	MT20	3.0	6.0		
E	TS-t	MT20	5.0	6.0		
F	TMWW-t	MT20	5.0	6.0		
G	TMVW-t	MT20	5.0	6.0	2.50	2.00
H	BMV1+p	MT20	3.0	8.0		
I	BMWW-t	MT20	5.0	6.0	2.50	2.00
J	BS-t	MT20	5.0	6.0		
K	BMWWW-t	MT20	6.0	9.0		
L	BMWW-t	MT20	5.0	8.0	2.50	3.75
M	BMV1+p	MT20	3.0	6.0		

HANGERS NOTES

1) SPECIAL HANGER(S) OR CONNECTION(S) REQUIRED TO SUPPORT CONCENTRATED LOAD(S) 244.5 lbs FACTORED DOWN AT 4-0-11, AND 101.4 lbs FACTORED DOWN AT 5-0-12, AND 101.4 lbs FACTORED DOWN AT 7-0-12 ON TOP CHORD, AND 69.9 lbs FACTORED DOWN AT 1-0-12, 69.9 lbs FACTORED DOWN AT 3-0-12, 69.9 lbs FACTORED DOWN AT 5-0-12, AND 69.9 lbs FACTORED DOWN AT 7-0-12, AND 1317.3 lbs FACTORED DOWN AT 8-7-8 ON BOTTOM CHORD. DESIGN FOR UNSPECIFIED CONNECTION(S) IS DELEGATED TO THE BUILDING DESIGNER.

SCAB JOINT # H ~~8~~ WITH 2 X 6 #2 SPF 24" LONG 1 SIDE(S) USING 2 ROW(S) 3/4" ~~ATTACH SPIRAL~~/COMMON WIRE NAILS AT 3" O/C STAGGERED (15 NAILS/SCAB). REQUIRED FOR 1 1/2" BRG PROVISION.

DIMENSIONS, SUPPORTS AND LOADINGS SPECIFIED BY FABRICATOR TO BE VERIFIED BY BUILDING DESIGNER

BEARINGS

JT	FACTORED GROSS REACTION VERT	HORZ	MAXIMUM FACTORED GROSS REACTION DOWN	HORZ	UPLIFT	INPUT BRG IN-SX	REQRD BRG IN-SX
H	1881	0	1881	0	0	1-8	~~2-10~~
M	2628	0	2628	0	0	5-8	5-8

UNFACTORED REACTIONS

JT	1ST LCASE COMBINED	MAX./MIN. COMPONENT REACTIONS SNOW	LIVE	PERM.LIVE	WIND	DEAD	SOIL
H	1532	870 / 0	336 / 0	0 / 0	0 / 0	326 / 0	0 / 0
M	2132	1226 / 0	457 / 0	0 / 0	0 / 0	449 / 0	0 / 0

BEARING MATERIAL TO BE SPF NO.2 OR BETTER AT JOINT(S) H, M

BRACING
TOP CHORD TO BE SHEATHED OR MAX. PURLIN SPACING = 3.76 FT.
MAX. UNBRACED BOTTOM CHORD LENGTH = 10.00 FT OR RIGID CEILING DIRECTLY APPLIED.

ALL PITCH BREAKS AND PERIMETER CORNER JOINTS MUST BE LATERALLY RESTRAINED.

LOADING
TOTAL LOAD CASES: (4)

CHORDS

MEMB. FR-TO	MAX. FACTORED FORCE (LBS)	FACTORED VERT. LOAD (PLF) FROM	TO	LC1	MAX CSI (LC)	MAX. UNBRAC LENGTH
A- B	0 / 33	-84.3	-84.3	0.07 (1)	10.00	
B- C	-3199 / 0	-84.3	-84.3	0.19 (1)	4.55	
C- N	-4173 / 0	-84.3	-84.3	0.47 (1)	3.76	
N- O	-4173 / 0	-84.3	-84.3	0.47 (1)	3.76	
O- D	-4173 / 0	-84.3	-84.3	0.47 (1)	3.76	
D- E	-4173 / 0	-84.3	-84.3	0.33 (1)	3.94	
E- F	-4173 / 0	-84.3	-84.3	0.33 (1)	3.94	
F- G	-2595 / 0	-84.3	-84.3	0.25 (1)	4.89	
H- G	-1784 / 0	0.0	0.0	0.41 (1)	6.21	
M- B	-2842 / 0	0.0	0.0	0.19 (1)	6.36	
M- P	0 / 0	-28.0	-28.0	0.19 (1)	10.00	
P- Q	0 / 0	-28.0	-28.0	0.19 (1)	10.00	
Q- L	0 / 0	-28.0	-28.0	0.19 (1)	10.00	
L- R	0 / 2659	-28.0	-28.0	0.56 (1)	10.00	
R- S	0 / 2659	-28.0	-28.0	0.56 (1)	10.00	
S- T	0 / 2659	-28.0	-28.0	0.56 (1)	10.00	
T- K	0 / 2659	-28.0	-28.0	0.56 (1)	10.00	
K- J	0 / 2595	-28.0	-28.0	0.34 (1)	10.00	
J- I	0 / 2595	-28.0	-28.0	0.34 (1)	10.00	
I- H	0 / 0	-28.0	-28.0	0.08 (2)	10.00	

WEBS

MEMB. FR-TO	MAX. FACTORED FORCE (LBS)	MAX CSI (LC)
L- C	0 / 374	0.07 (3)
C- K	0 / 1767	0.31 (1)
K- D	-602 / 0	0.10 (1)
K- F	0 / 1858	0.33 (1)
I- F	-1518 / 0	0.28 (1)
I- G	0 / 3034	0.54 (1)
B- L	0 / 2715	0.48 (1)

FACTORED CONCENTRATED LOADS (LBS)

JT	LOC.	LC1	MAX-	MAX+	FACE	DIR.	TYPE
[illegible]	4-0-11	-23	-25	—	FRONT	VERT	DEAD
[illegible]	4-0-11	-222	-222	—	FRONT	VERT	SNOW
[illegible]	5-0-12	-101	-101	—	BACK	VERT	TOTAL
[illegible]	7-0-12	-101	-101	—	BACK	VERT	TOTAL
[illegible]	1-0-12	-40	-70	—	BACK	VERT	TOTAL
[illegible]	3-0-12	-40	-70	—	BACK	VERT	TOTAL
R	5-0-12	-40	-70	—	BACK	VERT	TOTAL
S	7-0-12	-40	-70	—	BACK	VERT	TOTAL
T	8-7-8	-1317	-1317	—	BACK	VERT	TOTAL

LICENSED PROFESSIONAL ENGINEER 2878 S. KATSOULAKOS PROVINCE OF ONTARIO

DWG NO. TAM B295-18
STRUCTURAL COMPONENT ONLY

[M]

DESIGN CRITERIA

*** SPECIAL LOADS ANALYSIS ***
GEOMETRY AND/OR BASIC LOADS CHANGED BY USER.
LOADS WERE DERIVED FROM USER INPUT
NO FURTHER MODIFICATIONS WERE MADE

SPECIFIED LOADS:

TOP CH.	LL	=	25.6	PSF
	DL	=	3.0	PSF
BOT CH.	LL	=	10.5	PSF
	DL	=	7.0	PSF
TOTAL LOAD		=	46.1	PSF

SPACING = 24.0 IN. C/C

LOADING IN FLAT SECTION BASED ON A SLOPE OF 6.00/12

*** NON STANDARD GIRDER ***
ADDT'L USER-DEFINED LOADS APPLIED TO ALL LOAD CASES.

THIS TRUSS IS DESIGNED FOR RESIDENTIAL OR SMALL BUILDING REQUIREMENTS OF PART 9, NBCC 2010

THIS DESIGN COMPLIES WITH:
- PART 9 OF OBC 2012 , BCBC 2012 , ABC 2014
- CSA 086-09
- TPIC 2011

(55 % OF 31.3 P.S.F. G.S.L. PLUS 8.4 P.S.F. RAIN LOAD) EQUALS 25.6 P.S.F. SPECIFIED ROOF LIVE LOAD

ALLOWABLE DEFL.(LL)= L/360 (0.73")
CALCULATED VERT. DEFL.(LL) = L/ 999 (0.16")
ALLOWABLE DEFL.(TL)= L/360 (0.73")
CALCULATED VERT. DEFL.(TL) = L/ 999 (0.25")

CSI: TC=0.47/1.00 (C-D:1) , BC=0.56/1.00 (K-L:1) , WB=0.54/1.00 (G-I:1) , SSI=0.73/1.00 (K-L:1)

DOL LUMBER=1.00 NAIL=1.00 LS BEND=1.00 COMP=1.00 SHEAR=1.00 TENS= 1.00

COMPANION LIVE LOAD FACTOR = 0.50

TRUSS PLATE MANUFACTURER IS NOT RESPONSIBLE FOR QUALITY CONTROL IN THE TRUSS MANUFACTURING PLANT .

NAIL VALUES

PLATE	GRIP(DRY) (PSI) MAX	MIN	SHEAR (PLI) MAX	MIN	SECTION (PLI) MAX	MIN
MT20	618	354	1667	822	2284	1656

PLATE PLACEMENT TOL. = 0.250 inches

PLATE ROTATION TOL. = 5.0 Deg.

JSI GRIP= 0.89 (I) (INPUT = 0.90)
JSI METAL= 0.65 (G) (INPUT = 1.00)

JOB NAME	TRUSS NAME	QUANTITY	PLY	JOB DESC. 43954	DRWG NO.
286205	T49	1	1	TRUSS DESC.	

Tamarack Roof Truss, Burlington

Version 8.200 S Dec 12 2017 MiTek Industries, Inc. Tue Feb 6 16:53:44 2018 Page 1
ID:zBB7Ev1dAuzyzMrqV1CPA1yeR9e-Q29dUH3Hs3cgMxJSkzqxoTJrTGF7Q7AUeaRtpBznpML

Scale = 1:37.6

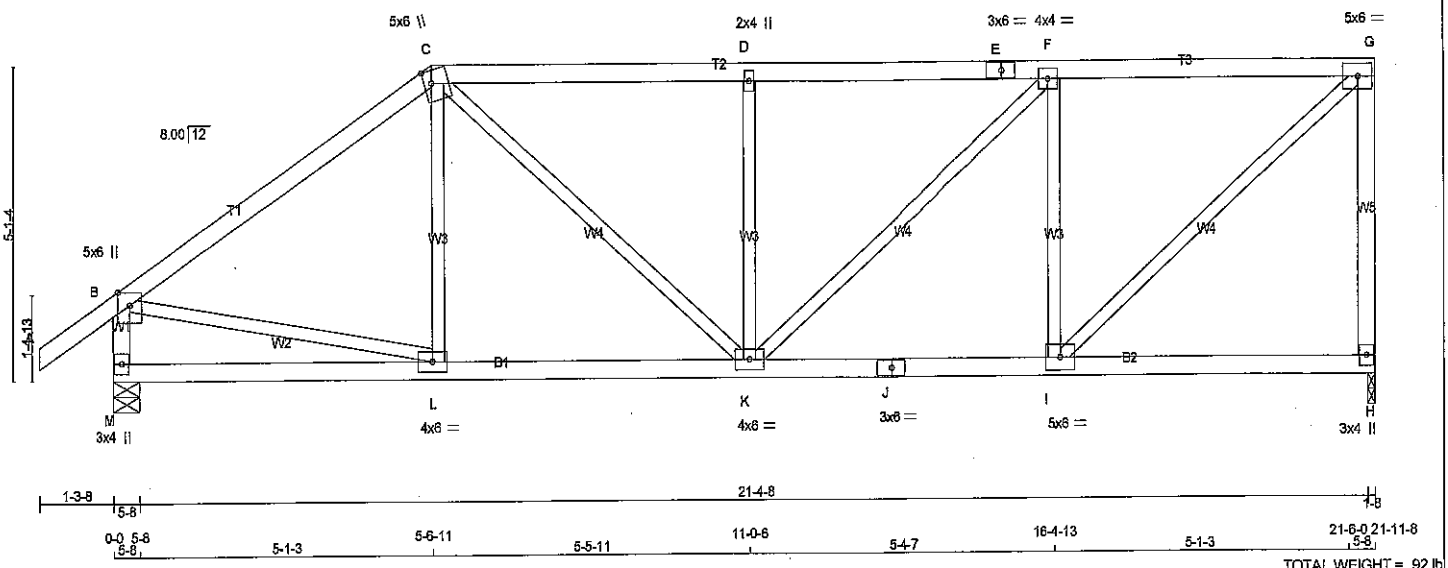

TOTAL WEIGHT = 92 lb

[M]

LUMBER

N. L. G. A. RULES

CHORDS	SIZE		LUMBER	DESCR.
A - C	2x4	DRY	No.2	SPF
C - E	2x4	DRY	No.2	SPF
E - G	2x4	DRY	No.2	SPF
H - G	2x4	DRY	No.2	SPF
M - B	2x4	DRY	No.2	SPF
M - J	2x4	DRY	No.2	SPF
J - H	2x4	DRY	No.2	SPF
ALL WEBS EXCEPT	2x3	DRY	No.2	SPF

DRY: SEASONED LUMBER.

PLATES (table is in inches)

JT	TYPE	PLATES	W	LEN	Y	X
B	TMWW+p	MT20	5.0	6.0	Edge	
C	TTWW+m	MT20	5.0	8.0	2.50	1.50
D	TMW+w	MT20	2.0	4.0		
E	TS-t	MT20	3.0	6.0		
F	TMWW-t	MT20	4.0	4.0		
G	TMWW-t	MT20	5.0	6.0		
H	BMV1+p	MT20	3.0	4.0		
I	BMWW-t	MT20	5.0	8.0		
J	BS-t	MT20	3.0	8.0		
K	BMWWW-t	MT20	4.0	6.0		
L	BMWW-t	MT20	4.0	6.0		
M	BMV1+p	MT20	3.0	4.0		

Edge - INDICATES REFERENCE CORNER OF PLATE TOUCHES EDGE OF CHORD.

DIMENSIONS, SUPPORTS AND LOADINGS SPECIFIED BY FABRICATOR TO BE VERIFIED BY BUILDING DESIGNER

BEARINGS

JT	FACTORED GROSS REACTION VERT	HORZ	MAXIMUM FACTORED GROSS REACTION DOWN	HORZ	UPLIFT	INPUT BRG IN-SX	REQRD BRG IN-SX
H	1232	0	1232	0	0	1-8	1-8
M	1348	0	1348	0	0	5-8	5-8

UNFACTORED REACTIONS

JT	1ST LCASE COMBINED	MAX./MIN. COMPONENT REACTIONS SNOW	LIVE	PERM.LIVE	WIND	DEAD	SOIL
H	1012	562 / 0	231 / 0	0 / 0	0 / 0	220 / 0	0 / 0
M	1090	632 / 0	231 / 0	0 / 0	0 / 0	228 / 0	0 / 0

BEARING MATERIAL TO BE SPF NO.2 OR BETTER AT JOINT(S) H, M

BRACING

TOP CHORD TO BE SHEATHED OR MAX. PURLIN SPACING = 4.94 FT.
MAX. UNBRACED BOTTOM CHORD LENGTH = 10.00 FT OR RIGID CEILING DIRECTLY APPLIED.

ALL PITCH BREAKS AND PERIMETER CORNER JOINTS MUST BE LATERALLY RESTRAINED.

LOADING

TOTAL LOAD CASES: (4)

CHORDS

MEMB. FR-TO	MAX. FACTORED FORCE (LBS)	FACTORED VERT. LOAD (PLF) FROM	TO	LC1 CSI (LC)	MAX. UNBRAC LENGTH
A- B	0 / 32	-84.3	-84.3	0.11 (1)	10.00
B- C	-1308 / 0	-84.3	-84.3	0.53 (1)	4.98
C- D	-1464 / 0	-84.3	-84.3	0.38 (1)	4.96
D- E	-1464 / 0	-84.3	-84.3	0.40 (1)	4.94
E- F	-1464 / 0	-84.3	-84.3	0.40 (1)	4.94
F- G	-1131 / 0	-84.3	-84.3	0.38 (1)	5.47
H- G	-1170 / 0	0.0	0.0	0.52 (1)	7.37
M- B	-1284 / 0	0.0	0.0	0.13 (1)	7.11
M- L	0 / 0	-28.0	-28.0	0.22 (3)	10.00
L- K	0 / 1086	-28.0	-28.0	0.35 (2)	10.00
K- J	0 / 1131	-28.0	-28.0	0.34 (2)	10.00
J- I	0 / 1131	-28.0	-28.0	0.34 (2)	10.00
I- H	0 / 0	-28.0	-28.0	0.21 (3)	10.00

WEBS

MEMB. FR-TO	MAX. FACTORED FORCE (LBS)	MAX CSI (LC)
L- C	-29 / 202	0.05 (3)
B- L	0 / 1106	0.25 (1)
I- G	0 / 1497	0.34 (1)
C- K	0 / 502	0.11 (1)
I- F	-804 / 0	0.31 (1)
K- D	-494 / 0	0.19 (1)
K- F	0 / 446	0.10 (1)

DESIGN CRITERIA

SPECIFIED LOADS:

TOP CH.	LL	=	25.6	PSF
	DL	=	3.0	PSF
BOT CH.	LL	=	10.5	PSF
	DL	=	7.0	PSF
TOTAL LOAD		=	46.1	PSF

SPACING = 24.0 IN. C/C

LOADING IN FLAT SECTION BASED ON A SLOPE OF 6.00/12

THIS TRUSS IS DESIGNED FOR RESIDENTIAL OR SMALL BUILDING REQUIREMENTS OF PART 9, NBCC 2010

THIS DESIGN COMPLIES WITH:
- PART 9 OF OBC 2012 , BCBC 2012 , ABC 2014
- CSA 086-09
- TPIC 2011

(55 % OF 31.3 P.S.F. G.S.L. PLUS 6.4 P.S.F. RAIN LOAD) EQUALS 25.6 P.S.F. SPECIFIED ROOF LIVE LOAD

ALLOWABLE DEFL.(LL)= L/360 (0.73")
CALCULATED VERT. DEFL.(LL) = L/ 999 (0.06")
ALLOWABLE DEFL.(TL)= L/360 (0.73")
CALCULATED VERT. DEFL.(TL) = L/ 899 (0.10")

CSI: TC=0.53/1.00 (B-C:1) , BC=0.35/1.00 (K-L:2) , WB=0.34/1.00 (G-I:1) , SSI=0.22/1.00 (F-G:1)

DOL LUMBER=1.00 NAIL=1.00 LS BEND=1.10 COMP=1.10 SHEAR=1.10 TENS= 1.10

COMPANION LIVE LOAD FACTOR = 0.50

TRUSS PLATE MANUFACTURER IS NOT RESPONSIBLE FOR QUALITY CONTROL IN THE TRUSS MANUFACTURING PLANT .

NAIL VALUES

PLATE	GRIP(DRY) (PSI) MAX	MIN	SHEAR (PLI) MAX	MIN	SECTION (PLI) MAX	MIN
MT20	818	354	1667	822	2284	1856

PLATE PLACEMENT TOL. = 0.250 inches

PLATE ROTATION TOL. = 5.0 Deg.

JSI GRIP= 0.82 (B) (INPUT = 0.90)
JSI METAL= 0.37 (J) (INPUT = 1.00)

LICENSED PROFESSIONAL ENGINEER
2978
S. KATSOULAKOS
PROVINCE OF ONTARIO

DWG NO. TAM B286-08
STRUCTURAL
COMPONENT ONLY

JOB NAME	TRUSS NAME	QUANTITY	PLY	JOB DESC. 43954	DRWG NO.
286205	T50	1	1	TRUSS DESC.	

Tamarack Roof Truss, Burlington

Version 8.200 S Dec 12 2017 MiTek Industries, Inc. Tue Feb 6 16:53:47 2018 Page 1

ID:zBB7Ev1dAuzyzMrqV1CPA1yeR9e-qdqm7J598__FDO21Q5OeQ6xGdTEbdRFwKYfXQWznpMI

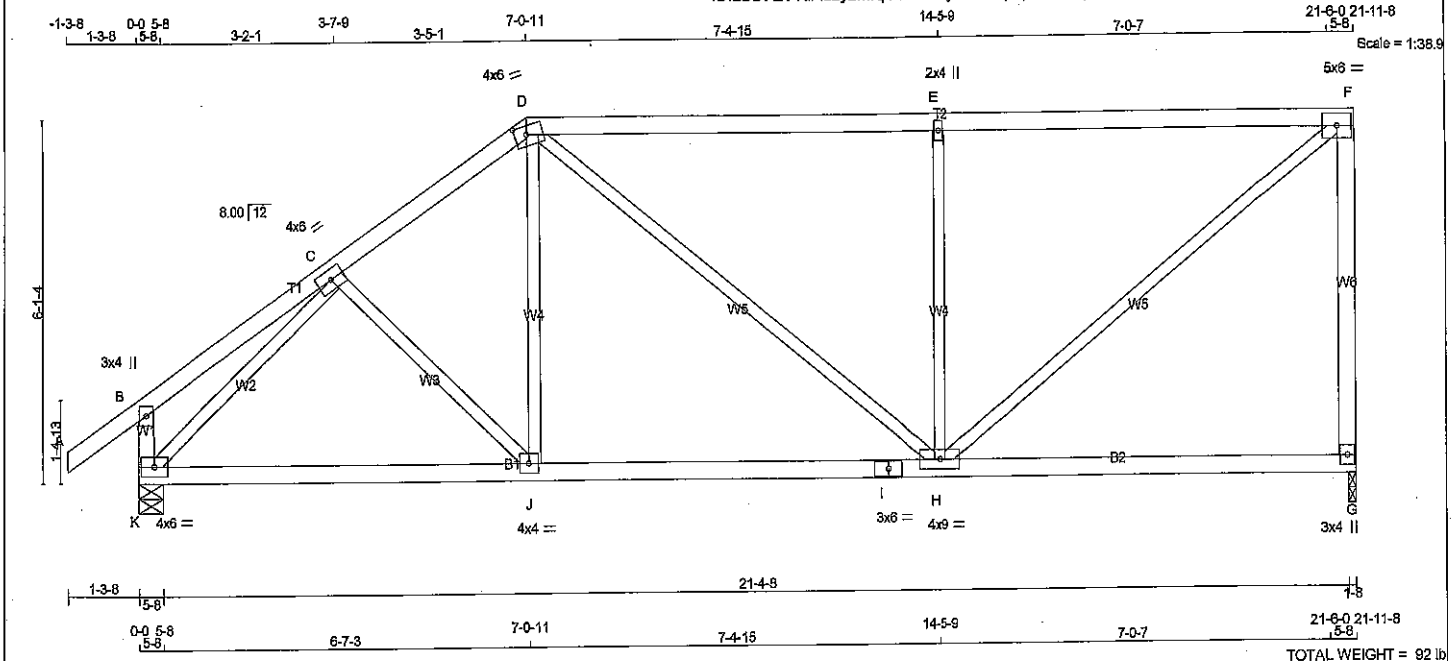

TOTAL WEIGHT = 92 lb

[M]

LUMBER

N. L. G. A. RULES

CHORDS	SIZE		LUMBER	DESCR.
A - D	2x4	DRY	No.2	SPF
D - F	2x4	DRY	No.2	SPF
G - F	2x4	DRY	No.2	SPF
K - B	2x4	DRY	No.2	SPF
K - I	2x4	DRY	No.2	SPF
I - G	2x4	DRY	No.2	SPF
ALL WEBS EXCEPT	2x3	DRY	No.2	SPF

DRY: SEASONED LUMBER.

PLATES (table is in inches)

JT	TYPE	PLATES	W	LEN	Y	X
B	TMV+p	MT20	3.0	4.0		
C	TMWW-t	MT20	4.0	6.0		
D	TTWW-m	MT20	4.0	6.0	1.75	2.50
E	TMW+w	MT20	2.0	4.0		
F	TMVW-t	MT20	5.0	6.0		
G	BMV1+p	MT20	3.0	4.0		
H	BMWWW-t	MT20	4.0	9.0		
I	BS-t	MT20	3.0	6.0		
J	BMWW-t	MT20	4.0	4.0		
K	BMVW1-t	MT20	4.0	6.0		

DIMENSIONS, SUPPORTS AND LOADINGS SPECIFIED BY FABRICATOR TO BE VERIFIED BY BUILDING DESIGNER

BEARINGS

JT	FACTORED GROSS REACTION VERT	HORZ	MAXIMUM FACTORED GROSS REACTION DOWN	HORZ	UPLIFT	INPUT BRG IN-SX	REQRD BRG IN-SX
G	1232	0	1232	0	0	1-8	1-8
K	1348	0	1348	0	0	5-8	5-8

UNFACTORED REACTIONS

JT	1ST LCASE COMBINED	MAX./MIN. COMPONENT REACTIONS SNOW	LIVE	PERM.LIVE	WIND	DEAD	SOIL
G	1012	562 / 0	231 / 0	0 / 0	0 / 0	220 / 0	0 / 0
K	1090	632 / 0	231 / 0	0 / 0	0 / 0	228 / 0	0 / 0

BEARING MATERIAL TO BE SPF NO.2 OR BETTER AT JOINT(S) G, K

BRACING

TOP CHORD TO BE SHEATHED OR MAX. PURLIN SPACING = 4.15 FT.
MAX. UNBRACED BOTTOM CHORD LENGTH = 10.00 FT OR RIGID CEILING DIRECTLY APPLIED.

ALL PITCH BREAKS AND PERIMETER CORNER JOINTS MUST BE LATERALLY RESTRAINED.

LOADING

TOTAL LOAD CASES: (4)

CHORDS

MEMB. FR-TO	MAX. FACTORED FORCE (LBS)	FACTORED VERT. LOAD (PLF) FROM	TO	LC1 MAX CSI (LC)	MAX. UNBRAC LENGTH
A- B	0 / 32	-84.3	-84.3	0.11 (1)	10.00
B- C	0 / 18	-84.3	-84.3	0.15 (1)	10.00
C- D	-1269 / 0	-84.3	-84.3	0.18 (1)	5.52
D- E	-1170 / 0	-84.3	-84.3	0.92 (1)	4.15
E- F	-1170 / 0	-84.3	-84.3	0.92 (1)	4.15
G- F	-1147 / 0	0.0	0.0	0.83 (1)	7.43
K- B	-232 / 0	0.0	0.0	0.02 (1)	7.81
K- J	0 / 1083	-28.0	-28.0	0.45 (2)	10.00
J- I	0 / 1044	-28.0	-28.0	0.49 (2)	10.00
I- H	0 / 1044	-28.0	-28.0	0.49 (2)	10.00
H- G	0 / 0	-28.0	-28.0	0.37 (3)	10.00

WEBS

MEMB. FR-TO	MAX. FACTORED FORCE (LBS)	MAX CSI (LC)
C- J	-33 / 100	0.02 (3)
J- D	0 / 337	0.06 (2)
K- C	-1484 / 0	0.57 (1)
H- F	0 / 1481	0.33 (1)
D- H	0 / 161	0.04 (1)
H- E	-779 / 0	0.46 (1)

DESIGN CRITERIA

SPECIFIED LOADS:

TOP CH.	LL	=	25.6	PSF
	DL	=	3.0	PSF
BOT CH.	LL	=	10.5	PSF
	DL	=	7.0	PSF
TOTAL LOAD		=	46.1	PSF

SPACING = 24.0 IN. C/C

LOADING IN FLAT SECTION BASED ON A SLOPE OF 6.00/12

THIS TRUSS IS DESIGNED FOR RESIDENTIAL OR SMALL BUILDING REQUIREMENTS OF PART 9, NBCC 2010

THIS DESIGN COMPLIES WITH:
- PART 9 OF OBC 2012 , BCBC 2012 , ABC 2014
- CSA 086-09
- TPIC 2011

(55 % OF 31.3 P.S.F. G.S.L. PLUS 8.4 P.S.F. RAIN LOAD) EQUALS 25.6 P.S.F. SPECIFIED ROOF LIVE LOAD

ALLOWABLE DEFL.(LL)= L/360 (0.73")
CALCULATED VERT. DEFL.(LL) = L/ 999 (0.13")
ALLOWABLE DEFL.(TL)= L/360 (0.73")
CALCULATED VERT. DEFL.(TL) = L/ 999 (0.21")

CSI: TC=0.92/1.00 (E-F:1) , BC=0.49/1.00 (H-J:2) , WB=0.57/1.00 (C-K:1) , SSI=0.31/1.00 (E-F:1)

DOL LUMBER=1.00 NAIL=1.00 LS BEND=1.10 COMP=1.10 SHEAR=1.10 TENS= 1.10

COMPANION LIVE LOAD FACTOR = 0.50

TRUSS PLATE MANUFACTURER IS NOT RESPONSIBLE FOR QUALITY CONTROL IN THE TRUSS MANUFACTURING PLANT .

NAIL VALUES

PLATE	GRIP(DRY) (PSI) MAX	MIN	SHEAR (PLI) MAX	MIN	SECTION (PLI) MAX	MIN
MT20	618	354	1667	822	2264	1656

PLATE PLACEMENT TOL. = 0.250 inches

PLATE ROTATION TOL. = 5.0 Deg.

JSI GRIP= 0.86 (H) (INPUT = 0.90)
JSI METAL= 0.46 (I) (INPUT = 1.00)

LICENSED PROFESSIONAL ENGINEER
2878
S. KATSOULAKOS
PROVINCE OF ONTARIO

DWG NO. TAM B297-18
STRUCTURAL COMPONENT ONLY

JOB NAME	TRUSS NAME	QUANTITY	PLY	JOB DESC. 43954	DRWG NO.
286205	T51	1	1	TRUSS DESC.	

Tamarack Roof Truss, Burlington

Version 8.200 S Dec 12 2017 MiTek Industries, Inc. Tue Feb 6 16:53:50 2018 Page 1

ID:zBB7Ev1dAuzyzMrqV1CPA1yeR9e-FCWulK72RvMq4snc5DxL2kZqKhF6qk1M0WuC1qznpMF

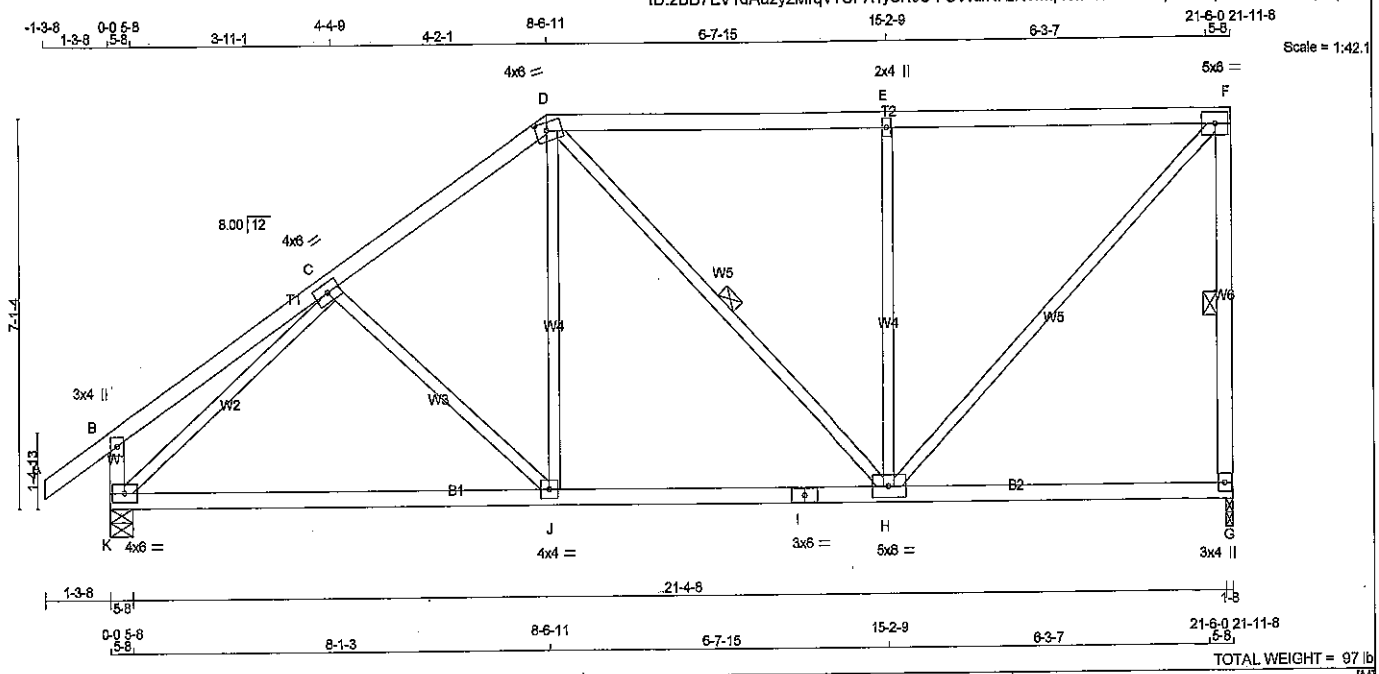

LUMBER

N. L. G. A. RULES

CHORDS	SIZE		LUMBER	DESCR.
A - D	2x4	DRY	No.2	SPF
D - F	2x4	DRY	No.2	SPF
G - F	2x4	DRY	No.2	SPF
K - B	2x4	DRY	No.2	SPF
K - I	2x4	DRY	No.2	SPF
I - G	2x4	DRY	No.2	SPF
ALL WEBS EXCEPT	2x3	DRY	No.2	SPF

DRY: SEASONED LUMBER.

PLATES (table is in inches)

JT	TYPE	PLATES	W	LEN	Y	X
B	TMV+p	MT20	3.0	4.0		
C	TMWW-t	MT20	4.0	6.0		
D	TTWW-m	MT20	4.0	8.0	1.75	2.50
E	TMW+w	MT20	2.0	4.0		
F	TMVW-t	MT20	5.0	6.0		
G	BMV1+p	MT20	3.0	4.0		
H	BMWWW-t	MT20	5.0	8.0		
I	BS-t	MT20	3.0	6.0		
J	BMWW-t	MT20	4.0	4.0		
K	BMVW1-t	MT20	4.0	6.0		

DIMENSIONS, SUPPORTS AND LOADINGS SPECIFIED BY FABRICATOR TO BE VERIFIED BY BUILDING DESIGNER

BEARINGS

JT	FACTORED GROSS REACTION VERT	HORZ	MAXIMUM FACTORED GROSS REACTION DOWN	HORZ	UPLIFT	INPUT BRG IN-SX	REQRD BRG IN-SX
G	1232	0	1232	0	0	1-8	1-8
K	1348	0	1348	0	0	5-8	5-8

UNFACTORED REACTIONS

JT	1ST LCASE COMBINED	MAX./MIN. COMPONENT REACTIONS SNOW	LIVE	PERM.LIVE	WIND	DEAD	SOIL
G	1012	562 / 0	231 / 0	0 / 0	0 / 0	220 / 0	0 / 0
K	1090	632 / 0	231 / 0	0 / 0	0 / 0	228 / 0	0 / 0

BEARING MATERIAL TO BE SPF NO.2 OR BETTER AT JOINT(S) G, K

BRACING

TOP CHORD TO BE SHEATHED OR MAX. PURLIN SPACING = 5.20 FT.
MAX. UNBRACED BOTTOM CHORD LENGTH = 10.00 FT OR RIGID CEILING DIRECTLY APPLIED.

ALL PITCH BREAKS AND PERIMETER CORNER JOINTS MUST BE LATERALLY RESTRAINED.

1 LATERAL BRACE(S) AT 1/ 2 LENGTH OF F-G, D-H.

END VERTICAL(S) MUST BE SHEATHED OR HAVE BRACES AS INDICATED IN THE MAX. UNBRACED LENGTH COLUMN OF THE TABLE BELOW

LOADING

TOTAL LOAD CASES: (4)

CHORDS

MEMB. FR-TO	MAX. FACTORED FORCE (LBS)	FACTORED VERT. LOAD (PLF) FROM	TO	LC1 CSI	MAX (LC)	MAX. UNBRAC LENGTH
A- B	0 / 32	-84.3	-84.3	0.11	(1)	10.00
B- C	0 / 23	-84.3	-84.3	0.24	(1)	10.00
C- D	-1191 / 0	-84.3	-84.3	0.27	(1)	5.52
D- E	-928 / 0	-84.3	-84.3	0.70	(1)	5.20
E- F	-928 / 0	-84.3	-84.3	0.70	(1)	5.20
G- F	-1153 / 0	0.0	0.0	0.26	(1)	5.93
K- B	-254 / 0	0.0	0.0	0.03	(1)	7.81
K- J	0 / 1061	-28.0	-28.0	0.56	(2)	10.00
J- I	0 / 975	-28.0	-28.0	0.57	(2)	10.00
I- H	0 / 975	-28.0	-28.0	0.57	(2)	10.00
H- G	0 / 0	-28.0	-28.0	0.26	(2)	10.00

WEBS

MEMB. FR-TO	MAX. FACTORED FORCE (LBS)	MAX CSI (LC)
C- J	-148 / 69	0.09 (1)
J- D	0 / 426	0.10 (2)
K- C	-1468 / 0	0.82 (1)
H- F	0 / 1319	0.30 (1)
D- H	-103 / 0	0.06 (2)
H- E	-700 / 0	0.61 (1)

DESIGN CRITERIA

SPECIFIED LOADS:

TOP CH.	LL	=	25.6	PSF
	DL	=	3.0	PSF
BOT CH.	LL	=	10.5	PSF
	DL	=	7.0	PSF
TOTAL LOAD		=	48.1	PSF

SPACING = 24.0 IN. C/C

LOADING IN FLAT SECTION BASED ON A SLOPE OF 8.00/12

THIS TRUSS IS DESIGNED FOR RESIDENTIAL OR SMALL BUILDING REQUIREMENTS OF PART 9, NBCC 2010

THIS DESIGN COMPLIES WITH:
- PART 9 OF OBC 2012 , BCBC 2012 , ABC 2014
- CSA 086-09
- TPIC 2011

(55 % OF 31.3 P.S.F. G.S.L. PLUS 8.4 P.S.F. RAIN LOAD) EQUALS 25.6 P.S.F. SPECIFIED ROOF LIVE LOAD

ALLOWABLE DEFL.(LL)= L/360 (0.73")
CALCULATED VERT. DEFL.(LL) = L/ 999 (0.22")
ALLOWABLE DEFL.(TL)= L/360 (0.73")
CALCULATED VERT. DEFL.(TL) = L/ 707 (0.37")

CSI: TC=0.70/1.00 (E-F:1) , BC=0.57/1.00 (H-J:2) , WB=0.82/1.00 (C-K:1) , SSI=0.28/1.00 (E-F:1)

DOL LUMBER=1.00 NAIL=1.00 LS BEND=1.10 COMP=1.10 SHEAR=1.10 TENS= 1.10

COMPANION LIVE LOAD FACTOR = 0.50

TRUSS PLATE MANUFACTURER IS NOT RESPONSIBLE FOR QUALITY CONTROL IN THE TRUSS MANUFACTURING PLANT .

NAIL VALUES

PLATE	GRIP(DRY) (PSI) MAX	MIN	SHEAR (PLI) MAX	MIN	SECTION (PLI) MAX	MIN
MT20	618	354	1667	822	2284	1656

PLATE PLACEMENT TOL. = 0.250 Inches

PLATE ROTATION TOL. = 5.0 Deg.

JSI GRIP= 0.80 (D) (INPUT = 0.90)
JSI METAL= 0.35 (C) (INPUT = 1.00)

LICENSED PROFESSIONAL ENGINEER
2018
S. KATSOULAKOS
PROVINCE OF ONTARIO

DWG NO. TAM B248-18
STRUCTURAL COMPONENT ONLY

JOB NAME	TRUSS NAME	QUANTITY	PLY	JOB DESC. 43954	DRWG NO.
286205	T52	1	1	TRUSS DESC.	

Tamarack Roof Truss, Burlington

Version 8.200 S Dec 12 2017 MiTek Industries, Inc. Tue Feb 6 11:15:14 2018 Page 1
ID:zBB7Ev1dAuzyzMrqV1CPA1yeR9e-5lxcsbGXupmQjjf1yVS9eV81jBTXlV90MkaAzNznuJh

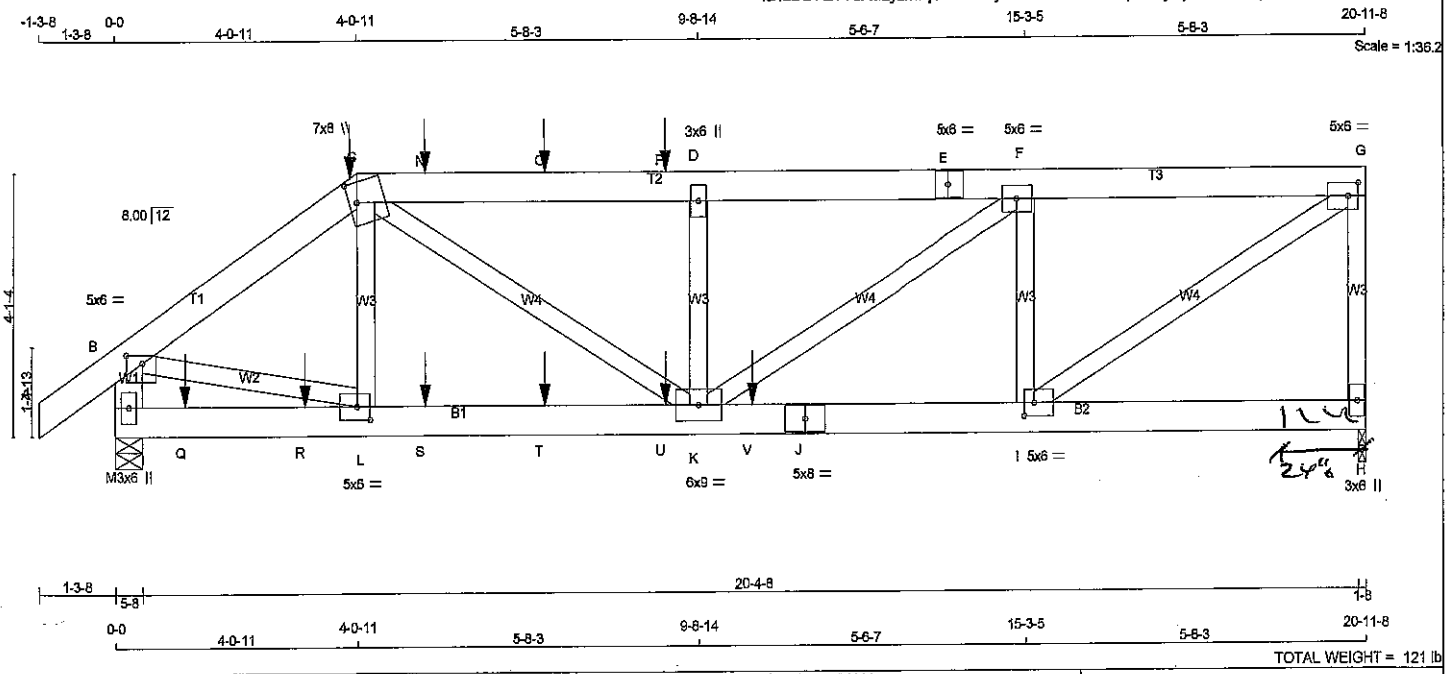

TOTAL WEIGHT = 121 lb

LUMBER
N. L. G. A. RULES

CHORDS	SIZE		LUMBER	DESCR.
A - C	2x6	DRY	No.2	SPF
C - E	2x6	DRY	No.2	SPF
E - G	2x6	DRY	No.2	SPF
H - G	2x4	DRY	No.2	SPF
M - B	2x6	DRY	No.2	SPF
M - J	2x6	DRY	2100F 1.8E	SPF
J - H	2x6	DRY	2100F 1.8E	SPF
ALL WEBS EXCEPT	2x4	DRY	No.2	SPF

DRY: SEASONED LUMBER.

PLATES (table is in inches)

JT	TYPE	PLATES	W	LEN	Y	X
B	TMVW-p	MT20	5.0	6.0	1.50	3.25
C	TTWW+m	MT20	7.0	8.0	3.75	1.50
D	TMW+w	MT20	3.0	6.0		
E	TS-t	MT20	5.0	6.0		
F	TMWW-t	MT20	5.0	8.0		
G	TMVW-t	MT20	5.0	6.0	2.50	2.00
H	BMV1+p	MT20	3.0	6.0		
I	BMWW-t	MT20	5.0	6.0	2.50	2.00
J	BS-t	MT20	5.0	8.0		
K	BMWWW-t	MT20	6.0	9.0		
L	BMWW-t	MT20	5.0	6.0	2.50	2.50
M	BMV1+p	MT20	3.0	6.0		

HANGERS NOTES

1) SPECIAL HANGER(S) OR CONNECTION(S) REQUIRED TO SUPPORT CONCENTRATED LOAD(S) 244.5 lbs FACTORED DOWN AT 4-0-11, 101.4 lbs FACTORED DOWN AT 5-2-4, AND 101.4 lbs FACTORED DOWN AT 7-2-4, AND 101.4 lbs FACTORED DOWN AT 9-2-4 ON TOP CHORD, AND 69.9 lbs FACTORED DOWN AT 1-2-4, 69.9 lbs FACTORED DOWN AT 3-2-4, 69.9 lbs FACTORED DOWN AT 5-2-4, 69.9 lbs FACTORED DOWN AT 7-2-4, AND 69.9 lbs FACTORED DOWN AT 9-2-4, AND 990.5 lbs FACTORED DOWN AT 10-7-8 ON BOTTOM CHORD. DESIGN FOR UNSPECIFIED CONNECTION(S) IS DELEGATED TO THE BUILDING DESIGNER.

SCAB JOINT # H WITH 2 X 6 #2
SPF 24" LONG 1 SIDE(3) USING 2
ROW(S) 3/4" COMMON WIRE NAILS
AT 3" O/C STAGGERED (15 NAILS/SCAB)
REQUIRED FOR 1 1/2" BRG PROVISION.

DIMENSIONS, SUPPORTS AND LOADINGS SPECIFIED BY FABRICATOR TO BE VERIFIED BY BUILDING DESIGNER

BEARINGS

JT	FACTORED GROSS REACTION VERT	HORZ	MAXIMUM FACTORED GROSS REACTION DOWN	HORZ	UPLIFT	INPUT BRG IN-SX	REQRD BRG IN-SX
H	1880	0	1880	0	0	1-8	1-8
M	2332	0	2332	0	0	5-8	5-8

UNFACTORED REACTIONS

JT	1ST LCASE COMBINED	MAX./MIN. COMPONENT REACTIONS SNOW	LIVE	PERM.LIVE	WIND	DEAD	SOIL
H	1522	880 / 0	323 / 0	0 / 0	0 / 0	319 / 0	0 / 0
M	1885	1094 / 0	397 / 0	0 / 0	0 / 0	394 / 0	0 / 0

BEARING MATERIAL TO BE SPF NO.2 OR BETTER AT JOINT(S) H, M

BRACING
TOP CHORD TO BE SHEATHED OR MAX. PURLIN SPACING = 4.00 FT.
MAX. UNBRACED BOTTOM CHORD LENGTH = 10.00 FT OR RIGID CEILING DIRECTLY APPLIED.

ALL PITCH BREAKS AND PERIMETER CORNER JOINTS MUST BE LATERALLY RESTRAINED.

LOADING
TOTAL LOAD CASES: (4)

CHORDS

MEMB. FR-TO	MAX. FACTORED FORCE (LBS)	FACTORED VERT. LOAD (PLF) FROM	TO	LC1 MAX CSI (LC)	MAX. UNBRAC LENGTH
A- B	0 / 33	-84.3	-84.3	0.07 (1)	10.00
B- C	-2659 / 0	-84.3	-84.3	0.17 (1)	4.93
C- N	-3757 / 0	-84.3	-84.3	0.42 (1)	4.00
N- O	-3757 / 0	-84.3	-84.3	0.42 (1)	4.00
O- P	-3757 / 0	-84.3	-84.3	0.42 (1)	4.00
P- D	-3757 / 0	-84.3	-84.3	0.42 (1)	4.00
D- E	-3758 / 0	-84.3	-84.3	0.31 (1)	4.14
E- F	-3758 / 0	-84.3	-84.3	0.31 (1)	4.14
F- G	-2536 / 0	-84.3	-84.3	0.23 (1)	4.96
H- G	-1831 / 0	0.0	0.0	0.42 (1)	6.14
M- B	-2245 / 0	0.0	0.0	0.16 (1)	6.79
M- Q	0 / 0	-28.0	-28.0	0.07 (3)	10.00
Q- R	0 / 0	-28.0	-28.0	0.07 (3)	10.00
R- L	0 / 0	-28.0	-28.0	0.07 (3)	10.00
L- S	0 / 2196	-28.0	-28.0	0.23 (1)	10.00
S- T	0 / 2196	-28.0	-28.0	0.23 (1)	10.00
T- U	0 / 2196	-28.0	-28.0	0.23 (1)	10.00
U- K	0 / 2196	-28.0	-28.0	0.23 (1)	10.00
K- V	0 / 2536	-28.0	-28.0	0.35 (1)	10.00
V- J	0 / 2536	-28.0	-28.0	0.35 (1)	10.00
J- I	0 / 2536	-28.0	-28.0	0.35 (1)	10.00
I- H	0 / 0	-28.0	-28.0	0.08 (2)	10.00

WEBS

MEMB. FR-TO	MAX. FACTORED FORCE (LBS)	MAX CSI (LC)
L- C	-270 / 217	0.05 (1)
C- K	0 / 1652	0.33 (1)
K- D	-687 / 0	0.12 (1)
K- F	0 / 1463	0.26 (1)
I- F	-1300 / 0	0.22 (1)
I- G	0 / 3013	0.53 (1)
B- L	0 / 2256	0.40 (1)

FACTORED CONCENTRATED LOADS (LBS)

JT	LOC.	LC1	MAX-	MAX+	FACE	DIR.	TYPE
C	4-0-11	-23	-25	---	FRONT	VERT	DEAD
C	4-0-11	-222	-222	---	FRONT	VERT	SNOW
N	5-2-4	-101	-101	---	FRONT	VERT	TOTAL
O	7-2-4	-101	-101	---	FRONT	VERT	TOTAL
P	9-2-4	-101	-101	---	FRONT	VERT	TOTAL
Q	1-2-4	-40	-70	---	FRONT	VERT	TOTAL
R	3-2-4	-40	-70	---	FRONT	VERT	TOTAL
S	5-2-4	-40	-70	---	FRONT	VERT	TOTAL
T	7-2-4	-40	-70	---	FRONT	VERT	TOTAL
U	9-2-4	-40	-70	---	FRONT	VERT	TOTAL
V	10-7-8	-990	-990	---	FRONT	VERT	TOTAL

LICENSED PROFESSIONAL ENGINEER
S. KATSOULAKOS
PROVINCE OF ONTARIO

[M]

DESIGN CRITERIA

*** SPECIAL LOADS ANALYSIS ***
GEOMETRY AND/OR BASIC LOADS CHANGED BY USER.
LOADS WERE DERIVED FROM USER INPUT
NO FURTHER MODIFICATIONS WERE MADE

SPECIFIED LOADS:

TOP CH.	LL	=	25.8	PSF
	DL	=	3.0	PSF
BOT CH.	LL	=	10.5	PSF
	DL	=	7.0	PSF
TOTAL LOAD		=	46.1	PSF

SPACING = 24.0 IN. C/C

LOADING IN FLAT SECTION BASED ON A SLOPE OF 6.00/12

*** NON STANDARD GIRDER ***
ADDT'L USER-DEFINED LOADS APPLIED TO ALL LOAD CASES.

THIS TRUSS IS DESIGNED FOR RESIDENTIAL OR SMALL BUILDING REQUIREMENTS OF PART 9, NBCC 2010

THIS DESIGN COMPLIES WITH:
- PART 9 OF OBC 2012 , BCBC 2012 , ABC 2014
- CSA 086-09
- TPIC 2011

(55 % OF 31.3 P.S.F. G.S.L. PLUS 8.4 P.S.F. RAIN LOAD) EQUALS 25.6 P.S.F. SPECIFIED ROOF LIVE LOAD

ALLOWABLE DEFL.(LL)= L/360 (0.70")
CALCULATED VERT. DEFL.(LL) = L/ 999 (0.12")
ALLOWABLE DEFL.(TL)= L/360 (0.70")
CALCULATED VERT. DEFL.(TL) = L/ 999 (0.19")

CSI: TC=0.42/1.00 (G-H:1) , BC=0.35/1.00 (I-K:1) , WB=0.53/1.00 (G-I:1) , SSI=0.62/1.00 (I-K:1)

DOL LUMBER=1.00 NAIL=1.00 LS BEND=1.00 COMP=1.00 SHEAR=1.00 TENS= 1.00

COMPANION LIVE LOAD FACTOR = 0.50

AUTOSOLVE RIGHT HEEL ONLY

TRUSS PLATE MANUFACTURER IS NOT RESPONSIBLE FOR QUALITY CONTROL IN THE TRUSS MANUFACTURING PLANT .

NAIL VALUES

PLATE	GRIP(DRY) (PSI) MAX	MIN	SHEAR (PLI) MAX	MIN	SECTION (PLI) MAX	MIN
MT20	618	354	1667	822	2284	1656

PLATE PLACEMENT TOL. = 0.250 inches

PLATE ROTATION TOL. = 5.0 Deg.

DWG NO. TAM 8075-18
STRUCTURAL COMPONENT ONLY

CONTINUED ON PAGE 2

JOB NAME	TRUSS NAME	QUANTITY	PLY	JOB DESC. 43954	DRWG NO.
286205	T52	1	1	TRUSS DESC.	

JSI GRIP= 0.69 (G) (INPUT = 0.90)
JSI METAL= 0.75 (J) (INPUT = 1.00)

LICENSED PROFESSIONAL ENGINEER
S. KATSOULAKOS
PROVINCE OF ONTARIO

DWG NO. TAM 8075-18
STRUCTURAL
COMPONENT ONLY

JOB NAME	TRUSS NAME	QUANTITY	PLY	JOB DESC. 43954	DRWG NO.
286205	T53	1	1	TRUSS DESC.	

Tamarack Roof Truss, Burlington

Version 8.200 S Dec 12 2017 MiTek Industries, Inc. Tue Feb 6 11:15:14 2018 Page 1
ID:zBB7Ev1dAuzyzMrqV1CPA1yeR9e-5lxcsbGXupmQljf1yVS9eV8?6BTnlZc0MkaAzNznuJh

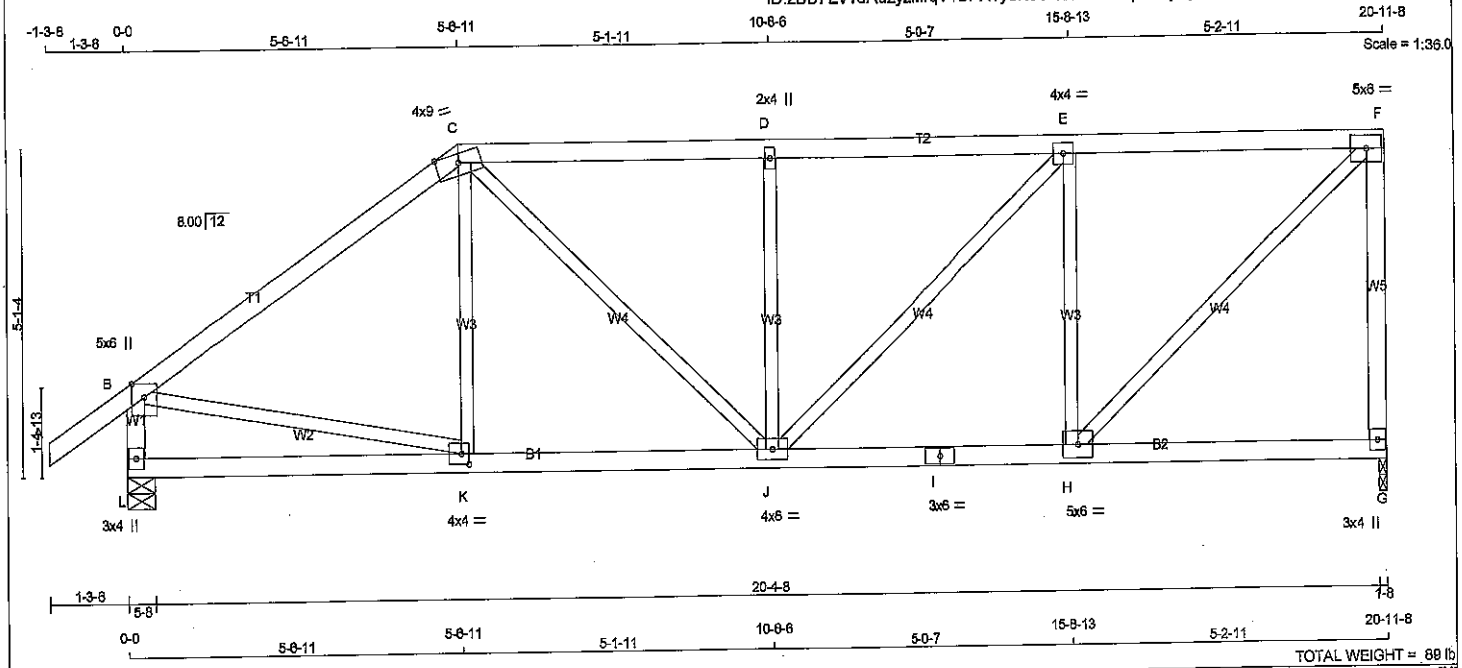

TOTAL WEIGHT = 88 lb [M]

LUMBER
N. L. G. A. RULES

CHORDS	SIZE		LUMBER	DESCR.
A - C	2x4	DRY	No.2	SPF
C - F	2x4	DRY	No.2	SPF
G - F	2x4	DRY	No.2	SPF
L - B	2x4	DRY	No.2	SPF
L - I	2x4	DRY	No.2	SPF
I - G	2x4	DRY	No.2	SPF
ALL WEBS EXCEPT	2x3	DRY	No.2	SPF

DRY: SEASONED LUMBER.

PLATES (table is in inches)

JT	TYPE	PLATES	W	LEN	Y	X
B	TMVW+p	MT20	5.0	6.0	Edge	
C	TTWW-m	MT20	4.0	9.0	Edge	
D	TMW+w	MT20	2.0	4.0		
E	TMWW-t	MT20	4.0	4.0		
F	TMVW-t	MT20	5.0	6.0		
G	BMV1+p	MT20	3.0	4.0		
H	BMWW-t	MT20	5.0	6.0		
I	BS-t	MT20	3.0	6.0		
J	BMWWW-t	MT20	4.0	6.0		
K	BMWW-t	MT20	4.0	4.0	2.00	1.50
L	BMV1+p	MT20	3.0	4.0		

Edge - INDICATES REFERENCE CORNER OF PLATE TOUCHES EDGE OF CHORD.

DIMENSIONS, SUPPORTS AND LOADINGS SPECIFIED BY FABRICATOR TO BE VERIFIED BY BUILDING DESIGNER

BEARINGS

JT	FACTORED GROSS REACTION VERT	HORZ	MAXIMUM FACTORED GROSS REACTION DOWN	HORZ	UPLIFT	INPUT BRG IN-SX	REQRD BRG IN-SX
G	1176	0	1176	0	0	1-8	1-8
L	1292	0	1292	0	0	5-8	5-8

UNFACTORED REACTIONS

JT	1ST LCASE COMBINED	MAX./MIN. COMPONENT REACTIONS SNOW	LIVE	PERM.LIVE	WIND	DEAD	SOIL
G	966	538 / 0	220 / 0	0 / 0	0 / 0	210 / 0	0 / 0
L	1044	806 / 0	220 / 0	0 / 0	0 / 0	218 / 0	0 / 0

BEARING MATERIAL TO BE SPF NO.2 OR BETTER AT JOINT(S) G, L .

BRACING
TOP CHORD TO BE SHEATHED OR MAX. PURLIN SPACING = 5.09 FT.
MAX. UNBRACED BOTTOM CHORD LENGTH = 10.00 FT OR RIGID CEILING DIRECTLY APPLIED.

ALL PITCH BREAKS AND PERIMETER CORNER JOINTS MUST BE LATERALLY RESTRAINED.

LOADING
TOTAL LOAD CASES: (4)

CHORDS

MEMB. FR-TO	MAX. FACTORED FORCE (LBS)	FACTORED VERT. LOAD (PLF) FROM	TO	LC1 CSI (LC)	MAX UNBRAC LENGTH
A- B	0 / 32	-84.3	-84.3	0.11 (1)	10.00
B- C	-1228 / 0	-84.3	-84.3	0.52 (1)	5.09
C- D	-1330 / 0	-84.3	-84.3	0.33 (1)	5.22
D- E	-1330 / 0	-84.3	-84.3	0.34 (1)	5.20
E- F	-1019 / 0	-84.3	-84.3	0.33 (1)	5.77
G- F	-1117 / 0	0.0	0.0	0.49 (1)	7.50
L- B	-1228 / 0	0.0	0.0	0.13 (1)	7.23
L- K	0 / 0	-28.0	-28.0	0.21 (3)	10.00
K- J	0 / 1020	-28.0	-28.0	0.33 (2)	10.00
J- I	0 / 1019	-28.0	-28.0	0.30 (2)	10.00
I- H	0 / 1019	-28.0	-28.0	0.30 (2)	10.00
H- G	0 / 0	-28.0	-28.0	0.19 (3)	10.00

WEBS

MEMB. FR-TO	MAX. FACTORED FORCE (LBS)	MAX CSI (LC)
K- C	-20 / 202	0.05 (3)
B- K	0 / 1039	0.23 (1)
H- F	0 / 1385	0.31 (1)
C- J	0 / 424	0.10 (1)
H- E	-773 / 0	0.30 (1)
J- D	-463 / 0	0.18 (1)
J- E	0 / 431	0.10 (1)

DESIGN CRITERIA

SPECIFIED LOADS:

TOP CH.	LL	=	25.6	PSF
	DL	=	3.0	PSF
BOT CH.	LL	=	10.5	PSF
	DL	=	7.0	PSF
TOTAL LOAD		=	46.1	PSF

SPACING = 24.0 IN. C/C

LOADING IN FLAT SECTION BASED ON A SLOPE OF 6.00/12

THIS TRUSS IS DESIGNED FOR RESIDENTIAL OR SMALL BUILDING REQUIREMENTS OF PART 9, NBCC 2010

THIS DESIGN COMPLIES WITH:
- PART 9 OF OBC 2012 , BCBC 2012 , ABC 2014
- CSA 086-09
- TPIC 2011

(55 % OF 31.3 P.S.F. G.S.L. PLUS 8.4 P.S.F. RAIN LOAD) EQUALS 25.6 P.S.F. SPECIFIED ROOF LIVE LOAD

ALLOWABLE DEFL.(LL)= L/360 (0.70")
CALCULATED VERT. DEFL.(LL) = L/ 999 (0.05")
ALLOWABLE DEFL.(TL)= L/360 (0.70")
CALCULATED VERT. DEFL.(TL) = L/ 999 (0.09")

CSI: TC=0.52/1.00 (B-C:1) , BC=0.33/1.00 (J-K:2) , WB=0.31/1.00 (F-H:1) , SSI=0.20/1.00 (E-F:1)

DOL LUMBER=1.00 NAIL=1.00 LS BEND=1.10 COMP=1.10 SHEAR=1.10 TENS= 1.10

COMPANION LIVE LOAD FACTOR = 0.50

TRUSS PLATE MANUFACTURER IS NOT RESPONSIBLE FOR QUALITY CONTROL IN THE TRUSS MANUFACTURING PLANT .

NAIL VALUES

PLATE	GRIP(DRY) (PSI) MAX	MIN	SHEAR (PLI) MAX	MIN	SECTION (PLI) MAX	MIN
MT20	818	354	1667	822	2284	1658

PLATE PLACEMENT TOL. = 0.250 inches

PLATE ROTATION TOL. = 5.0 Deg.

JSI GRIP= 0.85 (K) (INPUT = 0.90)
JSI METAL= 0.38 (K) (INPUT = 1.00)

LICENSED PROFESSIONAL ENGINEER
S. KATSOULAKOS
PROVINCE OF ONTARIO

DWG NO. TAM B076 -18
STRUCTURAL
COMPONENT ONLY

JOB NAME	TRUSS NAME	QUANTITY	PLY	JOB DESC. 43954	DRWG NO.
286205	T54	1	1	TRUSS DESC.	

Tamarack Roof Truss, Burlington

Version 8.200 S Dec 12 2017 MiTek Industries, Inc. Tue Feb 6 11:15:15 2018 Page 1

ID:zBB7Ev1dAuzyzMrqV1CPA1yeR9e-ZxV_4xH9f7uHNtEDWCzOBjg6gaoGUyIAaOKjVqznuJg

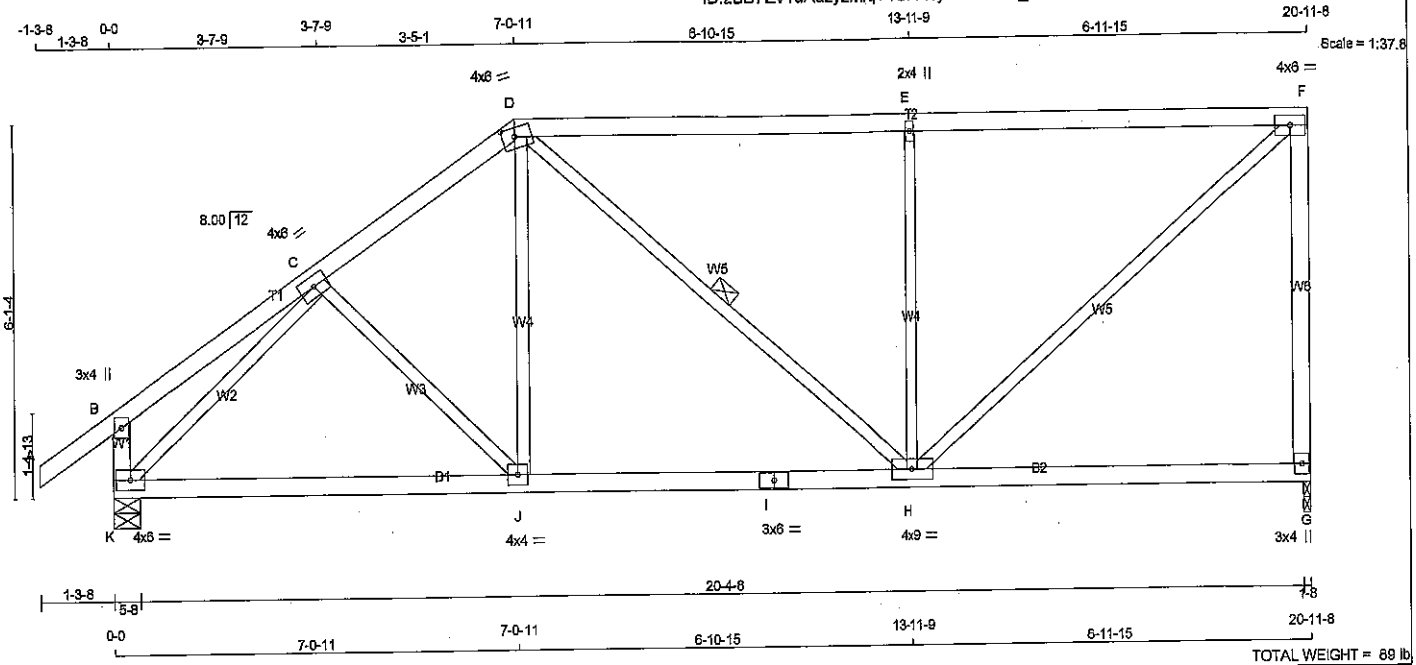

TOTAL WEIGHT = 89 lb

[M]

LUMBER

N. L. G. A. RULES

CHORDS	SIZE		LUMBER	DESCR.
A - D	2x4	DRY	No.2	SPF
D - F	2x4	DRY	No.2	SPF
G - F	2x4	DRY	No.2	SPF
K - B	2x4	DRY	No.2	SPF
K - 1	2x4	DRY	No.2	SPF
I - G	2x4	DRY	No.2	SPF
ALL WEBS EXCEPT	2x3	DRY	No.2	SPF

DRY: SEASONED LUMBER.

PLATES (table is in inches)

JT	TYPE	PLATES	W	LEN	Y	X
B	TMV+p	MT20	3.0	4.0		
C	TMWW-t	MT20	4.0	6.0		
D	TTWW-m	MT20	4.0	6.0	1.75	2.50
E	TMW+w	MT20	2.0	4.0		
F	TMVW-t	MT20	4.0	6.0		
G	BMV1+p	MT20	3.0	4.0		
H	BMWWW-t	MT20	4.0	9.0		
I	BS-t	MT20	3.0	6.0		
J	BMWW-t	MT20	4.0	4.0		
K	BMVW1-t	MT20	4.0	6.0		

DIMENSIONS, SUPPORTS AND LOADINGS SPECIFIED BY FABRICATOR TO BE VERIFIED BY BUILDING DESIGNER

BEARINGS

JT	FACTORED GROSS REACTION VERT	HORZ	MAXIMUM FACTORED GROSS REACTION DOWN	HORZ	UPLIFT	INPUT BRG IN-SX	REQRD BRG IN-SX
G	1176	0	1176	0	0	1-8	1-8
K	1292	0	1292	0	0	5-8	5-8

UNFACTORED REACTIONS

JT	1ST LCASE COMBINED	MAX./MIN. COMPONENT REACTIONS SNOW	LIVE	PERM.LIVE	WIND	DEAD	SOIL
G	966	536 / 0	220 / 0	0 / 0	0 / 0	210 / 0	0 / 0
K	1044	606 / 0	220 / 0	0 / 0	0 / 0	218 / 0	0 / 0

BEARING MATERIAL TO BE SPF NO.2 OR BETTER AT JOINT(S) G, K

BRACING

TOP CHORD TO BE SHEATHED OR MAX. PURLIN SPACING = 4.79 FT.
MAX. UNBRACED BOTTOM CHORD LENGTH = 10.00 FT OR RIGID CEILING DIRECTLY APPLIED.

ALL PITCH BREAKS AND PERIMETER CORNER JOINTS MUST BE LATERALLY RESTRAINED.

1 LATERAL BRACE(S) AT 1/ 2 LENGTH OF D-H.

END VERTICAL(S) MUST BE SHEATHED OR HAVE BRACES AS INDICATED IN THE MAX. UNBRACED LENGTH COLUMN OF THE TABLE BELOW

LOADING

TOTAL LOAD CASES: (4)

CHORDS

MEMB. FR-TO	MAX. FACTORED FORCE (LBS)	FACTORED VERT. LOAD LC1 (PLF) FROM	TO	MAX CSI (LC)	MAX. UNBRAC LENGTH
A- B	0 / 32	-84.3	-84.3	0.11 (1)	10.00
B- C	0 / 16	-64.3	-84.3	0.16 (1)	10.00
C- D	-1185 / 0	-84.3	-84.3	0.18 (1)	5.86
D- E	-1049 / 0	-84.3	-84.3	0.77 (1)	4.79
E- F	-1050 / 0	-84.3	-84.3	0.77 (1)	4.79
G- F	-1096 / 0	0.0	0.0	0.79 (1)	7.55
K- B	-232 / 0	0.0	0.0	0.02 (1)	7.81
K- J	0 / 1005	-28.0	-28.0	0.43 (2)	10.00
J- I	0 / 974	-28.0	-28.0	0.44 (2)	10.00
I- H	0 / 974	-28.0	-28.0	0.44 (2)	10.00
H- G	0 / 0	-28.0	-28.0	0.31 (3)	10.00

WEBS

MEMB. FR-TO	MAX. FACTORED FORCE (LBS)	MAX CSI (LC)
C- J	-48 / 92	0.02 (3)
J- D	0 / 336	0.08 (2)
K- C	-1403 / 0	0.54 (1)
H- F	0 / 1365	0.31 (1)
D- H	-2 / 98	0.02 (1)
H- E	-726 / 0	0.43 (1)

DESIGN CRITERIA

SPECIFIED LOADS:

TOP CH.	LL	=	25.6	PSF
	DL	=	3.0	PSF
BOT CH.	LL	=	10.5	PSF
	DL	=	7.0	PSF
TOTAL LOAD		=	46.1	PSF

SPACING = 24.0 IN. C/C

LOADING IN FLAT SECTION BASED ON A SLOPE OF 6.00/12

THIS TRUSS IS DESIGNED FOR RESIDENTIAL OR SMALL BUILDING REQUIREMENTS OF PART 9, NBCC 2010

THIS DESIGN COMPLIES WITH:
- PART 9 OF OBC 2012 , BCBC 2012 , ABC 2014
- CSA 086-09
- TPIC 2011

(55 % OF 31.3 P.S.F. G.S.L. PLUS 6.4 P.S.F. RAIN LOAD) EQUALS 25.6 P.S.F. SPECIFIED ROOF LIVE LOAD

ALLOWABLE DEFL.(LL)= L/360 (0.70")
CALCULATED VERT. DEFL.(LL) = L/ 999 (0.11")
ALLOWABLE DEFL.(TL)= L/360 (0.70")
CALCULATED VERT. DEFL.(TL) = L/ 999 (0.16")

CSI: TC=0.79/1.00 (F-G:1) , BC=0.44/1.00 (H-J:2) , WB=0.54/1.00 (C-K:1) , SSI=0.29/1.00 (E-F:1)

DOL LUMBER=1.00 NAIL=1.00 LS BEND=1.10 COMP=1.10 SHEAR=1.10 TENS= 1.10

COMPANION LIVE LOAD FACTOR = 0.50

TRUSS PLATE MANUFACTURER IS NOT RESPONSIBLE FOR QUALITY CONTROL IN THE TRUSS MANUFACTURING PLANT .

NAIL VALUES

PLATE	GRIP(DRY) (PSI) MAX	MIN	SHEAR (PLI) MAX	MIN	SECTION (PLI) MAX	MIN
MT20	616	354	1667	622	2284	1656

PLATE PLACEMENT TOL. = 0.250 inches

PLATE ROTATION TOL. = 5.0 Deg.

JSI GRIP= 0.87 (F) (INPUT = 0.90)
JSI METAL= 0.34 (C) (INPUT = 1.00)

LICENSED PROFESSIONAL ENGINEER
S. KATSOULAKOS
PROVINCE OF ONTARIO

DWG NO. TAM 8077

STRUCTURAL COMPONENT ONLY

JOB NAME	TRUSS NAME	QUANTITY	PLY	JOB DESC. 43954	DRWG NO.
286205	T55	1	1	TRUSS DESC.	

Tamarack Roof Truss, Burlington

Version 8.200 S Dec 12 2017 MiTek Industries, Inc. Tue Feb 6 11:15:15 2018 Page 1
ID:zBB7Ev1dAuzyzMrqV1CPA1yeR9e-ZxV_4xH9f7uHNtEDWCzOBjg9wamWUuZAaOKjVqznuJg

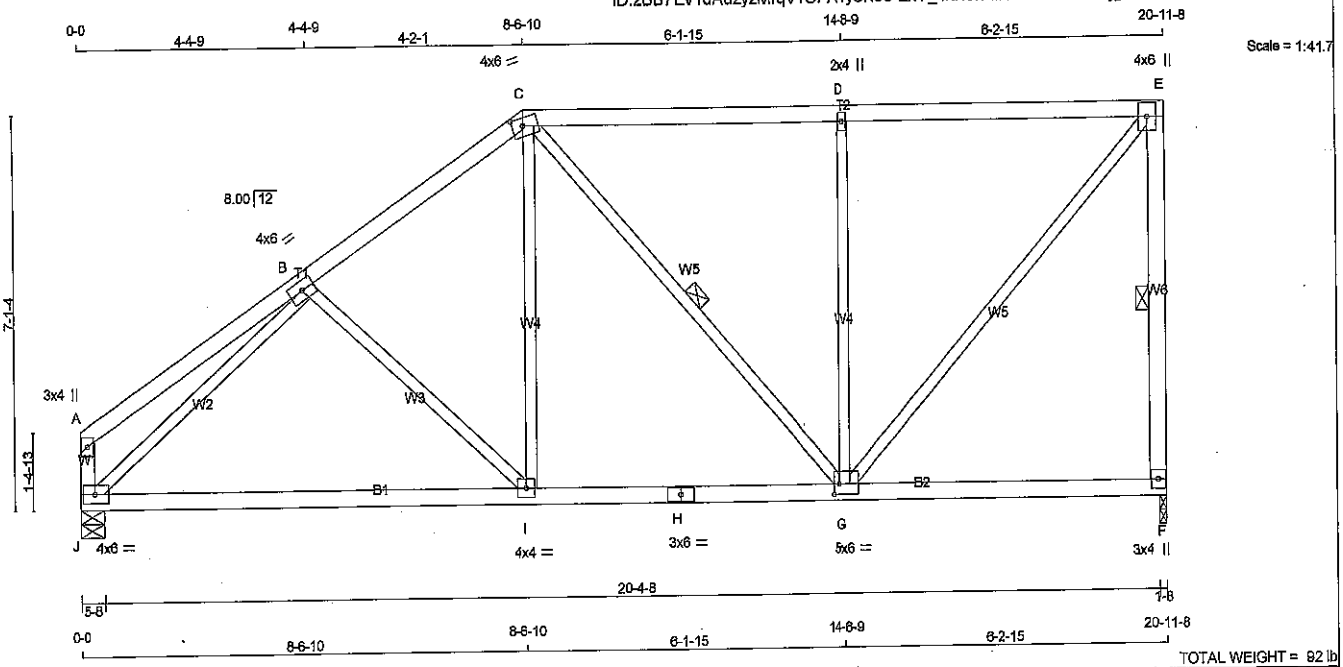

TOTAL WEIGHT = 92 lb

[M]

LUMBER

N. L. G. A. RULES

CHORDS	SIZE		LUMBER	DESCR.
A - C	2x4	DRY	No.2	SPF
C - E	2x4	DRY	No.2	SPF
F - E	2x4	DRY	No.2	SPF
J - A	2x4	DRY	No.2	SPF
J - H	2x4	DRY	No.2	SPF
H - F	2x4	DRY	No.2	SPF
ALL WEBS EXCEPT	2x3	DRY	No.2	SPF

DRY: SEASONED LUMBER.

PLATES (table is in inches)

JT	TYPE	PLATES	W	LEN	Y	X
A	TMV+p	MT20	3.0	4.0		
B	TMWW-t	MT20	4.0	6.0		
C	TTWW-m	MT20	4.0	6.0	1.75	2.50
D	TMW+w	MT20	2.0	4.0		
E	TMVW+p	MT20	4.0	6.0		
F	BMV1+p	MT20	3.0	4.0		
G	BMWWW-t	MT20	5.0	6.0	2.25	1.50
H	BS-t	MT20	3.0	8.0		
I	BMWW-t	MT20	4.0	4.0		
J	BMVW1-t	MT20	4.0	6.0		

DIMENSIONS, SUPPORTS AND LOADINGS SPECIFIED BY FABRICATOR TO BE VERIFIED BY BUILDING DESIGNER

BEARINGS

JT	FACTORED GROSS REACTION VERT	HORZ	MAXIMUM FACTORED GROSS REACTION DOWN	HORZ	UPLIFT	INPUT BRG IN-SX	REQRD BRG IN-SX
F	1176	0	1176	0	0	1-8	1-8
J	1176	0	1176	0	0	5-8	5-8

UNFACTORED REACTIONS

JT	1ST LCASE COMBINED	MAX./MIN. COMPONENT REACTIONS SNOW	LIVE	PERM.LIVE	WIND	DEAD	SOIL
F	966	536 / 0	220 / 0	0 / 0	0 / 0	210 / 0	0 / 0
J	966	536 / 0	220 / 0	0 / 0	0 / 0	210 / 0	0 / 0

BEARING MATERIAL TO BE SPF NO.2 OR BETTER AT JOINT(S) F, J

BRACING

TOP CHORD TO BE SHEATHED OR MAX. PURLIN SPACING = 5.68 FT.
MAX. UNBRACED BOTTOM CHORD LENGTH = 10.00 FT OR RIGID CEILING DIRECTLY APPLIED.

ALL PITCH BREAKS AND PERIMETER CORNER JOINTS MUST BE LATERALLY RESTRAINED.

1 LATERAL BRACE(S) AT 1/ 2 LENGTH OF E-F, C-G.

END VERTICAL(S) MUST BE SHEATHED OR HAVE BRACES AS INDICATED IN THE MAX. UNBRACED LENGTH COLUMN OF THE TABLE BELOW

LOADING

TOTAL LOAD CASES: (4)

CHORDS

MEMB. FR-TO	MAX. FACTORED FORCE (LBS)	FACTORED VERT. LOAD LC1 (PLF) FROM	TO	MAX CSI (LC)	MAX. UNBRAC LENGTH
A- B	0 / 23	-84.3	-84.3	0.24 (1)	10.00
B- C	-1105 / 0	-84.3	-84.3	0.27 (1)	5.68
C- D	-626 / 0	-84.3	-84.3	0.58 (1)	5.71
D- E	-826 / 0	-84.3	-84.3	0.58 (1)	5.71
F- E	-1101 / 0	0.0	0.0	0.25 (1)	6.03
J- A	-139 / 0	0.0	0.0	0.01 (1)	7.81
J- I	0 / 1019	-28.0	-28.0	0.55 (2)	10.00
I- H	0 / 905	-28.0	-28.0	0.55 (2)	10.00
H- G	0 / 905	-28.0	-28.0	0.55 (2)	10.00
G- F	0 / 0	-28.0	-28.0	0.23 (2)	10.00

WEBS

MEMB. FR-TO	MAX. FACTOREO FORCE (LBS)	MAX CSI (LC)
B- I	-161 / 63	0.10 (1)
I- C	0 / 428	0.10 (2)
J- B	-1365 / 0	0.78 (1)
G- E	0 / 1223	0.28 (1)
C- G	-140 / 0	0.08 (2)
G- D	-646 / 0	0.57 (1)

DESIGN CRITERIA

SPECIFIED LOADS:

TOP CH.	LL =	25.6	PSF
	DL =	3.0	PSF
BOT CH.	LL =	10.5	PSF
	DL =	7.0	PSF
TOTAL LOAD	=	46.1	PSF

SPACING = 24.0 IN. C/C

LOADING IN FLAT SECTION BASED ON A SLOPE OF 6.00/12

THIS TRUSS IS DESIGNED FOR RESIDENTIAL OR SMALL BUILDING REQUIREMENTS OF PART 9, NBCC 2010

THIS DESIGN COMPLIES WITH:
- PART 9 OF OBC 2012 , BCBC 2012 , ABC 2014
- CSA 086-09
- TPIC 2011

(55 % OF 31.3 P.S.F. G.S.L. PLUS 8.4 P.S.F. RAIN LOAD) EQUALS 25.6 P.S.F. SPECIFIED ROOF LIVE LOAD

ALLOWABLE DEFL.(LL)= L/360 (0.70")
CALCULATED VERT. DEFL.(LL) = L/ 999 (0.22")
ALLOWABLE DEFL.(TL)= L/360 (0.70")
CALCULATED VERT. DEFL.(TL) = L/ 675 (0.37")

CSI: TC=0.58/1.00 (D-E:1) , BC=0.55/1.00 (G-I:2) , WB=0.78/1.00 (B-J:1) , SSI=0.25/1.00 (D-E:1)

DOL LUMBER=1.00 NAIL=1.00 LS BEND=1.10 COMP=1.10 SHEAR=1.10 TENS= 1.10

COMPANION LIVE LOAD FACTOR = 0.50

TRUSS PLATE MANUFACTURER IS NOT RESPONSIBLE FOR QUALITY CONTROL IN THE TRUSS MANUFACTURING PLANT .

NAIL VALUES

PLATE	GRIP(DRY) (PSI) MAX	MIN	SHEAR (PLI) MAX	MIN	SECTION (PLI) MAX	MIN
MT20	618	354	1667	822	2284	1656

PLATE PLACEMENT TOL. = 0.250 inches

PLATE ROTATION TOL. = 5.0 Deg.

JSI GRIP= 0.87 (G) (INPUT = 0.90)
JSI METAL= 0.33 (B) (INPUT = 1.00)

LICENSED PROFESSIONAL ENGINEER
S. KATSOULAKOS
PROVINCE OF ONTARIO

DWG NO. TAM B078 -18
STRUCTURAL COMPONENT ONLY

JOB NAME	TRUSS NAME	QUANTITY	PLY	JOB DESC. 43954	DRWG NO.
286205	T56X	2	1	TRUSS DESC.	

Tamarack Roof Truss, Burlington

Version 8.200 S Dec 12 2017 MiTek Industries, Inc. Tue Feb 6 11:15:15 2018 Page 1

ID:zBB7Ev1dAuzyzMrqV1CPA1yeR9e-ZxV_4xH9f7uHNtEDWCzOBjgBZapxUvUAaOKjVqznuJg

Scale = 1:46.5

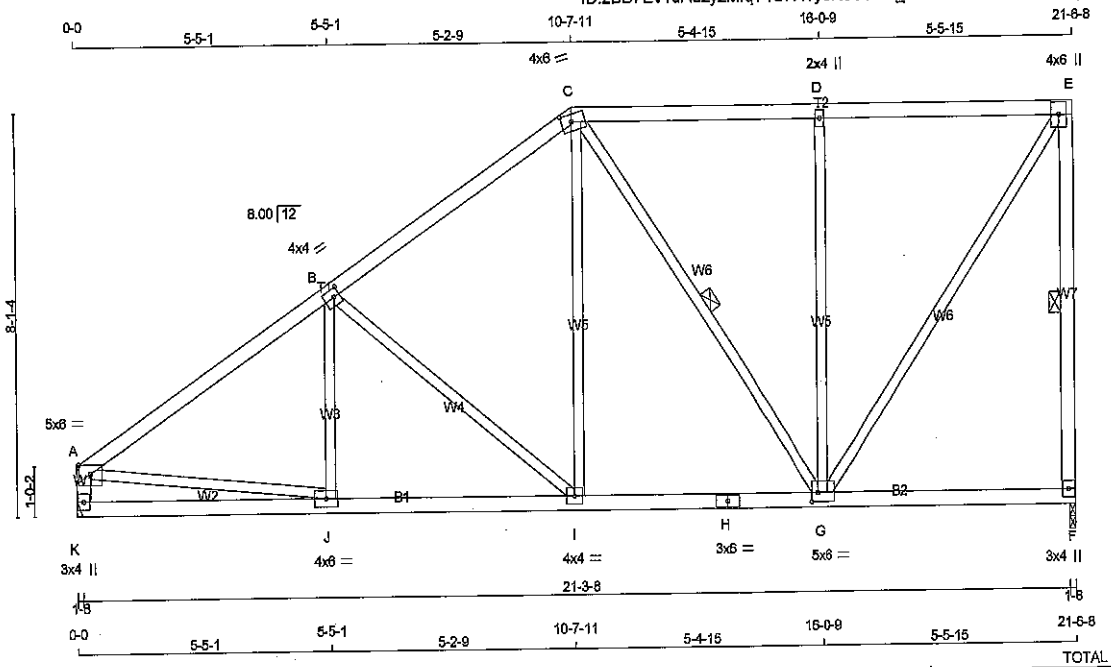

TOTAL WEIGHT = 2 X 101 = 202 lb [M]

LUMBER

N. L. G. A. RULES

CHORDS	SIZE		LUMBER	DESCR.
A - C	2x4	DRY	No.2	SPF
C - E	2x4	DRY	No.2	SPF
F - E	2x4	DRY	No.2	SPF
K - A	2x4	DRY	No.2	SPF
K - H	2x4	DRY	No.2	SPF
H - F	2x4	DRY	No.2	SPF
ALL WEBS EXCEPT	2x3	DRY	No.2	SPF

DRY: SEASONED LUMBER.

PLATES (table is in inches)

JT	TYPE	PLATES	W	LEN	Y	X
A	TMVW-p	MT20	5.0	6.0	Edge	
B	TMWW-t	MT20	4.0	4.0	2.00	1.50
C	TTWW-m	MT20	4.0	6.0	1.75	2.50
D	TMW+w	MT20	2.0	4.0		
E	TMVW+p	MT20	4.0	6.0		
F	BMV1+p	MT20	3.0	4.0		
G	BMWWW-t	MT20	5.0	6.0	2.25	1.50
H	BS-t	MT20	3.0	8.0		
I	BMWW-t	MT20	4.0	4.0		
J	BMWW-t	MT20	4.0	6.0		
K	BMV1+p	MT20	3.0	4.0		

Edge - INDICATES REFERENCE CORNER OF PLATE TOUCHES EDGE OF CHORD.

DIMENSIONS, SUPPORTS AND LOADINGS SPECIFIED BY FABRICATOR TO BE VERIFIED BY BUILDING DESIGNER

BEARINGS

JT	FACTORED GROSS REACTION VERT	HORZ	MAXIMUM FACTORED GROSS REACTION DOWN	HORZ	UPLIFT	INPUT BRG IN-SX	REQRD BRG IN-SX
F	1209	0	1209	0	0	1-8	1-8
K	1209	0	1209	0	0	HANGER BY OTHERS MIN. SEAT SIZE: 1-8	

UNFACTORED REACTIONS

JT	1ST LCASE COMBINED	MAX./MIN. COMPONENT REACTIONS SNOW	LIVE	PERM.LIVE	WIND	DEAD	SOIL
F	993	551 / 0	226 / 0	0 / 0	0 / 0	215 / 0	0 / 0
K	993	551 / 0	226 / 0	0 / 0	0 / 0	215 / 0	0 / 0

BEARING MATERIAL TO BE SPF NO.2 OR BETTER AT JOINT(S) F

BRACING

TOP CHORD TO BE SHEATHED OR MAX. PURLIN SPACING = 4.68 FT.
MAX. UNBRACED BOTTOM CHORD LENGTH = 10.00 FT OR RIGID CEILING DIRECTLY APPLIED.

ALL PITCH BREAKS AND PERIMETER CORNER JOINTS MUST BE LATERALLY RESTRAINED.

1 LATERAL BRACE(S) AT 1/ 2 LENGTH OF E-F, C-G.

END VERTICAL(S) MUST BE SHEATHED OR HAVE BRACES AS INDICATED IN THE MAX. UNBRACED LENGTH COLUMN OF THE TABLE BELOW

LOADING

TOTAL LOAD CASES: (4)

CHORDS

MEMB. FR-TO	MAX. FACTORED FORCE (LBS)	FACTORED VERT. LOAD (PLF) FROM	TO	LC1	MAX CSI (LC)	MAX. UNBRAC LENGTH
A- B	-1440 / 0	-84.3	-84.3	0.48 (1)	4.88	
B- C	-1037 / 0	-84.3	-84.3	0.44 (1)	5.56	
C- D	-682 / 0	-84.3	-84.3	0.43 (1)	6.25	
D- E	-682 / 0	-84.3	-84.3	0.43 (1)	6.25	
F- E	-1147 / 0	0.0	0.0	0.34 (1)	5.94	
K- A	-1148 / 0	0.0	0.0	0.12 (1)	7.43	
K- J	0 / 0	-28.0	-28.0	0.20 (3)	10.00	
J- I	0 / 1222	-28.0	-28.0	0.34 (2)	10.00	
I- H	0 / 843	-28.0	-28.0	0.30 (2)	10.00	
H- G	0 / 843	-28.0	-28.0	0.30 (2)	10.00	
G- F	0 / 0	-28.0	-28.0	0.21 (3)	10.00	

WEBS

MEMB. FR-TO	MAX. FACTORED FORCE (LBS)	MAX CSI (LC)
J- B	0 / 221	0.05 (3)
B- I	-496 / 0	0.43 (1)
I- C	0 / 462	0.10 (2)
A- J	0 / 1232	0.28 (1)
G- E	0 / 1186	0.27 (1)
C- G	-282 / 0	0.18 (1)
G- D	-568 / 0	0.72 (1)

DESIGN CRITERIA

SPECIFIED LOADS:

TOP CH.	LL	=	25.6	PSF
	DL	=	3.0	PSF
BOT CH.	LL	=	10.5	PSF
	DL	=	7.0	PSF
TOTAL LOAD		=	46.1	PSF

SPACING = 24.0 IN. C/C

LOADING IN FLAT SECTION BASED ON A SLOPE OF 8.00/12

THIS TRUSS IS DESIGNED FOR RESIDENTIAL OR SMALL BUILDING REQUIREMENTS OF PART 9, NBCC 2010

THIS DESIGN COMPLIES WITH:
- PART 9 OF OBC 2012 , BCBC 2012 , ABC 2014
- CSA 086-09
- TPIC 2011

(55 % OF 31.3 P.S.F. G.S.L. PLUS 8.4 P.S.F. RAIN LOAD) EQUALS 25.6 P.S.F. SPECIFIED ROOF LIVE LOAD

ALLOWABLE DEFL.(LL)= L/360 (0.72")
CALCULATED VERT. DEFL.(LL) = L/ 999 (0.05")
ALLOWABLE DEFL.(TL)= L/360 (0.72")
CALCULATED VERT. DEFL.(TL) = L/ 999 (0.08")

CSI: TC=0.48/1.00 (A-B:1) , BC=0.34/1.00 (I-J:2) , WB=0.72/1.00 (D-G:1) , SSI=0.22/1.00 (D-E:1)

DOL LUMBER=1.00 NAIL=1.00 LS BEND=1.10 COMP=1.10 SHEAR=1.10 TENS= 1.10

COMPANION LIVE LOAD FACTOR = 0.50

TRUSS PLATE MANUFACTURER IS NOT RESPONSIBLE FOR QUALITY CONTROL IN THE TRUSS MANUFACTURING PLANT .

NAIL VALUES

PLATE	GRIP(DRY) (PSI) MAX	MIN	SHEAR (PLI) MAX	MIN	SECTION (PLI) MAX	MIN
MT20	618	354	1667	822	2284	1656

PLATE PLACEMENT TOL. = 0.250 Inches

PLATE ROTATION TOL. = 5.0 Deg.

JSI GRIP= 0.61 (G) (INPUT = 0.90)
JSI METAL= 0.31 (J) (INPUT = 1.00)

LICENSED PROFESSIONAL ENGINEER
S. KATSOULAKOS
PROVINCE OF ONTARIO

DWG NO. TAM B079 -18
STRUCTURAL COMPONENT ONLY

JOB NAME	TRUSS NAME	QUANTITY	PLY	JOB DESC. 43954	DRWG NO.
286205	T57X	2	1	TRUSS DESC.	

Tamarack Roof Truss, Burlington

Version 8.200 S Dec 12 2017 MiTek Industries, Inc. Tue Feb 6 11:15:15 2018 Page 1
ID:zBB7Ev1dAuzyzMrqV1CPA1yeR9e-ZxV_4xH9f7uHNtEDWCzOBjgBwaosUv4AaOKjVqznuJg

Scale = 1:52.1

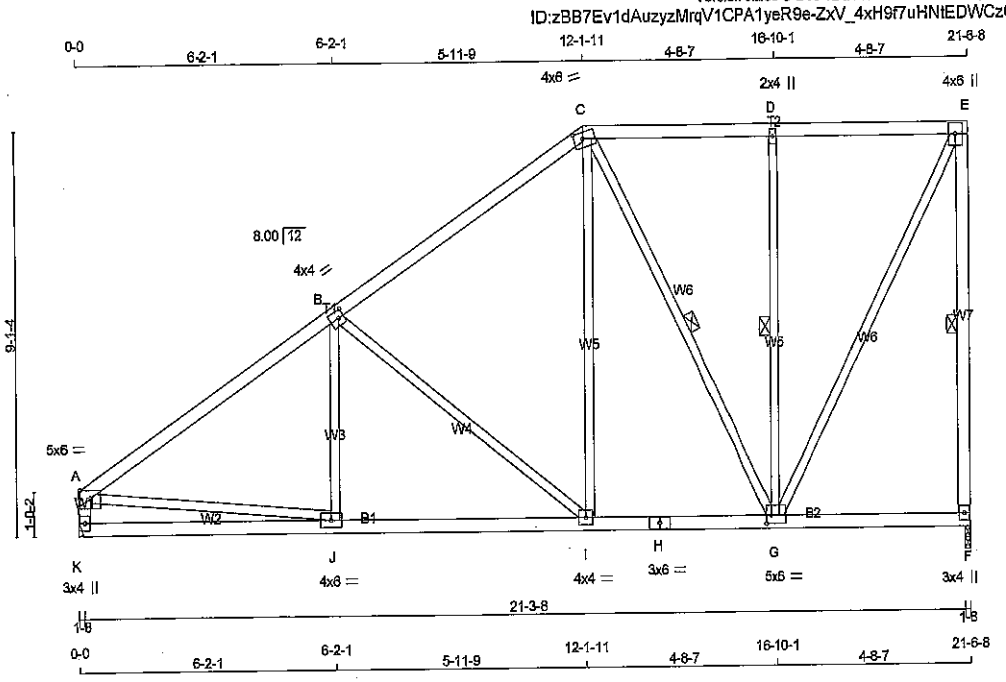

TOTAL WEIGHT = 2 X 106 = 213 lb

[M][F]

LUMBER

N. L. G. A. RULES

CHORDS	SIZE		LUMBER	DESCR.
A - C	2x4	DRY	No.2	SPF
C - E	2x4	DRY	No.2	SPF
F - E	2x4	DRY	No.2	SPF
K - A	2x4	DRY	No.2	SPF
K - H	2x4	DRY	No.2	SPF
H - F	2x4	DRY	No.2	SPF
ALL WEBS EXCEPT	2x3	DRY	No.2	SPF

DRY: SEASONED LUMBER.

PLATES (table is in inches)

JT	TYPE	PLATES	W	LEN	Y	X
A	TMWW-p	MT20	5.0	6.0	Edge	
B	TMWW-t	MT20	4.0	4.0	2.00	1.50
C	TTWW-m	MT20	4.0	6.0	1.75	2.50
D	TMW+w	MT20	2.0	4.0		
E	TMWW+p	MT20	4.0	6.0		
F	BMV1+p	MT20	3.0	4.0		
G	BMWWW-t	MT20	5.0	6.0	2.25	1.50
H	BS-t	MT20	3.0	6.0		
I	BMWW-t	MT20	4.0	4.0		
J	BMWW-t	MT20	4.0	6.0		
K	BMV1+p	MT20	3.0	4.0		

Edge - INDICATES REFERENCE CORNER OF PLATE TOUCHES EDGE OF CHORD.

DIMENSIONS, SUPPORTS AND LOADINGS SPECIFIED BY FABRICATOR TO BE VERIFIED BY BUILDING DESIGNER

BEARINGS

JT	FACTORED GROSS REACTION VERT	HORZ	MAXIMUM FACTORED GROSS REACTION DOWN	HORZ	UPLIFT	INPUT BRG IN-SX	REQRD BRG IN-SX
F	1209	0	1209	0	0	1-8	1-8
K	1209	0	1209	0	0	HANGER BY OTHERS MIN. SEAT SIZE: 1-8	

UNFACTORED REACTIONS

JT	1ST LCASE COMBINED	MAX./MIN. COMPONENT REACTIONS SNOW	LIVE	PERM.LIVE	WIND	DEAD	SOIL
F	993	551 / 0	229 / 0	0 / 0	0 / 0	215 / 0	0 / 0
K	993	551 / 0	226 / 0	0 / 0	0 / 0	215 / 0	0 / 0

BEARING MATERIAL TO BE SPF NO.2 OR BETTER AT JOINT(S) F

BRACING

TOP CHORD TO BE SHEATHED OR MAX. PURLIN SPACING = 4.96 FT.
MAX. UNBRACED BOTTOM CHORD LENGTH = 10.00 FT OR RIGID CEILING DIRECTLY APPLIED.

ALL PITCH BREAKS AND PERIMETER CORNER JOINTS MUST BE LATERALLY RESTRAINED.

1 LATERAL BRACE(S) AT 1/ 2 LENGTH OF E-F, C-G, D-G.

END VERTICAL(S) MUST BE SHEATHED OR HAVE BRACES AS INDICATED IN THE MAX. UNBRACED LENGTH COLUMN OF THE TABLE BELOW

LOADING

TOTAL LOAD CASES: (4)

CHORDS

MEMB. FR-TO	MAX. FACTORED FORCE (LBS)	FACTORED VERT. LOAD LC1 (PLF) FROM	TO	MAX CSI (LC)	MAX. UNBRAC LENGTH
A- B	-1417 / 0	-84.3	-84.3	0.45 (1)	4.96
B- C	-912 / 0	-84.3	-84.3	0.41 (1)	5.90
C- D	-538 / 0	-84.3	-84.3	0.23 (1)	6.25
D- E	-539 / 0	-84.3	-84.3	0.23 (1)	6.25
F- E	-1154 / 0	0.0	0.0	0.44 (1)	5.93
K- A	-1139 / 0	0.0	0.0	0.11 (1)	7.45
K- J	0 / 0	-28.0	-28.0	0.27 (3)	10.00
J- I	0 / 1207	-28.0	-28.0	0.40 (2)	10.00
I- H	0 / 735	-28.0	-28.0	0.23 (2)	10.00
H- G	0 / 735	-28.0	-28.0	0.23 (2)	10.00
G- F	0 / 0	-28.0	-28.0	0.14 (3)	10.00

WEBS

MEMB. FR-TO	MAX. FACTORED FORCE (LBS)	MAX CSI (LC)
J- B	0 / 280	0.06 (3)
B- I	-610 / 0	0.75 (1)
I- C	0 / 521	0.12 (1)
C- G	-421 / 0	0.30 (1)
G- D	-488 / 0	0.26 (1)
G- E	0 / 1136	0.26 (1)
A- J	0 / 1215	0.27 (1)

DESIGN CRITERIA

SPECIFIED LOADS:

TOP CH.	LL	=	25.6	PSF
	DL	=	3.0	PSF
BOT CH.	LL	=	10.5	PSF
	DL	=	7.0	PSF
TOTAL LOAD		=	46.1	PSF

SPACING = 24.0 IN. C/C

LOADING IN FLAT SECTION BASED ON A SLOPE OF 6.00/12

THIS TRUSS IS DESIGNED FOR RESIDENTIAL OR SMALL BUILDING REQUIREMENTS OF PART 9, NBCC 2010

THIS DESIGN COMPLIES WITH:
- PART 9 OF OBC 2012 , BCBC 2012 , ABC 2014
- CSA 086-09
- TPIC 2011

(55 % OF 31.3 P.S.F. G.S.L. PLUS 8.4 P.S.F. RAIN LOAD) EQUALS 25.6 P.S.F. SPECIFIED ROOF LIVE LOAD

ALLOWABLE DEFL.(LL)= L/360 (0.72")
CALCULATED VERT. DEFL.(LL) = L/ 999 (0.07")
ALLOWABLE DEFL.(TL)= L/360 (0.72")
CALCULATED VERT. DEFL.(TL) = L/ 999 (0.11")

CSI: TC=0.45/1.00 (A-B:1) , BC=0.40/1.00 (I-J:2) , WB=0.75/1.00 (B-I:1) , SSI=0.21/1.00 (A-B:1)

DOL LUMBER=1.00 NAIL=1.00 LS BEND=1.10 COMP=1.10 SHEAR=1.10 TENS= 1.10

COMPANION LIVE LOAD FACTOR = 0.50

AUTOSOLVE RIGHT HEEL ONLY

TRUSS PLATE MANUFACTURER IS NOT RESPONSIBLE FOR QUALITY CONTROL IN THE TRUSS MANUFACTURING PLANT .

NAIL VALUES

PLATE	GRIP(DRY) (PSI) MAX	MIN	SHEAR (PLI) MAX	MIN	SECTION (PLI) MAX	MIN
MT20	618	354	1687	822	2284	1656

PLATE PLACEMENT TOL. = 0.250 inches

PLATE ROTATION TOL. = 5.0 Deg.

JSI GRIP= 0.81 (G) (INPUT = 0.90)
JSI METAL= 0.30 (J) (INPUT = 1.00)

LICENSED PROFESSIONAL ENGINEER
S. KATSOULAKOS
PROVINCE OF ONTARIO

DWG NO. TAM 8080-8
STRUCTURAL COMPONENT ONLY

JOB NAME	TRUSS NAME	QUANTITY	PLY	JOB DESC. 43954	DRWG NO.
286205	T58X	4	1	TRUSS DESC.	

Tamarack Roof Truss, Burlington

Version 8.200 S Dec 12 2017 MiTek Industries, Inc. Tue Feb 6 11:15:16 2018 Page 1
ID:zBB7Ev1dAuzyzMrqV1CPA1yeR9e-173NHGlnQR08?1pP4wVdkwDKZ_6JDO3Jp23G1GznuJf

Scale = 1:57.6

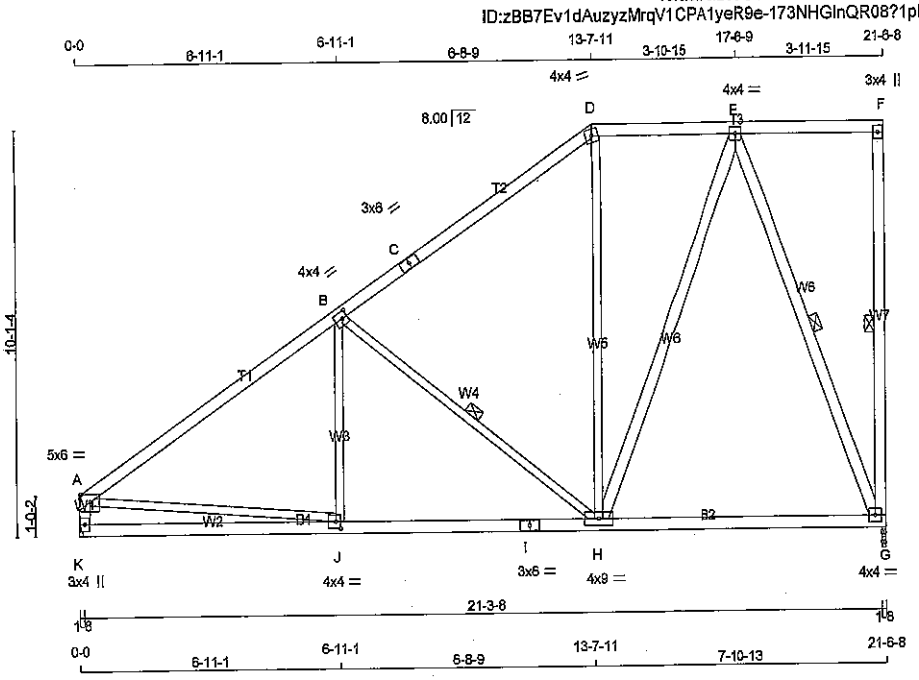

TOTAL WEIGHT = 4 X 111 = 445 lb

[M][F]

LUMBER

N. L. G. A. RULES

CHORDS	SIZE		LUMBER	DESCR.
A - C	2x4	DRY	No.2	SPF
C - D	2x4	DRY	No.2	SPF
D - F	2x4	DRY	No.2	SPF
G - F	2x4	DRY	No.2	SPF
K - A	2x4	DRY	No.2	SPF
K - I	2x4	DRY	No.2	SPF
I - G	2x4	DRY	No.2	SPF
ALL WEBS	2x3	DRY	No.2	SPF
EXCEPT				
H - E	2x4	DRY	No.2	SPF
E - G	2x4	DRY	No.2	SPF

DRY: SEASONED LUMBER.

PLATES (table is in inches)

JT	TYPE	PLATES	W	LEN	Y	X
A	TMVW-p	MT20	5.0	6.0	Edge	
B	TMWW-t	MT20	4.0	4.0	2.00	1.50
C	TS-t	MT20	3.0	6.0		
D	TTW-m	MT20	4.0	4.0		
E	TMWW-t	MT20	4.0	4.0		
F	TMV+p	MT20	3.0	4.0		
G	BMVW1-t	MT20	4.0	4.0		
H	BMWWW-t	MT20	4.0	9.0		
I	BS-t	MT20	3.0	6.0		
J	BMWW-t	MT20	4.0	4.0	2.00	1.50
K	BMV1+p	MT20	3.0	4.0		

Edge - INDICATES REFERENCE CORNER OF PLATE TOUCHES EDGE OF CHORD.

DIMENSIONS, SUPPORTS AND LOADINGS SPECIFIED BY FABRICATOR TO BE VERIFIED BY BUILDING DESIGNER

BEARINGS

JT	FACTORED GROSS REACTION VERT	HORZ	MAXIMUM FACTORED GROSS REACTION DOWN	HORZ	UPLIFT	INPUT BRG IN-SX	REQRD BRG IN-SX
G	1209	0	1209	0	0	1-8	1-8
K	1209	0	1209	0	0	HANGER BY OTHERS MIN. SEAT SIZE: 1-8	

UNFACTORED REACTIONS

JT	1ST LCASE COMBINED	MAX./MIN. COMPONENT REACTIONS SNOW	LIVE	PERM.LIVE	WIND	DEAD	SOIL
G	993	551 / 0	226 / 0	0 / 0	0 / 0	215 / 0	0 / 0
K	993	551 / 0	226 / 0	0 / 0	0 / 0	215 / 0	0 / 0

BEARING MATERIAL TO BE SPF NO.2 OR BETTER AT JOINT(S) G

BRACING

TOP CHORD TO BE SHEATHED OR MAX. PURLIN SPACING = 4.79 FT.
MAX. UNBRACED BOTTOM CHORD LENGTH = 10.00 FT OR RIGID CEILING DIRECTLY APPLIED.

ALL PITCH BREAKS AND PERIMETER CORNER JOINTS MUST BE LATERALLY RESTRAINED.

1 LATERAL BRACE(S) AT 1/ 2 LENGTH OF F-G, B-H, E-G.

END VERTICAL(S) MUST BE SHEATHED OR HAVE BRACES AS INDICATED IN THE MAX. UNBRACED LENGTH COLUMN OF THE TABLE BELOW

LOADING

TOTAL LOAD CASES: (4)

CHORDS

MEMB. FR-TO	MAX. FACTORED FORCE (LBS)	FACTORED VERT. LOAD (PLF) FROM	TO	LC1	MAX CSI (LC)	MAX. UNBRAC LENGTH
A- B	-1382 / 0	-84.3	-84.3	0.59 (1)	4.79	
B- C	-795 / 0	-84.3	-84.3	0.53 (1)	5.97	
C- D	-795 / 0	-84.3	-84.3	0.53 (1)	5.97	
D- E	-629 / 0	-84.3	-84.3	0.17 (1)	6.25	
E- F	0 / 0	-84.3	-84.3	0.22 (1)	10.00	
G- F	-128 / 0	0.0	0.0	0.06 (1)	6.25	
K- A	-1128 / 0	0.0	0.0	0.11 (1)	7.48	
K- J	0 / 0	-28.0	-28.0	0.29 (3)	10.00	
J- I	0 / 1182	-28.0	-28.0	0.52 (2)	10.00	
I- H	0 / 1182	-28.0	-28.0	0.52 (2)	10.00	
H- G	0 / 404	-28.0	-28.0	0.43 (2)	10.00	

WEBS

MEMB. FR-TO	MAX. FACTORED FORCE (LBS)	MAX CSI (LC)
J- B	0 / 299	0.07 (3)
B- H	-702 / 0	0.36 (1)
H- D	0 / 192	0.04 (3)
H- E	0 / 623	0.10 (1)
E- G	-1071 / 0	0.63 (1)
A- J	0 / 1188	0.27 (1)

DESIGN CRITERIA

SPECIFIED LOADS:

TOP CH.	LL	=	25.6	PSF
	DL	=	3.0	PSF
BOT CH.	LL	=	10.5	PSF
	DL	=	7.0	PSF
TOTAL LOAD		=	46.1	PSF

SPACING = 24.0 IN. C/C

LOADING IN FLAT SECTION BASED ON A SLOPE OF 6.00/12

THIS TRUSS IS DESIGNED FOR RESIDENTIAL OR SMALL BUILDING REQUIREMENTS OF PART 9, NBCC 2010

THIS DESIGN COMPLIES WITH:
- PART 9 OF OBC 2012 , BCBC 2012 , ABC 2014
- CSA 086-09
- TPIC 2011

(55 % OF 31.3 P.S.F. G.S.L. PLUS 8.4 P.S.F. RAIN LOAD) EQUALS 25.6 P.S.F. SPECIFIED ROOF LIVE LOAD

ALLOWABLE DEFL.(LL)= L/360 (0.72")
CALCULATED VERT. DEFL.(LL) = L/ 999 (0.14")
ALLOWABLE DEFL.(TL)= L/360 (0.72")
CALCULATED VERT. DEFL.(TL) = L/ 999 (0.24")

CSI: TC=0.59/1.00 (A-B:1) , BC=0.52/1.00 (H-J:2) , WB=0.63/1.00 (E-G:1) , SSI=0.23/1.00 (A-B:1)

DOL LUMBER=1.00 NAIL=1.00 LS BEND=1.10 COMP=1.10 SHEAR=1.10 TENS= 1.10

COMPANION LIVE LOAD FACTOR = 0.50

TRUSS PLATE MANUFACTURER IS NOT RESPONSIBLE FOR QUALITY CONTROL IN THE TRUSS MANUFACTURING PLANT .

NAIL VALUES

PLATE	GRIP(DRY) (PSI) MAX	MIN	SHEAR (PLI) MAX	MIN	SECTION (PLI) MAX	MIN
MT20	618	354	1667	822	2284	1656

PLATE PLACEMENT TOL. = 0.250 inches

PLATE ROTATION TOL. = 5.0 Deg.

JSI GRIP= 0.88 (J) (INPUT = 0.90)
JSI METAL= 0.44 (J) (INPUT = 1.00)

LICENSED PROFESSIONAL ENGINEER
S. KATSOULAKOS
PROVINCE OF ONTARIO

DWG NO. TAM 8081-18
STRUCTURAL
COMPONENT ONLY

JOB NAME	TRUSS NAME	QUANTITY	PLY	JOB DESC. 43954	DRWG NO.
286205	T59	1	2	TRUSS DESC.	

Tamarack Roof Truss, Burlington

Version 8.200 S Dec 12 2017 MiTek Industries, Inc. Tue Feb 6 11:15:16 2018 Page 1
ID:zBB7Ev1dAuzyzMrqV1CPA1yeR9e-173NHGlnQR08?1pP4wVdkwDR8_4ZDQcJp23G1GznuJf

Scale = 1:41.1

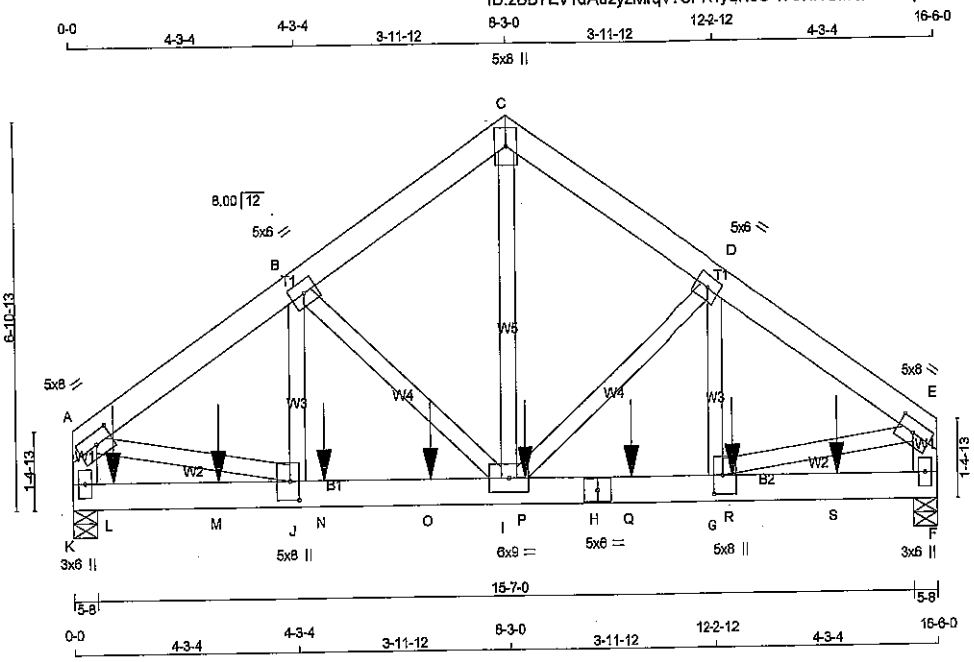

TOTAL WEIGHT = 2 X 103 = 206 lb

[M]

LUMBER

N. L. G. A. RULES

CHORDS	SIZE		LUMBER	DESCR.
A - C	2x6	DRY	No.2	SPF
C - E	2x6	DRY	No.2	SPF
K - A	2x6	DRY	No.2	SPF
F - E	2x6	DRY	No.2	SPF
K - H	2x6	DRY	No.2	SPF
H - F	2x6	DRY	No.2	SPF
ALL WEBS EXCEPT	2x4	DRY	No.2	SPF

DRY: SEASONED LUMBER.

DESIGN CONSISTS OF 2 TRUSSES BUILT SEPARATELY THEN FASTENED TOGETHER AS FOLLOWS:

CHORDS	#ROWS	SURFACE SPACING (IN)	LOAD(PLF)
TOP CHORDS : (0.122"X3") SPIRAL NAILS			
A- C	2	12	TOP
C- E	2	12	TOP
K- A	2	12	TOP
F- E	2	12	TOP
BOTTOM CHORDS : (0.122"X3") SPIRAL NAILS			
K- H	2	12	SIDE(183.1)
H- F	2	12	SIDE(183.1)
WEBS : (0.122"X3") SPIRAL NAILS			
I- C	1	6	SIDE(125.0)
D- G	1	6	SIDE(125.0)
2x4	1	6	

NAILS TO BE DRIVEN FROM ONE SIDE ONLY.

GIRDER NAILING ASSUMES NAILED HANGERS ARE FASTENED WITH MIN. 3-0 INCH NAILS.

TOP - COMPONENTS ARE LOADED FROM THE TOP AND MUST BE PLACED ON TOP EDGE OF ALL PLIES FOR THE LOAD TO BE TRANSFERRED TO EACH PLY.

SIDE - PLF SHOWN IS THE EQUIVALENT UDL APPLIED TO ONE SIDE THAT THE CORRESPONDING NAILING PATTERN SHALL BE CAPABLE OF TRANSFERING. REMAINING PLF MUST BE APPLIED ON THE OPPOSITE SIDE OR ON THE TOP.

PLATES (table is in inches)

JT	TYPE	PLATES	W	LEN	Y	X
A	TMWW-t	MT20	5.0	8.0	2.50	3.75
B	TMWW-t	MT20	5.0	6.0		
C	TTW+p	MT20	5.0	8.0		
D	TMWW-t	MT20	5.0	6.0		
E	TMWW-t	MT20	5.0	8.0	2.50	3.75
F	BMV1+p	MT20	3.0	6.0		
G	BMWW+t	MT20	5.0	8.0	4.00	2.00
H	BS-t	MT20	5.0	6.0		
I	BMWWW-t	MT20	6.0	9.0		
J	BMWW+t	MT20	5.0	8.0	4.00	2.00
K	BMV1+p	MT20	3.0	6.0		

HANGERS NOTES

1)

DIMENSIONS, SUPPORTS AND LOADINGS SPECIFIED BY FABRICATOR TO BE VERIFIED BY BUILDING DESIGNER

BEARINGS

JT	FACTORED GROSS REACTION VERT	HORZ	MAXIMUM FACTORED GROSS REACTION DOWN	HORZ	UPLIFT	INPUT BRG IN-SX	REQRD BRG IN-SX
K	5987	0	5987	0	0	5-8	5-8
F	5317	0	5317	0	0	5-8	5-8

UNFACTORED REACTIONS

JT	1ST LCASE COMBINED	MAX./MIN. COMPONENT REACTIONS SNOW	LIVE	PERM.LIVE	WIND	DEAD	SOIL
K	4866	2782 / 0	1054 / 0	0 / 0	0 / 0	1029 / 0	0 / 0
F	4321	2471 / 0	936 / 0	0 / 0	0 / 0	914 / 0	0 / 0

BEARING MATERIAL TO BE SPF NO.2 OR BETTER AT JOINT(S) K, F

BRACING

TOP CHORD TO BE SHEATHED OR MAX. PURLIN SPACING = 4.64 FT.
MAX. UNBRACED BOTTOM CHORD LENGTH = 10.00 FT OR RIGID CEILING DIRECTLY APPLIED.

ALL PITCH BREAKS AND PERIMETER CORNER JOINTS MUST BE LATERALLY RESTRAINED.

LOADING

TOTAL LOAD CASES: (4)

CHORDS

MEMB. FR-TO	MAX. FACTORED FORCE (LBS)	FACTORED VERT. LOAD (PLF) FROM	TO	LC1 CSI (LC)	MAX	MAX. UNBRAC LENGTH
A- B	-6283 / 0	-84.3	-84.3	0.14 (1)		4.64
B- C	-4712 / 0	-84.3	-84.3	0.10 (1)		5.25
C- D	-4712 / 0	-84.3	-84.3	0.10 (1)		5.25
D- E	-6209 / 0	-84.3	-84.3	0.14 (1)		4.67
K- A	-4769 / 0	0.0	0.0	0.17 (1)		6.63
F- E	-4714 / 0	0.0	0.0	0.17 (1)		6.66
K- L	0 / 0	-28.0	-28.0	0.36 (1)		10.00
L- M	0 / 0	-28.0	-28.0	0.36 (1)		10.00
M- J	0 / 0	-28.0	-28.0	0.36 (1)		10.00
J- N	0 / 5223	-28.0	-28.0	0.69 (1)		10.00
N- O	0 / 5223	-28.0	-28.0	0.69 (1)		10.00
O- I	0 / 5223	-28.0	-28.0	0.69 (1)		10.00
I- P	0 / 5162	-28.0	-28.0	0.64 (1)		10.00
P- H	0 / 5162	-28.0	-28.0	0.64 (1)		10.00
H- Q	0 / 5162	-28.0	-28.0	0.64 (1)		10.00
Q- G	0 / 5162	-28.0	-28.0	0.64 (1)		10.00
G- R	0 / 0	-28.0	-28.0	0.41 (1)		10.00
R- S	0 / 0	-28.0	-28.0	0.41 (1)		10.00
S- F	0 / 0	-28.0	-28.0	0.41 (1)		10.00

WEBS

MEMB. FR-TO	MAX. FACTORED FORCE (LBS)	MAX CSI (LC)
I- C	0 / 4878	0.43 (1)
I- D	-1697 / 0	0.29 (1)
G- D	0 / 1659	0.15 (1)
B- I	-1781 / 0	0.30 (1)
J- B	0 / 1759	0.16 (1)
A- J	0 / 5337	0.47 (1)
G- E	0 / 5274	0.47 (1)

FACTORED CONCENTRATED LOADS (LBS)

JT	LOC.	LC1	MAX-	MAX+	FACE	DIR.	TYPE
L	9-4	-1184	-1184	---	BACK	VERT	TOTAL
M	2-9-4	-1181	-1181	---	BACK	VERT	TOTAL
N	4-9-4	-1181	-1181	---	BACK	VERT	TOTAL
O	6-9-4	-1181	-1181	---	BACK	VERT	TOTAL
P	8-6-12	-1181	-1181	---	BACK	VERT	TOTAL
Q	10-6-12	-1181	-1181	---	BACK	VERT	TOTAL
R	12-8-12	-1181	-1181	---	BACK	VERT	TOTAL
S	14-6-12	-1181	-1181	---	BACK	VERT	TOTAL

DESIGN CRITERIA

SPECIFIED LOADS:

TOP CH.	LL	=	25.6	PSF
	DL	=	3.0	PSF
BOT CH.	LL	=	10.5	PSF
	DL	=	7.0	PSF
TOTAL LOAD		=	46.1	PSF

SPACING = 24.0 IN. C/C

THIS TRUSS IS DESIGNED FOR RESIDENTIAL OR SMALL BUILDING REQUIREMENTS OF PART 9, NBCC 2010

THIS DESIGN COMPLIES WITH:
- PART 9 OF OBC 2012 , BCBC 2012 , ABC 2014
- CSA 086-09
- TPIC 2011

(55 % OF 31.3 P.S.F. G.S.L. PLUS 6.4 P.S.F. RAIN LOAD) EQUALS 25.6 P.S.F. SPECIFIED ROOF LIVE LOAD

ALLOWABLE DEFL.(LL)= L/360 (0.55")
CALCULATED VERT. DEFL.(LL) = L/ 999 (0.06")
ALLOWABLE DEFL.(TL)= L/360 (0.55")
CALCULATED VERT. DEFL.(TL) = L/ 999 (0.09")

CSI: TC=0.17/1.00 (A-K:1) , BC=0.69/1.00 (I-J:1) , WB=0.47/1.00 (A-J:1) , SSI=0.62/1.00 (F-G:1)

DOL LUMBER=1.00 NAIL=1.00 LS BEND=1.00 COMP=1.00 SHEAR=1.00 TENS= 1.00

COMPANION LIVE LOAD FACTOR = 0.50

TRUSS PLATE MANUFACTURER IS NOT RESPONSIBLE FOR QUALITY CONTROL IN THE TRUSS MANUFACTURING PLANT .

NAIL VALUES

PLATE	GRIP(DRY) (PSI) MAX	MIN	SHEAR (PLI) MAX	MIN	SECTION (PLI) MAX	MIN
MT20	618	354	1667	822	2284	1656

PLATE PLACEMENT TOL. = 0.250 inches

PLATE ROTATION TOL. = 5.0 Deg.

JSI GRIP= 0.65 (G) (INPUT = 0.90)
JSI METAL= 0.68 (J) (INPUT = 1.00)

LICENSED PROFESSIONAL ENGINEER
26268
S. KATSOULAKOS
PROVINCE OF ONTARIO

DWG NO. TAM 8002-38
STRUCTURAL COMPONENT ONLY

CONTINUED ON PAGE 2

JOB NAME	TRUSS NAME	QUANTITY	PLY	JOB DESC. 43954	DRWG NO.
286205	T59	1	2	TRUSS DESC.	

HANGERS NOTES

1) SPECIAL HANGER(S) OR CONNECTION(S) REQUIRED TO SUPPORT CONCENTRATED LOAD(S) 1184.3 lbs FACTORED DOWN AT 9-4, 1181.1 lbs FACTORED DOWN AT 2-9-4, 1181.1 lbs FACTORED DOWN AT 4-9-4, 1181.1 lbs FACTORED DOWN AT 6-9-4, 1181.1 lbs FACTORED DOWN AT 8-6-12, 1181.1 lbs FACTORED DOWN AT 10-6-12, AND 1181.1 lbs FACTORED DOWN AT 12-6-12, AND 1181.1 lbs FACTORED DOWN AT 14-6-12 ON BOTTOM CHORD. DESIGN FOR UNSPECIFIED CONNECTION(S) IS DELEGATED TO THE BUILDING DESIGNER.

LICENSED PROFESSIONAL ENGINEER
S. KATSOULAKOS
PROVINCE OF ONTARIO

DWG NO. TAM 8082-18
STRUCTURAL
COMPONENT ONLY

JOB NAME	TRUSS NAME	QUANTITY	PLY	JOB DESC. 43954	DRWG NO.
286204	G60	1	1	TRUSS DESC.	

Version 6.030 S Oct 5 2016 MiTek Industries, Inc. Tue Sep 12 12:44:27 2017 Page 1

Tamarack Roof Truss, Burlington

ID:zBB7Ev1dAuzyzMrqV1CPA1yeR9e-KrhpgCJJMloUonHf7Pf?39M9iCZjRudJi5yy27yeO_

Scale = 1:41.1

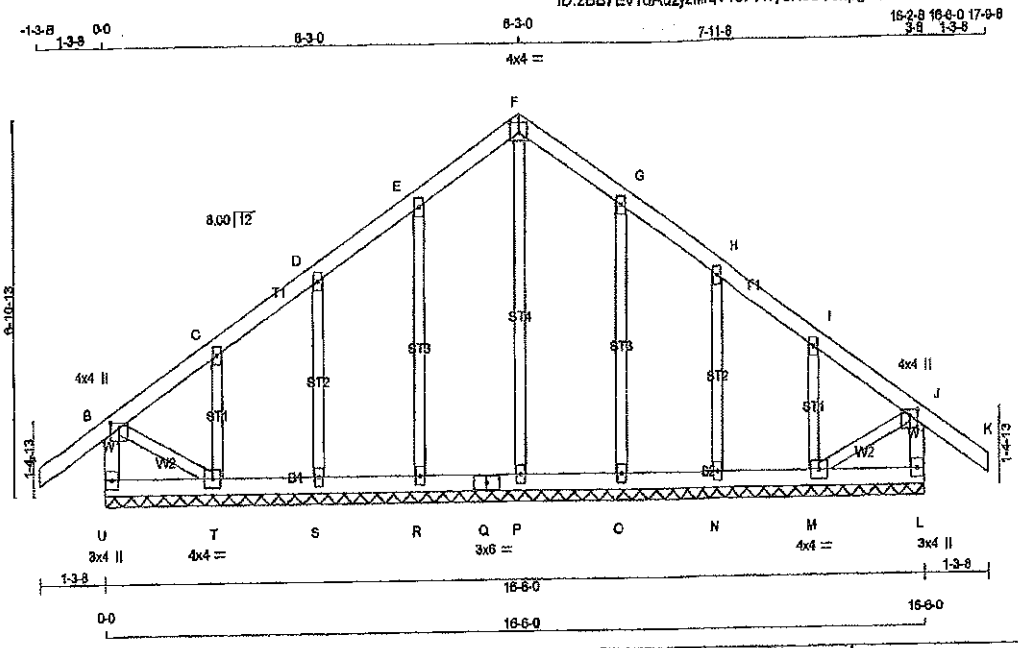

TOTAL WEIGHT = 74 lb (M)

LUMBER

N. L. G. A. RULES

CHORDS	SIZE		LUMBER	DESCR.
U - B	2x4	DRY	No.2	SPF
A - F	2x4	DRY	No.2	SPF
F - K	2x4	DRY	No.2	SPF
L - J	2x4	DRY	No.2	SPF
U - Q	2x4	DRY	No.2	SPF
Q - L	2x4	DRY	No.2	SPF
ALL WEBS	2x3	DRY	No.2	SPF
ALL GABLE WEBS	2x3	DRY	No.2	SPF

DRY: SEASONED LUMBER.

GABLE STUDS SPACED AT 2-0-0 CC.

PLATES (table is in inches)

JT	TYPE	PLATES	W	LEN	Y	X
B	TMWW+p	MT20	4.0	4.0	1.25	2.00
C, D, E, G, H, I						
C	TMW+w	MT20	2.0	4.0		
F	TTW-p	MT20	4.0	4.0	2.25	2.00
J	TMWW+p	MT20	4.0	4.0	1.25	2.00
L	BMV1+p	MT20	3.0	4.0		
M	BMWW1-t	MT20	4.0	4.0		
N, O, P, R, S						
N	BMW1+w	MT20	2.0	4.0		
Q	BS-t	MT20	3.0	6.0		
T	BMWW1-t	MT20	4.0	4.0		
U	BMV1+p	MT20	3.0	4.0		

DIMENSIONS, SUPPORTS AND LOADINGS SPECIFIED BY FABRICATOR TO BE VERIFIED BY BUILDING DESIGNER

BEARINGS

THIS TRUSS DESIGNED FOR CONTINUOUS BEARINGS.

THIS TRUSS REQUIRES RIGID SHEATHING ON EXPOSED FACE.

BEARING MATERIAL TO BE SPF NO.2 OR BETTER AT JOINT(S)

BRACING

TOP CHORD TO BE SHEATHED OR MAX. PURLIN SPACING = 6.25 FT.
MAX. UNBRACED BOTTOM CHORD LENGTH = 10.00 FT. OR RIGID CEILING DIRECTLY APPLIED.

ALL PITCH BREAKS AND PERIMETER CORNER JOINTS MUST BE LATERALLY RESTRAINED.

LOADING

TOTAL LOAD CASES: (4)

CHORDS

MEMB. FR-TO	MAX. FACTORED FORCE (LBS)	FACTORED VERT. LOAD (PLF) FROM	TO	LC1	MAX CSI (LC)	MAX. UNBRAC LENGTH
U- B	-219 / 0	0.0	0.0	0.02 (1)	7.81	
A- B	0 / 32	-84.3	-84.3	0.11 (1)	10.00	
B- C	-21 / 0	-84.3	-84.3	0.05 (1)	6.25	
C- D	-28 / 0	-84.3	-84.3	0.05 (1)	6.25	
D- E	-16 / 0	-84.3	-84.3	0.05 (1)	6.25	
E- F	-26 / 0	-84.3	-84.3	0.05 (1)	6.25	
F- G	-26 / 0	-84.3	-84.3	0.05 (1)	6.25	
G- H	-16 / 0	-84.3	-84.3	0.05 (1)	6.25	
H- I	-28 / 0	-84.3	-84.3	0.05 (1)	6.25	
I- J	-21 / 0	-84.3	-84.3	0.05 (1)	6.25	
J- K	0 / 32	-84.3	-84.3	0.11 (1)	10.00	
L- J	-219 / 0	0.0	0.0	0.02 (1)	7.81	
U- T	0 / 0	-28.0	-28.0	0.03 (2)	10.00	
T- S	0 / 20	-28.0	-28.0	0.03 (2)	10.00	
S- R	0 / 16	-28.0	-28.0	0.02 (2)	10.00	
R- Q	0 / 13	-28.0	-28.0	0.02 (2)	10.00	
Q- P	0 / 13	-28.0	-28.0	0.02 (2)	10.00	
P- O	0 / 13	-28.0	-28.0	0.02 (2)	10.00	
O- N	0 / 16	-28.0	-28.0	0.02 (2)	10.00	
N- M	0 / 20	-28.0	-28.0	0.03 (2)	10.00	
M- L	0 / 0	-28.0	-28.0	0.03 (2)	10.00	

WEBS

MEMB. FR-TO	MAX. FACTORED FORCE (LBS)	MAX CSI (LC)
P- F	-123 / 0	0.10 (1)
R- E	-193 / 0	0.09 (1)
S- D	-163 / 0	0.04 (1)
T- C	-197 / 0	0.03 (1)
O- G	-193 / 0	0.09 (1)
N- H	-153 / 0	0.04 (1)
M- I	-197 / 0	0.03 (1)
B- T	0 / 29	0.01 (1)
M- J	0 / 29	0.01 (1)

DESIGN CRITERIA

SPECIFIED LOADS:

TOP CH.	LL =	25.6	PSF
	DL =	3.0	PSF
BOT CH.	LL =	10.5	PSF
	DL =	7.0	PSF
TOTAL LOAD	=	46.1	PSF

SPACING = 24.0 IN. C/C

THIS TRUSS IS DESIGNED FOR RESIDENTIAL OR SMALL BUILDING REQUIREMENTS OF PART 9, NBCC 2010

THIS DESIGN COMPLIES WITH:
- PART 9 OF OBC 2012 , BCBC 2012 , ABC 2014
- CSA 086-09
- TPIC 2011

(55 % OF 31.3 P.S.F. G.S.L. PLUS 8.4 P.S.F. RAIN LOAD) EQUALS 25.6 P.S.F. SPECIFIED ROOF LIVE LOAD

CSI: TC=0.11 (J-K:1) , BC=0.03 (M-N:2) , WB=0.10 (F-P:1) , SSI=0.08 (J-K:1)

DOL LUMBER=1.00 NAIL=1.00 LS BEND=1.10 COMP=1.10 SHEAR=1.10 TENS= 1.10

COMPANION LIVE LOAD FACTOR = 0.50

TRUSS PLATE MANUFACTURER IS NOT RESPONSIBLE FOR QUALITY CONTROL IN THE TRUSS MANUFACTURING PLANT .

NAIL VALUES

PLATE	GRIP(DRY) (PSI) MAX	MIN	SHEAR (PLI) MAX	MIN	SECTION (PLI) MAX	MIN
MT20	618	354	1657	822	2284	1656

PLATE PLACEMENT TOL. = 0.250 inches

PLATE ROTATION TOL. = 5.0 Deg.

JSI GRIP= 0.52 (M) (INPUT = 0.90)
JSI METAL= 0.05 (I) (INPUT = 1.00)

LICENSED PROFESSIONAL ENGINEER
9/12/17
S. KATSOULAKOS
PROVINCE OF ONTARIO

DWG NO. TAM46244-17
STRUCTURAL
COMPONENT ONLY

JOB NAME	TRUSS NAME	QUANTITY	PLY	JOB DESC. 43954	DRWG NO.
286204	G61	1	1	TRUSS DESC.	

Tamarack Roof Truss, Burlington

Version 8.030 S Oct 5 2016 MiTek Industries, Inc. Tue Sep 12 12:44:27 2017 Page 1
ID:zBB7Ev1dAuzyzMqV1CPA1yeR9e-KrhpgCJJMloUonHf7PI?39M9iCZtRu5JI5yy27yeO_

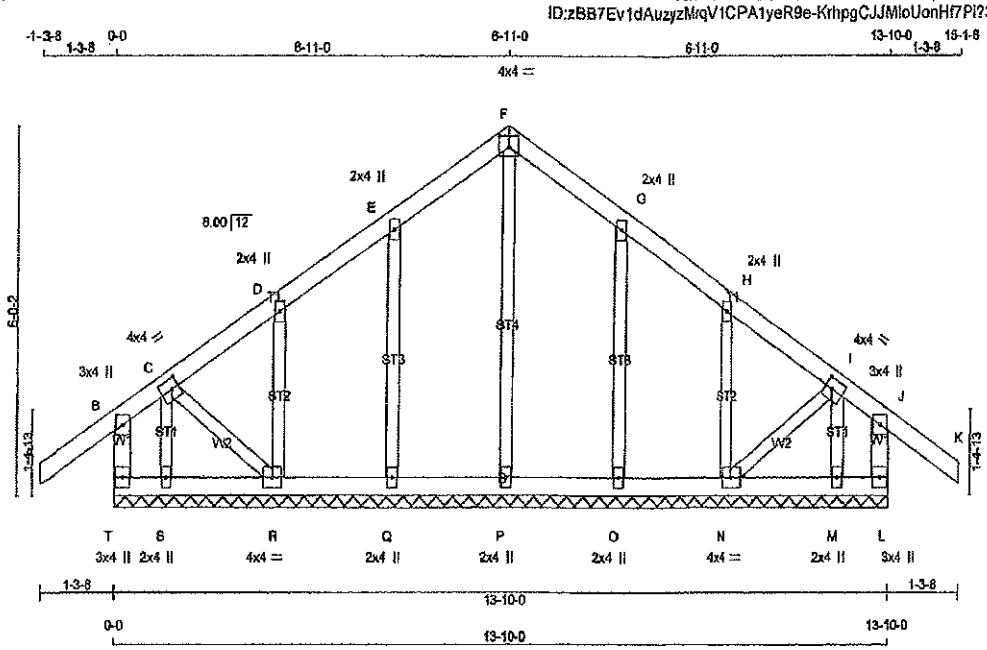

TOTAL WEIGHT = 63 lb

[M]

LUMBER
N. L. G. A. RULES

CHORDS	SIZE		LUMBER	DESCR.
T - B	2x4	DRY	No.2	SPF
A - F	2x4	DRY	No.2	SPF
F - K	2x4	DRY	No.2	SPF
L - J	2x4	DRY	No.2	SPF
T - L	2x4	DRY	No.2	SPF
ALL WEBS	2x3	DRY	No.2	SPF
ALL GABLE WEBS	2x3	DRY	No.2	SPF

DRY: SEASONED LUMBER.

GABLE STUDS SPACED AT 2-0-0 OC.

PLATES (table is in inches)

JT	TYPE	PLATES	W	LEN	Y	X
B	TMV+p	MT20	3.0	4.0		
C	TMWW-t	MT20	4.0	4.0	2.00	1.50
D, E, G, H						
D	TMW+w	MT20	2.0	4.0		
F	TTW-p	MT20	4.0	4.0	2.25	2.00
I	TMWW-t	MT20	4.0	4.0	2.00	1.50
J	TMV+p	MT20	3.0	4.0		
L	BMV1+p	MT20	3.0	4.0		
M, O, P, Q, S						
M	BMW1+w	MT20	2.0	4.0		
N	BMWW1-t	MT20	4.0	4.0		
R	BMWW1-t	MT20	4.0	4.0		
T	BMV1+p	MT20	3.0	4.0		

DIMENSIONS, SUPPORTS AND LOADINGS SPECIFIED BY FABRICATOR TO BE VERIFIED BY BUILDING DESIGNER

BEARINGS

THIS TRUSS DESIGNED FOR CONTINUOUS BEARINGS.

THIS TRUSS REQUIRES RIGID SHEATHING ON EXPOSED FACE.

BEARING MATERIAL TO BE SPF NO.2 OR BETTER AT JOINT(S)

BRACING
TOP CHORD TO BE SHEATHED OR MAX. PURLIN SPACING = 6.25 FT.
MAX. UNBRACED BOTTOM CHORD LENGTH = 10.00 FT. OR RIGID CEILING DIRECTLY APPLIED.

ALL PITCH BREAKS AND PERIMETER CORNER JOINTS MUST BE LATERALLY RESTRAINED.

LOADING
TOTAL LOAD CASES: (4)

CHORDS

MEMB. FR-TO	MAX. FORCE (LBS)	FACTORED VERT. LOAD (PLF) FROM	TO	MAX CSI (LC)	MAX. UNBRAC LENGTH	LC1
T- B	-231 / 0	0.0	0.0	0.02 (1)	7.81	
A- B	0 / 32	-84.3	-84.3	0.11 (1)	10.00	
B- C	-43 / 0	-84.3	-84.3	0.11 (1)	6.25	
C- D	-22 / 0	-84.3	-84.3	0.04 (1)	6.25	
D- E	-20 / 0	-84.3	-84.3	0.05 (1)	6.25	
E- F	-27 / 0	-84.3	-84.3	0.05 (1)	6.25	
F- G	-27 / 0	-84.3	-84.3	0.05 (1)	6.25	
G- H	-20 / 0	-84.3	-84.3	0.05 (1)	6.25	
H- I	-22 / 0	-84.3	-84.3	0.04 (1)	6.25	
I- J	-43 / 0	-84.3	-84.3	0.11 (1)	6.25	
J- K	0 / 32	-84.3	-84.3	0.11 (1)	10.00	
L- J	-231 / 0	0.0	0.0	0.02 (1)	7.81	
T- S	0 / 0	-28.0	-28.0	0.02 (2)	10.00	
S- R	0 / 0	-28.0	-28.0	0.02 (2)	10.00	
R- O	0 / 16	-28.0	-28.0	0.02 (2)	10.00	
Q- P	0 / 19	-28.0	-28.0	0.02 (2)	10.00	
P- O	0 / 15	-28.0	-28.0	0.02 (2)	10.00	
O- N	0 / 18	-28.0	-28.0	0.02 (2)	10.00	
N- M	0 / 0	-28.0	-28.0	0.02 (2)	10.00	
M- L	0 / 0	-28.0	-28.0	0.02 (2)	10.00	

WEBS

MEMB. FR-TO	MAX. FORCE (LBS)	MAX CSI (LC)
P- F	-122 / 0	0.07 (1)
Q- E	-190 / 0	0.06 (1)
R- D	-169 / 0	0.03 (1)
S- C	-67 / 0	0.01 (1)
O- G	-190 / 0	0.06 (1)
N- H	-169 / 0	0.03 (1)
M- I	-67 / 0	0.01 (1)
C- R	0 / 30	0.01 (1)
N- I	0 / 30	0.01 (1)

DESIGN CRITERIA

SPECIFIED LOADS:

TOP CH.	LL	=	25.5	PSF
	DL	=	3.0	PSF
BOT CH.	LL	=	10.5	PSF
	DL	=	7.0	PSF
TOTAL LOAD		=	46.1	PSF

SPACING = 24.0 IN. C/C

THIS TRUSS IS DESIGNED FOR RESIDENTIAL OR SMALL BUILDING REQUIREMENTS OF PART 9, NBCC 2010

THIS DESIGN COMPLIES WITH:
- PART 9 OF OBC 2012 , BCBC 2012 , ABC 2014
- CSA 086-09
- TPIC 2011

DESIGN ASSUMPTIONS
-OVERHANG NOT TO BE ALTERED OR CUT OFF.

(55 % OF 31.3 P.S.F. G.S.L. PLUS 8.4 P.S.F. RAIN LOAD) EQUALS 25.6 P.S.F. SPECIFIED ROOF LIVE LOAD

CSI: TC=0.11 (J-K:1) , BC=0.02 (Q-R:2) , WB=0.07 (F-P:1) , SSI=0.08 (J-K:1)

DOL LUMBER=1.00 NAIL=1.00 LS BEND=1.10 COMP=1.10 SHEAR=1.10 TENS= 1.10

COMPANION LIVE LOAD FACTOR = 0.50

TRUSS PLATE MANUFACTURER IS NOT RESPONSIBLE FOR QUALITY CONTROL IN THE TRUSS MANUFACTURING PLANT .

NAIL VALUES

PLATE	GRIP(DRY) (PSI) MAX	MIN	SHEAR (PLI) MAX	MIN	SECTION (PLI) MAX	MIN
MT20	618	354	1667	822	2284	1656

PLATE PLACEMENT TOL. = 0.250 inches

PLATE ROTATION TOL. = 5.0 Deg.

JSI GRIP= 0.13 (E) (INPUT = 0.90)
JSI METAL= 0.05 (G) (INPUT = 1.00)

LICENSED PROFESSIONAL ENGINEER
S. KATSOULAKOS
PROVINCE OF ONTARIO

DWG NO. TAM46245-17
STRUCTURAL
COMPONENT ONLY

JOB NAME	TRUSS NAME	QUANTITY	PLY	JOB DESC. 43954	DRWG NO.
286205	T62	1	1	TRUSS DESC.	

Tamarack Roof Truss, Burlington

Version 8.200 S Dec 12 2017 MiTek Industries, Inc. Tue Feb 6 11:15:17 2018 Page 1
ID:zBB7Ev1dAuzyzMrqV1CPA1yeR9e-VKdlVcIPAk8?cBOcdd0sG8mWROUsyvOT2ipqaiznuJe

Scale = 1:57.1

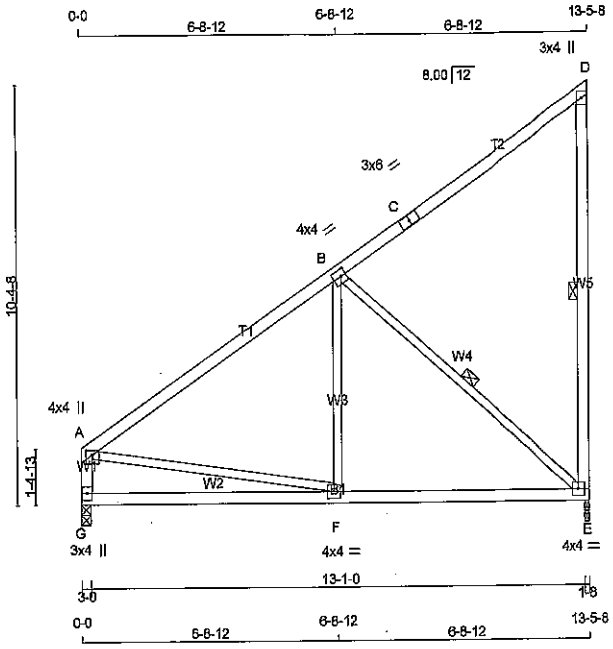

TOTAL WEIGHT = 62 lb

[M][F]

LUMBER
N. L. G. A. RULES

CHORDS	SIZE		LUMBER	DESCR.
A - C	2x4	DRY	No.2	SPF
C - D	2x4	DRY	No.2	SPF
E - D	2x4	DRY	No.2	SPF
G - A	2x4	DRY	No.2	SPF
G - E	2x4	DRY	No.2	SPF
ALL WEBS EXCEPT	2x3	DRY	No.2	SPF

DRY: SEASONED LUMBER.

PLATES (table is in inches)

JT	TYPE	PLATES	W	LEN	Y	X
A	TMVW+p	MT20	4.0	4.0	1.25	2.00
B	TMWW-t	MT20	4.0	4.0	2.00	1.50
C	TS-t	MT20	3.0	6.0		
D	TMV+p	MT20	3.0	4.0		
E	BMVW1-t	MT20	4.0	4.0		
F	BMWW-t	MT20	4.0	4.0		
G	BMV1+p	MT20	3.0	4.0		

DIMENSIONS, SUPPORTS AND LOADINGS SPECIFIED BY FABRICATOR TO BE VERIFIED BY BUILDING DESIGNER

BEARINGS

JT	FACTORED GROSS REACTION VERT	HORZ	MAXIMUM FACTORED GROSS REACTION DOWN	HORZ	UPLIFT	INPUT BRG IN-SX	REQRD BRG IN-SX
E	755	0	755	0	0	1-8	1-8
G	755	0	755	0	0	3-0	3-0

UNFACTORED REACTIONS

JT	1ST LCASE COMBINED	MAX./MIN. COMPONENT REACTIONS SNOW	LIVE	PERM.LIVE	WIND	DEAD	SOIL
E	620	344 / 0	141 / 0	0 / 0	0 / 0	135 / 0	0 / 0
G	620	344 / 0	141 / 0	0 / 0	0 / 0	135 / 0	0 / 0

BEARING MATERIAL TO BE SPF NO.2 OR BETTER AT JOINT(S) E, G

BRACING
TOP CHORD TO BE SHEATHED OR MAX. PURLIN SPACING = 6.25 FT.
MAX. UNBRACED BOTTOM CHORD LENGTH = 10.00 FT OR RIGID CEILING DIRECTLY APPLIED.

ALL PITCH BREAKS AND PERIMETER CORNER JOINTS MUST BE LATERALLY RESTRAINED.

1 LATERAL BRACE(S) AT 1/2 LENGTH OF D-E, B-E.

END VERTICAL(S) MUST BE SHEATHED OR HAVE BRACES AS INDICATED IN THE MAX. UNBRACED LENGTH COLUMN OF THE TABLE BELOW

LOADING
TOTAL LOAD CASES: (4)

CHORDS

MEMB. FR-TO	MAX. FACTORED FORCE (LBS)	FACTORED VERT. LOAD (PLF) FROM	TO	LC1	MAX CSI (LC)	MAX. UNBRAC LENGTH
A- B	-644 / 0	-84.3	-84.3	0.52 (1)	6.25	
B- C	-39 / 0	-84.3	-84.3	0.50 (1)	6.25	
C- D	-39 / 0	-84.3	-84.3	0.50 (1)	6.25	
E- D	-213 / 0	0.0	0.0	0.11 (1)	6.25	
G- A	-683 / 0	0.0	0.0	0.07 (1)	7.81	
G- F	0 / 0	-28.0	-28.0	0.37 (3)	10.00	
F- E	0 / 568	-28.0	-28.0	0.43 (2)	10.00	

WEBS

MEMB. FR-TO	MAX. FACTORED FORCE (LBS)	MAX CSI (LC)
F- B	0 / 365	0.08 (3)
B- E	-737 / 0	0.37 (1)
A- F	0 / 576	0.13 (1)

DESIGN CRITERIA

SPECIFIED LOADS:

TOP CH.	LL	=	25.6	PSF
	DL	=	3.0	PSF
BOT CH.	LL	=	10.5	PSF
	DL	=	7.0	PSF
TOTAL LOAD		=	46.1	PSF

SPACING = 24.0 IN. C/C

THIS TRUSS IS DESIGNED FOR RESIDENTIAL OR SMALL BUILDING REQUIREMENTS OF PART 9, NBCC 2010

THIS DESIGN COMPLIES WITH:
- PART 9 OF OBC 2012 , BCBC 2012 , ABC 2014
- CSA 086-09
- TPIC 2011

(55 % OF 31.3 P.S.F. G.S.L. PLUS 6.4 P.S.F. RAIN LOAD) EQUALS 25.6 P.S.F. SPECIFIED ROOF LIVE LOAD

ALLOWABLE DEFL.(LL)= L/360 (0.45")
CALCULATED VERT. DEFL.(LL) = L/999 (0.06")
ALLOWABLE DEFL.(TL)= L/360 (0.45")
CALCULATED VERT. DEFL.(TL) = L/999 (0.10")

CSI: TC=0.52/1.00 (A-B:1) , BC=0.43/1.00 (E-F:2) , WB=0.37/1.00 (B-E:1) , SSI=0.23/1.00 (A-B:1)

DOL LUMBER=1.00 NAIL=1.00 LS BEND=1.10 COMP=1.10 SHEAR=1.10 TENS= 1.10

COMPANION LIVE LOAD FACTOR = 0.50

AUTOSOLVE RIGHT HEEL ONLY

TRUSS PLATE MANUFACTURER IS NOT RESPONSIBLE FOR QUALITY CONTROL IN THE TRUSS MANUFACTURING PLANT .

NAIL VALUES

PLATE	GRIP(DRY) (PSI) MAX	MIN	SHEAR (PLI) MAX	MIN	SECTION (PLI) MAX	MIN
MT20	618	354	1667	822	2284	1656

PLATE PLACEMENT TOL. = 0.250 inches

PLATE ROTATION TOL. = 5.0 Deg.

ISI GRIP= 0.67 (A) (INPUT = 0.90)
ISI METAL= 0.21 (F) (INPUT = 1.00)

LICENSED PROFESSIONAL ENGINEER
S. KATSOULAKOS
PROVINCE OF ONTARIO

DWG NO. TAM 8083-18
STRUCTURAL COMPONENT ONLY

JOB NAME	TRUSS NAME	QUANTITY	PLY	JOB DESC. 43954	DRWG NO.
286205	T63	2	1	TRUSS DESC.	

Tamarack Roof Truss, Burlington

Version 8.200 S Dec 12 2017 MiTek Industries, Inc. Tue Feb 6 16:53:52 2018 Page 1

ID:zBB7Ev1dAuzyzMrqV1CPA1yeR9e-BbefA09IzWcXKAx_Ce_p79eD4Uy2Ik5fTpNI5jznpMD

Scale: 3/16"=1'

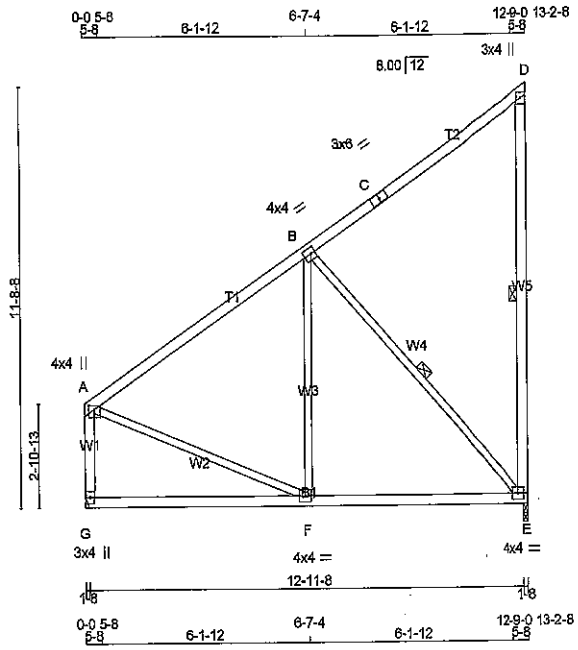

TOTAL WEIGHT = 2 X 67 = 134 lb

[M]F

LUMBER

N. L. G. A. RULES

CHORDS	SIZE		LUMBER	DESCR.
A - C	2x4	DRY	No.2	SPF
C - D	2x4	DRY	No.2	SPF
E - D	2x4	DRY	No.2	SPF
G - A	2x4	DRY	No.2	SPF
G - E	2x4	DRY	No.2	SPF
ALL WEBS EXCEPT	2x3	DRY	No.2	SPF

DRY: SEASONED LUMBER.

PLATES (table is in inches)

JT	TYPE	PLATES	W	LEN	Y	X
A	TMVW+p	MT20	4.0	4.0	1.25	2.00
B	TMWW-t	MT20	4.0	4.0	2.00	1.50
C	TS-t	MT20	3.0	6.0		
D	TMV+p	MT20	3.0	4.0		
E	BMVW1-t	MT20	4.0	4.0		
F	BMWW-t	MT20	4.0	4.0		
G	BMV1+p	MT20	3.0	4.0		

DIMENSIONS, SUPPORTS AND LOADINGS SPECIFIED BY FABRICATOR TO BE VERIFIED BY BUILDING DESIGNER

BEARINGS

JT	FACTORED GROSS REACTION VERT	HORZ	MAXIMUM FACTORED GROSS REACTION DOWN	HORZ	UPLIFT	INPUT BRG IN-SX	REQRD BRG IN-SX
E	741	0	741	0	0	1-8	1-8
G	741	0	741	0	0	HANGER BY OTHERS MIN. SEAT SIZE: 1-8	

UNFACTORED REACTIONS

JT	1ST LCASE COMBINED	MAX./MIN. COMPONENT REACTIONS SNOW	LIVE	PERM.LIVE	WIND	DEAD	SOIL
E	609	338 / 0	139 / 0	0 / 0	0 / 0	132 / 0	0 / 0
G	609	338 / 0	139 / 0	0 / 0	0 / 0	132 / 0	0 / 0

BEARING MATERIAL TO BE SPF NO.2 OR BETTER AT JOINT(S) E

BRACING

TOP CHORD TO BE SHEATHED OR MAX. PURLIN SPACING = 6.25 FT.
MAX. UNBRACED BOTTOM CHORD LENGTH = 10.00 FT OR RIGID CEILING DIRECTLY APPLIED.

ALL PITCH BREAKS AND PERIMETER CORNER JOINTS MUST BE LATERALLY RESTRAINED.

1 LATERAL BRACE(S) AT 1/ 2 LENGTH OF D-E, B-E.

END VERTICAL(S) MUST BE SHEATHED OR HAVE BRACES AS INDICATED IN THE MAX. UNBRACED LENGTH COLUMN OF THE TABLE BELOW

LOADING

TOTAL LOAD CASES: (4)

CHORDS

MEMB. FR-TO	MAX. FACTORED FORCE (LBS)	FACTORED VERT. LOAD (PLF) FROM	TO	LC1	MAX CSI (LC)	MAX. UNBRAC LENGTH
A- B	-487 / 0	-84.3	-84.3	0.49 (1)	6.25	
B- C	-38 / 0	-84.3	-84.3	0.48 (1)	6.25	
C- D	-38 / 0	-84.3	-84.3	0.48 (1)	6.25	
E- D	-209 / 0	0.0	0.0	0.15 (1)	6.25	
G- A	-671 / 0	0.0	0.0	0.10 (1)	7.81	
G- F	0 / 0	-28.0	-28.0	0.36 (3)	10.00	
F- E	0 / 437	-28.0	-28.0	0.41 (2)	10.00	

WEBS

MEMB. FR-TO	MAX. FACTORED FORCE (LBS)	MAX CSI (LC)
F- B	0 / 317	0.07 (3)
B- E	-638 / 0	0.40 (1)
A- F	0 / 469	0.11 (1)

DESIGN CRITERIA

SPECIFIED LOADS:

TOP CH.	LL =	25.6	PSF
	DL =	3.0	PSF
BOT CH.	LL =	10.5	PSF
	DL =	7.0	PSF
TOTAL LOAD	=	46.1	PSF

SPACING = 24.0 IN. C/C

THIS TRUSS IS DESIGNED FOR RESIDENTIAL OR SMALL BUILDING REQUIREMENTS OF PART 9, NBCC 2010

THIS DESIGN COMPLIES WITH:
- PART 9 OF OBC 2012 , BCBC 2012 , ABC 2014
- CSA 086-09
- TPIC 2011

(55 % OF 31.3 P.S.F. G.S.L. PLUS 8.4 P.S.F. RAIN LOAD) EQUALS 25.6 P.S.F. SPECIFIED ROOF LIVE LOAD

ALLOWABLE DEFL.(LL)= L/360 (0.44")
CALCULATED VERT. DEFL.(LL) = L/ 999 (0.06")
ALLOWABLE DEFL.(TL)= L/360 (0.44")
CALCULATED VERT. DEFL.(TL) = L/ 999 (0.09")

CSI: TC=0.49/1.00 (A-B:1) , BC=0.41/1.00 (E-F:2) , WB=0.40/1.00 (B-E:1) , SSI=0.23/1.00 (A-B:1)

DOL LUMBER=1.00 NAIL=1.00 LS BEND=1.10 COMP=1.10 SHEAR=1.10 TENS= 1.10

COMPANION LIVE LOAD FACTOR = 0.50

AUTOSOLVE RIGHT HEEL ONLY

TRUSS PLATE MANUFACTURER IS NOT RESPONSIBLE FOR QUALITY CONTROL IN THE TRUSS MANUFACTURING PLANT .

NAIL VALUES

PLATE	GRIP(DRY) (PSI) MAX	MIN	SHEAR (PLI) MAX	MIN	SECTION (PLI) MAX	MIN
MT20	618	354	1667	822	2284	1656

PLATE PLACEMENT TOL. = 0.250 inches

PLATE ROTATION TOL. = 5.0 Deg.

JSI GRIP= 0.55 (F) (INPUT = 0.90)
JSI METAL= 0.19 (C) (INPUT = 1.00)

LICENSED PROFESSIONAL ENGINEER
2018
S. KATSOULAKOS
PROVINCE OF ONTARIO

DWG NO. TAM B299-18
STRUCTURAL COMPONENT ONLY

JOB NAME	TRUSS NAME	QUANTITY	PLY	JOB DESC. 43954	DRWG NO.
286204	T90	4	1	TRUSS DESC.	

Version 8.030 S Oct 5 2016 MiTek Industries, Inc. Tue Sep 12 12:44:38 2017 Page 1

Tamarack Roof Truss, Burlington

ID:zBB7Ev1dAuzyzMrqV1CPAfyeR9e-WzszzzSDmgAwdTcmGDRb0UJ?HeF8WspwqJ71x_yeO_7

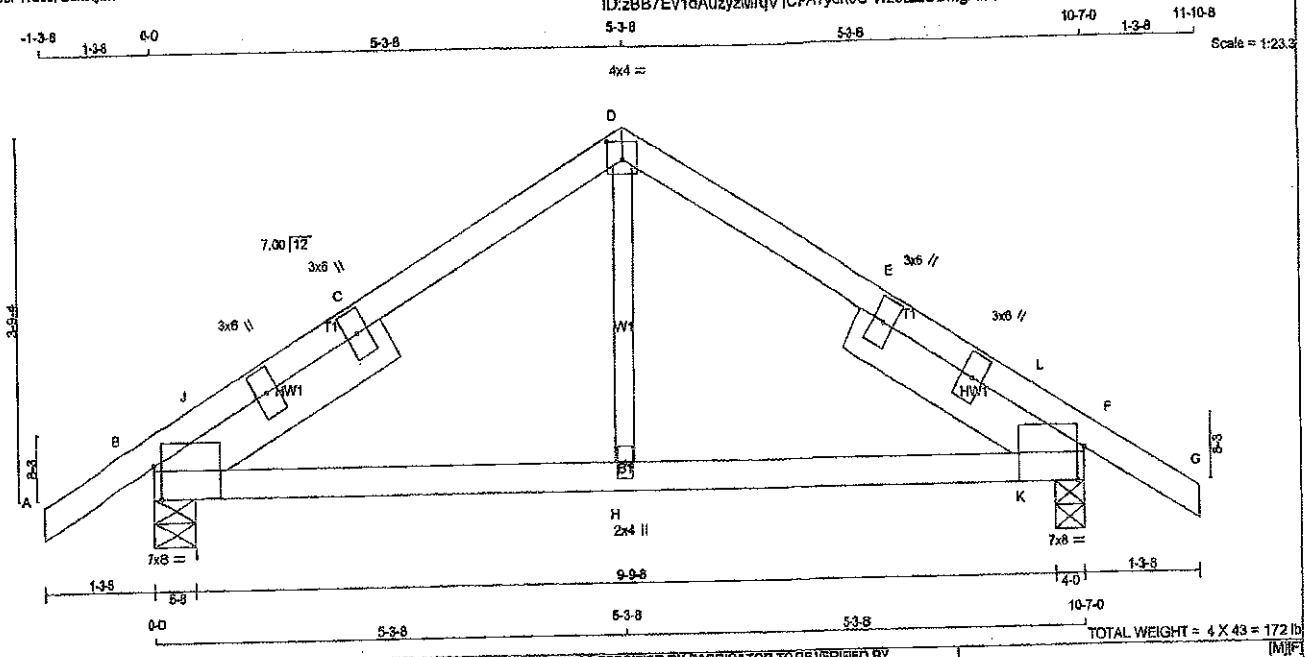

TOTAL WEIGHT = 4 X 43 = 172 lb

[MIF]

LUMBER

N. L. G. A. RULES

CHORDS	SIZE		LUMBER	DESCR.
A - D	2x4	DRY	No.2	SPF
D - G	2x4	DRY	No.2	SPF
B - F	2x4	DRY	No.2	SPF
REINFORCING MEMBERS				
HW1	2x6	DRY	No.2	SPF
HW2	2x8	DRY	No.2	SPF
ALL WEBS	2x3	DRY	No.2	SPF

DRY: SEASONED LUMBER.

PLATES (table is in inches)

JT	TYPE	PLATES	W	LEN	Y	X
B	TM6MR1-1	MT20	7.0	8.0	Edge	1.00
B, B, F, F						
B	RT+t	MT20	3.0	6.0		
D	TTW-p	MT20	4.0	4.0	2.25	2.00
F	TM6MR1-1	MT20	7.0	8.0	Edge	1.00
H	BMW+w	MT20	2.0	4.0		

Edge - INDICATES REFERENCE CORNER OF PLATE TOUCHES EDGE OF CHORD.

DIMENSIONS, SUPPORTS AND LOADINGS SPECIFIED BY FABRICATOR TO BE VERIFIED BY BUILDING DESIGNER

BEARINGS

JT	FACTORED GROSS REACTION VERT	HORZ	MAXIMUM FACTORED GROSS REACTION DOWN	HORZ	UPLIFT	INPUT BRG IN-SX	REQRD BRG IN-SX
B	709	0	709	0	0	5-8	5-8
F	709	0	709	0	0	4-0	4-0

UNFACTORED REACTIONS

JT	1ST LCASE COMBINED	MAX./MIN. COMPONENT REACTIONS SNOW	LIVE	PERM.LIVE	WIND	DEAD	SOIL
B	566	341 / 0	111 / 0	0 / 0	0 / 0	114 / 0	0 / 0
F	566	341 / 0	111 / 0	0 / 0	0 / 0	114 / 0	0 / 0

BEARING MATERIAL TO BE SPF NO.2 OR BETTER AT JOINT(S) B, F

BRACING

TOP CHORD TO BE SHEATHED OR MAX. PURLIN SPACING = 6.25 FT.
MAX. UNBRACED BOTTOM CHORD LENGTH = 10.00 FT. OR RIGID CEILING DIRECTLY APPLIED.

ALL PITCH BREAKS AND PERIMETER CORNER JOINTS MUST BE LATERALLY RESTRAINED.

LOADING

TOTAL LOAD CASES: (4)

CHORDS

MEMB. FR-TO	MAX. FACTORED FORCE (LBS)	FACTORED VERT. LOAD LC1 (PLF) FROM	TO	MAX CSI (LC)	MAX. UNBRAC LENGTH
A- B	0 / 17	-84.3	-84.3	0.11 (1)	10.00
B- J	-523 / 0	-84.3	-84.3	0.05 (1)	6.25
J- C	-504 / 0	-84.3	-84.3	0.22 (1)	6.25
C- D	-504 / 0	-84.3	-84.3	0.22 (1)	6.25
D- E	-504 / 0	-84.3	-84.3	0.22 (1)	6.25
E- L	-504 / 0	-84.3	-84.3	0.22 (1)	6.25
L- F	-523 / 0	-84.3	-84.3	0.05 (1)	6.25
F- G	0 / 17	-84.3	-84.3	0.11 (1)	10.00
B- I	0 / 356	-28.0	-28.0	0.23 (1)	10.00
I- H	0 / 501	-28.0	-28.0	0.30 (1)	10.00
H- K	0 / 501	-28.0	-28.0	0.30 (1)	10.00
K- F	0 / 356	-28.0	-28.0	0.23 (1)	10.00

WEBS

MEMB. FR-TO	MAX. FACTORED FORCE (LBS)	MAX CSI (LC)
H- D	0 / 298	0.07 (2)
I- J	-50 / 147	0.00 (1)
I- C	-192 / 31	0.02 (1)
K- L	-50 / 147	0.00 (1)
K- E	-192 / 31	0.02 (1)

DESIGN CRITERIA

SPECIFIED LOADS:

TOP CH.	LL =	25.6	PSF
	DL =	3.0	PSF
BOT CH.	LL =	10.5	PSF
	DL =	7.0	PSF
TOTAL LOAD	=	46.1	PSF

SPACING = 24.0 IN. C/C

THIS TRUSS IS DESIGNED FOR RESIDENTIAL OR SMALL BUILDING REQUIREMENTS OF PART 9, NBCC 2010

THIS DESIGN COMPLIES WITH:
- PART 9 OF OBC 2012 , BCBC 2012 , ABC 2014
- CSA 086-09
- TPIC 2011

(55 % OF 31.3 P.S.F. G.S.L. PLUS 8.4 P.S.F. RAIN LOAD) EQUALS 25.6 P.S.F. SPECIFIED ROOF LIVE LOAD

ALLOWABLE DEFL.(LL)= L/360 (0.35")
CALCULATED VERT. DEFL.(LL) = L/ 999 (0.03")
ALLOWABLE DEFL.(TL)= L/360 (0.35")
CALCULATED VERT. DEFL.(TL) = L/ 999 (0.05")

CSI: TC=0.22 (D-L:1) , BC=0.30 (H-I:1) , WB=0.07 (D-H:2) , SSI=0.17 (F-K:1)

DOL LUMBER=1.00 NAIL=1.00 LS BEND=1.10 COMP=1.10 SHEAR=1.10 TENS= 1.10

COMPANION LIVE LOAD FACTOR = 0.50

AUTOSOLVE LEFT HEEL ONLY

TRUSS PLATE MANUFACTURER IS NOT RESPONSIBLE FOR QUALITY CONTROL IN THE TRUSS MANUFACTURING PLANT .

NAIL VALUES

PLATE	GRIP(DRY) (PSI) MAX	MIN	SHEAR (PLI) MAX	MIN	SECTION (PLI) MAX	MIN
MT20	616	354	1697	822	2284	1656

PLATE PLACEMENT TOL. = 0.250 Inches

PLATE ROTATION TOL. = 5.0 Deg.

JSI GRIP= 0.47 (D) (INPUT = 0.90)
JSI METAL= 0.17 (F) (INPUT = 1.00)

LICENSED PROFESSIONAL ENGINEER
S. KATSOULAKOS
PROVINCE OF ONTARIO

DWG NO. TAM 46237-17
STRUCTURAL
COMPONENT ONLY

JOB NAME	TRUSS NAME	QUANTITY	PLY	JOB DESC. 43954	DRWG NO.
286204	G90	1	1	TRUSS DESC.	

Tamarack Roof Truss, Burlington

Version 6.030 S Oct 5 2016 MiTek Industries, Inc. Tue Sep 12 12:44:27 2017 Page 1

ID:zBB7Ev1dAuzyzMnqV1CPA1yeR9e-KrhpgCJJMfoUonHf7PI?39M9kCZYRvTJl5yy27yeO_I

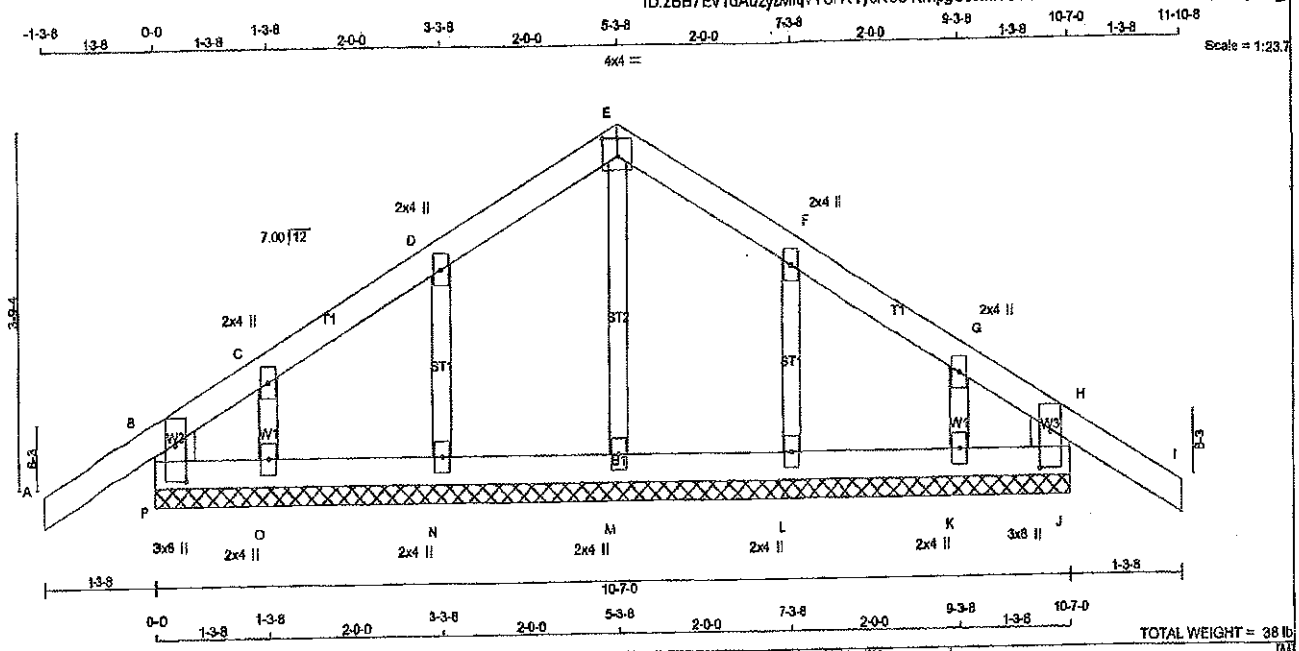

TOTAL WEIGHT = 38 lb

LUMBER

N. L. G. A. RULES

CHORDS	SIZE		LUMBER	DESCR.
A - E	2x4	DRY	No.2	SPF
E - I	2x4	DRY	No.2	SPF
P - B	2x6	DRY	No.2	SPF
J - H	2x6	DRY	No.2	SPF
P - J	2x4	DRY	No.2	SPF
ALL WEBS EXCEPT	2x3	DRY	No.2	SPF
ALL GABLE WEBS	2x3	DRY	No.2	SPF

DRY: SEASONED LUMBER.

GABLE STUDS SPACED AT 2-0-0 OC.

PLATES (table is in inches)

JT	TYPE	PLATES	W	LEN	Y	X
B, H, J, P						
B						
C, D, F, G						
C	TMW+w	MT20	2.0	4.0		
E	TTW-p	MT20	4.0	4.0	2.25	2.00
J	TMBMV1+p	MT20	3.0	8.0	4.50	1.50
K, L, M, N, O						
K	BMW1+w	MT20	2.0	4.0		
P	TMBMV1+p	MT20	3.0	8.0	4.50	1.50

DIMENSIONS, SUPPORTS AND LOADINGS SPECIFIED BY FABRICATOR TO BE VERIFIED BY BUILDING DESIGNER

BEARINGS

THIS TRUSS DESIGNED FOR CONTINUOUS BEARINGS.

THIS TRUSS REQUIRES RIGID SHEATHING ON EXPOSED FACE.

BEARING MATERIAL TO BE SPF NO.2 OR BETTER AT JOINT(S)

BRACING

TOP CHORD TO BE SHEATHED OR MAX. PURLIN SPACING = 10.00 FT.
MAX. UNBRACED BOTTOM CHORD LENGTH = 6.25 FT. OR RIGID CEILING DIRECTLY APPLIED.

ALL PITCH BREAKS AND PERIMETER CORNER JOINTS MUST BE LATERALLY RESTRAINED.

LOADING

TOTAL LOAD CASES: (4)

CHORDS

MEMB. FR-TO	MAX. FACTORED FORCE (LBS)	FACTORED VERT. LOAD (PLF) FROM	TO	LC1	MAX CSI (LC)	MAX. UNBRAC LENGTH
A- B	0 / 29	-84.3	-84.3	0.11 (1)	10.00	
B- C	-3 / 0	-84.3	-84.3	0.06 (1)	10.00	
C- D	0 / 21	-84.3	-84.3	0.05 (1)	10.00	
D- E	0 / 21	-84.3	-84.3	0.05 (1)	10.00	
E- F	0 / 21	-84.3	-84.3	0.05 (1)	10.00	
F- G	0 / 21	-84.3	-84.3	0.05 (1)	10.00	
G- H	-3 / 0	-84.3	-84.3	0.06 (1)	10.00	
H- I	0 / 29	-84.3	-84.3	0.11 (1)	10.00	
P- B	-166 / 0	0.0	0.0	0.02 (1)	7.81	
J- H	-166 / 0	0.0	0.0	0.02 (1)	7.81	
P- O	-7 / 1	-28.0	-28.0	0.05 (1)	10.00	
O- N	-14 / 0	-28.0	-28.0	0.02 (2)	6.25	
N- M	-20 / 0	-28.0	-28.0	0.02 (2)	6.25	
M- L	-20 / 0	-28.0	-28.0	0.02 (2)	6.25	
L- K	-14 / 0	-28.0	-28.0	0.02 (2)	6.25	
K- J	-7 / 1	-28.0	-28.0	0.05 (1)	10.00	

WEBS

MEMB. FR-TO	MAX. FACTORED FORCE (LBS)	NAX CSI (LC)
M- E	-192 / 0	0.04 (1)
N- D	-181 / 0	0.03 (1)
L- F	-181 / 0	0.03 (1)
O- C	-99 / 0	0.01 (1)
K- G	-99 / 0	0.01 (1)

DESIGN CRITERIA

SPECIFIED LOADS:

TOP CH.	LL	=	25.6	PSF
	DL	=	3.0	PSF
BOT CH.	LL	=	10.5	PSF
	DL	=	7.0	PSF
TOTAL LOAD		=	46.1	PSF

SPACING = 24.0 IN. C/C

THIS TRUSS IS DESIGNED FOR RESIDENTIAL OR SMALL BUILDING REQUIREMENTS OF PART 9, NBCC 2010

THIS DESIGN COMPLIES WITH:
- PART 9 OF OBC 2012 , BCBC 2012 , ABC 2014
- CSA 086-09
- TPIC 2011

DESIGN ASSUMPTIONS
-OVERHANG NOT TO BE ALTERED OR CUT OFF.

(55 % OF 31.3 P.S.F. G.S.L. PLUS 8.4 P.S.F. RAIN LOAD) EQUALS 25.6 P.S.F. SPECIFIED ROOF LIVE LOAD

CSI: TC=0.11 (H-I:1) , BC=0.05 (J-K:1) , WB=0.04 (E-M:1) , SSI=0.06 (H-I:1)

DOL LUMBER=1.00 NAIL=1.00 LS BEND=1.10 COMP=1.10 SHEAR=1.10 TENS= 1.10

COMPANION LIVE LOAD FACTOR = 0.50

TRUSS PLATE MANUFACTURER IS NOT RESPONSIBLE FOR QUALITY CONTROL IN THE TRUSS MANUFACTURING PLANT .

NAIL VALUES

PLATE	GRIP(DRY) (PSI) MAX	MIN	SHEAR (PLI) MAX	MIN	SECTION (PLI) MAX	MIN
MT20	618	354	1667	622	2284	1656

PLATE PLACEMENT TOL. = 0.250 Inches

PLATE ROTATION TOL. = 5.0 Deg.

JSI GRIP= 0.15 (E) (INPUT = 0.90)
JSI METAL= 0.05 (E) (INPUT = 1.00)

LICENSED PROFESSIONAL ENGINEER
S. KATSOULAKOS
PROVINCE OF ONTARIO

DWG NO. TAM46246-17
STRUCTURAL
COMPONENT ONLY

JOB NAME	TRUSS NAME	QUANTITY	PLY	JOB DESC. 43954	DRWG NO.
286204	T91	3	1	TRUSS DESC.	

Version 8.030 S Oct 5 2016 MiTek Industries, Inc. Tue Sep 12 12:44:39 2017 Page 1

Tamarack Roof Truss, Burlington

ID:zBB7Ev1dAuzyzMrqV1CPA1yeR9e-_9QLBJSrX_InFdByqxyqYhrBn2ctFKC42zsaTRyeO_6

Scale = 1:22.6

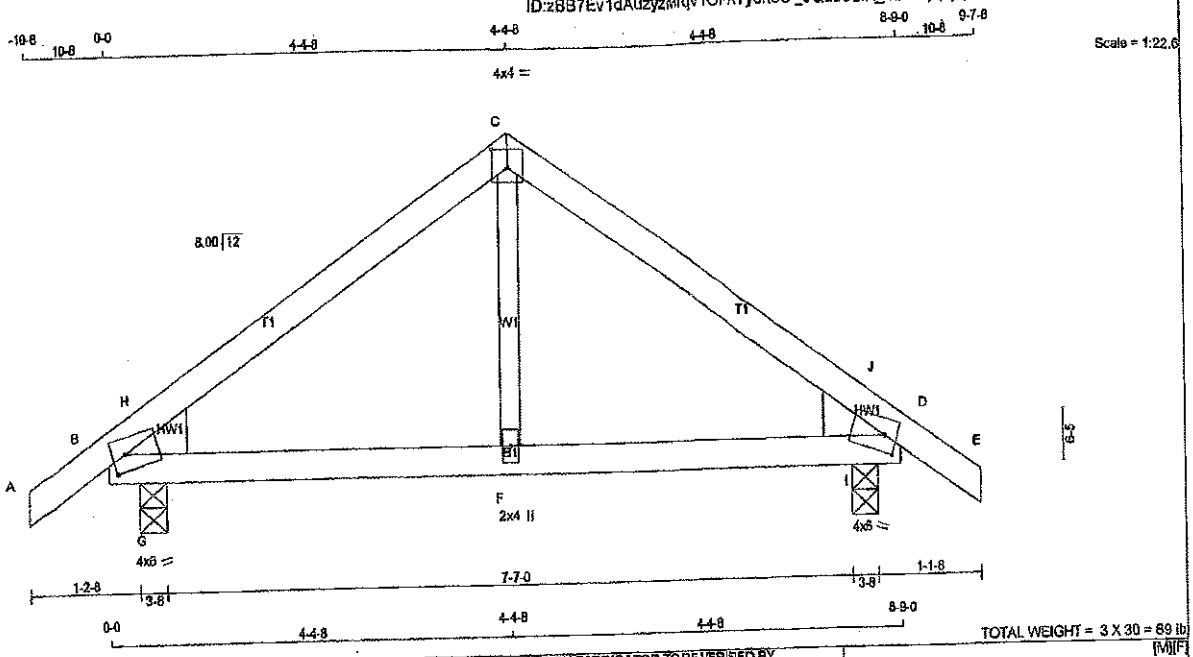

TOTAL WEIGHT = 3 X 30 = 89 lb

[M][F]

LUMBER

N. L. G. A. RULES

CHORDS	SIZE		LUMBER	DESCR.
A - C	2x4	DRY	No.2	SPF
C - E	2x4	DRY	No.2	SPF
B - D	2x4	DRY	No.2	SPF
ALL WEBS	2x3	DRY	No.2	SPF

DRY: SEASONED LUMBER.

PLATES (table is in inches)

JT	TYPE	PLATES	W	LEN	Y	X
B	TMBH1-m	MT20	4.0	6.0	2.00	1.50
C	TTW-p	MT20	4.0	4.0	2.25	2.00
D	TMBH1-m	MT20	4.0	6.0	2.00	1.50
F	BMW+w	MT20	2.0	4.0		

DIMENSIONS, SUPPORTS AND LOADINGS SPECIFIED BY FABRICATOR TO BE VERIFIED BY BUILDING DESIGNER

BEARINGS

JT	FACTORED GROSS REACTION VERT	HORZ	MAXIMUM FACTORED GROSS REACTION DOWN	HORZ	UPLIFT	INPUT BRG IN-SX	REQRD BRG IN-SX	HEEL WEDGE
B	572	0	572	0	0	3-8	3-8	2x6 L
D	572	0	572	0	0	3-8	3-8	2x6 R

UNFACTORED REACTIONS

JT	1ST LCASE COMBINED	MAX./MIN. COMPONENT REACTIONS SNOW	LIVE	PERM.LIVE	WIND	DEAD	SOIL
B	458	273 / 0	92 / 0	0 / 0	0 / 0	93 / 0	0 / 0
D	458	273 / 0	92 / 0	0 / 0	0 / 0	93 / 0	0 / 0

BEARING MATERIAL TO BE SPF NO.2 OR BETTER AT JOINT(S) B, D

BRACING

TOP CHORD TO BE SHEATHED OR MAX. PURLIN SPACING = 6.25 FT.
MAX. UNBRACED BOTTOM CHORD LENGTH = 10.00 FT. OR RIGID CEILING DIRECTLY APPLIED.

ALL PITCH BREAKS AND PERIMETER CORNER JOINTS MUST BE LATERALLY RESTRAINED.

LOADING

TOTAL LOAD CASES: (4)

CHORDS

MEMB. FR-TO	MAX. FACTORED FORCE (LBS)	FACTORED VERT. LOAD (PLF) FROM	TO	LC1	MAX CSI (LC)	MAX. UNBRAC LENGTH
A- B	0 / 17	-84.3	-84.3	0.06	(1)	10.00
B- H	-456 / 0	-84.3	-84.3	0.07	(1)	6.25
H- C	-484 / 0	-84.3	-84.3	0.17	(1)	6.25
C- J	-484 / 0	-84.3	-84.3	0.17	(1)	6.25
J- D	-456 / 0	-84.3	-84.3	0.07	(1)	6.25
D- E	0 / 17	-84.3	-84.3	0.06	(1)	10.00
B- G	0 / 378	-28.0	-28.0	0.18	(1)	10.00
G- F	0 / 378	-28.0	-28.0	0.20	(1)	10.00
F- I	0 / 378	-28.0	-28.0	0.20	(1)	10.00
I- D	0 / 378	-28.0	-28.0	0.18	(1)	10.00

WEBS

MEMB. FR-TO	MAX. FACTORED FORCE (LBS)	MAX CSI (LC)
F- C	0 / 256	0.08 (2)
G- H	-180 / 109	0.00 (1)
I- J	-180 / 109	0.00 (1)

DESIGN CRITERIA

SPECIFIED LOADS:

TOP CH.	LL	=	25.6	PSF
	DL	=	3.0	PSF
BOT CH.	LL	=	10.5	PSF
	DL	=	7.0	PSF
TOTAL LOAD		=	46.1	PSF

SPACING = 24.0 IN. O/C

THIS TRUSS IS DESIGNED FOR RESIDENTIAL OR SMALL BUILDING REQUIREMENTS OF PART 9, NBCC 2010

THIS DESIGN COMPLIES WITH:
- PART 9 OF OBC 2012 , BCBC 2012 , ABC 2014
- CSA 086-09
- TPIC 2011

(55 % OF 31.3 P.S.F. G.S.L. PLUS 8.4 P.S.F. RAIN LOAD) EQUALS 25.8 P.S.F. SPECIFIED ROOF LIVE LOAD

ALLOWABLE DEFL.(LL)= L/360 (0.28")
CALCULATED VERT. DEFL.(LL) = L/999 (0.02")
ALLOWABLE DEFL.(TL)= L/360 (0.28")
CALCULATED VERT. DEFL.(TL) = L/999 (0.03")

CSI: TC=0.17 (C-H:1) , BC=0.20 (F-I:1) , WB=0.08 (C-F:2) , SSI=0.16 (B-G:1)

DOL LUMBER=1.00 NAIL=1.00 LS BEND=1.10 COMP=1.10 SHEAR=1.10 TENS= 1.10

COMPANION LIVE LOAD FACTOR = 0.50

AUTOSOLVE HEELS OFF

TRUSS PLATE MANUFACTURER IS NOT RESPONSIBLE FOR QUALITY CONTROL IN THE TRUSS MANUFACTURING PLANT .

NAIL VALUES

PLATE	GRIP(DRY) (PSI) MAX	MIN	SHEAR (PLI) MAX	MIN	SECTION (PLI) MAX	MIN
MT20	818	354	1667	822	2284	1658

PLATE PLACEMENT TOL. = 0.250 inches

PLATE ROTATION TOL. = 5.0 Deg.

JSI GRIP= 0.43 (C) (INPUT = 0.90)
JSI METAL= 0.13 (D) (INPUT = 1.00)

LICENSED PROFESSIONAL ENGINEER
S. KATSOULAKOS
PROVINCE OF ONTARIO

DWG NO. TAM46238-17
STRUCTURAL
COMPONENT ONLY

JOB NAME	TRUSS NAME	QUANTITY	PLY	JOB DESC. 43954	DRWG NO.
286204	G91	1	1	TRUSS DESC.	

Tamarack Roof Truss, Burlington

Version 6.030 S Oct 5 2016 MiTek Industries, Inc. Tue Sep 12 12:44:28 2017 Page 1

ID:zBB7Ev1dAuzyzMrqV1CPA1yeR9e-o2F8tYKx7bwLQxrrh7GEcNuLJcutAMvSWliVaayeO_H

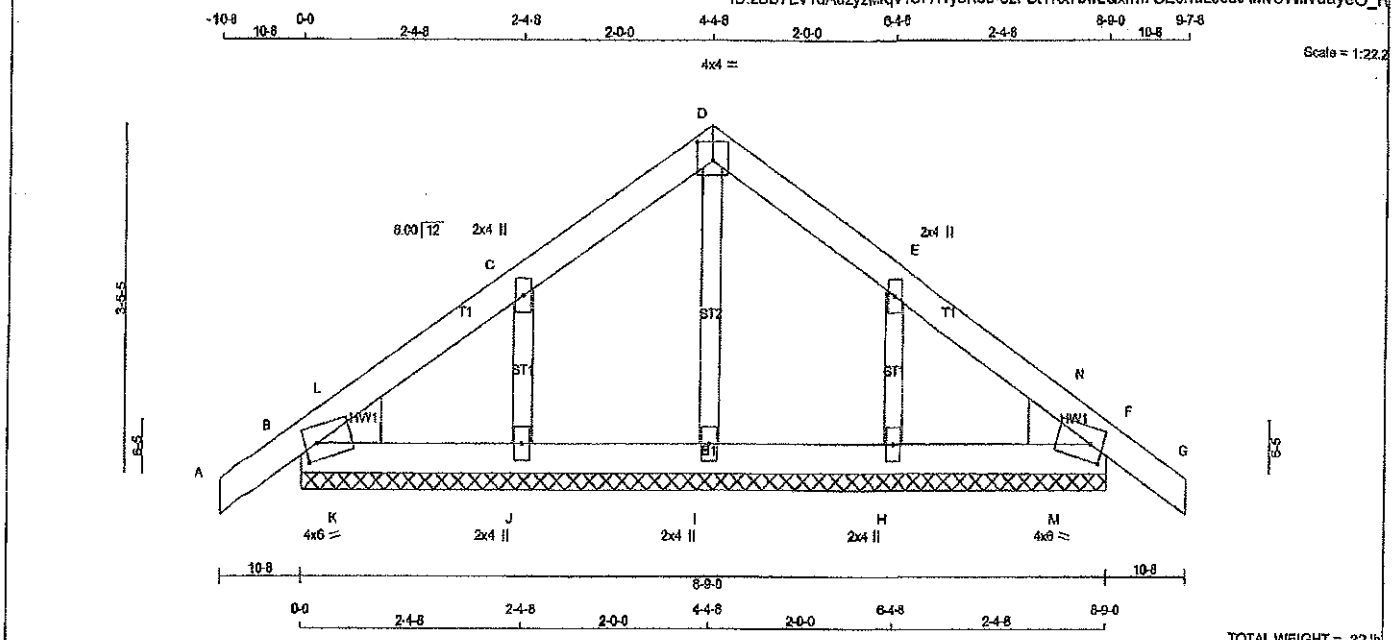

TOTAL WEIGHT = 32 lb

LUMBER

N. L. G. A. RULES

CHORDS	SIZE		LUMBER	DESCR.
A - D	2x4	DRY	No.2	SPF
D - G	2x4	DRY	No.2	SPF
B - F	2x4	DRY	No.2	SPF
ALL WEBS	2x3	DRY	No.2	SPF
ALL GABLE WEBS	2x3	DRY	No.2	SPF

DRY: SEASONED LUMBER.

GABLE STUDS SPACED AT 2-0-0 OC.

PLATES (table is in inches)

JT	TYPE	PLATES	W	LEN	Y	X
B	TMBH1-m	MT20	4.0	6.0	2.00	1.50
C	TMW+w	MT20	2.0	4.0		
D	TTW-p	MT20	4.0	4.0	2.25	2.00
E	TMW+w	MT20	2.0	4.0		
F	TMBH1-m	MT20	4.0	6.0	2.00	1.50
H, I, J						
H	BMW1+w	MT20	2.0	4.0		

DIMENSIONS, SUPPORTS AND LOADINGS SPECIFIED BY FABRICATOR TO BE VERIFIED BY BUILDING DESIGNER

BEARINGS

THIS TRUSS DESIGNED FOR CONTINUOUS BEARINGS.

THIS TRUSS REQUIRES RIGID SHEATHING ON EXPOSED FACE.

HEEL
WEDGE
2x6 L
2x6 R
BEARING MATERIAL TO BE SPF NO.2 OR BETTER AT JOINT(S)

BRACING

TOP CHORD TO BE SHEATHED OR MAX. PURLIN SPACING = 6.25 FT.
MAX. UNBRACED BOTTOM CHORD LENGTH = 10.00 FT. OR RIGID CEILING DIRECTLY APPLIED.

ALL PITCH BREAKS AND PERIMETER CORNER JOINTS MUST BE LATERALLY RESTRAINED.

LOADING

TOTAL LOAD CASES: (4)

CHORDS

MEMB. FR-TO	MAX. FACTORED FORCE (LBS)	FACTORED VERT. LOAD (PLF) FROM	TO	LC1	MAX CSI (LC)	MAX. UNBRAC LENGTH
A- B	0 / 17	-84.3	-84.3	0.08 (1)	10.00	
B- L	-91 / 0	-84.3	-84.3	0.02 (3)	6.25	
L- C	-51 / 0	-84.3	-84.3	0.06 (1)	6.25	
C- D	-66 / 0	-84.3	-84.3	0.06 (1)	6.25	
D- E	-66 / 0	-84.3	-84.3	0.06 (1)	6.25	
E- N	-51 / 0	-84.3	-84.3	0.06 (1)	6.25	
N- F	-91 / 0	-84.3	-84.3	0.02 (3)	6.25	
F- G	0 / 17	-84.3	-84.3	0.06 (1)	10.00	
B- K	0 / 55	-28.0	-28.0	0.04 (1)	10.00	
K- J	0 / 55	-28.0	-28.0	0.04 (2)	10.00	
J- I	0 / 45	-28.0	-28.0	0.04 (2)	10.00	
I- H	0 / 45	-28.0	-28.0	0.04 (2)	10.00	
H- M	0 / 55	-28.0	-28.0	0.04 (2)	10.00	
M- F	0 / 55	-28.0	-28.0	0.04 (1)	10.00	

WEBS

MEMB. FR-TO	MAX. FACTORED FORCE (LBS)	MAX CSI (LC)
I- D	-74 / 12	0.01 (1)
J- C	-206 / 0	0.03 (1)
H- E	-206 / 0	0.03 (1)
K- L	-33 / 33	0.00 (1)
M- N	-33 / 33	0.00 (1)

DESIGN CRITERIA

SPECIFIED LOADS:

TOP CH.	LL	=	25.6	PSF
	DL	=	3.0	PSF
BOT CH.	LL	=	10.5	PSF
	DL	=	7.0	PSF
TOTAL LOAD		=	46.1	PSF

SPACING = 24.0 IN. C/C

THIS TRUSS IS DESIGNED FOR RESIDENTIAL OR SMALL BUILDING REQUIREMENTS OF PART 9, NBCC 2010

THIS DESIGN COMPLIES WITH:
- PART 9 OF OBC 2012 , BCBC 2012 , ABC 2014
- CSA 086-09
- TPIC 2011

(55 % OF 31.3 P.S.F. G.S.L. PLUS 8.4 P.S.F. RAIN LOAD) EQUALS 25.6 P.S.F. SPECIFIED ROOF LIVE LOAD

CSI: TC=0.08 (C-D:1) , BC=0.04 (J-K:2) , WB=0.03 (C-J:1) , SSi=0.07 (C-D:1)

DOL LUMBER=1.00 NAIL=1.00 LS BEND=1.10 COMP=1.10 SHEAR=1.10 TENS= 1.10

COMPANION LIVE LOAD FACTOR = 0.50

AUTOSOLVE HEELS OFF

TRUSS PLATE MANUFACTURER IS NOT RESPONSIBLE FOR QUALITY CONTROL IN THE TRUSS MANUFACTURING PLANT .

NAIL VALUES

PLATE	GRIP(DRY) (PSI) MAX	MIN	SHEAR (PLI) MAX	MIN	SECTION (PLI) MAX	MIN
MT20	618	354	1667	822	2284	1658

PLATE PLACEMENT TOL. = 0.250 inches

PLATE ROTATION TOL. = 5.0 Deg.

JSI GRIP= 0.14 (C) (INPUT = 0.90)
JSI METAL= 0.05 (C) (INPUT = 1.00)

LICENSED PROFESSIONAL ENGINEER
S. KATSOULAKOS
PROVINCE OF ONTARIO

DWG NO. TAM46247-17
STRUCTURAL
COMPONENT ONLY

JOB NAME	TRUSS NAME	QUANTITY	PLY	JOB DESC. 43954	DRWG NO.
286204	T290A	18	1	TRUSS DESC.	

Tamarack Roof Truss, Burlington

Version 8.030 S Oct 5 2016 MiTek Industries, Inc. Tue Sep 12 12:44:39 2017 Page 1

ID:iwZQpw3SSbuVOx5lh3kDeHyeg6K-_9QLBJSrX_InFdByqxyqYhr0j2XJF5b42zsaTRyeO_6

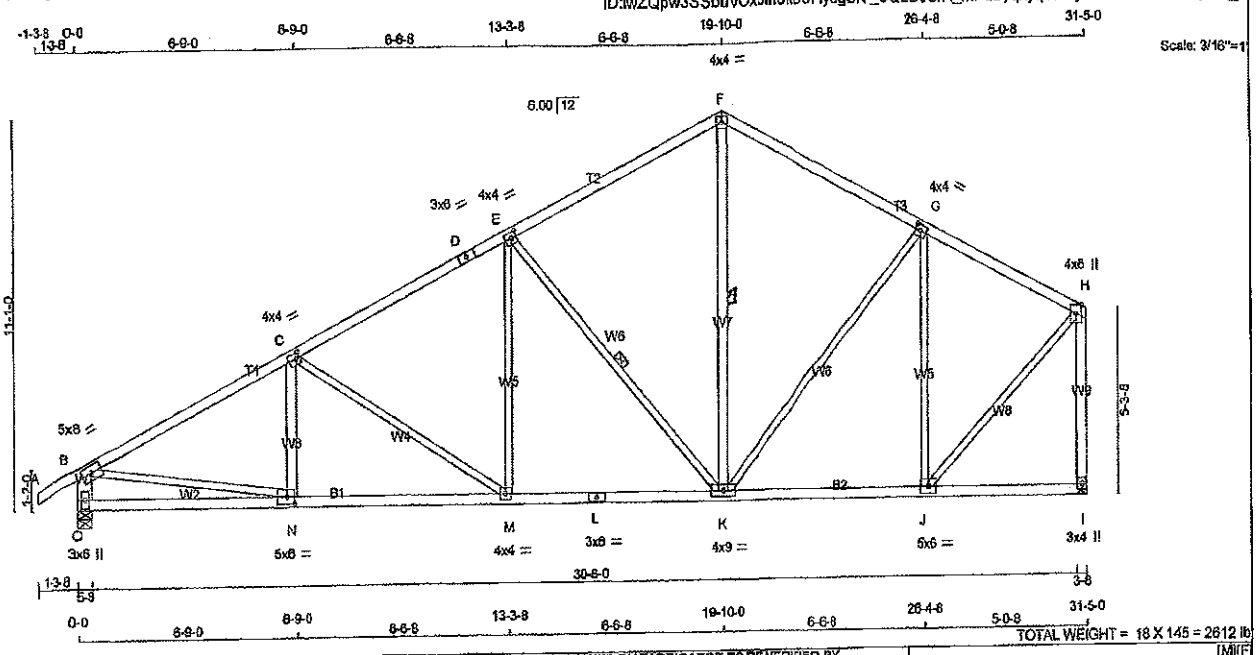

TOTAL WEIGHT = 18 X 145 = 2612 lb

(M)(F

LUMBER

N. L. G. A. RULES

CHORDS	SIZE		LUMBER	DESCR.
A - D	2x4	DRY	No.2	SPF
D - F	2x4	DRY	No.2	SPF
F - H	2x4	DRY	No.2	SPF
O - B	2x6	DRY	No.2	SPF
I - H	2x4	DRY	No.2	SPF
O - L	2x4	DRY	No.2	SPF
L - I	2x4	DRY	No.2	SPF
ALL WEBS	2x3	DRY	No.2	SPF
EXCEPT				
N - C	2x4	DRY	No.2	SPF
K - F	2x4	DRY	No.2	SPF

DRY: SEASONED LUMBER.

PLATES (table is in inches)

JT	TYPE	PLATES	W	LEN	Y	X
B	TMWW-t	MT20	5.0	8.0		
C	TMWW-t	MT20	4.0	4.0	2.00	1.25
D	TS-t	MT20	3.0	6.0		
E	TMWW-t	MT20	4.0	4.0	2.00	1.75
F	TTW-p	MT20	4.0	4.0		
G	TMWW-t	MT20	4.0	4.0	2.00	1.75
H	TMWW+p	MT20	4.0	6.0	Edge	
I	BMV1+p	MT20	3.0	4.0		
J	BMWW-t	MT20	5.0	6.0		
K	BMWWW-t	MT20	4.0	8.0		
L	BS-t	MT20	3.0	6.0		
M	BMWW-t	MT20	4.0	4.0		
N	BMWW-t	MT20	5.0	6.0	2.50	2.50
O	BMV1+p	MT20	3.0	6.0		

Edge - INDICATES REFERENCE CORNER OF PLATE TOUCHES EDGE OF CHORD.

DIMENSIONS, SUPPORTS AND LOADINGS SPECIFIED BY FABRICATOR TO BE VERIFIED BY BUILDING DESIGNER

BEARINGS

JT	FACTORED GROSS REACTION VERT	HORZ	MAXIMUM FACTORED GROSS REACTION DOWN	HORZ	UPLIFT	INPUT BRG IN-SX	REQRD BRG IN-SX
O	1676	0	1676	0	0	5-8	5-8
I	1763	0	1763	0	0	HANGER BY OTHERS	
						MIN. SEAT SIZE: 3-8	

UNFACTORED REACTIONS

JT	1ST LCASE COMBINED	MAX/MIN. COMPONENT REACTIONS SNOW	LIVE	PERM.LIVE	WIND	DEAD	SOIL
O	1525	673 / 0	330 / 0	0 / 0	0 / 0	322 / 0	0 / 0
I	1448	604 / 0	330 / 0	0 / 0	0 / 0	314 / 0	0 / 0

BEARING MATERIAL TO BE SPF NO.2 OR BETTER AT JOINT(S) O

BRACING

TOP CHORD TO BE SHEATHED OR MAX. PURLIN SPACING = 3.77 FT.
MAX. UNBRACED BOTTOM CHORD LENGTH = 10.00 FT. OR RIGID CEILING DIRECTLY APPLIED.

ALL PITCH BREAKS AND PERIMETER CORNER JOINTS MUST BE LATERALLY RESTRAINED.

1 LATERAL BRACE(S) AT 1/ 2 LENGTH OF E-K. F-TL

END VERTICAL(S) MUST BE SHEATHED OR HAVE BRACES AS INDICATED IN THE MAX. UNBRACED LENGTH COLUMN OF THE TABLE BELOW

LOADING

TOTAL LOAD CASES: (4)

CHORDS

MEMB. FR-TO	MAX. FACTORED FORCE (LBS)	FACTORED VERT. LOAD (PLF) FROM	TO	LC1	MAX CSI (LC)	MAX. UNBRAC LENGTH
A- B	0 / 26	-84.3	-84.3	0.11 (1)	10.00	
B- C	-2571 / 0	-84.3	-84.3	0.61 (1)	3.77	
C- D	-2081 / 0	-84.3	-84.3	0.50 (1)	4.24	
D- E	-2081 / 0	-84.3	-84.3	0.50 (1)	4.24	
E- F	-1373 / 0	-84.3	-84.3	0.47 (1)	4.99	
F- G	-1373 / 0	-84.3	-84.3	0.47 (1)	4.99	
G- H	-1147 / 0	-84.3	-84.3	0.40 (1)	5.43	
O- B	-1801 / 0	0.0	0.0	0.12 (1)	7.43	
I- H	-1710 / 0	0.0	0.0	0.68 (1)	6.36	
O- N	0 / 0	-28.0	-28.0	0.29 (3)	10.00	
N- M	0 / 2321	-28.0	-28.0	0.56 (2)	10.00	
M- L	0 / 1862	-28.0	-28.0	0.46 (2)	10.00	
L- K	0 / 1862	-28.0	-28.0	0.46 (2)	10.00	
K- J	0 / 1054	-28.0	-28.0	0.37 (2)	10.00	
J- I	0 / 0	-28.0	-28.0	0.22 (3)	10.00	

WEBS

MEMB. FR-TO	MAX. FACTORED FORCE (LBS)	MAX CSI (LC)
N- C	-97 / 214	0.03 (3)
C- M	-540 / 0	0.69 (1)
M- E	0 / 526	0.12 (2)
E- K	-998 / 0	0.71 (1)
K- F	0 / 766	0.12 (1)
K- G	0 / 231	0.05 (1)
J- G	-885 / 0	0.99 (1)
B- N	0 / 2340	0.53 (1)
J- H	0 / 1482	0.33 (1)

LICENSED PROFESSIONAL ENGINEER
9/12/17
S. KATSOULAKOS
PROVINCE OF ONTARIO

DESIGN CRITERIA

SPECIFIED LOADS:

TOP CH.	LL	=	25.6	PSF
	DL	=	3.0	PSF
BOT CH.	LL	=	10.5	PSF
	DL	=	7.0	PSF
TOTAL LOAD		=	48.1	PSF

SPACING = 24.0 IN. C/C

THIS TRUSS IS DESIGNED FOR RESIDENTIAL OR SMALL BUILDING REQUIREMENTS OF PART 9, NBCC 2010

THIS DESIGN COMPLIES WITH:
- PART 9 OF OBC 2012 , BCBC 2012 , ABC 2014
- CSA 086-09
- TPIC 2011

(55 % OF 31.3 P.S.F. G.S.L. PLUS 8.4 P.S.F. RAIN LOAD) EQUALS 25.6 P.S.F. SPECIFIED ROOF LIVE LOAD

ALLOWABLE DEFL.(LL)= L/360 (1.05")
CALCULATED VERT. DEFL.(LL) = L/ 999 (0.13")
ALLOWABLE DEFL.(TL)= L/360 (1.05")
CALCULATED VERT. DEFL.(TL) = L/ 999 (0.22")

CSI: TC=0.88 (H-I:1) , BC=0.56 (M-N:2) , WB=0.99 (G-J:1) , SSI=0.23 (B-C:1)

DOL LUMBER=1.00 NAIL=1.00 LS BEND=1.10 COMP=1.10 SHEAR=1.10 TENS= 1.10

COMPANION LIVE LOAD FACTOR = 0.50

AUTOSOLVE RIGHT HEEL ONLY

TRUSS PLATE MANUFACTURER IS NOT RESPONSIBLE FOR QUALITY CONTROL IN THE TRUSS MANUFACTURING PLANT .

NAIL VALUES

PLATE	GRIP(DRY) (PSI) MAX	MIN	SHEAR (PLI) MAX	MIN	SECTION (PLI) MAX	MIN
MT20	618	354	1667	822	2284	1656

PLATE PLACEMENT TOL = 0.250 inches

PLATE ROTATION TOL. = 5.0 Deg.

JSI GRIP= 0.90 (H) (INPUT = 0.90)
JSI METAL= 0.58 (N) (INPUT = 1.00)

DWG NO. TAM 46239-17
STRUCTURAL
COMPONENT ONLY

TECHNICAL BULLETIN

LUS – Double Shear Joist Hangers

SIMPSON Strong-Tie®

All LUS hangers have double shear nailing. This patented innovation distributes the load through two points on each joist nail for greater strength. It also allows the use of fewer nails, faster installation and the use of common nails for all connections.

MATERIAL: 18 gauge

FINISH: G90 galvanized

DESIGN:

- Factored resistances are in accordance with CSA O86-14
- Uplift resistances have been increased 15%. No further increase is permitted.
- Wood shear is not considered in the factored resistances given. The specifier must ensure that the joist and header capacities are capable of withstanding these loads.

INSTALLATION:

- Use all specified fasteners
- Nails: 16d = 0.162" dia. x 3½" long common wire, 10d = 0.148" x 3" long common wire.
- Double shear nails must be driven at an angle through the joist or truss into the header to achieve the table loads
- Not designed for welded or nailer applications

OPTIONS:

- These hangers cannot be modified.

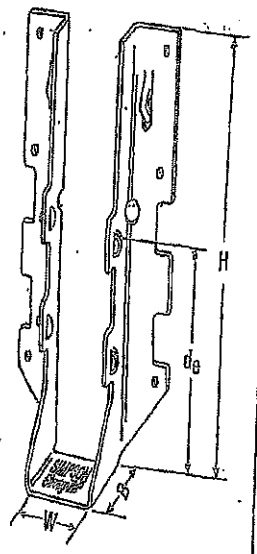

LUS28

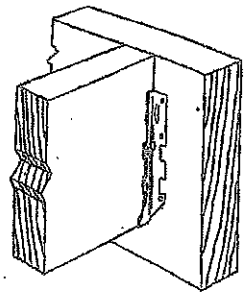

Typical LUS Installation

Model No.	Ga	Dimensions (in)				Fasteners		Factored Resistance (lbs)			
								D.Fir-L		S-P-F	
		W	H	B	d_e[1]	Face	Joist	Uplift (K_D=1.15)	Normal (K_D=1.00)	Uplift (K_D=1.15)	Normal (K_D=1.00)
LUS24	18	1 9/16	3 1/8	1 3/4	1 13/16	4-16d	2-16d	710	1620	645	1155
LUS24-2	18	3 1/8	3 1/8	2	1 13/16	4-16d	2-16d	835	2020	590	1435
LUS26	18	1 9/16	4 3/4	1 3/4	3 5/8	4-16d	4-10d	1420	2170	1290	1630
LUS26-2	18	3 1/8	4 3/4	2	4	4-16d	4-16d	1720	2595	1545	1920
LUS26-3	18	4 5/8	4 3/16	2	3 1/4	4-16d	4-16d	1720	2595	1545	2340
LUS28	18	1 9/16	6 5/8	1 3/4	3 3/4	6-16d	4-10d	1420	2520	1290	1790
LUS28-2	18	3 1/8	7	2	4	6-16d	4-16d	1720	3825	1645	2575
LUS28-3	18	4 5/8	6 1/4	2	3 1/4	6-16d	4-16d	1720	3825	1545	2975
LUS210	18	1 9/16	7 13/16	1 3/4	3 7/8	8-16d	4-10d	1420	2785	1250	2210
LUS210-2	18	3 1/8	9	2	6	8-16d	6-16d	2580	4500	2320	3195
LUS210-3	18	4 5/8	8 3/16	2	5 1/4	8-16d	6-16d	2580	3845	2320	2875

1. d_e is the distance from the seat of the hanger to the highest joist nail.

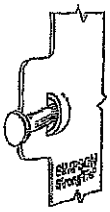

Dome Double Shear Nailing prevents tabs breaking off (available on some models).

U.S. Patent 5,603,580

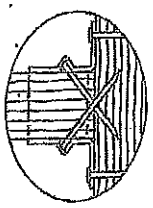

Double Shear Nailing Top View.

LICENSED PROFESSIONAL ENGINEER
01/13/2015
R. D. BUNTING
PROVINCE OF ONTARIO

© 2015 Simpson Strong-Tie Company Inc.

TECHNICAL BULLETIN

HUS/LJS – Double Shear Joist Hangers

SIMPSON Strong-Tie®

All hangers have double shear nailing. This patented innovation distributes the load through two points on each joist nail for greater strength. It also allows the use of fewer nails, faster installation and the use of common nails for all connections. Do not bend or remove tabs.

MATERIAL: See table

FINISH: G90 galvanized

DESIGN:

- Factored resistances are in accordance with CSA O86-14
- Uplift resistances have been increased 15% No further increase is permitted
- Wood shear is not considered in the factored resistances given. The specifier must ensure that the joist and header capacities are capable of withstanding these loads.

INSTALLATION:

- Use all specified fasteners
- Nails: 16d = 0.162" dia. x 3½" long common wire
- Double shear nails must be driven at an angle through the joist or truss into the header to achieve the table loads
- Not designed for welded or nailer applications

OPTIONS:

- See current catalogue for options

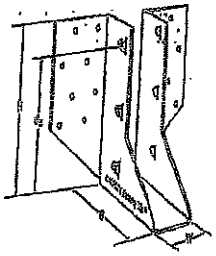

LJS26DS

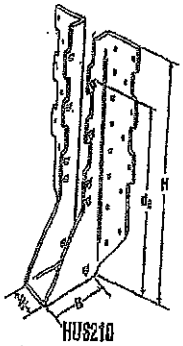

HUS210
(HUS26, HUS28, similar)

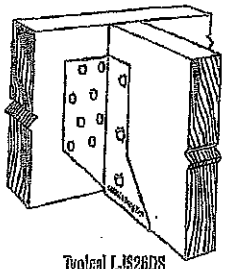

Typical LJS26DS Installation

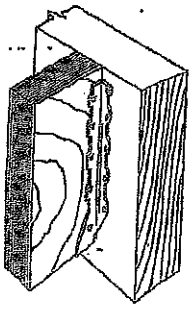

Typical HUS Installation

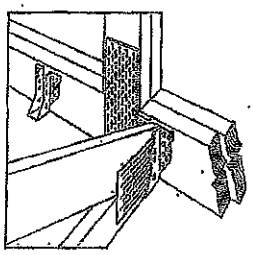

Typical HUS Installation
(Truss Designer to provide fastener quantity for connecting multiple members together)

Model No.	Ga	Dimensions (in)				Fasteners		Factored Resistance (lbs)			
								D.Fir-L		S-P-F	
		W	H	B	d_g[1]	Face	Joist	Uplift (K_D=1.15)	Normal (K_D=1.60)	Uplift (K_D=1.15)	Normal (K_D=1.60)
LJS26DS	18	1 9/16	5	3½	4⅝	16-16d	6-16d	2065	4265	1460	4115
HUS26	18	1⅝	6⅝	3	3 15/16	14-16d	6-16d	2705	4940	2085	3875
HUS28	18	1⅝	7 5/32	3	6 3/32	22-16d	8-16d	3805	5365	2675	4845
HUS210	18	1⅝	9 3/32	3	7 31/32	30-16d	10-16d	4505	5795	4010	4740
HUS1.81/10	18	1 13/16	9	3	8	30-16d	10-16d	4505	6450	4010	5200

1. d_g is the distance from the seat of the hanger to the highest joist nail.

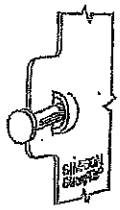

Dome Double Shear Nailing prevents tabs breaking off (available on some models).

U.S. Patent 5,603,599

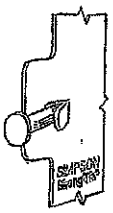

Double Shear Nailing Side View. Do not bend tab back.

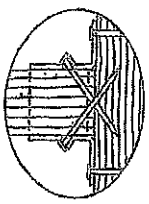

Double Sheer Nailing Top View.

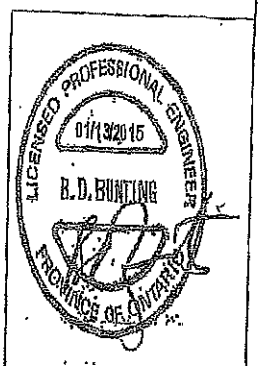

TECHNICAL BULLETIN

HGUS – Double Shear Joist Hangers

SIMPSON Strong-Tie®

All HGUS hangers have double shear nailing. This patented innovation distributes the load through two points on each joist nail for greater strength. It also allows the use of fewer nails, faster installation and the use of common nails for all connections. Do not bend or remove tabs.

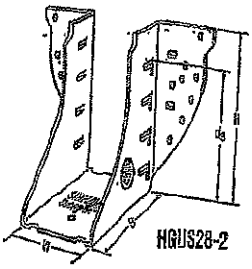

HGUS28-2

MATERIAL: 12 gauge

FINISH: G90 galvanized

DESIGN:

- Factored resistances are in accordance with CSA O86-14
- Uplift resistances have been increased 15%. No further increase is permitted.
- Wood shear is not considered in the factored resistances given. The specifier must ensure that the joist and header capacities are capable of withstanding these loads.

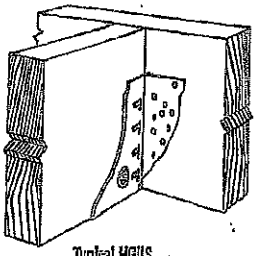

Typical HGUS Installation

INSTALLATION:

- Use all specified fasteners
- Nails: 16d = 0.162" dia x 3½" long common wire
- Double shear nails must be driven at an angle through the joist or truss into the header to achieve the table loads
- Not designed for welded or nailer applications

OPTIONS:

- See current catalogue for options.

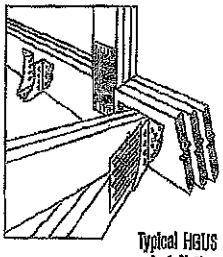

Typical HGUS Installation (Truss Designer to provide fastener quantity for connecting multiple members together)

Model No.	Ga	Dimensions (in)				Fasteners		Factored Resistances (lbs)			
								D.Fir-L		S-P-F	
		W	H	B	d_1[1]	Face	Joist	Uplift (K_D=1.15)	Normal (K_D=1.00)	Uplift (K_D=1.15)	Normal (K_D=1.00)
HGUS28	12	1¾	5⅝	5	4⁹⁄₁₆	20-16d	8-16d	2885	6825	2885	5700
HGUS28-2	12	3⁵⁄₁₆	5⁷⁄₁₆	4	4⅛	20-16d	8-16d	4385	8950	3100	6355
HGUS28-3	12	4⁹⁄₁₆	5½	4	4⅛	20-16d	8-16d	4385	8950	3100	6355
HGUS28-4	12	6⁵⁄₁₆	5⁷⁄₁₆	4	4⅛	20-16d	8-16d	4385	8950	3100	6355
HGUS38	12	1⅝	7¼	5	6⅛	36-16d	12-16d	2310	7675	3100	6600
HGUS38-2	12	3⁵⁄₁₆	7⁹⁄₁₆	4	6⅛	36-16d	12-16d	6070	12980	4310	9215
HGUS38-3	12	4⁹⁄₁₆	7¼	4	6⅛	36-16d	12-16d	6070	12980	4310	9215
HGUS38-4	12	6⁵⁄₁₆	7⁹⁄₁₆	4	6¼	36-16d	12-16d	6070	12980	4310	9215
HGU210-2	12	3⁵⁄₁₆	9⁹⁄₁₆	4	8⅛	46-16d	16-16d	6040	14645	4855	10400
HGUS210-3	12	4⁹⁄₁₆	9½	4	8⅛	46-16d	16-16d	6040	14645	4855	10400
HGUS210-4	12	6⁵⁄₁₆	9⁹⁄₁₆	4	8⅛	46-16d	16-16d	6040	14645	4855	10400
HGUS212-4	12	6⁵⁄₁₆	10⅝	4	10⅛	56-16d	20-16d	7640	14695	5425	10645
HGUS214-4	12	6⁵⁄₁₆	12⅝	4	11⅛	66-16d	22-16d	10130	16400	7195	11645

1. d_1 is the distance from the seat of the hanger to the highest joist nail.

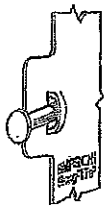

Dome Double Shear Nailing prevents tabs breaking off (available on some models).

U.S. Patent 5,603,580

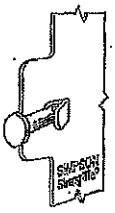

Double Shear Nailing Side View. Do not bend tab back.

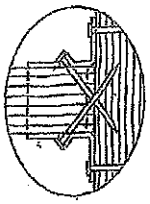

Double Shear Nailing Top View.

LICENSED PROFESSIONAL ENGINEER
01/03/2016
B.D. BUNTING
PROVINCE OF ONTARIO

MICRO CITY
ENGINEERING SERVICES INC.

TEL: (613) 287 - 2242

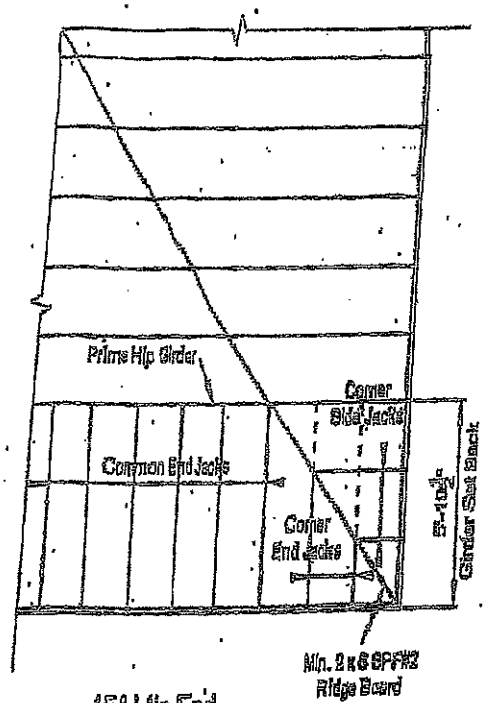

45° Hip End

LUMBER SPECIFICATION

TOP CHORD : 2x4 SPF#2

BOTTOM CHORD : 2x4 SPF#2

WEBS : 2x3 SPF#2

UNLESS OTHERWISE SHOWN

DESIGN LOADS

TOP CHORD LIVE LOAD	:	39.4 P.S.F.
TOP CHORD DEAD LOAD	:	3.0 P.S.F.
BOTTOM CHORD LIVE LOAD	:	10.5 P.S.F.
BOTTOM CHORD DEAD LOAD	:	7.0 P.S.F
TOTAL LOAD		59.9 P.S.F.

DWG NO TM 2485.14
STRUCTURAL
COMPONENT ONLY

LICENSED PROFESSIONAL ENGINEER
1-20-17
S. KATSOULAKOS
PROVINCE OF ONTARIO

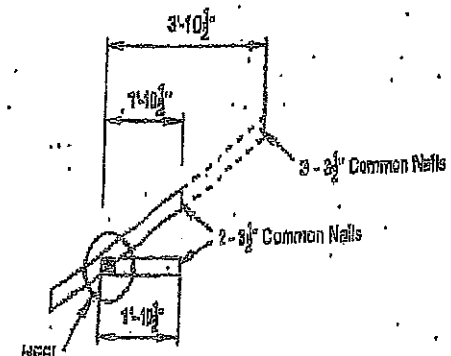

Corner Side Jacks

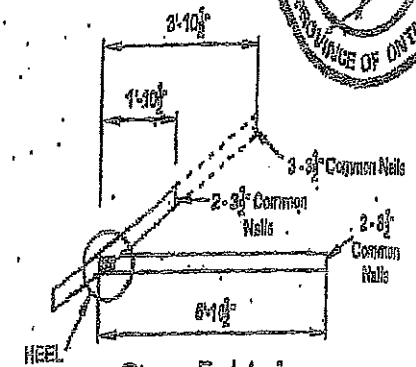

Corner End Jacks

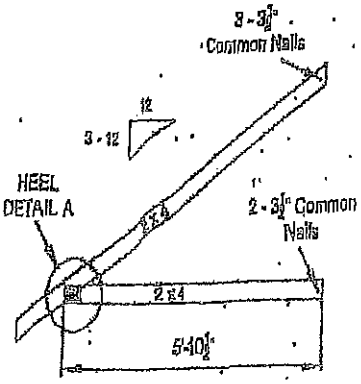

Common End Jacks

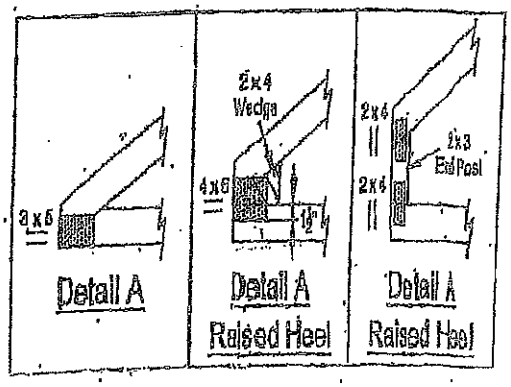

Detail A | Detail A Raised Heel | Detail A Raised Heel

NOTE: DESIGN CONFORMS TO PART 9, O.B.C. 2012 (LIMIT STATES DESIGN)

MICRO CITY
ENGINEERING SERVICES INC. TEL: (519) 287 - 2242
R.R. #1, P.O. BOX 61, GLENCOE, ONTARIO, N0L 1M0

LUMBER SPECIFICATION

TOP CHORD : 2x4 SPF#2
BOTTOM CHORD : 2x4 SPF#2
WEBS : 2x3 SPF#2
UNLESS OTHERWISE SHOWN

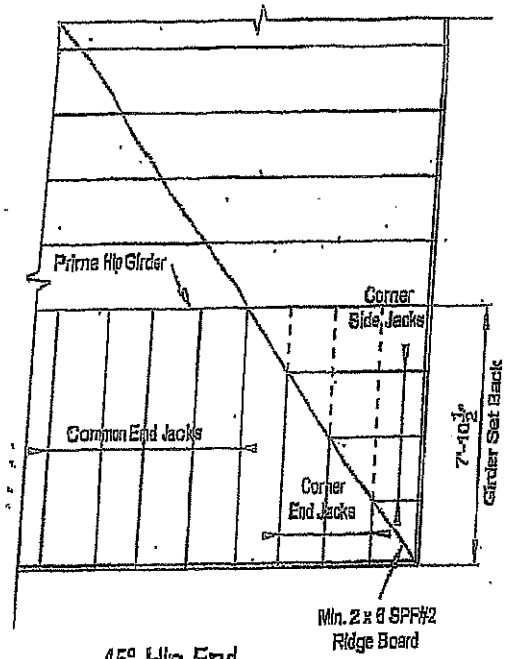

45° Hip End

DESIGN LOAD:

TOP CHORD LIVE LOAD	: 34.8 P.S.F.
TOP CHORD DEAD LOAD	: 3.0 P.S.F.
BOTTOM CHORD LIVE LOAD	: 0.0 P.S.F.
BOTTOM CHORD DEAD LOAD	: 7.0 P.S.F.
TOTAL LOAD	: 44.8 P.S.F.

DWG NO TAM 3503.14
STRUCTURAL COMPONENT ONLY

LICENSED PROFESSIONAL ENGINEER
S. KATSOULAKOS
PROVINCE OF ONTARIO

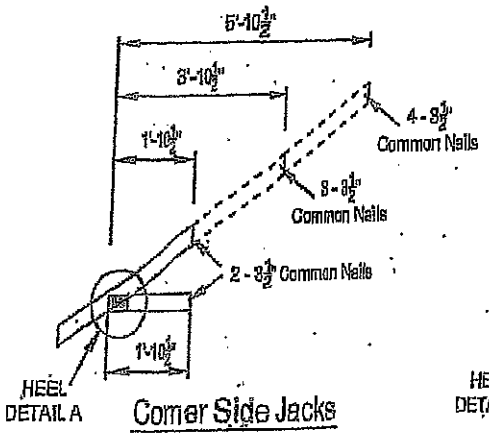

Corner Side Jacks

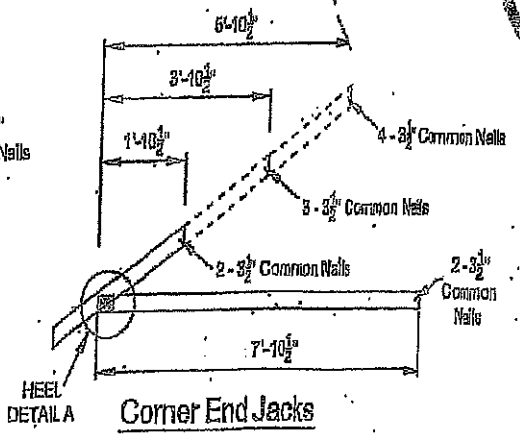

Corner End Jacks

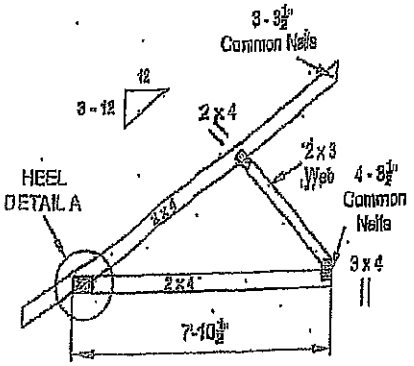

Common End Jacks

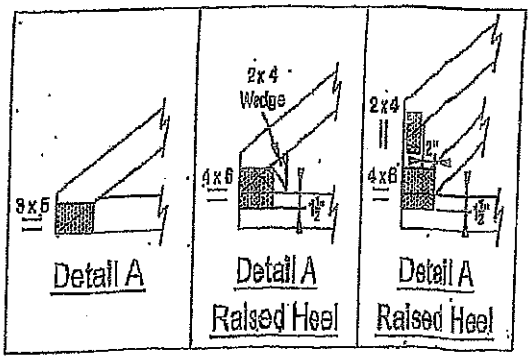

NOTE: DESIGN CONFORMS TO PART 9, O.B.C. 2012 (LIMIT STATES DESIGN)
(TO BE INCLUDED AND USED AS PART OF A FULL TRUSS ENGINEERING PACKAGE)

Symbols

PLATE LOCATION AND ORIENTATION

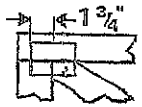

Center plate on joint unless x, y offsets are indicated. Dimensions are in ft-in-sixteenths or mm. Apply plates to both sides of truss and fully embed teeth.

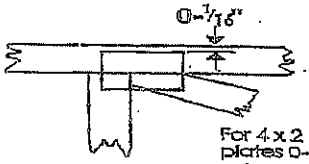

For 4 x 2 orientation, locate plates 0-1/16" from outside edge of truss.

This symbol indicates the required direction of slots in connector plates.

*Plate location details available in MiTek software or upon request.

PLATE SIZE

4 x 4

The first dimension is the plate width measured perpendicular to slots. Second dimension is the length parallel to slots.

LATERAL BRACING LOCATION

Indicated by symbol shown and/or by text in the bracing section of the output. Use T, I or Eliminator bracing if indicated.

BEARING

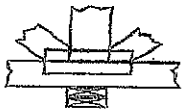

Indicates location where bearings (supports) occur. Icons vary but reaction section indicates joint number where bearings occur.

Industry Standards:

TPIC: Truss Design Procedures and Specifications for Light Metal Plate Connected Wood Trusses

DSB-89: Design Standard for Bracing.

BCSI: Building Component Safety Information, Guide to Good Practice for Handling, Installing & Bracing of Metal Plate Connected Wood Trusses.

Numbering System

dimensions shown in ft-in-sixteenths or mm (Drawings not to scale)

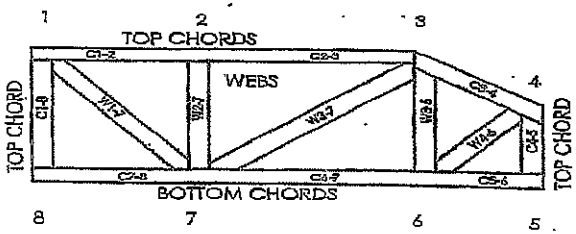

JOINTS ARE GENERALLY NUMBERED/LETTERED CLOCKWISE AROUND THE TRUSS STARTING AT THE JOINT FARTHEST TO THE LEFT.

CHORDS AND WEBS ARE IDENTIFIED BY END JOINT NUMBERS/LETTERS.

PRODUCT CODE APPROVALS

CCMC Reports:

11996-L, 10319-L, 13270-L, 12691-R

© 2007 MiTek® All Rights Reserved

MiTek®

POWER TO PERFORM.™

General Safety Notes

Failure to Follow Could Cause Property Damage or Personal Injury

1. Additional stability bracing for truss system, e.g. diagonal or X-bracing, is always required. See BCSI.
2. Truss bracing must be designed by an engineer. For wide truss spacing, individual lateral braces themselves may require bracing, or alternative T, I, or Eliminator bracing should be considered.
3. Never exceed the design loading shown and never stack materials on inadequately braced trusses.
4. Provide copies of this truss design to the building designer, erection supervisor, property owner and all other interested parties.
5. Cut members to bear tightly against each other.
6. Place plates on each face of truss at each joint and embed fully. Knots and wane at joint locations are regulated by TPIC.
7. Design assumes trusses will be suitably protected from the environment in accord with TPIC.
8. Unless otherwise noted, moisture content of lumber shall not exceed 19% at time of fabrication.
9. Unless expressly noted, this design is not applicable for use with fire retardant, preservative treated, or green lumber.
10. Camber is a non-structural consideration and is the responsibility of truss fabricator. General practice is to camber for dead load deflection.
11. Plate type, size, orientation and location dimensions indicated are minimum plating requirements.
12. Lumber used shall be of the species and size, and in all respects, equal to or better than that specified.
13. Top chords must be sheathed or purlins provided at spacing indicated on design.
14. Bottom chords require lateral bracing at 10 ft. spacing, or less, if no ceiling is installed, unless otherwise noted.
15. Connections not shown are the responsibility of others.
16. Do not cut or alter truss member or plate without prior approval of an engineer.
17. Install and load vertically unless indicated otherwise.
18. Use of green or treated lumber may pose unacceptable environmental, health or performance risks. Consult with project engineer before use.
19. Review all portions of this design (front, back, words and pictures) before use. Reviewing pictures alone is not sufficient.
20. Design assumes manufacture in accordance with TPIC Quality Criteria.

Micro City Engineering Services Inc.
(BCIN: 26064; FIRM BCIN: 29991)
RR #1, Po Box 61
Glencoe, Ontario
N0L 1M0
(519) 287 - 2242; Fax: (519) 287 - 5750 (Call)

LICENSED PROFESSIONAL ENGINEER
1-20-74
S. KATSOULAKOS
PROVINCE OF ONTARIO

DWG NO [illegible] 9/14
STRUCTURAL
COMPONENT ONLY

Responsibilities:

Micro City Engineering Services is responsible for the design of trusses as individual components.

It is the responsibilities of others to ascertain that the design loads utilized on this (these) drawing(s) meet or exceed the actual dead load imposed by the structure and the live load imposed by the local building code or the authorities having jurisdiction over such decisions.

All dimensions are to be verified by the owner, contractor, architect, or other authority having input over such decisions prior to truss component manufacture. At no time shall Micro City Engineering Services Inc. or its employees be responsible for dimension errors.

Micro City Engineering Services Inc. bears no responsibility for the erection of any truss components. Persons erecting truss components are cautioned to seek professional advice regarding temporary and permanent bracing systems and to be totally familiar with all aspects of truss erection prior to proceeding on any truss component erection job. Any bracing shown on Micro City Engineering Services Inc. or Tamarack Roof Trusses Inc. sealed or unsealed truss component drawings is specified for the single truss component in question and is identified as an integral part of the design for that particular truss component but is not meant to represent the only required bracing for that particular truss component when installed as a component in a series of truss components in a roof truss system.

~~It is the truss manufacturer's responsibility to ensure that trusses are manufactured in accordance with Micro City Engineering~~ Services Inc. specifications outlined below:

SPECIFICATIONS:

Truss components sealed by Micro City Engineering Services Inc. must conform to the relevant sections of the current Building Code of Ontario and Canada (Part 4 or Part 9) or the current Farm Building Code of Canada in accordance with the application specified on the sealed truss component drawing. All truss component design procedures must conform to the current design standard issued by the Truss Plate Institute of Canada (TPIC). All unit lumber and nailing stresses identified on truss component design drawings and/or used in the design of individual truss components shall conform to the current CSA Wood Design standard identified in the current Building Code and TPIC Design Standards.

The lumber used to manufacture any truss component is to conform to the specified size and grade identified on the truss drawing.

The lumber used in the manufacture of any truss component is not to exceed 19% during its service use unless specifically noted on the truss drawing.

The lumber used in the manufacture of any truss component is not to be treated with any chemicals during its service life unless specifically noted on the truss drawing.

Connector plates shall be applied to both faces of the truss component at each joint and shall be positioned exactly as specified.

The top chord of any truss component is assumed to be continuously laterally braced by the roof sheathing or purlins at intervals specified on the sealed truss component drawing but not exceeding 24" o/c (Part 9 design) and not exceeding 48" o/c (Part 4 or Agricultural design).

When a truss component is to be installed with no rigid ceiling attached directly to the bottom chord, then the bottom chord is to be laterally braced at intervals not exceeding 3m (or 10'-0").

All sealed or unsealed truss component drawings provided by Micro City Engineering Services Inc. Or Tamarack Roof Trusses Inc. should be read in conjunction with the following:

Warning-Verify design parameters and READ NOTES ON THIS AND INCLUDED MITEK REFERENCE PAGE MII-7473C rev 10-'08 BEFORE USE. Design valid for use only with Mitek connectors. This design is based only upon parameters shown, and is for individual building component. Applicability of design parameters and proper incorporation of component is the responsibility of the building designer - not the truss designer. Bracing shown is for lateral support of individual web members only. Additional temporary bracing to insure stability during construction is the responsibility of the erector. Additional permanent bracing of the overall structure is the responsibility of the building designer. For general guidance regarding fabrication, quality control, storage, delivery, erection, and bracing, consult TPIC Appendix G - Minimum Quality Manufacturing Criteria available from www.tpic.ca and BCSI Building Component Safety Information available from the Truss Plate Institute, 781 N. Lee Street, Suite 312, Alexandria, VA, 22314.