CONSTRUCTION NOTES (Unless otherwise noted)

ALL CONSTRUCTION TO ADHERE TO THESE PLANS AND SPEC'S AND TO CONFORM TO THE ONTARIO BUILDING CODE AND ALL OTHER APPLICABLE CODES AND AUTHORITIES HAVING JURISDICTION. THESE REQUIREMENTS ARE TO BE TAKEN AS MINIMUM SPECIFICATIONS. ONT. REG. 332/12-2012 OBC.

1. ROOF CONSTRUCTION
NO.210 (10.25kg/m2) ASPHALT SHINGLES, 10mm (3/8") PLYWOOD SHEATHING WITH "H" CLIPS. APPROVED WOOD TRUSSES @ 610mm (24") O.C. MAX. APPROVED EAVES PROTECTION TO EXTEND 900mm (3'-0") FROM EDGE OF ROOF AND MIN. 300mm (12") BEYOND INNER FACE OF EXTERIOR WALL. (EAVES PROTECTION NOT REQ'D FOR ROOF SLOPES 8:12 OR GREATER) 38x89 (2"x4") TRUSS BRACING @ 1830mm (6'-0") O.C. AT BOTTOM CHORD. PREFIN. ALUM. EAVESTROUGH, FASCIA, RWL & VENTED SOFFIT. PROVIDE ICE & WATER SHIELD TO ALL ROOF/WALL SURFACES SUSCEPTIBLE TO ICE DAMMING. ROOF SHEATHING TO BE FASTENED 150 (6") c/c ALONG EDGES & INTERMEDIATE SUPPORTS WHEN TRUSSES SPACED GREATER THAN 406 (16"). ATTIC VENTILATION 1:300 OF INSULATED CEILING AREA WITH MIN. 25% AT EAVES & MIN. 25% AT RIDGE (OBC 9.19.1.2.).

2. FRAME WALL CONSTRUCTION (2"x6") (SB-12-TABLE 3.1.1.2.A) ●
SIDING AS PER ELEV., 19x38 (1"x2") VERTICAL WOOD FURRING, CONTIN. SHEATHING MEMBRANE, 0.88 (R5) RIGID INSULATION, 38x140 (2"x6") STUDS @ 400mm (15") O.C., RSI 3.87 (R22) INSULATION AND APPR. VAPOUR BARRIER AND APPR. CONTIN. AIR BARRIER, 13mm (1/2") INT. DRYWALL FINISH. SIDING TO BE MIN. 200mm (8") ABOVE FINISH GRADE. REFER TO OBC SB-12, CHAPTER 3 FOR REQUIRED MINIMUM THERMAL INSULATION REQUIREMENTS.

2B. FRAME WALL CONSTRUCTION (2"x4")– GARAGE WALLS
SIDING AS PER ELEV., 19x38 (1"x2") VERTICAL WOOD FURRING, CONTIN. SHEATHING MEMBRANE, 11mm (7/16") EXT. TYPE SHEATHING, 38x89 (2"x4") STUDS @ 406mm (16") O.C. (MAX. HEIGHT 3000mm (9'-10")). WITH APPR. DIAGONAL WALL BRACING. REFER TO NOTE 19 WHERE FLOOR EXISTS ABOVE GARAGE.
SIDING TO BE MIN. 200mm (8") ABOVE FINISH GRADE.

2C. STUCCO WALL CONSTRUCTION (2"x6") (SB-12-TABLE 3.1.1.2.A)
STUCCO CLADDING SYSTEM CONFORMING TO O.B.C. 9.27.1.1.(2) & 9.28 THAT EMPLOY A MINIMUM 10mm AIR SPACE BEHIND THE CLADDING WITH POSITIVE DRAINAGE TO THE EXT. AND APPLIED PER MANUFACTURERS SPECIFICATIONS ON 25mm (1") MIN. 0.88 (R5) EXTRUDED OR EXPANDED RIGID POLYSTYRENE ON APPR. AIR/MOISTURE BARRIER ON 38x140 (2"x6") STUDS @ 406 (16") O.C., RSI 3.87 (R22) BATT INSUL., APPR. 6 MIL. POLYETHYLENE VAPOUR BARRIER, 13mm (1/2") GYPSUM BOARD INTERIOR FINISH. STUCCO TO BE MIN. 200 (8") ABOVE FINISH GRADE. REFER TO OBC SB-12, CHAPTER 3 FOR REQUIRED MINIMUM THERMAL INSULATION REQUIREMENTS.

2D. STUCCO WALL CONSTRUCTION (2"x4") -GARAGE WALLS
STUCCO CLADDING SYSTEM CONFORMING TO O.B.C. 9.27.1.1.(2) & 9.28 THAT EMPLOY A MINIMUM 10mm AIR SPACE BEHIND THE CLADDING WITH POSITIVE DRAINAGE TO THE EXTERIOR AND APPLIED PER MANUFACTURERS SPECIFICATIONS OVER 25mm (1") MIN. EXPANDED OR EXTRUDED RIGID POLYSTYRENE ON APPROVED AIR/MOISTURE BARRIER ON 38x89 (2"x4") STUDS @ 406 (16") O.C. (MAX. HEIGHT 3000mm (9'-10")), WITH APPR. DIAGONAL WALL BRACING. REFER TO NOTE 19 WHERE FLOOR EXISTS ABOVE GARAGE.
STUCCO TO BE MIN. 200 (8") ABOVE FINISH GRADE.

2E. WALLS ADJACENT TO ATTIC – NO CLADDING
0.88 (R5) RIGID INSULATION, 38x140 (2"x6") STUDS @ 400mm (16") O.C., RSI 3.87 (R22) INSULATION AND APPR. VAPOUR BARRIER AND APPR. CONTIN. AIR BARRIER, 13mm (1/2") INTERIOR DRYWALL FINISH. MID-HEIGHT BLOCKING REQ'D. IF NO SHEATHING APPLIED. REFER TO OBC SB-12, CHAPTER 3 FOR ADDITIONAL THERMAL INSULATION REQUIREMENTS.

3. BRICK VENEER CONSTRUCTION (2"x6") (SB-12-TABLE 3.1.1.2.A) ●
90mm (4") FACE BRICK, 25mm (1") AIR SPACE, 22x180x0.76mm (7/8"x7"x0.03") GALV. METAL TIES @ 406mm (16") O.C. HORIZONTAL 610mm (24") O.C. VERTICAL. APPROVED SHEATHING PAPER, 0.88 (R5) RIGID INSULATION, 38x140 (2"x6") STUDS @ 406mm (16") O.C., RSI 3.87 (R22) INSULATION AND APPROVED VAPOUR BARRIER WITH APPROVED CONTN. AIR BARRIER. 13mm (1/2") INT. DRYWALL FINISH. PROVIDE WEEP HOLES @ 800mm (32") O.C. BOTTOM COURSE AND OVER OPENINGS. PROVIDE BASE FLASHING UP MIN. 150mm (6") BEHIND BUILDING PAPER. BRICK TO BE MIN. 150mm (6") ABOVE FINISH GRADE. REFER TO OBC SB-12, CHAPTER 3 FOR REQUIRED MINIMUM THERMAL INSULATION REQUIREMENTS.

3B. BRICK VENEER CONSTRUCTION (2"x4")– GARAGE WALLS
90mm (4") FACE BRICK, 25mm (1") AIR SPACE, 22x180x0.76mm (7/8"x7"x0.03") GALV. METAL TIES @ 406mm (16") O.C. HORIZONTAL 610mm (24") O.C. VERTICAL. APPROVED SHEATHING PAPER, 11mm (7/16") EXTERIOR TYPE SHEATHING, 38x89 (2"x4") STUDS @ 406mm (16") O.C. (MAX. HEIGHT 3000mm (9'-10")) WITH APPROVED DIAGONAL WALL BRACING. REFER TO NOTE 19 WHERE FLOOR EXISTS ABOVE GARAGE. PROVIDE WEEP HOLES @ 800mm (32") O.C. BOTTOM COURSE AND OVER OPENINGS. PROVIDE BASE FLASHING UP MIN. 150mm (6") BEHIND BUILDING PAPER.
BRICK TO BE MIN. 150mm (6") ABOVE FINISH GRADE.

3C. STUCCO WALL CONSTRUCTION (2"x6") (SB-12-TABLE 3.1.1.2.A) ●
STUCCO CLADDING SYSTEM CONFORMING TO O.B.C. 9.27.1.1.(2) & 9.28 THAT EMPLOYS A MINIMUM 10mm AIR SPACE BEHIND THE CLADDING WITH POSITIVE DRAINAGE TO THE EXTERIOR AND APPLIED PER MANUFACTURERS SPECIFICATIONS OVER 25mm (1") MIN. 0.88 (R5) EXTRUDED OR EXPANDED RIGID POLYSTYRENE ON APPR. CONTIN. AIR/MOISTURE BARRIER ON 38x140 (2"x6") STUDS @ 406mm (16") O.C., RSI 3.87 (R22) BATT INSUL., APPR. 6 MIL. POLYETHYLENE VAPOUR BARRIER, 13mm (1/2") GYPSUM WALLBOARD INTERIOR FINISH. STUCCO TO BE MIN. 200 (8") ABOVE FINISH GRADE. REFER TO OBC SB-12, CHAPTER 3 FOR REQUIRED MINIMUM THERMAL INSULATION REQUIREMENTS.

REGISTERED PROFESSIONAL ENGINEER
B. MARINKOVIC
PROVINCE OF ONTARIO

STRUDET INC.
FOR STRUCTURE ONLY

greg – F:\LIBRARY\LIBRARY.ML\2017 OBC CONSTRUCTION NOTES\GREENPARK\GP-14x18-NOTES-2017-VA3-PKG-A4-16036.dwg – Fri, Sep 29 2017 – 2:17 PM

INTERIOR STUD PARTITIONS
4. FOR BEARING PARTITIONS 38x89 (2"x4") @ 406mm (16") O.C. FOR 2 STOREYS AND 305mm (12") O.C. FOR 3 STOREYS, NON-BEARING PARTITIONS 38x89 (2"x4") @ 610mm (24") O.C. PROVIDE 38x89 (2"x4") BOTTOM PLATE AND 2/38x89 (2/2"x4") TOP PLATE. 13mm (1/2") INT. DRYWALL BOTH SIDES OF STUDS, PROVIDE 38x140 (2"x6") STUDS/PLATES WHERE NOTED.

5. FOUNDATION WALL/FOOTINGS: (9.15.3, 9.15.4, 9.13.2, 9.14.2.1.(2))
230mm (9") POURED CONC. FDTN. WALL 15MPa (2200psi) WITH BITUMENOUS DAMPPROOFING AND DRAINAGE LAYER. DRAINAGE LAYER REQ'D. WHEN BASEMENT INSUL. EXTENDS 900 (2'-11") BELOW FIN. GRADE. DRAINGE LAYER IS NOT REQ'D. IF FOUNDATION WALL IS WATERPROOFED. MAXIMUM POUR HEIGHT 2390 (7'-10") ON 500x155 (20"x6") CONTINUOUS KEYED CONC. FTG. BRACE FDTN. WALL PRIOR TO BACKFILLING. ALL FOOTINGS SHALL REST ON NATURAL UNDISTURBED SOIL OR COMPACTED ENGINEERED FILL.

STRIP FOOTINGS – FOR TOWNHOUSES
FOR STRIP FOOTING SIZES REFER TO BLOCK FOUNDATION PLAN. ASSUMED 120 KPa (18 p.s.i.) SOIL BEARING CAPACITY FOR TOWNHOUSES, TO BE VERIFIED ON SITE.

-MAXIMUM FLOOR LIVE LOAD OF 2.4kPa. (50psf.) PER FLOOR.
-REFER TO SOILS REPORT FOR SOIL CONDITIONS AND BEARING CAPACITY.

6. FOUNDATION DRAINAGE OBC. 9.14.2. & 9.14.3.
100mm (4") DIA. FOUNDATION DRAINAGE TILE 150mm (6") CRUSHED STONE OVER AND AROUND DRAINAGE TILES.

7. BASEMENT SLAB OBC. 9.3.1.6.(1)(b), 9.16.4.5.(1), 9.25.3.3.(15)
80mm (3")MIN. 25MPa (3600psi) CONC. SLAB ON 100mm (4") COARSE GRANULAR FILL, OR 20MPa. (3000psi) CONC. WITH DAMPPROOFING BELOW SLAB. UNDER SLAB INSULATION PER SB-12; 3.1.1.7.(5)(6) where required.
ALL SLAB JOINTS & PENETRATIONS TO BE SEALED TO MAINTAIN AIR BARRIER.

8. WOOD SUBFLOORS (SEE OBC. 9.23.14. & 9.30.2.1)
-19mm (3/4") MIN. T & G SUBFLOOR UNDER GROUND FLOOR FINISH FLOOR.
16mm (5/8") T&G SUBFLOOR UNDER SECOND FLOOR FINISH FLOOR.
16mm (5/8") PANEL-TYPE UNDERLAY FOR CERAMIC TILE APPLICATION.
6mm (1/4") PANEL-TYPE UNDERLAYMENT UNDER RESILIENT & PARQUET FLOORING.

9. ATTIC INSULATION (SB-12-TABLE 3.1.1.2.A) (SB-12-3.1.1.8) ●
RSI 10.56 (R60) BLOWN IN ROOF INSULATION AND APPROVED VAPOUR BARRIER, 16mm (5/8") INT. DRYWALL FINISH OR APPROVED EQUAL.
RSI 3.52 (R20) MIN. ABOVE INNER SURFACE OF EXTERIOR WALL

10. ALL STAIRS/EXTERIOR STAIRS –OBC. 9.8.–

UNIFORM RISE	-5mm (1/4") MAX BETWEEN ADJACENT TREADS OR LANDINGS -10mm (1/2") MAX BETWEEN TALLEST & SHORTEST RISE IN FLIGHT
MAX. RISE	= 200 (7-7/8")
MIN. RUN	= 210 (8-1/4")
MIN. TREAD	= 235 (9-1/4")
MAX. NOSING	= 25 (1")
MIN. HEADROOM	= 1950 (6'-5")
RAIL @ LANDING	= 900 (2'-11")
RAIL @ STAIR	= 865 (2'-10") to 965 (3'-2")
MIN. STAIR WIDTH	= 860 (2'-10")
FOR CURVED STAIRS	
MIN. RUN	= 150 (6")
MIN. AVG. RUN	= 200 (8")

HANDRAILS –OBC. 9.8.7.–
11. FINISHED RAILING ON PICKETS SPACED MAXIMUM 100mm (4") BETWEEN PICKETS. CLEARANCE BETWEEN HANDRAIL AND SURFACE BEHIND IT TO BE 50 (2") MIN. HANDRAILS TO BE CONTINUOUS EXCEPT FOR NEWEL POST AT CHANGES OF DIRECTION .

INTERIOR GUARDS –OBC. 9.8.8.–
INTERIOR GUARDS: 900mm (2'-11") MIN. HIGH

EXTERIOR GUARDS – OBC. 9.8.8.
900mm (36") HIGH GUARD WHERE DISTANCE FROM PORCH TO FIN. GRADE IS LESS THAN 1800mm (71"). 1070mm (42") HIGH GUARD IS REQUIRED WHERE DISTANCE EXCEEDS 1800mm (71").

12. SILL PLATE ANCHORAGE
38x89 (2"x4") SILL PLATE WITH 13mm (1/2") DIA. ANCHOR BOLTS 200mm (8") LONG, EMBEDDED MIN. 100mm (4") INTO CONC. @ 2400mm (7'-10") O.C., CAULKING OR 25 (1") MIN. MINERAL WOOL BETWEEN PLATE AND TOP OF FDTN. WALL.
USE NON-SHRINK GROUT TO LEVEL SILL PLATE WHEN REQUIRED.

13. BASEMENT INSULATION (SB-12-3.1.1.7), 9.25.2.3, 9.13.2.6) ●
FOUNDATION WALLS ENCLOSING HEATED SPACE SHALL BE INSULATED FROM THE UNDERSIDE OF THE SUBFLOOR TO NOT MORE THAN 200mm (8") ABOVE THE FINISHED FLOOR & NO CLOSER THAN 50mm (2") OF THE BASEMENT SLAB. RSI3.52ci (R20ci) BLANKET INSULATION TO HAVE APPROVED VAPOUR BARRIER. RECOMMEND DAMPPROOF WITH BUILDING PAPER BETWEEN THE FOUNDATION WALL AND INSULATION UP TO GRADE LEVEL. NOTE: FULL HEIGHT INSULATION AT COLD CELLAR WALLS. AIR BARRIER TO BE SEALED TO FOUNDATION WALL WITH CAULKING. CONTINUOUS INSULATION (ci) IS NOT TO BE INTERRUPTED BY FRAMING.

14. BASEMENT BEARING STUD PARTITION
38x89 (2"x4") STUDS @ 406mm (16") O.C. 38x89 (2"x4") SILL PLATE ON DAMPPROOFING MATERIAL, 13mm (1/2") DIA. ANCHOR BOLTS 200mm (8") LONG, EMBEDDED MIN. 100mm (4") INTO CONC. @ 2400mm (7'-10") O.C. 100mm (4") HIGH CONC. CURB ON 305x155 (12"x6") CONC. FOOTING, ADD HORIZ. BLOCKING AT MID-HEIGHT IF WALL IS UNFINISHED.

15. STEEL BASEMENT COLUMN (SEE O.B.C. 9.15.3.3)
89mm(3-1/2") DIA x 4.78mm(0.188") STL. COL. WITH A MIN. CAPACITY OF 108.6kN (24,000lbs.) WITH 150x150x9.5 (6"x6"x3/8") STL. TOP & BOTTOM PLATE.

15A. STEEL COLUMN
90mm(3-1/2") DIA x 4.78mm(0.188") STL. COL. WITH 100x100x6.0 (4"x4"x1/4") TOP & BOTTOM PLATES. FIELD WELD BOTTOM PLATE TO 100x250x12.5 (4"x10"x1/2") BASE PLATE C/W 2-12mm DIA. x 300mm LONG x50mm HOOK ANCHORS (2-1/2"x12"x2"). TIE COLUMN TO STUD WALL WITH 2-32x3.175 (1 1/4"x 1/8") STEEL STRAP WELDED TO COLUMN AND FASTENED TO STUD WITH 2-SDS 6.35x38 (1/4"x1 1/2") SCREWS MANUF. BY SIMPSON STRONG TIE.

CONCRETE PILASTER
16. BEAM POCKET OR 200x200 (8"x8") POURED CONC. NIB WALLS. MIN. BEARING 90mm (3-1/2")

17. 19x38 (1"x2") CONTINUOUS WOOD STRAPPING BOTH SIDES OF STEEL BEAM. (OBC. 9.23.4.3.(3c))

18. GARAGE SLAB
100mm (4") 32MPa (4640psi) CONC. SLAB WITH 5-8% AIR ENTRAINMENT ON OPTIONAL 100 (4") COARSE GRANULAR FILL WITH COMPACTED SUB-BASE OR COMPACTED NATIVE FILL.
SLOPE TO FRONT (EXTERIOR) AT 1% MIN.

19. INTERIOR GARAGE WALLS & CEILINGS (SB-12-TABLE 3.1.1.2.A) ●
13mm (1/2") GYPSUM BOARD ON WALL AND CEILING BETWEEN HOUSE AND GARAGE. WALL INSULATION = RSI. 3.87 (R22) BATTS+ MIN. RSI. 0.88 (R-5) RIGID CONTINUOUS INSULATION. TOTAL MIN. RSI. 4.76 (R-27) FOR WALLS.
CEILING INSULATION= RSI. 5.46 (R31). TAPE AND SEAL ALL JOINTS AIRTIGHT PER O.B.C. 9.10.9.16.

20. DOOR AND FRAME GASPROOFED. DOOR EQUIPPED WITH SELF CLOSING DEVICE AND WEATHERSTRIPPING PER OBC 9.10.13.15.

21. EXTERIOR STEP
PRECAST CONCRETE STEP OR WOOD STEP WHERE NOT EXPOSED TO WEATHER. MAX. RISE 200mm (7-7/8") MIN. TREAD 250mm (9-1/2"). SEE OBC. 9.8.9.2., 9.8.9.3. & 9.8.10.

22. DRYER VENT(OBC-6.2.3.8.(7). & 6.2.4.1.1)
CAPPED DRYER EXHAUST VENTED TO EXTERIOR.
(USE 100mm (4") DIA. SMOOTH WALL VENT PIPE).

23. INSULATED ATTIC ACCESS (OBC-9.19.2.1. & SB12-3.1.1.8)
ATTIC ACCESS HATCH WITH MIN. DIMENSION OF 545x700mm (21-1/2"x27-1/2") & A MIN. AREA OF 0.32 SQ.M. (3.44 SQ.FT.) WITH WEATHERSTRIPPING. RSI 3.52 (R20) RIGID INSULATION BACKING. SEE OBC SB-12, 3.1.1.8.

24. FIREPLACE CHIMNEYS –OBC. 9.21.–
TOP OF FIREPLACE CHIMNEY SHALL BE 915mm (3'-0") ABOVE THE HIGHEST POINT AT WHICH IT COMES IN CONTACT WITH THE ROOF AND 610mm (2'-0") ABOVE THE ROOF SURFACE WITHIN A HORIZ. DISTANCE OF 3050mm (10'-0") FROM THE CHIMNEY.

25. LINEN CLOSETS
4 SHELVES MIN. 350mm (14") DEEP.

26. MECHANICAL EXHAUST
MECHANICAL EXHAUST FAN, VENTED TO EXTERIOR AS REQUIRED BY OBC. 9.32.3.5. & 9.32.3.10.

27. STEEL BEARING PLATE FOR MASONRY WALLS
280x280x16 (11"x11"x5/8") STL. PLATE FOR STL BEAMS AND 280x280x12 (11"x11"x1/2") STL. PLATE FOR WOOD BEAMS BEARING ON CONC. BLOCK PARTYWALL, ANCHORED WITH 2-19mm (3/4") x 200mm (8") LONG GALV. ANCHORS WITHIN SOLID BLOCK COURSE. LEVEL WITH NON-SHRINK GROUT.

27A. SOLID WOOD BEARING FOR WOOD STUD WALLS
SOLID BEARING TO BE AT LEAST AS WIDE AS THE SUPPORTED MEMBER. SOLID WOOD BEARING COMPRISED OF BUILT-UP WOOD STUDS TO BE CONSTRUCTED IN ACCORDANCE WITH OBC 9.17.4.2(2).

28. CLASS 'B' VENT
U.L.C. RATED CLASS "B" VENT 610mm (2'-0") ABOVE THE POINT IN CONTACT WITH THE ROOF FOR SLOPES UP TO 9/12. REFER TO THE ONTARIO GAS UTILIZATION CODE.

29. BASEMENT WOOD POST (OBC 9.17.4.)
3-38x140 (3-2"x6") BUILT-UP-POST ON METAL BASE SHOE ANCHORED TO CONC. WITH 12.7 DIA. BOLT, 406x406x203 (16"x16"x8") CONC. FTG. OR AS OTHERWISE SPECIFIED ON DRAWING.

30. STEPPED FOOTINGS (OBC 9.15.3.9.)
MIN. HORIZ. STEP = 600mm (24").
MAX. VERT. STEP = 600mm (24").

31. SLAB ON GRADE ●
MIN. 100mm (4") CONCRETE SLAB ON GRADE ON 100mm (4") COARSE GRANULAR FILL. REINFORCED WITH 6x6-W2.9xW2.9 MESH PLACED NEAR MID-DEPTH OF SLAB. CONC. STRENGTH 32 MPa (4640 psi) WITH 5-8% AIR ENTRAINMENT ON COMPACTED SUB-GRADE. UNDER SLAB INSULATION AS PER OBC. SB-12 3.1.1.7.(5)(6) AND SB-12, TABLE 3.1.1.2.A. where required.
ALL JOINTS & PENETRATIONS OF INTERIOR SLABS TO BE SEALED TO MAINTAIN AIR BARRIER.

LOOSE STEEL LINTELS

L1	=3-1/2" x 3-1/2" x 1/4"L (90x90x6.0L)
L2	=4" x 3-1/2" x 5/16"L (100x90x8.0L)
L3	=5" x 3-1/2" x 5/16"L (125x90x8.0L)
L4	=6" x 3-1/2" x 3/8"L (150x90x10.0L)
L5	=6" x 4" x 3/8"L (150x100x10.0L)
L6	=7" x 4" x 3/8"L (180x100x10.0L)

LAMINATED VENEER LUMBER (LVL) BEAMS

LVL1A	=1-1 3/4"x7 1/4"	(1-45x184)
LVL1	=2-1 3/4"x7 1/4"	(2-45x184)
LVL2	=3-1 3/4"x7 1/4"	(3-45x184)
LVL3	=4-1 3/4"x7 1/4"	(4-45x184)
LVL4A	=1-1 3/4"x9 1/4"	(1-45x235)
LVL4	=2-1 3/4"x9 1/4"	(2-45x235)
LVL5	=3-1 3/4"x9 1/4"	(3-45x235)
LVL5A	=4-1 3/4"x9 1/4"	(4-45x235)
LVL6A	=1-1 3/4"x11 7/8"	(1-45x300)
LVL6	=2-1 3/4"x11 7/8"	(2-45x300)
LVL7	=3-1 3/4"x11 7/8"	(3-45x300)
LVL7A	=4-1 3/4"x11 7/8"	(4-45x300)
LVL8	=2-1 3/4"x14"	(2-45x356)
LVL9	=3-1 3/4"x14"	(3-45x356)

PAD FOOTINGS

120 KPa. NATIVE SOIL	90 KPa. ENGINEERED FILL SOIL
F1 = 42"x42"x18" CONCRETE PAD	F1 = 48"x48"x20" CONCRETE PAD
F2 = 36"x36"x16" CONCRETE PAD	F2 = 40"x40"x16" CONCRETE PAD
F3 = 30"x30"x12" CONCRETE PAD	F3 = 34"x34"x14" CONCRETE PAD
F4 = 24"x24"x12" CONCRETE PAD	F4 = 28"x28"x12" CONCRETE PAD
F5 = 16"x16"x8" CONCRETE PAD	F5 = 18"x18"x8" CONCRETE PAD

(REFER TO FLOOR PLAN FOR UNUSUAL SIZE PADS NOT ON CHART.)

DOOR SCHEDULE

NOS.	WIDTH	HEIGHT 8'to 9' CEILING	HEIGHT 10' OR MORE CEILING	TYPE
1	2'-10"	6'-8"	8'-0"	INSULATED ENTRANCE DOOR
1a	2'-8"	6'-8"	8'-0"	INSULATED FRONT DOORS
2	2'-8"	6'-8"	8'-0"	WOOD & GLASS DOOR
3	2'-8"	6'-8"	8'-0"	EXTERIOR SLAB DOOR
4	2'-8"	6'-8"	8'-0"	INTERIOR SLAB DOOR
5	2'-6"	6'-8"	8'-0"	INTERIOR SLAB DOOR
6	2'-2"	6'-8"	8'-0"	INTERIOR SLAB DOOR
7	1'-6"	6'-8"	8'-0"	INTERIOR SLAB DOOR

BRICK VENEER LINTELS

WL1	=3-1/2" x 3-1/2" x 1/4"L (89x89x6.4L)	+ 2-2"x8" SPR. No.2
WL2	=4" x 3-1/2" x 5/16"L (102x89x7.9L)	+ 2-2"x8" SPR. No.2
WL3	=5" x 3-1/2" x 5/16"L (127x89x7.9L)	+ 2-2"x10" SPR. No.2
WL4	=6" x 3-1/2" x 7/16"L (152x89x11.0L)	+ 2-2"x12" SPR. No.2
WL5	=6" x 4" x 7/16"L (152x102x11.0L)	+ 2-2"x12" SPR. No.2
WL6	=5" x 3-1/2" x 5/16"L (127x89x7.9L)	+ 2-2"x12" SPR. No.2
WL7	=5" x 3-1/2" x 5/16"L (127x89x7.9L)	+ 3-2"x12" SPR. No.2
WL8	=5" x 3-1/2" x 5/16"L (127x89x7.9L)	+ 3-2"x10" SPR. No.2
WL9	=6" x 4" x 7/16"L (152x102x11.0L)	+ 3-2"x10" SPR. No.2

WOOD LINTELS AND BEAMS

WB1	=2-2"x8" (2-38x184)	SPR. No.2
WB2	=3-2"x8" (3-38x184)	SPR. No.2
WB3	=2-2"x10" (2-38x235)	SPR. No.2
WB4	=3-2"x10" (3-38x235)	SPR. No.2
WB5	=2-2"x12" (2-38x286)	SPR. No.2
WB6	=3-2"x12" (3-38x286)	SPR. No.2
WB7	=5-2"x12" (5-38x286)	SPR. No.2
WB11	=4-2"x10" (4-38x235)	SPR. No.2
WB12	=4-2"x12" (4-38x286)	SPR. No.2

DIRECT VENTING GAS FURNACE VENT
32. DIRECT VENT FURNACE TERMINAL MIN. 900mm (36") FROM A GAS REGULATOR. MIN. 300mm (12") ABOVE FIN. GRADE, FROM ALL OPENINGS, EXHAUST AND INTAKE VENTS. HRV INTAKE TO BE A MIN. OF 1830mm (6'-0") FROM ALL EXHAUST TERMINALS. REFER TO GAS UTILIZATION CODE.

33. DIRECT VENTING GAS FIREPLACE VENT
DIRECT VENT GAS FIREPLACE. VENT TO BE A MINIMUM 300mm (12") FROM ANY OPENING AND ABOVE FIN. GRADE. REFER TO GAS UTILIZATION CODE.

34. JOIST STRAPPING AND BRIDGING (SEE OBC. 9.23.9.4)
16mm (5/8") T & G SUBFLOOR ON WOOD FLOOR JOISTS. FOR CERAMIC TILE APPLICATION (* SEE OBC 9.30.6. *) 6mm (1/4") PANEL TYPE UNDERLAY UNDER RESILIENT & PARQUET FLOORING. (* SEE OBC 9.30.2.*)
FLOOR JOISTS WITH SPANS OVER 2100mm (6'-11") TO BE BRIDGED WITH 38x38 (2"x2") CROSS BRACING OR SOLID BLOCKING @ 2100mm (6'-11") O.C. MAX. AND WHERE SPECIFIED BY JOIST TABLES A-1 OR A-2 STRAPPING SHALL BE 19x64 (1"x3") @ 2100mm (6'-11") O.C. UNLESS A PANEL TYPE CEILING FINISH IS APPLIED. (* SEE OBC 9.23.9.4. *)

35. EXPOSED BUILDING FACE –OBC. 9.10.15.
EXTERIOR WALLS TO HAVE A FIRE RESISTANCE RATING OF NOT LESS THAN 45 min. WHERE LIMITING DISTANCE (LD) IS LESS THAN 1.2M (3'-11"). WHERE THE LD IS LESS THAN 600mm (1'-11") THE EXPOSING FACE SHALL BE CLAD IN NON-COMBUSTIBLE MATERIAL. SEE ELEVATIONS FOR ADDITIONAL NOTES.

36. COLD CELLAR PORCH SLAB (OBC 9.39.)
FOR MAX. 2500 mm (8'-2") PORCH DEPTH (SHORTEST DIM.), 125mm (4 7/8") 32MPa (4640psi) CONC. SLAB WITH 5-8% AIR ENTRAINMENT. REINF. WITH 10M BARS @ 200mm (7 7/8") O.C. EACH WAY IN BOTTOM THIRD OF SLAB, 600x600 (23 5/8"x 23 5/8") 10M DOWELS @ 600mm (23 5/8") O.C., ANCHORED IN PERIMETER FDTN. WALLS. SLOPE SLAB MIN. 1.0% FROM DOOR. SLAB TO HAVE MIN 75mm (3") BEARING ON FDTN. WALLS. PROVIDE (L1) LINTELS OVER CELLAR DOOR AND WITH 100mm (4") END BEARING.

37. BRICK CHECK
THE FDTN. WALL SHALL NOT BE REDUCED TO LESS THAN 90mm (3-1/2") THICK TO A MAX. DEPTH OF 660mm (26") AND SHALL BE TIED TO THE FACING MATERIAL WITH METAL TIES SPACED 200mm (8") O.C. VERTICALLY AND 900mm (36") O.C. HORIZONTALLY. FILL SPACE BETWEEN WALL AND FACING SOLID WITH MORTAR.

38. CONVENTIONAL ROOF FRAMING (2.0Kpa. SNOW LOAD)
38x140 (2"x6") RAFTERS @ 406mm (16"O.C.) FOR MAX 11'-7" SPAN, 38x184 (2"x8") RIDGE BOARD. 38x89 (2"x4") COLLAR TIES AT MIDSPANS. CEILING JOISTS TO BE 38x89 (2"x4") @ 406mm (16") O.C. FOR MAX. 2830mm (9'-3") SPAN & 38x140 (2"x6") @ 406 (16") O.C. FOR MAX. 4450mm (14'-7") SPAN.
RAFTERS FOR BUILT-UP ROOF TO BE 38x89 (2"x4") @ 610mm (24") O.C. WITH A 38x89 (2"x4") CENTRE POST TO THE TRUSS BELOW, LATERALLY BRACED @ 1800mm (6'-0") O.C. VERTICALLY.

39. TWO STOREY VOLUME SPACES
-FOR A MAXIMUM 5490 mm (18'-0") HEIGHT AND MAXIMUM SUPPORTED ROOF TRUSS LENGTH OF 6.0m, PROVIDE 2-38x140 (2-2"x6") SPR.#2 CONTIN. STUDS @ 305mm (12") O.C. (TRIPLE UP AT EVERY THIRD DOUBLE STUD FOR BRICK WALLS) C/W 9.5 (3/8") THICK EXT. PLYWOOD SHEATHING. PROVIDE SOLID WOOD BLOCKING BETWEEN WOOD STUDS @ 1220 mm (4'-0") O.C. VERTICALLY. -FOR WALLS WITH HORIZ. DISTANCES NOT EXCEEDING 2900 mm (9'-6"), PROVIDE 38x140 (2"x6") STUDS @ 406 (16") O.C. WITH CONTINUOUS 2-38x140 (2-2"x6")TOP PLATES + 1-38x140 (1-2"x6") BOTTOM PLATE & MINIMUM OF 3-38x184 (3-2"x8") CONT. HEADER AT GRND. CEILING LEVEL TOE-NAILED & GLUED AT TOP, BOTTOM PLATES AND HEADERS.

● **40. EXPOSED FLOOR TO EXTERIOR (SB-12-TABLE 3.1.1.2.A)**
PROVIDE RSI 5.46 (R31) INSULATION, APPROVED VAPOUR BARRIER AND CONTINUOUS AIR BARRIER, FINISHED SOFFIT.

41. PARTYWALLS
TYPICAL 1 HOUR RATED PARTYWALL.
REFER TO DETAILS FOR TYPE AND SPECIFICATIONS.

42. EXTERIOR WALLS FOR WALK-OUT CONDITIONS
THE EXTERIOR BASEMENT STUD WALL TO BE 38x140 (2"x6") STUDS @ 406mm (16") o.c. OR 38x89 (2"x4") STUDS @ 305mm (12") o.c.

WINDOWS:
1) MINIMUM BEDROOM WINDOW –OBC. 9.9.10.1–
AT LEAST ONE BEDROOM WINDOW ON A GIVEN FLOOR IS TO HAVE MIN. 0.35m2 UNOBSTRUCTED GLAZED OR OPENABLE AREA WITH MIN. CLEAR WIDTH OF 380 mm (1'-3").
2) WINDOW GUARDS –OBC. 9.8.8.1.(6)
A GUARD IS REQUIRED WHERE THE TOP OF THE WINDOW SILL IS LOCATED LESS THAN 480mm (1'-7") ABOVE FIN. FLOOR AND THE DISTANCE FROM THE FIN. FLOOR TO THE ADJACENT GRADE IS GREATER THAN 1800mm (5'-11")
3) WINDOW WELLS –OBC. 9.14.6.3.
ALL WINDOW WELLS TO DRAIN TO FOOTING LEVEL PER OBC 9.14.6.3. CHECK WITH THE LOCAL AUTHORITY.
4) EXTERIOR WINDOWS ●
ALL EXTERIOR WINDOWS TO COMPLY WITH REQUIREMENTS STATED IN O.B.C.-DIV. B-9.7.1.7. & SB12-3.1.1.9.

DOORS:
1) EXTERIOR DOORS– THERMAL RESISTANCE ●
ALL EXTERIOR DOORS TO COMPLY WITH THERMAL RESISTANCE AS STATED IN O.B.C. SB-12-3.1.1.9.
2) EXTERIOR SLIDING GLASS DOORS– THERMAL RESISTANCE
ALL EXTERIOR SLIDING GLASS DOORS TO COMPLY WITH THERMAL PERFORMANCE AS STATED IN O.B.C. SB-12-3.1.1.9.

GENERAL:
1) MECHANICAL VENTILATION IS REQUIRED TO PROVIDE 0.3 AIR CHANGES PER HOUR AVERAGED OVER 24 HOURS. SEE MECHANICAL DRAWINGS.
2) ALL DOWNSPOUTS TO DRAIN AWAY FROM THE BUILDING AS PER OBC 9.26.18.2. AND MUNICIPAL STANDARDS.
3) STUD WALL REINFORCEMENT FOR FUTURE GRAB BARS IN MAIN BATHROOM
REINFORCEMENT OF STUD WALLS SHALL BE INSTALLED ADJACENT TO WATER CLOSETS AND SHOWER OR BATHTUB IN MAIN BATHROOM. REFER TO OBC. 9.5.2.3, 3.8.3.8.(1)(d) & 3.8.3.13.(1)(f).
4) AIR BARRIERS
ALL AIR BARRIER SYSTEMS TO COMPLY WITH O.B.C.-DIV. B, 9.25.3.

LUMBER:
1) ALL LUMBER SHALL BE SPRUCE NO.2 GRADE, UNLESS NOTED OTHERWISE.
2) LUMBER EXPOSED TO THE EXTERIOR TO BE SPRUCE No.2 GRADE PRESSURE TREATED OR CEDAR, UNLESS NOTED OTHERWISE.
3) ALL LAMINATED VENEER LUMBER (L.V.L.) BEAMS, GIRDER TRUSSES, AND METAL HANGER CONNECTIONS SUPPORTING ROOF FRAMING TO BE DESIGNED & CERTIFIED BY TRUSS MANUF.
4) LVL BEAMS SHALL BE 2.0E-2950Fb MIN.. NAIL EACH PLY OF LVL WITH 89mm (3 1/2") LONG COMMON WIRE NAILS @ 300mm (12") O.C. STAGGERED IN 2 ROWS FOR 184,240 & 300mm (7 1/4",9 1/2", 11 7/8") DEPTHS AND STAGGERED IN 3 ROWS FOR GREATER DEPTHS AND FOR 4 PLY MEMBERS ADD 13mm (1/2") DIA. GALV. BOLTS BOLTED AT MID-DEPTH OF BEAM @ 915mm (3'-0") O.C.
5) PROVIDE TOP MOUNT BEAM HANGERS TYPE "SCL" MANUFACTURED BY SIMPSON STRONG-TIE OR EQUAL FOR ALL LVL BEAM TO BEAM CONNECTIONS UNLESS NOTED OTHERWISE.
6) JOIST HANGERS: PROVIDE METAL HANGERS FOR ALL JOISTS AND BUILT-UP WOOD MEMBERS INTERSECTING FLUSH BUILT-UP WOOD MEMBERS.
7) WOOD FRAMING NOT TREATED WITH A WOOD PRESERVATIVE, IN CONTACT WITH CONCRETE, SHALL BE SEPARATED FROM THE CONCRETE BY AT LEAST 2 mil. POLYETHYLENE FILM, No. 50 (45lbs.) ROLL ROOFING OR OTHER DAMPPROOFING MATERIAL, EXCEPT WHERE THE WOOD MEMBER IS AT LEAST 150mm (6") ABOVE THE GROUND.

STEEL:
1) STRUCTURAL STEEL SHALL CONFORM TO CAN/CSA-G40.21 GRADE 350W. "STRUCTURAL QUALITY". PER OBC. 8-9.23.4.3.
2) REINFORCING STEEL SHALL CONFORM TO CSA-G30-18M GRADE 400R.

STUCCO:
1) ALL STUCCO WALLS TO HAVE A MINIMUM 10mm AIR SPACE BEHIND THE CLADDING WITH POSITIVE DRAINAGE TO THE EXTERIOR. THE EXTERIOR SHEATHING MUST NOT BE GYPSUM BASED. ALL STUCCO TO BE INSTALLED AS PER MANUFACTURERS SPECIFICATIONS.

OCT 04 2017

THE MINIMAL THERMAL PERFORMANCE OF BUILDING ENVELOPE AND EQUIPMENT SHALL CONFORM TO THE FOLLOWING SB-12 COMPLIANCE PACKAGE AS PER OBC SUPPLEMENTARY STANDARD SB-12, SECTION 3.1.1.1. ●

USE SB-12 COMPLIANCE PACKAGE (A4):

COMPONENT	A4	Notes:
Ceiling with Attic Space Minimum RSI (R) value	10.56 (R60)	R20 at inner face of exterior walls
Ceiling without Attic Space Minimum RSI (R) value	5.46 (R31)	BATT or SPRAY
Exposed Floor Minimum RSI (R) value	5.46 (R31)	BATT or SPRAY
Walls Above Grade Minimum RSI (R) value	3.87+0.88ci (R22+5ci)	6" R22 BATT + R5ci RIGID INSUL.
Basement Walls Minimum RSI (R) value	3.52ci (R20ci)	OPTION TO USE R12+R10ci.
Edge of Below Grade Slab <600mm below grade Minimum RSI (R) value	1.76 (R10)	RIGID INSUL
Windows & Sliding glass Doors Maximum U-value	1.6U (0.28)	
Skylights Maximum U-value	2.8U (0.49)	
Space Heating Equipment Minimum AFUE	90% Min.	Combination space heating & hot water system
Hot Water Heater Minimum EF	0.80	
HRV Minimum Efficiency	75%	–
Drain Water Heat Recovery Unit (DWHR)	Minimum 1 OR Maximum 2 Required. Dependent on number of showers installed. Refer to SB12-3.1.1.12 for information	

ci– Denotes Continuous Insulation without framing interruption.
HVAC systems using Combined space heating & hot water systems may use A4 if above is met.

LEGEND

CLASS 'B' VENT	EXHAUST FAN TO EXTERIOR
DUPLEX OUTLET (12" ABOVE SURFACE)	DUPLEX OUTLET (HEIGHT A.F.F)
WEATHERPROOF DUPLEX OUTLET	GFI DUPLEX OUTLET (HEIGHT A.F.F)
POT LIGHT	HEAVY DUTY OUTLET (220 volt)
LIGHT FIXTURE (PULL CHAIN)	LIGHT FIXTURE (CEILING MOUNTED)
SWITCH	LIGHT FIXTURE (WALL MOUNTED)
FLOOR DRAIN	HOSE BIB (NON-FREEZE)
S.A./COD. COMBINED SMOKE ALARM AND CARBON MONOXIDE DETECTOR/ALARM	
DJ — DOUBLE JOIST	TJ — TRIPLE JOIST
SJ — SINGLE JOIST	LVL — LAMINATED VENEER LUMBER
PL POINT LOAD FROM ABOVE	
P.T. PRESSURE TREATED LUMBER	
G.T. GIRDER TRUSS BY ROOF TRUSS MANUF.	
F.A. FLAT ARCH	
C.A. CURVED ARCH	
M.C. MEDICINE CABINET	
CONC. BLOCK WALL	
SPECIAL WALL CONSTRUCTION SEE NOTE ON PLANS	
SB SOLID WOOD BEARING (SPRUCE No. 2) SOLID BEARING TO BE AS WIDE AS SUPPORTED MEMBER OR AS DIRECTED BY STRUCTURAL ENGINEER. SOLID BEARING TO BE MINIMUM 2 PIECES.	
SBFA SOLID WOOD BEARING TO MATCH FROM ABOVE	

NOTE: SOLID BEARING TO BE AT LEAST AS WIDE AS THE SUPPORTED LINTEL/BEAM

SMOKE ALARM (REFER TO OBC 9.10.19) ●
PROVIDE 1 PER FLOOR, NEAR THE STAIRS CONNECTING THE FLOOR LEVEL AND ALSO 1 IN EACH BEDROOM NEAR HALL DOOR. ALARMS TO BE CONNECTED TO AN ELECTRICAL CIRCUIT AND INTERCONNECTED TO ACTIVATE ALL ALARMS IF 1 SOUNDS. BATTERY BACK-UP REQUIRED. SMOKE ALARMS TO INCORPORATE VISUAL SIGNALLING COMPONENT (9.10.19.3.(3)).

CARBON MONOXIDE ALARM (OBC 9.33.4.)
WHERE A FUEL-BURNING APPLIANCE IS INSTALLED IN A DWELLING UNIT, A CARBON MONOXIDE DETECTOR CONFORMING TO CAN./CGA-6.19,CSA 6.19 OR UL2034 SHALL BE INSTALLED ADJACENT TO EACH SLEEPING AREA. CARBON MONOXIDE DETECTOR(S) SHALL BE PERMANENTLY WIRED SO THAT ITS ACTIVATION WILL ACTIVATE ALL CARBON MONOXIDE DETECTORS AND BE EQUIPPED WITH AN ALARM THAT IS AUDIBLE WITHIN BEDROOMS WHEN THE INTERVENING DOORS ARE CLOSED.

SOIL GAS CONTROL (OBC 9.13.4.1 & 9.13.4.2)
PROVIDE CONSTRUCTION TO PREVENT LEAKAGE OF SOIL GAS INTO THE BUILDING IF REQUIRED.

DRAIN WATER HEAT RECOVERY UNIT (DWHR)
PER SB12-3.1.1.12., A DRAIN WATER HEAT RECOVERY (DWHR) UNIT SHALL BE INSTALLED IN EACH DWELLING UNIT TO RECEIVE DRAIN WATER FROM ALL SHOWERS OR FROM AT LEAST TWO SHOWERS WHERE THERE ARE TWO OR MORE SHOWERS IN THE DWELLING UNIT. DOES NOT APPLY IF THERE ARE NO SHOWERS OR NO STOREY BENEATH ANY OF THE SHOWERS.

2012 OBC. – ON. REG. 332/12
THESE DRAWINGS HAVE BEEN DESIGNED TO COMPLY WITH THE 2012 OBC AND ALL AMENDMENTS AS OF JULY 2017.

CONTRACTOR MUST VERIFY ALL DIMENSIONS ON THE JOB AND REPORT ANY DISCREPANCY TO THE VA3 DESIGN BEFORE PROCEEDING WITH THE WORK.
ALL DRAWINGS AND SPECIFICATIONS ARE INSTRUMENTS OF SERVICE AND THE PROPERTY OF THE DESIGNER WHICH MUST BE RETURNED AT THE COMPLETION OF THE WORK.
ALL DRAWINGS TO BE USED FOR CONSTRUCTION ONLY AFTER BUILDING PERMIT HAS BEEN ISSUED.

SB-12 COMPLIANCE PACKAGE 'A4' TO BE USED FOR THIS MODEL.
The minimum thermal performance of building envelope and equipment shall conform to the selected package unless otherwise noted.

REVISION: ● ONT. REG. 332/12-2012 OBC
Amendment O. Reg. 368/13
MR-16-S-26 NOV. 28, 2016

PACKAGE 'A4'

no.	description	date	by
9	.	.	.
8	.	.	.
7	.	.	.
6	.	.	.
5	.	.	.
4	.	.	.
3	.	.	.
2	ISSUED FOR PERMIT.	SEP. 29/17	GW
1	ISSUED FOR PRICING.	AUG. 22/17	GW

The undersigned has reviewed and takes responsibility for this design and has the qualifications and meets the requirements set out in the Ontario Building Code to be a Designer.
qualification information
Richard Vink (signature) 24488
name signature BCIN
registration information
VA3 Design Inc. 42658

Contractor must verify all dimensions on the job and report any discrepancy to the Designer before proceeding with the work. All drawings and specifications are instruments of service and the property of the Designer which must be returned at the completion of the work. Drawings are not to be scaled.

VA3 DESIGN
255 Consumers Rd Suite 120
Toronto ON M2J 1R4
t 416.630.2255 f 416.630.4782
va3design.com

Greenpark.

DEWBERRY
–

project name	municipality	project no.
RUSSELL GARDENS PH.2	WATERDOWN,ON.	16036

TYPICAL CONSTRUCTION NOTES — drawing no. 1

date	drawn by	checked by	scale	file name
AUG. 2017	GW	GW	3/16" = 1'-0"	GP-14X18-NOTES-2017-VA3-PKG-A4-16036

GREG – F:\LIBRARY\LIBRARY.ML\2017 OBC CONSTRUCTION NOTES\GREENPARK\GP-14x18-NOTES-2017-VA3-PKG-A4-16036.dwg – Fri – Sep 29 2017 – 2:17 PM

All drawings specifications, related documents and design are the copyright property of VA3 DESIGN. Reproduction of this property in whole or in part is strictly prohibited without VA3 DESIGN's written permission.

REFER TO STANDARD WALL SECTION SHEET FOR FURTHER INFORMATION ON WALL CONSTRUCTION.

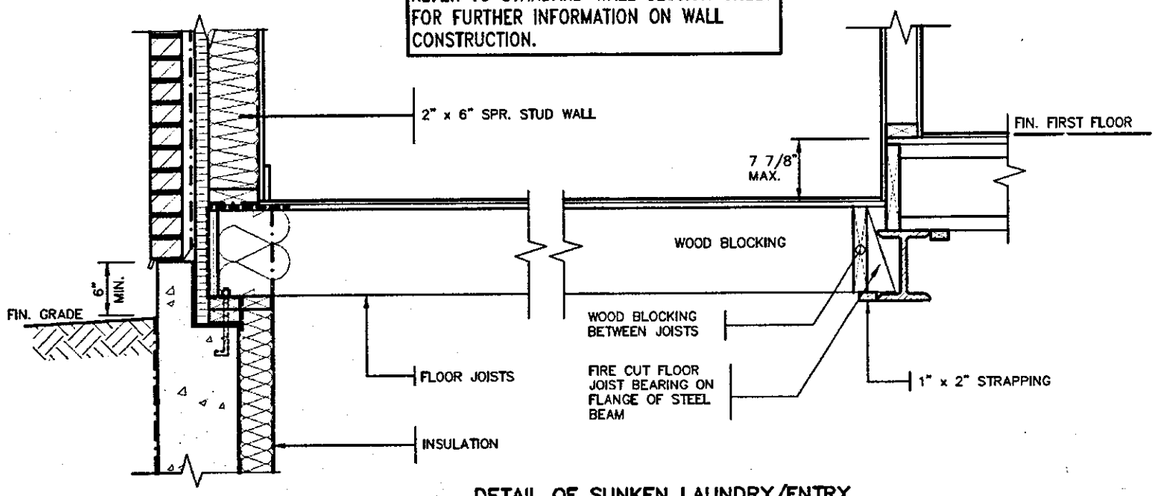

DETAIL OF SUNKEN LAUNDRY/ENTRY
(ONE RISER)

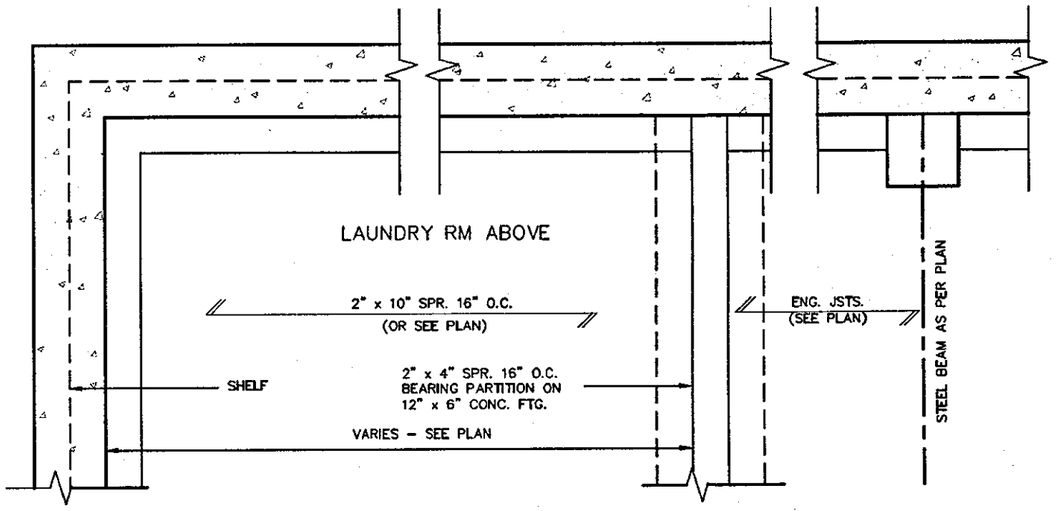

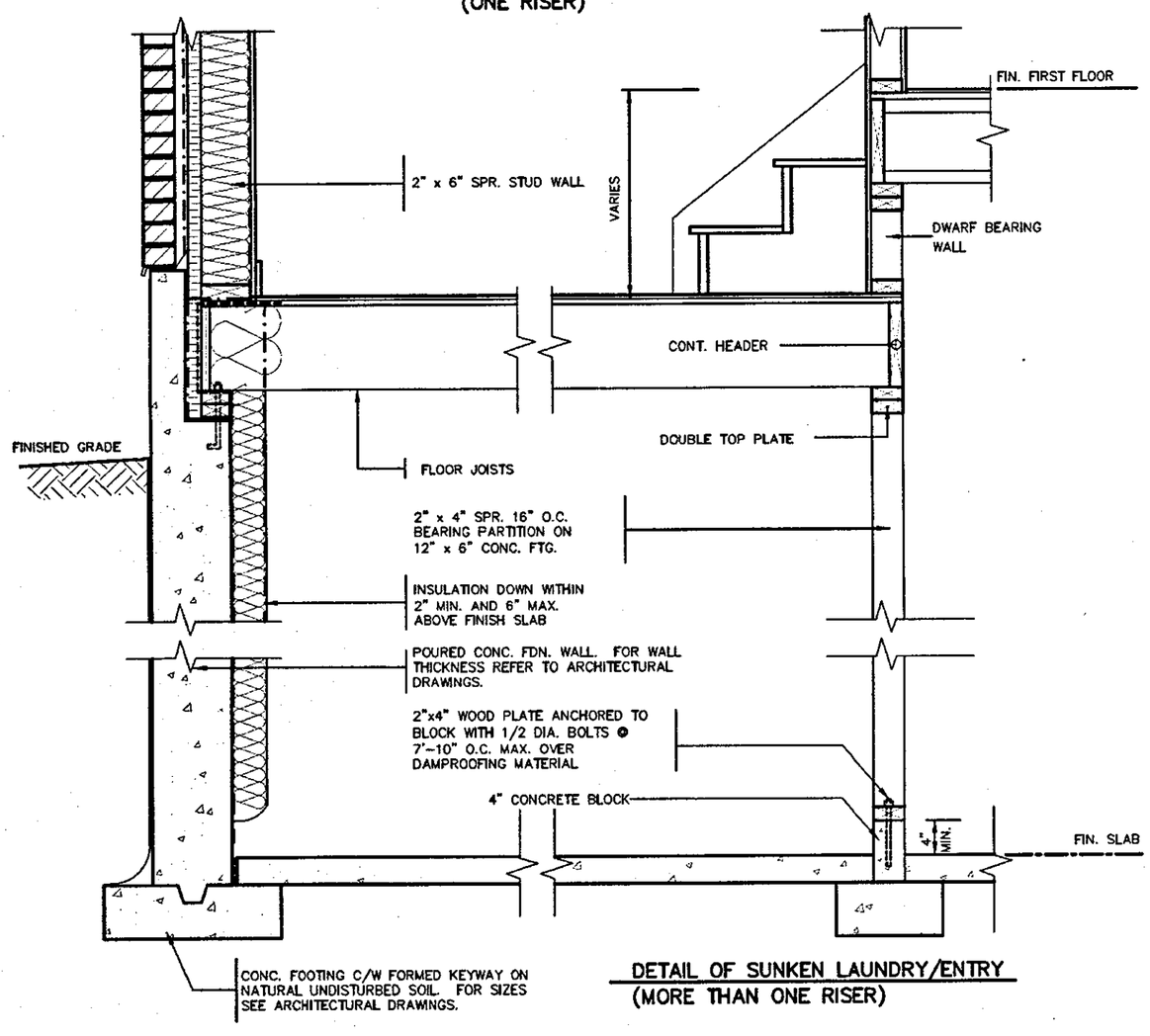

DETAIL OF SUNKEN LAUNDRY/ENTRY
(MORE THAN ONE RISER)

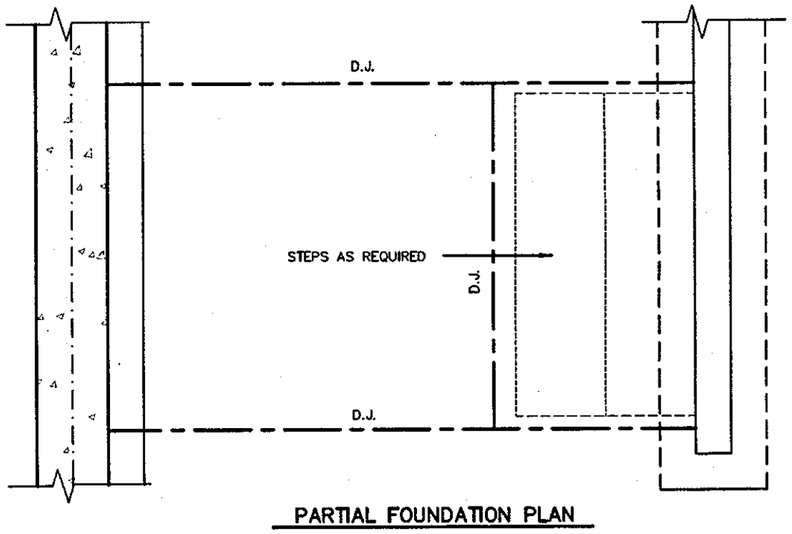

PARTIAL FOUNDATION PLAN

REGISTERED PROFESSIONAL ENGINEER
B. MARINKOVIC
PROVINCE OF ONTARIO

STRUDET INC.
FOR STRUCTURE ONLY

OCT 0 4 2017

2012 CODE COMPLIANCE PACKAGE A4

no.	description	date	by
9			
8			
7			
6			
5			
4			
3			
2	ISSUED FOR PERMIT.	SEP. 29/17	GW
1	ISSUED FOR PRICING.	AUG. 22/17	GW

The undersigned has reviewed and takes responsibility for this design and has the qualifications and meets the requirements set out in the Ontario Building Code to be a Designer.
qualification information: Richard Vink, signature: R Vink, BCIN: 24488
registration information: VA3 Design Inc. 42658

Contractor must verify all dimensions on the job and report any discrepancy to the Designer before proceeding with the work. All drawings and specifications are instruments of service and the property of the Designer which must be returned at the completion of the work. Drawings are not to be scaled.

VA3 DESIGN
300A Wilson Avenue
Toronto ON M3H 1S8
t 416.630.2255 f 416.630.4782
va3design.com

Greenpark

DEWBERRY
-

project name: RUSSELL GARDENS PH.2
municipality: WATERDOWN
project no.: 16036
date: AUG 2017
SUNKEN FLOOR DETAILS
drawn by: GW
checked by: -
scale: Not to Scale
file name: 16036-GP-STD_DETAILS_A4
drawing no.: 2
DWG - H:\ARCHIVE\BORING\2016\16036 GHE\DETAILS\16036-GP-STD_DETAILS_A4.dwg - Fri - Sep 29, 2017 - 2:29 PM

All drawings specifications, related documents and design are the copyright property of VA3 DESIGN. Reproduction of this property in whole or in part is strictly prohibited without VA3 DESIGN's written permission.

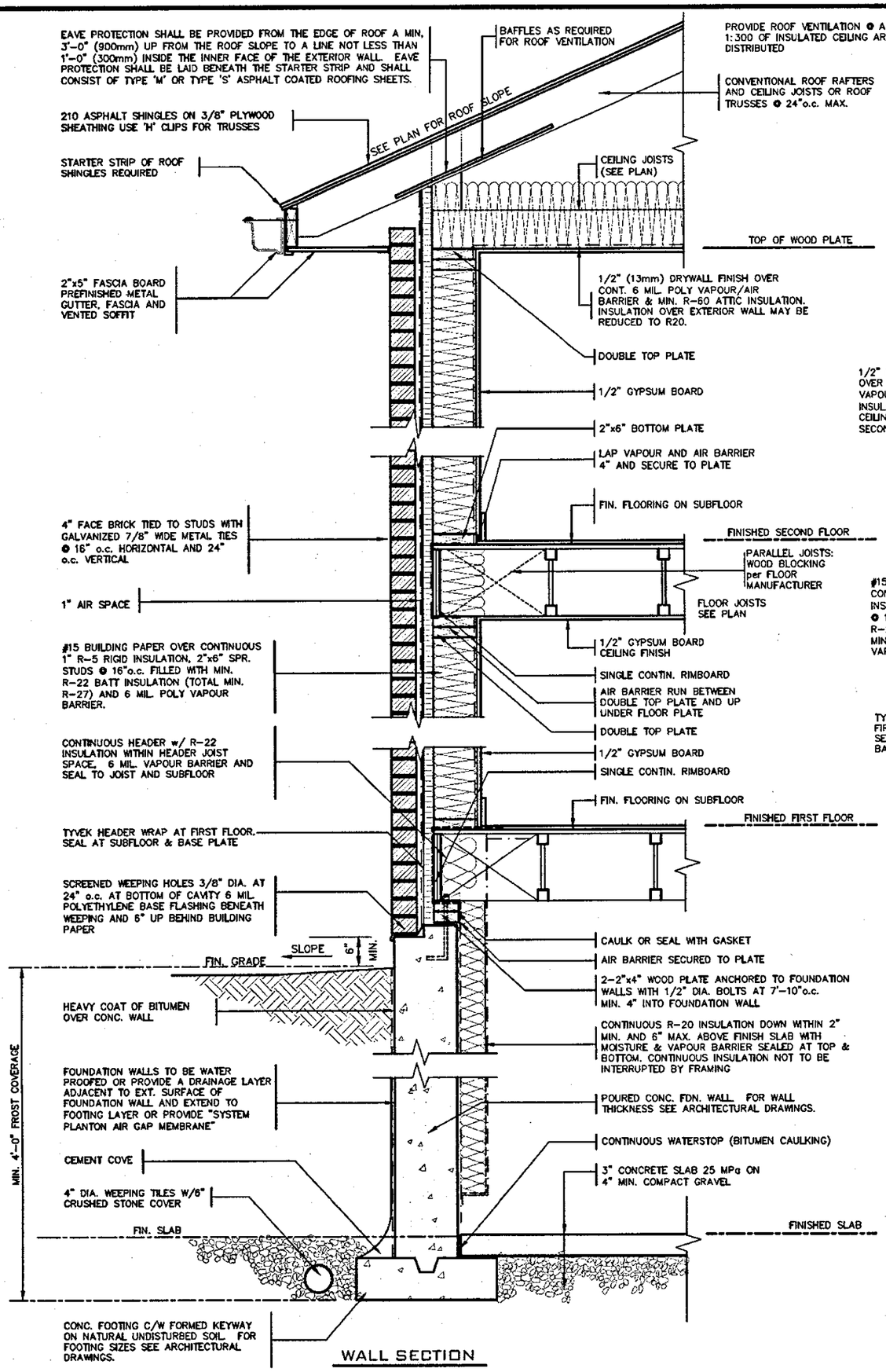

WALL SECTION

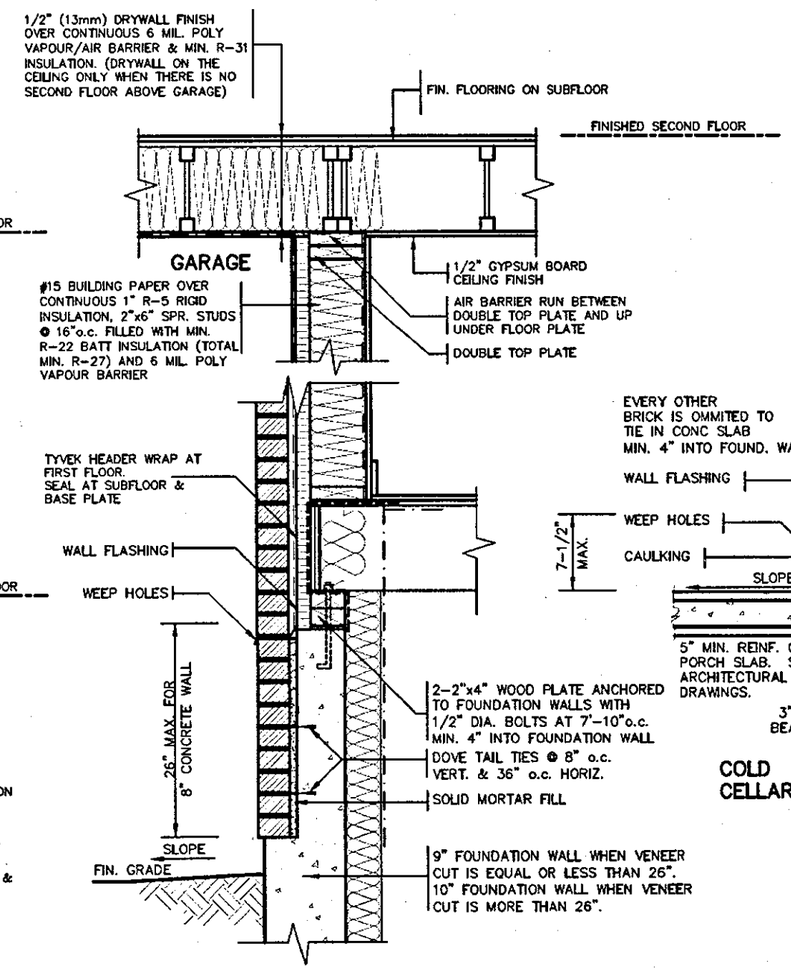

DETAIL FOR CONCRETE VENEER DROPPED GRADE

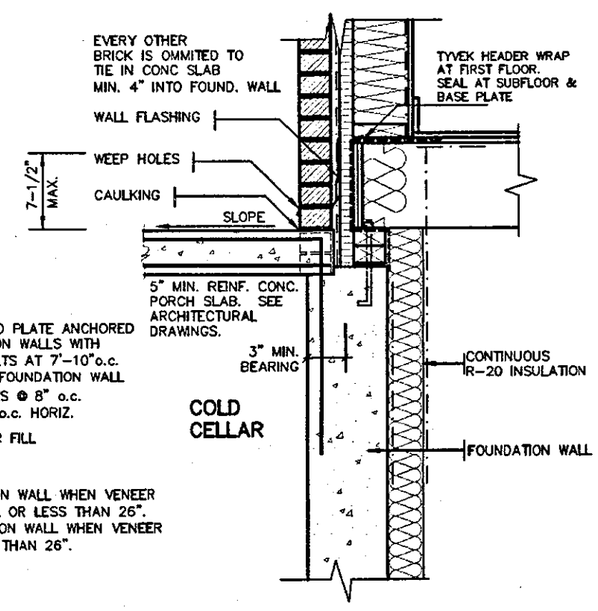

DETAIL FOR COLD CELLAR PORCH SLAB

REGISTERED PROFESSIONAL ENGINEER
R. B. MARINKOVIC
PROVINCE OF ONTARIO

STRUDET INC.
FOR STRUCTURE ONLY

OCT 0 4 2017

2012 CODE COMPLIANCE PACKAGE A4

no.	description	date	by
9	.	.	.
8	.	.	.
7	.	.	.
6	.	.	.
5	.	.	.
4	.	.	.
3	.	.	.
2	ISSUED FOR PERMIT.	SEP. 29/17	GW
1	ISSUED FOR PRICING.	AUG. 22/17	GW

The undersigned has reviewed and takes responsibility for this design and has the qualifications and meets the requirements set out in the Ontario Building Code to be a Designer.

qualification information
name: Richard Vink — signature — 24488
registration information
VA3 Design Inc. — BCIN 42658

Contractor must verify all dimensions on the job and report any discrepancy to the Designer before proceeding with the work. All drawings and specifications are instruments of service and the property of the Designer which must be returned at the completion of the work. Drawings are not to be scaled.

VA3 DESIGN
300A Wilson Avenue
Toronto ON M3H 1S8
t 416.630.2255 f 416.630.4782
va3design.com

Greenpark

DEWBERRY
-

project name: RUSSELL GARDENS PH.2
municipality: WATERDOWN
project no.: 16036
date: AUG 2017
2"x6" BRICK VENEER SECTIONS
drawn by: GW
checked by: -
scale: Not to Scale
file name: 16036-GP-STD_DETAILS_A4
drawing no.: 3

DWG - H:\ARCHIVE\WORKING\2016\16036.GPE\DETAILS\16036-GP-STD_DETAILS_A4.dwg - Fri - Sep 29 2017 - 2:29 PM

All drawings specifications, related documents and design are the copyright property of VA3 DESIGN. Reproduction of this property in whole or in part is strictly prohibited without VA3 DESIGN's written permission.

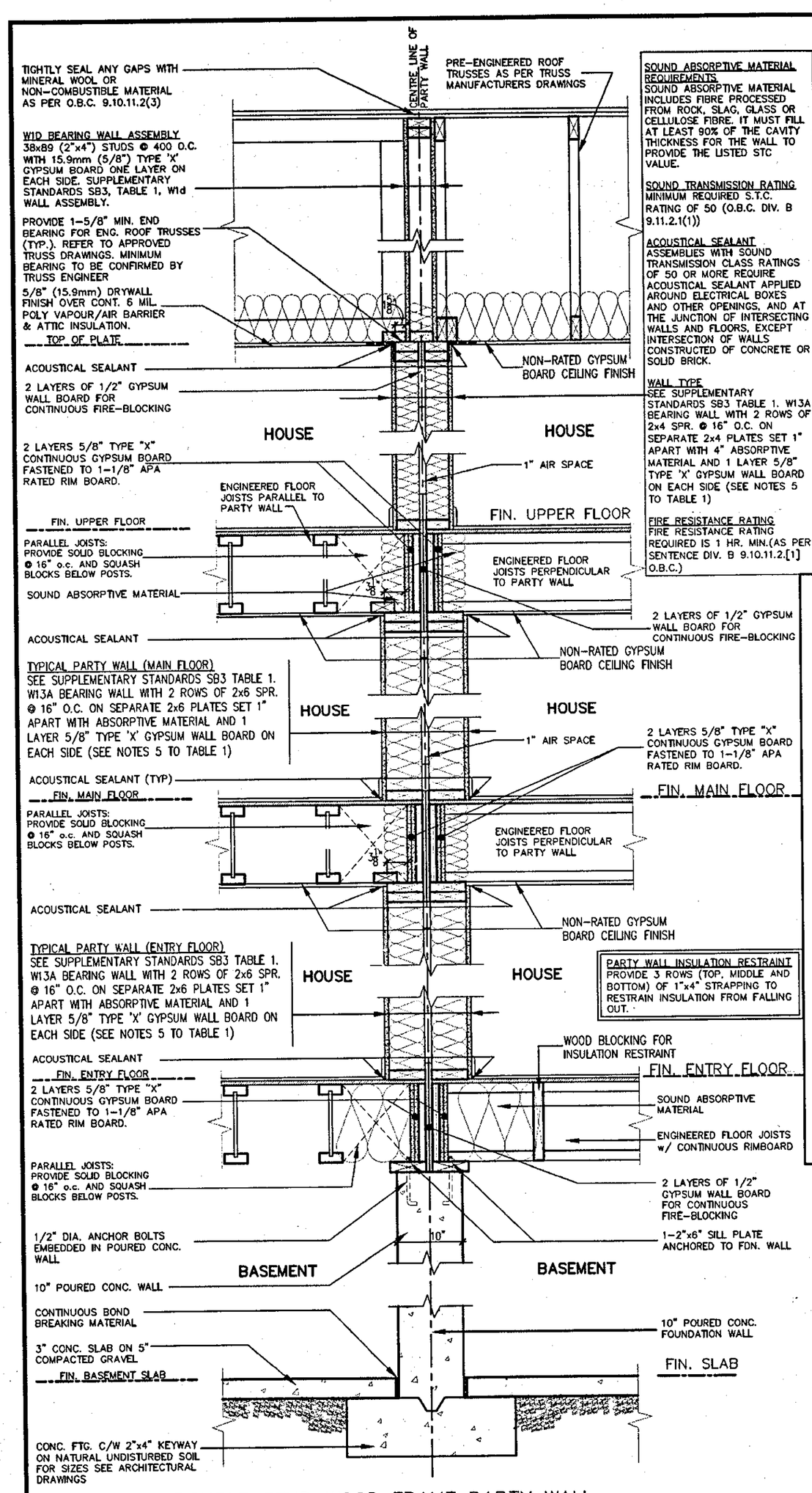

TYPICAL DOUBLE STUD WOOD FRAME PARTY WALL
JOISTS/TRUSSES PERPENDICULAR OR PARALLEL TO PARTY WALL – PAIRED HOUSE (Not to Scale)

SOUND ABSORPTIVE MATERIAL REQUIREMENTS
SOUND ABSORPTIVE MATERIAL INCLUDES FIBRE PROCESSED FROM ROCK, SLAG, GLASS OR CELLULOSE FIBRE. IT MUST FILL AT LEAST 90% OF THE CAVITY THICKNESS FOR THE WALL TO PROVIDE THE LISTED STC VALUE.

SOUND TRANSMISSION RATING
MINIMUM REQUIRED S.T.C. RATING OF 50 (O.B.C. DIV. B 9.11.2.1(1))

ACOUSTICAL SEALANT
ASSEMBLIES WITH SOUND TRANSMISSION CLASS RATINGS OF 50 OR MORE REQUIRE ACOUSTICAL SEALANT APPLIED AROUND ELECTRICAL BOXES AND OTHER OPENINGS, AND AT THE JUNCTION OF INTERSECTING WALLS AND FLOORS, EXCEPT INTERSECTION OF WALLS CONSTRUCTED OF CONCRETE OR SOLID BRICK.

WALL TYPE
SEE SUPPLEMENTARY STANDARDS SB3 TABLE 1. W13A BEARING WALL WITH 2 ROWS OF 2x4 SPR. @ 16" O.C. ON SEPARATE 2x4 PLATES SET 1" APART WITH 4" ABSORPTIVE MATERIAL AND 1 LAYER 5/8" TYPE 'X' GYPSUM WALL BOARD ON EACH SIDE (SEE NOTES 5 TO TABLE 1)

FIRE RESISTANCE RATING
FIRE RESISTANCE RATING REQUIRED IS 1 HR. MIN.(AS PER SENTENCE DIV. B 9.10.11.2.[1] O.B.C.)

FEB 22 2018

2012 CODE COMPLIANCE PACKAGE A4

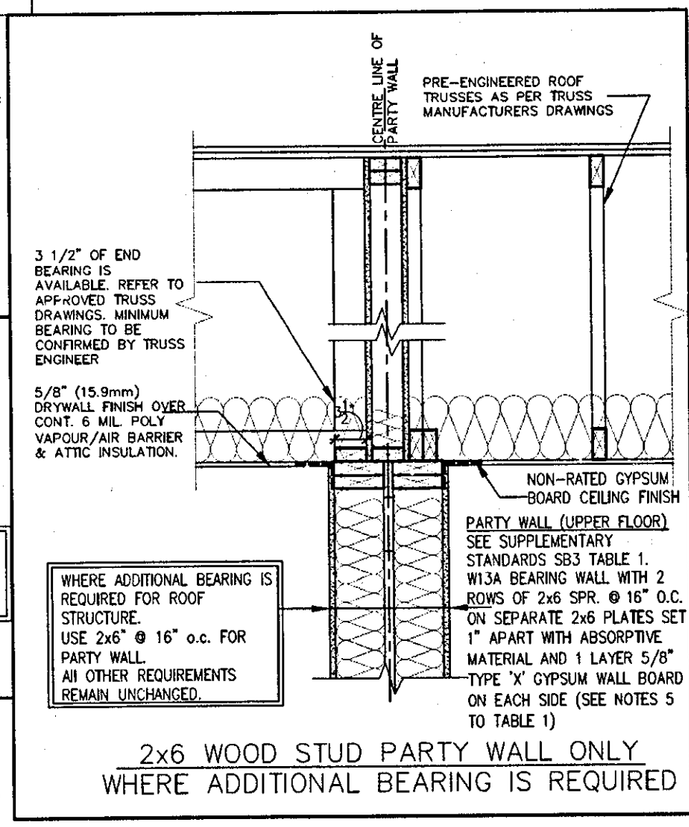

2x6 WOOD STUD PARTY WALL ONLY
WHERE ADDITIONAL BEARING IS REQUIRED

REGISTERED PROFESSIONAL ENGINEER
B. MARINKOVIC
PROVINCE OF ONTARIO
STRUDET INC.
FOR STRUCTURE ONLY

Greenpark.
project name: RUSSELL GARDENS PH.2
municipality: WATERDOWN
DEWBERRY
project no. 16036
date: AUG 2017
drawn by: CW
checked by: -
scale: As Shown
TYPICAL DOUBLE STUD PARTYWALL
16036-GP-STD_DETAILS_A4
drawing no. 4

VAS DESIGN
360A Wilson Avenue
Toronto, ON M3H 5S
t 416.630.2255 f 416.630.4782
vas3design.com

The undersigned has reviewed and takes responsibility for this design and has the qualifications and meets the requirements set out in the Ontario Building Code to be a Designer.
qualification information: Richard Vlak
signature
registration information: VAS Design Inc.
BCIN 24488
42658

Contractor must verify all dimensions on the job and report any discrepancies to the Designer before proceeding with the work. All drawings and specifications are instruments of service and the property of the Designer which must be returned at the completion of the work. Drawings are not to be scaled.

no.	description	date	by
9	-	-	-
8	-	-	-
7	-	-	-
6	-	-	-
5	-	-	-
4	-	-	-
3	REISSUED FOR PERMIT.	FEB. 22/18	CW
2	ISSUED FOR PERMIT.	SEP. 29/17	CW
1	ISSUED FOR PRICING.	AUG. 22/17	CW

All drawings specifications, related documents and design are the copyright property of VAS DESIGN. Reproduction of this property in whole or in part is strictly prohibited without VAS DESIGN's written permission.

SK4 (House to House)

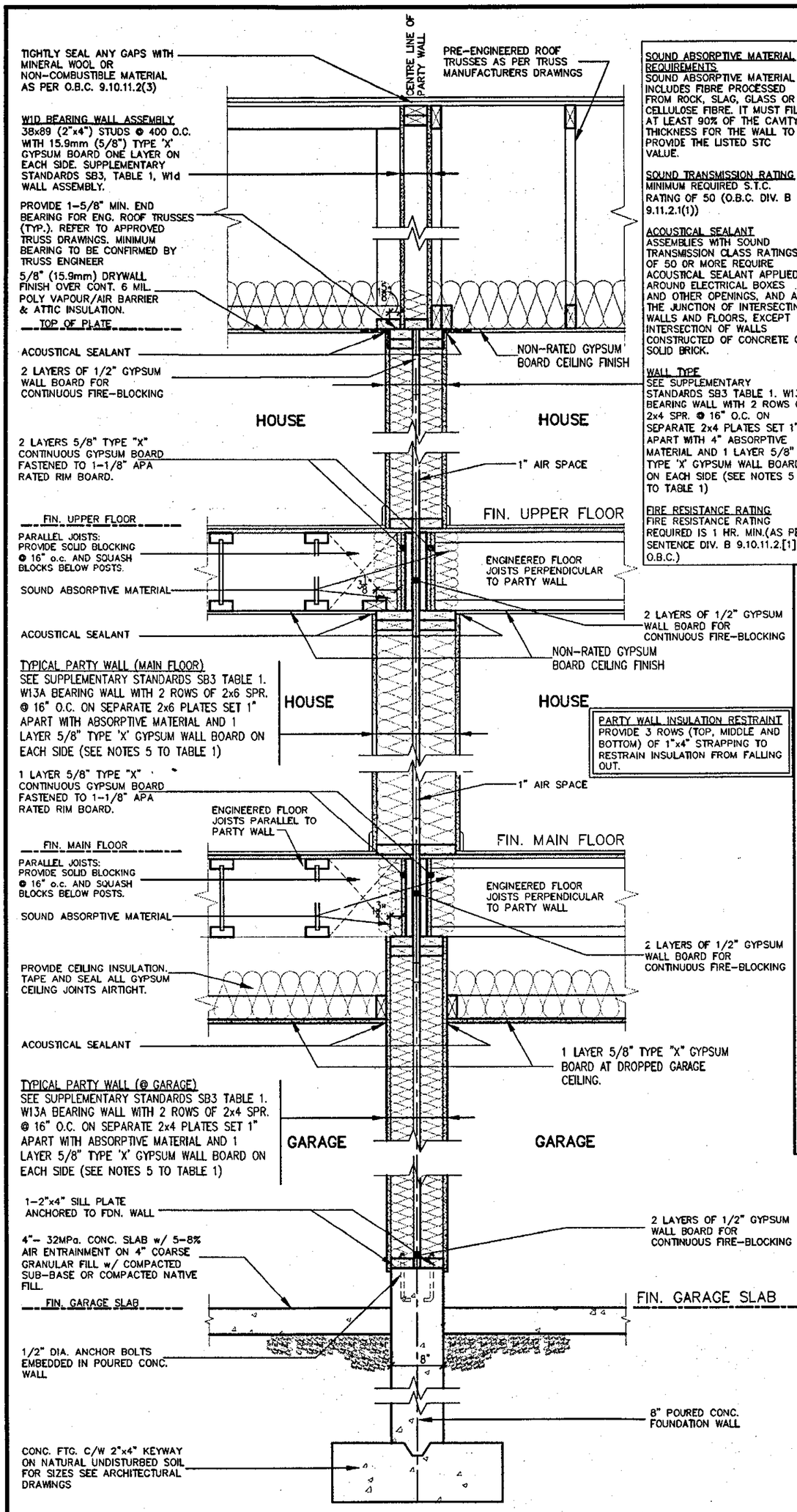

TYPICAL DOUBLE STUD WOOD FRAME PARTY WALL
JOISTS/TRUSSES PERPENDICULAR OR PARALLEL TO PARTY WALL – PAIRED GARAGES

SOUND ABSORPTIVE MATERIAL REQUIREMENTS
SOUND ABSORPTIVE MATERIAL INCLUDES FIBRE PROCESSED FROM ROCK, SLAG, GLASS OR CELLULOSE FIBRE. IT MUST FILL AT LEAST 90% OF THE CAVITY THICKNESS FOR THE WALL TO PROVIDE THE LISTED STC VALUE.

SOUND TRANSMISSION RATING
MINIMUM REQUIRED S.T.C. RATING OF 50 (O.B.C. DIV. B 9.11.2.1(1))

ACOUSTICAL SEALANT
ASSEMBLIES WITH SOUND TRANSMISSION CLASS RATINGS OF 50 OR MORE REQUIRE ACOUSTICAL SEALANT APPLIED AROUND ELECTRICAL BOXES AND OTHER OPENINGS, AND AT THE JUNCTION OF INTERSECTING WALLS AND FLOORS, EXCEPT INTERSECTION OF WALLS CONSTRUCTED OF CONCRETE OR SOLID BRICK.

WALL TYPE
SEE SUPPLEMENTARY STANDARDS SB3 TABLE 1. W13A BEARING WALL WITH 2 ROWS OF 2x4 SPR. @ 16" O.C. ON SEPARATE 2x4 PLATES SET 1" APART WITH 4" ABSORPTIVE MATERIAL AND 1 LAYER 5/8" TYPE 'X' GYPSUM WALL BOARD ON EACH SIDE (SEE NOTES 5 TO TABLE 1)

FIRE RESISTANCE RATING
FIRE RESISTANCE RATING REQUIRED IS 1 HR. MIN.(AS PER SENTENCE DIV. B 9.10.11.2.[1] O.B.C.)

FEB 22 2018

2012 CODE COMPLIANCE PACKAGE A4

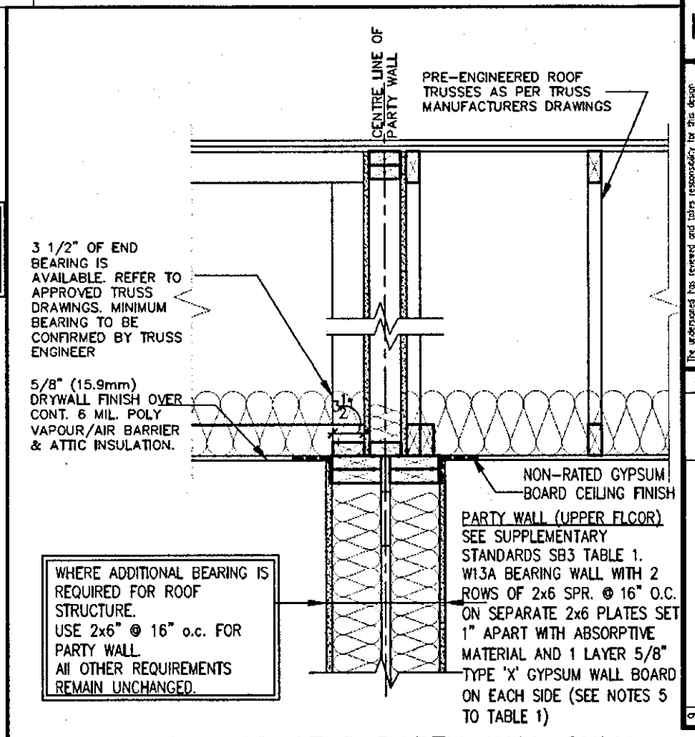

2x6 WOOD STUD PARTY WALL ONLY
WHERE ADDITIONAL BEARING IS REQUIRED

REGISTERED PROFESSIONAL ENGINEER
B. MARINKOVIC
PROVINCE OF ONTARIO
STRUDET INC.
FOR STRUCTURE ONLY

SK5 (Garage to Garage)

no.	description	date	by
9	-	-	-
8	-	-	-
7	-	-	-
6	-	-	-
5	-	-	-
4	-	-	-
3	REISSUED FOR PERMIT.	FEB. 22/18	GW
2	ISSUED FOR PERMIT.	SEP. 29/17	GW
1	ISSUED FOR PRICING.	AUG. 22/17	GW

The undersigned has reviewed and takes responsibility for this design and has the qualifications and meets the requirements set out in the Ontario Building Code to be a Designer.
qualification information — Richard Vink
signature
name — VA3 Design Inc.
registration information — BCIN 24488 — 42658

Contractor must verify all dimensions on the job and report any discrepancies to the Designer before proceeding with the work. All drawings and specifications are instruments of service and the property of the Designer which must be returned at the completion of the work. Drawings are not to be scaled.

All drawings specifications, related documents and design are the copyright property of VA3 DESIGN. Reproduction of this property in whole or in part is strictly prohibited without VA3 DESIGN's written permission.

VA3 DESIGN
300A Wilson Avenue
Toronto ON M3H 1S8
t 416.630.2235 f 416.630.4782
va3design.com

Greenpark
municipality: WATERDOWN
project name: RUSSELL GARDENS PH.2
TYPICAL DOUBLE STUD PARTYWALL
DEWBERRY
date: AUG 2017
drawn by: GW
checked by: -
scale: As Shown
file name: 16036-GP-STD_DETAILS_A4
project no. 16036
drawing no. 4a

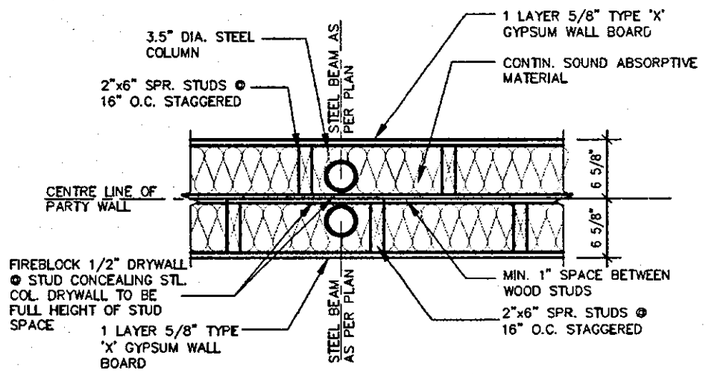

PLAN OF STEEL POST IN HOUSE/HOUSE PARTY WALL

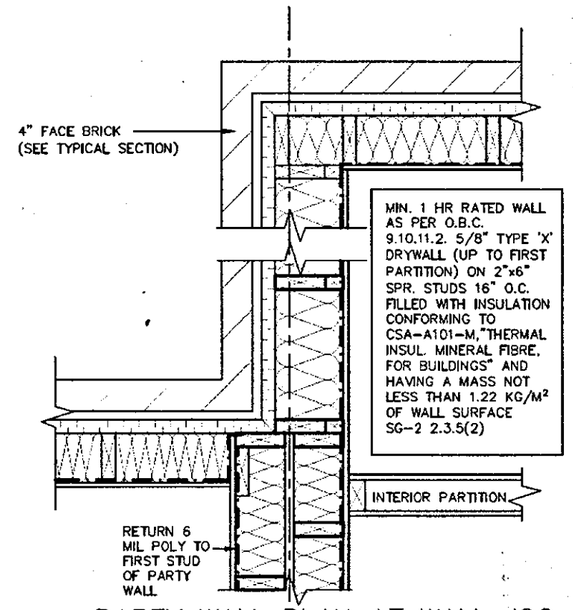

PARTY WALL PLAN AT WALL JOG

REGISTERED PROFESSIONAL ENGINEER
B. MARINKOVIC
PROVINCE OF ONTARIO

STRUDET INC.
FOR STRUCTURE ONLY

SK4 (House to House)

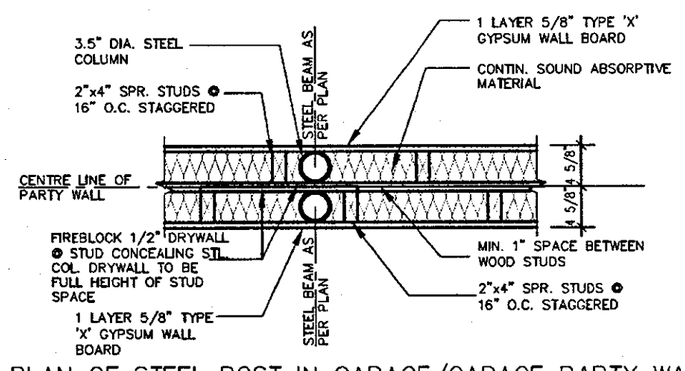

PLAN OF STEEL POST IN GARAGE/GARAGE PARTY WALL

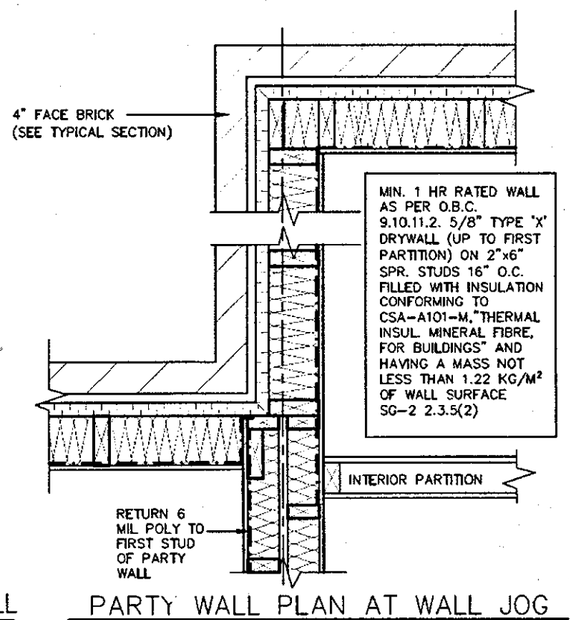

PARTY WALL PLAN AT WALL JOG

FEB 22 2018

SK5 (Garage to Garage)

2012 CODE COMPLIANCE PACKAGE A4

no.	description	date	by
9			
8			
7			
6			
5			
4			
3	REISSUED FOR PERMIT.	FEB. 22/18	GW
2	ISSUED FOR PERMIT.	SEP. 29/17	GW
1	ISSUED FOR PRICING.	AUG. 22/17	GW

The undersigned has reviewed and takes responsibility for this design, and has the qualifications and meets the requirements set out in the Ontario Building Code to be a Designer.

qualification information
name: Richard Vink — signature: R Vink — BCIN: 24488
registration information: VA3 Design Inc. — 42658

Contractor must verify all dimensions on the job and report any discrepancy to the Designer before proceeding with the work. All drawings and specifications are instruments of service and the property of the Designer which must be returned at the completion of the work. Drawings are not to be scaled.

VA3 DESIGN
300A Wilson Avenue
Toronto ON M3H 1S8
t 416.630.2255 f 416.630.4782
va3design.com

Greenpark

DEWBERRY

project name: RUSSELL GARDENS PH.2 — municipality: WATERDOWN — project no. 16036
date: AUG 2017 — PARTY WALL PLAN SECTIONS
drawn by: GW — checked by: – — scale: Not to Scale — file name: 16036-GP-STD_DETAILS_A4
drawing no. 4b

All drawings specifications, related documents and design are the copyright property of VA3 DESIGN. Reproduction of this property in whole or in part is strictly prohibited without VA3 DESIGN's written permission.

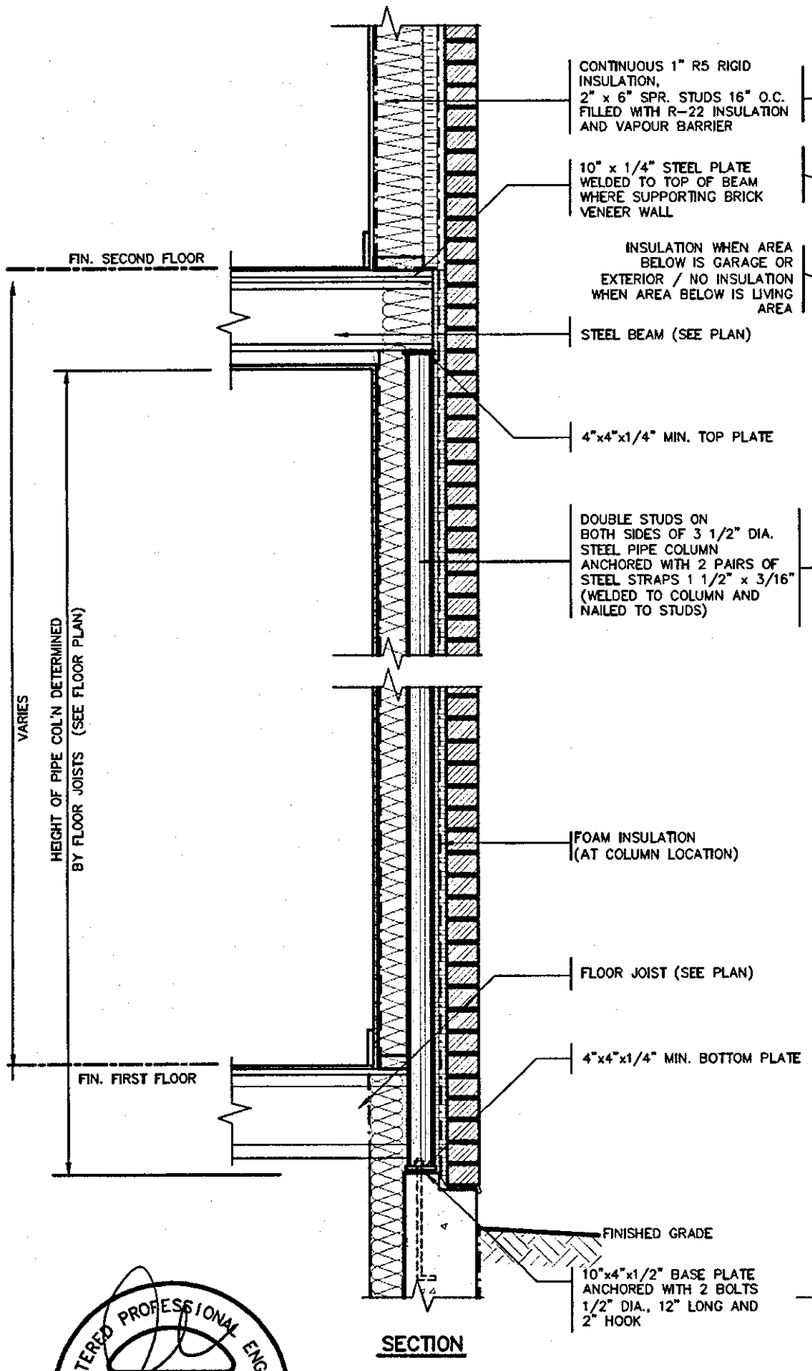

SECTION

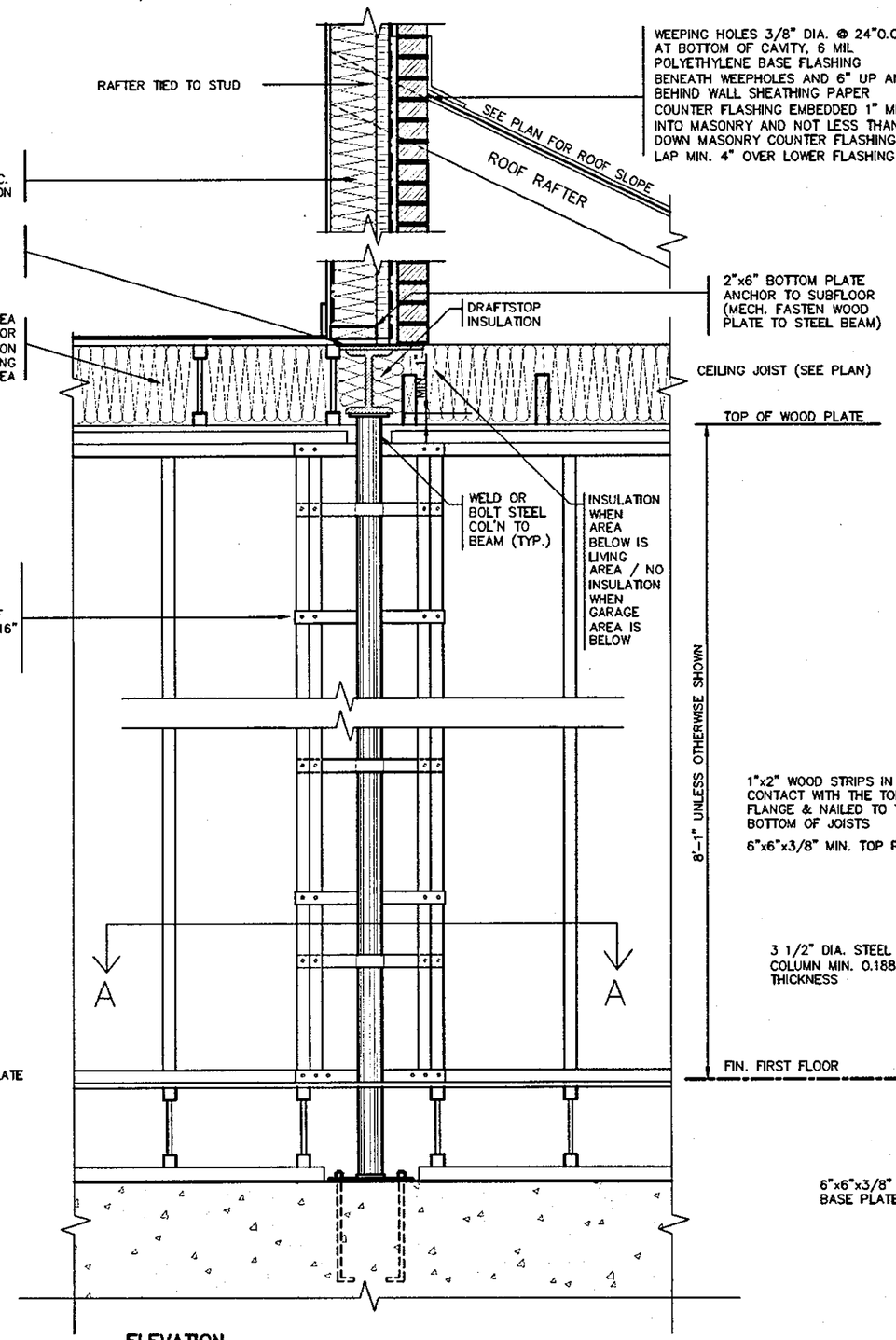

ELEVATION

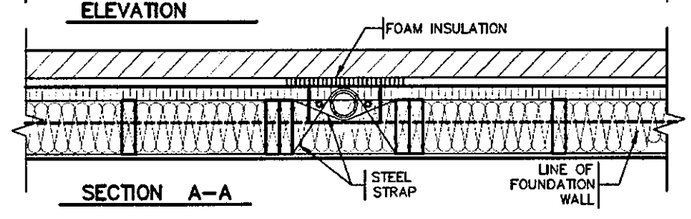

SECTION A–A

SECTION THROUGH STEEL BEAM SUPPORTING MASONRY & BEARING STUD PARTITION

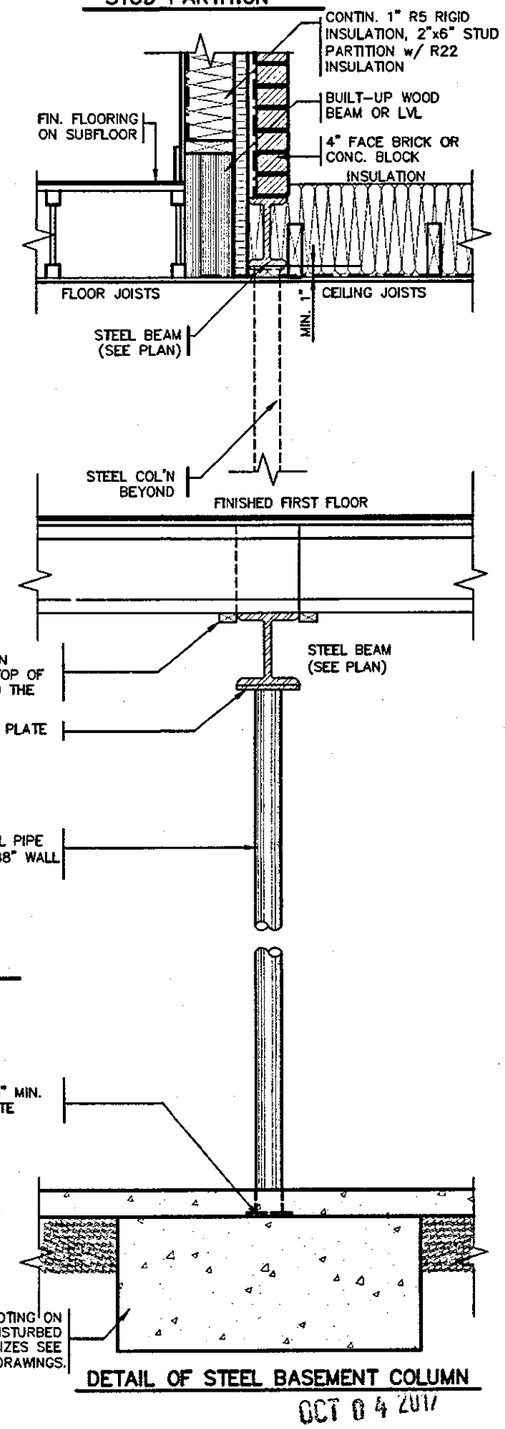

DETAIL OF STEEL BASEMENT COLUMN

OCT 04 2017

REGISTERED PROFESSIONAL ENGINEER
B. MARINKOVIC
PROVINCE OF ONTARIO

STRUDET INC.
FOR STRUCTURE ONLY

2012 CODE COMPLIANCE PACKAGE A4

no.	description	date	by
9	.	.	.
8	.	.	.
7	.	.	.
6	.	.	.
5	.	.	.
4	.	.	.
3	.	.	.
2	ISSUED FOR PERMIT.	SEP. 29/17	GW
1	ISSUED FOR PRICING.	AUG. 22/17	GW

The undersigned has reviewed and takes responsibility for this design and has the qualifications and meets the requirements set out in the Ontario Building Code to be a Designer.

qualification information
name: Richard Vink — signature: R Vink — BCIN: 24488
registration information: VA3 Design Inc. — 42658

Contractor must verify all dimensions on the job and report any discrepancy to the Designer before proceeding with the work. All drawings and specifications are instruments of service and the property of the Designer which must be returned at the completion of the work. Drawings are not to be scaled.

VA3 DESIGN
300A Wilson Avenue
Toronto ON M3H 1S8
t 416.630.2255 f 416.630.4782
va3design.com

Greenpark.

DEWBERRY

project name: RUSSELL GARDENS PH.2 — municipality: WATERDOWN — project no. 16036

date: AUG 2017 — STEEL COLUMN DETAILS — drawing no. 5

drawn by: GW — checked by: – — scale: As Shown — file name: 16036-GP-STD_DETAILS_A4

GREG – H:\ARCHIVE\WORKING\2016\16036 GREY\DETAILS\16036-GP-STD_DETAILS_A4.dwg – Fri – Sep 29 2017 – 2:29 PM

All drawings specifications, related documents and design are the copyright property of VA3 DESIGN. Reproduction of this property in whole or in part is strictly prohibited without VA3 DESIGN's written permission.

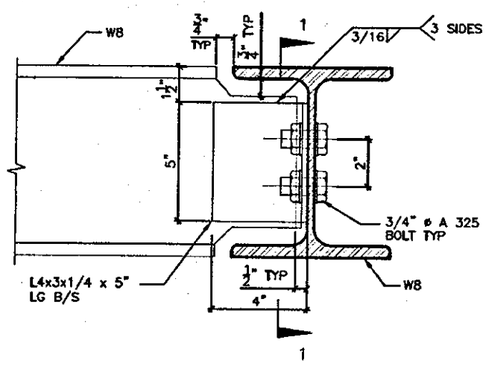

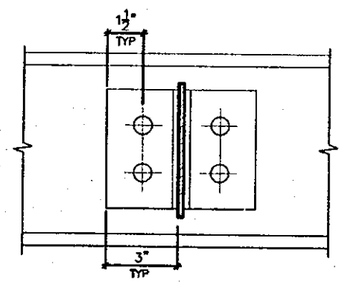

DETAIL 1.

W8
TO
W8
CONNECTION

SECTION 1–1

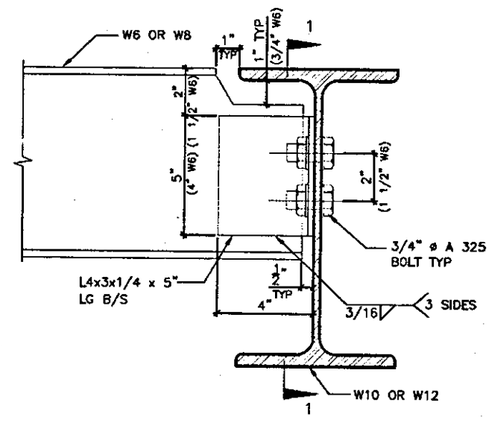

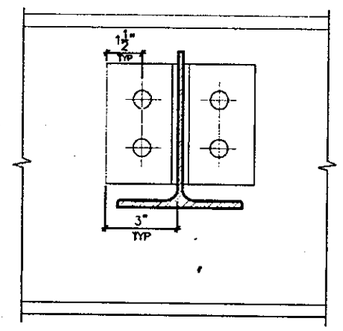

DETAIL 2.

W6(W8)
TO
W10(W12)
CONNECTION

SECTION 1–1

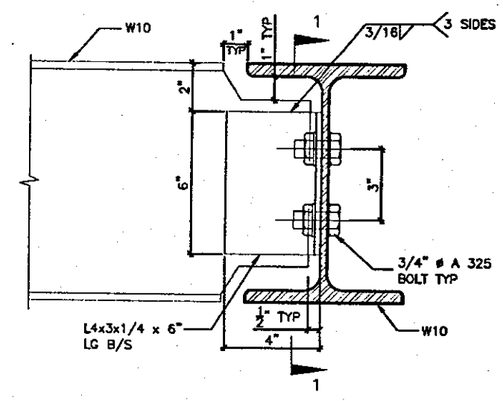

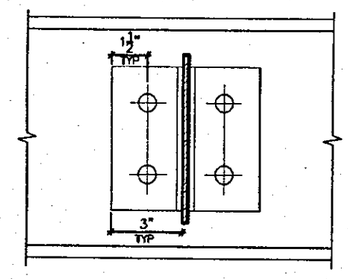

DETAIL 3.

W10
TO
W10
CONNECTION

SECTION 1–1

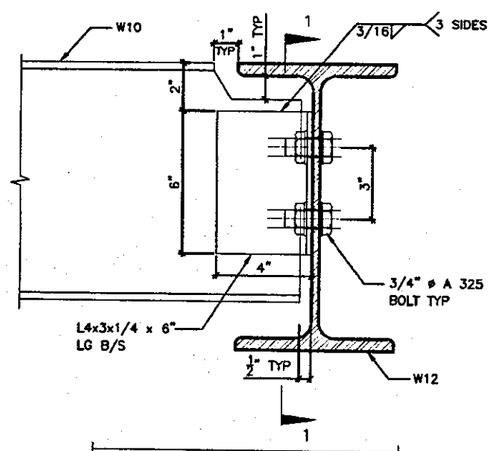

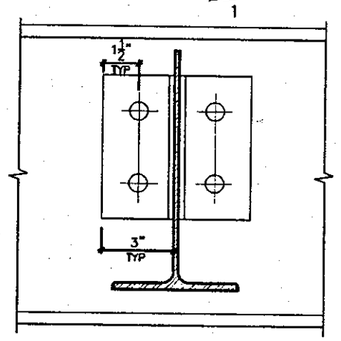

DETAIL 4.

W10
TO
W12
CONNECTION

SECTION 1–1

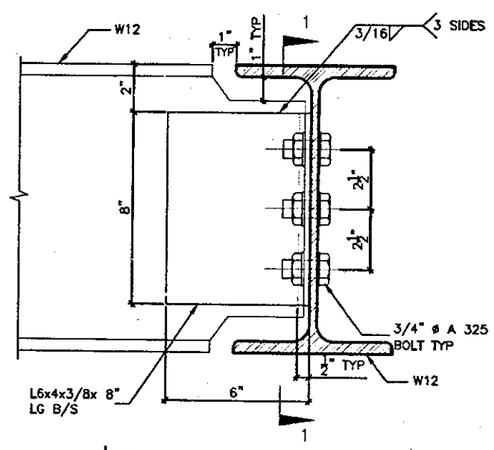

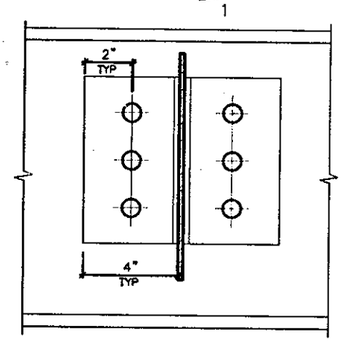

DETAIL 5.

W12
TO
W12
CONNECTION

SECTION 1–1

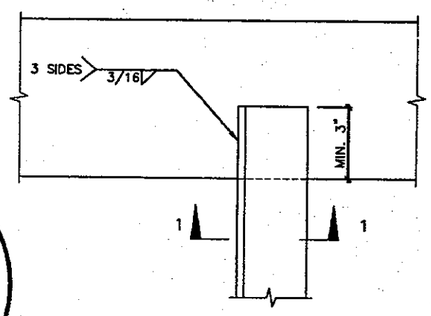

PLAN VIEW

STRUDET INC.
FOR STRUCTURE ONLY

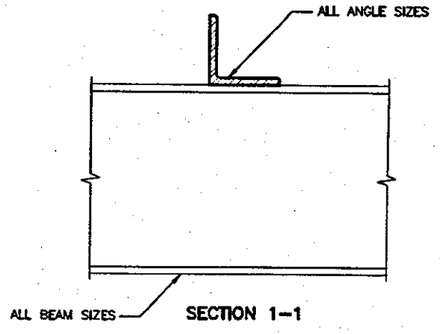

SECTION 1–1

DETAIL 6.

ANGLE
TO
BEAM
CONNECTION

2012 CODE COMPLIANCE PACKAGE

MAR 08 2018

no.	description	date	by
9			
8			
7			
6			
5			
4			
3	REVISED.	MAR. 06/18	GW
2	ISSUED FOR PERMIT.	SEP. 29/17	GW
1	ISSUED FOR PRICING.	AUG. 22/17	GW

The undersigned has reviewed and takes responsibility for this design and has the qualifications and meets the requirements set out in the Ontario Building Code to be a Designer.
qualification information
name: Richard Vink — signature: R Vink — BCIN: 24488
registration information: VA3 Design Inc. — 42658

Contractor must verify all dimensions on the job and report any discrepancy to the Designer before proceeding with the work. All drawings and specifications are instruments of service and the property of the Designer which must be returned at the completion of the work. Drawings are not to be scaled

VA3 DESIGN
300A Wilson Avenue
Toronto ON M3H 1S8
t 416.630.2255 f 416.630.4782
va3design.com

Greenpark.

project name: RUSSELL GARDENS PH.2 — municipality: WATERDOWN — project no. 16036
date: AUG 2017 — STEEL BEAM CONNECTIONS
drawn by: GW — checked by: – — scale: Not to Scale — file name: 16036-GP-STD_DETAILS_A4 — drawing no. 6
DWG - H:\ARCHIVE\WORKING\2016\16036\DWG\DETAILS\16036-GP-STD_DETAILS_A4.dwg - Tue - Mar 6 2018 - 9:20 AM

All drawings specifications, related documents and design are the copyright property of VA3 DESIGN. Reproduction of this property in whole or in part is strictly prohibited without VA3 DESIGN's written permission.

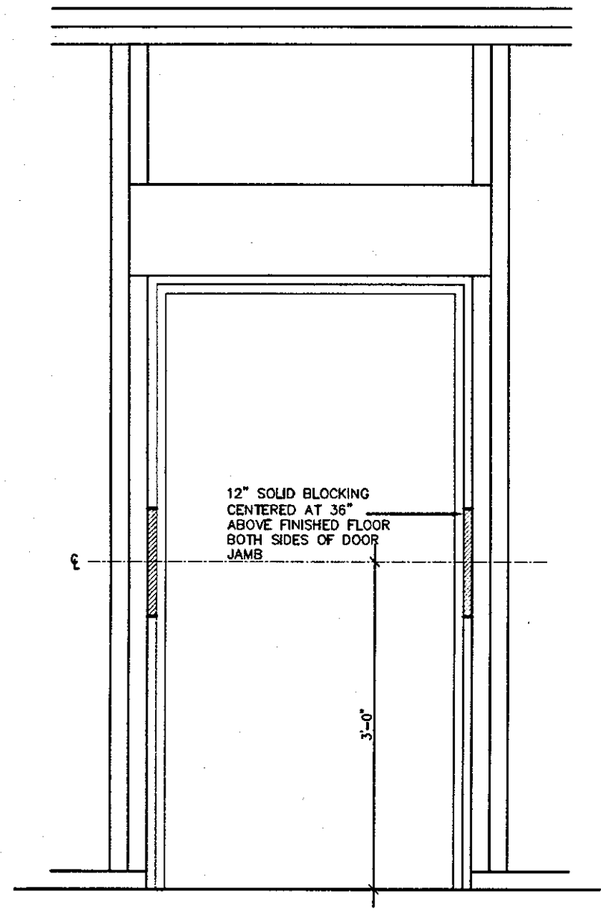

RESISTANCE TO FORCED ENTRY (OBC 9.6.8.)

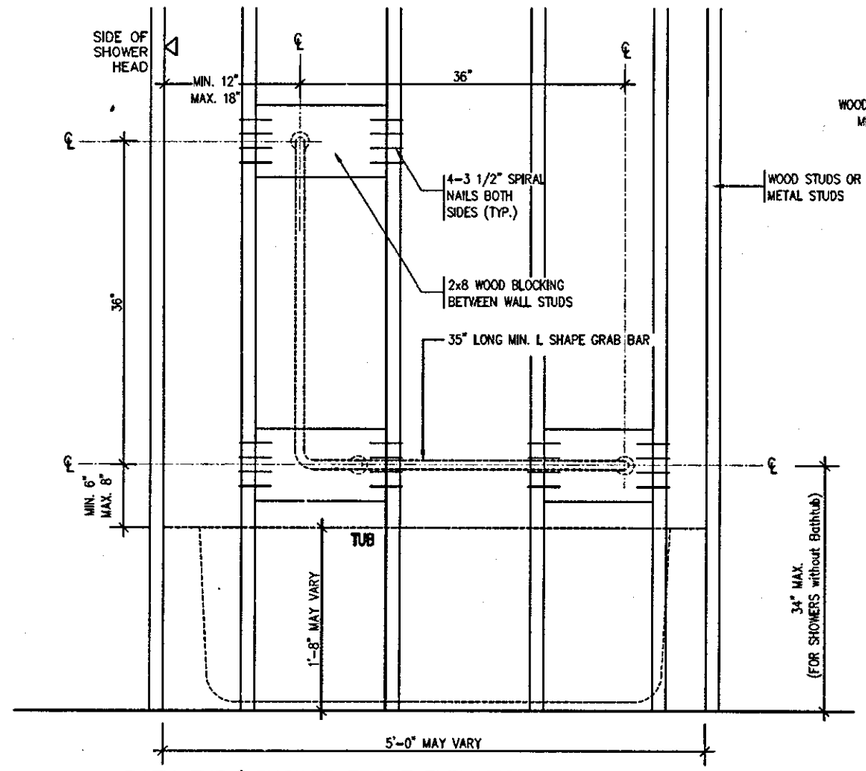

BATH TUB/ SHOWER FRONT ELEVATION

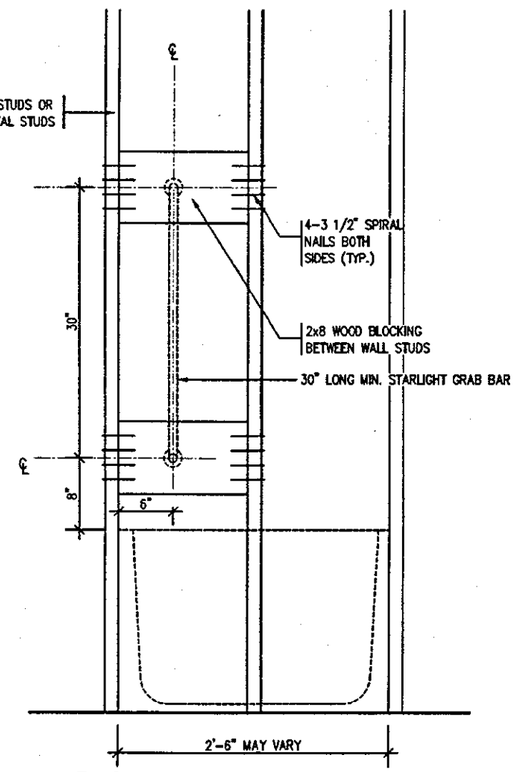

BATH TUB SHOWER HEAD SIDE ELEVATION

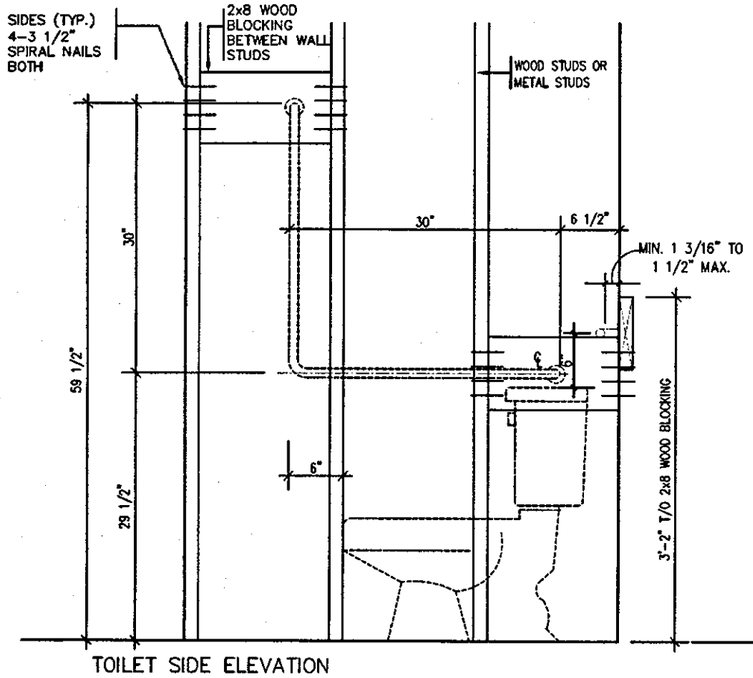

TOILET SIDE ELEVATION

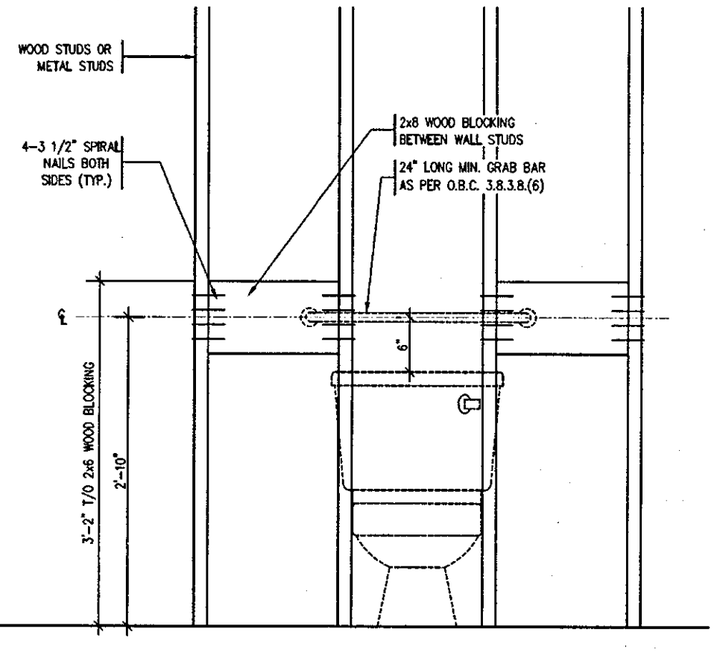

STRUCTURAL REINFORCEMENT FOR GRAB BAR (OBC 9.5.2.3.)

FOR MAIN BATH ONLY

REGISTERED PROFESSIONAL ENGINEER
B. MARINKOVIC
PROVINCE OF ONTARIO

STRUDET INC.
FOR STRUCTURE ONLY

OCT 0 4 2017

2012 CODE COMPLIANCE PACKAGE

no.	description	date	by
9	.	.	.
8	.	.	.
7	.	.	.
6	.	.	.
5	.	.	.
4	.	.	.
3	.	.	.
2	ISSUED FOR PERMIT.	SEP. 29/17	GW
1	ISSUED FOR PRICING.	AUG. 22/17	GW

The undersigned has reviewed and takes responsibility for this design and has the qualifications and meets the requirements set out in the Ontario Building Code to be a Designer.

qualification information
Richard Vink — signature — 24488
name — BCIN
registration information
VA3 Design Inc. — 42658

Contractor must verify all dimensions on the job and report any discrepancy to the Designer before proceeding with the work. All drawings and specifications are instruments of service and the property of the Designer which must be returned at the completion of the work. Drawings are not to be scaled.

VA3 DESIGN
300A Wilson Avenue
Toronto ON M3H 1S8
t 416.630.2255 f 416.630.4782
va3design.com

Greenpark

project name: RUSSELL GARDENS PH.2
municipality: WATERDOWN
project no.: 16036
date: AUG 2017
STUD WALL REINFORCEMENT
drawn by: GW
checked by: –
scale: Not to Scale
file name: 16036-GP-STD_DETAILS_A4
drawing no.: 7

CHEC – H:\ARCHIVE\BORRING\2016\16036.GHE\DETAILS\16036-GP-STD_DETAILS_A4.dwg – Fri – Sep 29, 2017 – 2:29 PM

All drawings specifications, related documents and design are the copyright property of VA3 DESIGN. Reproduction of this property in whole or in part is strictly prohibited without VA3 DESIGN's written permission.

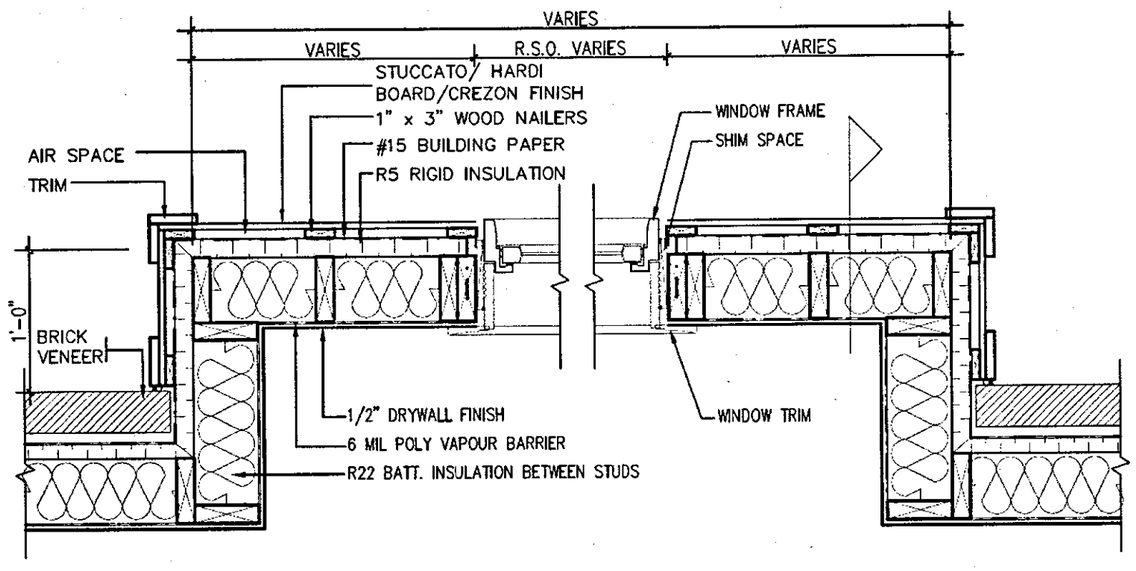

PLAN VIEW

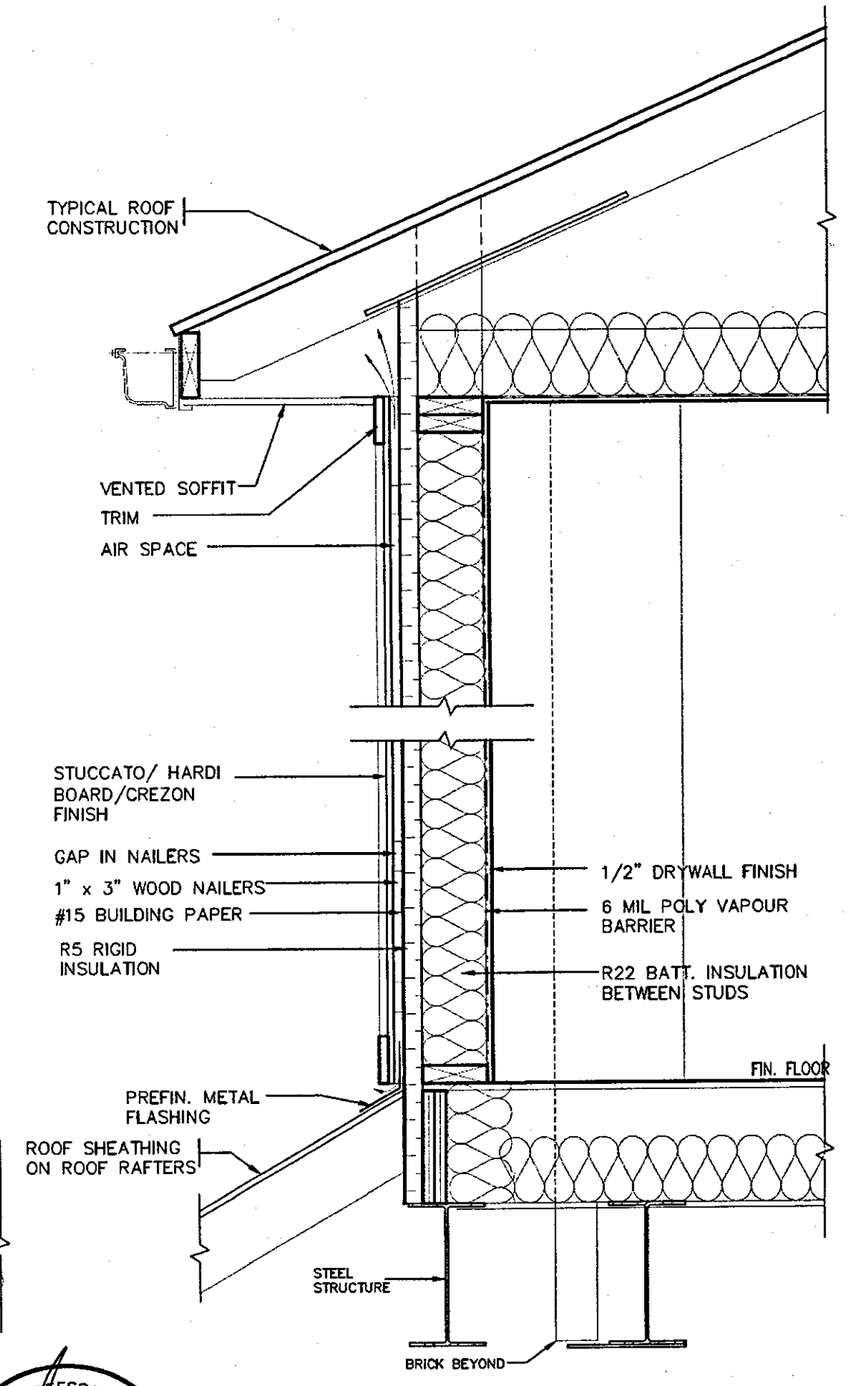

CROSS SECTION

STUCCATO BOARD FINISH CLADDING OR EQUAL (OBC 9.27.)

REGISTERED PROFESSIONAL ENGINEER
B. MARINKOVIC
04/7/17
PROVINCE OF ONTARIO

STRUDET INC.
FOR STRUCTURE ONLY

OCT 0 4 2017

2012 CODE COMPLIANCE PACKAGE A4

no.	description	date	by
9	.	.	.
8	.	.	.
7	.	.	.
6	.	.	.
5	.	.	.
4	.	.	.
3	.	.	.
2	ISSUED FOR PERMIT.	SEP. 29/17	GW
1	ISSUED FOR PRICING.	AUG. 22/17	GW

The undersigned has reviewed and takes responsibility for this design and has the qualifications and meets the requirements set out in the Ontario Building Code to be a Designer.
qualification information
Richard Vink — signature — 24488
name — BCIN
registration information
VA3 Design Inc. — 42658

Contractor must verify all dimensions on the job and report any discrepancy to the Designer before proceeding with the work. All drawings and specifications are instruments of service and the property of the Designer which must be returned at the completion of the work. Drawings are not to be scaled.

VA3 DESIGN
300A Wilson Avenue
Toronto ON M3H 1S8
t 416.630.2255 f 416.630.4782
va3design.com

Greenpark.

DEWBERRY
-

project name: RUSSELL GARDENS PH.2
municipality: WATERDOWN
project no.: 8
date: AUG 2017
STUCCATO/ HARDI BOARD FINISH
drawing no.: 8
drawn by: GW
checked by: -
scale: Not to Scale
file name: 16036-GP-STD_DETAILS_A4
DWG - H:\ARCHIVE\WORKING\2016\16036\DWG\DETAILS\16036-GP-STD_DETAILS_A4.dwg - Fri - Sep 29 2017 - 2:29 PM

All drawings specifications, related documents and design are the copyright property of VA3 DESIGN. Reproduction of this property in whole or in part is strictly prohibited without VA3 DESIGN's written permission.

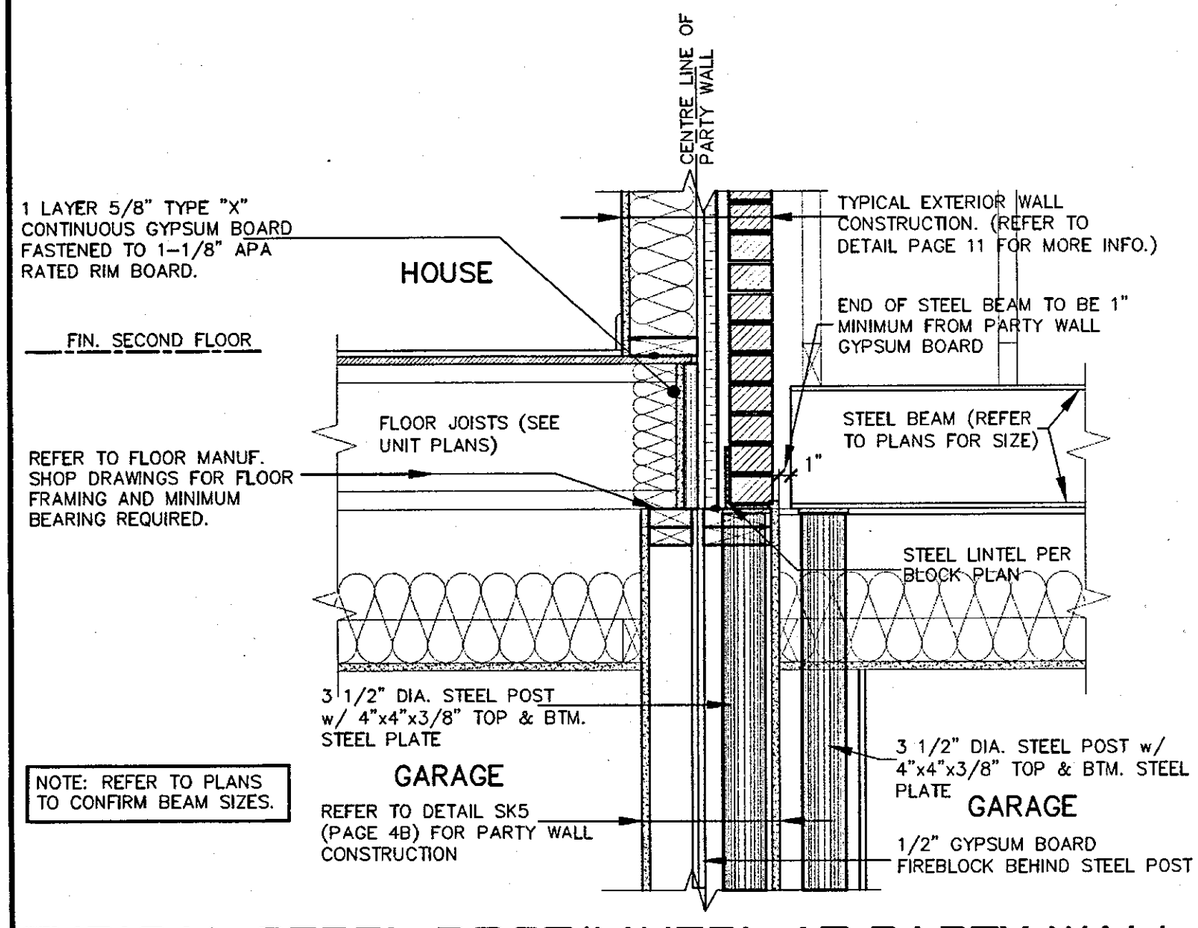

TYPICAL STEEL POST/LINTEL AT PARTY WALL

SECTION 1

SCALE: NOT TO SCALE

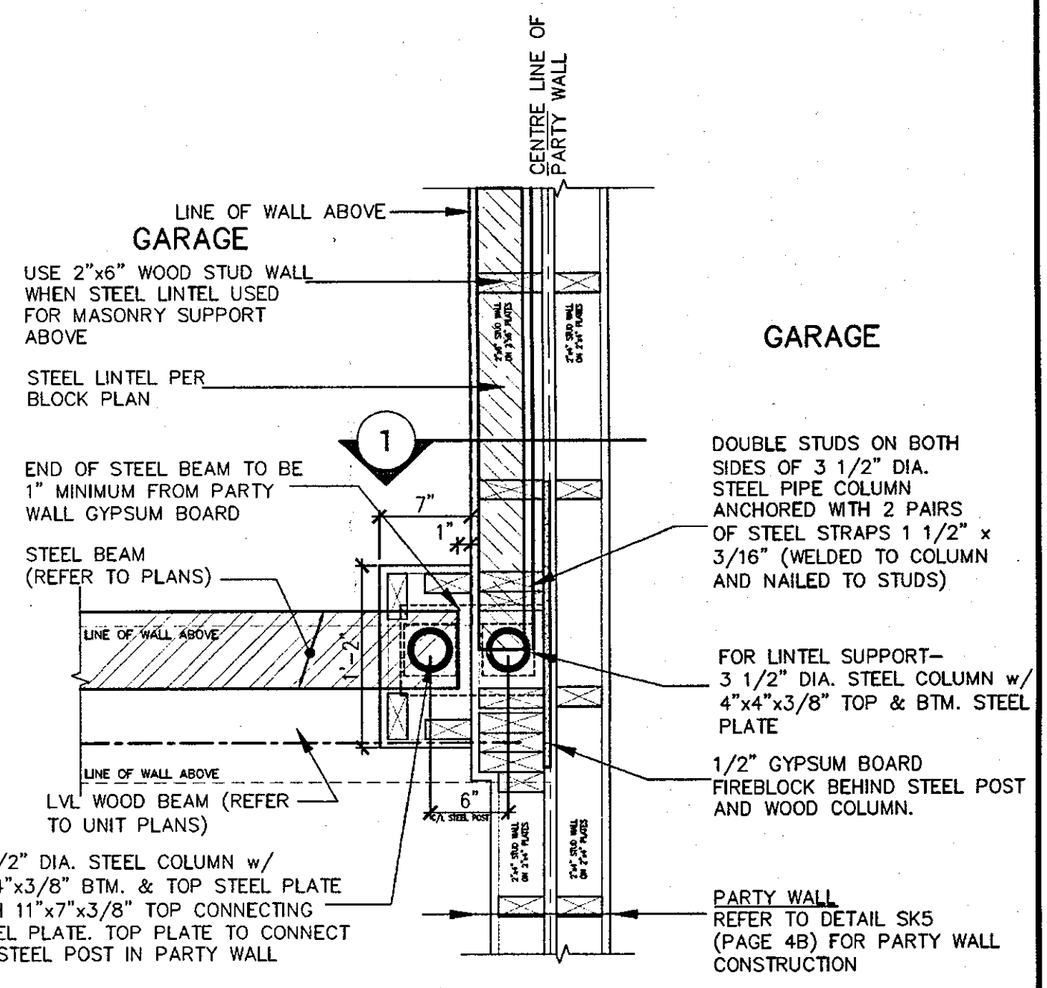

PLAN (OFFSET UPPER FLOOR) STEEL BEAMS/LINTELS

SCALE: NOT TO SCALE

REGISTERED PROFESSIONAL ENGINEER
B. MARINKOVIC
PROVINCE OF ONTARIO

STRUDET INC.
FOR STRUCTURE ONLY

MAY 03 2018

2012 CODE
COMPLIANCE PACKAGE A4

SK5 (Garage to Garage)

no.	description	date	by
9	.	.	.
8	.	.	.
7	.	.	.
6	.	.	.
5	.	.	.
4	REVISED.	APR. 27/18	GW
3	REVISED PER CITY COMMENTS.	MAR. 08/18	GW
2	ISSUED FOR PERMIT.	SEP. 29/17	GW
1	ISSUED FOR PRICING.	AUG. 22/17	GW

The undersigned has reviewed and takes responsibility for this design and has the qualifications and meets the requirements set out in the Ontario Building Code to be a Designer.
qualification information
Richard Vink — signature — 24488
name — registration information — BCIN
VA3 Design Inc. — 42658

Contractor must verify all dimensions on the job and report any discrepancy to the Designer before proceeding with the work. All drawings and specifications are instruments of service and the property of the Designer which must be returned at the completion of the work. Drawings are not to be scaled.

VA3 DESIGN
300A Wilson Avenue
Toronto ON M3H 1S8
t 416.630.2255 f 416.630.4782
va3design.com

Greenpark.

DEWBERRY

project name: RUSSELL GARDENS PH.2 — municipality: WATERDOWN — project no. 16036
date: AUG 2017 — STEEL BEAM/ LINTEL AT GARAGE PARTY WALL — drawing no. 9
drawn by: GW — checked by: – — scale: Not to Scale — file name: 16036-GP-STD_DETAILS_A4
SAVED: - H:\ARCHIVE\WORKING\2016\16036\DWG\DETAILS\16036-GP-STD_DETAILS_A4.dwg - Fri - Apr 27 2018 - 10:02 AM

All drawings specifications, related documents and design are the copyright property of VA3 DESIGN. Reproduction of this property in whole or in part is strictly prohibited without VA3 DESIGN's written permission.

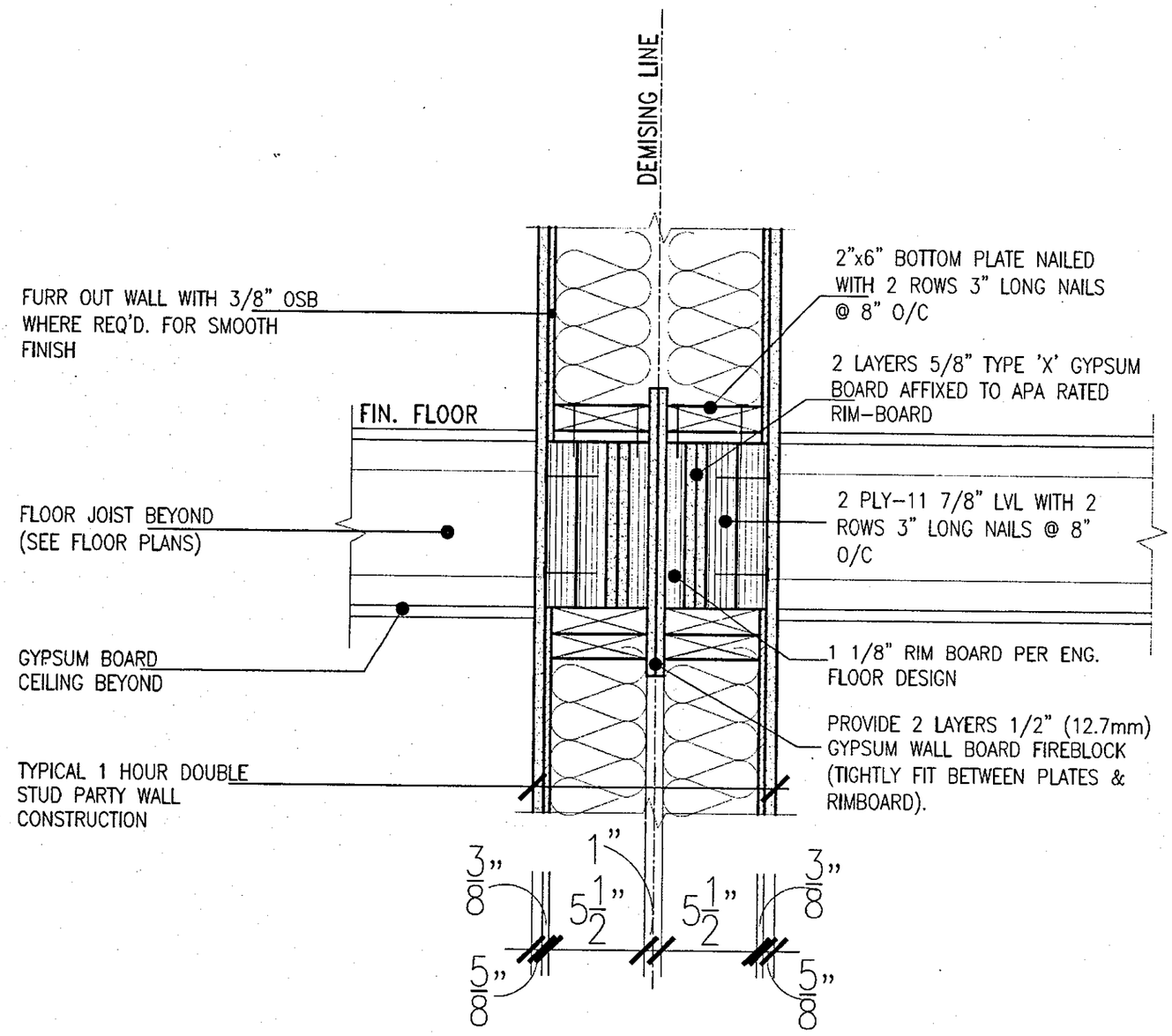

A4

TW1

WOOD PARTY WALL LATERAL SUPPORT AT STAIR OPENING

SCALE: Not to Scale

REGISTERED PROFESSIONAL ENGINEER
B. MARINKOVIC
PROVINCE OF ONTARIO

STRUDET INC.
FOR STRUCTURE ONLY

FEB 22 2018

2012 CODE COMPLIANCE PACKAGE A4

no.	description	date	by
9	.	.	.
8	.	.	.
7	.	.	.
6	.	.	.
5	.	.	.
4	.	.	.
3	REV. TO MAINTAIN RIMBOARD PROTECTION.	FEB. 06/17	GW
2	ISSUED FOR PERMIT.	SEP. 29/17	GW
1	ISSUED FOR PRICING.	AUG. 22/17	GW

The undersigned has reviewed and takes responsibility for this design and has the qualifications and meets the requirements set out in the Ontario Building Code to be a Designer.

qualification information
name: Richard Vink — signature: R Vink — BCIN: 24488
registration information
VA3 Design Inc. — 42658

Contractor must verify all dimensions on the job and report any discrepancy to the Designer before proceeding with the work. All drawings and specifications are instruments of service and the property of the Designer which must be returned at the completion of the work. Drawings are not to be scaled.

VA3 DESIGN
300A Wilson Avenue
Toronto ON M3H 1S8
t 416.630.2255 f 416.630.4782
va3design.com

Greenpark.

DEWBERRY
-

project name: RUSSELL GARDENS PH.2
municipality: WATERDOWN
project no.: 16036
date: JAN. 2018
TALL WALL AT PARTY WALL
drawn by: GW
checked by: -
scale: Not to Scale
file name: 16036-GP-STD_DETAILS_A4
DWG - H:\ARCHIVE\WORKING\2016\16036.GRE\DETAILS\16036-GP-STD_DETAILS_A4.dwg - Thu - Feb 22 2018 - 2:29 PM
drawing no.: 10

All drawings specifications, related documents and design are the copyright property of VA3 DESIGN. Reproduction of this property in whole or in part is strictly prohibited without VA3 DESIGN's written permission.

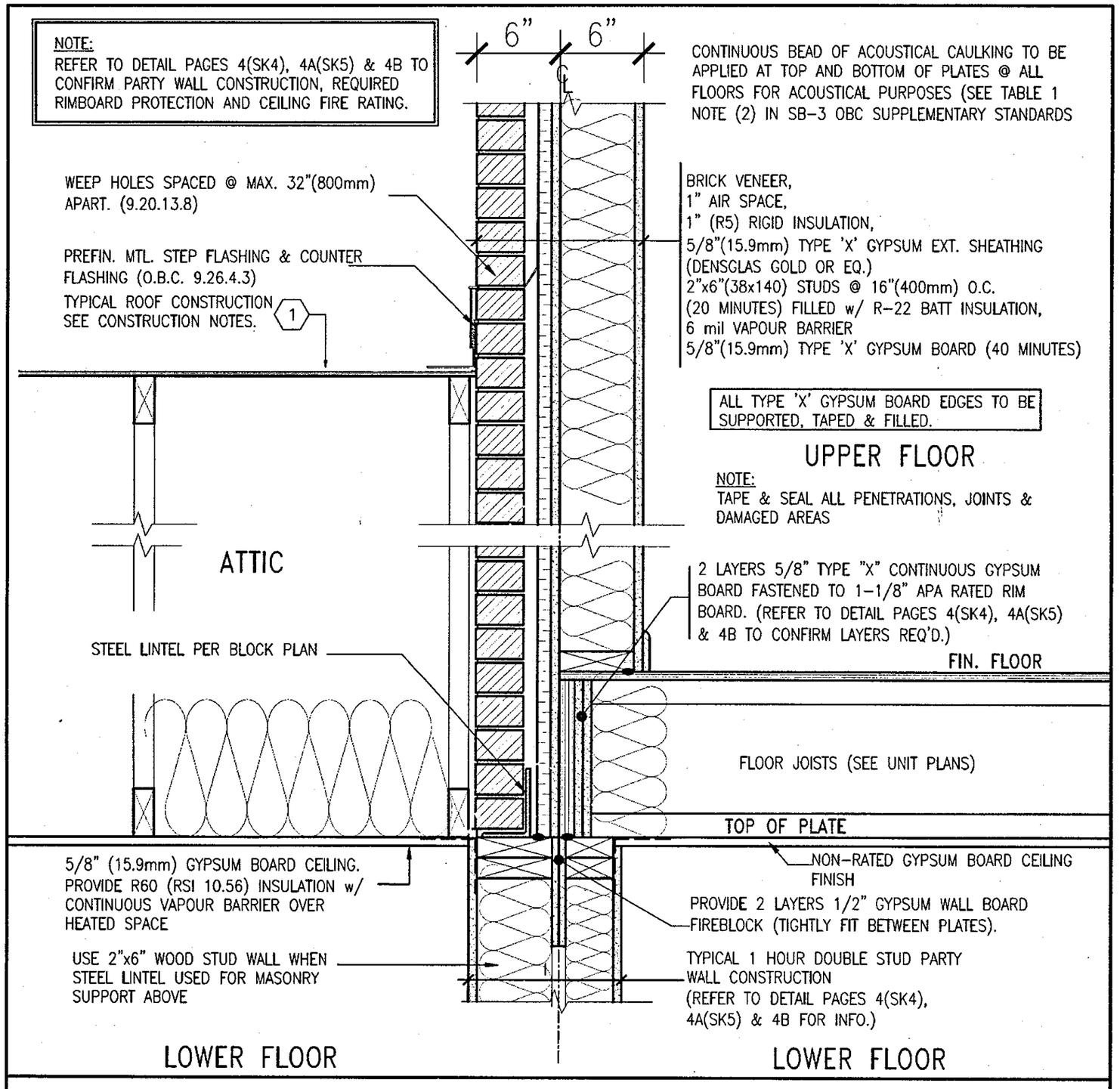

1 HOUR PARTY WALL BETWEEN ATTIC SPACE AND LIVING SPACE

SCALE: Not to Scale

APR. 26/18

REGISTERED PROFESSIONAL ENGINEER
B. MARINKOVIC
PROVINCE OF ONTARIO

STRUDET INC.
FOR STRUCTURE ONLY

MAY 03 2018

2012 CODE COMPLIANCE PACKAGE A4

no.	description	date	by
9	.	.	.
8	.	.	.
7	.	.	.
6	.	.	.
5	.	.	.
4	REVISED.	APR. 27/18	GW
3	REVISED PER CITY COMMENTS. REISSUED.	MAR. 08/18	GW
2	ISSUED FOR PERMIT.	SEP. 29/17	GW
1	ISSUED FOR PRICING.	AUG. 22/17	GW

The undersigned has reviewed and takes responsibility for this design and has the qualifications and meets the requirements set out in the Ontario Building Code to be a Designer.
qualification information
name: Richard Vink — signature: R Vink — BCIN: 24488
registration information: VA3 Design Inc. — 42658

Contractor must verify all dimensions on the job and report any discrepancy to the Designer before proceeding with the work. All drawings and specifications are instruments of service and the property of the Designer which must be returned at the completion of the work. Drawings are not to be scaled.

VA3 DESIGN
300A Wilson Avenue
Toronto ON M3H 1S8
t 416.630.2255 f 416.630.4782
va3design.com

Greenpark.

DEWBERRY
project name: RUSSELL GARDENS PH.2
municipality: WATERDOWN
project no.: 8
date: AUG 2017
EXT. WALL OVER PARTY WALL
drawn by: GW
checked by: –
scale: Not to Scale
file name: 16036-GP-STD_DETAILS_A4
drawing no.: 11

All drawings specifications, related documents and design are the copyright property of VA3 DESIGN. Reproduction of this property in whole or in part is strictly prohibited without VA3 DESIGN's written permission.

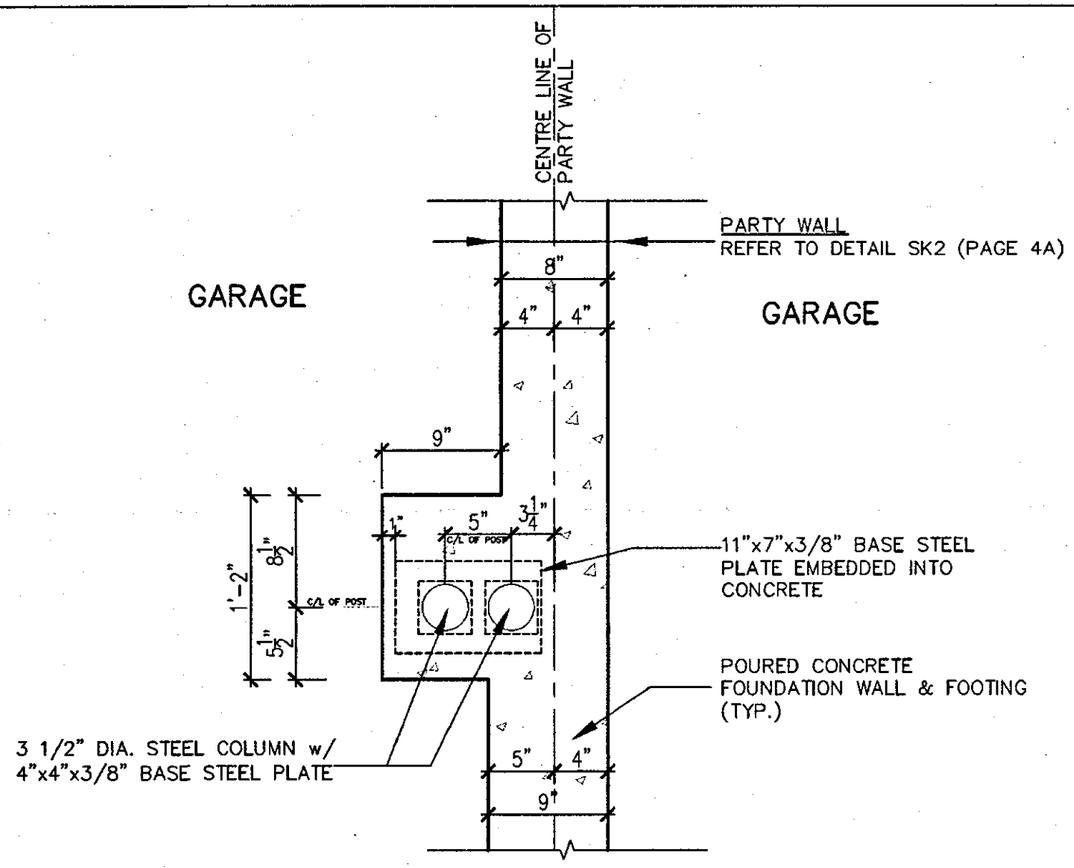

A4 FOUNDATION PLAN (STEEL BEAM IN GARAGE)

SCALE: NOT TO SCALE

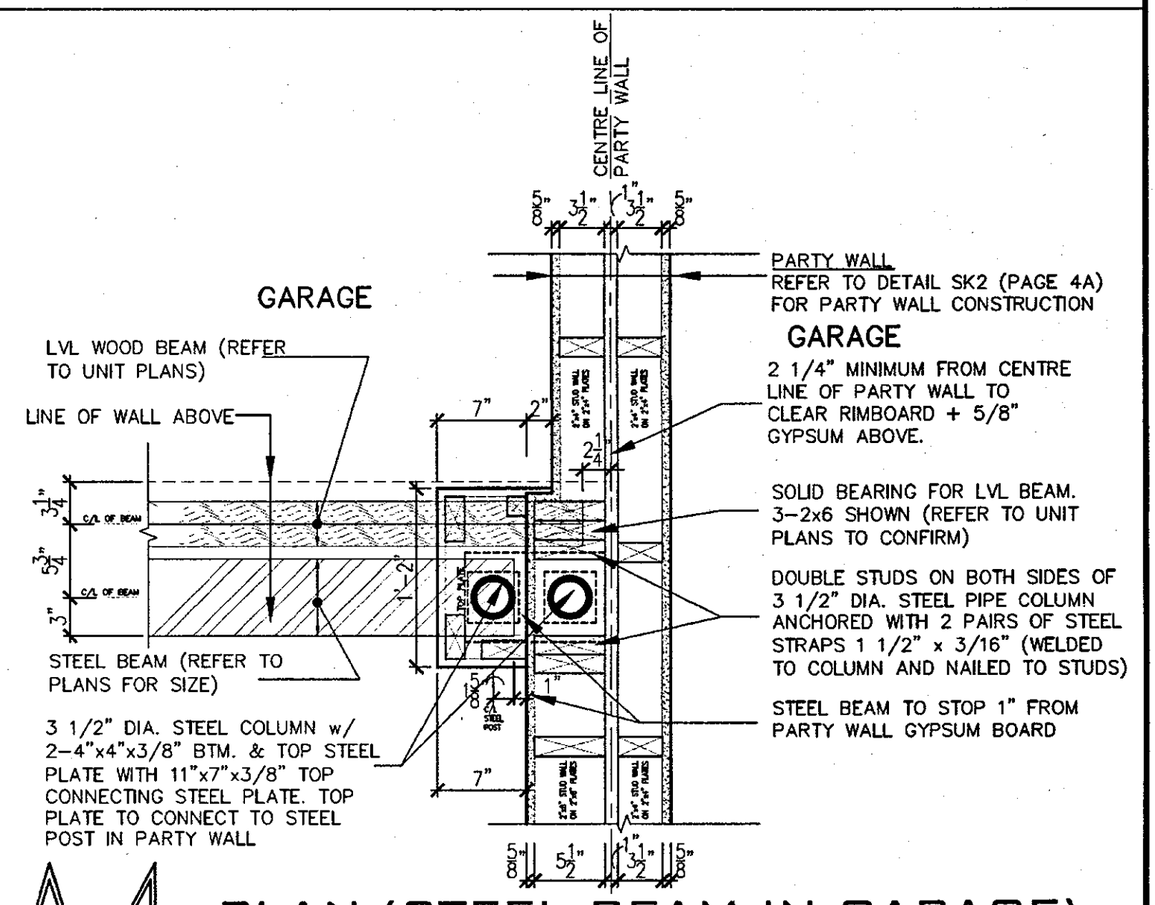

A4 PLAN (STEEL BEAM IN GARAGE)

SCALE: NOT TO SCALE

REGISTERED PROFESSIONAL ENGINEER
B. MARINKOVIC
PROVINCE OF ONTARIO

STRUDET INC.
FOR STRUCTURE ONLY

MAY 0 3 2018

2012 CODE COMPLIANCE PACKAGE A4

SK5 (Garage to Garage)

no.	description	date	by
9	.	.	.
8	.	.	.
7	.	.	.
6	.	.	.
5	.	.	.
4	REVISED.	APR. 27/18	GW
3	REVISED PER CITY COMMENTS.	MAR. 08/18	GW
2	ISSUED FOR PERMIT.	SEP. 29/17	GW
1	ISSUED FOR PRICING.	AUG. 22/17	GW

The undersigned has reviewed and takes responsibility for this design and has the qualifications and meets the requirements set out in the Ontario Building Code to be a Designer.

qualification information
name: Richard Vink — signature: R Vink — BCIN: 24488
registration information
VA3 Design Inc. — 42658

Contractor must verify all dimensions on the job and report any discrepancy to the Designer before proceeding with the work. All drawings and specifications are instruments of service and the property of the Designer which must be returned at the completion of the work. Drawings are not to be scaled.

VA3 DESIGN
300A Wilson Avenue
Toronto ON M3H 1S8
t 416.630.2255 f 416.630.4782
va3design.com

Greenpark.

DEWBERRY
-

project name: RUSSELL GARDENS PH.2
municipality: WATERDOWN
project no.: 16036

date: APRIL 2018
STEEL POST AT GARAGE PARTYWALL
drawing no.: 12
drawn by: GW
checked by: -
scale: Not to Scale
file name: 16036-GP-STD_DETAILS_A4

All drawings specifications, related documents and design are the copyright property of VA3 DESIGN. Reproduction of this property in whole or in part is strictly prohibited without VA3 DESIGN's written permission.

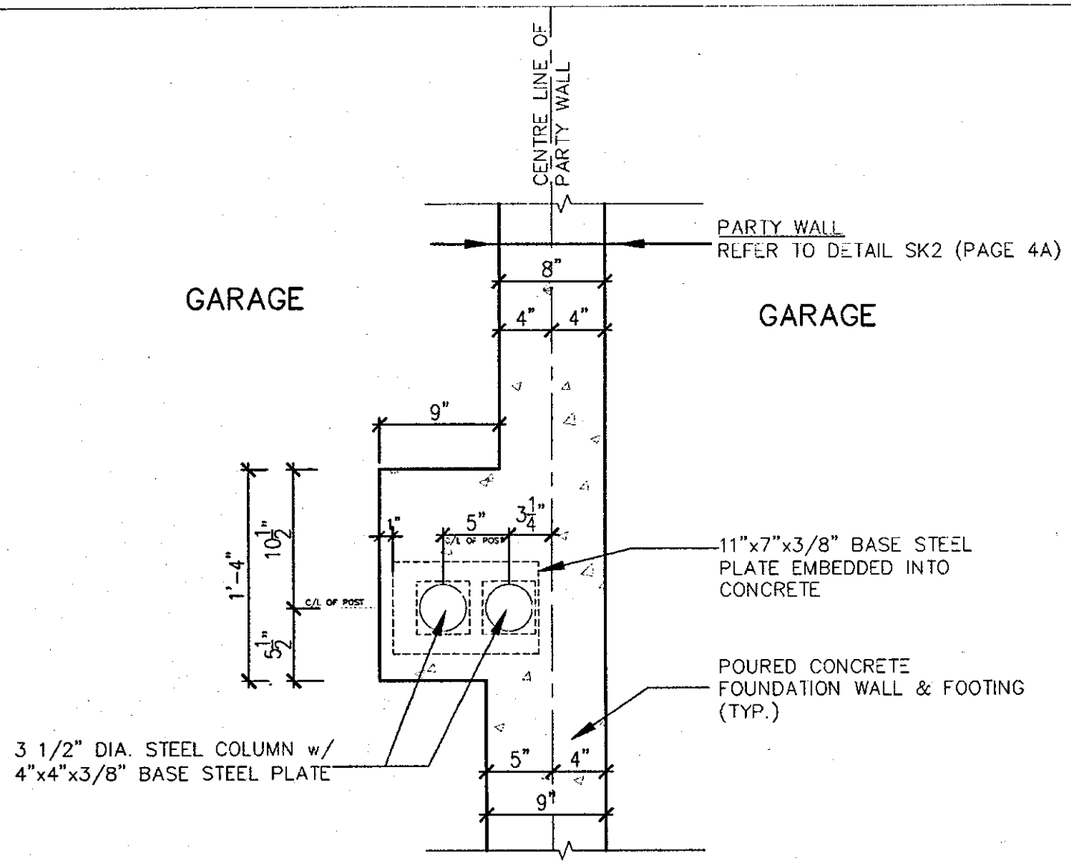

A4 FOUNDATION PLAN (STEEL BEAM IN GARAGE)

SCALE: NOT TO SCALE

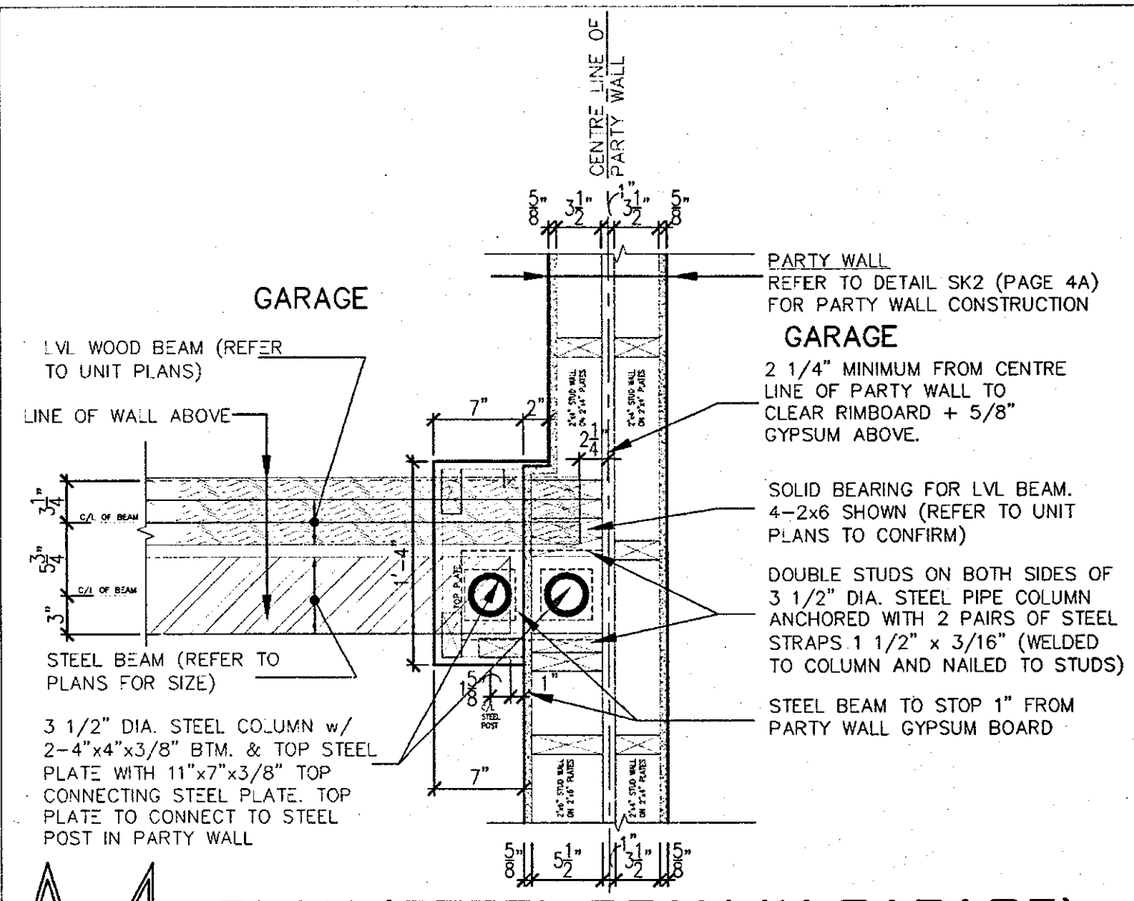

A4 PLAN (STEEL BEAM IN GARAGE)

SCALE: NOT TO SCALE

REGISTERED PROFESSIONAL ENGINEER
B. MARINKOVIC
PROVINCE OF ONTARIO

STRUDET INC.
FOR STRUCTURE ONLY

JUL 18 2018

2012 CODE COMPLIANCE PACKAGE A4

SK5 (Garage to Garage)

no.	description	date	by
9	.	.	.
8	.	.	.
7	.	.	.
6	.	.	.
5	ISSUED.	JUN. 26/18	GW
4	REVISED.	APR. 27/18	GW
3	REVISED PER CITY COMMENTS.	MAR. 08/18	GW
2	ISSUED FOR PERMIT.	SEP. 29/17	GW
1	ISSUED FOR PRICING.	AUG. 22/17	GW

The undersigned has reviewed and takes responsibility for this design and has the qualifications and meets the requirements set out in the Ontario Building Code to be a Designer.

qualification information

name	signature	BCIN
Richard Vink	R Vink	24488

registration information
VA3 Design Inc. 42658

Contractor must verify all dimensions on the job and report any discrepancy to the Designer before proceeding with the work. All drawings and specifications are instruments of service and the property of the Designer which must be returned at the completion of the work. Drawings are not to be scaled.

VA3 DESIGN
300A Wilson Avenue
Toronto ON M3H 1S8
t 416.630.2255 f 416.630.4782
va3design.com

Greenpark.

DEWBERRY
–

project name: RUSSELL GARDENS PH.2
municipality: WATERDOWN
project no.: 16036
date: APRIL 2018
STEEL POST AT GARAGE PARTYWALL
drawn by: GW
checked by: –
scale: Not to Scale
file name: 16036-GP-STD_DETAILS_A4
drawing no.: 12A

All drawings specifications, related documents and design are the copyright property of VA3 DESIGN. Reproduction of this property in whole or in part is strictly prohibited without VA3 DESIGN's written permission.

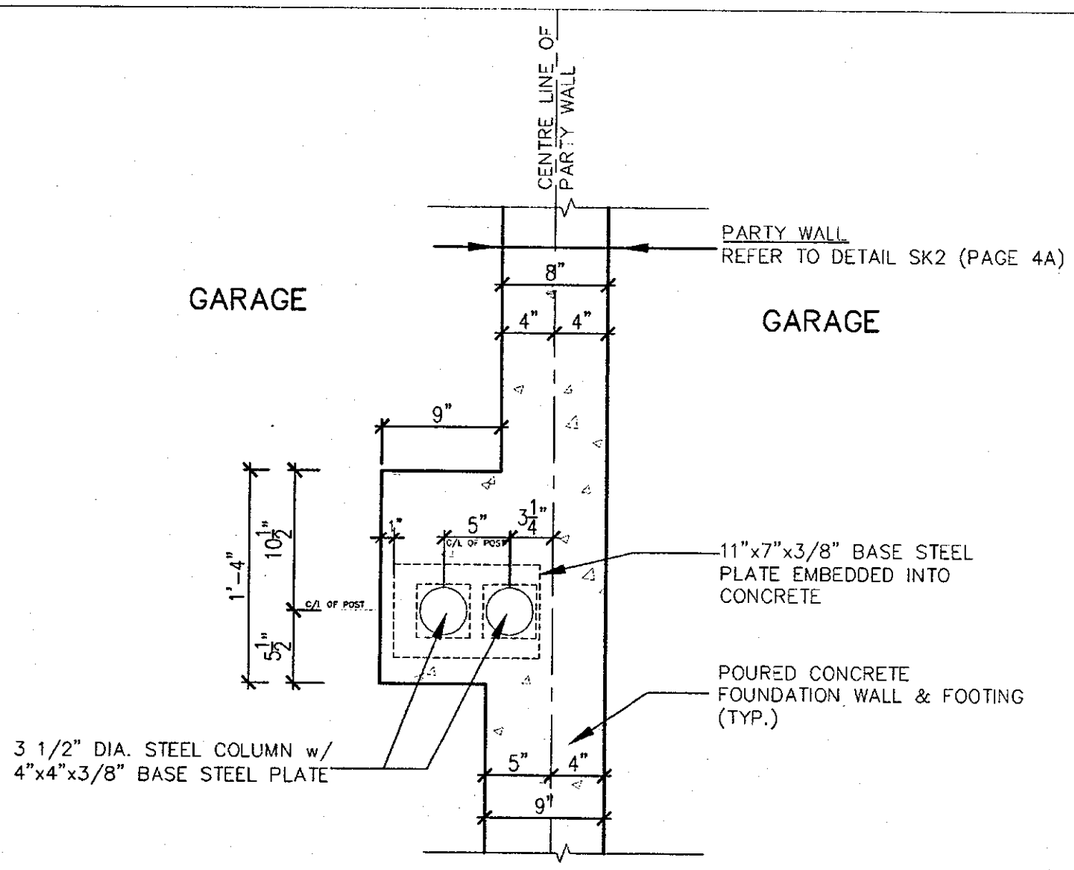

A4 FOUNDATION PLAN (STEEL BEAM IN GARAGE)

SCALE: NOT TO SCALE

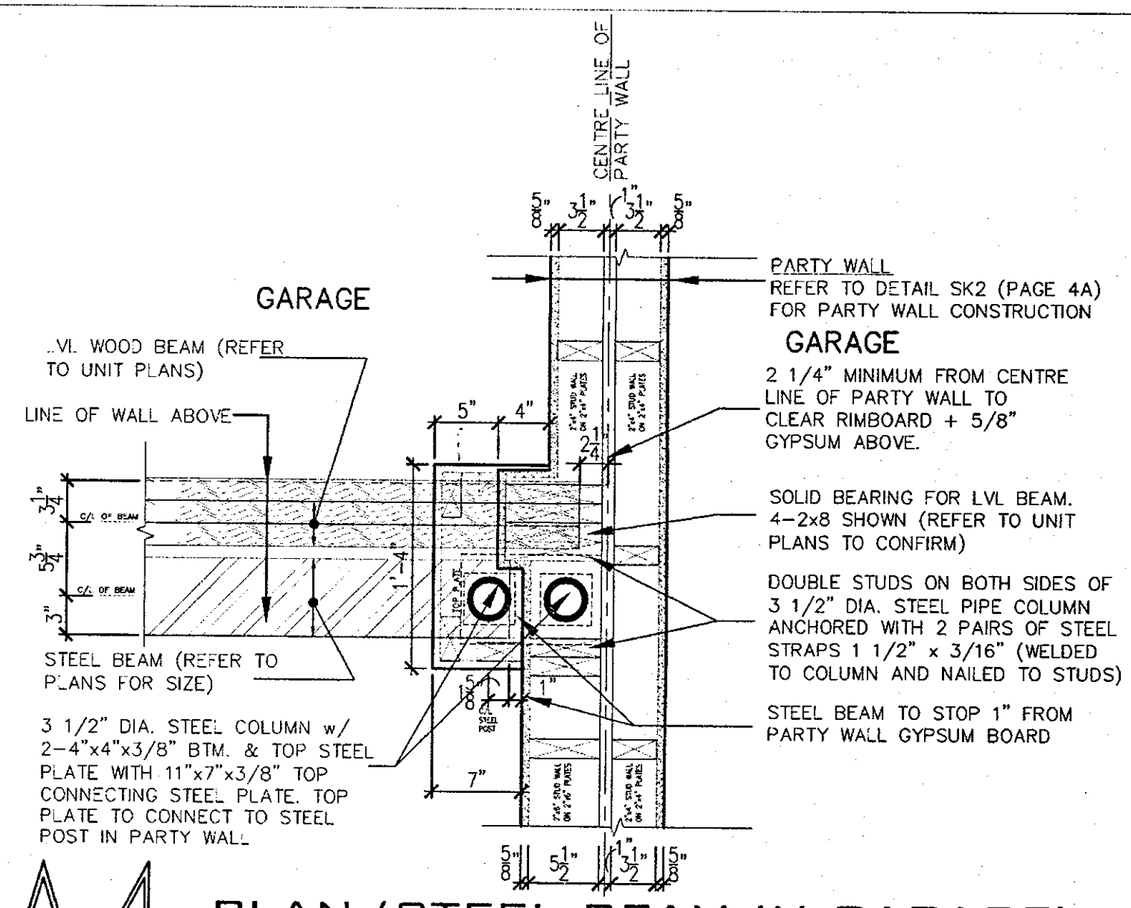

A4 PLAN (STEEL BEAM IN GARAGE)

SCALE: NOT TO SCALE

STRUDET INC.
FOR STRUCTURE ONLY

JUL 18 2018

2012 CODE COMPLIANCE PACKAGE A4

SK5 (Garage to Garage)

no.	description	date	by
9	.	.	.
8	.	.	.
7	.	.	.
6	.	.	.
5	ISSUED.	JUN. 26/18	GW
4	REVISED.	APR. 27/18	GW
3	REVISED PER CITY COMMENTS.	MAR. 08/18	GW
2	ISSUED FOR PERMIT.	SEP. 29/17	GW
1	ISSUED FOR PRICING.	AUG. 22/17	GW

The undersigned has reviewed and takes responsibility for this design and has the qualifications and meets the requirements set out in the Ontario Building Code to be a Designer.
qualification information
name: Richard Vink — signature — BCIN: 24488
registration information: VA3 Design Inc. — 42658

Contractor must verify all dimensions on the job and report any discrepancy to the Designer before proceeding with the work. All drawings and specifications are instruments of service and the property of the Designer which must be returned at the completion of the work. Drawings are not to be scaled.

VA3 DESIGN
300A Wilson Avenue
Toronto ON M3H 1S8
t 416.630.2255 f 416.630.4782
va3design.com

Greenpark.

DEWBERRY
-

project name: RUSSELL GARDENS PH.2
municipality: WATERDOWN
project no.: 16036
date: APRIL 2018
STEEL POST AT GARAGE PARTYWALL
drawn by: GW
checked by: -
scale: Not to Scale
file name: 16036-GP-STD_DETAILS_A4
drawing no.: 12B

All drawings specifications, related documents and design are the copyright property of VA3 DESIGN. Reproduction of this property in whole or in part is strictly prohibited without VA3 DESIGN's written permission.