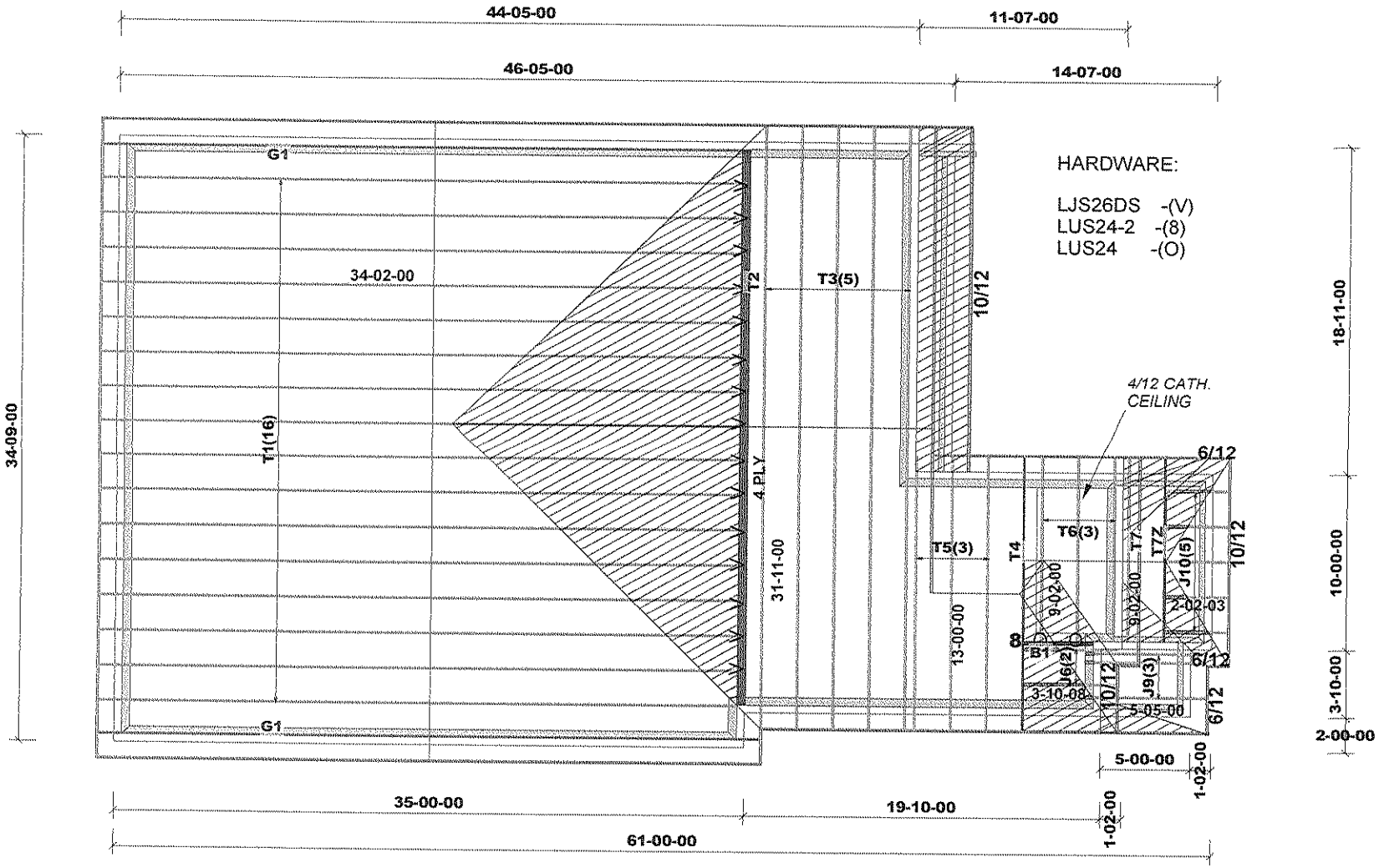

ASPHALT SHINGLES
12" FINISHED O.H.
5" CLADDING ALLOWANCE
2x6 EXTERIOR WALLS
2x6 FASCIA BOARD
HEEL: R.T.M.C.

T - 170391

ALL CONV. FRAMING TO CONFORM WITH PART 9 OF O.B.C. 2012 ROOF RAFTERS THAT CROSS OVER OR MEET TRUSSES TO BE 2X4 SPF #2 24" O.C. WITH A VERT.POST TO THE TRUSS UNDERNEATH AT EACH CROSS PT. VERT. POST LONGER THAN 6' TO HAVE LATERAL BRACING SO THAT THE DIST. BETWEEN END PT. & BETWEEN ROWS OF BRACING DOES NOT EXCEED 6'

DESIGN CONFORMS WITH OBC 2012
OCCUPANCY: RESIDENTIAL | PART: 9
GROUND SNOW LOAD Ss=31.3psf Sr=8.4psf
DESIGN LOADS
TCDL (3psf)
BCLL (10.5psf)
BCDL (7psf)

BEAMS:
B1: 2 - 2X8 SPF #2

DENOTES:
CONVENTIONAL FRAMING

ALL ROOF SLOPES ARE 7/12
UNLESS OTHERWISE NOTED

m10,980

TAMARACK LUMBER INC.	Job Track: **43954**	Builder / Location: **GREENPARK HOMES / WATERDOWN**	Model / Elevation: **ROSEWOOD 5 / 1**
	Layout ID: **282768**	Project: **RUSSEL GARDENS PHASE 2**	
	Plan Log: **92601**	Date: 8/28/2017 Designer: colinh/S.V.E	

THESE DRAWINGS CONSTITUTE THE PROPERTY OF TAMARACK ROOF TRUSSES INC., SHALL NOT BE REPRODUCED, PUBLISHED, OR REDISTRIBUTED IN ANY MANNER OR UTILIZED FOR ANY PURPOSE OTHER THAN THE MANUFACTURE OF TRUSSES BY TAMARACK ROOF TRUSSES INC AND WILL BE RETRACTED BY TAMARACK ROOF TRUSSES INC IF UTLILZED FOR ANY OTHER PURPOSE.

Mitek ver 7.5.0

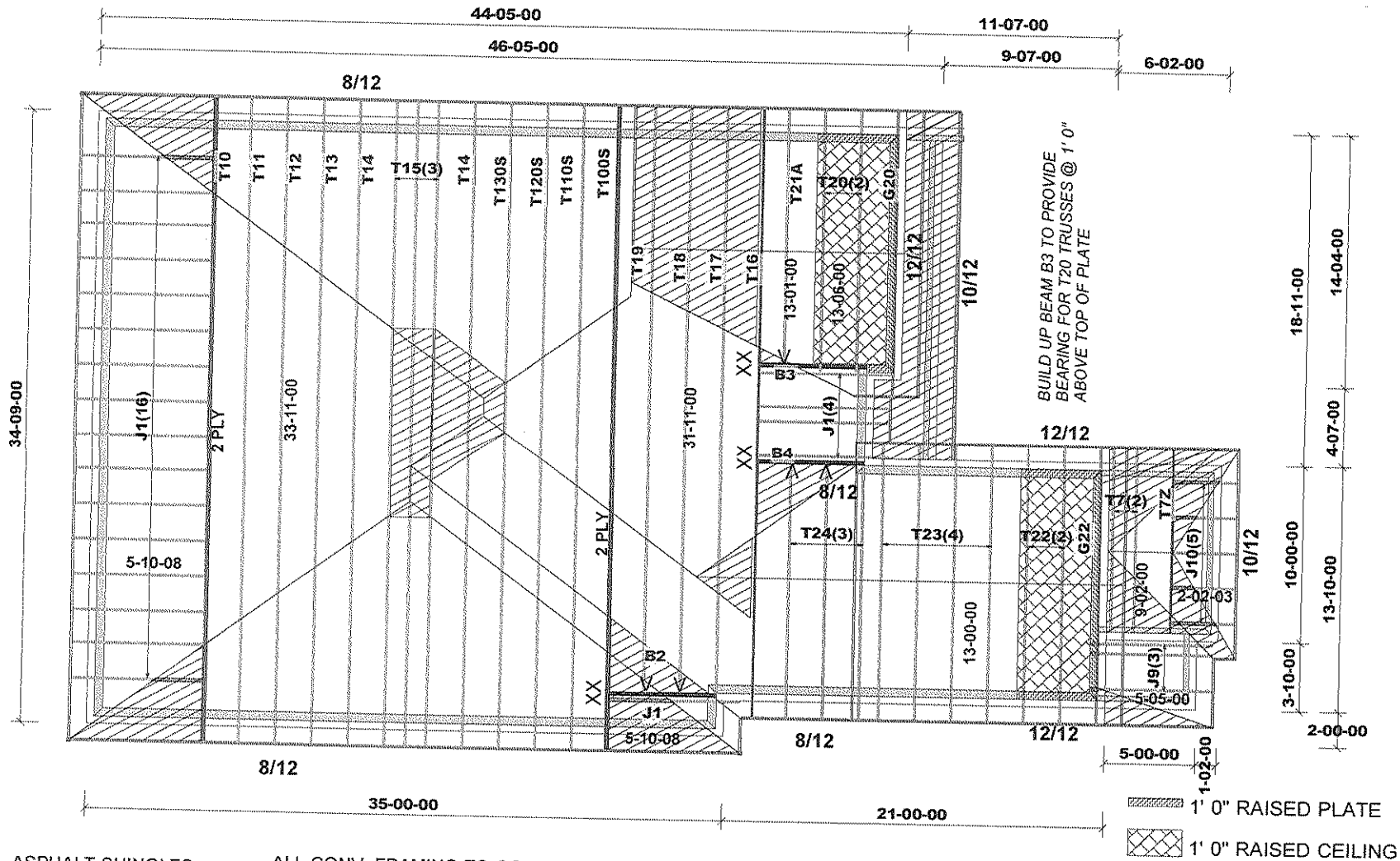

ASPHALT SHINGLES
12" FINISHED O.H.
5" CLADDING ALLOWANCE
2x6 EXTERIOR WALLS
2x6 FASCIA BOARD
HEEL: R.T.M.C.

T - 170391

ALL CONV. FRAMING TO CONFORM WITH PART 9 OF O.B.C. 2012 ROOF RAFTERS THAT CROSS OVER OR MEET TRUSSES TO BE 2X4 SPF #2 24" O.C. WITH A VERT.POST TO THE TRUSS UNDERNEATH AT EACH CROSS PT. VERT. POST LONGER THAN 6' TO HAVE LATERAL BRACING SO THAT THE DIST. BETWEEN END PT. & BETWEEN ROWS OF BRACING DOES NOT EXCEED 6'

DESIGN CONFORMS WITH OBC 2012
OCCUPANCY: RESIDENTIAL | PART: 9
GROUND SNOW LOAD Ss=31.3psf Sr=8.4psf
DESIGN LOADS
TCDL (3psf)
BCLL (10.5psf)
BCDL (7psf)

DENOTES:
CONVENTIONAL FRAMING

HARDWARE:

HGUS26-2 -(XX)
LJS26DS -(V)

BEAMS:
ALL BEAMS (B): 2 - 2X10 SPF #2

ALL ROOF SLOPES ARE 6/12 UNLESS OTHERWISE NOTED

m10,980

TAMARACK LUMBER INC.	Job Track: **43954**	Builder / Location: **GREENPARK HOMES / WATERDOWN**	Model / Elevation: **ROSEWOOD 5 / 2**
	Layout ID: **282769**	Project: **RUSSEL GARDENS PHASE 2**	
	Plan Log: **92602**	Date: 8/28/2017 Designer: colinh/S.V.E	

THESE DRAWINGS CONSTITUTE THE PROPERTY OF TAMARACK ROOF TRUSSES INC., SHALL NOT BE REPRODUCED, PUBLISHED, OR REDISTRIBUTED IN ANY MANNER OR UTILIZED FOR ANY PURPOSE OTHER THAN THE MANUFACTURE OF TRUSSES BY TAMARACK ROOF TRUSSES INC AND WILL BE RETRACTED BY TAMARACK ROOF TRUSSES INC IF UTLILZED FOR ANY OTHER PURPOSE.

Mitek ver 7.5.0

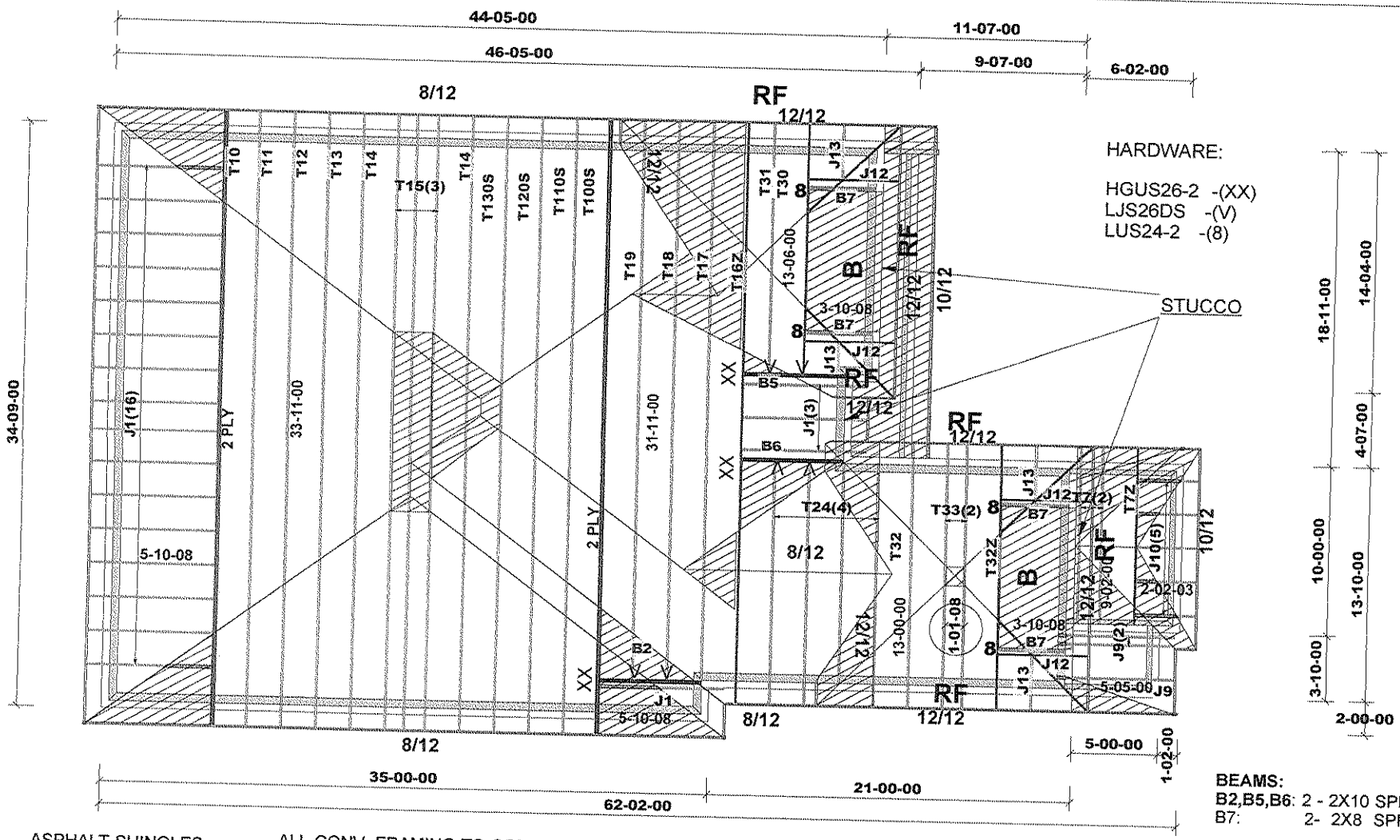

BEAMS:
B2,B5,B6: 2 - 2X10 SPF #2
B7: 2- 2X8 SPF#2

ASPHALT SHINGLES
12" FINISHED O.H.
5" CLADDING ALLOWANCE
2x6 EXTERIOR WALLS
2x6 FASCIA BOARD
HEEL: R.T.M.C.

T - 170391

ALL CONV. FRAMING TO CONFORM WITH PART 9 OF O.B.C. 2012 ROOF RAFTERS THAT CROSS OVER OR MEET TRUSSES TO BE 2X4 SPF #2 24" O.C. WITH A VERT.POST TO THE TRUSS UNDERNEATH AT EACH CROSS PT. VERT. POST LONGER THAN 6' TO HAVE LATERAL BRACING SO THAT THE DIST. BETWEEN END PT. & BETWEEN ROWS OF BRACING DOES NOT EXCEED 6'

DESIGN CONFORMS WITH OBC 2012
OCCUPANCY: RESIDENTIAL | PART: 9
GROUND SNOW LOAD Ss=31.3psf Sr=8.4psf
DESIGN LOADS
TCDL (3psf)
BCLL (10.5psf)
BCDL (7psf)

RF: 1' 0" RAISED FASICA ONLY

B: BARREL VAULT CEILING (C.R.F.)

DENOTES: CONVENTIONAL FRAMING

ALL ROOF SLOPES ARE 6/12 UNLESS OTHERWISE NOTED

M10,980

TAMARACK LUMBER INC. ALPA LUMBER GROUP	Job Track: **43954**	Builder / Location: **GREENPARK HOMES / WATERDOWN**	Model / Elevation: **ROSEWOOD 5 / 3**
	Layout ID: **282770**	Project: **RUSSEL GARDENS PHASE 2**	
	Plan Log: **92601**	Date: 8/28/2017 Designer: colinh/S.V.E	

THESE DRAWINGS CONSTITUTE THE PROPERTY OF TAMARACK ROOF TRUSSES INC., SHALL NOT BE REPRODUCED, PUBLISHED, OR REDISTRIBUTED IN ANY MANNER OR UTILIZED FOR ANY PURPOSE OTHER THAN THE MANUFACTURE OF TRUSSES BY TAMARACK ROOF TRUSSES INC AND WILL BE RETRACTED BY TAMARACK ROOF TRUSSES INC IF UTLILZED FOR ANY OTHER PURPOSE.

Mitek ver 7.5.0

TAMARACK LUMBER INC.
ALPA LUMBER GROUP

Delivery Shiplist

DATE	08/28/17
SALES REP	Mario

JOB TRACK: 43954 LAYOUT ID: 282768 LOCATION: WATERDOWN
BUILDER: GREENPARK - RUSSELL GARDENS PH 2 SUB-BUILDER:
MODEL: ROSEWOOD 5 ELEVATION: 1

ROOF TRUSSES

ROOF TRUSS SPACING: 24.0 IN. O.C. (TYP.)

PROFILE	QTY / PLY	MARK TYPE	PITCH TC / BC	SPAN	TRUSS HEIGHT	LUMBER TOP	LUMBER BOT	OVERHANG LEFT / RIGHT	HEEL HEIGHT LEFT / RIGHT	LBS. / BFT.	BUNDLE # / STACK #	LOAD BY: / REMARKS
	16	T1 COMMON	7.00 / 0.00	34-02-00	11-03-00	2 X 4	2 X 4	01-03-08 / 01-03-08	01-03-07 / 01-03-07	2398.08 / 1472.00		
	2	G1 GABLE	7.00 / 0.00	34-02-00	11-03-00	2 X 4	2 X 4	01-03-08 / 01-03-08	01-03-07 / 01-03-07	348.18 / 220.00		
	1 / 4 Ply	T2 COMMON	7.00 / 0.00	31-11-00	10-07-02	2 X 4	2 X 6	00-00-00 / 00-00-00	01-03-07 / 01-03-07	694.88 / 418.68		
	5	T3 COMMON	7.00 / 0.00	31-11-00	10-07-02	2 X 4	2 X 4	01-03-08 / 01-03-08	01-03-07 / 01-03-07	651.35 / 401.65		
	1	T4 HIP GIRDER	7.00 / 0.00	13-00-00	04-10-07	2 X 4	2 X 6	01-03-08 / 01-03-08	01-03-07 / 01-03-07	67.90 / 43.83		
	3	T5 COMMON	7.00 / 0.00	13-00-00	05-00-15	2 X 4	2 X 4	01-03-08 / 01-03-08	01-03-07 / 01-03-07	162.99 / 104.52		
	3	T6 SCISSORS	7.00 / 4.00	09-02-00	03-11-08	2 X 4	2 X 4	01-03-08 / 01-03-08	01-03-07 / 01-03-07	115.92 / 78.00		
	1	T7 COMMON	6.00 / 0.00	09-02-00	02-08-08	2 X 4	2 X 4	01-03-08 / 01-03-08	00-05-00 / 00-05-00	27.46 / 17.50		
	1	T7Z COMMON	6.00 / 0.00	09-02-00	02-08-08	2 X 4	2 X 4	01-03-08 / 01-03-08	00-05-00 / 00-05-00	27.46 / 17.50		
	2	J6 JACK-OPEN	10.00 / 0.00	03-10-08	04-10-07	2 X 4	2 X 4	01-03-08 / 00-00-00	01-07-11 / 00-05-13	27.50 / 17.34		
	3	J9 JACK-OPEN	6.00 / 0.00	05-05-00	03-01-08	2 X 4	2 X 4	01-03-08 / 00-00-00	00-05-00 / 03-01-08	44.70 / 27.99		
	5	J10 JACK-OPEN	10.00 / 0.00	02-02-03	02-08-08	2 X 4	2 X 4	01-03-08 / 00-00-00	00-10-11 / 00-05-13	42.25 / 30.00		

TOTAL # TRUSS= **46.00** TOTAL BFT OF ALL TRUSSES= **2849.01** BFT. TOTAL WEIGHT OF ALL TRUSSES= **4608.67** LBS.

HARDWARE

QTY	ITEM TYPE	MODEL	LENGTH FT-IN-16
1	Hangers	LUS24-2	
2	Hangers	LUS24	
15	Hangers	LJS26DS	

TOTAL # ITEMS= **18.00**

TAMARACK LUMBER INC.
ALPA LUMBER GROUP

Delivery Shiplist

DATE	08/28/17
SALES REP	Mario

JOB TRACK: 43954 LAYOUT ID: 282769 LOCATION: WATERDOWN
BUILDER: GREENPARK - RUSSELL GARDENS PH 2. SUB-BUILDER:
MODEL: ROSEWOOD 5 ELEVATION: 2

ROOF TRUSSES

ROOF TRUSS SPACING: 24.0 IN. O.C. (TYP.)

PROFILE	QTY / PLY	MARK / TYPE	PITCH TC / BC	SPAN	TRUSS HEIGHT	LUMBER TOP	LUMBER BOT	OVERHANG LEFT / RIGHT	HEEL HEIGHT LEFT / RIGHT	LBS. / BFT.	BUNDLE # / STACK #	LOAD BY: / REMARKS
	1 / 2 Ply	T100S ROOF	8.00 / 0.00	33-11-00	08-00-12	2 X 6	2 X 6	01-03-08 / 01-03-08	01-04-13 / 01-04-13	446.54 / 270.68		
	1	T110S ROOF	8.00 / 0.00	33-11-00	09-00-12	2 X 4	2 X 4	01-03-08 / 01-03-08	01-04-13 / 01-04-13	155.65 / 99.67		
	1	T120S ROOF	8.00 / 0.00	33-11-00	10-00-12	2 X 4	2 X 4	01-03-08 / 01-03-08	01-04-13 / 01-04-13	162.85 / 104.17		
	1	T130S ROOF	8.00 / 0.00	33-11-00	11-00-12	2 X 4	2 X 4	01-03-08 / 01-03-08	01-04-13 / 01-04-13	177.93 / 112.50		
	1 / 2 Ply	T10 HIP GIRDER	8.00 / 0.00	33-11-00	04-01-04	2 X 6	2 X 6	01-03-08 / 01-03-08	01-04-13 / 01-04-13	382.98 / 228.68		
	1	T11 HIP	8.00 / 0.00	33-11-00	05-01-04	2 X 4	2 X 4	01-03-08 / 01-03-08	01-04-13 / 01-04-13	137.63 / 89.83		
	1	T12 HIP	8.00 / 0.00	33-11-00	06-01-04	2 X 4	2 X 4	01-03-08 / 01-03-08	01-04-13 / 01-04-13	141.70 / 90.83		
	1	T13 HIP	8.00 / 0.00	33-11-00	07-01-04	2 X 4	2 X 4	01-03-08 / 01-03-08	01-04-13 / 01-04-13	148.63 / 95.50		
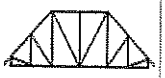	2	T14 HIP	8.00 / 0.00	33-11-00	08-01-04	2 X 4	2 X 4	01-03-08 / 01-03-08	01-04-13 / 01-04-13	298.96 / 188.66		
	3	T15 HIP	8.00 / 0.00	33-11-00	09-01-04	2 X 4	2 X 4	01-03-08 / 01-03-08	01-04-13 / 01-04-13	467.85 / 295.50		
	1	T16 HIP GIRDER	8.00 / 0.00	31-11-00	04-01-04	2 X 6	2 X 6	01-03-08 / 01-03-08	01-04-13 / 01-04-13	194.08 / 119.34		
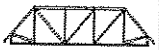	1	T17 HIP	8.00 / 0.00	31-11-00	05-01-04	2 X 4	2 X 4	01-03-08 / 01-03-08	01-04-13 / 01-04-13	126.00 / 80.83		
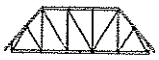	1	T18 HIP	8.00 / 0.00	31-11-00	06-01-04	2 X 4	2 X 4	01-03-08 / 01-03-08	01-04-13 / 01-04-13	135.94 / 86.00		
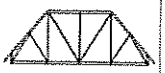	1	T19 HIP	8.00 / 0.00	31-11-00	07-01-04	2 X 4	2 X 4	01-03-08 / 01-03-08	01-04-13 / 01-04-13	133.86 / 85.17		
	2	T20 COMMON	12.00 / 0.00	13-06-00	08-07-08	2 X 4	2 X 4	01-03-08 / 01-03-08	01-10-08 / 01-10-08	140.00 / 88.00		
	1	G20 GABLE	12.00 / 0.00	13-06-00	08-07-08	2 X 4	2 X 4	01-03-08 / 01-03-08	01-10-08 / 01-10-08	71.47 / 47.00		
	1	T21A COMMON	12.00 / 0.00	13-01-00	09-07-08	2 X 4	2 X 4	01-03-08 / 00-00-00	02-10-08 / 03-03-08	72.97 / 46.50		
	2	T22 COMMON	12.00 / 0.00	13-00-00	08-04-08	2 X 4	2 X 4	01-03-08 / 01-03-08	01-10-08 / 01-10-08	135.72 / 86.66		

TAMARACK LUMBER INC.
ALPA LUMBER GROUP

Delivery Shiplist

DATE	08/28/17
SALES REP	Mario

JOB TRACK: 43954 LAYOUT ID: 282769 LOCATION: WATERDOWN
BUILDER: GREENPARK - RUSSELL GARDENS PH 2 SUB-BUILDER:
MODEL: ROSEWOOD 5 ELEVATION: 2

ROOF TRUSSES

ROOF TRUSS SPACING: 24.0 IN. O.C. (TYP.)

PROFILE	QTY / PLY	MARK / TYPE	PITCH TC / BC	SPAN	TRUSS HEIGHT	LUMBER TOP	LUMBER BOT	OVERHANG LEFT / RIGHT	HEEL HEIGHT LEFT / RIGHT	LBS. / BFT.	BUNDLE # / STACK #	LOAD BY: / REMARKS
	1	G22 GABLE	12.00 0.00	13-00-00	08-04-08	2 X 4	2 X 4	01-03-08 01-03-08	01-10-08 01-10-08	68.66 43.33		
	4	T23 COMMON	12.00 0.00	13-00-00	09-04-08	2 X 4	2 X 4	01-03-08 01-03-08	02-10-08 02-10-08	295.00 188.68		
	3	T24 COMMON	8.00 0.00	13-00-00	05-08-13	2 X 4	2 X 4	01-03-08 01-03-08	01-04-13 01-04-13	170.28 109.02		
	2	T7 COMMON	6.00 0.00	09-02-00	02-08-08	2 X 4	2 X 4	01-03-08 01-03-08	00-05-00 00-05-00	54.92 35.00		
	1	T7Z COMMON	6.00 0.00	09-02-00	02-08-08	2 X 4	2 X 4	01-03-08 01-03-08	00-05-00 00-05-00	27.46 17.50		
	21	J1 JACK-OPEN	6.00 0.00	05-10-08	04-01-04	2 X 4	2 X 4	01-03-08 00-00-00	01-02-00 04-01-04	352.59 224.07		
	3	J9 JACK-OPEN	6.00 0.00	05-05-00	03-01-08	2 X 4	2 X 4	01-03-08 00-00-00	00-05-00 03-01-08	44.70 27.99		
	5	J10 JACK-OPEN	10.00 0.00	02-02-03	02-08-08	2 X 4	2 X 4	01-03-08 00-00-00	00-10-11 02-08-08	42.25 30.00		

TOTAL # TRUSS= **65.00** TOTAL BFT OF ALL TRUSSES= **2891.11** BFT. TOTAL WEIGHT OF ALL TRUSSES= **4586.62** LBS.

HARDWARE

QTY	ITEM TYPE	MODEL	LENGTH FT-IN-16
3	Hangers	HGUS26-2	
5	Hangers	LJS26DS	

TOTAL # ITEMS= **8.00**

TAMARACK LUMBER INC.
ALPA LUMBER GROUP

Delivery Shiplist

DATE	08/28/17
SALES REP	Mario

JOB TRACK: 43954 LAYOUT ID: 282770 LOCATION: WATERDOWN
BUILDER: GREENPARK - RUSSELL GARDENS PH2 SUB-BUILDER:
MODEL: ROSEWOOD 5 ELEVATION: 3

ROOF TRUSSES

ROOF TRUSS SPACING: 24.0 IN. O.C. (TYP.)

PROFILE	QTY / PLY	MARK / TYPE	PITCH TC / BC	SPAN	TRUSS HEIGHT	LUMBER TOP	LUMBER BOT	OVERHANG LEFT / RIGHT	HEEL HEIGHT LEFT / RIGHT	LBS. / BFT.	BUNDLE # / STACK #	LOAD BY: / REMARKS
	1 / 2 Ply	T100S ROOF	8.00 / 0.00	33-11-00	08-00-12	2 X 6	2 X 6	01-03-08 / 01-03-08	01-04-13 / 01-04-13	446.54 / 270.68		
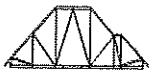	1	T110S ROOF	8.00 / 0.00	33-11-00	09-00-12	2 X 4	2 X 4	01-03-08 / 01-03-08	01-04-13 / 01-04-13	155.65 / 99.67		
	1	T120S ROOF	8.00 / 0.00	33-11-00	10-00-12	2 X 4	2 X 4	01-03-08 / 01-03-08	01-04-13 / 01-04-13	162.85 / 104.17		
	1	T130S ROOF	8.00 / 0.00	33-11-00	11-00-12	2 X 4	2 X 4	01-03-08 / 01-03-08	01-04-13 / 01-04-13	177.93 / 112.50		
	1 / 2 Ply	T10 HIP GIRDER	8.00 / 0.00	33-11-00	04-01-04	2 X 6	2 X 6	01-03-08 / 01-03-08	01-04-13 / 01-04-13	382.98 / 228.68		
	1	T11 HIP	8.00 / 0.00	33-11-00	05-01-04	2 X 4	2 X 4	01-03-08 / 01-03-08	01-04-13 / 01-04-13	137.63 / 89.83		
	1	T12 HIP	8.00 / 0.00	33-11-00	06-01-04	2 X 4	2 X 4	01-03-08 / 01-03-08	01-04-13 / 01-04-13	141.70 / 90.83		
	1	T13 HIP	8.00 / 0.00	33-11-00	07-01-04	2 X 4	2 X 4	01-03-08 / 01-03-08	01-04-13 / 01-04-13	148.63 / 95.50		
	2	T14 HIP	8.00 / 0.00	33-11-00	08-01-04	2 X 4	2 X 4	01-03-08 / 01-03-08	01-04-13 / 01-04-13	298.96 / 188.66		
	3	T15 HIP	8.00 / 0.00	33-11-00	09-01-04	2 X 4	2 X 4	01-03-08 / 01-03-08	01-04-13 / 01-04-13	467.85 / 295.50		
	1	T16Z HIP GIRDER	8.00 / 0.00	31-11-00	04-01-04	2 X 6	2 X 6	01-03-08 / 01-03-08	01-04-13 / 01-04-13	194.08 / 119.34		
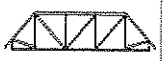	1	T17 HIP	8.00 / 0.00	31-11-00	05-01-04	2 X 4	2 X 4	01-03-08 / 01-03-08	01-04-13 / 01-04-13	126.00 / 80.83		
	1	T18 HIP	8.00 / 0.00	31-11-00	06-01-04	2 X 4	2 X 4	01-03-08 / 01-03-08	01-04-13 / 01-04-13	135.94 / 86.00		
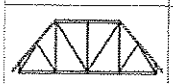	1	T19 HIP	8.00 / 0.00	31-11-00	07-01-04	2 X 4	2 X 4	01-03-08 / 01-03-08	01-04-13 / 01-04-13	133.88 / 85.17		
	1	T30 HIP GIRDER	12.00 / 0.00	13-06-00	06-09-00	2 X 4	2 X 4	01-03-08 / 01-03-08	02-10-08 / 02-10-08	72.97 / 47.00		
	1	T31 HIP	12.00 / 0.00	13-06-00	08-09-00	2 X 4	2 X 4	01-03-08 / 01-03-08	02-10-08 / 02-10-08	76.77 / 49.83		
	4	T24 COMMON	8.00 / 0.00	13-00-00	05-08-13	2 X 4	2 X 4	01-03-08 / 01-03-08	01-04-13 / 01-04-13	227.04 / 145.36		
	1	T32 HIP	12.00 / 0.00	13-00-00	06-09-00	2 X 4	2 X 4	01-03-08 / 01-03-08	02-10-08 / 02-10-08	67.27 / 43.33		

TAMARACK LUMBER INC.
ALPA LUMBER GROUP

Delivery Shiplist

DATE	08/28/17
SALES REP	Mario

JOB TRACK: 43954 LAYOUT ID: 282770 LOCATION: WATERDOWN
BUILDER: GREENPARK - RUSSELL GARDENS PH 1 SUB-BUILDER:
MODEL: ROSEWOOD 5 ELEVATION: 3

ROOF TRUSSES

ROOF TRUSS SPACING: 24.0 IN. O.C. (TYP.)

PROFILE	QTY / PLY	MARK / TYPE	PITCH TC / BC	SPAN	TRUSS HEIGHT	LUMBER TOP	LUMBER BOT	OVERHANG LEFT / RIGHT	HEEL HEIGHT LEFT / RIGHT	LBS. / BFT.	BUNDLE # / STACK #	LOAD BY: / REMARKS
	1	T32Z HIP	12.00 0.00	13-00-00	06-09-00	2 X 4	2 X 4	01-03-08 01-03-08	02-10-08 02-10-08	67.27 43.33		
	2	T33 HIP	12.00 0.00	13-00-00	08-09-00	2 X 4	2 X 4	01-03-08 01-03-08	02-10-08 02-10-08	151.16 98.34		
	2	T7 COMMON	6.00 0.00	09-02-00	02-08-08	2 X 4	2 X 4	01-03-08 01-03-08	00-05-00 00-05-00	54.92 35.00		
	1	T7Z COMMON	6.00 0.00	09-02-00	02-08-08	2 X 4	2 X 4	01-03-08 01-03-08	00-05-00 00-05-00	27.46 17.50		
	20	J1 JACK-OPEN	6.00 0.00	05-10-08	04-01-04	2 X 4	2 X 4	01-03-08 00-00-00	01-02-00 04-01-04	335.80 213.40		
	3	J9 JACK-OPEN	6.00 0.00	05-05-00	03-01-08	2 X 4	2 X 4	01-03-08 00-00-00	00-05-00 00-06-11	44.70 27.99		
	5	J10 JACK-OPEN	10.00 0.00	02-02-03	02-08-08	2 X 4	2 X 4	01-03-08 00-00-00	00-10-11 02-08-08	41.20 29.15		
	4	J12 JACK-OPEN	12.00 0.00	03-10-08	04-07-15	2 X 4	2 X 4	01-03-08 -02-01-01	02-10-08 06-04-01	46.60 30.00		
	4	J13 JACK-OPEN	12.00 0.00	01-10-08	04-07-15	2 X 4	2 X 4	01-03-08 -00-01-01	02-10-08 00-03-08	37.48 24.68		

TOTAL # TRUSS= **68.00** TOTAL BFT OF ALL TRUSSES= **2752.27** BFT. TOTAL WEIGHT OF ALL TRUSSES= **4361.26** LBS.

HARDWARE

QTY	ITEM TYPE	MODEL	LENGTH FT-IN-16
3	Hangers	HGUS26-2	
4	Hangers	LUS24-2	
6	Hangers	LJS26DS	

TOTAL # ITEMS= **13.00**

JOB NAME	TRUSS NAME	QUANTITY	PLY	JOB DESC. 43954	DRWG NO.
282768	T1	16	1	TRUSS DESC.	

Tamarack Roof Truss, Burlington

Version 8.030 S Oct 5 2016 MiTek Industries, Inc. Tue Aug 29 08:51:00 2017 Page 1
ID:xPHbW_B80ofwqI_kcMaimzyjO4I-dy5uNWDbX?C3yclAEaweaBILGn4PlZg3IVOX3lyj2j9

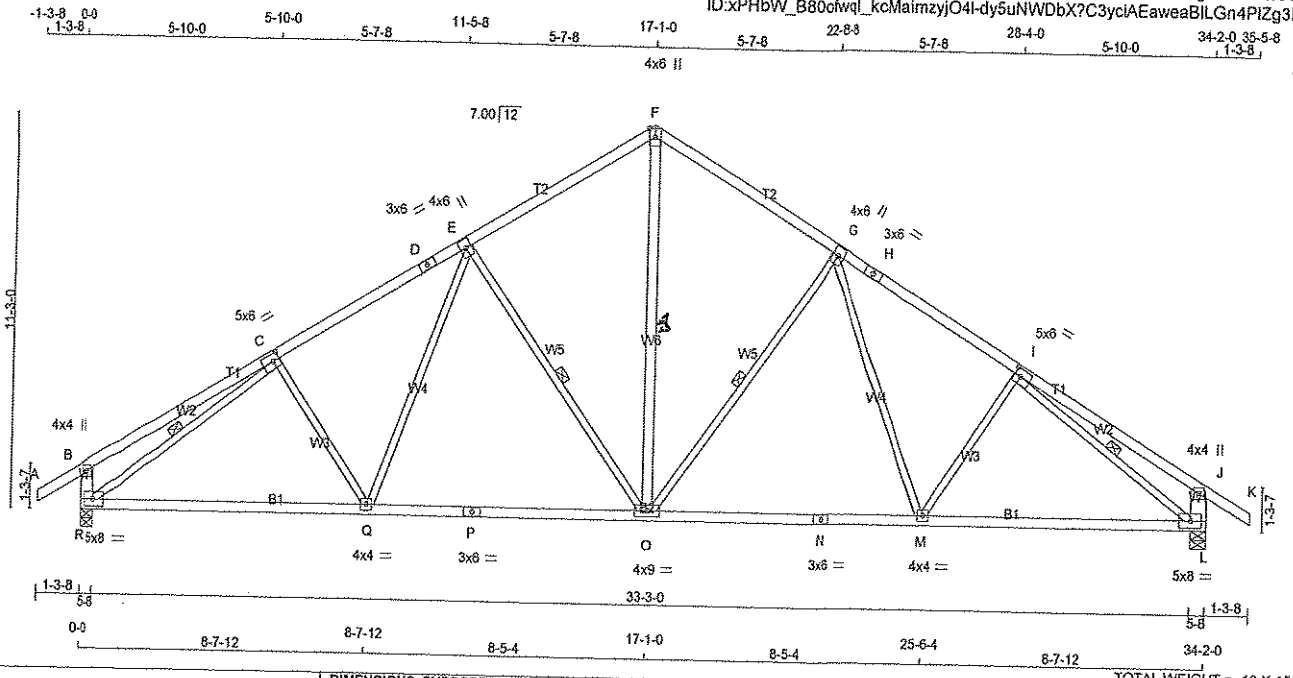

TOTAL WEIGHT = 16 X 150 = 2398 lb

[M][F]

LUMBER

N. L. G. A. RULES

CHORDS	SIZE		LUMBER	DESCR.
A - D	2x4	DRY	No.2	SPF
D - F	2x4	DRY	No.2	SPF
F - H	2x4	DRY	No.2	SPF
H - K	2x4	DRY	No.2	SPF
R - B	2x6	DRY	No.2	SPF
L - J	2x6	DRY	No.2	SPF
R - P	2x4	DRY	No.2	SPF
P - N	2x4	DRY	No.2	SPF
N - L	2x4	DRY	No.2	SPF
ALL WEBS EXCEPT	2x3	DRY	No.2	SPF
O - F	2x4	DRY	No.2	SPF

DRY: SEASONED LUMBER.

PLATES (table is in inches)

JT	TYPE	PLATES	W	LEN	Y	X
B	TMV+p	MT20	4.0	4.0		
C	TMWW-t	MT20	5.0	6.0	2.50	2.25
D	TS-t	MT20	3.0	6.0		
E	TMWW+t	MT20	4.0	6.0		
F	TTW+p	MT20	4.0	6.0	Edge	
G	TMWW+t	MT20	4.0	6.0		
H	TS-t	MT20	3.0	6.0		
I	TMWW-t	MT20	5.0	6.0	2.50	2.25
J	TMV+p	MT20	4.0	4.0		
L	BMVW1-t	MT20	5.0	8.0		
M	BMWW-t	MT20	4.0	4.0		
N	BS-t	MT20	3.0	6.0		
O	BMWWW-t	MT20	4.0	9.0		
P	BS-t	MT20	3.0	6.0		
Q	BMWW-t	MT20	4.0	4.0		
R	BMVW1-t	MT20	5.0	8.0		

Edge - INDICATES REFERENCE CORNER OF PLATE TOUCHES EDGE OF CHORD.

DIMENSIONS, SUPPORTS AND LOADINGS SPECIFIED BY FABRICATOR TO BE VERIFIED BY BUILDING DESIGNER

BEARINGS

JT	FACTORED GROSS REACTION VERT	HORZ	MAXIMUM FACTORED GROSS REACTION DOWN	HORZ	UPLIFT	INPUT BRG	REQRD BRG
R	2033	0	2033	0	0	IN-SX	IN-SX
L	2033	0	2033	0	0	5-8	5-8

UNFACTORED REACTIONS

JT	1ST LCASE COMBINED	MAX./MIN. COMPONENT REACTIONS SNOW	LIVE	PERM.LIVE	WIND	DEAD	SOIL
R	1653	944 / 0	359 / 0	0 / 0	0 / 0	350 / 0	0 / 0
L	1653	944 / 0	359 / 0	0 / 0	0 / 0	350 / 0	0 / 0

BEARING MATERIAL TO BE SPF NO.2 OR BETTER AT JOINT(S) R, L

BRACING

TOP CHORD TO BE SHEATHED OR MAX. PURLIN SPACING = 4.11 FT.
MAX. UNBRACED BOTTOM CHORD LENGTH = 10.00 FT. OR RIGID CEILING DIRECTLY APPLIED.

ALL PITCH BREAKS AND PERIMETER CORNER JOINTS MUST BE LATERALLY RESTRAINED.

1 LATERAL BRACE(S) AT 1/ 2 LENGTH OF G-O, E-O, C-R, I-L.

END VERTICAL(S) MUST BE SHEATHED OR HAVE BRACES AS INDICATED IN THE MAX. UNBRACED LENGTH COLUMN OF THE TABLE BELOW

LOADING

TOTAL LOAD CASES: (4)

CHORDS

MEMB. FR-TO	MAX. FACTORED FORCE (LBS)	FACTORED VERT. LOAD (PLF) FROM	TO	LC1 MAX CSI (LC)	MAX. UNBRAC LENGTH
A- B	0 / 29	-84.3	-84.3	0.11 (1)	10.00
B- C	0 / 22	-84.3	-84.3	0.35 (1)	10.00
C- D	-2402 / 0	-84.3	-84.3	0.40 (1)	4.11
D- E	-2402 / 0	-84.3	-84.3	0.40 (1)	4.11
E- F	-1772 / 0	-84.3	-84.3	0.37 (1)	4.66
F- G	-1772 / 0	-84.3	-84.3	0.37 (1)	4.66
G- H	-2402 / 0	-84.3	-84.3	0.40 (1)	4.11
H- I	-2402 / 0	-84.3	-84.3	0.40 (1)	4.11
I- J	0 / 22	-84.3	-84.3	0.35 (1)	10.00
J- K	0 / 29	-84.3	-84.3	0.11 (1)	10.00
R- B	-312 / 0	0.0	0.0	0.02 (1)	7.81
L- J	-312 / 0	0.0	0.0	0.02 (1)	7.81
R- Q	0 / 2154	-28.0	-28.0	0.76 (2)	10.00
Q- P	0 / 1940	-28.0	-28.0	0.73 (2)	10.00
P- O	0 / 1940	-28.0	-28.0	0.73 (2)	10.00
O- N	0 / 1940	-28.0	-28.0	0.73 (2)	10.00
N- M	0 / 1940	-28.0	-28.0	0.73 (2)	10.00
M- L	0 / 2154	-28.0	-28.0	0.76 (2)	10.00

WEBS

MEMB. FR-TO	MAX. FACTORED FORCE (LBS)	MAX CSI (LC)
O- F	0 / 1380	0.22 (1)
O- G	-721 / 0	0.46 (1)
G- M	0 / 464	0.10 (2)
M- I	-136 / 114	0.06 (1)
E- O	-721 / 0	0.46 (1)
Q- E	0 / 464	0.10 (2)
C- Q	-136 / 114	0.06 (1)
R- C	-2696 / 0	0.89 (1)
I- L	-2696 / 0	0.89 (1)

DESIGN CRITERIA

SPECIFIED LOADS:

TOP CH.	LL	=	25.6	PSF
	DL	=	3.0	PSF
BOT CH.	LL	=	10.5	PSF
	DL	=	7.0	PSF
TOTAL LOAD		=	46.1	PSF

SPACING = 24.0 IN. C/C

THIS TRUSS IS DESIGNED FOR RESIDENTIAL OR SMALL BUILDING REQUIREMENTS OF PART 9, NBCC 2010

THIS DESIGN COMPLIES WITH:
- PART 9 OF OBC 2012 , BCBC 2012 , ABC 2014
- CSA 086-09
- TPIC 2011

(55 % OF 31.3 P.S.F. G.S.L. PLUS 8.4 P.S.F. RAIN LOAD) EQUALS 25.6 P.S.F. SPECIFIED ROOF LIVE LOAD

ALLOWABLE DEFL.(LL)= L/360 (1.14")
CALCULATED VERT. DEFL.(LL) = L/ 999 (0.24")
ALLOWABLE DEFL.(TL)= L/360 (1.14")
CALCULATED VERT. DEFL.(TL) = L/ 999 (0.40")

CSI: TC=0.40 (G-I:1) , BC=0.76 (L-M:2) , WB=0.89 (C-R:1) , SSI=0.20 (L-M:3)

DOL LUMBER=1.00 NAIL=1.00 LS BEND=1.10 COMP=1.10 SHEAR=1.10 TENS= 1.10

COMPANION LIVE LOAD FACTOR = 0.50

AUTOSOLVE HEELS OFF

TRUSS PLATE MANUFACTURER IS NOT RESPONSIBLE FOR QUALITY CONTROL IN THE TRUSS MANUFACTURING PLANT .

NAIL VALUES

PLATE	GRIP(DRY) (PSI) MAX	MIN	SHEAR (PLI) MAX	MIN	SECTION (PLI) MAX	MIN
MT20	618	354	1687	822	2284	1656

PLATE PLACEMENT TOL. = 0.250 inches

PLATE ROTATION TOL. = 5.0 Deg.

JSI GRIP= 0.88 (L) (INPUT = 0.90)
JSI METAL= 0.67 (C) (INPUT = 1.00)

LICENSED PROFESSIONAL ENGINEER
S. KATSOULAKOS
PROVINCE OF ONTARIO

DWG NO. TAM43561-17
STRUCTURAL
COMPONENT ONLY

JOB NAME	TRUSS NAME	QUANTITY	PLY	JOB DESC. 43954	DRWG NO.
282768	G1	2	1	TRUSS DESC.	

Tamarack Roof Truss, Burlington

Version 8.030 S Oct 5 2016 MiTek Industries, Inc. Tue Aug 29 08:51:00 2017 Page 1
ID:xPHbW_B80ofwqI_kcMaimzyjO4l-dy5uNWDbX?C3yciAEaweaBlQpnFblka3lVOX3lyj2j9

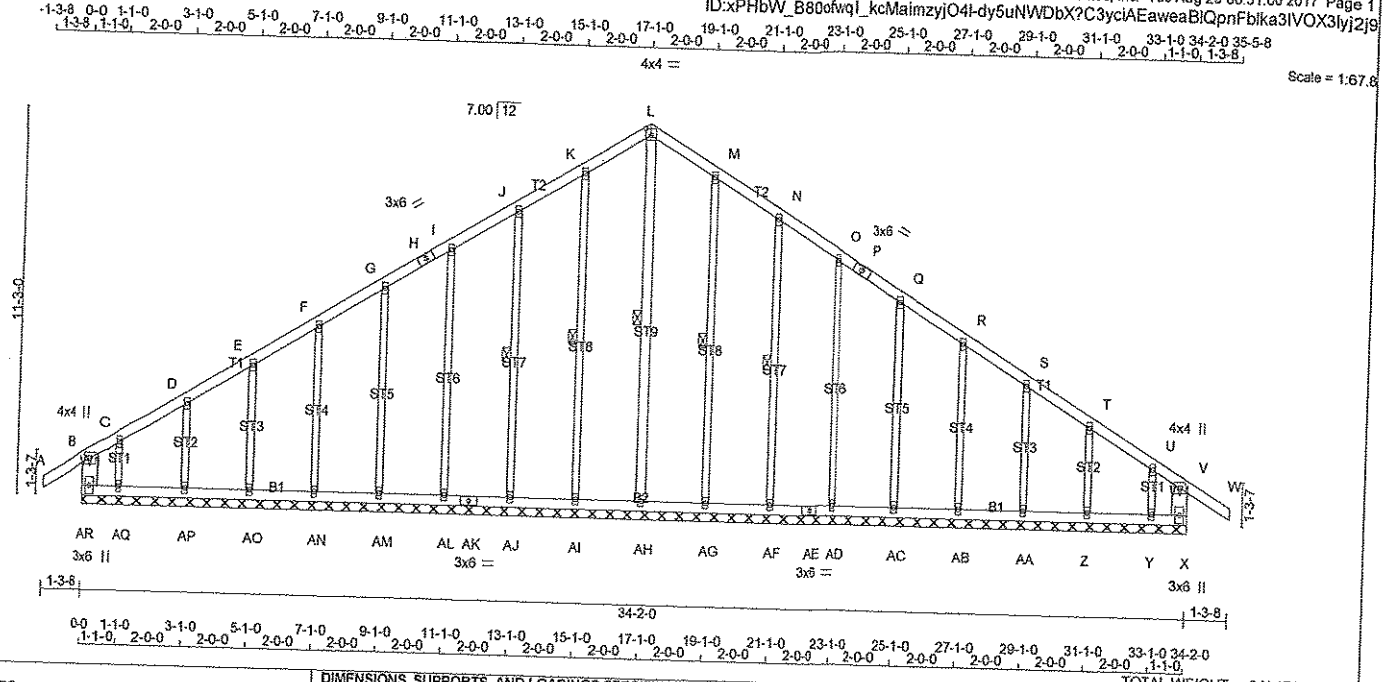

LUMBER

N. L. G. A. RULES

CHORDS	SIZE		LUMBER	DESCR.
A - H	2x4	DRY	No.2	SPF
H - L	2x4	DRY	No.2	SPF
L - P	2x4	DRY	No.2	SPF
P - W	2x4	DRY	No.2	SPF
AR- B	2x6	DRY	No.2	SPF
X - V	2x6	DRY	No.2	SPF
AR- AK	2x4	DRY	No.2	SPF
AK- AE	2x4	DRY	No.2	SPF
AE- X	2x4	DRY	No.2	SPF
ALL WEBS EXCEPT	2x3	DRY	No.2	SPF
AH- L	2x4	DRY	No.2	SPF
ALL GABLE WEBS EXCEPT	2x3	DRY	No.2	SPF
ST1	2x4	DRY	No.2	SPF

DRY: SEASONED LUMBER.

GABLE STUDS SPACED AT 2-0-0 OC.

PLATES (table is in inches)

JT	TYPE	PLATES	W	LEN	Y	X
B	TMV+p	MT20	4.0	4.0		
C, D, E, F, G, I, J, K, M, N, O, Q, R, S, T, U						
C	TMW+w	MT20	2.0	4.0		
H	TS-t	MT20	3.0	6.0		
L	TTW-p	MT20	4.0	4.0	2.25	2.00
P	TS-t	MT20	3.0	6.0		
V	TMV+p	MT20	4.0	4.0		
X	BMV1+p	MT20	3.0	6.0		
Y, Z, AA, AB, AC, AD, AF, AG, AH, AI, AJ, AL, AM, AN, AO, AP, AQ						
Y	BMW1+w	MT20	2.0	4.0		
AE	BS-t	MT20	3.0	6.0		
AK	BS-t	MT20	3.0	6.0		
AR	BMV1+p	MT20	3.0	6.0		

DWG NO. TAM 43589-17
STRUCTURAL
COMPONENT ONLY

DIMENSIONS, SUPPORTS AND LOADINGS SPECIFIED BY FABRICATOR TO BE VERIFIED BY BUILDING DESIGNER

BEARINGS

THIS TRUSS DESIGNED FOR CONTINUOUS BEARINGS.

THIS TRUSS REQUIRES RIGID SHEATHING ON EXPOSED FACE.

BEARING MATERIAL TO BE SPF NO.2 OR BETTER AT JOINT(S)

BRACING

TOP CHORD TO BE SHEATHED OR MAX. PURLIN SPACING = 6.25 FT.
MAX. UNBRACED BOTTOM CHORD LENGTH = 6.25 FT. OR RIGID CEILING DIRECTLY APPLIED.

ALL PITCH BREAKS AND PERIMETER CORNER JOINTS MUST BE LATERALLY RESTRAINED.

1 LATERAL BRACE(S) AT 1/ 2 LENGTH OF L-AH, K-AI, J-AJ, M-AG, N-AF.

END VERTICAL(S) MUST BE SHEATHED OR HAVE BRACES AS INDICATED IN THE MAX. UNBRACED LENGTH COLUMN OF THE TABLE BELOW

LOADING

TOTAL LOAD CASES: (4)

CHORDS

MEMB. FR-TO	MAX. FACTORED FORCE (LBS)	FACTORED VERT. LOAD (PLF) FROM	TO	LC1	MAX CSI (LC)	MAX. UNBRAC LENGTH
A- B	0 / 29	-84.3	-84.3	0.11	(1)	10.00
B- C	-18 / 0	-84.3	-84.3	0.07	(1)	6.25
C- D	0 / 9	-84.3	-84.3	0.04	(1)	10.00
D- E	0 / 9	-84.3	-84.3	0.04	(1)	10.00
E- F	0 / 14	-84.3	-84.3	0.04	(1)	10.00
F- G	0 / 16	-84.3	-84.3	0.04	(1)	10.00
G- H	0 / 19	-84.3	-84.3	0.04	(1)	10.00
H- I	0 / 19	-84.3	-84.3	0.04	(1)	10.00
I- J	0 / 21	-84.3	-84.3	0.04	(1)	10.00
J- K	0 / 22	-84.3	-84.3	0.04	(1)	10.00
K- L	0 / 25	-84.3	-84.3	0.05	(1)	10.00
L- M	0 / 25	-84.3	-84.3	0.05	(1)	10.00
M- N	0 / 22	-84.3	-84.3	0.04	(1)	10.00
N- O	0 / 21	-84.3	-84.3	0.04	(1)	10.00
O- P	0 / 19	-84.3	-84.3	0.04	(1)	10.00
P- Q	0 / 19	-84.3	-84.3	0.04	(1)	10.00
Q- R	0 / 16	-84.3	-84.3	0.04	(1)	10.00
R- S	0 / 14	-84.3	-84.3	0.04	(1)	10.00
S- T	0 / 9	-84.3	-84.3	0.04	(1)	10.00
T- U	0 / 9	-84.3	-84.3	0.04	(1)	10.00
U- V	-18 / 0	-84.3	-84.3	0.07	(1)	6.25
V- W	0 / 29	-84.3	-84.3	0.11	(1)	10.00
AR- B	-193 / 0	0.0	0.0	0.02	(1)	7.81
X- V	-193 / 0	0.0	0.0	0.02	(1)	7.81
AR-AQ	0 / 0	-28.0	-28.0	0.04	(1)	10.00
AQ-AP	-4 / 0	-28.0	-28.0	0.02	(2)	10.00
AP-AO	-9 / 0	-28.0	-28.0	0.02	(2)	10.00
AO-AN	-12 / 0	-28.0	-28.0	0.02	(2)	6.25
AN-AM	-14 / 0	-28.0	-28.0	0.02	(2)	6.25
AM-AL	-16 / 0	-28.0	-28.0	0.02	(2)	6.25
AL-AK	-18 / 0	-28.0	-28.0	0.02	(2)	6.25
AK-AJ	-18 / 0	-28.0	-28.0	0.02	(2)	6.25
AJ-AI	-19 / 0	-28.0	-28.0	0.02	(2)	6.25
AI-AH	-21 / 0	-28.0	-28.0	0.02	(2)	6.25
AH-AG	-21 / 0	-28.0	-28.0	0.02	(2)	6.25
AG-AF	-19 / 0	-28.0	-28.0	0.02	(2)	6.25
AF-AE	-18 / 0	-28.0	-28.0	0.02	(2)	6.25
AE-AD	-18 / 0	-28.0	-28.0	0.02	(2)	6.25
AD-AC	-16 / 0	-28.0	-28.0	0.02	(2)	6.25
AC-AB	-14 / 0	-28.0	-28.0	0.02	(2)	6.25
AB-AA	-12 / 0	-28.0	-28.0	0.02	(2)	6.25
AA- Z	-9 / 0	-28.0	-28.0	0.02	(2)	10.00

WEBS

MEMB. FR-TO	MAX. FACTORED FORCE (LBS)	MAX CSI (LC)
AH- L	-202 / 0	0.13 (1)
AI- K	-169 / 0	0.12 (1)
AJ- J	-168 / 0	0.09 (1)
AL- I	-168 / 0	0.19 (1)
AM- G	-167 / 0	0.12 (1)
AN- F	-168 / 0	0.07 (1)
AO- E	-164 / 0	0.04 (1)
AP- D	-177 / 0	0.03 (1)
AQ- C	-81 / 0	0.01 (1)
AG- M	-169 / 0	0.12 (1)
AF- N	-168 / 0	0.09 (1)
AD- O	-168 / 0	0.19 (1)
AC- Q	-167 / 0	0.12 (1)
AB- R	-168 / 0	0.07 (1)
AA- S	-164 / 0	0.04 (1)
Z- T	-177 / 0	0.03 (1)
Y- U	-81 / 0	0.01 (1)

DESIGN CRITERIA [M]

SPECIFIED LOADS:

TOP CH.	LL	=	25.6	PSF
	DL	=	3.0	PSF
BOT CH.	LL	=	10.5	PSF
	DL	=	7.0	PSF
TOTAL LOAD		=	46.1	PSF

SPACING = 24.0 IN. C/C

THIS TRUSS IS DESIGNED FOR RESIDENTIAL OR SMALL BUILDING REQUIREMENTS OF PART 9, NBCC 2010

THIS DESIGN COMPLIES WITH:
- PART 9 OF OBC 2012 , BCBC 2012 , ABC 2014
- CSA 086-09
- TPIC 2011

DESIGN ASSUMPTIONS
-OVERHANG NOT TO BE ALTERED OR CUT OFF.

(55 % OF 31.3 P.S.F. G.S.L. PLUS 8.4 P.S.F. RAIN LOAD) EQUALS 25.6 P.S.F. SPECIFIED ROOF LIVE LOAD

CSI: TC=0.11 (V-W:1) , BC=0.04 (AQ-AR:1) , WB=0.19 (O-AD:1) , SSI=0.08 (V-W:1)

DOL LUMBER=1.00 NAIL=1.00 LS BEND=1.10 COMP=1.10 SHEAR=1.10 TENS= 1.10

COMPANION LIVE LOAD FACTOR = 0.50

AUTOSOLVE HEELS OFF

TRUSS PLATE MANUFACTURER IS NOT RESPONSIBLE FOR QUALITY CONTROL IN THE TRUSS MANUFACTURING PLANT .

NAIL VALUES

PLATE	GRIP(DRY) (PSI) MAX	MIN	SHEAR (PLI) MAX	MIN	SECTION (PLI) MAX	MIN
MT20	618	354	1667	822	2284	1656

PLATE PLACEMENT TOL. = 0.250 inches

PLATE ROTATION TOL. = 5.0 Deg.

JSI GRIP= 0.40 (M) (INPUT = 0.90)
JSI METAL= 0.05 (L) (INPUT = 1.00)

LICENSED PROFESSIONAL ENGINEER
S. KATSOULAKOS
PROVINCE OF ONTARIO

P6/2

CONTINUED ON PAGE 2

JOB NAME	TRUSS NAME	QUANTITY	PLY	JOB DESC. 43954	DRWG NO.
282768	G1	2	1	TRUSS DESC.	

Tamarack Roof Truss, Burlington

LOADING
TOTAL LOAD CASES: (4)

CHORDS

MEMB. FR-TO	MAX. FACTORED FORCE (LBS)	FACTORED VERT. LOAD LC1 (PLF) FROM	TO	MAX CSI (LC)	MAX. UNBRAC LENGTH
Z-Y	-4 / 0	-28.0	-28.0	0.02 (2)	10.00
Y-X	0 / 0	-28.0	-28.0	0.04 (1)	10.00

WEBS

MEMB. FR-TO	MAX. FACTORED FORCE (LBS)	MAX CSI (LC)

LICENSED PROFESSIONAL ENGINEER
S. KATSOULAKOS
PROVINCE OF ONTARIO

DWG NO. TAM 43509-17
STRUCTURAL
COMPONENT ONLY

JOB NAME	TRUSS NAME	QUANTITY	PLY	JOB DESC. 43954	DRWG NO.
282768	T2	1	4	TRUSS DESC.	

Tamarack Roof Truss, Burlington

Version 8.030 S Oct 5 2016 MiTek Industries, Inc. Tue Aug 29 08:51:01 2017 Page 1
ID:xPHbW_B80ofwql_kcMaimzyjO4I-59eGbsDEIJKwZmHNoHRt7OIRbBMyU1LCX984bByj2j8

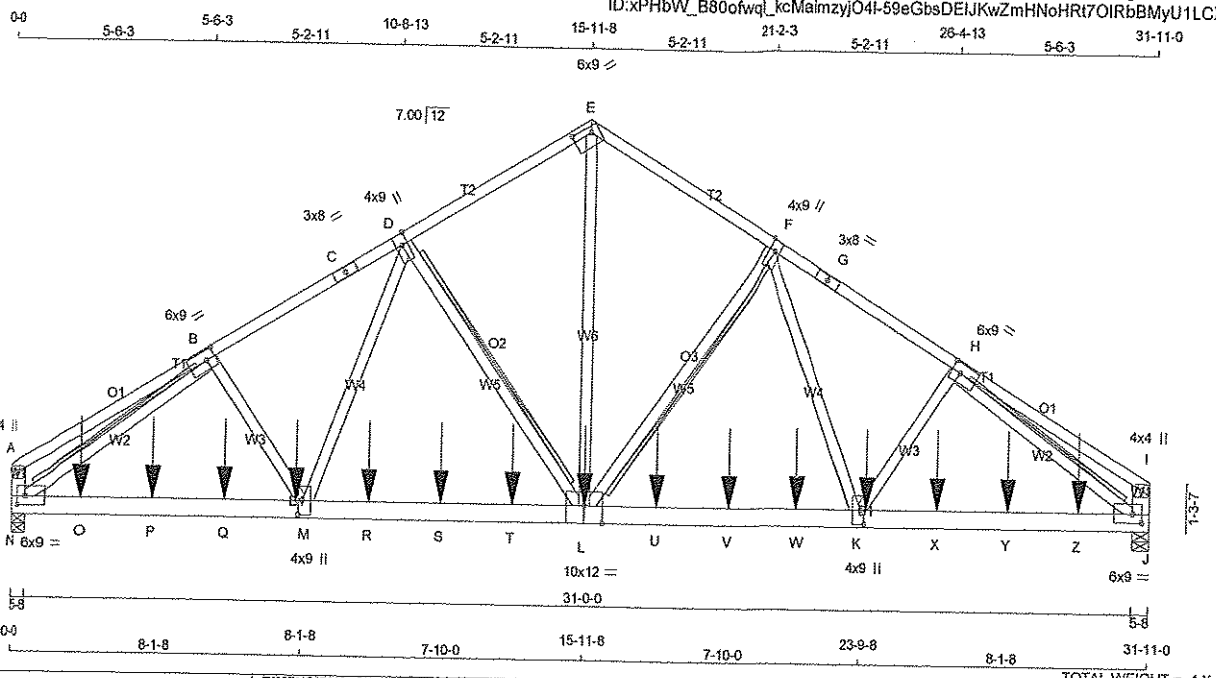

TOTAL WEIGHT = 4 X 174 = 695 lb [M]

LUMBER

N. L. G. A. RULES

CHORDS	SIZE		LUMBER	DESCR.
A - C	2x4	DRY	1650F 1.5E	SPF
C - E	2x4	DRY	1650F 1.5E	SPF
E - G	2x4	DRY	1650F 1.5E	SPF
G - I	2x4	DRY	1650F 1.5E	SPF
N - A	2x6	DRY	No.2	SPF
J - I	2x6	DRY	No.2	SPF
N - L	2x6	DRY	2100F 1.8E	SPF
L - J	2x6	DRY	2100F 1.8E	SPF
ALL WEBS EXCEPT	2x4	DRY	No.2	SPF

DRY: SEASONED LUMBER.

DESIGN CONSISTS OF 4 TRUSSES BUILT SEPARATELY THEN FASTENED TOGETHER AS FOLLOWS:

CHORDS	#ROWS	SURFACE SPACING (IN)	LOAD(PLF)
TOP CHORDS : (0.122"X3") SPIRAL NAILS			
A- C	1	12	TOP
C- E	1	12	TOP
E- G	1	12	TOP
G- I	1	12	TOP
N- A	2	12	TOP
J- I	2	12	TOP
BOTTOM CHORDS : (0.122"X3") SPIRAL NAILS			
N- L	2	5	SIDE(1394.6)
L- J	2	5	SIDE(1394.6)
WEBS : (0.122"X3") SPIRAL NAILS			
2x4	1	6	

STAGGER NAILS BY HALF THE SURFACE SPACING IN ADJACENT PLIES.

IN ADDITION, PRE-DRILL ONE 0.56" DIAM. HOLE IN EACH CHORD PANEL AND INSTALL 0.50" DIAM. ASTM A307 BOLTS WITH WASHERS, BOTH SIDES. FOR OTHER BOLT TYPES SEE CSAO86 3.3.2.

GIRDER NAILING ASSUMES NAILED HANGERS ARE FASTENED WITH MIN. 3-0 INCH NAILS.

TOP - COMPONENTS ARE LOADED FROM THE TOP AND MUST BE PLACED ON TOP EDGE OF ALL PLIES FOR THE LOAD TO BE TRANSFERRED TO EACH PLY.

SIDE - PLF SHOWN IS THE EQUIVALENT UDL APPLIED TO ONE SIDE THAT THE CORRESPONDING NAILING PATTERN SHALL BE CAPABLE OF TRANSFERING. REMAINING PLF MUST BE APPLIED ON THE OPPOSITE SIDE OR ON THE TOP.

PLATES (table is in inches)

JT	TYPE	PLATES	W	LEN	Y	X
A	TMV+p	MT20	4.0	4.0		
B	TMWW-t	MT20	6.0	9.0	3.00	3.00
C	TS-t	MT20	3.0	8.0		
D	TMWW+t	MT20	4.0	9.0	Edge	
E	TTW-h	MT20	6.0	9.0	2.00	6.25
F	TMWW+t	MT20	4.0	9.0	Edge	
G	TS-t	MT20	3.0	8.0		
H	TMWW-t	MT20	6.0	9.0	3.00	3.00
I	TMV+p	MT20	4.0	4.0		
J	BMWW1-t	MT20	6.0	9.0	2.75	3.00
K	BMWW+t	MT20	4.0	9.0	4.50	1.25
L	BSWWW-t	MT20	10.0	12.0	Edge	6.00
M	BMWW+t	MT20	4.0	9.0	4.50	1.25

DIMENSIONS, SUPPORTS AND LOADINGS SPECIFIED BY FABRICATOR TO BE VERIFIED BY BUILDING DESIGNER

BEARINGS

JT	FACTORED GROSS REACTION VERT	HORZ	MAXIMUM FACTORED GROSS REACTION DOWN	HORZ	UPLIFT	INPUT BRG IN-SX	REQRD BRG IN-SX
N	16827	0	16827	0	0	5-8	5-8
J	16826	0	16826	0	0	5-8	5-8

UNFACTORED REACTIONS

JT	1ST LCASE COMBINED	MAX./MIN. COMPONENT REACTIONS SNOW	LIVE	PERM.LIVE	WIND	DEAD	SOIL
N	13603	7897 / 0	2868 / 0	0 / 0	0 / 0	2838 / 0	0 / 0
J	13603	7896 / 0	2868 / 0	0 / 0	0 / 0	2838 / 0	0 / 0

BEARING MATERIAL TO BE SPF NO.2 OR BETTER AT JOINT(S) N, J

BRACING

TOP CHORD TO BE SHEATHED OR MAX. PURLIN SPACING = 2.96 FT.
MAX. UNBRACED BOTTOM CHORD LENGTH = 10.00 FT. OR RIGID CEILING DIRECTLY APPLIED.

ALL PITCH BREAKS AND PERIMETER CORNER JOINTS MUST BE LATERALLY RESTRAINED.

2x8 DRY SPF No.2 T-BRACE AT F-L, D-L, B-N, H-J

FASTEN T AND I-BRACES TO NARROW EDGE OF WEB WITH ONE ROW PER PLY OF 3" COMMON WIRE NAILS @ 6" O.C. WITH 3" MINIMUM END DISTANCE. BRACE MUST COVER 90% OF WEB LENGTH.

END VERTICAL(S) MUST BE SHEATHED OR HAVE BRACES AS INDICATED IN THE MAX. UNBRACED LENGTH COLUMN OF THE TABLE BELOW

LOADING

TOTAL LOAD CASES: (4)

CHORDS

MEMB. FR-TO	MAX. FACTORED FORCE (LBS)	FACTORED VERT. LOAD LC1 (PLF) FROM	TO	MAX CSI (LC)	MAX. UNBRAC LENGTH
A- B	-6 / 6	-84.3	-84.3	0.11 (1)	10.00
B- C	-23367 / 0	-84.3	-84.3	0.75 (1)	2.96
C- D	-23367 / 0	-84.3	-84.3	0.75 (1)	2.96
D- E	-16666 / 0	-84.3	-84.3	0.42 (1)	3.55
E- F	-16666 / 0	-84.3	-84.3	0.42 (1)	3.55
F- G	-23367 / 0	-84.3	-84.3	0.75 (1)	2.96
G- H	-23367 / 0	-84.3	-84.3	0.75 (1)	2.96
H- I	-6 / 6	-84.3	-84.3	0.11 (1)	10.00
N- A	-215 / 0	0.0	0.0	0.00 (1)	7.81
J- I	-215 / 0	0.0	0.0	0.00 (1)	7.81
N- O	0 / 18873	-28.0	-28.0	0.93 (1)	10.00
O- P	0 / 18873	-28.0	-28.0	0.93 (1)	10.00
P- Q	0 / 18873	-28.0	-28.0	0.93 (1)	10.00
Q- M	0 / 18873	-28.0	-28.0	0.93 (1)	10.00
M- R	0 / 17604	-28.0	-28.0	0.91 (1)	10.00
R- S	0 / 17604	-28.0	-28.0	0.91 (1)	10.00
S- T	0 / 17604	-28.0	-28.0	0.91 (1)	10.00
T- L	0 / 17604	-28.0	-28.0	0.91 (1)	10.00
L- U	0 / 17604	-28.0	-28.0	0.91 (1)	10.00
U- V	0 / 17604	-28.0	-28.0	0.91 (1)	10.00
V- W	0 / 17604	-28.0	-28.0	0.91 (1)	10.00
W- K	0 / 17604	-28.0	-28.0	0.91 (1)	10.00
K- X	0 / 18873	-28.0	-28.0	0.93 (1)	10.00
X- Y	0 / 18873	-28.0	-28.0	0.93 (1)	10.00
Y- Z	0 / 18873	-28.0	-28.0	0.93 (1)	10.00
Z- J	0 / 18873	-28.0	-28.0	0.93 (1)	10.00

WEBS

MEMB. FR-TO	MAX. FACTORED FORCE (LBS)	MAX CSI (LC)
L- E	0 / 16403	0.65 (1)
L- F	-5456 / 0	0.26 (1)
F- K	0 / 7741	0.31 (1)
K- H	0 / 2311	0.09 (1)
D- L	-5456 / 0	0.26 (1)
M- D	0 / 7741	0.31 (1)
B- M	0 / 2311	0.09 (1)
N- B	-23571 / 0	0.79 (1)
H- J	-23571 / 0	0.79 (1)

DESIGN CRITERIA

SPECIFIED LOADS:

TOP CH.	LL	=	25.6	PSF
	DL	=	3.0	PSF
BOT CH.	LL	=	10.5	PSF
	DL	=	7.0	PSF
TOTAL LOAD		=	46.1	PSF

SPACING = 24.0 IN. C/C

THIS TRUSS IS DESIGNED FOR RESIDENTIAL OR SMALL BUILDING REQUIREMENTS OF PART 9, NBCC 2010

THIS DESIGN COMPLIES WITH:
- PART 9 OF OBC 2012 , BCBC 2012 , ABC 2014
- CSA 086-09
- TPIC 2011

(55 % OF 31.3 P.S.F. G.S.L. PLUS 8.4 P.S.F. RAIN LOAD) EQUALS 25.6 P.S.F. SPECIFIED ROOF LIVE LOAD

ALLOWABLE DEFL.(LL)= L/360 (1.06")
CALCULATED VERT. DEFL.(LL) = L/ 999 (0.31")
ALLOWABLE DEFL.(TL)= L/360 (1.06")
CALCULATED VERT. DEFL.(TL) = L/ 781 (0.49")

CSI: TC=0.75 (F-H:1) , BC=0.93 (J-K:1) , WB=0.79 (B-N:1) , SSI=0.63 (J-K:1)

DOL LUMBER=1.00 NAIL=1.00 LS BEND=1.10 COMP=1.10 SHEAR=1.10 TENS= 1.10

COMPANION LIVE LOAD FACTOR = 0.50

TRUSS PLATE MANUFACTURER IS NOT RESPONSIBLE FOR QUALITY CONTROL IN THE TRUSS MANUFACTURING PLANT .

NAIL VALUES

PLATE	GRIP(DRY) (PSI) MAX	MIN	SHEAR (PLI) MAX	MIN	SECTION (PLI) MAX	MIN
MT20	618	354	1667	822	2284	1656

PLATE PLACEMENT TOL. = 0.250 inches

PLATE ROTATION TOL. = 5.0 Deg.

JSI GRIP= 0.89 (J) (INPUT = 0.90)
JSI METAL= 0.98 (B) (INPUT = 1.00)

LICENSED PROFESSIONAL ENGINEER
S. KATSOULAKOS
PROVINCE OF ONTARIO

DWG NO. TAM43582-17
STRUCTURAL
COMPONENT ONLY

CONTINUED ON PAGE 2

JOB NAME	TRUSS NAME	QUANTITY	PLY	JOB DESC. 43954	DRWG NO.
282768	T2	1	4	TRUSS DESC.	

Tamarack Roof Truss, Burlington

PLATES (table is in inches)

JT	TYPE	PLATES	W	LEN	Y	X
N	BMVW1-t	MT20	6.0	9.0	2.75	3.00

Edge - INDICATES REFERENCE CORNER OF PLATE TOUCHES EDGE OF CHORD.

HANGERS NOTES

1) SPECIAL HANGER(S) OR CONNECTION(S) REQUIRED TO SUPPORT CONCENTRATED LOAD(S) 2004.7 lbs FACTORED DOWN AT 1-11-8, 2004.7 lbs FACTORED DOWN AT 3-11-8, 2004.7 lbs FACTORED DOWN AT 5-11-8, 2004.7 lbs FACTORED DOWN AT 7-11-8, 2004.7 lbs FACTORED DOWN AT 9-11-8, 2004.7 lbs FACTORED DOWN AT 11-11-8, 2004.7 lbs FACTORED DOWN AT 13-11-8, 2004.7 lbs FACTORED DOWN AT 15-11-8, 2004.7 lbs FACTORED DOWN AT 17-11-8, 2004.7 lbs FACTORED DOWN AT 19-11-8, 2004.7 lbs FACTORED DOWN AT 21-11-8, 2004.7 lbs FACTORED DOWN AT 23-11-8, 2004.7 lbs FACTORED DOWN AT 25-11-8, AND 2004.7 lbs FACTORED DOWN AT 27-11-8, AND 2004.7 lbs FACTORED DOWN AT 29-11-8 ON BOTTOM CHORD. DESIGN FOR UNSPECIFIED CONNECTION(S) IS DELEGATED TO THE BUILDING DESIGNER.

FACTORED CONCENTRATED LOADS (LBS)

JT	LOC.	LC1	MAX-	MAX+	FACE	DIR.	TYPE
K	23-11-8	-2005	-2005	---	FRONT	VERT	TOTAL
L	15-11-8	-2005	-2005	---	FRONT	VERT	TOTAL
M	7-11-8	-2005	-2005	---	FRONT	VERT	TOTAL
O	1-11-8	-2005	-2005	---	FRONT	VERT	TOTAL
P	3-11-8	-2005	-2005	---	FRONT	VERT	TOTAL
Q	5-11-8	-2005	-2005	---	FRONT	VERT	TOTAL
R	9-11-8	-2005	-2005	---	FRONT	VERT	TOTAL
S	11-11-8	-2005	-2005	---	FRONT	VERT	TOTAL
T	13-11-8	-2005	-2005	---	FRONT	VERT	TOTAL
U	17-11-8	-2005	-2005	---	FRONT	VERT	TOTAL
V	19-11-8	-2005	-2005	---	FRONT	VERT	TOTAL
W	21-11-8	-2005	-2005	---	FRONT	VERT	TOTAL
X	25-11-8	-2005	-2005	---	FRONT	VERT	TOTAL
Y	27-11-8	-2005	-2005	---	FRONT	VERT	TOTAL
Z	29-11-8	-2005	-2005	---	FRONT	VERT	TOTAL

LICENSED PROFESSIONAL ENGINEER
8/29/17
S. KATSOULAKOS
PROVINCE OF ONTARIO

DWG NO. TAM 43582-17
STRUCTURAL
COMPONENT ONLY

JOB NAME	TRUSS NAME	QUANTITY	PLY	JOB DESC. 43954	DRWG NO.
282768	T3	5	1	TRUSS DESC.	

Tamarack Roof Truss, Burlington

Version 8.030 S Oct 5 2016 MiTek Industries, Inc. Tue Aug 29 08:51:01 2017 Page 1
ID:xPHbW_B80ofwqI_kcMaimzyjO4I-59eGbsDEIJKwZmHNoHRt7OlNhBQrU5LCX984bByj2j8

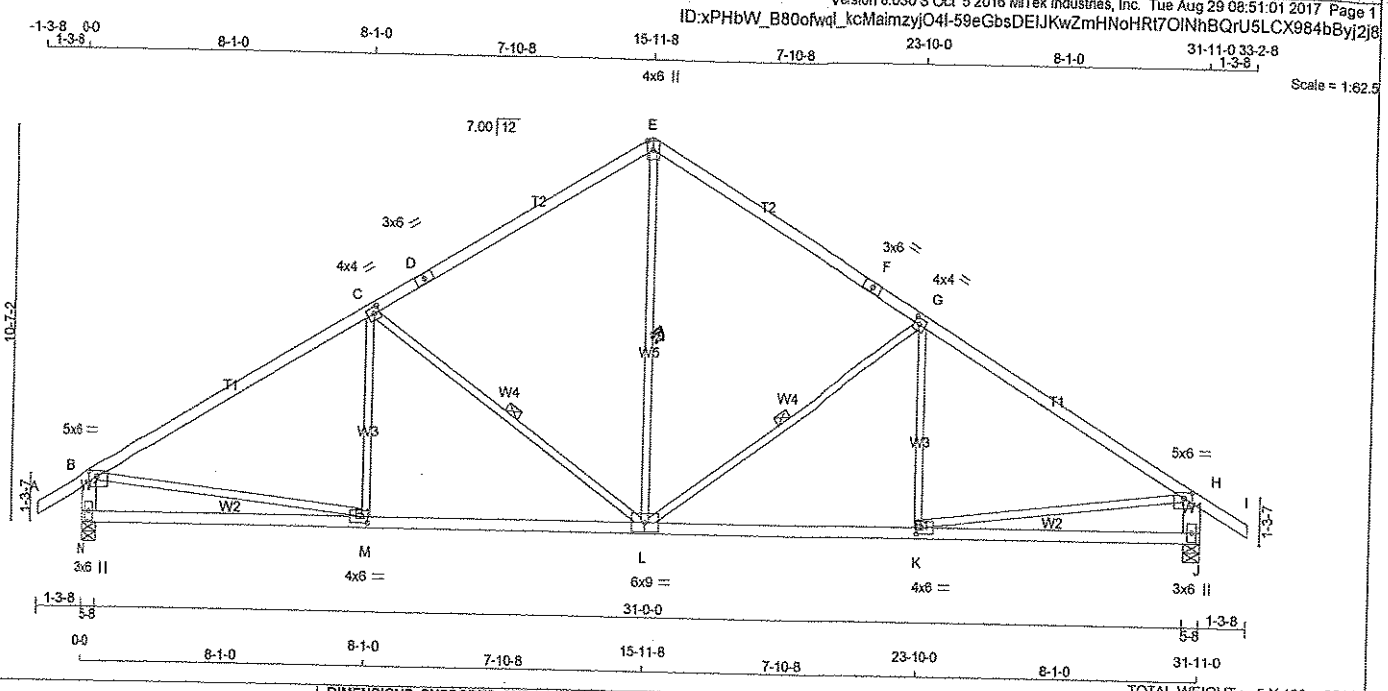

TOTAL WEIGHT = 5 X 130 = 651 lb
(M)(F)

LUMBER
N. L. G. A. RULES

CHORDS	SIZE		LUMBER	DESCR.
A - D	2x4	DRY	No.2	SPF
D - E	2x4	DRY	No.2	SPF
E - F	2x4	DRY	No.2	SPF
F - I	2x4	DRY	No.2	SPF
N - B	2x6	DRY	No.2	SPF
J - H	2x6	DRY	No.2	SPF
N - L	2x4	DRY	No.2	SPF
L - J	2x4	DRY	No.2	SPF
ALL WEBS EXCEPT	2x3	DRY	No.2	SPF

DRY: SEASONED LUMBER.

PLATES (table is in inches)

JT	TYPE	PLATES	W	LEN	Y	X
B	TMVW-p	MT20	5.0	6.0	1.75	2.75
C	TMWW-t	MT20	4.0	4.0	2.00	1.75
D	TS-t	MT20	3.0	6.0		
E	TTW+p	MT20	4.0	6.0	Edge	
F	TS-t	MT20	3.0	6.0		
G	TMWW-t	MT20	4.0	4.0	2.00	1.75
H	TMVW-p	MT20	5.0	6.0	1.75	2.75
J	BMV1+p	MT20	3.0	6.0		
K	BMWW-t	MT20	4.0	6.0	2.00	1.75
L	BSWWW-t	MT20	6.0	9.0		
M	BMWW-t	MT20	4.0	6.0	2.00	1.75
N	BMV1+p	MT20	3.0	6.0		

Edge - INDICATES REFERENCE CORNER OF PLATE TOUCHES EDGE OF CHORD.

DIMENSIONS, SUPPORTS AND LOADINGS SPECIFIED BY FABRICATOR TO BE VERIFIED BY BUILDING DESIGNER

BEARINGS

JT	FACTORED GROSS REACTION VERT	HORZ	MAXIMUM FACTORED GROSS REACTION DOWN	HORZ	UPLIFT	INPUT BRG IN-SX	REQRD BRG IN-SX
N	1906	0	1906	0	0	5-8	5-8
J	1906	0	1906	0	0	5-8	5-8

UNFACTORED REACTIONS

JT	1ST LCASE COMBINED	MAX./MIN. COMPONENT REACTIONS SNOW	LIVE	PERM.LIVE	WIND	DEAD	SOIL
N	1549	886 / 0	335 / 0	0 / 0	0 / 0	327 / 0	0 / 0
J	1549	886 / 0	335 / 0	0 / 0	0 / 0	327 / 0	0 / 0

BEARING MATERIAL TO BE SPF NO.2 OR BETTER AT JOINT(S) N, J

BRACING
TOP CHORD TO BE SHEATHED OR MAX. PURLIN SPACING = 3.27 FT.
MAX. UNBRACED BOTTOM CHORD LENGTH = 10.00 FT. OR RIGID CEILING DIRECTLY APPLIED.

ALL PITCH BREAKS AND PERIMETER CORNER JOINTS MUST BE LATERALLY RESTRAINED.

1 LATERAL BRACE(S) AT 1/2 LENGTH OF G-L, C-L. EZ

END VERTICAL(S) MUST BE SHEATHED OR HAVE BRACES AS INDICATED IN THE MAX. UNBRACED LENGTH COLUMN OF THE TABLE BELOW

LOADING
TOTAL LOAD CASES: (4)

CHORDS

MEMB. FR-TO	MAX. FACTORED FORCE (LBS)	FACTORED VERT. LOAD LC1 (PLF) FROM	TO	MAX CSI (LC)	MAX. UNBRAC LENGTH
A- B	0 / 29	-84.3	-84.3	0.11 (1)	10.00
B- C	-2329 / 0	-84.3	-84.3	1.00 (1)	3.27
C- D	-1666 / 0	-84.3	-84.3	0.84 (1)	3.96
D- E	-1666 / 0	-84.3	-84.3	0.84 (1)	3.96
E- F	-1666 / 0	-84.3	-84.3	0.84 (1)	3.96
F- G	-1666 / 0	-84.3	-84.3	0.84 (1)	3.96
G- H	-2329 / 0	-84.3	-84.3	1.00 (1)	3.27
H- I	0 / 29	-84.3	-84.3	0.11 (1)	10.00
N- B	-1815 / 0	0.0	0.0	0.12 (1)	7.41
J- H	-1815 / 0	0.0	0.0	0.12 (1)	7.41
N- M	0 / 0	-28.0	-28.0	0.45 (3)	10.00
M- L	0 / 2047	-28.0	-28.0	0.68 (2)	10.00
L- K	0 / 2047	-28.0	-28.0	0.68 (2)	10.00
K- J	0 / 0	-28.0	-28.0	0.45 (3)	10.00

WEBS

MEMB. FR-TO	MAX. FACTORED FORCE (LBS)	MAX CSI (LC)
L- E	0 / 1139	0.26 (1)
L- G	-794 / 0	0.54 (1)
K- G	0 / 323	0.07 (3)
C- L	-794 / 0	0.54 (1)
M- C	0 / 323	0.07 (3)
B- M	0 / 2061	0.46 (1)
K- H	0 / 2061	0.46 (1)

DESIGN CRITERIA

SPECIFIED LOADS:

TOP CH.	LL	=	25.6	PSF
	DL	=	3.0	PSF
BOT CH.	LL	=	10.5	PSF
	DL	=	7.0	PSF
TOTAL LOAD		=	46.1	PSF

SPACING = 24.0 IN. C/C

THIS TRUSS IS DESIGNED FOR RESIDENTIAL OR SMALL BUILDING REQUIREMENTS OF PART 9, NBCC 2010

THIS DESIGN COMPLIES WITH:
- PART 9 OF OBC 2012 , BCBC 2012 , ABC 2014
- CSA 086-09
- TPIC 2011

(55 % OF 31.3 P.S.F. G.S.L. PLUS 8.4 P.S.F. RAIN LOAD) EQUALS 25.6 P.S.F. SPECIFIED ROOF LIVE LOAD

ALLOWABLE DEFL.(LL)= L/360 (1.06")
CALCULATED VERT. DEFL.(LL) = L/ 999 (0.19")
ALLOWABLE DEFL.(TL)= L/360 (1.06")
CALCULATED VERT. DEFL.(TL) = L/ 999 (0.31")

CSI: TC=1.00 (B-C:1) , BC=0.68 (L-M:2) , WB=0.54 (C-L:1) , SSI=0.28 (B-C:1)

DOL LUMBER=1.00 NAIL=1.00 LS BEND=1.10 COMP=1.10 SHEAR=1.10 TENS= 1.10

COMPANION LIVE LOAD FACTOR = 0.50

AUTOSOLVE HEELS OFF

TRUSS PLATE MANUFACTURER IS NOT RESPONSIBLE FOR QUALITY CONTROL IN THE TRUSS MANUFACTURING PLANT .

NAIL VALUES

PLATE	GRIP(DRY) (PSI) MAX	MIN	SHEAR (PLI) MAX	MIN	SECTION (PLI) MAX	MIN
MT20	618	354	1667	822	2284	1656

PLATE PLACEMENT TOL. = 0.250 inches

PLATE ROTATION TOL. = 5.0 Deg.

JSI GRIP= 0.87 (B) (INPUT = 0.80)
JSI METAL= 0.51 (M) (INPUT = 1.00)

LICENSED PROFESSIONAL ENGINEER
S. KATSOULAKOS
PROVINCE OF ONTARIO

DWG NO. TAM 43563.17
STRUCTURAL
COMPONENT ONLY

JOB NAME	TRUSS NAME	QUANTITY	PLY	JOB DESC. 43954	DRWG NO.
282768	T4	1	1	TRUSS DESC.	

Tamarack Roof Truss, Burlington

Version 8.030 S Oct 5 2016 MiTek Industries, Inc. Tue Aug 29 08:51:01 2017 Page 1
ID:xPHbW_B80ofwq_kcMaimzyjO4I-59eGbsDEIJKwZmHNoHRt7Ola6BOCU7qCX984bByj2j8

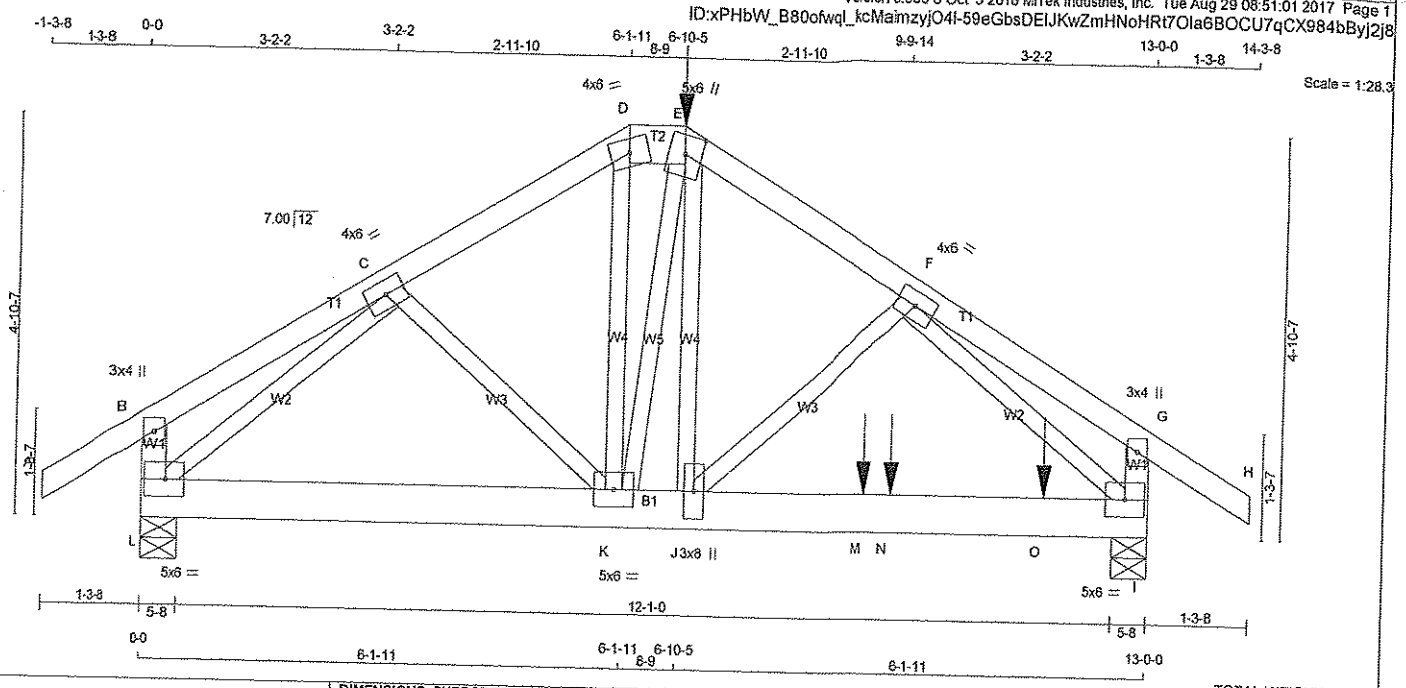

TOTAL WEIGHT = 68 lb [M]

LUMBER
N. L. G. A. RULES

CHORDS	SIZE		LUMBER	DESCR.
A - D	2x4	DRY	No.2	SPF
D - E	2x6	DRY	No.2	SPF
E - H	2x4	DRY	No.2	SPF
L - B	2x4	DRY	No.2	SPF
I - G	2x4	DRY	No.2	SPF
L - I	2x6	DRY	No.2	SPF
ALL WEBS EXCEPT	2x3	DRY	No.2	SPF

DRY: SEASONED LUMBER.

PLATES (table is in inches)

JT	TYPE	PLATES	W	LEN	Y	X
B	TMV+p	MT20	3.0	4.0		
C	TMWW-t	MT20	4.0	6.0		
D	TTW-m	MT20	4.0	6.0		
E	TTWW+m	MT20	5.0	6.0	2.75	2.50
F	TMWW-t	MT20	4.0	6.0		
G	TMV+p	MT20	3.0	4.0		
I	BMVW1-t	MT20	5.0	6.0		
J	BMWW+t	MT20	3.0	8.0		
K	BMWWW-t	MT20	5.0	6.0		
L	BMVW1-t	MT20	5.0	6.0		

HANGERS NOTES

1) SPECIAL HANGER(S) OR CONNECTION(S) REQUIRED TO SUPPORT CONCENTRATED LOAD(S) 218.0 lbs FACTORED DOWN AT 6-10-5 ON TOP CHORD, AND 778.7 lbs FACTORED DOWN AT 9-3-8, AND 34.1 lbs FACTORED DOWN AT 9-7-12, AND 34.1 lbs FACTORED DOWN AT 11-7-12 ON BOTTOM CHORD. DESIGN FOR UNSPECIFIED CONNECTION(S) IS DELEGATED TO THE BUILDING DESIGNER.

DIMENSIONS, SUPPORTS AND LOADINGS SPECIFIED BY FABRICATOR TO BE VERIFIED BY BUILDING DESIGNER

BEARINGS

JT	FACTORED GROSS REACTION VERT	HORZ	MAXIMUM FACTORED GROSS REACTION DOWN	HORZ	UPLIFT	INPUT BRG IN-SX	REQRD BRG IN-SX
L	1177	0	1177	0	0	5-8	5-8
I	1548	0	1548	0	0	5-8	5-8

UNFACTORED REACTIONS

JT	1ST LCASE COMBINED	MAX./MIN. COMPONENT REACTIONS SNOW	LIVE	PERM.LIVE	WIND	DEAD	SOIL
L	927	578 / 0	169 / 0	0 / 0	0 / 0	180 / 0	0 / 0
I	1224	756 / 0	227 / 0	0 / 0	0 / 0	241 / 0	0 / 0

BEARING MATERIAL TO BE SPF NO.2 OR BETTER AT JOINT(S) L, I

BRACING
TOP CHORD TO BE SHEATHED OR MAX. PURLIN SPACING = 5.32 FT.
MAX. UNBRACED BOTTOM CHORD LENGTH = 10.00 FT. OR RIGID CEILING DIRECTLY APPLIED.

ALL PITCH BREAKS AND PERIMETER CORNER JOINTS MUST BE LATERALLY RESTRAINED.

LOADING
TOTAL LOAD CASES: (4)

CHORDS

MEMB. FR-TO	MAX. FACTORED FORCE (LBS)	FACTORED VERT. LOAD (PLF) FROM	TO	LC1	MAX CSI (LC)	MAX. UNBRAC LENGTH
A- B	0 / 29	-84.3	-84.3	0.12 (1)	10.00	
B- C	0 / 13	-84.3	-84.3	0.12 (1)	10.00	
C- D	-1207 / 0	-84.3	-84.3	0.14 (1)	5.65	
D- E	-1025 / 0	-84.3	-84.3	0.01 (1)	6.25	
E- F	-1409 / 0	-84.3	-84.3	0.14 (1)	5.32	
F- G	0 / 12	-84.3	-84.3	0.11 (1)	10.00	
G- H	0 / 29	-84.3	-84.3	0.12 (1)	10.00	
L- B	-219 / 0	0.0	0.0	0.02 (1)	7.81	
I- G	-221 / 0	0.0	0.0	0.02 (1)	7.81	
L- K	0 / 1036	-28.0	-28.0	0.27 (1)	10.00	
K- J	0 / 1184	-28.0	-28.0	0.65 (1)	10.00	
J- M	0 / 1180	-28.0	-28.0	0.78 (1)	10.00	
M- N	0 / 1180	-28.0	-28.0	0.78 (1)	10.00	
N- O	0 / 1180	-28.0	-28.0	0.78 (1)	10.00	
O- I	0 / 1180	-28.0	-28.0	0.78 (1)	10.00	

WEBS

MEMB. FR-TO	MAX. FACTORED FORCE (LBS)	MAX CSI (LC)
C- K	0 / 86	0.02 (3)
K- D	0 / 460	0.11 (1)
K- E	-879 / 0	0.29 (1)
J- E	0 / 1206	0.30 (1)
J- F	0 / 102	0.03 (3)
L- C	-1375 / 0	0.39 (1)
F- I	-1566 / 0	0.44 (1)

FACTORED CONCENTRATED LOADS (LBS)

JT	LOC.	LC1	MAX-	MAX+	FACE	DIR.	TYPE
E	6-10-5	-20	-22	---	FRONT	VERT	DEAD
E	6-10-5	-198	-198	---	FRONT	VERT	SNOW
M	9-3-8	-779	-779	---	BACK	VERT	TOTAL
N	9-7-12	-20	-34	---	BACK	VERT	TOTAL
O	11-7-12	-20	-34	---	BACK	VERT	TOTAL

DESIGN CRITERIA

*** SPECIAL LOADS ANALYSIS ***
GEOMETRY AND/OR BASIC LOADS CHANGED BY USER.
LOADS WERE DERIVED FROM USER INPUT
NO FURTHER MODIFICATIONS WERE MADE

SPECIFIED LOADS:

TOP CH.	LL	=	25.6	PSF
	DL	=	3.0	PSF
BOT CH.	LL	=	10.5	PSF
	DL	=	7.0	PSF
TOTAL LOAD		=	46.1	PSF

SPACING = 24.0 IN. C/C

LOADING IN FLAT SECTION BASED ON A SLOPE OF 6.00/12

*** NON STANDARD GIRDER ***
ADDT'L USER-DEFINED LOADS APPLIED TO ALL LOAD CASES.

THIS TRUSS IS DESIGNED FOR RESIDENTIAL OR SMALL BUILDING REQUIREMENTS OF PART 9, NBCC 2010

THIS DESIGN COMPLIES WITH:
- PART 9 OF OBC 2012 , BCBC 2012 , ABC 2014
- CSA 086-09
- TPIC 2011

(55 % OF 31.3 P.S.F. G.S.L. PLUS 8.4 P.S.F. RAIN LOAD) EQUALS 25.6 P.S.F. SPECIFIED ROOF LIVE LOAD

ALLOWABLE DEFL.(LL)= L/360 (0.43")
CALCULATED VERT. DEFL.(LL) = L/ 999 (0.10")
ALLOWABLE DEFL.(TL)= L/360 (0.43")
CALCULATED VERT. DEFL.(TL) = L/ 999 (0.16")

CSI: TC=0.14 (C-D:1) , BC=0.78 (I-J:1) , WB=0.44 (F-I:1) , SSI=0.46 (I-J:1)

DOL LUMBER=1.00 NAIL=1.00 LS BEND=1.00 COMP=1.00 SHEAR=1.00 TENS= 1.00

COMPANION LIVE LOAD FACTOR = 0.50

TRUSS PLATE MANUFACTURER IS NOT RESPONSIBLE FOR QUALITY CONTROL IN THE TRUSS MANUFACTURING PLANT .

NAIL VALUES

PLATE	GRIP(DRY) (PSI) MAX	MIN	SHEAR (PLI) MAX	MIN	SECTION (PLI) MAX	MIN
MT20	618	354	1667	822	2284	1656

PLATE PLACEMENT TOL. = 0.250 inches

PLATE ROTATION TOL. = 5.0 Deg.

JSI GRIP= 0.86 (E) (INPUT = 0.90)
JSI METAL= 0.39 (F) (INPUT = 1.00)

LICENSED PROFESSIONAL ENGINEER
8442
S. KATSOULAKOS
PROVINCE OF ONTARIO

DWG NO. TAM43954-17
STRUCTURAL
COMPONENT ONLY

JOB NAME	TRUSS NAME	QUANTITY	PLY	JOB DESC. 43954	DRWG NO.
282768	T5	3	1	TRUSS DESC.	

Tamarack Roof Truss, Burlington

Version 8.030 S Oct 5 2016 MiTek Industries, Inc. Tue Aug 29 08:51:02 2017 Page 1
ID:xPHbW_B80ofwqI_kcMaimzyjO4l-ZLCeoCEs2cSnBwsZM?y6fcrlzbqGDd1Mlpte7dyj2j7

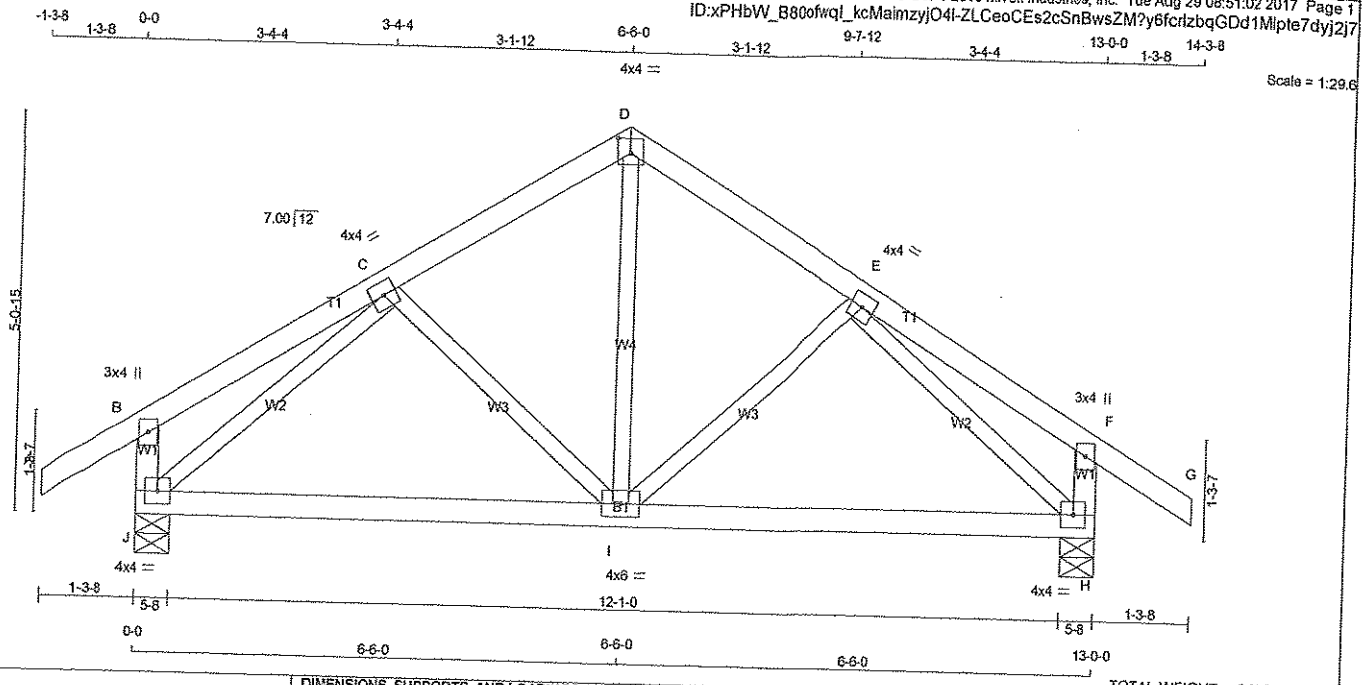

TOTAL WEIGHT = 3 X 54 = 163 lb
[M][F]

LUMBER
N. L. G. A. RULES

CHORDS	SIZE		LUMBER	DESCR.
A - D	2x4	DRY	No.2	SPF
D - G	2x4	DRY	No.2	SPF
J - B	2x4	DRY	No.2	SPF
H - F	2x4	DRY	No.2	SPF
J - H	2x4	DRY	No.2	SPF
ALL WEBS EXCEPT	2x3	DRY	No.2	SPF

DRY: SEASONED LUMBER.

PLATES (table is in inches)

JT	TYPE	PLATES	W	LEN	Y	X
B	TMV+p	MT20	3.0	4.0		
C	TMWW-t	MT20	4.0	4.0		
D	TTW-p	MT20	4.0	4.0	2.25	2.00
E	TMWW-t	MT20	4.0	4.0		
F	TMV+p	MT20	3.0	4.0		
H	BMVW1-t	MT20	4.0	4.0		
I	BMWWW-t	MT20	4.0	6.0		
J	BMVW1-t	MT20	4.0	4.0		

DIMENSIONS, SUPPORTS AND LOADINGS SPECIFIED BY FABRICATOR TO BE VERIFIED BY BUILDING DESIGNER

BEARINGS

JT	FACTORED GROSS REACTION VERT	HORZ	MAXIMUM FACTORED GROSS REACTION DOWN	HORZ	UPLIFT	INPUT BRG IN-SX	REQRD BRG IN-SX
J	845	0	845	0	0	5-8	5-8
H	845	0	845	0	0	5-8	5-8

UNFACTORED REACTIONS

JT	1ST LCASE COMBINED	MAX./MIN. COMPONENT REACTIONS SNOW	LIVE	PERM.LIVE	WIND	DEAD	SOIL
J	677	402 / 0	137 / 0	0 / 0	0 / 0	138 / 0	0 / 0
H	677	402 / 0	137 / 0	0 / 0	0 / 0	138 / 0	0 / 0

BEARING MATERIAL TO BE SPF NO.2 OR BETTER AT JOINT(S) J, H

BRACING
TOP CHORD TO BE SHEATHED OR MAX. PURLIN SPACING = 6.25 FT.
MAX. UNBRACED BOTTOM CHORD LENGTH = 10.00 FT. OR RIGID CEILING DIRECTLY APPLIED.

ALL PITCH BREAKS AND PERIMETER CORNER JOINTS MUST BE LATERALLY RESTRAINED.

LOADING
TOTAL LOAD CASES: (4)

CHORDS

MEMB. FR-TO	MAX. FACTORED FORCE (LBS)	FACTORED VERT. LOAD LC1 (PLF) FROM	TO	MAX CSI (LC)	MAX. UNBRAC LENGTH
A- B	0 / 29	-84.3	-84.3	0.11 (1)	10.00
B- C	0 / 15	-84.3	-84.3	0.13 (1)	10.00
C- D	-625 / 0	-84.3	-84.3	0.11 (1)	6.25
D- E	-625 / 0	-84.3	-84.3	0.11 (1)	6.25
E- F	0 / 15	-84.3	-84.3	0.13 (1)	10.00
F- G	0 / 29	-84.3	-84.3	0.11 (1)	10.00
J- B	-222 / 0	0.0	0.0	0.02 (1)	7.81
H- F	-222 / 0	0.0	0.0	0.02 (1)	7.81
J- I	0 / 626	-28.0	-28.0	0.41 (2)	10.00
I- H	0 / 626	-28.0	-28.0	0.41 (2)	10.00

WEBS

MEMB. FR-TO	MAX. FACTORED FORCE (LBS)	MAX CSI (LC)
I- D	0 / 409	0.09 (1)
I- E	-133 / 49	0.04 (1)
C- I	-133 / 49	0.04 (1)
J- C	-835 / 0	0.25 (1)
E- H	-835 / 0	0.25 (1)

DESIGN CRITERIA

SPECIFIED LOADS:

TOP CH.	LL	=	25.6	PSF
	DL	=	3.0	PSF
BOT CH.	LL	=	10.5	PSF
	DL	=	7.0	PSF
TOTAL LOAD		=	46.1	PSF

SPACING = 24.0 IN. C/C

THIS TRUSS IS DESIGNED FOR RESIDENTIAL OR SMALL BUILDING REQUIREMENTS OF PART 9, NBCC 2010

THIS DESIGN COMPLIES WITH:
- PART 9 OF OBC 2012 , BCBC 2012 , ABC 2014
- CSA 086-09
- TPIC 2011

(55 % OF 31.3 P.S.F. G.S.L. PLUS 8.4 P.S.F. RAIN LOAD) EQUALS 25.6 P.S.F. SPECIFIED ROOF LIVE LOAD

ALLOWABLE DEFL.(LL)= L/360 (0.43")
CALCULATED VERT. DEFL.(LL) = L/ 999 (0.06")
ALLOWABLE DEFL.(TL)= L/360 (0.43")
CALCULATED VERT. DEFL.(TL) = L/ 999 (0.09")

CSI: TC=0.13 (B-C:1) , BC=0.41 (I-J:2) , WB=0.25 (C-J:1) , SSI=0.15 (I-J:3)

DOL LUMBER=1.00 NAIL=1.00 LS BEND=1.10 COMP=1.10 SHEAR=1.10 TENS= 1.10

COMPANION LIVE LOAD FACTOR = 0.50

TRUSS PLATE MANUFACTURER IS NOT RESPONSIBLE FOR QUALITY CONTROL IN THE TRUSS MANUFACTURING PLANT .

NAIL VALUES

PLATE	GRIP(DRY) (PSI) MAX	MIN	SHEAR (PLI) MAX	MIN	SECTION (PLI) MAX	MIN
MT20	618	354	1667	822	2284	1656

PLATE PLACEMENT TOL. = 0.250 inches

PLATE ROTATION TOL. = 5.0 Deg.

JSI GRIP= 0.72 (J) (INPUT = 0.90)
JSI METAL= 0.29 (E) (INPUT = 1.00)

LICENSED PROFESSIONAL ENGINEER
S. KATSOULAKOS
PROVINCE OF ONTARIO

DWG NO. TAM 43585-17
STRUCTURAL
COMPONENT ONLY

JOB NAME	TRUSS NAME	QUANTITY	PLY	JOB DESC. 43954	DRWG NO.
282768	T6	3	1	TRUSS DESC.	

Tamarack Roof Truss, Burlington

Version 8.030 S Oct 5 2016 MiTek Industries, Inc. Tue Aug 29 08:51:02 2017 Page 1
ID:xPHbW_B80ofwqI_kcMaimzyjO4I-ZLCeoCEs2cSnBwsZM?y6fcrkRbuwDf9Mlpte7dyj2j7

Scale = 1:24.6

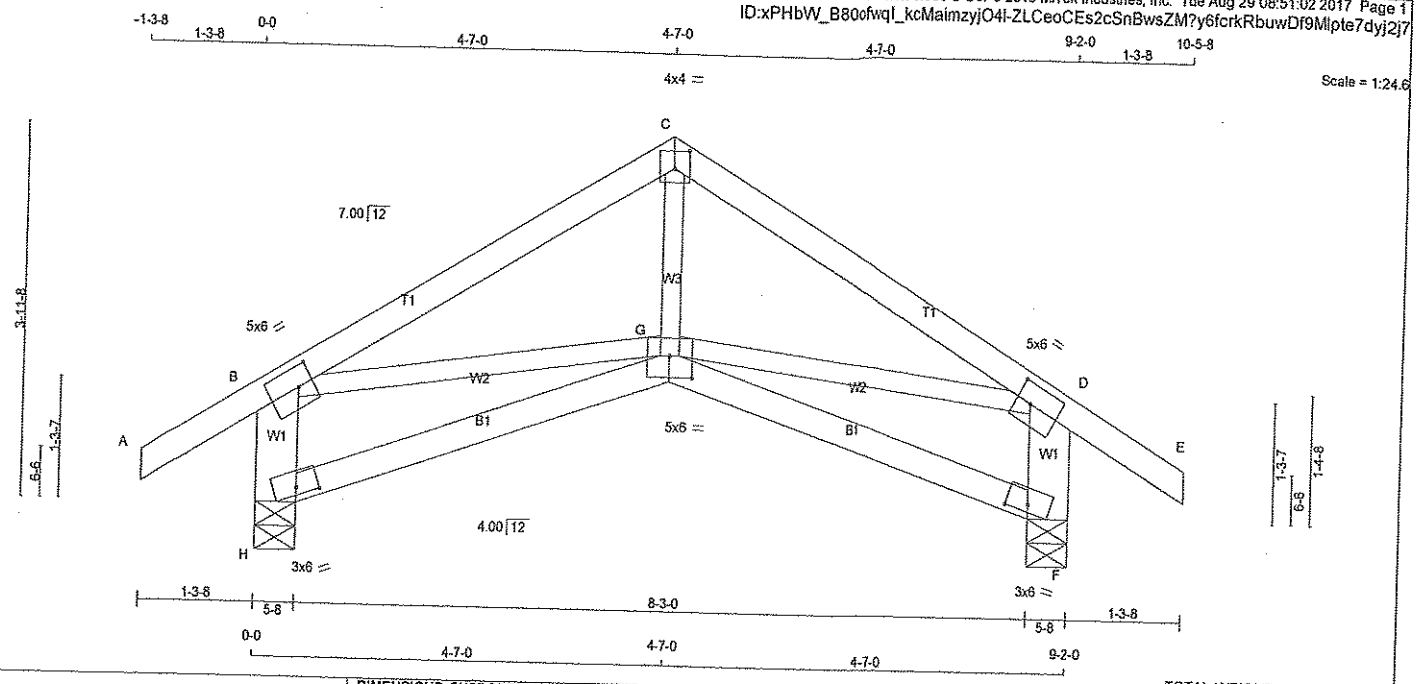

TOTAL WEIGHT = 3 X 39 = 116 lb

[M][F]

LUMBER

N. L. G. A. RULES

CHORDS	SIZE		LUMBER	DESCR.
A - C	2x4	DRY	No.2	SPF
C - E	2x4	DRY	No.2	SPF
H - B	2x6	DRY	No.2	SPF
F - D	2x6	DRY	No.2	SPF
H - G	2x4	DRY	No.2	SPF
G - F	2x4	DRY	No.2	SPF
ALL WEBS EXCEPT	2x3	DRY	No.2	SPF

DRY: SEASONED LUMBER.

PLATES (table is in inches)

JT	TYPE	PLATES	W	LEN	Y	X
B	TMVW-t	MT20	5.0	6.0	2.50	2.00
C	TTW-p	MT20	4.0	4.0	2.25	2.00
D	TMVW-t	MT20	5.0	6.0	2.50	2.00
F	BVM1-l	MT20	3.0	6.0	1.00	3.00
G	BBWWW-p	MT20	5.0	6.0	2.75	3.00
H	BVM1-l	MT20	3.0	6.0	1.00	3.00

DIMENSIONS, SUPPORTS AND LOADINGS SPECIFIED BY FABRICATOR TO BE VERIFIED BY BUILDING DESIGNER

BEARINGS

JT	FACTORED GROSS REACTION VERT	HORZ	MAXIMUM FACTORED GROSS REACTION DOWN	HORZ	UPLIFT	INPUT BRG IN-SX	REQRD BRG IN-SX
H	630	0	630	0	0	5-8	5-8
F	630	0	630	0	0	5-8	5-8

UNFACTORED REACTIONS

JT	1ST LCASE COMBINED	MAX /MIN. COMPONENT REACTIONS SNOW	LIVE	PERM.LIVE	WIND	DEAD	SOIL
H	500	304 / 0	96 / 0	0 / 0	0 / 0	100 / 0	0 / 0
F	500	304 / 0	96 / 0	0 / 0	0 / 0	100 / 0	0 / 0

BEARING MATERIAL TO BE SPF NO.2 OR BETTER AT JOINT(S) H, F

BRACING

TOP CHORD TO BE SHEATHED OR MAX. PURLIN SPACING = 6.25 FT.
MAX. UNBRACED BOTTOM CHORD LENGTH = 10.00 FT. OR RIGID CEILING DIRECTLY APPLIED.

ALL PITCH BREAKS AND PERIMETER CORNER JOINTS MUST BE LATERALLY RESTRAINED.

LOADING

TOTAL LOAD CASES: (4)

CHORDS

MEMB. FR-TO	MAX. FACTORED FORCE (LBS)	FACTORED VERT. LOAD LC1 (PLF) FROM	TO	MAX CSI (LC)	MAX. UNBRAC LENGTH
A- B	0 / 29	-84.3	-84.3	0.11 (1)	10.00
B- C	-603 / 0	-84.3	-84.3	0.23 (1)	6.25
C- D	-603 / 0	-84.3	-84.3	0.23 (1)	6.25
D- E	0 / 29	-84.3	-84.3	0.11 (1)	10.00
H- B	-565 / 0	0.0	0.0	0.04 (1)	7.81
F- D	-565 / 0	0.0	0.0	0.04 (1)	7.81
H- G	0 / 0	-28.0	-28.0	0.18 (3)	10.00
G- F	0 / 0	-28.0	-28.0	0.18 (3)	10.00

WEBS

MEMB. FR-TO	MAX. FACTORED FORCE (LBS)	MAX CSI (LC)
G- C	0 / 293	0.07 (2)
B- G	0 / 523	0.12 (1)
G- D	0 / 523	0.12 (1)

DESIGN CRITERIA

SPECIFIED LOADS:

TOP CH.	LL	=	25.6	PSF
	DL	=	3.0	PSF
BOT CH.	LL	=	10.5	PSF
	DL	=	7.0	PSF
TOTAL LOAD		=	46.1	PSF

SPACING = 24.0 IN. C/C

THIS TRUSS IS DESIGNED FOR RESIDENTIAL OR SMALL BUILDING REQUIREMENTS OF PART 9, NBCC 2010

THIS DESIGN COMPLIES WITH:
- PART 9 OF OBC 2012 , BCBC 2012 , ABC 2014
- CSA 086-09
- TPIC 2011

(55 % OF 31.3 P.S.F. G.S.L. PLUS 8.4 P.S.F. RAIN LOAD) EQUALS 25.6 P.S.F. SPECIFIED ROOF LIVE LOAD

ALLOWABLE DEFL.(LL)= L/360 (0.31")
CALCULATED VERT. DEFL.(LL) = L/ 999 (0.04")
ALLOWABLE DEFL.(TL)= L/360 (0.31")
CALCULATED VERT. DEFL.(TL) = L/ 999 (0.06")

CSI: TC=0.23 (B-C:1) , BC=0.18 (F-G:3) , WB=0.12 (B-G:1) , SSI=0.13 (C-D:1)

DOL LUMBER=1.00 NAIL=1.00 LS BEND=1.10 COMP=1.10 SHEAR=1.10 TENS= 1.10

COMPANION LIVE LOAD FACTOR = 0.50

AUTOSOLVE HEELS OFF

TRUSS PLATE MANUFACTURER IS NOT RESPONSIBLE FOR QUALITY CONTROL IN THE TRUSS MANUFACTURING PLANT .

NAIL VALUES

PLATE	GRIP(DRY) (PSI) MAX	MIN	SHEAR (PLI) MAX	MIN	SECTION (PLI) MAX	MIN
MT20	618	354	1667	822	2284	1656

PLATE PLACEMENT TOL. = 0.250 inches

PLATE ROTATION TOL. = 5.0 Deg.

JSI GRIP= 0.51 (D) (INPUT = 0.90)
JSI METAL= 0.19 (D) (INPUT = 1.00)

LICENSED PROFESSIONAL ENGINEER
S. KATSOULAKOS
PROVINCE OF ONTARIO

DWG NO. TAM 43566 17
STRUCTURAL
COMPONENT ONLY

JOB NAME	TRUSS NAME	QUANTITY	PLY	JOB DESC. 43954	DRWG NO.
282768	T7	1	1	TRUSS DESC.	

Tamarack Roof Truss, Burlington

Version 8.030 S Oct 5 2016 MiTek Industries, Inc. Tue Aug 29 08:51:02 2017 Page 1
ID:xPHbW_B80ofwqI_kcMaimzyjO4I-ZLCeoCEs2cSnBwsZM?y6fcrktbtzDg1Mlpte7dyj2j7

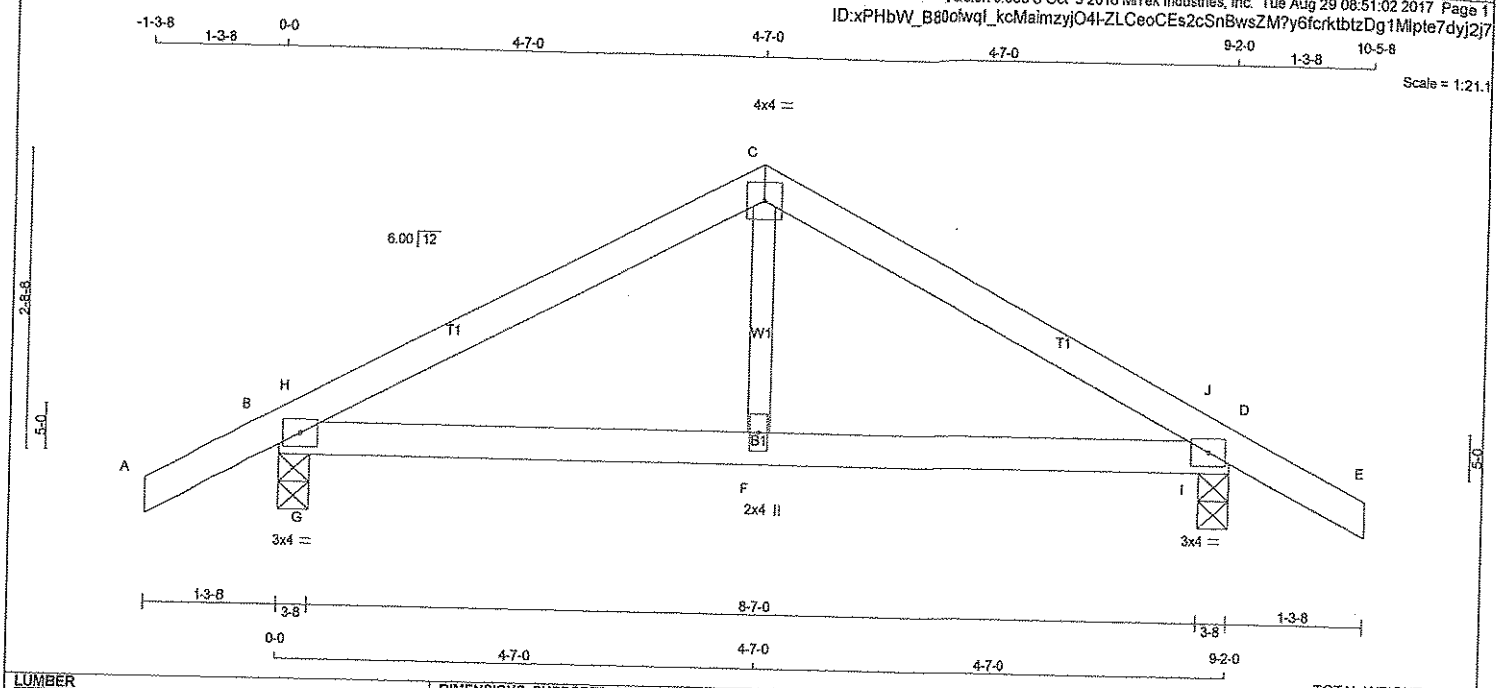

TOTAL WEIGHT = 27 lb
[M][F]

LUMBER
N. L. G. A. RULES

CHORDS	SIZE		LUMBER	DESCR.
A - C	2x4	DRY	No.2	SPF
C - E	2x4	DRY	No.2	SPF
B - D	2x4	DRY	No.2	SPF
ALL WEBS	2x3	DRY	No.2	SPF

DRY: SEASONED LUMBER.

PLATES (table is in inches)

JT	TYPE	PLATES	W	LEN	Y	X
B	TMB1-I	MT20	3.0	4.0		
C	TTW-p	MT20	4.0	4.0		
D	TMB1-I	MT20	3.0	4.0		
F	BMW+w	MT20	2.0	4.0		

DIMENSIONS, SUPPORTS AND LOADINGS SPECIFIED BY FABRICATOR TO BE VERIFIED BY BUILDING DESIGNER

BEARINGS

JT	FACTORED GROSS REACTION VERT	HORZ	MAXIMUM FACTORED GROSS REACTION DOWN	HORZ	UPLIFT	INPUT BRG IN-SX	REQRD BRG IN-SX
B	629	0	629	0	0	3-8	3-8
D	629	0	629	0	0	3-8	3-8

UNFACTORED REACTIONS

JT	1ST LCASE COMBINED	MAX./MIN. COMPONENT REACTIONS SNOW	LIVE	PERM.LIVE	WIND	DEAD	SOIL
B	500	304 / 0	96 / 0	0 / 0	0 / 0	100 / 0	0 / 0
D	500	304 / 0	96 / 0	0 / 0	0 / 0	100 / 0	0 / 0

BEARING MATERIAL TO BE SPF NO.2 OR BETTER AT JOINT(S) B, D

BRACING
TOP CHORD TO BE SHEATHED OR MAX. PURLIN SPACING = 6.25 FT.
MAX. UNBRACED BOTTOM CHORD LENGTH = 10.00 FT. OR RIGID CEILING DIRECTLY APPLIED.

ALL PITCH BREAKS AND PERIMETER CORNER JOINTS MUST BE LATERALLY RESTRAINED.

LOADING
TOTAL LOAD CASES: (4)

CHORDS

MEMB. FR-TO	MAX. FACTORED FORCE (LBS)	FACTORED VERT. LOAD LC1 (PLF) FROM	TO	MAX CSI (LC)	MAX. UNBRAC LENGTH
A- B	0 / 22	-84.3	-84.3	0.11 (1)	10.00
B- H	-525 / 0	-84.3	-84.3	0.09 (1)	6.25
H- C	-610 / 0	-84.3	-84.3	0.20 (1)	6.25
C- J	-610 / 0	-84.3	-84.3	0.20 (1)	6.25
J- D	-525 / 0	-84.3	-84.3	0.09 (1)	6.25
D- E	0 / 22	-84.3	-84.3	0.11 (1)	10.00
B- G	0 / 538	-28.0	-28.0	0.22 (1)	10.00
G- F	0 / 538	-28.0	-28.0	0.24 (1)	10.00
F- I	0 / 538	-28.0	-28.0	0.24 (1)	10.00
I- D	0 / 538	-28.0	-28.0	0.22 (1)	10.00

WEBS

MEMB. FR-TO	MAX. FACTORED FORCE (LBS)	MAX CSI (LC)
F- C	0 / 272	0.06 (2)
G- H	-303 / 153	0.00 (1)
I- J	-303 / 153	0.00 (1)

DESIGN CRITERIA

SPECIFIED LOADS:

TOP CH.	LL =	25.6	PSF
	DL =	3.0	PSF
BOT CH.	LL =	10.5	PSF
	DL =	7.0	PSF
TOTAL LOAD	=	46.1	PSF

SPACING = 24.0 IN. C/C

THIS TRUSS IS DESIGNED FOR RESIDENTIAL OR SMALL BUILDING REQUIREMENTS OF PART 9, NBCC 2010

THIS DESIGN COMPLIES WITH:
- PART 9 OF OBC 2012 , BCBC 2012 , ABC 2014
- CSA 086-09
- TPIC 2011

(55 % OF 31.3 P.S.F. G.S.L. PLUS 8.4 P.S.F. RAIN LOAD) EQUALS 25.6 P.S.F. SPECIFIED ROOF LIVE LOAD

ALLOWABLE DEFL.(LL)= L/360 (0.31")
CALCULATED VERT. DEFL.(LL) = L/ 999 (0.02")
ALLOWABLE DEFL.(TL)= L/360 (0.31")
CALCULATED VERT. DEFL.(TL) = L/ 999 (0.03")

CSI: TC=0.20 (C-J:1) , BC=0.24 (F-G:1) , WB=0.06 (C-F:2) , SSI=0.25 (D-I:1)

DOL LUMBER=1.00 NAIL=1.00 LS BEND=1.10 COMP=1.10 SHEAR=1.10 TENS= 1.10

COMPANION LIVE LOAD FACTOR = 0.50

TRUSS PLATE MANUFACTURER IS NOT RESPONSIBLE FOR QUALITY CONTROL IN THE TRUSS MANUFACTURING PLANT .

NAIL VALUES

PLATE	GRIP(DRY) (PSI) MAX	MIN	SHEAR (PLI) MAX	MIN	SECTION (PLI) MAX	MIN
MT20	618	354	1667	822	2284	1656

PLATE PLACEMENT TOL. = 0.250 inches

PLATE ROTATION TOL. = 5.0 Deg.

JSI GRIP= 0.57 (D) (INPUT = 0.90)
JSI METAL= 0.22 (B) (INPUT = 1.00)

LICENSED PROFESSIONAL ENGINEER
S. KATSOULAKOS
PROVINCE OF ONTARIO

DWG NO. TAM43582 17
STRUCTURAL
COMPONENT ONLY

JOB NAME	TRUSS NAME	QUANTITY	PLY	JOB DESC. 43954	DRWG NO.
282768	T7Z	1	1	TRUSS DESC.	

Tamarack Roof Truss, Burlington

Version 8.030 S Oct 5 2016 MiTek Industries, Inc. Tue Aug 29 08:51:03 2017 Page 1
ID:xPHbW_B80ofwql_kcMaimzyjO4l-1Xm00XFUpwaep3RIwiTLCpNv1?Cqy6BV_TdBg4yj2j6

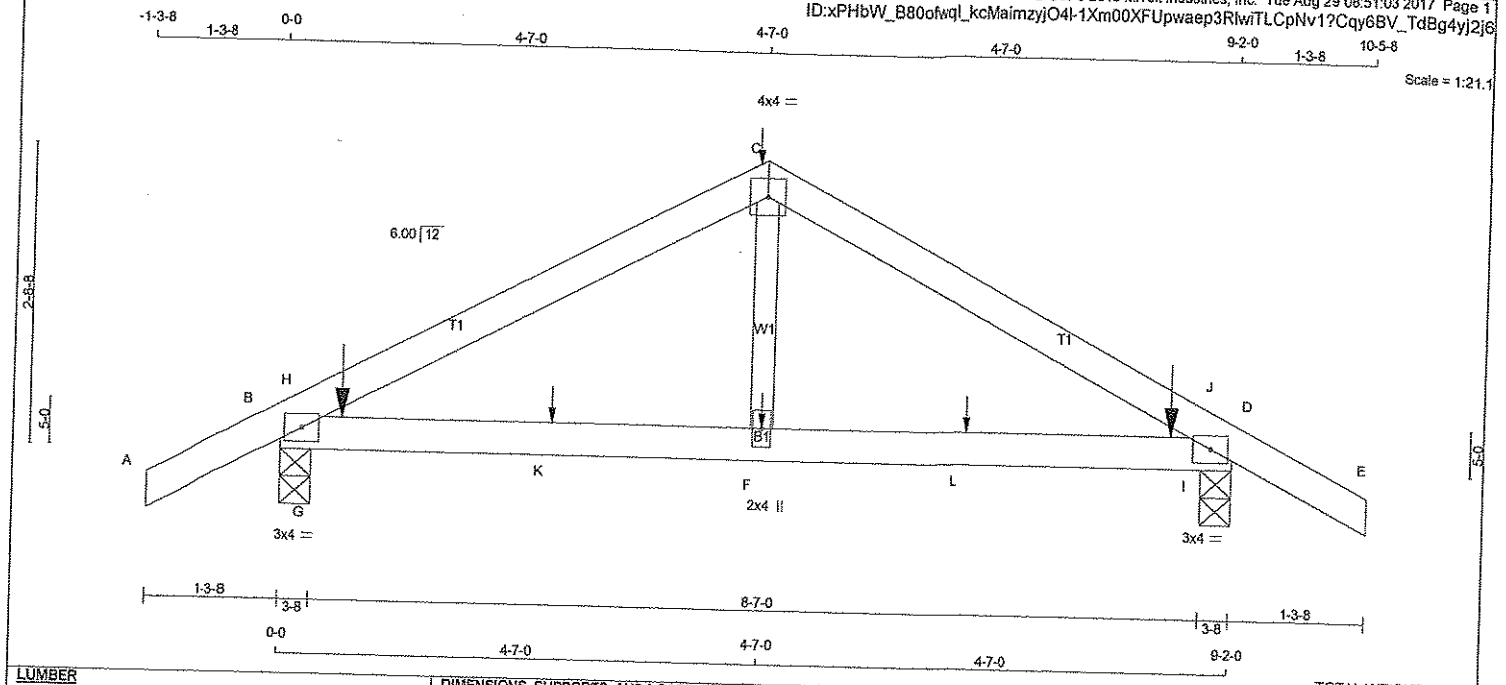

TOTAL WEIGHT = 27 lb [M]

LUMBER
N. L. G. A. RULES

CHORDS	SIZE		LUMBER	DESCR.
A - C	2x4	DRY	No.2	SPF
C - E	2x4	DRY	No.2	SPF
B - D	2x4	DRY	No.2	SPF
ALL WEBS	2x3	DRY	No.2	SPF

DRY: SEASONED LUMBER.

PLATES (table is in inches)

JT	TYPE	PLATES	W	LEN	Y	X
B	TMB1-I	MT20	3.0	4.0		
C	TTW-p	MT20	4.0	4.0		
D	TMB1-I	MT20	3.0	4.0		
F	BMW+w	MT20	2.0	4.0		

HANGERS NOTES

1) SPECIAL HANGER(S) OR CONNECTION(S) REQUIRED TO SUPPORT CONCENTRATED LOAD(S) AT 4-7-0 ON TOP CHORD, AND 7.1 lbs FACTORED DOWN AT 7-0, AT 2-7-0, AT 4-7-0, AND AT 6-7-0, AND 7.1 lbs FACTORED DOWN AT 8-7-0 ON BOTTOM CHORD. DESIGN FOR UNSPECIFIED CONNECTION(S) IS DELEGATED TO THE BUILDING DESIGNER.

DIMENSIONS, SUPPORTS AND LOADINGS SPECIFIED BY FABRICATOR TO BE VERIFIED BY BUILDING DESIGNER

BEARINGS

JT	FACTORED GROSS REACTION VERT	HORZ	MAXIMUM FACTORED GROSS REACTION DOWN	HORZ	UPLIFT	INPUT BRG IN-SX	REQRD BRG IN-SX
B	633	0	633	0	0	3-8	3-8
D	633	0	633	0	0	3-8	3-8

UNFACTORED REACTIONS

JT	1ST LCASE COMBINED	MAX /MIN. COMPONENT REACTIONS SNOW	LIVE	PERM.LIVE	WIND	DEAD	SOIL
B	505	304 / 0	99 / 0	0 / 0	0 / 0	102 / 0	0 / 0
D	505	304 / 0	99 / 0	0 / 0	0 / 0	102 / 0	0 / 0

BEARING MATERIAL TO BE SPF NO.2 OR BETTER AT JOINT(S) B, D

BRACING
TOP CHORD TO BE SHEATHED OR MAX. PURLIN SPACING = 6.25 FT.
MAX. UNBRACED BOTTOM CHORD LENGTH = 10.00 FT. OR RIGID CEILING DIRECTLY APPLIED.

ALL PITCH BREAKS AND PERIMETER CORNER JOINTS MUST BE LATERALLY RESTRAINED.

LOADING
TOTAL LOAD CASES: (4)

CHORDS

MEMB. FR-TO	MAX. FACTORED FORCE (LBS)	FACTORED VERT. LOAD (PLF) FROM	TO	LC1	MAX CSI (LC)	MAX. UNBRAC LENGTH
A- B	0 / 22	-84.3	-84.3	0.12 (1)	10.00	
B- H	-526 / 0	-84.3	-84.3	0.13 (1)	6.25	
H- C	-611 / 0	-84.3	-84.3	0.24 (1)	6.25	
C- J	-611 / 0	-84.3	-84.3	0.24 (1)	6.25	
J- D	-526 / 0	-84.3	-84.3	0.13 (1)	6.25	
D- E	0 / 22	-84.3	-84.3	0.12 (1)	10.00	
B- G	0 / 538	-28.0	-28.0	0.24 (1)	10.00	
G- K	0 / 538	-28.0	-28.0	0.26 (1)	10.00	
K- F	0 / 538	-28.0	-28.0	0.26 (1)	10.00	
F- L	0 / 538	-28.0	-28.0	0.26 (1)	10.00	
L- I	0 / 538	-28.0	-28.0	0.26 (1)	10.00	
I- D	0 / 538	-28.0	-28.0	0.24 (1)	10.00	

WEBS

MEMB. FR-TO	MAX. FACTORED FORCE (LBS)	MAX CSI (LC)
F- C	0 / 273	0.07 (2)
G- H	-301 / 156	0.00 (1)
I- J	-301 / 156	0.00 (1)

FACTORED CONCENTRATED LOADS (LBS)

JT	LOC.	LC1	MAX-	MAX+	FACE	DIR.	TYPE
C	4-7-0	—	—	—	BACK	VERT	TOTAL
F	4-7-0	—	—	—	BACK	VERT	TOTAL
G	7-0	-4	-7	—	BACK	VERT	TOTAL
I	8-7-0	-4	-7	—	BACK	VERT	TOTAL
K	2-7-0	—	—	—	BACK	VERT	TOTAL
L	6-7-0	—	—	—	BACK	VERT	TOTAL

DESIGN CRITERIA

SPECIFIED LOADS:

TOP CH.	LL	=	25.6	PSF
	DL	=	3.0	PSF
BOT CH.	LL	=	10.5	PSF
	DL	=	7.0	PSF
TOTAL LOAD		=	46.1	PSF

SPACING = 24.0 IN. C/C

THIS TRUSS IS DESIGNED FOR RESIDENTIAL OR SMALL BUILDING REQUIREMENTS OF PART 9, NBCC 2010

THIS DESIGN COMPLIES WITH:
- PART 9 OF OBC 2012 , BCBC 2012 , ABC 2014
- CSA 086-09
- TPIC 2011

(55 % OF 31.3 P.S.F. G.S.L. PLUS 8.4 P.S.F. RAIN LOAD) EQUALS 25.6 P.S.F. SPECIFIED ROOF LIVE LOAD

ALLOWABLE DEFL.(LL)= L/360 (0.31")
CALCULATED VERT. DEFL.(LL) = L/ 999 (0.02")
ALLOWABLE DEFL.(TL)= L/360 (0.31")
CALCULATED VERT. DEFL.(TL) = L/ 999 (0.03")

CSI: TC=0.24 (C-J:1) , BC=0.26 (F-I:1) , WB=0.07 (C-F:2) , SSI=0.28 (D-I:1)

DOL LUMBER=1.00 NAIL=1.00 LS BEND=1.00 COMP=1.00 SHEAR=1.00 TENS= 1.00

COMPANION LIVE LOAD FACTOR = 0.50

TRUSS PLATE MANUFACTURER IS NOT RESPONSIBLE FOR QUALITY CONTROL IN THE TRUSS MANUFACTURING PLANT .

NAIL VALUES

PLATE	GRIP(DRY) (PSI) MAX	MIN	SHEAR (PLI) MAX	MIN	SECTION (PLI) MAX	MIN
MT20	618	354	1667	822	2284	1656

PLATE PLACEMENT TOL. = 0.250 inches

PLATE ROTATION TOL. = 5.0 Deg.

JSI GRIP= 0.57 (D) (INPUT = 0.90)
JSI METAL= 0.22 (B) (INPUT = 1.00)

LICENSED PROFESSIONAL ENGINEER
S. KATSOULAKOS
PROVINCE OF ONTARIO

DWG NO. TAM43588-17
STRUCTURAL COMPONENT ONLY

JOB NAME	TRUSS NAME	QUANTITY	PLY	JOB DESC.	DRWG NO.
282769	T10	1	2	TRUSS DESC.	

Tamarack Roof Truss, Burlington

Version 8.030 S Oct 5 2016 MiTek Industries, Inc. Tue Aug 29 09:08:48 2017 Page 1
ID:dP6IGUfCrc5lDXmaOx0vTjyjMdB-LQdeXi8W08mW4kMRpt44sP_ulJeK_inGtf62Yryj2ST

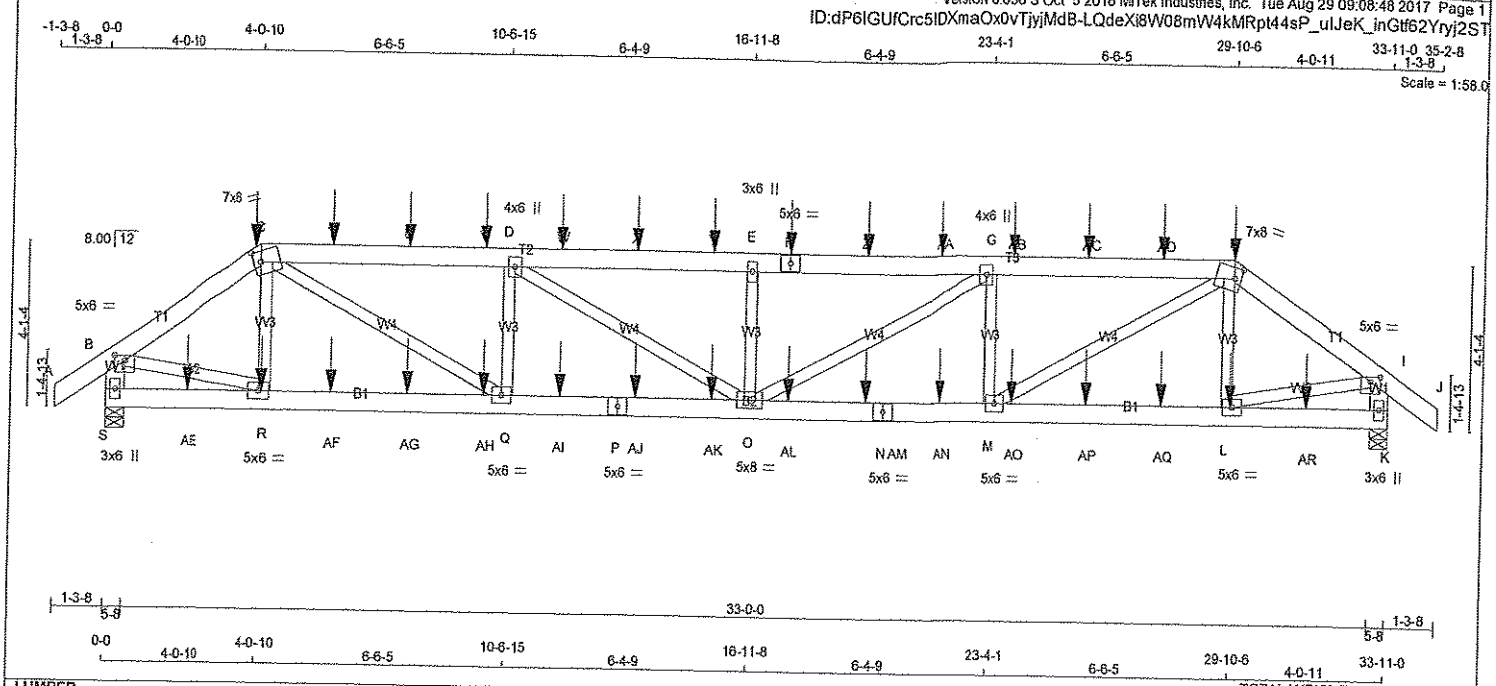

LUMBER

N. L. G. A. RULES

CHORDS	SIZE		LUMBER	DESCR.
A - C	2x6	DRY	No.2	SPF
C - F	2x6	DRY	No.2	SPF
F - H	2x6	DRY	No.2	SPF
H - J	2x6	DRY	No.2	SPF
S - B	2x6	DRY	No.2	SPF
K - I	2x6	DRY	No.2	SPF
S - P	2x6	DRY	No.2	SPF
P - N	2x6	DRY	No.2	SPF
N - K	2x6	DRY	No.2	SPF
ALL WEBS EXCEPT	2x4	DRY	No.2	SPF

DRY: SEASONED LUMBER.

DESIGN CONSISTS OF 2 TRUSSES BUILT SEPARATELY THEN FASTENED TOGETHER AS FOLLOWS:

CHORDS	#ROWS	SURFACE SPACING (IN)	LOAD(PLF)
TOP CHORDS : (0.122"X3") SPIRAL NAILS			
A- C	2	12	SIDE(122.0)
C- F	2	12	SIDE(61.0)
F- H	2	12	SIDE(61.0)
H- J	2	12	SIDE(122.0)
S- B	2	12	TOP
K- I	2	12	TOP
BOTTOM CHORDS : (0.122"X3") SPIRAL NAILS			
S- P	2	12	SIDE(183.1)
P- N	2	12	SIDE(0.0)
N- K	2	12	SIDE(183.1)
WEBS : (0.122"X3") SPIRAL NAILS			
2x4	1	6	

NAILS TO BE DRIVEN FROM ONE SIDE ONLY.

GIRDER NAILING ASSUMES NAILED HANGERS ARE FASTENED WITH MIN. 3-0 INCH NAILS.

TOP - COMPONENTS ARE LOADED FROM THE TOP AND MUST BE PLACED ON TOP EDGE OF ALL PLIES FOR THE LOAD TO BE TRANSFERRED TO EACH PLY.

SIDE - PLF SHOWN IS THE EQUIVALENT UDL APPLIED TO ONE SIDE THAT THE CORRESPONDING NAILING PATTERN SHALL BE CAPABLE OF TRANSFERING. REMAINING PLF MUST BE APPLIED ON THE OPPOSITE SIDE OR ON THE TOP.

PLATES (table is in inches)

JT	TYPE	PLATES	W	LEN	Y	X
B	TMWW-p	MT20	5.0	6.0	1.50	3.00
C	TTWW-m	MT20	7.0	8.0	3.25	2.00
D	TMWW+t	MT20	4.0	6.0		
E	TMW+w	MT20	3.0	6.0		
F	TS-t	MT20	5.0	6.0		
G	TMWW+t	MT20	4.0	6.0		
H	TTWW-m	MT20	7.0	8.0	3.25	2.00
I	TMWW-p	MT20	5.0	6.0	1.50	3.00
K	BMV1+p	MT20	3.0	6.0		
L, M, Q, R						
L	BMWW-t	MT20	5.0	6.0		
N	BS-t	MT20	5.0	6.0		
O	BMWWW-t	MT20	5.0	8.0		
P	BS-t	MT20	5.0	6.0		
S	BMV1+p	MT20	3.0	6.0		

DIMENSIONS, SUPPORTS AND LOADINGS SPECIFIED BY FABRICATOR TO BE VERIFIED BY BUILDING DESIGNER

BEARINGS

JT	FACTORED GROSS REACTION VERT	HORZ	MAXIMUM FACTORED GROSS REACTION DOWN	HORZ	UPLIFT	INPUT BRG IN-SX	REQRD BRG IN-SX
S	3301	0	3301	0	0	5-8	5-8
K	3301	0	3301	0	0	5-8	5-8

UNFACTORED REACTIONS

JT	1ST LCASE COMBINED	MAX./MIN. COMPONENT REACTIONS SNOW	LIVE	PERM.LIVE	WIND	DEAD	SOIL
S	2694	1519 / 0	596 / 0	0 / 0	0 / 0	579 / 0	0 / 0
K	2694	1519 / 0	596 / 0	0 / 0	0 / 0	579 / 0	0 / 0

BEARING MATERIAL TO BE SPF NO.2 OR BETTER AT JOINT(S) S, K

BRACING

TOP CHORD TO BE SHEATHED OR MAX. PURLIN SPACING = 4.16 FT.
MAX. UNBRACED BOTTOM CHORD LENGTH = 10.00 FT. OR RIGID CEILING DIRECTLY APPLIED.

ALL PITCH BREAKS AND PERIMETER CORNER JOINTS MUST BE LATERALLY RESTRAINED.

LOADING

TOTAL LOAD CASES: (4)

CHORDS

MEMB. FR-TO	MAX. FACTORED FORCE (LBS)	FACTORED VERT. LOAD (PLF) FROM	TO	LC1	MAX CSI (LC)	MAX. UNBRAC LENGTH
A- B	0 / 33	-84.3	-84.3	0.03 (1)	10.00	
B- C	-4034 / 0	-84.3	-84.3	0.09 (1)	5.59	
C- T	-6568 / 0	-84.3	-84.3	0.28 (1)	4.43	
T- U	-6568 / 0	-84.3	-84.3	0.28 (1)	4.43	
U- V	-6568 / 0	-84.3	-84.3	0.28 (1)	4.43	
V- D	-6568 / 0	-84.3	-84.3	0.28 (1)	4.43	
D- W	-7535 / 0	-84.3	-84.3	0.30 (1)	4.16	
W- X	-7535 / 0	-84.3	-84.3	0.30 (1)	4.16	
X- Y	-7535 / 0	-84.3	-84.3	0.30 (1)	4.16	
Y- E	-7535 / 0	-84.3	-84.3	0.30 (1)	4.16	
E- F	-7535 / 0	-84.3	-84.3	0.30 (1)	4.16	
F- Z	-7535 / 0	-84.3	-84.3	0.30 (1)	4.16	
Z-AA	-7535 / 0	-84.3	-84.3	0.30 (1)	4.16	
AA- G	-7535 / 0	-84.3	-84.3	0.30 (1)	4.16	
G-AB	-6568 / 0	-84.3	-84.3	0.28 (1)	4.44	
AB-AC	-6568 / 0	-84.3	-84.3	0.28 (1)	4.44	
AC-AD	-6568 / 0	-84.3	-84.3	0.28 (1)	4.44	
AD- H	-6568 / 0	-84.3	-84.3	0.28 (1)	4.44	
H- I	-4034 / 0	-84.3	-84.3	0.09 (1)	5.59	
I- J	0 / 33	-84.3	-84.3	0.03 (1)	10.00	
S- B	-3256 / 0	0.0	0.0	0.12 (1)	7.68	
K- I	-3256 / 0	0.0	0.0	0.12 (1)	7.68	
S-AE	0 / 0	-28.0	-28.0	0.09 (2)	10.00	
AE- R	0 / 0	-28.0	-28.0	0.09 (2)	10.00	
R-AF	0 / 3331	-28.0	-28.0	0.27 (1)	10.00	
AF-AG	0 / 3331	-28.0	-28.0	0.27 (1)	10.00	
AG-AH	0 / 3331	-28.0	-28.0	0.27 (1)	10.00	
AH- Q	0 / 3331	-28.0	-28.0	0.27 (1)	10.00	
Q-AI	0 / 6569	-28.0	-28.0	0.50 (1)	10.00	
AI- P	0 / 6569	-28.0	-28.0	0.50 (1)	10.00	
P-AJ	0 / 6569	-28.0	-28.0	0.50 (1)	10.00	
AJ-AK	0 / 6569	-28.0	-28.0	0.50 (1)	10.00	
AK- O	0 / 6569	-28.0	-28.0	0.50 (1)	10.00	
O-AL	0 / 6568	-28.0	-28.0	0.50 (1)	10.00	
AL-AM	0 / 6568	-28.0	-28.0	0.50 (1)	10.00	
AM- N	0 / 6568	-28.0	-28.0	0.50 (1)	10.00	
N-AN	0 / 6568	-28.0	-28.0	0.50 (1)	10.00	
AN- M	0 / 6568	-28.0	-28.0	0.50 (1)	10.00	
M-AO	0 / 3331	-28.0	-28.0	0.27 (1)	10.00	

WEBS

MEMB. FR-TO	MAX. FACTORED FORCE (LBS)	MAX CSI (LC)
R- C	-412 / 139	0.04 (1)
C- Q	0 / 3703	0.33 (1)
Q- D	-1504 / 0	0.13 (1)
D- O	0 / 1113	0.10 (1)
O- E	-799 / 0	0.07 (1)
O- G	0 / 1113	0.10 (1)
M- G	-1504 / 0	0.13 (1)
M- H	0 / 3703	0.33 (1)
L- H	-412 / 139	0.04 (1)
B- R	0 / 3423	0.30 (1)
L- I	0 / 3423	0.30 (1)

LICENSED PROFESSIONAL ENGINEER
S. KATSOULAKOS
PROVINCE OF ONTARIO

DESIGN CRITERIA

*** SPECIAL LOADS ANALYSIS ***
GEOMETRY AND/OR BASIC LOADS CHANGED BY USER.
LOADS WERE DERIVED FROM USER INPUT
NO FURTHER MODIFICATIONS WERE MADE

SPECIFIED LOADS:

TOP CH.	LL	=	25.6	PSF
	DL	=	3.0	PSF
BOT CH.	LL	=	10.5	PSF
	DL	=	7.0	PSF
TOTAL LOAD		=	46.1	PSF

SPACING = 24.0 IN. C/C

LOADING IN FLAT SECTION BASED ON A SLOPE OF 6.00/12

*** NON STANDARD GIRDER ***
ADDT'L USER-DEFINED LOADS APPLIED TO ALL LOAD CASES.

THIS TRUSS IS DESIGNED FOR RESIDENTIAL OR SMALL BUILDING REQUIREMENTS OF PART 9, NBCC 2010

THIS DESIGN COMPLIES WITH:
- PART 9 OF OBC 2012 , BCBC 2012 , ABC 2014
- CSA 086-09
- TPIC 2011

(55 % OF 31.3 P.S.F. G.S.L. PLUS 8.4 P.S.F. RAIN LOAD) EQUALS 25.6 P.S.F. SPECIFIED ROOF LIVE LOAD

ALLOWABLE DEFL.(LL)= L/360 (1.13")
CALCULATED VERT. DEFL.(LL) = L/ 999 (0.19")
ALLOWABLE DEFL.(TL)= L/360 (1.13")
CALCULATED VERT. DEFL.(TL) = L/ 999 (0.31")

CSI: TC=0.30 (D-E:1) , BC=0.50 (O-Q:1) , WB=0.33 (C-Q:1) , SSI=0.18 (C-D:1)

DOL LUMBER=1.00 NAIL=1.00 LS BEND=1.00 COMP=1.00 SHEAR=1.00 TENS= 1.00

COMPANION LIVE LOAD FACTOR = 0.50

TRUSS PLATE MANUFACTURER IS NOT RESPONSIBLE FOR QUALITY CONTROL IN THE TRUSS MANUFACTURING PLANT.

NAIL VALUES

PLATE	GRIP(DRY) (PSI) MAX	MIN	SHEAR (PLI) MAX	MIN	SECTION (PLI) MAX	MIN
MT20	618	354	1667	822	2284	1656

PLATE PLACEMENT TOL. = 0.250 inches

PLATE ROTATION TOL. = 5.0 Deg.

JSI GRIP= 0.88 (C) (INPUT = 0.90)
JSI METAL= 0.58 (N) (INPUT = 1.00)

DWG NO. TAM 43592-17 P6/6

STRUCTURAL COMPONENT ONLY

CONTINUED ON PAGE 2

JOB NAME	TRUSS NAME	QUANTITY	PLY	JOB DESC.	DRWG NO.
282769	T10	1	2	TRUSS DESC.	

Tamarack Roof Truss, Burlington

HANGERS NOTES

1) SPECIAL HANGER(S) OR CONNECTION(S) REQUIRED TO SUPPORT CONCENTRATED LOAD(S) 349.4 lbs FACTORED DOWN AT 4-0-11, 349.4 lbs FACTORED DOWN AT 29-10-6, 101.4 lbs FACTORED DOWN AT 5-11-8, 101.4 lbs FACTORED DOWN AT 7-11-8, 101.4 lbs FACTORED DOWN AT 9-11-8, 101.4 lbs FACTORED DOWN AT 11-11-8, 101.4 lbs FACTORED DOWN AT 13-11-8, 101.4 lbs FACTORED DOWN AT 15-11-8, 101.4 lbs FACTORED DOWN AT 17-11-8, 101.4 lbs FACTORED DOWN AT 19-11-8, 101.4 lbs FACTORED DOWN AT 21-11-8, 101.4 lbs FACTORED DOWN AT 23-11-8, AND 101.4 lbs FACTORED DOWN AT 25-11-8, AND 101.4 lbs FACTORED DOWN AT 27-11-8 ON TOP CHORD, AND 69.9 lbs FACTORED DOWN AT 2-1-6, 69.9 lbs FACTORED DOWN AT 4-1-6, 69.9 lbs FACTORED DOWN AT 5-11-8, 69.9 lbs FACTORED DOWN AT 7-11-8, 69.9 lbs FACTORED DOWN AT 9-11-8, 69.9 lbs FACTORED DOWN AT 11-11-8, 69.9 lbs FACTORED DOWN AT 13-11-8, 69.9 lbs FACTORED DOWN AT 15-11-8, 69.9 lbs FACTORED DOWN AT 17-11-8, 69.9 lbs FACTORED DOWN AT 19-11-8, 69.9 lbs FACTORED DOWN AT 21-11-8, 69.9 lbs FACTORED DOWN AT 23-11-8, 69.9 lbs FACTORED DOWN AT 25-11-8, 69.9 lbs FACTORED DOWN AT 27-11-8, AND 69.9 lbs FACTORED DOWN AT 29-9-9, AND 69.9 lbs FACTORED DOWN AT 31-9-9 ON BOTTOM CHORD. DESIGN FOR UNSPECIFIED CONNECTION(S) IS DELEGATED TO THE BUILDING DESIGNER.

LOADING

TOTAL LOAD CASES: (4)

CHORDS

MEMB. FR-TO	MAX. FACTORED FORCE (LBS)	FACTORED VERT. LOAD LC1 (PLF) FROM	TO	MAX CSI (LC)	MAX. UNBRAC LENGTH
AO-AP	0 / 3331	-28.0	-28.0	0.27 (1)	10.00
AP-AQ	0 / 3331	-28.0	-28.0	0.27 (1)	10.00
AQ- L	0 / 3331	-28.0	-28.0	0.27 (1)	10.00
L-AR	0 / 0	-28.0	-28.0	0.09 (2)	10.00
AR- K	0 / 0	-28.0	-28.0	0.09 (2)	10.00

WEBS

MEMB. FR-TO	MAX. FACTORED FORCE (LBS)	MAX CSI (LC)

FACTORED CONCENTRATED LOADS (LBS)

JT	LOC.	LC1	MAX-	MAX+	FACE	DIR.	TYPE
C	4-0-11	-23	-25	—	FRONT	VERT	DEAD
C	4-0-11	-105	-105	—	FRONT	VERT	TOTAL
C	4-0-11	-222	-222	—	FRONT	VERT	SNOW
F	17-11-8	-101	-101	—	FRONT	VERT	TOTAL
H	29-10-6	-23	-25	—	FRONT	VERT	DEAD
H	29-10-6	-105	-105	—	FRONT	VERT	TOTAL
H	29-10-6	-222	-222	—	FRONT	VERT	SNOW
L	29-9-9	-40	-70	—	FRONT	VERT	TOTAL
R	4-1-6	-40	-70	—	FRONT	VERT	TOTAL
T	5-11-8	-101	-101	—	FRONT	VERT	TOTAL
U	7-11-8	-101	-101	—	FRONT	VERT	TOTAL
V	9-11-8	-101	-101	—	FRONT	VERT	TOTAL
W	11-11-8	-101	-101	—	FRONT	VERT	TOTAL
X	13-11-8	-101	-101	—	FRONT	VERT	TOTAL
Y	15-11-8	-101	-101	—	FRONT	VERT	TOTAL
Z	19-11-8	-101	-101	—	FRONT	VERT	TOTAL
AA	21-11-8	-101	-101	—	FRONT	VERT	TOTAL
AB	23-11-8	-101	-101	—	FRONT	VERT	TOTAL
AC	25-11-8	-101	-101	—	FRONT	VERT	TOTAL
AD	27-11-8	-101	-101	—	FRONT	VERT	TOTAL
AE	2-1-6	-40	-70	—	FRONT	VERT	TOTAL
AF	5-11-8	-40	-70	—	FRONT	VERT	TOTAL
AG	7-11-8	-40	-70	—	FRONT	VERT	TOTAL
AH	9-11-8	-40	-70	—	FRONT	VERT	TOTAL
AI	11-11-8	-40	-70	—	FRONT	VERT	TOTAL
AJ	13-11-8	-40	-70	—	FRONT	VERT	TOTAL
AK	15-11-8	-40	-70	—	FRONT	VERT	TOTAL
AL	17-11-8	-40	-70	—	FRONT	VERT	TOTAL
AM	19-11-8	-40	-70	—	FRONT	VERT	TOTAL
AN	21-11-8	-40	-70	—	FRONT	VERT	TOTAL
AO	23-11-8	-40	-70	—	FRONT	VERT	TOTAL
AP	25-11-8	-40	-70	—	FRONT	VERT	TOTAL
AQ	27-11-8	-40	-70	—	FRONT	VERT	TOTAL
AR	31-9-9	-40	-70	—	FRONT	VERT	TOTAL

LICENSED PROFESSIONAL ENGINEER
8240
S. KATSOULAKOS
PROVINCE OF ONTARIO

DWG NO. TAM 43592 17
STRUCTURAL
COMPONENT ONLY

JOB NAME	TRUSS NAME	QUANTITY	PLY	JOB DESC.	DRWG NO.
282769	T11	1	1	TRUSS DESC.	

Tamarack Roof Truss, Burlington

Version 8.030 S Oct 5 2016 MiTek Industries, Inc. Tue Aug 29 09:08:48 2017 Page 1
ID:dP6IGUfCrc5IDXmaOx0vTjyjMdB-LQdeXi8W08mW4kMRpt44sP_oOJd9_hDGtf62Yryj2ST

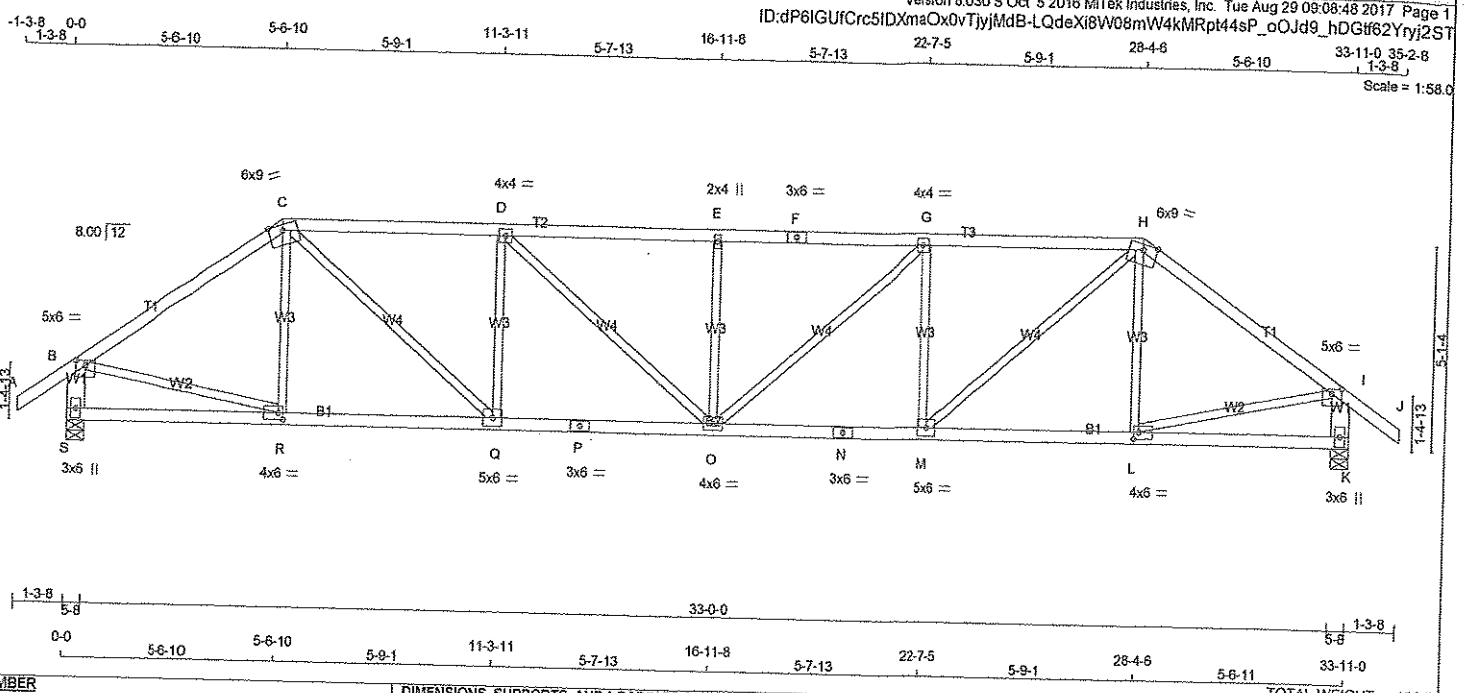

TOTAL WEIGHT = 138 lb

LUMBER

N. L. G. A. RULES

CHORDS	SIZE		LUMBER	DESCR.
A - C	2x4	DRY	No.2	SPF
C - F	2x4	DRY	No.2	SPF
F - H	2x4	DRY	No.2	SPF
H - J	2x4	DRY	No.2	SPF
S - B	2x6	DRY	No.2	SPF
K - I	2x6	DRY	No.2	SPF
S - P	2x4	DRY	No.2	SPF
P - N	2x4	DRY	No.2	SPF
N - K	2x4	DRY	No.2	SPF
ALL WEBS EXCEPT	2x3	DRY	No.2	SPF

DRY: SEASONED LUMBER.

PLATES (table is in inches)

JT	TYPE	PLATES	W	LEN	Y	X
B	TMVW-p	MT20	5.0	6.0	1.50	3.00
C	TTWW-m	MT20	6.0	9.0	Edge	
D	TMWW-t	MT20	4.0	4.0		
E	TMW+w	MT20	2.0	4.0		
F	TS-t	MT20	3.0	6.0		
G	TMWW-t	MT20	4.0	4.0		
H	TTWW-m	MT20	6.0	9.0	Edge	
I	TMVW-p	MT20	5.0	6.0	1.50	3.00
K	BMV1+p	MT20	3.0	6.0		
L	BMWW-t	MT20	4.0	6.0	2.00	1.50
M	BMWW-t	MT20	5.0	6.0		
N	BS-t	MT20	3.0	6.0		
O	BMWWW-t	MT20	4.0	6.0		
P	BS-t	MT20	3.0	6.0		
Q	BMWW-t	MT20	5.0	6.0		
R	BMWW-t	MT20	4.0	6.0	2.00	1.50
S	BMV1+p	MT20	3.0	6.0		

Edge - INDICATES REFERENCE CORNER OF PLATE TOUCHES EDGE OF CHORD.

DIMENSIONS, SUPPORTS AND LOADINGS SPECIFIED BY FABRICATOR TO BE VERIFIED BY BUILDING DESIGNER

BEARINGS

JT	FACTORED GROSS REACTION VERT	HORZ	MAXIMUM FACTORED GROSS REACTION DOWN	HORZ	UPLIFT	INPUT BRG IN-SX	REQRD BRG IN-SX
S	2019	0	2019	0	0	5-8	5-8
K	2019	0	2019	0	0	5-8	5-8

UNFACTORED REACTIONS

JT	1ST LCASE COMBINED	MAX./MIN. COMPONENT REACTIONS SNOW	LIVE	PERM.LIVE	WIND	DEAD	SOIL
S	1641	938 / 0	356 / 0	0 / 0	0 / 0	347 / 0	0 / 0
K	1641	938 / 0	356 / 0	0 / 0	0 / 0	347 / 0	0 / 0

BEARING MATERIAL TO BE SPF NO.2 OR BETTER AT JOINT(S) S, K

BRACING

TOP CHORD TO BE SHEATHED OR MAX. PURLIN SPACING = 3.23 FT.
MAX. UNBRACED BOTTOM CHORD LENGTH = 10.00 FT. OR RIGID CEILING DIRECTLY APPLIED.

ALL PITCH BREAKS AND PERIMETER CORNER JOINTS MUST BE LATERALLY RESTRAINED.

LOADING

TOTAL LOAD CASES: (4)

CHORDS

MEMB. FR-TO	MAX. FACTORED FORCE (LBS)	FACTORED VERT. LOAD (PLF) FROM	TO	LC1	MAX CSI (LC)	MAX. UNBRAC LENGTH
A- B	0 / 32	-84.3	-84.3	0.11 (1)	10.00	
B- C	-2247 / 0	-84.3	-84.3	0.65 (1)	3.91	
C- D	-3051 / 0	-84.3	-84.3	0.64 (1)	3.44	
D- E	-3403 / 0	-84.3	-84.3	0.68 (1)	3.23	
E- F	-3403 / 0	-84.3	-84.3	0.68 (1)	3.23	
F- G	-3403 / 0	-84.3	-84.3	0.68 (1)	3.23	
G- H	-3051 / 0	-84.3	-84.3	0.64 (1)	3.44	
H- I	-2247 / 0	-84.3	-84.3	0.65 (1)	3.91	
I- J	0 / 32	-84.3	-84.3	0.11 (1)	10.00	
S- B	-1956 / 0	0.0	0.0	0.13 (1)	7.20	
K- I	-1956 / 0	0.0	0.0	0.13 (1)	7.20	
S- R	0 / 0	-28.0	-28.0	0.22 (3)	10.00	
R- Q	0 / 1863	-28.0	-28.0	0.44 (2)	10.00	
Q- P	0 / 3051	-28.0	-28.0	0.57 (1)	10.00	
P- O	0 / 3051	-28.0	-28.0	0.57 (1)	10.00	
O- N	0 / 3051	-28.0	-28.0	0.57 (1)	10.00	
N- M	0 / 3051	-28.0	-28.0	0.57 (1)	10.00	
M- L	0 / 1863	-28.0	-28.0	0.44 (2)	10.00	
L- K	0 / 0	-28.0	-28.0	0.22 (3)	10.00	

WEBS

MEMB. FR-TO	MAX. FACTORED FORCE (LBS)	MAX CSI (LC)
R- C	-177 / 130	0.07 (1)
C- Q	0 / 1547	0.35 (1)
Q- D	-839 / 0	0.32 (1)
D- O	0 / 461	0.10 (1)
O- E	-439 / 0	0.17 (1)
O- G	0 / 461	0.10 (1)
M- G	-839 / 0	0.32 (1)
M- H	0 / 1547	0.35 (1)
L- H	-177 / 130	0.07 (1)
B- R	0 / 1901	0.43 (1)
L- I	0 / 1901	0.43 (1)

DESIGN CRITERIA

SPECIFIED LOADS:

TOP CH.	LL	=	25.6	PSF
	DL	=	3.0	PSF
BOT CH.	LL	=	10.5	PSF
	DL	=	7.0	PSF
TOTAL LOAD		=	46.1	PSF

SPACING = 24.0 IN. C/C

LOADING IN FLAT SECTION BASED ON A SLOPE OF 6.00/12

THIS TRUSS IS DESIGNED FOR RESIDENTIAL OR SMALL BUILDING REQUIREMENTS OF PART 9, NBCC 2010

THIS DESIGN COMPLIES WITH:
- PART 9 OF OBC 2012 , BCBC 2012 , ABC 2014
- CSA 086-09
- TPIC 2011

(55 % OF 31.3 P.S.F. G.S.L. PLUS 8.4 P.S.F. RAIN LOAD) EQUALS 25.6 P.S.F. SPECIFIED ROOF LIVE LOAD

ALLOWABLE DEFL.(LL)= L/360 (1.13")
CALCULATED VERT. DEFL.(LL) = L/ 999 (0.22")
ALLOWABLE DEFL.(TL)= L/360 (1.13")
CALCULATED VERT. DEFL.(TL) = L/ 999 (0.36")

CSI: TC=0.68 (D-E:1) , BC=0.57 (M-O:1) , WB=0.43 (I-L:1) , SSI=0.23 (G-H:1)

DOL LUMBER=1.00 NAIL=1.00 LS BEND=1.10 COMP=1.10 SHEAR=1.10 TENS= 1.10

COMPANION LIVE LOAD FACTOR = 0.50

TRUSS PLATE MANUFACTURER IS NOT RESPONSIBLE FOR QUALITY CONTROL IN THE TRUSS MANUFACTURING PLANT.

NAIL VALUES

PLATE	GRIP(DRY) (PSI) MAX	MIN	SHEAR (PLI) MAX	MIN	SECTION (PLI) MAX	MIN
MT20	618	354	1667	822	2284	1656

PLATE PLACEMENT TOL. = 0.250 inches

PLATE ROTATION TOL. = 5.0 Deg.

JSI GRIP= 0.89 (P) (INPUT = 0.90)
JSI METAL= 0.86 (N) (INPUT = 1.00)

LICENSED PROFESSIONAL ENGINEER
82447
S. KATSOULAKOS
PROVINCE OF ONTARIO

DWG NO. TAM 43593-17
STRUCTURAL
COMPONENT ONLY

JOB NAME	TRUSS NAME	QUANTITY	PLY	JOB DESC.	DRWG NO.
282769	T12	1	1	TRUSS DESC.	

Tamarack Roof Truss, Burlington

Version 8.030 S Oct 5 2016 MiTek Industries, Inc. Tue Aug 29 09:08:49 2017 Page 1
ID:dP6IGUfCrc5lDXmaOx0vTjyjMdB-pcB0k298nSuNiuxdMbbJPcXxVizdj1DP6Jrb4Hyj2SS

Scale = 1:58.0

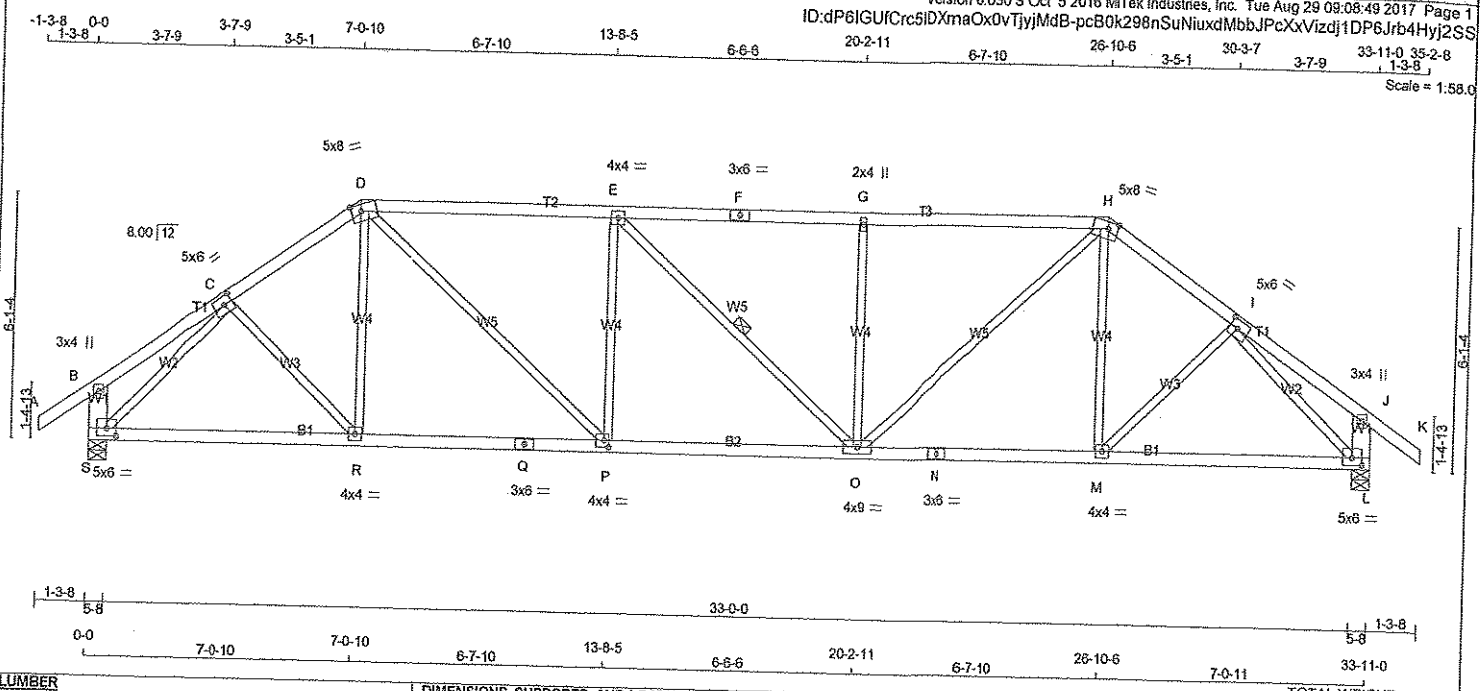

TOTAL WEIGHT = 142 lb [M]

LUMBER

N. L. G. A. RULES

CHORDS	SIZE		LUMBER	DESCR.
A - D	2x4	DRY	No.2	SPF
D - F	2x4	DRY	No.2	SPF
F - H	2x4	DRY	No.2	SPF
H - K	2x4	DRY	No.2	SPF
S - B	2x6	DRY	No.2	SPF
L - J	2x6	DRY	No.2	SPF
S - Q	2x4	DRY	No.2	SPF
Q - N	2x4	DRY	No.2	SPF
N - L	2x4	DRY	No.2	SPF
ALL WEBS EXCEPT	2x3	DRY	No.2	SPF

DRY: SEASONED LUMBER.

PLATES (table is in inches)

JT	TYPE	PLATES	W	LEN	Y	X
B	TMV+p	MT20	3.0	4.0		
C	TMWW-t	MT20	5.0	6.0	2.50	2.50
D	TTWW-m	MT20	5.0	8.0	2.00	3.00
E	TMWW-t	MT20	4.0	4.0		
F	TS-t	MT20	3.0	6.0		
G	TMW+w	MT20	2.0	4.0		
H	TTWW-m	MT20	5.0	8.0	2.00	3.00
I	TMWW-t	MT20	5.0	6.0	2.50	2.50
J	TMV+p	MT20	3.0	4.0		
L	BMWW1-t	MT20	5.0	6.0	2.25	3.00
M	BMWW-t	MT20	4.0	4.0		
N	BS-t	MT20	3.0	6.0		
O	BMWWW-t	MT20	4.0	9.0		
P	BMWW-t	MT20	4.0	4.0	2.00	1.50
Q	BS-t	MT20	3.0	6.0		
R	BMWW-t	MT20	4.0	4.0		
S	BMVW1-t	MT20	5.0	6.0	2.25	3.00

DIMENSIONS, SUPPORTS AND LOADINGS SPECIFIED BY FABRICATOR TO BE VERIFIED BY BUILDING DESIGNER

BEARINGS

JT	FACTORED GROSS REACTION VERT	HORZ	MAXIMUM FACTORED GROSS REACTION DOWN	HORZ	UPLIFT	INPUT BRG IN-SX	REQRD BRG IN-SX
S	2019	0	2019	0	0	5-8	5-8
L	2019	0	2019	0	0	5-8	5-8

UNFACTORED REACTIONS

JT	1ST LCASE COMBINED	MAX./MIN. COMPONENT REACTIONS SNOW	LIVE	PERM.LIVE	WIND	DEAD	SOIL
S	1641	938 / 0	356 / 0	0 / 0	0 / 0	347 / 0	0 / 0
L	1641	938 / 0	356 / 0	0 / 0	0 / 0	347 / 0	0 / 0

BEARING MATERIAL TO BE SPF NO.2 OR BETTER AT JOINT(S) S, L

BRACING

TOP CHORD TO BE SHEATHED OR MAX. PURLIN SPACING = 3.44 FT.
MAX. UNBRACED BOTTOM CHORD LENGTH = 10.00 FT. OR RIGID CEILING DIRECTLY APPLIED.

ALL PITCH BREAKS AND PERIMETER CORNER JOINTS MUST BE LATERALLY RESTRAINED.

1 LATERAL BRACE(S) AT 1/ 2 LENGTH OF E-O.

END VERTICAL(S) MUST BE SHEATHED OR HAVE BRACES AS INDICATED IN THE MAX. UNBRACED LENGTH COLUMN OF THE TABLE BELOW

LOADING

TOTAL LOAD CASES: (4)

CHORDS

MEMB. FR-TO	MAX. FACTORED FORCE (LBS)	FACTORED VERT. LOAD LC1 (PLF) FROM	TO	MAX CSI (LC)	MAX. UNBRAC LENGTH
A- B	0 / 32	-84.3	-84.3	0.11 (1)	10.00
B- C	0 / 16	-84.3	-84.3	0.14 (1)	10.00
C- D	-2253 / 0	-84.3	-84.3	0.21 (1)	4.37
D- E	-2749 / 0	-84.3	-84.3	0.79 (1)	3.44
E- F	-2748 / 0	-84.3	-84.3	0.78 (1)	3.44
F- G	-2748 / 0	-84.3	-84.3	0.78 (1)	3.44
G- H	-2748 / 0	-84.3	-84.3	0.78 (1)	3.45
H- I	-2253 / 0	-84.3	-84.3	0.21 (1)	4.37
I- J	0 / 16	-84.3	-84.3	0.14 (1)	10.00
J- K	0 / 32	-84.3	-84.3	0.11 (1)	10.00
S- B	-235 / 0	0.0	0.0	0.02 (1)	7.81
L- J	-235 / 0	0.0	0.0	0.02 (1)	7.81
S- R	0 / 1749	-28.0	-28.0	0.53 (2)	10.00
R- Q	0 / 1860	-28.0	-28.0	0.56 (2)	10.00
Q- P	0 / 1860	-28.0	-28.0	0.56 (2)	10.00
P- O	0 / 2749	-28.0	-28.0	0.55 (1)	10.00
O- N	0 / 1860	-28.0	-28.0	0.56 (2)	10.00
N- M	0 / 1860	-28.0	-28.0	0.56 (2)	10.00
M- L	0 / 1749	-28.0	-28.0	0.53 (2)	10.00

WEBS

MEMB. FR-TO	MAX. FACTORED FORCE (LBS)	MAX CSI (LC)
C- R	0 / 204	0.05 (2)
R- D	0 / 253	0.06 (3)
D- P	0 / 1181	0.27 (1)
P- E	-602 / 0	0.35 (1)
E- O	-2 / 0	0.00 (1)
O- G	-601 / 0	0.35 (1)
O- H	0 / 1179	0.27 (1)
M- H	0 / 253	0.06 (3)
M- I	0 / 204	0.05 (2)
S- C	-2441 / 0	0.89 (1)
I- L	-2441 / 0	0.89 (1)

DESIGN CRITERIA

SPECIFIED LOADS:

TOP CH.	LL	=	25.6	PSF
	DL	=	3.0	PSF
BOT CH.	LL	=	10.5	PSF
	DL	=	7.0	PSF
TOTAL LOAD		=	46.1	PSF

SPACING = 24.0 IN. C/C

LOADING IN FLAT SECTION BASED ON A SLOPE OF 6.00/12

THIS TRUSS IS DESIGNED FOR RESIDENTIAL OR SMALL BUILDING REQUIREMENTS OF PART 9, NBCC 2010

THIS DESIGN COMPLIES WITH:
- PART 9 OF OBC 2012 , BCBC 2012 , ABC 2014
- CSA 086-09
- TPIC 2011

(55 % OF 31.3 P.S.F. G.S.L. PLUS 8.4 P.S.F. RAIN LOAD) EQUALS 25.6 P.S.F. SPECIFIED ROOF LIVE LOAD

ALLOWABLE DEFL.(LL)= L/360 (1.13")
CALCULATED VERT. DEFL.(LL) = L/ 999 (0.18")
ALLOWABLE DEFL.(TL)= L/360 (1.13")
CALCULATED VERT. DEFL.(TL) = L/ 999 (0.30")

CSI: TC=0.79 (D-E:1) , BC=0.56 (M-O:2) , WB=0.89 (I-L:1) , SSI=0.26 (D-E:1)

DOL LUMBER=1.60 NAIL=1.00 LS BEND=1.10 COMP=1.10 SHEAR=1.10 TENS= 1.10

COMPANION LIVE LOAD FACTOR = 0.50

TRUSS PLATE MANUFACTURER IS NOT RESPONSIBLE FOR QUALITY CONTROL IN THE TRUSS MANUFACTURING PLANT .

NAIL VALUES

PLATE	GRIP(DRY) (PSI) MAX	MIN	SHEAR (PLI) MAX	MIN	SECTION (PLI) MAX	MIN
MT20	618	354	1667	822	2284	1656

PLATE PLACEMENT TOL. = 0.250 inches

PLATE ROTATION TOL. = 5.0 Deg.

SI GRIP= 0.90 (P) (INPUT = 0.90)
SI METAL= 0.61 (I) (INPUT = 1.00)

LICENSED PROFESSIONAL ENGINEER
S. KATSOULAKOS
PROVINCE OF ONTARIO

DWG NO. TAM 43599-17
STRUCTURAL
COMPONENT ONLY

JOB NAME	TRUSS NAME	QUANTITY	PLY	JOB DESC.	DRWG NO.
282769	T13	1	1	TRUSS DESC.	

Tamarack Roof Truss, Burlington

Version 8.030 S Oct 5 2016 MiTek Industries, Inc. Tue Aug 29 09:08:49 2017 Page 1
ID:dP6IGUfCrc5lDXmaOx0vTjyjMdB-pcB0k298nSuNiuxdMbbJPcX03ixuj55P6Jrb4Hyj2SS

Scale = 1:58.0

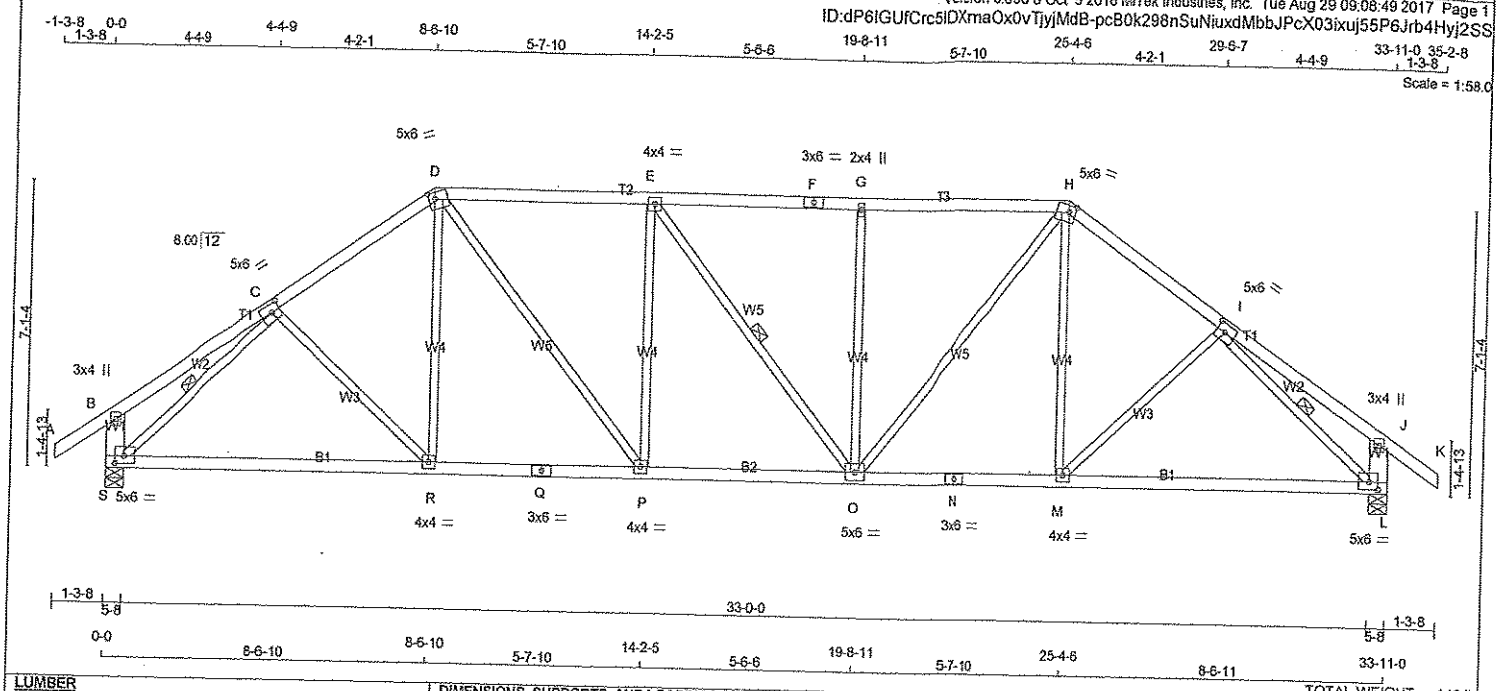

TOTAL WEIGHT = 149 lb [M]

LUMBER

N. L. G. A. RULES

CHORDS	SIZE		LUMBER	DESCR.
A - D	2x4	DRY	No.2	SPF
D - F	2x4	DRY	No.2	SPF
F - H	2x4	DRY	No.2	SPF
H - K	2x4	DRY	No.2	SPF
S - B	2x6	DRY	No.2	SPF
L - J	2x6	DRY	No.2	SPF
S - Q	2x4	DRY	No.2	SPF
Q - N	2x4	DRY	No.2	SPF
N - L	2x4	DRY	No.2	SPF
ALL WEBS EXCEPT	2x3	DRY	No.2	SPF

DRY: SEASONED LUMBER.

PLATES (table is in inches)

JT	TYPE	PLATES	W	LEN	Y	X
B	TMV+p	MT20	3.0	4.0		
C	TMWW-t	MT20	5.0	6.0	2.50	2.75
D	TTWW-m	MT20	5.0	6.0	2.00	2.00
E	TMWW-t	MT20	4.0	4.0		
F	TS-t	MT20	3.0	6.0		
G	TMW+w	MT20	2.0	4.0		
H	TTWW-m	MT20	5.0	6.0	2.00	2.00
I	TMWW-t	MT20	5.0	6.0	2.50	2.75
J	TMV+p	MT20	3.0	4.0		
L	BMVW1-t	MT20	5.0	6.0	2.25	2.75
M, P, R						
M	BMWW-t	MT20	4.0	4.0		
N	BS-t	MT20	3.0	6.0		
O	BMWWW-t	MT20	5.0	6.0		
Q	BS-t	MT20	3.0	6.0		
S	BMVW1-t	MT20	5.0	6.0	2.25	2.75

DIMENSIONS, SUPPORTS AND LOADINGS SPECIFIED BY FABRICATOR TO BE VERIFIED BY BUILDING DESIGNER

BEARINGS

JT	FACTORED GROSS REACTION VERT	HORZ	MAXIMUM FACTORED GROSS REACTION DOWN	HORZ	UPLIFT	INPUT BRG	REQRD BRG
S	2019	0	2019	0	0	5-8	5-8
L	2019	0	2019	0	0	5-8	5-8

UNFACTORED REACTIONS

JT	1ST LCASE COMBINED	MAX./MIN. COMPONENT REACTIONS SNOW	LIVE	PERM.LIVE	WIND	DEAD	SOIL
S	1641	938 / 0	356 / 0	0 / 0	0 / 0	347 / 0	0 / 0
L	1641	938 / 0	356 / 0	0 / 0	0 / 0	347 / 0	0 / 0

BEARING MATERIAL TO BE SPF NO.2 OR BETTER AT JOINT(S) S, L

BRACING

TOP CHORD TO BE SHEATHED OR MAX. PURLIN SPACING = 3.99 FT.
MAX. UNBRACED BOTTOM CHORD LENGTH = 10.00 FT. OR RIGID CEILING DIRECTLY APPLIED.

ALL PITCH BREAKS AND PERIMETER CORNER JOINTS MUST BE LATERALLY RESTRAINED.

1 LATERAL BRACE(S) AT 1/2 LENGTH OF E-O, C-S, I-L.

END VERTICAL(S) MUST BE SHEATHED OR HAVE BRACES AS INDICATED IN THE MAX. UNBRACED LENGTH COLUMN OF THE TABLE BELOW

LOADING

TOTAL LOAD CASES: (4)

CHORDS

MEMB. FR-TO	MAX. FACTORED FORCE (LBS)	FACTORED VERT. LOAD (PLF) FROM	TO	LC1	MAX CSI (LC)	MAX. UNBRAC LENGTH
A- B	0 / 32	-84.3	-84.3	0.11 (1)		10.00
B- C	0 / 22	-84.3	-84.3	0.23 (1)		10.00
C- D	-2208 / 0	-84.3	-84.3	0.32 (1)		4.29
D- E	-2350 / 0	-84.3	-84.3	0.49 (1)		3.99
E- F	-2349 / 0	-84.3	-84.3	0.49 (1)		3.99
F- G	-2349 / 0	-84.3	-84.3	0.49 (1)		3.99
G- H	-2348 / 0	-84.3	-84.3	0.49 (1)		4.00
H- I	-2208 / 0	-84.3	-84.3	0.32 (1)		4.29
I- J	0 / 22	-84.3	-84.3	0.23 (1)		10.00
J- K	0 / 32	-84.3	-84.3	0.11 (1)		10.00
S- B	-257 / 0	0.0	0.0	0.02 (1)		7.81
L- J	-257 / 0	0.0	0.0	0.02 (1)		7.81
S- R	0 / 1808	-28.0	-28.0	0.65 (2)		10.00
R- Q	0 / 1820	-28.0	-28.0	0.67 (2)		10.00
Q- P	0 / 1820	-28.0	-28.0	0.67 (2)		10.00
P- O	0 / 2350	-28.0	-28.0	0.47 (1)		10.00
O- N	0 / 1820	-28.0	-28.0	0.67 (2)		10.00
N- M	0 / 1820	-28.0	-28.0	0.67 (2)		10.00
M- L	0 / 1808	-28.0	-28.0	0.65 (2)		10.00

WEBS

MEMB. FR-TO	MAX. FACTORED FORCE (LBS)	MAX CSI (LC)
C- R	0 / 150	0.03 (3)
R- D	0 / 347	0.08 (2)
D- P	0 / 830	0.19 (1)
P- E	-509 / 0	0.44 (1)
E- O	-2 / 0	0.00 (1)
O- G	-508 / 0	0.44 (1)
O- H	0 / 828	0.19 (1)
M- H	0 / 347	0.08 (2)
M- I	0 / 150	0.03 (3)
S- C	-2456 / 0	0.58 (1)
I- L	-2456 / 0	0.58 (1)

DESIGN CRITERIA

SPECIFIED LOADS:

TOP CH.	LL	=	25.6	PSF
	DL	=	3.0	PSF
BOT CH.	LL	=	10.5	PSF
	DL	=	7.0	PSF
TOTAL LOAD		=	46.1	PSF

SPACING = 24.0 IN. C/C

LOADING IN FLAT SECTION BASED ON A SLOPE OF 6.00/12

THIS TRUSS IS DESIGNED FOR RESIDENTIAL OR SMALL BUILDING REQUIREMENTS OF PART 9, NBCC 2010

THIS DESIGN COMPLIES WITH:
- PART 9 OF OBC 2012 , BCBC 2012 , ABC 2014
- CSA 086-09
- TPIC 2011

(55 % OF 31.3 P.S.F. G.S.L. PLUS 8.4 P.S.F. RAIN LOAD) EQUALS 25.6 P.S.F. SPECIFIED ROOF LIVE LOAD

ALLOWABLE DEFL.(LL)= L/360 (1.13")
CALCULATED VERT. DEFL.(LL) = L/ 999 (0.24")
ALLOWABLE DEFL.(TL)= L/360 (1.13")
CALCULATED VERT. DEFL.(TL) = L/ 999 (0.41")

CSI: TC=0.49 (D-E:1) , BC=0.67 (M-O:2) , WB=0.58 (I-L:1) , SSI=0.22 (D-E:1)

DOL LUMBER=1.00 NAIL=1.00 LS BEND=1.10 COMP=1.10 SHEAR=1.10 TENS= 1.10

COMPANION LIVE LOAD FACTOR = 0.50

TRUSS PLATE MANUFACTURER IS NOT RESPONSIBLE FOR QUALITY CONTROL IN THE TRUSS MANUFACTURING PLANT .

NAIL VALUES

PLATE	GRIP(DRY) (PSI) MAX	MIN	SHEAR (PLI) MAX	MIN	SECTION (PLI) MAX	MIN
MT20	618	354	1667	822	2284	1656

PLATE PLACEMENT TOL. = 0.250 inches

PLATE ROTATION TOL. = 5.0 Deg.

JSI-GRIP= 0.88 (D) (INPUT = 0.90)
JSI-METAL= 0.61 (I) (INPUT = 1.00)

LICENSED PROFESSIONAL ENGINEER
S. KATSOULAKOS
PROVINCE OF ONTARIO

DWG NO. TAM 43595-17
STRUCTURAL
COMPONENT ONLY

JOB NAME	TRUSS NAME	QUANTITY	PLY	JOB DESC.	DRWG NO.
282769	T14	2	1	TRUSS DESC.	

Tamarack Roof Truss, Burlington

Version 8.030 S Oct 5 2016 MiTek Industries, Inc. Tue Aug 29 09:08:49 2017 Page 1
ID:dP6IGUfCrc5lDXmaOx0vTjyjMdB-pcB0k298nSuNiuxdMbbJPcX_Ei_jj01P6Jrb4Hyj2SS

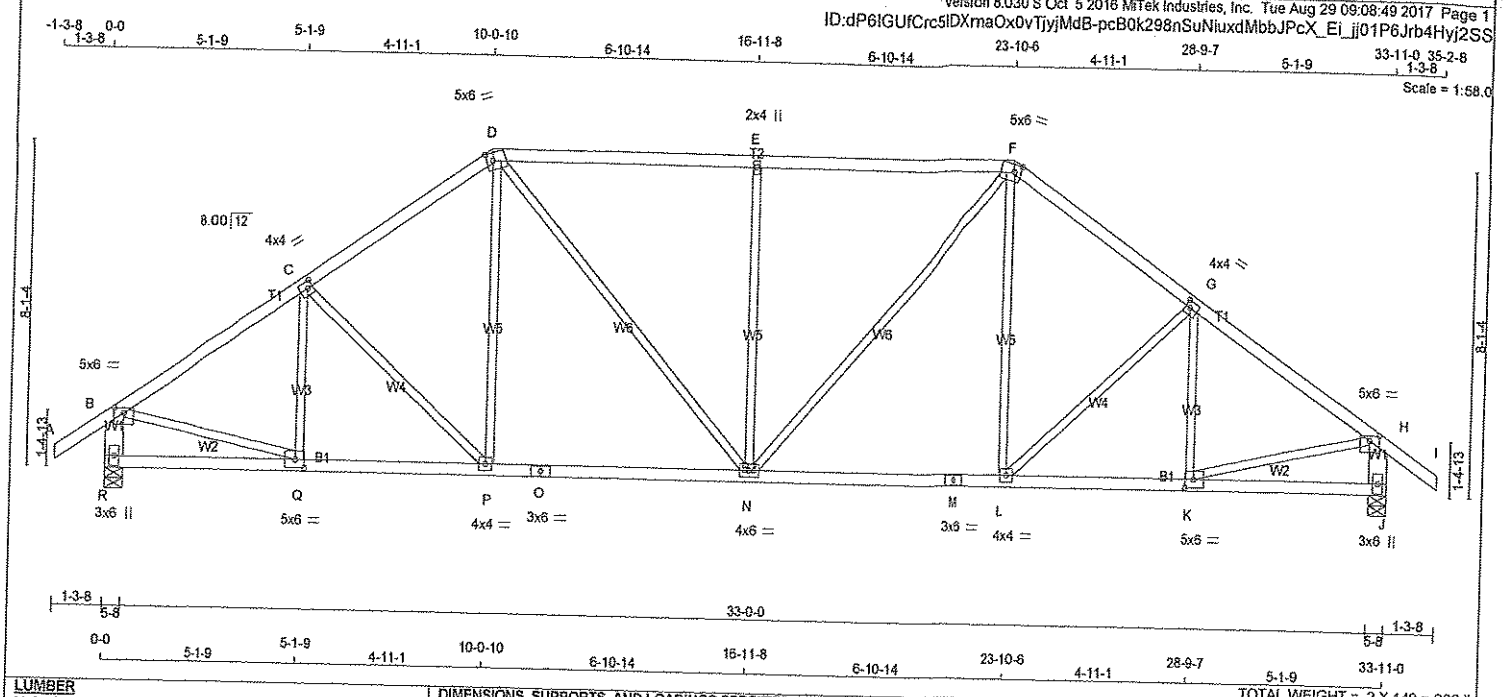

TOTAL WEIGHT = 2 X 149 = 299 lb
[M][F]

LUMBER

N. L. G. A. RULES

CHORDS	SIZE		LUMBER	DESCR.
A - D	2x4	DRY	No.2	SPF
D - F	2x4	DRY	No.2	SPF
F - I	2x4	DRY	No.2	SPF
R - B	2x6	DRY	No.2	SPF
J - H	2x6	DRY	No.2	SPF
R - O	2x4	DRY	No.2	SPF
O - M	2x4	DRY	No.2	SPF
M - J	2x4	DRY	No.2	SPF
ALL WEBS EXCEPT	2x3	DRY	No.2	SPF

DRY: SEASONED LUMBER.

PLATES (table is in inches)

JT	TYPE	PLATES	W	LEN	Y	X
B	TMVW-p	MT20	5.0	6.0	1.50	3.00
C	TMWW-t	MT20	4.0	4.0	2.00	1.50
D	TTWW-m	MT20	5.0	6.0	2.25	2.00
E	TMW+w	MT20	2.0	4.0		
F	TTWW-m	MT20	5.0	6.0	2.25	2.00
G	TMWW-t	MT20	4.0	4.0	2.00	1.50
H	TMVW-p	MT20	5.0	6.0	1.50	3.00
J	BMV1+p	MT20	3.0	6.0		
K	BMWW-t	MT20	5.0	6.0	2.50	2.75
L	BMWW-t	MT20	4.0	4.0		
M	BS-t	MT20	3.0	6.0		
N	BMWWW-t	MT20	4.0	6.0		
O	BS-t	MT20	3.0	6.0		
P	BMWW-t	MT20	4.0	4.0		
Q	BMWW-t	MT20	5.0	6.0	2.50	2.75
R	BMV1+p	MT20	3.0	6.0		

DIMENSIONS, SUPPORTS AND LOADINGS SPECIFIED BY FABRICATOR TO BE VERIFIED BY BUILDING DESIGNER

BEARINGS

JT	FACTORED GROSS REACTION VERT	HORZ	MAXIMUM FACTORED GROSS REACTION DOWN	HORZ	UPLIFT	INPUT BRG IN-SX	REQRD BRG IN-SX
R	2019	0	2019	0	0	5-8	5-8
J	2019	0	2019	0	0	5-8	5-8

UNFACTORED REACTIONS

JT	1ST LCASE COMBINED	MAX./MIN. COMPONENT REACTIONS SNOW	LIVE	PERM.LIVE	WIND	DEAD	SOIL
R	1641	938 / 0	356 / 0	0 / 0	0 / 0	347 / 0	0 / 0
J	1641	938 / 0	356 / 0	0 / 0	0 / 0	347 / 0	0 / 0

BEARING MATERIAL TO BE SPF NO.2 OR BETTER AT JOINT(S) R, J

BRACING

TOP CHORD TO BE SHEATHED OR MAX. PURLIN SPACING = 3.96 FT.
MAX. UNBRACED BOTTOM CHORD LENGTH = 10.00 FT. OR RIGID CEILING DIRECTLY APPLIED.

ALL PITCH BREAKS AND PERIMETER CORNER JOINTS MUST BE LATERALLY RESTRAINED.

LOADING

TOTAL LOAD CASES: (4)

CHORDS

MEMB. FR-TO	MAX. FACTORED FORCE (LBS)	FACTORED VERT. LOAD (PLF) FROM	TO	LC1	MAX CSI (LC)	MAX. UNBRAC LENGTH
A- B	0 / 32	-84.3	-84.3	0.11 (1)		10.00
B- C	-2266 / 0	-84.3	-84.3	0.36 (1)		4.24
C- D	-2116 / 0	-84.3	-84.3	0.34 (1)		4.37
D- E	-2142 / 0	-84.3	-84.3	0.61 (1)		3.96
E- F	-2142 / 0	-84.3	-84.3	0.61 (1)		3.96
F- G	-2116 / 0	-84.3	-84.3	0.34 (1)		4.37
G- H	-2266 / 0	-84.3	-84.3	0.36 (1)		4.24
H- I	0 / 32	-84.3	-84.3	0.11 (1)		10.00
R- B	-1957 / 0	0.0	0.0	0.13 (1)		7.20
J- H	-1957 / 0	0.0	0.0	0.13 (1)		7.20
R- Q	0 / 0	-28.0	-28.0	0.15 (3)		10.00
Q- P	0 / 1908	-28.0	-28.0	0.42 (1)		10.00
P- O	0 / 1739	-28.0	-28.0	0.49 (2)		10.00
O- N	0 / 1739	-28.0	-28.0	0.49 (2)		10.00
N- M	0 / 1739	-28.0	-28.0	0.49 (2)		10.00
M- L	0 / 1739	-28.0	-28.0	0.49 (2)		10.00
L- K	0 / 1908	-28.0	-28.0	0.42 (1)		10.00
K- J	0 / 0	-28.0	-28.0	0.15 (3)		10.00

WEBS

MEMB. FR-TO	MAX. FACTORED FORCE (LBS)	MAX CSI (LC)
Q- C	-256 / 64	0.09 (1)
C- P	-233 / 0	0.20 (1)
P- D	0 / 389	0.09 (2)
D- N	0 / 609	0.14 (1)
N- E	-714 / 0	0.90 (1)
N- F	0 / 609	0.14 (1)
L- F	0 / 389	0.09 (2)
L- G	-233 / 0	0.20 (1)
K- G	-256 / 64	0.09 (1)
B- Q	0 / 1950	0.44 (1)
K- H	0 / 1950	0.44 (1)

DESIGN CRITERIA

SPECIFIED LOADS:

TOP CH.	LL	=	25.6	PSF
	DL	=	3.0	PSF
BOT CH.	LL	=	10.5	PSF
	DL	=	7.0	PSF
TOTAL LOAD		=	46.1	PSF

SPACING = 24.0 IN. C/C

LOADING IN FLAT SECTION BASED ON A SLOPE OF 6.00/12

THIS TRUSS IS DESIGNED FOR RESIDENTIAL OR SMALL BUILDING REQUIREMENTS OF PART 9, NBCC 2010

THIS DESIGN COMPLIES WITH:
- PART 9 OF OBC 2012 , BCBC 2012 , ABC 2014
- CSA 086-09
- TPIC 2011

(55 % OF 31.3 P.S.F. G.S.L. PLUS 8.4 P.S.F. RAIN LOAD) EQUALS 25.6 P.S.F. SPECIFIED ROOF LIVE LOAD

ALLOWABLE DEFL.(LL)= L/360 (1.13")
CALCULATED VERT. DEFL.(LL) = L/ 999 (0.13")
ALLOWABLE DEFL.(TL)= L/360 (1.13")
CALCULATED VERT. DEFL.(TL) = L/ 999 (0.21")

CSI: TC=0.61 (D-E:1) , BC=0.49 (L-N:2) , WB=0.90 (E-N:1) , SSI=0.28 (E-F:1)

DOL LUMBER=1.00 NAIL=1.00 LS BEND=1.10 COMP=1.10 SHEAR=1.10 TENS= 1.10

COMPANION LIVE LOAD FACTOR = 0.50

TRUSS PLATE MANUFACTURER IS NOT RESPONSIBLE FOR QUALITY CONTROL IN THE TRUSS MANUFACTURING PLANT .

NAIL VALUES

PLATE	GRIP(DRY) (PSI) MAX	MIN	SHEAR (PLI) MAX	MIN	SECTION (PLI) MAX	MIN
MT20	618	354	1667	822	2284	1656

PLATE PLACEMENT TOL. = 0.250 inches

PLATE ROTATION TOL. = 5.0 Deg.

JSI GRIP= 0.89 (H) (INPUT = 0.90)
JSI METAL= 0.48 (Q) (INPUT = 1.00)

LICENSED PROFESSIONAL ENGINEER
S. KATSOULAKOS
PROVINCE OF ONTARIO

DWG NO. TAM 43596 17
STRUCTURAL
COMPONENT ONLY

JOB NAME	TRUSS NAME	QUANTITY	PLY	JOB DESC.	DRWG NO.
282769	T15	3	1	TRUSS DESC.	

Tamarack Roof Truss, Burlington

Version 8.030 S Oct 5 2016 MiTek Industries, Inc. Tue Aug 29 09:08:50 2017 Page 1
ID:dP6IGUfCrc5IDXmaOx0vTjyjMdB-IpkOyN9mXI0EJ2VqwI7Yyq3B06KVSbTZLzb9ckyj2SR

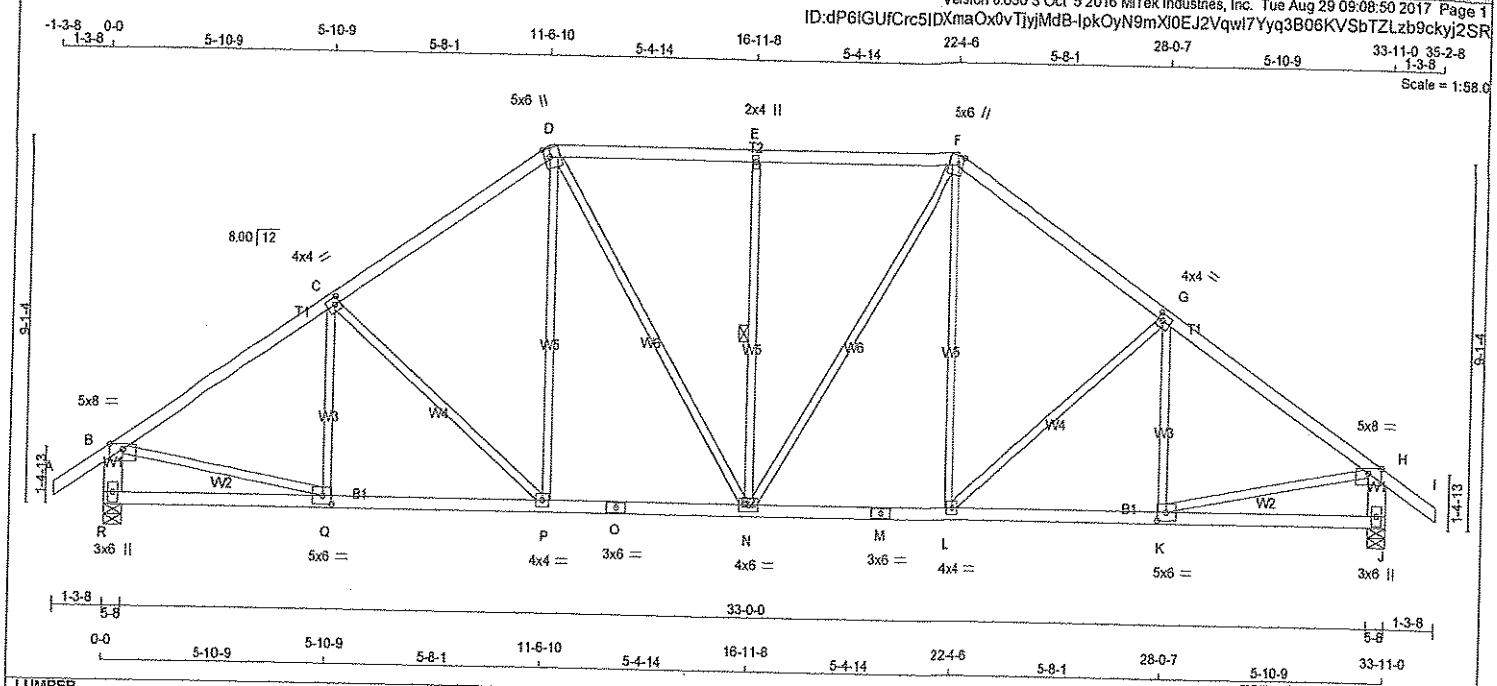

TOTAL WEIGHT = 3 X 156 = 468 lb

[M][F]

LUMBER

N. L. G. A. RULES

CHORDS	SIZE		LUMBER	DESCR.
A - D	2x4	DRY	No.2	SPF
D - F	2x4	DRY	No.2	SPF
F - I	2x4	DRY	No.2	SPF
R - B	2x6	DRY	No.2	SPF
J - H	2x6	DRY	No.2	SPF
R - O	2x4	DRY	No.2	SPF
O - M	2x4	DRY	No.2	SPF
M - J	2x4	DRY	No.2	SPF
ALL WEBS EXCEPT	2x3	DRY	No.2	SPF

DRY: SEASONED LUMBER.

PLATES (table is in inches)

JT	TYPE	PLATES	W	LEN	Y	X
B	TMVW-p	MT20	5.0	8.0	Edge	
C	TMWW-t	MT20	4.0	4.0	2.00	1.50
D	TTWW+m	MT20	5.0	6.0	Edge	1.75
E	TMW+w	MT20	2.0	4.0		
F	TTWW+m	MT20	5.0	6.0	Edge	1.75
G	TMWW-t	MT20	4.0	4.0	2.00	1.50
H	TMVW-p	MT20	5.0	8.0	Edge	
J	BMV1+p	MT20	3.0	6.0		
K	BMWW-t	MT20	5.0	6.0	2.50	2.75
L	BMWW-t	MT20	4.0	4.0		
M	BS-t	MT20	3.0	6.0		
N	BMWWW-t	MT20	4.0	6.0		
O	BS-t	MT20	3.0	6.0		
P	BMWW-t	MT20	4.0	4.0		
Q	BMWW-t	MT20	5.0	6.0	2.50	2.75
R	BMV1+p	MT20	3.0	6.0		

Edge - INDICATES REFERENCE CORNER OF PLATE TOUCHES EDGE OF CHORD.

DIMENSIONS, SUPPORTS AND LOADINGS SPECIFIED BY FABRICATOR TO BE VERIFIED BY BUILDING DESIGNER

BEARINGS

JT	FACTORED GROSS REACTION VERT	HORZ	MAXIMUM FACTORED GROSS REACTION DOWN	HORZ	UPLIFT	INPUT BRG IN-SX	REQRD BRG IN-SX
R	2019	0	2019	0	0	5-8	5-8
J	2019	0	2019	0	0	5-8	5-8

UNFACTORED REACTIONS

JT	1ST LCASE COMBINED	MAX./MIN. COMPONENT REACTIONS SNOW	LIVE	PERM.LIVE	WIND	DEAD	SOIL
R	1641	938 / 0	356 / 0	0 / 0	0 / 0	347 / 0	0 / 0
J	1641	938 / 0	356 / 0	0 / 0	0 / 0	347 / 0	0 / 0

BEARING MATERIAL TO BE SPF NO.2 OR BETTER AT JOINT(S) R, J

BRACING

TOP CHORD TO BE SHEATHED OR MAX. PURLIN SPACING = 4.08 FT.
MAX. UNBRACED BOTTOM CHORD LENGTH = 10.00 FT. OR RIGID CEILING DIRECTLY APPLIED.

ALL PITCH BREAKS AND PERIMETER CORNER JOINTS MUST BE LATERALLY RESTRAINED.

1 LATERAL BRACE(S) AT 1/ 2 LENGTH OF E-N.

END VERTICAL(S) MUST BE SHEATHED OR HAVE BRACES AS INDICATED IN THE MAX. UNBRACED LENGTH COLUMN OF THE TABLE BELOW

LOADING

TOTAL LOAD CASES: (4)

CHORDS

MEMB. FR-TO	MAX. FACTORED FORCE (LBS)	FACTORED VERT. LOAD LC1 (PLF) FROM	TO	MAX CSI (LC)	MAX. UNBRAC LENGTH
A- B	0 / 32	-84.3	-84.3	0.11 (1)	10.00
B- C	-2293 / 0	-84.3	-84.3	0.48 (1)	4.08
C- D	-2021 / 0	-84.3	-84.3	0.44 (1)	4.33
D- E	-1871 / 0	-84.3	-84.3	0.36 (1)	4.55
E- F	-1871 / 0	-84.3	-84.3	0.36 (1)	4.55
F- G	-2021 / 0	-84.3	-84.3	0.44 (1)	4.33
G- H	-2293 / 0	-84.3	-84.3	0.48 (1)	4.08
H- I	0 / 32	-84.3	-84.3	0.11 (1)	10.00
R- B	-1951 / 0	0.0	0.0	0.13 (1)	7.20
J- H	-1951 / 0	0.0	0.0	0.13 (1)	7.20
R- Q	0 / 0	-28.0	-28.0	0.23 (3)	10.00
Q- P	0 / 1934	-28.0	-28.0	0.45 (2)	10.00
P- O	0 / 1657	-28.0	-28.0	0.36 (1)	10.00
O- N	0 / 1657	-28.0	-28.0	0.36 (1)	10.00
N- M	0 / 1657	-28.0	-28.0	0.36 (1)	10.00
M- L	0 / 1657	-28.0	-28.0	0.36 (1)	10.00
L- K	0 / 1934	-28.0	-28.0	0.45 (2)	10.00
K- J	0 / 0	-28.0	-28.0	0.23 (3)	10.00

WEBS

MEMB. FR-TO	MAX. FACTORED FORCE (LBS)	MAX CSI (LC)
Q- C	-175 / 146	0.07 (1)
C- P	-373 / 0	0.44 (1)
P- D	0 / 433	0.10 (2)
D- N	0 / 410	0.09 (1)
N- E	-554 / 0	0.30 (1)
N- F	0 / 410	0.09 (1)
L- F	0 / 433	0.10 (2)
L- G	-373 / 0	0.44 (1)
K- G	-175 / 146	0.07 (1)
B- Q	0 / 1966	0.44 (1)
K- H	0 / 1966	0.44 (1)

DESIGN CRITERIA

SPECIFIED LOADS:

TOP CH.	LL	=	25.6	PSF
	DL	=	3.0	PSF
BOT CH.	LL	=	10.5	PSF
	DL	=	7.0	PSF
TOTAL LOAD		=	46.1	PSF

SPACING = 24.0 IN. C/C

LOADING IN FLAT SECTION BASED ON A SLOPE OF 6.00/12

THIS TRUSS IS DESIGNED FOR RESIDENTIAL OR SMALL BUILDING REQUIREMENTS OF PART 9, NBCC 2010

THIS DESIGN COMPLIES WITH:
- PART 9 OF OBC 2012 , BCBC 2012 , ABC 2014
- CSA 086-09
- TPIC 2011

(55 % OF 31.3 P.S.F. G.S.L. PLUS 8.4 P.S.F. RAIN LOAD) EQUALS 25.6 P.S.F. SPECIFIED ROOF LIVE LOAD

ALLOWABLE DEFL.(LL)= L/360 (1.13")
CALCULATED VERT. DEFL.(LL) = L/ 999 (0.11")
ALLOWABLE DEFL.(TL)= L/360 (1.13")
CALCULATED VERT. DEFL.(TL) = L/ 999 (0.18")

CSI: TC=0.48 (G-H:1) , BC=0.45 (K-L:2) , WB=0.44 (H-K:1) , SSI=0.22 (D-E:1)

DOL LUMBER=1.00 NAIL=1.00 LS BEND=1.10 COMP=1.10 SHEAR=1.10 TENS= 1.10

COMPANION LIVE LOAD FACTOR = 0.50

TRUSS PLATE MANUFACTURER IS NOT RESPONSIBLE FOR QUALITY CONTROL IN THE TRUSS MANUFACTURING PLANT .

NAIL VALUES

PLATE	GRIP(DRY) (PSI) MAX	MIN	SHEAR (PLI) MAX	MIN	SECTION (PLI) MAX	MIN
MT20	618	354	1667	822	2284	1656

PLATE PLACEMENT TOL. = 0.250 inches

PLATE ROTATION TOL. = 5.0 Deg.

JSI GRIP= 0.86 (Q) (INPUT = 0.90)
JSI METAL= 0.48 (Q) (INPUT = 1.00)

LICENSED PROFESSIONAL ENGINEER
S. KATSOULAKOS
PROVINCE OF ONTARIO

DWG NO. TAM 4359717
STRUCTURAL
COMPONENT ONLY

JOB NAME	TRUSS NAME	QUANTITY	PLY	JOB DESC.	DRWG NO.
282769	T16	1	1	TRUSS DESC.	

Tamarack Roof Truss, Burlington

Version 8.030 S Oct 5 2016 MiTek Industries, Inc. Tue Aug 29 09:08:50 2017 Page 1
ID:dP6IGUfCrc5IDXmaOx0vTjyjMdB-IpkOyN9mXI0EJ2VqwI7Yyq37I6EaSWsZLzb9ckyj2SR

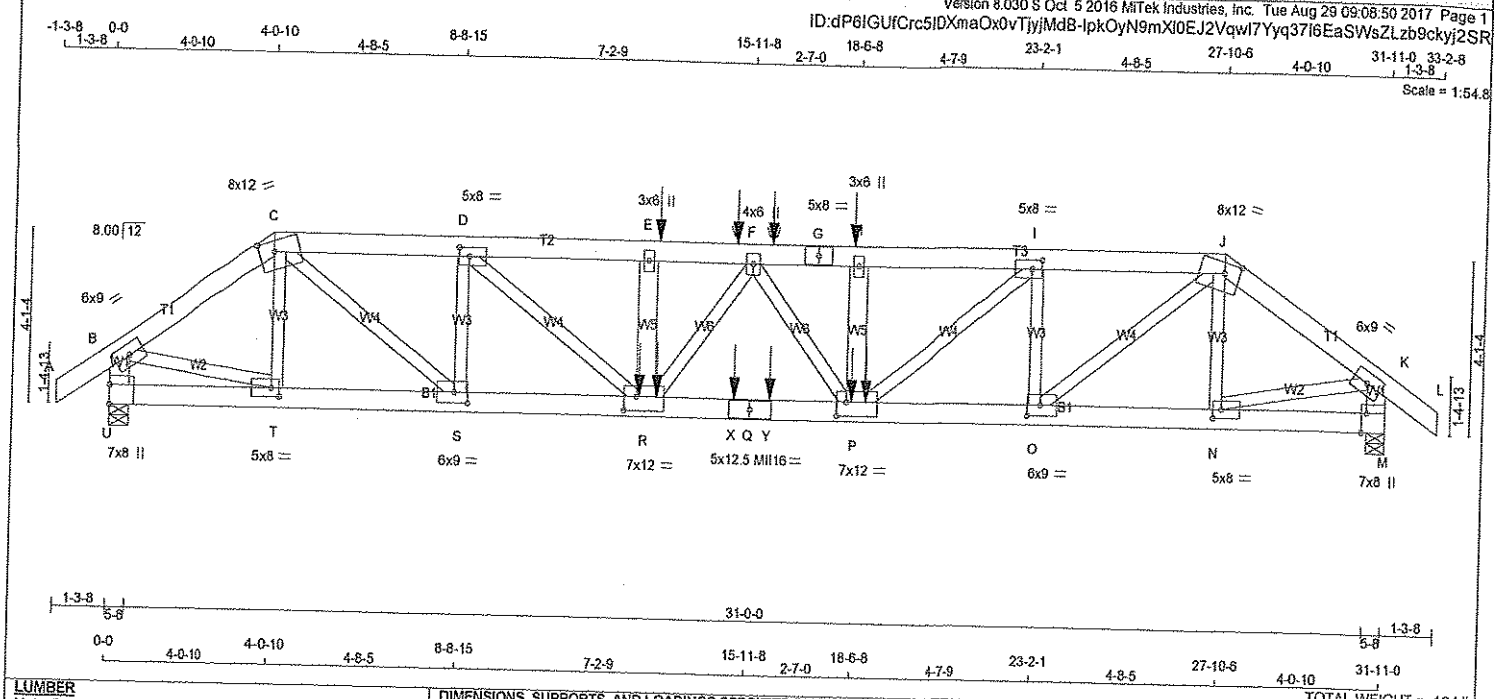

TOTAL WEIGHT = 194 lb [M]

LUMBER

N. L. G. A. RULES

CHORDS	SIZE		LUMBER	DESCR.
A - C	2x6	DRY	No.2	SPF
C - G	2x6	DRY	No.2	SPF
G - J	2x6	DRY	No.2	SPF
J - L	2x6	DRY	No.2	SPF
U - B	2x6	DRY	No.2	SPF
M - K	2x6	DRY	No.2	SPF
U - Q	2x6	DRY	1650F 1.5E	SPF
Q - M	2x6	DRY	1650F 1.5E	SPF
ALL WEBS EXCEPT	2x4	DRY	No.2	SPF
R - E	2x6	DRY	No.2	SPF
P - H	2x6	DRY	No.2	SPF

DRY: SEASONED LUMBER.

PLATES (table is in inches)

JT	TYPE	PLATES	W	LEN	Y	X
B	TMVW-t	MT20	6.0	9.0		
C	TTWW-m	MT20	8.0	12.0	3.00	4.50
D	TMWW-t	MT20	5.0	8.0	2.50	3.00
E	TMW+w	MT20	3.0	6.0		
F	TMWW+t	MT20	4.0	6.0		
G	TS-t	MT20	5.0	8.0		
H	TMW+w	MT20	3.0	6.0		
I	TMWW-t	MT20	5.0	8.0	2.50	3.00
J	TTWW-m	MT20	8.0	12.0	3.00	4.50
K	TMVW-t	MT20	6.0	9.0		
M	BMV1+t	MT20	7.0	8.0	Edge	1.50
N	BMWW-t	MT20	5.0	8.0	2.50	2.50
O	BMWW-t	MT20	6.0	9.0	3.00	4.00
P	BMWWW-t	MT20	7.0	12.0	4.00	2.75
Q	BS-t	MI16	5.0	12.5		
R	BMWWW-t	MT20	7.0	12.0	4.00	3.75
S	BMWW-t	MT20	6.0	9.0	3.00	4.00
T	BMWW-t	MT20	5.0	8.0	2.50	2.50
U	BMV1+t	MT20	7.0	8.0	5.50	

Edge - INDICATES REFERENCE CORNER OF PLATE TOUCHES EDGE OF CHORD.

HANGERS NOTES

1) SPECIAL HANGER(S) OR CONNECTION(S) REQUIRED TO SUPPORT CONCENTRATED LOAD(S) 101.4 lbs FACTORED DOWN AT 13-7-12, 101.4 lbs FACTORED DOWN AT 15-6-12, AND 101.4 lbs FACTORED DOWN AT 16-5-4, AND 101.4 lbs FACTORED DOWN AT 18-5-4 ON TOP CHORD, AND 1272.8 lbs FACTORED DOWN AT 13-2-8, 69.9 lbs FACTORED DOWN AT 13-7-12, 69.9 lbs FACTORED DOWN AT 15-6-12, 69.9 lbs FACTORED DOWN AT 16-5-4, AND 69.9 lbs FACTORED DOWN AT 18-5-4, AND 1153.9 lbs FACTORED DOWN AT 18-9-8 ON BOTTOM CHORD. DESIGN FOR UNSPECIFIED CONNECTION(S) IS DELEGATED TO THE BUILDING DESIGNER.

DIMENSIONS, SUPPORTS AND LOADINGS SPECIFIED BY FABRICATOR TO BE VERIFIED BY BUILDING DESIGNER

BEARINGS

JT	FACTORED GROSS REACTION VERT	HORZ	MAXIMUM FACTORED GROSS REACTION DOWN	HORZ	UPLIFT	INPUT BRG IN-SX	REQRD BRG IN-SX
U	3416	0	3416	0	0	5-8	5-8
M	3398	0	3398	0	0	5-8	5-8

UNFACTORED REACTIONS

JT	1ST LCASE COMBINED	MAX /MIN. COMPONENT REACTIONS SNOW	LIVE	PERM.LIVE	WIND	DEAD	SOIL
U	2762	1603 / 0	582 / 0	0 / 0	0 / 0	576 / 0	0 / 0
M	2744	1598 / 0	575 / 0	0 / 0	0 / 0	571 / 0	0 / 0

BEARING MATERIAL TO BE SPF NO.2 OR BETTER AT JOINT(S) U, M

BRACING

TOP CHORD TO BE SHEATHED OR MAX. PURLIN SPACING = 2.31 FT.
MAX. UNBRACED BOTTOM CHORD LENGTH = 10.00 FT. OR RIGID CEILING DIRECTLY APPLIED.

ALL PITCH BREAKS AND PERIMETER CORNER JOINTS MUST BE LATERALLY RESTRAINED.

LOADING

TOTAL LOAD CASES: (4)

CHORDS

MEMB. FR-TO	MAX. FACTORED FORCE (LBS)	FACTORED VERT. LOAD (PLF) FROM	TO	LC1	MAX CSI (LC)	MAX. UNBRAC LENGTH
A- B	0 / 33	-84.3	-84.3	0.07 (1)	10.00	
B- C	-4191 / 0	-84.3	-84.3	0.23 (1)	4.02	
C- D	-6756 / 0	-84.3	-84.3	0.45 (1)	3.08	
D- E	-9300 / 0	-84.3	-84.3	0.75 (1)	2.31	
E- V	-9300 / 0	-84.3	-84.3	0.65 (1)	2.40	
V- F	-9300 / 0	-84.3	-84.3	0.65 (1)	2.40	
F- W	-9235 / 0	-84.3	-84.3	0.64 (1)	2.42	
W- G	-9235 / 0	-84.3	-84.3	0.64 (1)	2.42	
G- H	-9235 / 0	-84.3	-84.3	0.64 (1)	2.42	
H- I	-9235 / 0	-84.3	-84.3	0.74 (1)	2.33	
I- J	-6711 / 0	-84.3	-84.3	0.44 (1)	3.09	
J- K	-4166 / 0	-84.3	-84.3	0.23 (1)	4.03	
K- L	0 / 33	-84.3	-84.3	0.07 (1)	10.00	
U- B	-3371 / 0	0.0	0.0	0.24 (1)	5.74	
M- K	-3353 / 0	0.0	0.0	0.24 (1)	5.75	
U- T	0 / 0	-28.0	-28.0	0.05 (2)	10.00	
T- S	0 / 3454	-28.0	-28.0	0.32 (1)	10.00	
S- R	0 / 6756	-28.0	-28.0	0.62 (1)	10.00	
R- X	0 / 9426	-28.0	-28.0	0.89 (1)	10.00	
X- Q	0 / 9426	-28.0	-28.0	0.89 (1)	10.00	
Q- Y	0 / 9426	-28.0	-28.0	0.89 (1)	10.00	
Y- P	0 / 9426	-28.0	-28.0	0.89 (1)	10.00	
P- O	0 / 6711	-28.0	-28.0	0.61 (1)	10.00	
O- N	0 / 3434	-28.0	-28.0	0.31 (1)	10.00	
N- M	0 / 0	-28.0	-28.0	0.05 (2)	10.00	

WEBS

MEMB. FR-TO	MAX. FACTORED FORCE (LBS)	MAX CSI (LC)
T- C	-587 / 0	0.10 (1)
N- J	-582 / 0	0.10 (1)
B- T	0 / 3556	0.63 (1)
N- K	0 / 3535	0.63 (1)
R- E	-348 / 0	0.04 (1)
P- H	-355 / 0	0.04 (1)
D- R	0 / 3239	0.57 (1)
C- S	0 / 4171	0.74 (1)
S- D	-2431 / 0	0.42 (1)
O- J	0 / 4141	0.73 (1)
P- I	0 / 3213	0.57 (1)
O- I	-2414 / 0	0.41 (1)
R- F	-217 / 5	0.05 (1)
F- P	-329 / 0	0.07 (1)

FACTORED CONCENTRATED LOADS (LBS)

JT	LOC.	LC1	MAX-	MAX+	FACE	DIR.	TYPE
E	13-7-12	-101	-101	---	BACK	VERT	TOTAL
H	18-5-4	-101	-101	---	BACK	VERT	TOTAL
P	18-5-4	-40	-70	---	BACK	VERT	TOTAL
P	18-9-8	-1154	-1154	---	BACK	VERT	TOTAL
R	13-2-8	-1273	-1273	---	BACK	VERT	TOTAL
R	13-7-12	-40	-70	---	BACK	VERT	TOTAL
V	15-6-12	-101	-101	---	BACK	VERT	TOTAL
W	16-5-4	-101	-101	---	BACK	VERT	TOTAL
X	15-6-12	-40	-70	---	BACK	VERT	TOTAL
Y	16-5-4	-40	-70	---	BACK	VERT	TOTAL

DESIGN CRITERIA

SPECIFIED LOADS:

TOP CH.	LL	=	25.6	PSF
	DL	=	3.0	PSF
BOT CH.	LL	=	10.5	PSF
	DL	=	7.0	PSF
TOTAL LOAD		=	46.1	PSF

SPACING = 24.0 IN. C/C

LOADING IN FLAT SECTION BASED ON A SLOPE OF 6.00/12

THIS TRUSS IS DESIGNED FOR RESIDENTIAL OR SMALL BUILDING REQUIREMENTS OF PART 9, NBCC 2010

THIS DESIGN COMPLIES WITH:
- PART 9 OF OBC 2012 , BCBC 2012 , ABC 2014
- CSA 086-09
- TPIC 2011

(55 % OF 31.3 P.S.F. G.S.L. PLUS 8.4 P.S.F. RAIN LOAD) EQUALS 25.6 P.S.F. SPECIFIED ROOF LIVE LOAD

ALLOWABLE DEFL.(LL)= L/360 (1.08")
CALCULATED VERT. DEFL.(LL) = L/ 927 (0.41")
ALLOWABLE DEFL.(TL)= L/360 (1.06")
CALCULATED VERT. DEFL.(TL) = L/ 581 (0.66")

CSI: TC=0.75 (D-E:1) , BC=0.89 (P-R:1) , WB=0.74 (C-S:1) , SSI=0.16 (D-E:1)

DOL LUMBER=1.00 NAIL=1.00 LS BEND=1.00 COMP=1.00 SHEAR=1.00 TENS= 1.00

COMPANION LIVE LOAD FACTOR = 0.50

AUTOSOLVE HEELS OFF

TRUSS PLATE MANUFACTURER IS NOT RESPONSIBLE FOR QUALITY CONTROL IN THE TRUSS MANUFACTURING PLANT .

NAIL VALUES

PLATE	GRIP(DRY) (PSI) MAX	MIN	SHEAR (PLI) MAX	MIN	SECTION (PLI) MAX	MIN
MT20	618	354	1667	822	2284	1656
MI16	473	276	2341	1245	4454	1656

PLATE PLACEMENT TOL. = 0.250 inches

PLATE ROTATION TOL. = 5.0 Deg.

USI GRIP= 0.90 (J) (INPUT = 0.90)
USI METAL= 0.83 (Q) (INPUT = 1.00)

LICENSED PROFESSIONAL ENGINEER
8242
S. KATSOULAKOS
PROVINCE OF ONTARIO

DWG NO. TAM 43598-17
STRUCTURAL
COMPONENT ONLY

JOB NAME	TRUSS NAME	QUANTITY	PLY	JOB DESC.	DRWG NO.
282770	T16Z	1	1	TRUSS DESC.	

Tamarack Roof Truss, Burlington

Version 8.030 S Oct 5 2016 MiTek Industries, Inc. Tue Aug 29 09:11:03 2017 Page 1
ID:dP6IGUfCrc5IDXmaOx0vTjyjMdB-uOHgssmCDdmNmUANDk?krt4qNjcL6gK8w9JhnWyj2QM

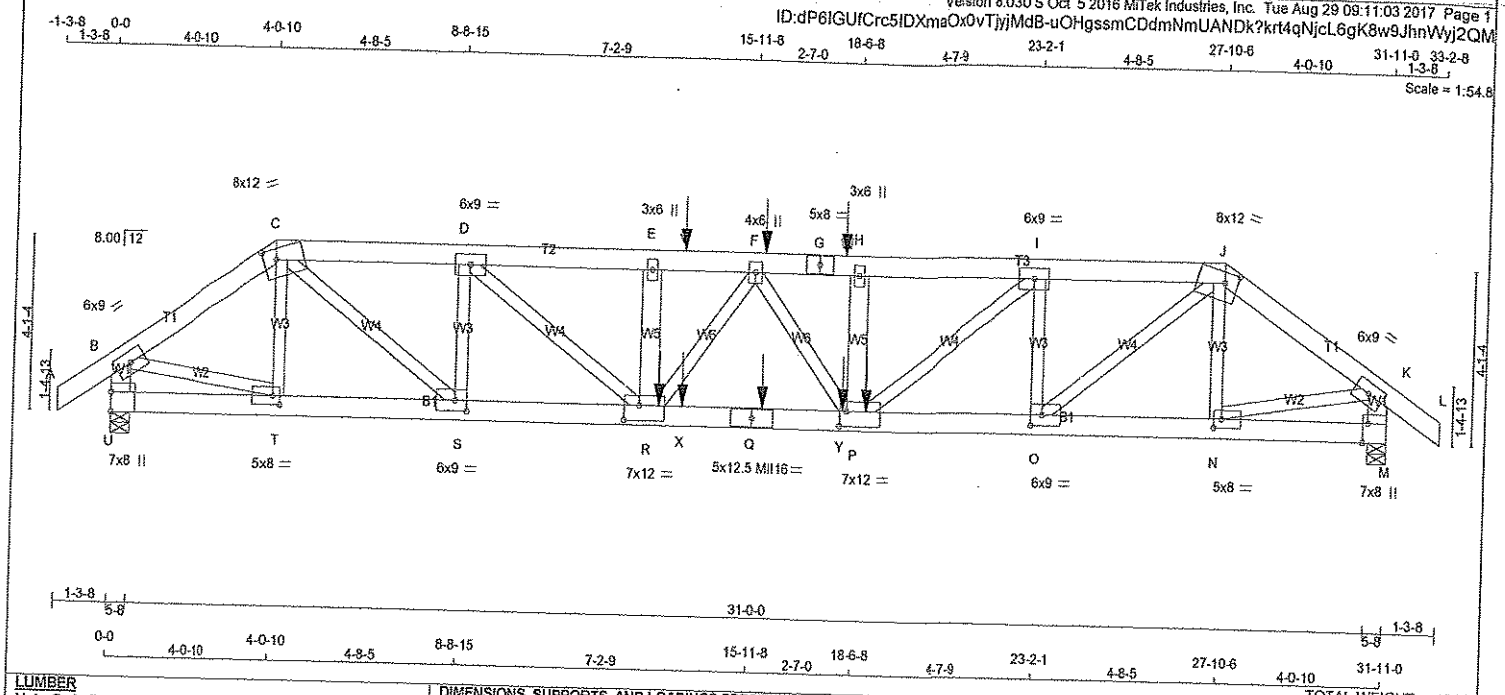

TOTAL WEIGHT = 194 lb

[M]

LUMBER

N. L. G. A. RULES

CHORDS	SIZE		LUMBER	DESCR.
A - C	2x6	DRY	No.2	SPF
C - G	2x6	DRY	No.2	SPF
G - J	2x6	DRY	No.2	SPF
J - L	2x6	DRY	No.2	SPF
U - B	2x6	DRY	No.2	SPF
M - K	2x6	DRY	No.2	SPF
U - Q	2x6	DRY	1650F 1.5E	SPF
Q - M	2x6	DRY	1650F 1.5E	SPF
ALL WEBS EXCEPT	2x4	DRY	No.2	SPF
R - E	2x6	DRY	No.2	SPF
P - H	2x6	DRY	No.2	SPF

DRY: SEASONED LUMBER.

PLATES (table is in inches)

JT	TYPE	PLATES	W	LEN	Y	X
B	TMVW-t	MT20	6.0	9.0		
C	TTWW-m	MT20	8.0	12.0	3.00	3.75
D	TMWW-t	MT20	6.0	9.0		
E	TMW+w	MT20	3.0	6.0		
F	TMWW+t	MT20	4.0	6.0		
G	TS-t	MT20	5.0	8.0		
H	TMW+w	MT20	3.0	6.0		
I	TMWW-t	MT20	6.0	9.0		
J	TTWW-m	MT20	8.0	12.0	3.00	3.75
K	TMVW-t	MT20	6.0	9.0		
M	BMV1+t	MT20	7.0	8.0	Edge	1.50
N	BMWW-t	MT20	5.0	8.0	2.50	2.25
O	BMWW-t	MT20	6.0	9.0	3.00	3.50
P	BMWWW-t	MT20	7.0	12.0	4.25	2.00
Q	BS-t	MII16	5.0	12.5		
R	BMWWW-t	MT20	7.0	12.0	4.25	4.50
S	BMWW-t	MT20	6.0	9.0	3.00	3.50
T	BMWW-t	MT20	5.0	8.0	2.50	2.25
U	BMV1+t	MT20	7.0	8.0	5.50	

Edge - INDICATES REFERENCE CORNER OF PLATE TOUCHES EDGE OF CHORD.

HANGERS NOTES

1) SPECIAL HANGER(S) OR CONNECTION(S) REQUIRED TO SUPPORT CONCENTRATED LOAD(S) 101.4 lbs FACTORED DOWN AT 14-2-8, AND 101.4 lbs FACTORED DOWN AT 16-2-8, AND 101.4 lbs FACTORED DOWN AT 18-2-8 ON TOP CHORD, AND 1598.4 lbs FACTORED DOWN AT 13-7-8, 69.9 lbs FACTORED DOWN AT 14-2-8, 69.9 lbs FACTORED DOWN AT 16-2-8, AND 69.9 lbs FACTORED DOWN AT 18-2-8, AND 1130.6 lbs FACTORED DOWN AT 18-9-8 ON BOTTOM CHORD. DESIGN FOR UNSPECIFIED CONNECTION(S) IS DELEGATED TO THE BUILDING DESIGNER.

DIMENSIONS, SUPPORTS AND LOADINGS SPECIFIED BY FABRICATOR TO BE VERIFIED BY BUILDING DESIGNER

BEARINGS

JT	FACTORED GROSS REACTION VERT	HORZ	MAXIMUM FACTORED GROSS REACTION DOWN	HORZ	UPLIFT	INPUT BRG IN-SX	REQRD BRG IN-SX
U	3523	0	3523	0	0	5-8	5-8
M	3452	0	3452	0	0	5-8	5-8

UNFACTORED REACTIONS

JT	1ST LCASE COMBINED	MAX./MIN. COMPONENT REACTIONS SNOW	LIVE	PERM.LIVE	WIND	DEAD	SOIL
U	2830	1673 / 0	576 / 0	0 / 0	0 / 0	580 / 0	0 / 0
M	2774	1638 / 0	567 / 0	0 / 0	0 / 0	570 / 0	0 / 0

BEARING MATERIAL TO BE SPF NO.2 OR BETTER AT JOINT(S) U, M

BRACING

TOP CHORD TO BE SHEATHED OR MAX. PURLIN SPACING = 2.20 FT.
MAX. UNBRACED BOTTOM CHORD LENGTH = 10.00 FT. OR RIGID CEILING DIRECTLY APPLIED.

ALL PITCH BREAKS AND PERIMETER CORNER JOINTS MUST BE LATERALLY RESTRAINED.

LOADING

TOTAL LOAD CASES: (4)

CHORDS

MEMB. FR-TO	MAX. FACTORED FORCE (LBS)	FACTORED VERT. LOAD (PLF) FROM	TO	LC1	MAX CSI (LC)	MAX. UNBRAC LENGTH
A- B	0 / 33	-84.3	-84.3	0.07 (1)	10.00	
B- C	-4336 / 0	-84.3	-84.3	0.24 (1)	3.96	
C- D	-7011 / 0	-84.3	-84.3	0.47 (1)	3.00	
D- E	-9686 / 0	-84.3	-84.3	0.81 (1)	2.20	
E- V	-9688 / 0	-84.3	-84.3	0.73 (1)	2.25	
V- F	-9688 / 0	-84.3	-84.3	0.73 (1)	2.25	
F- G	-9434 / 0	-84.3	-84.3	0.67 (1)	2.36	
G- W	-9434 / 0	-84.3	-84.3	0.67 (1)	2.36	
W- H	-9434 / 0	-84.3	-84.3	0.67 (1)	2.36	
H- I	-9434 / 0	-84.3	-84.3	0.77 (1)	2.28	
I- J	-6839 / 0	-84.3	-84.3	0.45 (1)	3.05	
J- K	-4240 / 0	-84.3	-84.3	0.23 (1)	4.00	
K- L	0 / 33	-84.3	-84.3	0.07 (1)	10.00	
U- B	-3478 / 0	0.0	0.0	0.25 (1)	5.65	
M- K	-3407 / 0	0.0	0.0	0.24 (1)	5.71	
U- T	0 / 0	-28.0	-28.0	0.05 (2)	10.00	
T- S	0 / 3574	-28.0	-28.0	0.32 (1)	10.00	
S- R	0 / 7011	-28.0	-28.0	0.64 (1)	10.00	
R- X	0 / 9708	-28.0	-28.0	0.92 (1)	10.00	
X- Q	0 / 9708	-28.0	-28.0	0.92 (1)	10.00	
Q- Y	0 / 9708	-28.0	-28.0	0.92 (1)	10.00	
Y- P	0 / 9708	-28.0	-28.0	0.92 (1)	10.00	
P- O	0 / 6839	-28.0	-28.0	0.62 (1)	10.00	
O- N	0 / 3494	-28.0	-28.0	0.32 (1)	10.00	
N- M	0 / 0	-28.0	-28.0	0.05 (2)	10.00	

WEBS

MEMB. FR-TO	MAX. FACTORED FORCE (LBS)	MAX CSI (LC)
T- C	-613 / 0	0.10 (1)
N- J	-595 / 0	0.10 (1)
B- T	0 / 3680	0.65 (1)
N- K	0 / 3597	0.64 (1)
R- E	-305 / 1	0.03 (1)
P- H	-330 / 0	0.04 (1)
D- R	0 / 3408	0.60 (1)
C- S	0 / 4342	0.77 (1)
S- D	-2533 / 0	0.43 (1)
O- J	0 / 4226	0.75 (1)
P- I	0 / 3302	0.58 (1)
O- I	-2467 / 0	0.42 (1)
R- F	-34 / 42	0.01 (1)
F- P	-474 / 0	0.11 (1)

FACTORED CONCENTRATED LOADS (LBS)

JT	LOC.	LC1	MAX-	MAX+	FACE	DIR.	TYPE
F	16-2-8	-101	-101	—	BACK	VERT	TOTAL
P	18-9-8	-1131	-1131	—	BACK	VERT	TOTAL
Q	16-2-8	-40	-70	—	BACK	VERT	TOTAL
R	13-7-8	-1598	-1598	—	BACK	VERT	TOTAL
V	14-2-8	-101	-101	—	BACK	VERT	TOTAL
W	18-2-8	-101	-101	—	BACK	VERT	TOTAL
X	14-2-8	-40	-70	—	BACK	VERT	TOTAL
Y	18-2-8	-40	-70	—	BACK	VERT	TOTAL

DESIGN CRITERIA

SPECIFIED LOADS:

TOP CH.	LL	=	25.6	PSF
	DL	=	3.0	PSF
BOT CH.	LL	=	10.5	PSF
	DL	=	7.0	PSF
TOTAL LOAD		=	46.1	PSF

SPACING = 24.0 IN. C/C

LOADING IN FLAT SECTION BASED ON A SLOPE OF 6.00/12

THIS TRUSS IS DESIGNED FOR RESIDENTIAL OR SMALL BUILDING REQUIREMENTS OF PART 9, NBCC 2010

THIS DESIGN COMPLIES WITH:
- PART 9 OF OBC 2012 , BCBC 2012 , ABC 2014
- CSA 086-09
- TPIC 2011

(55 % OF 31.3 P.S.F. G.S.L. PLUS 8.4 P.S.F. RAIN LOAD) EQUALS 25.6 P.S.F. SPECIFIED ROOF LIVE LOAD

ALLOWABLE DEFL.(LL)= L/360 (1.06")
CALCULATED VERT. DEFL.(LL) = L/ 896 (0.43")
ALLOWABLE DEFL.(TL)= L/360 (1.06")
CALCULATED VERT. DEFL.(TL) = L/ 585 (0.66")

CSI: TC=0.81 (D-E:1) , BC=0.92 (P-R:1) , WB=0.77 (C-S:1) , SSI=0.16 (P-R:2)

DOL LUMBER=1.00 NAIL=1.00 LS BEND=1.00 COMP=1.00 SHEAR=1.00 TENS= 1.00

COMPANION LIVE LOAD FACTOR = 0.50

AUTOSOLVE HEELS OFF

TRUSS PLATE MANUFACTURER IS NOT RESPONSIBLE FOR QUALITY CONTROL IN THE TRUSS MANUFACTURING PLANT .

NAIL VALUES

PLATE	GRIP(DRY) (PSI) MAX	MIN	SHEAR (PLI) MAX	MIN	SECTION (PLI) MAX	MIN
MT20	618	354	1667	822	2284	1656
MII16	473	276	2341	1245	4454	1656

PLATE PLACEMENT TOL. = 0.250 inches

PLATE ROTATION TOL. = 5.0 Deg.

CSI GRIP= 0.89 (O) (INPUT = 0.90)
CSI METAL= 0.85 (O) (INPUT = 1.00)

LICENSED PROFESSIONAL ENGINEER
82912
S. KATSOULAKOS
PROVINCE OF ONTARIO

DWG NO. TAM43611-17
STRUCTURAL
COMPONENT ONLY

JOB NAME	TRUSS NAME	QUANTITY	PLY	JOB DESC.	DRWG NO.
282769	T17	1	1	TRUSS DESC.	

Tamarack Roof Truss, Burlington

Version 8.030 S Oct 5 2016 MiTek Industries, Inc. Tue Aug 29 09:08:50 2017 Page 1
ID:dP6IGUfCrc5lDXmaOx0vTjyjMdB-IpkOyN9mXI0EJ2VqwI7Yyq3426I9Sb9ZLzb9ckyj2SR

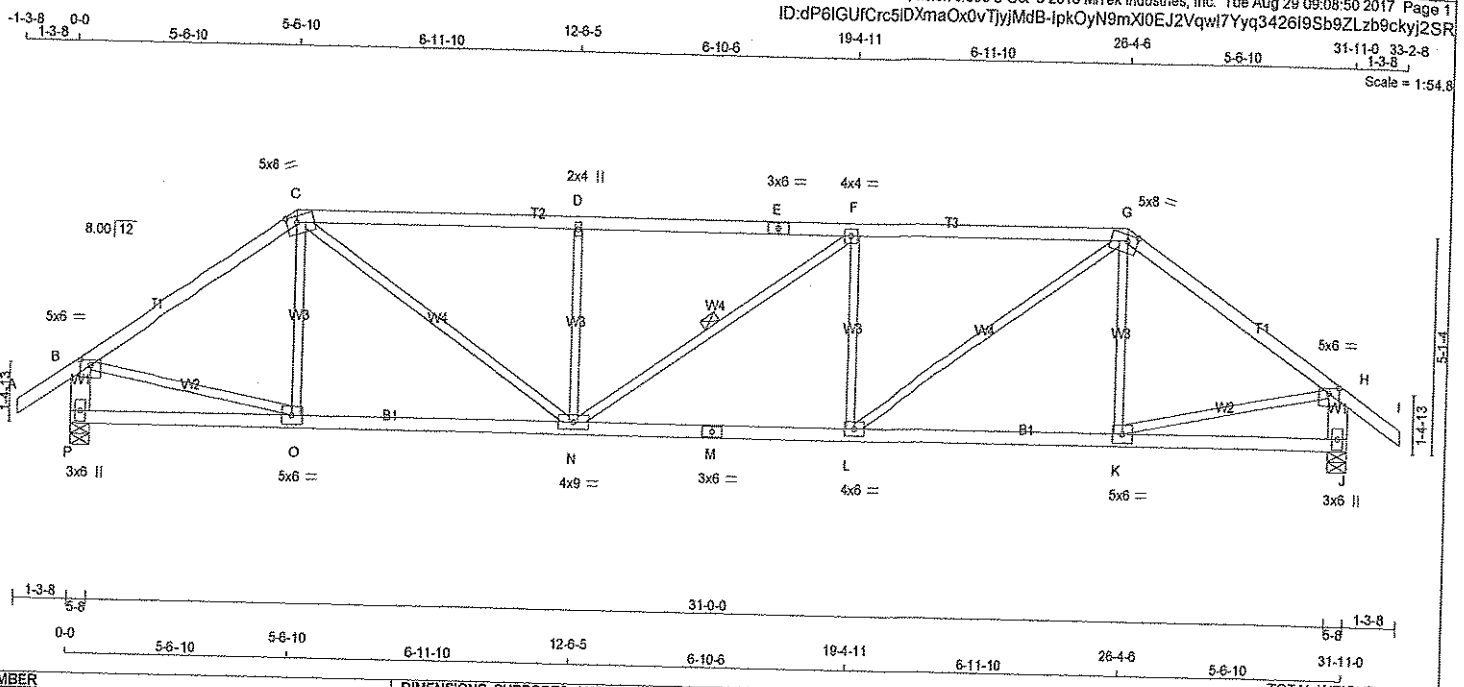

TOTAL WEIGHT = 126 lb [M]

LUMBER

N. L. G. A. RULES

CHORDS	SIZE		LUMBER	DESCR.
A - C	2x4	DRY	No.2	SPF
C - E	2x4	DRY	No.2	SPF
E - G	2x4	DRY	No.2	SPF
G - I	2x4	DRY	No.2	SPF
P - B	2x6	DRY	No.2	SPF
J - H	2x6	DRY	No.2	SPF
P - M	2x4	DRY	No.2	SPF
M - J	2x4	DRY	No.2	SPF
ALL WEBS EXCEPT	2x3	DRY	No.2	SPF

DRY: SEASONED LUMBER.

PLATES (table is in inches)

JT	TYPE	PLATES	W	LEN	Y	X
B	TMVW-p	MT20	5.0	6.0	1.50	3.00
C	TTWW-m	MT20	5.0	8.0	1.75	3.00
D	TMW+w	MT20	2.0	4.0		
E	TS-t	MT20	3.0	6.0		
F	TMWW-t	MT20	4.0	4.0		
G	TTWW-m	MT20	5.0	8.0	1.75	3.00
H	TMVW-p	MT20	5.0	6.0	1.50	3.00
J	BMV1+p	MT20	3.0	6.0		
K	BMWW-t	MT20	5.0	6.0		
L	BMWW-t	MT20	4.0	6.0		
M	BS-t	MT20	3.0	6.0		
N	BMWWW-t	MT20	4.0	9.0		
O	BMWW-t	MT20	5.0	6.0		
P	BMV1+p	MT20	3.0	6.0		

DIMENSIONS, SUPPORTS AND LOADINGS SPECIFIED BY FABRICATOR TO BE VERIFIED BY BUILDING DESIGNER

BEARINGS

JT	FACTORED GROSS REACTION VERT	HORZ	MAXIMUM FACTORED GROSS REACTION DOWN	HORZ	UPLIFT	INPUT BRG IN-SX	REQRD BRG IN-SX
P	1907	0	1907	0	0	5-8	5-8
J	1907	0	1907	0	0	5-8	5-8

UNFACTORED REACTIONS

JT	1ST LCASE COMBINED	MAX./MIN. COMPONENT REACTIONS SNOW	LIVE	PERM.LIVE	WIND	DEAD	SOIL
P	1549	887 / 0	335 / 0	0 / 0	0 / 0	327 / 0	0 / 0
J	1549	887 / 0	335 / 0	0 / 0	0 / 0	327 / 0	0 / 0

BEARING MATERIAL TO BE SPF NO.2 OR BETTER AT JOINT(S) P, J

BRACING

TOP CHORD TO BE SHEATHED OR MAX. PURLIN SPACING = 3.22 FT.
MAX. UNBRACED BOTTOM CHORD LENGTH = 10.00 FT. OR RIGID CEILING DIRECTLY APPLIED.

ALL PITCH BREAKS AND PERIMETER CORNER JOINTS MUST BE LATERALLY RESTRAINED.

1 LATERAL BRACE(S) AT 1/2 LENGTH OF F-N.

END VERTICAL(S) MUST BE SHEATHED OR HAVE BRACES AS INDICATED IN THE MAX. UNBRACED LENGTH COLUMN OF THE TABLE BELOW

LOADING

TOTAL LOAD CASES: (4)

CHORDS

MEMB. FR-TO	MAX. FACTORED FORCE (LBS)	FACTORED VERT. LOAD (PLF) FROM	TO	LC1	MAX CSI (LC)	MAX. UNBRAC LENGTH
A- B	0 / 32	-84.3	-84.3	0.11 (1)	10.00	
B- C	-2095 / 0	-84.3	-84.3	0.63 (1)	4.04	
C- D	-2932 / 0	-84.3	-84.3	0.92 (1)	3.22	
D- E	-2932 / 0	-84.3	-84.3	0.91 (1)	3.22	
E- F	-2932 / 0	-84.3	-84.3	0.91 (1)	3.22	
F- G	-2933 / 0	-84.3	-84.3	0.93 (1)	3.22	
G- H	-2094 / 0	-84.3	-84.3	0.63 (1)	4.04	
H- I	0 / 32	-84.3	-84.3	0.11 (1)	10.00	
P- B	-1847 / 0	0.0	0.0	0.12 (1)	7.35	
J- H	-1847 / 0	0.0	0.0	0.12 (1)	7.35	
P- O	0 / 0	-28.0	-28.0	0.26 (3)	10.00	
O- N	0 / 1738	-28.0	-28.0	0.47 (2)	10.00	
N- M	0 / 2933	-28.0	-28.0	0.60 (1)	10.00	
M- L	0 / 2933	-28.0	-28.0	0.60 (1)	10.00	
L- K	0 / 1738	-28.0	-28.0	0.47 (2)	10.00	
K- J	0 / 0	-28.0	-28.0	0.26 (3)	10.00	

WEBS

MEMB. FR-TO	MAX. FACTORED FORCE (LBS)	MAX CSI (LC)
O- C	-136 / 169	0.05 (1)
C- N	0 / 1450	0.33 (1)
N- D	-632 / 0	0.24 (1)
N- F	-1 / 0	0.00 (1)
L- F	-632 / 0	0.24 (1)
L- G	0 / 1452	0.33 (1)
K- G	-136 / 169	0.05 (1)
B- O	0 / 1772	0.40 (1)
K- H	0 / 1772	0.40 (1)

DESIGN CRITERIA

SPECIFIED LOADS:

TOP CH.	LL	=	25.6	PSF
	DL	=	3.0	PSF
BOT CH.	LL	=	10.5	PSF
	DL	=	7.0	PSF
TOTAL LOAD		=	46.1	PSF

SPACING = 24.0 IN. C/C

LOADING IN FLAT SECTION BASED ON A SLOPE OF 6.00/12

THIS TRUSS IS DESIGNED FOR RESIDENTIAL OR SMALL BUILDING REQUIREMENTS OF PART 9, NBCC 2010

THIS DESIGN COMPLIES WITH:
- PART 9 OF OBC 2012 , BCBC 2012 , ABC 2014
- CSA 086-09
- TPIC 2011

(55 % OF 31.3 P.S.F. G.S.L. PLUS 8.4 P.S.F. RAIN LOAD) EQUALS 25.6 P.S.F. SPECIFIED ROOF LIVE LOAD

ALLOWABLE DEFL.(LL)= L/360 (1.06")
CALCULATED VERT. DEFL.(LL) = L/ 999 (0.20")
ALLOWABLE DEFL.(TL)= L/360 (1.06")
CALCULATED VERT. DEFL.(TL) = L/ 999 (0.33")

CSI: TC=0.93 (F-G:1) , BC=0.60 (L-N:1) , WB=0.40 (B-O:1) , SSI=0.27 (F-G:1)

DOL LUMBER=1.00 NAIL=1.00 LS BEND=1.10 COMP=1.10 SHEAR=1.10 TENS= 1.10

COMPANION LIVE LOAD FACTOR = 0.50

TRUSS PLATE MANUFACTURER IS NOT RESPONSIBLE FOR QUALITY CONTROL IN THE TRUSS MANUFACTURING PLANT .

NAIL VALUES

PLATE	GRIP(DRY) (PSI) MAX	MIN	SHEAR (PLI) MAX	MIN	SECTION (PLI) MAX	MIN
MT20	616	354	1657	822	2284	1656

PLATE PLACEMENT TOL. = 0.250 inches

PLATE ROTATION TOL. = 5.0 Deg.

JSI GRIP= 0.88 (M) (INPUT = 0.90)
JSI METAL= 0.89 (M) (INPUT = 1.00)

LICENSED PROFESSIONAL ENGINEER
S. KATSOULAKOS
PROVINCE OF ONTARIO

DWG NO. TAM 43599-17
STRUCTURAL
COMPONENT ONLY

JOB NAME	TRUSS NAME	QUANTITY	PLY	JOB DESC.	DRWG NO.
282769	T18	1	1	TRUSS DESC.	

Tamarack Roof Truss, Burlington

Version 8.030 S Oct 5 2016 MiTek Industries, Inc. Tue Aug 29 09:08:51 2017 Page 1
ID:dP6IGUfCrc5IDXmaOx0vTjyjMdB-m?Im9jAPI385xC40U0enU1cLMWfaBxdiZdKi8Ayj2SO

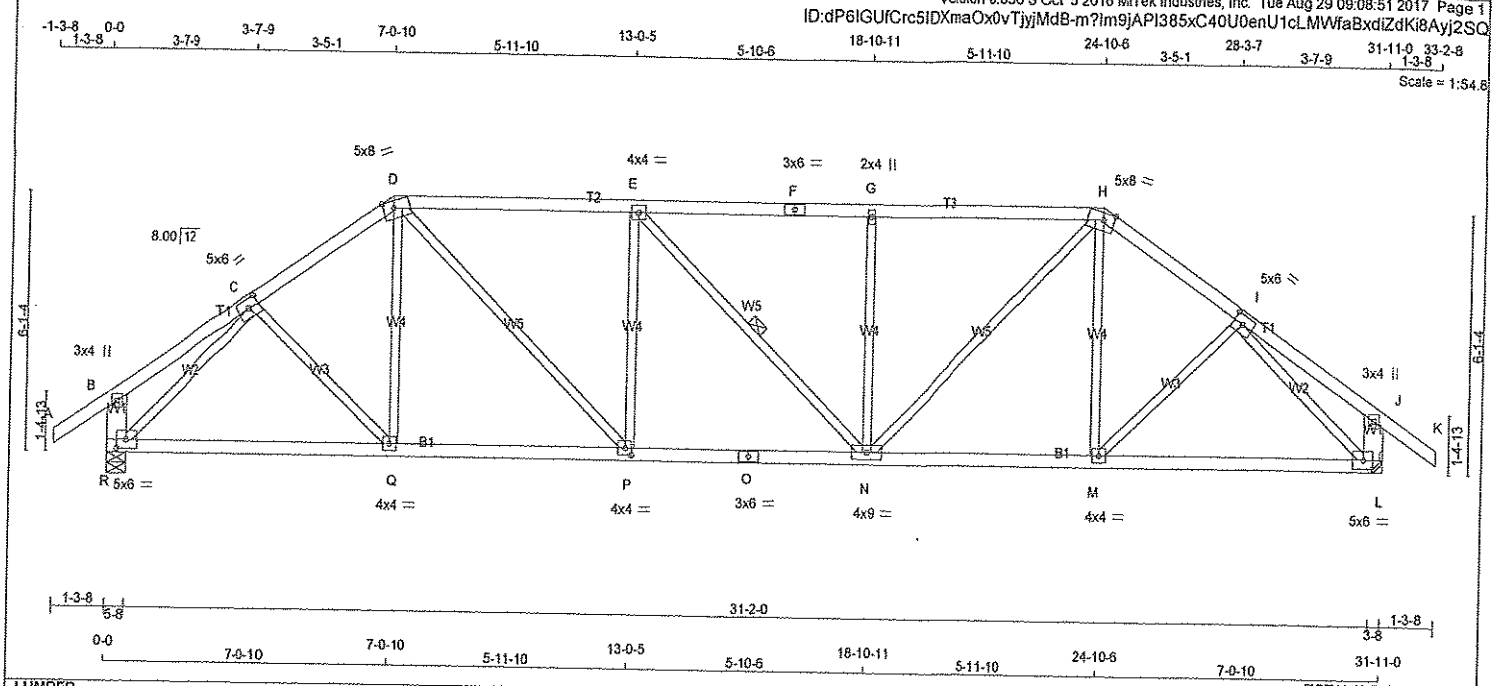

TOTAL WEIGHT = 136 lb [M]

LUMBER

N. L. G. A. RULES

CHORDS	SIZE		LUMBER	DESCR.
A - D	2x4	DRY	No.2	SPF
D - F	2x4	DRY	No.2	SPF
F - H	2x4	DRY	No.2	SPF
H - K	2x4	DRY	No.2	SPF
R - B	2x6	DRY	No.2	SPF
L - J	2x6	DRY	No.2	SPF
R - O	2x4	DRY	No.2	SPF
O - L	2x4	DRY	No.2	SPF
ALL WEBS EXCEPT	2x3	DRY	No.2	SPF

DRY: SEASONED LUMBER.

PLATES (table is in inches)

JT	TYPE	PLATES	W	LEN	Y	X
B	TMV+p	MT20	3.0	4.0		
C	TMWW-t	MT20	5.0	6.0	2.50	2.75
D	TTWW-m	MT20	5.0	8.0	2.00	3.25
E	TMWW-t	MT20	4.0	4.0		
F	TS-t	MT20	3.0	6.0		
G	TMW+w	MT20	2.0	4.0		
H	TTWW-m	MT20	5.0	8.0	2.00	3.25
I	TMWW-t	MT20	5.0	6.0	2.50	2.75
J	TMV+p	MT20	3.0	4.0		
L	BMVW1-t	MT20	5.0	6.0	2.50	2.75
M	BMWW-t	MT20	4.0	4.0		
N	BMWWW-t	MT20	4.0	9.0		
O	BS-t	MT20	3.0	6.0		
P	BMWW-t	MT20	4.0	4.0	2.00	1.75
Q	BMWW-t	MT20	4.0	4.0		
R	BMVW1-t	MT20	5.0	6.0	2.50	2.75

DIMENSIONS, SUPPORTS AND LOADINGS SPECIFIED BY FABRICATOR TO BE VERIFIED BY BUILDING DESIGNER

BEARINGS

JT	FACTORED GROSS REACTION VERT	HORZ	MAXIMUM FACTORED GROSS REACTION DOWN	HORZ	UPLIFT	INPUT BRG	REQRD BRG
R	1907	0	1907	0	0	IN-SX	IN-SX
L	1907	0	1907	0	0	5-8	5-8

HANGER BY OTHERS
MIN. SEAT SIZE: 3-8

UNFACTORED REACTIONS

JT	1ST LCASE COMBINED	MAX./MIN. COMPONENT REACTIONS SNOW	LIVE	PERM.LIVE	WIND	DEAD	SOIL
R	1549	887 / 0	335 / 0	0 / 0	0 / 0	327 / 0	0 / 0
L	1549	887 / 0	335 / 0	0 / 0	0 / 0	327 / 0	0 / 0

BEARING MATERIAL TO BE SPF NO.2 OR BETTER AT JOINT(S) R

BRACING

TOP CHORD TO BE SHEATHED OR MAX. PURLIN SPACING = 3.85 FT.
MAX. UNBRACED BOTTOM CHORD LENGTH = 10.00 FT. OR RIGID CEILING DIRECTLY APPLIED.

ALL PITCH BREAKS AND PERIMETER CORNER JOINTS MUST BE LATERALLY RESTRAINED.

1 LATERAL BRACE(S) AT 1/ 2 LENGTH OF E-N.

END VERTICAL(S) MUST BE SHEATHED OR HAVE BRACES AS INDICATED IN THE MAX. UNBRACED LENGTH COLUMN OF THE TABLE BELOW

LOADING

TOTAL LOAD CASES: (4)

CHORDS

MEMB. FR-TO	MAX. FACTORED FORCE (LBS)	FACTORED VERT. LOAD (PLF) FROM	TO	LC1	MAX CSI (LC)	MAX. UNBRAC LENGTH
A- B	0 / 32	-84.3	-84.3	0.11 (1)	10.00	
B- C	0 / 16	-84.3	-84.3	0.14 (1)	10.00	
C- D	-2087 / 0	-84.3	-84.3	0.21 (1)	4.52	
D- E	-2436 / 0	-84.3	-84.3	0.57 (1)	3.85	
E- F	-2434 / 0	-84.3	-84.3	0.56 (1)	3.85	
F- G	-2434 / 0	-84.3	-84.3	0.56 (1)	3.85	
G- H	-2434 / 0	-84.3	-84.3	0.56 (1)	3.86	
H- I	-2087 / 0	-84.3	-84.3	0.21 (1)	4.52	
I- J	0 / 16	-84.3	-84.3	0.14 (1)	10.00	
J- K	0 / 32	-84.3	-84.3	0.11 (1)	10.00	
R- B	-234 / 0	0.0	0.0	0.02 (1)	7.81	
L- J	-234 / 0	0.0	0.0	0.02 (1)	7.81	
R- Q	0 / 1633	-28.0	-28.0	0.50 (2)	10.00	
Q- P	0 / 1722	-28.0	-28.0	0.52 (2)	10.00	
P- O	0 / 2436	-28.0	-28.0	0.47 (1)	10.00	
O- N	0 / 2436	-28.0	-28.0	0.47 (1)	10.00	
N- M	0 / 1722	-28.0	-28.0	0.53 (2)	10.00	
M- L	0 / 1634	-28.0	-28.0	0.50 (2)	10.00	

WEBS

MEMB. FR-TO	MAX. FACTORED FORCE (LBS)	MAX CSI (LC)
C- Q	0 / 182	0.04 (2)
Q- D	0 / 252	0.06 (3)
D- P	0 / 995	0.22 (1)
P- E	-540 / 0	0.32 (1)
E- N	-2 / 0	0.00 (1)
N- G	-539 / 0	0.32 (1)
N- H	0 / 993	0.22 (1)
M- H	0 / 252	0.06 (3)
M- I	0 / 182	0.04 (2)
R- C	-2280 / 0	0.83 (1)
I- L	-2280 / 0	0.83 (1)

DESIGN CRITERIA

SPECIFIED LOADS:

TOP CH.	LL	=	25.6	PSF
	DL	=	3.0	PSF
BOT CH.	LL	=	10.5	PSF
	DL	=	7.0	PSF
TOTAL LOAD		=	46.1	PSF

SPACING = 24.0 IN. C/C

LOADING IN FLAT SECTION BASED ON A SLOPE OF 6.00/12

THIS TRUSS IS DESIGNED FOR RESIDENTIAL OR SMALL BUILDING REQUIREMENTS OF PART 9, NBCC 2010

THIS DESIGN COMPLIES WITH:
- PART 9 OF OBC 2012 , BCBC 2012 , ABC 2014
- CSA 086-09
- TPIC 2011

(55 % OF 31.3 P.S.F. G.S.L. PLUS 8.4 P.S.F. RAIN LOAD) EQUALS 25.6 P.S.F. SPECIFIED ROOF LIVE LOAD

ALLOWABLE DEFL.(LL)= L/360 (1.06")
CALCULATED VERT. DEFL.(LL) = L/ 999 (0.15")
ALLOWABLE DEFL.(TL)= L/360 (1.06")
CALCULATED VERT. DEFL.(TL) = L/ 999 (0.24")

CSI: TC=0.57 (D-E:1) , BC=0.53 (M-N:2) , WB=0.83 (I-L:1) , SSI=0.23 (D-E:1)

DOL LUMBER=1.00 NAIL=1.00 LS BEND=1.10 COMP=1.10 SHEAR=1.10 TENS= 1.10

COMPANION LIVE LOAD FACTOR = 0.50

AUTOSOLVE HEELS OFF

TRUSS PLATE MANUFACTURER IS NOT RESPONSIBLE FOR QUALITY CONTROL IN THE TRUSS MANUFACTURING PLANT .

NAIL VALUES

PLATE	GRIP(DRY) (PSI) MAX	MIN	SHEAR (PLI) MAX	MIN	SECTION (PLI) MAX	MIN
MT20	618	354	1667	822	2284	1656

PLATE PLACEMENT TOL. = 0.250 inches

PLATE ROTATION TOL. = 5.0 Deg.

JSI GRIP= 0.88 (L) (INPUT = 0.90)
JSI METAL= 0.74 (O) (INPUT = 1.00)

LICENSED PROFESSIONAL ENGINEER
S. KATSOULAKOS
PROVINCE OF ONTARIO

DWG NO. TAM 43602 17
STRUCTURAL
COMPONENT ONLY

JOB NAME	TRUSS NAME	QUANTITY	PLY	JOB DESC.	DRWG NO.
282769	T19	1	1	TRUSS DESC.	

Tamarack Roof Truss, Burlington

Version 8.030 S Oct 5 2016 MiTek Industries, Inc. Tue Aug 29 09:08:51 2017 Page 1
ID:dP6IGUfCrc5IDXmaOx0vTjyjMdB-m?Im9jAPI385xC40U0enU1cI2Wd?B_9iZdKi8Ayj2SQ

Scale = 1:54.8

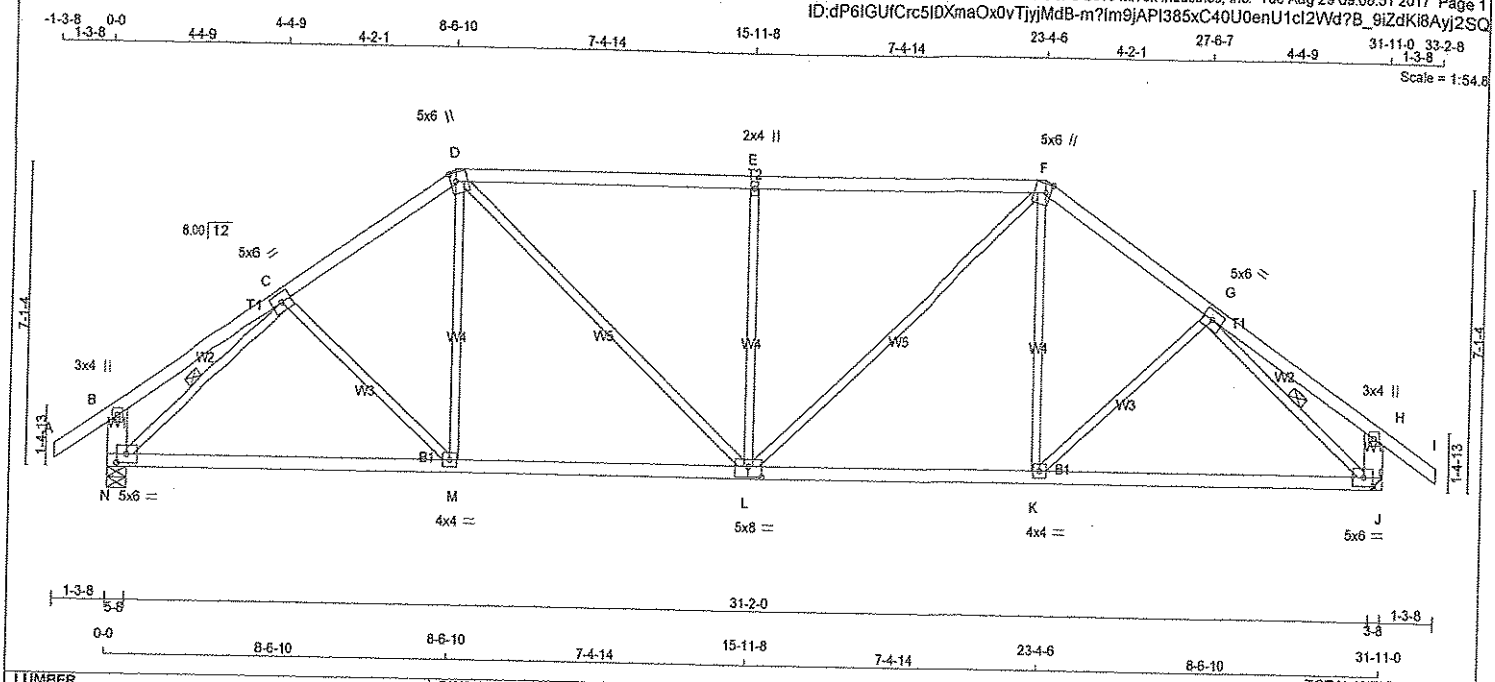

TOTAL WEIGHT = 134 lb

[M][F]

LUMBER

N. L. G. A. RULES

CHORDS	SIZE		LUMBER	DESCR.
A - D	2x4	DRY	No.2	SPF
D - F	2x4	DRY	No.2	SPF
F - I	2x4	DRY	No.2	SPF
N - B	2x6	DRY	No.2	SPF
J - H	2x6	DRY	No.2	SPF
N - L	2x4	DRY	No.2	SPF
L - J	2x4	DRY	No.2	SPF
ALL WEBS EXCEPT	2x3	DRY	No.2	SPF

DRY: SEASONED LUMBER.

PLATES (table is in inches)

JT	TYPE	PLATES	W	LEN	Y	X
B	TMV+p	MT20	3.0	4.0		
C	TMWW-t	MT20	5.0	6.0		
D	TTWW+m	MT20	5.0	6.0	2.50	1.50
E	TMW+w	MT20	2.0	4.0		
F	TTWW+m	MT20	5.0	6.0	2.50	1.50
G	TMWW-t	MT20	5.0	6.0		
H	TMV+p	MT20	3.0	4.0		
J	BMVW1-t	MT20	5.0	6.0	2.50	2.75
K	BMWW-t	MT20	4.0	4.0		
L	BSWWW-l	MT20	5.0	8.0	3.00	4.00
M	BMWW-t	MT20	4.0	4.0		
N	BMVW1-t	MT20	5.0	6.0	2.50	2.75

DIMENSIONS, SUPPORTS AND LOADINGS SPECIFIED BY FABRICATOR TO BE VERIFIED BY BUILDING DESIGNER

BEARINGS

JT	FACTORED GROSS REACTION VERT	HORZ	MAXIMUM FACTORED GROSS REACTION DOWN	HORZ	UPLIFT	INPUT BRG	REQRD BRG
N	1907	0	1907	0	0	IN-SX	IN-SX
J	1907	0	1907	0	0	5-8	5-8

HANGER BY OTHERS
MIN. SEAT SIZE: 3-8

UNFACTORED REACTIONS

JT	1ST LCASE COMBINED	MAX./MIN. COMPONENT REACTIONS SNOW	LIVE	PERM.LIVE	WIND	DEAD	SOIL
N	1549	887 / 0	335 / 0	0 / 0	0 / 0	327 / 0	0 / 0
J	1549	887 / 0	335 / 0	0 / 0	0 / 0	327 / 0	0 / 0

BEARING MATERIAL TO BE SPF NO.2 OR BETTER AT JOINT(S) N

BRACING

TOP CHORD TO BE SHEATHED OR MAX. PURLIN SPACING = 3.74 FT.
MAX. UNBRACED BOTTOM CHORD LENGTH = 10.00 FT. OR RIGID CEILING DIRECTLY APPLIED.

ALL PITCH BREAKS AND PERIMETER CORNER JOINTS MUST BE LATERALLY RESTRAINED.

1 LATERAL BRACE(S) AT 1/2 LENGTH OF C-N, G-J.

END VERTICAL(S) MUST BE SHEATHED OR HAVE BRACES AS INDICATED IN THE MAX. UNBRACED LENGTH COLUMN OF THE TABLE BELOW

LOADING

TOTAL LOAD CASES: (4)

CHORDS

MEMB. FR-TO	MAX. FACTORED FORCE (LBS)	FACTORED VERT. LOAD (PLF) FROM	TO	LC1 MAX CSI (LC)	MAX. UNBRAC LENGTH
A- B	0 / 32	-84.3	-84.3	0.11 (1)	10.00
B- C	0 / 22	-84.3	-84.3	0.23 (1)	10.00
C- D	-2041 / 0	-84.3	-84.3	0.24 (1)	4.55
D- E	-2191 / 0	-84.3	-84.3	0.72 (1)	3.74
E- F	-2191 / 0	-84.3	-84.3	0.72 (1)	3.74
F- G	-2041 / 0	-84.3	-84.3	0.24 (1)	4.55
G- H	0 / 22	-84.3	-84.3	0.23 (1)	10.00
H- I	0 / 32	-84.3	-84.3	0.11 (1)	10.00
N- B	-256 / 0	0.0	0.0	0.02 (1)	7.81
J- H	-256 / 0	0.0	0.0	0.02 (1)	7.81
N- M	0 / 1688	-28.0	-28.0	0.68 (2)	10.00
M- L	0 / 1682	-28.0	-28.0	0.69 (2)	10.00
L- K	0 / 1682	-28.0	-28.0	0.69 (2)	10.00
K- J	0 / 1688	-28.0	-28.0	0.68 (2)	10.00

WEBS

MEMB. FR-TO	MAX. FACTORED FORCE (LBS)	MAX CSI (LC)
C- M	-15 / 137	0.03 (3)
M- D	0 / 391	0.09 (2)
D- L	0 / 692	0.16 (1)
L- E	-767 / 0	0.67 (1)
L- F	0 / 692	0.16 (1)
K- F	0 / 391	0.09 (2)
K- G	-15 / 137	0.03 (3)
N- C	-2294 / 0	0.54 (1)
G- J	-2294 / 0	0.54 (1)

DESIGN CRITERIA

SPECIFIED LOADS:

TOP CH.	LL	=	25.6	PSF
	DL	=	3.0	PSF
BOT CH.	LL	=	10.5	PSF
	DL	=	7.0	PSF
TOTAL LOAD		=	46.1	PSF

SPACING = 24.0 IN. C/C

LOADING IN FLAT SECTION BASED ON A SLOPE OF 6.00/12

THIS TRUSS IS DESIGNED FOR RESIDENTIAL OR SMALL BUILDING REQUIREMENTS OF PART 9, NBCC 2010

THIS DESIGN COMPLIES WITH:
- PART 9 OF OBC 2012 , BCBC 2012 , ABC 2014
- CSA 086-09
- TPIC 2011

(55 % OF 31.3 P.S.F. G.S.L. PLUS 8.4 P.S.F. RAIN LOAD) EQUALS 25.6 P.S.F. SPECIFIED ROOF LIVE LOAD

ALLOWABLE DEFL.(LL)= L/360 (1.06")
CALCULATED VERT. DEFL.(LL) = L/ 999 (0.23")
ALLOWABLE DEFL.(TL)= L/360 (1.06")
CALCULATED VERT. DEFL.(TL) = L/ 999 (0.38")

CSI: TC=0.72 (D-E:1) , BC=0.69 (K-L:2) , WB=0.67 (E-L:1) , SSI=0.30 (D-E:1)

DOL LUMBER=1.00 NAIL=1.00 LS BEND=1.10 COMP=1.10 SHEAR=1.10 TENS= 1.10

COMPANION LIVE LOAD FACTOR = 0.50

AUTOSOLVE HEELS OFF

TRUSS PLATE MANUFACTURER IS NOT RESPONSIBLE FOR QUALITY CONTROL IN THE TRUSS MANUFACTURING PLANT .

NAIL VALUES

PLATE	GRIP(DRY) (PSI) MAX	MIN	SHEAR (PLI) MAX	MIN	SECTION (PLI) MAX	MIN
MT20	618	354	1667	822	2284	1656

PLATE PLACEMENT TOL. = 0.250 Inches

PLATE ROTATION TOL. = 5.0 Deg.

JSI GRIP= 0.89 (D) (INPUT = 0.90)
JSI METAL= 0.57 (C) (INPUT = 1.00)

LICENSED PROFESSIONAL ENGINEER
S. KATSOULAKOS
PROVINCE OF ONTARIO

DWG NO. TAM 4360/-17
STRUCTURAL
COMPONENT ONLY

JOB NAME	TRUSS NAME	QUANTITY	PLY	JOB DESC.	DRWG NO.
282769	T20	2	1	TRUSS DESC.	

Tamarack Roof Truss, Burlington

Version 8.030 S Oct 5 2016 MiTek Industries, Inc. Tue Aug 29 09:08:51 2017 Page 1
ID:dP6IGUfCrc5IDXmaOx0vTjyjMdB-m?Im9jAPI385xC40U0enU1cRuWhJB2BiZdKi8Ayj2SQ

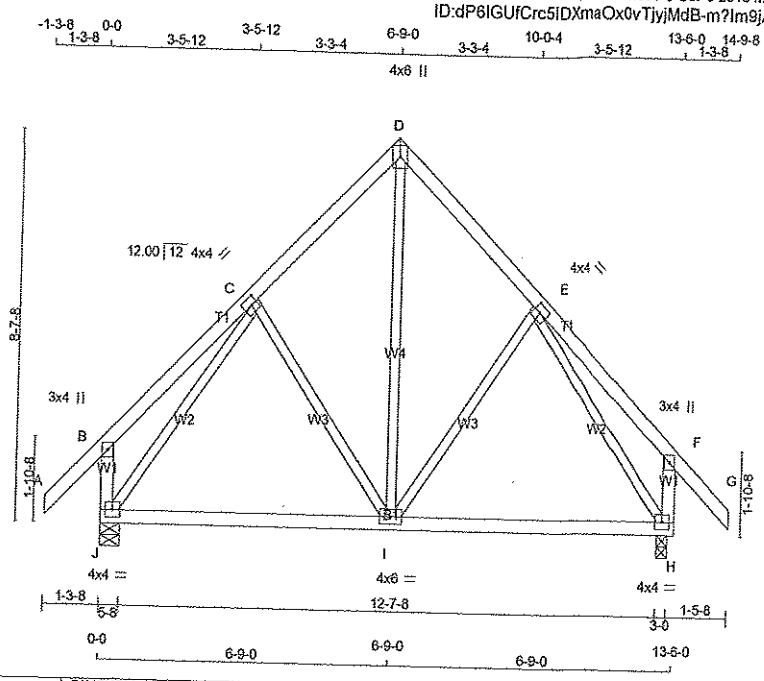

TOTAL WEIGHT = 2 X 70 = 140 lb
[M][F]

LUMBER
N. L. G. A. RULES

CHORDS	SIZE		LUMBER	DESCR.
A - D	2x4	DRY	No.2	SPF
D - G	2x4	DRY	No.2	SPF
J - B	2x4	DRY	No.2	SPF
H - F	2x4	DRY	No.2	SPF
J - H	2x4	DRY	No.2	SPF
ALL WEBS EXCEPT	2x3	DRY	No.2	SPF

DRY: SEASONED LUMBER.

PLATES (table is in inches)

JT	TYPE	PLATES	W	LEN	Y	X
B	TMV+p	MT20	3.0	4.0		
C	TMWW-t	MT20	4.0	4.0	2.00	1.75
D	TTW+p	MT20	4.0	6.0		
E	TMWW-t	MT20	4.0	4.0	2.00	1.75
F	TMV+p	MT20	3.0	4.0		
H	BMVW1-t	MT20	4.0	4.0		
I	BMWWW-t	MT20	4.0	6.0		
J	BMVW1-t	MT20	4.0	4.0		

DIMENSIONS, SUPPORTS AND LOADINGS SPECIFIED BY FABRICATOR TO BE VERIFIED BY BUILDING DESIGNER

BEARINGS

JT	FACTORED GROSS REACTION VERT	HORZ	MAXIMUM FACTORED GROSS REACTION DOWN	HORZ	UPLIFT	INPUT BRG IN-SX	REQRD BRG IN-SX
J	875	0	875	0	0	5-8	5-8
H	875	0	875	0	0	3-0	3-0

UNFACTORED REACTIONS

JT	1ST LCASE COMBINED	MAX./MIN. COMPONENT REACTIONS SNOW	LIVE	PERM.LIVE	WIND	DEAD	SOIL
J	702	417 / 0	142 / 0	0 / 0	0 / 0	143 / 0	0 / 0
H	702	417 / 0	142 / 0	0 / 0	0 / 0	143 / 0	0 / 0

BEARING MATERIAL TO BE SPF NO.2 OR BETTER AT JOINT(S) J, H

BRACING
TOP CHORD TO BE SHEATHED OR MAX. PURLIN SPACING = 6.25 FT.
MAX. UNBRACED BOTTOM CHORD LENGTH = 10.00 FT. OR RIGID CEILING DIRECTLY APPLIED.

ALL PITCH BREAKS AND PERIMETER CORNER JOINTS MUST BE LATERALLY RESTRAINED.

LOADING
TOTAL LOAD CASES: (4)

CHORDS

MEMB. FR-TO	MAX. FACTORED FORCE (LBS)	FACTORED VERT. LOAD LC1 (PLF) FROM	TO	MAX CSI (LC)	MAX. UNBRAC LENGTH
A- B	0 / 42	-84.3	-84.3	0.12 (1)	10.00
B- C	0 / 23	-84.3	-84.3	0.15 (1)	10.00
C- D	-466 / 0	-84.3	-84.3	0.12 (1)	6.25
D- E	-466 / 0	-84.3	-84.3	0.12 (1)	6.25
E- F	0 / 23	-84.3	-84.3	0.15 (1)	10.00
F- G	0 / 42	-84.3	-84.3	0.12 (1)	10.00
J- B	-225 / 0	0.0	0.0	0.03 (1)	7.81
H- F	-225 / 0	0.0	0.0	0.03 (1)	7.81
J- I	0 / 397	-28.0	-28.0	0.41 (2)	10.00
I- H	0 / 397	-28.0	-28.0	0.41 (2)	10.00

WEBS

MEMB. FR-TO	MAX. FACTORED FORCE (LBS)	MAX CSI (LC)
I- D	0 / 431	0.10 (1)
I- E	-120 / 35	0.07 (1)
C- I	-120 / 35	0.07 (1)
J- C	-701 / 0	0.41 (1)
E- H	-701 / 0	0.41 (1)

DESIGN CRITERIA

SPECIFIED LOADS:

TOP CH.	LL	=	25.6	PSF
	DL	=	3.0	PSF
BOT CH.	LL	=	10.5	PSF
	DL	=	7.0	PSF
TOTAL LOAD		=	46.1	PSF

SPACING = 24.0 IN. C/C

THIS TRUSS IS DESIGNED FOR RESIDENTIAL OR SMALL BUILDING REQUIREMENTS OF PART 9, NBCC 2010

THIS DESIGN COMPLIES WITH:
- PART 9 OF OBC 2012 , BCBC 2012 , ABC 2014
- CSA 086-09
- TPIC 2011

(55 % OF 31.3 P.S.F. G.S.L. PLUS 8.4 P.S.F. RAIN LOAD) EQUALS 25.6 P.S.F. SPECIFIED ROOF LIVE LOAD

ALLOWABLE DEFL.(LL)= L/360 (0.45")
CALCULATED VERT. DEFL.(LL) = L/ 999 (0.06")
ALLOWABLE DEFL.(TL)= L/360 (0.45")
CALCULATED VERT. DEFL.(TL) = L/ 999 (0.10")

CSI: TC=0.15 (E-F:1) , BC=0.41 (I-J:2) , WB=0.41 (E-H:1) , SSI=0.16 (I-J:3)

DOL LUMBER=1.00 NAIL=1.00 LS BEND=1.10 COMP=1.10 SHEAR=1.10 TENS= 1.10

COMPANION LIVE LOAD FACTOR = 0.50

TRUSS PLATE MANUFACTURER IS NOT RESPONSIBLE FOR QUALITY CONTROL IN THE TRUSS MANUFACTURING PLANT .

NAIL VALUES

PLATE	GRIP(DRY) (PSI) MAX	MIN	SHEAR (PLI) MAX	MIN	SECTION (PLI) MAX	MIN
MT20	618	354	1667	822	2284	1656

PLATE PLACEMENT TOL. = 0.250 inches

PLATE ROTATION TOL. = 5.0 Deg.

JSI GRIP= 0.77 (C) (INPUT = 0.90)
JSI METAL= 0.27 (C) (INPUT = 1.00)

LICENSED PROFESSIONAL ENGINEER
S. KATSOULAKOS
PROVINCE OF ONTARIO

DWG NO. TAM 4360217
STRUCTURAL
COMPONENT ONLY

JOB NAME	TRUSS NAME	QUANTITY	PLY	JOB DESC.	DRWG NO.
282769	G20	1	1	TRUSS DESC.	

Tamarack Roof Truss, Burlington

Version 8.030 S Oct 5 2016 MiTek Industries, Inc. Tue Aug 29 09:08:47 2017 Page 1
ID:dP6IGUfCrc5IDXmaOx0vTjyjMdB-tE3FKM7uFqegSanFFAZrKBRmRvPSFIW6f?MV?Pyj2SU

Scale = 1:54.4

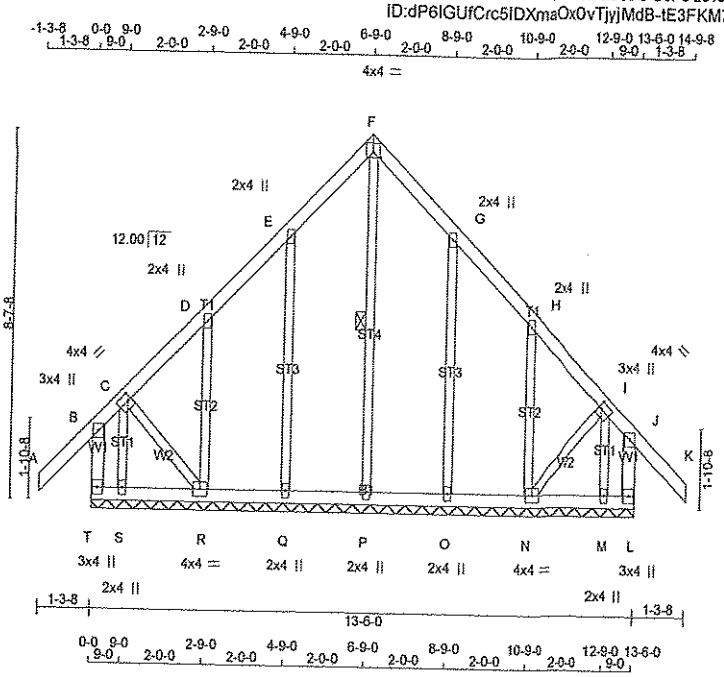

TOTAL WEIGHT = 76 lb

[M]

LUMBER

N. L. G. A. RULES

CHORDS	SIZE		LUMBER	DESCR.
A - F	2x4	DRY	No.2	SPF
F - K	2x4	DRY	No.2	SPF
T - B	2x4	DRY	No.2	SPF
L - J	2x4	DRY	No.2	SPF
T - L	2x4	DRY	No.2	SPF
ALL WEBS	2x3	DRY	No.2	SPF
ALL GABLE WEBS	2x3	DRY	No.2	SPF

DRY: SEASONED LUMBER.

GABLE STUDS SPACED AT 2-0-0 OC.

PLATES (table is in inches)

JT	TYPE	PLATES	W	LEN	Y	X
B	TMV+p	MT20	3.0	4.0		
C	TMWW-t	MT20	4.0	4.0	2.00	1.00
D, E, G, H						
D	TMW+w	MT20	2.0	4.0		
F	TTW-p	MT20	4.0	4.0	1.50	2.00
I	TMWW-t	MT20	4.0	4.0	2.00	1.00
J	TMV+p	MT20	3.0	4.0		
L	BMV1+p	MT20	3.0	4.0		
M, O, P, Q, S						
M	BMW1+w	MT20	2.0	4.0		
N	BMWW1-t	MT20	4.0	4.0		
R	BMWW1-t	MT20	4.0	4.0		
T	BMV1+p	MT20	3.0	4.0		

DIMENSIONS, SUPPORTS AND LOADINGS SPECIFIED BY FABRICATOR TO BE VERIFIED BY BUILDING DESIGNER

BEARINGS

THIS TRUSS DESIGNED FOR CONTINUOUS BEARINGS.

THIS TRUSS REQUIRES RIGID SHEATHING ON EXPOSED FACE.

BEARING MATERIAL TO BE SPF NO.2 OR BETTER AT JOINT(S)

BRACING

TOP CHORD TO BE SHEATHED OR MAX. PURLIN SPACING = 6.25 FT.
MAX. UNBRACED BOTTOM CHORD LENGTH = 10.00 FT. OR RIGID CEILING DIRECTLY APPLIED.

ALL PITCH BREAKS AND PERIMETER CORNER JOINTS MUST BE LATERALLY RESTRAINED.

1 LATERAL BRACE(S) AT 1/2 LENGTH OF F-P.

END VERTICAL(S) MUST BE SHEATHED OR HAVE BRACES AS INDICATED IN THE MAX. UNBRACED LENGTH COLUMN OF THE TABLE BELOW

LOADING

TOTAL LOAD CASES: (4)

CHORDS

MEMB. FR-TO	MAX. FACTORED FORCE (LBS)	FACTORED VERT. LOAD LC1 (PLF) FROM	TO	MAX CSI (LC)	MAX. UNBRAC LENGTH
A- B	0 / 42	-84.3	-84.3	0.12 (1)	10.00
B- C	-67 / 0	-84.3	-84.3	0.11 (1)	6.25
C- D	-32 / 0	-84.3	-84.3	0.04 (1)	6.25
D- E	-30 / 0	-84.3	-84.3	0.05 (1)	6.25
E- F	-40 / 0	-84.3	-84.3	0.05 (1)	6.25
F- G	-40 / 0	-84.3	-84.3	0.05 (1)	6.25
G- H	-30 / 0	-84.3	-84.3	0.05 (1)	6.25
H- I	-32 / 0	-84.3	-84.3	0.04 (1)	6.25
I- J	-67 / 0	-84.3	-84.3	0.11 (1)	6.25
J- K	0 / 42	-84.3	-84.3	0.12 (1)	10.00
T- B	-244 / 0	0.0	0.0	0.03 (1)	7.81
L- J	-244 / 0	0.0	0.0	0.03 (1)	7.81
T- S	0 / 0	-28.0	-28.0	0.02 (2)	10.00
S- R	0 / 0	-28.0	-28.0	0.02 (2)	10.00
R- Q	0 / 23	-28.0	-28.0	0.03 (2)	10.00
Q- P	0 / 20	-28.0	-28.0	0.02 (2)	10.00
P- O	0 / 20	-28.0	-28.0	0.02 (2)	10.00
O- N	0 / 23	-28.0	-28.0	0.03 (2)	10.00
N- M	0 / 0	-28.0	-28.0	0.02 (2)	10.00
M- L	0 / 0	-28.0	-28.0	0.02 (2)	10.00

WEBS

MEMB. FR-TO	MAX. FACTORED FORCE (LBS)	MAX CSI (LC)
P- F	-104 / 0	0.05 (1)
Q- E	-190 / 0	0.14 (1)
R- D	-165 / 0	0.05 (1)
S- C	-65 / 0	0.01 (1)
O- G	-190 / 0	0.14 (1)
N- H	-165 / 0	0.05 (1)
M- I	-65 / 0	0.01 (1)
C- R	0 / 41	0.01 (1)
N- I	0 / 41	0.01 (1)

DESIGN CRITERIA

SPECIFIED LOADS:

TOP CH.	LL	=	25.6	PSF
	DL	=	3.0	PSF
BOT CH.	LL	=	10.5	PSF
	DL	=	7.0	PSF
TOTAL LOAD		=	46.1	PSF

SPACING = 24.0 IN. C/C

THIS TRUSS IS DESIGNED FOR RESIDENTIAL OR SMALL BUILDING REQUIREMENTS OF PART 9, NBCC 2010

THIS DESIGN COMPLIES WITH:
- PART 9 OF OBC 2012 , BCBC 2012 , ABC 2014
- CSA 086-09
- TPIC 2011

DESIGN ASSUMPTIONS
-OVERHANG NOT TO BE ALTERED OR CUT OFF.

(55 % OF 31.3 P.S.F. G.S.L. PLUS 8.4 P.S.F. RAIN LOAD) EQUALS 25.6 P.S.F. SPECIFIED ROOF LIVE LOAD

CSI: TC=0.12 (J-K:1) , BC=0.03 (N-O:2) , WB=0.14 (G-O:1) , SSI=0.07 (I-J:1)

DOL LUMBER=1.00 NAIL=1.00 LS BEND=1.10 COMP=1.10 SHEAR=1.10 TENS= 1.10

COMPANION LIVE LOAD FACTOR = 0.50

TRUSS PLATE MANUFACTURER IS NOT RESPONSIBLE FOR QUALITY CONTROL IN THE TRUSS MANUFACTURING PLANT .

NAIL VALUES

PLATE	GRIP(DRY) (PSI) MAX	MIN	SHEAR (PLI) MAX	MIN	SECTION (PLI) MAX	MIN
MT20	618	354	1667	822	2284	1656

PLATE PLACEMENT TOL. = 0.250 inches

PLATE ROTATION TOL. = 5.0 Deg.

JSI GRIP= 0.21 (F) (INPUT = 0.90)
JSI METAL= 0.05 (G) (INPUT = 1.00)

LICENSED PROFESSIONAL ENGINEER
82417
S. KATSOULAKOS
PROVINCE OF ONTARIO

DWG NO. TAM43590-17
STRUCTURAL
COMPONENT ONLY

JOB NAME	TRUSS NAME	QUANTITY	PLY	JOB DESC.	DRWG NO.
282769	T21A	1	1	TRUSS DESC.	

Tamarack Roof Truss, Burlington

Version 8.030 S Oct 5 2016 MiTek Industries, Inc. Tue Aug 29 09:08:51 2017 Page 1
ID:dP6IGUfCrc5iDXmaOx0vTjyjMdB-m?Im9jAPI385xC40U0enU1cRsWhnB0NiZdKi8Ayj2SQ

Scale = 1:57.1

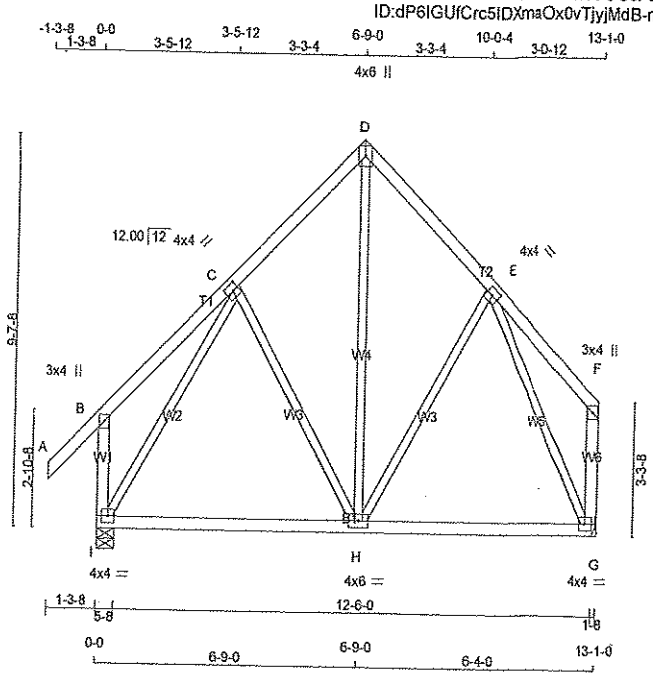

TOTAL WEIGHT = 73 lb
[MI]F

LUMBER
N. L. G. A. RULES

CHORDS	SIZE		LUMBER	DESCR.
A - D	2x4	DRY	No.2	SPF
D - F	2x4	DRY	No.2	SPF
I - B	2x4	DRY	No.2	SPF
G - F	2x4	DRY	No.2	SPF
I - G	2x4	DRY	No.2	SPF
ALL WEBS EXCEPT	2x3	DRY	No.2	SPF

DRY: SEASONED LUMBER.

PLATES (table is in inches)

JT	TYPE	PLATES	W	LEN	Y	X
B	TMV+p	MT20	3.0	4.0		
C	TMWW-t	MT20	4.0	4.0	2.00	1.75
D	TTW+p	MT20	4.0	6.0		
E	TMWW-t	MT20	4.0	4.0		
F	TMV+p	MT20	3.0	4.0		
G	BMVW1-t	MT20	4.0	4.0		
H	BMWWW-t	MT20	4.0	6.0		
I	BMVW1-t	MT20	4.0	4.0		

DIMENSIONS, SUPPORTS AND LOADINGS SPECIFIED BY FABRICATOR TO BE VERIFIED BY BUILDING DESIGNER

BEARINGS

JT	FACTORED GROSS REACTION VERT	HORZ	MAXIMUM FACTORED GROSS REACTION DOWN	HORZ	UPLIFT	INPUT BRG	REQRD BRG
I	852	0	852	0	0	IN-SX	IN-SX
G	734	0	734	0	0	5-8	5-8

HANGER BY OTHERS
MIN. SEAT SIZE: 1-8

UNFACTORED REACTIONS

JT	1ST LCASE COMBINED	MAX./MIN. COMPONENT REACTIONS SNOW	LIVE	PERM.LIVE	WIND	DEAD	SOIL
I	683	406 / 0	137 / 0	0 / 0	0 / 0	139 / 0	0 / 0
G	603	335 / 0	137 / 0	0 / 0	0 / 0	131 / 0	0 / 0

BEARING MATERIAL TO BE SPF NO.2 OR BETTER AT JOINT(S) I

BRACING
TOP CHORD TO BE SHEATHED OR MAX. PURLIN SPACING = 6.25 FT.
MAX. UNBRACED BOTTOM CHORD LENGTH = 10.00 FT. OR RIGID CEILING DIRECTLY APPLIED.

ALL PITCH BREAKS AND PERIMETER CORNER JOINTS MUST BE LATERALLY RESTRAINED.

LOADING
TOTAL LOAD CASES: (4)

CHORDS

MEMB. FR-TO	MAX. FACTORED FORCE (LBS)	FACTORED VERT. LOAD LC1 (PLF) FROM	TO	MAX CSI (LC)	MAX. UNBRAC LENGTH
A- B	0 / 42	-84.3	-84.3	0.12 (1)	10.00
B- C	0 / 24	-84.3	-84.3	0.15 (1)	10.00
C- D	-411 / 0	-84.3	-84.3	0.12 (1)	6.25
D- E	-408 / 0	-84.3	-84.3	0.10 (1)	6.25
E- F	0 / 23	-84.3	-84.3	0.13 (1)	10.00
I- B	-224 / 0	0.0	0.0	0.03 (1)	7.81
G- F	-94 / 0	0.0	0.0	0.02 (1)	7.81
I- H	0 / 315	-28.0	-28.0	0.38 (2)	10.00
H- G	0 / 290	-28.0	-28.0	0.38 (2)	10.00

WEBS

MEMB. FR-TO	MAX. FACTORED FORCE (LBS)	MAX CSI (LC)
C- H	-81 / 52	0.07 (1)
H- D	0 / 344	0.08 (2)
H- E	-32 / 70	0.03 (1)
I- C	-638 / 0	0.53 (1)
E- G	-644 / 0	0.49 (1)

DESIGN CRITERIA

SPECIFIED LOADS:

TOP CH.	LL =	25.6	PSF
	DL =	3.0	PSF
BOT CH.	LL =	10.5	PSF
	DL =	7.0	PSF
TOTAL LOAD	=	46.1	PSF

SPACING = 24.0 IN. C/C

THIS TRUSS IS DESIGNED FOR RESIDENTIAL OR SMALL BUILDING REQUIREMENTS OF PART 9, NBCC 2010

THIS DESIGN COMPLIES WITH:
- PART 9 OF OBC 2012 , BCBC 2012 , ABC 2014
- CSA 086-09
- TPIC 2011

(55 % OF 31.3 P.S.F. G.S.L. PLUS 8.4 P.S.F. RAIN LOAD) EQUALS 25.6 P.S.F. SPECIFIED ROOF LIVE LOAD

ALLOWABLE DEFL.(LL)= L/360 (0.44")
CALCULATED VERT. DEFL.(LL) = L/ 999 (0.07")
ALLOWABLE DEFL.(TL)= L/360 (0.44")
CALCULATED VERT. DEFL.(TL) = L/ 999 (0.11")

CSI: TC=0.15 (B-C:1) , BC=0.38 (H-I:2) , WB=0.53 (C-I:1) , SSI=0.16 (H-I:3)

DOL LUMBER=1.00 NAIL=1.00 LS BEND=1.10 COMP=1.10 SHEAR=1.10 TENS= 1.10

COMPANION LIVE LOAD FACTOR = 0.50

TRUSS PLATE MANUFACTURER IS NOT RESPONSIBLE FOR QUALITY CONTROL IN THE TRUSS MANUFACTURING PLANT .

NAIL VALUES

PLATE	GRIP(DRY) (PSI) MAX	MIN	SHEAR (PLI) MAX	MIN	SECTION (PLI) MAX	MIN
MT20	618	354	1667	822	2284	1656

PLATE PLACEMENT TOL. = 0.250 inches

PLATE ROTATION TOL. = 5.0 Deg.

JSI GRIP= 0.85 (E) (INPUT = 0.90)
JSI METAL= 0.24 (C) (INPUT = 1.00)

LICENSED PROFESSIONAL ENGINEER
S. KATSOULAKOS
PROVINCE OF ONTARIO

DWG NO. TAM 43603-17
STRUCTURAL
COMPONENT ONLY

JOB NAME	TRUSS NAME	QUANTITY	PLY	JOB DESC.	DRWG NO.
282769	T22	2	1	TRUSS DESC.	

Tamarack Roof Truss, Burlington

Version 6.030 S Oct 5 2016 MiTek Industries, Inc. Tue Aug 29 09:08:52 2017 Page 1
ID:dP6IGUfCrc5IDXmaOx0vTjyjMdB-EBs8N3B13NGyZMfC2j901F9cqw00wW7roH4Ghcyj2SP

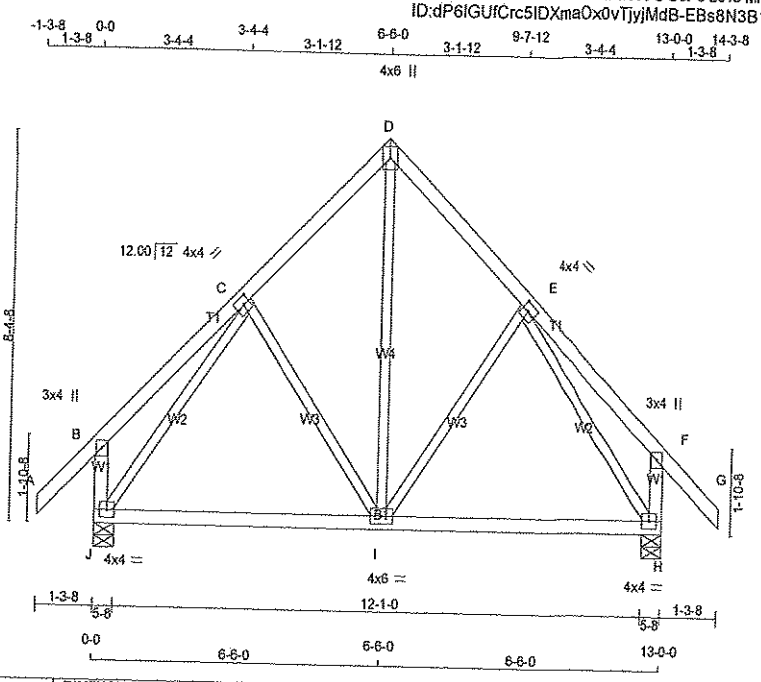

TOTAL WEIGHT = 2 X 68 = 136 lb

[M][F]

LUMBER

N. L. G. A. RULES

CHORDS	SIZE		LUMBER	DESCR.
A - D	2x4	DRY	No.2	SPF
D - G	2x4	DRY	No.2	SPF
J - B	2x4	DRY	No.2	SPF
H - F	2x4	DRY	No.2	SPF
J - H	2x4	DRY	No.2	SPF
ALL WEBS EXCEPT	2x3	DRY	No.2	SPF

DRY: SEASONED LUMBER.

PLATES (table is in inches)

JT	TYPE	PLATES	W	LEN	Y	X
B	TMV+p	MT20	3.0	4.0		
C	TMWW-t	MT20	4.0	4.0	2.00	1.75
D	TTW+p	MT20	4.0	6.0		
E	TMWW-t	MT20	4.0	4.0	2.00	1.75
F	TMV+p	MT20	3.0	4.0		
H	BMVW1-t	MT20	4.0	4.0		
I	BMWWW-t	MT20	4.0	6.0		
J	BMVW1-t	MT20	4.0	4.0		

DIMENSIONS, SUPPORTS AND LOADINGS SPECIFIED BY FABRICATOR TO BE VERIFIED BY BUILDING DESIGNER

BEARINGS

JT	FACTORED GROSS REACTION VERT	HORZ	MAXIMUM FACTORED GROSS REACTION DOWN	HORZ	UPLIFT	INPUT BRG	REQRD BRG
J	847	0	847	0	0	5-8	5-8
H	847	0	847	0	0	5-8	5-8

UNFACTORED REACTIONS

JT	1ST LCASE COMBINED	MAX./MIN. COMPONENT REACTIONS SNOW	LIVE	PERM.LIVE	WIND	DEAD	SOIL
J	679	404 / 0	137 / 0	0 / 0	0 / 0	138 / 0	0 / 0
H	679	404 / 0	137 / 0	0 / 0	0 / 0	138 / 0	0 / 0

BEARING MATERIAL TO BE SPF NO.2 OR BETTER AT JOINT(S) J, H

BRACING

TOP CHORD TO BE SHEATHED OR MAX. PURLIN SPACING = 6.25 FT.
MAX. UNBRACED BOTTOM CHORD LENGTH = 10.00 FT. OR RIGID CEILING DIRECTLY APPLIED.

ALL PITCH BREAKS AND PERIMETER CORNER JOINTS MUST BE LATERALLY RESTRAINED.

LOADING

TOTAL LOAD CASES: (4)

CHORDS

MEMB. FR-TO	MAX. FACTORED FORCE (LBS)	FACTORED VERT. LOAD LC1 (PLF) FROM	TO	MAX CSI (LC)	MAX. UNBRAC LENGTH
A- B	0 / 42	-84.3	-84.3	0.12 (1)	10.00
B- C	0 / 22	-84.3	-84.3	0.14 (1)	10.00
C- D	-464 / 0	-84.3	-84.3	0.11 (1)	6.25
D- E	-464 / 0	-84.3	-84.3	0.11 (1)	6.25
E- F	0 / 22	-84.3	-84.3	0.14 (1)	10.00
F- G	0 / 42	-84.3	-84.3	0.12 (1)	10.00
J- B	-221 / 0	0.0	0.0	0.02 (1)	7.81
H- F	-221 / 0	0.0	0.0	0.02 (1)	7.81
J- I	0 / 377	-28.0	-28.0	0.38 (2)	10.00
I- H	0 / 377	-28.0	-28.0	0.38 (2)	10.00

WEBS

MEMB. FR-TO	MAX. FACTORED FORCE (LBS)	MAX CSI (LC)
I- D	0 / 410	0.09 (1)
I- E	-112 / 35	0.06 (1)
C- I	-112 / 35	0.06 (1)
J- C	-673 / 0	0.37 (1)
E- H	-673 / 0	0.37 (1)

DESIGN CRITERIA

SPECIFIED LOADS:

TOP CH.	LL	=	25.6	PSF
	DL	=	3.0	PSF
BOT CH.	LL	=	10.5	PSF
	DL	=	7.0	PSF
TOTAL LOAD		=	46.1	PSF

SPACING = 24.0 IN. C/C

THIS TRUSS IS DESIGNED FOR RESIDENTIAL OR SMALL BUILDING REQUIREMENTS OF PART 9, NBCC 2010

THIS DESIGN COMPLIES WITH:
- PART 9 OF OBC 2012 , BCBC 2012 , ABC 2014
- CSA 086-09
- TPIC 2011

(55 % OF 31.3 P.S.F. G.S.L. PLUS 8.4 P.S.F. RAIN LOAD) EQUALS 25.6 P.S.F. SPECIFIED ROOF LIVE LOAD

ALLOWABLE DEFL.(LL)= L/360 (0.43")
CALCULATED VERT. DEFL.(LL) = L/ 999 (0.05")
ALLOWABLE DEFL.(TL)= L/360 (0.43")
CALCULATED VERT. DEFL.(TL) = L/ 999 (0.09")

CSI: TC=0.14 (E-F:1) , BC=0.38 (H-I:2) , WB=0.37 (C-J:1) , SSI=0.15 (H-I:3)

DOL LUMBER=1.00 NAIL=1.00 LS BEND=1.10 COMP=1.10 SHEAR=1.10 TENS= 1.10

COMPANION LIVE LOAD FACTOR = 0.50

TRUSS PLATE MANUFACTURER IS NOT RESPONSIBLE FOR QUALITY CONTROL IN THE TRUSS MANUFACTURING PLANT .

NAIL VALUES

PLATE	GRIP(DRY) (PSI) MAX	MIN	SHEAR (PLI) MAX	MIN	SECTION (PLI) MAX	MIN
MT20	618	354	1867	822	2284	1656

PLATE PLACEMENT TOL. = 0.250 inches

PLATE ROTATION TOL. = 5.0 Deg.

JSI GRIP= 0.75 (E) (INPUT = 0.90)
JSI METAL= 0.25 (E) (INPUT = 1.00)

LICENSED PROFESSIONAL ENGINEER
S. KATSOULAKOS
PROVINCE OF ONTARIO

DWG NO. TAM 43604-17
STRUCTURAL
COMPONENT ONLY

JOB NAME	TRUSS NAME	QUANTITY	PLY	JOB DESC.	DRWG NO.
282769	G22	1	1	TRUSS DESC.	

Tamarack Roof Truss, Burlington

Version 8.030 S Oct 5 2016 MiTek Industries, Inc. Tue Aug 29 09:08:47 2017 Page 1
ID:dP6IGUfCrc5IDXmaOx0vTjyjMdB-tE3FKM7uFqegSanFFAZrKBRmRvPSFJh6f?MV?PyJ2SU

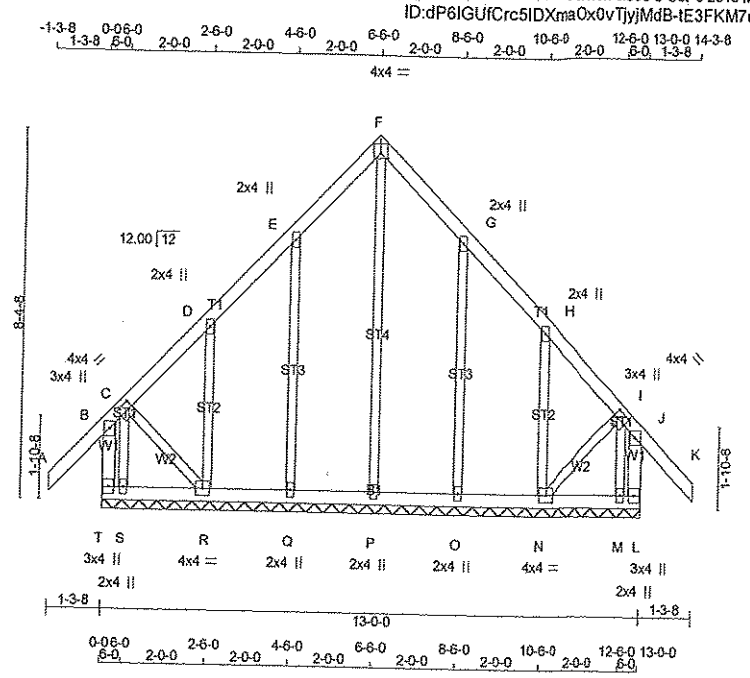

TOTAL WEIGHT = 73 lb

LUMBER

N. L. G. A. RULES

CHORDS	SIZE		LUMBER	DESCR.
A - F	2x4	DRY	No.2	SPF
F - K	2x4	DRY	No.2	SPF
T - B	2x4	DRY	No.2	SPF
L - J	2x4	DRY	No.2	SPF
T - L	2x4	DRY	No.2	SPF
ALL WEBS	2x3	DRY	No.2	SPF
ALL GABLE WEBS	2x3	DRY	No.2	SPF

DRY: SEASONED LUMBER.

GABLE STUDS SPACED AT 2-0-0 OC.

PLATES (table is in inches)

JT	TYPE	PLATES	W	LEN	Y	X
B	TMV+p	MT20	3.0	4.0		
C	TMWW-t	MT20	4.0	4.0	2.00	1.00
D, E, G, H						
D	TMW+w	MT20	2.0	4.0		
F	TTW-p	MT20	4.0	4.0	1.50	2.00
I	TMWW-t	MT20	4.0	4.0	2.00	1.00
J	TMV+p	MT20	3.0	4.0		
L	BMV1+p	MT20	3.0	4.0		
M, O, P, Q, S						
M	BMW1+w	MT20	2.0	4.0		
N	BMWW1-t	MT20	4.0	4.0		
R	BMWW1-t	MT20	4.0	4.0		
T	BMV1+p	MT20	3.0	4.0		

DIMENSIONS, SUPPORTS AND LOADINGS SPECIFIED BY FABRICATOR TO BE VERIFIED BY BUILDING DESIGNER

BEARINGS

THIS TRUSS DESIGNED FOR CONTINUOUS BEARINGS.

THIS TRUSS REQUIRES RIGID SHEATHING ON EXPOSED FACE.

BEARING MATERIAL TO BE SPF NO.2 OR BETTER AT JOINT(S)

BRACING

TOP CHORD TO BE SHEATHED OR MAX. PURLIN SPACING = 6.25 FT.
MAX. UNBRACED BOTTOM CHORD LENGTH = 10.00 FT. OR RIGID CEILING DIRECTLY APPLIED.

ALL PITCH BREAKS AND PERIMETER CORNER JOINTS MUST BE LATERALLY RESTRAINED.

LOADING

TOTAL LOAD CASES: (4)

CHORDS

MEMB. FR-TO	MAX. FACTORED FORCE (LBS)	FACTORED VERT. LOAD (PLF) FROM	TO	LC1	MAX CSI (LC)	MAX. UNBRAC LENGTH
A- B	0 / 42	-84.3	-84.3	0.12 (1)	10.00	
B- C	-90 / 0	-84.3	-84.3	0.11 (1)	6.25	
C- D	-42 / 0	-84.3	-84.3	0.04 (1)	6.25	
D- E	-36 / 0	-84.3	-84.3	0.05 (1)	6.25	
E- F	-47 / 0	-84.3	-84.3	0.05 (1)	6.25	
F- G	-47 / 0	-84.3	-84.3	0.05 (1)	6.25	
G- H	-36 / 0	-84.3	-84.3	0.05 (1)	6.25	
H- I	-42 / 0	-84.3	-84.3	0.04 (1)	6.25	
I- J	-90 / 0	-84.3	-84.3	0.11 (1)	6.25	
J- K	0 / 42	-84.3	-84.3	0.12 (1)	10.00	
T- B	-266 / 0	0.0	0.0	0.03 (1)	7.81	
L- J	-266 / 0	0.0	0.0	0.03 (1)	7.81	
T- S	0 / 0	-28.0	-28.0	0.02 (2)	10.00	
S- R	0 / 0	-28.0	-28.0	0.02 (2)	10.00	
R- Q	0 / 28	-28.0	-28.0	0.03 (2)	10.00	
Q- P	0 / 25	-28.0	-28.0	0.02 (2)	10.00	
P- O	0 / 25	-28.0	-28.0	0.02 (2)	10.00	
O- N	0 / 28	-28.0	-28.0	0.03 (2)	10.00	
N- M	0 / 0	-28.0	-28.0	0.02 (2)	10.00	
M- L	0 / 0	-28.0	-28.0	0.02 (2)	10.00	

WEBS

MEMB. FR-TO	MAX. FACTORED FORCE (LBS)	MAX CSI (LC)
P- F	-94 / 0	0.13 (1)
Q- E	-191 / 0	0.12 (1)
R- D	-159 / 0	0.04 (1)
S- C	-34 / 0	0.01 (1)
O- G	-191 / 0	0.12 (1)
N- H	-159 / 0	0.04 (1)
M- I	-34 / 0	0.01 (1)
C- R	0 / 46	0.01 (1)
N- I	0 / 46	0.01 (1)

DESIGN CRITERIA

SPECIFIED LOADS:

TOP CH.	LL	=	25.6	PSF
	DL	=	3.0	PSF
BOT CH.	LL	=	10.5	PSF
	DL	=	7.0	PSF
TOTAL LOAD		=	46.1	PSF

SPACING = 24.0 IN. C/C

THIS TRUSS IS DESIGNED FOR RESIDENTIAL OR SMALL BUILDING REQUIREMENTS OF PART 9, NBCC 2010

THIS DESIGN COMPLIES WITH:
- PART 9 OF OBC 2012 , BCBC 2012 , ABC 2014
- CSA 086-09
- TPIC 2011

DESIGN ASSUMPTIONS
-OVERHANG NOT TO BE ALTERED OR CUT OFF.

(55 % OF 31.3 P.S.F. G.S.L. PLUS 8.4 P.S.F. RAIN LOAD) EQUALS 25.6 P.S.F. SPECIFIED ROOF LIVE LOAD

CSI: TC=0.12 (A-B:1) , BC=0.03 (Q-R:2) , WB=0.13 (F-P:1) , SSI=0.08 (B-C:1)

DOL LUMBER=1.00 NAIL=1.00 LS BEND=1.10 COMP=1.10 SHEAR=1.10 TENS= 1.10

COMPANION LIVE LOAD FACTOR = 0.50

TRUSS PLATE MANUFACTURER IS NOT RESPONSIBLE FOR QUALITY CONTROL IN THE TRUSS MANUFACTURING PLANT .

NAIL VALUES

PLATE	GRIP(DRY) (PSI) MAX	MIN	SHEAR (PLI) MAX	MIN	SECTION (PLI) MAX	MIN
MT20	618	354	1867	822	2284	1656

PLATE PLACEMENT TOL. = 0.250 inches

PLATE ROTATION TOL. = 5.0 Deg.

JSI GRIP= 0.19 (F) (INPUT = 0.90)
JSI METAL= 0.05 (E) (INPUT = 1.00)

LICENSED PROFESSIONAL ENGINEER
S. KATSOULAKOS
PROVINCE OF ONTARIO

DWG NO. TAM 43591-17
STRUCTURAL
COMPONENT ONLY

JOB NAME	TRUSS NAME	QUANTITY	PLY	JOB DESC.	DRWG NO.
282769	T23	4	1	TRUSS DESC.	

Tamarack Roof Truss, Burlington

Version 8.030 S Oct 5 2016 MiTek Industries, Inc. Tue Aug 29 09:08:52 2017 Page 1
ID:dP6iGUfCrc5IDXmaOx0vTjyjMdB-EBs8N3B13NGyZMfC2j901F9cpw16wUBroH4Ghcyj2SP

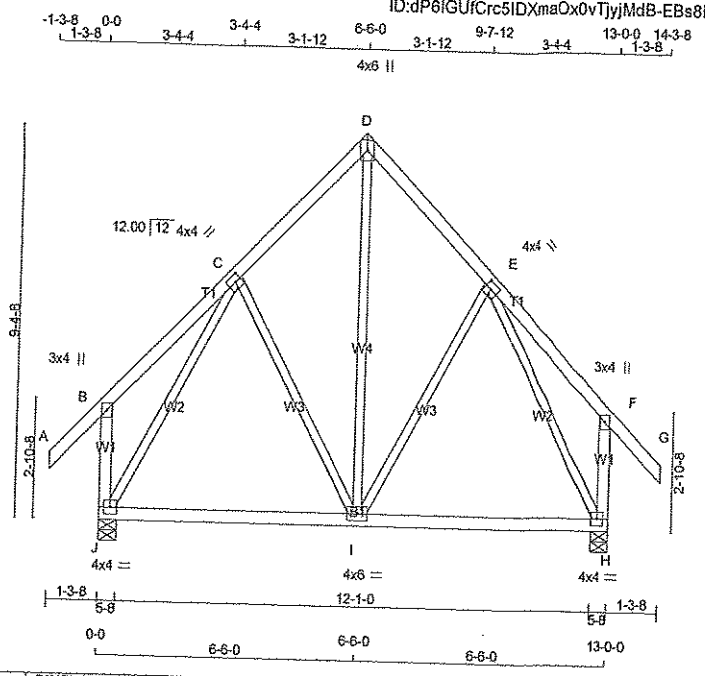

TOTAL WEIGHT = 4 X 74 = 295 lb
[M][F]

LUMBER
N. L. G. A. RULES

CHORDS	SIZE		LUMBER	DESCR.
A - D	2x4	DRY	No.2	SPF
D - G	2x4	DRY	No.2	SPF
J - B	2x4	DRY	No.2	SPF
H - F	2x4	DRY	No.2	SPF
J - H	2x4	DRY	No.2	SPF
ALL WEBS EXCEPT	2x3	DRY	No.2	SPF

DRY: SEASONED LUMBER.

PLATES (table is in inches)

JT	TYPE	PLATES	W	LEN	Y	X
B	TMV+p	MT20	3.0	4.0		
C	TMWW-t	MT20	4.0	4.0	2.00	1.75
D	TTW+p	MT20	4.0	6.0		
E	TMWW-t	MT20	4.0	4.0	2.00	1.75
F	TMV+p	MT20	3.0	4.0		
H	BMVW1-t	MT20	4.0	4.0		
I	BMWWW-t	MT20	4.0	6.0		
J	BMVW1-t	MT20	4.0	4.0		

DIMENSIONS, SUPPORTS AND LOADINGS SPECIFIED BY FABRICATOR TO BE VERIFIED BY BUILDING DESIGNER

BEARINGS

JT	FACTORED GROSS REACTION VERT	HORZ	MAXIMUM FACTORED GROSS REACTION DOWN	HORZ	UPLIFT	INPUT BRG IN-SX	REQRD BRG IN-SX
J	847	0	847	0	0	5-8	5-8
H	847	0	847	0	0	5-8	5-8

UNFACTORED REACTIONS

JT	1ST LCASE COMBINED	MAX./MIN. COMPONENT REACTIONS SNOW	LIVE	PERM.LIVE	WIND	DEAD	SOIL
J	679	404 / 0	136 / 0	0 / 0	0 / 0	138 / 0	0 / 0
H	679	404 / 0	136 / 0	0 / 0	0 / 0	138 / 0	0 / 0

BEARING MATERIAL TO BE SPF NO.2 OR BETTER AT JOINT(S) J, H

BRACING
TOP CHORD TO BE SHEATHED OR MAX. PURLIN SPACING = 6.25 FT.
MAX. UNBRACED BOTTOM CHORD LENGTH = 10.00 FT. OR RIGID CEILING DIRECTLY APPLIED.

ALL PITCH BREAKS AND PERIMETER CORNER JOINTS MUST BE LATERALLY RESTRAINED.

LOADING
TOTAL LOAD CASES: (4)

CHORDS

MEMB. FR-TO	MAX. FACTORED FORCE (LBS)	FACTORED VERT. LOAD (PLF) FROM	TO	LC1	MAX CSI (LC)	MAX. UNBRAC LENGTH
A- B	0 / 42	-84.3	-84.3	0.12 (1)		10.00
B- C	0 / 22	-84.3	-84.3	0.14 (1)		10.00
C- D	-416 / 0	-84.3	-84.3	0.11 (1)		6.25
D- E	-416 / 0	-84.3	-84.3	0.11 (1)		6.25
E- F	0 / 22	-84.3	-84.3	0.14 (1)		10.00
F- G	0 / 42	-84.3	-84.3	0.12 (1)		10.00
J- B	-225 / 0	0.0	0.0	0.03 (1)		7.81
H- F	-225 / 0	0.0	0.0	0.03 (1)		7.81
J- I	0 / 313	-28.0	-28.0	0.38 (2)		10.00
I- H	0 / 313	-28.0	-28.0	0.38 (2)		10.00

WEBS

MEMB. FR-TO	MAX. FACTORED FORCE (LBS)	MAX CSI (LC)
I- D	0 / 357	0.08 (2)
I- E	-70 / 56	0.06 (1)
C- I	-70 / 56	0.06 (1)
J- C	-635 / 0	0.49 (1)
E- H	-635 / 0	0.49 (1)

DESIGN CRITERIA

SPECIFIED LOADS:

TOP CH.	LL	=	25.6	PSF
	DL	=	3.0	PSF
BOT CH.	LL	=	10.5	PSF
	DL	=	7.0	PSF
TOTAL LOAD		=	46.1	PSF

SPACING = 24.0 IN. C/C

THIS TRUSS IS DESIGNED FOR RESIDENTIAL OR SMALL BUILDING REQUIREMENTS OF PART 9, NBCC 2010

THIS DESIGN COMPLIES WITH:
- PART 9 OF OBC 2012 , BCBC 2012 , ABC 2014
- CSA 086-09
- TPIC 2011

(55 % OF 31.3 P.S.F. G.S.L. PLUS 8.4 P.S.F. RAIN LOAD) EQUALS 25.6 P.S.F. SPECIFIED ROOF LIVE LOAD

ALLOWABLE DEFL.(LL)= L/360 (0.43")
CALCULATED VERT. DEFL.(LL) = L/ 999 (0.05")
ALLOWABLE DEFL.(TL)= L/360 (0.43")
CALCULATED VERT. DEFL.(TL) = L/ 999 (0.09")

CSI: TC=0.14 (E-F:1) , BC=0.38 (I-J:2) , WB=0.49 (C-J:1) , SSI=0.15 (H-I:3)

DOL LUMBER=1.00 NAIL=1.00 LS BEND=1.10 COMP=1.10 SHEAR=1.10 TENS= 1.10

COMPANION LIVE LOAD FACTOR = 0.50

TRUSS PLATE MANUFACTURER IS NOT RESPONSIBLE FOR QUALITY CONTROL IN THE TRUSS MANUFACTURING PLANT .

NAIL VALUES

PLATE	GRIP(DRY) (PSI) MAX	MIN	SHEAR (PLI) MAX	MIN	SECTION (PLI) MAX	MIN
MT20	618	354	1687	822	2284	1656

PLATE PLACEMENT TOL. = 0.250 inches

PLATE ROTATION TOL. = 5.0 Deg.

JSI GRIP= 0.72 (E) (INPUT = 0.90)
JSI METAL= 0.24 (E) (INPUT = 1.00)

LICENSED PROFESSIONAL ENGINEER
S. KATSOULAKOS
PROVINCE OF ONTARIO

DWG NO. TAM 43605-17
STRUCTURAL
COMPONENT ONLY

JOB NAME	TRUSS NAME	QUANTITY	PLY	JOB DESC.	DRWG NO.
282769	T24	3	1	TRUSS DESC.	

Tamarack Roof Truss, Burlington

Version 8.030 S Oct 5 2016 MiTek Industries, Inc. Tue Aug 29 09:08:52 2017 Page 1
ID:dP6IGUfCrc5IDXmaOx0vTjyjMdB-EBs8N3B13NGyZMfC2j901F9cvw0jwXoroH4Ghcyj2SP

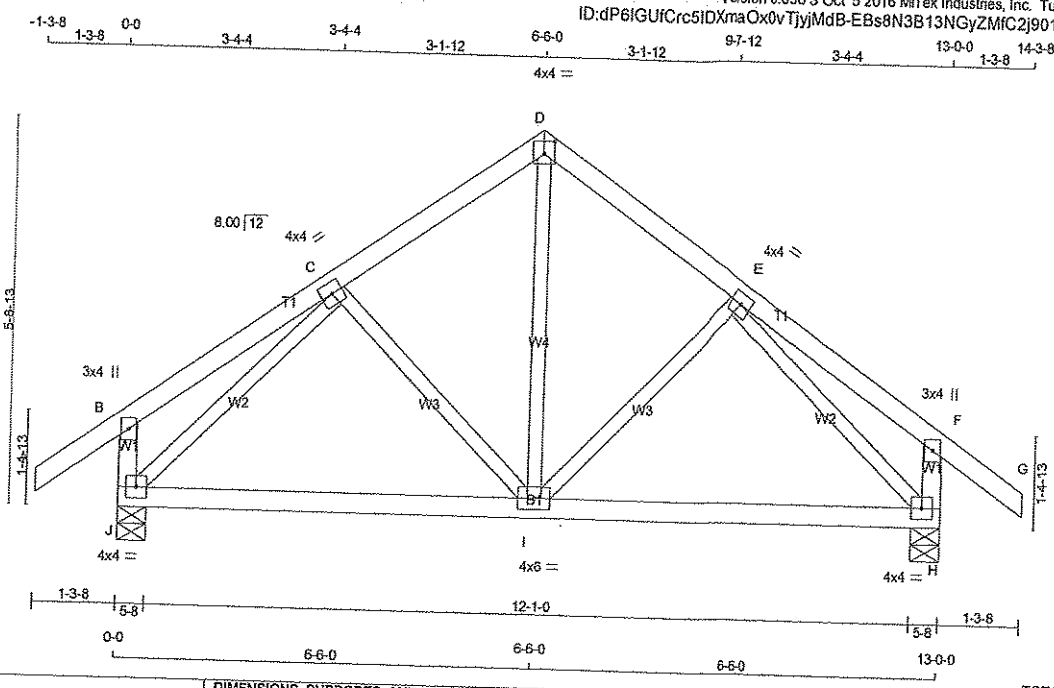

TOTAL WEIGHT = 3 X 57 = 170 lb
[M][F]

LUMBER
N. L. G. A. RULES

CHORDS	SIZE		LUMBER	DESCR.
A - D	2x4	DRY	No.2	SPF
D - G	2x4	DRY	No.2	SPF
J - B	2x4	DRY	No.2	SPF
H - F	2x4	DRY	No.2	SPF
J - H	2x4	DRY	No.2	SPF
ALL WEBS EXCEPT	2x3	DRY	No.2	SPF

DRY: SEASONED LUMBER.

PLATES (table is in inches)

JT	TYPE	PLATES	W	LEN	Y	X
B	TMV+p	MT20	3.0	4.0		
C	TMWW-t	MT20	4.0	4.0		
D	TTW-p	MT20	4.0	4.0	2.25	2.00
E	TMWW-t	MT20	4.0	4.0		
F	TMV+p	MT20	3.0	4.0		
H	BMVW1-t	MT20	4.0	4.0		
I	BMWWW-t	MT20	4.0	6.0		
J	BMVW1-t	MT20	4.0	4.0		

DIMENSIONS, SUPPORTS AND LOADINGS SPECIFIED BY FABRICATOR TO BE VERIFIED BY BUILDING DESIGNER

BEARINGS

JT	FACTORED GROSS REACTION VERT	HORZ	MAXIMUM FACTORED GROSS REACTION DOWN	HORZ	UPLIFT	INPUT BRG IN-SX	REQRD BRG IN-SX
J	845	0	845	0	0	5-8	5-8
H	845	0	845	0	0	5-8	5-8

UNFACTORED REACTIONS

JT	1ST LCASE COMBINED	MAX /MIN. COMPONENT REACTIONS SNOW	LIVE	PERM.LIVE	WIND	DEAD	SOIL
J	678	403 / 0	137 / 0	0 / 0	0 / 0	138 / 0	0 / 0
H	678	403 / 0	137 / 0	0 / 0	0 / 0	138 / 0	0 / 0

BEARING MATERIAL TO BE SPF NO.2 OR BETTER AT JOINT(S) J, H

BRACING
TOP CHORD TO BE SHEATHED OR MAX. PURLIN SPACING = 6.25 FT.
MAX. UNBRACED BOTTOM CHORD LENGTH = 10.00 FT. OR RIGID CEILING DIRECTLY APPLIED.

ALL PITCH BREAKS AND PERIMETER CORNER JOINTS MUST BE LATERALLY RESTRAINED.

LOADING
TOTAL LOAD CASES: (4)

CHORDS

MEMB. FR-TO	MAX. FACTORED FORCE (LBS)	FACTORED VERT. LOAD (PLF) FROM	TO	LC1	MAX CSI (LC)	MAX. UNBRAC LENGTH
A- B	0 / 32	-84.3	-84.3	0.11 (1)		10.00
B- C	0 / 17	-84.3	-84.3	0.14 (1)		10.00
C- D	-574 / 0	-84.3	-84.3	0.11 (1)		6.25
D- E	-574 / 0	-84.3	-84.3	0.11 (1)		6.25
E- F	0 / 17	-84.3	-84.3	0.14 (1)		10.00
F- G	0 / 32	-84.3	-84.3	0.11 (1)		10.00
J- B	-222 / 0	0.0	0.0	0.02 (1)		7.81
H- F	-222 / 0	0.0	0.0	0.02 (1)		7.81
J- I	0 / 554	-28.0	-28.0	0.40 (2)		10.00
I- H	0 / 554	-28.0	-28.0	0.40 (2)		10.00

WEBS

MEMB. FR-TO	MAX. FACTORED FORCE (LBS)	MAX CSI (LC)
I- D	0 / 404	0.09 (1)
I- E	-127 / 44	0.04 (1)
C- I	-127 / 44	0.04 (1)
J- C	-783 / 0	0.26 (1)
E- H	-783 / 0	0.26 (1)

DESIGN CRITERIA

SPECIFIED LOADS:

TOP CH.	LL =	25.6	PSF
	DL =	3.0	PSF
BOT CH.	LL =	10.5	PSF
	DL =	7.0	PSF
TOTAL LOAD	=	46.1	PSF

SPACING = 24.0 IN. C/C

THIS TRUSS IS DESIGNED FOR RESIDENTIAL OR SMALL BUILDING REQUIREMENTS OF PART 9, NBCC 2010

THIS DESIGN COMPLIES WITH:
- PART 9 OF OBC 2012 , BCBC 2012 , ABC 2014
- CSA 086-09
- TPIC 2011

(55 % OF 31.3 P.S.F. G.S.L. PLUS 8.4 P.S.F. RAIN LOAD) EQUALS 25.6 P.S.F. SPECIFIED ROOF LIVE LOAD

ALLOWABLE DEFL.(LL)= L/360 (0.43")
CALCULATED VERT. DEFL.(LL) = L/ 999 (0.05")
ALLOWABLE DEFL.(TL)= L/360 (0.43")
CALCULATED VERT. DEFL.(TL) = L/ 999 (0.09")

CSI: TC=0.14 (E-F:1) , BC=0.40 (I-J:2) , WB=0.26 (E-H:1) , SSI=0.15 (H-I:3)

DOL LUMBER=1.00 NAIL=1.00 LS BEND=1.10 COMP=1.10 SHEAR=1.10 TENS= 1.10

COMPANION LIVE LOAD FACTOR = 0.50

TRUSS PLATE MANUFACTURER IS NOT RESPONSIBLE FOR QUALITY CONTROL IN THE TRUSS MANUFACTURING PLANT .

NAIL VALUES

PLATE	GRIP(DRY) (PSI) MAX	MIN	SHEAR (PLI) MAX	MIN	SECTION (PLI) MAX	MIN
MT20	618	354	1667	822	2284	1656

PLATE PLACEMENT TOL. = 0.250 inches

PLATE ROTATION TOL. = 5.0 Deg.

JSI GRIP= 0.69 (C) (INPUT = 0.90)
JSI METAL= 0.28 (E) (INPUT = 1.00)

LICENSED PROFESSIONAL ENGINEER
8242
S. KATSOULAKOS
PROVINCE OF ONTARIO

DWG NO. TAM 43606 17
STRUCTURAL
COMPONENT ONLY

JOB NAME	TRUSS NAME	QUANTITY	PLY	JOB DESC.	DRWG NO.
282770	T30	1	1	TRUSS DESC.	

Tamarack Roof Truss, Burlington

Version 8.030 S Oct 5 2016 MiTek Industries, Inc. Tue Aug 29 09:11:03 2017 Page 1
ID:7?CtUZkq2cs_4ktSThKuolyjLhh-uOHgssmCDdmNmUANDk?krt4yojgG6oE8w9JhnWyj2QM

Scale = 1:38.7

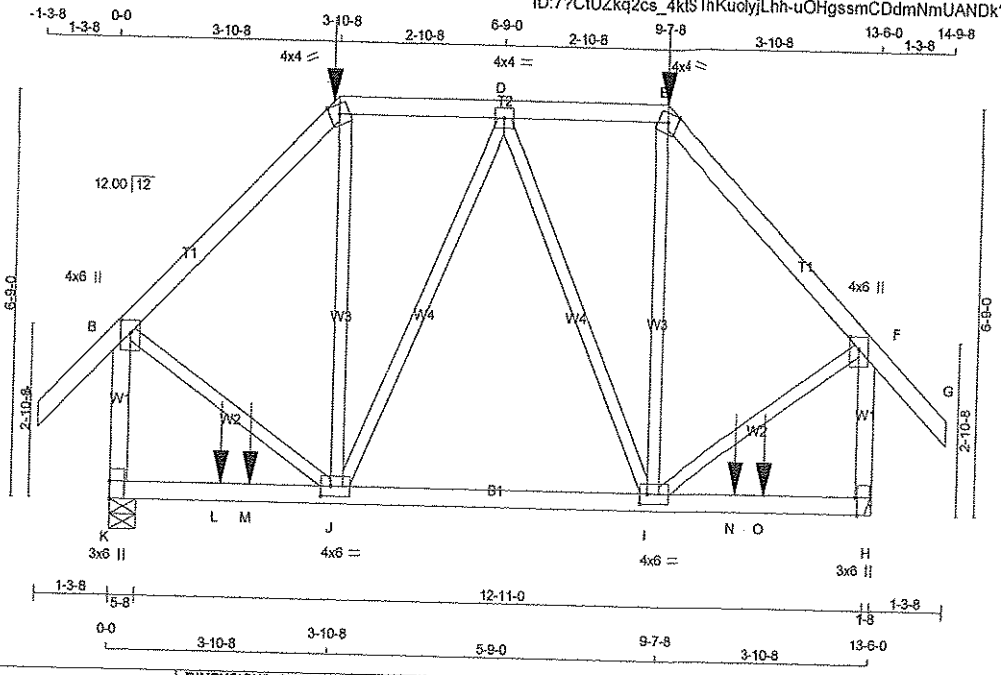

TOTAL WEIGHT = 73 lb
[M]

LUMBER

N. L. G. A. RULES

CHORDS	SIZE		LUMBER	DESCR.
A - C	2x4	DRY	No.2	SPF
C - E	2x4	DRY	No.2	SPF
E - G	2x4	DRY	No.2	SPF
K - B	2x4	DRY	No.2	SPF
H - F	2x4	DRY	No.2	SPF
K - H	2x4	DRY	No.2	SPF
ALL WEBS EXCEPT	2x3	DRY	No.2	SPF

DRY: SEASONED LUMBER.

PLATES (table is in inches)

JT	TYPE	PLATES	W	LEN	Y	X
B	TMVW+p	MT20	4.0	6.0	2.50	2.00
C	TTW-m	MT20	4.0	4.0	Edge	
D	TMWW-t	MT20	4.0	4.0		
E	TTW-m	MT20	4.0	4.0	Edge	
F	TMVW+p	MT20	4.0	6.0	2.50	2.00
H	BMV1+t	MT20	3.0	6.0	Edge	0.50
I	BMWWW-t	MT20	4.0	6.0	2.00	1.50
J	BMWWW-t	MT20	4.0	6.0	2.00	2.00
K	BMV1+t	MT20	3.0	6.0	3.50	

Edge - INDICATES REFERENCE CORNER OF PLATE TOUCHES EDGE OF CHORD.

HANGERS NOTES

1) SPECIAL HANGER(S) OR CONNECTION(S) REQUIRED TO SUPPORT CONCENTRATED LOAD(S) 184.4 lbs FACTORED DOWN AT 3-10-8, AND 184.4 lbs FACTORED DOWN AT 9-7-8 ON TOP CHORD, AND 42.4 lbs FACTORED DOWN AT 1-11-4, 527.1 lbs FACTORED DOWN AT 2-5-8, AND 527.1 lbs FACTORED DOWN AT 11-0-8, AND 42.4 lbs FACTORED DOWN AT 11-6-12 ON BOTTOM CHORD. DESIGN FOR UNSPECIFIED CONNECTION(S) IS DELEGATED TO THE BUILDING DESIGNER.

DIMENSIONS, SUPPORTS AND LOADINGS SPECIFIED BY FABRICATOR TO BE VERIFIED BY BUILDING DESIGNER

BEARINGS

JT	FACTORED GROSS REACTION VERT	HORZ	MAXIMUM FACTORED GROSS REACTION DOWN	HORZ	UPLIFT	INPUT BRG	REQRD BRG
K	1610	0	1610	0	0	5-8	5-8
H	1610	0	1610	0	0	HANGER BY OTHERS	
						MIN. SEAT SIZE: 1-8	

UNFACTORED REACTIONS

JT	1ST LCASE COMBINED	MAX./MIN. COMPONENT REACTIONS SNOW	LIVE	PERM.LIVE	WIND	DEAD	SOIL
K	1279	780 / 0	245 / 0	0 / 0	0 / 0	253 / 0	0 / 0
H	1279	780 / 0	245 / 0	0 / 0	0 / 0	253 / 0	0 / 0

BEARING MATERIAL TO BE SPF NO.2 OR BETTER AT JOINT(S) K

BRACING

TOP CHORD TO BE SHEATHED OR MAX. PURLIN SPACING = 5.98 FT.
MAX. UNBRACED BOTTOM CHORD LENGTH = 10.00 FT. OR RIGID CEILING DIRECTLY APPLIED.

ALL PITCH BREAKS AND PERIMETER CORNER JOINTS MUST BE LATERALLY RESTRAINED.

LOADING

TOTAL LOAD CASES: (4)

CHORDS

MEMB. FR-TO	MAX. FACTORED FORCE (LBS)	FACTORED VERT. LOAD (PLF) FROM	TO	LC1	MAX CSI (LC)	MAX. UNBRAC LENGTH
A- B	0 / 42	-84.3	-84.3	0.13 (1)	10.00	
B- C	-959 / 0	-84.3	-84.3	0.27 (1)	5.98	
C- D	-679 / 0	-84.3	-84.3	0.12 (1)	6.25	
D- E	-679 / 0	-84.3	-84.3	0.12 (1)	6.25	
E- F	-959 / 0	-84.3	-84.3	0.27 (1)	5.98	
F- G	0 / 42	-84.3	-84.3	0.13 (1)	10.00	
K- B	-1390 / 0	0.0	0.0	0.23 (1)	6.87	
H- F	-1390 / 0	0.0	0.0	0.23 (1)	6.87	
K- L	0 / 0	-28.0	-28.0	0.67 (1)	10.00	
L- M	0 / 0	-28.0	-28.0	0.67 (1)	10.00	
M- J	0 / 0	-28.0	-28.0	0.67 (1)	10.00	
J- I	0 / 739	-28.0	-28.0	0.42 (1)	10.00	
I- N	0 / 0	-28.0	-28.0	0.67 (1)	10.00	
N- O	0 / 0	-28.0	-28.0	0.67 (1)	10.00	
O- H	0 / 0	-28.0	-28.0	0.67 (1)	10.00	

WEBS

MEMB. FR-TO	MAX. FACTORED FORCE (LBS)	MAX CSI (LC)
J- C	0 / 284	0.07 (2)
J- D	-152 / 0	0.15 (1)
D- I	-152 / 0	0.15 (1)
I- E	0 / 284	0.07 (2)
B- J	0 / 800	0.20 (1)
I- F	0 / 800	0.20 (1)

FACTORED CONCENTRATED LOADS (LBS)

JT	LOC.	LC1	MAX-	MAX+	FACE	DIR.	TYPE
C	3-10-8	-184	-184	---	BACK	VERT	TOTAL
E	9-7-8	-184	-184	---	BACK	VERT	TOTAL
L	1-11-4	-23	-42	---	BACK	VERT	TOTAL
M	2-5-8	-527	-527	---	BACK	VERT	TOTAL
N	11-0-8	-527	-527	---	BACK	VERT	TOTAL
O	11-6-12	-23	-42	---	BACK	VERT	TOTAL

DESIGN CRITERIA

SPECIFIED LOADS:

TOP CH.	LL	=	25.6	PSF
	DL	=	3.0	PSF
BOT CH.	LL	=	10.5	PSF
	DL	=	7.0	PSF
TOTAL LOAD		=	46.1	PSF

SPACING = 24.0 IN. C/C

LOADING IN FLAT SECTION BASED ON A SLOPE OF 6.00/12

THIS TRUSS IS DESIGNED FOR RESIDENTIAL OR SMALL BUILDING REQUIREMENTS OF PART 9, NBCC 2010

THIS DESIGN COMPLIES WITH:
- PART 9 OF OBC 2012 , BCBC 2012 , ABC 2014
- CSA 086-09
- TPIC 2011

(55 % OF 31.3 P.S.F. G.S.L. PLUS 8.4 P.S.F. RAIN LOAD) EQUALS 25.6 P.S.F. SPECIFIED ROOF LIVE LOAD

ALLOWABLE DEFL.(LL)= L/360 (0.45")
CALCULATED VERT. DEFL.(LL) = L/ 999 (0.08")
ALLOWABLE DEFL.(TL)= L/360 (0.45")
CALCULATED VERT. DEFL.(TL) = L/ 999 (0.13")

CSI: TC=0.27 (E-F:1) , BC=0.67 (H-I:1) , WB=0.20 (B-J:1) , SSI=0.38 (J-K:1)

DOL LUMBER=1.00 NAIL=1.00 LS BEND=1.00 COMP=1.00 SHEAR=1.00 TENS= 1.00

COMPANION LIVE LOAD FACTOR = 0.50

TRUSS PLATE MANUFACTURER IS NOT RESPONSIBLE FOR QUALITY CONTROL IN THE TRUSS MANUFACTURING PLANT .

NAIL VALUES

PLATE	GRIP(DRY) (PSI) MAX	MIN	SHEAR (PLI) MAX	MIN	SECTION (PLI) MAX	MIN
MT20	618	354	1667	822	2284	1656

PLATE PLACEMENT TOL. = 0.250 inches

PLATE ROTATION TOL. = 5.0 Deg.

JSI GRIP= 0.83 (F) (INPUT = 0.90)
JSI METAL= 0.24 (B) (INPUT = 1.00)

LICENSED PROFESSIONAL ENGINEER
S. KATSOULAKOS
PROVINCE OF ONTARIO

DWG NO. TAM43612-17
STRUCTURAL COMPONENT ONLY

JOB NAME	TRUSS NAME	QUANTITY	PLY	JOB DESC.	DRWG NO.
282770	T31	1	1	TRUSS DESC.	

Tamarack Roof Truss, Burlington

Version 8.030 S Oct 5 2016 MiTek Industries, Inc. Tue Aug 29 09:11:03 2017 Page 1
ID:??CtUZkq2cs_4klSThKuolyjLhh-uOHgssmCDdmNmUANDk?krt4x3jng6q88w9JhnWyj2QM

Scale = 1:49.1

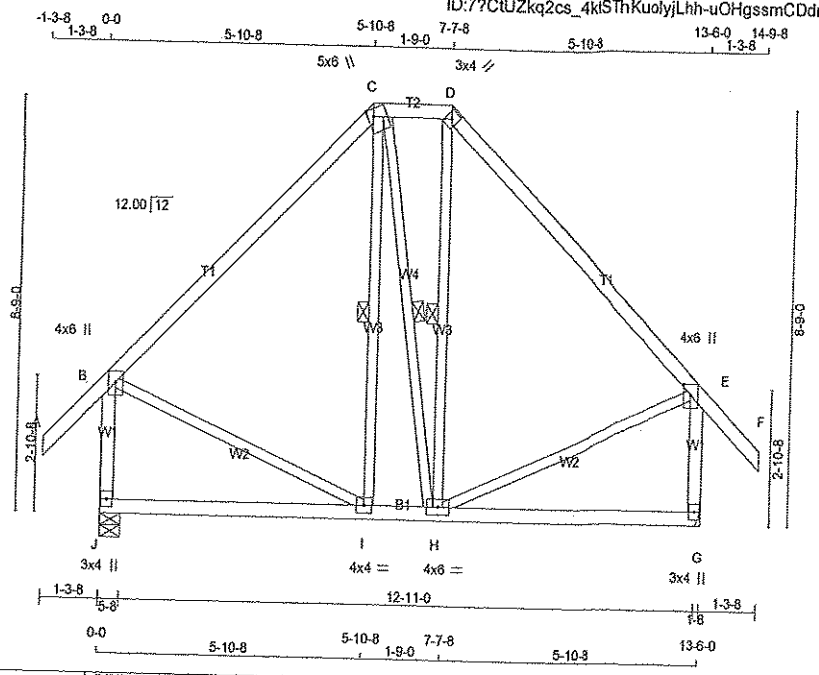

TOTAL WEIGHT = 77 lb
[M][F]

LUMBER
N. L. G. A. RULES

CHORDS	SIZE		LUMBER	DESCR.
A - C	2x4	DRY	No.2	SPF
C - D	2x4	DRY	No.2	SPF
D - F	2x4	DRY	No.2	SPF
J - B	2x4	DRY	No.2	SPF
G - E	2x4	DRY	No.2	SPF
J - G	2x4	DRY	No.2	SPF
ALL WEBS EXCEPT	2x3	DRY	No.2	SPF

DRY: SEASONED LUMBER.

PLATES (table is in inches)

JT	TYPE	PLATES	W	LEN	Y	X
B	TMVW+p	MT20	4.0	6.0	2.75	2.00
C	TTWW+m	MT20	5.0	6.0	2.00	1.50
D	TTW+h	MT20	3.0	4.0		
E	TMVW+p	MT20	4.0	6.0	2.75	2.00
G	BMV1+p	MT20	3.0	4.0		
H	BMWWW-t	MT20	4.0	6.0		
I	BMWW-t	MT20	4.0	4.0		
J	BMV1+p	MT20	3.0	4.0		

DIMENSIONS, SUPPORTS AND LOADINGS SPECIFIED BY FABRICATOR TO BE VERIFIED BY BUILDING DESIGNER

BEARINGS

JT	FACTORED GROSS REACTION VERT	HORZ	MAXIMUM FACTORED GROSS REACTION DOWN	HORZ	UPLIFT	INPUT BRG	REQRD BRG
J	875	0	875	0	0	5-8	5-8
G	875	0	875	0	0	IN-SX	IN-SX

HANGER BY OTHERS
MIN. SEAT SIZE: 1-8

UNFACTORED REACTIONS

JT	1ST LCASE COMBINED	MAX./MIN. COMPONENT REACTIONS SNOW	LIVE	PERM.LIVE	WIND	DEAD	SOIL
J	702	417 / 0	142 / 0	0 / 0	0 / 0	143 / 0	0 / 0
G	702	417 / 0	142 / 0	0 / 0	0 / 0	143 / 0	0 / 0

BEARING MATERIAL TO BE SPF NO.2 OR BETTER AT JOINT(S) J

BRACING
TOP CHORD TO BE SHEATHED OR MAX. PURLIN SPACING = 6.25 FT.
MAX. UNBRACED BOTTOM CHORD LENGTH = 10.00 FT. OR RIGID CEILING DIRECTLY APPLIED.

ALL PITCH BREAKS AND PERIMETER CORNER JOINTS MUST BE LATERALLY RESTRAINED.

1 LATERAL BRACE(S) AT 1/2 LENGTH OF C-I, C-H, D-H.

END VERTICAL(S) MUST BE SHEATHED OR HAVE BRACES AS INDICATED IN THE MAX. UNBRACED LENGTH COLUMN OF THE TABLE BELOW

LOADING
TOTAL LOAD CASES: (4)

CHORDS

MEMB. FR-TO	MAX. FACTORED FORCE (LBS)	FACTORED VERT. LOAD (PLF) FROM	TO	LC1	MAX CSI (LC)	MAX. UNBRAC LENGTH
A- B	0 / 42	-84.3	-84.3	0.12 (1)	10.00	
B- C	-438 / 0	-84.3	-84.3	0.38 (1)	6.25	
C- D	-309 / 0	-84.3	-84.3	0.03 (1)	6.25	
D- E	-438 / 0	-84.3	-84.3	0.38 (1)	6.25	
E- F	0 / 42	-84.3	-84.3	0.12 (1)	10.00	
J- B	-806 / 0	0.0	0.0	0.12 (1)	7.81	
G- E	-806 / 0	0.0	0.0	0.12 (1)	7.81	
J- I	0 / 0	-28.0	-28.0	0.21 (3)	10.00	
I- H	0 / 309	-28.0	-28.0	0.26 (2)	10.00	
H- G	0 / 0	-28.0	-28.0	0.22 (3)	10.00	

WEBS

MEMB. FR-TO	MAX. FACTORED FORCE (LBS)	MAX CSI (LC)
I- C	-10 / 136	0.03 (3)
C- H	0 / 4	0.00 (3)
H- D	-10 / 140	0.03 (3)
B- I	0 / 336	0.08 (1)
H- E	0 / 336	0.08 (1)

DESIGN CRITERIA

SPECIFIED LOADS:

TOP CH.	LL	=	25.6	PSF
	DL	=	3.0	PSF
BOT CH.	LL	=	10.5	PSF
	DL	=	7.0	PSF
TOTAL LOAD		=	46.1	PSF

SPACING = 24.0 IN. C/C

LOADING IN FLAT SECTION BASED ON A SLOPE OF 6.00/12

THIS TRUSS IS DESIGNED FOR RESIDENTIAL OR SMALL BUILDING REQUIREMENTS OF PART 9, NBCC 2010

THIS DESIGN COMPLIES WITH:
- PART 9 OF OBC 2012 , BCBC 2012 , ABC 2014
- CSA 086-09
- TPIC 2011

(55 % OF 31.3 P.S.F. G.S.L. PLUS 8.4 P.S.F. RAIN LOAD) EQUALS 25.6 P.S.F. SPECIFIED ROOF LIVE LOAD

ALLOWABLE DEFL.(LL)= L/360 (0.45")
CALCULATED VERT. DEFL.(LL) = L/ 999 (0.05")
ALLOWABLE DEFL.(TL)= L/360 (0.45")
CALCULATED VERT. DEFL.(TL) = L/ 999 (0.08")

CSI: TC=0.38 (B-C:1) , BC=0.26 (H-I:2) , WB=0.08 (B-I:1) , SSI=0.14 (D-E:1)

COL LUMBER=1.00 NAIL=1.00 LS BEND=1.10 COMP=1.10 SHEAR=1.10 TENS= 1.10

COMPANION LIVE LOAD FACTOR = 0.50

TRUSS PLATE MANUFACTURER IS NOT RESPONSIBLE FOR QUALITY CONTROL IN THE TRUSS MANUFACTURING PLANT .

NAIL VALUES

PLATE	GRIP(DRY) (PSI) MAX	MIN	SHEAR (PLI) MAX	MIN	SECTION (PLI) MAX	MIN
MT20	618	354	1687	822	2284	1656

PLATE PLACEMENT TOL. = 0.250 inches

PLATE ROTATION TOL. = 5.0 Deg.

JSI GRIP= 0.71 (D) (INPUT = 0.90)
JSI METAL= 0.14 (B) (INPUT = 1.00)

LICENSED PROFESSIONAL ENGINEER
S. KATSOULAKOS
PROVINCE OF ONTARIO

DWG NO. TAM43613-17
STRUCTURAL
COMPONENT ONLY

JOB NAME	TRUSS NAME	QUANTITY	PLY	JOB DESC.	DRWG NO.
282770	T32	1	1	TRUSS DESC.	

Tamarack Roof Truss, Burlington

Version 8.030 S Oct 5 2016 MiTek Industries, Inc. Tue Aug 29 09:11:03 2017 Page 1
ID:7?CtUZkq2cs_4ktSThKuolyjLhh-uOHgssmCDdmNmUANDk?krt4yJjox6q_8w9JhnWyj2QM

Scale = 1:38.8

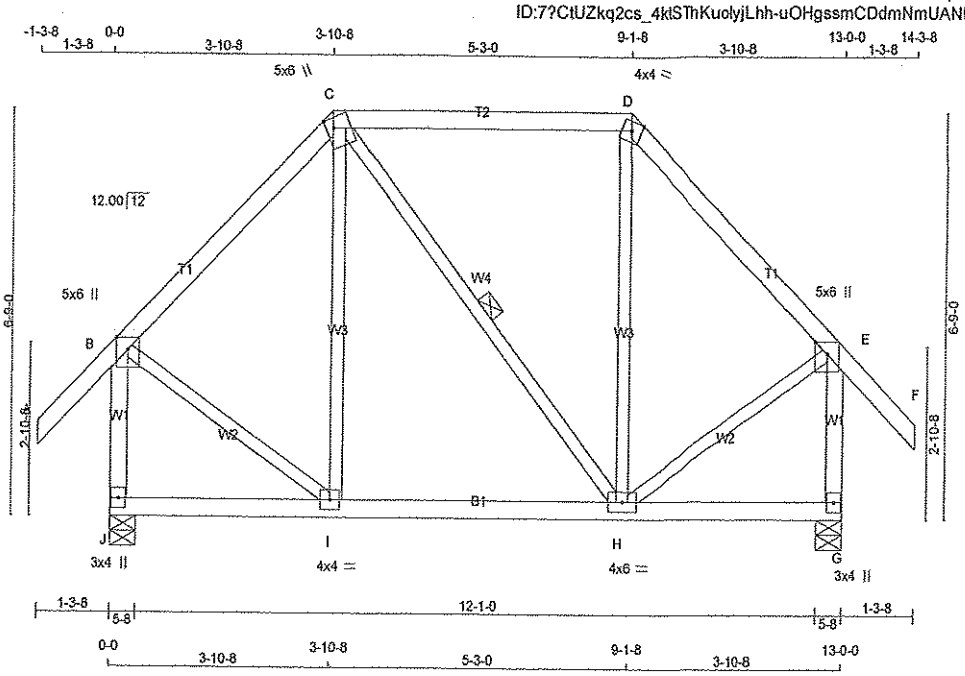

TOTAL WEIGHT = 67 lb

LUMBER
N. L. G. A. RULES

CHORDS	SIZE		LUMBER	DESCR.
A - C	2x4	DRY	No.2	SPF
C - D	2x4	DRY	No.2	SPF
D - F	2x4	DRY	No.2	SPF
J - B	2x4	DRY	No.2	SPF
G - E	2x4	DRY	No.2	SPF
J - G	2x4	DRY	No.2	SPF
ALL WEBS EXCEPT	2x3	DRY	No.2	SPF

DRY: SEASONED LUMBER.

PLATES (table is in inches)

JT	TYPE	PLATES	W	LEN	Y	X
B	TMVW+p	MT20	5.0	6.0	Edge	
C	TTWW+m	MT20	5.0	6.0	2.00	1.50
D	TTW-m	MT20	4.0	4.0	Edge	
E	TMVW+p	MT20	5.0	6.0	Edge	
G	BMV1+p	MT20	3.0	4.0		
H	BMWWW-t	MT20	4.0	6.0		
I	BMWW-t	MT20	4.0	4.0		
J	BMV1+p	MT20	3.0	4.0		

Edge - INDICATES REFERENCE CORNER OF PLATE TOUCHES EDGE OF CHORD.

DIMENSIONS, SUPPORTS AND LOADINGS SPECIFIED BY FABRICATOR TO BE VERIFIED BY BUILDING DESIGNER

BEARINGS

JT	FACTORED GROSS REACTION VERT	HORZ	MAXIMUM FACTORED GROSS REACTION DOWN	HORZ	UPLIFT	INPUT BRG IN-SX	REQRD BRG IN-SX
J	847	0	847	0	0	5-8	5-8
G	847	0	847	0	0	5-8	5-8

UNFACTORED REACTIONS

JT	1ST LCASE COMBINED	MAX./MIN. COMPONENT REACTIONS SNOW	LIVE	PERM.LIVE	WIND	DEAD	SOIL
J	679	404 / 0	137 / 0	0 / 0	0 / 0	138 / 0	0 / 0
G	679	404 / 0	137 / 0	0 / 0	0 / 0	138 / 0	0 / 0

BEARING MATERIAL TO BE SPF NO.2 OR BETTER AT JOINT(S) J, G

BRACING
TOP CHORD TO BE SHEATHED OR MAX. PURLIN SPACING = 6.25 FT.
MAX. UNBRACED BOTTOM CHORD LENGTH = 10.00 FT. OR RIGID CEILING DIRECTLY APPLIED.

ALL PITCH BREAKS AND PERIMETER CORNER JOINTS MUST BE LATERALLY RESTRAINED.

1 LATERAL BRACE(S) AT 1/2 LENGTH OF C-H.

END VERTICAL(S) MUST BE SHEATHED OR HAVE BRACES AS INDICATED IN THE MAX. UNBRACED LENGTH COLUMN OF THE TABLE BELOW

LOADING
TOTAL LOAD CASES: (4)

CHORDS

MEMB. FR-TO	MAX. FACTORED FORCE (LBS)	FACTORED VERT. LOAD LC1 (PLF) FROM	TO	MAX CSI (LC)	MAX. UNBRAC LENGTH
A- B	0 / 42	-84.3	-84.3	0.12 (1)	10.00
B- C	-454 / 0	-84.3	-84.3	0.16 (1)	6.25
C- D	-318 / 0	-84.3	-84.3	0.30 (1)	6.25
D- E	-453 / 0	-84.3	-84.3	0.16 (1)	6.25
E- F	0 / 42	-84.3	-84.3	0.12 (1)	10.00
J- B	-805 / 0	0.0	0.0	0.12 (1)	7.81
G- E	-805 / 0	0.0	0.0	0.12 (1)	7.81
J- I	0 / 0	-28.0	-28.0	0.13 (3)	10.00
I- H	0 / 319	-28.0	-28.0	0.17 (2)	10.00
H- G	0 / 0	-28.0	-28.0	0.14 (3)	10.00

WEBS

MEMB. FR-TO	MAX. FACTORED FORCE (LBS)	MAX CSI (LC)
I- C	-62 / 137	0.05 (1)
C- H	0 / 0	0.09 (1)
H- D	-63 / 138	0.05 (1)
B- I	0 / 378	0.09 (1)
H- E	0 / 378	0.09 (1)

DESIGN CRITERIA

SPECIFIED LOADS:

TOP CH.	LL =	25.6	PSF
	DL =	3.0	PSF
BOT CH.	LL =	10.5	PSF
	DL =	7.0	PSF
TOTAL LOAD	=	46.1	PSF

SPACING = 24.0 IN. C/C

LOADING IN FLAT SECTION BASED ON A SLOPE OF 6.00/12

THIS TRUSS IS DESIGNED FOR RESIDENTIAL OR SMALL BUILDING REQUIREMENTS OF PART 9, NBCC 2010

THIS DESIGN COMPLIES WITH:
- PART 9 OF OBC 2012 , BCBC 2012 , ABC 2014
- CSA 086-09
- TPIC 2011

(55 % OF 31.3 P.S.F. G.S.L. PLUS 8.4 P.S.F. RAIN LOAD) EQUALS 25.6 P.S.F. SPECIFIED ROOF LIVE LOAD

ALLOWABLE DEFL.(LL)= L/360 (0.43")
CALCULATED VERT. DEFL.(LL) = L/ 999 (0.02")
ALLOWABLE DEFL.(TL)= L/360 (0.43")
CALCULATED VERT. DEFL.(TL) = L/ 999 (0.02")

CSI: TC=0.30 (C-D:1) , BC=0.17 (H-I:2) , WB=0.09 (B-I:1) , SSI=0.17 (C-D:1)

DOL LUMBER=1.00 NAIL=1.00 LS BEND=1.10 COMP=1.10 SHEAR=1.10 TENS= 1.10

COMPANION LIVE LOAD FACTOR = 0.50

TRUSS PLATE MANUFACTURER IS NOT RESPONSIBLE FOR QUALITY CONTROL IN THE TRUSS MANUFACTURING PLANT .

NAIL VALUES

PLATE	GRIP(DRY) (PSI) MAX	MIN	SHEAR (PLI) MAX	MIN	SECTION (PLI) MAX	MIN
MT20	618	354	1667	822	2284	1656

PLATE PLACEMENT TOL. = 0.250 inches

PLATE ROTATION TOL. = 5.0 Deg.

JSI GRIP= 0.47 (H) (INPUT = 0.90)
JSI METAL= 0.12 (I) (INPUT = 1.00)

LICENSED PROFESSIONAL ENGINEER
82912
S. KATSOULAKOS
PROVINCE OF ONTARIO

DWG NO. TAM 43614-17
STRUCTURAL
COMPONENT ONLY

JOB NAME	TRUSS NAME	QUANTITY	PLY	JOB DESC.	DRWG NO.
282770	T32Z	1	1	TRUSS DESC.	

Tamarack Roof Truss, Burlington

Version 8.030 S Oct 5 2016 MiTek Industries, Inc. Tue Aug 29 09:11:04 2017 Page 1

ID:7?CtUZkq2cs_4ktSThKuolyjLhh-Mbr24Cnq_wuDOelanRWzN4d4b7?_rGgH9p2FJzyj2QU

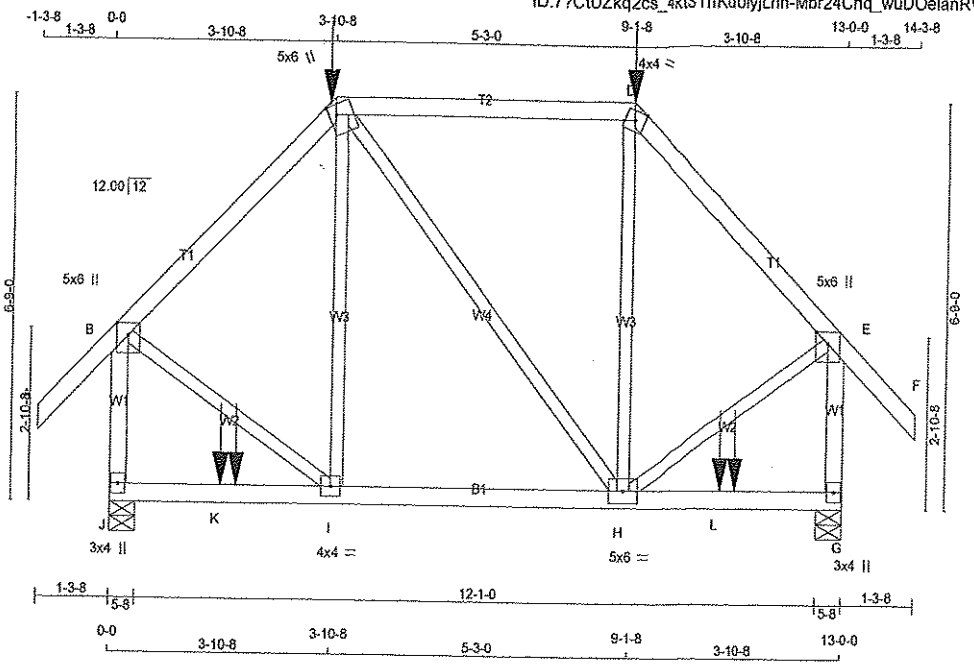

Scale = 1:38.8

TOTAL WEIGHT = 67 lb [M]

LUMBER

N. L. G. A. RULES

CHORDS	SIZE		LUMBER	DESCR.
A - C	2x4	DRY	No.2	SPF
C - D	2x4	DRY	No.2	SPF
D - F	2x4	DRY	No.2	SPF
J - B	2x4	DRY	No.2	SPF
G - E	2x4	DRY	No.2	SPF
J - G	2x4	DRY	No.2	SPF
ALL WEBS EXCEPT	2x3	DRY	No.2	SPF

DRY: SEASONED LUMBER.

PLATES (table is in inches)

JT	TYPE	PLATES	W	LEN	Y	X
B	TMVW+p	MT20	5.0	6.0	Edge	
C	TTWW+m	MT20	5.0	6.0	2.00	1.50
D	TTW-m	MT20	4.0	4.0	Edge	
E	TMVW+p	MT20	5.0	6.0	Edge	
G	BMV1+p	MT20	3.0	4.0		
H	BMWWW-t	MT20	5.0	6.0		
I	BMWW-t	MT20	4.0	4.0		
J	BMV1+p	MT20	3.0	4.0		

Edge - INDICATES REFERENCE CORNER OF PLATE TOUCHES EDGE OF CHORD.

HANGERS NOTES

1) SPECIAL HANGER(S) OR CONNECTION(S) REQUIRED TO SUPPORT CONCENTRATED LOAD(S) 184.4 lbs FACTORED DOWN AT 3-10-8, AND 184.4 lbs FACTORED DOWN AT 9-1-8 ON TOP CHORD, AND 42.4 lbs FACTORED DOWN AT 1-11-4, 527.1 lbs FACTORED DOWN AT 2-2-8, AND 527.1 lbs FACTORED DOWN AT 10-9-8, AND 42.4 lbs FACTORED DOWN AT 11-0-12 ON BOTTOM CHORD. DESIGN FOR UNSPECIFIED CONNECTION(S) IS DELEGATED TO THE BUILDING DESIGNER.

DIMENSIONS, SUPPORTS AND LOADINGS SPECIFIED BY FABRICATOR TO BE VERIFIED BY BUILDING DESIGNER

BEARINGS

JT	FACTORED GROSS REACTION VERT	HORZ	MAXIMUM FACTORED GROSS REACTION DOWN	HORZ	UPLIFT	INPUT BRG IN-SX	REQRD BRG IN-SX
J	1593	0	1593	0	0	5-8	5-8
G	1570	0	1570	0	0	5-8	5-8

UNFACTORED REACTIONS

JT	1ST LCASE COMBINED	MAX./MIN. COMPONENT REACTIONS SNOW	LIVE	PERM.LIVE	WIND	DEAD	SOIL
J	1265	773 / 0	242 / 0	0 / 0	0 / 0	250 / 0	0 / 0
G	1246	762 / 0	237 / 0	0 / 0	0 / 0	246 / 0	0 / 0

BEARING MATERIAL TO BE SPF NO.2 OR BETTER AT JOINT(S) J, G

BRACING

TOP CHORD TO BE SHEATHED OR MAX. PURLIN SPACING = 6.13 FT.
MAX. UNBRACED BOTTOM CHORD LENGTH = 10.00 FT. OR RIGID CEILING DIRECTLY APPLIED.

ALL PITCH BREAKS AND PERIMETER CORNER JOINTS MUST BE LATERALLY RESTRAINED.

LOADING

TOTAL LOAD CASES: (4)

CHORDS

MEMB. FR-TO	MAX. FACTORED FORCE (LBS)	FACTORED VERT. LOAD (PLF) FROM	TO	LC1	MAX CSI (LC)	MAX. UNBRAC LENGTH
A- B	0 / 42	-84.3	-84.3	0.13 (1)	10.00	
B- C	-884 / 0	-84.3	-84.3	0.26 (1)	6.16	
C- D	-634 / 0	-84.3	-84.3	0.46 (1)	6.25	
D- E	-898 / 0	-84.3	-84.3	0.26 (1)	6.13	
E- F	0 / 42	-84.3	-84.3	0.13 (1)	10.00	
J- B	-1303 / 0	0.0	0.0	0.21 (1)	7.03	
G- E	-1320 / 0	0.0	0.0	0.22 (1)	7.00	
J- K	0 / 0	-28.0	-28.0	0.76 (1)	10.00	
K- I	0 / 0	-28.0	-28.0	0.76 (1)	10.00	
I- H	0 / 623	-28.0	-28.0	0.41 (1)	10.00	
H- L	0 / 0	-28.0	-28.0	0.73 (1)	10.00	
L- G	0 / 0	-28.0	-28.0	0.73 (1)	10.00	

WEBS

MEMB. FR-TO	MAX. FACTORED FORCE (LBS)	MAX CSI (LC)
I- C	0 / 219	0.05 (3)
C- H	0 / 17	0.00 (1)
H- D	0 / 231	0.06 (3)
B- I	0 / 737	0.18 (1)
H- E	0 / 749	0.19 (1)

FACTORED CONCENTRATED LOADS (LBS)

JT	LOC.	LC1	MAX-	MAX+	FACE	DIR.	TYPE
C	3-10-8	-184	-184	---	BACK	VERT	TOTAL
D	9-1-8	-184	-184	---	BACK	VERT	TOTAL
K	1-11-4	-23	-42	---	BACK	VERT	TOTAL
K	2-2-8	-527	-527	---	BACK	VERT	TOTAL
L	10-9-8	-527	-527	---	BACK	VERT	TOTAL
L	11-0-12	-23	-42	---	BACK	VERT	TOTAL

DESIGN CRITERIA

SPECIFIED LOADS:

TOP CH.	LL	=	25.6	PSF
	DL	=	3.0	PSF
BOT CH.	LL	=	10.5	PSF
	DL	=	7.0	PSF
TOTAL LOAD		=	46.1	PSF

SPACING = 24.0 IN. C/C

LOADING IN FLAT SECTION BASED ON A SLOPE OF 6.00/12

THIS TRUSS IS DESIGNED FOR RESIDENTIAL OR SMALL BUILDING REQUIREMENTS OF PART 9, NBCC 2010

THIS DESIGN COMPLIES WITH:
- PART 9 OF OBC 2012 , BCBC 2012 , ABC 2014
- CSA 086-09
- TPIC 2011

(55 % OF 31.3 P.S.F. G.S.L. PLUS 8.4 P.S.F. RAIN LOAD) EQUALS 25.6 P.S.F. SPECIFIED ROOF LIVE LOAD

ALLOWABLE DEFL.(LL)= L/360 (0.43")
CALCULATED VERT. DEFL.(LL) = L/ 999 (0.09")
ALLOWABLE DEFL.(TL)= L/360 (0.43")
CALCULATED VERT. DEFL.(TL) = L/ 999 (0.14")

CSI: TC=0.46 (C-D:1) , BC=0.76 (I-J:1) , WB=0.19 (E-H:1) , SSI=0.35 (G-H:1)

DOL LUMBER=1.00 NAIL=1.00 LS BEND=1.00 COMP=1.00 SHEAR=1.00 TENS= 1.00

COMPANION LIVE LOAD FACTOR = 0.50

TRUSS PLATE MANUFACTURER IS NOT RESPONSIBLE FOR QUALITY CONTROL IN THE TRUSS MANUFACTURING PLANT .

NAIL VALUES

PLATE	GRIP(DRY) (PSI) MAX	MIN	SHEAR (PLI) MAX	MIN	SECTION (PLI) MAX	MIN
MT20	618	354	1667	822	2284	1656

PLATE PLACEMENT TOL. = 0.250 inches

PLATE ROTATION TOL. = 5.0 Deg.

JSI GRIP= 0.84 (H) (INPUT = 0.90)
JSI METAL= 0.23 (I) (INPUT = 1.00)

LICENSED PROFESSIONAL ENGINEER
82417
S. KATSOULAKOS
PROVINCE OF ONTARIO

DWG NO. TAM 43615-17
STRUCTURAL
COMPONENT ONLY

JOB NAME	TRUSS NAME	QUANTITY	PLY	JOB DESC.	DRWG NO.
282770	T33	2	1	TRUSS DESC.	

Tamarack Roof Truss, Burlington

Version 8.030 S Oct 5 2016 MiTek Industries, Inc. Tue Aug 29 09:11:04 2017 Page 1
ID:7?CtUZkq2cs_4kt6ThKuolyjLhh-Mbr24Cnq_wuDOelanRWzN4d6q76drHTH9p2FJzyj2QL

Scale = 1:49.1

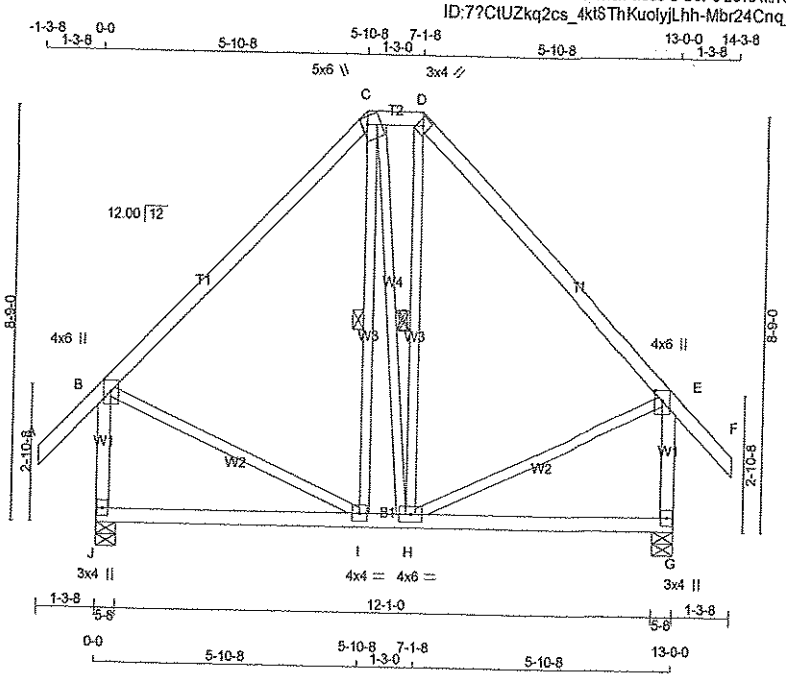

TOTAL WEIGHT = 2 X 76 = 151 lb

[M][F]

LUMBER

N. L. G. A. RULES

CHORDS	SIZE		LUMBER	DESCR.
A - C	2x4	DRY	No.2	SPF
C - D	2x4	DRY	No.2	SPF
D - F	2x4	DRY	No.2	SPF
J - B	2x4	DRY	No.2	SPF
G - E	2x4	DRY	No.2	SPF
J - G	2x4	DRY	No.2	SPF
ALL WEBS EXCEPT	2x3	DRY	No.2	SPF

DRY: SEASONED LUMBER.

PLATES (table is in inches)

JT	TYPE	PLATES	W	LEN	Y	X
B	TMVW+p	MT20	4.0	6.0	2.75	2.00
C	TTWW+m	MT20	5.0	6.0	2.00	1.50
D	TTW+h	MT20	3.0	4.0		
E	TMVW+p	MT20	4.0	6.0	2.75	2.00
G	BMV1+p	MT20	3.0	4.0		
H	BMWWW-t	MT20	4.0	6.0		
I	BMWW-t	MT20	4.0	4.0		
J	BMV1+p	MT20	3.0	4.0		

DIMENSIONS, SUPPORTS AND LOADINGS SPECIFIED BY FABRICATOR TO BE VERIFIED BY BUILDING DESIGNER

BEARINGS

JT	FACTORED GROSS REACTION VERT	HORZ	MAXIMUM FACTORED GROSS REACTION DOWN	HORZ	UPLIFT	INPUT BRG IN-SX	REQRD BRG IN-SX
J	847	0	847	0	0	5-8	5-8
G	847	0	847	0	0	5-8	5-8

UNFACTORED REACTIONS

JT	1ST LCASE COMBINED	MAX./MIN. COMPONENT REACTIONS SNOW	LIVE	PERM.LIVE	WIND	DEAD	SOIL
J	679	404 / 0	137 / 0	0 / 0	0 / 0	138 / 0	0 / 0
G	679	404 / 0	137 / 0	0 / 0	0 / 0	138 / 0	0 / 0

BEARING MATERIAL TO BE SPF NO.2 OR BETTER AT JOINT(S) J, G

BRACING

TOP CHORD TO BE SHEATHED OR MAX. PURLIN SPACING = 6.25 FT.
MAX. UNBRACED BOTTOM CHORD LENGTH = 10.00 FT. OR RIGID CEILING DIRECTLY APPLIED.

ALL PITCH BREAKS AND PERIMETER CORNER JOINTS MUST BE LATERALLY RESTRAINED.

1 LATERAL BRACE(S) AT 1/2 LENGTH OF C-I, C-H, D-H.

END VERTICAL(S) MUST BE SHEATHED OR HAVE BRACES AS INDICATED IN THE MAX. UNBRACED LENGTH COLUMN OF THE TABLE BELOW

LOADING

TOTAL LOAD CASES: (4)

CHORDS

MAX. MEMB. FR-TO	FACTORED FORCE (LBS)	FACTORED VERT. LOAD (PLF) FROM	TO	LC1	MAX CSI (LC)	MAX. UNBRAC LENGTH
A- B	0 / 42	-84.3	-84.3	0.12 (1)		10.00
B- C	-412 / 0	-84.3	-84.3	0.38 (1)		6.25
C- D	-290 / 0	-84.3	-84.3	0.02 (1)		6.25
D- E	-412 / 0	-84.3	-84.3	0.38 (1)		6.25
E- F	0 / 42	-84.3	-84.3	0.12 (1)		10.00
J- B	-760 / 0	0.0	0.0	0.12 (1)		7.81
G- E	-779 / 0	0.0	0.0	0.12 (1)		7.81
J- I	0 / 0	-28.0	-28.0	0.23 (2)		10.00
I- H	0 / 290	-28.0	-28.0	0.27 (2)		10.00
H- G	0 / 0	-28.0	-28.0	0.24 (3)		10.00

WEBS

MEMB. FR-TO	MAX. FACTORED FORCE (LBS)	MAX CSI (LC)
I- C	-8 / 125	0.03 (3)
C- H	0 / 8	0.00 (3)
H- D	-8 / 134	0.03 (3)
B- I	0 / 315	0.07 (1)
H- E	0 / 315	0.07 (1)

DESIGN CRITERIA

SPECIFIED LOADS:

TOP CH.	LL	=	25.6	PSF
	DL	=	3.0	PSF
BOT CH.	LL	=	10.5	PSF
	DL	=	7.0	PSF
TOTAL LOAD		=	46.1	PSF

SPACING = 24.0 IN. C/C

LOADING IN FLAT SECTION BASED ON A SLOPE OF 6.00/12

THIS TRUSS IS DESIGNED FOR RESIDENTIAL OR SMALL BUILDING REQUIREMENTS OF PART 9, NBCC 2010

THIS DESIGN COMPLIES WITH:
- PART 9 OF OBC 2012 , BCBC 2012 , ABC 2014
- CSA 086-09
- TPIC 2011

(55 % OF 31.3 P.S.F. G.S.L. PLUS 8.4 P.S.F. RAIN LOAD) EQUALS 25.6 P.S.F. SPECIFIED ROOF LIVE LOAD

ALLOWABLE DEFL.(LL)= L/360 (0.43")
CALCULATED VERT. DEFL.(LL) = L/ 999 (0.05")
ALLOWABLE DEFL.(TL)= L/360 (0.43")
CALCULATED VERT. DEFL.(TL) = L/ 999 (0.08")

CSI: TC=0.38 (B-C:1) , BC=0.27 (H-I:2) , WB=0.07 (B-I:1) , SSI=0.14 (G-H:3)

DOL LUMBER=1.00 NAIL=1.00 LS BEND=1.10 COMP=1.10 SHEAR=1.10 TENS= 1.10

COMPANION LIVE LOAD FACTOR = 0.50

TRUSS PLATE MANUFACTURER IS NOT RESPONSIBLE FOR QUALITY CONTROL IN THE TRUSS MANUFACTURING PLANT .

NAIL VALUES

PLATE	GRIP(DRY) (PSI) MAX	MIN	SHEAR (PLI) MAX	MIN	SECTION (PLI) MAX	MIN
MT20	618	354	1667	822	2284	1656

PLATE PLACEMENT TOL. = 0.250 inches

PLATE ROTATION TOL. = 5.0 Deg.

JSI GRIP= 0.63 (D) (INPUT = 0.90)
JSI METAL= 0.14 (B) (INPUT = 1.00)

LICENSED PROFESSIONAL ENGINEER
S. KATSOULAKOS
PROVINCE OF ONTARIO

DWG NO. TAM 43616 17
STRUCTURAL
COMPONENT ONLY

JOB NAME	TRUSS NAME	QUANTITY	PLY	JOB DESC.	DRWG NO.
282769	T100S	1	2	TRUSS DESC.	

Tamarack Roof Truss, Burlington

Version 8.030 S Oct 5 2016 MiTek Industries, Inc. Tue Aug 29 09:08:52 2017 Page 1
ID:dP6iGUfCrc5iDXmaOx0vTjyjMdB-EBs8N3B13NGyZMfC2j901F9cbwx_wTQroH4GhcyJ2SP

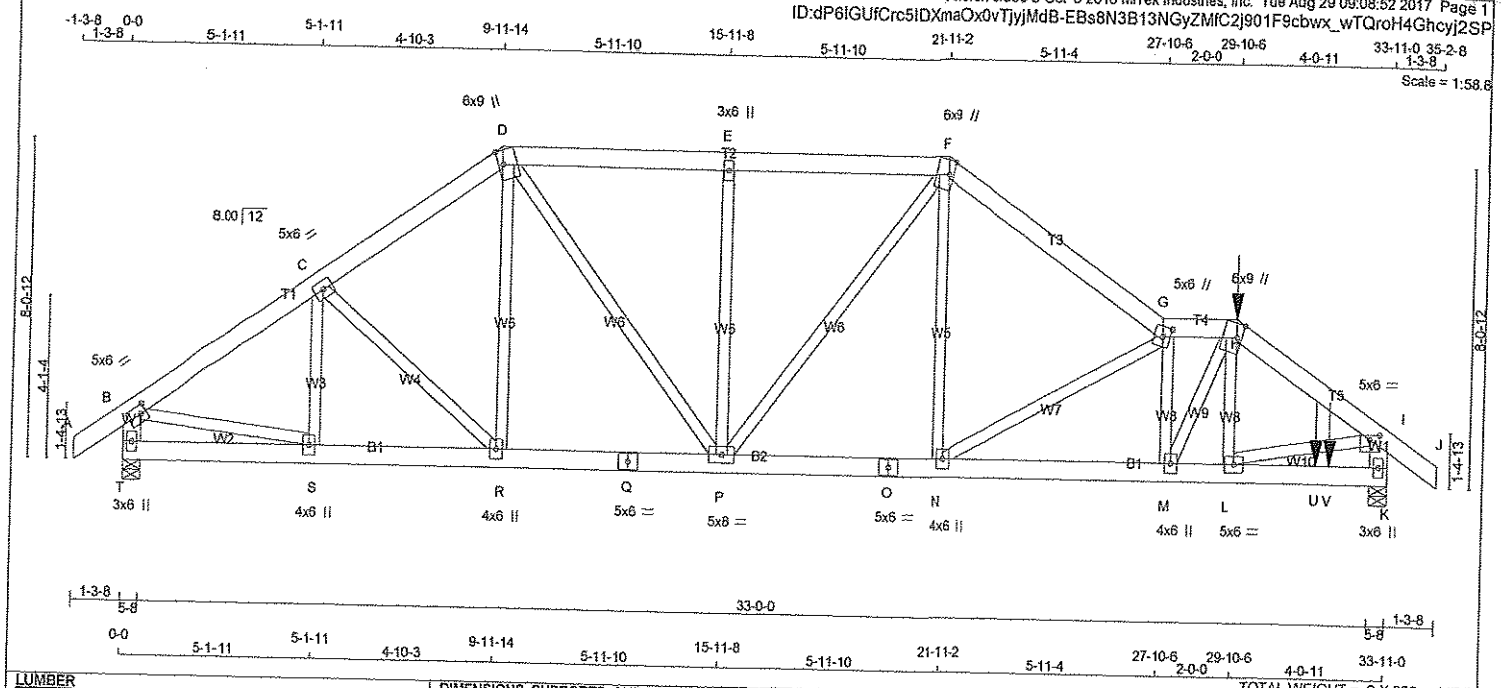

TOTAL WEIGHT = 2 X 223 = 447 lb [M]

LUMBER

N. L. G. A. RULES

CHORDS	SIZE		LUMBER	DESCR.
A - D	2x6	DRY	No.2	SPF
D - F	2x6	DRY	No.2	SPF
F - G	2x6	DRY	No.2	SPF
G - H	2x6	DRY	No.2	SPF
H - J	2x6	DRY	No.2	SPF
T - B	2x6	DRY	No.2	SPF
K - I	2x6	DRY	No.2	SPF
T - Q	2x6	DRY	No.2	SPF
Q - O	2x6	DRY	No.2	SPF
O - K	2x6	DRY	No.2	SPF
ALL WEBS EXCEPT	2x4	DRY	No.2	SPF

DRY: SEASONED LUMBER.

DESIGN CONSISTS OF 2 TRUSSES BUILT SEPARATELY THEN FASTENED TOGETHER AS FOLLOWS:

CHORDS	#ROWS	SURFACE SPACING (IN)	LOAD(PLF)
TOP CHORDS : (0.122"X3") SPIRAL NAILS			
A- D	2	12	TOP
D- F	2	12	TOP
F- G	2	12	TOP
G- H	2	12	SIDE(61.0)
H- J	2	12	SIDE(122.0)
T- B	2	12	TOP
K- I	2	12	TOP
BOTTOM CHORDS : (0.122"X3") SPIRAL NAILS			
T- Q	2	12	TOP
Q- O	2	12	TOP
O- K	2	12	SIDE(0.0)
WEBS : (0.122"X3") SPIRAL NAILS			
2x4	1	6	

NAILS TO BE DRIVEN FROM ONE SIDE ONLY.

GIRDER NAILING ASSUMES NAILED HANGERS ARE FASTENED WITH MIN. 3-0 INCH NAILS.

TOP - COMPONENTS ARE LOADED FROM THE TOP AND MUST BE PLACED ON TOP EDGE OF ALL PLIES FOR THE LOAD TO BE TRANSFERRED TO EACH PLY.

SIDE - PLF SHOWN IS THE EQUIVALENT UDL APPLIED TO ONE SIDE THAT THE CORRESPONDING NAILING PATTERN SHALL BE CAPABLE OF TRANSFERING. REMAINING PLF MUST BE APPLIED ON THE OPPOSITE SIDE OR ON THE TOP.

PLATES (table is in inches)

JT	TYPE	PLATES	W	LEN	Y	X
B	TMWW-t	MT20	5.0	6.0	2.50	1.75
C	TMWW-t	MT20	5.0	6.0		
D, F, H						
D	TTWW+m	MT20	6.0	9.0	4.25	1.50
E	TMW+w	MT20	3.0	6.0		
G	TTWW+m	MT20	5.0	6.0	3.00	2.25
I	TMWW-p	MT20	5.0	6.0	1.50	3.00
K	BMV1+p	MT20	3.0	6.0		
L	BMWW-t	MT20	5.0	6.0		
M, N, R, S						
M	BMWW+t	MT20	4.0	6.0		
O	BS-t	MT20	5.0	6.0		
P	BMWWW-t	MT20	5.0	8.0		
Q	BS-t	MT20	5.0	6.0		
T	BMV1+p	MT20	3.0	6.0		

DIMENSIONS, SUPPORTS AND LOADINGS SPECIFIED BY FABRICATOR TO BE VERIFIED BY BUILDING DESIGNER

BEARINGS

JT	FACTORED GROSS REACTION VERT	HORZ	MAXIMUM FACTORED GROSS REACTION DOWN	HORZ	UPLIFT	INPUT BRG	REQRD BRG
T	2178	0	2178	0	0	5-8	5-8
K	4387	0	4387	0	0	5-8	5-8

UNFACTORED REACTIONS

JT	1ST LCASE COMBINED	MAX./MIN. COMPONENT REACTIONS SNOW	LIVE	PERM.LIVE	WIND	DEAD	SOIL
T	1765	1017 / 0	378 / 0	0 / 0	0 / 0	371 / 0	0 / 0
K	3532	2074 / 0	728 / 0	0 / 0	0 / 0	729 / 0	0 / 0

BEARING MATERIAL TO BE SPF NO.2 OR BETTER AT JOINT(S) T, K

BRACING

TOP CHORD TO BE SHEATHED OR MAX. PURLIN SPACING = 5.54 FT.
MAX. UNBRACED BOTTOM CHORD LENGTH = 10.00 FT. OR RIGID CEILING DIRECTLY APPLIED.

ALL PITCH BREAKS AND PERIMETER CORNER JOINTS MUST BE LATERALLY RESTRAINED.

LOADING

TOTAL LOAD CASES: (4)

CHORDS

MEMB. FR-TO	MAX. FACTORED FORCE (LBS)	FACTORED VERT. LOAD LC1 (PLF) FROM	TO	MAX CSI (LC)	MAX. UNBRAC LENGTH
A- B	0 / 33	-84.3	-84.3	0.03 (1)	10.00
B- C	-2567 / 0	-84.3	-84.3	0.09 (1)	6.25
C- D	-2408 / 0	-84.3	-84.3	0.09 (1)	6.25
D- E	-2490 / 0	-84.3	-84.3	0.13 (1)	6.25
E- F	-2490 / 0	-84.3	-84.3	0.13 (1)	6.25
F- G	-2874 / 0	-84.3	-84.3	0.16 (1)	6.25
G- H	-3720 / 0	-84.3	-84.3	0.03 (1)	5.83
H- I	-4134 / 0	-84.3	-84.3	0.09 (1)	5.54
I- J	0 / 33	-84.3	-84.3	0.03 (1)	10.00
T- B	-2108 / 0	0.0	0.0	0.07 (1)	7.81
K- I	-3329 / 0	0.0	0.0	0.12 (1)	7.62
T- S	0 / 0	-28.0	-28.0	0.05 (2)	10.00
S- R	0 / 2155	-28.0	-28.0	0.17 (1)	10.00
R- Q	0 / 1986	-28.0	-28.0	0.16 (1)	10.00
Q- P	0 / 1986	-28.0	-28.0	0.16 (1)	10.00
P- O	0 / 2411	-28.0	-28.0	0.20 (1)	10.00
O- N	0 / 2411	-28.0	-28.0	0.20 (1)	10.00
N- M	0 / 3765	-28.0	-28.0	0.31 (1)	10.00
M- L	0 / 3485	-28.0	-28.0	0.63 (1)	10.00
L- U	0 / 0	-28.0	-28.0	0.71 (1)	10.00
U- V	0 / 0	-28.0	-28.0	0.71 (1)	10.00
V- K	0 / 0	-28.0	-28.0	0.71 (1)	10.00

WEBS

MEMB. FR-TO	MAX. FACTORED FORCE (LBS)	MAX CSI (LC)
S- C	-245 / 78	0.03 (1)
C- R	-232 / 0	0.06 (1)
R- D	0 / 376	0.03 (2)
D- P	0 / 816	0.07 (1)
P- E	-595 / 0	0.24 (1)
P- F	0 / 128	0.01 (1)
N- F	0 / 1039	0.09 (1)
N- G	-1599 / 0	0.54 (1)
M- G	-1111 / 0	0.10 (1)
M- H	0 / 518	0.05 (1)
L- H	0 / 1347	0.12 (1)
B- S	0 / 2187	0.19 (1)
L- I	0 / 3508	0.31 (1)

FACTORED CONCENTRATED LOADS (LBS)

JT	LOC.	LC1	MAX-	MAX+	FACE	DIR.
H	29-10-6	-23	-25	---	FRONT	VERT
H	29-10-6	-222	-222	---	FRONT	VERT
U	32-0-8	-2234	-2234	---	BACK	VERT
V	32-4-12	-40	-70	---	BACK	VERT

TYPE
DEAD
SNOW
TOTAL
TOTAL

LICENSED PROFESSIONAL ENGINEER
S. KATSOULAKOS
PROVINCE OF ONTARIO

DWG NO. TAM43607-17
STRUCTURAL
COMPONENT ONLY

DESIGN CRITERIA

*** SPECIAL LOADS ANALYSIS ***
GEOMETRY AND/OR BASIC LOADS CHANGED BY USER.
LOADS WERE DERIVED FROM USER INPUT
NO FURTHER MODIFICATIONS WERE MADE

SPECIFIED LOADS:

TOP CH.	LL	=	25.6	PSF
	DL	=	3.0	PSF
BOT CH.	LL	=	10.5	PSF
	DL	=	7.0	PSF
TOTAL LOAD		=	46.1	PSF

SPACING = 24.0 IN. C/C

LOADING IN ALL FLAT SECTIONS BASED ON A SLOPE OF 6.00/12

*** NON STANDARD GIRDER ***
ADDT'L USER-DEFINED LOADS APPLIED TO ALL LOAD CASES.

THIS TRUSS IS DESIGNED FOR RESIDENTIAL OR SMALL BUILDING REQUIREMENTS OF PART 9, NBCC 2010

THIS DESIGN COMPLIES WITH:
- PART 9 OF OBC 2012 , BCBC 2012 , ABC 2014
- CSA 086-09
- TPIC 2011

(55 % OF 31.3 P.S.F. G.S.L. PLUS 8.4 P.S.F. RAIN LOAD) EQUALS 25.6 P.S.F. SPECIFIED ROOF LIVE LOAD

ALLOWABLE DEFL.(LL)= L/360 (1.13")
CALCULATED VERT. DEFL.(LL) = L/ 999 (0.06")
ALLOWABLE DEFL.(TL)= L/360 (1.13")
CALCULATED VERT. DEFL.(TL) = L/ 999 (0.10")

CSI: TC=0.16 (F-G:1) , BC=0.71 (K-L:1) , WB=0.54 (G-N:1) , SSI=0.44 (K-L:1)

DOL LUMBER=1.00 NAIL=1.00 LS BEND=1.00 COMP=1.00 SHEAR=1.00 TENS= 1.00

COMPANION LIVE LOAD FACTOR = 0.50

TRUSS PLATE MANUFACTURER IS NOT RESPONSIBLE FOR QUALITY CONTROL IN THE TRUSS MANUFACTURING PLANT .

NAIL VALUES

PLATE	GRIP(DRY) (PSI) MAX	MIN	SHEAR (PLI) MAX	MIN	SECTION (PLI) MAX	MIN
MT20	618	354	1667	822	2284	1656

PLATE PLACEMENT TOL. = 0.250 inches

PLATE ROTATION TOL. = 5.0 Deg.

JSI GRIP= 0.81 (L) (INPUT = 0.90)
JSI METAL= 0.44 (L) (INPUT = 1.00)

CONTINUED ON PAGE 2

JOB NAME	TRUSS NAME	QUANTITY	PLY	JOB DESC.	DRWG NO.
282769	T100S	1	2	TRUSS DESC.	

Tamarack Roof Truss, Burlington

HANGERS NOTES

1) SPECIAL HANGER(S) OR CONNECTION(S) REQUIRED TO SUPPORT CONCENTRATED LOAD(S) 244.5 lbs FACTORED DOWN AT 29-10-6 ON TOP CHORD, AND 2234.2 lbs FACTORED DOWN AT 32-0-8, AND 69.9 lbs FACTORED DOWN AT 32-4-12 ON BOTTOM CHORD. DESIGN FOR UNSPECIFIED CONNECTION(S) IS DELEGATED TO THE BUILDING DESIGNER.

LICENSED PROFESSIONAL ENGINEER
S. KATSOULAKOS
PROVINCE OF ONTARIO

DWG NO. TAM 43607-17
STRUCTURAL
COMPONENT ONLY

JOB NAME	TRUSS NAME	QUANTITY	PLY	JOB DESC.	DRWG NO.
282769	T110S	1	1	TRUSS DESC.	

Tamarack Roof Truss, Burlington

Version 8.030 S Oct 5 2016 MiTek Industries, Inc. Tue Aug 29 09:08:53 2017 Page 1
ID:dP6IGUfCrc5IDXmaOx0vTjyjMdB-iOQXaPCfqgOpAVEObQgFZShh9Klufrh?1xppD2yj2SO

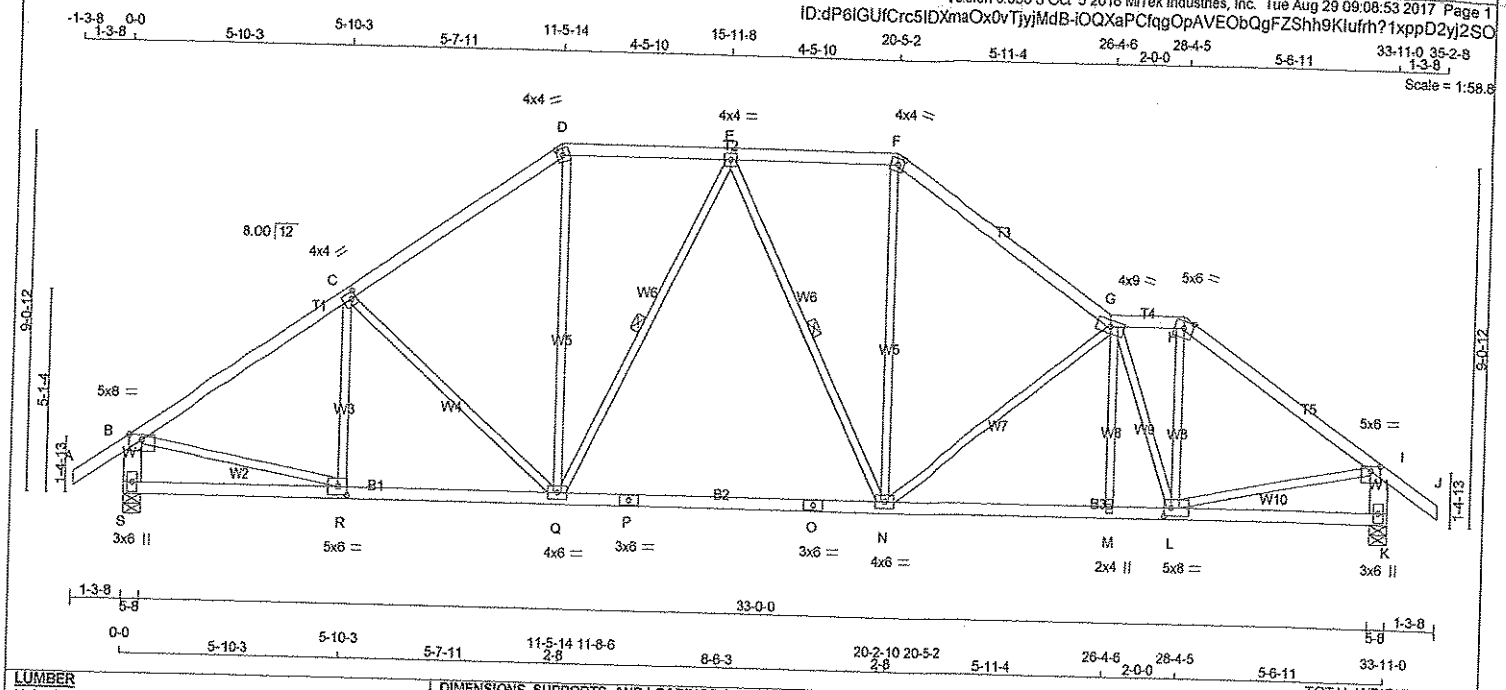

LUMBER

N. L. G. A. RULES

CHORDS	SIZE		LUMBER	DESCR.
A - D	2x4	DRY	No.2	SPF
D - F	2x4	DRY	No.2	SPF
F - G	2x4	DRY	No.2	SPF
G - H	2x4	DRY	No.2	SPF
H - J	2x4	DRY	No.2	SPF
S - B	2x6	DRY	No.2	SPF
K - I	2x6	DRY	No.2	SPF
S - P	2x4	DRY	No.2	SPF
P - O	2x4	DRY	No.2	SPF
O - K	2x4	DRY	No.2	SPF
ALL WEBS EXCEPT	2x3	DRY	No.2	SPF

DRY: SEASONED LUMBER.

PLATES (table is in inches)

JT	TYPE	PLATES	W	LEN	Y	X
B	TMWW-p	MT20	5.0	8.0	Edge	
C	TMWW-t	MT20	4.0	4.0	2.00	1.50
D	TTW-m	MT20	4.0	4.0	2.00	1.75
E	TMWW-t	MT20	4.0	4.0		
F	TTW-m	MT20	4.0	4.0	2.00	1.75
G	TTWWW-m	MT20	4.0	9.0		
H	TTW-m	MT20	5.0	6.0	Edge	
I	TMWW-p	MT20	5.0	6.0	1.50	3.00
K	BMV1+p	MT20	3.0	6.0		
L	BMWWW-t	MT20	5.0	8.0	2.50	2.25
M	BMW+w	MT20	2.0	4.0		
N	BMWWW-t	MT20	4.0	6.0		
O	BS-t	MT20	3.0	6.0		
P	BS-t	MT20	3.0	6.0		
Q	BMWWW-t	MT20	4.0	6.0		
R	BMWW-t	MT20	5.0	6.0	2.50	2.75
S	BMV1+p	MT20	3.0	6.0		

Edge - INDICATES REFERENCE CORNER OF PLATE TOUCHES EDGE OF CHORD.

DIMENSIONS, SUPPORTS AND LOADINGS SPECIFIED BY FABRICATOR TO BE VERIFIED BY BUILDING DESIGNER

BEARINGS

JT	FACTORED GROSS REACTION VERT	HORZ	MAXIMUM FACTORED GROSS REACTION DOWN	HORZ	UPLIFT	INPUT BRG IN-SX	REQRD BRG IN-SX
S	2019	0	2019	0	0	5-8	5-8
K	2019	0	2019	0	0	5-8	5-8

UNFACTORED REACTIONS

JT	1ST LCASE COMBINED	MAX /MIN. COMPONENT REACTIONS SNOW	LIVE	PERM.LIVE	WIND	DEAD	SOIL
S	1641	938 / 0	356 / 0	0 / 0	0 / 0	347 / 0	0 / 0
K	1641	938 / 0	356 / 0	0 / 0	0 / 0	347 / 0	0 / 0

BEARING MATERIAL TO BE SPF NO.2 OR BETTER AT JOINT(S) S, K

BRACING

TOP CHORD TO BE SHEATHED OR MAX. PURLIN SPACING = 4.10 FT.
MAX. UNBRACED BOTTOM CHORD LENGTH = 10.00 FT. OR RIGID CEILING DIRECTLY APPLIED.

ALL PITCH BREAKS AND PERIMETER CORNER JOINTS MUST BE LATERALLY RESTRAINED.

1 LATERAL BRACE(S) AT 1/ 2 LENGTH OF E-Q, E-N.

END VERTICAL(S) MUST BE SHEATHED OR HAVE BRACES AS INDICATED IN THE MAX. UNBRACED LENGTH COLUMN OF THE TABLE BELOW

LOADING

TOTAL LOAD CASES: (4)

CHORDS

MEMB. FR-TO	MAX. FACTORED FORCE (LBS)	FACTORED VERT. LOAD (PLF) FROM	TO	LC1	MAX CSI (LC)	MAX. UNBRAC LENGTH
A- B	0 / 32	-84.3	-84.3	0.11 (1)	10.00	
B- C	-2288 / 0	-84.3	-84.3	0.47 (1)	4.10	
C- D	-2035 / 0	-84.3	-84.3	0.43 (1)	4.33	
D- E	-1673 / 0	-84.3	-84.3	0.24 (1)	4.91	
E- F	-1788 / 0	-84.3	-84.3	0.24 (1)	4.77	
F- G	-2138 / 0	-84.3	-84.3	0.49 (1)	4.19	
G- H	-1899 / 0	-84.3	-84.3	0.08 (1)	4.83	
H- I	-2248 / 0	-84.3	-84.3	0.44 (1)	4.16	
I- J	0 / 32	-84.3	-84.3	0.11 (1)	10.00	
S- B	-1948 / 0	0.0	0.0	0.13 (1)	7.21	
K- I	-1953 / 0	0.0	0.0	0.13 (1)	7.20	
S- R	0 / 0	-28.0	-28.0	0.20 (2)	10.00	
R- Q	0 / 1930	-28.0	-28.0	0.56 (2)	10.00	
Q- P	0 / 1843	-28.0	-28.0	0.60 (2)	10.00	
P- O	0 / 1843	-28.0	-28.0	0.60 (2)	10.00	
O- N	0 / 1843	-28.0	-28.0	0.60 (2)	10.00	
N- M	0 / 2329	-28.0	-28.0	0.66 (2)	10.00	
M- L	0 / 2330	-28.0	-28.0	0.48 (1)	10.00	
L- K	0 / 0	-28.0	-28.0	0.20 (3)	10.00	

WEBS

MEMB. FR-TO	MAX. FACTORED FORCE (LBS)	MAX CSI (LC)
R- C	-195 / 110	0.08 (1)
C- Q	-352 / 0	0.41 (1)
Q- D	0 / 784	0.18 (1)
N- F	0 / 784	0.18 (1)
N- G	-703 / 0	0.86 (1)
M- G	0 / 92	0.02 (3)
G- L	-1202 / 0	0.52 (1)
L- H	0 / 933	0.21 (1)
B- R	0 / 1962	0.44 (1)
L- I	0 / 1902	0.43 (1)
Q- E	-380 / 0	0.26 (1)
E- N	-123 / 51	0.08 (1)

DESIGN CRITERIA

SPECIFIED LOADS:

TOP CH.	LL	=	25.6	PSF
	DL	=	3.0	PSF
BOT CH.	LL	=	10.5	PSF
	DL	=	7.0	PSF
TOTAL LOAD		=	46.1	PSF

SPACING = 24.0 IN. C/C

LOADING IN ALL FLAT SECTIONS BASED ON A SLOPE OF 6.00/12

THIS TRUSS IS DESIGNED FOR RESIDENTIAL OR SMALL BUILDING REQUIREMENTS OF PART 9, NBCC 2010

THIS DESIGN COMPLIES WITH:
- PART 9 OF OBC 2012 , BCBC 2012 , ABC 2014
- CSA 086-09
- TPIC 2011

(55 % OF 31.3 P.S.F. G.S.L. PLUS 8.4 P.S.F. RAIN LOAD) EQUALS 25.6 P.S.F. SPECIFIED ROOF LIVE LOAD

ALLOWABLE DEFL.(LL)= L/360 (1.13")
CALCULATED VERT. DEFL.(LL) = L/ 999 (0.21")
ALLOWABLE DEFL.(TL)= L/360 (1.13")
CALCULATED VERT. DEFL.(TL) = L/ 999 (0.34")

CSI: TC=0.49 (F-G:1) , BC=0.66 (M-N:2) , WB=0.86 (G-N:1) , SSI=0.20 (B-C:1)

DOL LUMBER=1.00 NAIL=1.00 LS BEND=1.10 COMP=1.10 SHEAR=1.10 TENS= 1.10

COMPANION LIVE LOAD FACTOR = 0.50

TRUSS PLATE MANUFACTURER IS NOT RESPONSIBLE FOR QUALITY CONTROL IN THE TRUSS MANUFACTURING PLANT .

NAIL VALUES

PLATE	GRIP(DRY) (PSI) MAX	MIN	SHEAR (PLI) MAX	MIN	SECTION (PLI) MAX	MIN
MT20	618	354	1667	822	2284	1656

PLATE PLACEMENT TOL. = 0.250 inches

PLATE ROTATION TOL. = 5.0 Deg.

JSI GRIP= 0.89 (F) (INPUT = 0.90)
JSI METAL= 0.71 (G) (INPUT = 1.00)

LICENSED PROFESSIONAL ENGINEER
8947
S. KATSOULAKOS
PROVINCE OF ONTARIO

DWG NO. TAM 43608 17
STRUCTURAL
COMPONENT ONLY

JOB NAME	TRUSS NAME	QUANTITY	PLY	JOB DESC.	DRWG NO.
282769	T120S	1	1	TRUSS DESC.	

Tamarack Roof Truss, Burlington

Version 8.030 S Oct 5 2016 MiTek Industries, Inc. Tue Aug 29 09:08:53 2017 Page 1
ID:dP6IGUfCrc5IDXmaOx0vTjyjMdB-iOQXaPCfqgOpAVEObQgFZShfwKKhfrD?1xppD2yj2SO

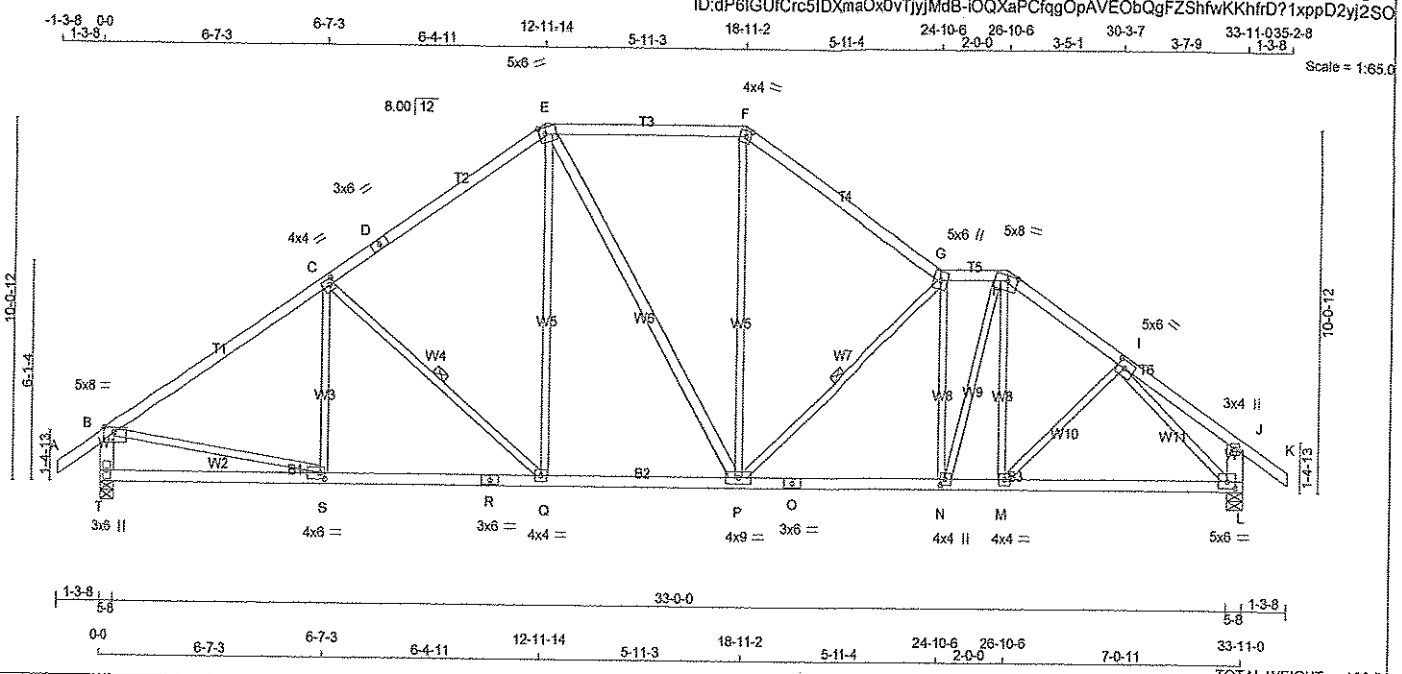

LUMBER
N. L. G. A. RULES

CHORDS	SIZE		LUMBER	DESCR.
A - D	2x4	DRY	No.2	SPF
D - E	2x4	DRY	No.2	SPF
E - F	2x4	DRY	No.2	SPF
F - G	2x4	DRY	No.2	SPF
G - H	2x4	DRY	No.2	SPF
H - K	2x4	DRY	No.2	SPF
T - B	2x6	DRY	No.2	SPF
L - J	2x6	DRY	No.2	SPF
T - R	2x4	DRY	No.2	SPF
R - O	2x4	DRY	No.2	SPF
O - L	2x4	DRY	No.2	SPF
ALL WEBS EXCEPT	2x3	DRY	No.2	SPF
E - P	2x4	DRY	No.2	SPF

DRY: SEASONED LUMBER.

PLATES (table is in inches)

JT	TYPE	PLATES	W	LEN	Y	X
B	TMVW-p	MT20	5.0	8.0	Edge	
C	TMWW-t	MT20	4.0	4.0	2.00	1.50
D	TS-t	MT20	3.0	6.0		
E	TTWW-m	MT20	5.0	6.0	2.25	2.00
F	TTW-m	MT20	4.0	4.0	2.00	1.75
G	TTWW+m	MT20	5.0	6.0		
H	TTWW-m	MT20	5.0	8.0	1.75	3.50
I	TMWW-t	MT20	5.0	6.0	2.50	2.50
J	TMV+p	MT20	3.0	4.0		
L	BMVW1-t	MT20	5.0	6.0	2.25	3.00
M	BMWW-t	MT20	4.0	4.0		
N	BMWW+t	MT20	4.0	4.0	2.00	1.50
O	BS-t	MT20	3.0	6.0		
P	BMWWW-t	MT20	4.0	9.0		
Q	BMWW-t	MT20	4.0	4.0		
R	BS-t	MT20	4.0	4.0		
S	BMWW-t	MT20	4.0	6.0	2.00	1.50
T	BMV1+p	MT20	3.0	6.0		

Edge - INDICATES REFERENCE CORNER OF PLATE TOUCHES EDGE OF CHORD.

DIMENSIONS, SUPPORTS AND LOADINGS SPECIFIED BY FABRICATOR TO BE VERIFIED BY BUILDING DESIGNER

BEARINGS

JT	FACTORED GROSS REACTION VERT	HORZ	MAXIMUM FACTORED GROSS REACTION DOWN	HORZ	UPLIFT	INPUT BRG IN-SX	REQRD BRG IN-SX
T	2019	0	2019	0	0	5-8	5-8
L	2019	0	2019	0	0	5-8	5-8

UNFACTORED REACTIONS

JT	1ST LCASE COMBINED	MAX./MIN. COMPONENT REACTIONS SNOW	LIVE	PERM.LIVE	WIND	DEAD	SOIL
T	1641	938 / 0	356 / 0	0 / 0	0 / 0	347 / 0	0 / 0
L	1641	938 / 0	356 / 0	0 / 0	0 / 0	347 / 0	0 / 0

BEARING MATERIAL TO BE SPF NO.2 OR BETTER AT JOINT(S) T, L

BRACING
TOP CHORD TO BE SHEATHED OR MAX. PURLIN SPACING = 3.90 FT.
MAX. UNBRACED BOTTOM CHORD LENGTH = 10.00 FT. OR RIGID CEILING DIRECTLY APPLIED.

ALL PITCH BREAKS AND PERIMETER CORNER JOINTS MUST BE LATERALLY RESTRAINED.

1 LATERAL BRACE(S) AT 1/ 2 LENGTH OF C-Q, G-P.

END VERTICAL(S) MUST BE SHEATHED OR HAVE BRACES AS INDICATED IN THE MAX. UNBRACED LENGTH COLUMN OF THE TABLE BELOW

LOADING
TOTAL LOAD CASES: (4)

CHORDS

MEMB. FR-TO	MAX. FACTORED FORCE (LBS)	FACTORED VERT. LOAD (PLF) FROM	TO	LC1	MAX CSI (LC)	MAX. UNBRAC LENGTH
A- B	0 / 32	-84.3	-84.3	0.11 (1)	10.00	
B- C	-2303 / 0	-84.3	-84.3	0.63 (1)	3.90	
C- D	-1923 / 0	-84.3	-84.3	0.56 (1)	4.26	
D- E	-1923 / 0	-84.3	-84.3	0.56 (1)	4.26	
E- F	-1641 / 0	-84.3	-84.3	0.42 (1)	4.70	
F- G	-1965 / 0	-84.3	-84.3	0.47 (1)	4.35	
G- H	-2157 / 0	-84.3	-84.3	0.09 (1)	4.57	
H- I	-2253 / 0	-84.3	-84.3	0.17 (1)	4.43	
I- J	0 / 16	-84.3	-84.3	0.14 (1)	10.00	
J- K	0 / 32	-84.3	-84.3	0.11 (1)	10.00	
T- B	-1944 / 0	0.0	0.0	0.13 (1)	7.22	
L- J	-235 / 0	0.0	0.0	0.02 (1)	7.81	
T- S	0 / 0	-28.0	-28.0	0.30 (3)	10.00	
S- R	0 / 1946	-28.0	-28.0	0.52 (2)	10.00	
R- Q	0 / 1946	-28.0	-28.0	0.52 (2)	10.00	
Q- P	0 / 1572	-28.0	-28.0	0.41 (2)	10.00	
P- O	0 / 2183	-28.0	-28.0	0.48 (1)	10.00	
O- N	0 / 2183	-28.0	-28.0	0.48 (1)	10.00	
N- M	0 / 1859	-28.0	-28.0	0.55 (2)	10.00	
M- L	0 / 1749	-28.0	-28.0	0.52 (2)	10.00	

WEBS

MEMB. FR-TO	MAX. FACTORED FORCE (LBS)	MAX CSI (LC)
S- C	-112 / 208	0.06 (1)
C- Q	-495 / 0	0.24 (1)
Q- E	0 / 506	0.11 (2)
E- P	0 / 135	0.02 (1)
P- F	0 / 607	0.14 (2)
P- G	-760 / 0	0.36 (1)
N- G	-899 / 0	0.53 (1)
N- H	0 / 991	0.22 (1)
M- H	0 / 208	0.05 (3)
M- I	0 / 204	0.05 (2)
B- S	0 / 1972	0.44 (1)
I- L	-2441 / 0	0.89 (1)

DESIGN CRITERIA

SPECIFIED LOADS:

TOP CH.	LL	=	25.6	PSF
	DL	=	3.0	PSF
BOT CH.	LL	=	10.5	PSF
	DL	=	7.0	PSF
TOTAL LOAD		=	46.1	PSF

SPACING = 24.0 IN. C/C

LOADING IN ALL FLAT SECTIONS BASED ON A SLOPE OF 6.00/12

THIS TRUSS IS DESIGNED FOR RESIDENTIAL OR SMALL BUILDING REQUIREMENTS OF PART 9, NBCC 2010

THIS DESIGN COMPLIES WITH:
- PART 9 OF OBC 2012 , BCBC 2012 , ABC 2014
- CSA 086-09
- TPIC 2011

(55 % OF 31.3 P.S.F. G.S.L. PLUS 8.4 P.S.F. RAIN LOAD) EQUALS 25.6 P.S.F. SPECIFIED ROOF LIVE LOAD

ALLOWABLE DEFL.(LL)= L/360 (1.13")
CALCULATED VERT. DEFL.(LL) = L/ 999 (0.13")
ALLOWABLE DEFL.(TL)= L/360 (1.13")
CALCULATED VERT. DEFL.(TL) = L/ 999 (0.22")

CSI: TC=0.63 (B-C:1) , BC=0.55 (M-N:2) , WB=0.89 (I-L:1) , SSI=0.22 (B-C:1)

DOL LUMBER=1.00 NAIL=1.00 LS BEND=1.10 COMP=1.10 SHEAR=1.10 TENS= 1.10

COMPANION LIVE LOAD FACTOR = 0.50

TRUSS PLATE MANUFACTURER IS NOT RESPONSIBLE FOR QUALITY CONTROL IN THE TRUSS MANUFACTURING PLANT .

NAIL VALUES

PLATE	GRIP(DRY) (PSI) MAX	MIN	SHEAR (PLI) MAX	MIN	SECTION (PLI) MAX	MIN
MT20	618	354	1667	822	2284	1656

PLATE PLACEMENT TOL. = 0.250 inches

PLATE ROTATION TOL. = 5.0 Deg.

USI GRIP= 0.90 (H) (INPUT = 0.90)
USI METAL= 0.61 (I) (INPUT = 1.00)

LICENSED PROFESSIONAL ENGINEER
S. KATSOULAKOS
PROVINCE OF ONTARIO

DWG NO. TAM43609-17
STRUCTURAL
COMPONENT ONLY

JOB NAME	TRUSS NAME	QUANTITY	PLY	JOB DESC.	DRWG NO.
282769	T130S	1	1	TRUSS DESC.	

Tamarack Roof Truss, Burlington

Version 8.030 S Oct 5 2016 MiTek Industries, Inc. Tue Aug 29 09:08:53 2017 Page 1
ID:dP6IGUfCrc5IDXma0x0vTjyjMdB-iOQXaPCfqgOpAVEObQgFZShc?KH2fvD?1xppD2yj2SO

Scale = 1:69.4

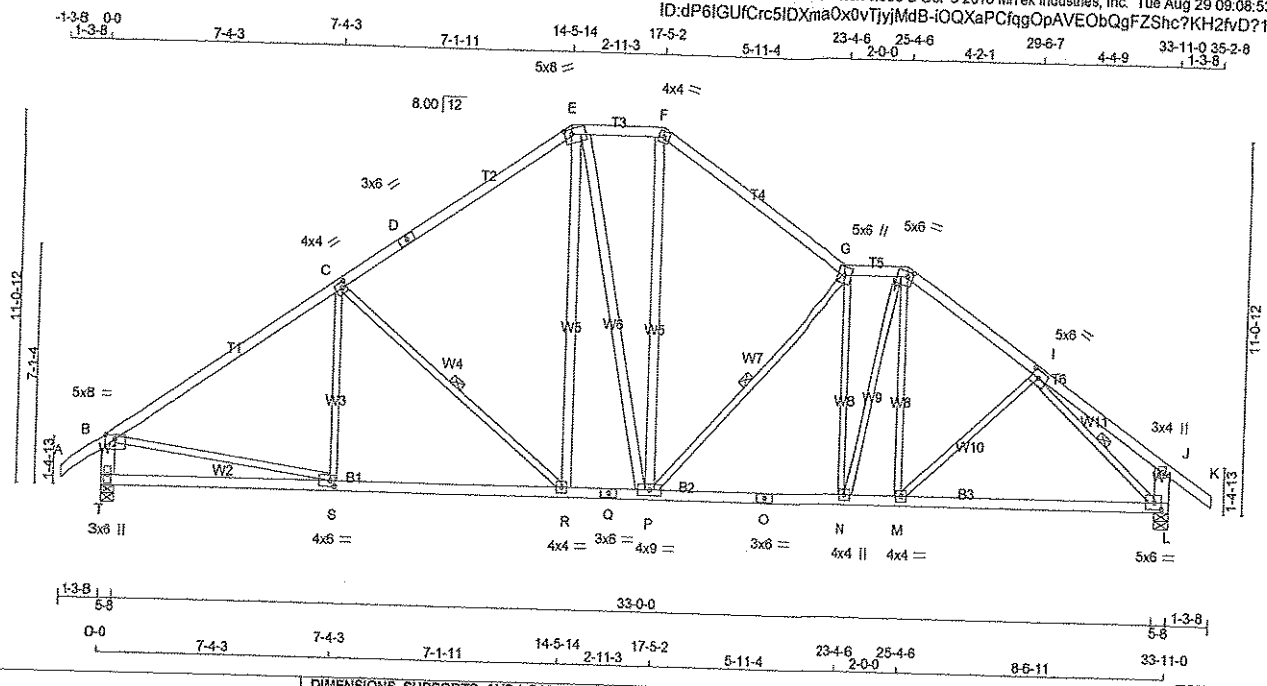

TOTAL WEIGHT = 178 lb

[M][F]

LUMBER

N. L. G. A. RULES

CHORDS	SIZE		LUMBER	DESCR.
A - D	2x4	DRY	No.2	SPF
D - E	2x4	DRY	No.2	SPF
E - F	2x4	DRY	No.2	SPF
F - G	2x4	DRY	No.2	SPF
G - H	2x4	DRY	No.2	SPF
H - K	2x4	DRY	No.2	SPF
T - B	2x6	DRY	No.2	SPF
L - J	2x6	DRY	No.2	SPF
T - Q	2x4	DRY	No.2	SPF
Q - O	2x4	DRY	No.2	SPF
O - L	2x4	DRY	No.2	SPF
ALL WEBS EXCEPT	2x3	DRY	No.2	SPF
R - E	2x4	DRY	No.2	SPF
E - P	2x4	DRY	No.2	SPF
P - F	2x4	DRY	No.2	SPF

DRY: SEASONED LUMBER.

PLATES (table is in inches)

JT	TYPE	PLATES	W	LEN	Y	X
B	TMWW-p	MT20	5.0	8.0	Edge	
C	TMWW-t	MT20	4.0	4.0	2.00	1.50
D	TS-t	MT20	3.0	6.0		
E	TTWW-m	MT20	5.0	8.0	1.75	2.75
F	TTW-m	MT20	4.0	4.0		
G	TTWW+m	MT20	5.0	6.0		
H	TTWW-m	MT20	5.0	6.0	1.75	2.00
I	TMWW-t	MT20	5.0	6.0	2.50	2.75
J	TMV+p	MT20	3.0	4.0		
L	BMVW1-t	MT20	5.0	6.0	2.25	2.75
M	BMWW-t	MT20	4.0	4.0		
N	BMWW+t	MT20	4.0	4.0		
O	BS-t	MT20	3.0	6.0		
P	BMWWW-t	MT20	4.0	9.0		
Q	BS-t	MT20	3.0	6.0		
R	BMWW-t	MT20	4.0	4.0		
S	BMWW-t	MT20	4.0	6.0	2.00	1.75
T	BMV1+p	MT20	3.0	6.0		

Edge - INDICATES REFERENCE CORNER OF PLATE TOUCHES EDGE OF CHORD.

DIMENSIONS, SUPPORTS AND LOADINGS SPECIFIED BY FABRICATOR TO BE VERIFIED BY BUILDING DESIGNER

BEARINGS

JT	FACTORED GROSS REACTION VERT	HORZ	MAXIMUM FACTORED GROSS REACTION DOWN	HORZ	UPLIFT	INPUT BRG IN-SX	REQRD BRG IN-SX
T	2019	0	2019	0	0	5-8	5-8
L	2019	0	2019	0	0	5-8	5-8

UNFACTORED REACTIONS

JT	1ST LCASE COMBINED	MAX./MIN. COMPONENT REACTIONS SNOW	LIVE	PERM.LIVE	WIND	DEAD	SOIL
T	1641	938 / 0	356 / 0	0 / 0	0 / 0	347 / 0	0 / 0
L	1641	938 / 0	356 / 0	0 / 0	0 / 0	347 / 0	0 / 0

BEARING MATERIAL TO BE SPF NO.2 OR BETTER AT JOINT(S) T, L

BRACING

TOP CHORD TO BE SHEATHED OR MAX. PURLIN SPACING = 3.65 FT.
MAX. UNBRACED BOTTOM CHORD LENGTH = 10.00 FT. OR RIGID CEILING DIRECTLY APPLIED.

ALL PITCH BREAKS AND PERIMETER CORNER JOINTS MUST BE LATERALLY RESTRAINED.

1 LATERAL BRACE(S) AT 1/ 2 LENGTH OF C-R, G-P, H-L.

END VERTICAL(S) MUST BE SHEATHED OR HAVE BRACES AS INDICATED IN THE MAX. UNBRACED LENGTH COLUMN OF THE TABLE BELOW

LOADING

TOTAL LOAD CASES: (4)

CHORDS

MEMB. FR-TO	MAX. FACTORED FORCE (LBS)	FACTORED VERT. LOAD LC1 (PLF) FROM	TO	MAX CSI (LC)	MAX. UNBRAC LENGTH
A- B	0 / 32	-84.3	-84.3	0.11 (1)	10.00
B- C	-2301 / 0	-84.3	-84.3	0.82 (1)	3.65
C- D	-1809 / 0	-84.3	-84.3	0.71 (1)	4.13
D- E	-1809 / 0	-84.3	-84.3	0.71 (1)	4.13
E- F	-1506 / 0	-84.3	-84.3	0.12 (1)	5.25
F- G	-1799 / 0	-84.3	-84.3	0.46 (1)	4.52
G- H	-2029 / 0	-84.3	-84.3	0.08 (1)	4.70
H- I	-2212 / 0	-84.3	-84.3	0.24 (1)	4.39
I- J	0 / 22	-84.3	-84.3	0.23 (1)	10.00
J- K	0 / 32	-84.3	-84.3	0.11 (1)	10.00
T- B	-1937 / 0	0.0	0.0	0.13 (1)	7.23
L- J	-257 / 0	0.0	0.0	0.02 (1)	7.81
T- S	0 / 0	-28.0	-28.0	0.39 (3)	10.00
S- R	0 / 1949	-28.0	-28.0	0.62 (2)	10.00
R- Q	0 / 1476	-28.0	-28.0	0.35 (2)	10.00
Q- P	0 / 1476	-28.0	-28.0	0.35 (2)	10.00
P- O	0 / 2040	-28.0	-28.0	0.43 (1)	10.00
O- N	0 / 2040	-28.0	-28.0	0.43 (1)	10.00
N- M	0 / 1824	-28.0	-28.0	0.72 (2)	10.00
M- L	0 / 1811	-28.0	-28.0	0.70 (2)	10.00

WEBS

MEMB. FR-TO	MAX. FACTORED FORCE (LBS)	MAX CSI (LC)
S- C	-49 / 277	0.06 (3)
C- R	-621 / 0	0.39 (1)
R- E	0 / 519	0.08 (1)
E- P	0 / 119	0.02 (1)
P- F	0 / 625	0.10 (1)
P- G	-814 / 0	0.47 (1)
N- G	-726 / 0	0.63 (1)
N- H	0 / 764	0.17 (1)
M- H	0 / 370	0.08 (2)
M- I	0 / 151	0.03 (3)
B- S	0 / 1970	0.44 (1)
I- L	-2460 / 0	0.58 (1)

LICENSED PROFESSIONAL ENGINEER
S. KATSOULAKOS
PROVINCE OF ONTARIO

DESIGN CRITERIA

SPECIFIED LOADS:

TOP CH.	LL	=	25.6	PSF
	DL	=	3.0	PSF
BOT CH.	LL	=	10.5	PSF
	DL	=	7.0	PSF
TOTAL LOAD		=	46.1	PSF

SPACING = 24.0 IN. C/C

LOADING IN ALL FLAT SECTIONS BASED ON A SLOPE OF 6.00/12

THIS TRUSS IS DESIGNED FOR RESIDENTIAL OR SMALL BUILDING REQUIREMENTS OF PART 9, NBCC 2010

THIS DESIGN COMPLIES WITH:
- PART 9 OF OBC 2012 , BCBC 2012 , ABC 2014
- CSA 086-09
- TPIC 2011

(55 % OF 31.3 P.S.F. G.S.L. PLUS 8.4 P.S.F. RAIN LOAD) EQUALS 25.6 P.S.F. SPECIFIED ROOF LIVE LOAD

ALLOWABLE DEFL.(LL)= L/360 (1.13")
CALCULATED VERT. DEFL.(LL) = L/ 999 (0.23")
ALLOWABLE DEFL.(TL)= L/360 (1.13")
CALCULATED VERT. DEFL.(TL) = L/ 999 (0.38")

CSI: TC=0.82 (B-C:1) , BC=0.72 (M-N:2) , WB=0.63 (G-N:1) , SSI=0.25 (B-C:1)

DOL LUMBER=1.00 NAIL=1.00 LS BEND=1.10 COMP=1.10 SHEAR=1.10 TENS= 1.10

COMPANION LIVE LOAD FACTOR = 0.50

TRUSS PLATE MANUFACTURER IS NOT RESPONSIBLE FOR QUALITY CONTROL IN THE TRUSS MANUFACTURING PLANT .

NAIL VALUES

PLATE	GRIP(DRY) (PSI) MAX	MIN	SHEAR (PLI) MAX	MIN	SECTION (PLI) MAX	MIN
MT20	618	354	1667	822	2284	1656

PLATE PLACEMENT TOL. = 0.250 inches

PLATE ROTATION TOL. = 5.0 Deg.

JSI GRIP= 0.90 (H) (INPUT = 0.90)
JSI METAL= 0.68 (O) (INPUT = 1.00)

DWG NO. TAM 436/2017
STRUCTURAL
COMPONENT ONLY

TECHNICAL BULLETIN

LUS – Double Shear Joist Hangers

SIMPSON Strong-Tie®

All LUS hangers have double shear nailing. This patented innovation distributes the load through two points on each joist nail for greater strength. It also allows the use of fewer nails, faster installation and the use of common nails for all connections.

MATERIAL: 18 gauge

FINISH: G90 galvanized

DESIGN:

- Factored resistances are in accordance with CSA O86-14
- Uplift resistances have been increased 15%. No further increase is permitted.
- Wood shear is not considered in the factored resistances given. The specifier must ensure that the joist and header capacities are capable of withstanding these loads.

INSTALLATION:

- Use all specified fasteners
- Nails: 16d = 0.162" dia. x 3½" long common wire, 10d = 0.148" x 3" long common wire.
- Double shear nails must be driven at an angle through the joist or truss into the header to achieve the table loads
- Not designed for welded or nailer applications

OPTIONS:

- These hangers cannot be modified.

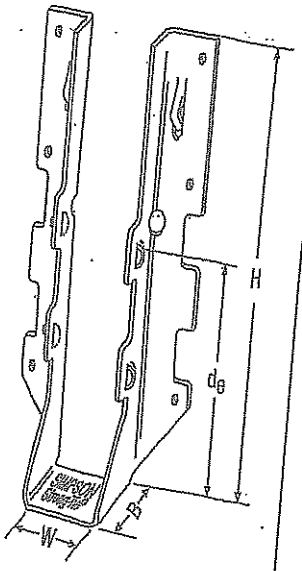

LUS28

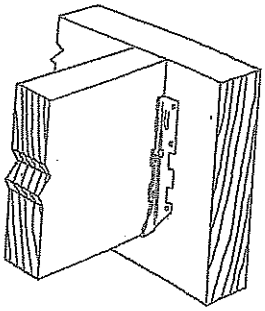

Typical LUS Installation

Model No.	Ga	Dimensions (in)				Fasteners		Factored Resistance (lbs)			
								D.Fir-L		S-P-F	
		W	H	B	d_e[1]	Face	Joist	Uplift (K_D=1.15)	Normal (K_D=1.00)	Uplift (K_D=1.15)	Normal (K_D=1.00)
LUS24	18	1 9/16	3⅛	1¾	1 15/16	4-10d	2-16d	710	1630	645	1165
LUS24-2	18	3⅛	3⅛	2	1 15/16	4-16d	2-16d	885	2020	590	1435
LUS26	18	1 9/16	4¾	1¾	3⅝	4-10d	4-10d	1420	2170	1290	1630
LUS26-2	18	3⅛	4⅞	2	4	4-16d	4-16d	1720	2595	1545	1920
LUS26-3	18	4⅝	4 9/16	2	3¼	4-16d	4-16d	1720	2595	1545	2340
LUS28	18	1 9/16	6⅝	1¾	3¾	6-10d	4-10d	1420	2520	1290	1790
LUS28-2	18	3⅛	7	2	4	6-16d	4-16d	1720	3325	1545	2575
LUS28-3	18	4⅝	6¼	2	3¼	6-16d	4-16d	1720	3325	1545	2375
LUS210	18	1 9/16	7 13/16	1¾	3⅞	8-10d	4-10d	1420	2785	1290	2210
LUS210-2	18	3⅛	9	2	6	8-16d	6-16d	2580	4500	2320	3195
LUS210-3	18	4⅝	8 9/16	2	5¼	8-16d	6-16d	2580	3345	2320	2375

1. d_e is the distance from the seat of the hanger to the highest joist nail.

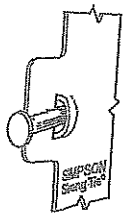

Dome Double Shear Nailing prevents tabs breaking off (available on some models).

U.S. Patent 5,603,580

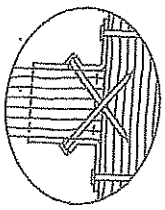

Double Shear Nailing Top View.

LICENSED PROFESSIONAL ENGINEER
01/13/2015
B. D. BUNTING
PROVINCE OF ONTARIO

LIMIT STATES DESIGN

This technical bulletin is effective until December 31, 2016, and reflects information available as of January 1, 2015. This information is updated periodically and should not be relied upon after December 31, 2016. Contact Simpson Strong-Tie for current information and limited warranty or see www.strongtie.com.

©2015 Simpson Strong-Tie Company Inc.

T-SPECLUS16 1/15 exp. 12/16

800-999-5099
www.strongtie.com

TECHNICAL BULLETIN

HUS/LJS – Double Shear Joist Hangers

SIMPSON Strong-Tie®

All hangers have double shear nailing. This patented innovation distributes the load through two points on each joist nail for greater strength. It also allows the use of fewer nails, faster installation and the use of common nails for all connections. Do not bend or remove tabs.

MATERIAL: See table

FINISH: G90 galvanized

DESIGN:

- Factored resistances are in accordance with CSA O86-14
- Uplift resistances have been increased 15% No further increase is permitted
- Wood shear is not considered in the factored resistances given. The specifier must ensure that the joist and header capacities are capable of withstanding these loads.

INSTALLATION:

- Use all specified fasteners
- Nails: 16d = 0.162" dia. x 3½" long common wire
- Double shear nails must be driven at an angle through the joist or truss into the header to achieve the table loads
- Not designed for welded or nailer applications

OPTIONS:

- See current catalogue for options

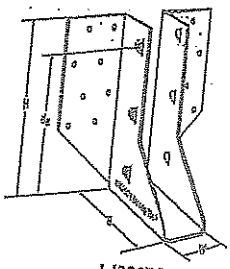

LJS26DS

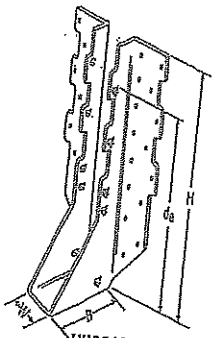

HUS210
(HUS26, HUS28, similar)

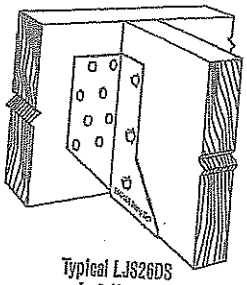

Typical LJS26DS Installation

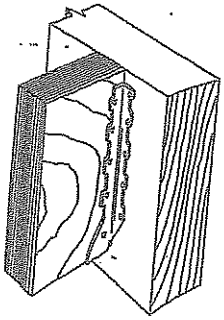

Typical HUS Installation

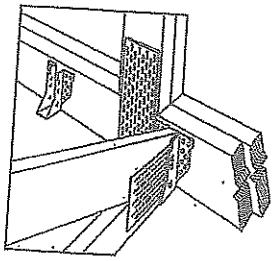

Typical HUS Installation
(Truss Designer to provide fastener quantity for connecting multiple members together)

Model No.	Ga	Dimensions (in)				Fasteners		Factored Resistance (lbs)			
								D.Fir-L.		S-P-F	
		W	H	B	d_e[1]	Face	Joist	Uplift (K_D=1.15)	Normal (K_D=1.00)	Uplift (K_D=1.15)	Normal (K_D=1.00)
LJS26DS	18	1 9/16	6	3½	4⅝	16-16d	6-16d	2055	4265	1460	4115
HUS26	16	1⅝	5⅝	3	3 15/16	14-16d	6-16d	2705	4940	2065	3875
HUS28	16	1⅝	7 5/32	3	6 3/32	22-16d	8-16d	3605	5365	2675	4345
HUS210	16	1⅝	9 5/32	3	7 31/32	30-16d	10-16d	4505	5795	4010	4740
HUS1.81/10	16	1 13/16	9	3	8	30-16d	10-16d	4505	6450	4010	5200

1. d_e is the distance from the seat of the hanger to the highest joist nail.

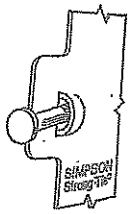

Dome Double Shear Nailing prevents tabs breaking off (available on some models).

U.S. Patent 5,603,560

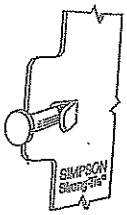

Double Shear Nailing Side View. Do not bend tab back.

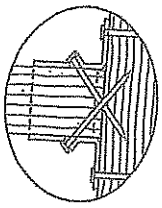

Double Shear Nailing Top View.

LICENSED PROFESSIONAL ENGINEER
01/13/2015
B. D. BUNTING
PROVINCE OF ONTARIO

© 2015 Simpson Strong-Tie® Company Inc.

TECHNICAL BULLETIN

HGUS – Double Shear Joist Hangers

SIMPSON Strong-Tie®

All HGUS hangers have double shear nailing. This patented innovation distributes the load through two points on each joist nail for greater strength. It also allows the use of fewer nails, faster installation and the use of common nails for all connections. Do not bend or remove tabs.

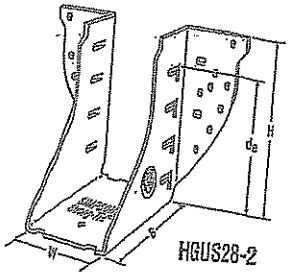

HGUS28-2

MATERIAL: 12 gauge

FINISH: G90 galvanized

DESIGN:

- Factored resistances are in accordance with CSA O86-14
- Uplift resistances have been increased 15%. No further increase is permitted.
- Wood shear is not considered in the factored resistances given. The specifier must ensure that the joist and header capacities are capable of withstanding these loads.

INSTALLATION:

- Use all specified fasteners
- Nails: 16d = 0.162" dia x 3½" long common wire
- Double shear nails must be driven at an angle through the joist or truss into the header to achieve the table loads
- Not designed for welded or nailer applications

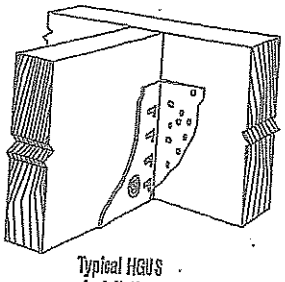
Typical HGUS Installation

OPTIONS:

- See current catalogue for options.

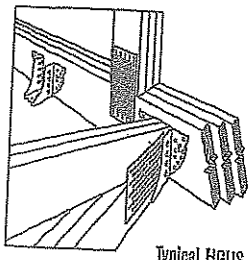
Typical HGUS Installation (Truss Designer to provide fastener quantity for connecting multiple members together)

Model No.	Ga	Dimensions (in)				Fasteners		Factored Resistance (lbs)			
								D.Fir-L		S-P-F	
		W	H	B	d_e[1]	Face	Joist	Uplift (K_D=1.15)	Normal (K_D=1.00)	Uplift (K_D=1.15)	Normal (K_D=1.00)
HGUS26	12	1⅝	5¾	5	4 5/32	20-16d	8-16d	2685	6625	2685	5700
HGUS26-2	12	3 5/16	5 7/16	4	4⅛	20-16d	8-16d	4385	8950	3100	6355
HGUS26-3	12	4 15/16	5½	4	4⅛	20-16d	8-16d	4385	8950	3100	6355
HGUS26-4	12	6 9/16	5 7/16	4	4⅛	20-16d	8-16d	4385	8950	3100	6355
HGUS28	12	1⅝	7¼	5	6⅛	36-16d	12-16d	3310	7675	3100	6900
HGUS28-2	12	3 5/16	7 5/16	4	6⅛	36-16d	12-16d	6070	12980	4310	9215
HGUS28-3	12	4 15/16	7¼	4	6⅛	36-16d	12-16d	6070	12980	4310	9215
HGUS28-4	12	6 9/16	7 5/16	4	6⅛	36-16d	12-16d	6070	12980	4310	9215
HGU210-2	12	3 5/16	9 5/16	4	8⅛	46-16d	16-16d	6840	14645	4855	10400
HGUS210-3	12	4 15/16	9¼	4	8⅛	46-16d	16-16d	6840	14645	4855	10400
HGUS210-4	12	6 9/16	9 5/16	4	8⅛	46-16d	16-16d	6840	14645	4855	10400
HGUS212-4	12	6 9/16	10⅝	4	10⅛	56-16d	20-16d	7640	14995	5425	10645
HGUS214-4	12	6 9/16	12⅝	4	11⅛	66-16d	22-16d	10130	16400	7195	11645

1. d_e is the distance from the seat of the hanger to the highest joist nail.

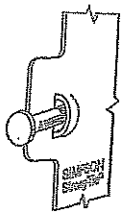

Dome Double Shear Nailing prevents tabs breaking off (available on some models).

U.S. Patent 5,603,580

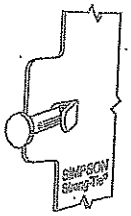

Double Shear Nailing Side View. Do not bend tab back.

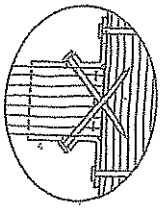
Double Shear Nailing Top View.

LICENSED PROFESSIONAL ENGINEER
01/13/2015
B. D. BUNTING
PROVINCE OF ONTARIO

MICRO CITY
ENGINEERING SERVICES INC.

TEL: (519) 287 - 2242

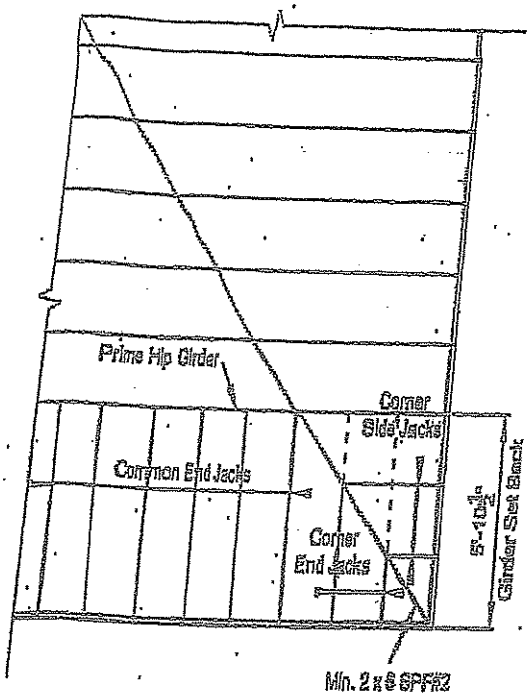

45° Hip End

LUMBER SPECIFICATION

TOP CHORD : 2x4 SPF#2

BOTTOM CHORD : 2x4 SPF#2

WEBS : 2x3 SPF#2

UNLESS OTHERWISE SHOWN

DESIGN LOAD:

TOP CHORD LIVE LOAD	:	39.4 P.S.F.
TOP CHORD DEAD LOAD	:	3.0 P.S.F.
BOTTOM CHORD LIVE LOAD	:	10.5 P.S.F.
BOTTOM CHORD DEAD LOAD	:	7.0 P.S.F
TOTAL LOAD		59.9 P.S.F.

DWG NO T1M 2475.14
STRUCTURAL
COMPONENT ONLY

LICENSED PROFESSIONAL ENGINEER
1-2014
S. KATSOULAKOS
PROVINCE OF ONTARIO

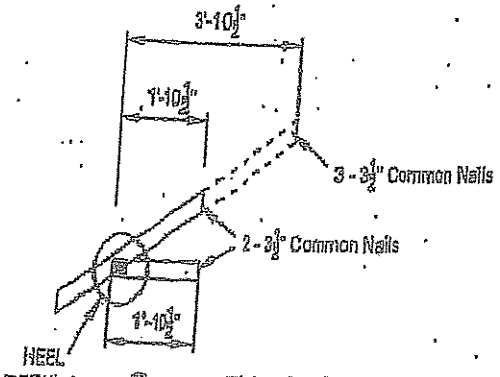

Corner Side Jacks

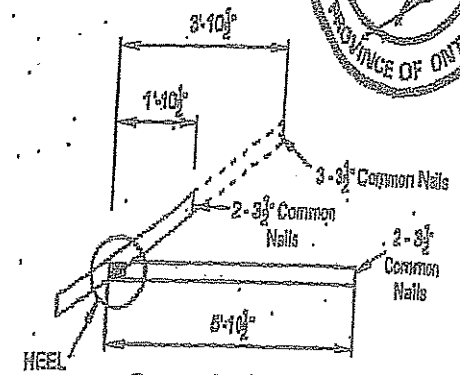

Corner End Jacks

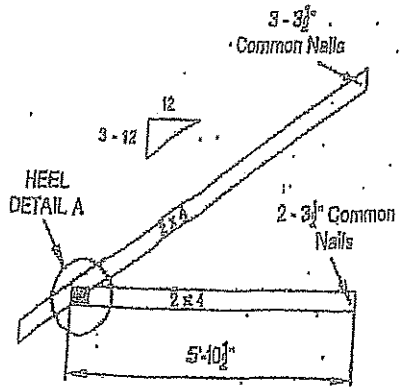

Common End Jacks

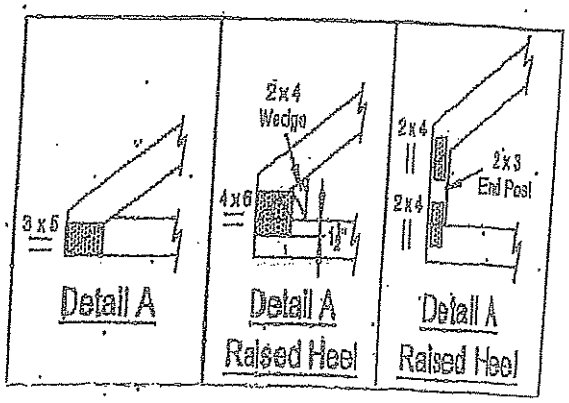

Detail A | Detail A Raised Heel | Detail A Raised Heel

NOTE: DESIGN CONFORMS TO PART 9, O.B.C. 2012 (LIMIT STATES DESIGN)

MICRO CITY
ENGINEERING SERVICES INC.
TEL: (519) 287 - 2242
R.R. #1, P.O. BOX 61, GLENCOE, ONTARIO, N0L 1M0

LUMBER SPECIFICATION

TOP CHORD : 2x4 SPF#2
BOTTOM CHORD : 2x4 SPF#2
WEBS : 2x3 SPF#2
UNLESS OTHERWISE SHOWN

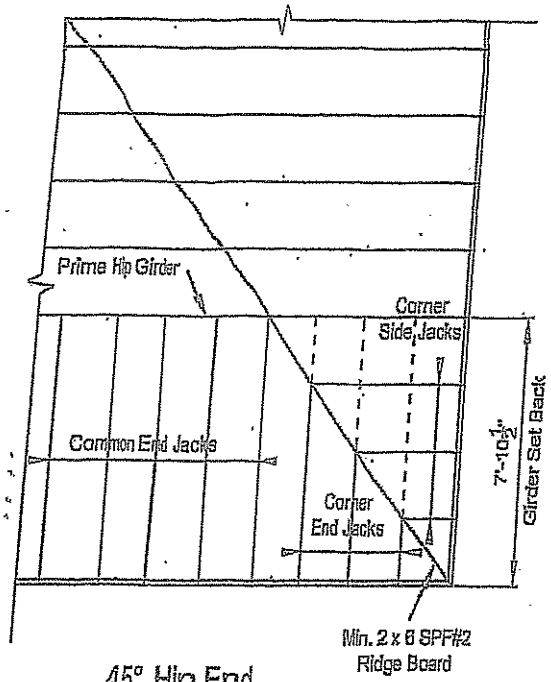

45° Hip End

DESIGN LOAD:

TOP CHORD LIVE LOAD	: 34.8 P.S.F.
TOP CHORD DEAD LOAD	: 3.0 P.S.F.
BOTTOM CHORD LIVE LOAD	: 0.0 P.S.F.
BOTTOM CHORD DEAD LOAD	: 7.0 P.S.F.
TOTAL LOAD	: 44.8 P.S.F.

DWG NO T&M 3503.14
STRUCTURAL
COMPONENT ONLY

LICENSED PROFESSIONAL ENGINEER
1-2014
S. KATSOULAKOS
PROVINCE OF ONTARIO

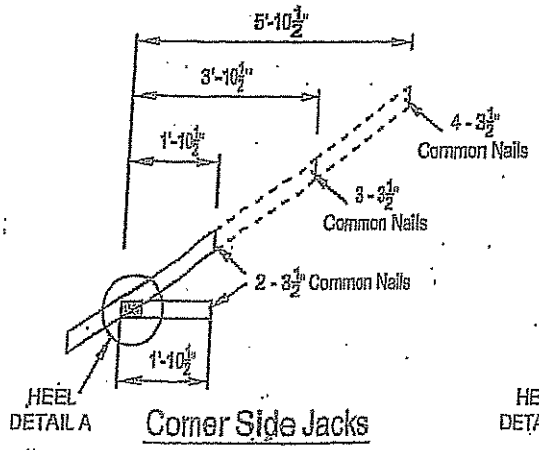

Corner Side Jacks

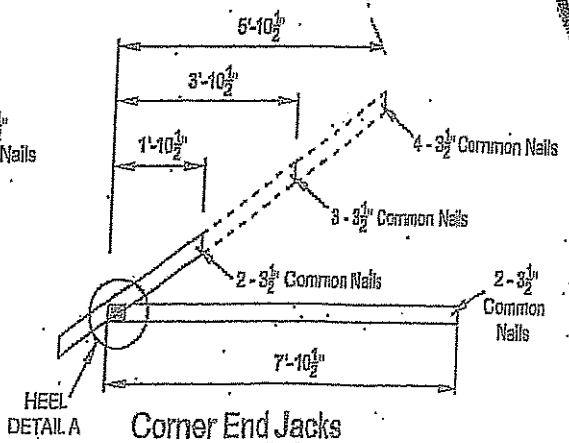

Corner End Jacks

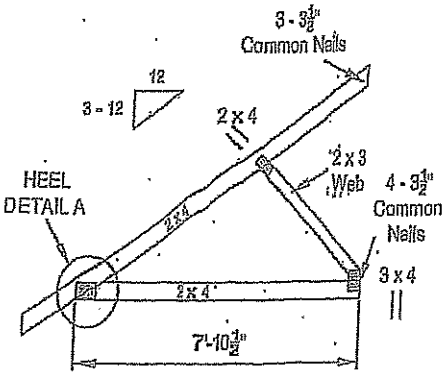

Common End Jacks

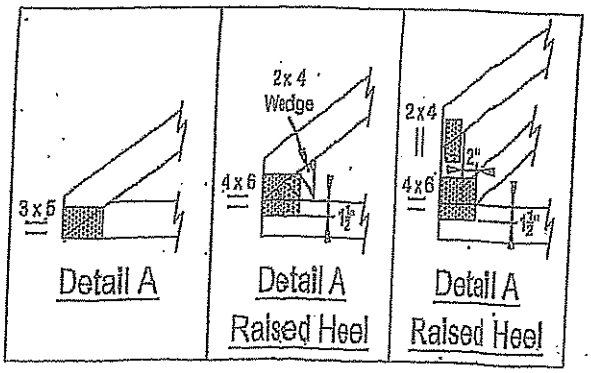

NOTE: DESIGN CONFORMS TO PART 9, O.B.C. 2012 (LIMIT STATES DESIGN)
(TO BE INCLUDED AND USED AS PART OF A FULL TRUSS ENGINEERING PACKAGE)

Symbols

PLATE LOCATION AND ORIENTATION

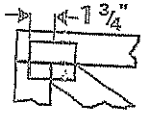

Center plate on joint unless x, y offsets are indicated. Dimensions are in ft-in-sixteenths or mm. Apply plates to both sides of truss and fully embed teeth.

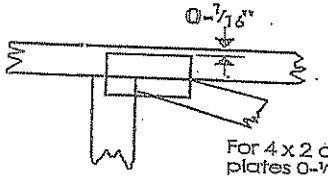

For 4 x 2 orientation, locate plates 0-1/16" from outside edge of truss.

This symbol indicates the required direction of slots in connector plates.

*Plate location details available in MiTek software or upon request.

PLATE SIZE

4 X 4

The first dimension is the plate width measured perpendicular to slots. Second dimension is the length parallel to slots.

LATERAL BRACING LOCATION

Indicated by symbol shown and/or by text in the bracing section of the output. Use T, I or Eliminator bracing if indicated.

BEARING

Indicates location where bearings (supports) occur. Icons vary but reaction section indicates joint number where bearings occur.

Industry Standards:

TPIC: Truss Design Procedures and Specifications for Light Metal Plate Connected Wood Trusses

DSB-89: *Design Standard for Bracing.*

BCSI: Building Component Safety Information, Guide to Good Practice for Handling, Installing & Bracing of Metal Plate Connected Wood Trusses.

Numbering System

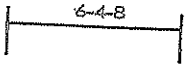

dimensions shown in ft-in-sixteenths or mm (Drawings not to scale)

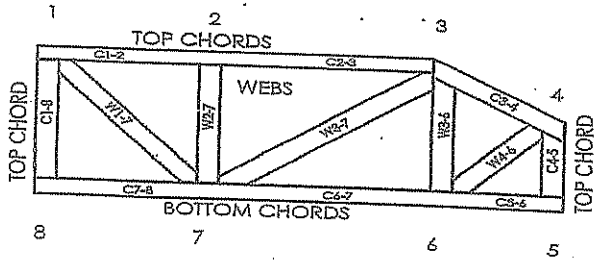

JOINTS ARE GENERALLY NUMBERED/LETTERED CLOCKWISE AROUND THE TRUSS STARTING AT THE JOINT FARTHEST TO THE LEFT.

CHORDS AND WEBS ARE IDENTIFIED BY END JOINT NUMBERS/LETTERS.

PRODUCT CODE APPROVALS

CCMC Reports:

11996-L, 10319-L, 13270-L, 12691-R

© 2007 MiTek® All Rights Reserved

MiTek®

POWER TO PERFORM.™

MiTek Engineering Reference Sheet: MII-7473C rev. 10-'08

General Safety Notes

Failure to Follow Could Cause Property Damage or Personal Injury

1. Additional stability bracing for truss system, e.g. diagonal or X-bracing, is always required. See BCSI.
2. Truss bracing must be designed by an engineer. For wide truss spacing, individual lateral braces themselves may require bracing, or alternative T, I, or Eliminator bracing should be considered.
3. Never exceed the design loading shown and never stack materials on inadequately braced trusses.
4. Provide copies of this truss design to the building designer, erection supervisor, property owner and all other interested parties.
5. Cut members to bear tightly against each other.
6. Place plates on each face of truss at each joint and embed fully. Knots and wane at joint locations are regulated by TPIC.
7. Design assumes trusses will be suitably protected from the environment in accord with TPIC.
8. Unless otherwise noted, moisture content of lumber shall not exceed 19% at time of fabrication.
9. Unless expressly noted, this design is not applicable for use with fire retardant, preservative treated, or green lumber.
10. Camber is a non-structural consideration and is the responsibility of truss fabricator. General practice is to camber for dead load deflection.
11. Plate type, size, orientation and location dimensions indicated are minimum plating requirements.
12. Lumber used shall be of the species and size, and in all respects, equal to or better than that specified.
13. Top chords must be sheathed or purlins provided at spacing indicated on design.
14. Bottom chords require lateral bracing at 10 ft. spacing, or less, if no ceiling is installed, unless otherwise noted.
15. Connections not shown are the responsibility of others.
16. Do not cut or alter truss member or plate without prior approval of an engineer.
17. Install and load vertically unless indicated otherwise.
18. Use of green or treated lumber may pose unacceptable environmental, health or performance risks. Consult with project engineer before use.
19. Review all portions of this design (front, back, words and pictures) before use. Reviewing pictures alone is not sufficient.
20. Design assumes manufacture in accordance with TPIC Quality Criteria.

Micro City Engineering Services Inc.
(BCIN: 26064; FIRM BCIN: 29991)
RR #1, Po Box 61
Glencoe, Ontario
N0L 1M0
(519) 287 - 2242; Fax: (519) 287 - 5750 (Call)

LICENSED PROFESSIONAL ENGINEER
1-20794
S. KATSOULAKOS
PROVINCE OF ONTARIO

DWG NO ~~TAM~~ 5479414
STRUCTURAL
COMPONENT ONLY

Responsibilities:

Micro City Engineering Services is responsible for the design of trusses as individual components.

It is the responsibilities of others to ascertain that the design loads utilized on this (these) drawing(s) meet or exceed the actual dead load imposed by the structure and the live load imposed by the local building code or the authorities having jurisdiction over such decisions.

All dimensions are to be verified by the owner, contractor, architect, or other authority having input over such decisions prior to truss component manufacture. At no time shall Micro City Engineering Services Inc. or its employees be responsible for dimension errors.

Micro City Engineering Services Inc. bears no responsibility for the erection of any truss components. Persons erecting truss components are cautioned to seek professional advice regarding temporary and permanent bracing systems and to be totally familiar with all aspects of truss erection prior to proceeding on any truss component erection job. Any bracing shown on Micro City Engineering Services Inc. or Tamarack Roof Trusses Inc. sealed or unsealed truss component drawings is specified for the single truss component in question and is identified as an integral part of the design for that particular truss component but is not meant to represent the only required bracing for that particular truss component when installed as a component in a series of truss components in a roof truss system.

~~It is the truss manufacturer's responsibility to ensure that trusses are manufactured in accordance with Micro City Engineering~~ Services Inc. specifications outlined below:

SPECIFICATIONS:

Truss components sealed by Micro City Engineering Services Inc. must conform to the relevant sections of the current Building Code of Ontario and Canada (Part 4 or Part 9) or the current Farm Building Code of Canada in accordance with the application specified on the sealed truss component drawing. All truss component design procedures must conform to the current design standard issued by the Truss Plate Institute of Canada (TPIC). All unit lumber and nailing stresses identified on truss component design drawings and/or used in the design of individual truss components shall conform to the current CSA Wood Design standard identified in the current Building Code and TPIC Design Standards.

The lumber used to manufacture any truss component is to conform to the specified size and grade identified on the truss drawing.

The lumber used in the manufacture of any truss component is not to exceed 19% during its service use unless specifically noted on the truss drawing.

The lumber used in the manufacture of any truss component is not to be treated with any chemicals during its service life unless specifically noted on the truss drawing.

Connector plates shall be applied to both faces of the truss component at each joint and shall be positioned exactly as specified.

The top chord of any truss component is assumed to be continuously laterally braced by the roof sheathing or purlins at intervals specified on the sealed truss component drawing but not exceeding 24" o/c (Part 9 design) and not exceeding 48" o/c (Part 4 or Agricultural design).

When a truss component is to be installed with no rigid ceiling attached directly to the bottom chord, then the bottom chord is to be laterally braced at intervals not exceeding 3m (or 10'-0").

All sealed or unsealed truss component drawings provided by Micro City Engineering Services Inc. Or Tamarack Roof Trusses Inc. should be read in conjunction with the following:

Warning-Verify design parameters and READ NOTES ON THIS AND INCLUDED MITEK REFERENCE PAGE MII-7473C rev 10-'08 BEFORE USE. Design valid for use only with Mitek connectors. This design is based only upon parameters shown, and is for individual building component. Applicability of design parameters and proper incorporation of component is the responsibility of the building designer - not the truss designer. Bracing shown is for lateral support of individual web members only. Additional temporary bracing to insure stability during construction is the responsibility of the erector. Additional permanent bracing of the overall structure is the responsibility of the building designer. For general guidance regarding fabrication, quality control, storage, delivery, erection, and bracing, consult TPIC Appendix G - Minimum Quality Manufacturing Criteria available from www.tpic.ca and BCSI Building Component Safety Information available from the Truss Plate Institute, 781 N. Lee Street, Suite 312, Alexandria, VA, 22314.