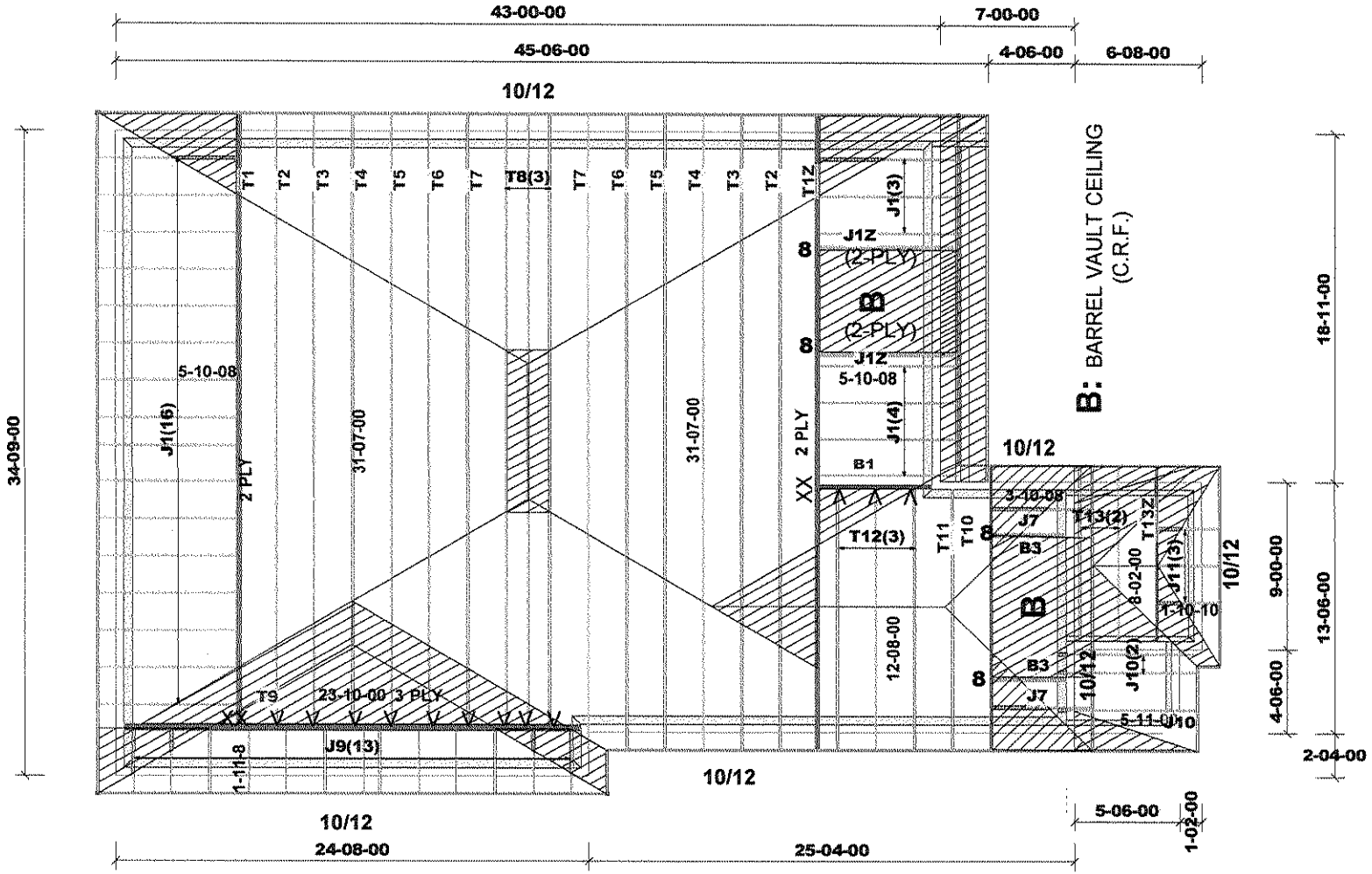


ASPHALT SHINGLES
12" FINISHED O.H.
5" CLADDING ALLOWANCE
2x6 EXTERIOR WALLS
2x6 FASCIA BOARD
HEEL: R.T.M.C.

T - 170375

ALL CONV. FRAMING TO CONFORM WITH PART 9 OF O.B.C. 2012 ROOF RAFTERS THAT CROSS OVER OR MEET TRUSSES TO BE 2X4 SPF #2 24" O.C. WITH A VERT.POST TO THE TRUSS UNDERNEATH AT EACH CROSS PT. VERT. POST LONGER THAN 6' TO HAVE LATERAL BRACING SO THAT THE DIST. BETWEEN END PT. & BETWEEN ROWS OF BRACING DOES NOT EXCEED 6'

DESIGN CONFORMS WITH OBC 2012
OCCUPANCY: RESIDENTIAL | PART: 9
GROUND SNOW LOAD Ss=31.3psf Sr=8.4psf
DESIGN LOADS
TCDL (3psf)
BCLL (10.5psf)
BCDL (7psf)

DENOTES: CONVENTIONAL FRAMING

HARDWARE:

HGUS26-2 -(XX)
LJS26DS -(V)
LUS24-2 -(8)

**BEAMS:**
B1-2 -2X10 SPF #2
B3: 2 - 2X8 SPF #2

ALL ROOF SLOPES ARE 6/12 UNLESS OTHERWISE NOTED

m1977

| | | | |
|---|---|---|---|
| TAMARACK LUMBER INC. | Job Track: **43954** | Builder / Location: **GREENPARK HOMES / WATERDOWN** | Model / Elevation: **ROSEWOOD 2 / 1** |
| | Layout ID: **282689** | Project: **RUSSEL GARDENS PHASE 2** | |
| | Plan Log: **92461** | Date: **8/24/2017** Designer: colinh/S.V.E | |

THESE DRAWINGS CONSTITUTE THE PROPERTY OF TAMARACK ROOF TRUSSES INC., SHALL NOT BE REPRODUCED, PUBLISHED, OR REDISTRIBUTED IN ANY MANNER OR UTILIZED FOR ANY PURPOSE OTHER THAN THE MANUFACTURE OF TRUSSES BY TAMARACK ROOF TRUSSES INC AND WILL BE RETRACTED BY TAMARACK ROOF TRUSSES INC IF UTLILZED FOR ANY OTHER PURPOSE.

Mitek ver 7.5.0

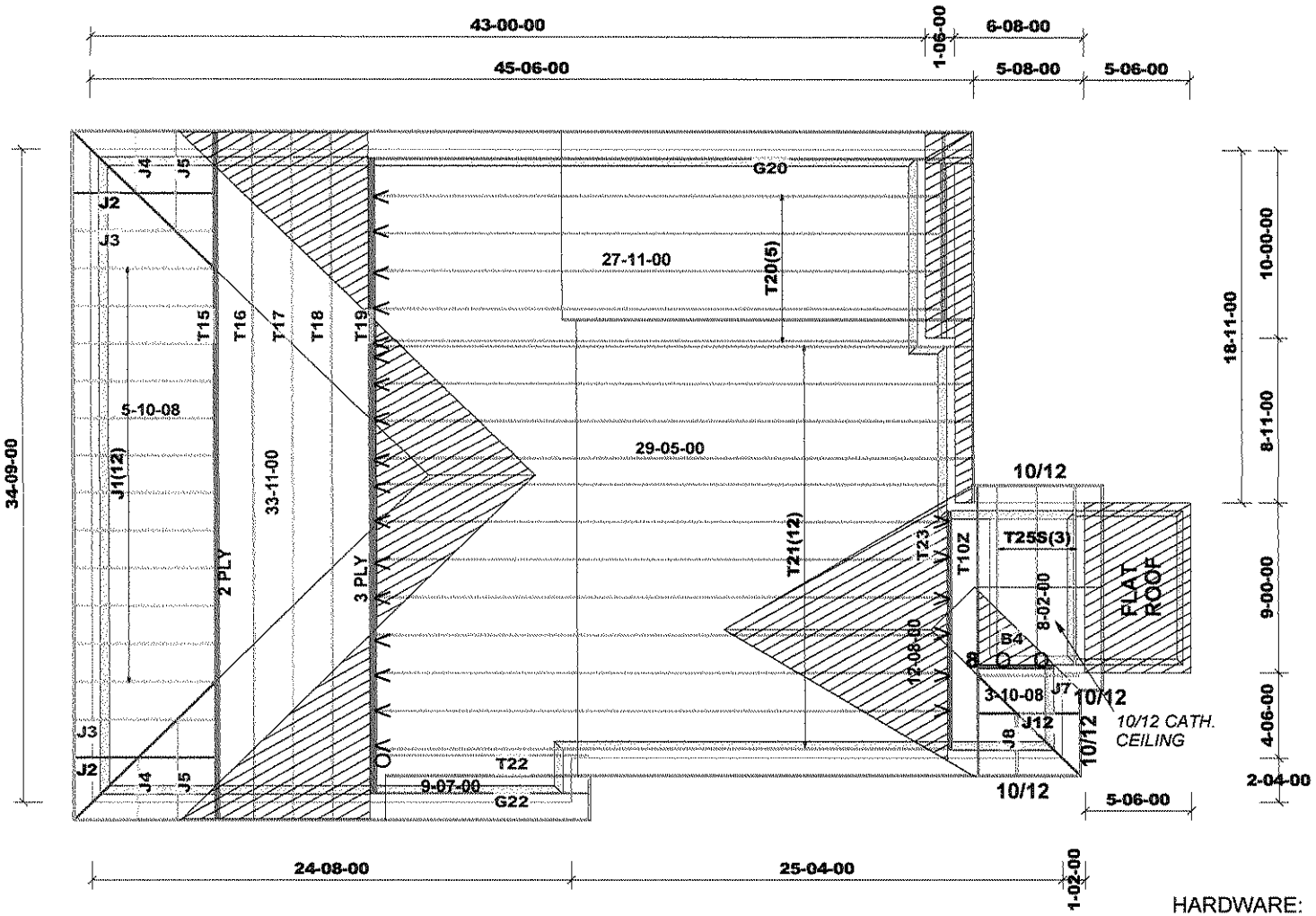


ASPHALT SHINGLES
12" FINISHED O.H.
5" CLADDING ALLOWANCE
2x6 EXTERIOR WALLS
2x6 FASCIA BOARD
HEEL: R.T.M.C.

T - 170375

ALL CONV. FRAMING TO CONFORM WITH PART 9 OF O.B.C. 2012 ROOF RAFTERS THAT CROSS OVER OR MEET TRUSSES TO BE 2X4 SPF #2 24" O.C. WITH A VERT.POST TO THE TRUSS UNDERNEATH AT EACH CROSS PT. VERT. POST LONGER THAN 6' TO HAVE LATERAL BRACING SO THAT THE DIST. BETWEEN END PT. & BETWEEN ROWS OF BRACING DOES NOT EXCEED 6'

DESIGN CONFORMS WITH OBC 2012
OCCUPANCY: RESIDENTIAL | PART: 9
GROUND SNOW LOAD Ss=31.3psf Sr=8.4psf
DESIGN LOADS
TCDL (3psf)
BCLL (10.5psf)
BCDL (7psf)

DENOTES: CONVENTIONAL FRAMING

HARDWARE:

LJS26DS -(V)
LUS24 -(O)
LUS24-2 -(8)

**BEAMS:**
**B4**: 2 - 2X8 SPF #2

ALL ROOF SLOPES ARE 6/12 UNLESS OTHERWISE NOTED

m10,977

| | | | |
|---|---|---|---|
| TAMARACK LUMBER INC. | Job Track: **43954** | Builder / Location: **GREENPARK HOMES / WATERDOWN** | Model / Elevation: **ROSEWOOD 2 / 2** |
| | Layout ID: **282690** | Project: **RUSSEL GARDENS PHASE 2** | THESE DRAWINGS CONSTITUTE THE PROPERTY OF TAMARACK ROOF TRUSSES INC., SHALL NOT BE REPRODUCED, PUBLISHED, OR REDISTRIBUTED IN ANY MANNER OR UTILIZED FOR ANY PURPOSE OTHER THAN THE MANUFACTURE OF TRUSSES BY TAMARACK ROOF TRUSSES INC AND WILL BE RETRACTED BY TAMARACK ROOF TRUSSES INC IF UTLILZED FOR ANY OTHER PURPOSE. |
| | Plan Log: **92461** | Date: 8/24/2017 Designer: colinh JS JVE | Mitek ver 7.5.0 |

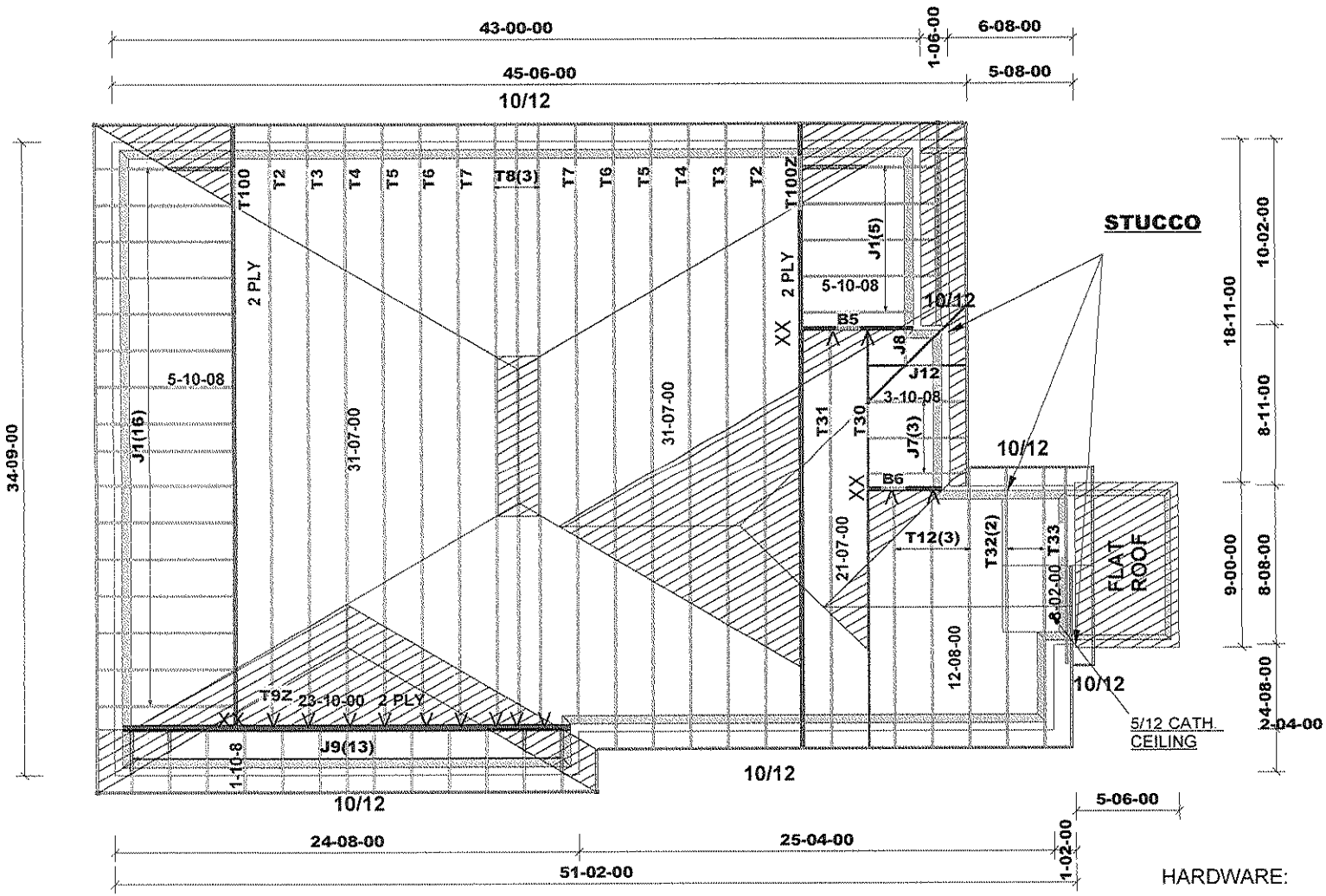


ASPHALT SHINGLES
12" FINISHED O.H.
5" CLADDING ALLOWANCE
2x6 EXTERIOR WALLS
2x6 FASCIA BOARD
HEEL: R.T.M.C.

T - 170375

ALL CONV. FRAMING TO CONFORM WITH PART 9 OF O.B.C. 2012 ROOF RAFTERS THAT CROSS OVER OR MEET TRUSSES TO BE 2X4 SPF #2 24" O.C. WITH A VERT.POST TO THE TRUSS UNDERNEATH AT EACH CROSS PT. VERT. POST LONGER THAN 6' TO HAVE LATERAL BRACING SO THAT THE DIST. BETWEEN END PT. & BETWEEN ROWS OF BRACING DOES NOT EXCEED 6'

DESIGN CONFORMS WITH OBC 2012
OCCUPANCY: RESIDENTIAL | PART: 9
GROUND SNOW LOAD Ss=31.3psf Sr=8.4psf
DESIGN LOADS
TCDL (3psf)
BCLL (10.5psf)
BCDL (7psf)

DENOTES:
CONVENTIONAL FRAMING

HARDWARE:

HGUS26-2 -(XX)
LJS26DS -(V)

**BEAMS:**
**ALL BEAMS (B):** 2 - 2X10 SPF #2

ALL ROOF SLOPES ARE 6/12 UNLESS OTHERWISE NOTED

M10,977

| | | | |
|---|---|---|---|
| TAMARACK LUMBER INC. | Job Track: 43954 | Builder / Location: GREENPARK HOMES / WATERDOWN | Model / Elevation: ROSEWOOD 2 / 3 |
| | Layout ID: 282695 | Project: RUSSEL GARDENS PHASE 2 | |
| | Plan Log: 92461 | Date: 8/24/2017 Designer: colinh/S.V.E | |

THESE DRAWINGS CONSTITUTE THE PROPERTY OF TAMARACK ROOF TRUSSES INC., SHALL NOT BE REPRODUCED, PUBLISHED, OR REDISTRIBUTED IN ANY MANNER OR UTILIZED FOR ANY PURPOSE OTHER THAN THE MANUFACTURE OF TRUSSES BY TAMARACK ROOF TRUSSES INC AND WILL BE RETRACTED BY TAMARACK ROOF TRUSSES INC IF UTLILZED FOR ANY OTHER PURPOSE.

Mitek ver 7.5.0

TAMARACK LUMBER INC.
ALPA LUMBER GROUP

# Delivery Shiplist

| | |
|---|---|
| DATE | 08/24/17 |
| SALES REP | Mario |

JOB TRACK: 43954 LAYOUT ID: 282689 LOCATION: WATERDOWN
BUILDER: GREENPARK - RUSSELL GARDENS PH 2 SUB-BUILDER:
MODEL: ROSEWOOD 2 ELEVATION: 1

## ROOF TRUSSES

ROOF TRUSS SPACING: 24.0 IN. O.C. (TYP.)

| PROFILE | QTY / PLY | MARK / TYPE | PITCH TC / BC | SPAN | TRUSS HEIGHT | LUMBER TOP | LUMBER BOT | OVERHANG LEFT / RIGHT | HEEL HEIGHT LEFT / RIGHT | LBS. / BFT. | BUNDLE # / STACK # | LOAD BY: / REMARKS |
|---|---|---|---|---|---|---|---|---|---|---|---|---|
| | 1 / 2 Ply | T1 HIP GIRDER | 10.00 / 0.00 | 31-07-00 | 04-01-04 | 2 X 6 | 2 X 6 | 01-03-08 / 01-03-08 | 01-07-11 / 01-07-11 | 365.44 / 216.00 | | |
| | 1 / 2 Ply | T1Z HIP GIRDER | 10.00 / 0.00 | 31-07-00 | 04-01-04 | 2 X 6 | 2 X 6 | 01-03-08 / 01-03-08 | 01-07-11 / 01-07-11 | 365.44 / 216.00 | | |
| | 2 | T2 HIP | 10.00 / 0.00 | 31-07-00 | 05-01-04 | 2 X 4 | 2 X 4 | 01-03-08 / 01-03-08 | 01-07-11 / 01-07-11 | 260.78 / 168.34 | | |
| | 2 | T3 HIP | 10.00 / 0.00 | 31-07-00 | 06-01-04 | 2 X 4 | 2 X 4 | 01-03-08 / 01-03-08 | 01-07-11 / 01-07-11 | 261.04 / 163.00 | | |
| | 2 | T4 HIP | 10.00 / 0.00 | 31-07-00 | 07-01-04 | 2 X 4 | 2 X 4 | 01-03-08 / 01-03-08 | 01-07-11 / 01-07-11 | 284.48 / 177.66 | | |
| | 2 | T5 HIP | 10.00 / 0.00 | 31-07-00 | 08-01-04 | 2 X 4 | 2 X 4 | 01-03-08 / 01-03-08 | 01-07-11 / 01-07-11 | 299.10 / 191.34 | | |
| 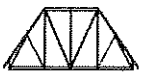 | 2 | T6 HIP | 10.00 / 0.00 | 31-07-00 | 09-01-04 | 2 X 4 | 2 X 4 | 01-03-08 / 01-03-08 | 01-07-11 / 01-07-11 | 303.02 / 188.34 | | |
| | 2 | T7 HIP | 10.00 / 0.00 | 31-07-00 | 10-01-04 | 2 X 4 | 2 X 4 | 01-03-08 / 01-03-08 | 01-07-11 / 01-07-11 | 325.86 / 204.00 | | |
| | 3 | T8 HIP | 10.00 / 0.00 | 31-07-00 | 11-01-04 | 2 X 4 | 2 X 4 | 01-03-08 / 01-03-08 | 01-07-11 / 01-07-11 | 505.26 / 312.99 | | |
| 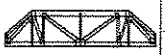 | 1 / 3 Ply | T9 HIP GIRDER | 6.00 / 0.00 | 23-10-00 | 03-03-04 | 2 X 4 | 2 X 6 | 00-00-00 / 00-00-00 | 01-02-00 / 01-02-00 | 382.08 / 236.01 | | |
| | 1 | T10 HIP GIRDER | 10.00 / 0.00 | 12-08-00 | 04-10-07 | 2 X 4 | 2 X 4 | 01-03-08 / 01-03-08 | 01-07-11 / 01-07-11 | 59.74 / 38.00 | | |
| | 1 | T11 HIP | 10.00 / 0.00 | 12-08-00 | 06-06-07 | 2 X 4 | 2 X 4 | 01-03-08 / 01-03-08 | 01-07-11 / 01-07-11 | 63.96 / 40.33 | | |
| | 3 | T12 COMMON | 10.00 / 0.00 | 12-08-00 | 06-11-00 | 2 X 4 | 2 X 4 | 01-03-08 / 01-03-08 | 01-07-11 / 01-07-11 | 182.28 / 118.50 | | |
| | 2 | T13 COMMON | 6.00 / 0.00 | 08-02-00 | 02-04-11 | 2 X 4 | 2 X 4 | 01-03-08 / 01-03-08 | 00-04-03 / 00-04-03 | 49.58 / 32.66 | | |
| | 1 | T13Z COMMON | 6.00 / 0.00 | 08-02-00 | 02-04-11 | 2 X 4 | 2 X 4 | 01-03-08 / 01-03-08 | 00-04-03 / 00-04-03 | 24.79 / 16.33 | | |
| | 23 | J1 JACK-OPEN | 6.00 / 0.00 | 05-10-08 | 04-01-04 | 2 X 4 | 2 X 4 | 01-03-08 / 00-00-00 | 01-02-00 / 04-01-04 | 386.17 / 245.41 | | |
| | 2 / 2 Ply | J1Z JACK-OPEN | 6.00 / 0.00 | 05-10-08 | 04-01-04 | 2 X 4 | 2 X 4 | 01-03-08 / 00-00-00 | 01-02-00 / 04-01-04 | 67.16 / 42.68 | | |
| | 2 | J7 JACK-OPEN | 10.00 / 0.00 | 03-10-08 | 04-10-07 | 2 X 4 | 2 X 4 | 01-03-08 / 00-00-00 | 01-07-11 / 00-05-13 | 27.50 / 17.34 | | |

TAMARACK LUMBER INC.
ALPA LUMBER GROUP

# Delivery Shiplist

| | |
|---|---|
| DATE | 08/24/17 |
| SALES REP | Mario |

**JOB TRACK:** 43954 **LAYOUT ID:** 282689 **LOCATION:** WATERDOWN
**BUILDER:** GREENPARK - RUSSELL GARDENS PH 2 **SUB-BUILDER:**
**MODEL:** ROSEWOOD 2 **ELEVATION:** 1

## ROOF TRUSSES

**ROOF TRUSS SPACING:** 24.0 IN. O.C. (TYP.)

| PROFILE | QTY / PLY | MARK / TYPE | PITCH TC / BC | SPAN | TRUSS HEIGHT | LUMBER TOP | LUMBER BOT | OVERHANG LEFT / RIGHT | HEEL HEIGHT LEFT / RIGHT | LBS. / BFT. | BUNDLE # / STACK # | LOAD BY: / REMARKS |
|---|---|---|---|---|---|---|---|---|---|---|---|---|
| | 13 | J9 JACK-OPEN | 10.00 / 0.00 | 01-11-08 | 03-03-04 | 2 X 4 | 2 X 4 | 01-03-08 / 00-00-00 | 01-07-11 / 03-03-04 | 113.36 / 78.00 | | |
| | 3 | J10 JACK-OPEN | 6.00 / 0.00 | 05-11-00 | 03-03-11 | 2 X 4 | 2 X 4 | 01-03-08 / 00-00-00 | 00-04-03 / 03-03-11 | 48.30 / 30.00 | | |
| | 3 | J11 JACK-OPEN | 10.00 / 0.00 | 01-10-10 | 02-04-11 | 2 X 4 | 2 X 4 | 01-03-08 / 00-00-00 | 00-09-13 / 02-04-11 | 22.77 / 15.99 | | |

TOTAL # TRUSS= **78.00** TOTAL BFT OF ALL TRUSSES= **2748.92** BFT. TOTAL WEIGHT OF ALL TRUSSES= **4398.11** LBS.

## HARDWARE

| QTY | ITEM TYPE | MODEL | LENGTH FT-IN-16 |
|---|---|---|---|
| 2 | Hangers | HGUS26-2 | |
| 4 | Hangers | LUS24-2 | |
| 12 | Hangers | LJS26DS | |

TOTAL # ITEMS= **18.00**

| | |
|---|---|
| DATE | 08/24/17 |
| SALES REP | Mario |

TAMARACK LUMBER INC.
ALPA LUMBER GROUP

# Delivery Shiplist

JOB TRACK: 43954 LAYOUT ID: 282690 LOCATION: WATERDOWN
BUILDER: GREENPARK - RUSSELL GARDENS PH 2 SUB-BUILDER:
MODEL: ROSEWOOD 2 ELEVATION: 2

## ROOF TRUSSES

ROOF TRUSS SPACING: 24.0 IN. O.C. (TYP.)

| PROFILE | QTY / PLY | MARK TYPE | PITCH TC / BC | SPAN | TRUSS HEIGHT | LUMBER TOP | LUMBER BOT | OVERHANG LEFT / RIGHT | HEEL HEIGHT LEFT / RIGHT | LBS. / BFT. | BUNDLE # / STACK # | LOAD BY: / REMARKS |
|---|---|---|---|---|---|---|---|---|---|---|---|---|
| | 1 / 2 Ply | T15 HIP GIRDER | 6.00 / 0.00 | 33-11-00 | 04-01-04 | 2 X 4 | 2 X 6 | 01-03-08 / 01-03-08 | 01-02-00 / 01-02-00 | 359.64 / 224.00 | | |
| | 1 | T16 HIP | 6.00 / 0.00 | 33-11-00 | 05-01-04 | 2 X 4 | 2 X 4 | 01-03-08 / 01-03-08 | 01-02-00 / 01-02-00 | 133.28 / 84.67 | | |
| | 1 | T17 HIP | 6.00 / 0.00 | 33-11-00 | 06-01-04 | 2 X 4 | 2 X 4 | 01-03-08 / 01-03-08 | 01-02-00 / 01-02-00 | 135.85 / 85.67 | | |
| | 1 | T18 HIP | 6.00 / 0.00 | 33-11-00 | 07-01-04 | 2 X 4 | 2 X 4 | 01-03-08 / 01-03-08 | 01-02-00 / 01-02-00 | 141.99 / 89.17 | | |
| | 1 / 3 Ply | T19 FLAT GIRDER | 0.00 / 0.00 | 33-11-00 | 05-04-04 | 2 X 6 | 2 X 6 | 00-00-00 / 00-00-00 | 05-04-04 / 05-04-04 | 656.37 / 393.99 | | |
| | 12 | T21 COMMON | 6.00 / 0.00 | 29-05-00 | 10-08-08 | 2 X 4 | 2 X 4 | 01-03-08 / 00-00-00 | 01-02-00 / 05-06-08 | 1639.68 / 1032.00 | | |
| | 5 | T20 COMMON | 6.00 / 0.00 | 27-11-00 | 10-04-00 | 2 X 4 | 2 X 4 | 01-03-08 / 00-00-00 | 01-02-00 / 05-06-08 | 626.50 / 390.85 | | |
| | 1 | G20 GABLE | 6.00 / 0.00 | 27-11-00 | 10-04-00 | 2 X 4 | 2 X 4 | 01-03-08 / 00-00-00 | 01-02-00 / 05-06-08 | 141.87 / 88.67 | | |
| 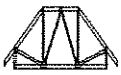 | 1 | T10Z HIP GIRDER | 10.00 / 0.00 | 12-08-00 | 04-10-07 | 2 X 4 | 2 X 4 | 01-03-08 / 01-03-08 | 01-07-11 / 01-07-11 | 59.74 / 38.00 | | |
| | 1 / 2 Ply | T23 HIP GIRDER | 10.00 / 0.00 | 12-08-00 | 06-00-03 | 2 X 6 | 2 X 6 | 00-00-00 / 00-00-00 | 01-07-11 / 01-07-11 | 174.14 / 109.34 | | |
| | 3 | T25S ROOF | 10.00 / 10.00 | 08-02-00 | 05-00-08 | 2 X 4 | 2 X 4 | 01-03-08 / 01-03-08 | 01-07-11 / 01-07-11 | 124.17 / 81.99 | | |
| | 1 | T22 COMMON | 6.00 / 0.00 | 09-07-00 | 05-09-00 | 2 X 4 | 2 X 4 | 01-03-08 / 00-00-00 | 01-02-00 / 00-03-08 | 45.15 / 28.33 | | |
| | 1 | G22 GABLE | 6.00 / 0.00 | 09-07-00 | 05-09-00 | 2 X 4 | 2 X 4 | 01-03-08 / 00-00-00 | 01-02-00 / 00-03-08 | 43.62 / 28.33 | | |
| | 12 | J1 JACK-OPEN | 6.00 / 0.00 | 05-10-08 | 04-01-04 | 2 X 4 | 2 X 4 | 01-03-08 / 00-00-00 | 01-02-00 / 04-01-04 | 201.48 / 128.04 | | |
| 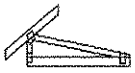 | 2 | J2 JACK-OPEN | 6.00 / 0.00 | 05-10-08 | 02-00-12 | 2 X 4 | 2 X 4 | 01-03-08 / -04-01-01 | 01-02-00 / 00-03-08 | 32.32 / 20.66 | | |
| | 2 | J3 JACK-OPEN | 6.00 / 0.00 | 05-10-08 | 03-00-12 | 2 X 4 | 2 X 4 | 01-03-08 / -02-01-01 | 01-02-00 / 00-03-08 | 37.42 / 23.34 | | |
| | 2 | J4 JACK-OPEN | 6.00 / 0.00 | 01-10-08 | 02-00-12 | 2 X 4 | 2 X 4 | 01-03-08 / -00-01-01 | 01-02-00 / 00-03-08 | 16.86 / 11.34 | | |
| | 2 | J5 JACK-OPEN | 6.00 / 0.00 | 01-10-08 | 03-00-12 | 2 X 4 | 2 X 4 | 01-03-08 / 01-10-15 | 01-02-00 / 00-04-11 | 21.96 / 14.00 | | |

| | |
|---|---|
| DATE | 08/24/17 |
| SALES REP | Mario |

TAMARACK LUMBER INC.
ALPA LUMBER GROUP

# Delivery Shiplist

**JOB TRACK:** 43954 **LAYOUT ID:** 282690 **LOCATION:** WATERDOWN
**BUILDER:** GREENPARK - RUSSELL GARDENS PH 2 **SUB-BUILDER:**
**MODEL:** ROSEWOOD 2 **ELEVATION:** 2

## ROOF TRUSSES

**ROOF TRUSS SPACING:** 24.0 IN. O.C. (TYP.)

| PROFILE | QTY / PLY | MARK TYPE | PITCH TC / BC | SPAN | TRUSS HEIGHT | LUMBER TOP | LUMBER BOT | OVERHANG LEFT / RIGHT | HEEL HEIGHT LEFT / RIGHT | LBS. / BFT. | BUNDLE # / STACK # | LOAD BY: / REMARKS |
|---|---|---|---|---|---|---|---|---|---|---|---|---|
| | 1 | J7 JACK-OPEN | 10.00 / 0.00 | 03-10-08 | 04-10-07 | 2 X 4 | 2 X 4 | 01-03-08 / 00-00-00 | 01-07-11 / 04-10-07 | 13.75 / 8.67 | | |
| | 1 | J8 JACK-OPEN | 10.00 / 0.00 | 01-10-08 | 03-01-09 | 2 X 4 | 2 X 4 | 01-03-08 / -00-01-01 | 01-07-11 / 00-03-08 | 9.99 / 7.00 | | |
| | 1 | J12 JACK-OPEN | 10.00 / 0.00 | 03-10-08 | 03-01-09 | 2 X 4 | 2 X 4 | 01-03-08 / -02-01-01 | 01-07-11 / 00-03-08 | 13.73 / 9.33 | | |

TOTAL # TRUSS= **57.00** TOTAL BFT OF ALL TRUSSES= **2897.39** BFT. TOTAL WEIGHT OF ALL TRUSSES= **4629.51** LBS.

## HARDWARE

| QTY | ITEM TYPE | MODEL | LENGTH FT-IN-16 |
|---|---|---|---|
| 1 | Hangers | LUS24-2 | |
| 3 | Hangers | LUS24 | |
| 23 | Hangers | LJS26DS | |

TOTAL # ITEMS= **27.00**

TAMARACK LUMBER INC.
ALPA LUMBER GROUP

# Delivery Shiplist

| | |
|---|---|
| DATE | 08/24/17 |
| SALES REP | Mario |

JOB TRACK: 43954 LAYOUT ID: 282695 LOCATION: WATERDOWN
BUILDER: GREENPARK - RUSSELL GARDENS PH2 SUB-BUILDER:
MODEL: ROSEWOOD 2 ELEVATION: 3

## ROOF TRUSSES

ROOF TRUSS SPACING: 24.0 IN. O.C. (TYP.)

| PROFILE | QTY / PLY | MARK / TYPE | PITCH TC / BC | SPAN | TRUSS HEIGHT | LUMBER TOP | LUMBER BOT | OVERHANG LEFT / RIGHT | HEEL HEIGHT LEFT / RIGHT | LBS. / BFT. | BUNDLE # / STACK # | LOAD BY: / REMARKS |
|---|---|---|---|---|---|---|---|---|---|---|---|---|
| | 1 / 2 Ply | T100 HIP GIRDER | 10.00 / 0.00 | 31-07-00 | 04-01-04 | 2 X 6 | 2 X 6 | 01-03-08 / 01-03-08 | 01-07-11 / 01-07-11 | 365.50 / 218.68 | | |
| | 1 / 2 Ply | T100Z HIP GIRDER | 10.00 / 0.00 | 31-07-00 | 04-01-04 | 2 X 6 | 2 X 6 | 01-03-08 / 01-03-08 | 01-07-11 / 01-07-11 | 365.50 / 218.68 | | |
| | 2 | T2 HIP | 10.00 / 0.00 | 31-07-00 | 05-01-04 | 2 X 4 | 2 X 4 | 01-03-08 / 01-03-08 | 01-07-11 / 01-07-11 | 260.78 / 168.34 | | |
| 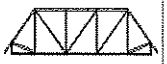 | 2 | T3 HIP | 10.00 / 0.00 | 31-07-00 | 06-01-04 | 2 X 4 | 2 X 4 | 01-03-08 / 01-03-08 | 01-07-11 / 01-07-11 | 261.04 / 163.00 | | |
| 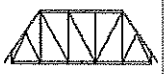 | 2 | T4 HIP | 10.00 / 0.00 | 31-07-00 | 07-01-04 | 2 X 4 | 2 X 4 | 01-03-08 / 01-03-08 | 01-07-11 / 01-07-11 | 284.48 / 177.66 | | |
| | 2 | T5 HIP | 10.00 / 0.00 | 31-07-00 | 08-01-04 | 2 X 4 | 2 X 4 | 01-03-08 / 01-03-08 | 01-07-11 / 01-07-11 | 299.10 / 191.34 | | |
| | 2 | T6 HIP | 10.00 / 0.00 | 31-07-00 | 09-01-04 | 2 X 4 | 2 X 4 | 01-03-08 / 01-03-08 | 01-07-11 / 01-07-11 | 303.02 / 188.34 | | |
| | 2 | T7 HIP | 10.00 / 0.00 | 31-07-00 | 10-01-04 | 2 X 4 | 2 X 4 | 01-03-08 / 01-03-08 | 01-07-11 / 01-07-11 | 325.86 / 204.00 | | |
| | 3 | T8 HIP | 10.00 / 0.00 | 31-07-00 | 11-01-04 | 2 X 4 | 2 X 4 | 01-03-08 / 01-03-08 | 01-07-11 / 01-07-11 | 505.26 / 312.99 | | |
| 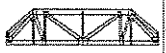 | 1 / 3 Ply | T9Z HIP GIRDER | 6.00 / 0.00 | 23-10-00 | 03-03-04 | 2 X 4 | 2 X 6 | 00-00-00 / 00-00-00 | 01-02-00 / 01-02-00 | 382.08 / 236.01 | | |
| 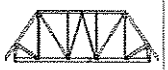 | 1 | T30 HIP GIRDER | 10.00 / 0.00 | 21-07-00 | 04-10-07 | 2 X 4 | 2 X 6 | 01-03-08 / 01-03-08 | 01-07-11 / 01-07-11 | 111.21 / 69.67 | | |
| | 1 | T31 HIP | 10.00 / 0.00 | 21-07-00 | 06-06-07 | 2 X 4 | 2 X 4 | 01-03-08 / 01-03-08 | 01-07-11 / 01-07-11 | 96.54 / 60.33 | | |
| | 3 | T12 COMMON | 10.00 / 0.00 | 12-08-00 | 06-11-00 | 2 X 4 | 2 X 4 | 01-03-08 / 01-03-08 | 01-07-11 / 01-07-11 | 182.28 / 118.50 | | |
| | 2 | T32 ROOF | 10.00 / 5.00 | 12-08-00 | 06-11-00 | 2 X 4 | 2 X 4 | 01-03-08 / 01-03-08 | 01-07-11 / 01-07-11 | 130.48 / 88.00 | | |
| | 1 | T33 SCISSOR | 10.00 / 5.00 | 08-02-00 | 05-00-08 | 2 X 4 | 2 X 4 | 01-03-08 / 01-03-08 | 01-07-11 / 01-07-11 | 39.70 / 26.83 | | |
| 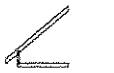 | 21 | J1 JACK-OPEN | 6.00 / 0.00 | 05-10-08 | 04-01-04 | 2 X 4 | 2 X 4 | 01-03-08 / 00-00-00 | 01-02-00 / 04-01-04 | 352.59 / 224.07 | | |
| | 3 | J7 JACK-OPEN | 10.00 / 0.00 | 03-10-08 | 04-10-07 | 2 X 4 | 2 X 4 | 01-03-08 / 00-00-00 | 01-07-11 / 04-10-07 | 41.25 / 26.01 | | |
| | 1 | J8 JACK-OPEN | 10.00 / 0.00 | 01-10-08 | 03-01-09 | 2 X 4 | 2 X 4 | 00-00-00 / -00-01-01 | 01-07-11 / 00-03-08 | 6.00 / 4.33 | | |

TAMARACK LUMBER INC.
ALPA LUMBER GROUP

# Delivery Shiplist

| | |
|---|---|
| DATE | 08/24/17 |
| SALES REP | Mario |

JOB TRACK: 43954 LAYOUT ID: 282695 LOCATION: WATERDOWN
BUILDER: GREENPARK - RUSSELL GARDENS PH2 SUB-BUILDER:
MODEL: ROSEWOOD 2 ELEVATION: 3

## ROOF TRUSSES

ROOF TRUSS SPACING: 24.0 IN. O.C. (TYP.)

| PROFILE | QTY / PLY | MARK TYPE | PITCH TC / BC | SPAN | TRUSS HEIGHT | LUMBER TOP | LUMBER BOT | OVERHANG LEFT / RIGHT | HEEL HEIGHT LEFT / RIGHT | LBS. / BFT. | BUNDLE # / STACK # | LOAD BY: / REMARKS |
|---|---|---|---|---|---|---|---|---|---|---|---|---|
| | 13 | J9 JACK-OPEN | 10.00 / 0.00 | 01-11-08 | 03-03-04 | 2 X 4 | 2 X 4 | 01-03-08 / 00-00-00 | 01-07-11 / 03-03-04 | 113.36 / 78.00 | | |
| | 1 | J12 JACK-OPEN | 10.00 / 0.00 | 03-10-08 | 03-01-09 | 2 X 4 | 2 X 4 | 01-03-08 / -02-01-01 | 01-07-11 / 00-03-08 | 13.73 / 9.33 | | |

TOTAL # TRUSS= **69.00** TOTAL BFT OF ALL TRUSSES= **2784.11** BFT. TOTAL WEIGHT OF ALL TRUSSES= **4439.76** LBS.

## HARDWARE

| QTY | ITEM TYPE | MODEL | LENGTH FT-IN-16 |
|---|---|---|---|
| 3 | Hangers | HGUS26-2 | |
| 13 | Hangers | LJS26DS | |

TOTAL # ITEMS= **16.00**

| JOB NAME | TRUSS NAME | QUANTITY | PLY | JOB DESC. 43954 | DRWG NO. |
|---|---|---|---|---|---|
| 282689 | T1 | 1 | 2 | TRUSS DESC. | |

Tamarack Roof Truss, Burlington

Version 8.030 S Oct 5 2016 MiTek Industries, Inc. Thu Aug 24 16:30:49 2017 Page 1

ID:_P_zlJoeh6kqSyqNtNRH3eykdwA-8wVrNM1nuigGsJtcsY0la4mPvFHb4FFI7dCNRWykbS4

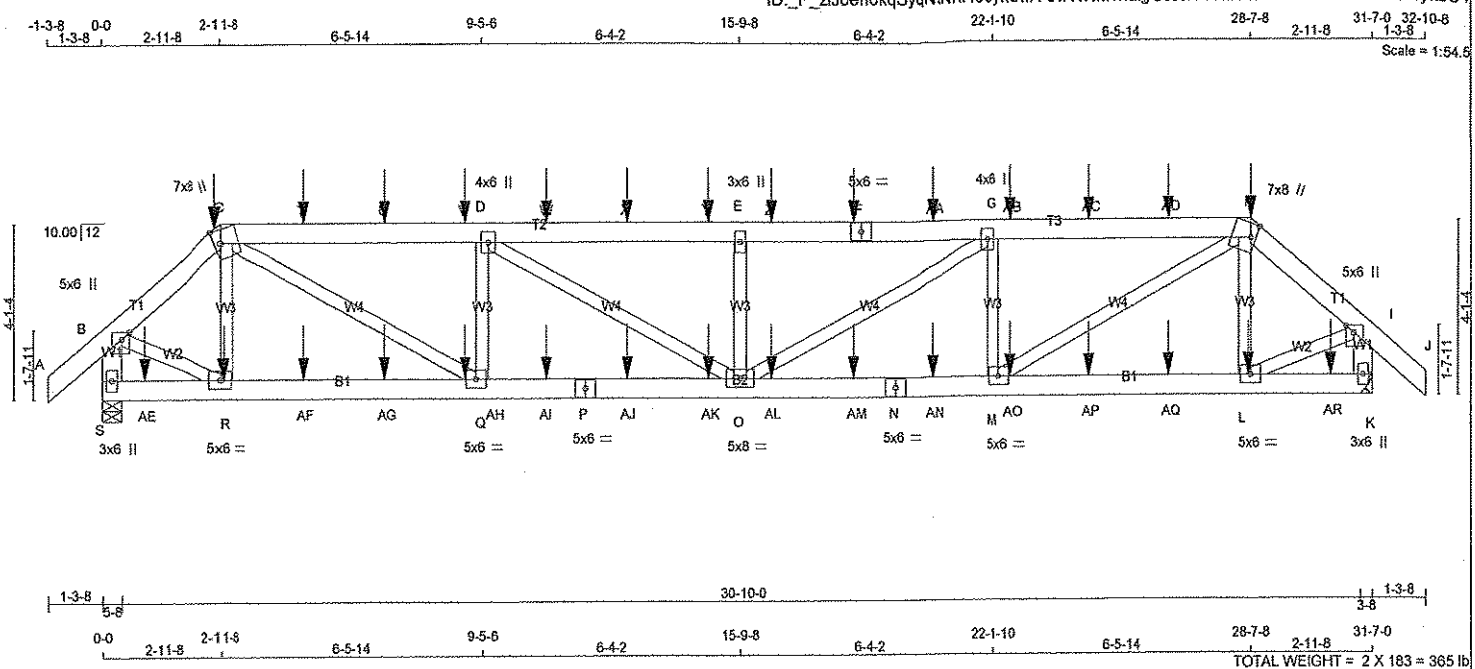





TOTAL WEIGHT = 2 X 183 = 365 lb

[M]

**LUMBER**

N. L. G. A. RULES

| CHORDS | SIZE | | LUMBER | DESCR. |
|---|---|---|---|---|
| A - C | 2x6 | DRY | No.2 | SPF |
| C - F | 2x6 | DRY | No.2 | SPF |
| F - H | 2x6 | DRY | No.2 | SPF |
| H - J | 2x6 | DRY | No.2 | SPF |
| S - B | 2x6 | DRY | No.2 | SPF |
| K - I | 2x6 | DRY | No.2 | SPF |
| S - P | 2x6 | DRY | 1650F 1.5E | SPF |
| P - N | 2x6 | DRY | 1650F 1.5E | SPF |
| N - K | 2x6 | DRY | 1650F 1.5E | SPF |
| ALL WEBS EXCEPT | 2x4 | DRY | No.2 | SPF |

DRY: SEASONED LUMBER.

DESIGN CONSISTS OF 2 TRUSSES BUILT SEPARATELY THEN FASTENED TOGETHER AS FOLLOWS:

| CHORDS | #ROWS | SURFACE SPACING (IN) | LOAD(PLF) |
|---|---|---|---|
| TOP CHORDS : (0.122"X3") SPIRAL NAILS | | | |
| A- C | 2 | 12 | SIDE(122.0) |
| C- F | 2 | 12 | SIDE(61.0) |
| F- H | 2 | 12 | SIDE(61.0) |
| H- J | 2 | 12 | SIDE(122.0) |
| S- B | 2 | 12 | TOP |
| K- I | 2 | 12 | TOP |
| BOTTOM CHORDS : (0.122"X3") SPIRAL NAILS | | | |
| S- P | 2 | 12 | SIDE(183.1) |
| P- N | 2 | 12 | SIDE(0.0) |
| N- K | 2 | 12 | SIDE(183.1) |
| WEBS : (0.122"X3") SPIRAL NAILS | | | |
| 2x4 | 1 | 6 | |

NAILS TO BE DRIVEN FROM ONE SIDE ONLY.

GIRDER NAILING ASSUMES NAILED HANGERS ARE FASTENED WITH MIN. 3-0 INCH NAILS.

TOP - COMPONENTS ARE LOADED FROM THE TOP AND MUST BE PLACED ON TOP EDGE OF ALL PLIES FOR THE LOAD TO BE TRANSFERRED TO EACH PLY.

SIDE - PLF SHOWN IS THE EQUIVALENT UDL APPLIED TO ONE SIDE THAT THE CORRESPONDING NAILING PATTERN SHALL BE CAPABLE OF TRANSFERING. REMAINING PLF MUST BE APPLIED ON THE OPPOSITE SIDE OR ON THE TOP.

**PLATES (table is in inches)**

| JT | TYPE | PLATES | W | LEN | Y | X |
|---|---|---|---|---|---|---|
| B | TMWW+p | MT20 | 5.0 | 6.0 | 2.00 | 2.25 |
| C | TTWW+m | MT20 | 7.0 | 8.0 | 3.75 | 1.50 |
| D | TMWW+t | MT20 | 4.0 | 6.0 | | |
| E | TMW+w | MT20 | 3.0 | 6.0 | | |
| F | TS-t | MT20 | 5.0 | 6.0 | | |
| G | TMWW+t | MT20 | 4.0 | 6.0 | | |
| H | TTWW+m | MT20 | 7.0 | 8.0 | 3.75 | 1.50 |
| I | TMW+p | MT20 | 5.0 | 6.0 | 2.00 | 2.25 |
| K | BMV1+p | MT20 | 3.0 | 6.0 | | |
| L, M, Q, R | | | | | | |
| L | BMWW-t | MT20 | 5.0 | 6.0 | | |
| N | BS-t | MT20 | 5.0 | 6.0 | | |
| O | BMWWW-t | MT20 | 5.0 | 8.0 | | |
| P | BS-t | MT20 | 5.0 | 6.0 | | |
| S | BMV1+p | MT20 | 3.0 | 6.0 | | |

**DIMENSIONS, SUPPORTS AND LOADINGS SPECIFIED BY FABRICATOR TO BE VERIFIED BY BUILDING DESIGNER**

**BEARINGS**

| JT | FACTORED GROSS REACTION VERT | HORZ | MAXIMUM FACTORED GROSS REACTION DOWN | HORZ | UPLIFT | INPUT BRG IN-SX | REQRD BRG IN-SX |
|---|---|---|---|---|---|---|---|
| S | 3137 | 0 | 3137 | 0 | 0 | 5-8 | 5-8 |
| K | 3109 | 0 | 3109 | 0 | 0 | HANGER BY OTHERS | |
| | | | | | | MIN. SEAT SIZE: 3-8 | |

**UNFACTORED REACTIONS**

| JT | 1ST LCASE COMBINED | MAX./MIN. COMPONENT REACTIONS SNOW | LIVE | PERM.LIVE | WIND | DEAD | SOIL |
|---|---|---|---|---|---|---|---|
| S | 2564 | 1442 / 0 | 571 / 0 | 0 / 0 | 0 / 0 | 551 / 0 | 0 / 0 |
| K | 2545 | 1423 / 0 | 571 / 0 | 0 / 0 | 0 / 0 | 551 / 0 | 0 / 0 |

BEARING MATERIAL TO BE SPF NO.2 OR BETTER AT JOINT(S) S

**BRACING**

TOP CHORD TO BE SHEATHED OR MAX. PURLIN SPACING = 4.44 FT.
MAX. UNBRACED BOTTOM CHORD LENGTH = 10.00 FT. OR RIGID CEILING DIRECTLY APPLIED.

ALL PITCH BREAKS AND PERIMETER CORNER JOINTS MUST BE LATERALLY RESTRAINED.

**LOADING**

TOTAL LOAD CASES: (4)

CHORDS

| MEMB. FR-TO | MAX. FACTORED FORCE (LBS) | FACTORED VERT. LOAD (PLF) FROM | TO | LC1 | MAX CSI (LC) | MAX. UNBRAC LENGTH |
|---|---|---|---|---|---|---|
| A- B | 0 / 39 | -84.3 | -84.3 | 0.03 (1) | 10.00 | |
| B- C | -3127 / 0 | -84.3 | -84.3 | 0.05 (1) | 6.20 | |
| C- T | -5581 / 0 | -84.3 | -84.3 | 0.25 (1) | 4.76 | |
| T- U | -5581 / 0 | -84.3 | -84.3 | 0.25 (1) | 4.76 | |
| U- V | -5581 / 0 | -84.3 | -84.3 | 0.25 (1) | 4.76 | |
| V- D | -5581 / 0 | -84.3 | -84.3 | 0.25 (1) | 4.76 | |
| D- W | -6557 / 0 | -84.3 | -84.3 | 0.28 (1) | 4.44 | |
| W- X | -6557 / 0 | -84.3 | -84.3 | 0.28 (1) | 4.44 | |
| X- Y | -6557 / 0 | -84.3 | -84.3 | 0.28 (1) | 4.44 | |
| Y- E | -6557 / 0 | -84.3 | -84.3 | 0.28 (1) | 4.44 | |
| E- Z | -6557 / 0 | -84.3 | -84.3 | 0.28 (1) | 4.44 | |
| Z- F | -6557 / 0 | -84.3 | -84.3 | 0.28 (1) | 4.44 | |
| F-AA | -6557 / 0 | -84.3 | -84.3 | 0.28 (1) | 4.44 | |
| AA- G | -6557 / 0 | -84.3 | -84.3 | 0.28 (1) | 4.44 | |
| G-AB | -5573 / 0 | -84.3 | -84.3 | 0.25 (1) | 4.76 | |
| AB-AC | -5573 / 0 | -84.3 | -84.3 | 0.25 (1) | 4.76 | |
| AC-AD | -5573 / 0 | -84.3 | -84.3 | 0.25 (1) | 4.76 | |
| AD- H | -5573 / 0 | -84.3 | -84.3 | 0.25 (1) | 4.76 | |
| H- I | -3097 / 0 | -84.3 | -84.3 | 0.05 (1) | 6.22 | |
| I- J | 0 / 39 | -84.3 | -84.3 | 0.03 (1) | 10.00 | |
| S- B | -3121 / 0 | 0.0 | 0.0 | 0.11 (1) | 7.8 | |
| K- I | -3093 / 0 | 0.0 | 0.0 | 0.11 (1) | 7.8 | |
| S-AE | 0 / 0 | -28.0 | -28.0 | 0.06 (2) | 10.00 | |
| AE- R | 0 / 0 | -28.0 | -28.0 | 0.06 (2) | 10.00 | |
| R-AF | 0 / 2366 | -28.0 | -28.0 | 0.14 (1) | 10.00 | |
| AF-AG | 0 / 2366 | -28.0 | -28.0 | 0.14 (1) | 10.00 | |
| AG-AH | 0 / 2366 | -28.0 | -28.0 | 0.14 (1) | 10.00 | |
| AH- Q | 0 / 2366 | -28.0 | -28.0 | 0.14 (1) | 10.00 | |
| Q-AI | 0 / 5581 | -28.0 | -28.0 | 0.27 (1) | 10.00 | |
| AI- P | 0 / 5581 | -28.0 | -28.0 | 0.27 (1) | 10.00 | |
| P-AJ | 0 / 5581 | -28.0 | -28.0 | 0.27 (1) | 10.00 | |
| AJ-AK | 0 / 5581 | -28.0 | -28.0 | 0.27 (1) | 10.00 | |
| AK- O | 0 / 5581 | -28.0 | -28.0 | 0.27 (1) | 10.00 | |
| O-AL | 0 / 5573 | -28.0 | -28.0 | 0.27 (1) | 10.00 | |
| AL-AM | 0 / 5573 | -28.0 | -28.0 | 0.27 (1) | 10.00 | |
| AM- N | 0 / 5573 | -28.0 | -28.0 | 0.27 (1) | 10.00 | |
| N-AN | 0 / 5573 | -28.0 | -28.0 | 0.27 (1) | 10.00 | |
| AN- M | 0 / 5573 | -28.0 | -28.0 | 0.27 (1) | 10.00 | |

WEBS

| MEMB. FR-TO | MAX. FACTORED FORCE (LBS) | MAX CSI (LC) |
|---|---|---|
| R- C | -555 / 36 | 0.05 (1) |
| C- Q | 0 / 3679 | 0.33 (1) |
| Q- D | -1503 / 0 | 0.13 (1) |
| D- O | 0 / 1125 | 0.10 (1) |
| O- E | -812 / 0 | 0.07 (1) |
| O- G | 0 / 1135 | 0.10 (1) |
| M- G | -1511 / 0 | 0.13 (1) |
| M- H | 0 / 3696 | 0.33 (1) |
| L- H | -546 / 36 | 0.05 (1) |
| B- R | 0 / 2538 | 0.22 (1) |
| L- I | 0 / 2513 | 0.22 (1) |

LICENSED PROFESSIONAL ENGINEER
S. KATSOULAKOS
PROVINCE OF ONTARIO

DWG NO. TAM 42856 17
STRUCTURAL
COMPONENT ONLY

**DESIGN CRITERIA**

*** SPECIAL LOADS ANALYSIS ***
GEOMETRY AND/OR BASIC LOADS CHANGED BY USER.
LOADS WERE DERIVED FROM USER INPUT
NO FURTHER MODIFICATIONS WERE MADE

SPECIFIED LOADS:

| | | | | |
|---|---|---|---|---|
| TOP CH. | LL | = | 25.6 | PSF |
| | DL | = | 3.0 | PSF |
| BOT CH. | LL | = | 10.5 | PSF |
| | DL | = | 7.0 | PSF |
| TOTAL LOAD | | = | 46.1 | PSF |

**SPACING = 24.0 IN. C/C**

LOADING IN FLAT SECTION BASED ON A SLOPE OF 6.00/12

*** NON STANDARD GIRDER ***
ADDT'L USER-DEFINED LOADS APPLIED TO ALL LOAD CASES.

THIS TRUSS IS DESIGNED FOR RESIDENTIAL OR SMALL BUILDING REQUIREMENTS OF PART 9, NBCC 2010

THIS DESIGN COMPLIES WITH:
- PART 9 OF OBC 2012 , BCBC 2012 , ABC 2014
- CSA 086-09
- TPIC 2011

(55 % OF 31.3 P.S.F. G.S.L. PLUS 8.4 P.S.F. RAIN LOAD) EQUALS 25.6 P.S.F. SPECIFIED ROOF LIVE LOAD

ALLOWABLE DEFL.(LL)= L/360 (1.05")
CALCULATED VERT. DEFL.(LL) = L/ 999 (0.15")
ALLOWABLE DEFL.(TL)= L/360 (1.05")
CALCULATED VERT. DEFL.(TL) = L/ 999 (0.24")

CSI: TC=0.28 (E-G:1) , BC=0.27 (O-Q:1) , WB=0.33 (H-M:1) , SSI=0.18 (G-H:1)

DOL LUMBER=1.00 NAIL=1.00 LS BEND=1.00 COMP=1.00 SHEAR=1.00 TENS= 1.00

COMPANION LIVE LOAD FACTOR = 0.50

TRUSS PLATE MANUFACTURER IS NOT RESPONSIBLE FOR QUALITY CONTROL IN THE TRUSS MANUFACTURING PLANT .

NAIL VALUES

| PLATE | GRIP(DRY) (PSI) MAX | MIN | SHEAR (PLI) MAX | MIN | SECTION (PLI) MAX | MIN |
|---|---|---|---|---|---|---|
| MT20 | 618 | 354 | 1667 | 822 | 2284 | 1656 |

PLATE PLACEMENT TOL. = 0.250 inches

PLATE ROTATION TOL. = 5.0 Deg.

JSI GRIP= 0.90 (H) (INPUT = 0.90 )
JSI METAL= 0.48 (N) (INPUT = 1.00 )

P6/6

CONTINUED ON PAGE 2

**HANGERS NOTES**

1) SPECIAL HANGER(S) OR CONNECTION(S) REQUIRED TO SUPPORT CONCENTRATED LOAD(S) 319.1 lbs FACTORED DOWN AT 2-11-8, 283.2 lbs FACTORED DOWN AT 28-7-8, 101.4 lbs FACTORED DOWN AT 5-0-4, 101.4 lbs FACTORED DOWN AT 7-0-4, 101.4 lbs FACTORED DOWN AT 9-0-4, 101.4 lbs FACTORED DOWN AT 11-0-4, 101.4 lbs FACTORED DOWN AT 13-0-4, 101.4 lbs FACTORED DOWN AT 15-0-4, 101.4 lbs FACTORED DOWN AT 16-6-12, 101.4 lbs FACTORED DOWN AT 18-6-12, 101.4 lbs FACTORED DOWN AT 20-6-12, 101.4 lbs FACTORED DOWN AT 22-6-12, AND 101.4 lbs FACTORED DOWN AT 24-6-12, AND 101.4 lbs FACTORED DOWN AT 26-6-12 ON TOP CHORD, AND 69.9 lbs FACTORED DOWN AT 1-0-4, 69.9 lbs FACTORED DOWN AT 3-0-4, 69.9 lbs FACTORED DOWN AT 5-0-4, 69.9 lbs FACTORED DOWN AT 7-0-4, 69.9 lbs FACTORED DOWN AT 9-0-4, 69.9 lbs FACTORED DOWN AT 11-0-4, 69.9 lbs FACTORED DOWN AT 13-0-4, 69.9 lbs FACTORED DOWN AT 15-0-4, 69.9 lbs FACTORED DOWN AT 16-6-12, 69.9 lbs FACTORED DOWN AT 18-6-12, 69.9 lbs FACTORED DOWN AT 20-6-12, 69.9 lbs FACTORED DOWN AT 22-6-12, 69.9 lbs FACTORED DOWN AT 24-6-12, 69.9 lbs FACTORED DOWN AT 26-6-12, AND 69.9 lbs FACTORED DOWN AT 28-6-12, AND 69.9 lbs FACTORED DOWN AT 30-6-12 ON BOTTOM CHORD. DESIGN FOR UNSPECIFIED CONNECTION(S) IS DELEGATED TO THE BUILDING DESIGNER.

**LOADING**

TOTAL LOAD CASES: (4)

CHORDS

| MEMB. FR-TO | MAX. FACTORED FORCE (LBS) | FACTORED VERT. LOAD (PLF) FROM | TO | LC1 | MAX CSI (LC) | MAX. UNBRAC LENGTH |
|---|---|---|---|---|---|---|
| M-AO | 0 / 2343 | -28.0 | -28.0 | 0.14 | (1) | 10.00 |
| AO-AP | 0 / 2343 | -28.0 | -28.0 | 0.14 | (1) | 10.00 |
| AP-AQ | 0 / 2343 | -28.0 | -28.0 | 0.14 | (1) | 10.00 |
| AQ-L | 0 / 2343 | -28.0 | -28.0 | 0.14 | (1) | 10.00 |
| L-AR | 0 / 0 | -28.0 | -28.0 | 0.06 | (2) | 10.00 |
| AR-K | 0 / 0 | -28.0 | -28.0 | 0.06 | (2) | 10.00 |

WEBS

| MEMB. FR-TO | MAX. FACTORED FORCE (LBS) | MAX CSI (LC) |
|---|---|---|

FACTORED CONCENTRATED LOADS (LBS)

| JT | LOC. | LC1 | MAX- | MAX+ | FACE | DIR. | TYPE |
|---|---|---|---|---|---|---|---|
| C | 2-11-8 | -16 | -18 | --- | FRONT | VERT | DEAD |
| C | 2-11-8 | -141 | -141 | --- | FRONT | VERT | TOTAL |
| C | 2-11-8 | -162 | -162 | --- | FRONT | VERT | SNOW |
| F | 18-6-12 | -101 | -101 | --- | FRONT | VERT | TOTAL |
| H | 28-7-8 | -16 | -18 | --- | FRONT | VERT | DEAD |
| H | 28-7-8 | -105 | -105 | --- | FRONT | VERT | TOTAL |
| H | 28-7-8 | -162 | -162 | --- | FRONT | VERT | SNOW |
| L | 28-6-12 | -40 | -70 | --- | FRONT | VERT | TOTAL |
| R | 3-0-4 | -40 | -70 | --- | FRONT | VERT | TOTAL |
| T | 5-0-4 | -101 | -101 | --- | FRONT | VERT | TOTAL |
| U | 7-0-4 | -101 | -101 | --- | FRONT | VERT | TOTAL |
| V | 9-0-4 | -101 | -101 | --- | FRONT | VERT | TOTAL |
| W | 11-0-4 | -101 | -101 | --- | FRONT | VERT | TOTAL |
| X | 13-0-4 | -101 | -101 | --- | FRONT | VERT | TOTAL |
| Y | 15-0-4 | -101 | -101 | --- | FRONT | VERT | TOTAL |
| Z | 16-6-12 | -101 | -101 | --- | FRONT | VERT | TOTAL |
| AA | 20-6-12 | -101 | -101 | --- | FRONT | VERT | TOTAL |
| AB | 22-6-12 | -101 | -101 | --- | FRONT | VERT | TOTAL |
| AC | 24-6-12 | -101 | -101 | --- | FRONT | VERT | TOTAL |
| AD | 26-6-12 | -101 | -101 | --- | FRONT | VERT | TOTAL |
| AE | 1-0-4 | -40 | -70 | --- | FRONT | VERT | TOTAL |
| AF | 5-0-4 | -40 | -70 | --- | FRONT | VERT | TOTAL |
| AG | 7-0-4 | -40 | -70 | --- | FRONT | VERT | TOTAL |
| AH | 9-0-4 | -40 | -70 | --- | FRONT | VERT | TOTAL |
| AI | 11-0-4 | -40 | -70 | --- | FRONT | VERT | TOTAL |
| AJ | 13-0-4 | -40 | -70 | --- | FRONT | VERT | TOTAL |
| AK | 15-0-4 | -40 | -70 | --- | FRONT | VERT | TOTAL |
| AL | 16-6-12 | -40 | -70 | --- | FRONT | VERT | TOTAL |
| AM | 18-6-12 | -40 | -70 | --- | FRONT | VERT | TOTAL |
| AN | 20-6-12 | -40 | -70 | --- | FRONT | VERT | TOTAL |
| AO | 22-6-12 | -40 | -70 | --- | FRONT | VERT | TOTAL |
| AP | 24-6-12 | -40 | -70 | --- | FRONT | VERT | TOTAL |
| AQ | 26-6-12 | -40 | -70 | --- | FRONT | VERT | TOTAL |
| AR | 30-6-12 | -40 | -70 | --- | FRONT | VERT | TOTAL |

LICENSED PROFESSIONAL ENGINEER
S. KATSOULAKOS
PROVINCE OF ONTARIO

DWG NO. TAM42856-17
STRUCTURAL
COMPONENT ONLY

| JOB NAME | TRUSS NAME | QUANTITY | PLY | JOB DESC. 43954 | DRWG NO. |
|---|---|---|---|---|---|
| 282689 | T1Z | 1 | 2 | TRUSS DESC. | |

Tamarack Roof Truss, Burlington

Version 8.030 S Oct 5 2016 MiTek Industries, Inc. Thu Aug 24 16:30:50 2017 Page 1

ID:_P_zJoeh6kqSyqNtNRH3eykdwA-c63Dbi1Pf0o7TSSpPFX_6IJaKfWSpgISMHxxzzykbS3

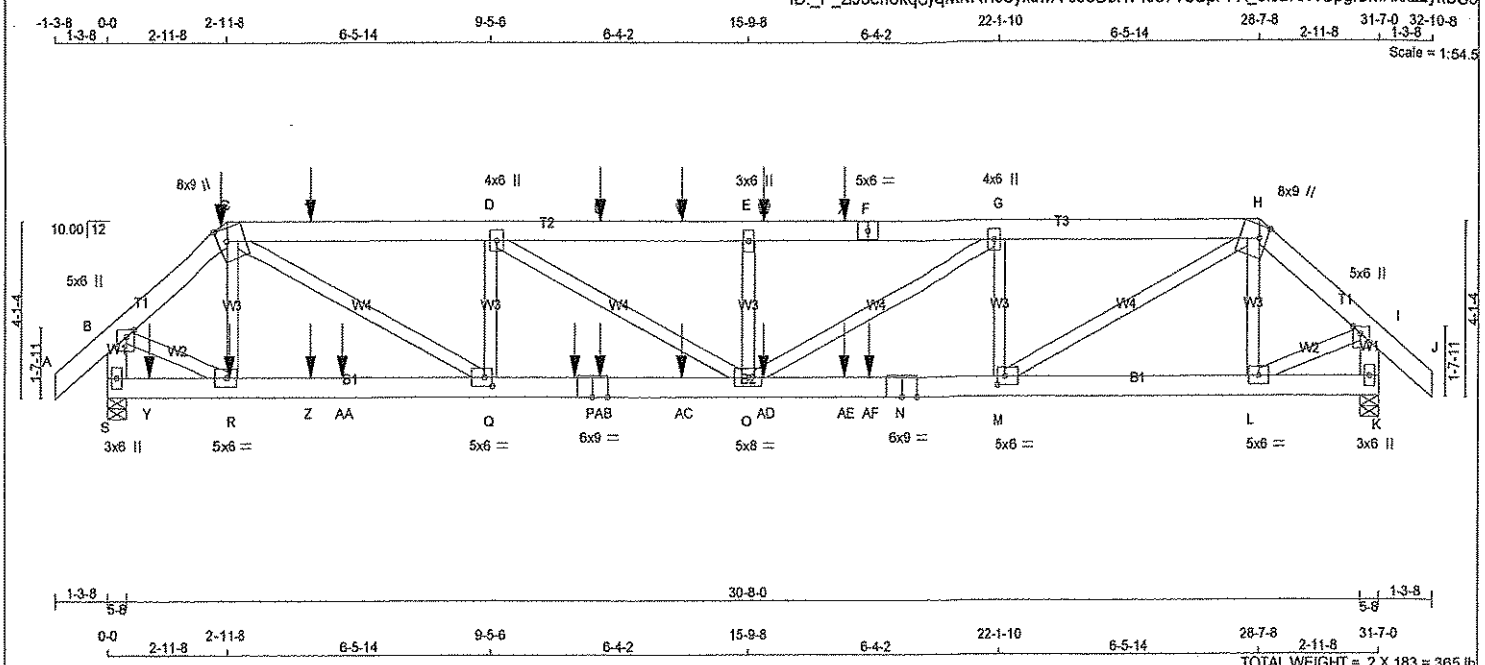





TOTAL WEIGHT = 2 X 183 = 365 lb

(M)

**LUMBER**

N. L. G. A. RULES

| CHORDS | SIZE | | LUMBER | DESCR. |
|---|---|---|---|---|
| A - C | 2x6 | DRY | No.2 | SPF |
| C - F | 2x6 | DRY | No.2 | SPF |
| F - H | 2x6 | DRY | No.2 | SPF |
| H - J | 2x6 | DRY | No.2 | SPF |
| S - B | 2x6 | DRY | No.2 | SPF |
| K - I | 2x6 | DRY | No.2 | SPF |
| S - P | 2x6 | DRY | 1650F 1.5E | SPF |
| P - N | 2x6 | DRY | 1650F 1.5E | SPF |
| N - K | 2x6 | DRY | 1650F 1.5E | SPF |
| ALL WEBS EXCEPT | 2x4 | DRY | No.2 | SPF |

DRY: SEASONED LUMBER.

DESIGN CONSISTS OF 2 TRUSSES BUILT SEPARATELY THEN FASTENED TOGETHER AS FOLLOWS:

| CHORDS | #ROWS | SURFACE SPACING (IN) | LOAD(PLF) |
|---|---|---|---|
| TOP CHORDS : (0.122"X3") SPIRAL NAILS | | | |
| A- C | 2 | 12 | SIDE(122.0) |
| C- F | 2 | 12 | SIDE(183.1) |
| F- H | 2 | 12 | TOP |
| H- J | 2 | 12 | TOP |
| S- B | 2 | 12 | TOP |
| K- I | 2 | 12 | TOP |
| BOTTOM CHORDS : (0.122"X3") SPIRAL NAILS | | | |
| S- P | 2 | 12 | SIDE(183.1) |
| P- N | 2 | 12 | SIDE(183.1) |
| N- K | 2 | 12 | TOP |
| WEBS : (0.122"X3") SPIRAL NAILS | | | |
| 2x4 | 1 | 6 | |

NAILS TO BE DRIVEN FROM ONE SIDE ONLY.

GIRDER NAILING ASSUMES NAILED HANGERS ARE FASTENED WITH MIN. 3-0 INCH NAILS.

TOP - COMPONENTS ARE LOADED FROM THE TOP AND MUST BE PLACED ON TOP EDGE OF ALL PLIES FOR THE LOAD TO BE TRANSFERRED TO EACH PLY.

SIDE - PLF SHOWN IS THE EQUIVALENT UDL APPLIED TO ONE SIDE THAT THE CORRESPONDING NAILING PATTERN SHALL BE CAPABLE OF TRANSFERING. REMAINING PLF MUST BE APPLIED ON THE OPPOSITE SIDE OR ON THE TOP.

**PLATES (table is in inches)**

| JT | TYPE | PLATES | W | LEN | Y | X |
|---|---|---|---|---|---|---|
| B | TMWW+p | MT20 | 5.0 | 6.0 | 2.00 | 2.25 |
| C | TTWW+m | MT20 | 8.0 | 9.0 | 3.50 | 2.25 |
| D | TMWW+t | MT20 | 4.0 | 6.0 | | |
| E | TMW+w | MT20 | 3.0 | 6.0 | | |
| F | TS-t | MT20 | 5.0 | 6.0 | | |
| G | TMWW+t | MT20 | 4.0 | 6.0 | | |
| H | TTWW+m | MT20 | 8.0 | 9.0 | 3.50 | 2.25 |
| I | TMWW+p | MT20 | 5.0 | 6.0 | 2.00 | 2.25 |
| K | BMV1+p | MT20 | 3.0 | 6.0 | | |
| L | BMWW-t | MT20 | 5.0 | 6.0 | | |
| M | BMWW-t | MT20 | 5.0 | 6.0 | 2.50 | 2.25 |
| N | BS-t | MT20 | 6.0 | 9.0 | | |
| O | BMWWW-t | MT20 | 5.0 | 8.0 | | |
| P | BS-t | MT20 | 6.0 | 9.0 | | |
| Q | BMWW-t | MT20 | 5.0 | 6.0 | 2.50 | 2.25 |
| R | BMWW-t | MT20 | 5.0 | 6.0 | | |
| S | BMV1+p | MT20 | 3.0 | 6.0 | | |

DIMENSIONS, SUPPORTS AND LOADINGS SPECIFIED BY FABRICATOR TO BE VERIFIED BY BUILDING DESIGNER

**BEARINGS**

| JT | FACTORED GROSS REACTION VERT | HORZ | MAXIMUM FACTORED GROSS REACTION DOWN | HORZ | UPLIFT | INPUT BRG IN-SX | REQRD BRG IN-SX |
|---|---|---|---|---|---|---|---|
| S | 3671 | 0 | 3671 | 0 | 0 | 5-8 | 5-8 |
| K | 3264 | 0 | 3264 | 0 | 0 | 5-8 | 5-8 |

**UNFACTORED REACTIONS**

| JT | 1ST LCASE COMBINED | MAX /MIN. COMPONENT REACTIONS SNOW | LIVE | PERM.LIVE | WIND | DEAD | SOIL |
|---|---|---|---|---|---|---|---|
| S | 2998 | 1690 / 0 | 666 / 0 | 0 / 0 | 0 / 0 | 642 / 0 | 0 / 0 |
| K | 2643 | 1527 / 0 | 562 / 0 | 0 / 0 | 0 / 0 | 554 / 0 | 0 / 0 |

BEARING MATERIAL TO BE SPF NO.2 OR BETTER AT JOINT(S) S, K

**BRACING**

TOP CHORD TO BE SHEATHED OR MAX. PURLIN SPACING = 3.92 FT.
MAX. UNBRACED BOTTOM CHORD LENGTH = 10.00 FT. OR RIGID CEILING DIRECTLY APPLIED.

ALL PITCH BREAKS AND PERIMETER CORNER JOINTS MUST BE LATERALLY RESTRAINED.

**LOADING**

TOTAL LOAD CASES: (4)

CHORDS

| MEMB. FR-TO | MAX. FACTORED FORCE (LBS) | FACTORED VERT. LOAD LC1 (PLF) FROM | TO | MAX CSI (LC) | MAX. UNBRAC LENGTH |
|---|---|---|---|---|---|
| A- B | 0 / 39 | -84.3 | -84.3 | 0.03 (1) | 10.00 |
| B- C | -3772 / 0 | -84.3 | -84.3 | 0.05 (1) | 5.77 |
| C- T | -6777 / 0 | -84.3 | -84.3 | 0.25 (1) | 4.41 |
| T- D | -6777 / 0 | -84.3 | -84.3 | 0.25 (1) | 4.41 |
| D- U | -8731 / 0 | -84.3 | -84.3 | 0.30 (1) | 3.92 |
| U- V | -8731 / 0 | -84.3 | -84.3 | 0.30 (1) | 3.92 |
| V- E | -8731 / 0 | -84.3 | -84.3 | 0.30 (1) | 3.92 |
| E- W | -8731 / 0 | -84.3 | -84.3 | 0.27 (1) | 3.96 |
| W- X | -8731 / 0 | -84.3 | -84.3 | 0.27 (1) | 3.96 |
| X- F | -8731 / 0 | -84.3 | -84.3 | 0.27 (1) | 3.96 |
| F- G | -8731 / 0 | -84.3 | -84.3 | 0.27 (1) | 3.96 |
| G- H | -7037 / 0 | -84.3 | -84.3 | 0.22 (1) | 4.38 |
| H- I | -3210 / 0 | -84.3 | -84.3 | 0.05 (1) | 6.14 |
| I- J | 0 / 39 | -84.3 | -84.3 | 0.03 (1) | 10.00 |
| S- B | -3714 / 0 | 0.0 | 0.0 | 0.13 (1) | 7.31 |
| K- I | -3197 / 0 | 0.0 | 0.0 | 0.12 (1) | 7.74 |
| S- Y | 0 / 0 | -28.0 | -28.0 | 0.09 (2) | 10.00 |
| Y- R | 0 / 0 | -28.0 | -28.0 | 0.09 (2) | 10.00 |
| R- Z | 0 / 2861 | -28.0 | -28.0 | 0.21 (1) | 10.00 |
| Z-AA | 0 / 2861 | -28.0 | -28.0 | 0.21 (1) | 10.00 |
| AA- Q | 0 / 2861 | -28.0 | -28.0 | 0.21 (1) | 10.00 |
| Q-AB | 0 / 6777 | -28.0 | -28.0 | 0.49 (1) | 10.00 |
| AB- P | 0 / 6777 | -28.0 | -28.0 | 0.49 (1) | 10.00 |
| P-AC | 0 / 6777 | -28.0 | -28.0 | 0.49 (1) | 10.00 |
| AC- O | 0 / 6777 | -28.0 | -28.0 | 0.49 (1) | 10.00 |
| O-AD | 0 / 7037 | -28.0 | -28.0 | 0.75 (1) | 10.00 |
| AD-AE | 0 / 7037 | -28.0 | -28.0 | 0.75 (1) | 10.00 |
| AE-AF | 0 / 7037 | -28.0 | -28.0 | 0.75 (1) | 10.00 |
| AF- N | 0 / 7037 | -28.0 | -28.0 | 0.75 (1) | 10.00 |
| N- M | 0 / 7037 | -28.0 | -28.0 | 0.75 (1) | 10.00 |
| M- L | 0 / 2416 | -28.0 | -28.0 | 0.27 (1) | 10.00 |
| L- K | 0 / 0 | -28.0 | -28.0 | 0.02 (1) | 10.00 |

WEBS

| MEMB. FR-TO | MAX. FACTORED FORCE (LBS) | MAX CSI (LC) |
|---|---|---|
| R- C | -507 / 63 | 0.04 (1) |
| C- Q | 0 / 4482 | 0.40 (1) |
| Q- D | -1825 / 0 | 0.16 (1) |
| D- O | 0 / 2254 | 0.20 (1) |
| O- E | -785 / 0 | 0.07 (1) |
| O- G | 0 / 1954 | 0.17 (1) |
| M- G | -1570 / 0 | 0.13 (1) |
| M- H | 0 / 5268 | 0.47 (1) |
| L- H | -892 / 0 | 0.08 (1) |
| B- R | 0 / 3061 | 0.27 (1) |
| L- I | 0 / 2605 | 0.23 (1) |

FACTORED CONCENTRATED LOADS (LBS)

| JT | LOC. | LC1 | MAX- | MAX+ | FACE | DIR. | TYPE |
|---|---|---|---|---|---|---|---|
| C | 2-11-8 | -16 | -18 | --- | FRONT | VERT | DEAD |
| C | 2-11-8 | -141 | -141 | --- | BACK | VERT | TOTAL |
| C | 2-11-8 | -162 | -162 | --- | FRONT | VERT | SNOW |
| P | 12-2-0 | -40 | -70 | --- | BACK | VERT | TOTAL |

**DESIGN CRITERIA**

*** SPECIAL LOADS ANALYSIS ***
GEOMETRY AND/OR BASIC LOADS CHANGED BY USER.
LOADS WERE DERIVED FROM USER INPUT
NO FURTHER MODIFICATIONS WERE MADE

SPECIFIED LOADS:

| | | | | |
|---|---|---|---|---|
| TOP CH. | LL | = | 25.6 | PSF |
| | DL | = | 3.0 | PSF |
| BOT CH. | LL | = | 10.5 | PSF |
| | DL | = | 7.0 | PSF |
| TOTAL LOAD | | = | 46.1 | PSF |

**SPACING = 24.0 IN. C/C**

LOADING IN FLAT SECTION BASED ON A SLOPE OF 6.00/12

*** NON STANDARD GIRDER ***
ADDT'L USER-DEFINED LOADS APPLIED TO ALL LOAD CASES.

THIS TRUSS IS DESIGNED FOR RESIDENTIAL OR SMALL BUILDING REQUIREMENTS OF PART 9, NBCC 2010

THIS DESIGN COMPLIES WITH:
- PART 9 OF OBC 2012 , BCBC 2012 , ABC 2014
- CSA 086-09
- TPIC 2011

(55 % OF 31.3 P.S.F. G.S.L. PLUS 8.4 P.S.F. RAIN LOAD) EQUALS 25.6 P.S.F. SPECIFIED ROOF LIVE LOAD

ALLOWABLE DEFL.(LL)= L/360 (1.05")
CALCULATED VERT. DEFL.(LL) = L/ 999 (0.25")
ALLOWABLE DEFL.(TL)= L/360 (1.05")
CALCULATED VERT. DEFL.(TL) = L/ 938 (0.40")

CSI: TC=0.30 (D-E:1) , BC=0.75 (M-O:1) , WB=0.47 (H-M:1) , SSI=0.32 (M-O:1)

DOL LUMBER=1.00 NAIL=1.00 LS BEND=1.00 COMP=1.00 SHEAR=1.00 TENS= 1.00

COMPANION LIVE LOAD FACTOR = 0.50

TRUSS PLATE MANUFACTURER IS NOT RESPONSIBLE FOR QUALITY CONTROL IN THE TRUSS MANUFACTURING PLANT .

NAIL VALUES

| PLATE | GRIP(DRY) (PSI) MAX | MIN | SHEAR (PLI) MAX | MIN | SECTION (PLI) MAX | MIN |
|---|---|---|---|---|---|---|
| MT20 | 618 | 354 | 1667 | 822 | 2284 | 1656 |

PLATE PLACEMENT TOL. = 0.250 Inches

PLATE ROTATION TOL. = 5.0 Deg.

JSI GRIP= 0.89 (D) (INPUT = 0.90 )
JSI METAL= 0.82 (P) (INPUT = 1.00 )

LICENSED PROFESSIONAL ENGINEER
S. KATSOULAKOS
PROVINCE OF ONTARIO

DWG NO. TAM 42857-17
STRUCTURAL COMPONENT ONLY

P6 1/2

CONTINUED ON PAGE 2

**HANGERS NOTES**

1) SPECIAL HANGER(S) OR CONNECTION(S) REQUIRED TO SUPPORT CONCENTRATED LOAD(S) 178.3 lbs FACTORED DOWN AT 2-11-8, 140.9 lbs FACTORED DOWN AT 2-11-8, 101.4 lbs FACTORED DOWN AT 5-0-4, 101.4 lbs FACTORED DOWN AT 12-2-0, 101.4 lbs FACTORED DOWN AT 14-2-0, AND 101.4 lbs FACTORED DOWN AT 16-2-0, AND 101.4 lbs FACTORED DOWN AT 18-2-0 ON TOP CHORD, AND 69.9 lbs FACTORED DOWN AT 1-0-4, 69.9 lbs FACTORED DOWN AT 3-0-4, 69.9 lbs FACTORED DOWN AT 5-0-4, 269.8 lbs FACTORED DOWN AT 5-9-8, 269.8 lbs FACTORED DOWN AT 11-6-8, 69.9 lbs FACTORED DOWN AT 12-2-0, 69.9 lbs FACTORED DOWN AT 14-2-0, 69.9 lbs FACTORED DOWN AT 16-2-0, AND 69.9 lbs FACTORED DOWN AT 18-2-0, AND 1501.9 lbs FACTORED DOWN AT 18-9-8 ON BOTTOM CHORD. DESIGN FOR UNSPECIFIED CONNECTION(S) IS DELEGATED TO THE BUILDING DESIGNER.

FACTORED CONCENTRATED LOADS (LBS)

| JT | LOC. | LC1 | MAX- | MAX+ | FACE | DIR. | TYPE |
|---|---|---|---|---|---|---|---|
| R | 3-0-4 | -40 | -70 | --- | BACK | VERT | TOTAL |
| T | 5-0-4 | -101 | -101 | --- | BACK | VERT | TOTAL |
| U | 12-2-0 | -101 | -101 | --- | BACK | VERT | TOTAL |
| V | 14-2-0 | -101 | -101 | --- | BACK | VERT | TOTAL |
| W | 16-2-0 | -101 | -101 | --- | BACK | VERT | TOTAL |
| X | 18-2-0 | -101 | -101 | --- | BACK | VERT | TOTAL |
| Y | 1-0-4 | -40 | -70 | --- | BACK | VERT | TOTAL |
| Z | 5-0-4 | -40 | -70 | --- | BACK | VERT | TOTAL |
| AA | 5-9-8 | -270 | -270 | --- | BACK | VERT | TOTAL |
| AB | 11-6-8 | -270 | -270 | --- | BACK | VERT | TOTAL |
| AC | 14-2-0 | -40 | -70 | --- | BACK | VERT | TOTAL |
| AD | 16-2-0 | -40 | -70 | --- | BACK | VERT | TOTAL |
| AE | 18-2-0 | -40 | -70 | --- | BACK | VERT | TOTAL |
| AF | 18-9-8 | -1502 | -1502 | --- | BACK | VERT | TOTAL |

LICENSED PROFESSIONAL ENGINEER
82577
S. KATSOULAKOS
PROVINCE OF ONTARIO

DWG NO. TAM42857-17
STRUCTURAL
COMPONENT ONLY

| JOB NAME | TRUSS NAME | QUANTITY | PLY | JOB DESC. 43954 | DRWG NO. |
|---|---|---|---|---|---|
| 282689 | T2 | 2 | 1 | TRUSS DESC. | |

Tamarack Roof Truss, Burlington

Version 8.030 S Oct 5 2016 MiTek Industries, Inc. Thu Aug 24 16:30:51 2017 Page 1

ID:_P_zlJoeh6kqSyqNtNRH3eykdwA-4Jdbo221PKx_5c1?zz3DfVsfd3wPY9CbbxhUVPykbS2

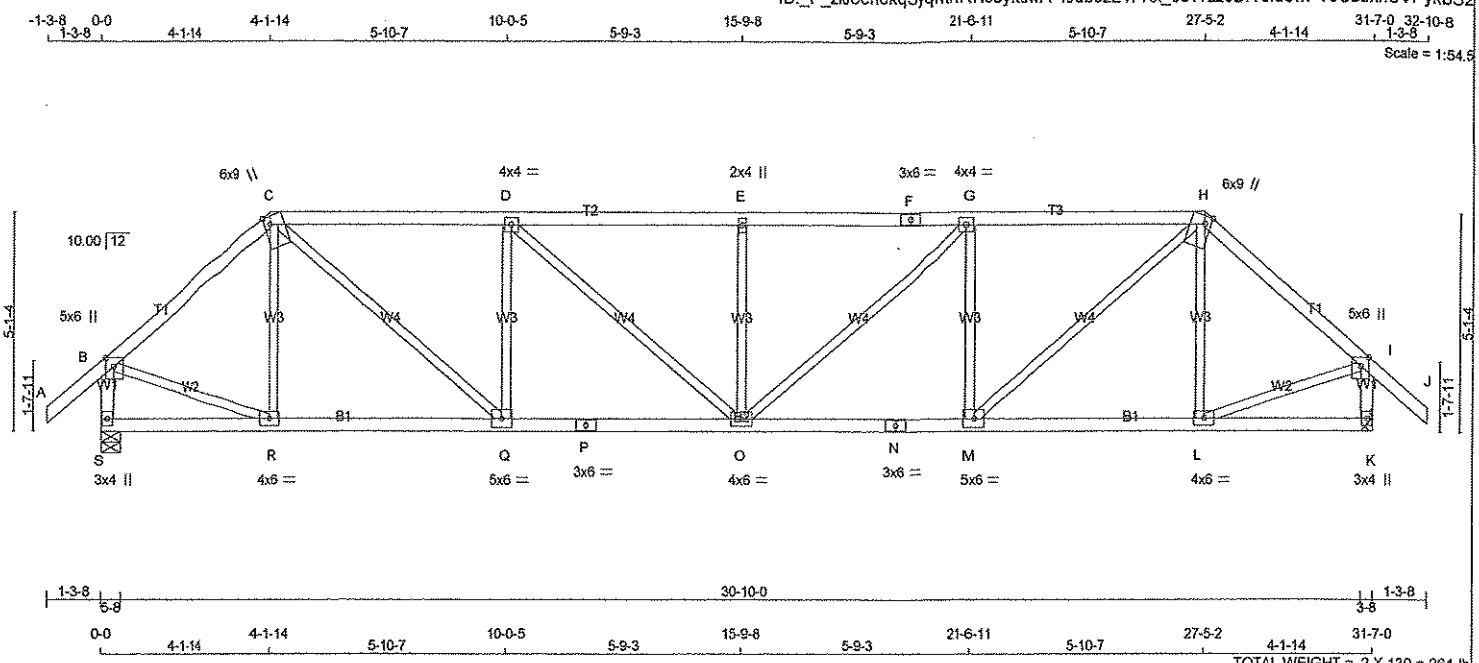


TOTAL WEIGHT = 2 X 130 = 261 lb

**LUMBER**

N. L. G. A. RULES

| CHORDS | SIZE | | LUMBER | DESCR. |
|---|---|---|---|---|
| A - C | 2x4 | DRY | No.2 | SPF |
| C - F | 2x4 | DRY | No.2 | SPF |
| F - H | 2x4 | DRY | No.2 | SPF |
| H - J | 2x4 | DRY | No.2 | SPF |
| S - B | 2x4 | DRY | No.2 | SPF |
| K - I | 2x4 | DRY | No.2 | SPF |
| S - P | 2x4 | DRY | No.2 | SPF |
| P - N | 2x4 | DRY | No.2 | SPF |
| N - K | 2x4 | DRY | No.2 | SPF |
| ALL WEBS EXCEPT | 2x3 | DRY | No.2 | SPF |

DRY: SEASONED LUMBER.

**PLATES (table is in inches)**

| JT | TYPE | PLATES | W | LEN | Y | X |
|---|---|---|---|---|---|---|
| B | TMVW+p | MT20 | 5.0 | 6.0 | 2.50 | 2.25 |
| C | TTWW+m | MT20 | 6.0 | 9.0 | Edge | 1.75 |
| D | TMWW-t | MT20 | 4.0 | 4.0 | | |
| E | TMW+w | MT20 | 2.0 | 4.0 | | |
| F | TS-t | MT20 | 3.0 | 6.0 | | |
| G | TMWW-t | MT20 | 4.0 | 4.0 | | |
| H | TTWW+m | MT20 | 6.0 | 9.0 | Edge | 1.75 |
| I | TMVW+p | MT20 | 5.0 | 6.0 | 2.50 | 2.25 |
| K | BMV1+p | MT20 | 3.0 | 4.0 | | |
| L | BMWW-t | MT20 | 4.0 | 6.0 | | |
| M | BMWW-t | MT20 | 5.0 | 6.0 | | |
| N | BS-t | MT20 | 3.0 | 6.0 | | |
| O | BMWWW-t | MT20 | 4.0 | 6.0 | | |
| P | BS-t | MT20 | 3.0 | 6.0 | | |
| Q | BMWW-t | MT20 | 5.0 | 6.0 | | |
| R | BMWW-t | MT20 | 4.0 | 6.0 | | |
| S | BMV1+p | MT20 | 3.0 | 4.0 | | |

Edge - INDICATES REFERENCE CORNER OF PLATE TOUCHES EDGE OF CHORD.

DIMENSIONS, SUPPORTS AND LOADINGS SPECIFIED BY FABRICATOR TO BE VERIFIED BY BUILDING DESIGNER

**BEARINGS**

| JT | FACTORED GROSS REACTION VERT | HORZ | MAXIMUM FACTORED GROSS REACTION DOWN | HORZ | UPLIFT | INPUT BRG IN-SX | REQRD BRG IN-SX |
|---|---|---|---|---|---|---|---|
| S | 1889 | 0 | 1889 | 0 | 0 | 5-8 | 5-8 |
| K | 1889 | 0 | 1889 | 0 | 0 | HANGER BY OTHERS | |
| | | | | | | MIN. SEAT SIZE: 3-8 | |

**UNFACTORED REACTIONS**

MAX./MIN. COMPONENT REACTIONS

| JT | 1ST LCASE COMBINED | SNOW | LIVE | PERM.LIVE | WIND | DEAD | SOIL |
|---|---|---|---|---|---|---|---|
| S | 1535 | 879 / 0 | 332 / 0 | 0 / 0 | 0 / 0 | 324 / 0 | 0 / 0 |
| K | 1535 | 879 / 0 | 332 / 0 | 0 / 0 | 0 / 0 | 324 / 0 | 0 / 0 |

BEARING MATERIAL TO BE SPF NO.2 OR BETTER AT JOINT(S) S

**BRACING**

TOP CHORD TO BE SHEATHED OR MAX. PURLIN SPACING = 3.47 FT.
MAX. UNBRACED BOTTOM CHORD LENGTH = 10.00 FT. OR RIGID CEILING DIRECTLY APPLIED.

ALL PITCH BREAKS AND PERIMETER CORNER JOINTS MUST BE LATERALLY RESTRAINED.

**LOADING**

TOTAL LOAD CASES: (4)

CHORDS

| MEMB. FR-TO | MAX. FACTORED FORCE (LBS) | FACTORED VERT. LOAD (PLF) FROM | TO | LC1 | MAX CSI (LC) | MAX. UNBRAC LENGTH |
|---|---|---|---|---|---|---|
| A- B | 0 / 37 | -84.3 | -84.3 | 0.12 (1) | 10.00 | |
| B- C | -1772 / 0 | -84.3 | -84.3 | 0.32 (1) | 4.69 | |
| C- D | -2595 / 0 | -84.3 | -84.3 | 0.60 (1) | 3.71 | |
| D- E | -2959 / 0 | -84.3 | -84.3 | 0.65 (1) | 3.47 | |
| E- F | -2959 / 0 | -84.3 | -84.3 | 0.65 (1) | 3.47 | |
| F- G | -2959 / 0 | -84.3 | -84.3 | 0.65 (1) | 3.47 | |
| G- H | -2595 / 0 | -84.3 | -84.3 | 0.60 (1) | 3.71 | |
| H- I | -1772 / 0 | -84.3 | -84.3 | 0.32 (1) | 4.69 | |
| I- J | 0 / 37 | -84.3 | -84.3 | 0.12 (1) | 10.00 | |
| S- B | -1847 / 0 | 0.0 | 0.0 | 0.20 (1) | 6.16 | |
| K- I | -1847 / 0 | 0.0 | 0.0 | 0.20 (1) | 6.16 | |
| S- R | 0 / 0 | -28.0 | -28.0 | 0.17 (2) | 10.00 | |
| R- Q | 0 / 1352 | -28.0 | -28.0 | 0.34 (2) | 10.00 | |
| Q- P | 0 / 2595 | -28.0 | -28.0 | 0.51 (1) | 10.00 | |
| P- O | 0 / 2595 | -28.0 | -28.0 | 0.51 (1) | 10.00 | |
| O- N | 0 / 2595 | -28.0 | -28.0 | 0.51 (1) | 10.00 | |
| N- M | 0 / 2595 | -28.0 | -28.0 | 0.51 (1) | 10.00 | |
| M- L | 0 / 1352 | -28.0 | -28.0 | 0.34 (2) | 10.00 | |
| L- K | 0 / 0 | -28.0 | -28.0 | 0.17 (2) | 10.00 | |

WEBS

| MEMB. FR-TO | MAX. FACTORED FORCE (LBS) | MAX CSI (LC) |
|---|---|---|
| R- C | -258 / 59 | 0.10 (1) |
| C- Q | 0 / 1605 | 0.36 (1) |
| Q- D | -853 / 0 | 0.33 (1) |
| D- O | 0 / 474 | 0.11 (1) |
| O- E | -448 / 0 | 0.17 (1) |
| O- G | 0 / 474 | 0.11 (1) |
| M- G | -853 / 0 | 0.33 (1) |
| M- H | 0 / 1605 | 0.36 (1) |
| L- H | -258 / 59 | 0.10 (1) |
| B- R | 0 / 1420 | 0.32 (1) |
| L- I | 0 / 1420 | 0.32 (1) |

**DESIGN CRITERIA**

SPECIFIED LOADS:

| | | | | |
|---|---|---|---|---|
| TOP CH. | LL | = | 25.6 | PSF |
| | DL | = | 3.0 | PSF |
| BOT CH. | LL | = | 10.5 | PSF |
| | DL | = | 7.0 | PSF |
| TOTAL LOAD | | = | 46.1 | PSF |

**SPACING = 24.0 IN. C/C**

LOADING IN FLAT SECTION BASED ON A SLOPE OF 6.00/12

THIS TRUSS IS DESIGNED FOR RESIDENTIAL OR SMALL BUILDING REQUIREMENTS OF PART 9, NBCC 2010

THIS DESIGN COMPLIES WITH:
- PART 9 OF OBC 2012 , BCBC 2012 , ABC 2014
- CSA 086-09
- TPIC 2011

(55 % OF 31.3 P.S.F. G.S.L. PLUS 8.4 P.S.F. RAIN LOAD) EQUALS 25.6 P.S.F. SPECIFIED ROOF LIVE LOAD

ALLOWABLE DEFL.(LL)= L/360 (1.05")
CALCULATED VERT. DEFL.(LL) = L/ 999 (0.17")
ALLOWABLE DEFL.(TL)= L/360 (1.05")
CALCULATED VERT. DEFL.(TL) = L/ 999 (0.28")

CSI: TC=0.65 (E-G:1) , BC=0.51 (M-O:1) , WB=0.36 (C-Q:1) , SSI=0.23 (C-D:1)

DOL LUMBER=1.00 NAIL=1.00 LS BEND=1.10 COMP=1.10 SHEAR=1.10 TENS= 1.10

COMPANION LIVE LOAD FACTOR = 0.50

TRUSS PLATE MANUFACTURER IS NOT RESPONSIBLE FOR QUALITY CONTROL IN THE TRUSS MANUFACTURING PLANT .

NAIL VALUES

| PLATE | GRIP(DRY) (PSI) MAX | MIN | SHEAR (PLI) MAX | MIN | SECTION (PLI) MAX | MIN |
|---|---|---|---|---|---|---|
| MT20 | 618 | 354 | 1667 | 822 | 2284 | 1656 |

PLATE PLACEMENT TOL. = 0.250 inches

PLATE ROTATION TOL. = 5.0 Deg.

JSI GRIP= 0.90 (L) (INPUT = 0.90 )
JSI METAL= 0.73 (P) (INPUT = 1.00 )

LICENSED PROFESSIONAL ENGINEER
82577
S. KATSOULAKOS
PROVINCE OF ONTARIO

DWG NO. TAM42858_17

STRUCTURAL COMPONENT ONLY

| JOB NAME | TRUSS NAME | QUANTITY | PLY | JOB DESC. 43954 | DRWG NO. |
|---|---|---|---|---|---|
| 282689 | T3 | 2 | 1 | TRUSS DESC. | |

Tamarack Roof Truss, Burlington

Version 8.030 S Oct 5 2016 MiTek Industries, Inc. Thu Aug 24 16:30:51 2017 Page 1

ID:_P_zlJoeh6kqSyqNNRH3eykdwA-4Jdbo221PKx_5c1?zz3DfVsdt3v?Y93bbxhUVPykbS2

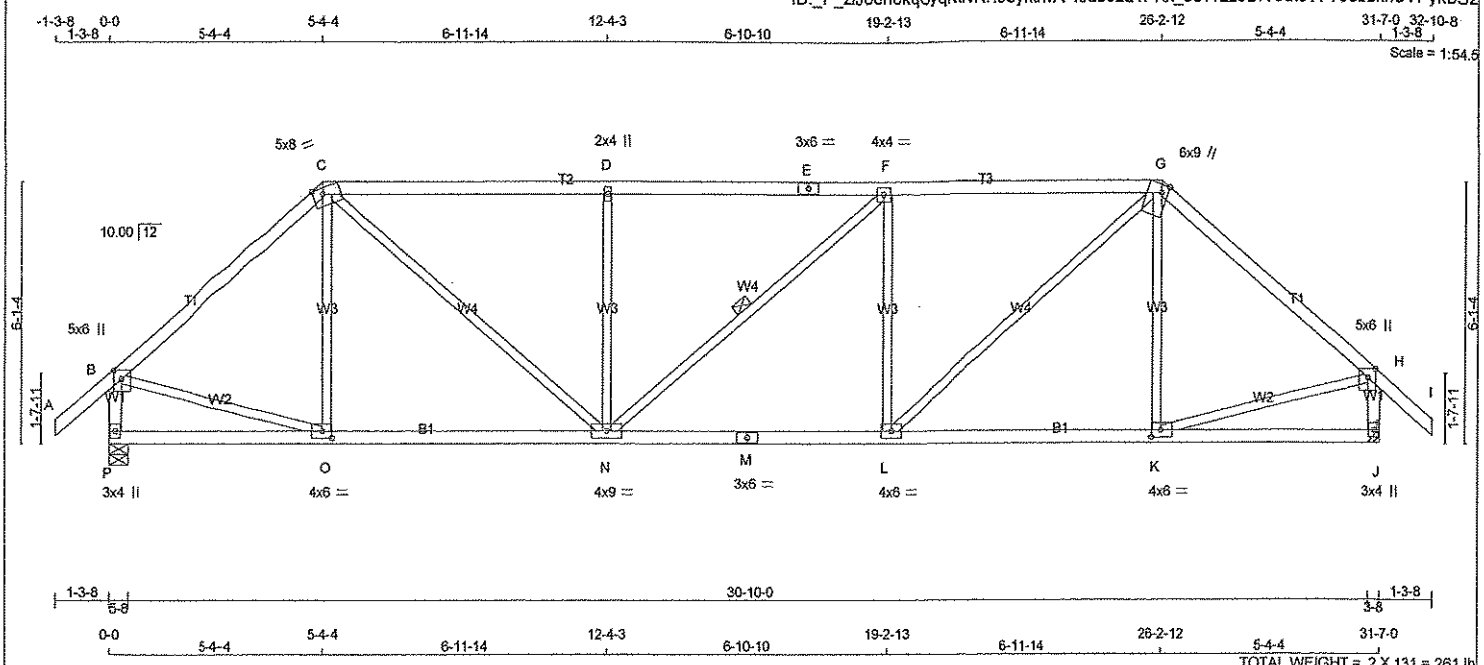


TOTAL WEIGHT = 2 X 131 = 261 lb

**LUMBER**

N. L. G. A. RULES

| CHORDS | SIZE | | LUMBER | DESCR. |
|---|---|---|---|---|
| A - C | 2x4 | DRY | No.2 | SPF |
| C - E | 2x4 | DRY | No.2 | SPF |
| E - G | 2x4 | DRY | No.2 | SPF |
| G - I | 2x4 | DRY | No.2 | SPF |
| P - B | 2x4 | DRY | No.2 | SPF |
| J - H | 2x4 | DRY | No.2 | SPF |
| P - M | 2x4 | DRY | No.2 | SPF |
| M - J | 2x4 | DRY | No.2 | SPF |
| ALL WEBS EXCEPT | 2x3 | DRY | No.2 | SPF |

DRY: SEASONED LUMBER.

**PLATES (table is in inches)**

| JT | TYPE | PLATES | W | LEN | Y | X |
|---|---|---|---|---|---|---|
| B | TMVW+p | MT20 | 5.0 | 6.0 | 2.50 | 2.25 |
| C | TTWW-m | MT20 | 5.0 | 8.0 | Edge | 3.00 |
| D | TMW+w | MT20 | 2.0 | 4.0 | | |
| E | TS-t | MT20 | 3.0 | 6.0 | | |
| F | TMWW-t | MT20 | 4.0 | 4.0 | | |
| G | TTWW+m | MT20 | 6.0 | 9.0 | Edge | 1.75 |
| H | TMVW+p | MT20 | 5.0 | 6.0 | 2.50 | 2.25 |
| J | BMV1+p | MT20 | 3.0 | 4.0 | | |
| K | BMWW-t | MT20 | 4.0 | 6.0 | 2.00 | 2.75 |
| L | BMWW-t | MT20 | 4.0 | 6.0 | | |
| M | BS-t | MT20 | 3.0 | 6.0 | | |
| N | BMWWW-t | MT20 | 4.0 | 9.0 | | |
| O | BMWW-t | MT20 | 4.0 | 6.0 | 2.00 | 2.75 |
| P | BMV1+p | MT20 | 3.0 | 4.0 | | |

Edge - INDICATES REFERENCE CORNER OF PLATE TOUCHES EDGE OF CHORD.

**DIMENSIONS, SUPPORTS AND LOADINGS SPECIFIED BY FABRICATOR TO BE VERIFIED BY BUILDING DESIGNER**

**BEARINGS**

| JT | FACTORED GROSS REACTION VERT | HORZ | MAXIMUM FACTORED GROSS REACTION DOWN | HORZ | UPLIFT | INPUT BRG IN-SX | REQRD BRG IN-SX |
|---|---|---|---|---|---|---|---|
| P | 1889 | 0 | 1889 | 0 | 0 | 5-8 | 5-8 |
| J | 1889 | 0 | 1889 | 0 | 0 | HANGER BY OTHERS | |
| | | | | | | MIN. SEAT SIZE: 3-8 | |

**UNFACTORED REACTIONS**

| JT | 1ST LCASE COMBINED | MAX./MIN. COMPONENT REACTIONS SNOW | LIVE | PERM.LIVE | WIND | DEAD | SOIL |
|---|---|---|---|---|---|---|---|
| P | 1535 | 879 / 0 | 332 / 0 | 0 / 0 | 0 / 0 | 324 / 0 | 0 / 0 |
| J | 1535 | 879 / 0 | 332 / 0 | 0 / 0 | 0 / 0 | 324 / 0 | 0 / 0 |

BEARING MATERIAL TO BE SPF NO.2 OR BETTER AT JOINT(S) P

**BRACING**

TOP CHORD TO BE SHEATHED OR MAX. PURLIN SPACING = 3.59 FT.
MAX. UNBRACED BOTTOM CHORD LENGTH = 10.00 FT. OR RIGID CEILING DIRECTLY APPLIED.

ALL PITCH BREAKS AND PERIMETER CORNER JOINTS MUST BE LATERALLY RESTRAINED.

1 LATERAL BRACE(S) AT 1/2 LENGTH OF F-N.

END VERTICAL(S) MUST BE SHEATHED OR HAVE BRACES AS INDICATED IN THE MAX. UNBRACED LENGTH COLUMN OF THE TABLE BELOW

**LOADING**

TOTAL LOAD CASES: (4)

CHORDS

| MEMB. FR-TO | MAX. FACTORED FORCE (LBS) | FACTORED VERT. LOAD (PLF) FROM | TO | LC1 | MAX CSI (LC) | MAX. UNBRAC LENGTH |
|---|---|---|---|---|---|---|
| A- B | 0 / 37 | -84.3 | -84.3 | 0.12 (1) | 10.00 | |
| B- C | -1806 / 0 | -84.3 | -84.3 | 0.57 (1) | 4.38 | |
| C- D | -2378 / 0 | -84.3 | -84.3 | 0.82 (1) | 3.60 | |
| D- E | -2378 / 0 | -84.3 | -84.3 | 0.81 (1) | 3.59 | |
| E- F | -2378 / 0 | -84.3 | -84.3 | 0.81 (1) | 3.59 | |
| F- G | -2379 / 0 | -84.3 | -84.3 | 0.82 (1) | 3.59 | |
| G- H | -1805 / 0 | -84.3 | -84.3 | 0.57 (1) | 4.38 | |
| H- I | 0 / 37 | -84.3 | -84.3 | 0.12 (1) | 10.00 | |
| P- B | -1832 / 0 | 0.0 | 0.0 | 0.19 (1) | 6.18 | |
| J- H | -1832 / 0 | 0.0 | 0.0 | 0.19 (1) | 6.19 | |
| P- O | 0 / 0 | -28.0 | -28.0 | 0.25 (2) | 10.00 | |
| O- N | 0 / 1382 | -28.0 | -28.0 | 0.42 (2) | 10.00 | |
| N- M | 0 / 2379 | -28.0 | -28.0 | 0.53 (2) | 10.00 | |
| M- L | 0 / 2379 | -28.0 | -28.0 | 0.53 (2) | 10.00 | |
| L- K | 0 / 1382 | -28.0 | -28.0 | 0.42 (2) | 10.00 | |
| K- J | 0 / 0 | -28.0 | -28.0 | 0.25 (3) | 10.00 | |

WEBS

| MEMB. FR-TO | MAX. FACTORED FORCE (LBS) | MAX CSI (LC) |
|---|---|---|
| O- C | -137 / 165 | 0.08 (1) |
| C- N | 0 / 1293 | 0.29 (1) |
| N- D | -633 / 0 | 0.37 (1) |
| N- F | -1 / 0 | 0.00 (1) |
| L- F | -633 / 0 | 0.37 (1) |
| L- G | 0 / 1295 | 0.29 (1) |
| K- G | -138 / 165 | 0.08 (1) |
| B- O | 0 / 1423 | 0.32 (1) |
| K- H | 0 / 1423 | 0.32 (1) |

LICENSED PROFESSIONAL ENGINEER
82577
S. KATSOULAKOS
PROVINCE OF ONTARIO

DWG NO. TAM 42859-17
STRUCTURAL COMPONENT ONLY

[M]

**DESIGN CRITERIA**

SPECIFIED LOADS:

| | | | | |
|---|---|---|---|---|
| TOP CH. | LL | = | 25.6 | PSF |
| | DL | = | 3.0 | PSF |
| BOT CH. | LL | = | 10.5 | PSF |
| | DL | = | 7.0 | PSF |
| TOTAL LOAD | | = | 46.1 | PSF |

**SPACING = 24.0 IN. C/C**

LOADING IN FLAT SECTION BASED ON A SLOPE OF 6.00/12

THIS TRUSS IS DESIGNED FOR RESIDENTIAL OR SMALL BUILDING REQUIREMENTS OF PART 9, NBCC 2010

THIS DESIGN COMPLIES WITH:
- PART 9 OF OBC 2012 , BCBC 2012 , ABC 2014
- CSA 086-09
- TPIC 2011

(55 % OF 31.3 P.S.F. G.S.L. PLUS 8.4 P.S.F. RAIN LOAD) EQUALS 25.6 P.S.F. SPECIFIED ROOF LIVE LOAD

ALLOWABLE DEFL.(LL)= L/360 (1.05")
CALCULATED VERT. DEFL.(LL) = L/ 999 (0.14")
ALLOWABLE DEFL.(TL)= L/360 (1.05")
CALCULATED VERT. DEFL.(TL) = L/ 999 (0.24")

CSI: TC=0.82 (F-G:1) , BC=0.53 (L-N:2) , WB=0.37 (F-L:1) , SSI=0.27 (F-G:1)

DOL LUMBER=1.00 NAIL=1.00 LS BEND=1.10 COMP=1.10 SHEAR=1.10 TENS= 1.10

COMPANION LIVE LOAD FACTOR = 0.50

TRUSS PLATE MANUFACTURER IS NOT RESPONSIBLE FOR QUALITY CONTROL IN THE TRUSS MANUFACTURING PLANT .

NAIL VALUES

| PLATE | GRIP(DRY) (PSI) MAX | MIN | SHEAR (PLI) MAX | MIN | SECTION (PLI) MAX | MIN |
|---|---|---|---|---|---|---|
| MT20 | 618 | 354 | 1667 | 822 | 2284 | 1656 |

PLATE PLACEMENT TOL. = 0.250 inches

PLATE ROTATION TOL. = 5.0 Deg.

JSI GRIP= 0.90 (C) (INPUT = 0.90 )
JSI METAL= 0.74 (M) (INPUT = 1.00 )

| JOB NAME | TRUSS NAME | QUANTITY | PLY | JOB DESC. 43954 | DRWG NO. |
|---|---|---|---|---|---|
| 282689 | T4 | 2 | 1 | TRUSS DESC. | |

Tamarack Roof Truss, Burlington

Version 8.030 S Oct 5 2016 MiTek Industries, Inc. Thu Aug 24 16:30:51 2017 Page 1

ID:_P_zlJoeh6kqSyqNtNRH3eykdwA-4Jdbo221PKx_5c1?zz3DfVsho3wFY17bbxhUVPykbS2

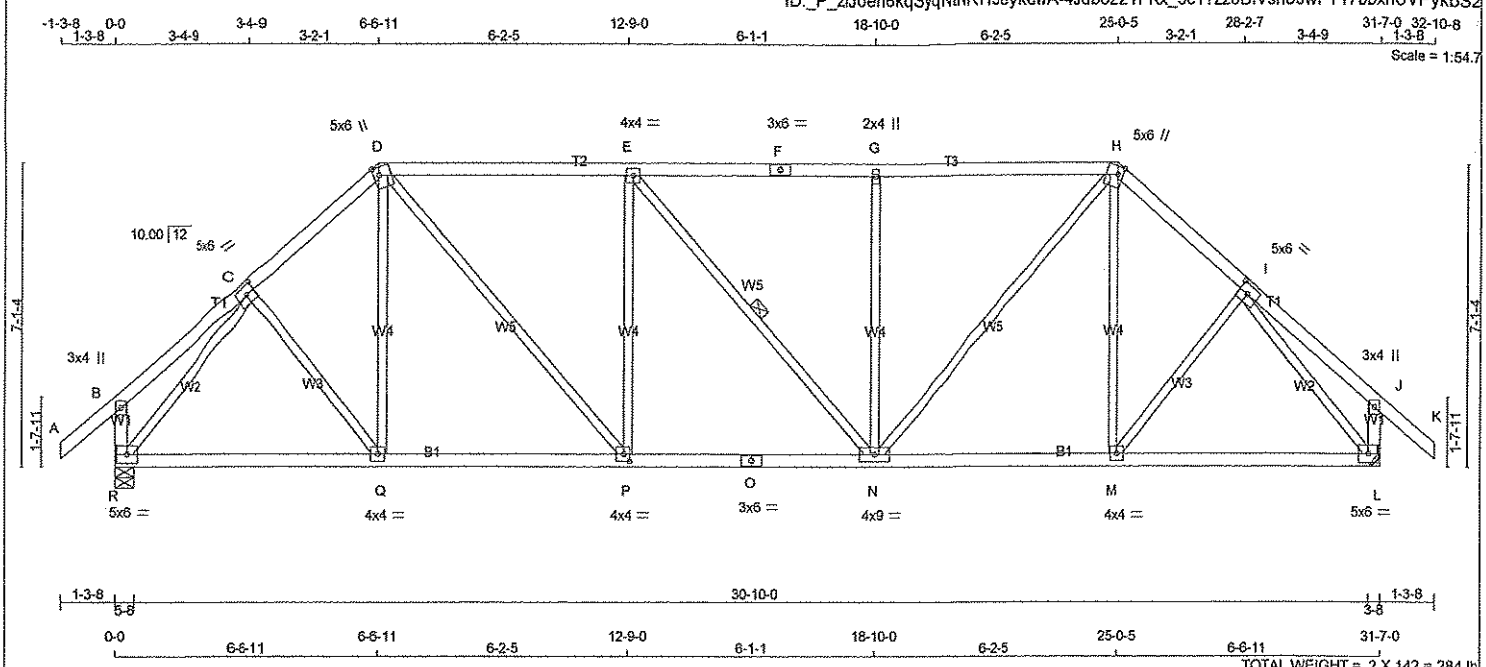


TOTAL WEIGHT = 2 X 142 = 284 lb

**LUMBER**

N. L. G. A. RULES

| CHORDS | SIZE | | LUMBER | DESCR. |
|---|---|---|---|---|
| A - D | 2x4 | DRY | No.2 | SPF |
| D - F | 2x4 | DRY | No.2 | SPF |
| F - H | 2x4 | DRY | No.2 | SPF |
| H - K | 2x4 | DRY | No.2 | SPF |
| R - B | 2x4 | DRY | No.2 | SPF |
| L - J | 2x4 | DRY | No.2 | SPF |
| R - O | 2x4 | DRY | No.2 | SPF |
| O - L | 2x4 | DRY | No.2 | SPF |
| ALL WEBS EXCEPT | 2x3 | DRY | No.2 | SPF |

DRY: SEASONED LUMBER.

**PLATES (table is in inches)**

| JT | TYPE | PLATES | W | LEN | Y | X |
|---|---|---|---|---|---|---|
| B | TMV+p | MT20 | 3.0 | 4.0 | | |
| C | TMWW-t | MT20 | 5.0 | 6.0 | 2.50 | 2.75 |
| D | TTWW+m | MT20 | 5.0 | 6.0 | 2.25 | 1.50 |
| E | TMWW-t | MT20 | 4.0 | 4.0 | | |
| F | TS-t | MT20 | 3.0 | 6.0 | | |
| G | TMW+w | MT20 | 2.0 | 4.0 | | |
| H | TTWW+m | MT20 | 5.0 | 6.0 | 2.25 | 1.50 |
| I | TMWW-t | MT20 | 5.0 | 6.0 | 2.50 | 2.75 |
| J | TMV+p | MT20 | 3.0 | 4.0 | | |
| L | BMVW1-t | MT20 | 5.0 | 6.0 | | |
| M | BMWW-t | MT20 | 4.0 | 4.0 | | |
| N | BMWWW-t | MT20 | 4.0 | 9.0 | | |
| O | BS-t | MT20 | 3.0 | 6.0 | | |
| P | BMWW-t | MT20 | 4.0 | 4.0 | 2.00 | 1.75 |
| Q | BMWW-t | MT20 | 4.0 | 4.0 | | |
| R | BMVW1-t | MT20 | 5.0 | 6.0 | | |

**DIMENSIONS, SUPPORTS AND LOADINGS SPECIFIED BY FABRICATOR TO BE VERIFIED BY BUILDING DESIGNER**

**BEARINGS**

| JT | FACTORED GROSS REACTION VERT | HORZ | MAXIMUM FACTORED GROSS REACTION DOWN | HORZ | UPLIFT | INPUT BRG IN-SX | REQRD BRG IN-SX |
|---|---|---|---|---|---|---|---|
| R | 1889 | 0 | 1889 | 0 | 0 | 5-8 | 5-8 |
| L | 1889 | 0 | 1889 | 0 | 0 | HANGER BY OTHERS | |
| | | | | | | MIN. SEAT SIZE: 3-8 | |

**UNFACTORED REACTIONS**

| JT | 1ST LCASE COMBINED | MAX./MIN. COMPONENT REACTIONS SNOW | LIVE | PERM.LIVE | WIND | DEAD | SOIL |
|---|---|---|---|---|---|---|---|
| R | 1535 | 879 / 0 | 332 / 0 | 0 / 0 | 0 / 0 | 324 / 0 | 0 / 0 |
| L | 1535 | 879 / 0 | 332 / 0 | 0 / 0 | 0 / 0 | 324 / 0 | 0 / 0 |

BEARING MATERIAL TO BE SPF NO.2 OR BETTER AT JOINT(S) R

**BRACING**

TOP CHORD TO BE SHEATHED OR MAX. PURLIN SPACING = 4.13 FT.
MAX. UNBRACED BOTTOM CHORD LENGTH = 10.00 FT. OR RIGID CEILING DIRECTLY APPLIED.

ALL PITCH BREAKS AND PERIMETER CORNER JOINTS MUST BE LATERALLY RESTRAINED.

1 LATERAL BRACE(S) AT 1/ 2 LENGTH OF E-N.

END VERTICAL(S) MUST BE SHEATHED OR HAVE BRACES AS INDICATED IN THE MAX. UNBRACED LENGTH COLUMN OF THE TABLE BELOW

**LOADING**

TOTAL LOAD CASES: (4)

CHORDS

| MEMB. FR-TO | MAX. FACTORED FORCE (LBS) | FACTORED VERT. LOAD (PLF) FROM | TO | LC1 CSI | MAX (LC) | MAX. UNBRAC LENGTH |
|---|---|---|---|---|---|---|
| A- B | 0 / 37 | -84.3 | -84.3 | 0.12 | (1) | 10.00 |
| B- C | 0 / 18 | -84.3 | -84.3 | 0.13 | (1) | 10.00 |
| C- D | -1811 / 0 | -84.3 | -84.3 | 0.17 | (1) | 4.82 |
| D- E | -2034 / 0 | -84.3 | -84.3 | 0.57 | (1) | 4.13 |
| E- F | -2033 / 0 | -84.3 | -84.3 | 0.57 | (1) | 4.13 |
| F- G | -2033 / 0 | -84.3 | -84.3 | 0.57 | (1) | 4.13 |
| G- H | -2033 / 0 | -84.3 | -84.3 | 0.57 | (1) | 4.14 |
| H- I | -1812 / 0 | -84.3 | -84.3 | 0.17 | (1) | 4.82 |
| I- J | 0 / 18 | -84.3 | -84.3 | 0.13 | (1) | 10.00 |
| J- K | 0 / 37 | -84.3 | -84.3 | 0.12 | (1) | 10.00 |
| R- B | -226 / 0 | 0.0 | 0.0 | 0.02 | (1) | 7.81 |
| L- J | -226 / 0 | 0.0 | 0.0 | 0.02 | (1) | 7.81 |
| R- Q | 0 / 1286 | -28.0 | -28.0 | 0.43 | (2) | 10.00 |
| Q- P | 0 / 1375 | -28.0 | -28.0 | 0.45 | (2) | 10.00 |
| P- O | 0 / 2035 | -28.0 | -28.0 | 0.43 | (1) | 10.00 |
| O- N | 0 / 2035 | -28.0 | -28.0 | 0.43 | (1) | 10.00 |
| N- M | 0 / 1375 | -28.0 | -28.0 | 0.45 | (2) | 10.00 |
| M- L | 0 / 1286 | -28.0 | -28.0 | 0.44 | (2) | 10.00 |

WEBS

| MEMB. FR-TO | MAX. FACTORED FORCE (LBS) | MAX CSI (LC) |
|---|---|---|
| C- Q | 0 / 178 | 0.04 (2) |
| Q- D | 0 / 231 | 0.05 (3) |
| D- P | 0 / 979 | 0.22 (1) |
| P- E | -559 / 0 | 0.49 (1) |
| E- N | -2 / 0 | 0.00 (1) |
| N- G | -559 / 0 | 0.49 (1) |
| N- H | 0 / 977 | 0.22 (1) |
| M- H | 0 / 232 | 0.05 (3) |
| M- I | 0 / 178 | 0.04 (2) |
| I- C | -2043 / 0 | 0.88 (1) |
| I- L | -2044 / 0 | 0.88 (1) |

**DESIGN CRITERIA**

SPECIFIED LOADS:

| | | | | |
|---|---|---|---|---|
| TOP CH. | LL | = | 25.6 | PSF |
| | DL | = | 3.0 | PSF |
| BOT CH. | LL | = | 10.5 | PSF |
| | DL | = | 7.0 | PSF |
| TOTAL LOAD | | = | 46.1 | PSF |

**SPACING = 24.0 IN. C/C**

LOADING IN FLAT SECTION BASED ON A SLOPE OF 6.00/12

THIS TRUSS IS DESIGNED FOR RESIDENTIAL OR SMALL BUILDING REQUIREMENTS OF PART 9, NBCC 2010

THIS DESIGN COMPLIES WITH:
- PART 9 OF OBC 2012 , BCBC 2012 , ABC 2014
- CSA 086-09
- TPIC 2011

(55 % OF 31.3 P.S.F. G.S.L. PLUS 8.4 P.S.F. RAIN LOAD) EQUALS 25.6 P.S.F. SPECIFIED ROOF LIVE LOAD

ALLOWABLE DEFL.(LL)= L/360 (1.05")
CALCULATED VERT. DEFL.(LL) = L/ 999 (0.12")
ALLOWABLE DEFL.(TL)= L/360 (1.05")
CALCULATED VERT. DEFL.(TL) = L/ 999 (0.19")

CSI: TC=0.57 (D-E:1) , BC=0.45 (M-N:2) , WB=0.88 (I-L:1) , SSI=0.24 (D-E:1)

DOL LUMBER=1.00 NAIL=1.00 LS BEND=1.10 COMP=1.10 SHEAR=1.10 TENS= 1.10

COMPANION LIVE LOAD FACTOR = 0.50

AUTOSOLVE HEELS OFF

TRUSS PLATE MANUFACTURER IS NOT RESPONSIBLE FOR QUALITY CONTROL IN THE TRUSS MANUFACTURING PLANT .

NAIL VALUES

| PLATE | GRIP(DRY) (PSI) MAX | MIN | SHEAR (PLI) MAX | MIN | SECTION (PLI) MAX | MIN |
|---|---|---|---|---|---|---|
| MT20 | 618 | 354 | 1667 | 822 | 2284 | 1656 |

PLATE PLACEMENT TOL. = 0.250 inches

PLATE ROTATION TOL. = 5.0 Deg.

JSI GRIP= 0.89 (I) (INPUT = 0.90 )
JSI METAL= 0.64 (O) (INPUT = 1.00 )

[M]

LICENSED PROFESSIONAL ENGINEER
8257
S. KATSOULAKOS
PROVINCE OF ONTARIO

DWG NO. TAM42862 17
STRUCTURAL
COMPONENT ONLY

| JOB NAME | TRUSS NAME | QUANTITY | PLY | JOB DESC. 43954 | DRWG NO. |
|---|---|---|---|---|---|
| 282689 | T5 | 2 | 1 | TRUSS DESC. | |

Tamarack Roof Truss, Burlington

Version 8.030 S Oct 5 2016 MiTek Industries, Inc. Thu Aug 24 16:30:52 2017 Page 1

ID:_P_zlJoeh6kqSyqNtNRH3eykdwA-YVA_0O3fAd3rjmcBXgaSBjOuCTFFHYVlpbQ22rykbS1

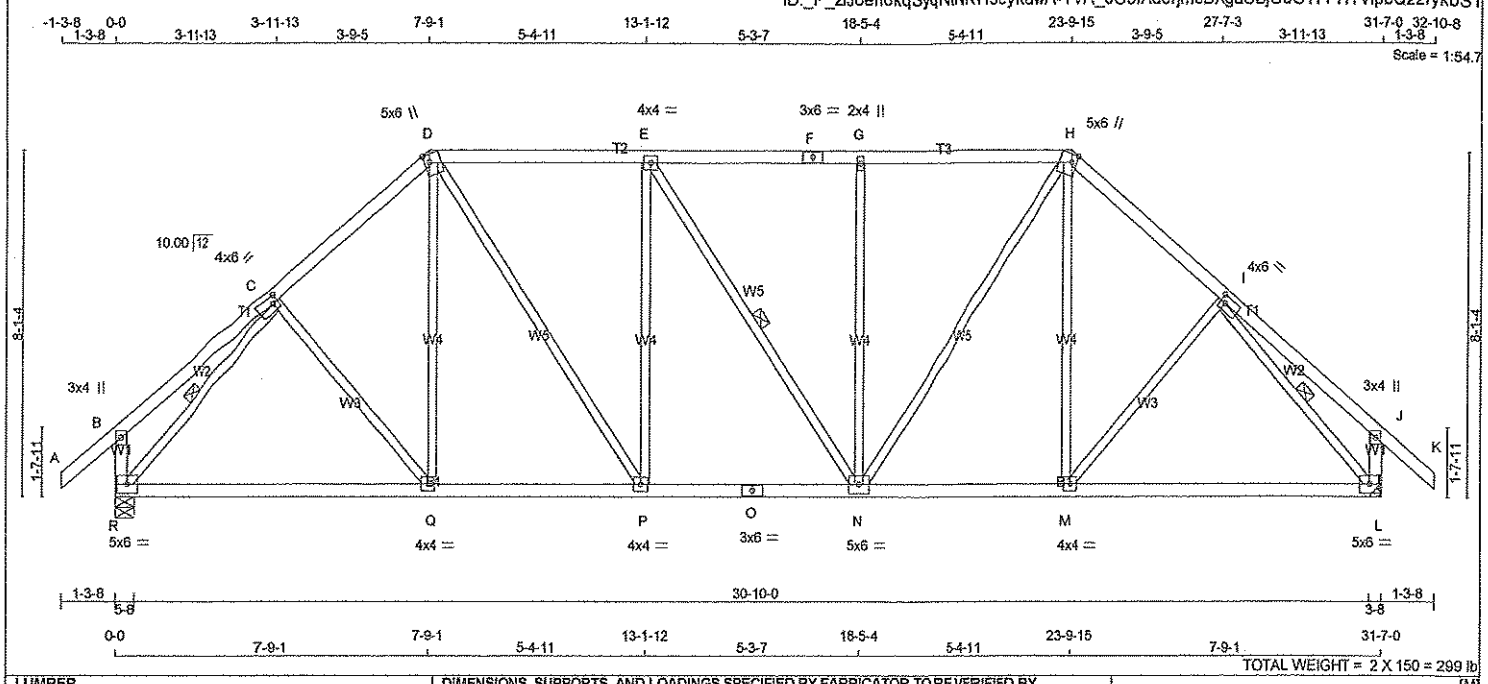


TOTAL WEIGHT = 2 X 150 = 299 lb

**LUMBER**

N. L. G. A. RULES

| CHORDS | SIZE | | LUMBER | DESCR. |
|---|---|---|---|---|
| A - D | 2x4 | DRY | No.2 | SPF |
| D - F | 2x4 | DRY | No.2 | SPF |
| F - H | 2x4 | DRY | No.2 | SPF |
| H - K | 2x4 | DRY | No.2 | SPF |
| R - B | 2x4 | DRY | No.2 | SPF |
| L - J | 2x4 | DRY | No.2 | SPF |
| R - O | 2x4 | DRY | No.2 | SPF |
| O - L | 2x4 | DRY | No.2 | SPF |
| ALL WEBS EXCEPT | 2x3 | DRY | No.2 | SPF |

DRY: SEASONED LUMBER.

**PLATES (table is in inches)**

| JT | TYPE | PLATES | W | LEN | Y | X |
|---|---|---|---|---|---|---|
| B | TMV+p | MT20 | 3.0 | 4.0 | | |
| C | TMWW-t | MT20 | 4.0 | 6.0 | 2.00 | 1.50 |
| D | TTWW+m | MT20 | 5.0 | 6.0 | 2.25 | 1.50 |
| E | TMWW-t | MT20 | 4.0 | 4.0 | | |
| F | TS-t | MT20 | 3.0 | 6.0 | | |
| G | TMW+w | MT20 | 2.0 | 4.0 | | |
| H | TTWW+m | MT20 | 5.0 | 6.0 | 2.25 | 1.50 |
| I | TMWW-t | MT20 | 4.0 | 6.0 | 2.00 | 1.50 |
| J | TMV+p | MT20 | 3.0 | 4.0 | | |
| L | BMVW1-t | MT20 | 5.0 | 6.0 | | |
| M, P, Q | | | | | | |
| M | BMWW-t | MT20 | 4.0 | 4.0 | | |
| N | BMWWW-t | MT20 | 5.0 | 6.0 | | |
| O | BS-t | MT20 | 3.0 | 6.0 | | |
| R | BMVW1-t | MT20 | 5.0 | 6.0 | | |

DIMENSIONS, SUPPORTS AND LOADINGS SPECIFIED BY FABRICATOR TO BE VERIFIED BY BUILDING DESIGNER

**BEARINGS**

| JT | FACTORED GROSS REACTION VERT | HORZ | MAXIMUM FACTORED GROSS REACTION DOWN | HORZ | UPLIFT | INPUT BRG IN-SX | REQRD BRG IN-SX |
|---|---|---|---|---|---|---|---|
| R | 1889 | 0 | 1889 | 0 | 0 | 5-8 | 5-8 |
| L | 1889 | 0 | 1889 | 0 | 0 | HANGER BY OTHERS | |
| | | | | | | MIN. SEAT SIZE: 3-8 | |

**UNFACTORED REACTIONS**

| JT | 1ST LCASE COMBINED | MAX /MIN. COMPONENT REACTIONS SNOW | LIVE | PERM.LIVE | WIND | DEAD | SOIL |
|---|---|---|---|---|---|---|---|
| R | 1535 | 879 / 0 | 332 / 0 | 0 / 0 | 0 / 0 | 324 / 0 | 0 / 0 |
| L | 1535 | 879 / 0 | 332 / 0 | 0 / 0 | 0 / 0 | 324 / 0 | 0 / 0 |

BEARING MATERIAL TO BE SPF NO.2 OR BETTER AT JOINT(S) R

**BRACING**

TOP CHORD TO BE SHEATHED OR MAX. PURLIN SPACING = 4.58 FT.
MAX. UNBRACED BOTTOM CHORD LENGTH = 10.00 FT. OR RIGID CEILING DIRECTLY APPLIED.

ALL PITCH BREAKS AND PERIMETER CORNER JOINTS MUST BE LATERALLY RESTRAINED.

1 LATERAL BRACE(S) AT 1/ 2 LENGTH OF E-N, C-R, I-L.

END VERTICAL(S) MUST BE SHEATHED OR HAVE BRACES AS INDICATED IN THE MAX. UNBRACED LENGTH COLUMN OF THE TABLE BELOW

**LOADING**

TOTAL LOAD CASES: (4)

CHORDS

| MEMB. FR-TO | MAX. FACTORED FORCE (LBS) | FACTORED VERT. LOAD LC1 (PLF) FROM | TO | MAX CSI (LC) | MAX. UNBRAC LENGTH |
|---|---|---|---|---|---|
| A- B | 0 / 37 | -84.3 | -84.3 | 0.12 (1) | 10.00 |
| B- C | 0 / 23 | -84.3 | -84.3 | 0.19 (1) | 10.00 |
| C- D | -1784 / 0 | -84.3 | -84.3 | 0.25 (1) | 4.77 |
| D- E | -1777 / 0 | -84.3 | -84.3 | 0.40 (1) | 4.58 |
| E- F | -1776 / 0 | -84.3 | -84.3 | 0.40 (1) | 4.58 |
| F- G | -1776 / 0 | -84.3 | -84.3 | 0.40 (1) | 4.58 |
| G- H | -1775 / 0 | -84.3 | -84.3 | 0.39 (1) | 4.59 |
| H- I | -1784 / 0 | -84.3 | -84.3 | 0.25 (1) | 4.77 |
| I- J | 0 / 23 | -84.3 | -84.3 | 0.19 (1) | 10.00 |
| J- K | 0 / 37 | -84.3 | -84.3 | 0.12 (1) | 10.00 |
| R- B | -243 / 0 | 0.0 | 0.0 | 0.03 (1) | 7.81 |
| L- J | -243 / 0 | 0.0 | 0.0 | 0.03 (1) | 7.81 |
| R- Q | 0 / 1327 | -28.0 | -28.0 | 0.52 (2) | 10.00 |
| Q- P | 0 / 1352 | -28.0 | -28.0 | 0.53 (2) | 10.00 |
| P- O | 0 / 1777 | -28.0 | -28.0 | 0.36 (1) | 10.00 |
| O- N | 0 / 1777 | -28.0 | -28.0 | 0.36 (1) | 10.00 |
| N- M | 0 / 1352 | -28.0 | -28.0 | 0.53 (2) | 10.00 |
| M- L | 0 / 1327 | -28.0 | -28.0 | 0.52 (2) | 10.00 |

WEBS

| MEMB. FR-TO | MAX. FACTORED FORCE (LBS) | MAX CSI (LC) |
|---|---|---|
| C- Q | 0 / 133 | 0.03 (3) |
| Q- D | 0 / 304 | 0.07 (2) |
| D- P | 0 / 746 | 0.17 (1) |
| P- E | -485 / 0 | 0.61 (1) |
| E- N | -2 / 0 | 0.00 (1) |
| N- G | -484 / 0 | 0.61 (1) |
| N- H | 0 / 744 | 0.17 (1) |
| M- H | 0 / 304 | 0.07 (2) |
| M- I | 0 / 133 | 0.03 (3) |
| R- C | -2045 / 0 | 0.51 (1) |
| I- L | -2045 / 0 | 0.51 (1) |

**DESIGN CRITERIA**

SPECIFIED LOADS:

| | | | | |
|---|---|---|---|---|
| TOP CH. | LL | = | 25.6 | PSF |
| | DL | = | 3.0 | PSF |
| BOT CH. | LL | = | 10.5 | PSF |
| | DL | = | 7.0 | PSF |
| TOTAL LOAD | | = | 46.1 | PSF |

**SPACING = 24.0 IN. C/C**

LOADING IN FLAT SECTION BASED ON A SLOPE OF 6.00/12

THIS TRUSS IS DESIGNED FOR RESIDENTIAL OR SMALL BUILDING REQUIREMENTS OF PART 9, NBCC 2010

THIS DESIGN COMPLIES WITH:
- PART 9 OF OBC 2012 , BCBC 2012 , ABC 2014
- CSA 086-09
- TPIC 2011

(55 % OF 31.3 P.S.F. G.S.L. PLUS 8.4 P.S.F. RAIN LOAD) EQUALS 25.6 P.S.F. SPECIFIED ROOF LIVE LOAD

ALLOWABLE DEFL.(LL)= L/360 (1.05")
CALCULATED VERT. DEFL.(LL) = L/ 999 (0.16")
ALLOWABLE DEFL.(TL)= L/360 (1.05")
CALCULATED VERT. DEFL.(TL) = L/ 999 (0.27")

CSI: TC=0.40 (D-E:1) , BC=0.53 (M-N:2) , WB=0.61 (E-P:1) , SSI=0.21 (D-E:1)

DOL LUMBER=1.00 NAIL=1.00 LS BEND=1.10 COMP=1.10 SHEAR=1.10 TENS= 1.10

COMPANION LIVE LOAD FACTOR = 0.50

AUTOSOLVE HEELS OFF

TRUSS PLATE MANUFACTURER IS NOT RESPONSIBLE FOR QUALITY CONTROL IN THE TRUSS MANUFACTURING PLANT .

NAIL VALUES

| PLATE | GRIP(DRY) (PSI) MAX | MIN | SHEAR (PLI) MAX | MIN | SECTION (PLI) MAX | MIN |
|---|---|---|---|---|---|---|
| MT20 | 618 | 354 | 1667 | 822 | 2284 | 1656 |

PLATE PLACEMENT TOL. = 0.250 inches

PLATE ROTATION TOL. = 5.0 Deg.

JSI GRIP= 0.86 (I) (INPUT = 0.90 )
JSI METAL= 0.57 (O) (INPUT = 1.00 )

LICENSED PROFESSIONAL ENGINEER
82577
S. KATSOULAKOS
PROVINCE OF ONTARIO

DWG NO. TAM 42861-17
STRUCTURAL
COMPONENT ONLY

| JOB NAME | TRUSS NAME | QUANTITY | PLY | JOB DESC. 43954 | DRWG NO. |
|---|---|---|---|---|---|
| 282689 | T6 | 2 | 1 | TRUSS DESC. | |

Tamarack Roof Truss, Burlington

Version 8.030 S Oct 5 2016 MiTek Industries, Inc. Thu Aug 24 16:30:52 2017 Page 1

ID:_P_zlJoeh6kqSyqNtNRH3eykdwA-YVA_0O3fAd3rjmcBXgaSBjOsiTD_HYRlpbQ22rykbS1

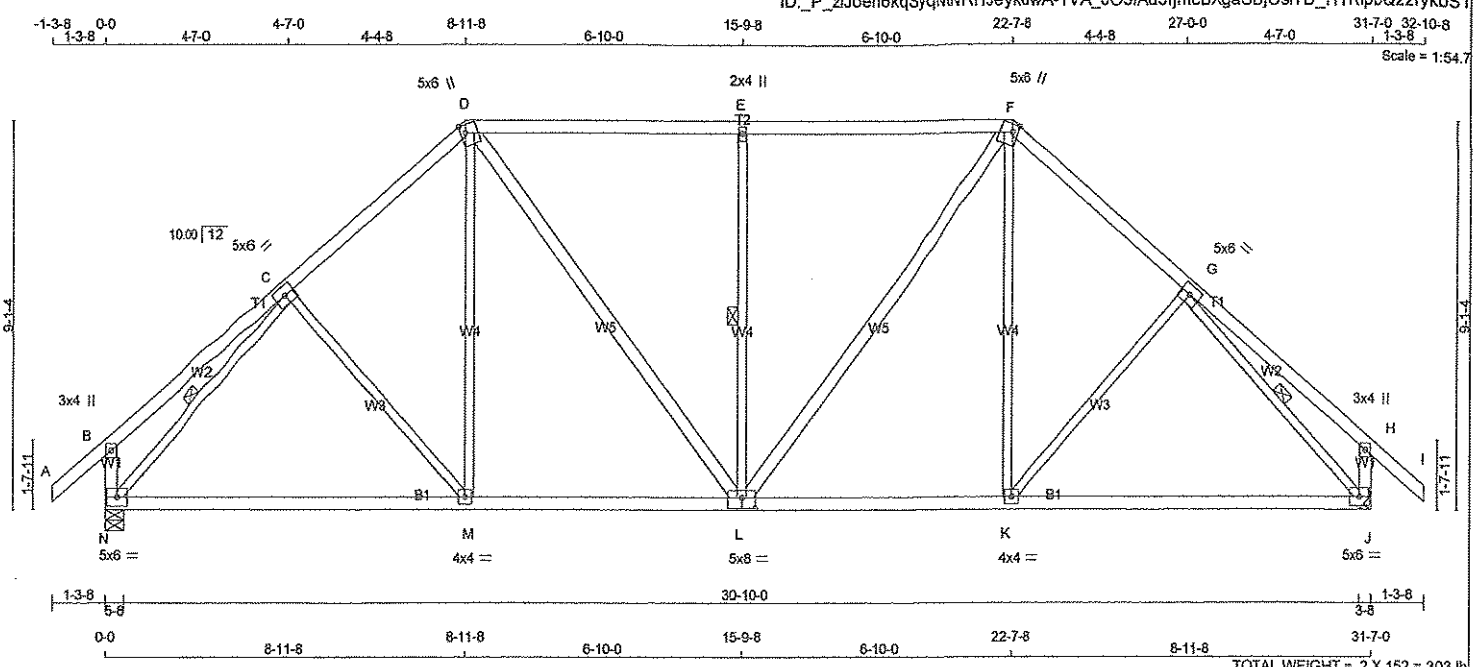


TOTAL WEIGHT = 2 X 152 = 303 lb

[M][F]

**LUMBER**

N. L. G. A. RULES

| CHORDS | SIZE | | LUMBER | DESCR. |
|---|---|---|---|---|
| A - D | 2x4 | DRY | No.2 | SPF |
| D - F | 2x4 | DRY | No.2 | SPF |
| F - I | 2x4 | DRY | No.2 | SPF |
| N - B | 2x4 | DRY | No.2 | SPF |
| J - H | 2x4 | DRY | No.2 | SPF |
| N - L | 2x4 | DRY | No.2 | SPF |
| L - J | 2x4 | DRY | No.2 | SPF |
| ALL WEBS | 2x3 | DRY | No.2 | SPF |
| EXCEPT | | | | |
| D - L | 2x4 | DRY | No.2 | SPF |
| L - F | 2x4 | DRY | No.2 | SPF |

DRY: SEASONED LUMBER.

**PLATES (table is in inches)**

| JT | TYPE | PLATES | W | LEN | Y | X |
|---|---|---|---|---|---|---|
| B | TMV+p | MT20 | 3.0 | 4.0 | | |
| C | TMWW-t | MT20 | 5.0 | 6.0 | | |
| D | TTWW+m | MT20 | 5.0 | 6.0 | 2.25 | 1.50 |
| E | TMW+w | MT20 | 2.0 | 4.0 | | |
| F | TTWW+m | MT20 | 5.0 | 6.0 | 2.25 | 1.50 |
| G | TMWW-t | MT20 | 5.0 | 6.0 | | |
| H | TMV+p | MT20 | 3.0 | 4.0 | | |
| J | BMVW1-t | MT20 | 5.0 | 6.0 | | |
| K | BMWW-t | MT20 | 4.0 | 4.0 | | |
| L | BSWWW-t | MT20 | 5.0 | 8.0 | 3.00 | 4.00 |
| M | BMWW-t | MT20 | 4.0 | 4.0 | | |
| N | BMVW1-t | MT20 | 5.0 | 6.0 | | |

DIMENSIONS, SUPPORTS AND LOADINGS SPECIFIED BY FABRICATOR TO BE VERIFIED BY BUILDING DESIGNER

**BEARINGS**

| JT | FACTORED GROSS REACTION VERT | HORZ | MAXIMUM FACTORED GROSS REACTION DOWN | HORZ | UPLIFT | INPUT BRG IN-SX | REQRD BRG IN-SX |
|---|---|---|---|---|---|---|---|
| N | 1889 | 0 | 1889 | 0 | 0 | 5-8 | 5-8 |
| J | 1889 | 0 | 1889 | 0 | 0 | HANGER BY OTHERS | |
| | | | | | | MIN. SEAT SIZE: 3-8 | |

**UNFACTORED REACTIONS**

| JT | 1ST LCASE COMBINED | MAX./MIN. COMPONENT REACTIONS SNOW | LIVE | PERM.LIVE | WIND | DEAD | SOIL |
|---|---|---|---|---|---|---|---|
| N | 1535 | 879 / 0 | 332 / 0 | 0 / 0 | 0 / 0 | 324 / 0 | 0 / 0 |
| J | 1535 | 879 / 0 | 332 / 0 | 0 / 0 | 0 / 0 | 324 / 0 | 0 / 0 |

BEARING MATERIAL TO BE SPF NO.2 OR BETTER AT JOINT(S) N

**BRACING**

TOP CHORD TO BE SHEATHED OR MAX. PURLIN SPACING = 4.47 FT.
MAX. UNBRACED BOTTOM CHORD LENGTH = 10.00 FT. OR RIGID CEILING DIRECTLY APPLIED.

ALL PITCH BREAKS AND PERIMETER CORNER JOINTS MUST BE LATERALLY RESTRAINED.

1 LATERAL BRACE(S) AT 1/ 2 LENGTH OF E-L, C-N, G-J.

END VERTICAL(S) MUST BE SHEATHED OR HAVE BRACES AS INDICATED IN THE MAX. UNBRACED LENGTH COLUMN OF THE TABLE BELOW

**LOADING**

TOTAL LOAD CASES: (4)

CHORDS

| MEMB. FR-TO | MAX. FACTORED FORCE (LBS) | FACTORED VERT. LOAD LC1 (PLF) FROM | TO | MAX CSI (LC) | MAX. UNBRAC LENGTH |
|---|---|---|---|---|---|
| A- B | 0 / 37 | -84.3 | -84.3 | 0.12 (1) | 10.00 |
| B- C | 0 / 28 | -84.3 | -84.3 | 0.27 (1) | 10.00 |
| C- D | -1745 / 0 | -84.3 | -84.3 | 0.25 (1) | 4.82 |
| D- E | -1648 / 0 | -84.3 | -84.3 | 0.56 (1) | 4.47 |
| E- F | -1648 / 0 | -84.3 | -84.3 | 0.56 (1) | 4.47 |
| F- G | -1745 / 0 | -84.3 | -84.3 | 0.25 (1) | 4.82 |
| G- H | 0 / 28 | -84.3 | -84.3 | 0.27 (1) | 10.00 |
| H- I | 0 / 37 | -84.3 | -84.3 | 0.12 (1) | 10.00 |
| N- B | -261 / 0 | 0.0 | 0.0 | 0.03 (1) | 7.81 |
| J- H | -261 / 0 | 0.0 | 0.0 | 0.03 (1) | 7.81 |
| N- M | 0 / 1354 | -28.0 | -28.0 | 0.67 (2) | 10.00 |
| M- L | 0 / 1320 | -28.0 | -28.0 | 0.68 (2) | 10.00 |
| L- K | 0 / 1320 | -28.0 | -28.0 | 0.68 (2) | 10.00 |
| K- J | 0 / 1354 | -28.0 | -28.0 | 0.67 (2) | 10.00 |

WEBS

| MEMB. FR-TO | MAX. FACTORED FORCE (LBS) | MAX CSI (LC) |
|---|---|---|
| C- M | -56 / 108 | 0.05 (1) |
| M- D | 0 / 421 | 0.09 (2) |
| D- L | 0 / 535 | 0.09 (1) |
| L- E | -706 / 0 | 0.38 (1) |
| L- F | 0 / 535 | 0.09 (1) |
| K- F | 0 / 421 | 0.09 (2) |
| K- G | -56 / 108 | 0.05 (1) |
| N- C | -2039 / 0 | 0.62 (1) |
| G- J | -2039 / 0 | 0.62 (1) |

**DESIGN CRITERIA**

SPECIFIED LOADS:

| | | | | |
|---|---|---|---|---|
| TOP CH. | LL | = | 25.6 | PSF |
| | DL | = | 3.0 | PSF |
| BOT CH. | LL | = | 10.5 | PSF |
| | DL | = | 7.0 | PSF |
| TOTAL LOAD | | = | 46.1 | PSF |

**SPACING = 24.0 IN. C/C**

LOADING IN FLAT SECTION BASED ON A SLOPE OF 6.00/12

THIS TRUSS IS DESIGNED FOR RESIDENTIAL OR SMALL BUILDING REQUIREMENTS OF PART 9, NBCC 2010

THIS DESIGN COMPLIES WITH:
- PART 9 OF OBC 2012 , BCBC 2012 , ABC 2014
- CSA 086-09
- TPIC 2011

(55 % OF 31.3 P.S.F. G.S.L. PLUS 8.4 P.S.F. RAIN LOAD) EQUALS 25.6 P.S.F. SPECIFIED ROOF LIVE LOAD

ALLOWABLE DEFL.(LL)= L/360 (1.05")
CALCULATED VERT. DEFL.(LL) = L/ 999 (0.26")
ALLOWABLE DEFL.(TL)= L/360 (1.05")
CALCULATED VERT. DEFL.(TL) = L/ 869 (0.44")

CSI: TC=0.56 (D-E:1) , BC=0.68 (K-L:2) , WB=0.62 (G-J:1) , SSI=0.28 (E-F:1)

DOL LUMBER=1.00 NAIL=1.00 LS BEND=1.10 COMP=1.10 SHEAR=1.10 TENS= 1.10

COMPANION LIVE LOAD FACTOR = 0.50

AUTOSOLVE HEELS OFF

TRUSS PLATE MANUFACTURER IS NOT RESPONSIBLE FOR QUALITY CONTROL IN THE TRUSS MANUFACTURING PLANT .

NAIL VALUES

| PLATE | GRIP(DRY) (PSI) MAX | MIN | SHEAR (PLI) MAX | MIN | SECTION (PLI) MAX | MIN |
|---|---|---|---|---|---|---|
| MT20 | 618 | 354 | 1667 | 822 | 2284 | 1656 |

PLATE PLACEMENT TOL. = 0.250 inches

PLATE ROTATION TOL. = 5.0 Deg.

JSI GRIP= 0.90 (G) (INPUT = 0.90 )
JSI METAL= 0.50 (G) (INPUT = 1.00 )

LICENSED PROFESSIONAL ENGINEER
8477
S. KATSOULAKOS
PROVINCE OF ONTARIO

DWG NO. TAM 42862-17
STRUCTURAL
COMPONENT ONLY

| JOB NAME | TRUSS NAME | QUANTITY | PLY | JOB DESC. 43954 | DRWG NO. |
|---|---|---|---|---|---|
| 282689 | T7 | 2 | 1 | TRUSS DESC. | |

Tamarack Roof Truss, Burlington

Version 8.030 S Oct 5 2016 MiTek Industries, Inc. Thu Aug 24 16:30:52 2017 Page 1

ID:_P_zlJoeh6kqSyqNtNRH3eykdwA-YVA_0O3fAd3rjmcBXgaSBjOvhTlLHbolpbQ22rykbS1

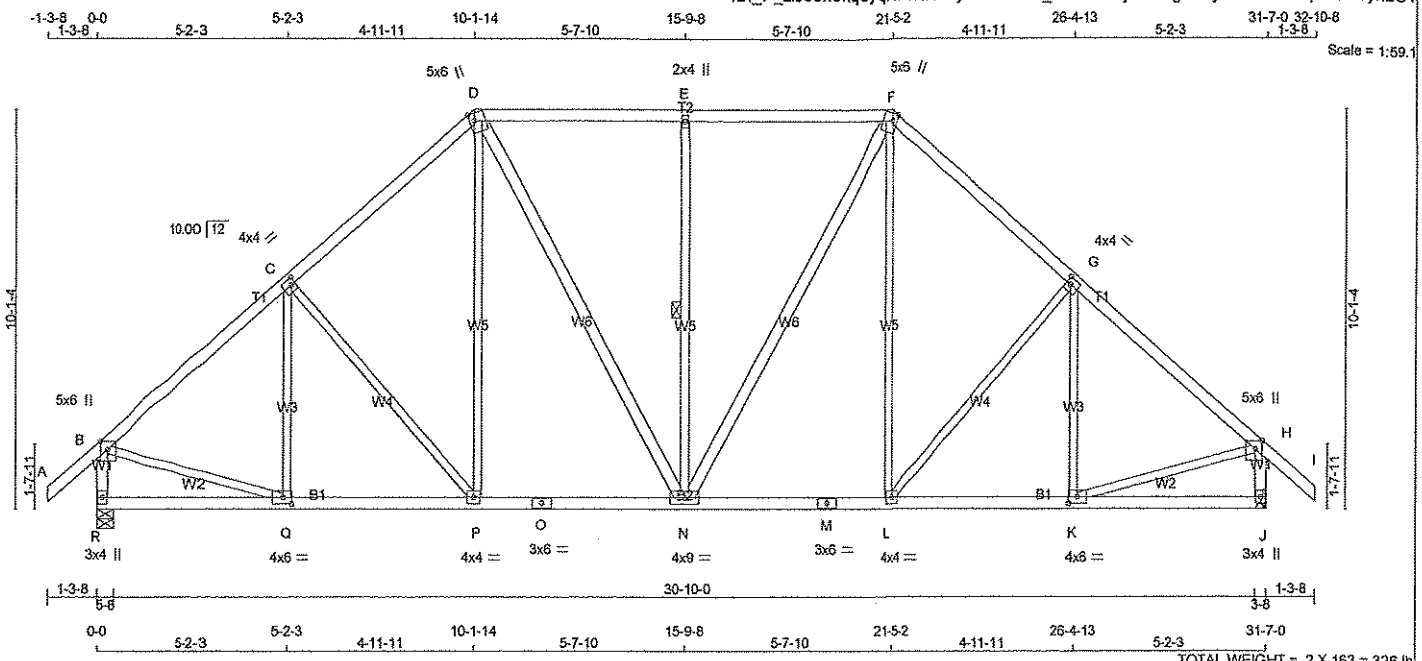


TOTAL WEIGHT = 2 X 163 = 326 lb

**LUMBER**

N. L. G. A. RULES

| CHORDS | SIZE | | LUMBER | DESCR. |
|---|---|---|---|---|
| A - D | 2x4 | DRY | No.2 | SPF |
| D - F | 2x4 | DRY | No.2 | SPF |
| F - I | 2x4 | DRY | No.2 | SPF |
| R - B | 2x4 | DRY | No.2 | SPF |
| J - H | 2x4 | DRY | No.2 | SPF |
| R - O | 2x4 | DRY | No.2 | SPF |
| O - M | 2x4 | DRY | No.2 | SPF |
| M - J | 2x4 | DRY | No.2 | SPF |
| ALL WEBS EXCEPT | 2x3 | DRY | No.2 | SPF |
| D - N | 2x4 | DRY | No.2 | SPF |
| N - F | 2x4 | DRY | No.2 | SPF |

DRY: SEASONED LUMBER.

**PLATES (table is in inches)**

| JT | TYPE | PLATES | W | LEN | Y | X |
|---|---|---|---|---|---|---|
| B | TMVW+p | MT20 | 5.0 | 6.0 | 2.50 | 2.25 |
| C | TMWW-t | MT20 | 4.0 | 4.0 | 2.00 | 1.25 |
| D | TTWW+m | MT20 | 5.0 | 6.0 | 2.25 | 1.50 |
| E | TMW+w | MT20 | 2.0 | 4.0 | | |
| F | TTWW+m | MT20 | 5.0 | 6.0 | 2.25 | 1.50 |
| G | TMWW-t | MT20 | 4.0 | 4.0 | 2.00 | 1.25 |
| H | TMVW+p | MT20 | 5.0 | 6.0 | 2.50 | 2.25 |
| J | BMV1+p | MT20 | 3.0 | 4.0 | | |
| K | BMWW-t | MT20 | 4.0 | 6.0 | 2.00 | 2.75 |
| L | BMWW-t | MT20 | 4.0 | 4.0 | | |
| M | BS-t | MT20 | 3.0 | 6.0 | | |
| N | BMWWW-t | MT20 | 4.0 | 9.0 | | |
| O | BS-t | MT20 | 3.0 | 6.0 | | |
| P | BMWW-t | MT20 | 4.0 | 4.0 | | |
| Q | BMWW-t | MT20 | 4.0 | 6.0 | 2.00 | 2.75 |
| R | BMV1+p | MT20 | 3.0 | 4.0 | | |

**DIMENSIONS, SUPPORTS AND LOADINGS SPECIFIED BY FABRICATOR TO BE VERIFIED BY BUILDING DESIGNER**

**BEARINGS**

| JT | FACTORED GROSS REACTION VERT | HORZ | MAXIMUM FACTORED GROSS REACTION DOWN | HORZ | UPLIFT | INPUT BRG IN-SX | REQRD BRG IN-SX |
|---|---|---|---|---|---|---|---|
| R | 1889 | 0 | 1889 | 0 | 0 | 5-8 | 5-8 |
| J | 1889 | 0 | 1889 | 0 | 0 | HANGER BY OTHERS | |
| | | | | | | MIN. SEAT SIZE: 3-8 | |

**UNFACTORED REACTIONS**

| JT | 1ST LCASE COMBINED | MAX./MIN. COMPONENT REACTIONS SNOW | LIVE | PERM.LIVE | WIND | DEAD | SOIL |
|---|---|---|---|---|---|---|---|
| R | 1535 | 879 / 0 | 332 / 0 | 0 / 0 | 0 / 0 | 324 / 0 | 0 / 0 |
| J | 1535 | 879 / 0 | 332 / 0 | 0 / 0 | 0 / 0 | 324 / 0 | 0 / 0 |

BEARING MATERIAL TO BE SPF NO.2 OR BETTER AT JOINT(S) R

**BRACING**

TOP CHORD TO BE SHEATHED OR MAX. PURLIN SPACING = 4.64 FT.
MAX. UNBRACED BOTTOM CHORD LENGTH = 10.00 FT. OR RIGID CEILING DIRECTLY APPLIED.

ALL PITCH BREAKS AND PERIMETER CORNER JOINTS MUST BE LATERALLY RESTRAINED.

1 LATERAL BRACE(S) AT 1/ 2 LENGTH OF E-N.

END VERTICAL(S) MUST BE SHEATHED OR HAVE BRACES AS INDICATED IN THE MAX. UNBRACED LENGTH COLUMN OF THE TABLE BELOW

**LOADING**

TOTAL LOAD CASES: (4)

CHORDS

| MEMB. FR-TO | MAX. FACTORED FORCE (LBS) | FACTORED VERT. LOAD (PLF) FROM | TO | LC1 CSI (LC) | MAX UNBRAC LENGTH |
|---|---|---|---|---|---|
| A- B | 0 / 37 | -84.3 | -84.3 | 0.12 (1) | 10.00 |
| B- C | -1820 / 0 | -84.3 | -84.3 | 0.35 (1) | 4.64 |
| C- D | -1665 / 0 | -84.3 | -84.3 | 0.33 (1) | 4.83 |
| D- E | -1466 / 0 | -84.3 | -84.3 | 0.37 (1) | 4.99 |
| E- F | -1466 / 0 | -84.3 | -84.3 | 0.37 (1) | 4.99 |
| F- G | -1665 / 0 | -84.3 | -84.3 | 0.33 (1) | 4.83 |
| G- H | -1820 / 0 | -84.3 | -84.3 | 0.35 (1) | 4.64 |
| H- I | 0 / 37 | -84.3 | -84.3 | 0.12 (1) | 10.00 |
| R- B | -1829 / 0 | 0.0 | 0.0 | 0.19 (1) | 6.19 |
| J- H | -1829 / 0 | 0.0 | 0.0 | 0.19 (1) | 6.19 |
| R- Q | 0 / 0 | -28.0 | -28.0 | 0.17 (3) | 10.00 |
| Q- P | 0 / 1423 | -28.0 | -28.0 | 0.34 (2) | 10.00 |
| P- O | 0 / 1255 | -28.0 | -28.0 | 0.33 (2) | 10.00 |
| O- N | 0 / 1255 | -28.0 | -28.0 | 0.33 (2) | 10.00 |
| N- M | 0 / 1255 | -28.0 | -28.0 | 0.33 (2) | 10.00 |
| M- L | 0 / 1255 | -28.0 | -28.0 | 0.33 (2) | 10.00 |
| L- K | 0 / 1423 | -28.0 | -28.0 | 0.34 (2) | 10.00 |
| K- J | 0 / 0 | -28.0 | -28.0 | 0.17 (3) | 10.00 |

WEBS

| MEMB. FR-TO | MAX. FACTORED FORCE (LBS) | MAX CSI (LC) |
|---|---|---|
| Q- C | -202 / 101 | 0.11 (1) |
| C- P | -257 / 0 | 0.30 (1) |
| P- D | 0 / 381 | 0.09 (2) |
| D- N | 0 / 425 | 0.07 (1) |
| N- E | -578 / 0 | 0.40 (1) |
| N- F | 0 / 425 | 0.07 (1) |
| L- F | 0 / 381 | 0.09 (2) |
| L- G | -257 / 0 | 0.30 (1) |
| K- G | -202 / 101 | 0.11 (1) |
| B- Q | 0 / 1467 | 0.33 (1) |
| K- H | 0 / 1467 | 0.33 (1) |

LICENSED PROFESSIONAL ENGINEER
S. KATSOULAKOS
PROVINCE OF ONTARIO

DWG NO. TAM 42863-17
STRUCTURAL
COMPONENT ONLY

(M)(F)

**DESIGN CRITERIA**

SPECIFIED LOADS:

| | | | | |
|---|---|---|---|---|
| TOP CH. | LL | = | 25.6 | PSF |
| | DL | = | 3.0 | PSF |
| BOT CH. | LL | = | 10.5 | PSF |
| | DL | = | 7.0 | PSF |
| TOTAL LOAD | | = | 46.1 | PSF |

**SPACING = 24.0 IN. C/C**

LOADING IN FLAT SECTION BASED ON A SLOPE OF 6.00/12

THIS TRUSS IS DESIGNED FOR RESIDENTIAL OR SMALL BUILDING REQUIREMENTS OF PART 9, NBCC 2010

THIS DESIGN COMPLIES WITH:
- PART 9 OF OBC 2012 , BCBC 2012 , ABC 2014
- CSA 086-09
- TPIC 2011

(55 % OF 31.3 P.S.F. G.S.L. PLUS 8.4 P.S.F. RAIN LOAD) EQUALS 25.6 P.S.F. SPECIFIED ROOF LIVE LOAD

ALLOWABLE DEFL.(LL)= L/360 (1.05")
CALCULATED VERT. DEFL.(LL) = L/ 999 (0.07")
ALLOWABLE DEFL.(TL)= L/360 (1.05")
CALCULATED VERT. DEFL.(TL) = L/ 999 (0.12")

CSI: TC=0.37 (D-E:1) , BC=0.34 (K-L:2) , WB=0.40 (E-N:1) , SSI=0.23 (D-E:1)

DOL LUMBER=1.00 NAIL=1.00 LS BEND=1.10 COMP=1.10 SHEAR=1.10 TENS= 1.10

COMPANION LIVE LOAD FACTOR = 0.50

TRUSS PLATE MANUFACTURER IS NOT RESPONSIBLE FOR QUALITY CONTROL IN THE TRUSS MANUFACTURING PLANT .

NAIL VALUES

| PLATE | GRIP(DRY) (PSI) MAX | MIN | SHEAR (PLI) MAX | MIN | SECTION (PLI) MAX | MIN |
|---|---|---|---|---|---|---|
| MT20 | 618 | 354 | 1667 | 822 | 2284 | 1656 |

PLATE PLACEMENT TOL. = 0.250 inches

PLATE ROTATION TOL. = 5.0 Deg.

JSI GRIP= 0.89 (Q) (INPUT = 0.90 )
JSI METAL= 0.37 (O) (INPUT = 1.00 )

| JOB NAME | TRUSS NAME | QUANTITY | PLY | JOB DESC. 43954 | DRWG NO. |
|---|---|---|---|---|---|
| 282689 | T8 | 3 | 1 | TRUSS DESC. | |

Tamarack Roof Truss, Burlington

Version 8.030 S Oct 5 2016 MiTek Industries, Inc. Thu Aug 24 16:30:53 2017 Page 1

ID:_P_zlJoeh6kqSyqNtNRH3eykdwA-0hkMDk4HxxBiKwBO5O5hkwx3Itcx03Au2FAbalykbS0

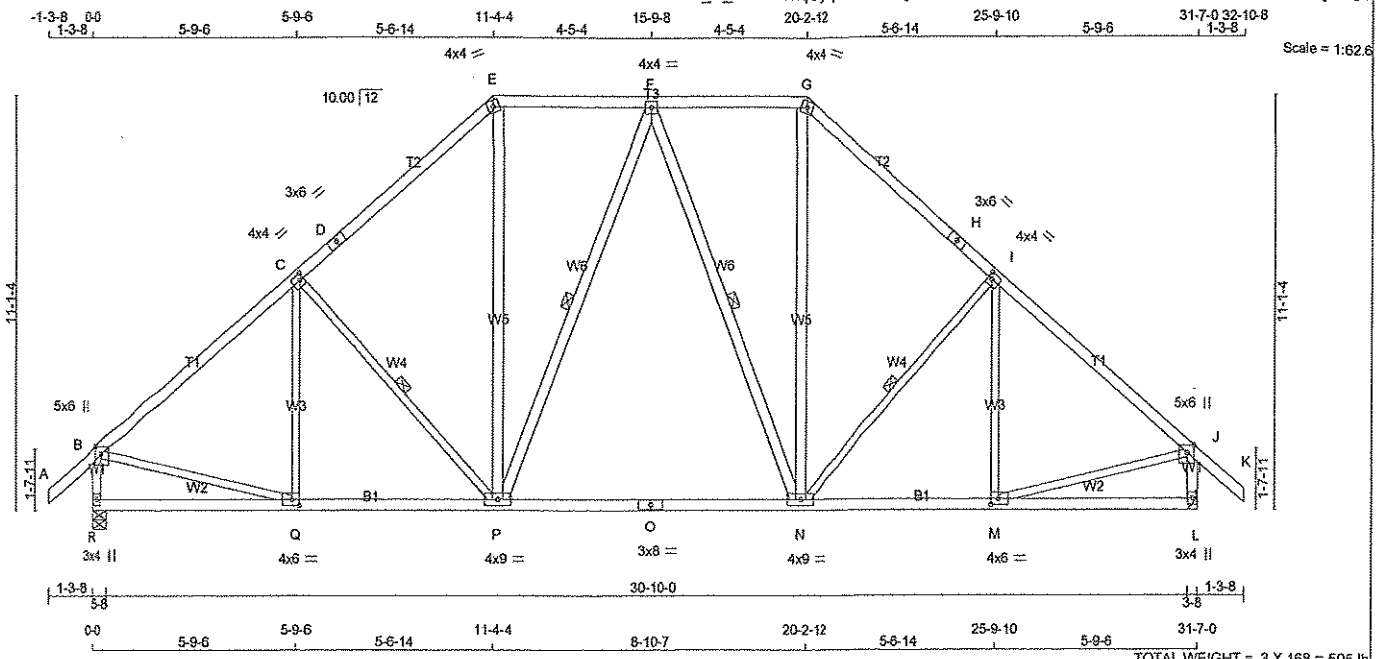


TOTAL WEIGHT = 3 X 168 = 505 lb

[M][F]

**LUMBER**

N. L. G. A. RULES

| CHORDS | SIZE | | LUMBER | DESCR. |
|---|---|---|---|---|
| A - D | 2x4 | DRY | No.2 | SPF |
| D - E | 2x4 | DRY | No.2 | SPF |
| E - G | 2x4 | DRY | No.2 | SPF |
| G - H | 2x4 | DRY | No.2 | SPF |
| H - K | 2x4 | DRY | No.2 | SPF |
| R - B | 2x4 | DRY | No.2 | SPF |
| L - J | 2x4 | DRY | No.2 | SPF |
| R - O | 2x4 | DRY | No.2 | SPF |
| O - L | 2x4 | DRY | No.2 | SPF |
| ALL WEBS | 2x3 | DRY | No.2 | SPF |
| EXCEPT | | | | |
| P - E | 2x4 | DRY | No.2 | SPF |
| P - F | 2x4 | DRY | No.2 | SPF |
| F - N | 2x4 | DRY | No.2 | SPF |
| N - G | 2x4 | DRY | No.2 | SPF |

DRY: SEASONED LUMBER.

**PLATES (table is in inches)**

| JT | TYPE | PLATES | W | LEN | Y | X |
|---|---|---|---|---|---|---|
| B | TMWW+p | MT20 | 5.0 | 6.0 | 2.50 | 2.25 |
| C | TMWW-t | MT20 | 4.0 | 4.0 | 2.00 | 1.25 |
| D | TS-t | MT20 | 3.0 | 6.0 | | |
| E | TTW-m | MT20 | 4.0 | 4.0 | | |
| F | TMWW-t | MT20 | 4.0 | 4.0 | | |
| G | TTW-m | MT20 | 4.0 | 4.0 | | |
| H | TS-t | MT20 | 3.0 | 6.0 | | |
| I | TMWW-t | MT20 | 4.0 | 4.0 | 2.00 | 1.25 |
| J | TMWW+p | MT20 | 5.0 | 6.0 | 2.50 | 2.25 |
| L | BMV1+p | MT20 | 3.0 | 4.0 | | |
| M | BMWW-t | MT20 | 4.0 | 6.0 | 2.00 | 2.50 |
| N | BMWWW-t | MT20 | 4.0 | 9.0 | | |
| O | BS-t | MT20 | 3.0 | 8.0 | | |
| P | BMWWW-t | MT20 | 4.0 | 9.0 | | |
| Q | BMWW-t | MT20 | 4.0 | 6.0 | 2.00 | 2.50 |
| R | BMV1+p | MT20 | 3.0 | 4.0 | | |

**DIMENSIONS, SUPPORTS AND LOADINGS SPECIFIED BY FABRICATOR TO BE VERIFIED BY BUILDING DESIGNER**

**BEARINGS**

| JT | FACTORED GROSS REACTION VERT | HORZ | MAXIMUM FACTORED GROSS REACTION DOWN | HORZ | UPLIFT | INPUT BRG IN-SX | REQRD BRG IN-SX |
|---|---|---|---|---|---|---|---|
| R | 1889 | 0 | 1889 | 0 | 0 | 5-8 | 5-8 |
| L | 1889 | 0 | 1889 | 0 | 0 | HANGER BY OTHERS | |
| | | | | | | MIN. SEAT SIZE: 3-8 | |

**UNFACTORED REACTIONS**

| JT | 1ST LCASE COMBINED | MAX./MIN. COMPONENT REACTIONS SNOW | LIVE | PERM.LIVE | WIND | DEAD | SOIL |
|---|---|---|---|---|---|---|---|
| R | 1535 | 879 / 0 | 332 / 0 | 0 / 0 | 0 / 0 | 324 / 0 | 0 / 0 |
| L | 1535 | 879 / 0 | 332 / 0 | 0 / 0 | 0 / 0 | 324 / 0 | 0 / 0 |

BEARING MATERIAL TO BE SPF NO.2 OR BETTER AT JOINT(S) R

**BRACING**

TOP CHORD TO BE SHEATHED OR MAX. PURLIN SPACING = 4.52 FT.
MAX. UNBRACED BOTTOM CHORD LENGTH = 10.00 FT. OR RIGID CEILING DIRECTLY APPLIED.

ALL PITCH BREAKS AND PERIMETER CORNER JOINTS MUST BE LATERALLY RESTRAINED.

1 LATERAL BRACE(S) AT 1/2 LENGTH OF C-P, F-P, F-N, I-N.

END VERTICAL(S) MUST BE SHEATHED OR HAVE BRACES AS INDICATED IN THE MAX. UNBRACED LENGTH COLUMN OF THE TABLE BELOW

**LOADING**

TOTAL LOAD CASES: (4)

CHORDS

| MEMB. FR-TO | MAX. FACTORED FORCE (LBS) | FACTORED VERT. LOAD LC1 (PLF) FROM | TO | MAX CSI (LC) | MAX. UNBRAC LENGTH |
|---|---|---|---|---|---|
| A- B | 0 / 37 | -84.3 | -84.3 | 0.12 (1) | 10.00 |
| B- C | -1828 / 0 | -84.3 | -84.3 | 0.44 (1) | 4.52 |
| C- D | -1607 / 0 | -84.3 | -84.3 | 0.41 (1) | 4.79 |
| D- E | -1607 / 0 | -84.3 | -84.3 | 0.41 (1) | 4.79 |
| E- F | -1212 / 0 | -84.3 | -84.3 | 0.22 (1) | 5.57 |
| F- G | -1212 / 0 | -84.3 | -84.3 | 0.22 (1) | 5.57 |
| G- H | -1607 / 0 | -84.3 | -84.3 | 0.41 (1) | 4.79 |
| H- I | -1607 / 0 | -84.3 | -84.3 | 0.41 (1) | 4.79 |
| I- J | -1828 / 0 | -84.3 | -84.3 | 0.44 (1) | 4.52 |
| J- K | 0 / 37 | -84.3 | -84.3 | 0.12 (1) | 10.00 |
| R- B | -1820 / 0 | 0.0 | 0.0 | 0.19 (1) | 6.20 |
| L- J | -1820 / 0 | 0.0 | 0.0 | 0.19 (1) | 6.20 |
| R- Q | 0 / 0 | -28.0 | -28.0 | 0.20 (2) | 10.00 |
| Q- P | 0 / 1432 | -28.0 | -28.0 | 0.50 (2) | 10.00 |
| P- O | 0 / 1302 | -28.0 | -28.0 | 0.49 (2) | 10.00 |
| O- N | 0 / 1302 | -28.0 | -28.0 | 0.49 (2) | 10.00 |
| N- M | 0 / 1432 | -28.0 | -28.0 | 0.50 (2) | 10.00 |
| M- L | 0 / 0 | -28.0 | -28.0 | 0.20 (2) | 10.00 |

WEBS

| MEMB. FR-TO | MAX. FACTORED FORCE (LBS) | MAX CSI (LC) |
|---|---|---|
| Q- C | -163 / 124 | 0.11 (1) |
| C- P | -336 / 0 | 0.16 (1) |
| P- E | 0 / 683 | 0.11 (1) |
| P- F | -241 / 0 | 0.19 (1) |
| F- N | -241 / 0 | 0.19 (1) |
| N- G | 0 / 683 | 0.11 (1) |
| N- I | -336 / 0 | 0.16 (1) |
| I- Q | -163 / 124 | 0.11 (1) |
| B- Q | 0 / 1468 | 0.33 (1) |
| M- J | 0 / 1468 | 0.33 (1) |

**DESIGN CRITERIA**

SPECIFIED LOADS:

| | | | | |
|---|---|---|---|---|
| TOP CH. | LL | = | 25.6 | PSF |
| | DL | = | 3.0 | PSF |
| BOT CH. | LL | = | 10.5 | PSF |
| | DL | = | 7.0 | PSF |
| TOTAL LOAD | | = | 46.1 | PSF |

**SPACING = 24.0 IN. C/C**

LOADING IN FLAT SECTION BASED ON A SLOPE OF 6.00/12

THIS TRUSS IS DESIGNED FOR RESIDENTIAL OR SMALL BUILDING REQUIREMENTS OF PART 9, NBCC 2010

THIS DESIGN COMPLIES WITH:
- PART 9 OF OBC 2012 , BCBC 2012 , ABC 2014
- CSA 086-09
- TPIC 2011

(55 % OF 31.3 P.S.F. G.S.L. PLUS 8.4 P.S.F. RAIN LOAD) EQUALS 25.6 P.S.F. SPECIFIED ROOF LIVE LOAD

ALLOWABLE DEFL.(LL)= L/360 (1.05")
CALCULATED VERT. DEFL.(LL) = L/ 999 (0.17")
ALLOWABLE DEFL.(TL)= L/360 (1.05")
CALCULATED VERT. DEFL.(TL) = L/ 999 (0.28")

CSI: TC=0.44 (I-J:1) , BC=0.50 (M-N:2) , WB=0.33 (B-Q:1) , SSI=0.18 (I-J:1)

DOL LUMBER=1.00 NAIL=1.00 LS BEND=1.10 COMP=1.10 SHEAR=1.10 TENS= 1.10

COMPANION LIVE LOAD FACTOR = 0.50

TRUSS PLATE MANUFACTURER IS NOT RESPONSIBLE FOR QUALITY CONTROL IN THE TRUSS MANUFACTURING PLANT .

NAIL VALUES

| PLATE | GRIP(DRY) (PSI) MAX | MIN | SHEAR (PLI) MAX | MIN | SECTION (PLI) MAX | MIN |
|---|---|---|---|---|---|---|
| MT20 | 618 | 354 | 1687 | 822 | 2284 | 1656 |

PLATE PLACEMENT TOL. = 0.250 inches

PLATE ROTATION TOL. = 5.0 Deg.

JSI GRIP= 0.88 (J) (INPUT = 0.90 )
JSI METAL= 0.70 (O) (INPUT = 1.00 )

LICENSED PROFESSIONAL ENGINEER
S. KATSOULAKOS
PROVINCE OF ONTARIO

DWG NO. TAM 42064-17
STRUCTURAL
COMPONENT ONLY

| JOB NAME | TRUSS NAME | QUANTITY | PLY | JOB DESC. 43954 | DRWG NO. |
|---|---|---|---|---|---|
| 282689 | T9 | 1 | 3 | TRUSS DESC. | |

Tamarack Roof Truss, Burlington

Version 8.030 S Oct 5 2016 MiTek Industries, Inc. Thu Aug 24 16:30:53 2017 Page 1

ID:_P_zlJoeh6kqSyqNlNRH3eykdwA-0hkMDk4HxxBiKwBO5O5hkwx0ttWe0x3u2FAbalykbS0

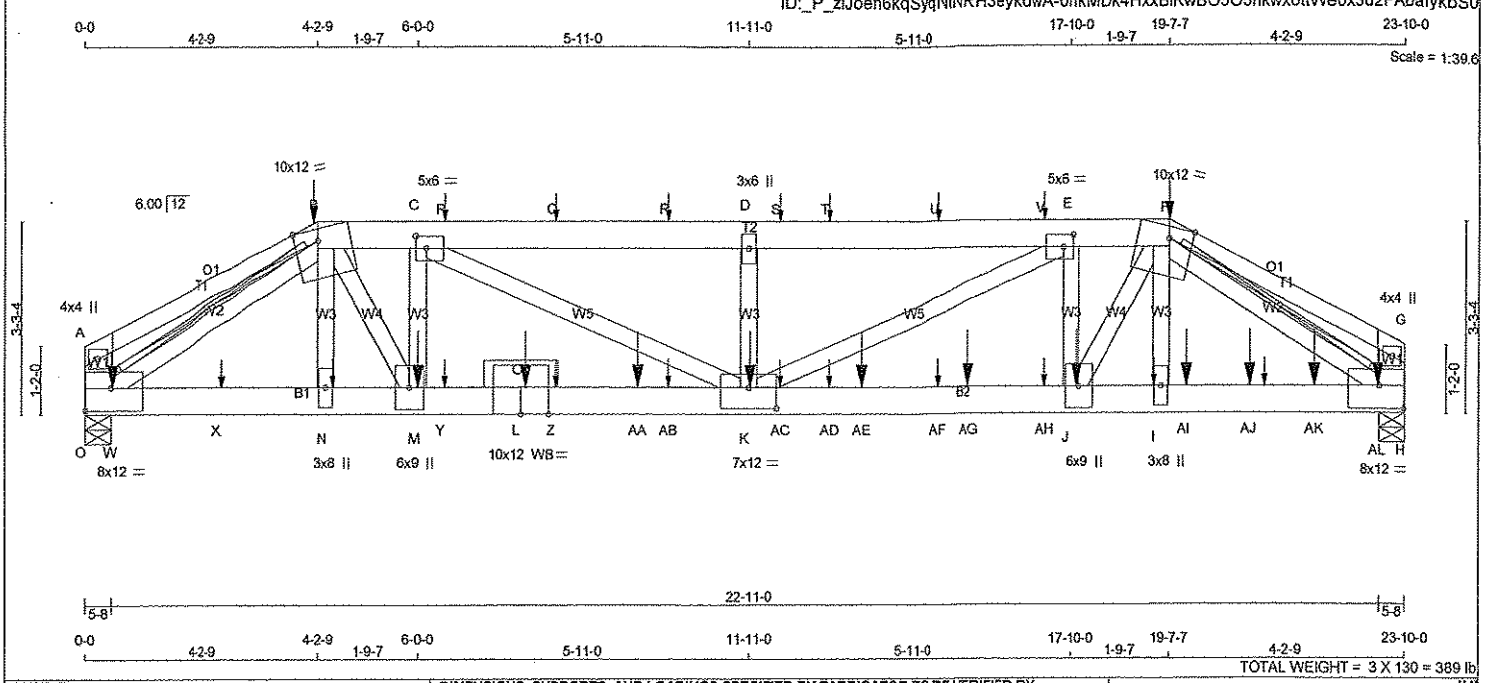


TOTAL WEIGHT = 3 X 130 = 389 lb

[M]

**LUMBER**

N. L. G. A. RULES

| CHORDS | SIZE | | LUMBER | DESCR. |
|---|---|---|---|---|
| A - B | 2x4 | DRY | No.2 | SPF |
| B - F | 2x6 | DRY | No.2 | SPF |
| F - G | 2x4 | DRY | No.2 | SPF |
| O - A | 2x6 | DRY | No.2 | SPF |
| H - G | 2x6 | DRY | No.2 | SPF |
| O - L | 2x6 | DRY | 1650F 1.5E | SPF |
| L - H | 2x6 | DRY | 1650F 1.5E | SPF |
| ALL WEBS EXCEPT | 2x4 | DRY | No.2 | SPF |

DRY: SEASONED LUMBER.

DESIGN CONSISTS OF 3 TRUSSES BUILT SEPARATELY THEN FASTENED TOGETHER AS FOLLOWS:

| CHORDS | #ROWS | SURFACE SPACING (IN) | LOAD(PLF) |
|---|---|---|---|
| TOP CHORDS : (0.122"X3") SPIRAL NAILS | | | |
| A- B | 1 | 12 | SIDE(91.5) |
| F- G | 1 | 12 | SIDE(91.5) |
| B- F | 2 | 12 | SIDE(91.5) |
| O- A | 2 | 12 | TOP |
| H- G | 2 | 12 | TOP |
| BOTTOM CHORDS : (0.122"X3") SPIRAL NAILS | | | |
| O- L | 2 | 6 | SIDE(640.9) |
| L- H | 2 | 6 | SIDE(1456.7) |
| WEBS : (0.122"X3") SPIRAL NAILS | | | |
| 2x4 | 1 | 6 | |
| C- M | 2 | 6 | SIDE(217.2) |
| D- K | 1 | 4 | |
| E- J | 2 | 6 | |

STAGGER NAILS BY HALF THE SURFACE SPACING IN ADJACENT PLIES.

GIRDER NAILING ASSUMES NAILED HANGERS ARE FASTENED WITH MIN. 3-0 INCH NAILS.

TOP - COMPONENTS ARE LOADED FROM THE TOP AND MUST BE PLACED ON TOP EDGE OF ALL PLIES FOR THE LOAD TO BE TRANSFERRED TO EACH PLY.

SIDE - PLF SHOWN IS THE EQUIVALENT UDL APPLIED TO ONE SIDE THAT THE CORRESPONDING NAILING PATTERN SHALL BE CAPABLE OF TRANSFERING. REMAINING PLF MUST BE APPLIED ON THE OPPOSITE SIDE OR ON THE TOP.

**PLATES (table is in inches)**

| JT | TYPE | PLATES | W | LEN | Y | X |
|---|---|---|---|---|---|---|
| A | TMV+p | MT20 | 4.0 | 4.0 | | |
| B | TTWWW-m | MT20 | 10.0 | 12.0 | Edge | 5.00 |
| C | TMWW-t | MT20 | 5.0 | 6.0 | 2.50 | 2.25 |
| D | TMW+w | MT20 | 3.0 | 6.0 | | |
| E | TMWW-t | MT20 | 5.0 | 6.0 | 2.50 | 2.25 |
| F | TTWWW-m | MT20 | 10.0 | 12.0 | Edge | 5.00 |
| G | TMV+p | MT20 | 4.0 | 4.0 | | |
| H | BMVW1-t | MT20 | 8.0 | 12.0 | 4.75 | 5.25 |
| I | BMW+w | MT20 | 3.0 | 8.0 | | |
| J | BMWW+t | MT20 | 6.0 | 9.0 | | |
| K | BMWWW-t | MT20 | 7.0 | 12.0 | 4.25 | 6.00 |
| L | BS-t | MT20 | 10.0 | 12.0 | | |
| M | BMWW+t | MT20 | 6.0 | 9.0 | | |
| N | BMW+w | MT20 | 3.0 | 8.0 | | |
| O | BMVW1-t | MT20 | 8.0 | 12.0 | 4.75 | 5.25 |

**DIMENSIONS, SUPPORTS AND LOADINGS SPECIFIED BY FABRICATOR TO BE VERIFIED BY BUILDING DESIGNER**

**BEARINGS**

| JT | FACTORED GROSS REACTION VERT | HORZ | MAXIMUM FACTORED GROSS REACTION DOWN | HORZ | UPLIFT | INPUT BRG IN-SX | REQRD BRG IN-SX |
|---|---|---|---|---|---|---|---|
| O | 9415 | 0 | 9415 | 0 | 0 | 5-8 | 5-8 |
| H | 13104 | 0 | 13104 | 0 | 0 | 5-8 | 5-8 |

**UNFACTORED REACTIONS**

| JT | 1ST LCASE COMBINED | MAX./MIN. COMPONENT REACTIONS SNOW | LIVE | PERM.LIVE | WIND | DEAD | SOIL |
|---|---|---|---|---|---|---|---|
| O | 7629 | 4398 / 0 | 1628 / 0 | 0 / 0 | 0 / 0 | 1604 / 0 | 0 / 0 |
| H | 10588 | 6155 / 0 | 2225 / 0 | 0 / 0 | 0 / 0 | 2207 / 0 | 0 / 0 |

BEARING MATERIAL TO BE SPF NO.2 OR BETTER AT JOINT(S) O, H

**BRACING**

TOP CHORD TO BE SHEATHED OR MAX. PURLIN SPACING = 2.56 FT.
MAX. UNBRACED BOTTOM CHORD LENGTH = 10.00 FT. OR RIGID CEILING DIRECTLY APPLIED.

ALL PITCH BREAKS AND PERIMETER CORNER JOINTS MUST BE LATERALLY RESTRAINED.

2x6 DRY SPF No.2 T-BRACE AT B-O, F-H

FASTEN T AND I-BRACES TO NARROW EDGE OF WEB WITH ONE ROW PER PLY OF 3" COMMON WIRE NAILS @ 6" O.C. WITH 3" MINIMUM END DISTANCE. BRACE MUST COVER 90% OF WEB LENGTH.

END VERTICAL(S) MUST BE SHEATHED OR HAVE BRACES AS INDICATED IN THE MAX. UNBRACED LENGTH COLUMN OF THE TABLE BELOW

**LOADING**

TOTAL LOAD CASES: (4)

CHORDS

| MEMB. FR-TO | MAX. FACTORED FORCE (LBS) | FACTORED VERT. LOAD (PLF) FROM | TO | LC1 | MAX CSI (LC) | MAX. UNBRAC LENGTH |
|---|---|---|---|---|---|---|
| A- B | 0 / 0 | -84.3 | -84.3 | 0.08 (1) | 10.00 | |
| B- C | -19925 / 0 | -84.3 | -84.3 | 0.22 (1) | 3.32 | |
| C- P | -27136 / 0 | -84.3 | -84.3 | 0.60 (1) | 2.56 | |
| P- Q | -27136 / 0 | -84.3 | -84.3 | 0.60 (1) | 2.56 | |
| Q- R | -27136 / 0 | -84.3 | -84.3 | 0.60 (1) | 2.56 | |
| R- D | -27136 / 0 | -84.3 | -84.3 | 0.60 (1) | 2.56 | |
| D- S | -27136 / 0 | -84.3 | -84.3 | 0.60 (1) | 2.56 | |
| S- T | -27136 / 0 | -84.3 | -84.3 | 0.60 (1) | 2.56 | |
| T- U | -27136 / 0 | -84.3 | -84.3 | 0.60 (1) | 2.56 | |
| U- V | -27136 / 0 | -84.3 | -84.3 | 0.60 (1) | 2.56 | |
| V- E | -27136 / 0 | -84.3 | -84.3 | 0.60 (1) | 2.56 | |
| E- F | -21336 / 0 | -84.3 | -84.3 | 0.25 (1) | 3.19 | |
| F- G | 0 / 0 | -84.3 | -84.3 | 0.08 (1) | 10.00 | |
| O- A | -177 / 0 | 0.0 | 0.0 | 0.00 (1) | 7.81 | |
| H- G | -177 / 0 | 0.0 | 0.0 | 0.00 (1) | 7.81 | |
| O- W | 0 / 13419 | -28.0 | -28.0 | 0.40 (1) | 10.00 | |
| W- X | 0 / 13419 | -28.0 | -28.0 | 0.40 (1) | 10.00 | |
| X- N | 0 / 13419 | -28.0 | -28.0 | 0.40 (1) | 10.00 | |
| N- M | 0 / 13352 | -28.0 | -28.0 | 0.59 (1) | 10.00 | |
| M- Y | 0 / 19922 | -28.0 | -28.0 | 0.81 (1) | 10.00 | |
| Y- L | 0 / 19922 | -28.0 | -28.0 | 0.81 (1) | 10.00 | |
| L- Z | 0 / 19922 | -28.0 | -28.0 | 0.81 (1) | 10.00 | |
| Z-AA | 0 / 19922 | -28.0 | -28.0 | 0.81 (1) | 10.00 | |
| AA-AB | 0 / 19922 | -28.0 | -28.0 | 0.81 (1) | 10.00 | |
| AB- K | 0 / 19922 | -28.0 | -28.0 | 0.81 (1) | 10.00 | |
| K-AC | 0 / 21332 | -28.0 | -28.0 | 0.84 (1) | 10.00 | |
| AC-AD | 0 / 21332 | -28.0 | -28.0 | 0.84 (1) | 10.00 | |
| AD-AE | 0 / 21332 | -28.0 | -28.0 | 0.84 (1) | 10.00 | |
| AE-AF | 0 / 21332 | -28.0 | -28.0 | 0.84 (1) | 10.00 | |
| AF-AG | 0 / 21332 | -28.0 | -28.0 | 0.84 (1) | 10.00 | |

WEBS

| MEMB. FR-TO | MAX. FACTORED FORCE (LBS) | MAX CSI (LC) |
|---|---|---|
| N- B | -1311 / 0 | 0.05 (1) |
| B- M | 0 / 12353 | 0.66 (1) |
| M- C | -4142 / 0 | 0.17 (1) |
| C- K | 0 / 7988 | 0.43 (1) |
| K- D | -387 / 19 | 0.02 (1) |
| K- E | 0 / 6426 | 0.34 (1) |
| J- E | -3521 / 0 | 0.15 (1) |
| J- F | 0 / 8625 | 0.46 (1) |
| I- F | 0 / 4007 | 0.21 (1) |
| O- B | -16198 / 0 | 0.69 (1) |
| F- H | -19965 / 0 | 0.85 (1) |

LICENSED PROFESSIONAL ENGINEER
8207
S. KATSOULAKOS
PROVINCE OF ONTARIO

**DESIGN CRITERIA**

SPECIFIED LOADS:

| | | | | |
|---|---|---|---|---|
| TOP CH. | LL | = | 25.6 | PSF |
| | DL | = | 3.0 | PSF |
| BOT CH. | LL | = | 10.5 | PSF |
| | DL | = | 7.0 | PSF |
| TOTAL LOAD | | = | 46.1 | PSF |

**SPACING = 24.0 IN. C/C**

LOADING IN FLAT SECTION BASED ON A SLOPE OF 6.00/12

THIS TRUSS IS DESIGNED FOR RESIDENTIAL OR SMALL BUILDING REQUIREMENTS OF PART 9, NBCC 2010

THIS DESIGN COMPLIES WITH:
- PART 9 OF OBC 2012 , BCBC 2012 , ABC 2014
- CSA 086-09
- TPIC 2011

(55 % OF 31.3 P.S.F. G.S.L. PLUS 8.4 P.S.F. RAIN LOAD) EQUALS 25.6 P.S.F. SPECIFIED ROOF LIVE LOAD

ALLOWABLE DEFL.(LL)= L/360 (0.79")
CALCULATED VERT. DEFL.(LL) = L/ 846 (0.34")
ALLOWABLE DEFL.(TL)= L/360 (0.79")
CALCULATED VERT. DEFL.(TL) = L/ 533 (0.54")

CSI: TC=0.60 (C-D:1) , BC=0.84 (J-K:1) , WB=0.85 (F-H:1) , SSI=0.80 (H-I:1)

DOL LUMBER=1.00 NAIL=1.00 LS BEND=1.10 COMP=1.10 SHEAR=1.10 TENS= 1.10

COMPANION LIVE LOAD FACTOR = 0.50

AUTOSOLVE HEELS OFF

TRUSS PLATE MANUFACTURER IS NOT RESPONSIBLE FOR QUALITY CONTROL IN THE TRUSS MANUFACTURING PLANT .

NAIL VALUES

| PLATE | GRIP(DRY) (PSI) MAX | MIN | SHEAR (PLI) MAX | MIN | SECTION (PLI) MAX | MIN |
|---|---|---|---|---|---|---|
| MT20 | 618 | 354 | 1667 | 822 | 2284 | 1656 |

PLATE PLACEMENT TOL. = 0.250 inches

PLATE ROTATION TOL. = 5.0 Deg.

JSI GRIP= 0.90 (J) (INPUT = 0.90 )
JSI METAL= 0.99 (L) (INPUT = 1.00 )

DWG NO. TAM 42665-17
STRUCTURAL
COMPONENT ONLY

CONTINUED ON PAGE 2

| JOB NAME | TRUSS NAME | QUANTITY | PLY | JOB DESC. 43954 | DRWG NO. |
|---|---|---|---|---|---|
| 282689 | T9 | 1 | 3 | TRUSS DESC. | |

Tamarack Roof Truss, Burlington



ID: P_zlJoeh6kqSyqNlNRH3eykdwA-0hkMDk4HxxBiKwBO5O5hkwx0ttWe0x3u2FAbalykbS0

Edge - INDICATES REFERENCE CORNER OF PLATE TOUCHES EDGE OF CHORD.

WB - INDICATES BLOCKING REQUIRED

**HANGERS NOTES**

1) SPECIAL HANGER(S) OR CONNECTION(S) REQUIRED TO SUPPORT CONCENTRATED LOAD(S) 0.9 lbs FACTORED DOWN AT 4-2-9, AT 6-5-13, AT 8-5-13, AT 10-5-13, AT 12-5-13, AT 13-4-3, AT 15-4-3, AND AT 17-4-3, AND 0.9 lbs FACTORED DOWN AT 19-7-7 ON TOP CHORD, AND 7.7 lbs FACTORED DOWN AT 5-13, AT 2-5-13, AT 4-5-13, 3081.1 lbs FACTORED DOWN AT 6-0-0, AT 6-5-13, 1861.4 lbs FACTORED DOWN AT 7-11-4, AT 8-5-13, 1861.4 lbs FACTORED DOWN AT 9-11-4, AT 10-5-13, 1861.4 lbs FACTORED DOWN AT 11-11-4, AT 12-5-13, AT 13-4-3, 1861.4 lbs FACTORED DOWN AT 13-11-4, AT 15-4-3, 1861.4 lbs FACTORED DOWN AT 15-11-4, AT 17-4-3, 1861.4 lbs FACTORED DOWN AT 17-11-4, AT 19-4-3, 1861.4 lbs FACTORED DOWN AT 19-11-4, 1861.4 lbs FACTORED DOWN AT 21-1-0, AT 21-4-3, AND 1861.4 lbs FACTORED DOWN AT 22-2-12, AND 7.7 lbs FACTORED DOWN AT 23-4-3 ON BOTTOM CHORD. DESIGN FOR UNSPECIFIED CONNECTION(S) IS DELEGATED TO THE BUILDING DESIGNER.

**LOADING**

TOTAL LOAD CASES: (4)

CHORDS

| MEMB. FR-TO | MAX. FACTORED FORCE (LBS) | FACTORED VERT. LOAD LC1 (PLF) FROM | TO | MAX CSI (LC) | MAX. UNBRAC LENGTH |
|---|---|---|---|---|---|
| AG-AH | 0 / 21332 | -28.0 | -28.0 | 0.84 (1) | 10.00 |
| AH- J | 0 / 21332 | -28.0 | -28.0 | 0.84 (1) | 10.00 |
| J- I | 0 / 16745 | -28.0 | -28.0 | 0.67 (1) | 10.00 |
| I-AI | 0 / 16540 | -28.0 | -28.0 | 0.83 (1) | 10.00 |
| AI-AJ | 0 / 16540 | -28.0 | -28.0 | 0.83 (1) | 10.00 |
| AJ-AK | 0 / 16540 | -28.0 | -28.0 | 0.83 (1) | 10.00 |
| AK-AL | 0 / 16540 | -28.0 | -28.0 | 0.83 (1) | 10.00 |
| AL- H | 0 / 16540 | -28.0 | -28.0 | 0.83 (1) | 10.00 |

WEBS

| MEMB. FR-TO | MAX. FACTORED FORCE (LBS) | MAX CSI (LC) |
|---|---|---|

FACTORED CONCENTRATED LOADS (LBS)

| JT | LOC. | LC1 | MAX- | MAX+ | FACE | DIR. | TYPE |
|---|---|---|---|---|---|---|---|
| B | 4-2-9 | -1 | -1 | --- | FRONT | VERT | TOTAL |
| F | 19-7-7 | -1 | -1 | --- | FRONT | VERT | TOTAL |
| I | 19-4-3 | --- | --- | --- | FRONT | VERT | TOTAL |
| J | 17-11-4 | -1861 | -1861 | --- | BACK | VERT | TOTAL |
| K | 11-11-4 | -1861 | -1861 | --- | BACK | VERT | TOTAL |
| L | 7-11-4 | -1861 | -1861 | --- | BACK | VERT | TOTAL |
| M | 6-0-0 | -3081 | -3081 | --- | BACK | VERT | TOTAL |
| N | 4-5-13 | --- | --- | --- | FRONT | VERT | TOTAL |
| P | 6-5-13 | --- | --- | --- | FRONT | VERT | TOTAL |
| Q | 8-5-13 | --- | --- | --- | FRONT | VERT | TOTAL |
| R | 10-5-13 | --- | --- | --- | FRONT | VERT | TOTAL |
| S | 12-5-13 | --- | --- | --- | FRONT | VERT | TOTAL |
| T | 13-4-3 | --- | --- | --- | FRONT | VERT | TOTAL |
| U | 15-4-3 | --- | --- | --- | FRONT | VERT | TOTAL |
| V | 17-4-3 | --- | --- | --- | FRONT | VERT | TOTAL |
| W | 5-13 | -4 | -8 | --- | FRONT | VERT | TOTAL |
| X | 2-5-13 | --- | --- | --- | FRONT | VERT | TOTAL |
| Y | 6-5-13 | --- | --- | --- | FRONT | VERT | TOTAL |
| Z | 8-5-13 | --- | --- | --- | FRONT | VERT | TOTAL |
| AA | 9-11-4 | -1861 | -1861 | --- | BACK | VERT | TOTAL |
| AB | 10-5-13 | --- | --- | --- | FRONT | VERT | TOTAL |
| AC | 12-5-13 | --- | --- | --- | FRONT | VERT | TOTAL |
| AD | 13-4-3 | --- | --- | --- | FRONT | VERT | TOTAL |
| AE | 13-11-4 | -1861 | -1861 | --- | BACK | VERT | TOTAL |
| AF | 15-4-3 | --- | --- | --- | FRONT | VERT | TOTAL |
| AG | 15-11-4 | -1861 | -1861 | --- | BACK | VERT | TOTAL |
| AH | 17-4-3 | --- | --- | --- | FRONT | VERT | TOTAL |
| AI | 19-11-4 | -1861 | -1861 | --- | BACK | VERT | TOTAL |
| AJ | 21-1-0 | -1861 | -1861 | --- | BACK | VERT | TOTAL |
| AJ | 21-4-3 | --- | --- | --- | FRONT | VERT | TOTAL |
| AK | 22-2-12 | -1861 | -1861 | --- | BACK | VERT | TOTAL |
| AL | 23-4-3 | -4 | -8 | --- | FRONT | VERT | TOTAL |

LICENSED PROFESSIONAL ENGINEER
82577
S. KATSOULAKOS
PROVINCE OF ONTARIO

DWG NO. TAM-42665-17
STRUCTURAL
COMPONENT ONLY

| JOB NAME | TRUSS NAME | QUANTITY | PLY | JOB DESC. | DRWG NO. |
|---|---|---|---|---|---|
| 282695 | T9Z | 1 | 3 | TRUSS DESC. | |

Tamarack Roof Truss, Burlington

Version 8.030 S Oct 5 2016 MiTek Industries, Inc. Thu Aug 24 17:18:02 2017 Page 1
ID:_P_zlJoeh6kqSyqNtNRH3eykdwA-hyAqz3Jpi8cIEgy5J1L6uVcTxF2VLPQlauznMpykalp

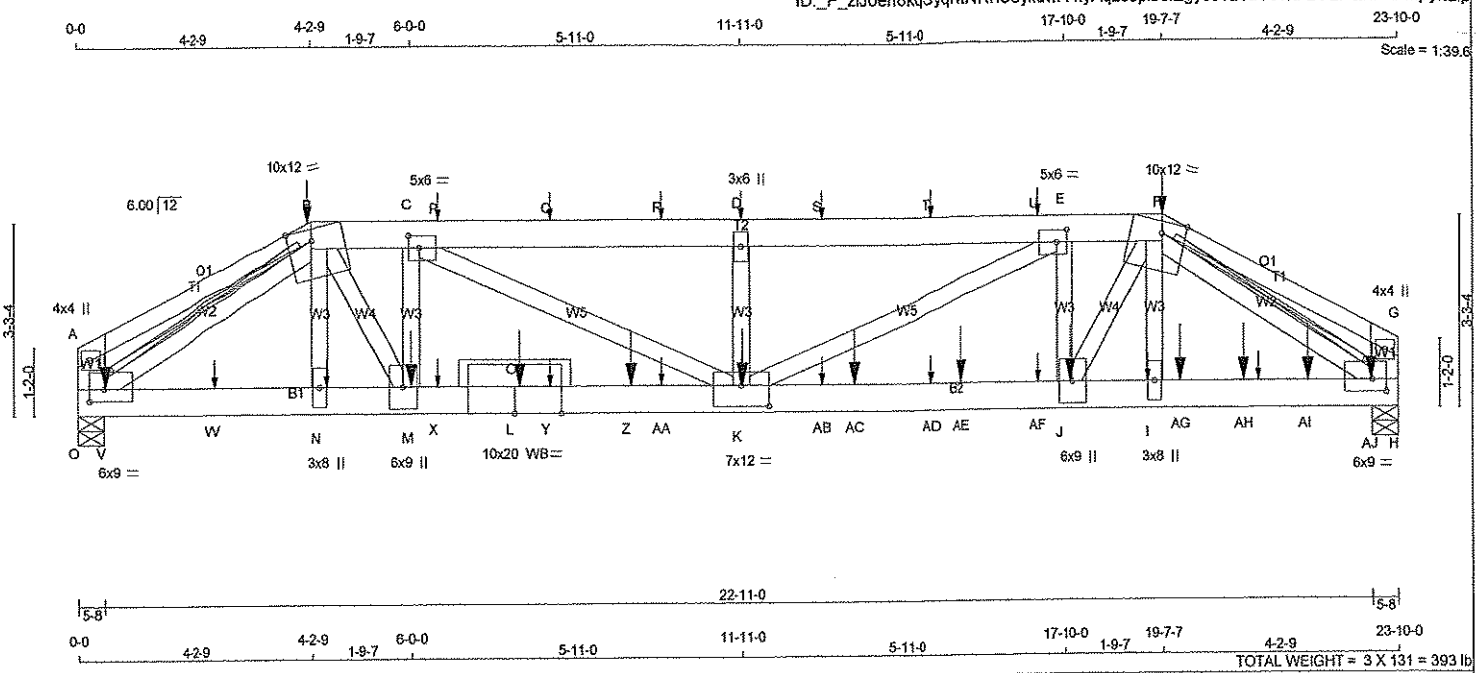


TOTAL WEIGHT = 3 X 131 = 393 lb

[M]

**LUMBER**

N. L. G. A. RULES

| CHORDS | SIZE | | LUMBER | DESCR. |
|---|---|---|---|---|
| A - B | 2x4 | DRY | No.2 | SPF |
| B - F | 2x6 | DRY | No.2 | SPF |
| F - G | 2x4 | DRY | No.2 | SPF |
| O - A | 2x6 | DRY | No.2 | SPF |
| H - G | 2x6 | DRY | No.2 | SPF |
| O - L | 2x6 | DRY | 1650F 1.5E | SPF |
| L - H | 2x6 | DRY | 1650F 1.5E | SPF |
| ALL WEBS EXCEPT | 2x4 | DRY | No.2 | SPF |

DRY: SEASONED LUMBER.

DESIGN CONSISTS OF 3 TRUSSES BUILT SEPARATELY THEN FASTENED TOGETHER AS FOLLOWS:

| CHORDS | #ROWS | SURFACE SPACING (IN) | LOAD(PLF) |
|---|---|---|---|
| TOP CHORDS : (0.122"X3") SPIRAL NAILS | | | |
| A- B | 1 | 12 | SIDE(91.5) |
| F- G | 1 | 12 | SIDE(91.5) |
| B- F | 2 | 12 | SIDE(91.5) |
| O- A | 2 | 12 | TOP |
| H- G | 2 | 12 | TOP |
| BOTTOM CHORDS : (0.122"X3") SPIRAL NAILS | | | |
| O- L | 2 | 6 | SIDE(457.7) |
| L- H | 2 | 6 | SIDE(1456.7) |
| WEBS : (0.122"X3") SPIRAL NAILS | | | |
| 2x4 | 1 | 6 | |
| D- K | 1 | 4 | |

STAGGER NAILS BY HALF THE SURFACE SPACING IN ADJACENT PLIES.

GIRDER NAILING ASSUMES NAILED HANGERS ARE FASTENED WITH MIN. 3-0 INCH NAILS.

TOP - COMPONENTS ARE LOADED FROM THE TOP AND MUST BE PLACED ON TOP EDGE OF ALL PLIES FOR THE LOAD TO BE TRANSFERRED TO EACH PLY.

SIDE - PLF SHOWN IS THE EQUIVALENT UDL APPLIED TO ONE SIDE THAT THE CORRESPONDING NAILING PATTERN SHALL BE CAPABLE OF TRANSFERING. REMAINING PLF MUST BE APPLIED ON THE OPPOSITE SIDE OR ON THE TOP.

**PLATES (table is in inches)**

| JT | TYPE | PLATES | W | LEN | Y | X |
|---|---|---|---|---|---|---|
| A | TMV+p | MT20 | 4.0 | 4.0 | | |
| B | TTWWW-m | MT20 | 10.0 | 12.0 | Edge | 5.00 |
| C | TMWW-t | MT20 | 5.0 | 6.0 | 2.50 | 2.25 |
| D | TMW+w | MT20 | 3.0 | 6.0 | | |
| E | TMWW-t | MT20 | 5.0 | 6.0 | 2.50 | 2.25 |
| F | TTWWW-m | MT20 | 10.0 | 12.0 | Edge | 5.00 |
| G | TMV+p | MT20 | 4.0 | 4.0 | | |
| H | BMVW1-t | MT20 | 6.0 | 9.0 | 2.50 | 3.00 |
| I | BMW+w | MT20 | 3.0 | 8.0 | | |
| J | BMWW+t | MT20 | 6.0 | 9.0 | | |
| K | BMWWW-t | MT20 | 7.0 | 12.0 | 4.25 | 6.00 |
| L | BS-t | MT20 | 10.0 | 20.0 | | |
| M | BMWW+t | MT20 | 6.0 | 9.0 | | |
| N | BMW+w | MT20 | 3.0 | 8.0 | | |
| O | BMVW1-t | MT20 | 6.0 | 9.0 | 2.50 | 3.00 |

Edge - INDICATES REFERENCE CORNER OF PLATE TOUCHES EDGE OF CHORD.

**DIMENSIONS, SUPPORTS AND LOADINGS SPECIFIED BY FABRICATOR TO BE VERIFIED BY BUILDING DESIGNER**

**BEARINGS**

| JT | FACTORED GROSS REACTION VERT | HORZ | MAXIMUM FACTORED GROSS REACTION DOWN | HORZ | UPLIFT | INPUT BRG IN-SX | REQR0 BRG IN-SX |
|---|---|---|---|---|---|---|---|
| O | 9412 | 0 | 9412 | 0 | 0 | 5-8 | 5-8 |
| H | 13103 | 0 | 13103 | 0 | 0 | 5-8 | 5-8 |

**UNFACTORED REACTIONS**

| JT | 1ST LCASE COMBINED | SNOW | MAX./MIN. COMPONENT REACTIONS LIVE | PERM.LIVE | WIND | DEAD | SOIL |
|---|---|---|---|---|---|---|---|
| O | 7627 | 4396 / 0 | 1628 / 0 | 0 / 0 | 0 / 0 | 1604 / 0 | 0 / 0 |
| H | 10587 | 6155 / 0 | 2225 / 0 | 0 / 0 | 0 / 0 | 2207 / 0 | 0 / 0 |

BEARING MATERIAL TO BE SPF NO.2 OR BETTER AT JOINT(S) O, H

**BRACING**

TOP CHORD TO BE SHEATHED OR MAX. PURLIN SPACING = 2.56 FT.
MAX. UNBRACED BOTTOM CHORD LENGTH = 10.00 FT. OR RIGID CEILING DIRECTLY APPLIED.

ALL PITCH BREAKS AND PERIMETER CORNER JOINTS MUST BE LATERALLY RESTRAINED.

2x6 DRY SPF No.2 T-BRACE AT B-O, F-H

FASTEN T AND I-BRACES TO NARROW EDGE OF WEB WITH ONE ROW PER PLY OF 3" COMMON WIRE NAILS @ 6" O.C. WITH 3" MINIMUM END DISTANCE. BRACE MUST COVER 90% OF WEB LENGTH.

END VERTICAL(S) MUST BE SHEATHED OR HAVE BRACES AS INDICATED IN THE MAX. UNBRACED LENGTH COLUMN OF THE TABLE BELOW

**LOADING**

TOTAL LOAD CASES: (4)

CHORDS

| MEMB. FR-TO | MAX. FACTORED FORCE (LBS) | FACTORED VERT. LOAD (PLF) FROM | TO | LC1 | MAX CSI (LC) | MAX. UNBRAC LENGTH |
|---|---|---|---|---|---|---|
| A- B | 0 / 0 | -84.3 | -84.3 | 0.08 (1) | 10.00 | |
| B- C | -19920 / 0 | -84.3 | -84.3 | 0.22 (1) | 3.32 | |
| C- P | -27132 / 0 | -84.3 | -84.3 | 0.60 (1) | 2.56 | |
| P- Q | -27132 / 0 | -84.3 | -84.3 | 0.60 (1) | 2.56 | |
| Q- R | -27132 / 0 | -84.3 | -84.3 | 0.60 (1) | 2.56 | |
| R- D | -27132 / 0 | -84.3 | -84.3 | 0.60 (1) | 2.56 | |
| D- S | -27132 / 0 | -84.3 | -84.3 | 0.60 (1) | 2.56 | |
| S- T | -27132 / 0 | -84.3 | -84.3 | 0.60 (1) | 2.56 | |
| T- U | -27132 / 0 | -84.3 | -84.3 | 0.60 (1) | 2.56 | |
| U- E | -27132 / 0 | -84.3 | -84.3 | 0.60 (1) | 2.56 | |
| E- F | -21334 / 0 | -84.3 | -84.3 | 0.25 (1) | 3.19 | |
| F- G | 0 / 0 | -84.3 | -84.3 | 0.08 (1) | 10.00 | |
| O- A | -177 / 0 | 0.0 | 0.0 | 0.00 (1) | 7.81 | |
| H- G | -177 / 0 | 0.0 | 0.0 | 0.00 (1) | 7.81 | |
| O- V | 0 / 13416 | -28.0 | -28.0 | 0.40 (1) | 10.00 | |
| V- W | 0 / 13416 | -28.0 | -28.0 | 0.40 (1) | 10.00 | |
| W- N | 0 / 13416 | -28.0 | -28.0 | 0.40 (1) | 10.00 | |
| N- M | 0 / 13349 | -28.0 | -28.0 | 0.59 (1) | 10.00 | |
| M- X | 0 / 19917 | -28.0 | -28.0 | 0.81 (1) | 10.00 | |
| X- L | 0 / 19917 | -28.0 | -28.0 | 0.81 (1) | 10.00 | |
| L- Y | 0 / 19917 | -28.0 | -28.0 | 0.81 (1) | 10.00 | |
| Y- Z | 0 / 19917 | -28.0 | -28.0 | 0.81 (1) | 10.00 | |
| Z-AA | 0 / 19917 | -28.0 | -28.0 | 0.81 (1) | 10.00 | |
| AA- K | 0 / 19917 | -28.0 | -28.0 | 0.81 (1) | 10.00 | |
| K-AB | 0 / 21330 | -28.0 | -28.0 | 0.84 (1) | 10.00 | |
| AB-AC | 0 / 21330 | -28.0 | -28.0 | 0.84 (1) | 10.00 | |
| AC-AD | 0 / 21330 | -28.0 | -28.0 | 0.84 (1) | 10.00 | |
| AD-AE | 0 / 21330 | -28.0 | -28.0 | 0.84 (1) | 10.00 | |
| AE-AF | 0 / 21330 | -28.0 | -28.0 | 0.84 (1) | 10.00 | |
| AF- J | 0 / 21330 | -28.0 | -28.0 | 0.84 (1) | 10.00 | |

WEBS

| MEMB. FR-TO | MAX. FACTORED FORCE (LBS) | MAX CSI (LC) |
|---|---|---|
| N- B | -1311 / 0 | 0.05 (1) |
| M- B | 0 / 12351 | 0.66 (1) |
| M- C | -4143 / 0 | 0.17 (1) |
| C- K | 0 / 7989 | 0.43 (1) |
| K- D | -387 / 19 | 0.02 (1) |
| K- E | 0 / 6424 | 0.34 (1) |
| J- E | -3520 / 0 | 0.15 (1) |
| J- F | 0 / 8624 | 0.46 (1) |
| I- F | 0 / 4007 | 0.21 (1) |
| O- B | -16194 / 0 | 0.69 (1) |
| F- H | -19564 / 0 | 0.85 (1) |

LICENSED PROFESSIONAL ENGINEER
52022
S. KATSOULAKOS
PROVINCE OF ONTARIO

**DESIGN CRITERIA**

SPECIFIED LOADS:

| | | | | |
|---|---|---|---|---|
| TOP CH. | LL | = | 25.6 | PSF |
| | DL | = | 3.0 | PSF |
| BOT CH. | LL | = | 10.5 | PSF |
| | DL | = | 7.0 | PSF |
| TOTAL LOAD | | = | 46.1 | PSF |

**SPACING = 24.0 IN. C/C**

LOADING IN FLAT SECTION BASED ON A SLOPE OF 6.00/12

THIS TRUSS IS DESIGNED FOR RESIDENTIAL OR SMALL BUILDING REQUIREMENTS OF PART 9, NBCC 2010

THIS DESIGN COMPLIES WITH:
- PART 9 OF OBC 2012 , BCBC 2012 , ABC 2014
- CSA 086-09
- TPIC 2011

(55 % OF 31.3 P.S.F. G.S.L. PLUS 8.4 P.S.F. RAIN LOAD) EQUALS 25.6 P.S.F. SPECIFIED ROOF LIVE LOAD

ALLOWABLE DEFL.(LL)= L/360 (0.79")
CALCULATED VERT. DEFL.(LL) = L/ 846 (0.34")
ALLOWABLE DEFL.(TL)= L/360 (0.79")
CALCULATED VERT. DEFL.(TL) = L/ 533 (0.54")

CSI: TC=0.60 (C-D:1) , BC=0.84 (J-K:1) , WB=0.85 (F-H:1) , SSI=0.80 (H-I:1)

DOL LUMBER=1.00 NAIL=1.00 LS BEND=1.10 COMP=1.10 SHEAR=1.10 TENS= 1.10

COMPANION LIVE LOAD FACTOR = 0.50

AUTOSOLVE HEELS OFF

TRUSS PLATE MANUFACTURER IS NOT RESPONSIBLE FOR QUALITY CONTROL IN THE TRUSS MANUFACTURING PLANT .

NAIL VALUES

| PLATE | GRIP(DRY) (PSI) MAX | MIN | SHEAR (PLI) MAX | MIN | SECTION (PLI) MAX | MIN |
|---|---|---|---|---|---|---|
| MT20 | 618 | 354 | 1667 | 822 | 2284 | 1656 |

PLATE PLACEMENT TOL. = 0.250 inches

PLATE ROTATION TOL. = 5.0 Deg.

JSI GRIP= 0.90 (H) (INPUT = 0.90 )
JSI METAL= 0.99 (L) (INPUT = 1.00 )

P6 1/2

DWG NO. TAM42884-17
STRUCTURAL
COMPONENT ONLY

CONTINUED ON PAGE 2

WB - INDICATES BLOCKING REQUIRED

**HANGERS NOTES**

1) SPECIAL HANGER(S) OR CONNECTION(S) REQUIRED TO SUPPORT CONCENTRATED LOAD(S) 0.9 lbs FACTORED DOWN AT 4-2-9, AT 6-5-13, AT 8-5-13, AT 10-5-13, AT 11-11-0, AT 13-4-3, AT 15-4-3, AND AT 17-4-3, AND 0.9 lbs FACTORED DOWN AT 19-7-7 ON TOP CHORD, AND 7.7 lbs FACTORED DOWN AT 5-13, AT 2-5-13, AT 4-5-13, 3077.7 lbs FACTORED DOWN AT 6-0-0, AT 6-5-13, 1861.4 lbs FACTORED DOWN AT 7-11-4, AT 8-5-13, 1861.4 lbs FACTORED DOWN AT 9-11-4, AT 10-5-13, AT 11-11-0, 1861.4 lbs FACTORED DOWN AT 11-11-4, AT 13-4-3, 1861.4 lbs FACTORED DOWN AT 13-11-4, AT 15-4-3, 1861.4 lbs FACTORED DOWN AT 15-11-4, AT 17-4-3, 1861.4 lbs FACTORED DOWN AT 17-11-4, AT 19-4-3, 1861.4 lbs FACTORED DOWN AT 19-11-4, 1861.4 lbs FACTORED DOWN AT 21-1-0, AT 21-4-3, AND 1861.4 lbs FACTORED DOWN AT 22-2-12, AND 7.7 lbs FACTORED DOWN AT 23-4-3 ON BOTTOM CHORD. DESIGN FOR UNSPECIFIED CONNECTION(S) IS DELEGATED TO THE BUILDING DESIGNER.

**LOADING**

TOTAL LOAD CASES: (4)

CHORDS

| MEMB. FR-TO | MAX. FACTORED FORCE (LBS) | FACTORED VERT. LOAD LC1 (PLF) FROM | TO | MAX CSI (LC) | MAX. UNBRAC LENGTH |
|---|---|---|---|---|---|
| J- I | 0 / 16744 | -28.0 | -28.0 | 0.67 (1) | 10.00 |
| I-AG | 0 / 16539 | -28.0 | -28.0 | 0.83 (1) | 10.00 |
| AG-AH | 0 / 16539 | -28.0 | -28.0 | 0.83 (1) | 10.00 |
| AH-AI | 0 / 16539 | -28.0 | -28.0 | 0.83 (1) | 10.00 |
| AI-AJ | 0 / 16539 | -28.0 | -28.0 | 0.83 (1) | 10.00 |
| AJ- H | 0 / 16539 | -28.0 | -28.0 | 0.83 (1) | 10.00 |

WEBS

| MEMB. FR-TO | MAX. FACTORED FORCE (LBS) | MAX CSI (LC) |
|---|---|---|

FACTORED CONCENTRATED LOADS (LBS)

| JT | LOC. | LC1 | MAX- | MAX+ | FACE | DIR. | TYPE |
|---|---|---|---|---|---|---|---|
| B | 4-2-9 | -1 | -1 | --- | FRONT | VERT | TOTAL |
| D | 11-11-0 | --- | --- | --- | FRONT | VERT | TOTAL |
| F | 19-7-7 | -1 | -1 | --- | FRONT | VERT | TOTAL |
| I | 19-4-3 | --- | --- | --- | FRONT | VERT | TOTAL |
| J | 17-11-4 | -1861 | -1861 | --- | BACK | VERT | TOTAL |
| K | 11-11-0 | --- | --- | --- | FRONT | VERT | TOTAL |
| K | 11-11-4 | -1861 | -1861 | --- | BACK | VERT | TOTAL |
| L | 7-11-4 | -1861 | -1861 | --- | BACK | VERT | TOTAL |
| M | 6-0-0 | -3078 | -3078 | --- | TOP | VERT | TOTAL |
| N | 4-5-13 | --- | --- | --- | FRONT | VERT | TOTAL |
| P | 6-5-13 | --- | --- | --- | FRONT | VERT | TOTAL |
| Q | 8-5-13 | --- | --- | --- | FRONT | VERT | TOTAL |
| R | 10-5-13 | --- | --- | --- | FRONT | VERT | TOTAL |
| S | 13-4-3 | --- | --- | --- | FRONT | VERT | TOTAL |
| T | 15-4-3 | --- | --- | --- | FRONT | VERT | TOTAL |
| U | 17-4-3 | --- | --- | --- | FRONT | VERT | TOTAL |
| V | 5-13 | -4 | -8 | --- | FRONT | VERT | TOTAL |
| W | 2-5-13 | --- | --- | --- | FRONT | VERT | TOTAL |
| X | 6-5-13 | --- | --- | --- | FRONT | VERT | TOTAL |
| Y | 8-5-13 | --- | --- | --- | FRONT | VERT | TOTAL |
| Z | 9-11-4 | -1861 | -1861 | --- | BACK | VERT | TOTAL |
| AA | 10-5-13 | --- | --- | --- | FRONT | VERT | TOTAL |
| AB | 13-4-3 | --- | --- | --- | FRONT | VERT | TOTAL |
| AC | 13-11-4 | -1861 | -1861 | --- | BACK | VERT | TOTAL |
| AD | 15-4-3 | --- | --- | --- | FRONT | VERT | TOTAL |
| AE | 15-11-4 | -1861 | -1861 | --- | BACK | VERT | TOTAL |
| AF | 17-4-3 | --- | --- | --- | FRONT | VERT | TOTAL |
| AG | 19-11-4 | -1861 | -1861 | --- | BACK | VERT | TOTAL |
| AH | 21-1-0 | -1861 | -1861 | --- | BACK | VERT | TOTAL |
| AH | 21-4-3 | --- | --- | --- | FRONT | VERT | TOTAL |
| AI | 22-2-12 | -1861 | -1861 | --- | BACK | VERT | TOTAL |
| AJ | 23-4-3 | -4 | -8 | --- | FRONT | VERT | TOTAL |

LICENSED PROFESSIONAL ENGINEER
S. KATSOULAKOS
PROVINCE OF ONTARIO

DWG NO. TAM 42864-17
STRUCTURAL
COMPONENT ONLY

| JOB NAME | TRUSS NAME | QUANTITY | PLY | JOB DESC. 43954 | DRWG NO. |
|---|---|---|---|---|---|
| 282689 | T10 | 1 | 1 | TRUSS DESC. | - |

Tamarack Roof Truss, Burlington

Version 8.030 S Oct 5 2016 MiTek Industries, Inc. Thu Aug 24 16:30:54 2017 Page 1

ID:_P_zlJoeh6kqSyqNtNRH3eykdwA-UuIkQ35vIFJZy4mae5cwH8UGnGwfIYA1Hvv86kykbS?

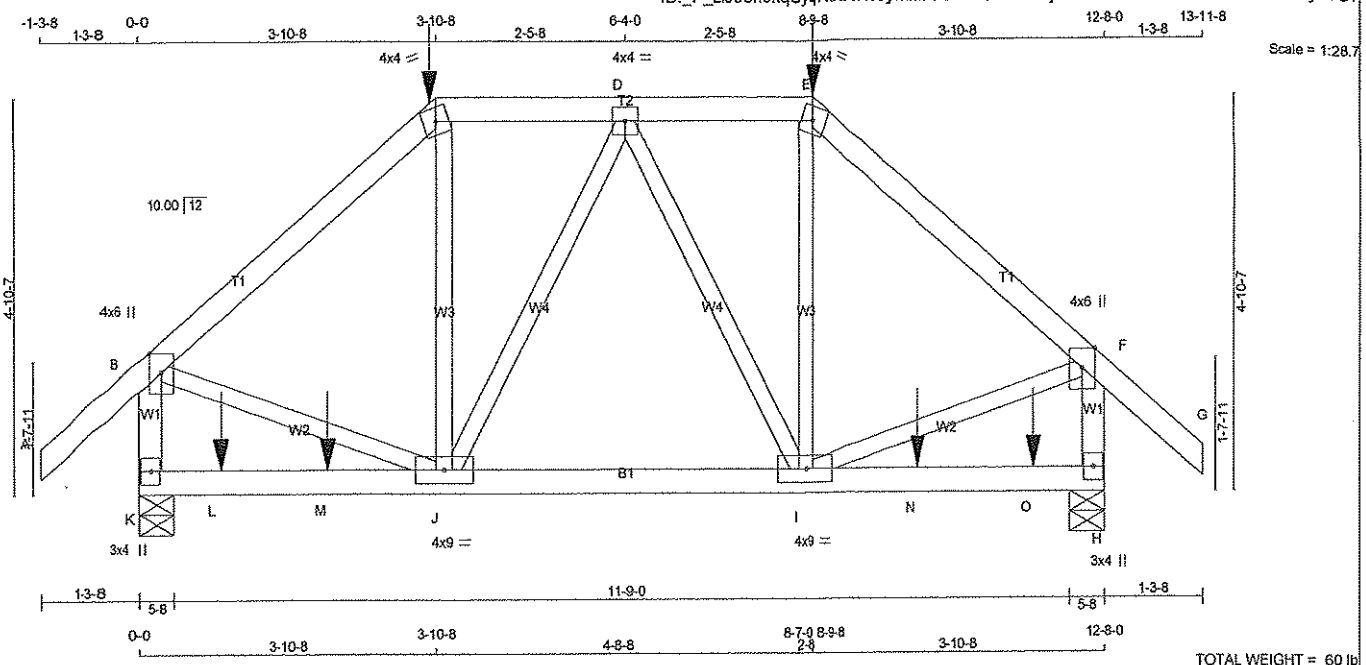


TOTAL WEIGHT = 60 lb

[M]

**LUMBER**

N. L. G. A. RULES

| CHORDS | SIZE | | LUMBER | DESCR. |
|---|---|---|---|---|
| A - C | 2x4 | DRY | No.2 | SPF |
| C - E | 2x4 | DRY | No.2 | SPF |
| E - G | 2x4 | DRY | No.2 | SPF |
| K - B | 2x4 | DRY | No.2 | SPF |
| H - F | 2x4 | DRY | No.2 | SPF |
| K - H | 2x4 | DRY | No.2 | SPF |
| ALL WEBS EXCEPT | 2x3 | DRY | No.2 | SPF |

DRY: SEASONED LUMBER.

**PLATES (table is in inches)**

| JT | TYPE | PLATES | W | LEN | Y | X |
|---|---|---|---|---|---|---|
| B | TMWW+p | MT20 | 4.0 | 6.0 | Edge | |
| C | TTW-m | MT20 | 4.0 | 4.0 | | |
| D | TMWW-t | MT20 | 4.0 | 4.0 | | |
| E | TTW-m | MT20 | 4.0 | 4.0 | | |
| F | TMWW+p | MT20 | 4.0 | 6.0 | Edge | |
| H | BMV1+p | MT20 | 3.0 | 4.0 | | |
| I | BMWWW-t | MT20 | 4.0 | 9.0 | | |
| J | BMWWW-t | MT20 | 4.0 | 9.0 | | |
| K | BMV1+p | MT20 | 3.0 | 4.0 | | |

Edge - INDICATES REFERENCE CORNER OF PLATE TOUCHES EDGE OF CHORD.

**HANGERS NOTES**

1) SPECIAL HANGER(S) OR CONNECTION(S) REQUIRED TO SUPPORT CONCENTRATED LOAD(S) 138.5 lbs FACTORED DOWN AT 3-10-8, AND 138.5 lbs FACTORED DOWN AT 8-9-8 ON TOP CHORD, AND 34.1 lbs FACTORED DOWN AT 1-0-12, 481.7 lbs FACTORED DOWN AT 2-5-8, AND 481.7 lbs FACTORED DOWN AT 10-2-8, AND 35.7 lbs FACTORED DOWN AT 11-8-12 ON BOTTOM CHORD. DESIGN FOR UNSPECIFIED CONNECTION(S) IS DELEGATED TO THE BUILDING DESIGNER.

LICENSED PROFESSIONAL ENGINEER
S. KATSOULAKOS
PROVINCE OF ONTARIO

DWG NO. TAM 42866 17
STRUCTURAL
COMPONENT ONLY

**DIMENSIONS, SUPPORTS AND LOADINGS SPECIFIED BY FABRICATOR TO BE VERIFIED BY BUILDING DESIGNER**

**BEARINGS**

| JT | FACTORED GROSS REACTION VERT | HORZ | MAXIMUM FACTORED GROSS REACTION DOWN | HORZ | UPLIFT | INPUT BRG IN-SX | REQRD BRG IN-SX |
|---|---|---|---|---|---|---|---|
| K | 1467 | 0 | 1467 | 0 | 0 | 5-8 | 5-8 |
| H | 1468 | 0 | 1468 | 0 | 0 | 5-8 | 5-8 |

**UNFACTORED REACTIONS**

| JT | 1ST LCASE COMBINED | MAX./MIN. COMPONENT REACTIONS SNOW | LIVE | PERM.LIVE | WIND | DEAD | SOIL |
|---|---|---|---|---|---|---|---|
| K | 1165 | 711 / 0 | 222 / 0 | 0 / 0 | 0 / 0 | 231 / 0 | 0 / 0 |
| H | 1166 | 711 / 0 | 223 / 0 | 0 / 0 | 0 / 0 | 232 / 0 | 0 / 0 |

BEARING MATERIAL TO BE SPF NO.2 OR BETTER AT JOINT(S) K, H

**BRACING**

TOP CHORD TO BE SHEATHED OR MAX. PURLIN SPACING = 5.68 FT.
MAX. UNBRACED BOTTOM CHORD LENGTH = 10.00 FT. OR RIGID CEILING DIRECTLY APPLIED.

ALL PITCH BREAKS AND PERIMETER CORNER JOINTS MUST BE LATERALLY RESTRAINED.

**LOADING**

TOTAL LOAD CASES: (4)

CHORDS

| MEMB. FR-TO | MAX. FACTORED FORCE (LBS) | FACTORED VERT. LOAD LC1 (PLF) FROM | TO | MAX CSI (LC) | MAX. UNBRAC LENGTH |
|---|---|---|---|---|---|
| A- B | 0 / 37 | -84.3 | -84.3 | 0.13 (1) | 10.00 |
| B- C | -1094 / 0 | -84.3 | -84.3 | 0.27 (1) | 5.68 |
| C- D | -845 / 0 | -84.3 | -84.3 | 0.08 (1) | 6.25 |
| D- E | -845 / 0 | -84.3 | -84.3 | 0.08 (1) | 6.25 |
| E- F | -1094 / 0 | -84.3 | -84.3 | 0.27 (1) | 5.68 |
| F- G | 0 / 37 | -84.3 | -84.3 | 0.13 (1) | 10.00 |
| K- B | -1258 / 0 | 0.0 | 0.0 | 0.15 (1) | 7.13 |
| H- F | -1258 / 0 | 0.0 | 0.0 | 0.15 (1) | 7.14 |
| K- L | 0 / 0 | -28.0 | -28.0 | 0.60 (1) | 10.00 |
| L- M | 0 / 0 | -28.0 | -28.0 | 0.60 (1) | 10.00 |
| M- J | 0 / 0 | -28.0 | -28.0 | 0.60 (1) | 10.00 |
| J- I | 0 / 905 | -28.0 | -28.0 | 0.43 (1) | 10.00 |
| I- N | 0 / 0 | -28.0 | -28.0 | 0.60 (1) | 10.00 |
| N- O | 0 / 0 | -28.0 | -28.0 | 0.60 (1) | 10.00 |
| O- H | 0 / 0 | -28.0 | -28.0 | 0.60 (1) | 10.00 |

WEBS

| MEMB. FR-TO | MAX. FACTORED FORCE (LBS) | MAX CSI (LC) |
|---|---|---|
| J- C | 0 / 321 | 0.08 (2) |
| I- E | 0 / 321 | 0.08 (2) |
| B- J | 0 / 882 | 0.22 (1) |
| I- F | 0 / 882 | 0.22 (1) |
| J- D | -130 / 0 | 0.06 (1) |
| D- I | -130 / 0 | 0.06 (1) |

FACTORED CONCENTRATED LOADS (LBS)

| JT | LOC. | LC1 | MAX- | MAX+ | FACE | DIR. | TYPE |
|---|---|---|---|---|---|---|---|
| C | 3-10-8 | -13 | -14 | --- | FRONT | VERT | DEAD |
| C | 3-10-8 | -126 | -126 | --- | FRONT | VERT | SNOW |
| E | 8-9-8 | -13 | -14 | --- | FRONT | VERT | DEAD |
| E | 8-9-8 | -126 | -126 | --- | FRONT | VERT | SNOW |
| L | 1-0-12 | -20 | -34 | --- | BACK | VERT | TOTAL |
| M | 2-5-8 | -482 | -482 | --- | BACK | VERT | TOTAL |
| N | 10-2-8 | -482 | -482 | --- | BACK | VERT | TOTAL |
| O | 11-8-12 | -20 | -36 | --- | BACK | VERT | TOTAL |

**DESIGN CRITERIA**

*** SPECIAL LOADS ANALYSIS ***
GEOMETRY AND/OR BASIC LOADS CHANGED BY USER.
LOADS WERE DERIVED FROM USER INPUT
NO FURTHER MODIFICATIONS WERE MADE

SPECIFIED LOADS:

| | | | | |
|---|---|---|---|---|
| TOP CH. | LL | = | 25.6 | PSF |
| | DL | = | 3.0 | PSF |
| BOT CH. | LL | = | 10.5 | PSF |
| | DL | = | 7.0 | PSF |
| TOTAL LOAD | | = | 46.1 | PSF |

**SPACING = 24.0 IN. C/C**

LOADING IN FLAT SECTION BASED ON A SLOPE OF 6.00/12

*** NON STANDARD GIRDER ***
ADDT'L USER-DEFINED LOADS APPLIED TO ALL LOAD CASES.

THIS TRUSS IS DESIGNED FOR RESIDENTIAL OR SMALL BUILDING REQUIREMENTS OF PART 9, NBCC 2010

THIS DESIGN COMPLIES WITH:
- PART 9 OF OBC 2012 , BCBC 2012 , ABC 2014
- CSA 086-09
- TPIC 2011

(55 % OF 31.3 P.S.F. G.S.L. PLUS 8.4 P.S.F. RAIN LOAD) EQUALS 25.6 P.S.F. SPECIFIED ROOF LIVE LOAD

ALLOWABLE DEFL.(LL)= L/360 (0.42")
CALCULATED VERT. DEFL.(LL) = L/ 999 (0.07")
ALLOWABLE DEFL.(TL)= L/360 (0.42")
CALCULATED VERT. DEFL.(TL) = L/ 999 (0.12")

CSI: TC=0.27 (B-C:1) , BC=0.60 (J-K:1) , WB=0.22 (B-J:1) , SSI=0.35 (J-K:1)

DOL LUMBER=1.00 NAIL=1.00 LS BEND=1.00 COMP=1.00 SHEAR=1.00 TENS= 1.00

COMPANION LIVE LOAD FACTOR = 0.50

TRUSS PLATE MANUFACTURER IS NOT RESPONSIBLE FOR QUALITY CONTROL IN THE TRUSS MANUFACTURING PLANT .

NAIL VALUES

| PLATE | GRIP(DRY) (PSI) MAX | MIN | SHEAR (PLI) MAX | MIN | SECTION (PLI) MAX | MIN |
|---|---|---|---|---|---|---|
| MT20 | 618 | 354 | 1667 | 822 | 2284 | 1656 |

PLATE PLACEMENT TOL. = 0.250 inches

PLATE ROTATION TOL. = 5.0 Deg.

JSI GRIP= 0.85 (B) (INPUT = 0.90 )
JSI METAL= 0.27 (B) (INPUT = 1.00 )

| JOB NAME | TRUSS NAME | QUANTITY | PLY | JOB DESC. | DRWG NO. |
|---|---|---|---|---|---|
| 282690 | T10Z | 1 | 1 | TRUSS DESC. | |

Tamarack Roof Truss, Burlington

Version 8.030 S Oct 5 2016 MiTek Industries, Inc. Thu Aug 24 16:34:10 2017 Page 1

ID:_P_zlJoeh6kqSyqNtNRH3eykdwA-Ib8qZ5SsYT?ITClF7F7uDTbm7HsJgAzuLPOWzNykbOx

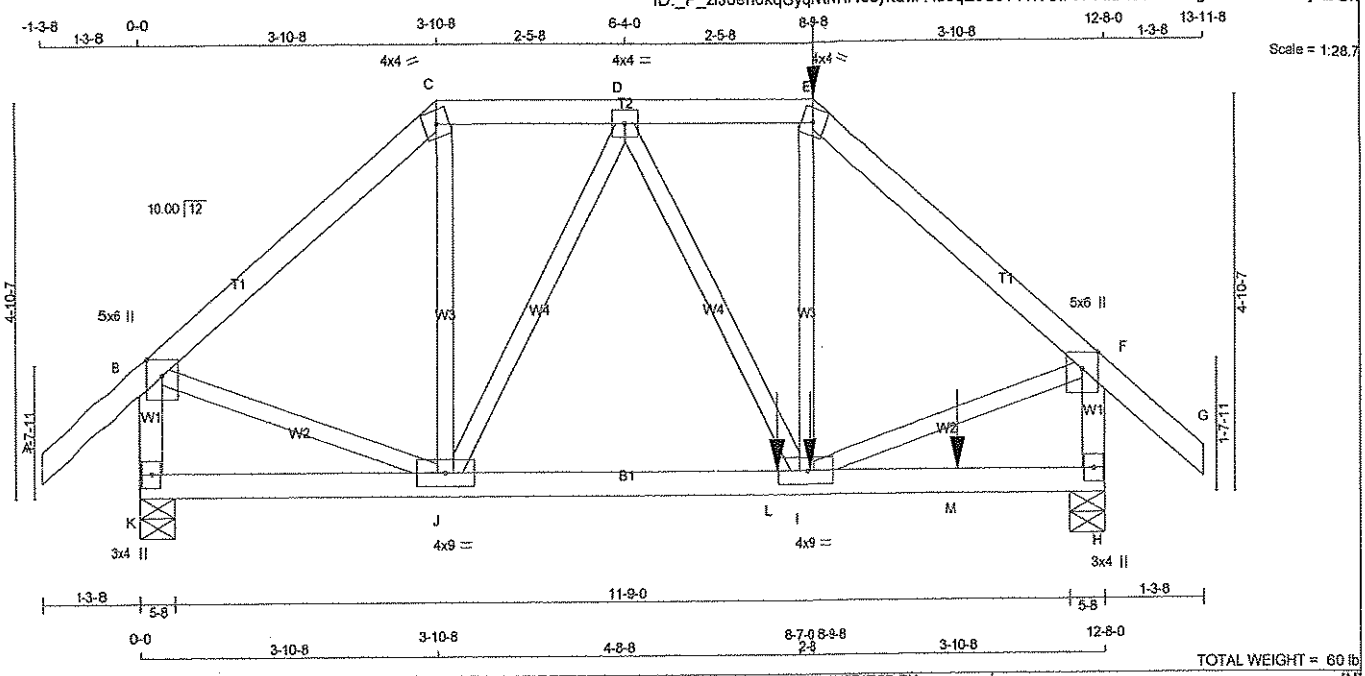


TOTAL WEIGHT = 60 lb

[M]

**LUMBER**

N. L. G. A. RULES

| CHORDS | SIZE | | LUMBER | DESCR. |
|---|---|---|---|---|
| A - C | 2x4 | DRY | No.2 | SPF |
| C - E | 2x4 | DRY | No.2 | SPF |
| E - G | 2x4 | DRY | No.2 | SPF |
| K - B | 2x4 | DRY | No.2 | SPF |
| H - F | 2x4 | DRY | No.2 | SPF |
| K - H | 2x4 | DRY | No.2 | SPF |
| ALL WEBS EXCEPT | 2x3 | DRY | No.2 | SPF |

DRY: SEASONED LUMBER.

**PLATES (table is in inches)**

| JT | TYPE | PLATES | W | LEN | Y | X |
|---|---|---|---|---|---|---|
| B | TMWW+p | MT20 | 5.0 | 6.0 | Edge | |
| C | TTW-m | MT20 | 4.0 | 4.0 | | |
| D | TMWW-t | MT20 | 4.0 | 4.0 | | |
| E | TTW-m | MT20 | 4.0 | 4.0 | | |
| F | TMWW+p | MT20 | 5.0 | 6.0 | Edge | |
| H | BMV1+p | MT20 | 3.0 | 4.0 | | |
| I | BMWWW-t | MT20 | 4.0 | 9.0 | | |
| J | BMWWW-t | MT20 | 4.0 | 9.0 | | |
| K | BMV1+p | MT20 | 3.0 | 4.0 | | |

Edge - INDICATES REFERENCE CORNER OF PLATE TOUCHES EDGE OF CHORD.

**HANGERS NOTES**

1) SPECIAL HANGER(S) OR CONNECTION(S) REQUIRED TO SUPPORT CONCENTRATED LOAD(S) 225.2 lbs FACTORED DOWN AT 8-9-8 ON TOP CHORD, AND 725.4 lbs FACTORED DOWN AT 8-3-8, AND 34.1 lbs FACTORED DOWN AT 8-8-12, AND 42.0 lbs FACTORED DOWN AT 10-8-12 ON BOTTOM CHORD. DESIGN FOR UNSPECIFIED CONNECTION(S) IS DELEGATED TO THE BUILDING DESIGNER.

**DIMENSIONS, SUPPORTS AND LOADINGS SPECIFIED BY FABRICATOR TO BE VERIFIED BY BUILDING DESIGNER**

**BEARINGS**

| JT | FACTORED GROSS REACTION VERT | HORZ | MAXIMUM FACTORED GROSS REACTION DOWN | HORZ | UPLIFT | INPUT BRG IN-SX | REQRD BRG IN-SX |
|---|---|---|---|---|---|---|---|
| K | 1157 | 0 | 1157 | 0 | 0 | 5-8 | 5-8 |
| H | 1493 | 0 | 1493 | 0 | 0 | 5-8 | 5-8 |

**UNFACTORED REACTIONS**

| JT | 1ST LCASE COMBINED | MAX./MIN. COMPONENT REACTIONS SNOW | LIVE | PERM.LIVE | WIND | DEAD | SOIL |
|---|---|---|---|---|---|---|---|
| K | 914 | 585 / 0 | 169 / 0 | 0 / 0 | 0 / 0 | 180 / 0 | 0 / 0 |
| H | 1175 | 733 / 0 | 213 / 0 | 0 / 0 | 0 / 0 | 230 / 0 | 0 / 0 |

BEARING MATERIAL TO BE SPF NO.2 OR BETTER AT JOINT(S) K, H

**BRACING**

TOP CHORD TO BE SHEATHED OR MAX. PURLIN SPACING = 5.26 FT.
MAX. UNBRACED BOTTOM CHORD LENGTH = 10.00 FT. OR RIGID CEILING DIRECTLY APPLIED.

ALL PITCH BREAKS AND PERIMETER CORNER JOINTS MUST BE LATERALLY RESTRAINED.

**LOADING**

TOTAL LOAD CASES: (4)

CHORDS

| MEMB. FR-TO | MAX. FACTORED FORCE (LBS) | FACTORED VERT. LOAD (PLF) FROM | TO | LC1 | MAX CSI (LC) | MAX. UNBRAC LENGTH |
|---|---|---|---|---|---|---|
| A- B | 0 / 37 | -84.3 | -84.3 | 0.13 (1) | 10.00 | |
| B- C | -944 / 0 | -84.3 | -84.3 | 0.26 (1) | 6.01 | |
| C- D | -731 / 0 | -84.3 | -84.3 | 0.08 (1) | 6.25 | |
| D- E | -1026 / 0 | -84.3 | -84.3 | 0.09 (1) | 6.07 | |
| E- F | -1329 / 0 | -84.3 | -84.3 | 0.28 (1) | 5.26 | |
| F- G | 0 / 37 | -84.3 | -84.3 | 0.13 (1) | 10.00 | |
| K- B | -1124 / 0 | 0.0 | 0.0 | 0.13 (1) | 7.45 | |
| H- F | -1468 / 0 | 0.0 | 0.0 | 0.17 (1) | 6.71 | |
| K- J | 0 / 0 | -28.0 | -28.0 | 0.17 (2) | 10.00 | |
| J- L | 0 / 938 | -28.0 | -28.0 | 0.42 (1) | 10.00 | |
| L- I | 0 / 938 | -28.0 | -28.0 | 0.42 (1) | 10.00 | |
| I- M | 0 / 0 | -28.0 | -28.0 | 0.26 (2) | 10.00 | |
| M- H | 0 / 0 | -28.0 | -28.0 | 0.26 (2) | 10.00 | |

WEBS

| MEMB. FR-TO | MAX. FACTORED FORCE (LBS) | MAX CSI (LC) |
|---|---|---|
| J- C | 0 / 353 | 0.09 (1) |
| I- E | 0 / 372 | 0.09 (1) |
| B- J | 0 / 761 | 0.19 (1) |
| I- F | 0 / 1071 | 0.27 (1) |
| J- D | -452 / 0 | 0.21 (1) |
| D- I | 0 / 193 | 0.05 (1) |

FACTORED CONCENTRATED LOADS (LBS)

| JT | LOC. | LC1 | MAX- | MAX+ | FACE | DIR. | TYPE |
|---|---|---|---|---|---|---|---|
| E | 8-9-8 | -225 | -225 | --- | BACK | VERT | TOTAL |
| I | 8-8-12 | -20 | -34 | --- | BACK | VERT | TOTAL |
| L | 8-3-8 | -725 | -725 | --- | BACK | VERT | TOTAL |
| M | 10-8-12 | -24 | -42 | --- | BACK | VERT | TOTAL |

**DESIGN CRITERIA**

SPECIFIED LOADS:

| | | | | |
|---|---|---|---|---|
| TOP CH. | LL = | 25.6 | PSF |
| | DL = | 3.0 | PSF |
| BOT CH. | LL = | 10.5 | PSF |
| | DL = | 7.0 | PSF |
| TOTAL LOAD | = | 46.1 | PSF |

**SPACING = 24.0 IN. C/C**

LOADING IN FLAT SECTION BASED ON A SLOPE OF 6.00/12

THIS TRUSS IS DESIGNED FOR RESIDENTIAL OR SMALL BUILDING REQUIREMENTS OF PART 9, NBCC 2010

THIS DESIGN COMPLIES WITH:
- PART 9 OF OBC 2012 , BCBC 2012 , ABC 2014
- CSA 086-09
- TPIC 2011

(55 % OF 31.3 P.S.F. G.S.L. PLUS 8.4 P.S.F. RAIN LOAD) EQUALS 25.6 P.S.F. SPECIFIED ROOF LIVE LOAD

ALLOWABLE DEFL.(LL)= L/360 (0.42")
CALCULATED VERT. DEFL.(LL) = L/ 999 (0.05")
ALLOWABLE DEFL.(TL)= L/360 (0.42")
CALCULATED VERT. DEFL.(TL) = L/ 999 (0.07")

CSI: TC=0.28 (E-F:1) , BC=0.42 (I-J:1) , WB=0.27 (F-I:1) , SSI=0.64 (I-J:1)

DOL LUMBER=1.00 NAIL=1.00 LS BEND=1.00 COMP=1.00 SHEAR=1.00 TENS= 1.00

COMPANION LIVE LOAD FACTOR = 0.50

TRUSS PLATE MANUFACTURER IS NOT RESPONSIBLE FOR QUALITY CONTROL IN THE TRUSS MANUFACTURING PLANT .

NAIL VALUES

| PLATE | GRIP(DRY) (PSI) MAX | MIN | SHEAR (PLI) MAX | MIN | SECTION (PLI) MAX | MIN |
|---|---|---|---|---|---|---|
| MT20 | 618 | 354 | 1667 | 822 | 2284 | 1656 |

PLATE PLACEMENT TOL. = 0.250 inches

PLATE ROTATION TOL. = 5.0 Deg.

JSI GRIP= 0.70 (B) (INPUT = 0.90 )
JSI METAL= 0.25 (F) (INPUT = 1.00 )

LICENSED PROFESSIONAL ENGINEER
S. KATSOULAKOS
PROVINCE OF ONTARIO

DWG NO. TAM 42871-17
STRUCTURAL
COMPONENT ONLY

| JOB NAME | TRUSS NAME | QUANTITY | PLY | JOB DESC. 43954 | DRWG NO. |
|---|---|---|---|---|---|
| 282689 | T11 | 1 | 1 | TRUSS DESC. | |

Tamarack Roof Truss, Burlington

Version 8.030 S Oct 5 2016 MiTek Industries, Inc. Thu Aug 24 16:30:54 2017 Page 1

ID:_P_zlJoeh6kqSyqNtNRH3eykdwA-UulkQ35viFJZy4mae5cwH8UF5G?7laE1Hvv86kykbS?

Scale = 1:38.5

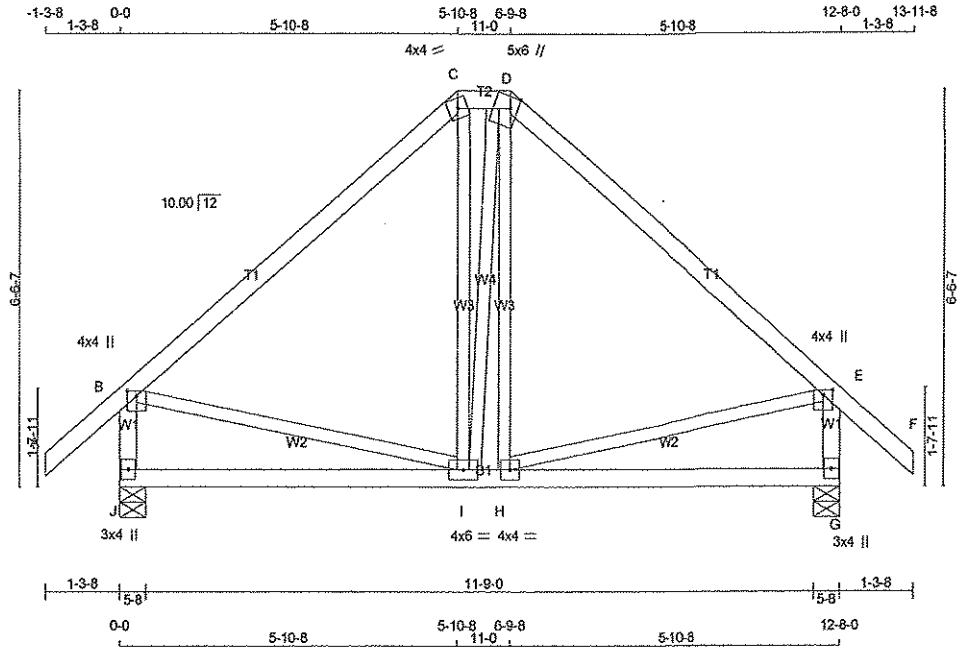


TOTAL WEIGHT = 64 lb

[M]F

**LUMBER**

N. L. G. A. RULES

| CHORDS | SIZE | | LUMBER | DESCR. |
|---|---|---|---|---|
| A - C | 2x4 | DRY | No.2 | SPF |
| C - D | 2x4 | DRY | No.2 | SPF |
| D - F | 2x4 | DRY | No.2 | SPF |
| J - B | 2x4 | DRY | No.2 | SPF |
| G - E | 2x4 | DRY | No.2 | SPF |
| J - G | 2x4 | DRY | No.2 | SPF |
| ALL WEBS EXCEPT | 2x3 | DRY | No.2 | SPF |

DRY: SEASONED LUMBER.

**PLATES (table is in inches)**

| JT | TYPE | PLATES | W | LEN | Y | X |
|---|---|---|---|---|---|---|
| B | TMVW+p | MT20 | 4.0 | 4.0 | 1.00 | 2.00 |
| C | TTW-m | MT20 | 4.0 | 4.0 | | |
| D | TTWW+m | MT20 | 5.0 | 6.0 | 2.25 | 1.50 |
| E | TMVW+p | MT20 | 4.0 | 4.0 | 1.00 | 2.00 |
| G | BMV1+p | MT20 | 3.0 | 4.0 | | |
| H | BMWW-t | MT20 | 4.0 | 4.0 | | |
| I | BMWWW-t | MT20 | 4.0 | 6.0 | | |
| J | BMV1+p | MT20 | 3.0 | 4.0 | | |

**DIMENSIONS, SUPPORTS AND LOADINGS SPECIFIED BY FABRICATOR TO BE VERIFIED BY BUILDING DESIGNER**

**BEARINGS**

| JT | FACTORED GROSS REACTION VERT | HORZ | MAXIMUM FACTORED GROSS REACTION DOWN | HORZ | UPLIFT | INPUT BRG IN-SX | REQRD BRG IN-SX |
|---|---|---|---|---|---|---|---|
| J | 828 | 0 | 828 | 0 | 0 | 5-8 | 5-8 |
| G | 828 | 0 | 828 | 0 | 0 | 5-8 | 5-8 |

**UNFACTORED REACTIONS**

| JT | 1ST LCASE COMBINED | MAX./MIN. COMPONENT REACTIONS SNOW | LIVE | PERM.LIVE | WIND | DEAD | SOIL |
|---|---|---|---|---|---|---|---|
| J | 663 | 395 / 0 | 133 / 0 | 0 / 0 | 0 / 0 | 135 / 0 | 0 / 0 |
| G | 663 | 395 / 0 | 133 / 0 | 0 / 0 | 0 / 0 | 135 / 0 | 0 / 0 |

BEARING MATERIAL TO BE SPF NO.2 OR BETTER AT JOINT(S) J, G

**BRACING**

TOP CHORD TO BE SHEATHED OR MAX. PURLIN SPACING = 6.25 FT.
MAX. UNBRACED BOTTOM CHORD LENGTH = 10.00 FT. OR RIGID CEILING DIRECTLY APPLIED.

ALL PITCH BREAKS AND PERIMETER CORNER JOINTS MUST BE LATERALLY RESTRAINED.

**LOADING**

TOTAL LOAD CASES: (4)

CHORDS

| MEMB. FR-TO | MAX. FACTORED FORCE (LBS) | FACTORED VERT. LOAD LC1 (PLF) FROM | TO | MAX CSI (LC) | MAX. UNBRAC LENGTH |
|---|---|---|---|---|---|
| A- B | 0 / 37 | -84.3 | -84.3 | 0.12 (1) | 10.00 |
| B- C | -491 / 0 | -84.3 | -84.3 | 0.38 (1) | 6.25 |
| C- D | -378 / 0 | -84.3 | -84.3 | 0.01 (1) | 6.25 |
| D- E | -491 / 0 | -84.3 | -84.3 | 0.38 (1) | 6.25 |
| E- F | 0 / 37 | -84.3 | -84.3 | 0.12 (1) | 10.00 |
| J- B | -760 / 0 | 0.0 | 0.0 | 0.08 (1) | 7.81 |
| G- E | -761 / 0 | 0.0 | 0.0 | 0.08 (1) | 7.81 |
| J- I | 0 / 0 | -28.0 | -28.0 | 0.27 (3) | 10.00 |
| I- H | 0 / 377 | -28.0 | -28.0 | 0.32 (2) | 10.00 |
| H- G | 0 / 0 | -28.0 | -28.0 | 0.25 (3) | 10.00 |

WEBS

| MEMB. FR-TO | MAX. FACTORED FORCE (LBS) | MAX CSI (LC) |
|---|---|---|
| I- C | 0 / 149 | 0.03 (3) |
| I- D | 0 / 30 | 0.01 (3) |
| H- D | 0 / 119 | 0.03 (3) |
| B- I | 0 / 385 | 0.09 (1) |
| H- E | 0 / 385 | 0.09 (1) |

LICENSED PROFESSIONAL ENGINEER
S. KATSOULAKOS
PROVINCE OF ONTARIO

DWG NO. TAM 42862 17
STRUCTURAL
COMPONENT ONLY

**DESIGN CRITERIA**

SPECIFIED LOADS:

| | | | | |
|---|---|---|---|---|
| TOP CH. | LL | = | 25.6 | PSF |
| | DL | = | 3.0 | PSF |
| BOT CH. | LL | = | 10.5 | PSF |
| | DL | = | 7.0 | PSF |
| TOTAL LOAD | | = | 46.1 | PSF |

**SPACING = 24.0 IN. C/C**

LOADING IN FLAT SECTION BASED ON A SLOPE OF 6.00/12

THIS TRUSS IS DESIGNED FOR RESIDENTIAL OR SMALL BUILDING REQUIREMENTS OF PART 9, NBCC 2010

THIS DESIGN COMPLIES WITH:
- PART 9 OF OBC 2012 , BCBC 2012 , ABC 2014
- CSA 086-09
- TPIC 2011

(55 % OF 31.3 P.S.F. G.S.L. PLUS 8.4 P.S.F. RAIN LOAD) EQUALS 25.6 P.S.F. SPECIFIED ROOF LIVE LOAD

ALLOWABLE DEFL.(LL)= L/360 (0.42")
CALCULATED VERT. DEFL.(LL) = L/ 999 (0.05")
ALLOWABLE DEFL.(TL)= L/360 (0.42")
CALCULATED VERT. DEFL.(TL) = L/ 999 (0.08")

CSI: TC=0.38 (B-C:1) , BC=0.32 (H-I:2) , WB=0.09 (B-I:1) , SSI=0.15 (D-E:1)

DOL LUMBER=1.00 NAIL=1.00 LS BEND=1.10 COMP=1.10 SHEAR=1.10 TENS= 1.10

COMPANION LIVE LOAD FACTOR = 0.50

TRUSS PLATE MANUFACTURER IS NOT RESPONSIBLE FOR QUALITY CONTROL IN THE TRUSS MANUFACTURING PLANT .

NAIL VALUES

| PLATE | GRIP(DRY) (PSI) MAX | MIN | SHEAR (PLI) MAX | MIN | SECTION (PLI) MAX | MIN |
|---|---|---|---|---|---|---|
| MT20 | 618 | 354 | 1667 | 822 | 2284 | 1656 |

PLATE PLACEMENT TOL. = 0.250 Inches

PLATE ROTATION TOL. = 5.0 Deg.

JSI GRIP= 0.70 (B) (INPUT = 0.90 )
JSI METAL= 0.19 (B) (INPUT = 1.00 )

| JOB NAME | TRUSS NAME | QUANTITY | PLY | JOB DESC. 43954 | DRWG NO. |
|---|---|---|---|---|---|
| 282689 | T12 | 3 | 1 | TRUSS DESC. | |

Tamarack Roof Truss, Burlington

Version 8.030 S Oct 5 2016 MiTek Industries, Inc. Thu Aug 24 16:30:54 2017 Page 1

ID:_P_zlJoeh6kqSyqNtNRH3eykdwA-UulkQ35viFJZy4mae5cwH8UlxG_DlXC1Hvv86kykbS?

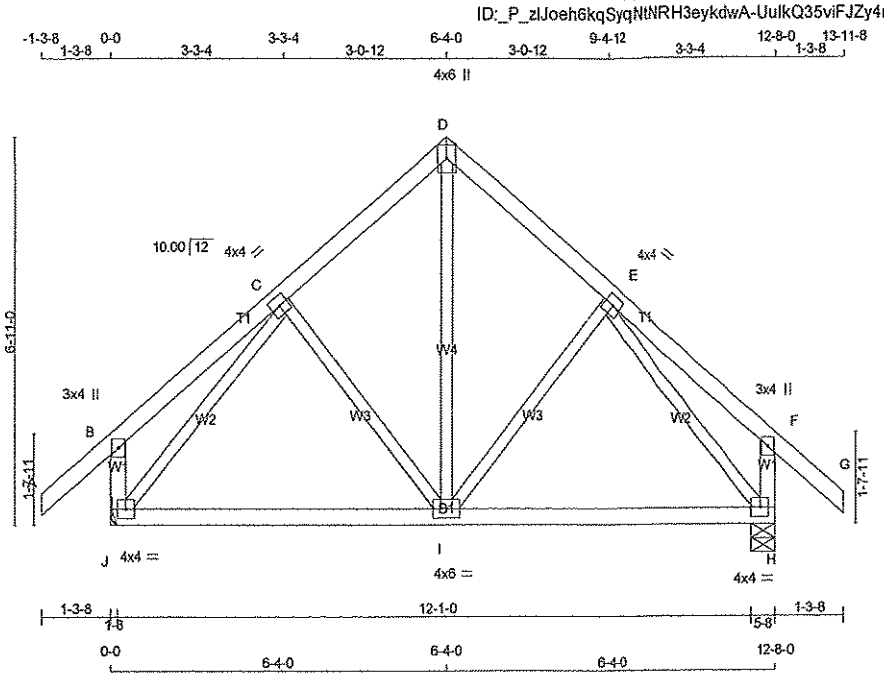


TOTAL WEIGHT = 3 X 61 = 182 lb

[M][F]

**LUMBER**

N. L. G. A. RULES

| CHORDS | SIZE | | LUMBER | DESCR. |
|---|---|---|---|---|
| A - D | 2x4 | DRY | No.2 | SPF |
| D - G | 2x4 | DRY | No.2 | SPF |
| J - B | 2x4 | DRY | No.2 | SPF |
| H - F | 2x4 | DRY | No.2 | SPF |
| J - H | 2x4 | DRY | No.2 | SPF |
| ALL WEBS EXCEPT | 2x3 | DRY | No.2 | SPF |

DRY: SEASONED LUMBER.

**PLATES (table is in inches)**

| JT | TYPE | PLATES | W | LEN | Y | X |
|---|---|---|---|---|---|---|
| B | TMV+p | MT20 | 3.0 | 4.0 | | |
| C | TMWW-t | MT20 | 4.0 | 4.0 | | |
| D | TTW+p | MT20 | 4.0 | 6.0 | Edge | |
| E | TMWW-t | MT20 | 4.0 | 4.0 | | |
| F | TMV+p | MT20 | 3.0 | 4.0 | | |
| H | BMVW1-t | MT20 | 4.0 | 4.0 | | |
| I | BMWWW-t | MT20 | 4.0 | 6.0 | | |
| J | BMVW1-t | MT20 | 4.0 | 4.0 | | |

Edge - INDICATES REFERENCE CORNER OF PLATE TOUCHES EDGE OF CHORD.

**DIMENSIONS, SUPPORTS AND LOADINGS SPECIFIED BY FABRICATOR TO BE VERIFIED BY BUILDING DESIGNER**

**BEARINGS**

| JT | FACTORED GROSS REACTION VERT | HORZ | MAXIMUM FACTORED GROSS REACTION DOWN | HORZ | UPLIFT | INPUT BRG IN-SX | REQRD BRG IN-SX |
|---|---|---|---|---|---|---|---|
| J | 828 | 0 | 828 | 0 | 0 | HANGER BY OTHERS MIN. SEAT SIZE: 1-8 | |
| H | 828 | 0 | 828 | 0 | 0 | 5-8 | 5-8 |

**UNFACTORED REACTIONS**

MAX./MIN. COMPONENT REACTIONS

| JT | 1ST LCASE COMBINED | SNOW | LIVE | PERM.LIVE | WIND | DEAD | SOIL |
|---|---|---|---|---|---|---|---|
| J | 663 | 395 / 0 | 133 / 0 | 0 / 0 | 0 / 0 | 135 / 0 | 0 / 0 |
| H | 663 | 395 / 0 | 133 / 0 | 0 / 0 | 0 / 0 | 135 / 0 | 0 / 0 |

BEARING MATERIAL TO BE SPF NO.2 OR BETTER AT JOINT(S) H

**BRACING**

TOP CHORD TO BE SHEATHED OR MAX. PURLIN SPACING = 6.25 FT.
MAX. UNBRACED BOTTOM CHORD LENGTH = 10.00 FT. OR RIGID CEILING DIRECTLY APPLIED.

ALL PITCH BREAKS AND PERIMETER CORNER JOINTS MUST BE LATERALLY RESTRAINED.

**LOADING**

TOTAL LOAD CASES: (4)

CHORDS

| MEMB. FR-TO | MAX. FORCE (LBS) | FACTORED VERT. LOAD (PLF) FROM | TO | LC1 | MAX CSI (LC) | MAX. UNBRAC LENGTH |
|---|---|---|---|---|---|---|
| A- B | 0 / 37 | -84.3 | -84.3 | 0.12 (1) | 10.00 | |
| B- C | 0 / 19 | -84.3 | -84.3 | 0.13 (1) | 10.00 | |
| C- D | -490 / 0 | -84.3 | -84.3 | 0.10 (1) | 6.25 | |
| D- E | -490 / 0 | -84.3 | -84.3 | 0.10 (1) | 6.25 | |
| E- F | 0 / 19 | -84.3 | -84.3 | 0.13 (1) | 10.00 | |
| F- G | 0 / 37 | -84.3 | -84.3 | 0.12 (1) | 10.00 | |
| J- B | -219 / 0 | 0.0 | 0.0 | 0.02 (1) | 7.81 | |
| H- F | -219 / 0 | 0.0 | 0.0 | 0.02 (1) | 7.81 | |
| J- I | 0 / 433 | -28.0 | -28.0 | 0.37 (2) | 10.00 | |
| I- H | 0 / 433 | -28.0 | -28.0 | 0.37 (2) | 10.00 | |

WEBS

| MEMB. FR-TO | MAX. FORCE (LBS) | MAX CSI (LC) |
|---|---|---|
| I- D | 0 / 393 | 0.09 (1) |
| I- E | -112 / 39 | 0.05 (1) |
| C- I | -112 / 39 | 0.05 (1) |
| J- C | -693 / 0 | 0.28 (1) |
| E- H | -693 / 0 | 0.28 (1) |

**DESIGN CRITERIA**

SPECIFIED LOADS:

| | | | | |
|---|---|---|---|---|
| TOP CH. | LL | = | 25.6 | PSF |
| | DL | = | 3.0 | PSF |
| BOT CH. | LL | = | 10.5 | PSF |
| | DL | = | 7.0 | PSF |
| TOTAL LOAD | | = | 46.1 | PSF |

**SPACING = 24.0 IN. C/C**

THIS TRUSS IS DESIGNED FOR RESIDENTIAL OR SMALL BUILDING REQUIREMENTS OF PART 9, NBCC 2010

THIS DESIGN COMPLIES WITH:
- PART 9 OF OBC 2012 , BCBC 2012 , ABC 2014
- CSA 086-09
- TPIC 2011

(55 % OF 31.3 P.S.F. G.S.L. PLUS 8.4 P.S.F. RAIN LOAD) EQUALS 25.6 P.S.F. SPECIFIED ROOF LIVE LOAD

ALLOWABLE DEFL.(LL)= L/360 (0.42")
CALCULATED VERT. DEFL.(LL) = L/ 999 (0.05")
ALLOWABLE DEFL.(TL)= L/360 (0.42")
CALCULATED VERT. DEFL.(TL) = L/ 999 (0.08")

CSI: TC=0.13 (E-F:1) , BC=0.37 (I-J:2) , WB=0.28 (E-H:1) , SSI=0.15 (H-I:3)

DOL LUMBER=1.00 NAIL=1.00 LS BEND=1.10 COMP=1.10 SHEAR=1.10 TENS= 1.10

COMPANION LIVE LOAD FACTOR = 0.50

TRUSS PLATE MANUFACTURER IS NOT RESPONSIBLE FOR QUALITY CONTROL IN THE TRUSS MANUFACTURING PLANT .

NAIL VALUES

| PLATE | GRIP(DRY) (PSI) MAX | MIN | SHEAR (PLI) MAX | MIN | SECTION (PLI) MAX | MIN |
|---|---|---|---|---|---|---|
| MT20 | 618 | 354 | 1667 | 822 | 2284 | 1656 |

PLATE PLACEMENT TOL. = 0.250 inches

PLATE ROTATION TOL. = 5.0 Deg.

JSI GRIP= 0.80 (C) (INPUT = 0.90 )
JSI METAL= 0.25 (E) (INPUT = 1.00 )

LICENSED PROFESSIONAL ENGINEER
S. KATSOULAKOS
PROVINCE OF ONTARIO

DWG NO. TAM 42668 17
STRUCTURAL
COMPONENT ONLY

| JOB NAME | TRUSS NAME | QUANTITY | PLY | JOB DESC. 43954 | DRWG NO. |
|---|---|---|---|---|---|
| 282689 | T13 | 2 | 1 | TRUSS DESC. | |

Tamarack Roof Truss, Burlington

Version 8.030 S Oct 5 2016 MiTek Industries, Inc. Thu Aug 24 16:30:54 2017 Page 1
ID:_P_zlJoeh6kqSyqNtNRH3eykdwA-UuIkQ35viFJZy4mae5cwH8UlVG0llbi1Hvv86kykbS?

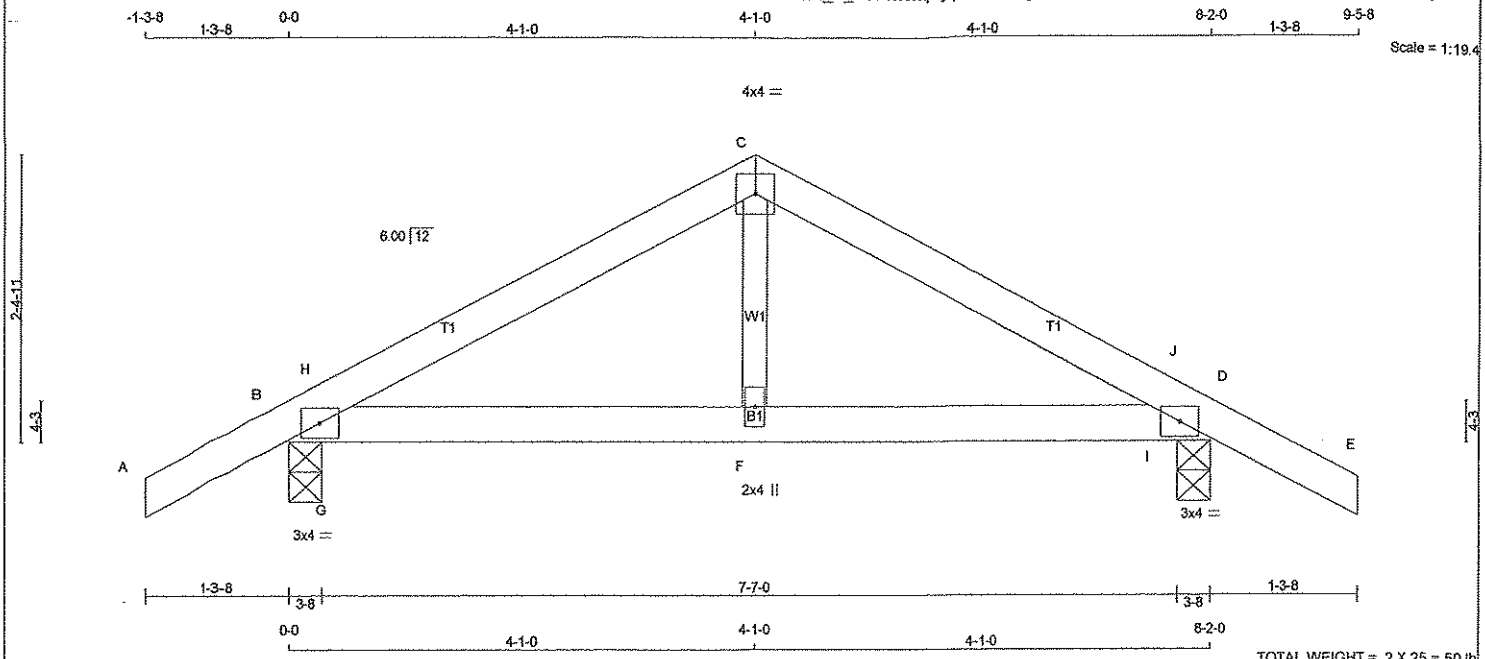


TOTAL WEIGHT = 2 X 25 = 50 lb

**LUMBER**
N. L. G. A. RULES

| CHORDS | SIZE | | LUMBER | DESCR. |
|---|---|---|---|---|
| A - C | 2x4 | DRY | No.2 | SPF |
| C - E | 2x4 | DRY | No.2 | SPF |
| B - D | 2x4 | DRY | No.2 | SPF |
| ALL WEBS | 2x3 | DRY | No.2 | SPF |

DRY: SEASONED LUMBER.

**PLATES (table is in inches)**

| JT | TYPE | PLATES | W | LEN Y | X |
|---|---|---|---|---|---|
| B | TMB1-I | MT20 | 3.0 | 4.0 | |
| C | TTW-p | MT20 | 4.0 | 4.0 | |
| D | TMB1-I | MT20 | 3.0 | 4.0 | |
| F | BMW+w | MT20 | 2.0 | 4.0 | |

DIMENSIONS, SUPPORTS AND LOADINGS SPECIFIED BY FABRICATOR TO BE VERIFIED BY BUILDING DESIGNER

**BEARINGS**

| JT | FACTORED GROSS REACTION VERT | HORZ | MAXIMUM FACTORED GROSS REACTION DOWN | HORZ | UPLIFT | INPUT BRG IN-SX | REQRD BRG IN-SX |
|---|---|---|---|---|---|---|---|
| B | 573 | 0 | 573 | 0 | 0 | 3-8 | 3-8 |
| D | 573 | 0 | 573 | 0 | 0 | 3-8 | 3-8 |

**UNFACTORED REACTIONS**

| JT | 1ST LCASE COMBINED | MAX./MIN. COMPONENT REACTIONS SNOW | LIVE | PERM.LIVE | WIND | DEAD | SOIL |
|---|---|---|---|---|---|---|---|
| B | 454 | 278 / 0 | 86 / 0 | 0 / 0 | 0 / 0 | 90 / 0 | 0 / 0 |
| D | 454 | 278 / 0 | 86 / 0 | 0 / 0 | 0 / 0 | 90 / 0 | 0 / 0 |

BEARING MATERIAL TO BE SPF NO.2 OR BETTER AT JOINT(S) B, D

**BRACING**
TOP CHORD TO BE SHEATHED OR MAX. PURLIN SPACING = 6.25 FT.
MAX. UNBRACED BOTTOM CHORD LENGTH = 10.00 FT. OR RIGID CEILING DIRECTLY APPLIED.

ALL PITCH BREAKS AND PERIMETER CORNER JOINTS MUST BE LATERALLY RESTRAINED.

**LOADING**
TOTAL LOAD CASES: (4)

CHORDS

| MEMB. FR-TO | MAX. FACTORED FORCE (LBS) | FROM | TO | VERT. LOAD LC1 (PLF) | MAX CSI (LC) | MAX. UNBRAC LENGTH |
|---|---|---|---|---|---|---|
| A- B | 0 / 24 | -84.3 | -84.3 | 0.11 (1) | 10.00 | |
| B- H | -526 / 0 | -84.3 | -84.3 | 0.04 (1) | 6.25 | |
| H- C | -559 / 0 | -84.3 | -84.3 | 0.16 (1) | 6.25 | |
| C- J | -559 / 0 | -84.3 | -84.3 | 0.16 (1) | 6.25 | |
| J- D | -526 / 0 | -84.3 | -84.3 | 0.04 (1) | 6.25 | |
| D- E | 0 / 24 | -84.3 | -84.3 | 0.11 (1) | 10.00 | |
| B- G | 0 / 495 | -28.0 | -28.0 | 0.21 (1) | 10.00 | |
| G- F | 0 / 495 | -28.0 | -28.0 | 0.21 (1) | 10.00 | |
| F- I | 0 / 495 | -28.0 | -28.0 | 0.21 (1) | 10.00 | |
| I- D | 0 / 495 | -28.0 | -28.0 | 0.21 (1) | 10.00 | |

WEBS

| MEMB. FR-TO | MAX. FACTORED FORCE (LBS) | MAX CSI (LC) |
|---|---|---|
| F- C | 0 / 250 | 0.06 (2) |
| G- H | -234 / 76 | 0.00 (1) |
| I- J | -234 / 76 | 0.00 (1) |

**DESIGN CRITERIA** [M][F]

SPECIFIED LOADS:

| | | | | |
|---|---|---|---|---|
| TOP CH. | LL = | 25.6 | PSF |
| | DL = | 3.0 | PSF |
| BOT CH. | LL = | 10.5 | PSF |
| | DL = | 7.0 | PSF |
| TOTAL LOAD | = | 46.1 | PSF |

**SPACING = 24.0 IN. C/C**

THIS TRUSS IS DESIGNED FOR RESIDENTIAL OR SMALL BUILDING REQUIREMENTS OF PART 9, NBCC 2010

THIS DESIGN COMPLIES WITH:
- PART 9 OF OBC 2012 , BCBC 2012 , ABC 2014
- CSA 086-09
- TPIC 2011

(55 % OF 31.3 P.S.F. G.S.L. PLUS 8.4 P.S.F. RAIN LOAD) EQUALS 25.6 P.S.F. SPECIFIED ROOF LIVE LOAD

ALLOWABLE DEFL.(LL)= L/360 (0.27")
CALCULATED VERT. DEFL.(LL) = L/ 999 (0.02")
ALLOWABLE DEFL.(TL)= L/360 (0.27")
CALCULATED VERT. DEFL.(TL) = L/ 999 (0.03")

CSI: TC=0.16 (C-J:1) , BC=0.21 (F-I:1) , WB=0.06 (C-F:2) , SSI=0.19 (D-I:1)

DOL LUMBER=1.00 NAIL=1.00 LS BEND=1.10 COMP=1.10 SHEAR=1.10 TENS= 1.10

COMPANION LIVE LOAD FACTOR = 0.50

TRUSS PLATE MANUFACTURER IS NOT RESPONSIBLE FOR QUALITY CONTROL IN THE TRUSS MANUFACTURING PLANT .

NAIL VALUES

| PLATE | GRIP(DRY) (PSI) MAX | MIN | SHEAR (PLI) MAX | MIN | SECTION (PLI) MAX | MIN |
|---|---|---|---|---|---|---|
| MT20 | 618 | 354 | 1667 | 822 | 2284 | 1656 |

PLATE PLACEMENT TOL. = 0.250 inches

PLATE ROTATION TOL. = 5.0 Deg.

JSI GRIP= 0.52 (B) (INPUT = 0.90 )
JSI METAL= 0.20 (B) (INPUT = 1.00 )

LICENSED PROFESSIONAL ENGINEER
8577
S. KATSOULAKOS
PROVINCE OF ONTARIO

DWG NO. TAM42869-17
STRUCTURAL
COMPONENT ONLY

| JOB NAME | TRUSS NAME | QUANTITY | PLY | JOB DESC. 43954 | DRWG NO. |
|---|---|---|---|---|---|
| 282689 | T13Z | 1 | 1 | TRUSS DESC. | |

Tamarack Roof Truss, Burlington

Version 8.030 S Oct 5 2016 MiTek Industries, Inc. Thu Aug 24 16:30:54 2017 Page 1

ID:_P_zlJoeh6kqSyqNNRH3eykdwA-UulkQ35viFJZy4mae5cwH8UI0G0Rlbd1Hvv86kykbS?

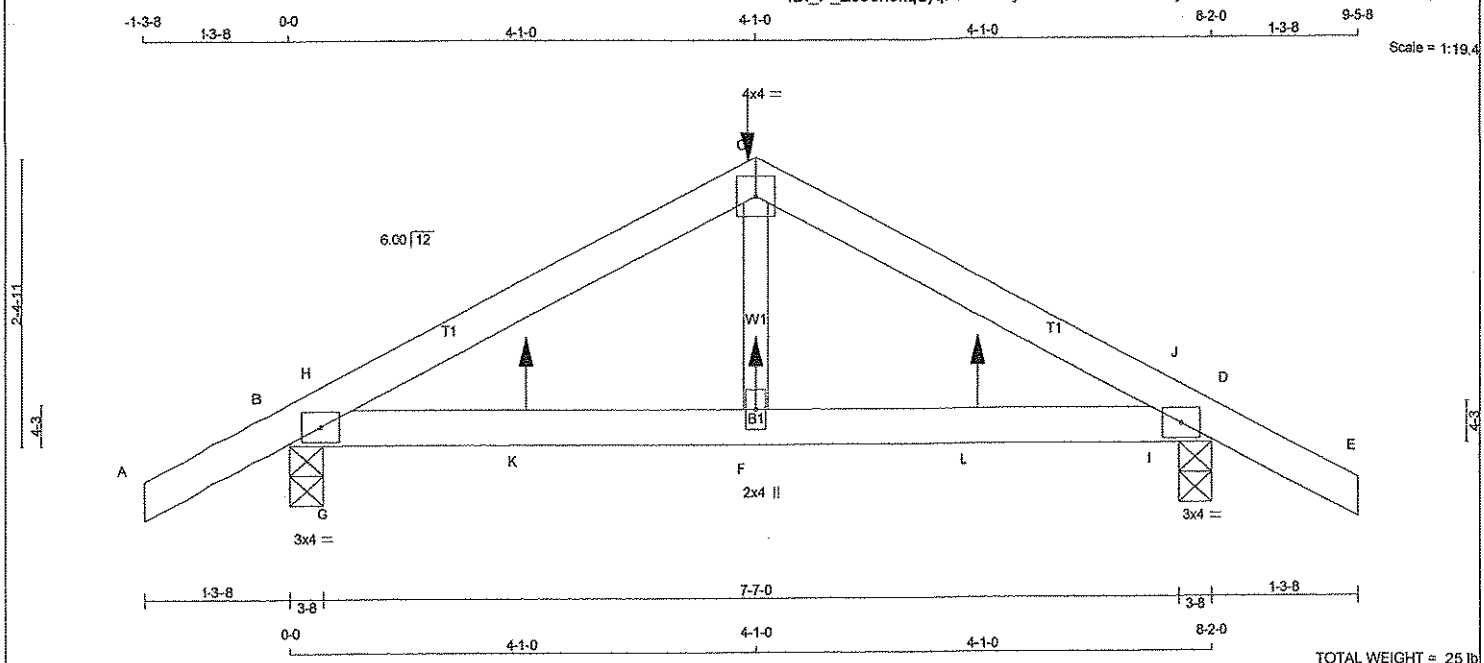


TOTAL WEIGHT = 25 lb

[M]

**LUMBER**

N. L. G. A. RULES

| CHORDS | SIZE | | LUMBER | DESCR. |
|---|---|---|---|---|
| A - C | 2x4 | DRY | No.2 | SPF |
| C - E | 2x4 | DRY | No.2 | SPF |
| B - D | 2x4 | DRY | No.2 | SPF |
| ALL WEBS | 2x3 | DRY | No.2 | SPF |

DRY: SEASONED LUMBER.

**PLATES (table is in inches)**

| JT | TYPE | PLATES | W | LEN Y | X |
|---|---|---|---|---|---|
| B | TMB1-I | MT20 | 3.0 | 4.0 | |
| C | TTW-p | MT20 | 4.0 | 4.0 | |
| D | TMB1-I | MT20 | 3.0 | 4.0 | |
| F | BMW+w | MT20 | 2.0 | 4.0 | |

**HANGERS NOTES**

1) SPECIAL HANGER(S) OR CONNECTION(S) REQUIRED TO SUPPORT CONCENTRATED LOAD(S) 2.4 lbs FACTORED DOWN AND 99.2 lbs FACTORED UP AT 4-1-0 ON TOP CHORD, AND 16.6 lbs FACTORED UP AT 2-1-0, AND 16.6 lbs FACTORED UP AT 4-1-0, AND 16.6 lbs FACTORED UP AT 6-1-0 ON BOTTOM CHORD. DESIGN FOR UNSPECIFIED CONNECTION(S) IS DELEGATED TO THE BUILDING DESIGNER.

**DIMENSIONS, SUPPORTS AND LOADINGS SPECIFIED BY FABRICATOR TO BE VERIFIED BY BUILDING DESIGNER**

**BEARINGS**

| JT | FACTORED GROSS REACTION VERT | HORZ | MAXIMUM FACTORED GROSS REACTION DOWN | HORZ | UPLIFT | INPUT BRG IN-SX | REQRD BRG IN-SX |
|---|---|---|---|---|---|---|---|
| B | 560 | 0 | 560 | 0 | 0 | 3-8 | 3-8 |
| D | 560 | 0 | 560 | 0 | 0 | 3-8 | 3-8 |

**UNFACTORED REACTIONS**

| JT | 1ST LCASE COMBINED | MAX /MIN. COMPONENT REACTIONS SNOW | LIVE | PERM.LIVE | WIND | DEAD | SOIL |
|---|---|---|---|---|---|---|---|
| B | 446 | 269 / 0 | 87 / 0 | 0 / 0 | 0 / 0 | 90 / 0 | 0 / 0 |
| D | 446 | 269 / 0 | 87 / 0 | 0 / 0 | 0 / 0 | 90 / 0 | 0 / 0 |

BEARING MATERIAL TO BE SPF NO.2 OR BETTER AT JOINT(S) B, D

**BRACING**

TOP CHORD TO BE SHEATHED OR MAX. PURLIN SPACING = 6.25 FT.
MAX. UNBRACED BOTTOM CHORD LENGTH = 10.00 FT. OR RIGID CEILING DIRECTLY APPLIED.

ALL PITCH BREAKS AND PERIMETER CORNER JOINTS MUST BE LATERALLY RESTRAINED.

**LOADING**

TOTAL LOAD CASES: (7)

CHORDS

| MEMB. FR-TO | MAX. FACTORED FORCE (LBS) | FACTORED VERT. LOAD (PLF) FROM | TO | LC1 | MAX CSI (LC) | MAX. UNBRAC LENGTH |
|---|---|---|---|---|---|---|
| A- B | 0 / 24 | -84.3 | -84.3 | 0.12 (1) | 10.00 | |
| B- H | -501 / 0 | -84.3 | -84.3 | 0.07 (5) | 6.25 | |
| H- C | -537 / 0 | -84.3 | -84.3 | 0.19 (1) | 6.25 | |
| C- J | -537 / 0 | -84.3 | -84.3 | 0.19 (1) | 6.25 | |
| J- D | -501 / 0 | -84.3 | -84.3 | 0.07 (5) | 6.25 | |
| D- E | 0 / 24 | -84.3 | -84.3 | 0.12 (1) | 10.00 | |
| B- G | 0 / 476 | -28.0 | -28.0 | 0.23 (1) | 10.00 | |
| G- K | 0 / 476 | -28.0 | -28.0 | 0.23 (1) | 10.00 | |
| K- F | 0 / 476 | -28.0 | -28.0 | 0.23 (1) | 10.00 | |
| F- L | 0 / 476 | -28.0 | -28.0 | 0.23 (1) | 10.00 | |
| L- I | 0 / 476 | -28.0 | -28.0 | 0.23 (1) | 10.00 | |
| I- D | 0 / 476 | -28.0 | -28.0 | 0.23 (1) | 10.00 | |

WEBS

| MEMB. FR-TO | MAX. FACTORED FORCE (LBS) | MAX CSI (LC) |
|---|---|---|
| F- C | 0 / 243 | 0.06 (7) |
| G- H | -255 / 76 | 0.00 (1) |
| I- J | -255 / 76 | 0.00 (1) |

FACTORED CONCENTRATED LOADS (LBS)

| JT | LOC. | LC1 | MAX- | MAX+ | FACE | DIR. | TYPE |
|---|---|---|---|---|---|---|---|
| C | 4-1-0 | -1 | -2 | 99 | BACK | VERT | TOTAL |
| F | 4-1-0 | 9 | --- | 17 | BACK | VERT | TOTAL |
| K | 2-1-0 | 9 | --- | 17 | BACK | VERT | TOTAL |
| L | 6-1-0 | 9 | --- | 17 | BACK | VERT | TOTAL |

**DESIGN CRITERIA**

SPECIFIED LOADS:

| | | | | |
|---|---|---|---|---|
| TOP CH. | LL = | 25.6 | PSF |
| | DL = | 3.0 | PSF |
| BOT CH. | LL = | 10.5 | PSF |
| | DL = | 7.0 | PSF |
| TOTAL LOAD | = | 46.1 | PSF |

**SPACING = 24.0 IN. C/C**

THIS TRUSS IS DESIGNED FOR RESIDENTIAL OR SMALL BUILDING REQUIREMENTS OF PART 9, NBCC 2010

THIS DESIGN COMPLIES WITH:
- PART 9 OF OBC 2012 , BCBC 2012 , ABC 2014
- CSA 086-09
- TPIC 2011

(65 % OF 31.3 P.S.F. G.S.L. PLUS 8.4 P.S.F. RAIN LOAD) EQUALS 25.6 P.S.F. SPECIFIED ROOF LIVE LOAD

ALLOWABLE DEFL.(LL)= L/360 (0.27")
CALCULATED VERT. DEFL.(LL) = L/ 999 (0.02")
ALLOWABLE DEFL.(TL)= L/360 (0.27")
CALCULATED VERT. DEFL.(TL) = L/ 999 (0.03")

CSI: TC=0.19 (C-J:1) , BC=0.23 (F-I:1) , WB=0.06 (C-F:7) , SSI=0.22 (D-I:5)

DOL LUMBER=1.00 NAIL=1.00 LS BEND=1.00 COMP=1.00 SHEAR=1.00 TENS= 1.00

COMPANION LIVE LOAD FACTOR = 0.50

TRUSS PLATE MANUFACTURER IS NOT RESPONSIBLE FOR QUALITY CONTROL IN THE TRUSS MANUFACTURING PLANT .

NAIL VALUES

| PLATE | GRIP(DRY) (PSI) MAX | MIN | SHEAR (PLI) MAX | MIN | SECTION (PLI) MAX | MIN |
|---|---|---|---|---|---|---|
| MT20 | 618 | 354 | 1667 | 822 | 2284 | 1656 |

PLATE PLACEMENT TOL. = 0.250 inches

PLATE ROTATION TOL. = 5.0 Deg.

JSI GRIP= 0.51 (B) (INPUT = 0.90 )
JSI METAL= 0.19 (B) (INPUT = 1.00 )

LICENSED PROFESSIONAL ENGINEER
S. KATSOULAKOS
PROVINCE OF ONTARIO

DWG NO. TAM 42870 17

STRUCTURAL COMPONENT ONLY

| JOB NAME | TRUSS NAME | QUANTITY | PLY | JOB DESC. | DRWG NO. |
|---|---|---|---|---|---|
| 282690 | T15 | 1 | 2 | TRUSS DESC. | |

Tamarack Roof Truss, Burlington

Version 8.030 S Oct 5 2016 MiTek Industries, Inc. Thu Aug 24 16:34:10 2017 Page 1

ID:DZmtPBj_26xwKfmrz12lewykd1T-Ib8qZ5SsYT?ITCIF7F7uDTbjvHqvg8ouLPOWzNykbOx

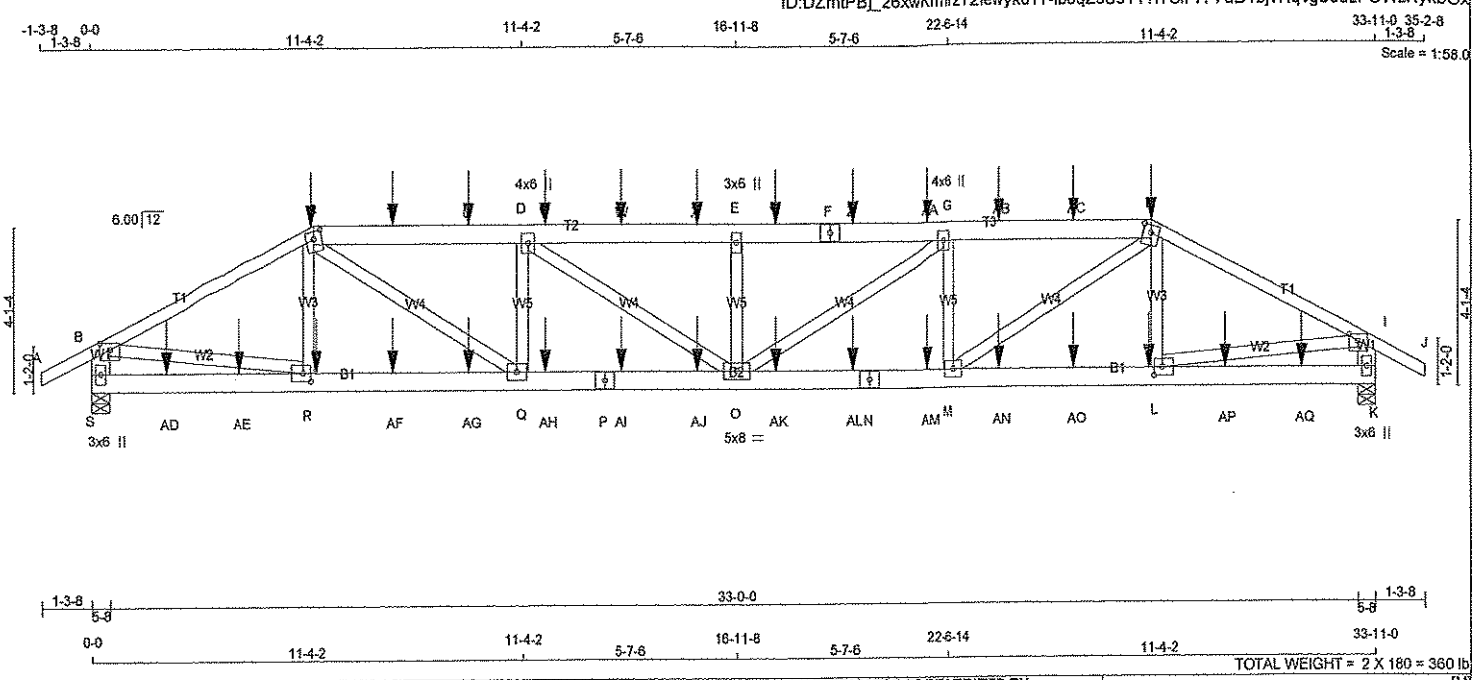


TOTAL WEIGHT = 2 X 180 = 360 lb

[M]

**LUMBER**

N. L. G. A. RULES

| CHORDS | SIZE | | LUMBER | DESCR. |
|---|---|---|---|---|
| A - C | 2x4 | DRY | No.2 | SPF |
| C - F | 2x6 | DRY | No.2 | SPF |
| F - H | 2x6 | DRY | No.2 | SPF |
| H - J | 2x4 | DRY | No.2 | SPF |
| S - B | 2x6 | DRY | No.2 | SPF |
| K - I | 2x6 | DRY | No.2 | SPF |
| S - P | 2x6 | DRY | No.2 | SPF |
| P - N | 2x6 | DRY | No.2 | SPF |
| N - K | 2x6 | DRY | No.2 | SPF |
| ALL WEBS EXCEPT | 2x4 | DRY | No.2 | SPF |

DRY: SEASONED LUMBER.

DESIGN CONSISTS OF 2 TRUSSES BUILT SEPARATELY THEN FASTENED TOGETHER AS FOLLOWS:

| CHORDS | #ROWS | SURFACE SPACING (IN) | LOAD(PLF) |
|---|---|---|---|
| TOP CHORDS : (0.122"X3") SPIRAL NAILS | | | |
| A- C | 1 | 12 | SIDE(61.0) |
| H- J | 1 | 12 | SIDE(61.0) |
| C- F | 2 | 12 | SIDE(61.0) |
| F- H | 2 | 12 | SIDE(61.0) |
| S- B | 2 | 12 | TOP |
| K- I | 2 | 12 | TOP |
| BOTTOM CHORDS : (0.122"X3") SPIRAL NAILS | | | |
| S- P | 2 | 12 | SIDE(183.1) |
| P- N | 2 | 12 | SIDE(0.0) |
| N- K | 2 | 12 | SIDE(183.1) |
| WEBS : (0.122"X3") SPIRAL NAILS | | | |
| R- C | 1 | 6 | SIDE(1.2) |
| L- H | 1 | 6 | SIDE(1.2) |
| 2x4 | 1 | 6 | |

NAILS TO BE DRIVEN FROM ONE SIDE ONLY.

GIRDER NAILING ASSUMES NAILED HANGERS ARE FASTENED WITH MIN. 3-0 INCH NAILS.

TOP - COMPONENTS ARE LOADED FROM THE TOP AND MUST BE PLACED ON TOP EDGE OF ALL PLIES FOR THE LOAD TO BE TRANSFERRED TO EACH PLY.

SIDE - PLF SHOWN IS THE EQUIVALENT UDL APPLIED TO ONE SIDE THAT THE CORRESPONDING NAILING PATTERN SHALL BE CAPABLE OF TRANSFERING. REMAINING PLF MUST BE APPLIED ON THE OPPOSITE SIDE OR ON THE TOP.

**PLATES (table is in inches)**

| JT | TYPE | PLATES | W | LEN | Y | X |
|---|---|---|---|---|---|---|
| B | TMVW-p | MT20 | 5.0 | 6.0 | 2.00 | 3.00 |
| C | TTWW+m | MT20 | 5.0 | 6.0 | 2.25 | 2.50 |
| D | TMWW+t | MT20 | 4.0 | 6.0 | | |
| E | TMW+w | MT20 | 3.0 | 6.0 | | |
| F | TS-t | MT20 | 5.0 | 6.0 | | |
| G | TMWW+t | MT20 | 4.0 | 6.0 | | |
| H | TTWW+m | MT20 | 5.0 | 6.0 | 2.25 | 2.50 |
| I | TMVW-p | MT20 | 5.0 | 6.0 | 2.00 | 3.00 |
| K | BMV1+p | MT20 | 3.0 | 6.0 | | |
| L | BMWW-t | MT20 | 5.0 | 6.0 | 2.50 | 2.50 |
| M | BMWW-t | MT20 | 5.0 | 6.0 | | |
| N | BS-t | MT20 | 5.0 | 6.0 | | |
| O | BMWWW-t | MT20 | 5.0 | 8.0 | | |
| P | BS-t | MT20 | 5.0 | 6.0 | | |
| Q | BMWW-t | MT20 | 5.0 | 6.0 | | |

**DIMENSIONS, SUPPORTS AND LOADINGS SPECIFIED BY FABRICATOR TO BE VERIFIED BY BUILDING DESIGNER**

**BEARINGS**

| JT | FACTORED GROSS REACTION VERT | HORZ | MAXIMUM FACTORED GROSS REACTION DOWN | HORZ | UPLIFT | INPUT BRG IN-SX | REQRD BRG IN-SX |
|---|---|---|---|---|---|---|---|
| S | 3334 | 0 | 3334 | 0 | 0 | 5-8 | 5-8 |
| K | 3334 | 0 | 3334 | 0 | 0 | 5-8 | 5-8 |

**UNFACTORED REACTIONS**

| JT | 1ST LCASE COMBINED | MAX./MIN. COMPONENT REACTIONS SNOW | LIVE | PERM.LIVE | WIND | DEAD | SOIL |
|---|---|---|---|---|---|---|---|
| S | 2726 | 1530 / 0 | 608 / 0 | 0 / 0 | 0 / 0 | 588 / 0 | 0 / 0 |
| K | 2726 | 1530 / 0 | 608 / 0 | 0 / 0 | 0 / 0 | 588 / 0 | 0 / 0 |

BEARING MATERIAL TO BE SPF NO.2 OR BETTER AT JOINT(S) S, K

**BRACING**

TOP CHORD TO BE SHEATHED OR MAX. PURLIN SPACING = 3.91 FT.
MAX. UNBRACED BOTTOM CHORD LENGTH = 10.00 FT. OR RIGID CEILING DIRECTLY APPLIED.

ALL PITCH BREAKS AND PERIMETER CORNER JOINTS MUST BE LATERALLY RESTRAINED.

**LOADING**

TOTAL LOAD CASES: (4)

CHORDS

| MEMB. FR-TO | MAX. FACTORED FORCE (LBS) | FACTORED VERT. LOAD LC1 (PLF) FROM | TO | MAX CSI (LC) | MAX. UNBRAC LENGTH |
|---|---|---|---|---|---|
| A- B | 0 / 26 | -84.3 | -84.3 | 0.06 (1) | 10.00 |
| B- C | -5061 / 0 | -84.3 | -84.3 | 0.49 (1) | 3.91 |
| C- T | -6957 / 0 | -84.3 | -84.3 | 0.22 (1) | 4.38 |
| T- U | -6957 / 0 | -84.3 | -84.3 | 0.22 (1) | 4.38 |
| U- D | -6957 / 0 | -84.3 | -84.3 | 0.22 (1) | 4.38 |
| D- V | -7712 / 0 | -84.3 | -84.3 | 0.23 (1) | 4.19 |
| V- W | -7712 / 0 | -84.3 | -84.3 | 0.23 (1) | 4.19 |
| W- X | -7712 / 0 | -84.3 | -84.3 | 0.23 (1) | 4.19 |
| X- E | -7712 / 0 | -84.3 | -84.3 | 0.23 (1) | 4.19 |
| E- Y | -7712 / 0 | -84.3 | -84.3 | 0.23 (1) | 4.19 |
| Y- F | -7712 / 0 | -84.3 | -84.3 | 0.23 (1) | 4.19 |
| F- Z | -7712 / 0 | -84.3 | -84.3 | 0.23 (1) | 4.19 |
| Z-AA | -7712 / 0 | -84.3 | -84.3 | 0.23 (1) | 4.19 |
| AA- G | -7712 / 0 | -84.3 | -84.3 | 0.23 (1) | 4.19 |
| G-AB | -6957 / 0 | -84.3 | -84.3 | 0.22 (1) | 4.38 |
| AB-AC | -6957 / 0 | -84.3 | -84.3 | 0.22 (1) | 4.38 |
| AC- H | -6957 / 0 | -84.3 | -84.3 | 0.22 (1) | 4.38 |
| H- I | -5061 / 0 | -84.3 | -84.3 | 0.49 (1) | 3.91 |
| I- J | 0 / 26 | -84.3 | -84.3 | 0.06 (1) | 10.00 |
| S- B | -3218 / 0 | 0.0 | 0.0 | 0.11 (1) | 7.72 |
| K- I | -3218 / 0 | 0.0 | 0.0 | 0.11 (1) | 7.72 |
| S-AD | 0 / 0 | -28.0 | -28.0 | 0.10 (2) | 10.00 |
| AD-AE | 0 / 0 | -28.0 | -28.0 | 0.10 (2) | 10.00 |
| AE- R | 0 / 0 | -28.0 | -28.0 | 0.10 (2) | 10.00 |
| R-AF | 0 / 4550 | -28.0 | -28.0 | 0.34 (1) | 10.00 |
| AF-AG | 0 / 4550 | -28.0 | -28.0 | 0.34 (1) | 10.00 |
| AG- Q | 0 / 4550 | -28.0 | -28.0 | 0.34 (1) | 10.00 |
| Q-AH | 0 / 6957 | -28.0 | -28.0 | 0.51 (1) | 10.00 |
| AH- P | 0 / 6957 | -28.0 | -28.0 | 0.51 (1) | 10.00 |
| P-AI | 0 / 6957 | -28.0 | -28.0 | 0.51 (1) | 10.00 |
| AI-AJ | 0 / 6957 | -28.0 | -28.0 | 0.51 (1) | 10.00 |
| AJ- O | 0 / 6957 | -28.0 | -28.0 | 0.51 (1) | 10.00 |
| O-AK | 0 / 6957 | -28.0 | -28.0 | 0.51 (1) | 10.00 |
| AK-AL | 0 / 6957 | -28.0 | -28.0 | 0.51 (1) | 10.00 |
| AL- N | 0 / 6957 | -28.0 | -28.0 | 0.51 (1) | 10.00 |
| N-AM | 0 / 6957 | -28.0 | -28.0 | 0.51 (1) | 10.00 |
| AM- M | 0 / 6957 | -28.0 | -28.0 | 0.51 (1) | 10.00 |
| M-AN | 0 / 4550 | -28.0 | -28.0 | 0.34 (1) | 10.00 |
| AN-AO | 0 / 4550 | -28.0 | -28.0 | 0.34 (1) | 10.00 |

WEBS

| MEMB. FR-TO | MAX. FACTORED FORCE (LBS) | MAX CSI (LC) |
|---|---|---|
| R- C | -314 / 241 | 0.03 (1) |
| L- H | -314 / 241 | 0.03 (1) |
| B- R | 0 / 4579 | 0.40 (1) |
| L- I | 0 / 4579 | 0.40 (1) |
| M- H | 0 / 2901 | 0.26 (1) |
| C- Q | 0 / 2901 | 0.26 (1) |
| M- G | -1353 / 0 | 0.12 (1) |
| Q- D | -1353 / 0 | 0.12 (1) |
| O- G | 0 / 901 | 0.08 (1) |
| D- O | 0 / 901 | 0.08 (1) |
| O- E | -721 / 0 | 0.06 (1) |

LICENSED PROFESSIONAL ENGINEER
S. KATSOULAKOS
PROVINCE OF ONTARIO

DWG NO. TAM4287217
STRUCTURAL
COMPONENT ONLY

**DESIGN CRITERIA**

SPECIFIED LOADS:

| | | | | |
|---|---|---|---|---|
| TOP CH. | LL | = | 25.6 | PSF |
| | DL | = | 3.0 | PSF |
| BOT CH. | LL | = | 10.5 | PSF |
| | DL | = | 7.0 | PSF |
| TOTAL LOAD | | = | 46.1 | PSF |

**SPACING = 24.0 IN. C/C**

LOADING IN FLAT SECTION BASED ON A SLOPE OF 6.00/12

THIS TRUSS IS DESIGNED FOR RESIDENTIAL OR SMALL BUILDING REQUIREMENTS OF PART 9, NBCC 2010

THIS DESIGN COMPLIES WITH:
- PART 9 OF OBC 2012 , BCBC 2012 , ABC 2014
- CSA 086-09
- TPIC 2011

(55 % OF 31.3 P.S.F. G.S.L. PLUS 8.4 P.S.F. RAIN LOAD) EQUALS 25.6 P.S.F. SPECIFIED ROOF LIVE LOAD

ALLOWABLE DEFL.(LL)= L/360 (1.13")
CALCULATED VERT. DEFL.(LL) = L/ 999 (0.21")
ALLOWABLE DEFL.(TL)= L/360 (1.13")
CALCULATED VERT. DEFL.(TL) = L/ 999 (0.34")

CSI: TC=0.49 (B-C:1) , BC=0.51 (M-O:1) , WB=0.40 (B-R:1) , SSI=0.14 (D-E:1)

DOL LUMBER=1.00 NAIL=1.00 LS BEND=1.00 COMP=1.00 SHEAR=1.00 TENS= 1.00

COMPANION LIVE LOAD FACTOR = 0.50

TRUSS PLATE MANUFACTURER IS NOT RESPONSIBLE FOR QUALITY CONTROL IN THE TRUSS MANUFACTURING PLANT .

NAIL VALUES

| PLATE | GRIP(DRY) (PSI) MAX | MIN | SHEAR (PLI) MAX | MIN | SECTION (PLI) MAX | MIN |
|---|---|---|---|---|---|---|
| MT20 | 618 | 354 | 1667 | 822 | 2284 | 1656 |

PLATE PLACEMENT TOL. = 0.250 inches

PLATE ROTATION TOL. = 5.0 Deg.

JSI GRIP= 0.87 (C) (INPUT = 0.90 )
JSI METAL= 0.58 (N) (INPUT = 1.00 )

P616

CONTINUED ON PAGE 2

| JOB NAME | TRUSS NAME | QUANTITY | PLY | JOB DESC. | DRWG NO. |
|---|---|---|---|---|---|
| 282690 | T15 | 1 | 2 | TRUSS DESC. | |

Tamarack Roof Truss, Burlington

Version 8.030 S Oct 5 2016 MiTek Industries, Inc. Thu Aug 24 16:34:10 2017 Page 2
ID:DZmtPBj_26xwKfmrz12lewykd1T-Ib8qZ5SsYT?ITCIF7F7uDTbjvHqvg8ouLPOWzNykbOx

**PLATES (table is in inches)**

| JT | TYPE | PLATES | W | LEN | Y | X |
|---|---|---|---|---|---|---|
| R | BMWW-t | MT20 | 5.0 | 6.0 | 2.50 | 2.50 |
| S | BMV1+p | MT20 | 3.0 | 6.0 | | |

**HANGERS NOTES**

1) SPECIAL HANGER(S) OR CONNECTION(S) REQUIRED TO SUPPORT CONCENTRATED LOAD(S) 472.3 lbs FACTORED DOWN AT 5-10-8, 101.4 lbs FACTORED DOWN AT 7-11-4, 101.4 lbs FACTORED DOWN AT 9-11-4, 101.4 lbs FACTORED DOWN AT 11-11-4, 101.4 lbs FACTORED DOWN AT 13-11-4, 101.4 lbs FACTORED DOWN AT 15-11-4, 101.4 lbs FACTORED DOWN AT 17-11-12, 101.4 lbs FACTORED DOWN AT 19-11-12, 101.4 lbs FACTORED DOWN AT 21-11-12, 101.4 lbs FACTORED DOWN AT 23-11-12, AND 101.4 lbs FACTORED DOWN AT 25-11-12, AND 472.3 lbs FACTORED DOWN AT 28-0-8 ON TOP CHORD, AND 84.6 lbs FACTORED DOWN AT 1-11-4, 84.6 lbs FACTORED DOWN AT 3-11-4, 69.9 lbs FACTORED DOWN AT 5-11-4, 69.9 lbs FACTORED DOWN AT 7-11-4, 69.9 lbs FACTORED DOWN AT 9-11-4, 69.9 lbs FACTORED DOWN AT 11-11-4, 69.9 lbs FACTORED DOWN AT 13-11-4, 69.9 lbs FACTORED DOWN AT 15-11-4, 69.9 lbs FACTORED DOWN AT 17-11-12, 69.9 lbs FACTORED DOWN AT 19-11-12, 69.9 lbs FACTORED DOWN AT 21-11-12, 69.9 lbs FACTORED DOWN AT 23-11-12, 69.9 lbs FACTORED DOWN AT 25-11-12, 69.9 lbs FACTORED DOWN AT 27-11-12, AND 84.6 lbs FACTORED DOWN AT 29-11-12, AND 84.6 lbs FACTORED DOWN AT 31-11-12 ON BOTTOM CHORD. DESIGN FOR UNSPECIFIED CONNECTION(S) IS DELEGATED TO THE BUILDING DESIGNER.

**LOADING**

TOTAL LOAD CASES: (4)

CHORDS

| MEMB. FR-TO | MAX. FORCE (LBS) | FACTORED VERT. LOAD (PLF) FROM | TO | LC1 | MAX CSI (LC) |
|---|---|---|---|---|---|
| AO- L | 0 / 4550 | -28.0 | -28.0 | 0.34 (1) | |
| L-AP | 0 / 0 | -28.0 | -28.0 | 0.10 (2) | |
| AP-AQ | 0 / 0 | -28.0 | -28.0 | 0.10 (2) | |
| AQ- K | 0 / 0 | -28.0 | -28.0 | 0.10 (2) | |

WEBS

| MEMB. FR-TO | MAX. FORCE (LBS) | MAX CSI (LC) | MAX. UNBRAC LENGTH |
|---|---|---|---|
| | | | 10.00 |
| | | | 10.00 |
| | | | 10.00 |
| | | | 10.00 |

FACTORED CONCENTRATED LOADS (LBS)

| JT | LOC. | LC1 | MAX- | MAX+ | FACE | DIR. | TYPE |
|---|---|---|---|---|---|---|---|
| C | 5-10-8 | -472 | -472 | --- | FRONT | VERT | TOTAL |
| H | 28-0-8 | -472 | -472 | --- | FRONT | VERT | TOTAL |
| L | 27-11-12 | -40 | -70 | --- | FRONT | VERT | TOTAL |
| R | 5-11-4 | -40 | -70 | --- | FRONT | VERT | TOTAL |
| T | 7-11-4 | -101 | -101 | --- | FRONT | VERT | TOTAL |
| U | 9-11-4 | -101 | -101 | --- | FRONT | VERT | TOTAL |
| V | 11-11-4 | -101 | -101 | --- | FRONT | VERT | TOTAL |
| W | 13-11-4 | -101 | -101 | --- | FRONT | VERT | TOTAL |
| X | 15-11-4 | -101 | -101 | --- | FRONT | VERT | TOTAL |
| Y | 17-11-12 | -101 | -101 | --- | FRONT | VERT | TOTAL |
| Z | 19-11-12 | -101 | -101 | --- | FRONT | VERT | TOTAL |
| AA | 21-11-12 | -101 | -101 | --- | FRONT | VERT | TOTAL |
| AB | 23-11-12 | -101 | -101 | --- | FRONT | VERT | TOTAL |
| AC | 25-11-12 | -101 | -101 | --- | FRONT | VERT | TOTAL |
| AD | 1-11-4 | -48 | -85 | --- | FRONT | VERT | TOTAL |
| AE | 3-11-4 | -48 | -85 | --- | FRONT | VERT | TOTAL |
| AF | 7-11-4 | -40 | -70 | --- | FRONT | VERT | TOTAL |
| AG | 9-11-4 | -40 | -70 | --- | FRONT | VERT | TOTAL |
| AH | 11-11-4 | -40 | -70 | --- | FRONT | VERT | TOTAL |
| AI | 13-11-4 | -40 | -70 | --- | FRONT | VERT | TOTAL |
| AJ | 15-11-4 | -40 | -70 | --- | FRONT | VERT | TOTAL |
| AK | 17-11-12 | -40 | -70 | --- | FRONT | VERT | TOTAL |
| AL | 19-11-12 | -40 | -70 | --- | FRONT | VERT | TOTAL |
| AM | 21-11-12 | -40 | -70 | --- | FRONT | VERT | TOTAL |
| AN | 23-11-12 | -40 | -70 | --- | FRONT | VERT | TOTAL |
| AO | 25-11-12 | -40 | -70 | --- | FRONT | VERT | TOTAL |
| AP | 29-11-12 | -48 | -85 | --- | FRONT | VERT | TOTAL |
| AQ | 31-11-12 | -48 | -85 | --- | FRONT | VERT | TOTAL |

LICENSED PROFESSIONAL ENGINEER
S. KATSOULAKOS
PROVINCE OF ONTARIO

DWG NO. TAM 42872-17
STRUCTURAL
COMPONENT ONLY

| JOB NAME | TRUSS NAME | QUANTITY | PLY | JOB DESC. | DRWG NO. |
|---|---|---|---|---|---|
| 282690 | T16 | 1 | 1 | TRUSS DESC. | |

Tamarack Roof Truss, Burlington

Version 8.030 S Oct 5 2016 MiTek Industries, Inc. Thu Aug 24 16:34:11 2017 Page 1

ID:DZmtPBj_26xwKfmrz12lewykd1T-DniCnRTUJm7c5LJRhze7mg8q?h8bPZf1a284WpykbOw

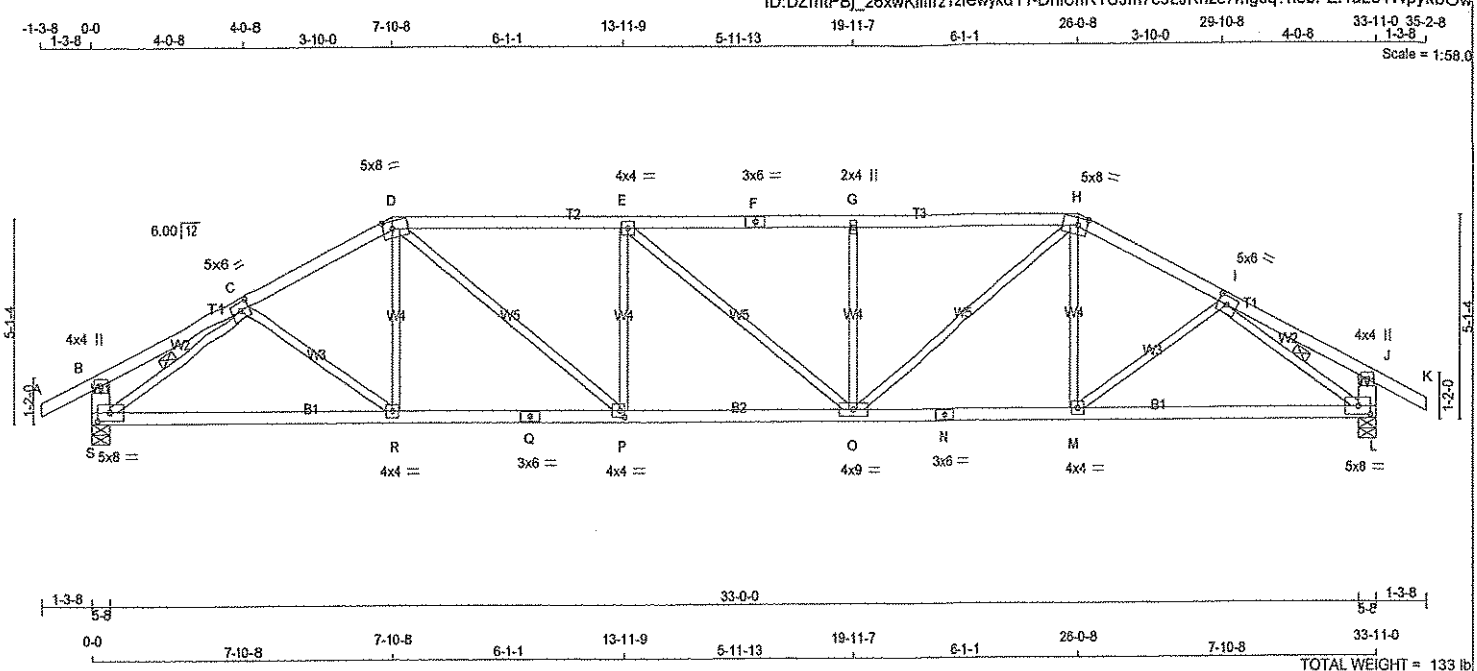


TOTAL WEIGHT = 133 lb

[M]

**LUMBER**

N. L. G. A. RULES

| CHORDS | SIZE | | LUMBER | DESCR. |
|---|---|---|---|---|
| A - D | 2x4 | DRY | No.2 | SPF |
| D - F | 2x4 | DRY | No.2 | SPF |
| F - H | 2x4 | DRY | No.2 | SPF |
| H - K | 2x4 | DRY | No.2 | SPF |
| S - B | 2x6 | DRY | No.2 | SPF |
| L - J | 2x6 | DRY | No.2 | SPF |
| S - Q | 2x4 | DRY | No.2 | SPF |
| Q - N | 2x4 | DRY | No.2 | SPF |
| N - L | 2x4 | DRY | No.2 | SPF |
| ALL WEBS EXCEPT | 2x3 | DRY | No.2 | SPF |

DRY: SEASONED LUMBER.

**PLATES (table is in inches)**

| JT | TYPE | PLATES | W | LEN | Y | X |
|---|---|---|---|---|---|---|
| B | TMV+p | MT20 | 4.0 | 4.0 | | |
| C | TMWW-t | MT20 | 5.0 | 6.0 | 2.50 | 2.75 |
| D | TTWW-m | MT20 | 5.0 | 8.0 | 2.25 | 3.00 |
| E | TMWW-t | MT20 | 4.0 | 4.0 | | |
| F | TS-t | MT20 | 3.0 | 6.0 | | |
| G | TMW+w | MT20 | 2.0 | 4.0 | | |
| H | TTWW-m | MT20 | 5.0 | 8.0 | 2.25 | 3.00 |
| I | TMWW-t | MT20 | 5.0 | 6.0 | 2.50 | 2.75 |
| J | TMV+p | MT20 | 4.0 | 4.0 | | |
| L | BMVW1-t | MT20 | 5.0 | 8.0 | 2.50 | 3.75 |
| M | BMWW-t | MT20 | 4.0 | 4.0 | | |
| N | BS-t | MT20 | 3.0 | 6.0 | | |
| O | BMWWW-t | MT20 | 4.0 | 9.0 | | |
| P | BMWW-t | MT20 | 4.0 | 4.0 | 2.00 | 1.50 |
| Q | BS-t | MT20 | 3.0 | 6.0 | | |
| R | BMWW-t | MT20 | 4.0 | 4.0 | | |
| S | BMVW1-t | MT20 | 5.0 | 8.0 | 2.50 | 3.75 |

**DIMENSIONS, SUPPORTS AND LOADINGS SPECIFIED BY FABRICATOR TO BE VERIFIED BY BUILDING DESIGNER**

**BEARINGS**

| JT | FACTORED GROSS REACTION VERT | HORZ | MAXIMUM FACTORED GROSS REACTION DOWN | HORZ | UPLIFT | INPUT BRG IN-SX | REQRD BRG IN-SX |
|---|---|---|---|---|---|---|---|
| S | 2018 | 0 | 2018 | 0 | 0 | 5-8 | 5-8 |
| L | 2018 | 0 | 2018 | 0 | 0 | 5-8 | 5-8 |

**UNFACTORED REACTIONS**

| JT | 1ST LCASE COMBINED | MAX /MIN. COMPONENT REACTIONS SNOW | LIVE | PERM.LIVE | WIND | DEAD | SOIL |
|---|---|---|---|---|---|---|---|
| S | 1641 | 937 / 0 | 356 / 0 | 0 / 0 | 0 / 0 | 347 / 0 | 0 / 0 |
| L | 1641 | 937 / 0 | 356 / 0 | 0 / 0 | 0 / 0 | 347 / 0 | 0 / 0 |

BEARING MATERIAL TO BE SPF NO.2 OR BETTER AT JOINT(S) S, L

**BRACING**

TOP CHORD TO BE SHEATHED OR MAX. PURLIN SPACING = 3.25 FT.
MAX. UNBRACED BOTTOM CHORD LENGTH = 10.00 FT. OR RIGID CEILING DIRECTLY APPLIED.

ALL PITCH BREAKS AND PERIMETER CORNER JOINTS MUST BE LATERALLY RESTRAINED.

1 LATERAL BRACE(S) AT 1/ 2 LENGTH OF C-S, I-L.

END VERTICAL(S) MUST BE SHEATHED OR HAVE BRACES AS INDICATED IN THE MAX. UNBRACED LENGTH COLUMN OF THE TABLE BELOW

**LOADING**

TOTAL LOAD CASES: (4)

CHORDS

| MEMB. FR-TO | MAX. FORCE (LBS) | FACTORED VERT. LOAD LC1 (PLF) FROM | TO | MAX CSI (LC) | MAX. UNBRAC LENGTH |
|---|---|---|---|---|---|
| A- B | 0 / 26 | -84.3 | -84.3 | 0.11 (1) | 10.00 |
| B- C | 0 / 14 | -84.3 | -84.3 | 0.17 (1) | 10.00 |
| C- D | -2730 / 0 | -84.3 | -84.3 | 0.28 (1) | 3.97 |
| D- E | -3322 / 0 | -84.3 | -84.3 | 0.72 (1) | 3.25 |
| E- F | -3320 / 0 | -84.3 | -84.3 | 0.71 (1) | 3.25 |
| F- G | -3320 / 0 | -84.3 | -84.3 | 0.71 (1) | 3.25 |
| G- H | -3320 / 0 | -84.3 | -84.3 | 0.72 (1) | 3.25 |
| H- I | -2730 / 0 | -84.3 | -84.3 | 0.28 (1) | 3.97 |
| I- J | 0 / 14 | -84.3 | -84.3 | 0.17 (1) | 10.00 |
| J- K | 0 / 26 | -84.3 | -84.3 | 0.11 (1) | 10.00 |
| S- B | -249 / 0 | 0.0 | 0.0 | 0.02 (1) | 7.81 |
| L- J | -249 / 0 | 0.0 | 0.0 | 0.02 (1) | 7.81 |
| S- R | 0 / 2337 | -28.0 | -28.0 | 0.65 (2) | 10.00 |
| R- Q | 0 / 2430 | -28.0 | -28.0 | 0.67 (2) | 10.00 |
| Q- P | 0 / 2430 | -28.0 | -28.0 | 0.67 (2) | 10.00 |
| P- O | 0 / 3322 | -28.0 | -28.0 | 0.63 (1) | 10.00 |
| O- N | 0 / 2430 | -28.0 | -28.0 | 0.68 (2) | 10.00 |
| N- M | 0 / 2430 | -28.0 | -28.0 | 0.68 (2) | 10.00 |
| M- L | 0 / 2337 | -28.0 | -28.0 | 0.65 (2) | 10.00 |

WEBS

| MEMB. FR-TO | MAX. FORCE (LBS) | MAX CSI (LC) |
|---|---|---|
| C- R | 0 / 210 | 0.05 (3) |
| R- D | 0 / 288 | 0.06 (2) |
| D- P | 0 / 1135 | 0.26 (1) |
| P- E | -551 / 0 | 0.21 (1) |
| E- O | -2 / 0 | 0.00 (1) |
| O- G | -551 / 0 | 0.21 (1) |
| O- H | 0 / 1134 | 0.26 (1) |
| M- H | 0 / 288 | 0.06 (2) |
| M- I | 0 / 210 | 0.05 (3) |
| S- C | -2876 / 0 | 0.56 (1) |
| I- L | -2876 / 0 | 0.56 (1) |

**DESIGN CRITERIA**

SPECIFIED LOADS:

| | | | | |
|---|---|---|---|---|
| TOP CH. | LL | = | 25.6 | PSF |
| | DL | = | 3.0 | PSF |
| BOT CH. | LL | = | 10.5 | PSF |
| | DL | = | 7.0 | PSF |
| TOTAL LOAD | | = | 46.1 | PSF |

**SPACING = 24.0 IN. C/C**

LOADING IN FLAT SECTION BASED ON A SLOPE OF 6.00/12

THIS TRUSS IS DESIGNED FOR RESIDENTIAL OR SMALL BUILDING REQUIREMENTS OF PART 9, NBCC 2010

THIS DESIGN COMPLIES WITH:
- PART 9 OF OBC 2012 , BCBC 2012 , ABC 2014
- CSA 086-09
- TPIC 2011

(55 % OF 31.3 P.S.F. G.S.L. PLUS 8.4 P.S.F. RAIN LOAD) EQUALS 25.6 P.S.F. SPECIFIED ROOF LIVE LOAD

ALLOWABLE DEFL.(LL)= L/360 (1.13")
CALCULATED VERT. DEFL.(LL) = L/ 999 (0.24")
ALLOWABLE DEFL.(TL)= L/360 (1.13")
CALCULATED VERT. DEFL.(TL) = L/ 999 (0.40")

CSI: TC=0.72 (D-E:1) , BC=0.68 (M-O:2) , WB=0.56 (I-L:1) , SSI=0.24 (D-E:1)

DOL LUMBER=1.00 NAIL=1.00 LS BEND=1.10 COMP=1.10 SHEAR=1.10 TENS= 1.10

COMPANION LIVE LOAD FACTOR = 0.50

TRUSS PLATE MANUFACTURER IS NOT RESPONSIBLE FOR QUALITY CONTROL IN THE TRUSS MANUFACTURING PLANT .

NAIL VALUES

| PLATE | GRIP(DRY) (PSI) MAX | MIN | SHEAR (PLI) MAX | MIN | SECTION (PLI) MAX | MIN |
|---|---|---|---|---|---|---|
| MT20 | 618 | 354 | 1667 | 822 | 2284 | 1656 |

PLATE PLACEMENT TOL. = 0.250 inches

PLATE ROTATION TOL. = 5.0 Deg.

JSI GRIP= 0.69 (L) (INPUT = 0.90 )
JSI METAL= 0.72 (I) (INPUT = 1.00 )

LICENSED PROFESSIONAL ENGINEER
S. KATSOULAKOS
PROVINCE OF ONTARIO

DWG NO. TAM 42873 17

STRUCTURAL COMPONENT ONLY

| JOB NAME | TRUSS NAME | QUANTITY | PLY | JOB DESC. | DRWG NO. |
|---|---|---|---|---|---|
| 282690 | T17 | 1 | 1 | TRUSS DESC. | |

Tamarack Roof Truss, Burlington

Version 8.030 S Oct 5 2016 MiTek Industries, Inc. Thu Aug 24 16:34:11 2017 Page 1

ID:DZmtPBj_26xwKfmrz12lewykd1T-DniCnRTUJm7c5LJRhze7mg8qshALPZT1a284WpykbOw

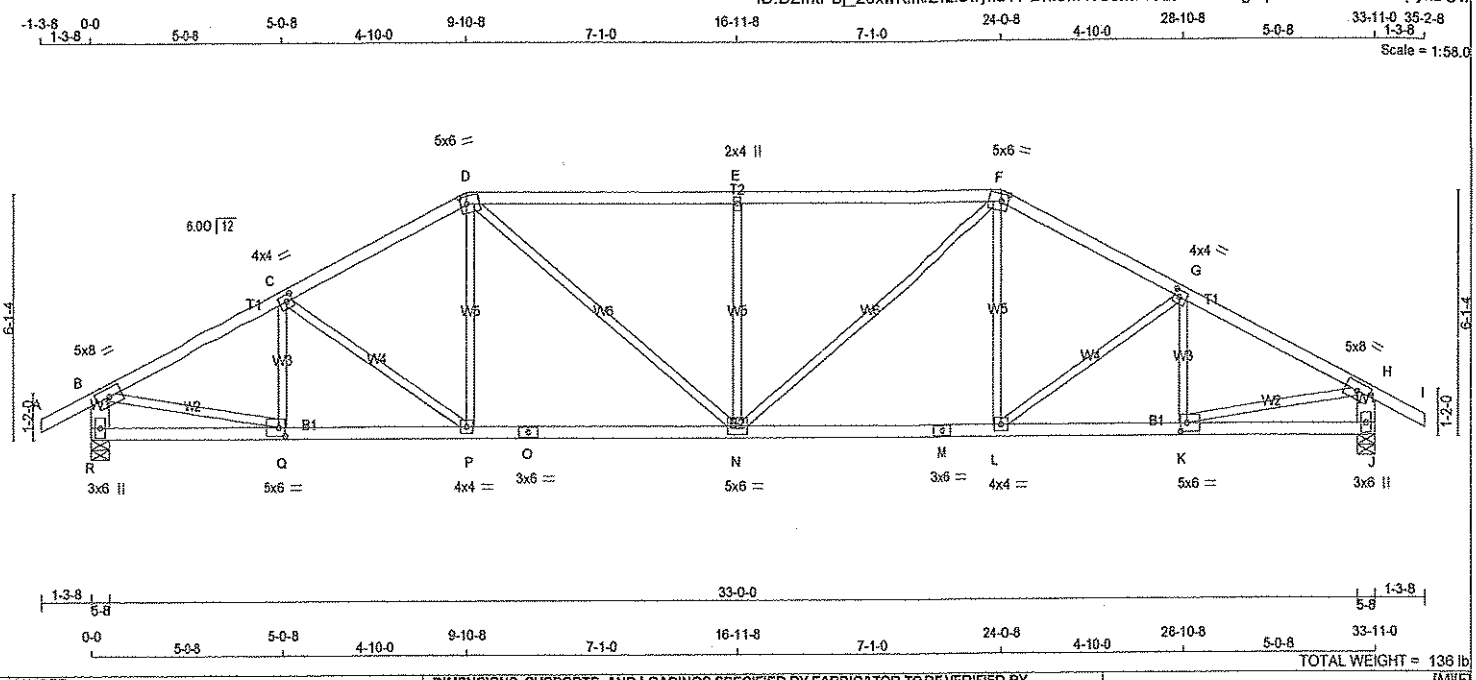


TOTAL WEIGHT = 136 lb

[M][F]

**LUMBER**

N. L. G. A. RULES

| CHORDS | SIZE | | LUMBER | DESCR. |
|---|---|---|---|---|
| A - D | 2x4 | DRY | No.2 | SPF |
| D - F | 2x4 | DRY | No.2 | SPF |
| F - I | 2x4 | DRY | No.2 | SPF |
| R - B | 2x6 | DRY | No.2 | SPF |
| J - H | 2x6 | DRY | No.2 | SPF |
| R - O | 2x4 | DRY | No.2 | SPF |
| O - M | 2x4 | DRY | No.2 | SPF |
| M - J | 2x4 | DRY | No.2 | SPF |
| ALL WEBS EXCEPT | 2x3 | DRY | No.2 | SPF |

DRY: SEASONED LUMBER.

**PLATES (table is in inches)**

| JT | TYPE | PLATES | W | LEN | Y | X |
|---|---|---|---|---|---|---|
| B | TMVW-t | MT20 | 5.0 | 8.0 | | |
| C | TMWW-t | MT20 | 4.0 | 4.0 | 2.00 | 1.75 |
| D | TTWW-m | MT20 | 5.0 | 6.0 | 2.25 | 2.00 |
| E | TMW+w | MT20 | 2.0 | 4.0 | | |
| F | TTWW-m | MT20 | 5.0 | 6.0 | 2.25 | 2.00 |
| G | TMWW-t | MT20 | 4.0 | 4.0 | 2.00 | 1.75 |
| H | TMVW-t | MT20 | 5.0 | 8.0 | | |
| J | BMV1+p | MT20 | 3.0 | 6.0 | | |
| K | BMWW-t | MT20 | 5.0 | 6.0 | 2.50 | 2.00 |
| L | BMWW-t | MT20 | 4.0 | 4.0 | | |
| M | BS-t | MT20 | 3.0 | 6.0 | | |
| N | BMWWW-t | MT20 | 5.0 | 6.0 | | |
| O | BS-t | MT20 | 3.0 | 6.0 | | |
| P | BMWW-t | MT20 | 4.0 | 4.0 | | |
| Q | BMWW-t | MT20 | 5.0 | 6.0 | 2.50 | 2.00 |
| R | BMV1+p | MT20 | 3.0 | 6.0 | | |

**DIMENSIONS, SUPPORTS AND LOADINGS SPECIFIED BY FABRICATOR TO BE VERIFIED BY BUILDING DESIGNER**

**BEARINGS**

| JT | FACTORED GROSS REACTION VERT | HORZ | MAXIMUM FACTORED GROSS REACTION DOWN | HORZ | UPLIFT | INPUT BRG IN-SX | REQRD BRG IN-SX |
|---|---|---|---|---|---|---|---|
| R | 2018 | 0 | 2018 | 0 | 0 | 5-8 | 5-8 |
| J | 2018 | 0 | 2018 | 0 | 0 | 5-8 | 5-8 |

**UNFACTORED REACTIONS**

| JT | 1ST LCASE COMBINED | MAX./MIN. COMPONENT REACTIONS SNOW | LIVE | PERM.LIVE | WIND | DEAD | SOIL |
|---|---|---|---|---|---|---|---|
| R | 1641 | 937 / 0 | 356 / 0 | 0 / 0 | 0 / 0 | 347 / 0 | 0 / 0 |
| J | 1641 | 937 / 0 | 356 / 0 | 0 / 0 | 0 / 0 | 347 / 0 | 0 / 0 |

BEARING MATERIAL TO BE SPF NO.2 OR BETTER AT JOINT(S) R, J

**BRACING**

TOP CHORD TO BE SHEATHED OR MAX. PURLIN SPACING = 3.34 FT.
MAX. UNBRACED BOTTOM CHORD LENGTH = 10.00 FT. OR RIGID CEILING DIRECTLY APPLIED.

ALL PITCH BREAKS AND PERIMETER CORNER JOINTS MUST BE LATERALLY RESTRAINED.

**LOADING**

TOTAL LOAD CASES: (4)

CHORDS

| MEMB. FR-TO | MAX. FACTORED FORCE (LBS) | FACTORED VERT. LOAD LC1 (PLF) FROM | TO | MAX CSI (LC) | MAX. UNBRAC LENGTH |
|---|---|---|---|---|---|
| A- B | 0 / 26 | -84.3 | -84.3 | 0.11 (1) | 10.00 |
| B- C | -2770 / 0 | -84.3 | -84.3 | 0.37 (1) | 3.88 |
| C- D | -2603 / 0 | -84.3 | -84.3 | 0.34 (1) | 4.00 |
| D- E | -2883 / 0 | -84.3 | -84.3 | 0.73 (1) | 3.34 |
| E- F | -2883 / 0 | -84.3 | -84.3 | 0.73 (1) | 3.34 |
| F- G | -2603 / 0 | -84.3 | -84.3 | 0.34 (1) | 4.00 |
| G- H | -2770 / 0 | -84.3 | -84.3 | 0.37 (1) | 3.88 |
| H- I | 0 / 26 | -84.3 | -84.3 | 0.11 (1) | 10.00 |
| R- B | -1954 / 0 | 0.0 | 0.0 | 0.13 (1) | 7.20 |
| J- H | -1954 / 0 | 0.0 | 0.0 | 0.13 (1) | 7.20 |
| R- Q | 0 / 0 | -28.0 | -28.0 | 0.15 (2) | 10.00 |
| Q- P | 0 / 2496 | -28.0 | -28.0 | 0.52 (1) | 10.00 |
| P- O | 0 / 2313 | -28.0 | -28.0 | 0.56 (2) | 10.00 |
| O- N | 0 / 2313 | -28.0 | -28.0 | 0.56 (2) | 10.00 |
| N- M | 0 / 2313 | -28.0 | -28.0 | 0.56 (2) | 10.00 |
| M- L | 0 / 2313 | -28.0 | -28.0 | 0.56 (2) | 10.00 |
| L- K | 0 / 2496 | -28.0 | -28.0 | 0.52 (1) | 10.00 |
| K- J | 0 / 0 | -28.0 | -28.0 | 0.15 (2) | 10.00 |

WEBS

| MEMB. FR-TO | MAX. FACTORED FORCE (LBS) | MAX CSI (LC) |
|---|---|---|
| Q- C | -289 / 42 | 0.06 (1) |
| C- P | -228 / 0 | 0.14 (1) |
| P- D | 0 / 376 | 0.08 (2) |
| D- N | 0 / 738 | 0.17 (1) |
| N- E | -734 / 0 | 0.43 (1) |
| N- F | 0 / 738 | 0.17 (1) |
| L- F | 0 / 376 | 0.08 (2) |
| L- G | -228 / 0 | 0.14 (1) |
| K- G | -289 / 42 | 0.06 (1) |
| B- Q | 0 / 2532 | 0.57 (1) |
| K- H | 0 / 2532 | 0.57 (1) |

**DESIGN CRITERIA**

SPECIFIED LOADS:

| | | | | |
|---|---|---|---|---|
| TOP CH. | LL | = | 25.6 | PSF |
| | DL | = | 3.0 | PSF |
| BOT CH. | LL | = | 10.5 | PSF |
| | DL | = | 7.0 | PSF |
| TOTAL LOAD | | = | 46.1 | PSF |

**SPACING = 24.0 IN. C/C**

LOADING IN FLAT SECTION BASED ON A SLOPE OF 6.00/12

THIS TRUSS IS DESIGNED FOR RESIDENTIAL OR SMALL BUILDING REQUIREMENTS OF PART 9, NBCC 2010

THIS DESIGN COMPLIES WITH:
- PART 9 OF OBC 2012 , BCBC 2012 , ABC 2014
- CSA 086-09
- TPIC 2011

(55 % OF 31.3 P.S.F. G.S.L. PLUS 8.4 P.S.F. RAIN LOAD) EQUALS 25.6 P.S.F. SPECIFIED ROOF LIVE LOAD

ALLOWABLE DEFL.(LL)= L/360 (1.13")
CALCULATED VERT. DEFL.(LL) = L/ 999 (0.19")
ALLOWABLE DEFL.(TL)= L/360 (1.13")
CALCULATED VERT. DEFL.(TL) = L/ 999 (0.32")

CSI: TC=0.73 (D-E:1) , BC=0.56 (L-N:2) , WB=0.57 (H-K:1) , SSI=0.29 (D-E:1)

DOL LUMBER=1.00 NAIL=1.00 LS BEND=1.10 COMP=1.10 SHEAR=1.10 TENS= 1.10

COMPANION LIVE LOAD FACTOR = 0.50

AUTOSOLVE HEELS OFF

TRUSS PLATE MANUFACTURER IS NOT RESPONSIBLE FOR QUALITY CONTROL IN THE TRUSS MANUFACTURING PLANT .

NAIL VALUES

| PLATE | GRIP(DRY) (PSI) MAX | MIN | SHEAR (PLI) MAX | MIN | SECTION (PLI) MAX | MIN |
|---|---|---|---|---|---|---|
| MT20 | 618 | 354 | 1667 | 822 | 2284 | 1656 |

PLATE PLACEMENT TOL. = 0.250 inches

PLATE ROTATION TOL. = 5.0 Deg.

JSI GRIP= 0.90 (D) (INPUT = 0.90 )
JSI METAL= 0.62 (K) (INPUT = 1.00 )

LICENSED PROFESSIONAL ENGINEER
S. KATSOULAKOS
PROVINCE OF ONTARIO

DWG NO. TAM 42817

STRUCTURAL COMPONENT ONLY

| JOB NAME | TRUSS NAME | QUANTITY | PLY | JOB DESC. | DRWG NO. |
|---|---|---|---|---|---|
| 282690 | T18 | 1 | 1 | TRUSS DESC. | |

Tamarack Roof Truss, Burlington

Version 8.030 S Oct 5 2016 MiTek Industries, Inc. Thu Aug 24 16:34:11 2017 Page 1
ID:DZmtPBj_26xwKfmrz12lewykd1T-DniCnRTUJm7c5LJRhze7mg8tshAtPYK1a284WpykbOw

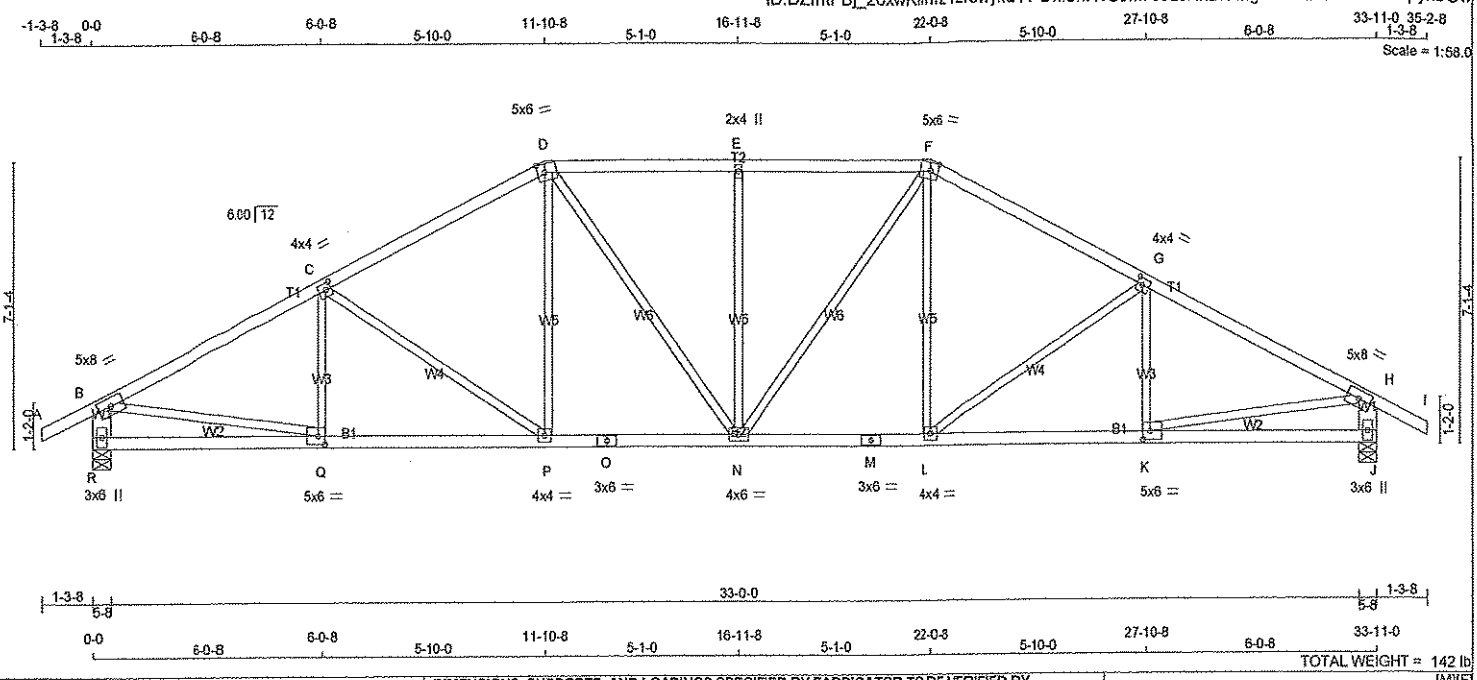





TOTAL WEIGHT = 142 lb

[M][F]

**LUMBER**

N. L. G. A. RULES

| CHORDS | SIZE | | LUMBER | DESCR. |
|---|---|---|---|---|
| A - D | 2x4 | DRY | No.2 | SPF |
| D - F | 2x4 | DRY | No.2 | SPF |
| F - I | 2x4 | DRY | No.2 | SPF |
| R - B | 2x6 | DRY | No.2 | SPF |
| J - H | 2x6 | DRY | No.2 | SPF |
| R - O | 2x4 | DRY | No.2 | SPF |
| O - M | 2x4 | DRY | No.2 | SPF |
| M - J | 2x4 | DRY | No.2 | SPF |
| ALL WEBS EXCEPT | 2x3 | DRY | No.2 | SPF |

DRY: SEASONED LUMBER.

**PLATES (table is in inches)**

| JT | TYPE | PLATES | W | LEN | Y | X |
|---|---|---|---|---|---|---|
| B | TMVW-t | MT20 | 5.0 | 8.0 | | |
| C | TMWW-t | MT20 | 4.0 | 4.0 | 2.00 | 1.75 |
| D | TTWW-m | MT20 | 5.0 | 6.0 | 2.50 | 2.25 |
| E | TMW+w | MT20 | 2.0 | 4.0 | | |
| F | TTWW-m | MT20 | 5.0 | 6.0 | 2.50 | 2.25 |
| G | TMWW-t | MT20 | 4.0 | 4.0 | 2.00 | 1.75 |
| H | TMVW-t | MT20 | 5.0 | 8.0 | | |
| J | BMV1+p | MT20 | 3.0 | 6.0 | | |
| K | BMWW-t | MT20 | 5.0 | 6.0 | 2.50 | 2.25 |
| L | BMWW-t | MT20 | 4.0 | 4.0 | | |
| M | BS-t | MT20 | 3.0 | 6.0 | | |
| N | BMWWW-t | MT20 | 4.0 | 6.0 | | |
| O | BS-t | MT20 | 3.0 | 6.0 | | |
| P | BMWW-t | MT20 | 4.0 | 4.0 | | |
| Q | BMWW-t | MT20 | 5.0 | 6.0 | 2.50 | 2.25 |
| R | BMV1+p | MT20 | 3.0 | 6.0 | | |

**DIMENSIONS, SUPPORTS AND LOADINGS SPECIFIED BY FABRICATOR TO BE VERIFIED BY BUILDING DESIGNER**

**BEARINGS**

| JT | FACTORED GROSS REACTION VERT | HORZ | MAXIMUM FACTORED GROSS REACTION DOWN | HORZ | UPLIFT | INPUT BRG IN-SX | REQRD BRG IN-SX |
|---|---|---|---|---|---|---|---|
| R | 2018 | 0 | 2018 | 0 | 0 | 5-8 | 5-8 |
| J | 2018 | 0 | 2018 | 0 | 0 | 5-8 | 5-8 |

**UNFACTORED REACTIONS**

| JT | 1ST LCASE COMBINED | MAX./MIN. COMPONENT REACTIONS SNOW | LIVE | PERM.LIVE | WIND | DEAD | SOIL |
|---|---|---|---|---|---|---|---|
| R | 1641 | 937 / 0 | 356 / 0 | 0 / 0 | 0 / 0 | 347 / 0 | 0 / 0 |
| J | 1641 | 937 / 0 | 356 / 0 | 0 / 0 | 0 / 0 | 347 / 0 | 0 / 0 |

BEARING MATERIAL TO BE SPF NO.2 OR BETTER AT JOINT(S) R, J

**BRACING**

TOP CHORD TO BE SHEATHED OR MAX. PURLIN SPACING = 3.67 FT.
MAX. UNBRACED BOTTOM CHORD LENGTH = 10.00 FT. OR RIGID CEILING DIRECTLY APPLIED.

ALL PITCH BREAKS AND PERIMETER CORNER JOINTS MUST BE LATERALLY RESTRAINED.

**LOADING**

TOTAL LOAD CASES: (4)

CHORDS

| MEMB. FR-TO | MAX. FACTORED FORCE (LBS) | FACTORED VERT. LOAD LC1 (PLF) FROM | TO | MAX CSI (LC) | MAX. UNBRAC LENGTH |
|---|---|---|---|---|---|
| A- B | 0 / 26 | -84.3 | -84.3 | 0.11 (1) | 10.00 |
| B- C | -2821 / 0 | -84.3 | -84.3 | 0.54 (1) | 3.67 |
| C- D | -2448 / 0 | -84.3 | -84.3 | 0.48 (1) | 3.96 |
| D- E | -2413 / 0 | -84.3 | -84.3 | 0.35 (1) | 4.11 |
| E- F | -2413 / 0 | -84.3 | -84.3 | 0.35 (1) | 4.11 |
| F- G | -2448 / 0 | -84.3 | -84.3 | 0.48 (1) | 3.96 |
| G- H | -2821 / 0 | -84.3 | -84.3 | 0.54 (1) | 3.67 |
| H- I | 0 / 26 | -84.3 | -84.3 | 0.11 (1) | 10.00 |
| R- B | -1947 / 0 | 0.0 | 0.0 | 0.13 (1) | 7.22 |
| J- H | -1947 / 0 | 0.0 | 0.0 | 0.13 (1) | 7.22 |
| R- Q | 0 / 0 | -28.0 | -28.0 | 0.24 (3) | 10.00 |
| Q- P | 0 / 2546 | -28.0 | -28.0 | 0.53 (2) | 10.00 |
| P- O | 0 / 2170 | -28.0 | -28.0 | 0.44 (1) | 10.00 |
| O- N | 0 / 2170 | -28.0 | -28.0 | 0.44 (1) | 10.00 |
| N- M | 0 / 2170 | -28.0 | -28.0 | 0.44 (1) | 10.00 |
| M- L | 0 / 2170 | -28.0 | -28.0 | 0.44 (1) | 10.00 |
| L- K | 0 / 2546 | -28.0 | -28.0 | 0.53 (2) | 10.00 |
| K- J | 0 / 0 | -28.0 | -28.0 | 0.24 (3) | 10.00 |

WEBS

| MEMB. FR-TO | MAX. FACTORED FORCE (LBS) | MAX CSI (LC) |
|---|---|---|
| O- C | -179 / 152 | 0.05 (1) |
| C- P | -456 / 0 | 0.44 (1) |
| P- D | 0 / 438 | 0.10 (2) |
| D- N | 0 / 406 | 0.09 (1) |
| N- E | -521 / 0 | 0.46 (1) |
| N- F | 0 / 406 | 0.09 (1) |
| L- F | 0 / 438 | 0.10 (2) |
| L- G | -456 / 0 | 0.44 (1) |
| K- G | -179 / 152 | 0.05 (1) |
| B- Q | 0 / 2572 | 0.58 (1) |
| K- H | 0 / 2572 | 0.58 (1) |

**DESIGN CRITERIA**

SPECIFIED LOADS:

| | | | | |
|---|---|---|---|---|
| TOP CH. | LL | = | 25.6 | PSF |
| | DL | = | 3.0 | PSF |
| BOT CH. | LL | = | 10.5 | PSF |
| | DL | = | 7.0 | PSF |
| TOTAL LOAD | | = | 46.1 | PSF |

**SPACING = 24.0 IN. C/C**

LOADING IN FLAT SECTION BASED ON A SLOPE OF 6.00/12

THIS TRUSS IS DESIGNED FOR RESIDENTIAL OR SMALL BUILDING REQUIREMENTS OF PART 9, NBCC 2010

THIS DESIGN COMPLIES WITH:
- PART 9 OF OBC 2012 , BCBC 2012 , ABC 2014
- CSA 086-09
- TPIC 2011

(55 % OF 31.3 P.S.F. G.S.L. PLUS 8.4 P.S.F. RAIN LOAD) EQUALS 25.6 P.S.F. SPECIFIED ROOF LIVE LOAD

ALLOWABLE DEFL.(LL)= L/360 (1.13")
CALCULATED VERT. DEFL.(LL) = L/ 999 (0.16")
ALLOWABLE DEFL.(TL)= L/360 (1.13")
CALCULATED VERT. DEFL.(TL) = L/ 999 (0.26")

CSI: TC=0.54 (G-H:1) , BC=0.53 (P-Q:2) , WB=0.58 (B-Q:1) , SSI=0.22 (G-H:1)

DOL LUMBER=1.00 NAIL=1.00 LS BEND=1.10 COMP=1.10 SHEAR=1.10 TENS= 1.10

COMPANION LIVE LOAD FACTOR = 0.50

AUTOSOLVE HEELS OFF

TRUSS PLATE MANUFACTURER IS NOT RESPONSIBLE FOR QUALITY CONTROL IN THE TRUSS MANUFACTURING PLANT .

NAIL VALUES

| PLATE | GRIP(DRY) (PSI) MAX | MIN | SHEAR (PLI) MAX | MIN | SECTION (PLI) MAX | MIN |
|---|---|---|---|---|---|---|
| MT20 | 618 | 354 | 1667 | 822 | 2284 | 1656 |

PLATE PLACEMENT TOL. = 0.250 inches

PLATE ROTATION TOL. = 5.0 Deg.

JSI GRIP= 0.89 (K) (INPUT = 0.90 )
JSI METAL= 0.64 (Q) (INPUT = 1.00 )

LICENSED PROFESSIONAL ENGINEER
S. KATSOULAKOS
PROVINCE OF ONTARIO

DWG NO. TAM 42825-17
STRUCTURAL
COMPONENT ONLY

| JOB NAME | TRUSS NAME | QUANTITY | PLY | JOB DESC. | DRWG NO. |
|---|---|---|---|---|---|
| 282690 | T19 | 1 | 3 | TRUSS DESC. | |

Tamarack Roof Truss, Burlington

Version 8.030 S Oct 5 2016 MiTek Industries, Inc. Thu Aug 24 16:34:12 2017 Page 1

ID:DZmtPBj_26xwKfmrz12lewykd1T-h_Ga_mU644FTiVudFg9Mluh5g5SVW8yiBpitd2FykbOv

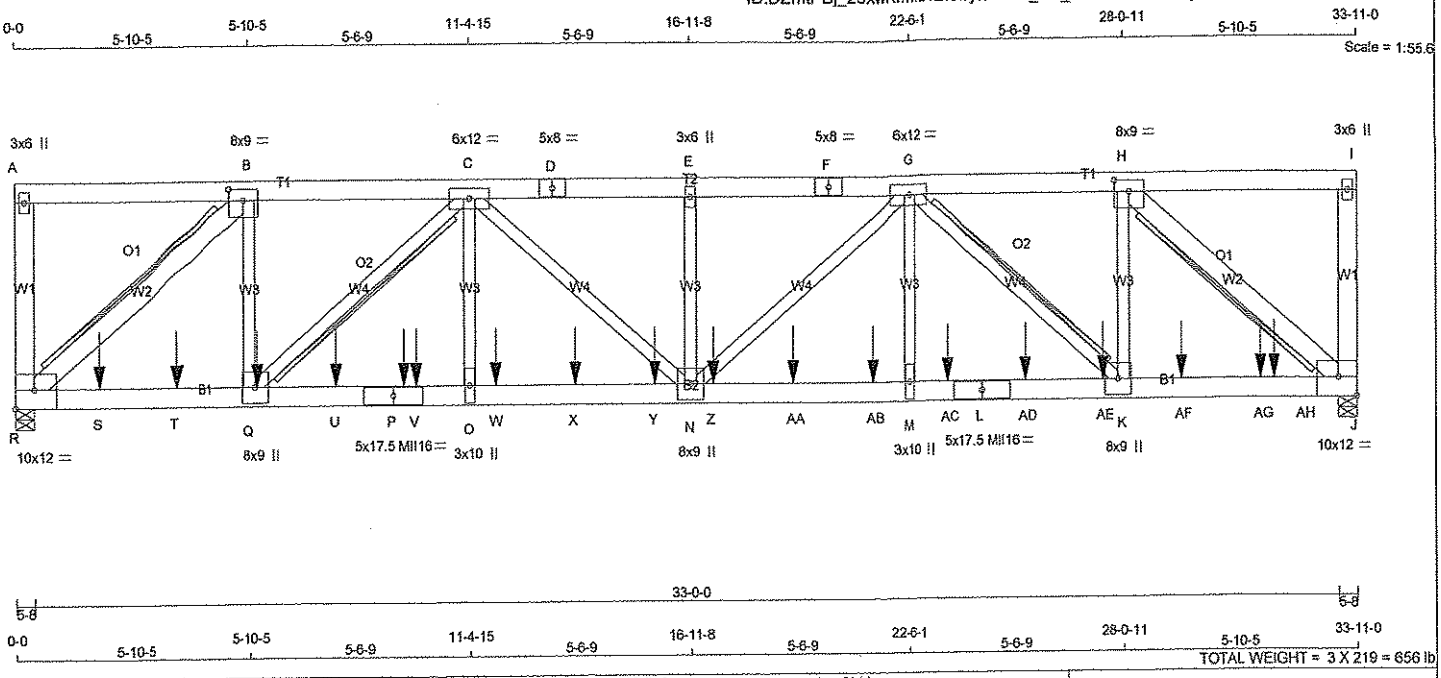


TOTAL WEIGHT = 3 X 219 = 656 lb

**LUMBER**

N. L. G. A. RULES

| CHORDS | SIZE | | LUMBER | DESCR. |
|---|---|---|---|---|
| R - A | 2x6 | DRY | No.2 | SPF |
| A - D | 2x6 | DRY | 2100F 1.8E | SPF |
| D - F | 2x6 | DRY | 2100F 1.8E | SPF |
| F - I | 2x6 | DRY | 2100F 1.8E | SPF |
| J - I | 2x6 | DRY | No.2 | SPF |
| R - P | 2x6 | DRY | 2100F 1.8E | SPF |
| P - L | 2x6 | DRY | 2100F 1.8E | SPF |
| L - J | 2x6 | DRY | 2100F 1.8E | SPF |
| ALL WEBS EXCEPT | 2x4 | DRY | No.2 | SPF |
| R - B | 2x6 | DRY | No.2 | SPF |
| H - J | 2x6 | DRY | No.2 | SPF |

DRY: SEASONED LUMBER.

DESIGN CONSISTS OF 3 TRUSSES BUILT SEPARATELY THEN FASTENED TOGETHER AS FOLLOWS:

| CHORDS | #ROWS | SURFACE SPACING (IN) | LOAD(PLF) |
|---|---|---|---|
| TOP CHORDS : (0.122"X3") SPIRAL NAILS | | | |
| R- A | 2 | 12 | TOP |
| A- D | 2 | 12 | TOP |
| D- F | 2 | 12 | TOP |
| F- I | 2 | 12 | TOP |
| I- J | 2 | 12 | TOP |
| BOTTOM CHORDS : (0.122"X3") SPIRAL NAILS | | | |
| R- P | 2 | 7 | SIDE(602.2) |
| P- L | 2 | 7 | SIDE(846.8) |
| L- J | 2 | 7 | SIDE(556.4) |
| WEBS : (0.122"X3") SPIRAL NAILS | | | |
| 2x4 | 1 | 6 | |
| 2x6 | 2 | 6 | |

STAGGER NAILS BY HALF THE SURFACE SPACING IN ADJACENT PLIES.

GIRDER NAILING ASSUMES NAILED HANGERS ARE FASTENED WITH MIN. 3-0 INCH NAILS.

TOP - COMPONENTS ARE LOADED FROM THE TOP AND MUST BE PLACED ON TOP EDGE OF ALL PLIES FOR THE LOAD TO BE TRANSFERRED TO EACH PLY.

SIDE - PLF SHOWN IS THE EQUIVALENT UDL APPLIED TO ONE SIDE THAT THE CORRESPONDING NAILING PATTERN SHALL BE CAPABLE OF TRANSFERING. REMAINING PLF MUST BE APPLIED ON THE OPPOSITE SIDE OR ON THE TOP.

**PLATES (table is in inches)**

| JT | TYPE | PLATES | W | LEN | Y | X |
|---|---|---|---|---|---|---|
| A | TMV+p | MT20 | 3.0 | 6.0 | | |
| B | TMWW-t | MT20 | 8.0 | 9.0 | 3.25 | 4.50 |
| C | TMWWW-t | MT20 | 6.0 | 12.0 | | |
| D | TS-t | MT20 | 5.0 | 8.0 | | |
| E | TMW+w | MT20 | 3.0 | 6.0 | | |
| F | TS-t | MT20 | 5.0 | 8.0 | | |
| G | TMWWW-t | MT20 | 6.0 | 12.0 | | |
| H | TMWW-t | MT20 | 8.0 | 9.0 | 3.25 | 4.50 |
| I | TMV+p | MT20 | 3.0 | 6.0 | | |
| J | BMVW1-t | MT20 | 10.0 | 12.0 | Edge | 5.50 |
| K | BMWW+t | MT20 | 8.0 | 9.0 | | |
| L | BS-t | MII16 | 5.0 | 17.5 | | |
| M | BMW+w | MT20 | 3.0 | 10.0 | | |
| N | BMWWW+t | MT20 | 8.0 | 9.0 | | |

**DIMENSIONS, SUPPORTS AND LOADINGS SPECIFIED BY FABRICATOR TO BE VERIFIED BY BUILDING DESIGNER**

**BEARINGS**

| JT | FACTORED GROSS REACTION VERT | HORZ | MAXIMUM FACTORED GROSS REACTION DOWN | HORZ | UPLIFT | INPUT BRG IN-SX | REQRD BRG IN-SX |
|---|---|---|---|---|---|---|---|
| R | 15877 | 0 | 15877 | 0 | 0 | 5-8 | 5-8 |
| J | 15611 | 0 | 15611 | 0 | 0 | 5-8 | 5-8 |

**UNFACTORED REACTIONS**

| JT | 1ST LCASE COMBINED | MAX /MIN. COMPONENT REACTIONS SNOW | LIVE | PERM.LIVE | WIND | DEAD | SOIL |
|---|---|---|---|---|---|---|---|
| R | 12930 | 7350 / 0 | 2830 / 0 | 0 / 0 | 0 / 0 | 2749 / 0 | 0 / 0 |
| J | 12708 | 7233 / 0 | 2777 / 0 | 0 / 0 | 0 / 0 | 2699 / 0 | 0 / 0 |

BEARING MATERIAL TO BE SPF NO.2 OR BETTER AT JOINT(S) R, J

**BRACING**

TOP CHORD TO BE SHEATHED OR MAX. PURLIN SPACING = 3.45 FT.
MAX. UNBRACED BOTTOM CHORD LENGTH = 10.00 FT. OR RIGID CEILING DIRECTLY APPLIED.

ALL PITCH BREAKS AND PERIMETER CORNER JOINTS MUST BE LATERALLY RESTRAINED.

2x8 DRY SPF No.2 T-BRACE AT B-R, H-J
2x6 DRY SPF No.2 T-BRACE AT G-K, C-Q

FASTEN T AND I-BRACES TO NARROW EDGE OF WEB WITH ONE ROW PER PLY OF 3" COMMON WIRE NAILS @ 6" O.C. WITH 3" MINIMUM END DISTANCE. BRACE MUST COVER 90% OF WEB LENGTH.

END VERTICAL(S) MUST BE SHEATHED OR HAVE BRACES AS INDICATED IN THE MAX. UNBRACED LENGTH COLUMN OF THE TABLE BELOW

**LOADING**

TOTAL LOAD CASES: (4)

CHORDS

| MEMB. FR-TO | MAX. FACTORED FORCE (LBS) | FACTORED VERT. LOAD LC1 (PLF) FROM | TO | MAX CSI (LC) | MAX. UNBRAC LENGTH |
|---|---|---|---|---|---|
| R- A | -194 / 0 | 0.0 | 0.0 | 0.02 (1) | 7.81 |
| A- B | 0 / 0 | -84.3 | -84.3 | 0.04 (1) | 10.00 |
| B- C | -17479 / 0 | -84.3 | -84.3 | 0.13 (1) | 4.43 |
| C- D | -29576 / 0 | -84.3 | -84.3 | 0.28 (1) | 3.45 |
| D- E | -29576 / 0 | -84.3 | -84.3 | 0.28 (1) | 3.45 |
| E- F | -29576 / 0 | -84.3 | -84.3 | 0.27 (1) | 3.45 |
| F- G | -29576 / 0 | -84.3 | -84.3 | 0.27 (1) | 3.45 |
| G- H | -16913 / 0 | -84.3 | -84.3 | 0.12 (1) | 4.50 |
| H- I | 0 / 0 | -84.3 | -84.3 | 0.04 (1) | 10.00 |
| J- I | -196 / 0 | 0.0 | 0.0 | 0.02 (1) | 7.81 |
| R- S | 0 / 17479 | -28.0 | -28.0 | 0.61 (1) | 10.00 |
| S- T | 0 / 17479 | -28.0 | -28.0 | 0.61 (1) | 10.00 |
| T- Q | 0 / 17479 | -28.0 | -28.0 | 0.61 (1) | 10.00 |
| Q- U | 0 / 26813 | -28.0 | -28.0 | 0.76 (1) | 10.00 |
| U- P | 0 / 26813 | -28.0 | -28.0 | 0.76 (1) | 10.00 |
| P- V | 0 / 26813 | -28.0 | -28.0 | 0.76 (1) | 10.00 |
| V- O | 0 / 26813 | -28.0 | -28.0 | 0.76 (1) | 10.00 |
| O- W | 0 / 26813 | -28.0 | -28.0 | 0.70 (1) | 10.00 |
| W- X | 0 / 26813 | -28.0 | -28.0 | 0.70 (1) | 10.00 |
| X- Y | 0 / 26813 | -28.0 | -28.0 | 0.70 (1) | 10.00 |
| Y- N | 0 / 26813 | -28.0 | -28.0 | 0.70 (1) | 10.00 |
| N- Z | 0 / 25892 | -28.0 | -28.0 | 0.66 (1) | 10.00 |
| Z-AA | 0 / 25892 | -28.0 | -28.0 | 0.66 (1) | 10.00 |
| AA-AB | 0 / 25892 | -28.0 | -28.0 | 0.66 (1) | 10.00 |
| AB- M | 0 / 25892 | -28.0 | -28.0 | 0.66 (1) | 10.00 |
| M-AC | 0 / 25892 | -28.0 | -28.0 | 0.76 (1) | 10.00 |
| AC- L | 0 / 25892 | -28.0 | -28.0 | 0.76 (1) | 10.00 |
| L-AD | 0 / 25892 | -28.0 | -28.0 | 0.76 (1) | 10.00 |

WEBS

| MEMB. FR-TO | MAX. FACTORED FORCE (LBS) | MAX CSI (LC) |
|---|---|---|
| R- B | -22775 / 0 | 0.76 (1) |
| H- J | -22037 / 0 | 0.73 (1) |
| G- K | -11975 / 0 | 0.79 (1) |
| K- H | 0 / 13493 | 0.72 (1) |
| Q- B | 0 / 13953 | 0.75 (1) |
| Q- C | -12448 / 0 | 0.83 (1) |
| M- G | 0 / 4353 | 0.23 (1) |
| O- C | 0 / 5498 | 0.29 (1) |
| N- G | 0 / 4912 | 0.26 (1) |
| C- N | 0 / 3684 | 0.20 (1) |
| N- E | -566 / 0 | 0.05 (1) |

LICENSED PROFESSIONAL ENGINEER
S. KATSOULAKOS
PROVINCE OF ONTARIO

**DESIGN CRITERIA**

SPECIFIED LOADS:

| | | | | |
|---|---|---|---|---|
| TOP CH. | LL | = | 25.6 | PSF |
| | DL | = | 3.0 | PSF |
| BOT CH. | LL | = | 10.5 | PSF |
| | DL | = | 7.0 | PSF |
| TOTAL LOAD | | = | 46.1 | PSF |

**SPACING = 24.0 IN. C/C**

LOADING IN FLAT SECTION BASED ON A SLOPE OF 6.00/12

THIS TRUSS IS DESIGNED FOR RESIDENTIAL OR SMALL BUILDING REQUIREMENTS OF PART 9, NBCC 2010

THIS DESIGN COMPLIES WITH:
- PART 9 OF OBC 2012 , BCBC 2012 , ABC 2014
- CSA 086-09
- TPIC 2011

(55 % OF 31.3 P.S.F. G.S.L. PLUS 8.4 P.S.F. RAIN LOAD) EQUALS 25.6 P.S.F. SPECIFIED ROOF LIVE LOAD

ALLOWABLE DEFL.(LL)= L/360 (1.13")
CALCULATED VERT. DEFL.(LL) = L/ 999 (0.36")
ALLOWABLE DEFL.(TL)= L/360 (1.13")
CALCULATED VERT. DEFL.(TL) = L/ 704 (0.58")

CSI: TC=0.28 (C-E:1) , BC=0.76 (K-M:1) , WB=0.83 (C-Q:1) , SSI=0.59 (K-M:1)

DOL LUMBER=1.00 NAIL=1.00 LS BEND=1.10 COMP=1.10 SHEAR=1.10 TENS= 1.10

COMPANION LIVE LOAD FACTOR = 0.50

TRUSS PLATE MANUFACTURER IS NOT RESPONSIBLE FOR QUALITY CONTROL IN THE TRUSS MANUFACTURING PLANT .

NAIL VALUES

| PLATE | GRIP(DRY) (PSI) MAX | MIN | SHEAR (PLI) MAX | MIN | SECTION (PLI) MAX | MIN |
|---|---|---|---|---|---|---|
| MT20 | 618 | 354 | 1667 | 822 | 2284 | 1656 |
| MII16 | 473 | 276 | 2341 | 1245 | 4454 | 1656 |

PLATE PLACEMENT TOL. = 0.250 inches

PLATE ROTATION TOL. = 5.0 Deg.

JSI GRIP= 0.87 (H) (INPUT = 0.90 )
JSI METAL= 0.99 (P) (INPUT = 1.00 )

DWG NO. TAM 42876 17
STRUCTURAL
COMPONENT ONLY

CONTINUED ON PAGE 2

| JOB NAME | TRUSS NAME | QUANTITY | PLY | JOB DESC. | DRWG NO. |
|---|---|---|---|---|---|
| 282690 | T19 | 1 | 3 | TRUSS DESC. | |



**PLATES (table is in inches)**

| JT | TYPE | PLATES | W | LEN | Y | X |
|---|---|---|---|---|---|---|
| O | BMW+w | MT20 | 3.0 | 10.0 | | |
| P | BS-t | Mll16 | 5.0 | 17.5 | | |
| Q | BMWW+t | MT20 | 8.0 | 9.0 | | |
| R | BMVW1-t | MT20 | 10.0 | 12.0 | Edge | 5.50 |

Edge - INDICATES REFERENCE CORNER OF PLATE TOUCHES EDGE OF CHORD.

**HANGERS NOTES**

1) SPECIAL HANGER(S) OR CONNECTION(S) REQUIRED TO SUPPORT CONCENTRATED LOAD(S) 1538.9 lbs FACTORED DOWN AT 2-0-12, 1538.9 lbs FACTORED DOWN AT 4-0-12, 1538.9 lbs FACTORED DOWN AT 6-0-12, 1538.9 lbs FACTORED DOWN AT 8-0-12, 1538.9 lbs FACTORED DOWN AT 9-9-4, 1623.1 lbs FACTORED DOWN AT 10-0-12, 1623.1 lbs FACTORED DOWN AT 12-0-12, 1623.1 lbs FACTORED DOWN AT 14-0-12, 1623.1 lbs FACTORED DOWN AT 16-0-12, 1623.1 lbs FACTORED DOWN AT 17-6-4, 1623.1 lbs FACTORED DOWN AT 19-6-4, 1623.1 lbs FACTORED DOWN AT 21-6-4, 1623.1 lbs FACTORED DOWN AT 23-6-4, 1623.1 lbs FACTORED DOWN AT 25-6-4, 1623.1 lbs FACTORED DOWN AT 27-6-4, 1623.1 lbs FACTORED DOWN AT 29-6-4, AND 1623.1 lbs FACTORED DOWN AT 31-6-4, AND 509.9 lbs FACTORED DOWN AT 31-10-4 ON BOTTOM CHORD. DESIGN FOR UNSPECIFIED CONNECTION(S) IS DELEGATED TO THE BUILDING DESIGNER.

**LOADING**

TOTAL LOAD CASES: (4)

CHORDS

| MEMB. FR-TO | MAX. FACTORED FORCE (LBS) | FACTORED VERT. LOAD LC1 (PLF) FROM | TO | MAX CSI (LC) | MAX. UNBRAC LENGTH |
|---|---|---|---|---|---|
| AD-AE | 0 / 25892 | -28.0 | -28.0 | 0.76 (1) | 10.00 |
| AE- K | 0 / 25892 | -28.0 | -28.0 | 0.76 (1) | 10.00 |
| K-AF | 0 / 16913 | -28.0 | -28.0 | 0.62 (1) | 10.00 |
| AF-AG | 0 / 16913 | -28.0 | -28.0 | 0.62 (1) | 10.00 |
| AG-AH | 0 / 16913 | -28.0 | -28.0 | 0.62 (1) | 10.00 |
| AH- J | 0 / 16913 | -28.0 | -28.0 | 0.62 (1) | 10.00 |

WEBS

| MEMB. FR-TO | MAX. FACTORED FORCE (LBS) | MAX CSI (LC) |
|---|---|---|

FACTORED CONCENTRATED LOADS (LBS)

| JT | LOC. | LC1 | MAX- | MAX+ | FACE | DIR. | TYPE |
|---|---|---|---|---|---|---|---|
| P | 9-9-4 | -1539 | -1539 | --- | BACK | VERT | TOTAL |
| Q | 6-0-12 | -1539 | -1539 | --- | BACK | VERT | TOTAL |
| S | 2-0-12 | -1539 | -1539 | --- | BACK | VERT | TOTAL |
| T | 4-0-12 | -1539 | -1539 | --- | BACK | VERT | TOTAL |
| U | 8-0-12 | -1539 | -1539 | --- | BACK | VERT | TOTAL |
| V | 10-0-12 | -1623 | -1623 | --- | BACK | VERT | TOTAL |
| W | 12-0-12 | -1623 | -1623 | --- | BACK | VERT | TOTAL |
| X | 14-0-12 | -1623 | -1623 | --- | BACK | VERT | TOTAL |
| Y | 16-0-12 | -1623 | -1623 | --- | BACK | VERT | TOTAL |
| Z | 17-6-4 | -1623 | -1623 | --- | BACK | VERT | TOTAL |
| AA | 19-6-4 | -1623 | -1623 | --- | BACK | VERT | TOTAL |
| AB | 21-6-4 | -1623 | -1623 | --- | BACK | VERT | TOTAL |
| AC | 23-6-4 | -1623 | -1623 | --- | BACK | VERT | TOTAL |
| AD | 25-6-4 | -1623 | -1623 | --- | BACK | VERT | TOTAL |
| AE | 27-6-4 | -1623 | -1623 | --- | BACK | VERT | TOTAL |
| AF | 29-6-4 | -1623 | -1623 | --- | BACK | VERT | TOTAL |
| AG | 31-6-4 | -1623 | -1623 | --- | BACK | VERT | TOTAL |
| AH | 31-10-4 | -510 | -510 | --- | BACK | VERT | TOTAL |

LICENSED PROFESSIONAL ENGINEER
8477
S. KATSOULAKOS
PROVINCE OF ONTARIO

DWG NO. TAM 4206 17
STRUCTURAL
COMPONENT ONLY

| JOB NAME | TRUSS NAME | QUANTITY | PLY | JOB DESC. | DRWG NO. |
|---|---|---|---|---|---|
| 282690 | T20 | 5 | 1 | TRUSS DESC. | |

Tamarack Roof Truss, Burlington

Version 8.030 S Oct 5 2016 MiTek Industries, Inc. Thu Aug 24 16:34:13 2017 Page 1

ID:DZmtPBj_26xwKfmrz12lewykd1T-9AqzB6VkrONKKfTqpOhbr5D73UmZtMlK1MdAaiykbOu

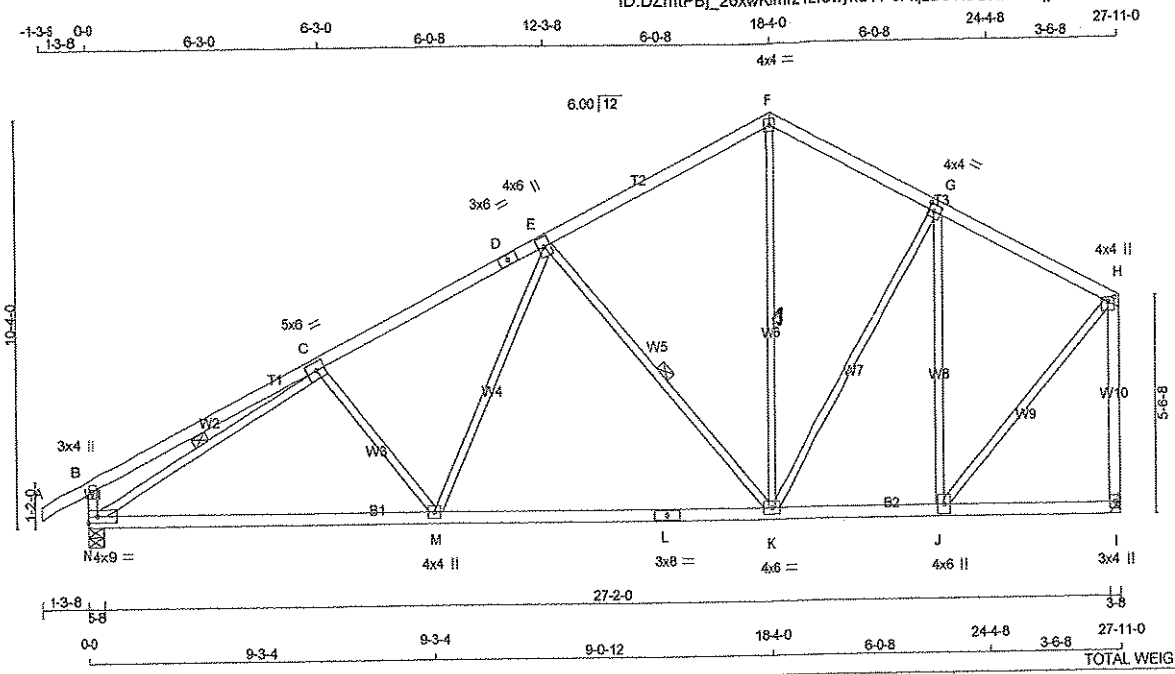


TOTAL WEIGHT = 5 X 125 = 627 lb

[M][F]

**LUMBER**

N. L. G. A. RULES

| CHORDS | SIZE | | LUMBER | DESCR. |
|---|---|---|---|---|
| A - D | 2x4 | DRY | No.2 | SPF |
| D - F | 2x4 | DRY | No.2 | SPF |
| F - H | 2x4 | DRY | No.2 | SPF |
| N - B | 2x4 | DRY | No.2 | SPF |
| I - H | 2x4 | DRY | No.2 | SPF |
| N - L | 2x4 | DRY | No.2 | SPF |
| L - I | 2x4 | DRY | No.2 | SPF |
| ALL WEBS EXCEPT | 2x3 | DRY | No.2 | SPF |

DRY: SEASONED LUMBER.

**PLATES (table is in inches)**

| JT | TYPE | PLATES | W | LEN | Y | X |
|---|---|---|---|---|---|---|
| B | TMV+p | MT20 | 3.0 | 4.0 | | |
| C | TMWW-t | MT20 | 5.0 | 6.0 | | |
| D | TS-t | MT20 | 3.0 | 6.0 | | |
| E | TMWW+t | MT20 | 4.0 | 6.0 | | |
| F | TTW-p | MT20 | 4.0 | 4.0 | | |
| G | TMWW-t | MT20 | 4.0 | 4.0 | 2.00 | 1.75 |
| H | TMVW+p | MT20 | 4.0 | 4.0 | 1.25 | 2.00 |
| I | BMV1+p | MT20 | 3.0 | 4.0 | | |
| J | BMWW+t | MT20 | 4.0 | 6.0 | | |
| K | BMWWW-t | MT20 | 4.0 | 6.0 | | |
| L | BS-t | MT20 | 3.0 | 8.0 | | |
| M | BMWW+t | MT20 | 4.0 | 4.0 | | |
| N | BMVW1-t | MT20 | 4.0 | 9.0 | | Edge |

Edge - INDICATES REFERENCE CORNER OF PLATE TOUCHES EDGE OF CHORD.

**DIMENSIONS, SUPPORTS AND LOADINGS SPECIFIED BY FABRICATOR TO BE VERIFIED BY BUILDING DESIGNER**

**BEARINGS**

| JT | FACTORED GROSS REACTION VERT | HORZ | MAXIMUM FACTORED GROSS REACTION DOWN | HORZ | UPLIFT | INPUT BRG IN-SX | REQRD BRG IN-SX |
|---|---|---|---|---|---|---|---|
| N | 1681 | 0 | 1681 | 0 | 0 | 5-8 | 5-8 |
| I | 1567 | 0 | 1567 | 0 | 0 | HANGER BY OTHERS MIN. SEAT SIZE: 3-8 | |

**UNFACTORED REACTIONS**

| JT | 1ST LCASE COMBINED | MAX./MIN. COMPONENT REACTIONS SNOW | LIVE | PERM.LIVE | WIND | DEAD | SOIL |
|---|---|---|---|---|---|---|---|
| N | 1364 | 784 / 0 | 293 / 0 | 0 / 0 | 0 / 0 | 287 / 0 | 0 / 0 |
| I | 1287 | 714 / 0 | 293 / 0 | 0 / 0 | 0 / 0 | 279 / 0 | 0 / 0 |

BEARING MATERIAL TO BE SPF NO.2 OR BETTER AT JOINT(S) N

**BRACING**

TOP CHORD TO BE SHEATHED OR MAX. PURLIN SPACING = 4.39 FT.
MAX. UNBRACED BOTTOM CHORD LENGTH = 10.00 FT. OR RIGID CEILING DIRECTLY APPLIED.

ALL PITCH BREAKS AND PERIMETER CORNER JOINTS MUST BE LATERALLY RESTRAINED.

1 LATERAL BRACE(S) AT 1/2 LENGTH OF E-K, C-N. F-K

END VERTICAL(S) MUST BE SHEATHED OR HAVE BRACES AS INDICATED IN THE MAX. UNBRACED LENGTH COLUMN OF THE TABLE BELOW

**LOADING**

TOTAL LOAD CASES: (4)

CHORDS

| MEMB. FR-TO | MAX. FACTORED FORCE (LBS) | FACTORED VERT. LOAD (PLF) FROM | TO | LC1 | MAX CSI (LC) | MAX. UNBRAC LENGTH |
|---|---|---|---|---|---|---|
| A- B | 0 / 26 | -84.3 | -84.3 | 0.11 (1) | 10.00 | |
| B- C | 0 / 22 | -84.3 | -84.3 | 0.41 (1) | 10.00 | |
| C- D | -2002 / 0 | -84.3 | -84.3 | 0.41 (1) | 4.39 | |
| D- E | -2002 / 0 | -84.3 | -84.3 | 0.41 (1) | 4.39 | |
| E- F | -1136 / 0 | -84.3 | -84.3 | 0.38 (1) | 5.49 | |
| F- G | -1135 / 0 | -84.3 | -84.3 | 0.26 (1) | 5.66 | |
| G- H | -939 / 0 | -84.3 | -84.3 | 0.25 (1) | 6.09 | |
| N- B | -325 / 0 | 0.0 | 0.0 | 0.03 (1) | 7.81 | |
| I- H | -1508 / 0 | 0.0 | 0.0 | 0.88 (1) | 6.68 | |
| N- M | 0 / 1958 | -28.0 | -28.0 | 0.84 (2) | 10.00 | |
| M- L | 0 / 1577 | -28.0 | -28.0 | 0.80 (2) | 10.00 | |
| L- K | 0 / 1577 | -28.0 | -28.0 | 0.80 (2) | 10.00 | |
| K- J | 0 / 859 | -28.0 | -28.0 | 0.38 (2) | 10.00 | |
| J- I | 0 / 0 | -28.0 | -28.0 | 0.14 (2) | 10.00 | |

WEBS

| MEMB. FR-TO | MAX. FACTORED FORCE (LBS) | MAX CSI (LC) |
|---|---|---|
| C- M | -266 / 74 | 0.11 (1) |
| M- E | 0 / 591 | 0.13 (2) |
| E- K | -889 / 0 | 0.54 (1) |
| K- F | 0 / 643 | 0.14 (1) |
| K- G | 0 / 262 | 0.06 (1) |
| J- G | -791 / 0 | 0.97 (1) |
| N- C | -2324 / 0 | 0.82 (1) |
| J- H | 0 / 1259 | 0.28 (1) |

**DESIGN CRITERIA**

SPECIFIED LOADS:

| | | | | |
|---|---|---|---|---|
| TOP CH. | LL | = | 25.6 | PSF |
| | DL | = | 3.0 | PSF |
| BOT CH. | LL | = | 10.5 | PSF |
| | DL | = | 7.0 | PSF |
| TOTAL LOAD | | = | 46.1 | PSF |

**SPACING = 24.0 IN. C/C**

THIS TRUSS IS DESIGNED FOR RESIDENTIAL OR SMALL BUILDING REQUIREMENTS OF PART 9, NBCC 2010

THIS DESIGN COMPLIES WITH:
- PART 9 OF OBC 2012 , BCBC 2012 , ABC 2014
- CSA 086-09
- TPIC 2011

(55 % OF 31.3 P.S.F. G.S.L. PLUS 8.4 P.S.F. RAIN LOAD) EQUALS 25.6 P.S.F. SPECIFIED ROOF LIVE LOAD

ALLOWABLE DEFL.(LL)= L/360 (0.93")
CALCULATED VERT. DEFL.(LL) = L/ 999 (0.28")
ALLOWABLE DEFL.(TL)= L/360 (0.93")
CALCULATED VERT. DEFL.(TL) = L/ 727 (0.46")

CSI: TC=0.88 (H-I:1) , BC=0.84 (M-N:2) , WB=0.97 (G-J:1) , SSI=0.22 (M-N:3)

DOL LUMBER=1.00 NAIL=1.00 LS BEND=1.10 COMP=1.10 SHEAR=1.10 TENS= 1.10

COMPANION LIVE LOAD FACTOR = 0.50

AUTOSOLVE RIGHT HEEL ONLY

TRUSS PLATE MANUFACTURER IS NOT RESPONSIBLE FOR QUALITY CONTROL IN THE TRUSS MANUFACTURING PLANT .

NAIL VALUES

| PLATE | GRIP(DRY) (PSI) MAX | MIN | SHEAR (PLI) MAX | MIN | SECTION (PLI) MAX | MIN |
|---|---|---|---|---|---|---|
| MT20 | 618 | 354 | 1667 | 822 | 2284 | 1656 |

PLATE PLACEMENT TOL. = 0.250 inches

PLATE ROTATION TOL. = 5.0 Deg.

JSI GRIP= 0.89 (M) (INPUT = 0.90 )
JSI METAL= 0.62 (L) (INPUT = 1.00 )

LICENSED PROFESSIONAL ENGINEER
8207
S. KATSOULAKOS
PROVINCE OF ONTARIO

DWG NO. TAM 42872-17

STRUCTURAL COMPONENT ONLY

| JOB NAME | TRUSS NAME | QUANTITY | PLY | JOB DESC. | DRWG NO. |
|---|---|---|---|---|---|
| 282690 | G20 | 1 | 1 | TRUSS DESC. | |

Tamarack Roof Truss, Burlington

Version 8.030 S Oct 5 2016 MiTek Industries, Inc. Thu Aug 24 16:34:09 2017 Page 1

ID:DZmtPBj_26xwKfmrz12lewykd1T-HPaSMISEn9tur2A2aYcfgF3e3tc7xkLk6lfzRwykbOy

Scale = 1:60.3

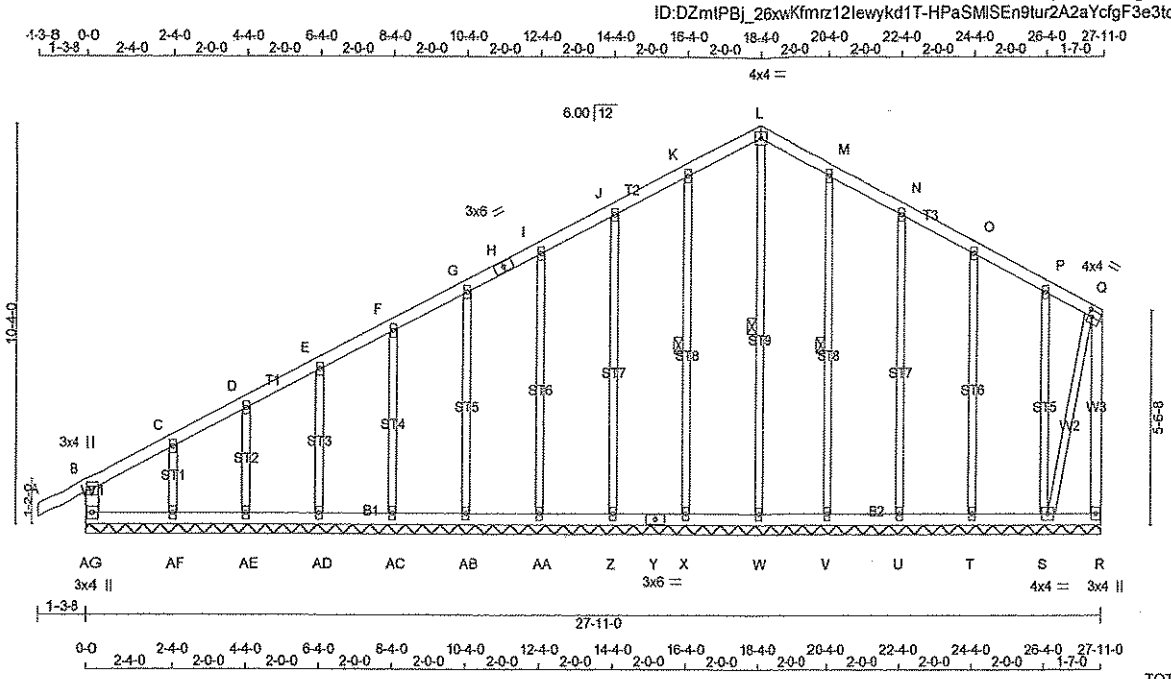


TOTAL WEIGHT = 146 lb

[M]

**LUMBER**

N. L. G. A. RULES

| CHORDS | SIZE | | LUMBER | DESCR. |
|---|---|---|---|---|
| A - H | 2x4 | DRY | No.2 | SPF |
| H - L | 2x4 | DRY | No.2 | SPF |
| L - Q | 2x4 | DRY | No.2 | SPF |
| AG- B | 2x4 | DRY | No.2 | SPF |
| R - Q | 2x4 | DRY | No.2 | SPF |
| AG- Y | 2x4 | DRY | No.2 | SPF |
| Y - R | 2x4 | DRY | No.2 | SPF |
| ALL WEBS | 2x3 | DRY | No.2 | SPF |
| ALL GABLE WEBS | 2x3 | DRY | No.2 | SPF |

DRY: SEASONED LUMBER.

GABLE STUDS SPACED AT 2-0-0 OC.

**PLATES (table is in inches)**

| JT | TYPE | PLATES | W | LEN | Y | X |
|---|---|---|---|---|---|---|
| B | TMV+p | MT20 | 3.0 | 4.0 | | |
| C, D, E, F, G, I, J, K, M, N, O, P | | | | | | |
| C | TMW+w | MT20 | 2.0 | 4.0 | | |
| H | TS-t | MT20 | 3.0 | 6.0 | | |
| L | TTW-p | MT20 | 4.0 | 4.0 | | |
| Q | TMVW-t | MT20 | 4.0 | 4.0 | 2.00 | 1.25 |
| R | BMV1+p | MT20 | 3.0 | 4.0 | | |
| S | BMWW1-t | MT20 | 4.0 | 4.0 | | |
| T, U, V, W, X, Z, AA, AB, AC, AD, AE, AF | | | | | | |
| T | BMW1+w | MT20 | 2.0 | 4.0 | | |
| Y | BS-t | MT20 | 3.0 | 6.0 | | |
| AG | BMV1+p | MT20 | 3.0 | 4.0 | | |

**DIMENSIONS, SUPPORTS AND LOADINGS SPECIFIED BY FABRICATOR TO BE VERIFIED BY BUILDING DESIGNER**

**BEARINGS**

THIS TRUSS DESIGNED FOR CONTINUOUS BEARINGS.

THIS TRUSS REQUIRES RIGID SHEATHING ON EXPOSED FACE.

BEARING MATERIAL TO BE SPF NO.2 OR BETTER AT JOINT(S)

**BRACING**

TOP CHORD TO BE SHEATHED OR MAX. PURLIN SPACING = 10.00 FT.
MAX. UNBRACED BOTTOM CHORD LENGTH = 6.25 FT. OR RIGID CEILING DIRECTLY APPLIED.

ALL PITCH BREAKS AND PERIMETER CORNER JOINTS MUST BE LATERALLY RESTRAINED.

1 LATERAL BRACE(S) AT 1/ 2 LENGTH OF L-W, K-X, M-V.

END VERTICAL(S) MUST BE SHEATHED OR HAVE BRACES AS INDICATED IN THE MAX. UNBRACED LENGTH COLUMN OF THE TABLE BELOW

**LOADING**

TOTAL LOAD CASES: (4)

CHORDS

| MEMB. FR-TO | MAX. FACTORED FORCE (LBS) | FACTORED VERT. LOAD LC1 (PLF) FROM | TO | MAX CSI (LC) | MAX. UNBRAC LENGTH |
|---|---|---|---|---|---|
| A- B | 0 / 26 | -84.3 | -84.3 | 0.11 (1) | 10.00 |
| B- C | 0 / 8 | -84.3 | -84.3 | 0.06 (1) | 10.00 |
| C- D | 0 / 4 | -84.3 | -84.3 | 0.06 (1) | 10.00 |
| D- E | 0 / 12 | -84.3 | -84.3 | 0.04 (1) | 10.00 |
| E- F | 0 / 14 | -84.3 | -84.3 | 0.04 (1) | 10.00 |
| F- G | 0 / 17 | -84.3 | -84.3 | 0.04 (1) | 10.00 |
| G- H | 0 / 19 | -84.3 | -84.3 | 0.04 (1) | 10.00 |
| H- I | 0 / 19 | -84.3 | -84.3 | 0.04 (1) | 10.00 |
| I- J | 0 / 20 | -84.3 | -84.3 | 0.04 (1) | 10.00 |
| J- K | 0 / 24 | -84.3 | -84.3 | 0.05 (1) | 10.00 |
| K- L | 0 / 16 | -84.3 | -84.3 | 0.05 (1) | 10.00 |
| L- M | 0 / 16 | -84.3 | -84.3 | 0.05 (1) | 10.00 |
| M- N | 0 / 24 | -84.3 | -84.3 | 0.05 (1) | 10.00 |
| N- O | 0 / 20 | -84.3 | -84.3 | 0.04 (1) | 10.00 |
| O- P | 0 / 20 | -84.3 | -84.3 | 0.04 (1) | 10.00 |
| P- Q | 0 / 23 | -84.3 | -84.3 | 0.03 (1) | 10.00 |
| AG- B | -192 / 0 | 0.0 | 0.0 | 0.02 (1) | 7.81 |
| R- Q | 0 / 8 | 0.0 | 0.0 | 0.00 (1) | 10.00 |
| AG-AF | 0 / 0 | -28.0 | -28.0 | 0.04 (2) | 10.00 |
| AF-AE | -7 / 0 | -28.0 | -28.0 | 0.04 (2) | 10.00 |
| AE-AD | -10 / 0 | -28.0 | -28.0 | 0.02 (2) | 6.25 |
| AD-AC | -13 / 0 | -28.0 | -28.0 | 0.02 (2) | 6.25 |
| AC-AB | -15 / 0 | -28.0 | -28.0 | 0.02 (2) | 6.25 |
| AB-AA | -17 / 0 | -28.0 | -28.0 | 0.02 (2) | 6.25 |
| AA- Z | -18 / 0 | -28.0 | -28.0 | 0.02 (2) | 6.25 |
| Z- Y | -20 / 0 | -28.0 | -28.0 | 0.02 (2) | 6.25 |
| Y- X | -20 / 0 | -28.0 | -28.0 | 0.02 (2) | 6.25 |
| X- W | -21 / 0 | -28.0 | -28.0 | 0.02 (2) | 6.25 |
| W- V | -21 / 0 | -28.0 | -28.0 | 0.02 (2) | 6.25 |
| V- U | -20 / 0 | -28.0 | -28.0 | 0.02 (2) | 6.25 |
| U- T | -18 / 0 | -28.0 | -28.0 | 0.02 (2) | 6.25 |
| T- S | -17 / 0 | -28.0 | -28.0 | 0.02 (2) | 6.25 |
| S- R | 0 / 0 | -28.0 | -28.0 | 0.02 (2) | 10.00 |

WEBS

| MEMB. FR-TO | MAX. FACTORED FORCE (LBS) | MAX CSI (LC) |
|---|---|---|
| W- L | -161 / 0 | 0.12 (1) |
| X- K | -191 / 0 | 0.11 (1) |
| Z- J | -163 / 0 | 0.23 (1) |
| AA- I | -168 / 0 | 0.16 (1) |
| AB- G | -168 / 0 | 0.11 (1) |
| AC- F | -167 / 0 | 0.07 (1) |
| AD- E | -169 / 0 | 0.05 (1) |
| AE- D | -157 / 0 | 0.03 (1) |
| AF- C | -203 / 0 | 0.03 (1) |
| V- M | -192 / 0 | 0.11 (1) |
| U- N | -163 / 0 | 0.22 (1) |
| T- O | -172 / 0 | 0.17 (1) |
| S- P | -159 / 0 | 0.10 (1) |
| S- Q | -52 / 0 | 0.03 (1) |

LICENSED PROFESSIONAL ENGINEER
8277
S. KATSOULAKOS
PROVINCE OF ONTARIO

DWG NO. TAM4266217

STRUCTURAL COMPONENT ONLY

**DESIGN CRITERIA**

SPECIFIED LOADS:

| | | | | | |
|---|---|---|---|---|---|
| TOP CH. | LL | = | 25.6 | PSF |
| | DL | = | 3.0 | PSF |
| BOT CH. | LL | = | 10.5 | PSF |
| | DL | = | 7.0 | PSF |
| TOTAL LOAD | | = | 46.1 | PSF |

**SPACING = 24.0 IN. C/C**

THIS TRUSS IS DESIGNED FOR RESIDENTIAL OR SMALL BUILDING REQUIREMENTS OF PART 9, NBCC 2010

THIS DESIGN COMPLIES WITH:
- PART 9 OF OBC 2012 , BCBC 2012 , ABC 2014
- CSA 086-09
- TPIC 2011

(55 % OF 31.3 P.S.F. G.S.L. PLUS 8.4 P.S.F. RAIN LOAD) EQUALS 25.6 P.S.F. SPECIFIED ROOF LIVE LOAD

CSI: TC=0.11 (A-B:1) , BC=0.04 (AE-AF:2) , WB=0.23 (J-Z:1) , SSI=0.08 (A-B:1)

DOL LUMBER=1.00 NAIL=1.00 LS BEND=1.10 COMP=1.10 SHEAR=1.10 TENS= 1.10

COMPANION LIVE LOAD FACTOR = 0.50

AUTOSOLVE RIGHT HEEL ONLY

TRUSS PLATE MANUFACTURER IS NOT RESPONSIBLE FOR QUALITY CONTROL IN THE TRUSS MANUFACTURING PLANT .

NAIL VALUES

| PLATE | GRIP(DRY) (PSI) MAX | MIN | SHEAR (PLI) MAX | MIN | SECTION (PLI) MAX | MIN |
|---|---|---|---|---|---|---|
| MT20 | 618 | 354 | 1667 | 822 | 2284 | 1656 |

PLATE PLACEMENT TOL. = 0.250 inches

PLATE ROTATION TOL. = 5.0 Deg.

JSI GRIP= 0.52 (S) (INPUT = 0.90 )
JSI METAL= 0.05 (C) (INPUT = 1.00 )

| JOB NAME | TRUSS NAME | QUANTITY | PLY | JOB DESC. | DRWG NO. |
|---|---|---|---|---|---|
| 282690 | T21 | 12 | 1 | TRUSS DESC. | |

Tamarack Roof Truss, Burlington

Version 8.030 S Oct 5 2016 MiTek Industries, Inc. Thu Aug 24 16:34:13 2017 Page 1

ID:DZmtPBj_26xwKfmrz12lewykd1T-9AqzB6VkrONKKfTqpOhbr5D67UrUtMWK1MdAaiykbOu

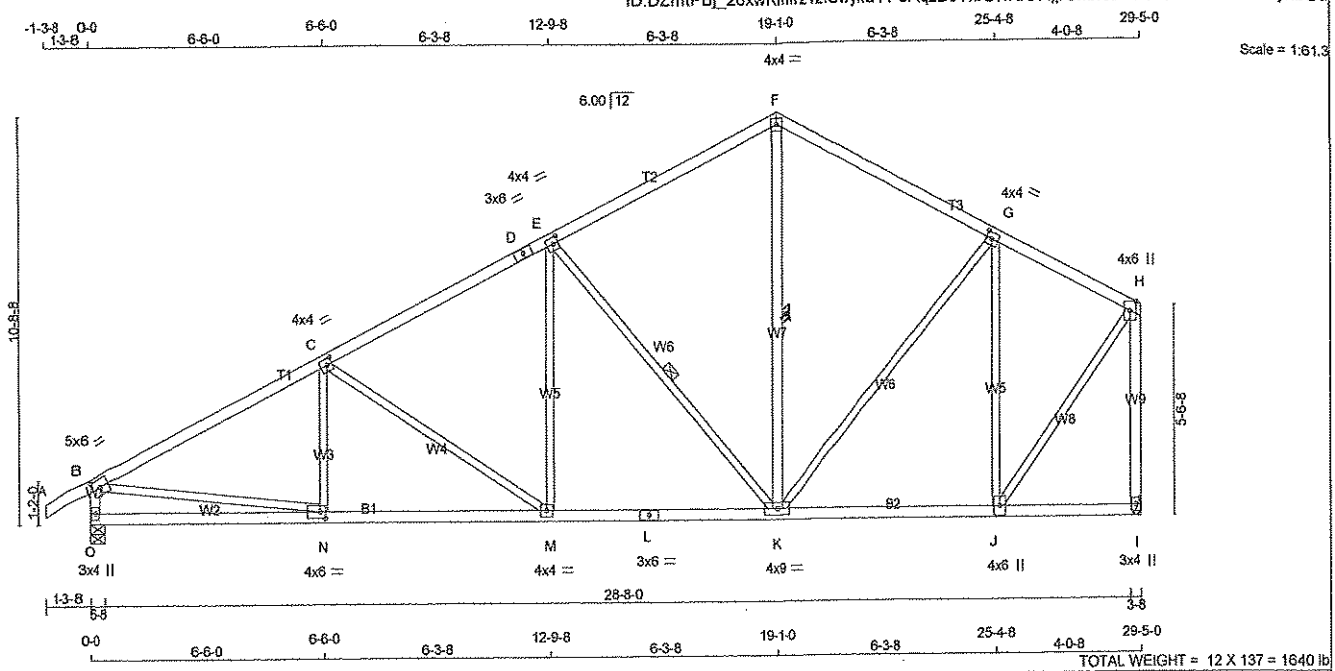


**LUMBER**

N. L. G. A. RULES

| CHORDS | SIZE | | LUMBER | DESCR. |
|---|---|---|---|---|
| A - D | 2x4 | DRY | No.2 | SPF |
| D - F | 2x4 | DRY | No.2 | SPF |
| F - H | 2x4 | DRY | No.2 | SPF |
| O - B | 2x4 | DRY | No.2 | SPF |
| I - H | 2x4 | DRY | No.2 | SPF |
| O - L | 2x4 | DRY | No.2 | SPF |
| L - I | 2x4 | DRY | No.2 | SPF |
| ALL WEBS | 2x3 | DRY | No.2 | SPF |
| EXCEPT | | | | |
| K - F | 2x4 | DRY | No.2 | SPF |

DRY: SEASONED LUMBER.

**PLATES (table is in inches)**

| JT | TYPE | PLATES | W | LEN | Y | X |
|---|---|---|---|---|---|---|
| B | TMVW-t | MT20 | 5.0 | 6.0 | 2.50 | 2.75 |
| C, E, G | | | | | | |
| C | TMVW-t | MT20 | 4.0 | 4.0 | 2.00 | 1.75 |
| D | TS-t | MT20 | 3.0 | 6.0 | | |
| F | TTW-p | MT20 | 4.0 | 4.0 | | |
| H | TMVW+p | MT20 | 4.0 | 6.0 | Edge | |
| I | BMV1+p | MT20 | 3.0 | 4.0 | | |
| J | BMWW+t | MT20 | 4.0 | 6.0 | | |
| K | BMWWW-t | MT20 | 4.0 | 9.0 | | |
| L | BS-t | MT20 | 3.0 | 6.0 | | |
| M | BMWW-t | MT20 | 4.0 | 4.0 | | |
| N | BMWW-t | MT20 | 4.0 | 6.0 | 2.00 | 1.75 |
| O | BMV1+p | MT20 | 3.0 | 4.0 | | |

Edge - INDICATES REFERENCE CORNER OF PLATE TOUCHES EDGE OF CHORD.

**DIMENSIONS, SUPPORTS AND LOADINGS SPECIFIED BY FABRICATOR TO BE VERIFIED BY BUILDING DESIGNER**

**BEARINGS**

| JT | FACTORED GROSS REACTION VERT | HORZ | MAXIMUM FACTORED GROSS REACTION DOWN | HORZ | UPLIFT | INPUT BRG IN-SX | REQRD BRG IN-SX |
|---|---|---|---|---|---|---|---|
| O | 1765 | 0 | 1765 | 0 | 0 | 5-8 | 5-8 |
| I | 1651 | 0 | 1651 | 0 | 0 | HANGER BY OTHERS | |
| | | | | | | MIN. SEAT SIZE: 3-8 | |

**UNFACTORED REACTIONS**

| JT | 1ST LCASE COMBINED | MAX./MIN. COMPONENT REACTIONS SNOW | LIVE | PERM.LIVE | WIND | DEAD | SOIL |
|---|---|---|---|---|---|---|---|
| O | 1433 | 822 / 0 | 309 / 0 | 0 / 0 | 0 / 0 | 302 / 0 | 0 / 0 |
| I | 1356 | 753 / 0 | 309 / 0 | 0 / 0 | 0 / 0 | 294 / 0 | 0 / 0 |

BEARING MATERIAL TO BE SPF NO.2 OR BETTER AT JOINT(S) O

**BRACING**

TOP CHORD TO BE SHEATHED OR MAX. PURLIN SPACING = 3.94 FT.
MAX. UNBRACED BOTTOM CHORD LENGTH = 10.00 FT. OR RIGID CEILING DIRECTLY APPLIED.

ALL PITCH BREAKS AND PERIMETER CORNER JOINTS MUST BE LATERALLY RESTRAINED.

1 LATERAL BRACE(S) AT 1/2 LENGTH OF E-K.

END VERTICAL(S) MUST BE SHEATHED OR HAVE BRACES AS INDICATED IN THE MAX. UNBRACED LENGTH COLUMN OF THE TABLE BELOW

**LOADING**

TOTAL LOAD CASES: (4)

CHORDS

| MEMB. FR-TO | MAX. FACTORED FORCE (LBS) | FACTORED VERT. LOAD (PLF) FROM | TO | LC1 MAX CSI (LC) | MAX. UNBRAC LENGTH |
|---|---|---|---|---|---|
| A- B | 0 / 26 | -84.3 | -84.3 | 0.11 (1) | 10.00 |
| B- C | -2370 / 0 | -84.3 | -84.3 | 0.56 (1) | 3.94 |
| C- D | -1902 / 0 | -84.3 | -84.3 | 0.43 (1) | 4.46 |
| D- E | -1902 / 0 | -84.3 | -84.3 | 0.43 (1) | 4.46 |
| E- F | -1224 / 0 | -84.3 | -84.3 | 0.42 (1) | 5.29 |
| F- G | -1222 / 0 | -84.3 | -84.3 | 0.42 (1) | 5.29 |
| G- H | -912 / 0 | -84.3 | -84.3 | 0.33 (1) | 6.02 |
| O- B | -1690 / 0 | 0.0 | 0.0 | 0.17 (1) | 6.39 |
| I- H | -1612 / 0 | 0.0 | 0.0 | 0.94 (1) | 6.52 |
| O- N | 0 / 0 | -28.0 | -28.0 | 0.28 (3) | 10.00 |
| N- M | 0 / 2140 | -28.0 | -28.0 | 0.52 (2) | 10.00 |
| M- L | 0 / 1701 | -28.0 | -28.0 | 0.43 (2) | 10.00 |
| L- K | 0 / 1701 | -28.0 | -28.0 | 0.43 (2) | 10.00 |
| K- J | 0 / 846 | -28.0 | -28.0 | 0.33 (2) | 10.00 |
| J- I | 0 / 0 | -28.0 | -28.0 | 0.18 (3) | 10.00 |

WEBS

| MEMB. FR-TO | MAX. FACTORED FORCE (LBS) | MAX CSI (LC) |
|---|---|---|
| N- C | -84 / 212 | 0.05 (3) |
| C- M | -524 / 0 | 0.59 (1) |
| M- E | 0 / 507 | 0.11 (2) |
| E- K | -958 / 0 | 0.62 (1) |
| K- F | 0 / 645 | 0.10 (1) |
| K- G | 0 / 348 | 0.08 (1) |
| J- G | -938 / 0 | 0.98 (1) |
| B- N | 0 / 2158 | 0.49 (1) |
| J- H | 0 / 1384 | 0.31 (1) |

LICENSED PROFESSIONAL ENGINEER
S. KATSOULAKOS
PROVINCE OF ONTARIO

**DESIGN CRITERIA**

SPECIFIED LOADS:

| | | | | |
|---|---|---|---|---|
| TOP CH. | LL | = | 25.6 | PSF |
| | DL | = | 3.0 | PSF |
| BOT CH. | LL | = | 10.5 | PSF |
| | DL | = | 7.0 | PSF |
| TOTAL LOAD | | = | 46.1 | PSF |

**SPACING = 24.0 IN. C/C**

THIS TRUSS IS DESIGNED FOR RESIDENTIAL OR SMALL BUILDING REQUIREMENTS OF PART 9, NBCC 2010

THIS DESIGN COMPLIES WITH:
- PART 9 OF OBC 2012 , BCBC 2012 , ABC 2014
- CSA 086-09
- TPIC 2011

(55 % OF 31.3 P.S.F. G.S.L. PLUS 8.4 P.S.F. RAIN LOAD) EQUALS 25.6 P.S.F. SPECIFIED ROOF LIVE LOAD

ALLOWABLE DEFL.(LL)= L/360 (0.98")
CALCULATED VERT. DEFL.(LL) = L/ 999 (0.11")
ALLOWABLE DEFL.(TL)= L/360 (0.98")
CALCULATED VERT. DEFL.(TL) = L/ 999 (0.19")

CSI: TC=0.94 (H-I:1) , BC=0.52 (M-N:2) , WB=0.98 (G-J:1) , SSI=0.23 (B-C:1)

DOL LUMBER=1.00 NAIL=1.00 LS BEND=1.10 COMP=1.10 SHEAR=1.10 TENS= 1.10

COMPANION LIVE LOAD FACTOR = 0.50

AUTOSOLVE RIGHT HEEL ONLY

TRUSS PLATE MANUFACTURER IS NOT RESPONSIBLE FOR QUALITY CONTROL IN THE TRUSS MANUFACTURING PLANT .

NAIL VALUES

| PLATE | GRIP(DRY) (PSI) MAX | MIN | SHEAR (PLI) MAX | MIN | SECTION (PLI) MAX | MIN |
|---|---|---|---|---|---|---|
| MT20 | 618 | 354 | 1667 | 822 | 2284 | 1656 |

PLATE PLACEMENT TOL. = 0.250 inches

PLATE ROTATION TOL. = 5.0 Deg.

JSI GRIP= 0.89 (D) (INPUT = 0.90 )
JSI METAL= 0.64 (B) (INPUT = 1.00 )

DWG NO. TAM 42816-17
STRUCTURAL
COMPONENT ONLY

| JOB NAME | TRUSS NAME | QUANTITY | PLY | JOB DESC. | DRWG NO. |
|---|---|---|---|---|---|
| 282690 | T22 | 1 | 1 | TRUSS DESC. | |

Tamarack Roof Truss, Burlington

Version 8.030 S Oct 5 2016 MiTek Industries, Inc. Thu Aug 24 16:34:13 2017 Page 1

ID:DZmtPBj_26xwKfmrz12lewykd1T-9AqzB6VkrONKKfTqpOhbr5DHtUwutX0K1MdAaiykbOu

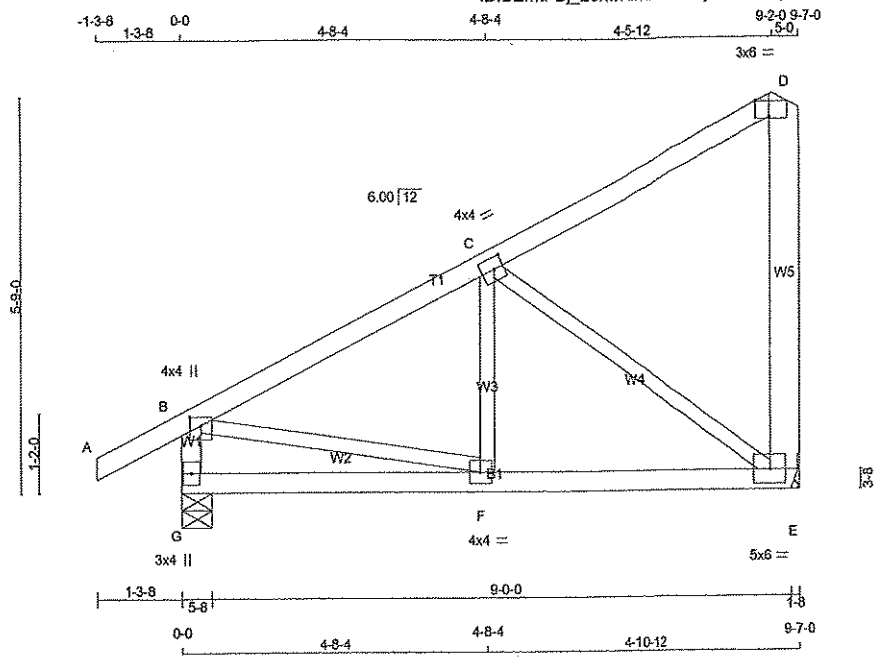


TOTAL WEIGHT = 45 lb

[M][F]

**LUMBER**

N. L. G. A. RULES

| CHORDS | SIZE | | LUMBER | DESCR. |
|---|---|---|---|---|
| A - D | 2x4 | DRY | No.2 | SPF |
| G - B | 2x4 | DRY | No.2 | SPF |
| E - D | 2x6 | DRY | No.2 | SPF |
| G - E | 2x4 | DRY | No.2 | SPF |
| ALL WEBS EXCEPT | 2x3 | DRY | No.2 | SPF |

DRY: SEASONED LUMBER.

**PLATES (table is in inches)**

| JT | TYPE | PLATES | W | LEN | Y | X |
|---|---|---|---|---|---|---|
| B | TMVW+p | MT20 | 4.0 | 4.0 | 1.50 | 2.00 |
| C | TMWW-t | MT20 | 4.0 | 4.0 | 2.00 | 1.75 |
| D | TVM-p | MT20 | 3.0 | 6.0 | Edge | 2.50 |
| E | BMVW1-t | MT20 | 5.0 | 6.0 | | |
| F | BMWW-t | MT20 | 4.0 | 4.0 | | |
| G | BMV1+p | MT20 | 3.0 | 4.0 | | |

Edge - INDICATES REFERENCE CORNER OF PLATE TOUCHES EDGE OF CHORD.

**DIMENSIONS, SUPPORTS AND LOADINGS SPECIFIED BY FABRICATOR TO BE VERIFIED BY BUILDING DESIGNER**

**BEARINGS**

| JT | FACTORED GROSS REACTION VERT | HORZ | MAXIMUM FACTORED GROSS REACTION DOWN | HORZ | UPLIFT | INPUT BRG IN-SX | REQRD BRG IN-SX |
|---|---|---|---|---|---|---|---|
| G | 652 | 0 | 652 | 0 | 0 | 5-8 | 5-8 |
| E | 538 | 0 | 538 | 0 | 0 | HANGER BY OTHERS MIN. SEAT SIZE: 1-8 | |

**UNFACTORED REACTIONS**

| JT | 1ST LCASE COMBINED | MAX./MIN. COMPONENT REACTIONS SNOW | LIVE | PERM.LIVE | WIND | DEAD | SOIL |
|---|---|---|---|---|---|---|---|
| G | 519 | 315 / 0 | 101 / 0 | 0 / 0 | 0 / 0 | 104 / 0 | 0 / 0 |
| E | 442 | 245 / 0 | 101 / 0 | 0 / 0 | 0 / 0 | 96 / 0 | 0 / 0 |

BEARING MATERIAL TO BE SPF NO.2 OR BETTER AT JOINT(S) G

**BRACING**

TOP CHORD TO BE SHEATHED OR MAX. PURLIN SPACING = 6.25 FT.
MAX. UNBRACED BOTTOM CHORD LENGTH = 10.00 FT. OR RIGID CEILING DIRECTLY APPLIED.

ALL PITCH BREAKS AND PERIMETER CORNER JOINTS MUST BE LATERALLY RESTRAINED.

**LOADING**

TOTAL LOAD CASES: (4)

CHORDS

| MEMB. FR-TO | MAX. FACTORED FORCE (LBS) | FACTORED VERT. LOAD (PLF) FROM | TO | LC1 MAX CSI (LC) | MAX. UNBRAC LENGTH |
|---|---|---|---|---|---|
| A- B | 0 / 26 | -84.3 | -84.3 | 0.11 (1) | 10.00 |
| B- C | -533 / 0 | -84.3 | -84.3 | 0.25 (1) | 6.25 |
| C- D | -21 / 0 | -84.3 | -84.3 | 0.24 (1) | 6.25 |
| G- B | -601 / 0 | 0.0 | 0.0 | 0.06 (1) | 7.81 |
| E- D | -159 / 0 | 0.0 | 0.0 | 0.07 (1) | 7.81 |
| G- F | 0 / 0 | -28.0 | -28.0 | 0.18 (3) | 10.00 |
| F- E | 0 / 497 | -28.0 | -28.0 | 0.24 (2) | 10.00 |

WEBS

| MEMB. FR-TO | MAX. FACTORED FORCE (LBS) | MAX CSI (LC) |
|---|---|---|
| F- C | 0 / 245 | 0.06 (3) |
| B- F | 0 / 505 | 0.11 (1) |
| C- E | -594 / 0 | 0.31 (1) |

**DESIGN CRITERIA**

SPECIFIED LOADS:

| | | | | |
|---|---|---|---|---|
| TOP CH. | LL | = | 25.6 | PSF |
| | DL | = | 3.0 | PSF |
| BOT CH. | LL | = | 10.5 | PSF |
| | DL | = | 7.0 | PSF |
| TOTAL LOAD | | = | 46.1 | PSF |

**SPACING = 24.0 IN. C/C**

THIS TRUSS IS DESIGNED FOR RESIDENTIAL OR SMALL BUILDING REQUIREMENTS OF PART 9, NBCC 2010

THIS DESIGN COMPLIES WITH:
- PART 9 OF OBC 2012 , BCBC 2012 , ABC 2014
- CSA 086-09
- TPIC 2011

(55 % OF 31.3 P.S.F. G.S.L. PLUS 8.4 P.S.F. RAIN LOAD) EQUALS 25.6 P.S.F. SPECIFIED ROOF LIVE LOAD

ALLOWABLE DEFL.(LL)= L/360 (0.32")
CALCULATED VERT. DEFL.(LL) = L/ 999 (0.02")
ALLOWABLE DEFL.(TL)= L/360 (0.32")
CALCULATED VERT. DEFL.(TL) = L/ 999 (0.04")

CSI: TC=0.25 (B-C:1) , BC=0.24 (E-F:2) , WB=0.31 (C-E:1) , SSI=0.18 (C-D:1)

DOL LUMBER=1.00 NAIL=1.00 LS BEND=1.10 COMP=1.10 SHEAR=1.10 TENS= 1.10

COMPANION LIVE LOAD FACTOR = 0.50

AUTOSOLVE LEFT HEEL ONLY

TRUSS PLATE MANUFACTURER IS NOT RESPONSIBLE FOR QUALITY CONTROL IN THE TRUSS MANUFACTURING PLANT .

NAIL VALUES

| PLATE | GRIP(DRY) (PSI) MAX | MIN | SHEAR (PLI) MAX | MIN | SECTION (PLI) MAX | MIN |
|---|---|---|---|---|---|---|
| MT20 | 618 | 354 | 1667 | 822 | 2284 | 1656 |

PLATE PLACEMENT TOL. = 0.250 inches

PLATE ROTATION TOL. = 5.0 Deg.

JSI GRIP= 0.63 (B) (INPUT = 0.90 )
JSI METAL= 0.19 (F) (INPUT = 1.00 )

LICENSED PROFESSIONAL ENGINEER
8277
S. KATSOULAKOS
PROVINCE OF ONTARIO

DWG NO. TAM 42079-17

STRUCTURAL COMPONENT ONLY

| JOB NAME | TRUSS NAME | QUANTITY | PLY | JOB DESC. | DRWG NO. |
|---|---|---|---|---|---|
| 282690 | G22 | 1 | 1 | TRUSS DESC. | |

Tamarack Roof Truss, Burlington

Version 8.030 S Oct 5 2016 MiTek Industries, Inc. Thu Aug 24 16:34:09 2017 Page 1
ID:DZmtPBj_26xwKfmrz12lewykd1T-HPaSMlSEn9tur2A2aYcfgF3e3tc4xmkk6lfzRwykbOy

Scale = 1:33.3

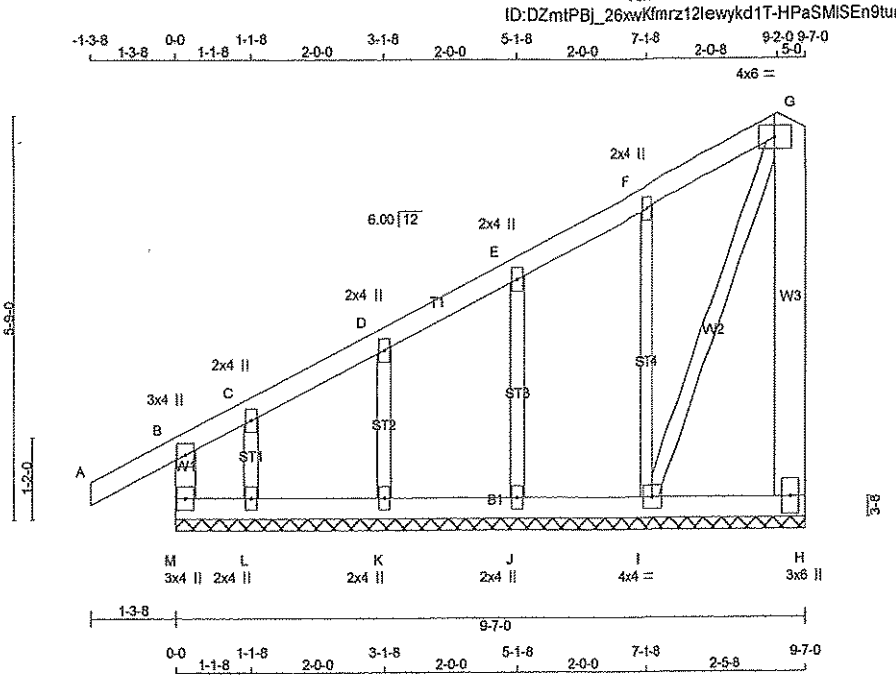


TOTAL WEIGHT = 48 lb

[M]

**LUMBER**
N. L. G. A. RULES

| CHORDS | SIZE | | LUMBER | DESCR. |
|---|---|---|---|---|
| A - G | 2x4 | DRY | No.2 | SPF |
| M - B | 2x4 | DRY | No.2 | SPF |
| H - G | 2x6 | DRY | No.2 | SPF |
| M - H | 2x4 | DRY | No.2 | SPF |
| ALL WEBS | 2x3 | DRY | No.2 | SPF |
| ALL GABLE WEBS | 2x3 | DRY | No.2 | SPF |

DRY: SEASONED LUMBER.

GABLE STUDS SPACED AT 2-0-0 OC.

**PLATES (table is in inches)**

| JT | TYPE | PLATES | W | LEN | Y | X |
|---|---|---|---|---|---|---|
| B | TMV+p | MT20 | 3.0 | 4.0 | | |
| C, D, E, F | | | | | | |
| C | TMW+w | MT20 | 2.0 | 4.0 | | |
| G | TVMW-p | MT20 | 4.0 | 6.0 | | |
| H | BMV1+p | MT20 | 3.0 | 6.0 | | |
| I | BMWW1-t | MT20 | 4.0 | 4.0 | | |
| J, K, L | | | | | | |
| J | BMW1+w | MT20 | 2.0 | 4.0 | | |
| M | BMV1+p | MT20 | 3.0 | 4.0 | | |

**DIMENSIONS, SUPPORTS AND LOADINGS SPECIFIED BY FABRICATOR TO BE VERIFIED BY BUILDING DESIGNER**

**BEARINGS**

THIS TRUSS DESIGNED FOR CONTINUOUS BEARINGS.

THIS TRUSS REQUIRES RIGID SHEATHING ON EXPOSED FACE.

BEARING MATERIAL TO BE SPF NO.2 OR BETTER AT JOINT(S)

**BRACING**
TOP CHORD TO BE SHEATHED OR MAX. PURLIN SPACING = 6.25 FT.
MAX. UNBRACED BOTTOM CHORD LENGTH = 6.25 FT. OR RIGID CEILING DIRECTLY APPLIED.

ALL PITCH BREAKS AND PERIMETER CORNER JOINTS MUST BE LATERALLY RESTRAINED.

**LOADING**
TOTAL LOAD CASES: (4)

CHORDS

| MEMB. FR-TO | MAX. FORCE (LBS) | FACTORED VERT. LOAD (PLF) FROM | TO | LC1 | MAX CSI (LC) | MAX. UNBRAC LENGTH |
|---|---|---|---|---|---|---|
| A- B | 0 / 26 | -84.3 | -84.3 | 0.11 (1) | 10.00 | |
| B- C | -29 / 0 | -84.3 | -84.3 | 0.11 (1) | 6.25 | |
| C- D | 0 / 8 | -84.3 | -84.3 | 0.05 (1) | 10.00 | |
| D- E | 0 / 6 | -84.3 | -84.3 | 0.05 (1) | 10.00 | |
| E- F | 0 / 17 | -84.3 | -84.3 | 0.07 (1) | 10.00 | |
| F- G | 0 / 7 | -84.3 | -84.3 | 0.07 (1) | 10.00 | |
| M- B | -223 / 0 | 0.0 | 0.0 | 0.02 (1) | 7.81 | |
| H- G | -63 / 0 | 0.0 | 0.0 | 0.03 (1) | 7.81 | |
| M- L | 0 / 0 | -28.0 | -28.0 | 0.02 (2) | 10.00 | |
| L- K | -2 / 0 | -28.0 | -28.0 | 0.02 (2) | 10.00 | |
| K- J | -7 / 0 | -28.0 | -28.0 | 0.02 (2) | 10.00 | |
| J- I | -10 / 0 | -28.0 | -28.0 | 0.04 (2) | 6.25 | |
| I- H | 0 / 0 | -28.0 | -28.0 | 0.04 (2) | 10.00 | |

WEBS

| MEMB. FR-TO | MAX. FACTORED FORCE (LBS) | MAX CSI (LC) |
|---|---|---|
| I- F | -220 / 0 | 0.07 (1) |
| J- E | -150 / 0 | 0.03 (1) |
| K- D | -183 / 0 | 0.03 (1) |
| L- C | -52 / 0 | 0.01 (1) |
| I- G | -34 / 0 | 0.02 (1) |

**DESIGN CRITERIA**

SPECIFIED LOADS:

| | | | | |
|---|---|---|---|---|
| TOP CH. | LL | = | 25.6 | PSF |
| | DL | = | 3.0 | PSF |
| BOT CH. | LL | = | 10.5 | PSF |
| | DL | = | 7.0 | PSF |
| TOTAL LOAD | | = | 46.1 | PSF |

**SPACING = 24.0 IN. C/C**

THIS TRUSS IS DESIGNED FOR RESIDENTIAL OR SMALL BUILDING REQUIREMENTS OF PART 9, NBCC 2010

THIS DESIGN COMPLIES WITH:
- PART 9 OF OBC 2012 , BCBC 2012 , ABC 2014
- CSA 086-09
- TPIC 2011

DESIGN ASSUMPTIONS
-OVERHANG NOT TO BE ALTERED OR CUT OFF.

(55 % OF 31.3 P.S.F. G.S.L. PLUS 8.4 P.S.F. RAIN LOAD) EQUALS 25.6 P.S.F. SPECIFIED ROOF LIVE LOAD

CSI: TC=0.11 (A-B:1) , BC=0.04 (I-J:2) , WB=0.07 (F-I:1) , SSI=0.09 (F-G:1)

DOL LUMBER=1.00 NAIL=1.00 LS BEND=1.10 COMP=1.10 SHEAR=1.10 TENS= 1.10

COMPANION LIVE LOAD FACTOR = 0.50

AUTOSOLVE LEFT HEEL ONLY

TRUSS PLATE MANUFACTURER IS NOT RESPONSIBLE FOR QUALITY CONTROL IN THE TRUSS MANUFACTURING PLANT .

NAIL VALUES

| PLATE | GRIP(DRY) (PSI) MAX | MIN | SHEAR (PLI) MAX | MIN | SECTION (PLI) MAX | MIN |
|---|---|---|---|---|---|---|
| MT20 | 618 | 354 | 1667 | 822 | 2284 | 1656 |

PLATE PLACEMENT TOL. = 0.250 inches

PLATE ROTATION TOL. = 5.0 Deg.

JSI GRIP= 0.13 (F) (INPUT = 0.90 )
JSI METAL= 0.05 (F) (INPUT = 1.00 )

LICENSED PROFESSIONAL ENGINEER
S. KATSOULAKOS
PROVINCE OF ONTARIO

DWG NO. TAM 4280317
STRUCTURAL
COMPONENT ONLY

| JOB NAME | TRUSS NAME | QUANTITY | PLY | JOB DESC. | DRWG NO. |
|---|---|---|---|---|---|
| 282690 | T23 | 1 | 2 | TRUSS DESC. | |

Tamarack Roof Truss, Burlington

Version 8.030 S Oct 5 2016 MiTek Industries, Inc. Thu Aug 24 16:34:13 2017 Page 1

ID:DZmtPBj_26xwKfmrz12lewykd1T-9AqzB6VkrONKKfTqpOhbr5DHGUnYtWYK1MdAaiykbOu

Scale = 1:34.7

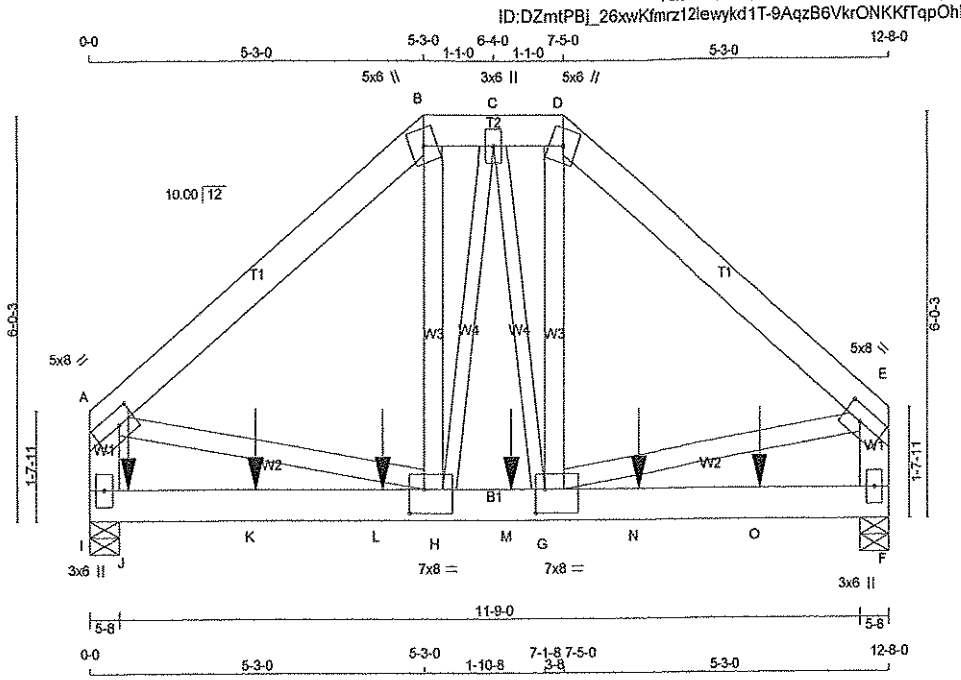


TOTAL WEIGHT = 2 X 87 = 174 lb

[M]

**LUMBER**

N. L. G. A. RULES

| CHORDS | SIZE | | LUMBER | DESCR. |
|---|---|---|---|---|
| A - B | 2x6 | DRY | No.2 | SPF |
| B - D | 2x6 | DRY | No.2 | SPF |
| D - E | 2x6 | DRY | No.2 | SPF |
| I - A | 2x6 | DRY | No.2 | SPF |
| F - E | 2x6 | DRY | No.2 | SPF |
| I - F | 2x6 | DRY | 1650F 1.5E | SPF |
| ALL WEBS EXCEPT | 2x4 | DRY | No.2 | SPF |
| H - C | 2x3 | DRY | No.2 | SPF |
| C - G | 2x3 | DRY | No.2 | SPF |

DRY: SEASONED LUMBER.

DESIGN CONSISTS OF 2 TRUSSES BUILT SEPARATELY THEN FASTENED TOGETHER AS FOLLOWS:

| CHORDS | #ROWS | SURFACE SPACING (IN) | LOAD(PLF) |
|---|---|---|---|
| TOP CHORDS : (0.122"X3") SPIRAL NAILS | | | |
| A- B | 2 | 12 | TOP |
| B- D | 2 | 12 | TOP |
| D- E | 2 | 12 | TOP |
| I- A | 2 | 2 | SIDE(27.4) |
| F- E | 2 | 2 | TOP |
| BOTTOM CHORDS : (0.122"X3") SPIRAL NAILS | | | |
| I- F | 2 | 5 | SIDE(427.3) |
| WEBS : (0.122"X3") SPIRAL NAILS | | | |
| 2x3 | 1 | 6 | |
| 2x4 | 1 | 6 | |

NAILS TO BE DRIVEN FROM ONE SIDE ONLY.

GIRDER NAILING ASSUMES NAILED HANGERS ARE FASTENED WITH MIN. 3-8 INCH NAILS.

TOP - COMPONENTS ARE LOADED FROM THE TOP AND MUST BE PLACED ON TOP EDGE OF ALL PLIES FOR THE LOAD TO BE TRANSFERRED TO EACH PLY.

SIDE - PLF SHOWN IS THE EQUIVALENT UDL APPLIED TO ONE SIDE THAT THE CORRESPONDING NAILING PATTERN SHALL BE CAPABLE OF TRANSFERING. REMAINING PLF MUST BE APPLIED ON THE OPPOSITE SIDE OR ON THE TOP.

**PLATES (table is in inches)**

| JT | TYPE | PLATES | W | LEN | Y | X |
|---|---|---|---|---|---|---|
| A | TMWW-t | MT20 | 5.0 | 8.0 | 2.50 | 3.25 |
| B | TTW+m | MT20 | 5.0 | 6.0 | | |
| C | TMWW+t | MT20 | 3.0 | 6.0 | | |
| D | TTW+m | MT20 | 5.0 | 6.0 | | |
| E | TMWW-t | MT20 | 5.0 | 8.0 | 2.50 | 3.25 |
| F | BMV1+p | MT20 | 3.0 | 6.0 | | |
| G | BMWWW-t | MT20 | 7.0 | 8.0 | 4.25 | 1.75 |
| H | BMWWW-t | MT20 | 7.0 | 8.0 | 4.25 | 2.75 |
| I | BMV1+p | MT20 | 3.0 | 6.0 | | |

**HANGERS NOTES**

1)

DIMENSIONS, SUPPORTS AND LOADINGS SPECIFIED BY FABRICATOR TO BE VERIFIED BY BUILDING DESIGNER

**BEARINGS**

| JT | FACTORED GROSS REACTION VERT | HORZ | MAXIMUM FACTORED GROSS REACTION DOWN | HORZ | UPLIFT | INPUT BRG IN-SX | REQRD BRG IN-SX |
|---|---|---|---|---|---|---|---|
| I | 6529 | 0 | 6529 | 0 | 0 | 5-8 | 5-8 |
| F | 5323 | 0 | 5323 | 0 | 0 | 5-8 | 5-8 |

**UNFACTORED REACTIONS**

| JT | 1ST LCASE COMBINED | MAX./MIN. COMPONENT REACTIONS SNOW | LIVE | PERM.LIVE | WIND | DEAD | SOIL |
|---|---|---|---|---|---|---|---|
| I | 5268 | 3074 / 0 | 1100 / 0 | 0 / 0 | 0 / 0 | 1094 / 0 | 0 / 0 |
| F | 4296 | 2506 / 0 | 897 / 0 | 0 / 0 | 0 / 0 | 892 / 0 | 0 / 0 |

BEARING MATERIAL TO BE SPF NO.2 OR BETTER AT JOINT(S) I, F

**BRACING**

TOP CHORD TO BE SHEATHED OR MAX. PURLIN SPACING = 5.11 FT.
MAX. UNBRACED BOTTOM CHORD LENGTH = 10.00 FT. OR RIGID CEILING DIRECTLY APPLIED.

ALL PITCH BREAKS AND PERIMETER CORNER JOINTS MUST BE LATERALLY RESTRAINED.

**LOADING**

TOTAL LOAD CASES: (4)

CHORDS

| MEMB. FR-TO | MAX. FACTORED FORCE (LBS) | FACTORED VERT. LOAD (PLF) FROM | TO | LC1 | MAX CSI (LC) | MAX. UNBRAC LENGTH |
|---|---|---|---|---|---|---|
| A- B | -4916 / 0 | -84.3 | -84.3 | 0.15 (1) | 5.11 | |
| B- C | -3884 / 0 | -84.3 | -84.3 | 0.22 (1) | 5.49 | |
| C- D | -3848 / 0 | -84.3 | -84.3 | 0.22 (1) | 5.51 | |
| D- E | -4868 / 0 | -84.3 | -84.3 | 0.15 (1) | 5.14 | |
| I- A | -4145 / 0 | 0.0 | 0.0 | 0.15 (1) | 7.00 | |
| F- E | -4107 / 0 | 0.0 | 0.0 | 0.15 (1) | 7.03 | |
| I- J | 0 / 0 | -28.0 | -28.0 | 0.67 (1) | 10.00 | |
| J- K | 0 / 0 | -28.0 | -28.0 | 0.67 (1) | 10.00 | |
| K- L | 0 / 0 | -28.0 | -28.0 | 0.67 (1) | 10.00 | |
| L- H | 0 / 0 | -28.0 | -28.0 | 0.67 (1) | 10.00 | |
| H- M | 0 / 3758 | -28.0 | -28.0 | 0.77 (1) | 10.00 | |
| M- G | 0 / 3758 | -28.0 | -28.0 | 0.77 (1) | 10.00 | |
| G- N | 0 / 0 | -28.0 | -28.0 | 0.62 (1) | 10.00 | |
| N- O | 0 / 0 | -28.0 | -28.0 | 0.62 (1) | 10.00 | |
| O- F | 0 / 0 | -28.0 | -28.0 | 0.62 (1) | 10.00 | |

WEBS

| MEMB. FR-TO | MAX. FACTORED FORCE (LBS) | MAX CSI (LC) |
|---|---|---|
| H- B | 0 / 2301 | 0.20 (1) |
| G- D | 0 / 2185 | 0.19 (1) |
| A- H | 0 / 3841 | 0.34 (1) |
| G- E | 0 / 3803 | 0.34 (1) |
| H- C | 0 / 685 | 0.08 (1) |
| C- G | 0 / 515 | 0.06 (1) |

FACTORED CONCENTRATED LOADS (LBS)

| JT | LOC. | LC1 | MAX- | MAX+ | FACE | DIR. | TYPE |
|---|---|---|---|---|---|---|---|
| J | 7-4 | -1743 | -1743 | --- | FRONT | VERT | TOTAL |
| K | 2-7-4 | -1737 | -1737 | --- | FRONT | VERT | TOTAL |
| L | 4-7-4 | -1737 | -1737 | --- | FRONT | VERT | TOTAL |
| M | 6-7-4 | -1737 | -1737 | --- | FRONT | VERT | TOTAL |
| N | 8-7-4 | -1737 | -1737 | --- | FRONT | VERT | TOTAL |
| O | 10-7-4 | -1737 | -1737 | --- | FRONT | VERT | TOTAL |

**DESIGN CRITERIA**

SPECIFIED LOADS:

| | | | | |
|---|---|---|---|---|
| TOP CH. | LL | = | 25.6 | PSF |
| | DL | = | 3.0 | PSF |
| BOT CH. | LL | = | 10.5 | PSF |
| | DL | = | 7.0 | PSF |
| TOTAL LOAD | | = | 46.1 | PSF |

**SPACING = 24.0 IN. C/C**

LOADING IN FLAT SECTION BASED ON A SLOPE OF 6.00/12

THIS TRUSS IS DESIGNED FOR RESIDENTIAL OR SMALL BUILDING REQUIREMENTS OF PART 9, NBCC 2010

THIS DESIGN COMPLIES WITH:
- PART 9 OF OBC 2012 , BCBC 2012 , ABC 2014
- CSA 086-09
- TPIC 2011

(55 % OF 31.3 P.S.F. G.S.L. PLUS 8.4 P.S.F. RAIN LOAD) EQUALS 25.6 P.S.F. SPECIFIED ROOF LIVE LOAD

ALLOWABLE DEFL.(LL)= L/360 (0.42")
CALCULATED VERT. DEFL.(LL) = L/ 999 (0.12")
ALLOWABLE DEFL.(TL)= L/360 (0.42")
CALCULATED VERT. DEFL.(TL) = L/ 827 (0.18")

CSI: TC=0.22 (B-C:1) , BC=0.77 (G-H:1) , WB=0.34 (A-H:1) , SSI=0.99 (H-I:1)

DOL LUMBER=1.00 NAIL=1.00 LS BEND=1.00 COMP=1.00 SHEAR=1.00 TENS= 1.00

COMPANION LIVE LOAD FACTOR = 0.50

AUTOSOLVE HEELS OFF

TRUSS PLATE MANUFACTURER IS NOT RESPONSIBLE FOR QUALITY CONTROL IN THE TRUSS MANUFACTURING PLANT .

NAIL VALUES

| PLATE | GRIP(DRY) (PSI) MAX | MIN | SHEAR (PLI) MAX | MIN | SECTION (PLI) MAX | MIN |
|---|---|---|---|---|---|---|
| MT20 | 618 | 354 | 1667 | 822 | 2284 | 1656 |

PLATE PLACEMENT TOL. = 0.250 inches

PLATE ROTATION TOL. = 5.0 Deg.

JSI GRIP= 0.88 (G) (INPUT = 0.90 )
JSI METAL= 0.47 (E) (INPUT = 1.00 )

LICENSED PROFESSIONAL ENGINEER
8277
S. KATSOULAKOS
PROVINCE OF ONTARIO

DWG NO. TAM 42000217
STRUCTURAL
COMPONENT ONLY

CONTINUED ON PAGE 2

| JOB NAME | TRUSS NAME | QUANTITY | PLY | JOB DESC. | DRWG NO. |
|---|---|---|---|---|---|
| 282690 | T23 | 1 | 2 | TRUSS DESC. | |



**HANGERS NOTES**

1) SPECIAL HANGER(S) OR CONNECTION(S) REQUIRED TO SUPPORT CONCENTRATED LOAD(S) 1742.9 lbs FACTORED DOWN AT 7-4, 1737.4 lbs FACTORED DOWN AT 2-7-4, 1737.4 lbs FACTORED DOWN AT 4-7-4, 1737.4 lbs FACTORED DOWN AT 6-7-4, AND 1737.4 lbs FACTORED DOWN AT 8-7-4, AND 1737.4 lbs FACTORED DOWN AT 10-7-4 ON BOTTOM CHORD. DESIGN FOR UNSPECIFIED CONNECTION(S) IS DELEGATED TO THE BUILDING DESIGNER.

LICENSED PROFESSIONAL ENGINEER
S. KATSOULAKOS
PROVINCE OF ONTARIO

DWG NO. TAM4280217
STRUCTURAL
COMPONENT ONLY

| JOB NAME | TRUSS NAME | QUANTITY | PLY | JOB DESC. | DRWG NO. |
|---|---|---|---|---|---|
| 282690 | T25S | 3 | 1 | TRUSS DESC. | |

Tamarack Roof Truss, Burlington

Version 8.030 S Oct 5 2016 MiTek Industries, Inc. Thu Aug 24 16:34:14 2017 Page 1
ID:DZmtPBj_26xwKfmrz12lewykd1T-dMOLPSVMchVByp20M5CqNJmTauHfc0wTG0Mk78ykbOt

Scale: 3/8"=1'

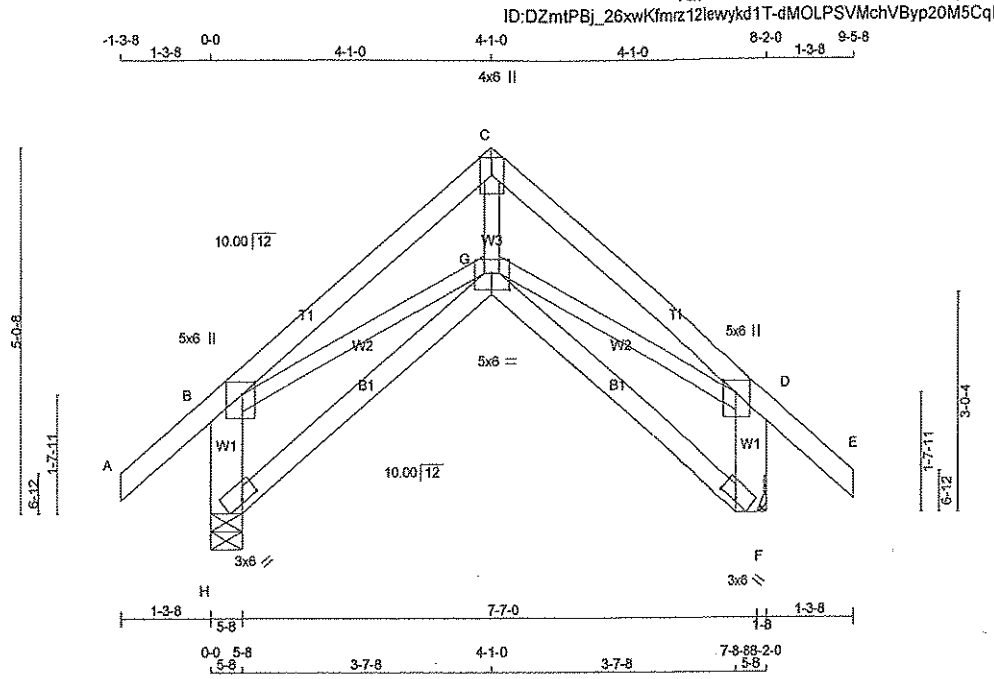


TOTAL WEIGHT = 3 X 41 = 124 lb

[M][F]

**LUMBER**

N. L. G. A. RULES

| CHORDS | SIZE | | LUMBER | DESCR. |
|---|---|---|---|---|
| A - C | 2x4 | DRY | No.2 | SPF |
| C - E | 2x4 | DRY | No.2 | SPF |
| H - B | 2x6 | DRY | No.2 | SPF |
| F - D | 2x6 | DRY | No.2 | SPF |
| H - G | 2x4 | DRY | No.2 | SPF |
| G - F | 2x4 | DRY | No.2 | SPF |
| ALL WEBS EXCEPT | 2x3 | DRY | No.2 | SPF |

DRY: SEASONED LUMBER.

**PLATES (table is in inches)**

| JT | TYPE | PLATES | W | LEN | Y | X |
|---|---|---|---|---|---|---|
| B | TMVW+p | MT20 | 5.0 | 6.0 | 2.00 | 2.25 |
| C | TTW+p | MT20 | 4.0 | 6.0 | Edge | |
| D | TMVW+p | MT20 | 5.0 | 6.0 | 2.00 | 2.25 |
| F | BVM1-I | MT20 | 3.0 | 6.0 | 0.50 | 3.00 |
| G | BBWWW-p | MT20 | 5.0 | 6.0 | 2.75 | 3.00 |
| H | BVM1-I | MT20 | 3.0 | 6.0 | 0.50 | 3.00 |

Edge - INDICATES REFERENCE CORNER OF PLATE TOUCHES EDGE OF CHORD.

**DIMENSIONS, SUPPORTS AND LOADINGS SPECIFIED BY FABRICATOR TO BE VERIFIED BY BUILDING DESIGNER**

**BEARINGS**

| JT | FACTORED GROSS REACTION VERT | HORZ | MAXIMUM FACTORED GROSS REACTION DOWN | HORZ | UPLIFT | INPUT BRG IN-SX | REQRD BRG IN-SX |
|---|---|---|---|---|---|---|---|
| H | 575 | 0 | 575 | 0 | 0 | 5-8 | 5-8 |
| F | 575 | 0 | 575 | 0 | 0 | HANGER BY OTHERS | |
| | | | | | | MIN. SEAT SIZE: 1-8 | |

**UNFACTORED REACTIONS**

| JT | 1ST LCASE COMBINED | MAX./MIN. COMPONENT REACTIONS SNOW | LIVE | PERM.LIVE | WIND | DEAD | SOIL |
|---|---|---|---|---|---|---|---|
| H | 456 | 280 / 0 | 86 / 0 | 0 / 0 | 0 / 0 | 90 / 0 | 0 / 0 |
| F | 456 | 280 / 0 | 86 / 0 | 0 / 0 | 0 / 0 | 90 / 0 | 0 / 0 |

BEARING MATERIAL TO BE SPF NO.2 OR BETTER AT JOINT(S) H

**BRACING**

TOP CHORD TO BE SHEATHED OR MAX. PURLIN SPACING = 6.25 FT.
MAX. UNBRACED BOTTOM CHORD LENGTH = 10.00 FT. OR RIGID CEILING DIRECTLY APPLIED.

ALL PITCH BREAKS AND PERIMETER CORNER JOINTS MUST BE LATERALLY RESTRAINED.

**LOADING**

TOTAL LOAD CASES: (4)

CHORDS

| MEMB. FR-TO | MAX. FACTORED FORCE (LBS) | FACTORED VERT. LOAD (PLF) FROM | TO | LC1 MAX CSI (LC) | MAX. UNBRAC LENGTH |
|---|---|---|---|---|---|
| A- B | 0 / 37 | -84.3 | -84.3 | 0.12 (1) | 10.00 |
| B- C | -741 / 0 | -84.3 | -84.3 | 0.19 (1) | 6.25 |
| C- D | -741 / 0 | -84.3 | -84.3 | 0.19 (1) | 6.25 |
| D- E | 0 / 37 | -84.3 | -84.3 | 0.12 (1) | 10.00 |
| H- B | -518 / 0 | 0.0 | 0.0 | 0.04 (1) | 7.81 |
| F- D | -518 / 0 | 0.0 | 0.0 | 0.04 (1) | 7.81 |
| H- G | 0 / 0 | -28.0 | -28.0 | 0.14 (3) | 10.00 |
| G- F | 0 / 0 | -28.0 | -28.0 | 0.14 (3) | 10.00 |

WEBS

| MEMB. FR-TO | MAX. FACTORED FORCE (LBS) | MAX CSI (LC) |
|---|---|---|
| G- C | 0 / 605 | 0.14 (1) |
| G- D | 0 / 620 | 0.14 (1) |
| B- G | 0 / 620 | 0.14 (1) |

**DESIGN CRITERIA**

SPECIFIED LOADS:

| | | | | |
|---|---|---|---|---|
| TOP CH. | LL | = | 25.6 | PSF |
| | DL | = | 3.0 | PSF |
| BOT CH. | LL | = | 10.5 | PSF |
| | DL | = | 7.0 | PSF |
| TOTAL LOAD | | = | 46.1 | PSF |

**SPACING = 24.0 IN. C/C**

THIS TRUSS IS DESIGNED FOR RESIDENTIAL OR SMALL BUILDING REQUIREMENTS OF PART 9, NBCC 2010

THIS DESIGN COMPLIES WITH:
- PART 9 OF OBC 2012 , BCBC 2012 , ABC 2014
- CSA 086-09
- TPIC 2011

(55 % OF 31.3 P.S.F. G.S.L. PLUS 8.4 P.S.F. RAIN LOAD) EQUALS 25.6 P.S.F. SPECIFIED ROOF LIVE LOAD

ALLOWABLE DEFL.(LL)= L/360 (0.27")
CALCULATED VERT. DEFL.(LL) = L/ 999 (0.03")
ALLOWABLE DEFL.(TL)= L/360 (0.27")
CALCULATED VERT. DEFL.(TL) = L/ 999 (0.05")

CSI: TC=0.19 (C-D:1) , BC=0.14 (G-H:3) , WB=0.14 (D-G:1) , SSI=0.10 (C-D:1)

DOL LUMBER=1.00 NAIL=1.00 LS BEND=1.10 COMP=1.10 SHEAR=1.10 TENS= 1.10

COMPANION LIVE LOAD FACTOR = 0.50

AUTOSOLVE HEELS OFF

TRUSS PLATE MANUFACTURER IS NOT RESPONSIBLE FOR QUALITY CONTROL IN THE TRUSS MANUFACTURING PLANT .

NAIL VALUES

| PLATE | GRIP(DRY) (PSI) MAX | MIN | SHEAR (PLI) MAX | MIN | SECTION (PLI) MAX | MIN |
|---|---|---|---|---|---|---|
| MT20 | 618 | 354 | 1667 | 822 | 2284 | 1656 |

PLATE PLACEMENT TOL. = 0.250 inches

PLATE ROTATION TOL. = 5.0 Deg.

JSI GRIP= 0.51 (G) (INPUT = 0.90 )
JSI METAL= 0.16 (B) (INPUT = 1.00 )

LICENSED PROFESSIONAL ENGINEER
8202
S. KATSOULAKOS
PROVINCE OF ONTARIO

DWG NO. TAM 4286/17
STRUCTURAL
COMPONENT ONLY

| JOB NAME | TRUSS NAME | QUANTITY | PLY | JOB DESC. | DRWG NO. |
|---|---|---|---|---|---|
| 282695 | T30 | 1 | 1 | TRUSS DESC. | |

Tamarack Roof Truss, Burlington

Version 8.030 S Oct 5 2016 MiTek Industries, Inc. Thu Aug 24 16:46:45 2017 Page 1

ID:4p0dQcRwWIQU5TVGLfjZsEykc_h-8rGF0FbRIR7dYDyLsJAxJgNl3dYc3be0yMnz_6ykbD8

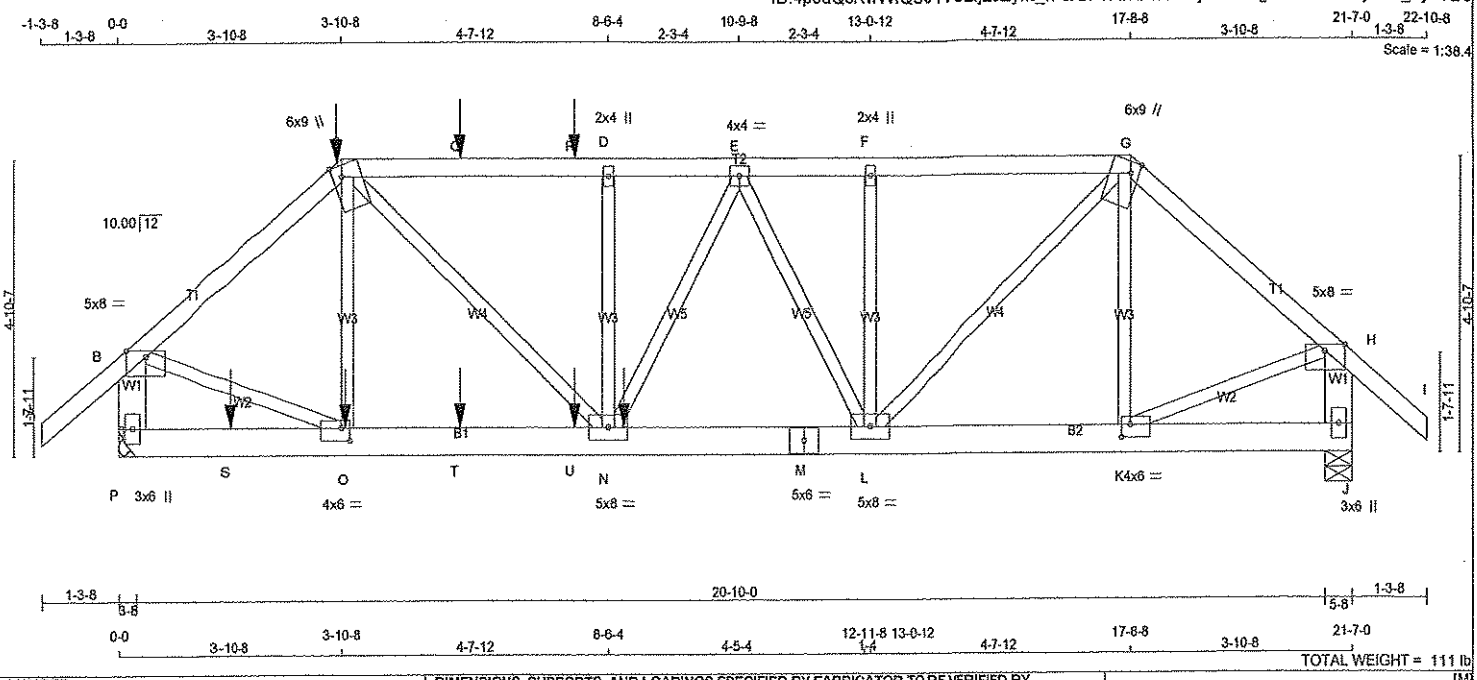


**LUMBER**

N. L. G. A. RULES

| CHORDS | SIZE | | LUMBER | DESCR. |
|---|---|---|---|---|
| A - C | 2x4 | DRY | No.2 | SPF |
| C - G | 2x4 | DRY | No.2 | SPF |
| G - I | 2x4 | DRY | No.2 | SPF |
| P - B | 2x6 | DRY | No.2 | SPF |
| J - H | 2x6 | DRY | No.2 | SPF |
| P - M | 2x6 | DRY | No.2 | SPF |
| M - J | 2x6 | DRY | No.2 | SPF |
| ALL WEBS EXCEPT | 2x3 | DRY | No.2 | SPF |

DRY: SEASONED LUMBER.

**PLATES (table is in inches)**

| JT | TYPE | PLATES | W | LEN | Y | X |
|---|---|---|---|---|---|---|
| B | TMVW-p | MT20 | 5.0 | 8.0 | Edge | |
| C | TTWW+m | MT20 | 6.0 | 9.0 | Edge | 1.75 |
| D | TMW+w | MT20 | 2.0 | 4.0 | | |
| E | TMWW-t | MT20 | 4.0 | 4.0 | | |
| F | TMW+w | MT20 | 2.0 | 4.0 | | |
| G | TTWW+m | MT20 | 6.0 | 9.0 | Edge | 1.75 |
| H | TMVW-p | MT20 | 5.0 | 8.0 | Edge | |
| J | BMV1+p | MT20 | 3.0 | 6.0 | | |
| K | BMWW-t | MT20 | 4.0 | 6.0 | 2.50 | 1.75 |
| L | BMWWW-t | MT20 | 5.0 | 8.0 | | |
| M | BS-t | MT20 | 5.0 | 6.0 | | |
| N | BMWWW-t | MT20 | 5.0 | 8.0 | | |
| O | BMWW-t | MT20 | 4.0 | 6.0 | 2.50 | 1.75 |
| P | BMV1+p | MT20 | 3.0 | 6.0 | | |

Edge - INDICATES REFERENCE CORNER OF PLATE TOUCHES EDGE OF CHORD.

**HANGERS NOTES**

1) SPECIAL HANGER(S) OR CONNECTION(S) REQUIRED TO SUPPORT CONCENTRATED LOAD(S) 225.2 lbs FACTORED DOWN AT 3-10-8, AND 38.3 lbs FACTORED DOWN AT 5-11-4, AND 38.3 lbs FACTORED DOWN AT 7-11-4 ON TOP CHORD, AND 42.0 lbs FACTORED DOWN AT 1-11-4, 34.1 lbs FACTORED DOWN AT 3-11-4, 34.1 lbs FACTORED DOWN AT 5-11-4, AND 34.1 lbs FACTORED DOWN AT 7-11-4, AND 835.4 lbs FACTORED DOWN AT 8-9-8 ON BOTTOM CHORD. DESIGN FOR UNSPECIFIED CONNECTION(S) IS DELEGATED TO THE BUILDING DESIGNER.

DIMENSIONS, SUPPORTS AND LOADINGS SPECIFIED BY FABRICATOR TO BE VERIFIED BY BUILDING DESIGNER

**BEARINGS**

| JT | FACTORED GROSS REACTION VERT | HORZ | MAXIMUM FACTORED GROSS REACTION DOWN | HORZ | UPLIFT | INPUT BRG IN-SX | REQRD BRG IN-SX |
|---|---|---|---|---|---|---|---|
| P | 2135 | 0 | 2135 | 0 | 0 | HANGER BY OTHERS MIN. SEAT SIZE: 3-8 | |
| J | 1741 | 0 | 1741 | 0 | 0 | 5-8 | 5-8 |

**UNFACTORED REACTIONS**

| JT | 1ST LCASE COMBINED | MAX./MIN. COMPONENT REACTIONS SNOW | LIVE | PERM.LIVE | WIND | DEAD | SOIL |
|---|---|---|---|---|---|---|---|
| P | 1709 | 1018 / 0 | 342 / 0 | 0 / 0 | 0 / 0 | 350 / 0 | 0 / 0 |
| J | 1398 | 827 / 0 | 284 / 0 | 0 / 0 | 0 / 0 | 287 / 0 | 0 / 0 |

BEARING MATERIAL TO BE SPF NO.2 OR BETTER AT JOINT(S) J

**BRACING**

TOP CHORD TO BE SHEATHED OR MAX. PURLIN SPACING = 3.80 FT.
MAX. UNBRACED BOTTOM CHORD LENGTH = 10.00 FT. OR RIGID CEILING DIRECTLY APPLIED.

ALL PITCH BREAKS AND PERIMETER CORNER JOINTS MUST BE LATERALLY RESTRAINED.

**LOADING**

TOTAL LOAD CASES: (4)

CHORDS

| MEMB. FR-TO | MAX. FACTORED FORCE (LBS) | FACTORED VERT. LOAD (PLF) FROM | TO | LC1 CSI (LC) | MAX UNBRAC LENGTH |
|---|---|---|---|---|---|
| A- B | 0 / 37 | -84.3 | -84.3 | 0.13 (1) | 10.00 |
| B- C | -2057 / 0 | -84.3 | -84.3 | 0.33 (1) | 4.37 |
| C- Q | -2621 / 0 | -84.3 | -84.3 | 0.44 (1) | 3.80 |
| Q- R | -2621 / 0 | -84.3 | -84.3 | 0.44 (1) | 3.80 |
| R- D | -2621 / 0 | -84.3 | -84.3 | 0.44 (1) | 3.80 |
| D- E | -2621 / 0 | -84.3 | -84.3 | 0.35 (1) | 3.86 |
| E- F | -2208 / 0 | -84.3 | -84.3 | 0.29 (1) | 4.24 |
| F- G | -2208 / 0 | -84.3 | -84.3 | 0.33 (1) | 4.23 |
| G- H | -1617 / 0 | -84.3 | -84.3 | 0.30 (1) | 4.85 |
| H- I | 0 / 37 | -84.3 | -84.3 | 0.13 (1) | 10.00 |
| P- B | -2086 / 0 | 0.0 | 0.0 | 0.15 (1) | 6.99 |
| J- H | -1700 / 0 | 0.0 | 0.0 | 0.13 (1) | 7.56 |
| P- S | 0 / 0 | -28.0 | -28.0 | 0.09 (2) | 10.00 |
| S- O | 0 / 0 | -28.0 | -28.0 | 0.09 (2) | 10.00 |
| O- T | 0 / 1570 | -28.0 | -28.0 | 0.26 (1) | 10.00 |
| T- U | 0 / 1570 | -28.0 | -28.0 | 0.26 (1) | 10.00 |
| U- N | 0 / 1570 | -28.0 | -28.0 | 0.26 (1) | 10.00 |
| N- M | 0 / 2422 | -28.0 | -28.0 | 0.38 (1) | 10.00 |
| M- L | 0 / 2422 | -28.0 | -28.0 | 0.38 (1) | 10.00 |
| L- K | 0 / 1233 | -28.0 | -28.0 | 0.20 (1) | 10.00 |
| K- J | 0 / 0 | -28.0 | -28.0 | 0.07 (2) | 10.00 |

WEBS

| MEMB. FR-TO | MAX. FACTORED FORCE (LBS) | MAX CSI (LC) |
|---|---|---|
| O- C | -276 / 105 | 0.09 (1) |
| C- N | 0 / 1460 | 0.36 (1) |
| N- D | -453 / 0 | 0.15 (1) |
| L- F | -391 / 0 | 0.13 (1) |
| L- G | 0 / 1354 | 0.34 (1) |
| K- G | -236 / 53 | 0.08 (1) |
| B- O | 0 / 1649 | 0.41 (1) |
| K- H | 0 / 1296 | 0.32 (1) |
| N- E | 0 / 443 | 0.11 (1) |
| E- L | -473 / 0 | 0.20 (1) |

FACTORED CONCENTRATED LOADS (LBS)

| JT | LOC. | LC1 | MAX- | MAX+ | FACE | DIR. | TYPE |
|---|---|---|---|---|---|---|---|
| C | 3-10-8 | -225 | -225 | --- | BACK | VERT | TOTAL |
| N | 8-9-8 | -835 | -835 | --- | BACK | VERT | TOTAL |
| O | 3-11-4 | -20 | -34 | --- | BACK | VERT | TOTAL |
| Q | 5-11-4 | -38 | -38 | --- | BACK | VERT | TOTAL |
| R | 7-11-4 | -38 | -38 | --- | BACK | VERT | TOTAL |
| S | 1-11-4 | -24 | -42 | --- | BACK | VERT | TOTAL |
| T | 5-11-4 | -20 | -34 | --- | BACK | VERT | TOTAL |
| U | 7-11-4 | -20 | -34 | --- | BACK | VERT | TOTAL |

**DESIGN CRITERIA**

SPECIFIED LOADS:

| | | | | |
|---|---|---|---|---|
| TOP CH. | LL | = | 25.6 | PSF |
| | DL | = | 3.0 | PSF |
| BOT CH. | LL | = | 10.5 | PSF |
| | DL | = | 7.0 | PSF |
| TOTAL LOAD | | = | 46.1 | PSF |

**SPACING = 24.0 IN. C/C**

LOADING IN FLAT SECTION BASED ON A SLOPE OF 6.00/12

THIS TRUSS IS DESIGNED FOR RESIDENTIAL OR SMALL BUILDING REQUIREMENTS OF PART 9, NBCC 2010

THIS DESIGN COMPLIES WITH:
- PART 9 OF OBC 2012 , BCBC 2012 , ABC 2014
- CSA 086-09
- TPIC 2011

(55 % OF 31.3 P.S.F. G.S.L. PLUS 8.4 P.S.F. RAIN LOAD) EQUALS 25.6 P.S.F. SPECIFIED ROOF LIVE LOAD

ALLOWABLE DEFL.(LL)= L/360 (0.72")
CALCULATED VERT. DEFL.(LL) = L/ 999 (0.08")
ALLOWABLE DEFL.(TL)= L/360 (0.72")
CALCULATED VERT. DEFL.(TL) = L/ 999 (0.13")

CSI: TC=0.44 (C-D:1) , BC=0.38 (L-N:1) , WB=0.41 (B-O:1) , SSI=0.24 (C-D:1)

DOL LUMBER=1.00 NAIL=1.00 LS BEND=1.00 COMP=1.00 SHEAR=1.00 TENS= 1.00

COMPANION LIVE LOAD FACTOR = 0.50

TRUSS PLATE MANUFACTURER IS NOT RESPONSIBLE FOR QUALITY CONTROL IN THE TRUSS MANUFACTURING PLANT .

NAIL VALUES

| PLATE | GRIP(DRY) (PSI) MAX | MIN | SHEAR (PLI) MAX | MIN | SECTION (PLI) MAX | MIN |
|---|---|---|---|---|---|---|
| MT20 | 618 | 354 | 1667 | 822 | 2284 | 1656 |

PLATE PLACEMENT TOL. = 0.250 inches

PLATE ROTATION TOL. = 5.0 Deg.

JSI GRIP= 0.90 (O) (INPUT = 0.90 )
JSI METAL= 0.42 (M) (INPUT = 1.00 )

LICENSED PROFESSIONAL ENGINEER
82477
S. KATSOULAKOS
PROVINCE OF ONTARIO

DWG NO. TAM42085-17
STRUCTURAL
COMPONENT ONLY

| JOB NAME | TRUSS NAME | QUANTITY | PLY | JOB DESC. | DRWG NO. |
|---|---|---|---|---|---|
| 282695 | T31 | 1 | 1 | TRUSS DESC. | |

Tamarack Roof Truss, Burlington

Version 8.030 S Oct 5 2016 MiTek Industries, Inc. Thu Aug 24 16:46:46 2017 Page 1

ID:4p0dQcRwWIQU5TVGLfjZsEykc_h-c1qdEbc3WIFUANXYQ1hAsuvwP1uco3n9B0XXWYykbD7

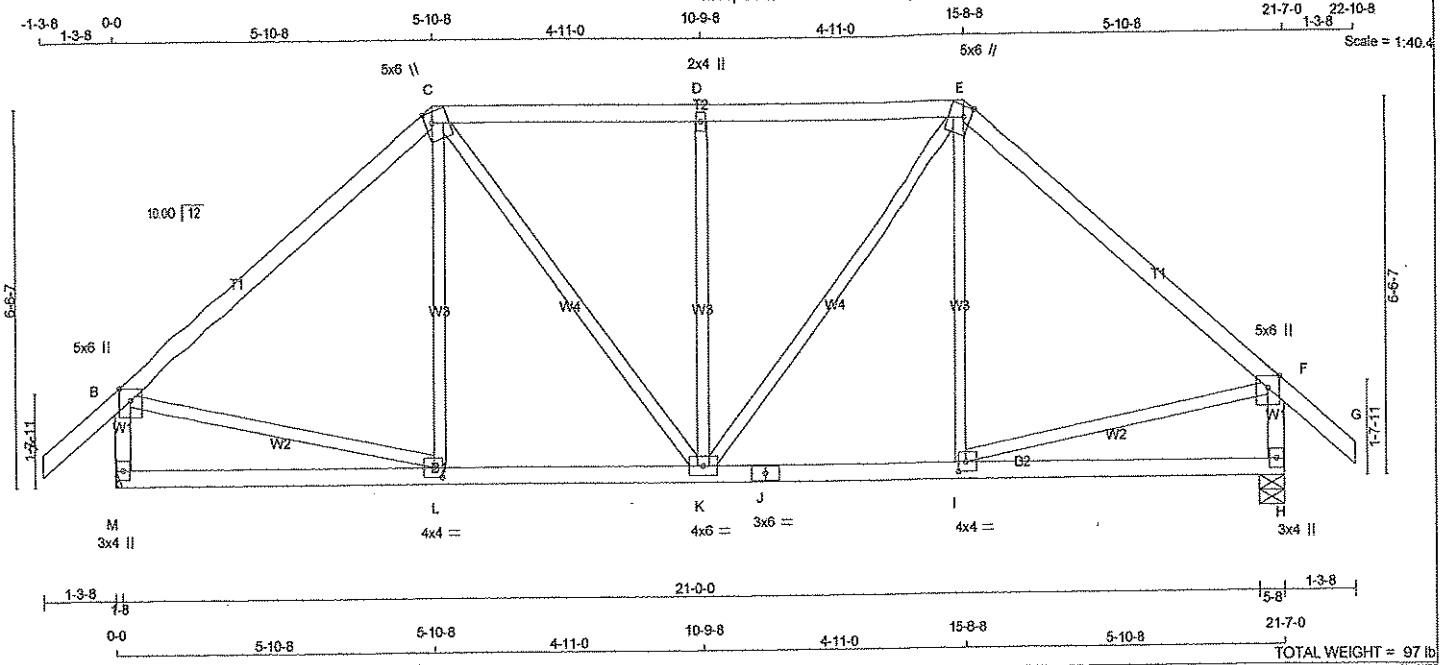


TOTAL WEIGHT = 97 lb

[M][F]

**LUMBER**

N. L. G. A. RULES

| CHORDS | SIZE | | LUMBER | DESCR. |
|---|---|---|---|---|
| A - C | 2x4 | DRY | No.2 | SPF |
| C - E | 2x4 | DRY | No.2 | SPF |
| E - G | 2x4 | DRY | No.2 | SPF |
| M - B | 2x4 | DRY | No.2 | SPF |
| H - F | 2x4 | DRY | No.2 | SPF |
| M - J | 2x4 | DRY | No.2 | SPF |
| J - H | 2x4 | DRY | No.2 | SPF |
| ALL WEBS EXCEPT | 2x3 | DRY | No.2 | SPF |

DRY: SEASONED LUMBER.

**PLATES (table is in inches)**

| JT | TYPE | PLATES | W | LEN | Y | X |
|---|---|---|---|---|---|---|
| B | TMVW+p | MT20 | 5.0 | 6.0 | Edge | |
| C | TTWW+m | MT20 | 5.0 | 6.0 | 2.25 | 1.50 |
| D | TMW+w | MT20 | 2.0 | 4.0 | | |
| E | TTWW+m | MT20 | 5.0 | 6.0 | 2.25 | 1.50 |
| F | TMVW+p | MT20 | 5.0 | 6.0 | Edge | |
| H | BMV1+p | MT20 | 3.0 | 4.0 | | |
| I | BMWW-t | MT20 | 4.0 | 4.0 | 2.00 | 1.75 |
| J | BS-t | MT20 | 3.0 | 6.0 | | |
| K | BMWWW-t | MT20 | 4.0 | 6.0 | | |
| L | BMWW-t | MT20 | 4.0 | 4.0 | 2.00 | 1.75 |
| M | BMV1+p | MT20 | 3.0 | 4.0 | | |

Edge - INDICATES REFERENCE CORNER OF PLATE TOUCHES EDGE OF CHORD.

**DIMENSIONS, SUPPORTS AND LOADINGS SPECIFIED BY FABRICATOR TO BE VERIFIED BY BUILDING DESIGNER**

**BEARINGS**

| JT | FACTORED GROSS REACTION VERT | HORZ | MAXIMUM FACTORED GROSS REACTION DOWN | HORZ | UPLIFT | INPUT BRG IN-SX | REQRD BRG IN-SX |
|---|---|---|---|---|---|---|---|
| M | 1328 | 0 | 1328 | 0 | 0 | HANGER BY OTHERS MIN. SEAT SIZE: 1-8 | |
| H | 1328 | 0 | 1328 | 0 | 0 | 5-8 | 5-8 |

**UNFACTORED REACTIONS**

| JT | 1ST LCASE COMBINED | MAX./MIN. COMPONENT REACTIONS SNOW | LIVE | PERM.LIVE | WIND | DEAD | SOIL |
|---|---|---|---|---|---|---|---|
| M | 1074 | 623 / 0 | 227 / 0 | 0 / 0 | 0 / 0 | 224 / 0 | 0 / 0 |
| H | 1074 | 623 / 0 | 227 / 0 | 0 / 0 | 0 / 0 | 224 / 0 | 0 / 0 |

BEARING MATERIAL TO BE SPF NO.2 OR BETTER AT JOINT(S) H

**BRACING**

TOP CHORD TO BE SHEATHED OR MAX. PURLIN SPACING = 5.52 FT.
MAX. UNBRACED BOTTOM CHORD LENGTH = 10.00 FT. OR RIGID CEILING DIRECTLY APPLIED.

ALL PITCH BREAKS AND PERIMETER CORNER JOINTS MUST BE LATERALLY RESTRAINED.

**LOADING**

TOTAL LOAD CASES: (4)

CHORDS

| MEMB. FR-TO | MAX. FACTORED FORCE (LBS) | FACTORED VERT. LOAD (PLF) FROM | TO | LC1 MAX CSI (LC) | MAX. UNBRAC LENGTH |
|---|---|---|---|---|---|
| A- B | 0 / 37 | -84.3 | -84.3 | 0.12 (1) | 10.00 |
| B- C | -1107 / 0 | -84.3 | -84.3 | 0.41 (1) | 5.52 |
| C- D | -1089 / 0 | -84.3 | -84.3 | 0.27 (1) | 5.74 |
| D- E | -1089 / 0 | -84.3 | -84.3 | 0.27 (1) | 5.74 |
| E- F | -1107 / 0 | -84.3 | -84.3 | 0.41 (1) | 5.52 |
| F- G | 0 / 37 | -84.3 | -84.3 | 0.12 (1) | 10.00 |
| M- B | -1260 / 0 | 0.0 | 0.0 | 0.13 (1) | 7.16 |
| H- F | -1260 / 0 | 0.0 | 0.0 | 0.13 (1) | 7.16 |
| M- L | 0 / 0 | -28.0 | -28.0 | 0.23 (3) | 10.00 |
| L- K | 0 / 849 | -28.0 | -28.0 | 0.33 (2) | 10.00 |
| K- J | 0 / 849 | -28.0 | -28.0 | 0.33 (2) | 10.00 |
| J- I | 0 / 849 | -28.0 | -28.0 | 0.33 (2) | 10.00 |
| I- H | 0 / 0 | -28.0 | -28.0 | 0.23 (3) | 10.00 |

WEBS

| MEMB. FR-TO | MAX. FACTORED FORCE (LBS) | MAX CSI (LC) |
|---|---|---|
| L- C | -4 / 219 | 0.05 (3) |
| C- K | 0 / 388 | 0.09 (1) |
| K- D | -503 / 0 | 0.35 (1) |
| K- E | 0 / 388 | 0.09 (1) |
| I- E | -4 / 219 | 0.05 (3) |
| B- L | 0 / 869 | 0.20 (1) |
| I- F | 0 / 869 | 0.20 (1) |

LICENSED PROFESSIONAL ENGINEER
82577
S. KATSOULAKOS
PROVINCE OF ONTARIO

DWG NO. TAM 42686 17
STRUCTURAL
COMPONENT ONLY

**DESIGN CRITERIA**

SPECIFIED LOADS:

| | | | | |
|---|---|---|---|---|
| TOP CH. | LL | = | 25.6 | PSF |
| | DL | = | 3.0 | PSF |
| BOT CH. | LL | = | 10.5 | PSF |
| | DL | = | 7.0 | PSF |
| TOTAL LOAD | | = | 46.1 | PSF |

**SPACING = 24.0 IN. C/C**

LOADING IN FLAT SECTION BASED ON A SLOPE OF 6.00/12

THIS TRUSS IS DESIGNED FOR RESIDENTIAL OR SMALL BUILDING REQUIREMENTS OF PART 9, NBCC 2010

THIS DESIGN COMPLIES WITH:
- PART 9 OF OBC 2012 , BCBC 2012 , ABC 2014
- CSA 086-09
- TPIC 2011

(55 % OF 31.3 P.S.F. G.S.L. PLUS 8.4 P.S.F. RAIN LOAD) EQUALS 25.6 P.S.F. SPECIFIED ROOF LIVE LOAD

ALLOWABLE DEFL.(LL)= L/360 (0.72")
CALCULATED VERT. DEFL.(LL) = L/ 999 (0.05")
ALLOWABLE DEFL.(TL)= L/360 (0.72")
CALCULATED VERT. DEFL.(TL) = L/ 999 (0.09")

CSI: TC=0.41 (E-F:1) , BC=0.33 (I-K:2) , WB=0.35 (D-K:1) , SSI=0.20 (D-E:1)

DOL LUMBER=1.00 NAIL=1.00 LS BEND=1.10 COMP=1.10 SHEAR=1.10 TENS= 1.10

COMPANION LIVE LOAD FACTOR = 0.50

TRUSS PLATE MANUFACTURER IS NOT RESPONSIBLE FOR QUALITY CONTROL IN THE TRUSS MANUFACTURING PLANT .

NAIL VALUES

| PLATE | GRIP(DRY) (PSI) MAX | MIN | SHEAR (PLI) MAX | MIN | SECTION (PLI) MAX | MIN |
|---|---|---|---|---|---|---|
| MT20 | 618 | 354 | 1667 | 822 | 2284 | 1656 |

PLATE PLACEMENT TOL. = 0.250 inches

PLATE ROTATION TOL. = 5.0 Deg.

JSI GRIP= 0.85 (L) (INPUT = 0.90 )
JSI METAL= 0.32 (L) (INPUT = 1.00 )

| JOB NAME | TRUSS NAME | QUANTITY | PLY | JOB DESC. | DRWG NO. |
|---|---|---|---|---|---|
| 282695 | T32 | 2 | 1 | TRUSS DESC. | |

Tamarack Roof Truss, Burlington

Version 8.030 S Oct 5 2016 MiTek Industries, Inc. Thu Aug 24 16:46:46 2017 Page 1

ID:4p0dQcRwWIQU5TVGLfjZsEykc_h-c1qdEbc3WlFUANXYQ1hAsuvzH1wao5D9B0XXWYykbD7

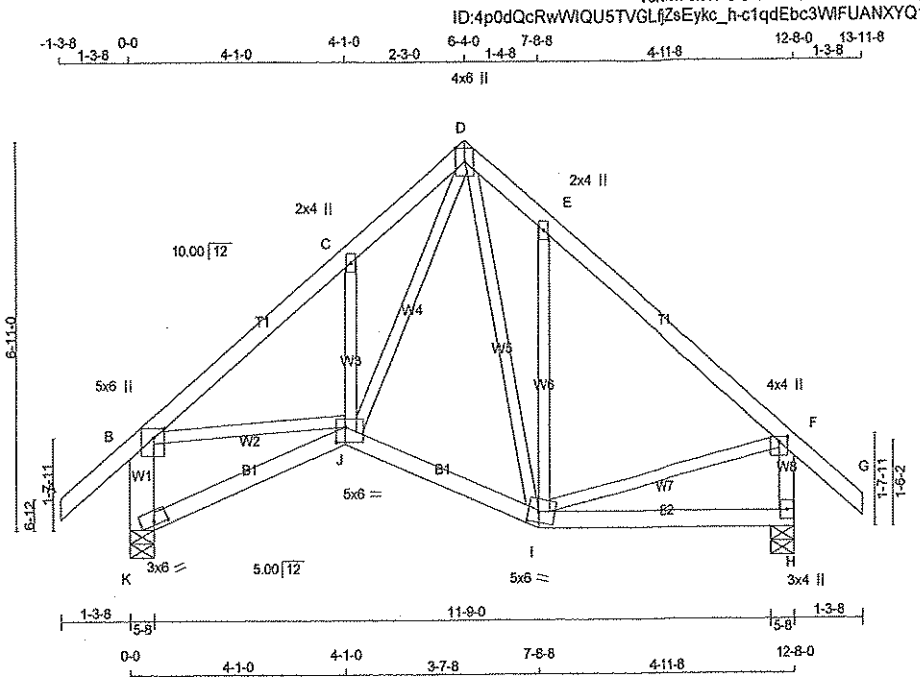


TOTAL WEIGHT = 2 X 65 = 131 lb

[M][F]

**LUMBER**

N. L. G. A. RULES

| CHORDS | SIZE | | LUMBER | DESCR. |
|---|---|---|---|---|
| A - D | 2x4 | DRY | No.2 | SPF |
| D - G | 2x4 | DRY | No.2 | SPF |
| K - B | 2x6 | DRY | No.2 | SPF |
| H - F | 2x4 | DRY | No.2 | SPF |
| K - J | 2x4 | DRY | No.2 | SPF |
| J - I | 2x4 | DRY | No.2 | SPF |
| I - H | 2x4 | DRY | No.2 | SPF |
| ALL WEBS EXCEPT | 2x3 | DRY | No.2 | SPF |

DRY: SEASONED LUMBER.

**PLATES (table is in inches)**

| JT | TYPE | PLATES | W | LEN | Y | X |
|---|---|---|---|---|---|---|
| B | TMW+p | MT20 | 5.0 | 6.0 | 2.00 | 2.25 |
| C | TMW+w | MT20 | 2.0 | 4.0 | | |
| D | TTWW+p | MT20 | 4.0 | 6.0 | Edge | |
| E | TMW+w | MT20 | 2.0 | 4.0 | | |
| F | TMWW+p | MT20 | 4.0 | 4.0 | 1.00 | 2.00 |
| H | BMV1+p | MT20 | 3.0 | 4.0 | | |
| I | BBWWW-m | MT20 | 5.0 | 6.0 | 2.25 | 2.25 |
| J | BBWWW-p | MT20 | 5.0 | 6.0 | 3.25 | 2.00 |
| K | BVM1-l | MT20 | 3.0 | 6.0 | 0.75 | 3.00 |

Edge - INDICATES REFERENCE CORNER OF PLATE TOUCHES EDGE OF CHORD.

DIMENSIONS, SUPPORTS AND LOADINGS SPECIFIED BY FABRICATOR TO BE VERIFIED BY BUILDING DESIGNER

**BEARINGS**

| JT | FACTORED GROSS REACTION VERT | HORZ | MAXIMUM FACTORED GROSS REACTION DOWN | HORZ | UPLIFT | INPUT BRG IN-SX | REQRD BRG IN-SX |
|---|---|---|---|---|---|---|---|
| K | 828 | 0 | 828 | 0 | 0 | 5-8 | 5-8 |
| H | 828 | 0 | 828 | 0 | 0 | 5-8 | 5-8 |

**UNFACTORED REACTIONS**

| JT | 1ST LCASE COMBINED | MAX./MIN. COMPONENT REACTIONS SNOW | LIVE | PERM.LIVE | WIND | DEAD | SOIL |
|---|---|---|---|---|---|---|---|
| K | 663 | 395 / 0 | 133 / 0 | 0 / 0 | 0 / 0 | 135 / 0 | 0 / 0 |
| H | 663 | 395 / 0 | 133 / 0 | 0 / 0 | 0 / 0 | 135 / 0 | 0 / 0 |

BEARING MATERIAL TO BE SPF NO.2 OR BETTER AT JOINT(S) K, H

**BRACING**

TOP CHORD TO BE SHEATHED OR MAX. PURLIN SPACING = 6.25 FT.
MAX. UNBRACED BOTTOM CHORD LENGTH = 10.00 FT. OR RIGID CEILING DIRECTLY APPLIED.

ALL PITCH BREAKS AND PERIMETER CORNER JOINTS MUST BE LATERALLY RESTRAINED.

**LOADING**

TOTAL LOAD CASES: (4)

CHORDS

| MEMB. FR-TO | MAX. FACTORED FORCE (LBS) | FACTORED VERT. LOAD LC1 (PLF) FROM | TO | MAX CSI (LC) | MAX. UNBRAC LENGTH |
|---|---|---|---|---|---|
| A- B | 0 / 37 | -84.3 | -84.3 | 0.12 (1) | 10.00 |
| B- C | -830 / 0 | -84.3 | -84.3 | 0.18 (1) | 6.25 |
| C- D | -880 / 0 | -84.3 | -84.3 | 0.12 (1) | 6.25 |
| D- E | -616 / 0 | -84.3 | -84.3 | 0.18 (1) | 6.25 |
| E- F | -544 / 0 | -84.3 | -84.3 | 0.22 (1) | 6.25 |
| F- G | 0 / 37 | -84.3 | -84.3 | 0.12 (1) | 10.00 |
| K- B | -770 / 0 | 0.0 | 0.0 | 0.06 (1) | 7.81 |
| H- F | -758 / 0 | 0.0 | 0.0 | 0.08 (1) | 7.81 |
| K- J | 0 / 0 | -28.0 | -28.0 | 0.14 (2) | 10.00 |
| J- I | 0 / 399 | -28.0 | -28.0 | 0.16 (2) | 10.00 |
| I- H | 0 / 0 | -28.0 | -28.0 | 0.20 (2) | 10.00 |

WEBS

| MEMB. FR-TO | MAX. FACTORED FORCE (LBS) | MAX CSI (LC) |
|---|---|---|
| J- C | -343 / 0 | 0.07 (1) |
| D- I | 0 / 256 | 0.06 (1) |
| I- E | -399 / 0 | 0.20 (1) |
| B- J | 0 / 652 | 0.15 (1) |
| I- F | 0 / 450 | 0.10 (1) |
| J- D | 0 / 700 | 0.16 (1) |

LICENSED PROFESSIONAL ENGINEER
8477
S. KATSOULAKOS
PROVINCE OF ONTARIO

DWG NO. TAM 42802 17
STRUCTURAL
COMPONENT ONLY

**DESIGN CRITERIA**

SPECIFIED LOADS:

| | | | | |
|---|---|---|---|---|
| TOP CH. | LL | = | 25.6 | PSF |
| | DL | = | 3.0 | PSF |
| BOT CH. | LL | = | 10.5 | PSF |
| | DL | = | 7.0 | PSF |
| TOTAL LOAD | | = | 46.1 | PSF |

**SPACING = 24.0 IN. C/C**

THIS TRUSS IS DESIGNED FOR RESIDENTIAL OR SMALL BUILDING REQUIREMENTS OF PART 9, NBCC 2010

THIS DESIGN COMPLIES WITH:
- PART 9 OF OBC 2012 , BCBC 2012 , ABC 2014
- CSA 086-09
- TPIC 2011

(55 % OF 31.3 P.S.F. G.S.L. PLUS 8.4 P.S.F. RAIN LOAD) EQUALS 25.6 P.S.F. SPECIFIED ROOF LIVE LOAD

ALLOWABLE DEFL.(LL)= L/360 (0.42")
CALCULATED VERT. DEFL.(LL) = L/ 999 (0.04")
ALLOWABLE DEFL.(TL)= L/360 (0.42")
CALCULATED VERT. DEFL.(TL) = L/ 999 (0.07")

CSI: TC=0.22 (E-F:1) , BC=0.20 (H-I:2) , WB=0.20 (E-I:1) , SSI=0.14 (E-F:1)

DOL LUMBER=1.00 NAIL=1.00 LS BEND=1.10 COMP=1.10 SHEAR=1.10 TENS= 1.10

COMPANION LIVE LOAD FACTOR = 0.50

AUTOSOLVE RIGHT HEEL ONLY

TRUSS PLATE MANUFACTURER IS NOT RESPONSIBLE FOR QUALITY CONTROL IN THE TRUSS MANUFACTURING PLANT .

NAIL VALUES

| PLATE | GRIP(DRY) (PSI) MAX | MIN | SHEAR (PLI) MAX | MIN | SECTION (PLI) MAX | MIN |
|---|---|---|---|---|---|---|
| MT20 | 618 | 354 | 1667 | 822 | 2284 | 1656 |

PLATE PLACEMENT TOL. = 0.250 inches

PLATE ROTATION TOL. = 5.0 Deg.

JSI GRIP= 0.75 (I) (INPUT = 0.90 )
JSI METAL= 0.20 (F) (INPUT = 1.00 )

| JOB NAME | TRUSS NAME | QUANTITY | PLY | JOB DESC. | DRWG NO. |
|---|---|---|---|---|---|
| 282695 | T33 | 1 | 1 | TRUSS DESC. | |

Tamarack Roof Truss, Burlington

Version 8.030 S Oct 5 2016 MiTek Industries, Inc. Thu Aug 24 16:46:46 2017 Page 1

ID:4p0dQcRwWIQU5TVGLfjZsEykc_h-c1qdEbc3WFUANXYQ1hAsuv_v1xao7E9B0XXWYykbD7

Scale: 3/8"=1'

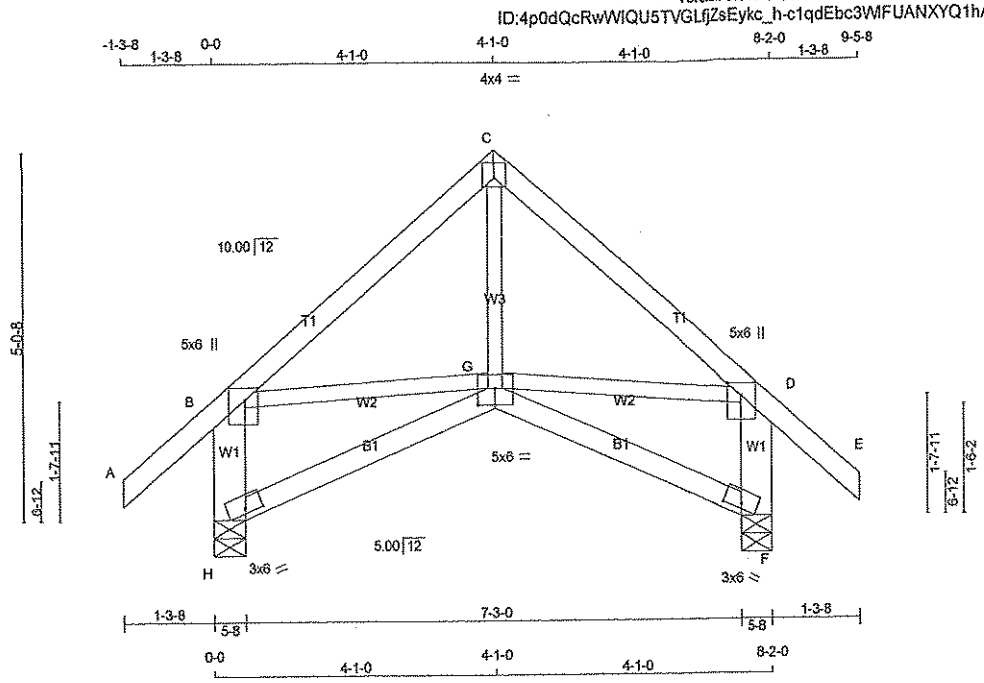


TOTAL WEIGHT = 40 lb

[M][F]

**LUMBER**

N. L. G. A. RULES

| CHORDS | SIZE | | LUMBER | DESCR. |
|---|---|---|---|---|
| A - C | 2x4 | DRY | No.2 | SPF |
| C - E | 2x4 | DRY | No.2 | SPF |
| H - B | 2x6 | DRY | No.2 | SPF |
| F - D | 2x6 | DRY | No.2 | SPF |
| H - G | 2x4 | DRY | No.2 | SPF |
| G - F | 2x4 | DRY | No.2 | SPF |
| ALL WEBS EXCEPT | 2x3 | DRY | No.2 | SPF |

DRY: SEASONED LUMBER.

**PLATES (table is in inches)**

| JT | TYPE | PLATES | W | LEN | Y | X |
|---|---|---|---|---|---|---|
| B | TMVW+p | MT20 | 5.0 | 6.0 | 2.00 | 2.25 |
| C | TTW-p | MT20 | 4.0 | 4.0 | 1.50 | 2.00 |
| D | TMVW+p | MT20 | 5.0 | 6.0 | 2.00 | 2.25 |
| F | BVM1-I | MT20 | 3.0 | 6.0 | 0.75 | 3.00 |
| G | BBWWW-p | MT20 | 5.0 | 6.0 | 2.75 | 3.00 |
| H | BVM1-I | MT20 | 3.0 | 6.0 | 0.75 | 3.00 |

**DIMENSIONS, SUPPORTS AND LOADINGS SPECIFIED BY FABRICATOR TO BE VERIFIED BY BUILDING DESIGNER**

**BEARINGS**

| JT | FACTORED GROSS REACTION VERT | HORZ | MAXIMUM FACTORED GROSS REACTION DOWN | HORZ | UPLIFT | INPUT BRG IN-SX | REQRD BRG IN-SX |
|---|---|---|---|---|---|---|---|
| H | 575 | 0 | 575 | 0 | 0 | 5-8 | 5-8 |
| F | 575 | 0 | 575 | 0 | 0 | 5-8 | 5-8 |

**UNFACTORED REACTIONS**

| JT | 1ST LCASE COMBINED | MAX /MIN. COMPONENT REACTIONS SNOW | LIVE | PERM.LIVE | WIND | DEAD | SOIL |
|---|---|---|---|---|---|---|---|
| H | 456 | 280 / 0 | 86 / 0 | 0 / 0 | 0 / 0 | 90 / 0 | 0 / 0 |
| F | 456 | 280 / 0 | 86 / 0 | 0 / 0 | 0 / 0 | 90 / 0 | 0 / 0 |

BEARING MATERIAL TO BE SPF NO.2 OR BETTER AT JOINT(S) H, F

**BRACING**

TOP CHORD TO BE SHEATHED OR MAX. PURLIN SPACING = 6.25 FT.
MAX. UNBRACED BOTTOM CHORD LENGTH = 10.00 FT. OR RIGID CEILING DIRECTLY APPLIED.

ALL PITCH BREAKS AND PERIMETER CORNER JOINTS MUST BE LATERALLY RESTRAINED.

**LOADING**

TOTAL LOAD CASES: (4)

CHORDS

| MEMB. FR-TO | MAX. FACTORED FORCE (LBS) | FACTORED VERT. LOAD LC1 (PLF) FROM | TO | MAX CSI (LC) | MAX. UNBRAC LENGTH |
|---|---|---|---|---|---|
| A- B | 0 / 37 | -84.3 | -84.3 | 0.12 (1) | 10.00 |
| B- C | -382 / 0 | -84.3 | -84.3 | 0.18 (1) | 6.25 |
| C- D | -382 / 0 | -84.3 | -84.3 | 0.18 (1) | 6.25 |
| D- E | 0 / 37 | -84.3 | -84.3 | 0.12 (1) | 10.00 |
| H- B | -518 / 0 | 0.0 | 0.0 | 0.04 (1) | 7.81 |
| F- D | -518 / 0 | 0.0 | 0.0 | 0.04 (1) | 7.81 |
| H- G | 0 / 0 | -28.0 | -28.0 | 0.14 (3) | 10.00 |
| G- F | 0 / 0 | -28.0 | -28.0 | 0.14 (3) | 10.00 |

WEBS

| MEMB. FR-TO | MAX. FACTORED FORCE (LBS) | MAX CSI (LC) |
|---|---|---|
| G- C | 0 / 223 | 0.05 (2) |
| B- G | 0 / 294 | 0.07 (1) |
| G- D | 0 / 294 | 0.07 (1) |

**DESIGN CRITERIA**

SPECIFIED LOADS:

| | | | | |
|---|---|---|---|---|
| TOP CH. | LL | = | 25.6 | PSF |
| | DL | = | 3.0 | PSF |
| BOT CH. | LL | = | 10.5 | PSF |
| | DL | = | 7.0 | PSF |
| TOTAL LOAD | | = | 46.1 | PSF |

**SPACING = 24.0 IN. C/C**

THIS TRUSS IS DESIGNED FOR RESIDENTIAL OR SMALL BUILDING REQUIREMENTS OF PART 9, NBCC 2010

THIS DESIGN COMPLIES WITH:
- PART 9 OF OBC 2012 , BCBC 2012 , ABC 2014
- CSA 086-09
- TPIC 2011

(55 % OF 31.3 P.S.F. G.S.L. PLUS 8.4 P.S.F. RAIN LOAD) EQUALS 25.6 P.S.F. SPECIFIED ROOF LIVE LOAD

ALLOWABLE DEFL.(LL)= L/360 (0.27")
CALCULATED VERT. DEFL.(LL) = L/ 999 (0.02")
ALLOWABLE DEFL.(TL)= L/360 (0.27")
CALCULATED VERT. DEFL.(TL) = L/ 999 (0.04")

CSI: TC=0.18 (C-D:1) , BC=0.14 (F-G:3) , WB=0.07 (B-G:1) , SSI=0.10 (C-D:1)

DOL LUMBER=1.00 NAIL=1.00 LS BEND=1.10 COMP=1.10 SHEAR=1.10 TENS= 1.10

COMPANION LIVE LOAD FACTOR = 0.50

AUTOSOLVE HEELS OFF

TRUSS PLATE MANUFACTURER IS NOT RESPONSIBLE FOR QUALITY CONTROL IN THE TRUSS MANUFACTURING PLANT .

NAIL VALUES

| PLATE | GRIP(DRY) (PSI) MAX | MIN | SHEAR (PLI) MAX | MIN | SECTION (PLI) MAX | MIN |
|---|---|---|---|---|---|---|
| MT20 | 618 | 354 | 1667 | 822 | 2284 | 1656 |

PLATE PLACEMENT TOL. = 0.250 Inches

PLATE ROTATION TOL. = 5.0 Deg.

JSI GRIP= 0.74 (C) (INPUT = 0.90 )
JSI METAL= 0.10 (D) (INPUT = 1.00 )

LICENSED PROFESSIONAL ENGINEER
82077
S. KATSOULAKOS
PROVINCE OF ONTARIO

DWG NO. TAM42008B17
STRUCTURAL
COMPONENT ONLY

| JOB NAME | TRUSS NAME | QUANTITY | PLY | JOB DESC. | DRWG NO. |
|---|---|---|---|---|---|
| 282695 | T100 | 1 | 2 | TRUSS DESC. | |

Tamarack Roof Truss, Burlington

Version 8.030 S Oct 5 2016 MiTek Industries, Inc. Thu Aug 24 16:46:47 2017 Page 1

ID:_P_zlJoeh6kqSyqNtNRH3eykdwA-4EO?RxdiH2NLnX6kzkCPO5S7?RDFXWGJQgG43?ykbD6

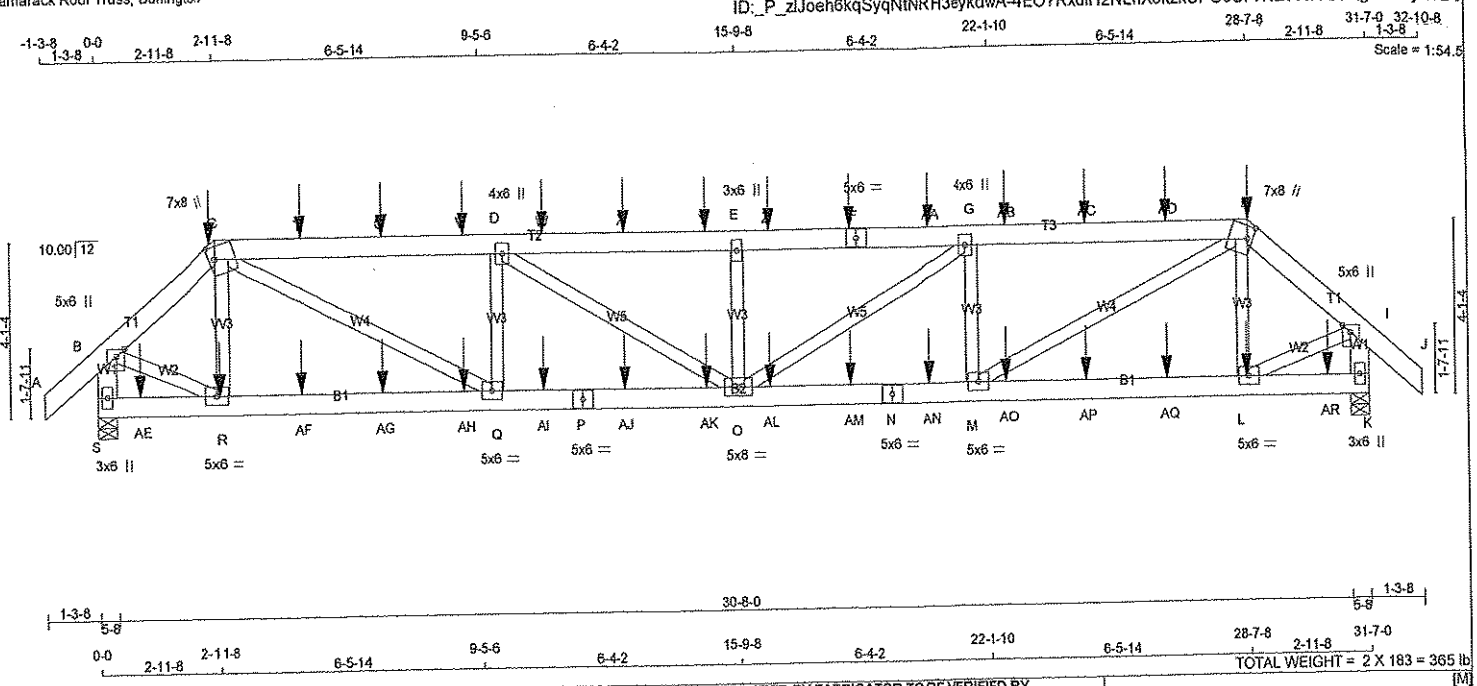


## LUMBER

N. L. G. A. RULES

| CHORDS | SIZE | | LUMBER | DESCR. |
|---|---|---|---|---|
| A - C | 2x6 | DRY | No.2 | SPF |
| C - F | 2x6 | DRY | No.2 | SPF |
| F - H | 2x6 | DRY | No.2 | SPF |
| H - J | 2x6 | DRY | No.2 | SPF |
| S - B | 2x6 | DRY | No.2 | SPF |
| K - I | 2x6 | DRY | No.2 | SPF |
| S - P | 2x6 | DRY | No.2 | SPF |
| P - N | 2x6 | DRY | No.2 | SPF |
| N - K | 2x6 | DRY | No.2 | SPF |
| ALL WEBS EXCEPT | 2x4 | DRY | No.2 | SPF |

DRY: SEASONED LUMBER.

DESIGN CONSISTS OF 2 TRUSSES BUILT SEPARATELY THEN FASTENED TOGETHER AS FOLLOWS:

| CHORDS | #ROWS | SURFACE SPACING (IN) | LOAD(PLF) |
|---|---|---|---|
| TOP CHORDS : (0.122"X3") SPIRAL NAILS | | | |
| A- C | 2 | 12 | SIDE(122.0) |
| C- F | 2 | 12 | SIDE(61.0) |
| F- H | 2 | 12 | SIDE(61.0) |
| H- J | 2 | 12 | SIDE(122.0) |
| S- B | 2 | 12 | TOP |
| K- I | 2 | 12 | TOP |
| BOTTOM CHORDS : (0.122"X3") SPIRAL NAILS | | | |
| S- P | 2 | 12 | SIDE(183.1) |
| P- N | 2 | 12 | SIDE(0.0) |
| N- K | 2 | 12 | SIDE(183.1) |
| WEBS : (0.122"X3") SPIRAL NAILS | | | |
| 2x4 | 1 | 6 | |

NAILS TO BE DRIVEN FROM ONE SIDE ONLY.

GIRDER NAILING ASSUMES NAILED HANGERS ARE FASTENED WITH MIN. 3-0 INCH NAILS.

TOP - COMPONENTS ARE LOADED FROM THE TOP AND MUST BE PLACED ON TOP EDGE OF ALL PLIES FOR THE LOAD TO BE TRANSFERRED TO EACH PLY.

SIDE - PLF SHOWN IS THE EQUIVALENT UDL APPLIED TO ONE SIDE THAT THE CORRESPONDING NAILING PATTERN SHALL BE CAPABLE OF TRANSFERING. REMAINING PLF MUST BE APPLIED ON THE OPPOSITE SIDE OR ON THE TOP.

## PLATES (table is in inches)

| JT | TYPE | PLATES | W | LEN | Y | X |
|---|---|---|---|---|---|---|
| B | TMWW+p | MT20 | 5.0 | 6.0 | 2.00 | 2.25 |
| C | TTWW+m | MT20 | 7.0 | 8.0 | 3.50 | 1.50 |
| D | TMWW+t | MT20 | 4.0 | 6.0 | | |
| E | TMW+w | MT20 | 3.0 | 6.0 | | |
| F | TS-t | MT20 | 5.0 | 6.0 | | |
| G | TMWW+t | MT20 | 4.0 | 6.0 | | |
| H | TTWW+m | MT20 | 7.0 | 8.0 | 3.50 | 1.50 |
| I | TMW+p | MT20 | 5.0 | 6.0 | 2.00 | 2.25 |
| K | BMV1+p | MT20 | 3.0 | 6.0 | | |
| L, M, Q, R | | | | | | |
| L | BMWW-t | MT20 | 5.0 | 6.0 | | |
| N | BS-t | MT20 | 5.0 | 6.0 | | |
| O | BMWWW-t | MT20 | 5.0 | 8.0 | | |
| P | BS-t | MT20 | 5.0 | 6.0 | | |
| S | BMV1+p | MT20 | 3.0 | 6.0 | | |

DIMENSIONS, SUPPORTS AND LOADINGS SPECIFIED BY FABRICATOR TO BE VERIFIED BY BUILDING DESIGNER

## BEARINGS

| JT | FACTORED GROSS REACTION VERT | HORZ | MAXIMUM FACTORED GROSS REACTION DOWN | HORZ | UPLIFT | INPUT BRG IN-SX | REQRD BRG IN-SX |
|---|---|---|---|---|---|---|---|
| S | 3137 | 0 | 3137 | 0 | 0 | 5-8 | 5-8 |
| K | 3109 | 0 | 3109 | 0 | 0 | 5-8 | 5-8 |

## UNFACTORED REACTIONS

| JT | 1ST LCASE COMBINED | MAX./MIN. COMPONENT REACTIONS SNOW | LIVE | PERM.LIVE | WIND | DEAD | SOIL |
|---|---|---|---|---|---|---|---|
| S | 2564 | 1442 / 0 | 571 / 0 | 0 / 0 | 0 / 0 | 551 / 0 | 0 / 0 |
| K | 2545 | 1423 / 0 | 571 / 0 | 0 / 0 | 0 / 0 | 551 / 0 | 0 / 0 |

BEARING MATERIAL TO BE SPF NO.2 OR BETTER AT JOINT(S) S, K

## BRACING

TOP CHORD TO BE SHEATHED OR MAX. PURLIN SPACING = 4.43 FT.
MAX. UNBRACED BOTTOM CHORD LENGTH = 10.00 FT. OR RIGID CEILING DIRECTLY APPLIED.

ALL PITCH BREAKS AND PERIMETER CORNER JOINTS MUST BE LATERALLY RESTRAINED.

## LOADING

TOTAL LOAD CASES: (4)

### CHORDS

| MEMB. FR-TO | MAX. FACTORED FORCE (LBS) | FACTORED VERT. LOAD (PLF) FROM | TO | LC1 | MAX CSI (LC) | MAX. UNBRAC LENGTH |
|---|---|---|---|---|---|---|
| A- B | 0 / 39 | -84.3 | -84.3 | 0.03 (1) | 10.00 | |
| B- C | -3136 / 0 | -84.3 | -84.3 | 0.05 (1) | 6.20 | |
| C- T | -5721 / 0 | -84.3 | -84.3 | 0.28 (1) | 4.69 | |
| T- U | -5721 / 0 | -84.3 | -84.3 | 0.28 (1) | 4.69 | |
| U- V | -5721 / 0 | -84.3 | -84.3 | 0.28 (1) | 4.69 | |
| V- D | -5721 / 0 | -84.3 | -84.3 | 0.28 (1) | 4.69 | |
| D- W | -6526 / 0 | -84.3 | -84.3 | 0.29 (1) | 4.43 | |
| W- X | -6526 / 0 | -84.3 | -84.3 | 0.29 (1) | 4.43 | |
| X- Y | -6526 / 0 | -84.3 | -84.3 | 0.29 (1) | 4.43 | |
| Y- E | -6526 / 0 | -84.3 | -84.3 | 0.29 (1) | 4.43 | |
| E- Z | -6526 / 0 | -84.3 | -84.3 | 0.29 (1) | 4.43 | |
| Z- F | -6526 / 0 | -84.3 | -84.3 | 0.29 (1) | 4.43 | |
| F-AA | -6526 / 0 | -84.3 | -84.3 | 0.29 (1) | 4.43 | |
| AA- G | -6526 / 0 | -84.3 | -84.3 | 0.29 (1) | 4.43 | |
| G-AB | -5713 / 0 | -84.3 | -84.3 | 0.28 (1) | 4.69 | |
| AB-AC | -5713 / 0 | -84.3 | -84.3 | 0.28 (1) | 4.69 | |
| AC-AD | -5713 / 0 | -84.3 | -84.3 | 0.28 (1) | 4.69 | |
| AD- H | -5713 / 0 | -84.3 | -84.3 | 0.28 (1) | 4.69 | |
| H- I | -3106 / 0 | -84.3 | -84.3 | 0.05 (1) | 6.21 | |
| I- J | 0 / 39 | -84.3 | -84.3 | 0.03 (1) | 10.00 | |
| S- B | -3130 / 0 | 0.0 | 0.0 | 0.11 (1) | 7.80 | |
| K- I | -3102 / 0 | 0.0 | 0.0 | 0.11 (1) | 7.81 | |
| S-AE | 0 / 0 | -28.0 | -28.0 | 0.10 (2) | 10.00 | |
| AE- R | 0 / 0 | -28.0 | -28.0 | 0.10 (2) | 10.00 | |
| R-AF | 0 / 2374 | -28.0 | -28.0 | 0.23 (1) | 10.00 | |
| AF-AG | 0 / 2374 | -28.0 | -28.0 | 0.23 (1) | 10.00 | |
| AG-AH | 0 / 2374 | -28.0 | -28.0 | 0.23 (1) | 10.00 | |
| AH- Q | 0 / 2374 | -28.0 | -28.0 | 0.23 (1) | 10.00 | |
| Q-AI | 0 / 5721 | -28.0 | -28.0 | 0.43 (1) | 10.00 | |
| AI- P | 0 / 5721 | -28.0 | -28.0 | 0.43 (1) | 10.00 | |
| P-AJ | 0 / 5721 | -28.0 | -28.0 | 0.43 (1) | 10.00 | |
| AJ-AK | 0 / 5721 | -28.0 | -28.0 | 0.43 (1) | 10.00 | |
| AK- O | 0 / 5721 | -28.0 | -28.0 | 0.43 (1) | 10.00 | |
| O-AL | 0 / 5714 | -28.0 | -28.0 | 0.43 (1) | 10.00 | |
| AL-AM | 0 / 5714 | -28.0 | -28.0 | 0.43 (1) | 10.00 | |
| AM- N | 0 / 5714 | -28.0 | -28.0 | 0.43 (1) | 10.00 | |
| N-AN | 0 / 5714 | -28.0 | -28.0 | 0.43 (1) | 10.00 | |
| AN- M | 0 / 5714 | -28.0 | -28.0 | 0.43 (1) | 10.00 | |
| M-AO | 0 / 2351 | -28.0 | -28.0 | 0.22 (1) | 10.00 | |

### WEBS

| MEMB. FR-TO | MAX. FACTORED FORCE (LBS) | MAX CSI (LC) |
|---|---|---|
| R- C | -535 / 69 | 0.05 (1) |
| C- Q | 0 / 3776 | 0.33 (1) |
| Q- D | -1463 / 0 | 0.13 (1) |
| D- O | 0 / 946 | 0.08 (1) |
| O- E | -707 / 0 | 0.06 (1) |
| O- G | 0 / 954 | 0.08 (1) |
| M- G | -1471 / 0 | 0.13 (1) |
| M- H | 0 / 3793 | 0.34 (1) |
| L- H | -527 / 69 | 0.05 (1) |
| B- R | 0 / 2545 | 0.22 (1) |
| L- I | 0 / 2521 | 0.22 (1) |

LICENSED PROFESSIONAL ENGINEER
S. KATSOULAKOS
PROVINCE OF ONTARIO

DWG NO. TAM42009
STRUCTURAL COMPONENT ONLY

## DESIGN CRITERIA

*** SPECIAL LOADS ANALYSIS ***
GEOMETRY AND/OR BASIC LOADS CHANGED BY USER.
LOADS WERE DERIVED FROM USER INPUT
NO FURTHER MODIFICATIONS WERE MADE

SPECIFIED LOADS:

| | | | | |
|---|---|---|---|---|
| TOP CH. | LL | = | 25.6 | PSF |
| | DL | = | 3.0 | PSF |
| BOT CH. | LL | = | 10.5 | PSF |
| | DL | = | 7.0 | PSF |
| TOTAL LOAD | | = | 46.1 | PSF |

**SPACING = 24.0 IN. C/C**

LOADING IN FLAT SECTION BASED ON A SLOPE OF 6.00/12

*** NON STANDARD GIRDER ***
ADDT'L USER-DEFINED LOADS APPLIED TO ALL LOAD CASES.

THIS TRUSS IS DESIGNED FOR RESIDENTIAL OR SMALL BUILDING REQUIREMENTS OF PART 9, NBCC 2010

THIS DESIGN COMPLIES WITH:
- PART 9 OF OBC 2012 , BCBC 2012 , ABC 2014
- CSA 086-09
- TPIC 2011

(55 % OF 31.3 P.S.F. G.S.L. PLUS 8.4 P.S.F. RAIN LOAD) EQUALS 25.6 P.S.F. SPECIFIED ROOF LIVE LOAD

ALLOWABLE DEFL.(LL)= L/360 (1.05")
CALCULATED VERT. DEFL.(LL) = L/ 999 (0.15")
ALLOWABLE DEFL.(TL)= L/360 (1.05")
CALCULATED VERT. DEFL.(TL) = L/ 999 (0.25")

CSI: TC=0.29 (E-G:1) , BC=0.43 (O-Q:1) , WB=0.34 (H-M:1) , SSI=0.18 (G-H:1)

DOL LUMBER=1.00 NAIL=1.00 LS BEND=1.00 COMP=1.00 SHEAR=1.00 TENS= 1.00

COMPANION LIVE LOAD FACTOR = 0.50

TRUSS PLATE MANUFACTURER IS NOT RESPONSIBLE FOR QUALITY CONTROL IN THE TRUSS MANUFACTURING PLANT .

NAIL VALUES

| PLATE | GRIP(DRY) (PSI) MAX | MIN | SHEAR (PLI) MAX | MIN | SECTION (PLI) MAX | MIN |
|---|---|---|---|---|---|---|
| MT20 | 618 | 354 | 1667 | 822 | 2284 | 1656 |

PLATE PLACEMENT TOL. = 0.250 Inches

PLATE ROTATION TOL. = 5.0 Deg.

JSI GRIP= 0.88 (C) (INPUT = 0.90 )
JSI METAL= 0.48 (N) (INPUT = 1.00 )

P6 1/2

CONTINUED ON PAGE 2

| JOB NAME | TRUSS NAME | QUANTITY | PLY | JOB DESC. | DRWG NO. |
|---|---|---|---|---|---|
| 282695 | T100 | 1 | 2 | TRUSS DESC. | |



Tamarack Roof Truss, Burlington

ID: P_zlJoeh6kqSyqNtNRH3eykdwA-4EO?RxdiH2NLnX6kzkCPO5S7?RDFXWGJQgG43?ykbD6

**HANGERS NOTES**

1) SPECIAL HANGER(S) OR CONNECTION(S) REQUIRED TO SUPPORT CONCENTRATED LOAD(S) 319.1 lbs FACTORED DOWN AT 2-11-8, 283.2 lbs FACTORED DOWN AT 28-7-8, 101.4 lbs FACTORED DOWN AT 5-0-4, 101.4 lbs FACTORED DOWN AT 7-0-4, 101.4 lbs FACTORED DOWN AT 9-0-4, 101.4 lbs FACTORED DOWN AT 11-0-4, 101.4 lbs FACTORED DOWN AT 13-0-4, 101.4 lbs FACTORED DOWN AT 15-0-4, 101.4 lbs FACTORED DOWN AT 16-6-12, 101.4 lbs FACTORED DOWN AT 18-6-12, 101.4 lbs FACTORED DOWN AT 20-6-12, 101.4 lbs FACTORED DOWN AT 22-6-12, AND 101.4 lbs FACTORED DOWN AT 24-6-12, AND 101.4 lbs FACTORED DOWN AT 26-6-12 ON TOP CHORD, AND 69.9 lbs FACTORED DOWN AT 1-0-4, 69.9 lbs FACTORED DOWN AT 3-0-4, 69.9 lbs FACTORED DOWN AT 5-0-4, 69.9 lbs FACTORED DOWN AT 7-0-4, 69.9 lbs FACTORED DOWN AT 9-0-4, 69.9 lbs FACTORED DOWN AT 11-0-4, 69.9 lbs FACTORED DOWN AT 13-0-4, 69.9 lbs FACTORED DOWN AT 15-0-4, 69.9 lbs FACTORED DOWN AT 16-6-12, 69.9 lbs FACTORED DOWN AT 18-6-12, 69.9 lbs FACTORED DOWN AT 20-6-12, 69.9 lbs FACTORED DOWN AT 22-6-12, 69.9 lbs FACTORED DOWN AT 24-6-12, 69.9 lbs FACTORED DOWN AT 26-6-12, AND 69.9 lbs FACTORED DOWN AT 28-6-12, AND 69.9 lbs FACTORED DOWN AT 30-6-12 ON BOTTOM CHORD. DESIGN FOR UNSPECIFIED CONNECTION(S) IS DELEGATED TO THE BUILDING DESIGNER.

**LOADING**

TOTAL LOAD CASES: (4)

CHORDS

| MEMB. FR-TO | MAX. FACTORED FORCE (LBS) | FACTORED VERT. LOAD LC1 (PLF) FROM | TO | MAX CSI (LC) | MAX. UNBRAC LENGTH |
|---|---|---|---|---|---|
| AO-AP | 0 / 2351 | -28.0 | -28.0 | 0.22 (1) | 10.00 |
| AP-AQ | 0 / 2351 | -28.0 | -28.0 | 0.22 (1) | 10.00 |
| AQ- L | 0 / 2351 | -28.0 | -28.0 | 0.22 (1) | 10.00 |
| L-AR | 0 / 0 | -28.0 | -28.0 | 0.10 (2) | 10.00 |
| AR- K | 0 / 0 | -28.0 | -28.0 | 0.10 (2) | 10.00 |

WEBS

| MEMB. FR-TO | MAX. FACTORED FORCE (LBS) | MAX CSI (LC) |
|---|---|---|

FACTORED CONCENTRATED LOADS (LBS)

| JT | LOC. | LC1 | MAX- | MAX+ | FACE | DIR. | TYPE |
|---|---|---|---|---|---|---|---|
| C | 2-11-8 | -16 | -18 | --- | FRONT | VERT | DEAD |
| C | 2-11-8 | -141 | -141 | --- | FRONT | VERT | TOTAL |
| C | 2-11-8 | -162 | -162 | --- | FRONT | VERT | SNOW |
| F | 18-6-12 | -101 | -101 | --- | FRONT | VERT | TOTAL |
| H | 28-7-8 | -16 | -18 | --- | FRONT | VERT | DEAD |
| H | 28-7-8 | -105 | -105 | --- | FRONT | VERT | TOTAL |
| H | 28-7-8 | -162 | -162 | --- | FRONT | VERT | SNOW |
| L | 28-6-12 | -40 | -70 | --- | FRONT | VERT | TOTAL |
| R | 3-0-4 | -40 | -70 | --- | FRONT | VERT | TOTAL |
| T | 5-0-4 | -101 | -101 | --- | FRONT | VERT | TOTAL |
| U | 7-0-4 | -101 | -101 | --- | FRONT | VERT | TOTAL |
| V | 9-0-4 | -101 | -101 | --- | FRONT | VERT | TOTAL |
| W | 11-0-4 | -101 | -101 | --- | FRONT | VERT | TOTAL |
| X | 13-0-4 | -101 | -101 | --- | FRONT | VERT | TOTAL |
| Y | 15-0-4 | -101 | -101 | --- | FRONT | VERT | TOTAL |
| Z | 16-6-12 | -101 | -101 | --- | FRONT | VERT | TOTAL |
| AA | 20-6-12 | -101 | -101 | --- | FRONT | VERT | TOTAL |
| AB | 22-6-12 | -101 | -101 | --- | FRONT | VERT | TOTAL |
| AC | 24-6-12 | -101 | -101 | --- | FRONT | VERT | TOTAL |
| AD | 26-6-12 | -101 | -101 | --- | FRONT | VERT | TOTAL |
| AE | 1-0-4 | -40 | -70 | --- | FRONT | VERT | TOTAL |
| AF | 5-0-4 | -40 | -70 | --- | FRONT | VERT | TOTAL |
| AG | 7-0-4 | -40 | -70 | --- | FRONT | VERT | TOTAL |
| AH | 9-0-4 | -40 | -70 | --- | FRONT | VERT | TOTAL |
| AI | 11-0-4 | -40 | -70 | --- | FRONT | VERT | TOTAL |
| AJ | 13-0-4 | -40 | -70 | --- | FRONT | VERT | TOTAL |
| AK | 15-0-4 | -40 | -70 | --- | FRONT | VERT | TOTAL |
| AL | 16-6-12 | -40 | -70 | --- | FRONT | VERT | TOTAL |
| AM | 18-6-12 | -40 | -70 | --- | FRONT | VERT | TOTAL |
| AN | 20-6-12 | -40 | -70 | --- | FRONT | VERT | TOTAL |
| AO | 22-6-12 | -40 | -70 | --- | FRONT | VERT | TOTAL |
| AP | 24-6-12 | -40 | -70 | --- | FRONT | VERT | TOTAL |
| AQ | 26-6-12 | -40 | -70 | --- | FRONT | VERT | TOTAL |
| AR | 30-6-12 | -40 | -70 | --- | FRONT | VERT | TOTAL |

LICENSED PROFESSIONAL ENGINEER
S. KATSOULAKOS
PROVINCE OF ONTARIO

DWG NO. TAM 42869-17
STRUCTURAL
COMPONENT ONLY

| JOB NAME | TRUSS NAME | QUANTITY | PLY | JOB DESC. | DRWG NO. |
|---|---|---|---|---|---|
| 282695 | T100Z | 1 | 2 | TRUSS DESC. | |

Tamarack Roof Truss, Burlington

Version 8.030 S Oct 5 2016 MiTek Industries, Inc. Thu Aug 24 17:16:55 2017 Page 1

ID:_P_zlJoeh6kqSyqNtNRH3eykdwA-83dVv9VoUZApiNKDuSeOgNK4GFEm9BIRAzEkVCykams

Scale = 1:54.5

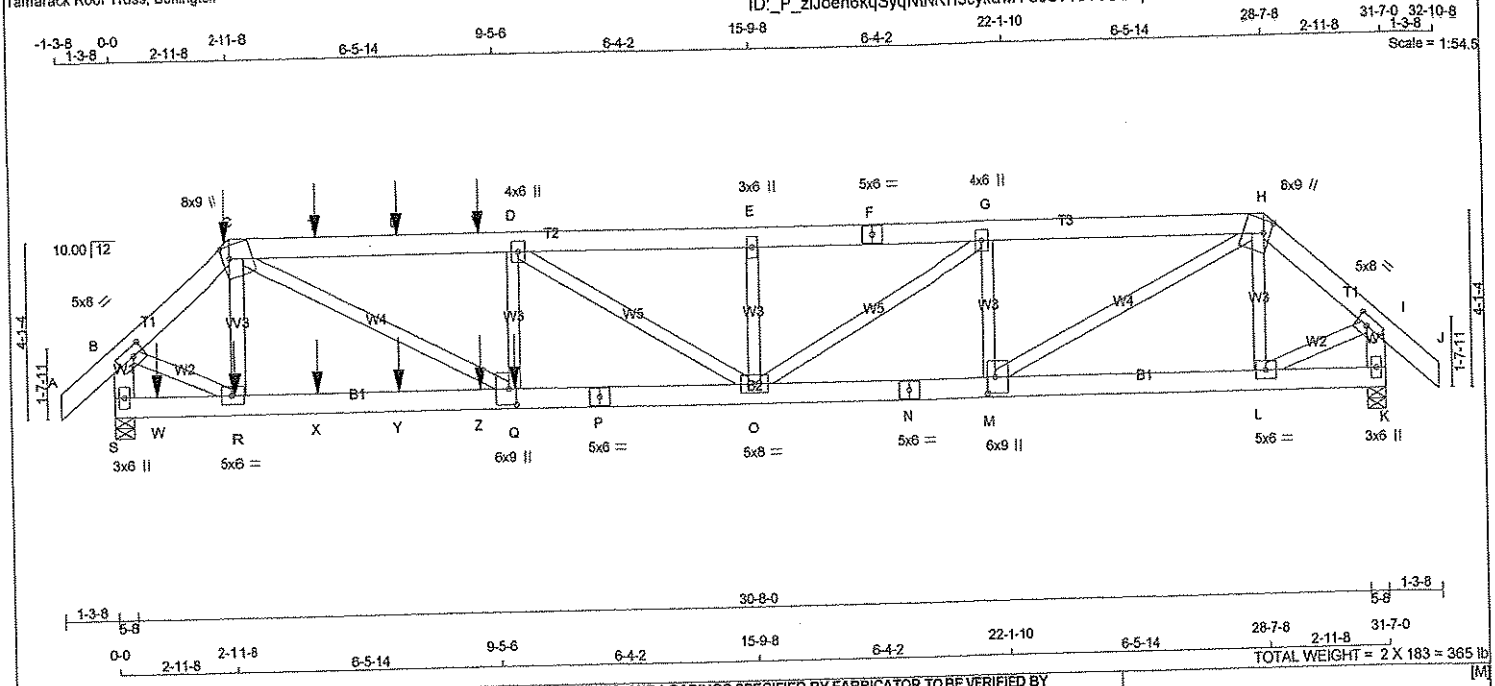





TOTAL WEIGHT = 2 X 183 = 365 lb

[M]

**LUMBER**

N. L. G. A. RULES

| CHORDS | SIZE | | LUMBER | DESCR. |
|---|---|---|---|---|
| A - C | 2x6 | DRY | No.2 | SPF |
| C - F | 2x6 | DRY | No.2 | SPF |
| F - H | 2x6 | DRY | No.2 | SPF |
| H - J | 2x6 | DRY | No.2 | SPF |
| S - B | 2x6 | DRY | No.2 | SPF |
| K - I | 2x6 | DRY | No.2 | SPF |
| S - P | 2x6 | DRY | No.2 | SPF |
| P - N | 2x6 | DRY | No.2 | SPF |
| N - K | 2x6 | DRY | No.2 | SPF |
| ALL WEBS EXCEPT | 2x4 | DRY | No.2 | SPF |

DRY: SEASONED LUMBER.

DESIGN CONSISTS OF 2 TRUSSES BUILT SEPARATELY THEN FASTENED TOGETHER AS FOLLOWS:

| CHORDS | #ROWS | SURFACE SPACING (IN) | LOAD(PLF) |
|---|---|---|---|
| TOP CHORDS : (0.122"X3") SPIRAL NAILS | | | |
| A- C | 2 | 12 | SIDE(122.0) |
| C- F | 2 | 12 | SIDE(61.0) |
| F- H | 2 | 12 | TOP |
| H- J | 2 | 12 | TOP |
| S- B | 2 | 12 | TOP |
| K- I | 2 | 12 | TOP |
| BOTTOM CHORDS : (0.122"X3") SPIRAL NAILS | | | |
| S- P | 2 | 12 | SIDE(183.1) |
| P- N | 2 | 12 | TOP |
| N- K | 2 | 12 | TOP |
| WEBS : (0.122"X3") SPIRAL NAILS | | | |
| 2x4 | 1 | 6 | |
| D- Q | 1 | 4 | SIDE(380.0) |
| G- M | 1 | 4 | |

NAILS TO BE DRIVEN FROM ONE SIDE ONLY.

GIRDER NAILING ASSUMES NAILED HANGERS ARE FASTENED WITH MIN. 3-0 INCH NAILS.

TOP - COMPONENTS ARE LOADED FROM THE TOP AND MUST BE PLACED ON TOP EDGE OF ALL PLIES FOR THE LOAD TO BE TRANSFERRED TO EACH PLY.

SIDE - PLF SHOWN IS THE EQUIVALENT UDL APPLIED TO ONE SIDE THAT THE CORRESPONDING NAILING PATTERN SHALL BE CAPABLE OF TRANSFERING. REMAINING PLF MUST BE APPLIED ON THE OPPOSITE SIDE OR ON THE TOP.

**PLATES (table is in inches)**

| JT | TYPE | PLATES | W | LEN | Y | X |
|---|---|---|---|---|---|---|
| B | TMWW-t | MT20 | 5.0 | 8.0 | 2.50 | 3.25 |
| C | TTWW+m | MT20 | 8.0 | 9.0 | 3.50 | 2.00 |
| D | TMWW+t | MT20 | 4.0 | 6.0 | | |
| E | TMW+w | MT20 | 3.0 | 6.0 | | |
| F | TS-t | MT20 | 5.0 | 6.0 | | |
| G | TMWW+t | MT20 | 4.0 | 6.0 | | |
| H | TTWW+m | MT20 | 8.0 | 9.0 | 3.50 | 2.00 |
| I | TMWW-t | MT20 | 5.0 | 8.0 | 2.50 | 3.25 |
| K | BMV1+p | MT20 | 3.0 | 6.0 | | |
| L | BMWW-t | MT20 | 5.0 | 6.0 | | |
| M | BMWW+t | MT20 | 6.0 | 9.0 | 4.50 | 2.25 |
| N | BS-t | MT20 | 5.0 | 6.0 | | |
| O | BMWWW-t | MT20 | 5.0 | 8.0 | | |
| P | BS-t | MT20 | 5.0 | 6.0 | | |
| Q | BMWW+t | MT20 | 6.0 | 9.0 | 4.50 | 2.25 |

**DIMENSIONS, SUPPORTS AND LOADINGS SPECIFIED BY FABRICATOR TO BE VERIFIED BY BUILDING DESIGNER**

**BEARINGS**

| JT | FACTORED GROSS REACTION VERT | HORZ | MAXIMUM FACTORED GROSS REACTION DOWN | HORZ | UPLIFT | INPUT BRG IN-SX | REQRD BRG IN-SX |
|---|---|---|---|---|---|---|---|
| S | 4071 | 0 | 4071 | 0 | 0 | 5-8 | 5-8 |
| K | 2698 | 0 | 2698 | 0 | 0 | 5-8 | 5-8 |

**UNFACTORED REACTIONS**

| JT | 1ST LCASE COMBINED | MAX /MIN. COMPONENT REACTIONS SNOW | LIVE | PERM.LIVE | WIND | DEAD | SOIL |
|---|---|---|---|---|---|---|---|
| S | 3284 | 1918 / 0 | 684 / 0 | 0 / 0 | 0 / 0 | 682 / 0 | 0 / 0 |
| K | 2180 | 1267 / 0 | 459 / 0 | 0 / 0 | 0 / 0 | 455 / 0 | 0 / 0 |

BEARING MATERIAL TO BE SPF NO.2 OR BETTER AT JOINT(S) S, K

**BRACING**

TOP CHORD TO BE SHEATHED OR MAX. PURLIN SPACING = 3.95 FT.
MAX. UNBRACED BOTTOM CHORD LENGTH = 10.00 FT. OR RIGID CEILING DIRECTLY APPLIED.

ALL PITCH BREAKS AND PERIMETER CORNER JOINTS MUST BE LATERALLY RESTRAINED.

**LOADING**

TOTAL LOAD CASES: (4)

CHORDS

| MEMB. FR-TO | MAX. FACTORED FORCE (LBS) | FACTORED VERT. LOAD (PLF) FROM | TO | LC1 | MAX CSI (LC) | MAX. UNBRAC LENGTH |
|---|---|---|---|---|---|---|
| A- B | 0 / 39 | -84.3 | -84.3 | 0.03 (1) | 10.00 | |
| B- C | -4177 / 0 | -84.3 | -84.3 | 0.06 (1) | 5.55 | |
| C- T | -8164 / 0 | -84.3 | -84.3 | 0.38 (1) | 3.95 | |
| T- U | -8164 / 0 | -84.3 | -84.3 | 0.38 (1) | 3.95 | |
| U- V | -8164 / 0 | -84.3 | -84.3 | 0.38 (1) | 3.95 | |
| V- D | -8164 / 0 | -84.3 | -84.3 | 0.38 (1) | 3.95 | |
| D- E | -7347 / 0 | -84.3 | -84.3 | 0.24 (1) | 4.27 | |
| E- F | -7347 / 0 | -84.3 | -84.3 | 0.22 (1) | 4.30 | |
| F- G | -7347 / 0 | -84.3 | -84.3 | 0.22 (1) | 4.30 | |
| G- H | -5560 / 0 | -84.3 | -84.3 | 0.20 (1) | 4.83 | |
| H- I | -2673 / 0 | -84.3 | -84.3 | 0.04 (1) | 6.25 | |
| I- J | 0 / 39 | -84.3 | -84.3 | 0.03 (1) | 10.00 | |
| S- B | -4086 / 0 | 0.0 | 0.0 | 0.15 (1) | 7.05 | |
| K- I | -2703 / 0 | 0.0 | 0.0 | 0.10 (1) | 7.81 | |
| S- W | 0 / 0 | -28.0 | -28.0 | 0.12 (2) | 10.00 | |
| W- R | 0 / 0 | -28.0 | -28.0 | 0.12 (2) | 10.00 | |
| R- X | 0 / 3159 | -28.0 | -28.0 | 0.30 (1) | 10.00 | |
| X- Y | 0 / 3159 | -28.0 | -28.0 | 0.30 (1) | 10.00 | |
| Y- Z | 0 / 3159 | -28.0 | -28.0 | 0.30 (1) | 10.00 | |
| Z- Q | 0 / 3159 | -28.0 | -28.0 | 0.30 (1) | 10.00 | |
| Q- P | 0 / 8164 | -28.0 | -28.0 | 0.59 (1) | 10.00 | |
| P- O | 0 / 8164 | -28.0 | -28.0 | 0.59 (1) | 10.00 | |
| O- N | 0 / 5560 | -28.0 | -28.0 | 0.41 (1) | 10.00 | |
| N- M | 0 / 5560 | -28.0 | -28.0 | 0.41 (1) | 10.00 | |
| M- L | 0 / 2020 | -28.0 | -28.0 | 0.19 (1) | 10.00 | |
| L- K | 0 / 0 | -28.0 | -28.0 | 0.07 (2) | 10.00 | |

WEBS

| MEMB. FR-TO | MAX. FACTORED FORCE (LBS) | MAX CSI (LC) |
|---|---|---|
| R- C | -765 / 0 | 0.07 (1) |
| C- Q | 0 / 5646 | 0.50 (1) |
| Q- D | -279 / 159 | 0.02 (1) |
| D- O | -960 / 0 | 0.30 (1) |
| O- E | -408 / 0 | 0.03 (1) |
| O- G | 0 / 2098 | 0.19 (1) |
| M- G | -1699 / 0 | 0.15 (1) |
| M- H | 0 / 3993 | 0.35 (1) |
| L- H | -522 / 0 | 0.04 (1) |
| B- R | 0 / 3389 | 0.30 (1) |
| L- I | 0 / 2169 | 0.19 (1) |

FACTORED CONCENTRATED LOADS (LBS)

| JT | LOC. | LC1 | MAX- | MAX+ | FACE | DIR. | TYPE |
|---|---|---|---|---|---|---|---|
| C | 2-11-8 | -16 | -18 | --- | FRONT | VERT | DEAD |
| C | 2-11-8 | -141 | -141 | --- | BACK | VERT | TOTAL |
| C | 2-11-8 | -162 | -162 | --- | FRONT | VERT | SNOW |
| Q | 9-10-8 | -2159 | -2159 | --- | BACK | VERT | TOTAL |
| R | 3-0-4 | -40 | -70 | --- | BACK | VERT | TOTAL |
| T | 5-0-4 | -101 | -101 | --- | BACK | VERT | TOTAL |
| U | 7-0-4 | -101 | -101 | --- | BACK | VERT | TOTAL |
| V | 9-0-4 | -101 | -101 | --- | BACK | VERT | TOTAL |
| W | 1-0-4 | -40 | -70 | --- | BACK | VERT | TOTAL |
| X | 5-0-4 | -40 | -70 | --- | BACK | VERT | TOTAL |

LICENSED PROFESSIONAL ENGINEER
S. KATSOULAKOS
PROVINCE OF ONTARIO

**DESIGN CRITERIA**

*** SPECIAL LOADS ANALYSIS ***
GEOMETRY AND/OR BASIC LOADS CHANGED BY USER.
LOADS WERE DERIVED FROM USER INPUT
NO FURTHER MODIFICATIONS WERE MADE

SPECIFIED LOADS:

| | | | | |
|---|---|---|---|---|
| TOP CH. | LL | = | 25.6 | PSF |
| | DL | = | 3.0 | PSF |
| BOT CH. | LL | = | 10.5 | PSF |
| | DL | = | 7.0 | PSF |
| TOTAL LOAD | | = | 46.1 | PSF |

**SPACING = 24.0 IN. C/C**

LOADING IN FLAT SECTION BASED ON A SLOPE OF 6.00/12

*** NON STANDARD GIRDER ***
ADDT'L USER-DEFINED LOADS APPLIED TO ALL LOAD CASES.

THIS TRUSS IS DESIGNED FOR RESIDENTIAL OR SMALL BUILDING REQUIREMENTS OF PART 9, NBCC 2010

THIS DESIGN COMPLIES WITH:
- PART 9 OF OBC 2012 , BCBC 2012 , ABC 2014
- CSA 086-09
- TPIC 2011

(55 % OF 31.3 P.S.F. G.S.L. PLUS 8.4 P.S.F. RAIN LOAD) EQUALS 25.6 P.S.F. SPECIFIED ROOF LIVE LOAD

ALLOWABLE DEFL.(LL)= L/360 (1.05")
CALCULATED VERT. DEFL.(LL) = L/ 999 (0.19")
ALLOWABLE DEFL.(TL)= L/360 (1.05")
CALCULATED VERT. DEFL.(TL) = L/ 999 (0.29")

CSI: TC=0.38 (C-D:1) , BC=0.59 (O-Q:1) , WB=0.50 (C-Q:1) , SSI=0.17 (C-D:1)

DOL LUMBER=1.00 NAIL=1.00 LS BEND=1.00 COMP=1.00 SHEAR=1.00 TENS= 1.00

COMPANION LIVE LOAD FACTOR = 0.50

TRUSS PLATE MANUFACTURER IS NOT RESPONSIBLE FOR QUALITY CONTROL IN THE TRUSS MANUFACTURING PLANT .

NAIL VALUES

| PLATE | GRIP(DRY) (PSI) MAX | MIN | SHEAR (PLI) MAX | MIN | SECTION (PLI) MAX | MIN |
|---|---|---|---|---|---|---|
| MT20 | 618 | 354 | 1667 | 822 | 2284 | 1656 |

PLATE PLACEMENT TOL. = 0.250 inches

PLATE ROTATION TOL. = 5.0 Deg.

JSI GRIP= 0.88 (C) (INPUT = 0.90 )
JSI METAL= 0.67 (N) (INPUT = 1.00 )

DWG NO. TAM 4289017
STRUCTURAL
COMPONENT ONLY

CONTINUED ON PAGE 2

| JOB NAME | TRUSS NAME | QUANTITY | PLY | JOB DESC. | DRWG NO. |
|---|---|---|---|---|---|
| 282695 | T100Z | 1 | 2 | TRUSS DESC. | |



**PLATES (table is in inches)**

| JT | TYPE | PLATES | W | LEN | Y | X |
|---|---|---|---|---|---|---|
| R | BMWW-t | MT20 | 5.0 | 6.0 | | |
| S | BMV1+p | MT20 | 3.0 | 6.0 | | |

**HANGERS NOTES**

1) SPECIAL HANGER(S) OR CONNECTION(S) REQUIRED TO SUPPORT CONCENTRATED LOAD(S) 178.3 lbs FACTORED DOWN AT 2-11-8, 140.9 lbs FACTORED DOWN AT 2-11-8, 101.4 lbs FACTORED DOWN AT 5-0-4, AND 101.4 lbs FACTORED DOWN AT 7-0-4, AND 101.4 lbs FACTORED DOWN AT 9-0-4 ON TOP CHORD, AND 69.9 lbs FACTORED DOWN AT 1-0-4, 69.9 lbs FACTORED DOWN AT 3-0-4, 69.9 lbs FACTORED DOWN AT 5-0-4, 69.9 lbs FACTORED DOWN AT 7-0-4, AND 69.9 lbs FACTORED DOWN AT 9-0-4, AND 2158.5 lbs FACTORED DOWN AT 9-10-8 ON BOTTOM CHORD. DESIGN FOR UNSPECIFIED CONNECTION(S) IS DELEGATED TO THE BUILDING DESIGNER.

FACTORED CONCENTRATED LOADS (LBS)

| JT | LOC. | LC1 | MAX- | MAX+ | FACE | DIR. | TYPE |
|---|---|---|---|---|---|---|---|
| Y | 7-0-4 | -40 | -70 | --- | BACK | VERT | TOTAL |
| Z | 9-0-4 | -40 | -70 | --- | BACK | VERT | TOTAL |

LICENSED PROFESSIONAL ENGINEER
S. KATSOULAKOS
PROVINCE OF ONTARIO

DWG NO. TAM 42090-17
STRUCTURAL
COMPONENT ONLY

TECHNICAL BULLETIN

# LUS – Double Shear Joist Hangers

SIMPSON Strong-Tie®

All LUS hangers have double shear nailing. This patented innovation distributes the load through two points on each joist nail for greater strength. It also allows the use of fewer nails, faster installation and the use of common nails for all connections.

MATERIAL: 18 gauge

FINISH: G90 galvanized

DESIGN:

- Factored resistances are in accordance with CSA O86-14
- Uplift resistances have been increased 15%. No further increase is permitted.
- Wood shear is not considered in the factored resistances given. The specifier must ensure that the joist and header capacities are capable of withstanding these loads.

INSTALLATION:

- Use all specified fasteners
- Nails: 16d = 0.162" dia. x 3½" long common wire, 10d = 0.148" x 3" long common wire.
- Double shear nails must be driven at an angle through the joist or truss into the header to achieve the table loads
- Not designed for welded or nailer applications

OPTIONS:

- These hangers cannot be modified.

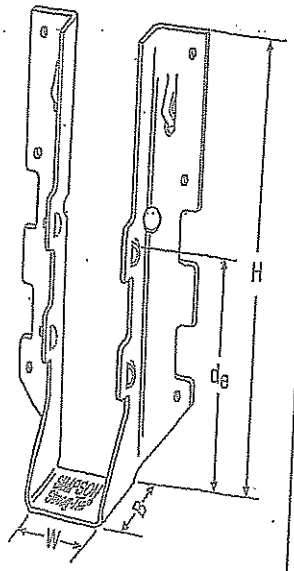


LUS26

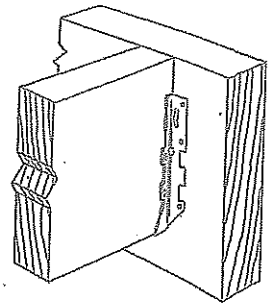

Typical LUS Installation

| Model No. | Ga | Dimensions (in) | | | | Fasteners | | Factored Resistance (lbs) | | | |
|---|---|---|---|---|---|---|---|---|---|---|---|
| | | | | | | | | D.Fir-L | | S-P-F | |
| | | W | H | B | $d_e$[1] | Face | Joist | Uplift ($K_D$=1.15) | Normal ($K_D$=1.00) | Uplift ($K_D$=1.15) | Normal ($K_D$=1.00) |
| LUS24 | 18 | 1 9/16 | 3⅛ | 1¾ | 1 15/16 | 4-10d | 2-10d | 710 | 1630 | 645 | 1165 |
| LUS24-2 | 18 | 3⅛ | 3⅛ | 2 | 1 13/16 | 4-16d | 2-16d | 835 | 2020 | 590 | 1435 |
| LUS26 | 18 | 1 9/16 | 4¾ | 1¾ | 3⅝ | 4-10d | 4-10d | 1420 | 2170 | 1290 | 1630 |
| LUS26-2 | 18 | 3⅛ | 4⅞ | 2 | 4 | 4-16d | 4-16d | 1720 | 2595 | 1545 | 1920 |
| LUS26-3 | 18 | 4⅝ | 4 9/16 | 2 | 3¼ | 4-16d | 4-16d | 1720 | 2595 | 1545 | 2340 |
| LUS28 | 18 | 1 9/16 | 6⅝ | 1¾ | 3¾ | 6-10d | 4-10d | 1420 | 2520 | 1290 | 1790 |
| LUS28-2 | 18 | 3⅛ | 7 | 2 | 4 | 6-16d | 4-16d | 1720 | 3325 | 1545 | 2575 |
| LUS28-3 | 18 | 4⅝ | 6¼ | 2 | 3¼ | 6-16d | 4-16d | 1720 | 3325 | 1545 | 2375 |
| LUS210 | 18 | 1 9/16 | 7 13/16 | 1¾ | 3⅝ | 8-10d | 4-10d | 1420 | 2785 | 1290 | 2210 |
| LUS210-2 | 18 | 3⅛ | 9 | 2 | 6 | 8-16d | 6-16d | 2580 | 4500 | 2320 | 3195 |
| LUS210-3 | 18 | 4⅝ | 8 9/16 | 2 | 5¼ | 8-16d | 6-16d | 2580 | 3345 | 2320 | 2375 |

1. $d_e$ is the distance from the seat of the hanger to the highest joist nail.

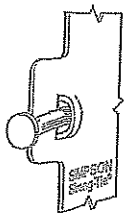

Dome Double Shear Nailing prevents tabs breaking off (available on some models).

U.S. Patent 5,603,580

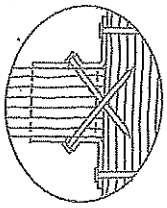

Double Shear Nailing Top View.

LICENSED PROFESSIONAL ENGINEER
01/13/2015
B. D. BUNTING
PROVINCE OF ONTARIO



©2015 Simpson Strong-Tie Company Inc.

TECHNICAL BULLETIN

# HUS/LJS – Double Shear Joist Hangers

SIMPSON Strong-Tie®

All hangers have double shear nailing. This patented innovation distributes the load through two points on each joist nail for greater strength. It also allows the use of fewer nails, faster installation and the use of common nails for all connections. Do not bend or remove tabs.

MATERIAL: See table

FINISH: G90 galvanized

DESIGN:

- Factored resistances are in accordance with CSA O86-14
- Uplift resistances have been increased 15% No further increase is permitted
- Wood shear is not considered in the factored resistances given. The specifier must ensure that the joist and header capacities are capable of withstanding these loads.

INSTALLATION:

- Use all specified fasteners
- Nails: 16d = 0.162" dia. x 3½" long common wire
- Double shear nails must be driven at an angle through the joist or truss into the header to achieve the table loads
- Not designed for welded or nailer applications

OPTIONS:

- See current catalogue for options

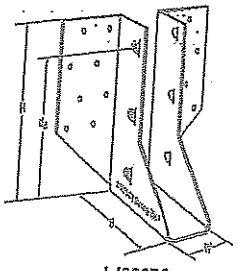

LJS26DS

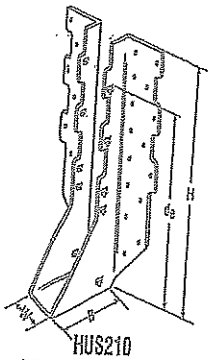

HUS210
(HUS26, HUS28, similar)

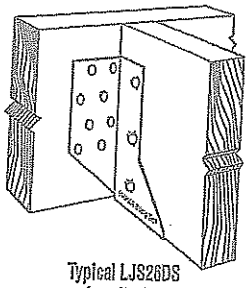

Typical LJS26DS Installation

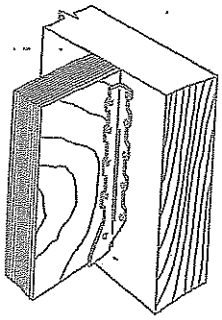

Typical HUS Installation

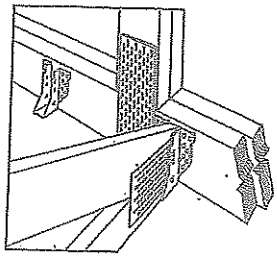

Typical HUS Installation
(Truss Designer to provide fastener quantity for connecting multiple members together)

| Model No. | Ga | Dimensions (in) | | | | Fasteners | | Factored Resistance (lbs) | | | |
|---|---|---|---|---|---|---|---|---|---|---|---|
| | | | | | | | | D.Fir-L | | S-P-F | |
| | | W | H | B | $d_B$[1] | Face | Joist | Uplift ($K_D$=1.15) | Normal ($K_D$=1.00) | Uplift ($K_D$=1.15) | Normal ($K_D$=1.00) |
| LJS26DS | 18 | 1 9/16 | 5 | 3½ | 4⅝ | 16-16d | 6-16d | 2055 | 4265 | 1460 | 4115 |
| HUS26 | 18 | 1⅝ | 5⅝ | 3 | 3 15/16 | 14-16d | 6-16d | 2705 | 4940 | 2065 | 3875 |
| HUS28 | 18 | 1⅝ | 7 3/32 | 3 | 6 3/32 | 22-16d | 8-16d | 3605 | 5365 | 2875 | 4345 |
| HUS210 | 18 | 1⅝ | 9 3/32 | 3 | 7 31/32 | 30-16d | 10-16d | 4505 | 5795 | 4010 | 4740 |
| HUS1.81/16 | 18 | 1 13/16 | 9 | 3 | 8 | 30-16d | 10-16d | 4505 | 6450 | 4010 | 5200 |

1. $d_B$ is the distance from the seat of the hanger to the highest joist nail.

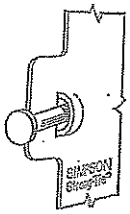

Dome Double Shear Nailing prevents tabs breaking off (available on some models).

U.S. Patent 5,603,580

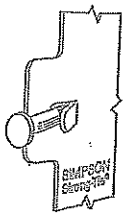

Double Shear Nailing Side View. Do not bend tab back.

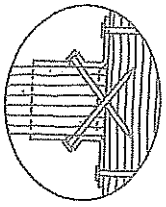

Double Shear Nailing Top View.

LICENSED PROFESSIONAL ENGINEER
01/13/2015
B. D. BUNTING
PROVINCE OF ONTARIO



UNITED STATES DESIGN: [illegible]

Suite 900-5000
www.strongtie.com

TECHNICAL BULLETIN

# HGUS – Double Shear Joist Hangers

SIMPSON Strong-Tie®

All HGUS hangers have double shear nailing. This patented innovation distributes the load through two points on each joist nail for greater strength. It also allows the use of fewer nails, faster installation and the use of common nails for all connections. Do not bend or remove tabs.

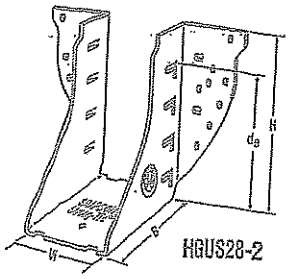

HGUS28-2

MATERIAL: 12 gauge

FINISH: G90 galvanized

DESIGN:

- Factored resistances are in accordance with CSA O86-14
- Uplift resistances have been increased 15%. No further increase is permitted.
- Wood shear is not considered in the factored resistances given. The specifier must ensure that the joist and header capacities are capable of withstanding these loads.

INSTALLATION:

- Use all specified fasteners
- Nails: 16d = 0.162" dia x 3½" long common wire
- Double shear nails must be driven at an angle through the joist or truss into the header to achieve the table loads
- Not designed for welded or nailer applications

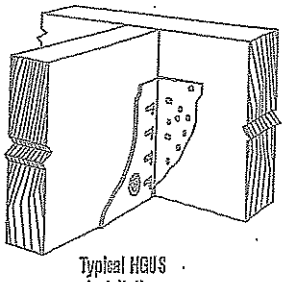
Typical HGUS Installation

OPTIONS:

- See current catalogue for options

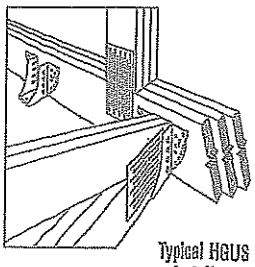
Typical HGUS Installation (Truss Designer to provide fastener quantity for connecting multiple members together)

| Model No. | Ga | Dimensions (in) | | | | Fasteners | | Factored Resistance (lbs) | | | |
|---|---|---|---|---|---|---|---|---|---|---|---|
| | | | | | | | | D.Fir-L | | S-P-F | |
| | | W | H | B | $d_a$[1] | Face | Joist | Uplift ($K_D$=1.15) | Normal ($K_D$=1.00) | Uplift ($K_D$=1.15) | Normal ($K_D$=1.00) |
| HGUS26 | 12 | 1⅝ | 5⅜ | 5 | 4⁹⁄₃₂ | 20-16d | 8-16d | 2685 | 6625 | 2685 | 5700 |
| HGUS26-2 | 12 | 3⁵⁄₁₆ | 5⁷⁄₁₆ | 4 | 4⅛ | 20-16d | 8-16d | 4385 | 8950 | 3100 | 6355 |
| HGUS26-3 | 12 | 4⁹⁄₁₆ | 5½ | 4 | 4⅛ | 20-16d | 8-16d | 4385 | 8950 | 3100 | 6355 |
| HGUS26-4 | 12 | 6⁹⁄₁₆ | 5⁷⁄₁₆ | 4 | 4⅛ | 20-16d | 8-16d | 4385 | 8950 | 3100 | 6355 |
| HGUS28 | 12 | 1⅝ | 7¼ | 5 | 6⅛ | 36-16d | 12-16d | 3310 | 7675 | 3100 | 6900 |
| HGUS28-2 | 12 | 3⁵⁄₁₆ | 7⁹⁄₁₆ | 4 | 6⅛ | 36-16d | 12-16d | 6070 | 12980 | 4310 | 9215 |
| HGUS28-3 | 12 | 4⁹⁄₁₆ | 7¼ | 4 | 6⅛ | 36-16d | 12-16d | 6070 | 12980 | 4310 | 9215 |
| HGUS28-4 | 12 | 6⁹⁄₁₆ | 7⁹⁄₁₆ | 4 | 6⅛ | 36-16d | 12-16d | 6070 | 12980 | 4310 | 9215 |
| HGU210-2 | 12 | 3⁵⁄₁₆ | 9⁹⁄₁₆ | 4 | 8⅛ | 46-16d | 16-16d | 6840 | 14645 | 4855 | 10400 |
| HGUS210-3 | 12 | 4⁹⁄₁₆ | 9¼ | 4 | 8⅛ | 46-16d | 16-16d | 6840 | 14645 | 4855 | 10400 |
| HGUS210-4 | 12 | 6⁹⁄₁₆ | 9⁹⁄₁₆ | 4 | 8⅛ | 46-16d | 16-16d | 6840 | 14645 | 4855 | 10400 |
| HGUS212-4 | 12 | 6⅝ | 10⅝ | 4 | 10⅛ | 56-16d | 20-16d | 7640 | 14995 | 5425 | 10645 |
| HGUS214-4 | 12 | 6⅝ | 12⅝ | 4 | 11⅛ | 66-16d | 22-16d | 10130 | 16400 | 7195 | 11645 |

1. $d_a$ is the distance from the seat of the hanger to the highest joist nail.

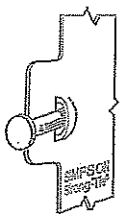
Dome Double Shear Nailing prevents tabs breaking off (available on some models).

U.S. Patent 5,603,580

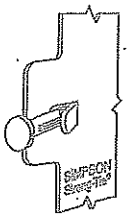
Double Shear Nailing Side View. Do not bend tab back.

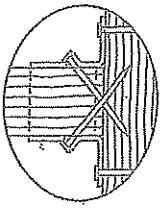
Double Shear Nailing Top View.

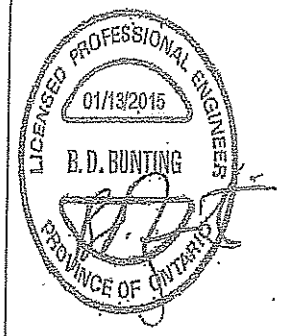

# MICRO CITY
# ENGINEERING SERVICES INC.

TEL: (519) 287 - 2242

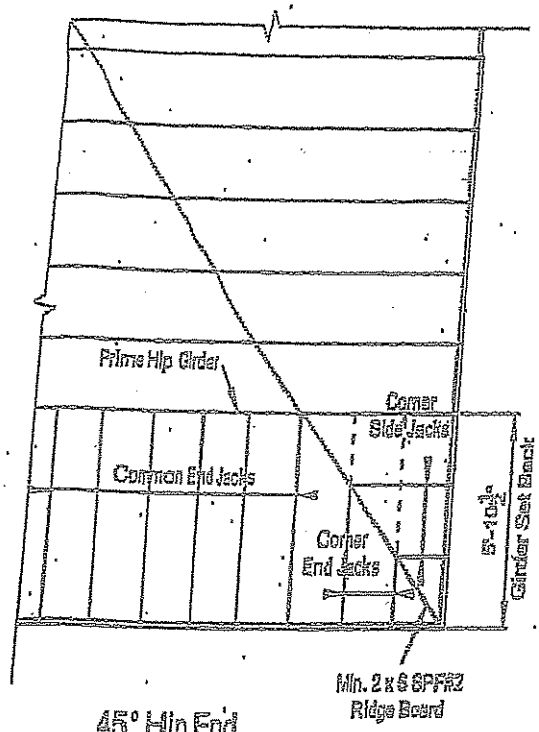


45° Hip End

## LUMBER SPECIFICATION

TOP CHORD : 2x4 SPF#2

BOTTOM CHORD : 2x4 SPF#2

WEBS : 2x3 SPF#2

UNLESS OTHERWISE SHOWN

**DESIGN LOAD:**

| | |
|---|---|
| TOP CHORD LIVE LOAD | : 39.4 P.S.F. |
| TOP CHORD DEAD LOAD | : 3.0 P.S.F. |
| BOTTOM CHORD LIVE LOAD | : 10.5 P.S.F. |
| BOTTOM CHORD DEAD LOAD | : 7.0 P.S.F |
| TOTAL LOAD | 59.9 P.S.F. |

DWG NO T1M 2495.14
STRUCTURAL COMPONENT ONLY

LICENSED PROFESSIONAL ENGINEER
1-2014
S. KATSOULAKOS
PROVINCE OF ONTARIO

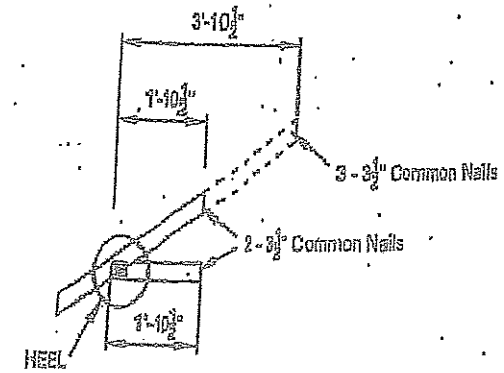


Corner Side Jacks

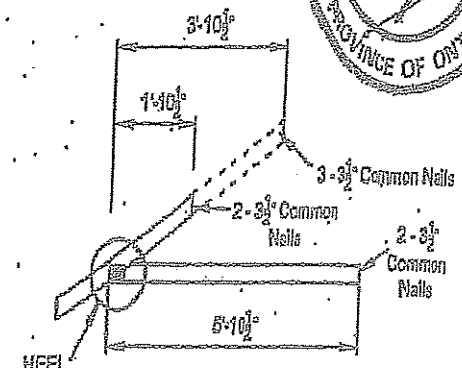


Corner End Jacks

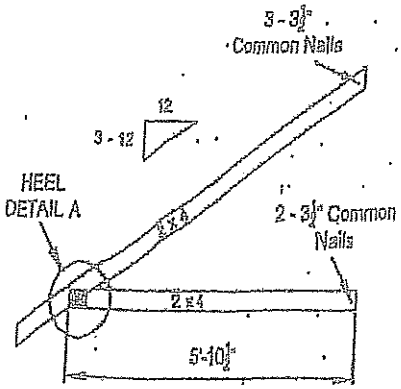


Common End Jacks

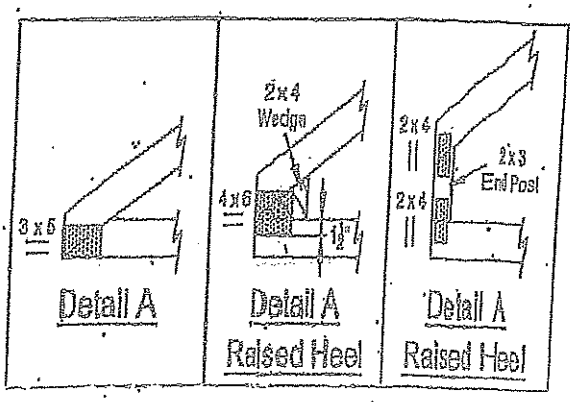


Detail A | Detail A Raised Heel | Detail A Raised Heel

NOTE: DESIGN CONFORMS TO PART 9, O.B.C. 2012 (LIMIT STATES DESIGN)
(TO BE INCLUDED AND USED AS PART OF A FULL TRUSS ENGINEERING PACKAGE)

MICRO CITY
ENGINEERING SERVICES INC.
TEL: (519) 287 - 2242
R.R. #1, P.O. BOX 61, GLENCOE, ONTARIO, N0L 1M0

## LUMBER SPECIFICATION

TOP CHORD : 2x4 SPF#2
BOTTOM CHORD : 2x4 SPF#2
WEBS : 2x3 SPF#2
UNLESS OTHERWISE SHOWN

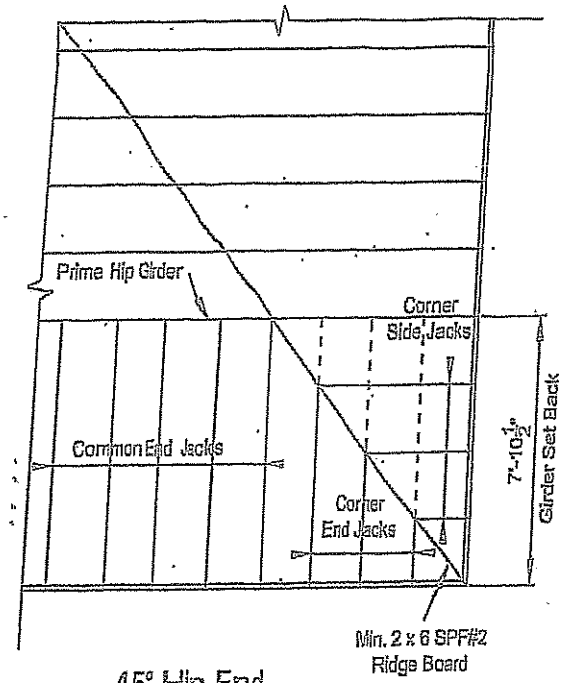


45° Hip End

**DESIGN LOAD:**

| | | |
|---|---|---|
| TOP CHORD LIVE LOAD | : | 34.8 P.S.F. |
| TOP CHORD DEAD LOAD | : | 3.0 P.S.F. |
| BOTTOM CHORD LIVE LOAD | : | 0.0 P.S.F. |
| BOTTOM CHORD DEAD LOAD | : | 7.0 P.S.F. |
| TOTAL LOAD | : | 44.8 P.S.F. |

DWG NO THM 3503 14
STRUCTURAL
COMPONENT ONLY

LICENSED PROFESSIONAL ENGINEER
1-2014
S. KATSOULAKOS
PROVINCE OF ONTARIO

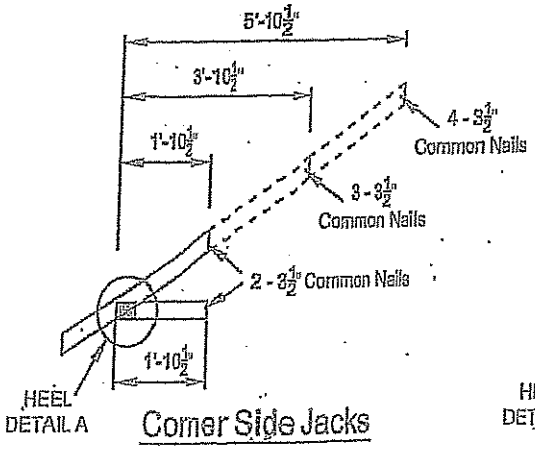


Corner Side Jacks

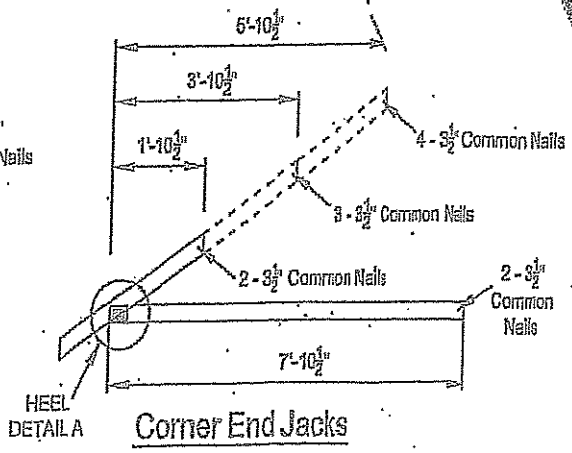


Corner End Jacks

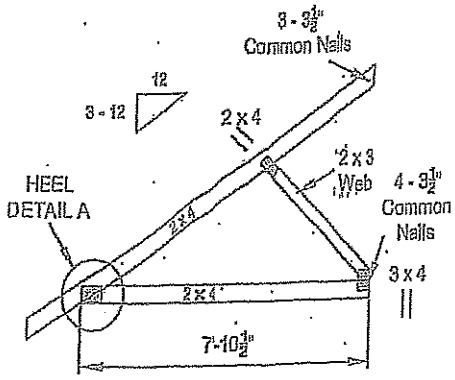


Common End Jacks

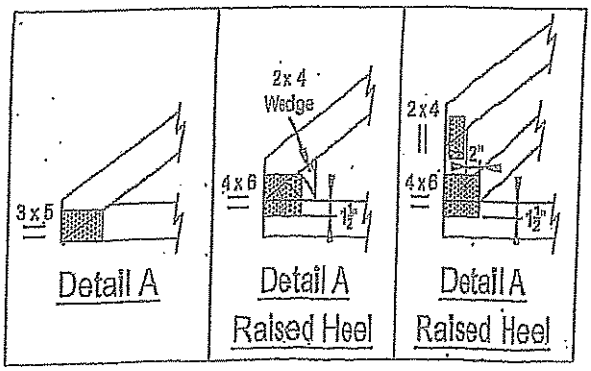


NOTE: DESIGN CONFORMS TO PART 9, O.B.C. 2012 (LIMIT STATES DESIGN)
(TO BE INCLUDED AND USED AS PART OF A FULL TRUSS ENGINEERING PACKAGE)

# Symbols

## PLATE LOCATION AND ORIENTATION

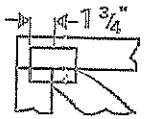


Center plate on joint unless x, y offsets are indicated. Dimensions are in ft-in-sixteenths or mm. Apply plates to both sides of truss and fully embed teeth.

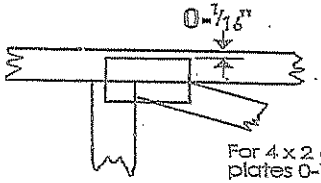


For 4 x 2 orientation, locate plates 0-7/16" from outside edge of truss.

This symbol indicates the required direction of slots in connector plates.

* Plate location details available in MiTek software or upon request.

## PLATE SIZE

4 x 4

The first dimension is the plate width measured perpendicular to slots. Second dimension is the length parallel to slots.

## LATERAL BRACING LOCATION

Indicated by symbol shown and/or by text in the bracing section of the output. Use T, I or Eliminator bracing if indicated.

## BEARING

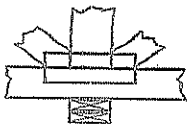

Indicates location where bearings (supports) occur. Icons vary but reaction section indicates joint number where bearings occur.

**Industry Standards:**

TPIC: Truss Design Procedures and Specifications for Light Metal Plate Connected Wood Trusses

DSB-89: *Design Standard for Bracing.*

BCSI: Building Component Safety Information, Guide to Good Practice for Handling, Installing & Bracing of Metal Plate Connected Wood Trusses.

# Numbering System

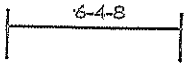


dimensions shown in ft-in-sixteenths or mm (Drawings not to scale)

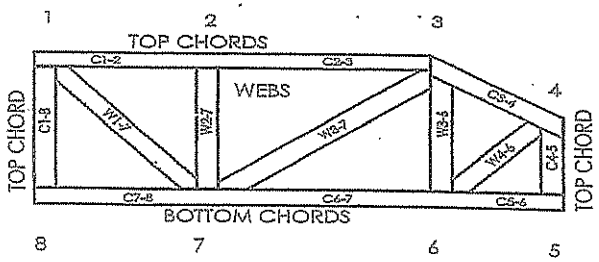


**JOINTS ARE GENERALLY NUMBERED/LETTERED CLOCKWISE AROUND THE TRUSS STARTING AT THE JOINT FARTHEST TO THE LEFT.**

**CHORDS AND WEBS ARE IDENTIFIED BY END JOINT NUMBERS/LETTERS.**

**PRODUCT CODE APPROVALS**

CCMC Reports:

11996-L, 10319-L, 13270-L, 12691-R

© 2007 MiTek® All Rights Reserved

MiTek®

POWER TO PERFORM.™



# General Safety Notes

Failure to Follow Could Cause Property Damage or Personal Injury

1. Additional stability bracing for truss system, e.g. diagonal or X-bracing, is always required. See BCSI.
2. Truss bracing must be designed by an engineer. For wide truss spacing, individual lateral braces themselves may require bracing, or alternative T, I, or Eliminator bracing should be considered.
3. Never exceed the design loading shown and never stack materials on inadequately braced trusses.
4. Provide copies of this truss design to the building designer, erection supervisor, property owner and all other interested parties.
5. Cut members to bear tightly against each other.
6. Place plates on each face of truss at each joint and embed fully. Knots and wane at joint locations are regulated by TPIC.
7. Design assumes trusses will be suitably protected from the environment in accord with TPIC.
8. Unless otherwise noted, moisture content of lumber shall not exceed 19% at time of fabrication.
9. Unless expressly noted, this design is not applicable for use with fire retardant, preservative treated, or green lumber.
10. Camber is a non-structural consideration and is the responsibility of truss fabricator. General practice is to camber for dead load deflection.
11. Plate type, size, orientation and location dimensions indicated are minimum plating requirements.
12. Lumber used shall be of the species and size, and in all respects, equal to or better than that specified.
13. Top chords must be sheathed or purlins provided at spacing indicated on design.
14. Bottom chords require lateral bracing at 10 ft. spacing, or less, if no ceiling is installed, unless otherwise noted.
15. Connections not shown are the responsibility of others.
16. Do not cut or alter truss member or plate without prior approval of an engineer.
17. Install and load vertically unless indicated otherwise.
18. Use of green or treated lumber may pose unacceptable environmental, health or performance risks. Consult with project engineer before use.
19. Review all portions of this design (front, back, words and pictures) before use. Reviewing pictures alone is not sufficient.
20. Design assumes manufacture in accordance with TPIC Quality Criteria.

Micro City Engineering Services Inc.
(BCIN: 26064; FIRM BCIN: 29991)
RR #1, Po Box 61
Glencoe, Ontario
N0L 1M0
(519) 287 - 2242; Fax: (519) 287 - 5750 (Call)

LICENSED PROFESSIONAL ENGINEER
1-20794
S. KATSOULAKOS
PROVINCE OF ONTARIO

DWG NO T4-94414
STRUCTURAL
COMPONENT ONLY

## Responsibilities:

Micro City Engineering Services is responsible for the design of trusses as individual components.

It is the responsibilities of others to ascertain that the design loads utilized on this (these) drawing(s) meet or exceed the actual dead load imposed by the structure and the live load imposed by the local building code or the authorities having jurisdiction over such decisions.

All dimensions are to be verified by the owner, contractor, architect, or other authority having input over such decisions prior to truss component manufacture. At no time shall Micro City Engineering Services Inc. or its employees be responsible for dimension errors.

Micro City Engineering Services Inc. bears no responsibility for the erection of any truss components. Persons erecting truss components are cautioned to seek professional advice regarding temporary and permanent bracing systems and to be totally familiar with all aspects of truss erection prior to proceeding on any truss component erection job. Any bracing shown on Micro City Engineering Services Inc. or Tamarack Roof Trusses Inc. sealed or unsealed truss component drawings is specified for the single truss component in question and is identified as an integral part of the design for that particular truss component but is not meant to represent the only required bracing for that particular truss component when installed as a component in a series of truss components in a roof truss system.

~~It is the truss manufacturer's responsibility to ensure that trusses are manufactured in accordance with Micro City Engineering~~ Services Inc. specifications outlined below:

## SPECIFICATIONS:

Truss components sealed by Micro City Engineering Services Inc. must conform to the relevant sections of the current Building Code of Ontario and Canada (Part 4 or Part 9) or the current Farm Building Code of Canada in accordance with the application specified on the sealed truss component drawing. All truss component design procedures must conform to the current design standard issued by the Truss Plate Institute of Canada (TPIC). All unit lumber and nailing stresses identified on truss component design drawings and/or used in the design of individual truss components shall conform to the current CSA Wood Design standard identified in the current Building Code and TPIC Design Standards.

The lumber used to manufacture any truss component is to conform to the specified size and grade identified on the truss drawing.

The lumber used in the manufacture of any truss component is not to exceed 19% during its service use unless specifically noted on the truss drawing.

The lumber used in the manufacture of any truss component is not to be treated with any chemicals during its service life unless specifically noted on the truss drawing.

Connector plates shall be applied to both faces of the truss component at each joint and shall be positioned exactly as specified.

The top chord of any truss component is assumed to be continuously laterally braced by the roof sheathing or purlins at intervals specified on the sealed truss component drawing but not exceeding 24" o/c (Part 9 design) and not exceeding 48" o/c (Part 4 or Agricultural design).

When a truss component is to be installed with no rigid ceiling attached directly to the bottom chord, then the bottom chord is to be laterally braced at intervals not exceeding 3m (or 10'-0").

**All sealed or unsealed truss component drawings provided by Micro City Engineering Services Inc. Or Tamarack Roof Trusses Inc. should be read in conjunction with the following:**

Warning-Verify design parameters and READ NOTES ON THIS AND INCLUDED MITEK REFERENCE PAGE MII-7473C rev 10-'08 BEFORE USE. Design valid for use only with Mitek connectors. This design is based only upon parameters shown, and is for individual building component. Applicability of design parameters and proper incorporation of component is the responsibility of the building designer - not the truss designer. Bracing shown is for lateral support of individual web members only. Additional temporary bracing to insure stability during construction is the responsibility of the erector. Additional permanent bracing of the overall structure is the responsibility of the building designer. For general guidance regarding fabrication, quality control, storage, delivery, erection, and bracing, consult TPIC Appendix G - Minimum Quality Manufacturing Criteria available from www.tpic.ca and BCSI Building Component Safety Information available from the Truss Plate Institute, 781 N. Lee Street, Suite 312, Alexandria, VA, 22314.