TRUSSES BY KOTT

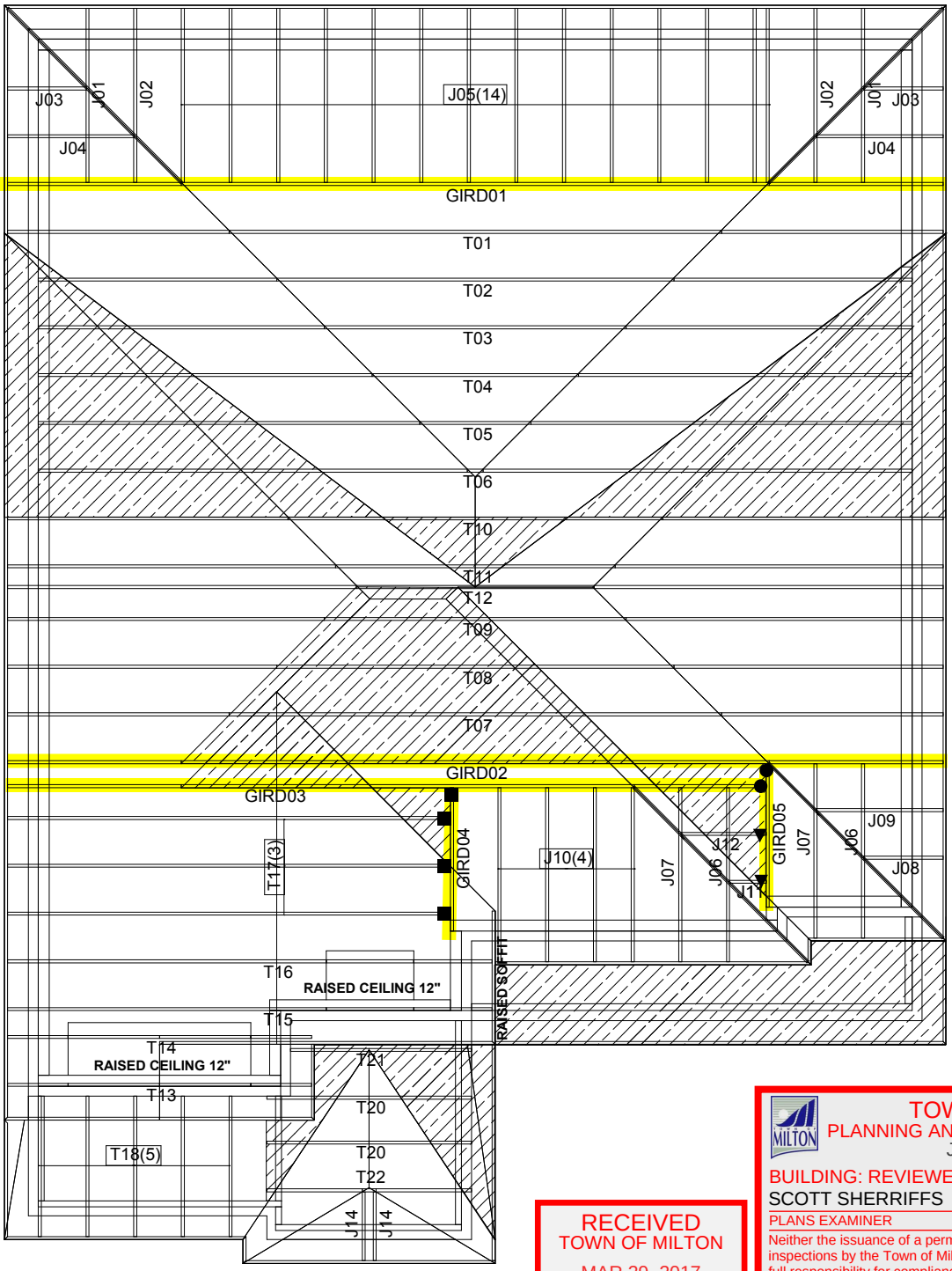

RECEIVED
TOWN OF MILTON
MAR 29, 2017
JUNIPER 2
BUILDING DIVISION

TOWN OF MILTON
PLANNING AND DEVELOPMENT
JUNIPER 2 MODEL
BUILDING: REVIEWED
SCOTT SHERRIFFS MAR 30, 2017
PLANS EXAMINER DATE
Neither the issuance of a permit nor carrying out of inspections by the Town of Milton relives the owner from full responsibility for compliance with the provisions of the Ontario Building Code Act and the Ontario Building Code, both as amended, as well as other applicable statutes and regulations of the Province on Ontario, By-laws of the Region of Halton and Town of Milton

CONVENTIONAL FRAMING BY OTHERS

ALL CONVENTIONAL FRAMING TO CONFORM WITH PART 9 OF THE O.B.C
ROOF RAFTERS THAT CROSS MEET OVER TRUSSES TO BE 2x4 S.P.F. @ 24"O/C WITH A 2x4 VERTICAL POST TO THE TRUSS UNDERNEATH EACH CROSS POINT. VERTICAL POST LONGER THAN 6' TO HAVE LATERAL BRACING SO THAT THE DISTANCE BETWEEN END POINT AND BETWEEN ROWS OF BRACING DOES NOT EXCEED 6'.

HANGER LEGEND:

▼ LUS24 ■ LJS26DS
● HGUS26 ✕ HGUS26-2

SIZE AND LOCATION OF CONVENTIONAL FRAMING IS APPROXIMATE. ALL AREAS MAY NOT BE SHOWN. REFER TO ARCHITECTURAL PLANS FOR DETAILS.

Model: **JUNIPER EL 1**
Customer: GREENPARK
Project: LECCO RIDGE
Location: MILTON
Date: 10/7/2016 Drawn by: BB

ENGINEERING NOTE PAGE (ENP-1)
PLEASE READ PRIOR TO INSTALLATION

RESPONSIBILITIES

THIS DESIGN IS FOR AN INDIVIDUAL BUILDING COMPONENT AND HAS BEEN BASED ON INFORMATION PROVIDED BY THE DESIGN OFFICE OF KOTT LUMBER. THE UNDERSIGNED ENGINEER DISCLAIMS ANY RESPONSIBILITY FOR DAMAGES AS A RESULT OF FAULTY OR INCORRECT INFORMATION, SPECIFICATION AND/OR DESIGNS FURNISHED TO THE ENGINEER. THE UNDERSIGNED ENGINEER IS ONLY RESPONSIBLE FOR THE STRUCTURAL INTEGRITY OF THIS BUILDING COMPONENT FOR THE CONDITIONS AND LOADS SHOWN ON THIS DRAWING. THE STRUCTURAL INTEGRITY OF THE BUILDING AND THE VERIFICATION OF THE DIMENSIONS AND THE DESIGN LOADS USED ARE THE RESPONSIBILITY OF THE BUILDING DESIGNER.

TRUSSES ARE DESIGNED IN CONFORMANCE WITH THE RELEVANT SECTIONS OF THE NATIONAL BUILDING CODE OF CANADA OR THE CANADIAN CODE FOR FARM BUILDINGS, WHICHEVER APPLIES TO THE BUILDING TYPE INDICATED ON THE DRAWING

IT IS THE RESPONSIBILITY OF KOTT LUMBER TO ENSURE THAT TRUSSES ARE MANUFACTURED IN CONFORMANCE WITH THESE DESIGNS AND WITH THE SPECIFICATIONS OUTLINED BELOW. THE UNDERSIGNED ENGINEER IS NOT RESPONSIBLE FOR QUALITY CONTROL IN THE TRUSS MANUFACTURING PLANT.

USE AND OCCUPANCY

- The building is of the type indicated on the drawing

LOADING

- The truss loading intensity and distribution as well as load transfer mechanism is that indicated on the drawing
- No buildings, trees, parapets or other projections higher than the roof for which the trusses are used are located within a distance less than ten (10) times the difference in height, or five metres (16 ft) whichever is greater, unless the drawing indicates that the snow drifting has been taken into account

HANDLING, INSTALLATION AND BRACING

- The trusses must be handled and installed by a qualified professional as per the supplied document titled *Information for Truss Installers* and the BCSI-B1 and BCSI-B3 Summary Sheets
- The compression chords are laterally braced by continuous rigid diaphragm sheathing or as specified on the drawing
- Temporary and permanent bracing must be installed as indicated on the truss drawing and according to the BCSI-B1 and BCSI-B3 Summary Sheets. Bracing for the lateral stability of the truss is to be provided by the building designer
- **It is recommended that a Professional Engineer's advice be obtained for the bracing of trusses spanning more than 12.37m (40'-7")**

SUPPORTS

- The trusses are to be supported at the bearing points indicated and anchored to the supports where considered necessary by the designer of the overall structure
- Bearing sizes shown are the minimum required to prevent crushing of the truss members and do not necessarily take into account stability of the overall building structure
- Elevation of bearings must be carefully checked and shimmed to alignment for solid bearings
- Adequate wood truss bearing is the responsibility of the building designer.

DIMENSIONS

- Geometry of the truss and dimensions indicated on the drawing are identical to those of the installed truss.

RECEIVED
TOWN OF MILTON
MAR 29, 2017
JUNIPER 2
BUILDING DIVISION

BEARING ANCHORAGE BY TOE-NAILS FOR LATERAL CAPACITY

B37579H1

NAIL TYPE	LENGTH (IN)	DIAMETER (IN)	NAIL LATERAL CAPACITY (LB)	
			S-P-F	D. FIR
COMMON WIRE	3.00	0.144	132	147
	3.25	0.144	132	147
	3.50	0.160	159	177
COMMON SPIRAL	3.00	0.122	97	108
	3.25	0.122	97	108
	3.50	0.152	145	162

NOTES:

1. Rafter and ceiling members may be anchored to top and bottom chords of girder truss by toe-nailing rafter and ceiling members to girder chords provided the reaction does not exceed the lateral capacities in the table. Hangers (specified by others) are required for reactions higher than the maximum toe-nail capacity. Reactions are based on factored loads.
2. Toe nail capacities shown in the table are for **one** toe-nail. For additional toe-nails multiply values in table by the number of toe-nails used. Toe-nail capacities take into account toe-nailing factor J_A in CSA O86-09, section 10.9.4.1.
3. For 9- 3/4 gauge 3.25" common wire gun nails (diameter = 0.120") use 3" common spiral nail values.
4. Maximum number of toe-nails allowed depends on the lumber size & species to be toe-nailed to supporting member and nail diameter, as shown in tables below.
5. Nail values in table are based on the following relative lumber densities: G = 0.42 (SPF), G = 0.49 (D. Fir).
6. Toe-nails shall be driven at approximately 1/3 the nail length from the edge of the joist/truss chord and driven at an angle of 30° to the grain of the member (See next page for nailing on bearing plate).
7. For loads due to **wind** the nail lateral capacity in this table may be multiplied by 1.15 (K_D factor).
8. Lumber must be dry (< 19% moisture content) at the time of nail installation.
9. Nail values in this table comply with CSA O86-09, section 10.9.4
10. This design is not valid after April 30, 2017.

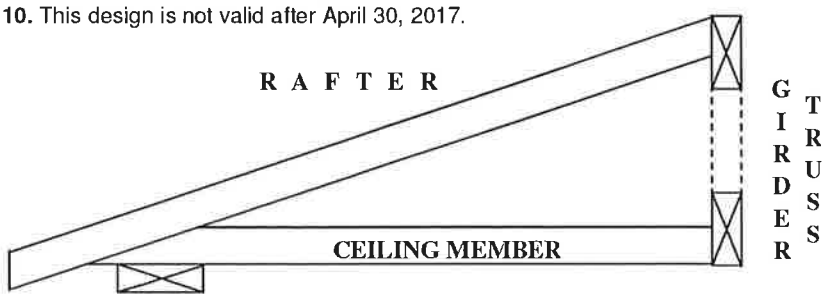

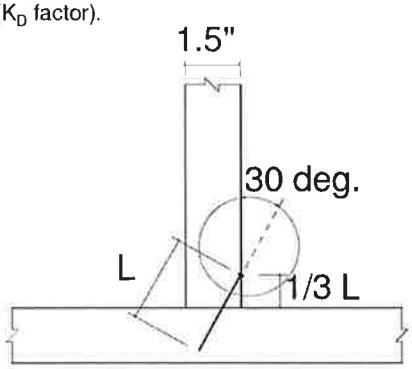

TOE-NAIL INSTALLATION

Nail type	Common wire	Common spiral	Common wire	Common spiral
Nail dia. (in)	0.160	0.152	0.144	0.122
	(3.5" nail)		(3" and 3.25" nail)	
LUMBER SIZE	MAXIMUM NUMBER OF TOE-NAILS			
2X4 SPF	2	2	3	3
2X4 D. Fir	2	2	2	2
2X6 SPF	4	4	4	5
2X6 D. Fir	3	3	3	4

MiTek Canada Inc
100 Industrial Rd.
Bradford, Ontario L3Z 3G7

PEO
Certificate No. 10889485

LICENSED PROFESSIONAL ENGINEER
C. Cordogiannis
90553736
PROVINCE OF ONTARIO

RECEIVED
TOWN OF MILTON
MAR 29, 2017
JUNIPER 2
BUILDING DIVISION

April 24, 2015

BEARING ANCHORAGE BY TOE-NAILS FOR WIND LOADING B37579H2

NAIL TYPE	LENGTH (IN)	DIAMETER (IN)	NAIL WITHDRAWAL CAPACITY (LB)	
			S-P-F	D. FIR
COMMON WIRE	3.00	0.144	30	42
	3.25	0.144	32	45
	3.50	0.160	38	52
COMMON SPIRAL	3.00	0.122	26	36
	3.25	0.122	28	40
	3.50	0.152	36	50

Note: If using truss with D. Fir lumber and S-P-F bearing plate, use values in table for S-P-F.

NOTES:

1. Truss chord, rafter, or ceiling members may be anchored to bearing plate by toe-nails, provided that the actual factored uplift force due to **wind** or **earthquake** load does not exceed the withdrawal capacities in the table. Hangers (specified by others) are required for uplift forces that are higher than the maximum toe-nail withdrawal capacity.
2. Toe nail capacities shown in the table are for **one** toe-nail. For additional toe-nails multiply values in table by the number of toe-nails used. Toe-nail capacities take into account toe-nailing factor J_A in CSA O86-09, section 10.9.5.2.
3. For 9- 3/4 gauge 3.25" common wire gun nails (diameter = 0.120") use 3" common spiral nail values.
4. Maximum number of toe-nails allowed depends on the lumber size & species to be toe-nailed to supporting member and nail diameter, as shown in table above.
5. Nail values in table are based on the following relative lumber densities: G = 0.42(SPF), G = 0.49(D. Fir).
6. Toe-nails shall be driven at approximately 1/3 the nail length from the edge of the joist/truss chord and driven at an angle of 30° to the grain of the member (See drawing on detail B37579H1).
7. Lumber must be dry (< 19% moisture content) at the time of nail installation.
8. Nail values in this table comply with CSA O86-09, section 10.9.5
9. This design is not valid after April 30, 2017

Toe-nailing on 2x6 Bearing Plate

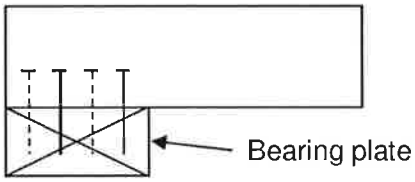

Elevation view

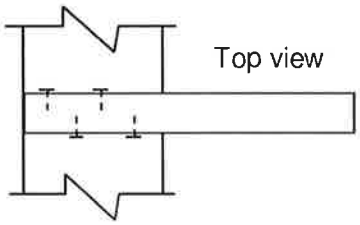

Top view

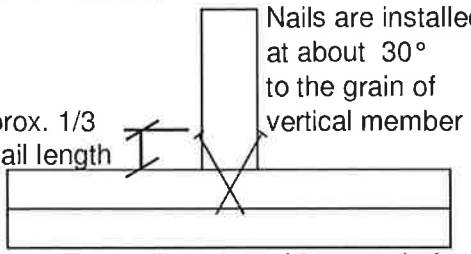

Toe-nailing viewed from end of joist or truss

Toe-nailing on 2x4 Bearing Plate

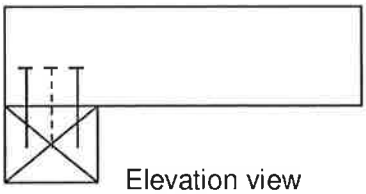

Elevation view

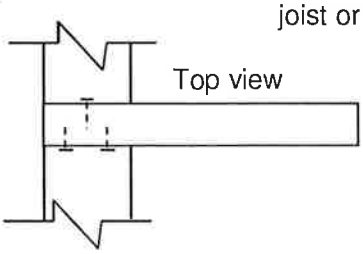

Top view

MiTek Canada Inc
100 Industrial Rd.
Bradford, Ontario L3Z 3G7

RECEIVED
TOWN OF MILTON
MAR 29, 2017
JUNIPER 2
BUILDING DIVISION

PEO
Certificate No. 10889485

LICENSED PROFESSIONAL ENGINEER
C. Cordogiannis
90553736
PROVINCE OF ONTARIO

April 24, 2015

JOB NAME **DETAILS** | JOB DESC. **HIP END FRAMING** | DRAWING NO. **B37579J**

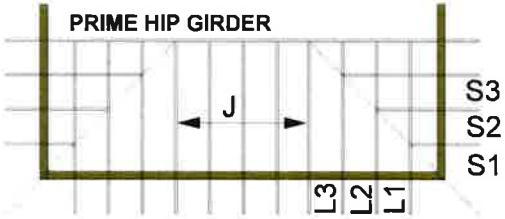

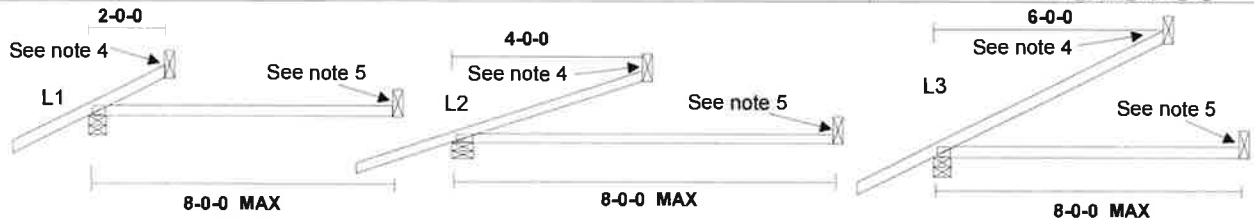

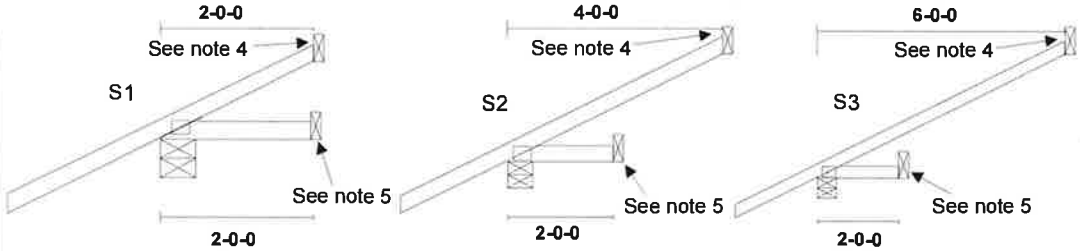

DETAIL "A"

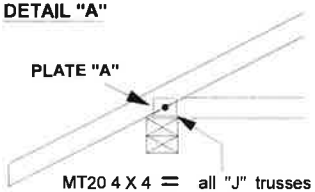

MT20 4 X 4 = all "J" trusses
MT20 3 X 4 = all other trusses

DETAIL "B"

RAISED HEEL

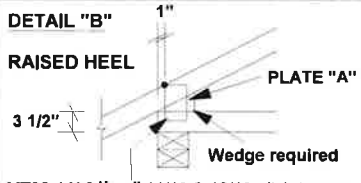

MT20 4 X 8 || all 11/12 & 12/12 pitch trusses
MT20 4 X 7 || all other trusses

DETAIL "C"

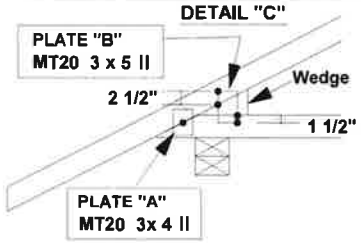

CANTILEVER DETAIL "C"

SLOPE	MAX CANTILEVER	PLATE "B"	WEDGE SIZE
3/12	17"	3 X 5	2 X 3
4/12	14"	3 X 5	2 X 3
5/12	12"	3 X 5	2 X 4
6/12	10"	3 X 5	2 X 4
7/12	9"	3 X 5	2 X 6
8/12	8.5"	3 X 5	2 X 6
9/12	8"	3 X 5	2 X 6
10/12	7.5"	3 X 5	2 X 6

"J"

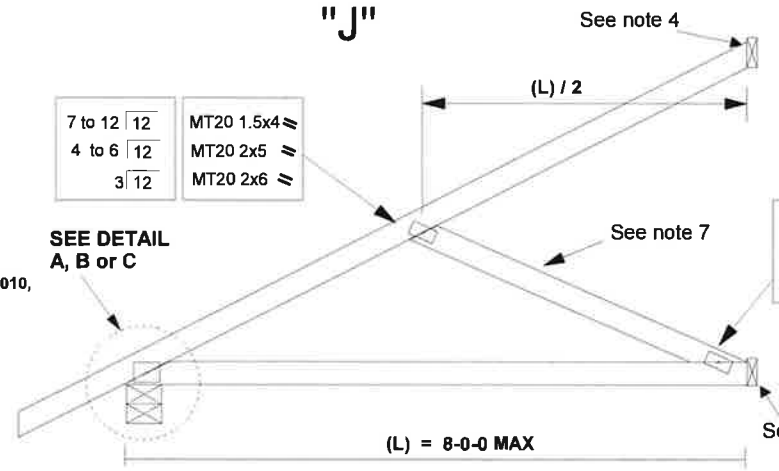

7 to 12 / 12	MT20 1.5x4 =
4 to 6 / 12	MT20 2x5 =
3 / 12	MT20 2x6 =

7 to 12 / 12	MT20 2x4 =
4 to 6 / 12	MT20 2x6 =
3 / 12	MT20 3x6 =

NOTES:

1. ALL LUMBER SHALL BE 2x4 SPF OR D. Fir No. 2 DRY OR BETTER.
2. THIS TRUSS IS DESIGNED FOR HOUSING AND SMALL BUILDING REQUIREMENTS OF PART 9 NBCC 2010, WHERE GROUND SNOW LOAD IS 60.0 PSF OR LESS AND RAIN LOAD DOES NOT EXCEED 12.53 PSF; TOP CHORD DEAD LOAD IS 6 PSF OR LESS; BC LIVE LOAD IS 0 PSF AND BC DEAD LOAD IS 7 PSF.
3. HIP RAFTER DESIGN SHALL CONFORM TO SECTION 9.23.14.6 OF NBCC 2010.
4. FASTEN HIGH END OF RAFTERS USING MITEK CANADA INC. "BEARING ANCHORAGE BY TOE-NAILS FOR LATERAL CAPACITY" STANDARD DETAIL B37579H1.
5. FASTEN RIGHT END OF CEILING USING MITEK CANADA INC. "BEARING ANCHORAGE BY TOE-NAILS FOR LATERAL CAPACITY" STANDARD DETAIL B37579H1.
6. OVERHANG LENGTH SHALL NOT EXCEED 2 FT.
7. WHEN SETBACK IS 6 FT OR LESS, DIAGONAL WEB MAY BE OMITTED AND HIGH END OF TOP CHORD SHALL BE CONNECTED AS PER NOTE 4.
8. ALL PLATES SPECIFIED ARE PRESSED INTO BOTH FACES OF THE TRUSS.
9. MITEK REFERENCE PAGE MII-7473C FORMS AN INTEGRAL PART OF THIS DETAIL.
10. THIS DETAIL IS NOT VALID AFTER APRIL 30, 2017

MiTek Canada, Inc.
100 Industrial Rd.
Bradford, Ontario, L3Z 3G7

PEO
Certificate No. 10889485

LICENSED PROFESSIONAL ENGINEER
C. Cordogiannis
90553736
PROVINCE OF ONTARIO

RECEIVED
TOWN OF MILTON
MAR 29, 2017
JUNIPER 2
BUILDING DIVISION

April 24, 2015

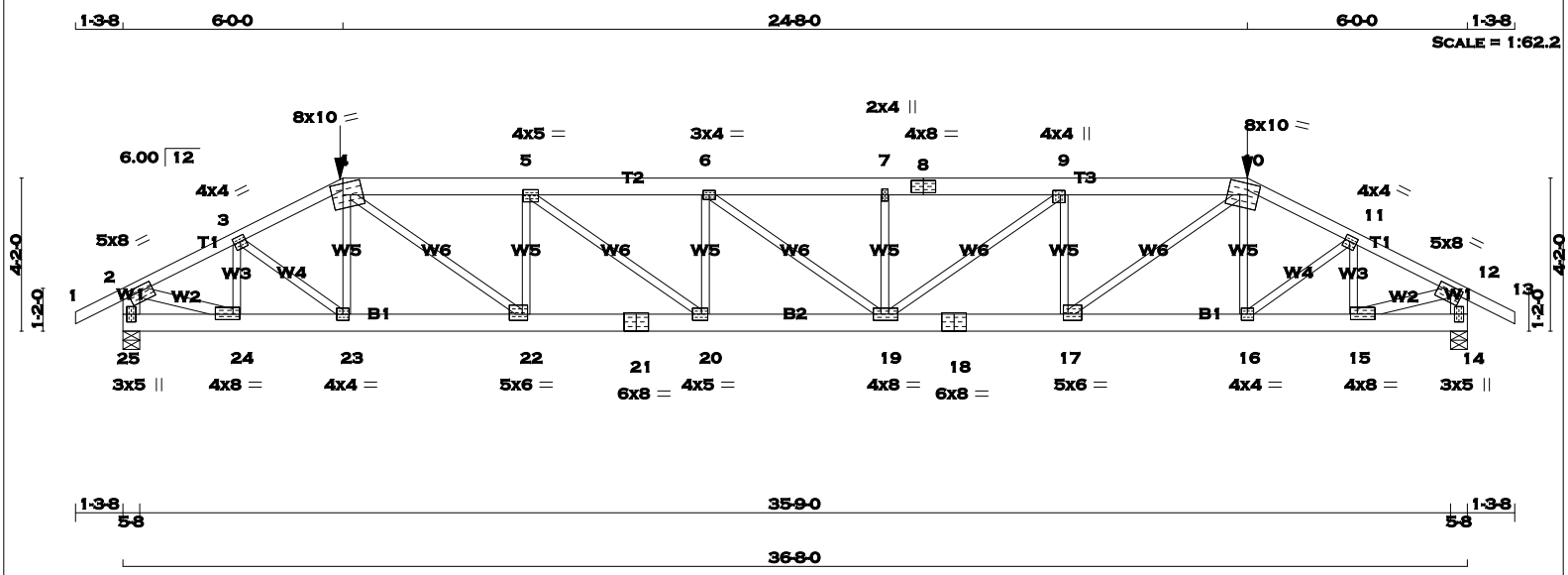

TOTAL WEIGHT = 185 lb [M]

LUMBER

N. L. G. A. RULES

CHORDS	SIZE		LUMBER	DESCR.
1 - 4	2x4	DRY	No.2	SPF
4 - 8	2x6	DRY	No.2	SPF
8 - 10	2x6	DRY	No.2	SPF
10 - 13	2x4	DRY	No.2	SPF
25 - 2	2x6	DRY	No.2	SPF
14 - 12	2x6	DRY	No.2	SPF
25 - 21	2x6	DRY	2100F 1.8E	SPF
21 - 18	2x6	DRY	2100F 1.8E	SPF
18 - 14	2x6	DRY	2100F 1.8E	SPF
ALL WEBS	2x3	DRY	No.2	SPF
EXCEPT				
2 - 24	2x4	DRY	No.2	SPF
15 - 12	2x4	DRY	No.2	SPF

DRY: SEASONED LUMBER.

PLATES (table is in inches)

JT	TYPE	PLATES	W	LEN	Y	X
2	TMVW-t	MT20	5.0	8.0	1.75	3.75
3	TMWW-t	MT20	4.0	4.0	1.75	1.75
4	TTWW-m	MT20	8.0	10.0	4.25	4.00
5	TMWW-t	MT20	4.0	5.0	1.75	2.25
6	TMWW-t	MT20	3.0	4.0		
7	TMW+w	MT20	2.0	4.0		
8	TS-t	MT20	4.0	8.0		
9	TMWW+t	MT20	4.0	4.0	1.50	1.50
10	TTWW-m	MT20	8.0	10.0	4.25	4.00
11	TMWW-t	MT20	4.0	4.0	1.75	1.75
12	TMVW-t	MT20	5.0	8.0	1.75	3.75
14	BMV1+p	MT20	3.0	5.0		
15	BMWW-t	MT20	4.0	8.0	1.75	2.25
16	BMWW-t	MT20	4.0	4.0		
17	BMWW-t	MT20	5.0	6.0	2.00	1.50
18	BS-t	MT20	6.0	8.0		
19	BMWWW-t	MT20	4.0	8.0	2.00	2.50
20	BMWW-t	MT20	4.0	5.0	2.00	2.00
21	BS-t	MT20	6.0	8.0		
22	BMWW-t	MT20	5.0	6.0	2.00	1.75
23	BMWW-t	MT20	4.0	4.0		
24	BMWW-t	MT20	4.0	8.0	1.75	2.25
25	BMV1+p	MT20	3.0	5.0		

A SIZE FOR SIZE SUBSTITUTION OF MITEK MII20 WITH TEE-LOK TL20 PLATES IS ALLOWED.

READ ALL NOTES ON THIS PAGE AND ON THE ENGINEERING NOTE PAGE ENP-1. THE NOTE PAGE IS AN INTEGRAL PART OF THIS DRAWING AS IT CONTAINS SPECIFICATIONS AND CRITERIA USED IN THE DESIGN OF THIS COMPONENT.

21 MAR 2017

DIMENSIONS, SUPPORTS AND LOADINGS SPECIFIED BY FABRICATOR TO BE VERIFIED BY BUILDING DESIGNER

BEARINGS

JT	FACTORED GROSS REACTION VERT	HORZ	MAXIMUM FACTORED GROSS REACTION DOWN	HORZ	UPLIFT	INPUT BRG IN-SX	REQRD BRG IN-SX
25	3321	0	3321	0	0	5-8	5-8
14	3321	0	3321	0	0	5-8	5-8

UNFACTORED REACTIONS

JT	1ST LCASE COMBINED	MAX./MIN. COMPONENT REACTIONS SNOW	LIVE	PERM.LIVE	WIND	DEAD	SOIL
25	2329	1635 / 0	0 / 0	0 / 0	0 / 0	695 / 0	0 / 0
14	2329	1635 / 0	0 / 0	0 / 0	0 / 0	695 / 0	0 / 0

BEARING MATERIAL TO BE SPF NO.2 OR BETTER AT JOINT(S) 25, 14

BRACING

TOP CHORD TO BE SHEATHED OR MAX. PURLIN SPACING = 2.56 FT.
MAX. UNBRACED BOTTOM CHORD LENGTH = 10.00 FT. OR RIGID CEILING DIRECTLY APPLIED.

ALL PITCH BREAKS AND PERIMETER CORNER JOINTS MUST BE LATERALLY RESTRAINED.

LOADING

TOTAL LOAD CASES: (4)

CHORDS

MEMB. FR-TO	MAX. FACTORED FORCE (LBS)	FACTORED VERT. LOAD (PLF) FROM	TO	LC1 CSI (LC)	MAX UNBRAC LENGTH
1- 2	0 / 23	-77.3	-77.3	0.11 (1)	10.00
2- 3	-4460 / 0	-77.3	-77.3	0.39 (1)	3.02
3- 4	-5203 / 0	-77.3	-77.3	0.46 (1)	2.70
4- 5	-7088 / 0	-145.8	-145.8	0.61 (1)	2.81
5- 6	-8229 / 0	-145.8	-145.8	0.68 (1)	2.56
6- 7	-8208 / 0	-145.8	-145.8	0.67 (1)	2.56
7- 8	-8208 / 0	-145.8	-145.8	0.68 (1)	2.56
8- 9	-8208 / 0	-145.8	-145.8	0.68 (1)	2.56
9-10	-7093 / 0	-145.8	-145.8	0.61 (1)	2.81
10-11	-5202 / 0	-77.3	-77.3	0.46 (1)	2.70
11-12	-4460 / 0	-77.3	-77.3	0.39 (1)	3.02
12-13	0 / 23	-77.3	-77.3	0.11 (1)	10.00
25- 2	-3204 / 0	0.0	0.0	0.23 (1)	5.87
14-12	-3205 / 0	0.0	0.0	0.23 (1)	5.87
25-24	0 / 0	-33.0	-33.0	0.08 (1)	10.00
24-23	0 / 3995	-33.0	-33.0	0.29 (1)	10.00
23-22	0 / 4662	-33.0	-33.0	0.29 (1)	10.00
22-21	0 / 7087	-33.0	-33.0	0.44 (1)	10.00
21-20	0 / 7087	-33.0	-33.0	0.44 (1)	10.00
20-19	0 / 8229	-33.0	-33.0	0.50 (1)	10.00
19-18	0 / 7092	-33.0	-33.0	0.44 (1)	10.00
18-17	0 / 7092	-33.0	-33.0	0.44 (1)	10.00
17-16	0 / 4661	-33.0	-33.0	0.29 (1)	10.00
16-15	0 / 3995	-33.0	-33.0	0.29 (1)	10.00
15-14	0 / 0	-33.0	-33.0	0.08 (1)	10.00

WEBS

MEMB. FR-TO	MAX. FACTORED FORCE (LBS)	MAX CSI (LC)
24- 3	-1068 / 0	0.19 (1)
3-23	0 / 852	0.21 (1)
23- 4	-246 / 56	0.06 (1)
4-22	0 / 3031	0.75 (1)
22- 5	-1699 / 0	0.42 (1)
5-20	0 / 1432	0.35 (1)
20- 6	-690 / 0	0.17 (1)
6-19	-26 / 0	0.02 (1)
19- 7	-684 / 0	0.17 (1)
19- 9	0 / 1400	0.35 (1)
17- 9	-1689 / 0	0.41 (1)
17-10	0 / 3038	0.75 (1)
16-10	-249 / 55	0.06 (1)
16-11	0 / 851	0.21 (1)
15-11	-1067 / 0	0.19 (1)
2-24	0 / 4117	0.73 (1)
15-12	0 / 4117	0.73 (1)

FACTORED CONCENTRATED LOADS (LBS)

JT	LOC.	LC1	MAX-	MAX+	FACE	DIR.	TYPE
4	6-0-0	-348	-348	---	FRONT	VERT	TOTAL
10	30-8-0	-348	-348	---	FRONT	VERT	TOTAL

DESIGN CRITERIA

SPECIFIED LOADS:

TOP	CH.	LL	=	23.3	PSF
		DL	=	3.0	PSF
BOT	CH.	LL	=	0.0	PSF
		DL	=	7.0	PSF
TOTAL	LOAD		=	33.3	PSF

SPACING = 24.0 IN. C/C

LOADING IN FLAT SECTION BASED ON A SLOPE OF 6.00/12

GIRDER TYPE: CPrimeHip
SIDE SETBACK = 6-0-0
END SETBACK = 6-0-0
END WALL WIDTH = 5-8
CORNER FRAMING TYPE: CONVENTIONAL
END JACK TYPE: CONVENTIONAL
APPLIED TO FRONT SIDE
- ADDT'L LOADS BASED ON 55 % OF GSL.

THIS TRUSS IS DESIGNED FOR RESIDENTIAL OR SMALL BUILDING REQUIREMENTS OF PART 9, NBCC 2010

THIS DESIGN COMPLIES WITH:
- PART 9 OF OBC 2012 , BCBC 2012 , ABC 2014
- CSA 086-09
- TPIC 2011

(55 % OF 27.2 P.S.F. G.S.L. PLUS 8.4 P.S.F. RAIN LOAD) EQUALS 23.3 P.S.F. SPECIFIED ROOF LIVE LOAD

ALLOWABLE DEFL.(LL)= L/360 (1.22")
CALCULATED VERT. DEFL.(LL) = L/ 999 (0.42")
ALLOWABLE DEFL.(TL)= L/360 (1.22")
CALCULATED VERT. DEFL.(TL) = L/ 598 (0.74")

CSI: TC=0.68 (7-9:1) , BC=0.50 (19-20:1) , WB=0.75 (10-17:1) , SSI=0.28 (9-10:1)

DOL LUMBER=1.00 NAIL=1.00 LS BEND=1.00 COMP=1.00 SHEAR=1.00 TENS= 1.00

COMPANION LIVE LOAD FACTOR = 0.50

TRUSS PLATE MANUFACTURER IS NOT RESPONSIBLE FOR QUALITY CONTROL IN THE TRUSS MANUFACTURING PLANT .

NAIL VALUES

PLATE	GRIP(DRY) (PSI) MAX	MIN	SHEAR (PLI) MAX	MIN	SECTION (PLI) MAX	MIN
MT20	618	354	1667	822	2284	1656

PLATE PLACEMENT TOL. = 0.250 inches

PLATE ROTATION TOL. = 5.0 Deg.

JSI GRIP= 0.90 (22) (INPUT = 0.90)
JSI METAL= 0.97 (18) (INPUT = 1.00)

RECEIVED
TOWN OF MILTON
MAR 29, 2017
JUNIPER 2
BUILDING DIVISION

CONTINUED ON PAGE 2

HANGERS NOTES

1) SPECIAL HANGER(S) OR CONNECTION(S) REQUIRED TO SUPPORT CONCENTRATED LOAD(S) 348.1 lbs FACTORED DOWN AT 30-8-0, AND 348.1 lbs FACTORED DOWN AT 6-0-0 ON TOP CHORD. DESIGN FOR UNSPECIFIED CONNECTION(S) IS DELEGATED TO THE BUILDING DESIGNER.

READ ALL NOTES ON THIS PAGE AND ON THE ENGINEERING NOTE PAGE ENP-1. THE NOTE PAGE IS AN INTEGRAL PART OF THIS DRAWING AS IT CONTAINS SPECIFICATIONS AND CRITERIA USED IN THE DESIGN OF THIS COMPONENT.

LICENSED PROFESSIONAL ENGINEER
C.G. CARSON
100076892
PROVINCE OF ONTARIO

21 MAR 2017

KOTT

RECEIVED
TOWN OF MILTON
MAR 29, 2017
JUNIPER 2
BUILDING DIVISION

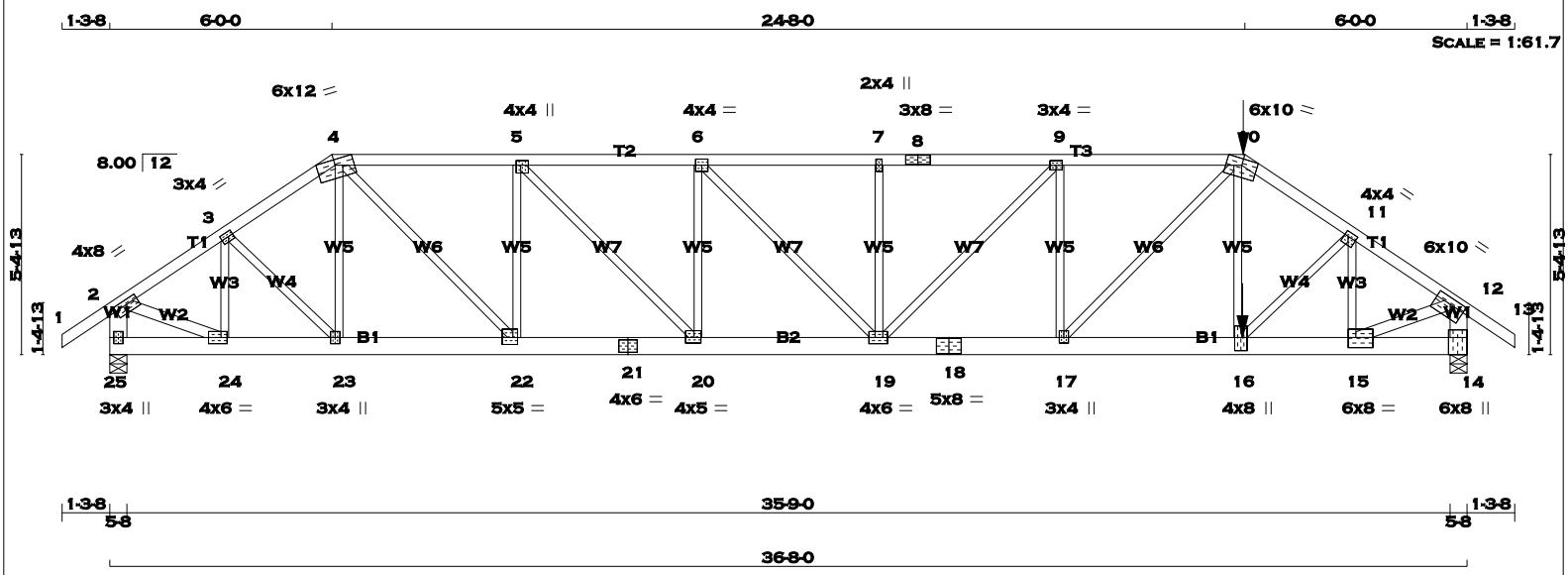

TOTAL WEIGHT = 184 lb [M]

LUMBER

N. L. G. A. RULES

CHORDS	SIZE		LUMBER	DESCR.
1 - 4	2x4	DRY	No.2	SPF
4 - 8	2x4	DRY	No.2	SPF
8 - 10	2x4	DRY	No.2	SPF
10 - 13	2x4	DRY	No.2	SPF
25 - 2	2x6	DRY	No.2	SPF
14 - 12	2x6	DRY	No.2	SPF
25 - 21	2x6	DRY	No.2	SPF
21 - 18	2x6	DRY	No.2	SPF
18 - 14	2x6	DRY	No.2	SPF
ALL WEBS	2x3	DRY	No.2	SPF
EXCEPT				
2 - 24	2x4	DRY	No.2	SPF
15 - 12	2x4	DRY	No.2	SPF

DRY: SEASONED LUMBER.

PLATES (table is in inches)

JT	TYPE	PLATES	W	LEN	Y	X
2	TMVW-t	MT20	4.0	8.0	1.50	3.75
3	TMWW-t	MT20	3.0	4.0	1.50	1.50
4	TTWW-m	MT20	6.0	12.0	Edge	
5	TMWW+t	MT20	4.0	4.0	1.50	1.50
6	TMWW-t	MT20	4.0	4.0		
7	TMW+w	MT20	2.0	4.0		
8	TS-t	MT20	3.0	8.0		
9	TMWW-t	MT20	3.0	4.0		
10	TTWW-m	MT20	6.0	10.0	Edge	
11	TMWW-t	MT20	4.0	4.0	1.50	1.25
12	TMVW-t	MT20	6.0	10.0	2.00	5.00
14	BMV1+t	MT20	6.0	8.0	Edge	0.50
15	BMWW-t	MT20	6.0	8.0	3.25	2.50
16	BMWW+t	MT20	4.0	8.0	4.25	1.75
17	BMWW+t	MT20	3.0	4.0	1.75	1.50
18	BS-t	MT20	5.0	8.0		
19	BMWWW-t	MT20	4.0	6.0	2.00	2.00
20	BMWW-t	MT20	4.0	5.0	1.75	2.25
21	BS-t	MT20	4.0	6.0		
22	BMWW-t	MT20	5.0	5.0	2.25	1.50
23	BMWW+t	MT20	3.0	4.0		
24	BMWW-t	MT20	4.0	6.0	2.00	2.00
25	BMV1+p	MT20	3.0	4.0		

Edge - INDICATES REFERENCE CORNER OF PLATE TOUCHES EDGE OF CHORD.

A SIZE FOR SIZE SUBSTITUTION OF MITEK MII20 WITH TEE-LOK TL20 PLATES IS ALLOWED.

READ ALL NOTES ON THIS PAGE AND ON THE ENGINEERING NOTE PAGE ENP-1. THE NOTE PAGE IS AN INTEGRAL PART OF THIS DRAWING AS IT CONTAINS SPECIFICATIONS AND CRITERIA USED IN THE DESIGN OF THIS COMPONENT.

LICENSED PROFESSIONAL ENGINEER
C.G. CARSON
100076892
PROVINCE OF ONTARIO

21 MAR 2017

DIMENSIONS, SUPPORTS AND LOADINGS SPECIFIED BY FABRICATOR TO BE VERIFIED BY BUILDING DESIGNER

BEARINGS

JT	FACTORED GROSS REACTION VERT	HORZ	MAXIMUM FACTORED GROSS REACTION DOWN	HORZ	UPLIFT	INPUT BRG IN-SX	REQRD BRG IN-SX
25	2421	0	2421	0	0	5-8	5-8
14	4735	0	4735	0	0	5-8	5-8

UNFACTORED REACTIONS

JT	1ST LCASE COMBINED	MAX./MIN. COMPONENT REACTIONS SNOW	LIVE	PERM.LIVE	WIND	DEAD	SOIL
25	1696	1203 / 0	0 / 0	0 / 0	0 / 0	493 / 0	0 / 0
14	3323	2326 / 0	0 / 0	0 / 0	0 / 0	997 / 0	0 / 0

BEARING MATERIAL TO BE SPF NO.2 OR BETTER AT JOINT(S) 25, 14

BRACING

TOP CHORD TO BE SHEATHED OR MAX. PURLIN SPACING = 2.21 FT.
MAX. UNBRACED BOTTOM CHORD LENGTH = 10.00 FT. OR RIGID CEILING DIRECTLY APPLIED.

ALL PITCH BREAKS AND PERIMETER CORNER JOINTS MUST BE LATERALLY RESTRAINED.

LOADING

TOTAL LOAD CASES: (4)

CHORDS

MEMB. FR-TO	MAX. FACTORED FORCE (LBS)	FACTORED VERT. LOAD (PLF) FROM	TO	LC1	MAX CSI (LC)	MAX. UNBRAC LENGTH
1- 2	0 / 29	-77.3	-77.3	0.11 (1)	10.00	
2- 3	-2624 / 0	-77.3	-77.3	0.20 (1)	4.07	
3- 4	-2967 / 0	-77.3	-77.3	0.23 (1)	3.83	
4- 5	-3956 / 0	-77.3	-77.3	0.62 (1)	3.02	
5- 6	-4959 / 0	-77.3	-77.3	0.80 (1)	2.53	
6- 7	-5506 / 0	-77.3	-77.3	0.82 (1)	2.40	
7- 8	-5506 / 0	-77.3	-77.3	0.91 (1)	2.28	
8- 9	-5506 / 0	-77.3	-77.3	0.91 (1)	2.28	
9-10	-5648 / 0	-77.3	-77.3	0.95 (1)	2.21	
10-11	-6209 / 0	-77.3	-77.3	0.64 (1)	2.26	
11-12	-5399 / 0	-77.3	-77.3	0.54 (1)	2.58	
12-13	0 / 29	-77.3	-77.3	0.11 (1)	10.00	
25- 2	-2371 / 0	0.0	0.0	0.17 (1)	6.65	
14-12	-4658 / 0	0.0	0.0	0.33 (1)	4.94	
25-24	0 / 0	-17.5	-17.5	0.05 (1)	10.00	
24-23	0 / 2194	-17.5	-17.5	0.34 (1)	10.00	
23-22	0 / 2454	-17.5	-17.5	0.37 (1)	10.00	
22-21	0 / 3956	-17.5	-17.5	0.56 (1)	10.00	
21-20	0 / 3956	-17.5	-17.5	0.56 (1)	10.00	
20-19	0 / 4959	-17.5	-17.5	0.72 (1)	10.00	
19-18	0 / 5648	-17.5	-17.5	0.80 (1)	10.00	
18-17	0 / 5648	-17.5	-17.5	0.80 (1)	10.00	
17-16	0 / 5232	-17.5	-17.5	0.77 (1)	10.00	
16-15	0 / 4497	-33.0	-33.0	0.69 (1)	10.00	
15-14	0 / 0	-33.0	-33.0	0.07 (1)	10.00	

WEBS

MEMB. FR-TO	MAX. FACTORED FORCE (LBS)	MAX CSI (LC)
24- 3	-717 / 0	0.15 (1)
23- 3	0 / 372	0.09 (1)
23- 4	-131 / 14	0.06 (1)
4-22	0 / 2140	0.53 (1)
22- 5	-1458 / 0	0.61 (1)
5-20	0 / 1438	0.36 (1)
20- 6	-932 / 0	0.39 (1)
6-19	0 / 785	0.19 (1)
19- 7	-366 / 0	0.15 (1)
19- 9	-203 / 0	0.19 (1)
17- 9	-283 / 0	0.12 (1)
17-10	0 / 591	0.15 (1)
16-10	0 / 2414	0.60 (1)
16-11	0 / 937	0.23 (1)
15-11	-1357 / 0	0.28 (1)
2-24	0 / 2304	0.41 (1)
15-12	0 / 4723	0.84 (1)

FACTORED CONCENTRATED LOADS (LBS)

JT	LOC.	LC1	MAX-	MAX+	FACE	DIR.	TYPE
10	30-7-8	-348	-348	---	FRONT	VERT	TOTAL
16	30-7-4	-3022	-3022	---	FRONT	VERT	TOTAL

DESIGN CRITERIA

*** SPECIAL LOADS ANALYSIS ***
GEOMETRY AND/OR BASIC LOADS CHANGED BY USER.
LOADS WERE DERIVED FROM USER INPUT
NO FURTHER MODIFICATIONS WERE MADE

SPECIFIED LOADS:

TOP	CH.	LL	=	23.3	PSF
		DL	=	3.0	PSF
BOT	CH.	LL	=	0.0	PSF
		DL	=	7.0	PSF
TOTAL	LOAD		=	33.3	PSF

SPACING = 24.0 IN. C/C

LOADING IN FLAT SECTION BASED ON A SLOPE OF 2.00/12 MINIMUM

GIRDER TYPE: CPrimeHip
SIDE SETBACK = 6-0-0
END SETBACK = 6-0-0
END WALL WIDTH = 5-8
CORNER FRAMING TYPE: CONVENTIONAL
END JACK TYPE: CONVENTIONAL
APPLIED TO FRONT SIDE
- ADDT'L LOADS BASED ON 55 % OF GSL.
LOADS APPLIED TO FIRST 6-2-0 OF SPAN MEASURED FROM THE RIGHT.

*** NON STANDARD GIRDER ***
ADDT'L USER-DEFINED LOADS APPLIED TO ALL LOAD CASES.

THIS TRUSS IS DESIGNED FOR RESIDENTIAL OR SMALL BUILDING REQUIREMENTS OF PART 9, NBCC 2010

THIS DESIGN COMPLIES WITH:
- PART 9 OF OBC 2012 , BCBC 2012 , ABC 2014
- CSA 086-09
- TPIC 2011

(55 % OF 27.2 P.S.F. G.S.L. PLUS 8.4 P.S.F. RAIN LOAD) EQUALS 23.3 P.S.F. SPECIFIED ROOF LIVE LOAD

ALLOWABLE DEFL.(LL)= L/360 (1.22")
CALCULATED VERT. DEFL.(LL) = L/ 999 (0.29")
ALLOWABLE DEFL.(TL)= L/360 (1.22")
CALCULATED VERT. DEFL.(TL) = L/ 856 (0.51")

CSI: TC=0.95 (9-10:1) , BC=0.80 (17-19:1) , WB=0.84 (12-15:1) , SSI=0.20 (4-5:1)

DOL LUMBER=1.00 NAIL=1.00 LS BEND=1.00 COMP=1.00 SHEAR=1.00 TENS= 1.00

COMPANION LIVE LOAD FACTOR = 0.50

TRUSS PLATE MANUFACTURER IS NOT RESPONSIBLE FOR QUALITY CONTROL IN THE TRUSS MANUFACTURING PLANT .

NAIL VALUES
PLATE GRIP(D
(PSI)
MAX M
MT20 618 :

PLATE PLACEM

PLATE ROTATI

RECEIVED
TOWN OF MILTON
MAR 29, 2017
JUNIPER 2
BUILDING DIVISION

KOTT

CONTINUED ON PAGE 2

HANGERS NOTES

1) SPECIAL HANGER(S) OR CONNECTION(S) REQUIRED TO SUPPORT CONCENTRATED LOAD(S) 348.1 lbs FACTORED DOWN AT 30-7-8 ON TOP CHORD, AND 3022.2 lbs FACTORED DOWN AT 30-7-4 ON BOTTOM CHORD. DESIGN FOR UNSPECIFIED CONNECTION(S) IS DELEGATED TO THE BUILDING DESIGNER.

JSI GRIP= 0.89 (10) (INPUT = 0.90)
JSI METAL= 0.90 (18) (INPUT = 1.00)

READ ALL NOTES ON THIS PAGE AND ON THE ENGINEERING NOTE PAGE ENP-1. THE NOTE PAGE IS AN INTEGRAL PART OF THIS DRAWING AS IT CONTAINS SPECIFICATIONS AND CRITERIA USED IN THE DESIGN OF THIS COMPONENT.

LICENSED PROFESSIONAL ENGINEER
C.G. CARSON
100076892
PROVINCE OF ONTARIO

21 MAR 2017

KOTT

RECEIVED
TOWN OF MILTON
MAR 29, 2017
JUNIPER 2
BUILDING DIVISION

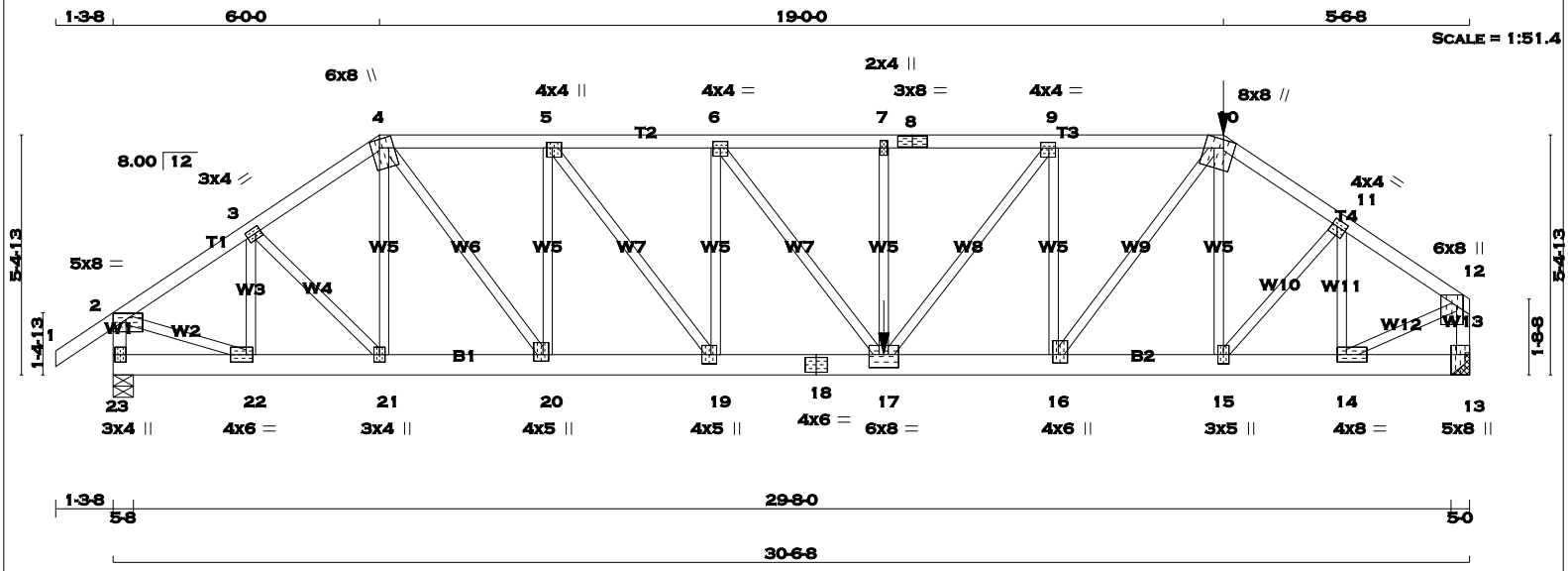

TOTAL WEIGHT = 159 lb

LUMBER

N. L. G. A. RULES

CHORDS	SIZE		LUMBER	DESCR.
1 - 4	2x4	DRY	No.2	SPF
4 - 8	2x4	DRY	No.2	SPF
8 - 10	2x4	DRY	No.2	SPF
10 - 12	2x4	DRY	No.2	SPF
23 - 2	2x4	DRY	No.2	SPF
13 - 12	2x4	DRY	No.2	SPF
23 - 18	2x6	DRY	No.2	SPF
18 - 13	2x6	DRY	No.2	SPF
ALL WEBS EXCEPT	2x3	DRY	No.2	SPF

DRY: SEASONED LUMBER.

PLATES (table is in inches)

JT	TYPE	PLATES	W	LEN	Y	X
2	TMVW-p	MT20	5.0	8.0	1.75	3.50
3	TMWW-t	MT20	3.0	4.0	1.50	1.50
4	TTWW+m	MT20	6.0	8.0	2.25	2.25
5	TMWW+t	MT20	4.0	4.0	1.50	1.50
6	TMWW-t	MT20	4.0	4.0	1.75	2.00
7	TMW+w	MT20	2.0	4.0		
8	TS-t	MT20	3.0	8.0		
9	TMWW-t	MT20	4.0	4.0	1.50	1.75
10	TTWW+m	MT20	8.0	8.0	Edge	3.00
11	TMWW-t	MT20	4.0	4.0	1.75	1.50
12	TMVW+p	MT20	6.0	8.0	Edge	1.75
13	BMV1+t	MT20	5.0	8.0	Edge	1.50
14	BMWW-t	MT20	4.0	8.0	2.00	2.50
15	BMWW+t	MT20	3.0	5.0		
16	BMWW+t	MT20	4.0	6.0	2.25	1.50
17	BMWWW-t	MT20	6.0	8.0	3.50	4.00
18	BS-t	MT20	4.0	6.0		
19	BMWW+t	MT20	4.0	5.0	2.50	1.50
20	BMWW+t	MT20	4.0	5.0	1.75	1.50
21	BMWW+t	MT20	3.0	4.0		
22	BMWW-t	MT20	4.0	6.0	2.00	1.75
23	BMV1+p	MT20	3.0	4.0	2.00	0.50

Edge - INDICATES REFERENCE CORNER OF PLATE TOUCHES EDGE OF CHORD.

A SIZE FOR SIZE SUBSTITUTION OF MITEK MII20 WITH TEE-LOK TL20 PLATES IS ALLOWED.

HANGERS NOTES

READ ALL NOTES ON THIS PAGE AND ON THE ENGINEERING NOTE PAGE ENP-1. THE NOTE PAGE IS AN INTEGRAL PART OF THIS DRAWING AS IT CONTAINS SPECIFICATIONS AND CRITERIA USED IN THE DESIGN OF THIS COMPONENT.

LICENSED PROFESSIONAL ENGINEER
C.G. CARSON
100076892
PROVINCE OF ONTARIO

21 MAR 2017

DIMENSIONS, SUPPORTS AND LOADINGS SPECIFIED BY FABRICATOR TO BE VERIFIED BY BUILDING DESIGNER

BEARINGS

JT	FACTORED GROSS REACTION VERT	HORZ	MAXIMUM FACTORED GROSS REACTION DOWN	HORZ	UPLIFT	INPUT BRG IN-SX	REQRD BRG IN-SX
23	2401	0	2401	0	0	5-8	5-8
13	3003	0	3003	0	0	HANGER BY OTHERS MIN. SEAT SIZE: 5-0	

UNFACTORED REACTIONS

JT	1ST LCASE COMBINED	SNOW	MAX./MIN. COMPONENT REACTIONS LIVE	PERM.LIVE	WIND	DEAD	SOIL
23	1682	1193 / 0	0 / 0	0 / 0	0 / 0	489 / 0	0 / 0
13	2109	1465 / 0	0 / 0	0 / 0	0 / 0	644 / 0	0 / 0

BEARING MATERIAL TO BE SPF NO.2 OR BETTER AT JOINT(S) 23

BRACING

TOP CHORD TO BE SHEATHED OR MAX. PURLIN SPACING = 2.38 FT.
MAX. UNBRACED BOTTOM CHORD LENGTH = 10.00 FT. OR RIGID CEILING DIRECTLY APPLIED.

ALL PITCH BREAKS AND PERIMETER CORNER JOINTS MUST BE LATERALLY RESTRAINED.

LOADING

TOTAL LOAD CASES: (4)

CHORDS

MEMB. FR-TO	MAX. FACTORED FORCE (LBS)	FACTORED VERT. LOAD LC1 (PLF) FROM	TO	MAX CSI (LC)	MAX. UNBRAC LENGTH
1- 2	0 / 29	-77.3	-77.3	0.11 (1)	10.00
2- 3	-2594 / 0	-77.3	-77.3	0.20 (1)	4.10
3- 4	-2932 / 0	-77.3	-77.3	0.22 (1)	3.86
4- 5	-3582 / 0	-77.3	-77.3	0.36 (1)	3.39
5- 6	-4471 / 0	-77.3	-77.3	0.48 (1)	2.94
6- 7	-5069 / 0	-77.3	-77.3	0.54 (1)	2.70
7- 8	-5069 / 0	-145.8	-145.8	0.76 (1)	2.38
8- 9	-5069 / 0	-145.8	-145.8	0.76 (1)	2.38
9-10	-4335 / 0	-145.8	-145.8	0.65 (1)	2.75
10-11	-3631 / 0	-77.3	-77.3	0.26 (1)	3.47
11-12	-3037 / 0	-77.3	-77.3	0.21 (1)	3.81
23- 2	-2347 / 0	0.0	0.0	0.26 (1)	5.52
13-12	-2932 / 0	0.0	0.0	0.34 (1)	4.97
23-22	0 / 0	-17.5	-17.5	0.06 (1)	10.00
22-21	0 / 2168	-17.5	-17.5	0.34 (1)	10.00
21-20	0 / 2421	-17.5	-17.5	0.36 (1)	10.00
20-19	0 / 3582	-17.5	-17.5	0.50 (1)	10.00
19-18	0 / 4471	-17.5	-17.5	0.70 (1)	10.00
18-17	0 / 4471	-17.5	-17.5	0.70 (1)	10.00
17-16	0 / 4335	-33.0	-33.0	0.69 (1)	10.00
16-15	0 / 2996	-33.0	-33.0	0.43 (1)	10.00
15-14	0 / 2535	-33.0	-33.0	0.38 (1)	10.00
14-13	0 / 0	-33.0	-33.0	0.06 (1)	10.00

WEBS

MEMB. FR-TO	MAX. FACTORED FORCE (LBS)	MAX CSI (LC)
22- 3	-719 / 0	0.15 (1)
3-21	0 / 366	0.09 (1)
21- 4	-132 / 5	0.06 (1)
4-20	0 / 1927	0.48 (1)
20- 5	-1497 / 0	0.63 (1)
5-19	0 / 1479	0.37 (1)
19- 6	-1071 / 0	0.45 (1)
6-17	0 / 993	0.25 (1)
17- 7	-397 / 0	0.17 (1)
17- 9	0 / 1212	0.30 (1)
16- 9	-1595 / 0	0.67 (1)
16-10	0 / 2207	0.55 (1)
15-10	-380 / 0	0.16 (1)
15-11	0 / 719	0.18 (1)
14-11	-1125 / 0	0.24 (1)
2-22	0 / 2277	0.56 (1)
14-12	0 / 2783	0.69 (1)

FACTORED CONCENTRATED LOADS (LBS)

JT	LOC.	LC1	MAX-	MAX+	FACE	DIR.	TYPE
10	25-0-0	-321	-321	---	FRONT	VERT	TOTAL
17	17-4-4	-1352	-1352	---	FRONT	VERT	TOTAL

DESIGN CRITERIA

*** SPECIAL LOADS ANALYSIS ***
GEOMETRY AND/OR BASIC LOADS CHANGED BY USER.
LOADS WERE DERIVED FROM USER INPUT
NO FURTHER MODIFICATIONS WERE MADE

SPECIFIED LOADS:

TOP	CH.	LL	=	23.3	PSF
		DL	=	3.0	PSF
BOT	CH.	LL	=	0.0	PSF
		DL	=	7.0	PSF
TOTAL	LOAD		=	33.3	PSF

SPACING = 24.0 IN. C/C

LOADING IN FLAT SECTION BASED ON A SLOPE OF 2.00/12 MINIMUM

GIRDER TYPE: CPrimeHip
LEFT SETBACK = 6-0-0
RIGHT SETBACK = 5-6-8
END SETBACK = 6-0-0
END WALL WIDTH = 5-8
CORNER FRAMING TYPE: CONVENTIONAL
END JACK TYPE: CONVENTIONAL
APPLIED TO FRONT SIDE
- ADDT'L LOADS BASED ON 55 % OF GSL.
LOADS APPLIED TO FIRST 13-2-4 OF SPAN MEASURED FROM THE RIGHT.

*** NON STANDARD GIRDER ***
ADDT'L USER-DEFINED LOADS APPLIED TO ALL LOAD CASES.

THIS TRUSS IS DESIGNED FOR RESIDENTIAL OR SMALL BUILDING REQUIREMENTS OF PART 9, NBCC 2010

THIS DESIGN COMPLIES WITH:
- PART 9 OF OBC 2012 , BCBC 2012 , ABC 2014
- CSA 086-09
- TPIC 2011

(55 % OF 27.2 P.S.F. G.S.L. PLUS 8.4 P.S.F. RAIN LOAD) EQUALS 23.3 P.S.F. SPECIFIED ROOF LIVE LOAD

ALLOWABLE DEFL.(LL)= L/360 (1.02")
CALCULATED VERT. DEFL.(LL) = L/ 999 (0.21")
ALLOWABLE DEFL.(TL)= L/360 (1.02")
CALCULATED VERT. DEFL.(TL) = L/ 999 (0.36")

CSI: TC=0.76 (7-9:1) , BC=0.70 (17-19:1) , WB=0.69 (12-14:1) , SSI=0.29 (9-10:1)

DOL LUMBER=1.00 NAIL=1.00 LS BEND=1.00 COMP=1.00 SHEAR=1.00 TENS= 1.00

COMPANION LIVE LOAD FACTOR = 0.50

TRUSS PLATE MANUFACTURER IS NOT RESPONSIBLE FOR QUALITY CONTROL IN THE TRUSS MANUFACTURING PLANT .

NAIL VALUES
PLATE GRIP(D
(PSI)
MAX M
MT20 618 :

PLATE PLACEM

PLATE ROTATI

RECEIVED
TOWN OF MILTON
MAR 29, 2017
JUNIPER 2
BUILDING DIVISION

KOTT

CONTINUED ON PAGE 2

HANGERS NOTES

1) SPECIAL HANGER(S) OR CONNECTION(S) REQUIRED TO SUPPORT CONCENTRATED LOAD(S) 321.5 lbs FACTORED DOWN AT 25-0-0 ON TOP CHORD, AND 1352.2 lbs FACTORED DOWN AT 17-4-4 ON BOTTOM CHORD. DESIGN FOR UNSPECIFIED CONNECTION(S) IS DELEGATED TO THE BUILDING DESIGNER.

JSI GRIP= 0.90 (22) (INPUT = 0.90)
JSI METAL= 1.00 (18) (INPUT = 1.00)

READ ALL NOTES ON THIS PAGE AND ON THE ENGINEERING NOTE PAGE ENP-1. THE NOTE PAGE IS AN INTEGRAL PART OF THIS DRAWING AS IT CONTAINS SPECIFICATIONS AND CRITERIA USED IN THE DESIGN OF THIS COMPONENT.

LICENSED PROFESSIONAL ENGINEER
C.G. CARSON
100076892
PROVINCE OF ONTARIO

21 MAR 2017

KOTT

RECEIVED
TOWN OF MILTON
MAR 29, 2017
JUNIPER 2
BUILDING DIVISION

SCALE = 1:37.9

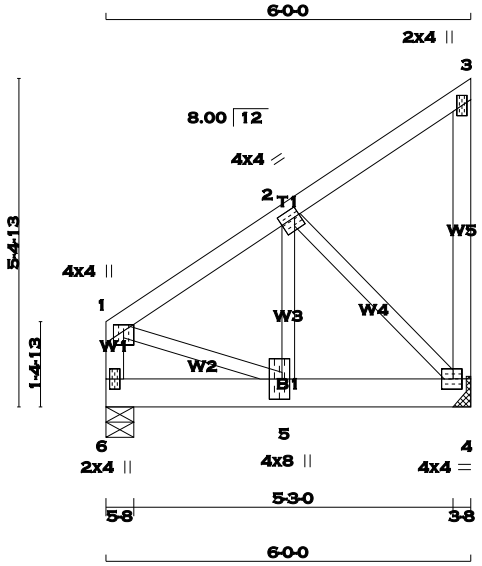

TOTAL WEIGHT = 33 lb [M]

LUMBER

N. L. G. A. RULES

CHORDS	SIZE		LUMBER	DESCR.
1 - 3	2x4	DRY	No.2	SPF
4 - 3	2x4	DRY	No.2	SPF
6 - 1	2x4	DRY	No.2	SPF
6 - 4	2x6	DRY	No.2	SPF
ALL WEBS EXCEPT	2x3	DRY	No.2	SPF

DRY: SEASONED LUMBER.

PLATES (table is in inches)

JT	TYPE	PLATES	W	LEN	Y	X
1	TMVW+p	MT20	4.0	4.0	1.25	2.00
2	TMWW-t	MT20	4.0	4.0	1.75	1.00
3	TMV+p	MT20	2.0	4.0		
4	BMVW1-t	MT20	4.0	4.0	2.00	1.75
5	BMWW+t	MT20	4.0	8.0	4.00	1.50
6	BMV1+p	MT20	2.0	4.0		

A SIZE FOR SIZE SUBSTITUTION OF MITEK MII20 WITH TEE-LOK TL20 PLATES IS ALLOWED.

READ ALL NOTES ON THIS PAGE AND ON THE ENGINEERING NOTE PAGE ENP-1. THE NOTE PAGE IS AN INTEGRAL PART OF THIS DRAWING AS IT CONTAINS SPECIFICATIONS AND CRITERIA USED IN THE DESIGN OF THIS COMPONENT.

LICENSED PROFESSIONAL ENGINEER
C.G. CARSON
100076892
PROVINCE OF ONTARIO

21 MAR 2017

DIMENSIONS, SUPPORTS AND LOADINGS SPECIFIED BY FABRICATOR TO BE VERIFIED BY BUILDING DESIGNER

BEARINGS

JT	FACTORED GROSS REACTION VERT	HORZ	MAXIMUM FACTORED GROSS REACTION DOWN	HORZ	UPLIFT	INPUT BRG IN-SX	REQRD BRG IN-SX
4	1352	0	1352	0	0	HANGER BY OTHERS MIN. SEAT SIZE: 3-8	
6	1352	0	1352	0	0	5-8	5-8

UNFACTORED REACTIONS

JT	1ST LCASE COMBINED	SNOW	MAX./MIN. COMPONENT REACTIONS LIVE	PERM.LIVE	WIND	DEAD	SOIL
4	949	664 / 0	0 / 0	0 / 0	0 / 0	285 / 0	0 / 0
6	949	664 / 0	0 / 0	0 / 0	0 / 0	285 / 0	0 / 0

BEARING MATERIAL TO BE SPF NO.2 OR BETTER AT JOINT(S) 6

BRACING

TOP CHORD TO BE SHEATHED OR MAX. PURLIN SPACING = 6.21 FT.
MAX. UNBRACED BOTTOM CHORD LENGTH = 10.00 FT. OR RIGID CEILING DIRECTLY APPLIED.

ALL PITCH BREAKS AND PERIMETER CORNER JOINTS MUST BE LATERALLY RESTRAINED.

LOADING

TOTAL LOAD CASES: (4)

CHORDS

MEMB. FR-TO	MAX. FACTORED FORCE (LBS)	FACTORED VERT. LOAD LC1 (PLF) FROM	TO	MAX CSI (LC)	MAX. UNBRAC LENGTH
1- 2	-947 / 0	-77.3	-77.3	0.12 (1)	6.21
2- 3	-13 / 0	-77.3	-77.3	0.11 (1)	6.25
4- 3	-92 / 0	0.0	0.0	0.04 (1)	7.81
6- 1	-890 / 0	0.0	0.0	0.10 (1)	7.81
6- 5	0 / 0	-373.2	-373.2	0.22 (1)	10.00
5- 4	0 / 799	-373.2	-373.2	0.32 (1)	10.00

WEBS

MEMB. FR-TO	MAX. FACTORED FORCE (LBS)	MAX CSI (LC)
5- 2	0 / 1051	0.26 (1)
2- 4	-1129 / 0	0.33 (1)
1- 5	0 / 842	0.21 (1)

DESIGN CRITERIA

SPECIFIED LOADS:

TOP CH.	LL	=	23.3	PSF
	DL	=	3.0	PSF
BOT CH.	LL	=	0.0	PSF
	DL	=	7.0	PSF
TOTAL LOAD		=	33.3	PSF

SPACING = 24.0 IN. C/C

GIRDER TYPE: CStdGirder
START DISTANCE = 0-0
START SPAN CARRIED = 17-3-8
END DISTANCE = 6-0-0
END SPAN CARRIED = 17-3-8
END WALL WIDTH = 3-8
APPLIED TO FRONT SIDE OF BOTTOM CHORD.
- ADDT'L LOADS BASED ON 55 % OF GSL.

THIS TRUSS IS DESIGNED FOR RESIDENTIAL OR SMALL BUILDING REQUIREMENTS OF PART 9, NBCC 2010

THIS DESIGN COMPLIES WITH:
- PART 9 OF OBC 2012 , BCBC 2012 , ABC 2014
- CSA 086-09
- TPIC 2011

(55 % OF 27.2 P.S.F. G.S.L. PLUS 8.4 P.S.F. RAIN LOAD) EQUALS 23.3 P.S.F. SPECIFIED ROOF LIVE LOAD

ALLOWABLE DEFL.(LL)= L/360 (0.20")
CALCULATED VERT. DEFL.(LL) = L/ 999 (0.01")
ALLOWABLE DEFL.(TL)= L/360 (0.20")
CALCULATED VERT. DEFL.(TL) = L/ 999 (0.02")

CSI: TC=0.12 (1-2:1) , BC=0.32 (4-5:1) , WB=0.33 (2-4:1) , SSI=0.44 (5-6:1)

DOL LUMBER=1.00 NAIL=1.00 LS BEND=1.00 COMP=1.00 SHEAR=1.00 TENS= 1.00

COMPANION LIVE LOAD FACTOR = 0.50

TRUSS PLATE MANUFACTURER IS NOT RESPONSIBLE FOR QUALITY CONTROL IN THE TRUSS MANUFACTURING PLANT .

NAIL VALUES

PLATE	GRIP(DRY) (PSI) MAX	MIN	SHEAR (PLI) MAX	MIN	SECTION (PLI) MAX	MIN
MT20	618	354	1667	822	2284	1656

PLATE PLACEMENT TOL. = 0.250 inches

PLATE ROTATION TOL. = 5.0 Deg.

JSI GRIP= 0.86 (1) (INPUT = 0.90)
JSI METAL= 0.30 (2) (INPUT = 1.00)

KOTT

RECEIVED
TOWN OF MILTON
MAR 29, 2017
JUNIPER 2
BUILDING DIVISION

SCALE = 1:40.0

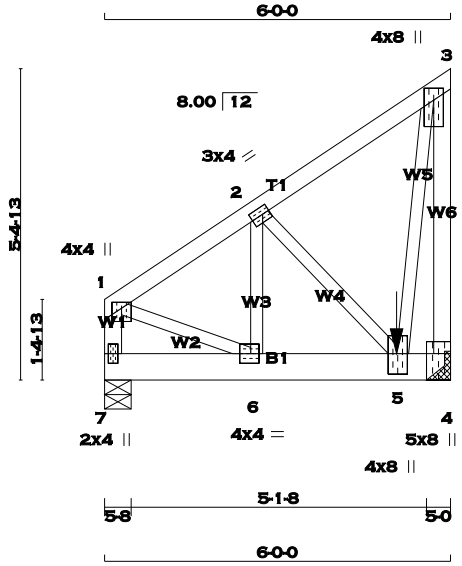

TOTAL WEIGHT = 36 lb [M]

LUMBER

N. L. G. A. RULES

CHORDS	SIZE		LUMBER	DESCR.
1 - 3	2x4	DRY	No.2	SPF
4 - 3	2x4	DRY	No.2	SPF
7 - 1	2x4	DRY	No.2	SPF
7 - 4	2x6	DRY	No.2	SPF
ALL WEBS EXCEPT	2x3	DRY	No.2	SPF

DRY: SEASONED LUMBER.

PLATES (table is in inches)

JT	TYPE	PLATES	W	LEN	Y	X
1	TMVW+p	MT20	4.0	4.0	1.25	2.00
2	TMWW-t	MT20	3.0	4.0	1.50	1.50
3	TMVW+p	MT20	4.0	8.0	2.50	2.00
4	BMV1+t	MT20	5.0	8.0	Edge	1.50
5	BMWW+t	MT20	4.0	8.0	4.25	1.75
6	BMWW-t	MT20	4.0	4.0	2.00	1.75
7	BMV1+p	MT20	2.0	4.0		

Edge - INDICATES REFERENCE CORNER OF PLATE TOUCHES EDGE OF CHORD.

A SIZE FOR SIZE SUBSTITUTION OF MITEK MII20 WITH TEE-LOK TL20 PLATES IS ALLOWED.

HANGERS NOTES

1) SPECIAL HANGER(S) OR CONNECTION(S) REQUIRED TO SUPPORT CONCENTRATED LOAD(S) 3005.1 lbs FACTORED DOWN AT 5-0-12 ON BOTTOM CHORD. DESIGN FOR UNSPECIFIED CONNECTION(S) IS DELEGATED TO THE BUILDING DESIGNER.

READ ALL NOTES ON THIS PAGE AND ON THE ENGINEERING NOTE PAGE ENP-1. THE NOTE PAGE IS AN INTEGRAL PART OF THIS DRAWING AS IT CONTAINS SPECIFICATIONS AND CRITERIA USED IN THE DESIGN OF THIS COMPONENT.

LICENSED PROFESSIONAL ENGINEER
C.G. CARSON
100076892
PROVINCE OF ONTARIO

21 MAR 2017

DIMENSIONS, SUPPORTS AND LOADINGS SPECIFIED BY FABRICATOR TO BE VERIFIED BY BUILDING DESIGNER

BEARINGS

JT	FACTORED GROSS REACTION VERT	HORZ	MAXIMUM FACTORED GROSS REACTION DOWN	HORZ	UPLIFT	INPUT BRG IN-SX	REQRD BRG IN-SX
4	3070	0	3070	0	0	HANGER BY OTHERS MIN. SEAT SIZE: 5-0	
7	992	0	992	0	0	5-8	5-8

UNFACTORED REACTIONS

JT	1ST LCASE COMBINED	SNOW	LIVE	PERM.LIVE	WIND	DEAD	SOIL
		MAX./MIN. COMPONENT REACTIONS					
4	2155	1507 / 0	0 / 0	0 / 0	0 / 0	647 / 0	0 / 0
7	696	487 / 0	0 / 0	0 / 0	0 / 0	209 / 0	0 / 0

BEARING MATERIAL TO BE SPF NO.2 OR BETTER AT JOINT(S) 7

BRACING

TOP CHORD TO BE SHEATHED OR MAX. PURLIN SPACING = 6.22 FT.
MAX. UNBRACED BOTTOM CHORD LENGTH = 10.00 FT. OR RIGID CEILING DIRECTLY APPLIED.

ALL PITCH BREAKS AND PERIMETER CORNER JOINTS MUST BE LATERALLY RESTRAINED.

LOADING

TOTAL LOAD CASES: (4)

CHORDS

MEMB. FR-TO	MAX. FACTORED FORCE (LBS)	VERT. LOAD LC1 FROM (PLF)	TO	MAX CSI (LC)	MAX. UNBRAC LENGTH
1- 2	-950 / 0	-77.3	-77.3	0.11 (1)	6.22
2- 3	-476 / 0	-77.3	-77.3	0.13 (1)	6.25
4- 3	-2115 / 0	0.0	0.0	0.99 (1)	5.78
7- 1	-916 / 0	0.0	0.0	0.10 (1)	7.81
7- 6	0 / 0	-112.3	-112.3	0.14 (1)	10.00
6- 5	0 / 802	-112.3	-112.3	0.70 (1)	10.00
5- 4	0 / 0	-17.5	-17.5	0.60 (1)	10.00

WEBS

MEMB. FR-TO	MAX. FACTORED FORCE (LBS)	MAX CSI (LC)
6- 2	0 / 457	0.11 (1)
2- 5	-615 / 0	0.16 (1)
5- 3	0 / 2294	0.57 (1)
1- 6	0 / 857	0.21 (1)

FACTORED CONCENTRATED LOADS (LBS)

JT	LOC.	LC1	MAX-	MAX+	FACE	DIR.	TYPE
5	5-0-12	-3005	-3005	---	FRONT	VERT	TOTAL

DESIGN CRITERIA

*** SPECIAL LOADS ANALYSIS ***
GEOMETRY AND/OR BASIC LOADS CHANGED BY USER.
LOADS WERE DERIVED FROM USER INPUT
NO FURTHER MODIFICATIONS WERE MADE

SPECIFIED LOADS:

TOP CH.	LL	=	23.3	PSF
	DL	=	3.0	PSF
BOT CH.	LL	=	0.0	PSF
	DL	=	7.0	PSF
TOTAL LOAD		=	33.3	PSF

SPACING = 24.0 IN. C/C

GIRDER TYPE: CStdGirder
START DISTANCE = 0-0
START SPAN CARRIED = 6-0-0
END DISTANCE = 5-0-12
END SPAN CARRIED = 6-0-0
END WALL WIDTH = 0-0
APPLIED TO FRONT SIDE OF BOTTOM CHORD.
- ADDT'L LOADS BASED ON 55 % OF GSL.

*** NON STANDARD GIRDER ***
ADDT'L USER-DEFINED LOADS APPLIED TO ALL LOAD CASES.

THIS TRUSS IS DESIGNED FOR RESIDENTIAL OR SMALL BUILDING REQUIREMENTS OF PART 9, NBCC 2010

THIS DESIGN COMPLIES WITH:
- PART 9 OF OBC 2012 , BCBC 2012 , ABC 2014
- CSA 086-09
- TPIC 2011

(55 % OF 27.2 P.S.F. G.S.L. PLUS 8.4 P.S.F. RAIN LOAD) EQUALS 23.3 P.S.F. SPECIFIED ROOF LIVE LOAD

ALLOWABLE DEFL.(LL)= L/360 (0.20")
CALCULATED VERT. DEFL.(LL) = L/ 999 (0.03")
ALLOWABLE DEFL.(TL)= L/360 (0.20")
CALCULATED VERT. DEFL.(TL) = L/ 999 (0.05")

CSI: TC=0.99 (3-4:1) , BC=0.70 (5-6:1) , WB=0.57 (3-5:1) , SSI=0.63 (4-5:1)

DOL LUMBER=1.00 NAIL=1.00 LS BEND=1.00 COMP=1.00 SHEAR=1.00 TENS= 1.00

COMPANION LIVE LOAD FACTOR = 0.50

TRUSS PLATE MANUFACTURER IS NOT RESPONSIBLE FOR QUALITY CONTROL IN THE TRUSS MANUFACTURING PLANT .

NAIL VALUES

PLATE	GRIP(DRY) (PSI) MAX	MIN	SHEAR (PLI) MAX	MIN	SECTION (PLI) MAX	MIN
MT20	618	354	1667	822	2284	1656

PLATE PLACEM

PLATE ROTATI

JSI GRIP= 0.90
JSI METAL= 0.4

RECEIVED
TOWN OF MILTON
MAR 29, 2017
JUNIPER 2
BUILDING DIVISION

KOTT

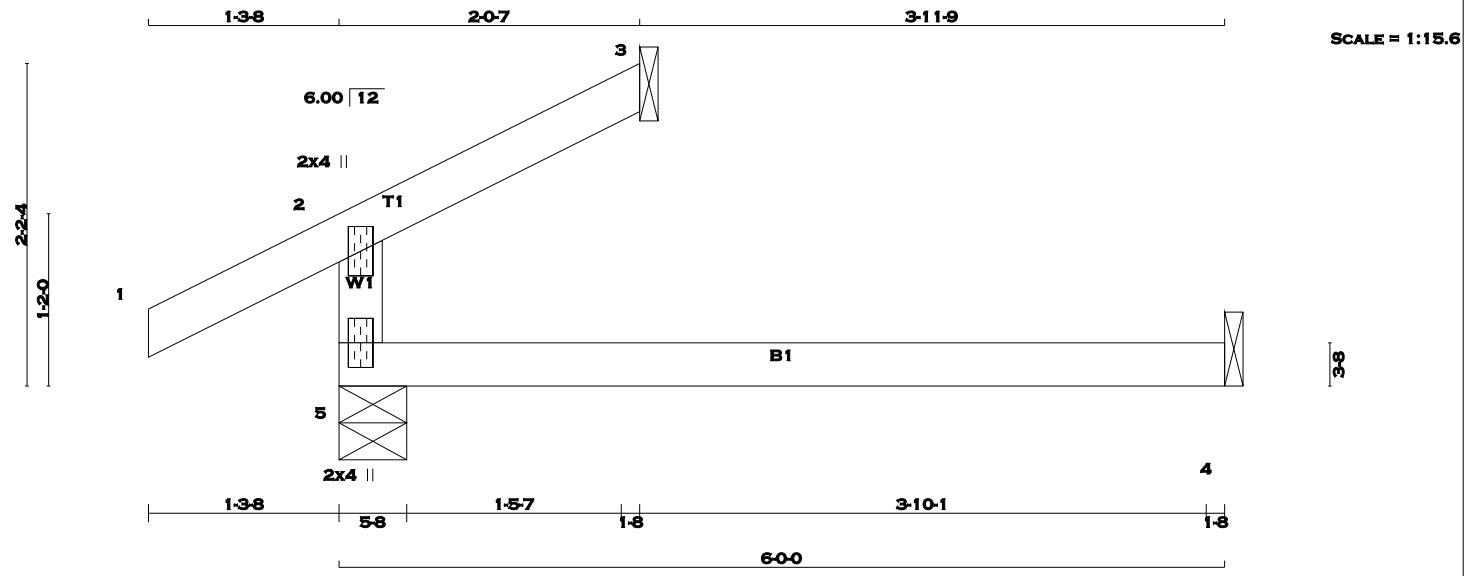

TOTAL WEIGHT = 2 X 12 = 24 lb [M]

LUMBER

N. L. G. A. RULES

CHORDS	SIZE		LUMBER	DESCR.
5 - 2	2x4	DRY	No.2	SPF
1 - 3	2x4	DRY	No.2	SPF
5 - 4	2x4	DRY	No.2	SPF

DRY: SEASONED LUMBER.

PLATES (table is in inches)

JT	TYPE	PLATES	W	LEN	Y	X
2	TMV+p	MT20	2.0	4.0		
5	BMV1+p	MT20	2.0	4.0		

A SIZE FOR SIZE SUBSTITUTION OF MITEK MII20 WITH TEE-LOK TL20 PLATES IS ALLOWED.

DIMENSIONS, SUPPORTS AND LOADINGS SPECIFIED BY FABRICATOR TO BE VERIFIED BY BUILDING DESIGNER

BEARINGS

JT	FACTORED GROSS REACTION VERT	HORZ	MAXIMUM FACTORED GROSS REACTION DOWN	HORZ	UPLIFT	INPUT BRG IN-SX	REQRD BRG IN-SX
5	265	0	265	0	0	5-8	5-8
3	59	0	59	0	0	1-8	1-8
4	43	0	49	0	0	1-8	1-8

SEE MITEK STANDARD DETAIL B37579H FOR CONNECTION TO JOINT(S) 3 , 4

UNFACTORED REACTIONS

JT	1ST LCASE COMBINED	MAX./MIN. COMPONENT REACTIONS SNOW	LIVE	PERM.LIVE	WIND	DEAD	SOIL
5	187	122 / 0	0 / 0	0 / 0	0 / 0	65 / 0	0 / 0
3	40	36 / 0	0 / 0	0 / 0	0 / 0	5 / 0	0 / 0
4	35	0 / 0	0 / 0	0 / 0	0 / 0	35 / 0	0 / 0

BEARING MATERIAL TO BE SPF NO.2 OR BETTER AT JOINT(S) 5, 3

BRACING

TOP CHORD TO BE SHEATHED OR MAX. PURLIN SPACING = 10.00 FT.
MAX. UNBRACED BOTTOM CHORD LENGTH = 10.00 FT. OR RIGID CEILING DIRECTLY APPLIED.

ALL PITCH BREAKS AND PERIMETER CORNER JOINTS MUST BE LATERALLY RESTRAINED.

LOADING

TOTAL LOAD CASES: (4)

CHORDS MEMB. FR-TO	MAX. FACTORED FORCE (LBS)	FACTORED VERT. LOAD (PLF) FROM	TO	LC1 MAX CSI (LC)	MAX. UNBRAC LENGTH	WEBS MEMB. FR-TO	MAX. FACTORED FORCE (LBS)	MAX CSI (LC)
5- 2	-203 / 0	0.0	0.0	0.13 (4)	7.81			
1- 2	0 / 23	-77.3	-77.3	0.10 (1)	10.00			
2- 3	-9 / 0	-77.3	-77.3	0.05 (1)	10.00			
5- 4	0 / 0	-17.5	-17.5	0.13 (4)	10.00			

DESIGN CRITERIA

SPECIFIED LOADS:

TOP CH.	LL	=	23.3	PSF
	DL	=	3.0	PSF
BOT CH.	LL	=	0.0	PSF
	DL	=	7.0	PSF
TOTAL LOAD		=	33.3	PSF

SPACING = 24.0 IN. C/C

THIS TRUSS IS DESIGNED FOR RESIDENTIAL OR SMALL BUILDING REQUIREMENTS OF PART 9, NBCC 2010

THIS DESIGN COMPLIES WITH:
- PART 9 OF OBC 2012 , BCBC 2012 , ABC 2014
- CSA 086-09
- TPIC 2011

DESIGN ASSUMPTIONS
-OVERHANG NOT TO BE ALTERED OR CUT OFF.

(55 % OF 27.2 P.S.F. G.S.L. PLUS 8.4 P.S.F. RAIN LOAD) EQUALS 23.3 P.S.F. SPECIFIED ROOF LIVE LOAD

ALLOWABLE DEFL.(LL)= L/360 (0.20")
CALCULATED VERT. DEFL.(LL) = L/ 999 (0.00")
ALLOWABLE DEFL.(TL)= L/360 (0.20")
CALCULATED VERT. DEFL.(TL) = L/ 999 (0.03")

CSI: TC=0.13 (2-5:4) , BC=0.13 (4-5:4) , WB=0.00 (n/a:0) , SSI=0.08 (4-5:4)

DOL LUMBER=1.00 NAIL=1.00 LS BEND=1.10 COMP=1.10 SHEAR=1.10 TENS= 1.10

COMPANION LIVE LOAD FACTOR = 0.50

TRUSS PLATE MANUFACTURER IS NOT RESPONSIBLE FOR QUALITY CONTROL IN THE TRUSS MANUFACTURING PLANT .

NAIL VALUES

PLATE	GRIP(DRY) (PSI) MAX	MIN	SHEAR (PLI) MAX	MIN	SECTION (PLI) MAX	MIN
MT20	618	354	1667	822	2284	1656

PLATE PLACEMENT TOL. = 0.250 inches

PLATE ROTATION TOL. = 5.0 Deg.

JSI GRIP= 0.12 (2) (INPUT = 0.90)
JSI METAL= 0.05 (2) (INPUT = 1.00)

READ ALL NOTES ON THIS PAGE AND ON THE ENGINEERING NOTE PAGE ENP-1. THE NOTE PAGE IS AN INTEGRAL PART OF THIS DRAWING AS IT CONTAINS SPECIFICATIONS AND CRITERIA USED IN THE DESIGN OF THIS COMPONENT.

LICENSED PROFESSIONAL ENGINEER
C.G. CARSON
100076892
PROVINCE OF ONTARIO

21 MAR 2017

KOTT

RECEIVED
TOWN OF MILTON
MAR 29, 2017
JUNIPER 2
BUILDING DIVISION

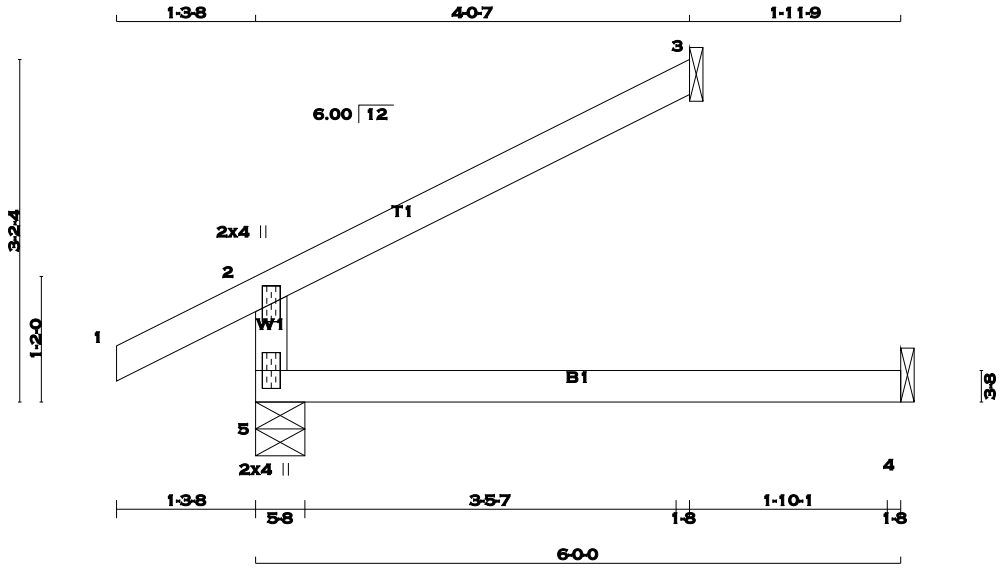

TOTAL WEIGHT = 2 X 15 = 29 lb [M]

LUMBER

N. L. G. A. RULES

CHORDS	SIZE		LUMBER	DESCR.
5 - 2	2x4	DRY	No.2	SPF
1 - 3	2x4	DRY	No.2	SPF
5 - 4	2x4	DRY	No.2	SPF

DRY: SEASONED LUMBER.

PLATES (table is in inches)

JT	TYPE	PLATES	W	LEN	Y	X
2	TMV+p	MT20	2.0	4.0		
5	BMV1+p	MT20	2.0	4.0		

A SIZE FOR SIZE SUBSTITUTION OF MITEK MII20 WITH TEE-LOK TL20 PLATES IS ALLOWED.

DIMENSIONS, SUPPORTS AND LOADINGS SPECIFIED BY FABRICATOR TO BE VERIFIED BY BUILDING DESIGNER

BEARINGS

JT	FACTORED GROSS REACTION VERT	HORZ	MAXIMUM FACTORED GROSS REACTION DOWN	HORZ	UPLIFT	INPUT BRG IN-SX	REQRD BRG IN-SX
5	362	0	362	0	0	5-8	5-8
3	117	0	117	0	0	1-8	1-8
4	43	0	49	0	0	1-8	1-8

SEE MITEK STANDARD DETAIL B37579H FOR CONNECTION TO JOINT(S) 3 , 4

UNFACTORED REACTIONS

JT	1ST LCASE COMBINED	MAX./MIN. COMPONENT REACTIONS SNOW	LIVE	PERM.LIVE	WIND	DEAD	SOIL
5	253	181 / 0	0 / 0	0 / 0	0 / 0	73 / 0	0 / 0
3	80	71 / 0	0 / 0	0 / 0	0 / 0	9 / 0	0 / 0
4	35	0 / 0	0 / 0	0 / 0	0 / 0	35 / 0	0 / 0

BEARING MATERIAL TO BE SPF NO.2 OR BETTER AT JOINT(S) 5, 3

BRACING

TOP CHORD TO BE SHEATHED OR MAX. PURLIN SPACING = 6.25 FT.
MAX. UNBRACED BOTTOM CHORD LENGTH = 10.00 FT. OR RIGID CEILING DIRECTLY APPLIED.

ALL PITCH BREAKS AND PERIMETER CORNER JOINTS MUST BE LATERALLY RESTRAINED.

LOADING

TOTAL LOAD CASES: (4)

CHORDS MEMB. FR-TO	MAX. FACTORED FORCE (LBS)	FACTORED VERT. LOAD (PLF) FROM	TO	LC1 MAX CSI (LC)	MAX. UNBRAC LENGTH	WEBS MEMB. FR-TO	MAX. FACTORED FORCE (LBS)	MAX CSI (LC)
5- 2	-300 / 0	0.0	0.0	0.13 (4)	7.81			
1- 2	0 / 23	-77.3	-77.3	0.10 (1)	10.00			
2- 3	-17 / 0	-77.3	-77.3	0.21 (1)	6.25			
5- 4	0 / 0	-17.5	-17.5	0.13 (4)	10.00			

DESIGN CRITERIA

SPECIFIED LOADS:

TOP	CH.	LL	=	23.3	PSF
		DL	=	3.0	PSF
BOT	CH.	LL	=	0.0	PSF
		DL	=	7.0	PSF
TOTAL	LOAD		=	33.3	PSF

SPACING = 24.0 IN. C/C

THIS TRUSS IS DESIGNED FOR RESIDENTIAL OR SMALL BUILDING REQUIREMENTS OF PART 9, NBCC 2010

THIS DESIGN COMPLIES WITH:
- PART 9 OF OBC 2012 , BCBC 2012 , ABC 2014
- CSA 086-09
- TPIC 2011

DESIGN ASSUMPTIONS
-OVERHANG NOT TO BE ALTERED OR CUT OFF.

(55 % OF 27.2 P.S.F. G.S.L. PLUS 8.4 P.S.F. RAIN LOAD) EQUALS 23.3 P.S.F. SPECIFIED ROOF LIVE LOAD

ALLOWABLE DEFL.(LL)= L/360 (0.20")
CALCULATED VERT. DEFL.(LL) = L/ 999 (0.00")
ALLOWABLE DEFL.(TL)= L/360 (0.20")
CALCULATED VERT. DEFL.(TL) = L/ 999 (0.03")

CSI: TC=0.21 (2-3:1) , BC=0.13 (4-5:4) , WB=0.00 (n/a:0) , SSI=0.14 (2-3:1)

DOL LUMBER=1.00 NAIL=1.00 LS BEND=1.10 COMP=1.10 SHEAR=1.10 TENS= 1.10

COMPANION LIVE LOAD FACTOR = 0.50

TRUSS PLATE MANUFACTURER IS NOT RESPONSIBLE FOR QUALITY CONTROL IN THE TRUSS MANUFACTURING PLANT .

NAIL VALUES

PLATE	GRIP(DRY) (PSI) MAX	MIN	SHEAR (PLI) MAX	MIN	SECTION (PLI) MAX	MIN
MT20	618	354	1667	822	2284	1656

PLATE PLACEMENT TOL. = 0.250 inches

PLATE ROTATION TOL. = 5.0 Deg.

JSI GRIP= 0.17 (2) (INPUT = 0.90)
JSI METAL= 0.07 (2) (INPUT = 1.00)

READ ALL NOTES ON THIS PAGE AND ON THE ENGINEERING NOTE PAGE ENP-1. THE NOTE PAGE IS AN INTEGRAL PART OF THIS DRAWING AS IT CONTAINS SPECIFICATIONS AND CRITERIA USED IN THE DESIGN OF THIS COMPONENT.

LICENSED PROFESSIONAL ENGINEER
C.G. CARSON
100076892
PROVINCE OF ONTARIO

21 MAR 2017

KOTT

RECEIVED
TOWN OF MILTON
MAR 29, 2017
JUNIPER 2
BUILDING DIVISION

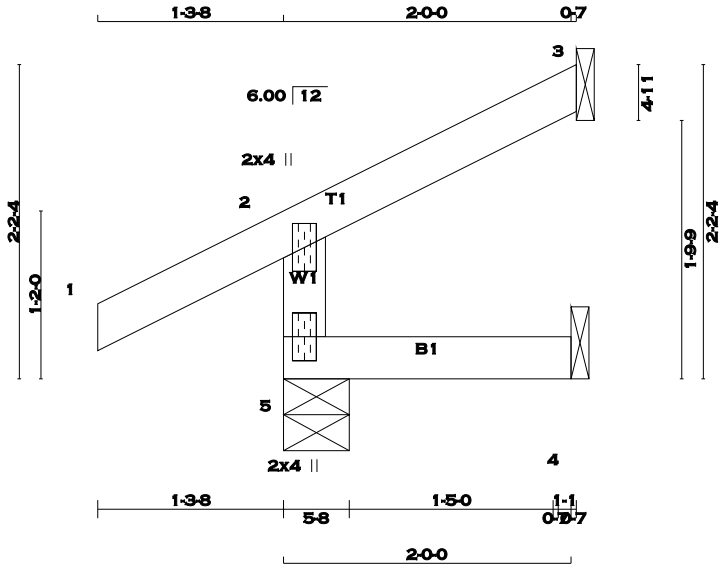

TOTAL WEIGHT = 2 X 7 = 15 lb [M]

LUMBER

N. L. G. A. RULES

CHORDS	SIZE		LUMBER	DESCR.
5 - 2	2x4	DRY	No.2	SPF
1 - 3	2x4	DRY	No.2	SPF
5 - 4	2x4	DRY	No.2	SPF

DRY: SEASONED LUMBER.

PLATES (table is in inches)

JT	TYPE	PLATES	W	LEN	Y	X
2	TMV+p	MT20	2.0	4.0		
5	BMV1+p	MT20	2.0	4.0		

A SIZE FOR SIZE SUBSTITUTION OF MITEK MII20 WITH TEE-LOK TL20 PLATES IS ALLOWED.

DIMENSIONS, SUPPORTS AND LOADINGS SPECIFIED BY FABRICATOR TO BE VERIFIED BY BUILDING DESIGNER

BEARINGS

	FACTORED GROSS REACTION		MAXIMUM FACTORED GROSS REACTION			INPUT BRG	REQRD BRG
JT	VERT	HORZ	DOWN	HORZ	UPLIFT	IN-SX	IN-SX
5	222	0	222	0	0	5-8	5-8
3	59	0	59	0	0	1-8	1-8
4	16	0	17	0	0	1-8	1-8

SEE MITEK STANDARD DETAIL B37579H FOR CONNECTION TO JOINT(S) 3 , 4

UNFACTORED REACTIONS

	1ST LCASE	MAX./MIN. COMPONENT REACTIONS					
JT	COMBINED	SNOW	LIVE	PERM.LIVE	WIND	DEAD	SOIL
5	153	122 / 0	0 / 0	0 / 0	0 / 0	31 / 0	0 / 0
3	40	36 / 0	0 / 0	0 / 0	0 / 0	5 / 0	0 / 0
4	12	0 / 0	0 / 0	0 / 0	0 / 0	12 / 0	0 / 0

BEARING MATERIAL TO BE SPF NO.2 OR BETTER AT JOINT(S) 5

BRACING

TOP CHORD TO BE SHEATHED OR MAX. PURLIN SPACING = 10.00 FT.
MAX. UNBRACED BOTTOM CHORD LENGTH = 10.00 FT. OR RIGID CEILING DIRECTLY APPLIED.

ALL PITCH BREAKS AND PERIMETER CORNER JOINTS MUST BE LATERALLY RESTRAINED.

LOADING

TOTAL LOAD CASES: (5)

CHORDS MEMB. FR-TO	MAX. FACTORED FORCE (LBS)	FACTORED VERT. LOAD (PLF) FROM	TO	LC1 MAX CSI (LC)	WEBS MAX. UNBRAC LENGTH	MEMB. FR-TO	MAX. FACTORED FORCE (LBS)	MAX CSI (LC)
5- 2	-203 / 0	0.0	0.0	0.01 (4)	7.81			
1- 2	0 / 23	-77.3	-77.3	0.10 (1)	10.00			
2- 3	-9 / 0	-77.3	-77.3	0.05 (1)	10.00			
5- 4	0 / 0	-17.5	-17.5	0.02 (4)	10.00			

CANTILEVER ANALYSIS HAS BEEN CONSIDERED IN THIS DESIGN

DESIGN CRITERIA

SPECIFIED LOADS:

TOP CH.	LL	=	23.3	PSF
	DL	=	3.0	PSF
BOT CH.	LL	=	0.0	PSF
	DL	=	7.0	PSF
TOTAL LOAD		=	33.3	PSF

SPACING = 24.0 IN. C/C

THIS TRUSS IS DESIGNED FOR RESIDENTIAL OR SMALL BUILDING REQUIREMENTS OF PART 9, NBCC 2010

THIS DESIGN COMPLIES WITH:
- PART 9 OF OBC 2012 , BCBC 2012 , ABC 2014
- CSA 086-09
- TPIC 2011

DESIGN ASSUMPTIONS
-OVERHANG NOT TO BE ALTERED OR CUT OFF.

(55 % OF 27.2 P.S.F. G.S.L. PLUS 8.4 P.S.F. RAIN LOAD) EQUALS 23.3 P.S.F. SPECIFIED ROOF LIVE LOAD

ALLOWABLE DEFL.(LL)= L/360 (0.19")
CALCULATED VERT. DEFL.(LL) = L/ 999 (0.00")
ALLOWABLE DEFL.(TL)= L/360 (0.19")
CALCULATED VERT. DEFL.(TL) = L/ 999 (0.00")

CSI: TC=0.10 (1-2:1) , BC=0.02 (4-5:4) , WB=0.00 (n/a:0) , SSI=0.07 (1-2:1)

DOL LUMBER=1.00 NAIL=1.00 LS BEND=1.10 COMP=1.10 SHEAR=1.10 TENS= 1.10

COMPANION LIVE LOAD FACTOR = 0.50

TRUSS PLATE MANUFACTURER IS NOT RESPONSIBLE FOR QUALITY CONTROL IN THE TRUSS MANUFACTURING PLANT .

NAIL VALUES

PLATE	GRIP(DRY) (PSI) MAX	MIN	SHEAR (PLI) MAX	MIN	SECTION (PLI) MAX	MIN
MT20	618	354	1667	822	2284	1656

PLATE PLACEMENT TOL. = 0.250 inches

PLATE ROTATION TOL. = 5.0 Deg.

JSI GRIP= 0.12 (2) (INPUT = 0.90)
JSI METAL= 0.05 (2) (INPUT = 1.00)

READ ALL NOTES ON THIS PAGE AND ON THE ENGINEERING NOTE PAGE ENP-1. THE NOTE PAGE IS AN INTEGRAL PART OF THIS DRAWING AS IT CONTAINS SPECIFICATIONS AND CRITERIA USED IN THE DESIGN OF THIS COMPONENT.

LICENSED PROFESSIONAL ENGINEER
C.G. CARSON
100076892
PROVINCE OF ONTARIO

21 MAR 2017

KOTT

RECEIVED
TOWN OF MILTON
MAR 29, 2017
JUNIPER 2
BUILDING DIVISION

SCALE = 1:22.0

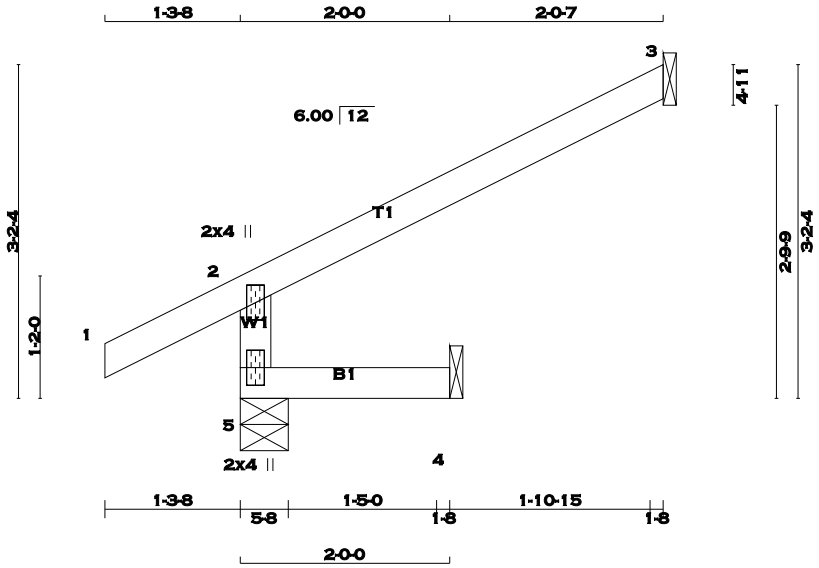

TOTAL WEIGHT = 2 X 10 = 20 lb [M]

LUMBER

N. L. G. A. RULES

CHORDS	SIZE		LUMBER	DESCR.
5 - 2	2x4	DRY	No.2	SPF
1 - 3	2x4	DRY	No.2	SPF
5 - 4	2x4	DRY	No.2	SPF

DRY: SEASONED LUMBER.

PLATES (table is in inches)

JT	TYPE	PLATES	W	LEN	Y	X
2	TMV+p	MT20	2.0	4.0		
5	BMV1+p	MT20	2.0	4.0		

A SIZE FOR SIZE SUBSTITUTION OF MITEK MII20 WITH TEE-LOK TL20 PLATES IS ALLOWED.

DIMENSIONS, SUPPORTS AND LOADINGS SPECIFIED BY FABRICATOR TO BE VERIFIED BY BUILDING DESIGNER

BEARINGS

JT	FACTORED GROSS REACTION VERT	HORZ	MAXIMUM FACTORED GROSS REACTION DOWN	HORZ	UPLIFT	INPUT BRG IN-SX	REQRD BRG IN-SX
5	319	0	319	0	0	5-8	5-8
3	117	0	117	0	0	1-8	1-8
4	16	0	17	0	0	1-8	1-8

SEE MITEK STANDARD DETAIL B37579H FOR CONNECTION TO JOINT(S) 3 , 4

UNFACTORED REACTIONS

JT	1ST LCASE COMBINED	MAX./MIN. COMPONENT REACTIONS SNOW	LIVE	PERM.LIVE	WIND	DEAD	SOIL
5	219	181 / 0	0 / 0	0 / 0	0 / 0	39 / 0	0 / 0
3	80	71 / 0	0 / 0	0 / 0	0 / 0	9 / 0	0 / 0
4	12	0 / 0	0 / 0	0 / 0	0 / 0	12 / 0	0 / 0

BEARING MATERIAL TO BE SPF NO.2 OR BETTER AT JOINT(S) 5

BRACING

TOP CHORD TO BE SHEATHED OR MAX. PURLIN SPACING = 6.25 FT.
MAX. UNBRACED BOTTOM CHORD LENGTH = 10.00 FT. OR RIGID CEILING DIRECTLY APPLIED.

ALL PITCH BREAKS AND PERIMETER CORNER JOINTS MUST BE LATERALLY RESTRAINED.

LOADING

TOTAL LOAD CASES: (4)

CHORDS MEMB. FR-TO	MAX. FACTORED FORCE (LBS)	FACTORED VERT. LOAD (PLF) FROM	TO	LC1 MAX CSI (LC)	WEBS MAX. UNBRAC LENGTH	MEMB. FR-TO	MAX. FACTORED FORCE (LBS)	MAX CSI (LC)
5- 2	-300 / 0	0.0	0.0	0.01 (4)	7.81			
1- 2	0 / 23	-77.3	-77.3	0.10 (1)	10.00			
2- 3	-17 / 0	-77.3	-77.3	0.21 (1)	6.25			
5- 4	0 / 0	-17.5	-17.5	0.02 (4)	10.00			

DESIGN CRITERIA

SPECIFIED LOADS:

TOP CH.	LL	=	23.3	PSF
	DL	=	3.0	PSF
BOT CH.	LL	=	0.0	PSF
	DL	=	7.0	PSF
TOTAL LOAD		=	33.3	PSF

SPACING = 24.0 IN. C/C

THIS TRUSS IS DESIGNED FOR RESIDENTIAL OR SMALL BUILDING REQUIREMENTS OF PART 9, NBCC 2010

THIS DESIGN COMPLIES WITH:
- PART 9 OF OBC 2012 , BCBC 2012 , ABC 2014
- CSA 086-09
- TPIC 2011

DESIGN ASSUMPTIONS
-OVERHANG NOT TO BE ALTERED OR CUT OFF.

(55 % OF 27.2 P.S.F. G.S.L. PLUS 8.4 P.S.F. RAIN LOAD) EQUALS 23.3 P.S.F. SPECIFIED ROOF LIVE LOAD

ALLOWABLE DEFL.(LL)= L/360 (0.19")
CALCULATED VERT. DEFL.(LL) = L/ 999 (0.00")
ALLOWABLE DEFL.(TL)= L/360 (0.19")
CALCULATED VERT. DEFL.(TL) = L/ 999 (0.00")

CSI: TC=0.21 (2-3:1) , BC=0.02 (4-5:4) , WB=0.00 (n/a:0) , SSI=0.14 (2-3:1)

DOL LUMBER=1.00 NAIL=1.00 LS BEND=1.10 COMP=1.10 SHEAR=1.10 TENS= 1.10

COMPANION LIVE LOAD FACTOR = 0.50

TRUSS PLATE MANUFACTURER IS NOT RESPONSIBLE FOR QUALITY CONTROL IN THE TRUSS MANUFACTURING PLANT .

NAIL VALUES

PLATE	GRIP(DRY) (PSI) MAX	MIN	SHEAR (PLI) MAX	MIN	SECTION (PLI) MAX	MIN
MT20	618	354	1667	822	2284	1656

PLATE PLACEMENT TOL. = 0.250 inches

PLATE ROTATION TOL. = 5.0 Deg.

JSI GRIP= 0.17 (2) (INPUT = 0.90)
JSI METAL= 0.07 (2) (INPUT = 1.00)

READ ALL NOTES ON THIS PAGE AND ON THE ENGINEERING NOTE PAGE ENP-1. THE NOTE PAGE IS AN INTEGRAL PART OF THIS DRAWING AS IT CONTAINS SPECIFICATIONS AND CRITERIA USED IN THE DESIGN OF THIS COMPONENT.

LICENSED PROFESSIONAL ENGINEER
C.G. CARSON
100076892
PROVINCE OF ONTARIO

21 MAR 2017

KOTT

RECEIVED
TOWN OF MILTON
MAR 29, 2017
JUNIPER 2
BUILDING DIVISION

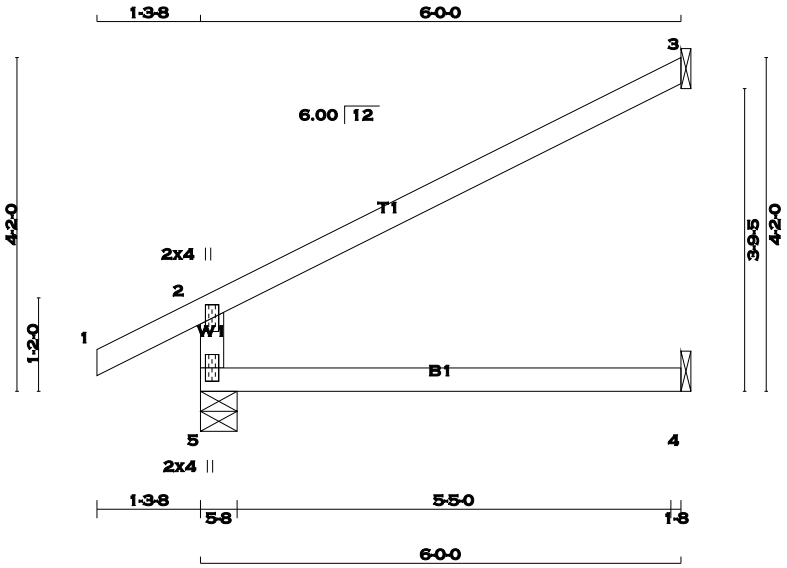

TOTAL WEIGHT = 14 X 17 = 239 lb [M]

LUMBER

N. L. G. A. RULES

CHORDS	SIZE		LUMBER	DESCR.
5 - 2	2x4	DRY	No.2	SPF
1 - 3	2x4	DRY	No.2	SPF
5 - 4	2x4	DRY	No.2	SPF

DRY: SEASONED LUMBER.

PLATES (table is in inches)

JT	TYPE	PLATES	W	LEN	Y	X
2	TMV+p	MT20	2.0	4.0		
5	BMV1+p	MT20	2.0	4.0		

A SIZE FOR SIZE SUBSTITUTION OF MITEK MII20 WITH TEE-LOK TL20 PLATES IS ALLOWED.

DIMENSIONS, SUPPORTS AND LOADINGS SPECIFIED BY FABRICATOR TO BE VERIFIED BY BUILDING DESIGNER

BEARINGS

JT	FACTORED GROSS REACTION VERT	HORZ	MAXIMUM FACTORED GROSS REACTION DOWN	HORZ	UPLIFT	INPUT BRG IN-SX	REQRD BRG IN-SX
5	457	0	457	0	0	5-8	5-8
3	174	0	174	0	0	1-8	1-8
4	43	0	49	0	0	1-8	1-8

SEE MITEK STANDARD DETAIL B37579H FOR CONNECTION TO JOINT(S) 3 , 4

UNFACTORED REACTIONS

JT	1ST LCASE COMBINED	MAX./MIN. COMPONENT REACTIONS SNOW	LIVE	PERM.LIVE	WIND	DEAD	SOIL
5	318	238 / 0	0 / 0	0 / 0	0 / 0	80 / 0	0 / 0
3	118	105 / 0	0 / 0	0 / 0	0 / 0	14 / 0	0 / 0
4	35	0 / 0	0 / 0	0 / 0	0 / 0	35 / 0	0 / 0

BEARING MATERIAL TO BE SPF NO.2 OR BETTER AT JOINT(S) 5

BRACING

TOP CHORD TO BE SHEATHED OR MAX. PURLIN SPACING = 6.25 FT.
MAX. UNBRACED BOTTOM CHORD LENGTH = 10.00 FT. OR RIGID CEILING DIRECTLY APPLIED.

ALL PITCH BREAKS AND PERIMETER CORNER JOINTS MUST BE LATERALLY RESTRAINED.

LOADING

TOTAL LOAD CASES: (4)

CHORDS MEMB. FR-TO	MAX. FACTORED FORCE (LBS)	FACTORED VERT. LOAD (PLF) FROM	TO	LC1 MAX CSI (LC)	MAX. UNBRAC LENGTH	WEBS MEMB. FR-TO	MAX. FACTORED FORCE (LBS)	MAX CSI (LC)
5- 2	-395 / 0	0.0	0.0	0.13 (4)	7.81			
1- 2	0 / 23	-77.3	-77.3	0.10 (1)	10.00			
2- 3	-26 / 0	-77.3	-77.3	0.47 (1)	6.25			
5- 4	0 / 0	-17.5	-17.5	0.13 (4)	10.00			

DESIGN CRITERIA

SPECIFIED LOADS:

TOP CH.	LL	=	23.3	PSF
	DL	=	3.0	PSF
BOT CH.	LL	=	0.0	PSF
	DL	=	7.0	PSF
TOTAL LOAD		=	33.3	PSF

SPACING = 24.0 IN. C/C

THIS TRUSS IS DESIGNED FOR RESIDENTIAL OR SMALL BUILDING REQUIREMENTS OF PART 9, NBCC 2010

THIS DESIGN COMPLIES WITH:
- PART 9 OF OBC 2012 , BCBC 2012 , ABC 2014
- CSA 086-09
- TPIC 2011

DESIGN ASSUMPTIONS
-OVERHANG NOT TO BE ALTERED OR CUT OFF.

(55 % OF 27.2 P.S.F. G.S.L. PLUS 8.4 P.S.F. RAIN LOAD) EQUALS 23.3 P.S.F. SPECIFIED ROOF LIVE LOAD

ALLOWABLE DEFL.(LL)= L/360 (0.20")
CALCULATED VERT. DEFL.(LL) = L/ 999 (0.00")
ALLOWABLE DEFL.(TL)= L/360 (0.20")
CALCULATED VERT. DEFL.(TL) = L/ 999 (0.03")

CSI: TC=0.47 (2-3:1) , BC=0.13 (4-5:4) , WB=0.00 (n/a:0) , SSI=0.20 (2-3:1)

DOL LUMBER=1.00 NAIL=1.00 LS BEND=1.10 COMP=1.10 SHEAR=1.10 TENS= 1.10

COMPANION LIVE LOAD FACTOR = 0.50

TRUSS PLATE MANUFACTURER IS NOT RESPONSIBLE FOR QUALITY CONTROL IN THE TRUSS MANUFACTURING PLANT .

NAIL VALUES

PLATE	GRIP(DRY) (PSI) MAX	MIN	SHEAR (PLI) MAX	MIN	SECTION (PLI) MAX	MIN
MT20	618	354	1667	822	2284	1656

PLATE PLACEMENT TOL. = 0.250 inches

PLATE ROTATION TOL. = 0.5 Deg.

JSI GRIP= 0.23 (2) (INPUT = 0.90)
JSI METAL= 0.09 (2) (INPUT = 1.00)

READ ALL NOTES ON THIS PAGE AND ON THE ENGINEERING NOTE PAGE ENP-1. THE NOTE PAGE IS AN INTEGRAL PART OF THIS DRAWING AS IT CONTAINS SPECIFICATIONS AND CRITERIA USED IN THE DESIGN OF THIS COMPONENT.

LICENSED PROFESSIONAL ENGINEER
C.G. CARSON
100076892
PROVINCE OF ONTARIO

21 MAR 2017

KOTT

RECEIVED
TOWN OF MILTON
MAR 29, 2017
JUNIPER 2
BUILDING DIVISION

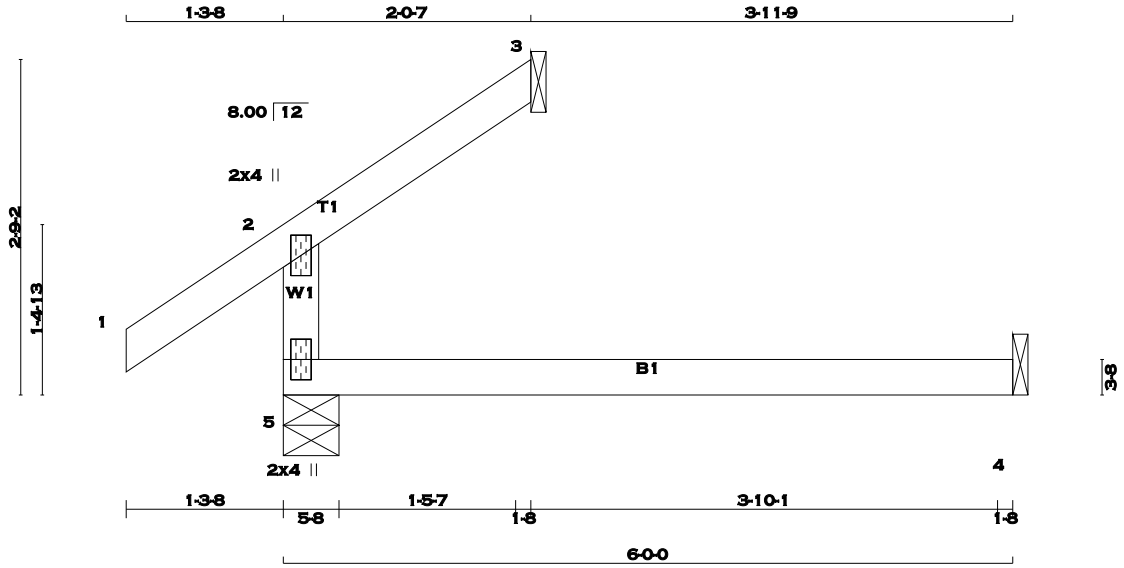

TOTAL WEIGHT = 2 X 13 = 25 lb [M]

LUMBER

N. L. G. A. RULES

CHORDS	SIZE		LUMBER	DESCR.
5 - 2	2x4	DRY	No.2	SPF
1 - 3	2x4	DRY	No.2	SPF
5 - 4	2x4	DRY	No.2	SPF

DRY: SEASONED LUMBER.

PLATES (table is in inches)

JT	TYPE	PLATES	W	LEN	Y	X
2	TMV+p	MT20	2.0	4.0		
5	BMV1+p	MT20	2.0	4.0		

A SIZE FOR SIZE SUBSTITUTION OF MITEK MII20 WITH TEE-LOK TL20 PLATES IS ALLOWED.

DIMENSIONS, SUPPORTS AND LOADINGS SPECIFIED BY FABRICATOR TO BE VERIFIED BY BUILDING DESIGNER

BEARINGS

JT	FACTORED GROSS REACTION VERT	HORZ	MAXIMUM FACTORED GROSS REACTION DOWN	HORZ	UPLIFT	INPUT BRG IN-SX	REQRD BRG IN-SX
5	265	0	265	0	0	5-8	5-8
3	60	0	60	0	0	1-8	1-8
4	44	0	49	0	0	1-8	1-8

SEE MITEK STANDARD DETAIL B37579H FOR CONNECTION TO JOINT(S) 3 , 4

UNFACTORED REACTIONS

JT	1ST LCASE COMBINED	MAX./MIN. COMPONENT REACTIONS SNOW	LIVE	PERM.LIVE	WIND	DEAD	SOIL
5	188	123 / 0	0 / 0	0 / 0	0 / 0	65 / 0	0 / 0
3	40	36 / 0	0 / 0	0 / 0	0 / 0	5 / 0	0 / 0
4	35	0 / 0	0 / 0	0 / 0	0 / 0	35 / 0	0 / 0

BEARING MATERIAL TO BE SPF NO.2 OR BETTER AT JOINT(S) 5, 3

BRACING

TOP CHORD TO BE SHEATHED OR MAX. PURLIN SPACING = 6.25 FT.
MAX. UNBRACED BOTTOM CHORD LENGTH = 10.00 FT. OR RIGID CEILING DIRECTLY APPLIED.

ALL PITCH BREAKS AND PERIMETER CORNER JOINTS MUST BE LATERALLY RESTRAINED.

LOADING

TOTAL LOAD CASES: (4)

CHORDS MEMB. FR-TO	MAX. FACTORED FORCE (LBS)	FACTORED VERT. LOAD (PLF) FROM	TO	LC1 MAX CSI (LC)	MAX. UNBRAC LENGTH
5- 2	-204 / 0	0.0	0.0	0.12 (4)	7.81
1- 2	0 / 29	-77.3	-77.3	0.10 (1)	10.00
2- 3	-11 / 0	-77.3	-77.3	0.05 (1)	6.25
5- 4	0 / 0	-17.5	-17.5	0.13 (4)	10.00

WEBS MEMB. FR-TO	MAX. FACTORED FORCE (LBS)	MAX CSI (LC)

DESIGN CRITERIA

SPECIFIED LOADS:

TOP CH.	LL	=	23.3	PSF
	DL	=	3.0	PSF
BOT CH.	LL	=	0.0	PSF
	DL	=	7.0	PSF
TOTAL LOAD		=	33.3	PSF

SPACING = 24.0 IN. C/C

THIS TRUSS IS DESIGNED FOR RESIDENTIAL OR SMALL BUILDING REQUIREMENTS OF PART 9, NBCC 2010

THIS DESIGN COMPLIES WITH:
- PART 9 OF OBC 2012 , BCBC 2012 , ABC 2014
- CSA 086-09
- TPIC 2011

DESIGN ASSUMPTIONS
-OVERHANG NOT TO BE ALTERED OR CUT OFF.

(55 % OF 27.2 P.S.F. G.S.L. PLUS 8.4 P.S.F. RAIN LOAD) EQUALS 23.3 P.S.F. SPECIFIED ROOF LIVE LOAD

ALLOWABLE DEFL.(LL)= L/360 (0.20")
CALCULATED VERT. DEFL.(LL) = L/ 999 (0.00")
ALLOWABLE DEFL.(TL)= L/360 (0.20")
CALCULATED VERT. DEFL.(TL) = L/ 999 (0.03")

CSI: TC=0.12 (2-5:4) , BC=0.13 (4-5:4) , WB=0.00 (n/a:0) , SSI=0.08 (4-5:4)

DOL LUMBER=1.00 NAIL=1.00 LS BEND=1.10 COMP=1.10 SHEAR=1.10 TENS= 1.10

COMPANION LIVE LOAD FACTOR = 0.50

TRUSS PLATE MANUFACTURER IS NOT RESPONSIBLE FOR QUALITY CONTROL IN THE TRUSS MANUFACTURING PLANT .

NAIL VALUES

PLATE	GRIP(DRY) (PSI) MAX	MIN	SHEAR (PLI) MAX	MIN	SECTION (PLI) MAX	MIN
MT20	618	354	1667	822	2284	1656

PLATE PLACEMENT TOL. = 0.250 inches

PLATE ROTATION TOL. = 5.0 Deg.

JSI GRIP= 0.13 (2) (INPUT = 0.90)
JSI METAL= 0.05 (2) (INPUT = 1.00)

READ ALL NOTES ON THIS PAGE AND ON THE ENGINEERING NOTE PAGE ENP-1. THE NOTE PAGE IS AN INTEGRAL PART OF THIS DRAWING AS IT CONTAINS SPECIFICATIONS AND CRITERIA USED IN THE DESIGN OF THIS COMPONENT.

LICENSED PROFESSIONAL ENGINEER
C.G. CARSON
100076892
PROVINCE OF ONTARIO

21 MAR 2017

KOTT

RECEIVED
TOWN OF MILTON
MAR 29, 2017
JUNIPER 2
BUILDING DIVISION

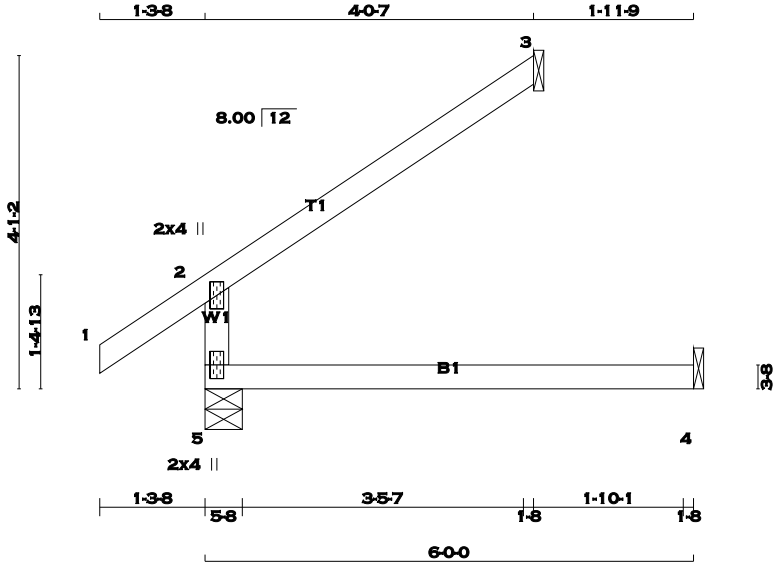

TOTAL WEIGHT = 2 X 15 = 31 lb [M]

LUMBER

N. L. G. A. RULES

CHORDS	SIZE		LUMBER	DESCR.
5 - 2	2x4	DRY	No.2	SPF
1 - 3	2x4	DRY	No.2	SPF
5 - 4	2x4	DRY	No.2	SPF

DRY: SEASONED LUMBER.

PLATES (table is in inches)

JT	TYPE	PLATES	W	LEN	Y	X
2	TMV+p	MT20	2.0	4.0		
5	BMV1+p	MT20	2.0	4.0		

A SIZE FOR SIZE SUBSTITUTION OF MITEK MII20 WITH TEE-LOK TL20 PLATES IS ALLOWED.

READ ALL NOTES ON THIS PAGE AND ON THE ENGINEERING NOTE PAGE ENP-1. THE NOTE PAGE IS AN INTEGRAL PART OF THIS DRAWING AS IT CONTAINS SPECIFICATIONS AND CRITERIA USED IN THE DESIGN OF THIS COMPONENT.

LICENSED PROFESSIONAL ENGINEER
C.G. CARSON
100076892
PROVINCE OF ONTARIO

21 MAR 2017

DIMENSIONS, SUPPORTS AND LOADINGS SPECIFIED BY FABRICATOR TO BE VERIFIED BY BUILDING DESIGNER

BEARINGS

JT	FACTORED GROSS REACTION VERT	HORZ	MAXIMUM FACTORED GROSS REACTION DOWN	HORZ	UPLIFT	INPUT BRG IN-SX	REQRD BRG IN-SX
5	362	0	362	0	0	5-8	5-8
3	117	0	117	0	0	1-8	1-8
4	44	0	49	0	0	1-8	1-8

SEE MITEK STANDARD DETAIL B37579H FOR CONNECTION TO JOINT(S) 3 , 4

UNFACTORED REACTIONS

JT	1ST LCASE COMBINED	MAX./MIN. COMPONENT REACTIONS SNOW	LIVE	PERM.LIVE	WIND	DEAD	SOIL
5	254	181 / 0	0 / 0	0 / 0	0 / 0	72 / 0	0 / 0
3	80	71 / 0	0 / 0	0 / 0	0 / 0	9 / 0	0 / 0
4	35	0 / 0	0 / 0	0 / 0	0 / 0	35 / 0	0 / 0

BEARING MATERIAL TO BE SPF NO.2 OR BETTER AT JOINT(S) 5, 3

BRACING

TOP CHORD TO BE SHEATHED OR MAX. PURLIN SPACING = 6.25 FT.
MAX. UNBRACED BOTTOM CHORD LENGTH = 10.00 FT. OR RIGID CEILING DIRECTLY APPLIED.

ALL PITCH BREAKS AND PERIMETER CORNER JOINTS MUST BE LATERALLY RESTRAINED.

LOADING

TOTAL LOAD CASES: (4)

CHORDS MEMB. FR-TO	MAX. FACTORED FORCE (LBS)	FACTORED VERT. LOAD (PLF) FROM	TO	LC1 MAX CSI (LC)	MAX. UNBRAC LENGTH
5- 2	-301 / 0	0.0	0.0	0.12 (4)	7.81
1- 2	0 / 29	-77.3	-77.3	0.10 (1)	10.00
2- 3	-22 / 0	-77.3	-77.3	0.21 (1)	6.25
5- 4	0 / 0	-17.5	-17.5	0.13 (4)	10.00

WEBS MEMB. FR-TO	MAX. FACTORED FORCE (LBS)	MAX CSI (LC)

DESIGN CRITERIA

SPECIFIED LOADS:

TOP CH.	LL	=	23.3	PSF
	DL	=	3.0	PSF
BOT CH.	LL	=	0.0	PSF
	DL	=	7.0	PSF
TOTAL LOAD		=	33.3	PSF

SPACING = 24.0 IN. C/C

THIS TRUSS IS DESIGNED FOR RESIDENTIAL OR SMALL BUILDING REQUIREMENTS OF PART 9, NBCC 2010

THIS DESIGN COMPLIES WITH:
- PART 9 OF OBC 2012 , BCBC 2012 , ABC 2014
- CSA 086-09
- TPIC 2011

DESIGN ASSUMPTIONS
-OVERHANG NOT TO BE ALTERED OR CUT OFF.

(55 % OF 27.2 P.S.F. G.S.L. PLUS 8.4 P.S.F. RAIN LOAD) EQUALS 23.3 P.S.F. SPECIFIED ROOF LIVE LOAD

ALLOWABLE DEFL.(LL)= L/360 (0.20")
CALCULATED VERT. DEFL.(LL) = L/ 999 (0.00")
ALLOWABLE DEFL.(TL)= L/360 (0.20")
CALCULATED VERT. DEFL.(TL) = L/ 999 (0.03")

CSI: TC=0.21 (2-3:1) , BC=0.13 (4-5:4) , WB=0.00 (n/a:0) , SSI=0.13 (2-3:1)

DOL LUMBER=1.00 NAIL=1.00 LS BEND=1.10 COMP=1.10 SHEAR=1.10 TENS= 1.10

COMPANION LIVE LOAD FACTOR = 0.50

TRUSS PLATE MANUFACTURER IS NOT RESPONSIBLE FOR QUALITY CONTROL IN THE TRUSS MANUFACTURING PLANT .

NAIL VALUES

PLATE	GRIP(DRY) (PSI) MAX	MIN	SHEAR (PLI) MAX	MIN	SECTION (PLI) MAX	MIN
MT20	618	354	1667	822	2284	1656

PLATE PLACEMENT TOL. = 0.250 inches

PLATE ROTATION TOL. = 5.0 Deg.

JSI GRIP= 0.19 (2) (INPUT = 0.90)
JSI METAL= 0.07 (2) (INPUT = 1.00)

KOTT

RECEIVED
TOWN OF MILTON
MAR 29, 2017
JUNIPER 2
BUILDING DIVISION

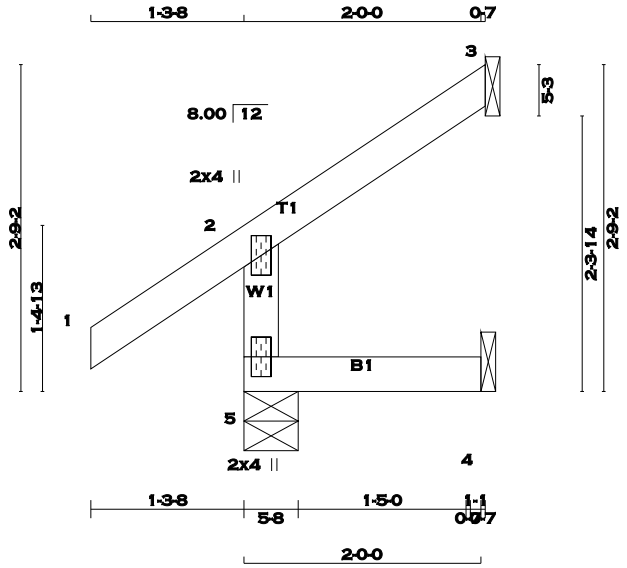

TOTAL WEIGHT = 8 lb [M]

LUMBER

N. L. G. A. RULES

CHORDS	SIZE		LUMBER	DESCR.
5 - 2	2x4	DRY	No.2	SPF
1 - 3	2x4	DRY	No.2	SPF
5 - 4	2x4	DRY	No.2	SPF

DRY: SEASONED LUMBER.

PLATES (table is in inches)

JT	TYPE	PLATES	W	LEN	Y	X
2	TMV+p	MT20	2.0	4.0		
5	BMV1+p	MT20	2.0	4.0		

A SIZE FOR SIZE SUBSTITUTION OF MITEK MII20 WITH TEE-LOK TL20 PLATES IS ALLOWED.

DIMENSIONS, SUPPORTS AND LOADINGS SPECIFIED BY FABRICATOR TO BE VERIFIED BY BUILDING DESIGNER

BEARINGS

JT	FACTORED GROSS REACTION VERT	HORZ	MAXIMUM FACTORED GROSS REACTION DOWN	HORZ	UPLIFT	INPUT BRG IN-SX	REQRD BRG IN-SX
5	223	0	223	0	0	5-8	5-8
3	60	0	60	0	0	1-8	1-8
4	16	0	18	0	0	1-8	1-8

SEE MITEK STANDARD DETAIL B37579H FOR CONNECTION TO JOINT(S) 3 , 4

UNFACTORED REACTIONS

JT	1ST LCASE COMBINED	MAX./MIN. COMPONENT REACTIONS SNOW	LIVE	PERM.LIVE	WIND	DEAD	SOIL
5	154	123 / 0	0 / 0	0 / 0	0 / 0	31 / 0	0 / 0
3	40	36 / 0	0 / 0	0 / 0	0 / 0	5 / 0	0 / 0
4	13	0 / 0	0 / 0	0 / 0	0 / 0	13 / 0	0 / 0

BEARING MATERIAL TO BE SPF NO.2 OR BETTER AT JOINT(S) 5

BRACING

TOP CHORD TO BE SHEATHED OR MAX. PURLIN SPACING = 6.25 FT.
MAX. UNBRACED BOTTOM CHORD LENGTH = 10.00 FT. OR RIGID CEILING DIRECTLY APPLIED.

ALL PITCH BREAKS AND PERIMETER CORNER JOINTS MUST BE LATERALLY RESTRAINED.

LOADING

TOTAL LOAD CASES: (5)

CHORDS MEMB. FR-TO	MAX. FACTORED FORCE (LBS)	FACTORED VERT. LOAD (PLF) FROM	TO	LC1 MAX CSI (LC)	WEBS MAX. UNBRAC LENGTH	MEMB. FR-TO	MAX. FACTORED FORCE (LBS)	MAX CSI (LC)
5- 2	-204 / 0	0.0	0.0	0.01 (4)	7.81			
1- 2	0 / 29	-77.3	-77.3	0.10 (1)	10.00			
2- 3	-11 / 0	-77.3	-77.3	0.05 (1)	6.25			
5- 4	0 / 0	-17.5	-17.5	0.02 (4)	10.00			

CANTILEVER ANALYSIS HAS BEEN CONSIDERED IN THIS DESIGN

DESIGN CRITERIA

SPECIFIED LOADS:

TOP CH.	LL	=	23.3	PSF
	DL	=	3.0	PSF
BOT CH.	LL	=	0.0	PSF
	DL	=	7.0	PSF
TOTAL LOAD		=	33.3	PSF

SPACING = 24.0 IN. C/C

THIS TRUSS IS DESIGNED FOR RESIDENTIAL OR SMALL BUILDING REQUIREMENTS OF PART 9, NBCC 2010

THIS DESIGN COMPLIES WITH:
- PART 9 OF OBC 2012 , BCBC 2012 , ABC 2014
- CSA 086-09
- TPIC 2011

DESIGN ASSUMPTIONS
-OVERHANG NOT TO BE ALTERED OR CUT OFF.

(55 % OF 27.2 P.S.F. G.S.L. PLUS 8.4 P.S.F. RAIN LOAD) EQUALS 23.3 P.S.F. SPECIFIED ROOF LIVE LOAD

ALLOWABLE DEFL.(LL)= L/360 (0.19")
CALCULATED VERT. DEFL.(LL) = L/ 999 (0.00")
ALLOWABLE DEFL.(TL)= L/360 (0.19")
CALCULATED VERT. DEFL.(TL) = L/ 999 (0.00")

CSI: TC=0.10 (1-2:1) , BC=0.02 (4-5:4) , WB=0.00 (n/a:0) , SSI=0.07 (1-2:1)

DOL LUMBER=1.00 NAIL=1.00 LS BEND=1.10 COMP=1.10 SHEAR=1.10 TENS= 1.10

COMPANION LIVE LOAD FACTOR = 0.50

TRUSS PLATE MANUFACTURER IS NOT RESPONSIBLE FOR QUALITY CONTROL IN THE TRUSS MANUFACTURING PLANT .

NAIL VALUES

PLATE	GRIP(DRY) (PSI) MAX	MIN	SHEAR (PLI) MAX	MIN	SECTION (PLI) MAX	MIN
MT20	618	354	1667	822	2284	1656

PLATE PLACEMENT TOL. = 0.250 inches

PLATE ROTATION TOL. = 5.0 Deg.

JSI GRIP= 0.13 (2) (INPUT = 0.90)
JSI METAL= 0.05 (2) (INPUT = 1.00)

READ ALL NOTES ON THIS PAGE AND ON THE ENGINEERING NOTE PAGE ENP-1. THE NOTE PAGE IS AN INTEGRAL PART OF THIS DRAWING AS IT CONTAINS SPECIFICATIONS AND CRITERIA USED IN THE DESIGN OF THIS COMPONENT.

LICENSED PROFESSIONAL ENGINEER
C.G. CARSON
100076892
PROVINCE OF ONTARIO

21 MAR 2017

KOTT

RECEIVED
TOWN OF MILTON
MAR 29, 2017
JUNIPER 2
BUILDING DIVISION

SCALE = 1:27.4

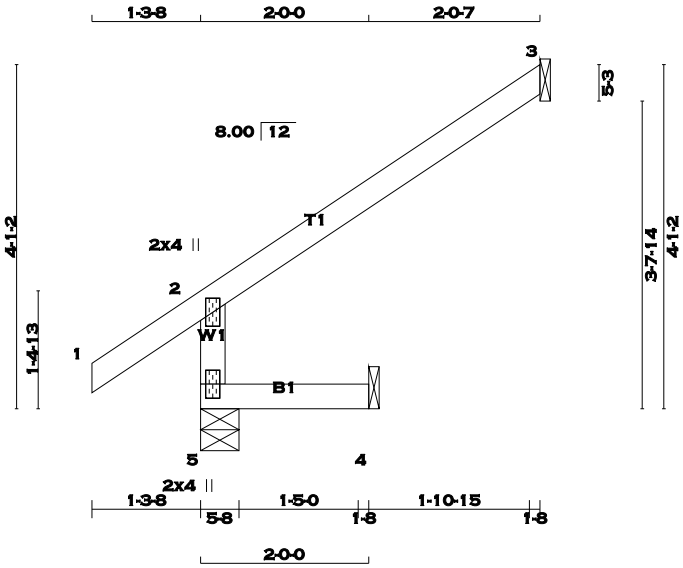

TOTAL WEIGHT = 11 lb [M]

LUMBER

N. L. G. A. RULES

CHORDS	SIZE		LUMBER	DESCR.
5 - 2	2x4	DRY	No.2	SPF
1 - 3	2x4	DRY	No.2	SPF
5 - 4	2x4	DRY	No.2	SPF

DRY: SEASONED LUMBER.

PLATES (table is in inches)

JT	TYPE	PLATES	W	LEN	Y	X
2	TMV+p	MT20	2.0	4.0		
5	BMV1+p	MT20	2.0	4.0		

A SIZE FOR SIZE SUBSTITUTION OF MITEK MII20 WITH TEE-LOK TL20 PLATES IS ALLOWED.

READ ALL NOTES ON THIS PAGE AND ON THE ENGINEERING NOTE PAGE ENP-1. THE NOTE PAGE IS AN INTEGRAL PART OF THIS DRAWING AS IT CONTAINS SPECIFICATIONS AND CRITERIA USED IN THE DESIGN OF THIS COMPONENT.

LICENSED PROFESSIONAL ENGINEER
C.G. CARSON
100076892
PROVINCE OF ONTARIO

21 MAR 2017

DIMENSIONS, SUPPORTS AND LOADINGS SPECIFIED BY FABRICATOR TO BE VERIFIED BY BUILDING DESIGNER

BEARINGS

JT	FACTORED GROSS REACTION VERT	HORZ	MAXIMUM FACTORED GROSS REACTION DOWN	HORZ	UPLIFT	INPUT BRG IN-SX	REQRD BRG IN-SX
5	320	0	320	0	0	5-8	5-8
3	117	0	117	0	0	1-8	1-8
4	16	0	18	0	0	1-8	1-8

SEE MITEK STANDARD DETAIL B37579H FOR CONNECTION TO JOINT(S) 3 , 4

UNFACTORED REACTIONS

JT	1ST LCASE COMBINED	MAX./MIN. COMPONENT REACTIONS SNOW	LIVE	PERM.LIVE	WIND	DEAD	SOIL
5	220	181 / 0	0 / 0	0 / 0	0 / 0	39 / 0	0 / 0
3	80	71 / 0	0 / 0	0 / 0	0 / 0	9 / 0	0 / 0
4	13	0 / 0	0 / 0	0 / 0	0 / 0	13 / 0	0 / 0

BEARING MATERIAL TO BE SPF NO.2 OR BETTER AT JOINT(S) 5

BRACING

TOP CHORD TO BE SHEATHED OR MAX. PURLIN SPACING = 6.25 FT.
MAX. UNBRACED BOTTOM CHORD LENGTH = 10.00 FT. OR RIGID CEILING DIRECTLY APPLIED.

ALL PITCH BREAKS AND PERIMETER CORNER JOINTS MUST BE LATERALLY RESTRAINED.

LOADING

TOTAL LOAD CASES: (4)

CHORDS MEMB. FR-TO	MAX. FACTORED FORCE (LBS)	FACTORED VERT. LOAD (PLF) FROM	TO	LC1 MAX CSI (LC)	MAX. UNBRAC LENGTH
5- 2	-301 / 0	0.0	0.0	0.01 (4)	7.81
1- 2	0 / 29	-77.3	-77.3	0.10 (1)	10.00
2- 3	-22 / 0	-77.3	-77.3	0.21 (1)	6.25
5- 4	0 / 0	-17.5	-17.5	0.02 (4)	10.00

WEBS MEMB. FR-TO	MAX. FACTORED FORCE (LBS)	MAX CSI (LC)

DESIGN CRITERIA

SPECIFIED LOADS:

TOP CH.	LL	=	23.3	PSF
	DL	=	3.0	PSF
BOT CH.	LL	=	0.0	PSF
	DL	=	7.0	PSF
TOTAL LOAD		=	33.3	PSF

SPACING = 24.0 IN. C/C

THIS TRUSS IS DESIGNED FOR RESIDENTIAL OR SMALL BUILDING REQUIREMENTS OF PART 9, NBCC 2010

THIS DESIGN COMPLIES WITH:
- PART 9 OF OBC 2012 , BCBC 2012 , ABC 2014
- CSA 086-09
- TPIC 2011

DESIGN ASSUMPTIONS
-OVERHANG NOT TO BE ALTERED OR CUT OFF.

(55 % OF 27.2 P.S.F. G.S.L. PLUS 8.4 P.S.F. RAIN LOAD) EQUALS 23.3 P.S.F. SPECIFIED ROOF LIVE LOAD

ALLOWABLE DEFL.(TL)= L/360 (0.19")
CALCULATED VERT. DEFL.(TL) = L/ 999 (0.00")

CSI: TC=0.21 (2-3:1) , BC=0.02 (4-5:4) , WB=0.00 (n/a:0) , SSI=0.13 (2-3:1)

DOL LUMBER=1.00 NAIL=1.00 LS BEND=1.10 COMP=1.10 SHEAR=1.10 TENS= 1.10

COMPANION LIVE LOAD FACTOR = 0.50

TRUSS PLATE MANUFACTURER IS NOT RESPONSIBLE FOR QUALITY CONTROL IN THE TRUSS MANUFACTURING PLANT .

NAIL VALUES

PLATE	GRIP(DRY) (PSI) MAX	MIN	SHEAR (PLI) MAX	MIN	SECTION (PLI) MAX	MIN
MT20	618	354	1667	822	2284	1656

PLATE PLACEMENT TOL. = 0.250 inches

PLATE ROTATION TOL. = 5.0 Deg.

JSI GRIP= 0.19 (2) (INPUT = 0.90)
JSI METAL= 0.07 (2) (INPUT = 1.00)

KOTT

RECEIVED
TOWN OF MILTON
MAR 29, 2017
JUNIPER 2
BUILDING DIVISION

SCALE = 1:35.9

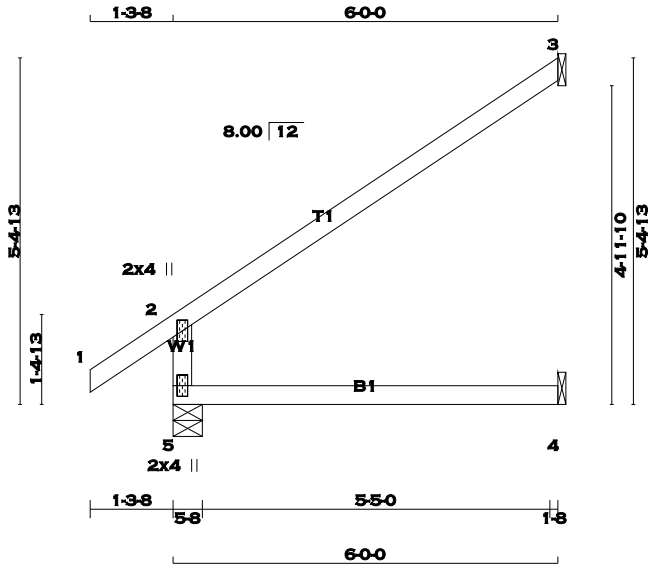

TOTAL WEIGHT = 4 X 18 = 73 lb [M]

LUMBER

N. L. G. A. RULES

CHORDS	SIZE		LUMBER	DESCR.
5 - 2	2x4	DRY	No.2	SPF
1 - 3	2x4	DRY	No.2	SPF
5 - 4	2x4	DRY	No.2	SPF

DRY: SEASONED LUMBER.

PLATES (table is in inches)

JT	TYPE	PLATES	W	LEN	Y	X
2	TMV+p	MT20	2.0	4.0		
5	BMV1+p	MT20	2.0	4.0		

A SIZE FOR SIZE SUBSTITUTION OF MITEK MII20 WITH TEE-LOK TL20 PLATES IS ALLOWED.

DIMENSIONS, SUPPORTS AND LOADINGS SPECIFIED BY FABRICATOR TO BE VERIFIED BY BUILDING DESIGNER

BEARINGS

JT	FACTORED GROSS REACTION VERT	HORZ	MAXIMUM FACTORED GROSS REACTION DOWN	HORZ	UPLIFT	INPUT BRG IN-SX	REQRD BRG IN-SX
5	457	0	457	0	0	5-8	5-8
3	174	0	174	0	0	1-8	1-8
4	44	0	49	0	0	1-8	1-8

SEE MITEK STANDARD DETAIL B37579H FOR CONNECTION TO JOINT(S) 3 , 4

UNFACTORED REACTIONS

JT	1ST LCASE COMBINED	MAX./MIN. COMPONENT REACTIONS SNOW	LIVE	PERM.LIVE	WIND	DEAD	SOIL
5	318	239 / 0	0 / 0	0 / 0	0 / 0	80 / 0	0 / 0
3	118	105 / 0	0 / 0	0 / 0	0 / 0	14 / 0	0 / 0
4	35	0 / 0	0 / 0	0 / 0	0 / 0	35 / 0	0 / 0

BEARING MATERIAL TO BE SPF NO.2 OR BETTER AT JOINT(S) 5

BRACING

TOP CHORD TO BE SHEATHED OR MAX. PURLIN SPACING = 6.25 FT.
MAX. UNBRACED BOTTOM CHORD LENGTH = 10.00 FT. OR RIGID CEILING DIRECTLY APPLIED.

ALL PITCH BREAKS AND PERIMETER CORNER JOINTS MUST BE LATERALLY RESTRAINED.

LOADING

TOTAL LOAD CASES: (4)

CHORDS MEMB. FR-TO	MAX. FACTORED FORCE (LBS)	FACTORED VERT. LOAD (PLF) FROM	TO	LC1 MAX CSI (LC)	MAX. UNBRAC LENGTH
5- 2	-396 / 0	0.0	0.0	0.12 (4)	7.81
1- 2	0 / 29	-77.3	-77.3	0.10 (1)	10.00
2- 3	-32 / 0	-77.3	-77.3	0.47 (1)	6.25
5- 4	0 / 0	-17.5	-17.5	0.13 (4)	10.00

WEBS MEMB. FR-TO	MAX. FACTORED FORCE (LBS)	MAX CSI (LC)

DESIGN CRITERIA

SPECIFIED LOADS:

TOP CH.	LL	=	23.3	PSF
	DL	=	3.0	PSF
BOT CH.	LL	=	0.0	PSF
	DL	=	7.0	PSF
TOTAL LOAD		=	33.3	PSF

SPACING = 24.0 IN. C/C

THIS TRUSS IS DESIGNED FOR RESIDENTIAL OR SMALL BUILDING REQUIREMENTS OF PART 9, NBCC 2010

THIS DESIGN COMPLIES WITH:
- PART 9 OF OBC 2012 , BCBC 2012 , ABC 2014
- CSA 086-09
- TPIC 2011

DESIGN ASSUMPTIONS
-OVERHANG NOT TO BE ALTERED OR CUT OFF.

(55 % OF 27.2 P.S.F. G.S.L. PLUS 8.4 P.S.F. RAIN LOAD) EQUALS 23.3 P.S.F. SPECIFIED ROOF LIVE LOAD

ALLOWABLE DEFL.(LL)= L/360 (0.20")
CALCULATED VERT. DEFL.(LL) = L/ 999 (0.00")
ALLOWABLE DEFL.(TL)= L/360 (0.20")
CALCULATED VERT. DEFL.(TL) = L/ 999 (0.03")

CSI: TC=0.47 (2-3:1) , BC=0.13 (4-5:4) , WB=0.00 (n/a:0) , SSI=0.19 (2-3:1)

DOL LUMBER=1.00 NAIL=1.00 LS BEND=1.10 COMP=1.10 SHEAR=1.10 TENS= 1.10

COMPANION LIVE LOAD FACTOR = 0.50

TRUSS PLATE MANUFACTURER IS NOT RESPONSIBLE FOR QUALITY CONTROL IN THE TRUSS MANUFACTURING PLANT .

NAIL VALUES

PLATE	GRIP(DRY) (PSI) MAX	MIN	SHEAR (PLI) MAX	MIN	SECTION (PLI) MAX	MIN
MT20	618	354	1667	822	2284	1656

PLATE PLACEMENT TOL. = 0.250 inches

PLATE ROTATION TOL. = 5.0 Deg.

JSI GRIP= 0.25 (2) (INPUT = 0.90)
JSI METAL= 0.10 (2) (INPUT = 1.00)

READ ALL NOTES ON THIS PAGE AND ON THE ENGINEERING NOTE PAGE ENP-1. THE NOTE PAGE IS AN INTEGRAL PART OF THIS DRAWING AS IT CONTAINS SPECIFICATIONS AND CRITERIA USED IN THE DESIGN OF THIS COMPONENT.

LICENSED PROFESSIONAL ENGINEER
C.G. CARSON
100076892
PROVINCE OF ONTARIO

21 MAR 2017

KOTT

RECEIVED
TOWN OF MILTON
MAR 29, 2017
JUNIPER 2
BUILDING DIVISION

SCALE = 1:19.5

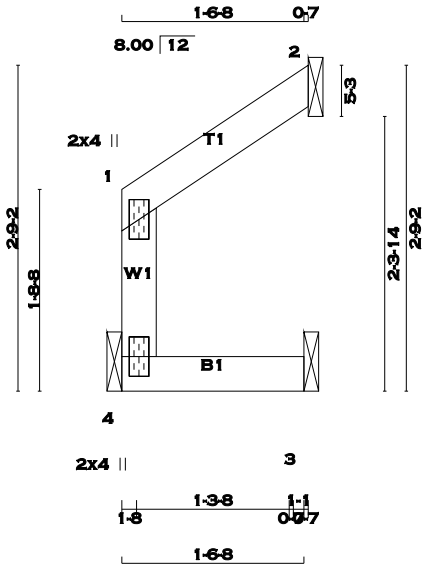

TOTAL WEIGHT = 6 lb

[M][F]

LUMBER

N. L. G. A. RULES

CHORDS	SIZE		LUMBER	DESCR.
4 - 1	2x4	DRY	No.2	SPF
1 - 2	2x4	DRY	No.2	SPF
4 - 3	2x4	DRY	No.2	SPF

DRY: SEASONED LUMBER.

PLATES (table is in inches)

JT	TYPE	PLATES	W	LEN	Y	X
1	TMV+p	MT20	2.0	4.0		
4	BMV1+p	MT20	2.0	4.0		

A SIZE FOR SIZE SUBSTITUTION OF MITEK MII20 WITH TEE-LOK TL20 PLATES IS ALLOWED.

DIMENSIONS, SUPPORTS AND LOADINGS SPECIFIED BY FABRICATOR TO BE VERIFIED BY BUILDING DESIGNER

BEARINGS

JT	FACTORED GROSS REACTION VERT	HORZ	MAXIMUM FACTORED GROSS REACTION DOWN	HORZ	UPLIFT	INPUT BRG IN-SX	REQRD BRG IN-SX
4	74	0	74	0	0	1-8	1-8
2	58	0	58	0	0	1-8	1-8
3	17	0	17	0	0	1-8	1-8

SEE MITEK STANDARD DETAIL B37579H FOR CONNECTION TO JOINT(S) 4 , 2 , 3

UNFACTORED REACTIONS

JT	1ST LCASE COMBINED	MAX./MIN. COMPONENT REACTIONS SNOW	LIVE	PERM.LIVE	WIND	DEAD	SOIL
4	52	37 / 0	0 / 0	0 / 0	0 / 0	16 / 0	0 / 0
2	39	35 / 0	0 / 0	0 / 0	0 / 0	5 / 0	0 / 0
3	13	2 / 0	0 / 0	0 / 0	0 / 0	11 / 0	0 / 0

BRACING

TOP CHORD TO BE SHEATHED OR MAX. PURLIN SPACING = 10.00 FT.
MAX. UNBRACED BOTTOM CHORD LENGTH = 10.00 FT. OR RIGID CEILING DIRECTLY APPLIED.

ALL PITCH BREAKS AND PERIMETER CORNER JOINTS MUST BE LATERALLY RESTRAINED.

LOADING

TOTAL LOAD CASES: (4)

CHORDS

MEMB. FR-TO	MAX. FACTORED FORCE (LBS)	FACTORED VERT. LOAD (PLF) FROM	TO	LC1 MAX CSI (LC)	MAX. UNBRAC LENGTH
4- 1	-64 / 0	0.0	0.0	0.01 (1)	7.81
1- 2	-2 / 0	-77.3	-77.3	0.02 (1)	10.00
4- 3	0 / 0	-17.5	-17.5	0.01 (4)	10.00

WEBS

MEMB. FR-TO	MAX. FACTORED FORCE (LBS)	MAX CSI (LC)

DESIGN CRITERIA

SPECIFIED LOADS:

TOP CH.	LL =	23.3	PSF
	DL =	3.0	PSF
BOT CH.	LL =	0.0	PSF
	DL =	7.0	PSF
TOTAL LOAD	=	33.3	PSF

SPACING = 24.0 IN. C/C

THIS TRUSS IS DESIGNED FOR RESIDENTIAL OR SMALL BUILDING REQUIREMENTS OF PART 9, NBCC 2010

THIS DESIGN COMPLIES WITH:
- PART 9 OF OBC 2012 , BCBC 2012 , ABC 2014
- CSA 086-09
- TPIC 2011

(55 % OF 27.2 P.S.F. G.S.L. PLUS 8.4 P.S.F. RAIN LOAD) EQUALS 23.3 P.S.F. SPECIFIED ROOF LIVE LOAD

ALLOWABLE DEFL.(LL)= L/360 (0.19")
CALCULATED VERT. DEFL.(LL) = L/ 999 (0.00")
ALLOWABLE DEFL.(TL)= L/360 (0.19")
CALCULATED VERT. DEFL.(TL) = L/ 999 (0.00")

CSI: TC=0.02 (1-2:1) , BC=0.01 (3-4:4) , WB=0.00 (n/a:0) , SSI=0.04 (1-2:1)

DOL LUMBER=1.00 NAIL=1.00 LS BEND=1.10 COMP=1.10 SHEAR=1.10 TENS= 1.10

COMPANION LIVE LOAD FACTOR = 0.50

TRUSS PLATE MANUFACTURER IS NOT RESPONSIBLE FOR QUALITY CONTROL IN THE TRUSS MANUFACTURING PLANT .

NAIL VALUES

PLATE	GRIP(DRY) (PSI) MAX	MIN	SHEAR (PLI) MAX	MIN	SECTION (PLI) MAX	MIN
MT20	618	354	1667	822	2284	1656

PLATE PLACEMENT TOL. = 0.250 inches

PLATE ROTATION TOL. = 5.0 Deg.

JSI GRIP= 0.04 (1) (INPUT = 0.90)
JSI METAL= 0.02 (1) (INPUT = 1.00)

READ ALL NOTES ON THIS PAGE AND ON THE ENGINEERING NOTE PAGE ENP-1. THE NOTE PAGE IS AN INTEGRAL PART OF THIS DRAWING AS IT CONTAINS SPECIFICATIONS AND CRITERIA USED IN THE DESIGN OF THIS COMPONENT.

LICENSED PROFESSIONAL ENGINEER
C.G. CARSON
100076892
PROVINCE OF ONTARIO

21 MAR 2017

KOTT

RECEIVED
TOWN OF MILTON
MAR 29, 2017
JUNIPER 2
BUILDING DIVISION

SCALE = 1:27.5

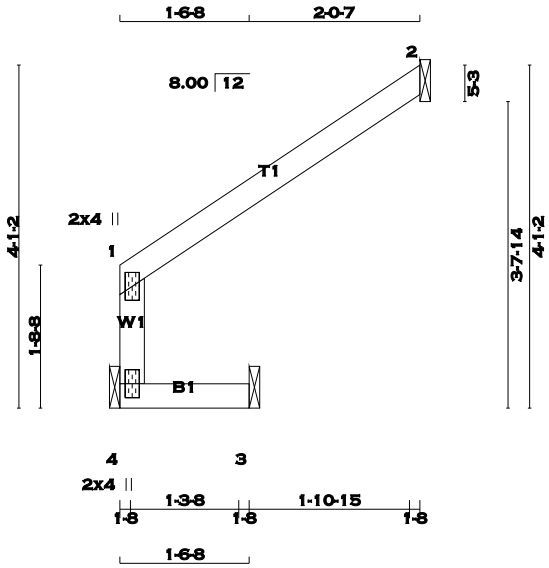

TOTAL WEIGHT = 8 lb

[M][F]

LUMBER

N. L. G. A. RULES

CHORDS	SIZE		LUMBER	DESCR.
4 - 1	2x4	DRY	No.2	SPF
1 - 2	2x4	DRY	No.2	SPF
4 - 3	2x4	DRY	No.2	SPF

DRY: SEASONED LUMBER.

PLATES (table is in inches)

JT	TYPE	PLATES	W	LEN	Y	X
1	TMV+p	MT20	2.0	4.0		
4	BMV1+p	MT20	2.0	4.0		

A SIZE FOR SIZE SUBSTITUTION OF MITEK MII20 WITH TEE-LOK TL20 PLATES IS ALLOWED.

DIMENSIONS, SUPPORTS AND LOADINGS SPECIFIED BY FABRICATOR TO BE VERIFIED BY BUILDING DESIGNER

BEARINGS

JT	FACTORED GROSS REACTION VERT	HORZ	MAXIMUM FACTORED GROSS REACTION DOWN	HORZ	UPLIFT	INPUT BRG IN-SX	REQRD BRG IN-SX
4	133	0	133	0	0	1-8	1-8
2	124	0	124	0	0	1-8	1-8
3	47	0	47	0	0	1-8	1-8

SEE MITEK STANDARD DETAIL B37579H FOR CONNECTION TO JOINT(S) 4 , 2 , 3

UNFACTORED REACTIONS

JT	1ST LCASE COMBINED	MAX./MIN. COMPONENT REACTIONS SNOW	LIVE	PERM.LIVE	WIND	DEAD	SOIL
4	92	72 / 0	0 / 0	0 / 0	0 / 0	20 / 0	0 / 0
2	84	74 / 0	0 / 0	0 / 0	0 / 0	10 / 0	0 / 0
3	34	21 / 0	0 / 0	0 / 0	0 / 0	13 / 0	0 / 0

BRACING

TOP CHORD TO BE SHEATHED OR MAX. PURLIN SPACING = 10.00 FT.
MAX. UNBRACED BOTTOM CHORD LENGTH = 10.00 FT. OR RIGID CEILING DIRECTLY APPLIED.

ALL PITCH BREAKS AND PERIMETER CORNER JOINTS MUST BE LATERALLY RESTRAINED.

LOADING

TOTAL LOAD CASES: (4)

CHORDS MEMB. FR-TO	MAX. FACTORED FORCE (LBS)	FACTORED VERT. LOAD (PLF) FROM	TO	LC1 MAX CSI (LC)	MAX. UNBRAC LENGTH
4- 1	-153 / 0	0.0	0.0	0.06 (1)	7.81
1- 2	-8 / 0	-77.3	-77.3	0.13 (1)	10.00
4- 3	0 / 0	-17.5	-17.5	0.07 (1)	10.00

WEBS MEMB. FR-TO	MAX. FACTORED FORCE (LBS)	MAX CSI (LC)

DESIGN CRITERIA

SPECIFIED LOADS:

TOP CH.	LL	=	23.3	PSF
	DL	=	3.0	PSF
BOT CH.	LL	=	0.0	PSF
	DL	=	7.0	PSF
TOTAL LOAD		=	33.3	PSF

SPACING = 24.0 IN. C/C

THIS TRUSS IS DESIGNED FOR RESIDENTIAL OR SMALL BUILDING REQUIREMENTS OF PART 9, NBCC 2010

THIS DESIGN COMPLIES WITH:
- PART 9 OF OBC 2012 , BCBC 2012 , ABC 2014
- CSA 086-09
- TPIC 2011

(55 % OF 27.2 P.S.F. G.S.L. PLUS 8.4 P.S.F. RAIN LOAD) EQUALS 23.3 P.S.F. SPECIFIED ROOF LIVE LOAD

ALLOWABLE DEFL.(LL)= L/360 (0.19")
CALCULATED VERT. DEFL.(LL) = L/ 999 (0.00")
ALLOWABLE DEFL.(TL)= L/360 (0.19")
CALCULATED VERT. DEFL.(TL) = L/ 999 (0.00")

CSI: TC=0.13 (1-2:1) , BC=0.07 (3-4:1) , WB=0.00 (n/a:0) , SSI=0.10 (1-2:1)

DOL LUMBER=1.00 NAIL=1.00 LS BEND=1.10 COMP=1.10 SHEAR=1.10 TENS= 1.10

COMPANION LIVE LOAD FACTOR = 0.50

TRUSS PLATE MANUFACTURER IS NOT RESPONSIBLE FOR QUALITY CONTROL IN THE TRUSS MANUFACTURING PLANT .

NAIL VALUES

PLATE	GRIP(DRY) (PSI) MAX	MIN	SHEAR (PLI) MAX	MIN	SECTION (PLI) MAX	MIN
MT20	618	354	1667	822	2284	1656

PLATE PLACEMENT TOL. = 0.250 inches

PLATE ROTATION TOL. = 5.0 Deg.

JSI GRIP= 0.10 (1) (INPUT = 0.90)
JSI METAL= 0.04 (1) (INPUT = 1.00)

READ ALL NOTES ON THIS PAGE AND ON THE ENGINEERING NOTE PAGE ENP-1. THE NOTE PAGE IS AN INTEGRAL PART OF THIS DRAWING AS IT CONTAINS SPECIFICATIONS AND CRITERIA USED IN THE DESIGN OF THIS COMPONENT.

LICENSED PROFESSIONAL ENGINEER
C.G. CARSON
100076892
PROVINCE OF ONTARIO

21 MAR 2017

KOTT

RECEIVED
TOWN OF MILTON
MAR 29, 2017
JUNIPER 2
BUILDING DIVISION

SCALE = 1:20.6

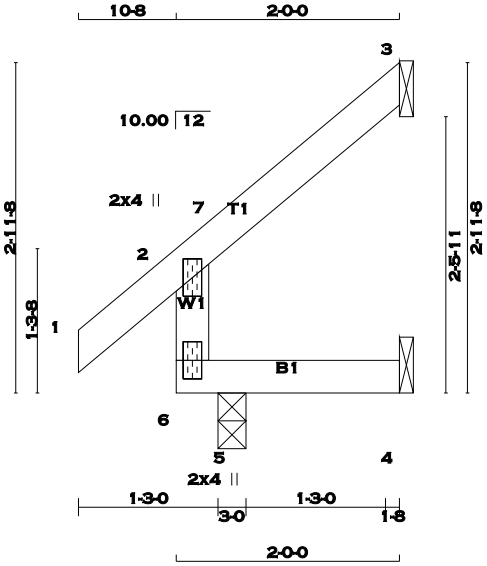

TOTAL WEIGHT = 2 X 8 = 16 lb [M]

LUMBER

N. L. G. A. RULES

CHORDS	SIZE		LUMBER	DESCR.
6 - 2	2x4	DRY	No.2	SPF
1 - 3	2x4	DRY	No.2	SPF
6 - 4	2x4	DRY	No.2	SPF

DRY: SEASONED LUMBER.

PLATES (table is in inches)

JT	TYPE	PLATES	W	LEN	Y	X
2	TMV+p	MT20	2.0	4.0		
6	BMV+p	MT20	2.0	4.0		

A SIZE FOR SIZE SUBSTITUTION OF MITEK MII20 WITH TEE-LOK TL20 PLATES IS ALLOWED.

READ ALL NOTES ON THIS PAGE AND ON THE ENGINEERING NOTE PAGE ENP-1. THE NOTE PAGE IS AN INTEGRAL PART OF THIS DRAWING AS IT CONTAINS SPECIFICATIONS AND CRITERIA USED IN THE DESIGN OF THIS COMPONENT.

LICENSED PROFESSIONAL ENGINEER
C.G. CARSON
100076892
PROVINCE OF ONTARIO

21 MAR 2017

DIMENSIONS, SUPPORTS AND LOADINGS SPECIFIED BY FABRICATOR TO BE VERIFIED BY BUILDING DESIGNER

BEARINGS

JT	FACTORED GROSS REACTION VERT	HORZ	MAXIMUM FACTORED GROSS REACTION DOWN	HORZ	UPLIFT	INPUT BRG IN-SX	REQRD BRG IN-SX
3	63	0	63	0	0	1-8	1-8
4	-23	0	9	0	-23	1-8	1-8
5	225	0	225	0	0	3-0	3-0

SEE MITEK STANDARD DETAIL B37579H FOR CONNECTION TO JOINT(S) 3 , 4

PROVIDE ANCHORAGE AT BEARING JOINT 4 FOR 150 LBS FACTORED UPLIFT

UNFACTORED REACTIONS

JT	1ST LCASE COMBINED	MAX./MIN. COMPONENT REACTIONS SNOW	LIVE	PERM.LIVE	WIND	DEAD	SOIL
3	43	38 / 0	0 / 0	0 / 0	0 / 0	5 / 0	0 / 0
4	-14	0 / -21	0 / 0	0 / 0	0 / 0	6 / 0	0 / 0
5	156	121 / 0	0 / 0	0 / 0	0 / 0	35 / 0	0 / 0

BEARING MATERIAL TO BE SPF NO.2 OR BETTER AT JOINT(S) 5

BRACING

TOP CHORD TO BE SHEATHED OR MAX. PURLIN SPACING = 10.00 FT.
MAX. UNBRACED BOTTOM CHORD LENGTH = 10.00 FT. OR RIGID CEILING DIRECTLY APPLIED.

ALL PITCH BREAKS AND PERIMETER CORNER JOINTS MUST BE LATERALLY RESTRAINED.

LOADING

TOTAL LOAD CASES: (5)

CHORDS

MEMB. FR-TO	MAX. FACTORED FORCE (LBS)	FACTORED VERT. LOAD (PLF) FROM	TO	LC1 MAX CSI (LC)	MAX. UNBRAC LENGTH
6- 2	-167 / 0	0.0	0.0	0.04 (1)	7.81
1- 2	0 / 24	-77.3	-77.3	0.05 (1)	10.00
2- 7	-10 / 0	-77.3	-77.3	0.04 (1)	10.00
7- 3	-10 / 0	-77.3	-77.3	0.04 (1)	10.00
6- 5	0 / 0	-17.5	-17.5	0.07 (1)	10.00
5- 4	0 / 0	-17.5	-17.5	0.07 (1)	10.00

WEBS

MEMB. FR-TO	MAX. FACTORED FORCE (LBS)	MAX CSI (LC)

CANTILEVER ANALYSIS HAS BEEN CONSIDERED IN THIS DESIGN

DESIGN CRITERIA

SPECIFIED LOADS:

TOP CH.	LL	=	23.3	PSF
	DL	=	3.0	PSF
BOT CH.	LL	=	0.0	PSF
	DL	=	7.0	PSF
TOTAL LOAD		=	33.3	PSF

SPACING = 24.0 IN. C/C

THIS TRUSS IS DESIGNED FOR RESIDENTIAL OR SMALL BUILDING REQUIREMENTS OF PART 9, NBCC 2010

THIS DESIGN COMPLIES WITH:
- PART 9 OF OBC 2012 , BCBC 2012 , ABC 2014
- CSA 086-09
- TPIC 2011

DESIGN ASSUMPTIONS
-OVERHANG NOT TO BE ALTERED OR CUT OFF.

(55 % OF 27.2 P.S.F. G.S.L. PLUS 8.4 P.S.F. RAIN LOAD) EQUALS 23.3 P.S.F. SPECIFIED ROOF LIVE LOAD

ALLOWABLE DEFL.(LL)= L/360 (0.19")
CALCULATED VERT. DEFL.(LL) = L/ 999 (0.00")
ALLOWABLE DEFL.(TL)= L/360 (0.19")
CALCULATED VERT. DEFL.(TL) = L/ 999 (0.00")

CANTILEVER DEFLECTION:
ALLOWABLE DEFL.(LL)= L/120 (0.19")
CALCULATED VERT. DEFL.(LL) = L/ 999 (0.00")
ALLOWABLE DEFL.(TL)= L/120 (0.19")
CALCULATED VERT. DEFL.(TL) = L/ 999 (0.00")

CSI: TC=0.05 (1-2:1) , BC=0.07 (4-5:1) , WB=0.00 (n/a:0) , SSI=0.14 (5-6:1)

DOL LUMBER=1.00 NAIL=1.00 LS BEND=1.10 COMP=1.10 SHEAR=1.10 TENS= 1.10

COMPANION LIVE LOAD FACTOR = 0.50

AUTOSOLVE HEELS OFF

TRUSS PLATE MANUFACTURER IS NOT RESPONSIBLE FOR QUALITY CONTROL IN THE TRUSS MANUFACTURING PLANT .

NAIL VALUES

PLATE	GRIP(DRY) (PSI) MAX	MIN	SHEAR (PLI) MAX	MIN	SECTION (PLI) MAX	MIN
MT20	618	354	1667	822	2284	1656

PLATE PLACEMENT TOL. = 0.250 inches

PLATE ROTATION TOL. = 5.0 Deg.

JSI GRIP= 0.12 (2) (INPUT = 0.90)
JSI METAL= 0.05 (2) (INPUT = 1.00)

RECEIVED
TOWN OF MILTON
MAR 29, 2017
JUNIPER 2
BUILDING DIVISION

KOTT

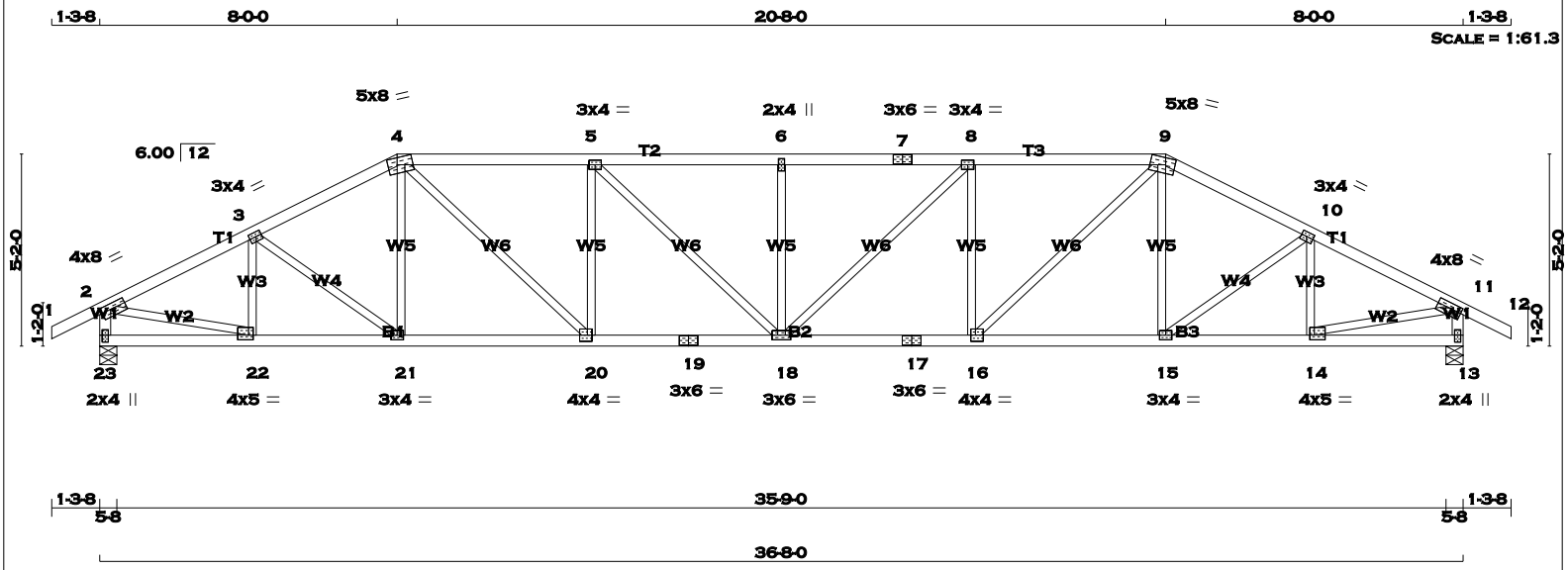

TOTAL WEIGHT = 150 lb [M]

LUMBER

N. L. G. A. RULES

CHORDS	SIZE		LUMBER	DESCR.
1 - 4	2x4	DRY	No.2	SPF
4 - 7	2x4	DRY	No.2	SPF
7 - 9	2x4	DRY	No.2	SPF
9 - 12	2x4	DRY	No.2	SPF
23 - 2	2x4	DRY	No.2	SPF
13 - 11	2x4	DRY	No.2	SPF
23 - 19	2x4	DRY	No.2	SPF
19 - 17	2x4	DRY	No.2	SPF
17 - 13	2x4	DRY	No.2	SPF
ALL WEBS EXCEPT	2x3	DRY	No.2	SPF

DRY: SEASONED LUMBER.

PLATES (table is in inches)

JT	TYPE	PLATES	W	LEN	Y	X
2	TMVW-t	MT20	4.0	8.0	1.75	3.00
3	TMWW-t	MT20	3.0	4.0	1.50	1.75
4	TTWW-m	MT20	5.0	8.0	2.25	3.00
5	TMWW-t	MT20	3.0	4.0		
6	TMW+w	MT20	2.0	4.0		
7	TS-t	MT20	3.0	6.0		
8	TMWW-t	MT20	3.0	4.0		
9	TTWW-m	MT20	5.0	8.0	2.25	3.00
10	TMWW-t	MT20	3.0	4.0	1.50	1.75
11	TMVW-t	MT20	4.0	8.0	1.75	3.00
13	BMV1+p	MT20	2.0	4.0	2.25	1.00
14	BMWW-t	MT20	4.0	5.0	1.50	1.50
15	BMWW-t	MT20	3.0	4.0		
16	BMWW-t	MT20	4.0	4.0	2.00	1.50
17	BS-t	MT20	3.0	6.0		
18	BMWWW-t	MT20	3.0	6.0		
19	BS-t	MT20	3.0	6.0		
20	BMWW-t	MT20	4.0	4.0	2.00	1.50
21	BMWW-t	MT20	3.0	4.0		
22	BMWW-t	MT20	4.0	5.0	1.50	1.50
23	BMV1+p	MT20	2.0	4.0	2.25	1.00

A SIZE FOR SIZE SUBSTITUTION OF MITEK MII20 WITH TEE-LOK TL20 PLATES IS ALLOWED.

READ ALL NOTES ON THIS PAGE AND ON THE ENGINEERING NOTE PAGE ENP-1. THE NOTE PAGE IS AN INTEGRAL PART OF THIS DRAWING AS IT CONTAINS SPECIFICATIONS AND CRITERIA USED IN THE DESIGN OF THIS COMPONENT.

LICENSED PROFESSIONAL ENGINEER
C.G. CARSON
100076892
PROVINCE OF ONTARIO

21 MAR 2017

DIMENSIONS, SUPPORTS AND LOADINGS SPECIFIED BY FABRICATOR TO BE VERIFIED BY BUILDING DESIGNER

BEARINGS

JT	FACTORED GROSS REACTION VERT	HORZ	MAXIMUM FACTORED GROSS REACTION DOWN	HORZ	UPLIFT	INPUT BRG IN-SX	REQRD BRG IN-SX
23	1844	0	1844	0	0	5-8	5-8
13	1844	0	1844	0	0	5-8	5-8

UNFACTORED REACTIONS

JT	1ST LCASE COMBINED	MAX./MIN. COMPONENT REACTIONS SNOW	LIVE	PERM.LIVE	WIND	DEAD	SOIL
23	1292	917 / 0	0 / 0	0 / 0	0 / 0	375 / 0	0 / 0
13	1292	917 / 0	0 / 0	0 / 0	0 / 0	375 / 0	0 / 0

BEARING MATERIAL TO BE SPF NO.2 OR BETTER AT JOINT(S) 23, 13

BRACING

TOP CHORD TO BE SHEATHED OR MAX. PURLIN SPACING = 3.45 FT.
MAX. UNBRACED BOTTOM CHORD LENGTH = 10.00 FT. OR RIGID CEILING DIRECTLY APPLIED.

ALL PITCH BREAKS AND PERIMETER CORNER JOINTS MUST BE LATERALLY RESTRAINED.

LOADING

TOTAL LOAD CASES: (4)

CHORDS

MEMB. FR-TO	MAX. FACTORED FORCE (LBS)	FACTORED VERT. LOAD (PLF) FROM	TO	LC1 MAX CSI (LC)	MAX. UNBRAC LENGTH
1- 2	0 / 23	-77.3	-77.3	0.10 (1)	10.00
2- 3	-2468 / 0	-77.3	-77.3	0.27 (1)	4.16
3- 4	-2523 / 0	-77.3	-77.3	0.27 (1)	4.11
4- 5	-3063 / 0	-77.3	-77.3	0.48 (1)	3.59
5- 6	-3301 / 0	-77.3	-77.3	0.51 (1)	3.45
6- 7	-3301 / 0	-77.3	-77.3	0.51 (1)	3.45
7- 8	-3301 / 0	-77.3	-77.3	0.51 (1)	3.45
8- 9	-3063 / 0	-77.3	-77.3	0.48 (1)	3.59
9-10	-2523 / 0	-77.3	-77.3	0.27 (1)	4.11
10-11	-2468 / 0	-77.3	-77.3	0.27 (1)	4.16
11-12	0 / 23	-77.3	-77.3	0.10 (1)	10.00
23- 2	-1807 / 0	0.0	0.0	0.18 (1)	6.22
13-11	-1807 / 0	0.0	0.0	0.18 (1)	6.22
23-22	0 / 0	-17.5	-17.5	0.06 (4)	10.00
22-21	0 / 2220	-17.5	-17.5	0.40 (1)	10.00
21-20	0 / 2243	-17.5	-17.5	0.41 (1)	10.00
20-19	0 / 3063	-17.5	-17.5	0.54 (1)	10.00
19-18	0 / 3063	-17.5	-17.5	0.54 (1)	10.00
18-17	0 / 3063	-17.5	-17.5	0.54 (1)	10.00
17-16	0 / 3063	-17.5	-17.5	0.54 (1)	10.00
16-15	0 / 2243	-17.5	-17.5	0.41 (1)	10.00
15-14	0 / 2220	-17.5	-17.5	0.40 (1)	10.00
14-13	0 / 0	-17.5	-17.5	0.06 (4)	10.00

WEBS

MEMB. FR-TO	MAX. FACTORED FORCE (LBS)	MAX CSI (LC)
22- 3	-404 / 0	0.08 (1)
3-21	0 / 26	0.01 (1)
21- 4	0 / 82	0.03 (4)
4-20	0 / 1121	0.25 (1)
20- 5	-676 / 0	0.27 (1)
5-18	0 / 328	0.07 (1)
18- 6	-365 / 0	0.14 (1)
18- 8	0 / 328	0.07 (1)
16- 8	-676 / 0	0.27 (1)
16- 9	0 / 1121	0.25 (1)
15- 9	0 / 82	0.03 (4)
15-10	0 / 26	0.01 (1)
14-10	-404 / 0	0.08 (1)
2-22	0 / 2268	0.51 (1)
14-11	0 / 2268	0.51 (1)

DESIGN CRITERIA

SPECIFIED LOADS:

TOP	CH.	LL	=	23.3	PSF
		DL	=	3.0	PSF
BOT	CH.	LL	=	0.0	PSF
		DL	=	7.0	PSF
TOTAL	LOAD		=	33.3	PSF

SPACING = 24.0 IN. C/C

LOADING IN FLAT SECTION BASED ON A SLOPE OF 6.00/12

THIS TRUSS IS DESIGNED FOR RESIDENTIAL OR SMALL BUILDING REQUIREMENTS OF PART 9, NBCC 2010

THIS DESIGN COMPLIES WITH:
- PART 9 OF OBC 2012 , BCBC 2012 , ABC 2014
- CSA 086-09
- TPIC 2011

(55 % OF 27.2 P.S.F. G.S.L. PLUS 8.4 P.S.F. RAIN LOAD) EQUALS 23.3 P.S.F. SPECIFIED ROOF LIVE LOAD

ALLOWABLE DEFL.(LL)= L/360 (1.22")
CALCULATED VERT. DEFL.(LL) = L/ 999 (0.22")
ALLOWABLE DEFL.(TL)= L/360 (1.22")
CALCULATED VERT. DEFL.(TL) = L/ 999 (0.38")

CSI: TC=0.51 (5-6:1) , BC=0.54 (18-20:1) , WB=0.51 (2-22:1) , SSI=0.19 (4-5:1)

DOL LUMBER=1.00 NAIL=1.00 LS BEND=1.10 COMP=1.10 SHEAR=1.10 TENS= 1.10

COMPANION LIVE LOAD FACTOR = 0.50

TRUSS PLATE MANUFACTURER IS NOT RESPONSIBLE FOR QUALITY CONTROL IN THE TRUSS MANUFACTURING PLANT .

NAIL VALUES

PLATE	GRIP(DRY) (PSI) MAX	MIN	SHEAR (PLI) MAX	MIN	SECTION (PLI) MAX	MIN
MT20	618	354	1667	822	2284	1656

PLATE PLACEMENT TOL. = 0.250 inches

PLATE ROTATION TOL. = 5.0 Deg.

JSI GRIP= 0.89 (17) (INPUT = 0.90)
JSI METAL= 0.83 (19) (INPUT = 1.00)

RECEIVED
TOWN OF MILTON
MAR 29, 2017
JUNIPER 2
BUILDING DIVISION

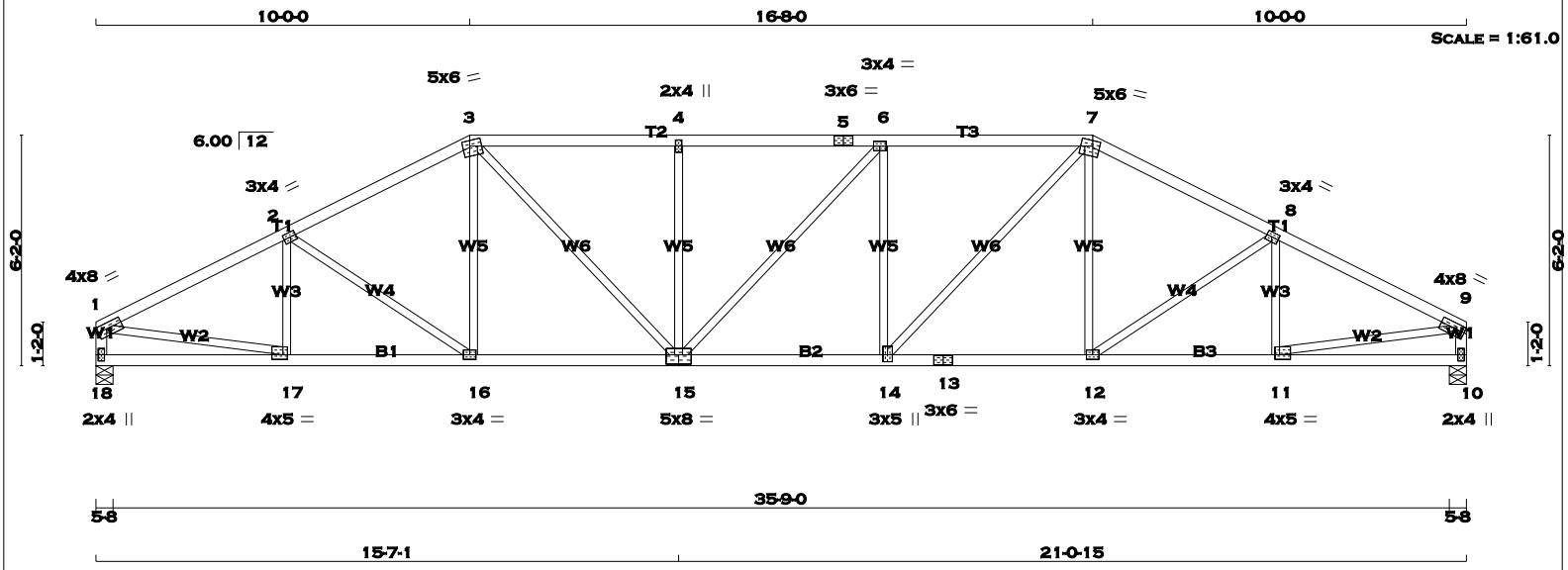

TOTAL WEIGHT = 147 lb

[M][F]

LUMBER

N. L. G. A. RULES

CHORDS	SIZE		LUMBER	DESCR.
1 - 3	2x4	DRY	No.2	SPF
3 - 5	2x4	DRY	No.2	SPF
5 - 7	2x4	DRY	No.2	SPF
7 - 9	2x4	DRY	No.2	SPF
18 - 1	2x4	DRY	No.2	SPF
10 - 9	2x4	DRY	No.2	SPF
18 - 15	2x4	DRY	No.2	SPF
15 - 13	2x4	DRY	No.2	SPF
13 - 10	2x4	DRY	No.2	SPF
ALL WEBS EXCEPT	2x3	DRY	No.2	SPF

DRY: SEASONED LUMBER.

PLATES (table is in inches)

JT	TYPE	PLATES	W	LEN	Y	X
1	TMVW-t	MT20	4.0	8.0	1.75	Edge
2	TMWW-t	MT20	3.0	4.0	1.50	1.75
3	TTWW-m	MT20	5.0	6.0	1.75	2.25
4	TMW+w	MT20	2.0	4.0		
5	TS-t	MT20	3.0	6.0		
6	TMWW-t	MT20	3.0	4.0		
7	TTWW-m	MT20	5.0	6.0	1.75	2.25
8	TMWW-t	MT20	3.0	4.0	1.50	1.75
9	TMVW-t	MT20	4.0	8.0	1.75	Edge
10	BMV1+p	MT20	2.0	4.0		
11	BMWW-t	MT20	4.0	5.0	1.50	1.50
12	BMWW-t	MT20	3.0	4.0		
13	BS-t	MT20	3.0	6.0		
14	BMWW+t	MT20	3.0	5.0	2.25	1.50
15	BSWWW-l	MT20	5.0	8.0	3.00	4.00
16	BMWW-t	MT20	3.0	4.0		
17	BMWW-t	MT20	4.0	5.0	1.50	1.50
18	BMV1+p	MT20	2.0	4.0		

Edge - INDICATES REFERENCE CORNER OF PLATE TOUCHES EDGE OF CHORD.

A SIZE FOR SIZE SUBSTITUTION OF MITEK MII20 WITH TEE-LOK TL20 PLATES IS ALLOWED.

READ ALL NOTES ON THIS PAGE AND ON THE ENGINEERING NOTE PAGE ENP-1. THE NOTE PAGE IS AN INTEGRAL PART OF THIS DRAWING AS IT CONTAINS SPECIFICATIONS AND CRITERIA USED IN THE DESIGN OF THIS COMPONENT.

LICENSED PROFESSIONAL ENGINEER
C.G. CARSON
100076892
PROVINCE OF ONTARIO

21 MAR 2017

DIMENSIONS, SUPPORTS AND LOADINGS SPECIFIED BY FABRICATOR TO BE VERIFIED BY BUILDING DESIGNER

BEARINGS

JT	FACTORED GROSS REACTION VERT	HORZ	MAXIMUM FACTORED GROSS REACTION DOWN	HORZ	UPLIFT	INPUT BRG IN-SX	REQRD BRG IN-SX
18	1739	0	1739	0	0	5-8	5-8
10	1739	0	1739	0	0	5-8	5-8

UNFACTORED REACTIONS

JT	1ST LCASE COMBINED	MAX./MIN. COMPONENT REACTIONS SNOW	LIVE	PERM.LIVE	WIND	DEAD	SOIL
18	1220	854 / 0	0 / 0	0 / 0	0 / 0	367 / 0	0 / 0
10	1220	854 / 0	0 / 0	0 / 0	0 / 0	367 / 0	0 / 0

BEARING MATERIAL TO BE SPF NO.2 OR BETTER AT JOINT(S) 18, 10

BRACING

TOP CHORD TO BE SHEATHED OR MAX. PURLIN SPACING = 3.90 FT.
MAX. UNBRACED BOTTOM CHORD LENGTH = 10.00 FT. OR RIGID CEILING DIRECTLY APPLIED.

ALL PITCH BREAKS AND PERIMETER CORNER JOINTS MUST BE LATERALLY RESTRAINED.

LOADING

TOTAL LOAD CASES: (4)

CHORDS

MEMB. FR-TO	MAX. FACTORED FORCE (LBS)	FACTORED VERT. LOAD (PLF) FROM	TO	LC1 CSI (LC)	MAX UNBRAC LENGTH
1- 2	-2562 / 0	-77.3	-77.3	0.34 (1)	4.04
2- 3	-2437 / 0	-77.3	-77.3	0.32 (1)	4.14
3- 4	-2696 / 0	-77.3	-77.3	0.39 (1)	3.90
4- 5	-2696 / 0	-77.3	-77.3	0.35 (1)	3.94
5- 6	-2696 / 0	-77.3	-77.3	0.35 (1)	3.94
6- 7	-2697 / 0	-77.3	-77.3	0.39 (1)	3.90
7- 8	-2437 / 0	-77.3	-77.3	0.32 (1)	4.14
8- 9	-2562 / 0	-77.3	-77.3	0.34 (1)	4.04
18- 1	-1697 / 0	0.0	0.0	0.17 (1)	6.38
10- 9	-1698 / 0	0.0	0.0	0.17 (1)	6.38
18-17	0 / 0	-17.5	-17.5	0.09 (4)	10.00
17-16	0 / 2309	-17.5	-17.5	0.43 (1)	10.00
16-15	0 / 2164	-17.5	-17.5	0.41 (1)	10.00
15-14	0 / 2697	-17.5	-17.5	0.48 (1)	10.00
14-13	0 / 2164	-17.5	-17.5	0.40 (1)	10.00
13-12	0 / 2164	-17.5	-17.5	0.40 (1)	10.00
12-11	0 / 2309	-17.5	-17.5	0.43 (1)	10.00
11-10	0 / 0	-17.5	-17.5	0.09 (4)	10.00

WEBS

MEMB. FR-TO	MAX. FACTORED FORCE (LBS)	MAX CSI (LC)
17- 2	-301 / 0	0.07 (1)
2-16	-179 / 0	0.11 (1)
16- 3	0 / 200	0.05 (1)
3-15	0 / 771	0.17 (1)
15- 4	-464 / 0	0.28 (1)
15- 6	-2 / 0	0.00 (1)
14- 6	-464 / 0	0.28 (1)
14- 7	0 / 773	0.17 (1)
12- 7	0 / 199	0.04 (1)
12- 8	-180 / 0	0.11 (1)
11- 8	-301 / 0	0.07 (1)
1-17	0 / 2341	0.53 (1)
11- 9	0 / 2341	0.53 (1)

DESIGN CRITERIA

SPECIFIED LOADS:

TOP	CH.	LL	=	23.3	PSF
		DL	=	3.0	PSF
BOT	CH.	LL	=	0.0	PSF
		DL	=	7.0	PSF
TOTAL	LOAD		=	33.3	PSF

SPACING = 24.0 IN. C/C

LOADING IN FLAT SECTION BASED ON A SLOPE OF 2.00/12 MINIMUM

THIS TRUSS IS DESIGNED FOR RESIDENTIAL OR SMALL BUILDING REQUIREMENTS OF PART 9, NBCC 2010

THIS DESIGN COMPLIES WITH:
- PART 9 OF OBC 2012 , BCBC 2012 , ABC 2014
- CSA 086-09
- TPIC 2011

(55 % OF 27.2 P.S.F. G.S.L. PLUS 8.4 P.S.F. RAIN LOAD) EQUALS 23.3 P.S.F. SPECIFIED ROOF LIVE LOAD

ALLOWABLE DEFL.(LL)= L/360 (1.22")
CALCULATED VERT. DEFL.(LL) = L/ 999 (0.17")
ALLOWABLE DEFL.(TL)= L/360 (1.22")
CALCULATED VERT. DEFL.(TL) = L/ 999 (0.31")

CSI: TC=0.39 (3-4:1) , BC=0.48 (14-15:1) , WB=0.53 (9-11:1) , SSI=0.20 (6-7:1)

DOL LUMBER=1.00 NAIL=1.00 LS BEND=1.10 COMP=1.10 SHEAR=1.10 TENS= 1.10

COMPANION LIVE LOAD FACTOR = 0.50

TRUSS PLATE MANUFACTURER IS NOT RESPONSIBLE FOR QUALITY CONTROL IN THE TRUSS MANUFACTURING PLANT .

NAIL VALUES

PLATE	GRIP(DRY) (PSI) MAX	MIN	SHEAR (PLI) MAX	MIN	SECTION (PLI) MAX	MIN
MT20	618	354	1667	822	2284	1656

PLATE PLACEMENT TOL. = 0.250 inches

PLATE ROTATION TOL. = 5.0 Deg.

JSI GRIP= 0.89 (10) (INPUT = 0.90)
JSI METAL= 0.69 (11) (INPUT = 1.00)

KOTT

RECEIVED
TOWN OF MILTON
MAR 29, 2017
JUNIPER 2
BUILDING DIVISION

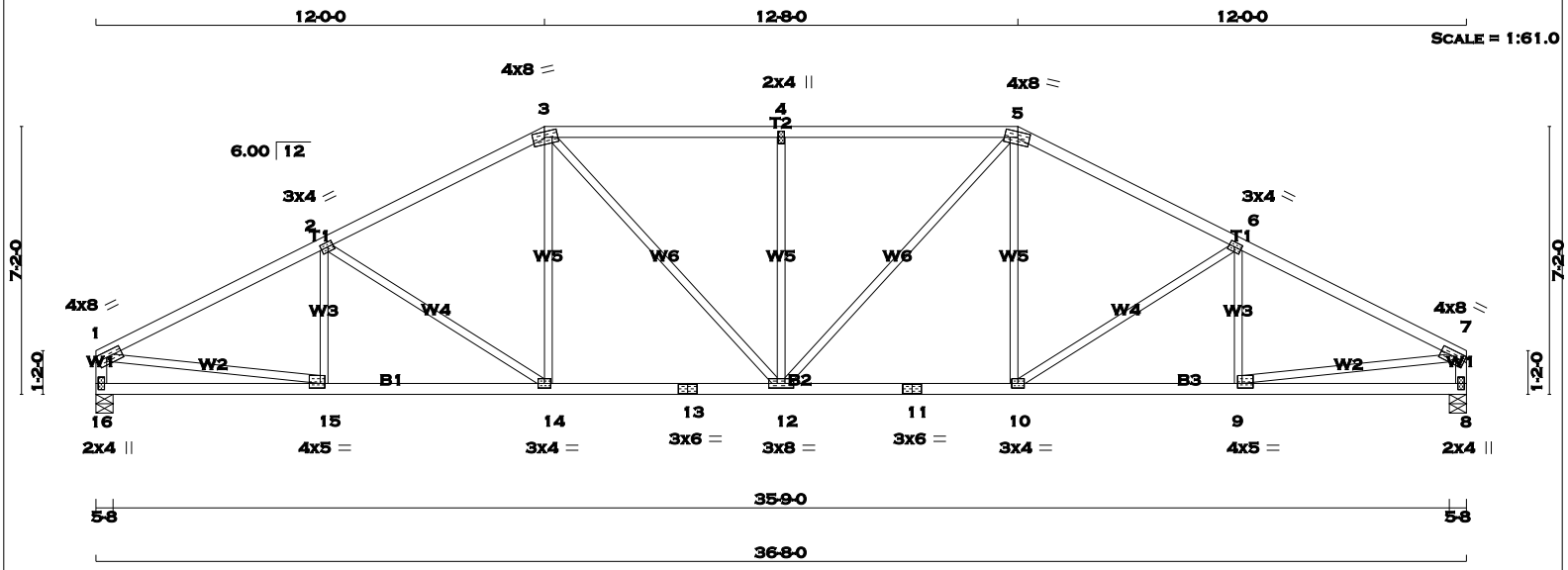

TOTAL WEIGHT = 146 lb

[M][F]

LUMBER

N. L. G. A. RULES

CHORDS	SIZE		LUMBER	DESCR.
1 - 3	2x4	DRY	No.2	SPF
3 - 5	2x4	DRY	No.2	SPF
5 - 7	2x4	DRY	No.2	SPF
16 - 1	2x4	DRY	No.2	SPF
8 - 7	2x4	DRY	No.2	SPF
16 - 13	2x4	DRY	No.2	SPF
13 - 11	2x4	DRY	No.2	SPF
11 - 8	2x4	DRY	No.2	SPF
ALL WEBS EXCEPT	2x3	DRY	No.2	SPF

DRY: SEASONED LUMBER.

PLATES (table is in inches)

JT	TYPE	PLATES	W	LEN	Y	X
1	TMVW-t	MT20	4.0	8.0	1.75	Edge
2	TMWW-t	MT20	3.0	4.0	1.50	1.75
3	TTWW-m	MT20	4.0	8.0	1.75	3.75
4	TMW+w	MT20	2.0	4.0		
5	TTWW-m	MT20	4.0	8.0	1.75	3.75
6	TMWW-t	MT20	3.0	4.0	1.50	1.75
7	TMVW-t	MT20	4.0	8.0	1.75	Edge
8	BMV1+p	MT20	2.0	4.0		
9	BMWW-t	MT20	4.0	5.0	1.50	1.50
10	BMWW-t	MT20	3.0	4.0		
11	BS-t	MT20	3.0	6.0		
12	BMWWW-t	MT20	3.0	8.0		
13	BS-t	MT20	3.0	6.0		
14	BMWW-t	MT20	3.0	4.0		
15	BMWW-t	MT20	4.0	5.0	1.50	1.50
16	BMV1+p	MT20	2.0	4.0		

Edge - INDICATES REFERENCE CORNER OF PLATE TOUCHES EDGE OF CHORD.

A SIZE FOR SIZE SUBSTITUTION OF MITEK MII20 WITH TEE-LOK TL20 PLATES IS ALLOWED.

READ ALL NOTES ON THIS PAGE AND ON THE ENGINEERING NOTE PAGE ENP-1. THE NOTE PAGE IS AN INTEGRAL PART OF THIS DRAWING AS IT CONTAINS SPECIFICATIONS AND CRITERIA USED IN THE DESIGN OF THIS COMPONENT.

LICENSED PROFESSIONAL ENGINEER
C.G. CARSON
100076892
PROVINCE OF ONTARIO

21 MAR 2017

DIMENSIONS, SUPPORTS AND LOADINGS SPECIFIED BY FABRICATOR TO BE VERIFIED BY BUILDING DESIGNER

BEARINGS

JT	FACTORED GROSS REACTION VERT	HORZ	MAXIMUM GROSS REACTION DOWN	HORZ	FACTORED UPLIFT	INPUT BRG IN-SX	REQRD BRG IN-SX
16	1739	0	1739	0	0	5-8	5-8
8	1739	0	1739	0	0	5-8	5-8

UNFACTORED REACTIONS

JT	1ST LCASE COMBINED	MAX./MIN. COMPONENT REACTIONS SNOW	LIVE	PERM.LIVE	WIND	DEAD	SOIL
16	1220	854 / 0	0 / 0	0 / 0	0 / 0	367 / 0	0 / 0
8	1220	854 / 0	0 / 0	0 / 0	0 / 0	367 / 0	0 / 0

BEARING MATERIAL TO BE SPF NO.2 OR BETTER AT JOINT(S) 16, 8

BRACING

TOP CHORD TO BE SHEATHED OR MAX. PURLIN SPACING = 3.85 FT.
MAX. UNBRACED BOTTOM CHORD LENGTH = 10.00 FT. OR RIGID CEILING DIRECTLY APPLIED.

ALL PITCH BREAKS AND PERIMETER CORNER JOINTS MUST BE LATERALLY RESTRAINED.

LOADING

TOTAL LOAD CASES: (4)

CHORDS

MEMB. FR-TO	MAX. FACTORED FORCE (LBS)	FACTORED VERT. LOAD (PLF) FROM	TO	LC1 CSI (LC)	MAX UNBRAC LENGTH
1- 2	-2610 / 0	-77.3	-77.3	0.49 (1)	3.85
2- 3	-2316 / 0	-77.3	-77.3	0.45 (1)	4.09
3- 4	-2380 / 0	-77.3	-77.3	0.50 (1)	3.97
4- 5	-2380 / 0	-77.3	-77.3	0.50 (1)	3.97
5- 6	-2316 / 0	-77.3	-77.3	0.45 (1)	4.09
6- 7	-2610 / 0	-77.3	-77.3	0.49 (1)	3.85
16- 1	-1692 / 0	0.0	0.0	0.17 (1)	6.39
8- 7	-1692 / 0	0.0	0.0	0.17 (1)	6.39
16-15	0 / 0	-17.5	-17.5	0.14 (4)	10.00
15-14	0 / 2356	-17.5	-17.5	0.45 (1)	10.00
14-13	0 / 2053	-17.5	-17.5	0.40 (1)	10.00
13-12	0 / 2053	-17.5	-17.5	0.40 (1)	10.00
12-11	0 / 2053	-17.5	-17.5	0.40 (1)	10.00
11-10	0 / 2053	-17.5	-17.5	0.40 (1)	10.00
10- 9	0 / 2356	-17.5	-17.5	0.45 (1)	10.00
9- 8	0 / 0	-17.5	-17.5	0.14 (4)	10.00

WEBS

MEMB. FR-TO	MAX. FACTORED FORCE (LBS)	MAX CSI (LC)
15- 2	-221 / 34	0.06 (1)
14- 3	-367 / 0	0.36 (1)
3-12	0 / 311	0.07 (1)
3-12	0 / 482	0.11 (1)
12- 4	-601 / 0	0.54 (1)
12- 5	0 / 482	0.11 (1)
10- 5	0 / 311	0.07 (1)
10- 6	-367 / 0	0.36 (1)
9- 6	-221 / 34	0.06 (1)
1-15	0 / 2379	0.54 (1)
9- 7	0 / 2379	0.54 (1)

DESIGN CRITERIA

SPECIFIED LOADS:

TOP	CH.	LL	=	23.3	PSF
		DL	=	3.0	PSF
BOT	CH.	LL	=	0.0	PSF
		DL	=	7.0	PSF
TOTAL	LOAD		=	33.3	PSF

SPACING = 24.0 IN. C/C

LOADING IN FLAT SECTION BASED ON A SLOPE OF 6.00/12

THIS TRUSS IS DESIGNED FOR RESIDENTIAL OR SMALL BUILDING REQUIREMENTS OF PART 9, NBCC 2010

THIS DESIGN COMPLIES WITH:
- PART 9 OF OBC 2012 , BCBC 2012 , ABC 2014
- CSA 086-09
- TPIC 2011

(55 % OF 27.2 P.S.F. G.S.L. PLUS 8.4 P.S.F. RAIN LOAD) EQUALS 23.3 P.S.F. SPECIFIED ROOF LIVE LOAD

ALLOWABLE DEFL.(LL)= L/360 (1.22")
CALCULATED VERT. DEFL.(LL) = L/ 999 (0.15")
ALLOWABLE DEFL.(TL)= L/360 (1.22")
CALCULATED VERT. DEFL.(TL) = L/ 999 (0.28")

CSI: TC=0.50 (3-4:1) , BC=0.45 (14-15:1) , WB=0.54 (4-12:1) , SSI=0.24 (3-4:1)

DOL LUMBER=1.00 NAIL=1.00 LS BEND=1.10 COMP=1.10 SHEAR=1.10 TENS= 1.10

COMPANION LIVE LOAD FACTOR = 0.50

TRUSS PLATE MANUFACTURER IS NOT RESPONSIBLE FOR QUALITY CONTROL IN THE TRUSS MANUFACTURING PLANT .

NAIL VALUES

PLATE	GRIP(DRY) (PSI) MAX	MIN	SHEAR (PLI) MAX	MIN	SECTION (PLI) MAX	MIN
MT20	618	354	1667	822	2284	1656

PLATE PLACEMENT TOL. = 0.250 inches

PLATE ROTATION TOL. = 5.0 Deg.

JSI GRIP= 0.89 (8) (INPUT = 0.90)
JSI METAL= 0.71 (15) (INPUT = 1.00)

KOTT

RECEIVED
TOWN OF MILTON
MAR 29, 2017
JUNIPER 2
BUILDING DIVISION

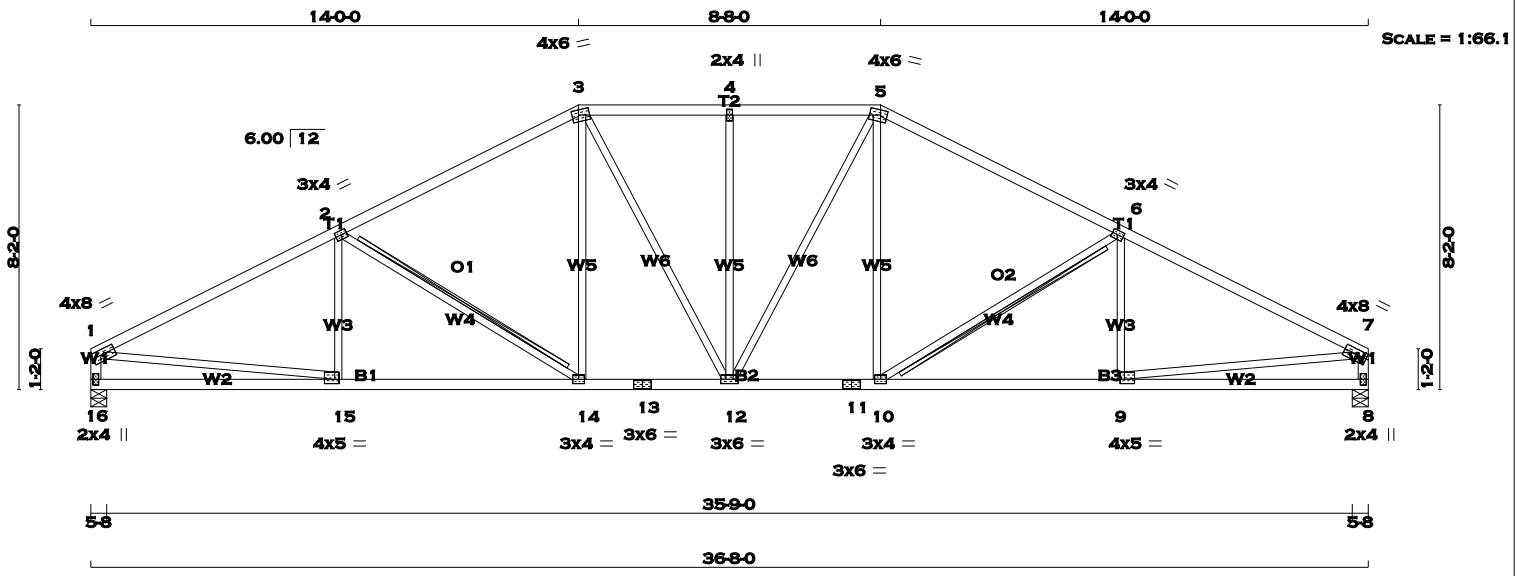

TOTAL WEIGHT = 153 lb

[M][F]

LUMBER

N. L. G. A. RULES

CHORDS	SIZE		LUMBER	DESCR.
1 - 3	2x4	DRY	No.2	SPF
3 - 5	2x4	DRY	No.2	SPF
5 - 7	2x4	DRY	No.2	SPF
16 - 1	2x4	DRY	No.2	SPF
8 - 7	2x4	DRY	No.2	SPF
16 - 13	2x4	DRY	No.2	SPF
13 - 11	2x4	DRY	No.2	SPF
11 - 8	2x4	DRY	No.2	SPF
ALL WEBS EXCEPT	2x3	DRY	No.2	SPF

DRY: SEASONED LUMBER.

PLATES (table is in inches)

JT	TYPE	PLATES	W	LEN	Y	X
1	TMVW-t	MT20	4.0	8.0	1.75	Edge
2	TMWW-t	MT20	3.0	4.0	1.50	1.75
3	TTWW-m	MT20	4.0	6.0	1.75	2.25
4	TMW+w	MT20	2.0	4.0		
5	TTWW-m	MT20	4.0	6.0	1.75	2.25
6	TMWW-t	MT20	3.0	4.0	1.50	1.75
7	TMVW-t	MT20	4.0	8.0	1.75	Edge
8	BMV1+p	MT20	2.0	4.0		
9	BMWW-t	MT20	4.0	5.0	1.50	1.50
10	BMWW-t	MT20	3.0	4.0		
11	BS-t	MT20	3.0	6.0		
12	BMWWW-t	MT20	3.0	6.0		
13	BS-t	MT20	3.0	6.0		
14	BMWW-t	MT20	3.0	4.0		
15	BMWW-t	MT20	4.0	5.0	1.50	1.50
16	BMV1+p	MT20	2.0	4.0		

Edge - INDICATES REFERENCE CORNER OF PLATE TOUCHES EDGE OF CHORD.

A SIZE FOR SIZE SUBSTITUTION OF MITEK MII20 WITH TEE-LOK TL20 PLATES IS ALLOWED.

READ ALL NOTES ON THIS PAGE AND ON THE ENGINEERING NOTE PAGE ENP-1. THE NOTE PAGE IS AN INTEGRAL PART OF THIS DRAWING AS IT CONTAINS SPECIFICATIONS AND CRITERIA USED IN THE DESIGN OF THIS COMPONENT.

LICENSED PROFESSIONAL ENGINEER
C.G. CARSON
100076892
PROVINCE OF ONTARIO

21 MAR 2017

DIMENSIONS, SUPPORTS AND LOADINGS SPECIFIED BY FABRICATOR TO BE VERIFIED BY BUILDING DESIGNER

BEARINGS

JT	FACTORED GROSS REACTION VERT	HORZ	MAXIMUM FACTORED GROSS REACTION DOWN	HORZ	UPLIFT	INPUT BRG IN-SX	REQRD BRG IN-SX
16	1739	0	1739	0	0	5-8	5-8
8	1739	0	1739	0	0	5-8	5-8

UNFACTORED REACTIONS

JT	1ST LCASE COMBINED	MAX./MIN. COMPONENT REACTIONS SNOW	LIVE	PERM.LIVE	WIND	DEAD	SOIL
16	1220	854 / 0	0 / 0	0 / 0	0 / 0	367 / 0	0 / 0
8	1220	854 / 0	0 / 0	0 / 0	0 / 0	367 / 0	0 / 0

BEARING MATERIAL TO BE SPF NO.2 OR BETTER AT JOINT(S) 16, 8

BRACING

TOP CHORD TO BE SHEATHED OR MAX. PURLIN SPACING = 3.61 FT.
MAX. UNBRACED BOTTOM CHORD LENGTH = 10.00 FT. OR RIGID CEILING DIRECTLY APPLIED.

ALL PITCH BREAKS AND PERIMETER CORNER JOINTS MUST BE LATERALLY RESTRAINED.

2x3 SPF No.2 T-BRACE AT 2-14, 6-10

FASTEN T AND I-BRACES TO NARROW EDGE OF WEB WITH ONE ROW PER PLY OF 3" COMMON WIRE NAILS @ 6" O.C. WITH 3" MINIMUM END DISTANCE. BRACE MUST COVER 90% OF WEB LENGTH.

END VERTICAL(S) MUST BE SHEATHED OR HAVE BRACES AS INDICATED IN THE MAX. UNBRACED LENGTH COLUMN OF THE TABLE BELOW

LOADING

TOTAL LOAD CASES: (4)

CHORDS

MEMB. FR-TO	MAX. FACTORED FORCE (LBS)	FACTORED VERT. LOAD (PLF) FROM	TO	LC1 MAX CSI (LC)	MAX. UNBRAC LENGTH
1- 2	-2629 / 0	-77.3	-77.3	0.71 (1)	3.61
2- 3	-2172 / 0	-77.3	-77.3	0.62 (1)	3.99
3- 4	-2046 / 0	-77.3	-77.3	0.23 (1)	4.54
4- 5	-2046 / 0	-77.3	-77.3	0.23 (1)	4.54
5- 6	-2172 / 0	-77.3	-77.3	0.62 (1)	3.99
6- 7	-2629 / 0	-77.3	-77.3	0.71 (1)	3.61
16- 1	-1687 / 0	0.0	0.0	0.17 (1)	6.39
8- 7	-1687 / 0	0.0	0.0	0.17 (1)	6.39
16-15	0 / 0	-17.5	-17.5	0.21 (4)	10.00
15-14	0 / 2377	-17.5	-17.5	0.48 (1)	10.00
14-13	0 / 1920	-17.5	-17.5	0.38 (1)	10.00
13-12	0 / 1920	-17.5	-17.5	0.38 (1)	10.00
12-11	0 / 1920	-17.5	-17.5	0.38 (1)	10.00
11-10	0 / 1920	-17.5	-17.5	0.38 (1)	10.00
10- 9	0 / 2377	-17.5	-17.5	0.48 (1)	10.00
9- 8	0 / 0	-17.5	-17.5	0.21 (4)	10.00

WEBS

MEMB. FR-TO	MAX. FACTORED FORCE (LBS)	MAX CSI (LC)
15- 2	-151 / 75	0.05 (1)
2-14	-546 / 0	0.63 (1)
14- 3	0 / 397	0.09 (1)
3-12	0 / 261	0.06 (1)
12- 4	-404 / 0	0.52 (1)
12- 5	0 / 261	0.06 (1)
10- 5	0 / 397	0.09 (1)
10- 6	-546 / 0	0.63 (1)
9- 6	-151 / 75	0.05 (1)
1-15	0 / 2394	0.54 (1)
9- 7	0 / 2394	0.54 (1)

KOTT

DESIGN CRITERIA

SPECIFIED LOADS:

TOP	CH.	LL	=	23.3	PSF
		DL	=	3.0	PSF
BOT	CH.	LL	=	0.0	PSF
		DL	=	7.0	PSF
TOTAL	LOAD		=	33.3	PSF

SPACING = 24.0 IN. C/C

LOADING IN FLAT SECTION BASED ON A SLOPE OF 2.00/12 MINIMUM

THIS TRUSS IS DESIGNED FOR RESIDENTIAL OR SMALL BUILDING REQUIREMENTS OF PART 9, NBCC 2010

THIS DESIGN COMPLIES WITH:
- PART 9 OF OBC 2012 , BCBC 2012 , ABC 2014
- CSA 086-09
- TPIC 2011

(55 % OF 27.2 P.S.F. G.S.L. PLUS 8.4 P.S.F. RAIN LOAD) EQUALS 23.3 P.S.F. SPECIFIED ROOF LIVE LOAD

ALLOWABLE DEFL.(LL)= L/360 (1.22")
CALCULATED VERT. DEFL.(LL) = L/ 999 (0.14")
ALLOWABLE DEFL.(TL)= L/360 (1.22")
CALCULATED VERT. DEFL.(TL) = L/ 999 (0.26")

CSI: TC=0.71 (1-2:1) , BC=0.48 (9-10:1) , WB=0.63 (6-10:1) , SSI=0.24 (1-2:1)

DOL LUMBER=1.00 NAIL=1.00 LS BEND=1.10 COMP=1.10 SHEAR=1.10 TENS= 1.10

COMPANION LIVE LOAD FACTOR = 0.50

TRUSS PLATE MANUFACTURER IS NOT RESPONSIBLE FOR QUALITY CONTROL IN THE TRUSS MANUFACTURING PLANT .

NAIL VALUES

PLATE	GRIP(DRY) (PSI) MAX	MIN	SHEAR (PLI) MAX	MIN	SECTION (PLI) MAX	MIN
MT20	618	354	1667	822	2284	1656

PLATE PLACEMENT TOL. = 0.250 inches

PLATE ROTATION TOL. = 5.0 Deg.

JSI GRIP= 0.88 (8) (INPUT = 0.90)
JSI METAL= 0.71 (9) (INPUT = 1.00)

RECEIVED
TOWN OF MILTON
MAR 29, 2017
JUNIPER 2
BUILDING DIVISION

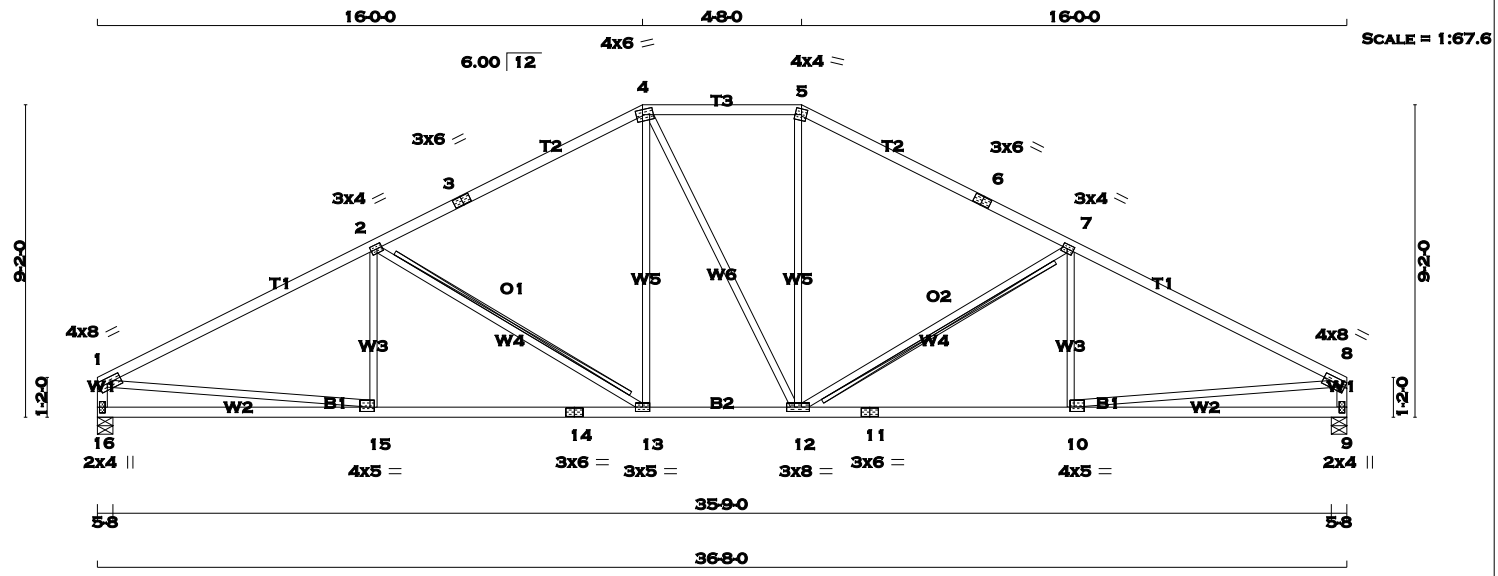

TOTAL WEIGHT = 147 lb

[M][F]

LUMBER

N. L. G. A. RULES

CHORDS	SIZE		LUMBER	DESCR.
1 - 3	2x4	DRY	No.2	SPF
3 - 4	2x4	DRY	No.2	SPF
4 - 5	2x4	DRY	No.2	SPF
5 - 6	2x4	DRY	No.2	SPF
6 - 8	2x4	DRY	No.2	SPF
16 - 1	2x4	DRY	No.2	SPF
9 - 8	2x4	DRY	No.2	SPF
16 - 14	2x4	DRY	No.2	SPF
14 - 11	2x4	DRY	No.2	SPF
11 - 9	2x4	DRY	No.2	SPF
ALL WEBS EXCEPT	2x3	DRY	No.2	SPF

DRY: SEASONED LUMBER.

PLATES (table is in inches)

JT	TYPE	PLATES	W	LEN	Y	X
1	TMVW-t	MT20	4.0	8.0	1.75	Edge
2	TMWW-t	MT20	3.0	4.0	1.50	1.75
3	TS-t	MT20	3.0	6.0		
4	TTWW-m	MT20	4.0	6.0	1.75	2.25
5	TTW-m	MT20	4.0	4.0	2.00	1.75
6	TS-t	MT20	3.0	6.0		
7	TMWW-t	MT20	3.0	4.0	1.50	1.75
8	TMVW-t	MT20	4.0	8.0	1.75	Edge
9	BMV1+p	MT20	2.0	4.0		
10	BMWW-t	MT20	4.0	5.0	1.50	1.50
11	BS-t	MT20	3.0	6.0		
12	BMWWW-t	MT20	3.0	8.0		
13	BMWW-t	MT20	3.0	5.0		
14	BS-t	MT20	3.0	6.0		
15	BMWW-t	MT20	4.0	5.0	1.50	1.50
16	BMV1+p	MT20	2.0	4.0		

Edge - INDICATES REFERENCE CORNER OF PLATE TOUCHES EDGE OF CHORD.

A SIZE FOR SIZE SUBSTITUTION OF MITEK MII20 WITH TEE-LOK TL20 PLATES IS ALLOWED.

READ ALL NOTES ON THIS PAGE AND ON THE ENGINEERING NOTE PAGE ENP-1. THE NOTE PAGE IS AN INTEGRAL PART OF THIS DRAWING AS IT CONTAINS SPECIFICATIONS AND CRITERIA USED IN THE DESIGN OF THIS COMPONENT.

LICENSED PROFESSIONAL ENGINEER
C.G. CARSON
100076892
PROVINCE OF ONTARIO

21 MAR 2017

DIMENSIONS, SUPPORTS AND LOADINGS SPECIFIED BY FABRICATOR TO BE VERIFIED BY BUILDING DESIGNER

BEARINGS

JT	FACTORED GROSS REACTION VERT	HORZ	MAXIMUM FACTORED GROSS REACTION DOWN	HORZ	UPLIFT	INPUT BRG IN-SX	REQRD BRG IN-SX
16	1739	0	1739	0	0	5-8	5-8
9	1739	0	1739	0	0	5-8	5-8

UNFACTORED REACTIONS

JT	1ST LCASE COMBINED	MAX./MIN. COMPONENT REACTIONS SNOW	LIVE	PERM.LIVE	WIND	DEAD	SOIL
16	1220	854 / 0	0 / 0	0 / 0	0 / 0	367 / 0	0 / 0
9	1220	854 / 0	0 / 0	0 / 0	0 / 0	367 / 0	0 / 0

BEARING MATERIAL TO BE SPF NO.2 OR BETTER AT JOINT(S) 16, 9

BRACING

TOP CHORD TO BE SHEATHED OR MAX. PURLIN SPACING = 3.22 FT.
MAX. UNBRACED BOTTOM CHORD LENGTH = 10.00 FT. OR RIGID CEILING DIRECTLY APPLIED.

ALL PITCH BREAKS AND PERIMETER CORNER JOINTS MUST BE LATERALLY RESTRAINED.

2x4 SPF No.2 T-BRACE AT 2-13, 7-12

FASTEN T AND I-BRACES TO NARROW EDGE OF WEB WITH ONE ROW PER PLY OF 3" COMMON WIRE NAILS @ 6" O.C. WITH 3" MINIMUM END DISTANCE. BRACE MUST COVER 90% OF WEB LENGTH.

END VERTICAL(S) MUST BE SHEATHED OR HAVE BRACES AS INDICATED IN THE MAX. UNBRACED LENGTH COLUMN OF THE TABLE BELOW

LOADING

TOTAL LOAD CASES: (4)

CHORDS

MEMB. FR-TO	MAX. FACTORED FORCE (LBS)	FACTORED VERT. LOAD LC1 (PLF) FROM	TO	MAX CSI (LC)	MAX. UNBRAC LENGTH
1- 2	-2627 / 0	-77.3	-77.3	0.98 (1)	3.22
2- 3	-2013 / 0	-77.3	-77.3	0.82 (1)	3.76
3- 4	-2013 / 0	-77.3	-77.3	0.82 (1)	3.76
4- 5	-1776 / 0	-77.3	-77.3	0.26 (1)	4.77
5- 6	-2014 / 0	-77.3	-77.3	0.82 (1)	3.76
6- 7	-2014 / 0	-77.3	-77.3	0.82 (1)	3.76
7- 8	-2627 / 0	-77.3	-77.3	0.98 (1)	3.22
16- 1	-1681 / 0	0.0	0.0	0.17 (1)	6.41
9- 8	-1681 / 0	0.0	0.0	0.17 (1)	6.41
16-15	0 / 0	-17.5	-17.5	0.29 (4)	10.00
15-14	0 / 2380	-17.5	-17.5	0.53 (1)	10.00
14-13	0 / 2380	-17.5	-17.5	0.53 (1)	10.00
13-12	0 / 1775	-17.5	-17.5	0.37 (1)	10.00
12-11	0 / 2379	-17.5	-17.5	0.52 (1)	10.00
11-10	0 / 2379	-17.5	-17.5	0.52 (1)	10.00
10- 9	0 / 0	-17.5	-17.5	0.29 (4)	10.00

WEBS

MEMB. FR-TO	MAX. FACTORED FORCE (LBS)	MAX CSI (LC)
15- 2	-92 / 110	0.04 (4)
2-13	-716 / 0	0.51 (1)
13- 4	0 / 476	0.11 (1)
4-12	0 / 2	0.00 (1)
12- 5	0 / 477	0.11 (1)
12- 7	-714 / 0	0.51 (1)
10- 7	-93 / 110	0.04 (4)
1-15	0 / 2393	0.54 (1)
10- 8	0 / 2393	0.54 (1)

DESIGN CRITERIA

SPECIFIED LOADS:

TOP CH.	LL	=	23.3	PSF
	DL	=	3.0	PSF
BOT CH.	LL	=	0.0	PSF
	DL	=	7.0	PSF
TOTAL LOAD		=	33.3	PSF

SPACING = 24.0 IN. C/C

LOADING IN FLAT SECTION BASED ON A SLOPE OF 6.00/12

THIS TRUSS IS DESIGNED FOR RESIDENTIAL OR SMALL BUILDING REQUIREMENTS OF PART 9, NBCC 2010

THIS DESIGN COMPLIES WITH:
- PART 9 OF OBC 2012 , BCBC 2012 , ABC 2014
- CSA 086-09
- TPIC 2011

(55 % OF 27.2 P.S.F. G.S.L. PLUS 8.4 P.S.F. RAIN LOAD) EQUALS 23.3 P.S.F. SPECIFIED ROOF LIVE LOAD

ALLOWABLE DEFL.(LL)= L/360 (1.22")
CALCULATED VERT. DEFL.(LL) = L/ 999 (0.15")
ALLOWABLE DEFL.(TL)= L/360 (1.22")
CALCULATED VERT. DEFL.(TL) = L/ 999 (0.30")

CSI: TC=0.98 (1-2:1) , BC=0.53 (13-15:1) , WB=0.54 (1-15:1) , SSI=0.27 (7-8:1)

DOL LUMBER=1.00 NAIL=1.00 LS BEND=1.10 COMP=1.10 SHEAR=1.10 TENS= 1.10

COMPANION LIVE LOAD FACTOR = 0.50

TRUSS PLATE MANUFACTURER IS NOT RESPONSIBLE FOR QUALITY CONTROL IN THE TRUSS MANUFACTURING PLANT .

NAIL VALUES

PLATE	GRIP(DRY) (PSI) MAX	MIN	SHEAR (PLI) MAX	MIN	SECTION (PLI) MAX	MIN
MT20	618	354	1667	822	2284	1656

PLATE PLACEMENT TOL. = 0.250 inches

PLATE ROTATION TOL. = 5.0 Deg.

JSI GRIP= 0.88 (16) (INPUT = 0.90)
JSI METAL= 0.71 (15) (INPUT = 1.00)

KOTT

RECEIVED
TOWN OF MILTON
MAR 29, 2017
JUNIPER 2
BUILDING DIVISION

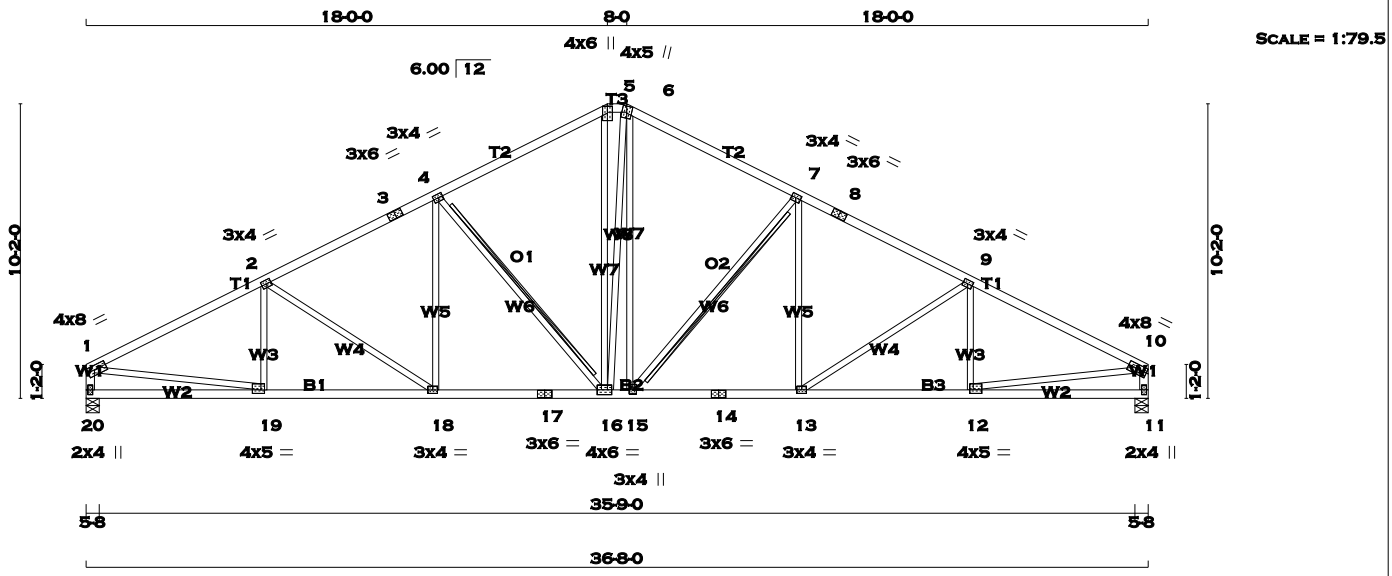

TOTAL WEIGHT = 165 lb

[M][F]

LUMBER

N. L. G. A. RULES

CHORDS	SIZE		LUMBER	DESCR.
1 - 3	2x4	DRY	No.2	SPF
3 - 5	2x4	DRY	No.2	SPF
5 - 6	2x4	DRY	No.2	SPF
6 - 8	2x4	DRY	No.2	SPF
8 - 10	2x4	DRY	No.2	SPF
20 - 1	2x4	DRY	No.2	SPF
11 - 10	2x4	DRY	No.2	SPF
20 - 17	2x4	DRY	No.2	SPF
17 - 14	2x4	DRY	No.2	SPF
14 - 11	2x4	DRY	No.2	SPF
ALL WEBS EXCEPT	2x3	DRY	No.2	SPF

DRY: SEASONED LUMBER.

PLATES (table is in inches)

JT	TYPE	PLATES	W	LEN	Y	X
1	TMVW-t	MT20	4.0	8.0	1.75	Edge
2, 4, 7, 9						
2	TMWW-t	MT20	3.0	4.0	1.50	1.75
3	TS-t	MT20	3.0	6.0		
5	TTW+p	MT20	4.0	6.0	2.50	2.00
6	TTWW+m	MT20	4.0	5.0		
8	TS-t	MT20	3.0	6.0		
10	TMVW-t	MT20	4.0	8.0	1.75	Edge
11	BMV1+p	MT20	2.0	4.0		
12	BMWW-t	MT20	4.0	5.0	1.50	1.50
13	BMWW-t	MT20	3.0	4.0		
14	BS-t	MT20	3.0	6.0		
15	BMWW+t	MT20	3.0	4.0	1.75	1.50
16	BMWWW-t	MT20	4.0	6.0		
17	BS-t	MT20	3.0	6.0		
18	BMWW-t	MT20	3.0	4.0		
19	BMWW-t	MT20	4.0	5.0	1.50	1.50
20	BMV1+p	MT20	2.0	4.0		

Edge - INDICATES REFERENCE CORNER OF PLATE TOUCHES EDGE OF CHORD.

A SIZE FOR SIZE SUBSTITUTION OF MITEK MII20 WITH TEE-LOK TL20 PLATES IS ALLOWED.

READ ALL NOTES ON THIS PAGE AND ON THE ENGINEERING NOTE PAGE ENP-1. THE NOTE PAGE IS AN INTEGRAL PART OF THIS DRAWING AS IT CONTAINS SPECIFICATIONS AND CRITERIA USED IN THE DESIGN OF THIS COMPONENT.

LICENSED PROFESSIONAL ENGINEER
C.G. CARSON
100076892
PROVINCE OF ONTARIO

21 MAR 2017

DIMENSIONS, SUPPORTS AND LOADINGS SPECIFIED BY FABRICATOR TO BE VERIFIED BY BUILDING DESIGNER

BEARINGS

JT	FACTORED GROSS REACTION VERT	HORZ	MAXIMUM FACTORED GROSS REACTION DOWN	HORZ	UPLIFT	INPUT BRG IN-SX	REQRD BRG IN-SX
20	1739	0	1739	0	0	5-8	5-8
11	1739	0	1739	0	0	5-8	5-8

UNFACTORED REACTIONS

JT	1ST LCASE COMBINED	MAX./MIN. COMPONENT REACTIONS SNOW	LIVE	PERM.LIVE	WIND	DEAD	SOIL
20	1220	854 / 0	0 / 0	0 / 0	0 / 0	367 / 0	0 / 0
11	1220	854 / 0	0 / 0	0 / 0	0 / 0	367 / 0	0 / 0

BEARING MATERIAL TO BE SPF NO.2 OR BETTER AT JOINT(S) 20, 11

BRACING

TOP CHORD TO BE SHEATHED OR MAX. PURLIN SPACING = 3.88 FT.
MAX. UNBRACED BOTTOM CHORD LENGTH = 10.00 FT. OR RIGID CEILING DIRECTLY APPLIED.

ALL PITCH BREAKS AND PERIMETER CORNER JOINTS MUST BE LATERALLY RESTRAINED.

2x4 SPF No.2 T-BRACE AT 4-16, 7-15

FASTEN T AND I-BRACES TO NARROW EDGE OF WEB WITH ONE ROW PER PLY OF 3" COMMON WIRE NAILS @ 6" O.C. WITH 3" MINIMUM END DISTANCE. BRACE MUST COVER 90% OF WEB LENGTH.

END VERTICAL(S) MUST BE SHEATHED OR HAVE BRACES AS INDICATED IN THE MAX. UNBRACED LENGTH COLUMN OF THE TABLE BELOW

LOADING

TOTAL LOAD CASES: (4)

CHORDS

MEMB. FR-TO	MAX. FACTORED FORCE (LBS)	FACTORED VERT. LOAD (PLF) FROM	TO	LC1 MAX CSI (LC)	MAX. UNBRAC LENGTH
1- 2	-2599 / 0	-77.3	-77.3	0.49 (1)	3.88
2- 3	-2332 / 0	-77.3	-77.3	0.40 (1)	4.16
3- 4	-2332 / 0	-77.3	-77.3	0.40 (1)	4.16
4- 5	-1842 / 0	-77.3	-77.3	0.38 (1)	4.57
5- 6	-1622 / 0	-77.3	-77.3	0.03 (1)	5.19
6- 7	-1835 / 0	-77.3	-77.3	0.38 (1)	4.58
7- 8	-2335 / 0	-77.3	-77.3	0.40 (1)	4.16
8- 9	-2335 / 0	-77.3	-77.3	0.40 (1)	4.16
9-10	-2598 / 0	-77.3	-77.3	0.49 (1)	3.88
20- 1	-1693 / 0	0.0	0.0	0.17 (1)	6.39
11-10	-1692 / 0	0.0	0.0	0.17 (1)	6.39
20-19	0 / 0	-17.5	-17.5	0.14 (4)	10.00
19-18	0 / 2342	-17.5	-17.5	0.44 (1)	10.00
18-17	0 / 2086	-17.5	-17.5	0.43 (1)	10.00
17-16	0 / 2086	-17.5	-17.5	0.43 (1)	10.00
16-15	0 / 1617	-17.5	-17.5	0.36 (1)	10.00
15-14	0 / 2088	-17.5	-17.5	0.40 (1)	10.00
14-13	0 / 2088	-17.5	-17.5	0.40 (1)	10.00
13-12	0 / 2341	-17.5	-17.5	0.44 (1)	10.00
12-11	0 / 0	-17.5	-17.5	0.14 (4)	10.00

WEBS

MEMB. FR-TO	MAX. FACTORED FORCE (LBS)	MAX CSI (LC)
19- 2	-212 / 36	0.06 (1)
2-18	-307 / 0	0.30 (1)
18- 4	0 / 264	0.06 (1)
4-16	-708 / 0	0.45 (1)
16- 5	0 / 606	0.14 (1)
16- 6	0 / 66	0.01 (1)
15- 6	0 / 538	0.12 (1)
15- 7	-721 / 0	0.46 (1)
13- 7	0 / 277	0.06 (1)
13- 9	-303 / 0	0.29 (1)
12- 9	-216 / 35	0.06 (1)
1-19	0 / 2365	0.53 (1)
12-10	0 / 2364	0.53 (1)

DESIGN CRITERIA

SPECIFIED LOADS:

TOP CH.	LL	=	23.3	PSF
	DL	=	3.0	PSF
BOT CH.	LL	=	0.0	PSF
	DL	=	7.0	PSF
TOTAL LOAD		=	33.3	PSF

SPACING = 24.0 IN. C/C

LOADING IN FLAT SECTION BASED ON A SLOPE OF 6.00/12

THIS TRUSS IS DESIGNED FOR RESIDENTIAL OR SMALL BUILDING REQUIREMENTS OF PART 9, NBCC 2010

THIS DESIGN COMPLIES WITH:
- PART 9 OF OBC 2012 , BCBC 2012 , ABC 2014
- CSA 086-09
- TPIC 2011

(55 % OF 27.2 P.S.F. G.S.L. PLUS 8.4 P.S.F. RAIN LOAD) EQUALS 23.3 P.S.F. SPECIFIED ROOF LIVE LOAD

ALLOWABLE DEFL.(LL)= L/360 (1.22")
CALCULATED VERT. DEFL.(LL) = L/ 999 (0.15")
ALLOWABLE DEFL.(TL)= L/360 (1.22")
CALCULATED VERT. DEFL.(TL) = L/ 999 (0.27")

CSI: TC=0.49 (1-2:1) , BC=0.44 (12-13:1) , WB=0.53 (1-19:1) , SSI=0.20 (1-2:1)

DOL LUMBER=1.00 NAIL=1.00 LS BEND=1.10 COMP=1.10 SHEAR=1.10 TENS= 1.10

COMPANION LIVE LOAD FACTOR = 0.50

TRUSS PLATE MANUFACTURER IS NOT RESPONSIBLE FOR QUALITY CONTROL IN THE TRUSS MANUFACTURING PLANT .

NAIL VALUES

PLATE	GRIP(DRY) (PSI) MAX	MIN	SHEAR (PLI) MAX	MIN	SECTION (PLI) MAX	MIN
MT20	618	354	1667	822	2284	1656

PLATE PLACEMENT TOL. = 0.250 inches

PLATE ROTATION TOL. = 5.0 Deg.

JSI GRIP= 0.89 (20) (INPUT = 0.90)
JSI METAL= 0.70 (19) (INPUT = 1.00)

KOTT

RECEIVED
TOWN OF MILTON
MAR 29, 2017
JUNIPER 2
BUILDING DIVISION

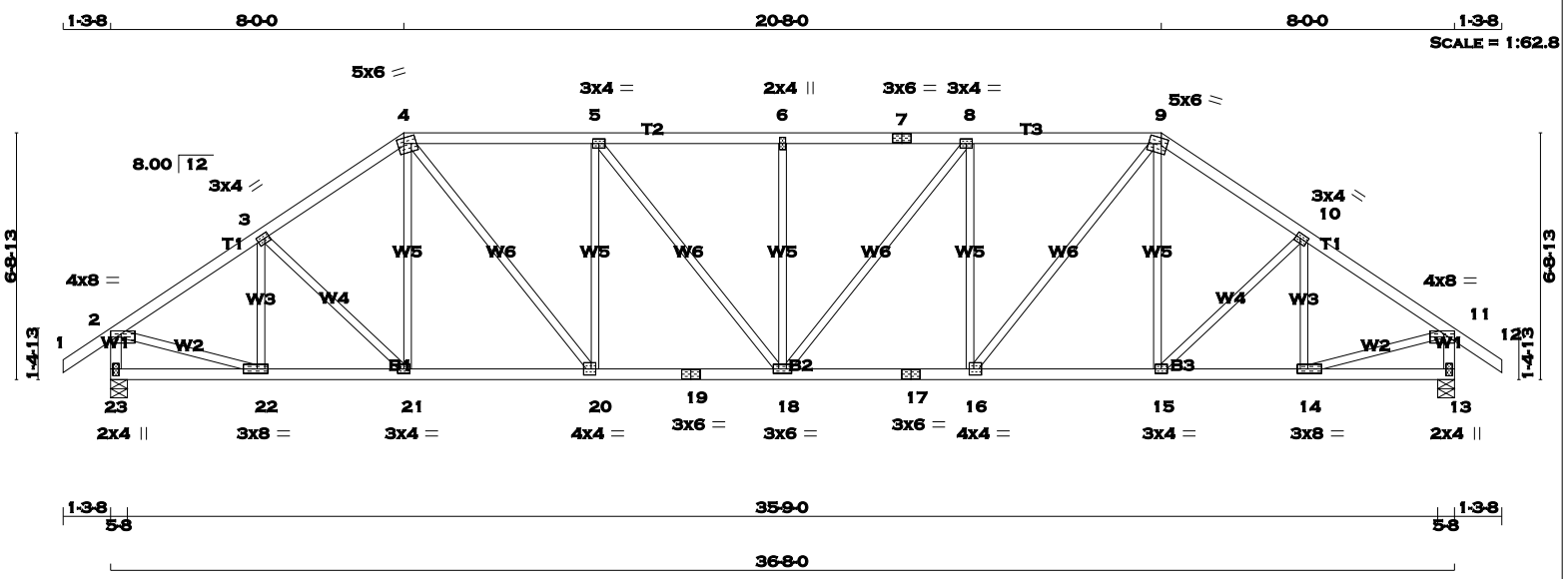

TOTAL WEIGHT = 165 lb [M]

LUMBER

N. L. G. A. RULES

CHORDS	SIZE		LUMBER	DESCR.
1 - 4	2x4	DRY	No.2	SPF
4 - 7	2x4	DRY	No.2	SPF
7 - 9	2x4	DRY	No.2	SPF
9 - 12	2x4	DRY	No.2	SPF
23 - 2	2x4	DRY	No.2	SPF
13 - 11	2x4	DRY	No.2	SPF
23 - 19	2x4	DRY	No.2	SPF
19 - 17	2x4	DRY	No.2	SPF
17 - 13	2x4	DRY	No.2	SPF
ALL WEBS EXCEPT	2x3	DRY	No.2	SPF

DRY: SEASONED LUMBER.

PLATES (table is in inches)

JT	TYPE	PLATES	W	LEN	Y	X
2	TMVW-p	MT20	4.0	8.0	1.00	3.50
3	TMWW-t	MT20	3.0	4.0	1.50	1.50
4	TTWW-m	MT20	5.0	6.0	1.75	2.00
5	TMWW-t	MT20	3.0	4.0		
6	TMW+w	MT20	2.0	4.0		
7	TS-t	MT20	3.0	6.0		
8	TMWW-t	MT20	3.0	4.0		
9	TTWW-m	MT20	5.0	6.0	1.75	2.00
10	TMWW-t	MT20	3.0	4.0	1.50	1.50
11	TMVW-p	MT20	4.0	8.0	1.00	3.50
13	BMV1+p	MT20	2.0	4.0	2.25	1.00
14	BMWW-t	MT20	3.0	8.0	1.50	3.50
15	BMWW-t	MT20	3.0	4.0		
16	BMWW-t	MT20	4.0	4.0	2.00	1.50
17	BS-t	MT20	3.0	6.0		
18	BMWWW-t	MT20	3.0	6.0		
19	BS-t	MT20	3.0	6.0		
20	BMWW-t	MT20	4.0	4.0	2.00	1.50
21	BMWW-t	MT20	3.0	4.0		
22	BMWW-t	MT20	3.0	8.0	1.50	3.50
23	BMV1+p	MT20	2.0	4.0	2.25	1.00

A SIZE FOR SIZE SUBSTITUTION OF MITEK MII20 WITH TEE-LOK TL20 PLATES IS ALLOWED.

READ ALL NOTES ON THIS PAGE AND ON THE ENGINEERING NOTE PAGE ENP-1. THE NOTE PAGE IS AN INTEGRAL PART OF THIS DRAWING AS IT CONTAINS SPECIFICATIONS AND CRITERIA USED IN THE DESIGN OF THIS COMPONENT.

LICENSED PROFESSIONAL ENGINEER
C.G. CARSON
100076892
PROVINCE OF ONTARIO

21 MAR 2017

DIMENSIONS, SUPPORTS AND LOADINGS SPECIFIED BY FABRICATOR TO BE VERIFIED BY BUILDING DESIGNER

BEARINGS

JT	FACTORED GROSS REACTION VERT	HORZ	MAXIMUM FACTORED GROSS REACTION DOWN	HORZ	UPLIFT	INPUT BRG IN-SX	REQRD BRG IN-SX
23	1845	0	1845	0	0	5-8	5-8
13	1845	0	1845	0	0	5-8	5-8

UNFACTORED REACTIONS

JT	1ST LCASE COMBINED	MAX./MIN. COMPONENT REACTIONS SNOW	LIVE	PERM.LIVE	WIND	DEAD	SOIL
23	1293	918 / 0	0 / 0	0 / 0	0 / 0	375 / 0	0 / 0
13	1293	918 / 0	0 / 0	0 / 0	0 / 0	375 / 0	0 / 0

BEARING MATERIAL TO BE SPF NO.2 OR BETTER AT JOINT(S) 23, 13

BRACING

TOP CHORD TO BE SHEATHED OR MAX. PURLIN SPACING = 3.97 FT.
MAX. UNBRACED BOTTOM CHORD LENGTH = 10.00 FT. OR RIGID CEILING DIRECTLY APPLIED.

ALL PITCH BREAKS AND PERIMETER CORNER JOINTS MUST BE LATERALLY RESTRAINED.

LOADING

TOTAL LOAD CASES: (4)

CHORDS

MEMB. FR-TO	MAX. FACTORED FORCE (LBS)	FACTORED VERT. LOAD (PLF) FROM	TO	LC1	MAX CSI (LC)	MAX. UNBRAC LENGTH
1- 2	0 / 29	-77.3	-77.3	0.10	(1)	10.00
2- 3	-2023 / 0	-77.3	-77.3	0.26	(1)	4.52
3- 4	-2062 / 0	-77.3	-77.3	0.26	(1)	4.48
4- 5	-2320 / 0	-77.3	-77.3	0.41	(1)	4.11
5- 6	-2498 / 0	-77.3	-77.3	0.43	(1)	3.97
6- 7	-2498 / 0	-77.3	-77.3	0.43	(1)	3.97
7- 8	-2498 / 0	-77.3	-77.3	0.43	(1)	3.97
8- 9	-2320 / 0	-77.3	-77.3	0.41	(1)	4.11
9-10	-2062 / 0	-77.3	-77.3	0.26	(1)	4.48
10-11	-2023 / 0	-77.3	-77.3	0.26	(1)	4.52
11-12	0 / 29	-77.3	-77.3	0.10	(1)	10.00
23- 2	-1811 / 0	0.0	0.0	0.19	(1)	6.21
13-11	-1811 / 0	0.0	0.0	0.19	(1)	6.21
23-22	0 / 0	-17.5	-17.5	0.06	(4)	10.00
22-21	0 / 1699	-17.5	-17.5	0.32	(1)	10.00
21-20	0 / 1698	-17.5	-17.5	0.32	(1)	10.00
20-19	0 / 2320	-17.5	-17.5	0.42	(1)	10.00
19-18	0 / 2320	-17.5	-17.5	0.42	(1)	10.00
18-17	0 / 2320	-17.5	-17.5	0.42	(1)	10.00
17-16	0 / 2320	-17.5	-17.5	0.42	(1)	10.00
16-15	0 / 1698	-17.5	-17.5	0.32	(1)	10.00
15-14	0 / 1699	-17.5	-17.5	0.32	(1)	10.00
14-13	0 / 0	-17.5	-17.5	0.06	(4)	10.00

WEBS

MEMB. FR-TO	MAX. FACTORED FORCE (LBS)	MAX CSI (LC)
22- 3	-381 / 0	0.10 (1)
3-21	-3 / 6	0.00 (4)
21- 4	0 / 88	0.03 (4)
4-20	0 / 986	0.22 (1)
20- 5	-674 / 0	0.51 (1)
5-18	0 / 287	0.06 (1)
18- 6	-364 / 0	0.28 (1)
18- 8	0 / 287	0.06 (1)
16- 8	-674 / 0	0.51 (1)
16- 9	0 / 987	0.22 (1)
15- 9	0 / 88	0.03 (4)
15-10	-3 / 6	0.00 (4)
14-10	-381 / 0	0.10 (1)
2-22	0 / 1757	0.40 (1)
14-11	0 / 1757	0.40 (1)

DESIGN CRITERIA

SPECIFIED LOADS:

TOP	CH.	LL	=	23.3	PSF
		DL	=	3.0	PSF
BOT	CH.	LL	=	0.0	PSF
		DL	=	7.0	PSF
TOTAL	LOAD		=	33.3	PSF

SPACING = 24.0 IN. C/C

LOADING IN FLAT SECTION BASED ON A SLOPE OF 6.00/12

THIS TRUSS IS DESIGNED FOR RESIDENTIAL OR SMALL BUILDING REQUIREMENTS OF PART 9, NBCC 2010

THIS DESIGN COMPLIES WITH:
- PART 9 OF OBC 2012 , BCBC 2012 , ABC 2014
- CSA 086-09
- TPIC 2011

(55 % OF 27.2 P.S.F. G.S.L. PLUS 8.4 P.S.F. RAIN LOAD) EQUALS 23.3 P.S.F. SPECIFIED ROOF LIVE LOAD

ALLOWABLE DEFL.(LL)= L/360 (1.22")
CALCULATED VERT. DEFL.(LL) = L/ 999 (0.14")
ALLOWABLE DEFL.(TL)= L/360 (1.22")
CALCULATED VERT. DEFL.(TL) = L/ 999 (0.25")

CSI: TC=0.43 (6-8:1) , BC=0.42 (18-20:1) , WB=0.51 (8-16:1) , SSI=0.19 (4-5:1)

DOL LUMBER=1.00 NAIL=1.00 LS BEND=1.10 COMP=1.10 SHEAR=1.10 TENS= 1.10

COMPANION LIVE LOAD FACTOR = 0.50

TRUSS PLATE MANUFACTURER IS NOT RESPONSIBLE FOR QUALITY CONTROL IN THE TRUSS MANUFACTURING PLANT .

NAIL VALUES

PLATE	GRIP(DRY) (PSI) MAX	MIN	SHEAR (PLI) MAX	MIN	SECTION (PLI) MAX	MIN
MT20	618	354	1667	822	2284	1656

PLATE PLACEMENT TOL. = 0.250 inches

PLATE ROTATION TOL. = 5.0 Deg.

JSI GRIP= 0.89 (10) (INPUT = 0.90)
JSI METAL= 0.64 (19) (INPUT = 1.00)

KOTT

RECEIVED
TOWN OF MILTON
MAR 29, 2017
JUNIPER 2
BUILDING DIVISION

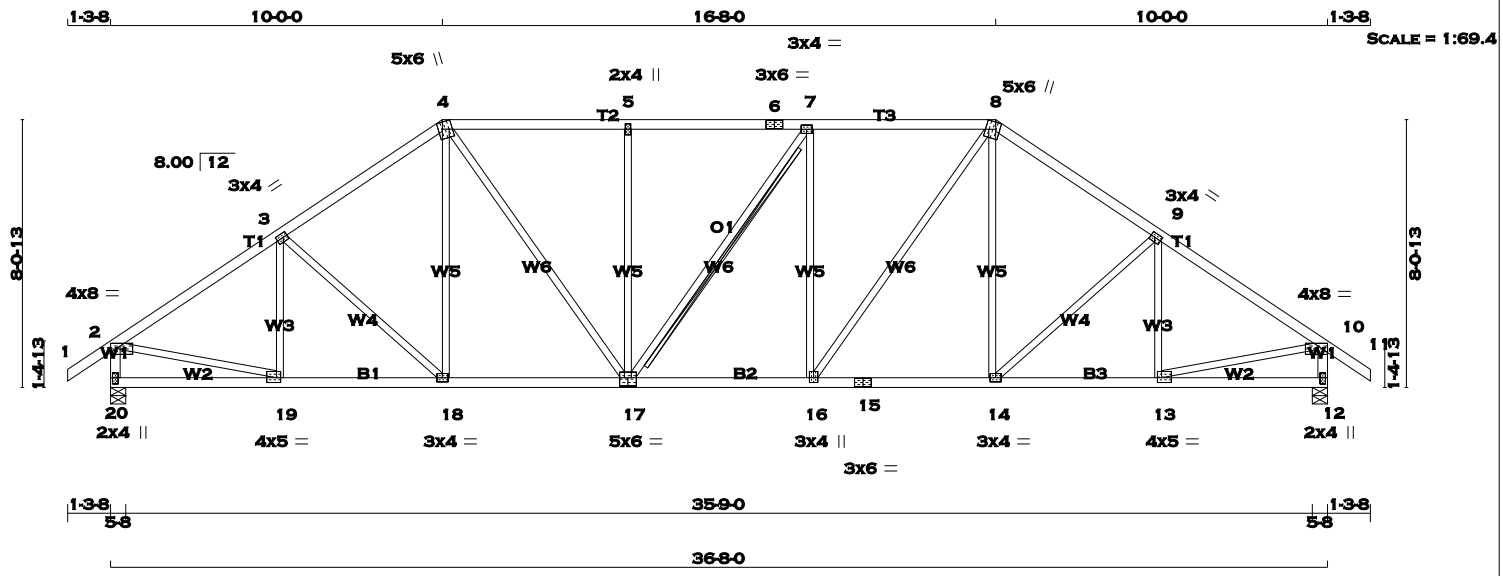

TOTAL WEIGHT = 166 lb

[M][F]

LUMBER

N. L. G. A. RULES

CHORDS	SIZE		LUMBER	DESCR.
1 - 4	2x4	DRY	No.2	SPF
4 - 6	2x4	DRY	No.2	SPF
6 - 8	2x4	DRY	No.2	SPF
8 - 11	2x4	DRY	No.2	SPF
20 - 2	2x4	DRY	No.2	SPF
12 - 10	2x4	DRY	No.2	SPF
20 - 17	2x4	DRY	No.2	SPF
17 - 15	2x4	DRY	No.2	SPF
15 - 12	2x4	DRY	No.2	SPF
ALL WEBS EXCEPT	2x3	DRY	No.2	SPF

DRY: SEASONED LUMBER.

PLATES (table is in inches)

JT	TYPE	PLATES	W	LEN	Y	X
2	TMVW-p	MT20	4.0	8.0	1.00	3.50
3	TMWW-t	MT20	3.0	4.0	1.50	1.50
4	TTWW+m	MT20	5.0	6.0	2.50	1.50
5	TMW+w	MT20	2.0	4.0		
6	TS-t	MT20	3.0	6.0		
7	TMWW-t	MT20	3.0	4.0		
8	TTWW+m	MT20	5.0	6.0	2.50	1.50
9	TMWW-t	MT20	3.0	4.0	1.50	1.50
10	TMVW-p	MT20	4.0	8.0	1.00	3.50
12	BMV1+p	MT20	2.0	4.0	2.25	1.00
13	BMWW-t	MT20	4.0	5.0	1.75	1.50
14	BMWW-t	MT20	3.0	4.0		
15	BS-t	MT20	3.0	6.0		
16	BMWW+t	MT20	3.0	4.0	1.75	1.50
17	BSWWW-l	MT20	5.0	6.0	3.00	3.00
18	BMWW-t	MT20	3.0	4.0		
19	BMWW-t	MT20	4.0	5.0	1.75	1.50
20	BMV1+p	MT20	2.0	4.0	2.25	1.00

A SIZE FOR SIZE SUBSTITUTION OF MITEK MII20 WITH TEE-LOK TL20 PLATES IS ALLOWED.

READ ALL NOTES ON THIS PAGE AND ON THE ENGINEERING NOTE PAGE ENP-1. THE NOTE PAGE IS AN INTEGRAL PART OF THIS DRAWING AS IT CONTAINS SPECIFICATIONS AND CRITERIA USED IN THE DESIGN OF THIS COMPONENT.

LICENSED PROFESSIONAL ENGINEER
C.G. CARSON
100076892
PROVINCE OF ONTARIO

21 MAR 2017

DIMENSIONS, SUPPORTS AND LOADINGS SPECIFIED BY FABRICATOR TO BE VERIFIED BY BUILDING DESIGNER

BEARINGS

JT	FACTORED GROSS REACTION VERT	HORZ	MAXIMUM FACTORED GROSS REACTION DOWN	HORZ	UPLIFT	INPUT BRG IN-SX	REQRD BRG IN-SX
20	1845	0	1845	0	0	5-8	5-8
12	1845	0	1845	0	0	5-8	5-8

UNFACTORED REACTIONS

JT	1ST LCASE COMBINED	MAX./MIN. COMPONENT REACTIONS SNOW	LIVE	PERM.LIVE	WIND	DEAD	SOIL
20	1293	918 / 0	0 / 0	0 / 0	0 / 0	375 / 0	0 / 0
12	1293	918 / 0	0 / 0	0 / 0	0 / 0	375 / 0	0 / 0

BEARING MATERIAL TO BE SPF NO.2 OR BETTER AT JOINT(S) 20, 12

BRACING

TOP CHORD TO BE SHEATHED OR MAX. PURLIN SPACING = 4.42 FT.
MAX. UNBRACED BOTTOM CHORD LENGTH = 10.00 FT. OR RIGID CEILING DIRECTLY APPLIED.

ALL PITCH BREAKS AND PERIMETER CORNER JOINTS MUST BE LATERALLY RESTRAINED.

2x4 SPF No.2 T-BRACE AT 7-17

FASTEN T AND I-BRACES TO NARROW EDGE OF WEB WITH ONE ROW PER PLY OF 3" COMMON WIRE NAILS @ 6" O.C. WITH 3" MINIMUM END DISTANCE. BRACE MUST COVER 90% OF WEB LENGTH.

END VERTICAL(S) MUST BE SHEATHED OR HAVE BRACES AS INDICATED IN THE MAX. UNBRACED LENGTH COLUMN OF THE TABLE BELOW

LOADING

TOTAL LOAD CASES: (4)

CHORDS

MEMB. FR-TO	MAX. FACTORED FORCE (LBS)	FACTORED VERT. LOAD LC1 (PLF) FROM	TO	MAX CSI (LC)	MAX. UNBRAC LENGTH
1- 2	0 / 29	-77.3	-77.3	0.10 (1)	10.00
2- 3	-2092 / 0	-77.3	-77.3	0.32 (1)	4.42
3- 4	-1991 / 0	-77.3	-77.3	0.30 (1)	4.52
4- 5	-2037 / 0	-77.3	-77.3	0.34 (1)	4.44
5- 6	-2038 / 0	-77.3	-77.3	0.31 (1)	4.47
6- 7	-2038 / 0	-77.3	-77.3	0.31 (1)	4.47
7- 8	-2039 / 0	-77.3	-77.3	0.34 (1)	4.43
8- 9	-1990 / 0	-77.3	-77.3	0.30 (1)	4.52
9-10	-2092 / 0	-77.3	-77.3	0.32 (1)	4.42
10-11	0 / 29	-77.3	-77.3	0.10 (1)	10.00
20- 2	-1806 / 0	0.0	0.0	0.19 (1)	6.23
12-10	-1806 / 0	0.0	0.0	0.19 (1)	6.23
20-19	0 / 0	-17.5	-17.5	0.10 (4)	10.00
19-18	0 / 1761	-17.5	-17.5	0.34 (1)	10.00
18-17	0 / 1635	-17.5	-17.5	0.32 (1)	10.00
17-16	0 / 2039	-17.5	-17.5	0.38 (1)	10.00
16-15	0 / 1635	-17.5	-17.5	0.32 (1)	10.00
15-14	0 / 1635	-17.5	-17.5	0.32 (1)	10.00
14-13	0 / 1761	-17.5	-17.5	0.34 (1)	10.00
13-12	0 / 0	-17.5	-17.5	0.10 (4)	10.00

WEBS

MEMB. FR-TO	MAX. FACTORED FORCE (LBS)	MAX CSI (LC)
19- 3	-282 / 0	0.10 (1)
3-18	-172 / 0	0.14 (1)
18- 4	0 / 211	0.05 (1)
4-17	0 / 688	0.15 (1)
17- 5	-463 / 0	0.58 (1)
17- 7	-2 / 0	0.00 (1)
16- 7	-463 / 0	0.58 (1)
16- 8	0 / 691	0.16 (1)
14- 8	0 / 209	0.05 (1)
14- 9	-172 / 0	0.14 (1)
13- 9	-281 / 0	0.10 (1)
2-19	0 / 1800	0.40 (1)
13-10	0 / 1800	0.41 (1)

DESIGN CRITERIA

SPECIFIED LOADS:

TOP	CH.	LL	=	23.3	PSF
		DL	=	3.0	PSF
BOT	CH.	LL	=	0.0	PSF
		DL	=	7.0	PSF
TOTAL	LOAD		=	33.3	PSF

SPACING = 24.0 IN. C/C

LOADING IN FLAT SECTION BASED ON A SLOPE OF 6.00/12

THIS TRUSS IS DESIGNED FOR RESIDENTIAL OR SMALL BUILDING REQUIREMENTS OF PART 9, NBCC 2010

THIS DESIGN COMPLIES WITH:
- PART 9 OF OBC 2012 , BCBC 2012 , ABC 2014
- CSA 086-09
- TPIC 2011

(55 % OF 27.2 P.S.F. G.S.L. PLUS 8.4 P.S.F. RAIN LOAD) EQUALS 23.3 P.S.F. SPECIFIED ROOF LIVE LOAD

ALLOWABLE DEFL.(LL)= L/360 (1.22")
CALCULATED VERT. DEFL.(LL) = L/ 999 (0.11")
ALLOWABLE DEFL.(TL)= L/360 (1.22")
CALCULATED VERT. DEFL.(TL) = L/ 999 (0.20")

CSI: TC=0.34 (7-8:1) , BC=0.38 (16-17:1) , WB=0.58 (7-16:1) , SSI=0.20 (7-8:1)

DOL LUMBER=1.00 NAIL=1.00 LS BEND=1.10 COMP=1.10 SHEAR=1.10 TENS= 1.10

COMPANION LIVE LOAD FACTOR = 0.50

TRUSS PLATE MANUFACTURER IS NOT RESPONSIBLE FOR QUALITY CONTROL IN THE TRUSS MANUFACTURING PLANT .

NAIL VALUES

PLATE	GRIP(DRY) (PSI) MAX	MIN	SHEAR (PLI) MAX	MIN	SECTION (PLI) MAX	MIN
MT20	618	354	1667	822	2284	1656

PLATE PLACEMENT TOL. = 0.250 inches

PLATE ROTATION TOL. = 5.0 Deg.

JSI GRIP= 0.88 (16) (INPUT = 0.90)
JSI METAL= 0.53 (13) (INPUT = 1.00)

KOTT

RECEIVED
TOWN OF MILTON
MAR 29, 2017
JUNIPER 2
BUILDING DIVISION

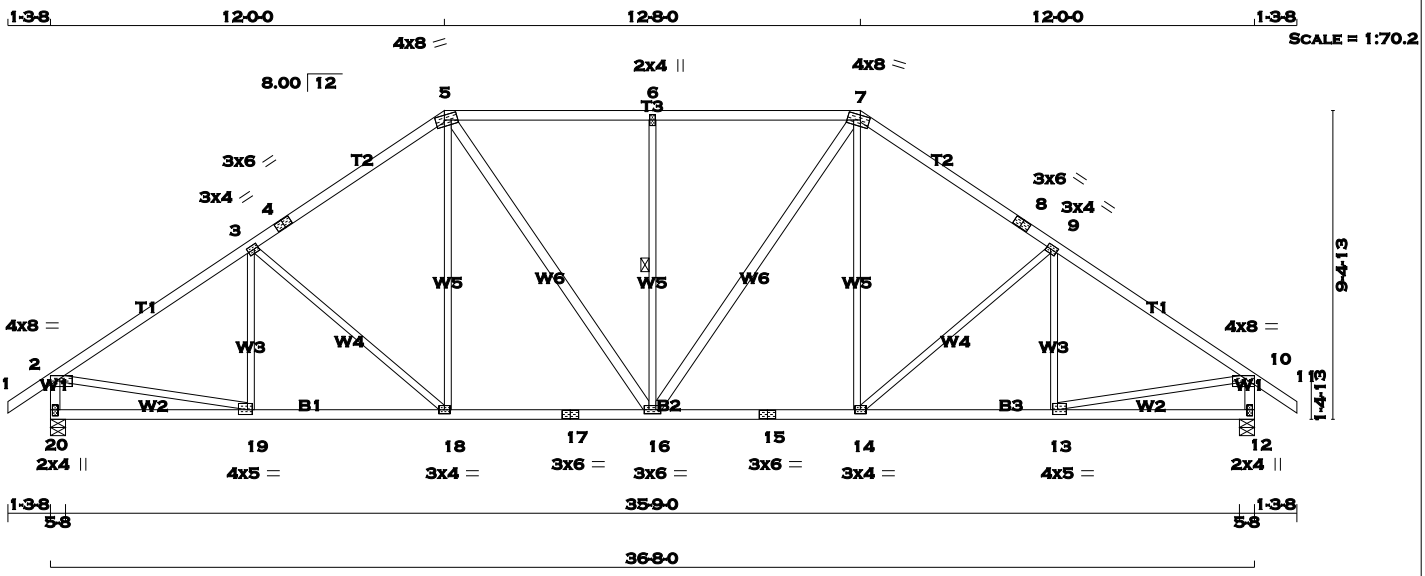

TOTAL WEIGHT = 171 lb

[M][F]

LUMBER

N. L. G. A. RULES

CHORDS	SIZE		LUMBER	DESCR.
1 - 4	2x4	DRY	No.2	SPF
4 - 5	2x4	DRY	No.2	SPF
5 - 7	2x4	DRY	No.2	SPF
7 - 8	2x4	DRY	No.2	SPF
8 - 11	2x4	DRY	No.2	SPF
20 - 2	2x4	DRY	No.2	SPF
12 - 10	2x4	DRY	No.2	SPF
20 - 17	2x4	DRY	No.2	SPF
17 - 15	2x4	DRY	No.2	SPF
15 - 12	2x4	DRY	No.2	SPF
ALL WEBS	2x3	DRY	No.2	SPF
EXCEPT				
5 - 16	2x4	DRY	No.2	SPF
16 - 7	2x4	DRY	No.2	SPF

DRY: SEASONED LUMBER.

PLATES (table is in inches)

JT	TYPE	PLATES	W	LEN	Y	X
2	TMVW-p	MT20	4.0	8.0	1.00	3.50
3	TMWW-t	MT20	3.0	4.0	1.50	1.50
4	TS-t	MT20	3.0	6.0		
5	TTWW-m	MT20	4.0	8.0	1.75	3.25
6	TMW+w	MT20	2.0	4.0		
7	TTWW-m	MT20	4.0	8.0	1.75	3.25
8	TS-t	MT20	3.0	6.0		
9	TMWW-t	MT20	3.0	4.0	1.50	1.50
10	TMVW-p	MT20	4.0	8.0	1.00	3.50
12	BMV1+p	MT20	2.0	4.0	2.25	1.00
13	BMWW-t	MT20	4.0	5.0	1.75	1.75
14	BMWW-t	MT20	3.0	4.0		
15	BS-t	MT20	3.0	6.0		
16	BMWWW-t	MT20	3.0	6.0		
17	BS-t	MT20	3.0	6.0		
18	BMWW-t	MT20	3.0	4.0		
19	BMWW-t	MT20	4.0	5.0	1.75	1.75
20	BMV1+p	MT20	2.0	4.0	2.25	1.00

A SIZE FOR SIZE SUBSTITUTION OF MITEK MII20 WITH TEE-LOK TL20 PLATES IS ALLOWED.

READ ALL NOTES ON THIS PAGE AND ON THE ENGINEERING NOTE PAGE ENP-1. THE NOTE PAGE IS AN INTEGRAL PART OF THIS DRAWING AS IT CONTAINS SPECIFICATIONS AND CRITERIA USED IN THE DESIGN OF THIS COMPONENT.

LICENSED PROFESSIONAL ENGINEER
C.G. CARSON
100076892
PROVINCE OF ONTARIO

21 MAR 2017

DIMENSIONS, SUPPORTS AND LOADINGS SPECIFIED BY FABRICATOR TO BE VERIFIED BY BUILDING DESIGNER

BEARINGS

JT	FACTORED GROSS REACTION VERT	HORZ	MAXIMUM FACTORED GROSS REACTION DOWN	HORZ	UPLIFT	INPUT BRG IN-SX	REQRD BRG IN-SX
20	1845	0	1845	0	0	5-8	5-8
12	1845	0	1845	0	0	5-8	5-8

UNFACTORED REACTIONS

JT	1ST LCASE COMBINED	MAX./MIN. COMPONENT REACTIONS SNOW	LIVE	PERM.LIVE	WIND	DEAD	SOIL
20	1293	918 / 0	0 / 0	0 / 0	0 / 0	375 / 0	0 / 0
12	1293	918 / 0	0 / 0	0 / 0	0 / 0	375 / 0	0 / 0

BEARING MATERIAL TO BE SPF NO.2 OR BETTER AT JOINT(S) 20, 12

BRACING

TOP CHORD TO BE SHEATHED OR MAX. PURLIN SPACING = 4.23 FT.
MAX. UNBRACED BOTTOM CHORD LENGTH = 10.00 FT. OR RIGID CEILING DIRECTLY APPLIED.

ALL PITCH BREAKS AND PERIMETER CORNER JOINTS MUST BE LATERALLY RESTRAINED.

1 - 2x3 SPF No.2 LATERAL BRACE(S) AT 1/ 2 LENGTH OF 6-16. DBS = 20-0-0 . CBF = 75 LBS.

DBS = DIAGONAL BRACE SPACING (MAX). CBF = CUMULATIVE BRACING FORCE. FASTEN LATERAL BRACE(S) USING (0.122"X3") SPIRAL NAILS : 1 NAIL FOR 2x3 BRACE(S), 2 FOR 1x4, 2x4, 2x5, 3 FOR 2x6, 4 FOR 2x8, 5 FOR 2x10, AND 6 FOR 2x12.

END VERTICAL(S) MUST BE SHEATHED OR HAVE BRACES AS INDICATED IN THE MAX. UNBRACED LENGTH COLUMN OF THE TABLE BELOW

LOADING

TOTAL LOAD CASES: (4)

CHORDS MEMB. FR-TO	MAX. FACTORED FORCE (LBS)	FACTORED VERT. LOAD (PLF) FROM	TO	LC1 MAX CSI (LC)	MAX. UNBRAC LENGTH	WEBS MEMB. FR-TO	MAX. FACTORED FORCE (LBS)	MAX CSI (LC)
1- 2	0 / 29	-77.3	-77.3	0.10 (1)	10.00	19- 3	-203 / 39	0.09 (1)
2- 3	-2124 / 0	-77.3	-77.3	0.47 (1)	4.23	3-18	-325 / 0	0.42 (1)
3- 4	-1892 / 0	-77.3	-77.3	0.43 (1)	4.46	18- 5	0 / 319	0.07 (1)
4- 5	-1892 / 0	-77.3	-77.3	0.43 (1)	4.46	5-16	0 / 433	0.07 (1)
5- 6	-1797 / 0	-77.3	-77.3	0.46 (1)	4.50	16- 6	-600 / 0	0.35 (1)
6- 7	-1797 / 0	-77.3	-77.3	0.46 (1)	4.50	16- 7	0 / 433	0.07 (1)
7- 8	-1892 / 0	-77.3	-77.3	0.43 (1)	4.46	14- 7	0 / 319	0.07 (1)
8- 9	-1892 / 0	-77.3	-77.3	0.43 (1)	4.46	14- 9	-325 / 0	0.42 (1)
9-10	-2124 / 0	-77.3	-77.3	0.47 (1)	4.23	13- 9	-203 / 39	0.09 (1)
10-11	0 / 29	-77.3	-77.3	0.10 (1)	10.00	2-19	0 / 1821	0.41 (1)
20- 2	-1800 / 0	0.0	0.0	0.19 (1)	6.23	13-10	0 / 1821	0.41 (1)
12-10	-1800 / 0	0.0	0.0	0.19 (1)	6.23			
20-19	0 / 0	-17.5	-17.5	0.15 (4)	10.00			
19-18	0 / 1793	-17.5	-17.5	0.36 (1)	10.00			
18-17	0 / 1550	-17.5	-17.5	0.32 (1)	10.00			
17-16	0 / 1550	-17.5	-17.5	0.32 (1)	10.00			
16-15	0 / 1550	-17.5	-17.5	0.32 (1)	10.00			
15-14	0 / 1550	-17.5	-17.5	0.32 (1)	10.00			
14-13	0 / 1793	-17.5	-17.5	0.36 (1)	10.00			
13-12	0 / 0	-17.5	-17.5	0.15 (4)	10.00			

DESIGN CRITERIA

SPECIFIED LOADS:

TOP CH.	LL	=	23.3	PSF
	DL	=	3.0	PSF
BOT CH.	LL	=	0.0	PSF
	DL	=	7.0	PSF
TOTAL LOAD		=	33.3	PSF

SPACING = 24.0 IN. C/C

LOADING IN FLAT SECTION BASED ON A SLOPE OF 6.00/12

THIS TRUSS IS DESIGNED FOR RESIDENTIAL OR SMALL BUILDING REQUIREMENTS OF PART 9, NBCC 2010

THIS DESIGN COMPLIES WITH:
- PART 9 OF OBC 2012 , BCBC 2012 , ABC 2014
- CSA 086-09
- TPIC 2011

(55 % OF 27.2 P.S.F. G.S.L. PLUS 8.4 P.S.F. RAIN LOAD) EQUALS 23.3 P.S.F. SPECIFIED ROOF LIVE LOAD

ALLOWABLE DEFL.(LL)= L/360 (1.22")
CALCULATED VERT. DEFL.(LL) = L/ 999 (0.10")
ALLOWABLE DEFL.(TL)= L/360 (1.22")
CALCULATED VERT. DEFL.(TL) = L/ 999 (0.18")

CSI: TC=0.47 (2-3:1) , BC=0.36 (18-19:1) , WB=0.42 (3-18:1) , SSI=0.24 (5-6:1)

DOL LUMBER=1.00 NAIL=1.00 LS BEND=1.10 COMP=1.10 SHEAR=1.10 TENS= 1.10

COMPANION LIVE LOAD FACTOR = 0.50

TRUSS PLATE MANUFACTURER IS NOT RESPONSIBLE FOR QUALITY CONTROL IN THE TRUSS MANUFACTURING PLANT .

NAIL VALUES

PLATE	GRIP(DRY) (PSI) MAX	MIN	SHEAR (PLI) MAX	MIN	SECTION (PLI) MAX	MIN
MT20	618	354	1667	822	2284	1656

PLATE PLACEMENT TOL. = 0.250 inches

PLATE ROTATION TOL. = 5.0 Deg.

JSI GRIP= 0.90 (13) (INPUT = 0.90)
JSI METAL= 0.54 (13) (INPUT = 1.00)

KOTT

RECEIVED
TOWN OF MILTON
MAR 29, 2017
JUNIPER 2
BUILDING DIVISION

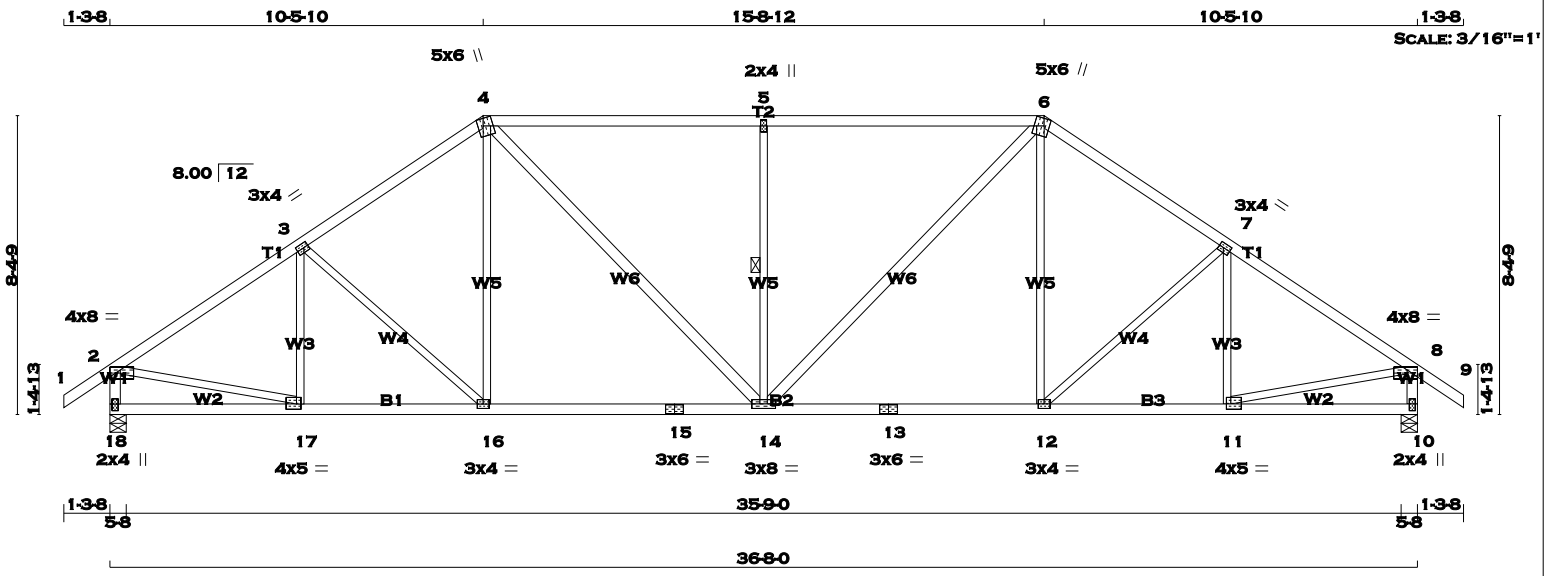

TOTAL WEIGHT = 165 lb

[M][F]

LUMBER

N. L. G. A. RULES

CHORDS	SIZE		LUMBER	DESCR.
1 - 4	2x4	DRY	No.2	SPF
4 - 6	2x4	DRY	No.2	SPF
6 - 9	2x4	DRY	No.2	SPF
18 - 2	2x4	DRY	No.2	SPF
10 - 8	2x4	DRY	No.2	SPF
18 - 15	2x4	DRY	No.2	SPF
15 - 13	2x4	DRY	No.2	SPF
13 - 10	2x4	DRY	No.2	SPF
ALL WEBS	2x3	DRY	No.2	SPF
EXCEPT				
4 - 14	2x4	DRY	No.2	SPF
14 - 6	2x4	DRY	No.2	SPF

DRY: SEASONED LUMBER.

PLATES (table is in inches)

JT	TYPE	PLATES	W	LEN	Y	X
2	TMVW-p	MT20	4.0	8.0	1.00	3.50
3	TMWW-t	MT20	3.0	4.0	1.50	1.50
4	TTWW+m	MT20	5.0	6.0	Edge	1.75
5	TMW+w	MT20	2.0	4.0		
6	TTWW+m	MT20	5.0	6.0	Edge	1.75
7	TMWW-t	MT20	3.0	4.0	1.50	1.50
8	TMVW-p	MT20	4.0	8.0	1.00	3.50
10	BMV1+p	MT20	2.0	4.0	2.25	1.00
11	BMWW-t	MT20	4.0	5.0	1.75	1.50
12	BMWW-t	MT20	3.0	4.0		
13	BS-t	MT20	3.0	6.0		
14	BMWWW-t	MT20	3.0	8.0		
15	BS-t	MT20	3.0	6.0		
16	BMWW-t	MT20	3.0	4.0		
17	BMWW-t	MT20	4.0	5.0	1.75	1.50
18	BMV1+p	MT20	2.0	4.0	2.25	1.00

Edge - INDICATES REFERENCE CORNER OF PLATE TOUCHES EDGE OF CHORD.

A SIZE FOR SIZE SUBSTITUTION OF MITEK MII20 WITH TEE-LOK TL20 PLATES IS ALLOWED.

READ ALL NOTES ON THIS PAGE AND ON THE ENGINEERING NOTE PAGE ENP-1. THE NOTE PAGE IS AN INTEGRAL PART OF THIS DRAWING AS IT CONTAINS SPECIFICATIONS AND CRITERIA USED IN THE DESIGN OF THIS COMPONENT.

LICENSED PROFESSIONAL ENGINEER
C.G. CARSON
100076892
PROVINCE OF ONTARIO

21 MAR 2017

DIMENSIONS, SUPPORTS AND LOADINGS SPECIFIED BY FABRICATOR TO BE VERIFIED BY BUILDING DESIGNER

BEARINGS

JT	FACTORED GROSS REACTION VERT	HORZ	MAXIMUM FACTORED GROSS REACTION DOWN	HORZ	UPLIFT	INPUT BRG IN-SX	REQRD BRG IN-SX
18	1845	0	1845	0	0	5-8	5-8
10	1845	0	1845	0	0	5-8	5-8

UNFACTORED REACTIONS

JT	1ST LCASE COMBINED	MAX./MIN. COMPONENT REACTIONS SNOW	LIVE	PERM.LIVE	WIND	DEAD	SOIL
18	1293	918 / 0	0 / 0	0 / 0	0 / 0	375 / 0	0 / 0
10	1293	918 / 0	0 / 0	0 / 0	0 / 0	375 / 0	0 / 0

BEARING MATERIAL TO BE SPF NO.2 OR BETTER AT JOINT(S) 18, 10

BRACING

TOP CHORD TO BE SHEATHED OR MAX. PURLIN SPACING = 3.79 FT.
MAX. UNBRACED BOTTOM CHORD LENGTH = 10.00 FT. OR RIGID CEILING DIRECTLY APPLIED.

ALL PITCH BREAKS AND PERIMETER CORNER JOINTS MUST BE LATERALLY RESTRAINED.

1 - 2x3 SPF No.2 LATERAL BRACE(S) AT 1/ 2 LENGTH OF 5-14. DBS = 18-0-0 . CBF = 84 LBS.

DBS = DIAGONAL BRACE SPACING (MAX). CBF = CUMULATIVE BRACING FORCE. FASTEN LATERAL BRACE(S) USING (0.122"X3") SPIRAL NAILS : 1 NAIL FOR 2x3 BRACE(S), 2 FOR 1x4, 2x4, 2x5, 3 FOR 2x6, 4 FOR 2x8, 5 FOR 2x10, AND 6 FOR 2x12.

END VERTICAL(S) MUST BE SHEATHED OR HAVE BRACES AS INDICATED IN THE MAX. UNBRACED LENGTH COLUMN OF THE TABLE BELOW

LOADING

TOTAL LOAD CASES: (4)

CHORDS

MEMB. FR-TO	MAX. FACTORED FORCE (LBS)	FACTORED VERT. LOAD (PLF) FROM	TO	LC1 MAX CSI (LC)	MAX. UNBRAC LENGTH
1- 2	0 / 29	-77.3	-77.3	0.10 (1)	10.00
2- 3	-2100 / 0	-77.3	-77.3	0.35 (1)	4.38
3- 4	-1973 / 0	-77.3	-77.3	0.33 (1)	4.50
4- 5	-2054 / 0	-77.3	-77.3	0.75 (1)	3.79
5- 6	-2054 / 0	-77.3	-77.3	0.75 (1)	3.79
6- 7	-1973 / 0	-77.3	-77.3	0.33 (1)	4.50
7- 8	-2100 / 0	-77.3	-77.3	0.35 (1)	4.38
8- 9	0 / 29	-77.3	-77.3	0.10 (1)	10.00
18- 2	-1803 / 0	0.0	0.0	0.19 (1)	6.23
10- 8	-1803 / 0	0.0	0.0	0.19 (1)	6.23
18-17	0 / 0	-17.5	-17.5	0.10 (4)	10.00
17-16	0 / 1769	-17.5	-17.5	0.37 (1)	10.00
16-15	0 / 1620	-17.5	-17.5	0.38 (1)	10.00
15-14	0 / 1620	-17.5	-17.5	0.38 (1)	10.00
14-13	0 / 1620	-17.5	-17.5	0.38 (1)	10.00
13-12	0 / 1620	-17.5	-17.5	0.38 (1)	10.00
12-11	0 / 1769	-17.5	-17.5	0.37 (1)	10.00
11-10	0 / 0	-17.5	-17.5	0.10 (4)	10.00

WEBS

MEMB. FR-TO	MAX. FACTORED FORCE (LBS)	MAX CSI (LC)
17- 3	-268 / 2	0.10 (1)
3-16	-204 / 0	0.19 (1)
16- 4	0 / 253	0.06 (1)
4-14	0 / 623	0.10 (1)
14- 5	-750 / 0	0.33 (1)
14- 6	0 / 623	0.10 (1)
12- 6	0 / 253	0.06 (1)
12- 7	-204 / 0	0.19 (1)
11- 7	-268 / 2	0.10 (1)
2-17	0 / 1805	0.41 (1)
11- 8	0 / 1805	0.41 (1)

DESIGN CRITERIA

SPECIFIED LOADS:

TOP CH.	LL	=	23.3	PSF
	DL	=	3.0	PSF
BOT CH.	LL	=	0.0	PSF
	DL	=	7.0	PSF
TOTAL LOAD		=	33.3	PSF

SPACING = 24.0 IN. C/C

LOADING IN FLAT SECTION BASED ON A SLOPE OF 6.00/12

THIS TRUSS IS DESIGNED FOR RESIDENTIAL OR SMALL BUILDING REQUIREMENTS OF PART 9, NBCC 2010

THIS DESIGN COMPLIES WITH:
- PART 9 OF OBC 2012 , BCBC 2012 , ABC 2014
- CSA 086-09
- TPIC 2011

(55 % OF 27.2 P.S.F. G.S.L. PLUS 8.4 P.S.F. RAIN LOAD) EQUALS 23.3 P.S.F. SPECIFIED ROOF LIVE LOAD

ALLOWABLE DEFL.(LL)= L/360 (1.22")
CALCULATED VERT. DEFL.(LL) = L/ 999 (0.11")
ALLOWABLE DEFL.(TL)= L/360 (1.22")
CALCULATED VERT. DEFL.(TL) = L/ 999 (0.21")

CSI: TC=0.75 (4-5:1) , BC=0.38 (12-14:1) , WB=0.41 (8-11:1) , SSI=0.30 (4-5:1)

DOL LUMBER=1.00 NAIL=1.00 LS BEND=1.10 COMP=1.10 SHEAR=1.10 TENS= 1.10

COMPANION LIVE LOAD FACTOR = 0.50

TRUSS PLATE MANUFACTURER IS NOT RESPONSIBLE FOR QUALITY CONTROL IN THE TRUSS MANUFACTURING PLANT .

NAIL VALUES

PLATE	GRIP(DRY) (PSI) MAX	MIN	SHEAR (PLI) MAX	MIN	SECTION (PLI) MAX	MIN
MT20	618	354	1667	822	2284	1656

PLATE PLACEMENT TOL. = 0.250 inches

PLATE ROTATION TOL. = 5.0 Deg.

JSI GRIP= 0.87 (2) (INPUT = 0.90)
JSI METAL= 0.53 (11) (INPUT = 1.00)

RECEIVED
TOWN OF MILTON
MAR 29, 2017
JUNIPER 2
BUILDING DIVISION

KOTT

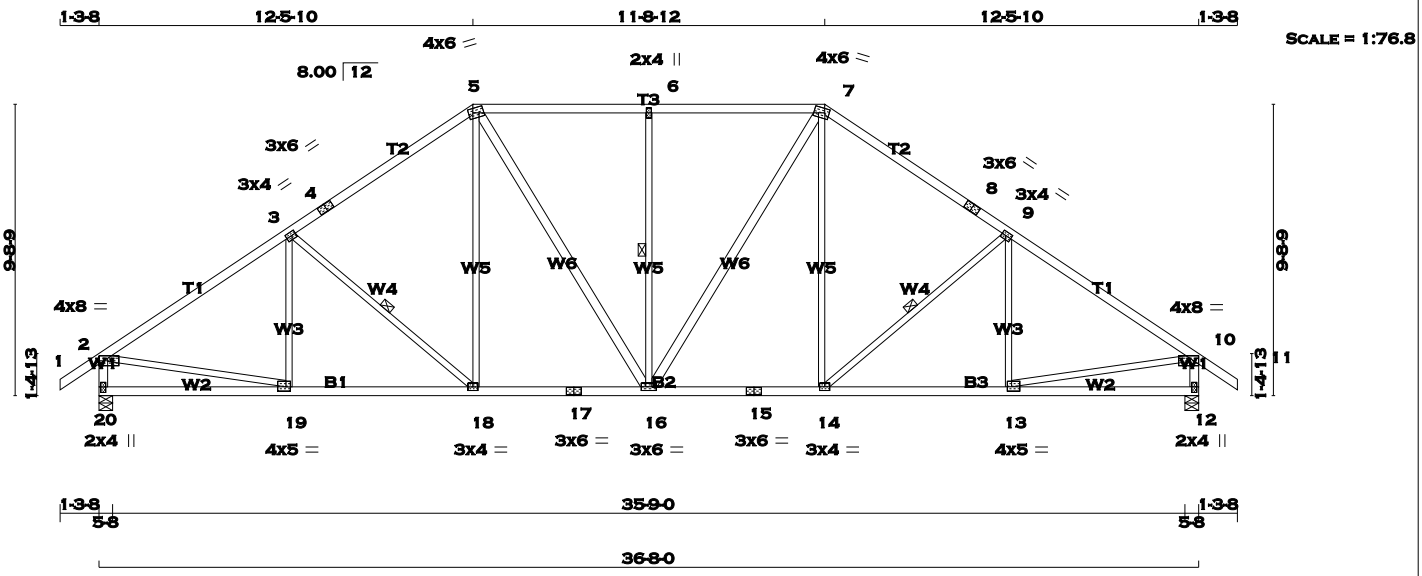

TOTAL WEIGHT = 173 lb

[M][F]

LUMBER

N. L. G. A. RULES

CHORDS	SIZE		LUMBER	DESCR.
1 - 4	2x4	DRY	No.2	SPF
4 - 5	2x4	DRY	No.2	SPF
5 - 7	2x4	DRY	No.2	SPF
7 - 8	2x4	DRY	No.2	SPF
8 - 11	2x4	DRY	No.2	SPF
20 - 2	2x4	DRY	No.2	SPF
12 - 10	2x4	DRY	No.2	SPF
20 - 17	2x4	DRY	No.2	SPF
17 - 15	2x4	DRY	No.2	SPF
15 - 12	2x4	DRY	No.2	SPF
ALL WEBS EXCEPT	2x3	DRY	No.2	SPF
5 - 16	2x4	DRY	No.2	SPF
16 - 7	2x4	DRY	No.2	SPF

DRY: SEASONED LUMBER.

PLATES (table is in inches)

JT	TYPE	PLATES	W	LEN	Y	X
2	TMVW-p	MT20	4.0	8.0	1.00	3.50
3	TMWW-t	MT20	3.0	4.0	1.50	1.50
4	TS-t	MT20	3.0	6.0		
5	TTWW-m	MT20	4.0	6.0	1.75	1.75
6	TMW+w	MT20	2.0	4.0		
7	TTWW-m	MT20	4.0	6.0	1.75	1.75
8	TS-t	MT20	3.0	6.0		
9	TMWW-t	MT20	3.0	4.0	1.50	1.50
10	TMVW-p	MT20	4.0	8.0	1.00	3.50
12	BMV1+p	MT20	2.0	4.0	2.25	1.00
13	BMWW-t	MT20	4.0	5.0	1.75	1.75
14	BMWW-t	MT20	3.0	4.0		
15	BS-t	MT20	3.0	6.0		
16	BMWWW-t	MT20	3.0	6.0		
17	BS-t	MT20	3.0	6.0		
18	BMWW-t	MT20	3.0	4.0		
19	BMWW-t	MT20	4.0	5.0	1.75	1.75
20	BMV1+p	MT20	2.0	4.0	2.25	1.00

A SIZE FOR SIZE SUBSTITUTION OF MITEK MII20 WITH TEE-LOK TL20 PLATES IS ALLOWED.

READ ALL NOTES ON THIS PAGE AND ON THE ENGINEERING NOTE PAGE ENP-1. THE NOTE PAGE IS AN INTEGRAL PART OF THIS DRAWING AS IT CONTAINS SPECIFICATIONS AND CRITERIA USED IN THE DESIGN OF THIS COMPONENT.

LICENSED PROFESSIONAL ENGINEER
C.G. CARSON
100076892
PROVINCE OF ONTARIO

21 MAR 2017

DIMENSIONS, SUPPORTS AND LOADINGS SPECIFIED BY FABRICATOR TO BE VERIFIED BY BUILDING DESIGNER

BEARINGS

JT	FACTORED GROSS REACTION VERT	HORZ	MAXIMUM FACTORED GROSS REACTION DOWN	HORZ	UPLIFT	INPUT BRG IN-SX	REQRD BRG IN-SX
20	1845	0	1845	0	0	5-8	5-8
12	1845	0	1845	0	0	5-8	5-8

UNFACTORED REACTIONS

JT	1ST LCASE COMBINED	MAX./MIN. COMPONENT REACTIONS SNOW	LIVE	PERM.LIVE	WIND	DEAD	SOIL
20	1293	918 / 0	0 / 0	0 / 0	0 / 0	375 / 0	0 / 0
12	1293	918 / 0	0 / 0	0 / 0	0 / 0	375 / 0	0 / 0

BEARING MATERIAL TO BE SPF NO.2 OR BETTER AT JOINT(S) 20, 12

BRACING

TOP CHORD TO BE SHEATHED OR MAX. PURLIN SPACING = 4.17 FT.
MAX. UNBRACED BOTTOM CHORD LENGTH = 10.00 FT. OR RIGID CEILING DIRECTLY APPLIED.

ALL PITCH BREAKS AND PERIMETER CORNER JOINTS MUST BE LATERALLY RESTRAINED.

1 - 2x3 SPF No.2 LATERAL BRACE(S) AT 1/ 2 LENGTH OF 3-18, 6-16, 9-14. DBS = 20-0-0 . CBF = 69 LBS.

DBS = DIAGONAL BRACE SPACING (MAX). CBF = CUMULATIVE BRACING FORCE. FASTEN LATERAL BRACE(S) USING (0.122"X3") SPIRAL NAILS : 1 NAIL FOR 2x3 BRACE(S), 2 FOR 1x4, 2x4, 2x5, 3 FOR 2x6, 4 FOR 2x8, 5 FOR 2x10, AND 6 FOR 2x12.

END VERTICAL(S) MUST BE SHEATHED OR HAVE BRACES AS INDICATED IN THE MAX. UNBRACED LENGTH COLUMN OF THE TABLE BELOW

LOADING

TOTAL LOAD CASES: (4)

CHORDS

MEMB. FR-TO	MAX. FACTORED FORCE (LBS)	FACTORED VERT. LOAD (PLF) FROM	TO	LC1	MAX CSI (LC)	MAX. UNBRAC LENGTH
1- 2	0 / 29	-77.3	-77.3	0.10	(1)	10.00
2- 3	-2129 / 0	-77.3	-77.3	0.52	(1)	4.17
3- 4	-1865 / 0	-77.3	-77.3	0.47	(1)	4.44
4- 5	-1865 / 0	-77.3	-77.3	0.47	(1)	4.44
5- 6	-1730 / 0	-77.3	-77.3	0.39	(1)	4.66
6- 7	-1730 / 0	-77.3	-77.3	0.39	(1)	4.66
7- 8	-1865 / 0	-77.3	-77.3	0.47	(1)	4.44
8- 9	-1865 / 0	-77.3	-77.3	0.47	(1)	4.44
9-10	-2129 / 0	-77.3	-77.3	0.52	(1)	4.17
10-11	0 / 29	-77.3	-77.3	0.10	(1)	10.00
20- 2	-1799 / 0	0.0	0.0	0.19	(1)	6.23
12-10	-1799 / 0	0.0	0.0	0.19	(1)	6.23
20-19	0 / 0	-17.5	-17.5	0.16	(4)	10.00
19-18	0 / 1798	-17.5	-17.5	0.37	(1)	10.00
18-17	0 / 1527	-17.5	-17.5	0.31	(1)	10.00
17-16	0 / 1527	-17.5	-17.5	0.31	(1)	10.00
16-15	0 / 1527	-17.5	-17.5	0.31	(1)	10.00
15-14	0 / 1527	-17.5	-17.5	0.31	(1)	10.00
14-13	0 / 1798	-17.5	-17.5	0.37	(1)	10.00
13-12	0 / 0	-17.5	-17.5	0.16	(4)	10.00

WEBS

MEMB. FR-TO	MAX. FACTORED FORCE (LBS)	MAX CSI (LC)
19- 3	-186 / 49	0.09 (1)
3-18	-360 / 0	0.16 (1)
18- 5	0 / 338	0.08 (1)
5-16	0 / 385	0.06 (1)
16- 6	-554 / 0	0.35 (1)
16- 7	0 / 385	0.06 (1)
14- 7	0 / 338	0.08 (1)
14- 9	-360 / 0	0.16 (1)
13- 9	-186 / 49	0.09 (1)
2-19	0 / 1824	0.41 (1)
13-10	0 / 1824	0.41 (1)

DESIGN CRITERIA

SPECIFIED LOADS:

TOP CH.	LL	=	23.3	PSF
	DL	=	3.0	PSF
BOT CH.	LL	=	0.0	PSF
	DL	=	7.0	PSF
TOTAL LOAD		=	33.3	PSF

SPACING = 24.0 IN. C/C

LOADING IN FLAT SECTION BASED ON A SLOPE OF 6.00/12

THIS TRUSS IS DESIGNED FOR RESIDENTIAL OR SMALL BUILDING REQUIREMENTS OF PART 9, NBCC 2010

THIS DESIGN COMPLIES WITH:
- PART 9 OF OBC 2012 , BCBC 2012 , ABC 2014
- CSA 086-09
- TPIC 2011

(55 % OF 27.2 P.S.F. G.S.L. PLUS 8.4 P.S.F. RAIN LOAD) EQUALS 23.3 P.S.F. SPECIFIED ROOF LIVE LOAD

ALLOWABLE DEFL.(LL)= L/360 (1.22")
CALCULATED VERT. DEFL.(LL) = L/ 999 (0.09")
ALLOWABLE DEFL.(TL)= L/360 (1.22")
CALCULATED VERT. DEFL.(TL) = L/ 999 (0.17")

CSI: TC=0.52 (9-10:1) , BC=0.37 (13-14:1) , WB=0.41 (2-19:1) , SSI=0.22 (5-6:1)

DOL LUMBER=1.00 NAIL=1.00 LS BEND=1.10 COMP=1.10 SHEAR=1.10 TENS= 1.10

COMPANION LIVE LOAD FACTOR = 0.50

TRUSS PLATE MANUFACTURER IS NOT RESPONSIBLE FOR QUALITY CONTROL IN THE TRUSS MANUFACTURING PLANT .

NAIL VALUES

PLATE	GRIP(DRY) (PSI) MAX	MIN	SHEAR (PLI) MAX	MIN	SECTION (PLI) MAX	MIN
MT20	618	354	1667	822	2284	1656

PLATE PLACEMENT TOL. = 0.250 inches

PLATE ROTATION TOL. = 5.0 Deg.

JSI GRIP= 0.89 (13) (INPUT = 0.90)
JSI METAL= 0.54 (19) (INPUT = 1.00)

KOTT

RECEIVED
TOWN OF MILTON
MAR 29, 2017
JUNIPER 2
BUILDING DIVISION

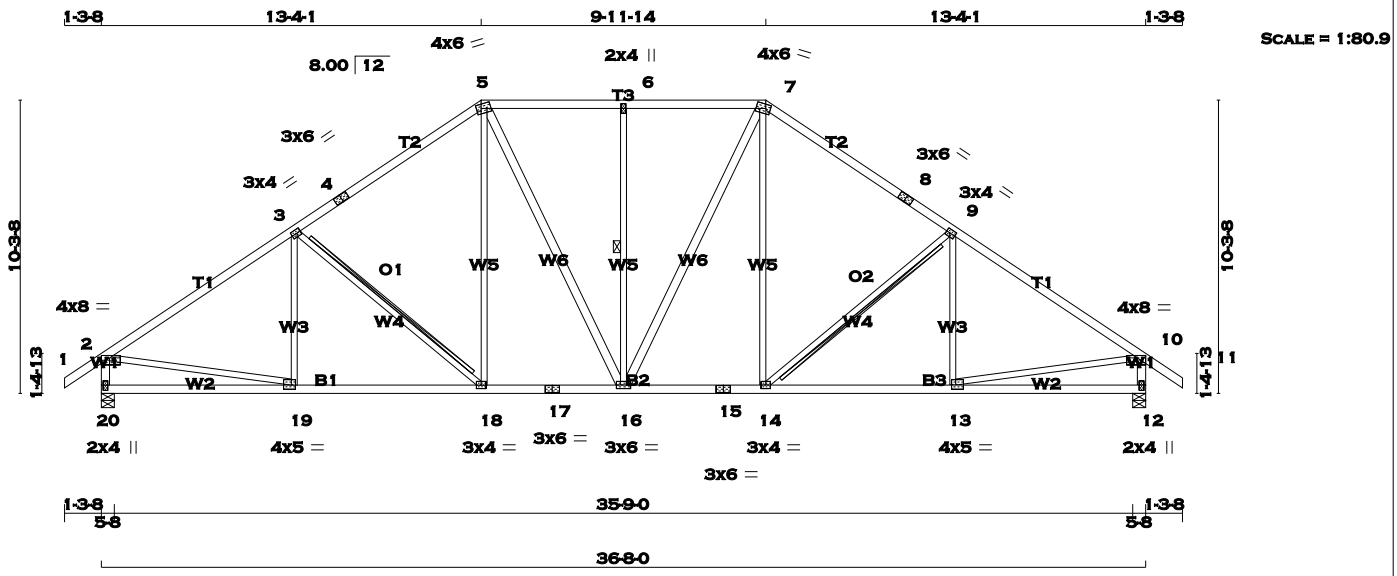

TOTAL WEIGHT = 177 lb

[M][F]

LUMBER

N. L. G. A. RULES

CHORDS	SIZE		LUMBER	DESCR.
1 - 4	2x4	DRY	No.2	SPF
4 - 5	2x4	DRY	No.2	SPF
5 - 7	2x4	DRY	No.2	SPF
7 - 8	2x4	DRY	No.2	SPF
8 - 11	2x4	DRY	No.2	SPF
20 - 2	2x4	DRY	No.2	SPF
12 - 10	2x4	DRY	No.2	SPF
20 - 17	2x4	DRY	No.2	SPF
17 - 15	2x4	DRY	No.2	SPF
15 - 12	2x4	DRY	No.2	SPF
ALL WEBS EXCEPT	2x3	DRY	No.2	SPF
5 - 16	2x4	DRY	No.2	SPF
16 - 7	2x4	DRY	No.2	SPF

DRY: SEASONED LUMBER.

PLATES (table is in inches)

JT	TYPE	PLATES	W	LEN	Y	X
2	TMVW-p	MT20	4.0	8.0	1.00	3.50
3	TMWW-t	MT20	3.0	4.0	1.50	1.50
4	TS-t	MT20	3.0	6.0		
5	TTWW-m	MT20	4.0	6.0	1.75	2.00
6	TMW+w	MT20	2.0	4.0		
7	TTWW-m	MT20	4.0	6.0	1.75	2.00
8	TS-t	MT20	3.0	6.0		
9	TMWW-t	MT20	3.0	4.0	1.50	1.50
10	TMVW-p	MT20	4.0	8.0	1.00	3.50
12	BMV1+p	MT20	2.0	4.0	2.25	1.00
13	BMWW-t	MT20	4.0	5.0	1.75	1.75
14	BMWW-t	MT20	3.0	4.0		
15	BS-t	MT20	3.0	6.0		
16	BMWWW-t	MT20	3.0	6.0		
17	BS-t	MT20	3.0	6.0		
18	BMWW-t	MT20	3.0	4.0		
19	BMWW-t	MT20	4.0	5.0	1.75	1.75
20	BMV1+p	MT20	2.0	4.0	2.25	1.00

A SIZE FOR SIZE SUBSTITUTION OF MITEK MII20 WITH TEE-LOK TL20 PLATES IS ALLOWED.

READ ALL NOTES ON THIS PAGE AND ON THE ENGINEERING NOTE PAGE ENP-1. THE NOTE PAGE IS AN INTEGRAL PART OF THIS DRAWING AS IT CONTAINS SPECIFICATIONS AND CRITERIA USED IN THE DESIGN OF THIS COMPONENT.

LICENSED PROFESSIONAL ENGINEER
C.G. CARSON
100076892
PROVINCE OF ONTARIO

21 MAR 2017

DIMENSIONS, SUPPORTS AND LOADINGS SPECIFIED BY FABRICATOR TO BE VERIFIED BY BUILDING DESIGNER

BEARINGS

JT	FACTORED GROSS REACTION VERT	HORZ	MAXIMUM FACTORED GROSS REACTION DOWN	HORZ	UPLIFT	INPUT BRG IN-SX	REQRD BRG IN-SX
20	1845	0	1845	0	0	5-8	5-8
12	1845	0	1845	0	0	5-8	5-8

UNFACTORED REACTIONS

JT	1ST LCASE COMBINED	MAX./MIN. COMPONENT REACTIONS SNOW	LIVE	PERM.LIVE	WIND	DEAD	SOIL
20	1293	918 / 0	0 / 0	0 / 0	0 / 0	375 / 0	0 / 0
12	1293	918 / 0	0 / 0	0 / 0	0 / 0	375 / 0	0 / 0

BEARING MATERIAL TO BE SPF NO.2 OR BETTER AT JOINT(S) 20, 12

BRACING

TOP CHORD TO BE SHEATHED OR MAX. PURLIN SPACING = 4.07 FT.
MAX. UNBRACED BOTTOM CHORD LENGTH = 10.00 FT. OR RIGID CEILING DIRECTLY APPLIED.

ALL PITCH BREAKS AND PERIMETER CORNER JOINTS MUST BE LATERALLY RESTRAINED.

1 - 2x3 SPF No.2 LATERAL BRACE(S) AT 1/ 2 LENGTH OF 6-16. DBS = 20-0-0 . CBF = 59 LBS.
2x3 SPF No.2 T-BRACE AT 3-18, 9-14

DBS = DIAGONAL BRACE SPACING (MAX). CBF = CUMULATIVE BRACING FORCE. FASTEN LATERAL BRACE(S) USING (0.122"X3") SPIRAL NAILS : 1 NAIL FOR 2x3 BRACE(S), 2 FOR 1x4, 2x4, 2x5, 3 FOR 2x6, 4 FOR 2x8, 5 FOR 2x10, AND 6 FOR 2x12.

FASTEN T AND I-BRACES TO NARROW EDGE OF WEB WITH ONE ROW PER PLY OF 3" COMMON WIRE NAILS @ 6" O.C. WITH 3" MINIMUM END DISTANCE. BRACE MUST COVER 90% OF WEB LENGTH.

END VERTICAL(S) MUST BE SHEATHED OR HAVE BRACES AS INDICATED IN THE MAX. UNBRACED LENGTH COLUMN OF THE TABLE BELOW

LOADING

TOTAL LOAD CASES: (4)

CHORDS MEMB. FR-TO	MAX. FACTORED FORCE (LBS)	FACTORED VERT. LOAD LC1 (PLF) FROM	TO	MAX CSI (LC)	MAX. UNBRAC LENGTH	WEBS MEMB. FR-TO	MAX. FACTORED FORCE (LBS)	MAX CSI (LC)
1- 2	0 / 29	-77.3	-77.3	0.10 (1)	10.00	19- 3	-156 / 67	0.08 (1)
2- 3	-2133 / 0	-77.3	-77.3	0.60 (1)	4.07	3-18	-424 / 0	0.56 (1)
3- 4	-1814 / 0	-77.3	-77.3	0.55 (1)	4.39	18- 5	0 / 374	0.08 (1)
4- 5	-1814 / 0	-77.3	-77.3	0.55 (1)	4.39	5-16	0 / 305	0.05 (1)
5- 6	-1619 / 0	-77.3	-77.3	0.28 (1)	4.93	16- 6	-468 / 0	0.34 (1)
6- 7	-1619 / 0	-77.3	-77.3	0.28 (1)	4.93	16- 7	0 / 305	0.05 (1)
7- 8	-1814 / 0	-77.3	-77.3	0.55 (1)	4.39	14- 7	0 / 374	0.08 (1)
8- 9	-1814 / 0	-77.3	-77.3	0.55 (1)	4.39	14- 9	-424 / 0	0.56 (1)
9-10	-2133 / 0	-77.3	-77.3	0.60 (1)	4.07	13- 9	-156 / 67	0.08 (1)
10-11	0 / 29	-77.3	-77.3	0.10 (1)	10.00	2-19	0 / 1826	0.41 (1)
20- 2	-1796 / 0	0.0	0.0	0.19 (1)	6.23	13-10	0 / 1826	0.41 (1)
12-10	-1796 / 0	0.0	0.0	0.19 (1)	6.23			
20-19	0 / 0	-17.5	-17.5	0.19 (4)	10.00			
19-18	0 / 1804	-17.5	-17.5	0.39 (1)	10.00			
18-17	0 / 1483	-17.5	-17.5	0.30 (1)	10.00			
17-16	0 / 1483	-17.5	-17.5	0.30 (1)	10.00			
16-15	0 / 1483	-17.5	-17.5	0.30 (1)	10.00			
15-14	0 / 1483	-17.5	-17.5	0.30 (1)	10.00			
14-13	0 / 1804	-17.5	-17.5	0.39 (1)	10.00			
13-12	0 / 0	-17.5	-17.5	0.19 (4)	10.00			

KOTT

DESIGN CRITERIA

SPECIFIED LOADS:

TOP	CH.	LL	=	23.3	PSF
		DL	=	3.0	PSF
BOT	CH.	LL	=	0.0	PSF
		DL	=	7.0	PSF
TOTAL	LOAD		=	33.3	PSF

SPACING = 24.0 IN. C/C

LOADING IN FLAT SECTION BASED ON A SLOPE OF 6.00/12

THIS TRUSS IS DESIGNED FOR RESIDENTIAL OR SMALL BUILDING REQUIREMENTS OF PART 9, NBCC 2010

THIS DESIGN COMPLIES WITH:
- PART 9 OF OBC 2012 , BCBC 2012 , ABC 2014
- CSA 086-09
- TPIC 2011

(55 % OF 27.2 P.S.F. G.S.L. PLUS 8.4 P.S.F. RAIN LOAD) EQUALS 23.3 P.S.F. SPECIFIED ROOF LIVE LOAD

ALLOWABLE DEFL.(LL)= L/360 (1.22")
CALCULATED VERT. DEFL.(LL) = L/ 999 (0.09")
ALLOWABLE DEFL.(TL)= L/360 (1.22")
CALCULATED VERT. DEFL.(TL) = L/ 999 (0.17")

CSI: TC=0.60 (9-10:1) , BC=0.39 (13-14:1) , WB=0.56 (9-14:1) , SSI=0.21 (2-3:1)

DOL LUMBER=1.00 NAIL=1.00 LS BEND=1.10 COMP=1.10 SHEAR=1.10 TENS= 1.10

COMPANION LIVE LOAD FACTOR = 0.50

TRUSS PLATE MANUFACTURER IS NOT RESPONSIBLE FOR QUALITY CONTROL IN THE TRUSS MANUFACTURING PLANT .

NAIL VALUES

PLATE	GRIP(DRY) (PSI) MAX	MIN	SHEAR (PLI) MAX	MIN	SECTION (PLI) MAX	MIN
MT20	618	354	1667	822	2284	1656

PLATE PLACEMENT TOL. = 0.250 inches

PLATE ROTATION TOL. = 5.0 Deg.

JSI GRIP= 0.89 (2) (INPUT = 0.90)
JSI METAL= 0.54 (13) (INPUT = 1.00)

RECEIVED
TOWN OF MILTON
MAR 29, 2017
JUNIPER 2
BUILDING DIVISION

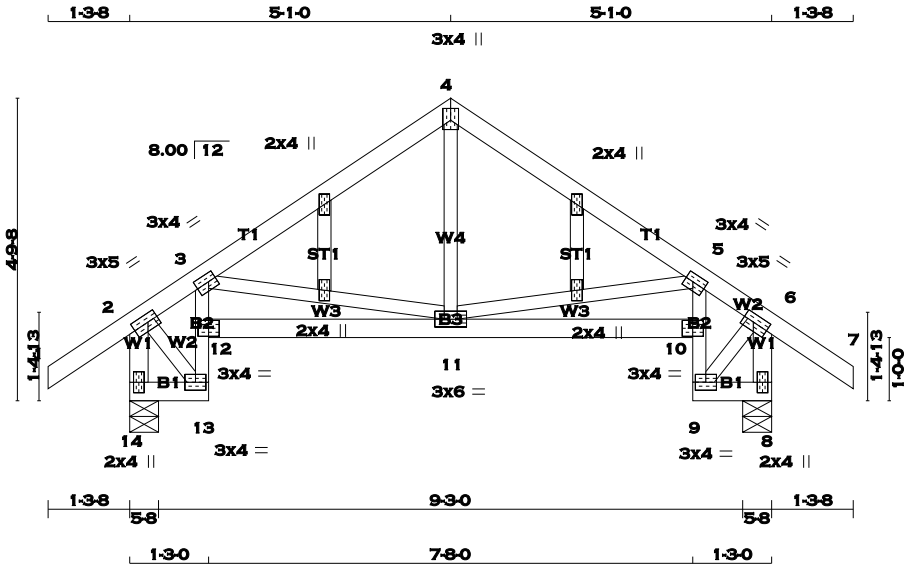

TOTAL WEIGHT = 47 lb [M]

LUMBER

N. L. G. A. RULES

CHORDS	SIZE		LUMBER	DESCR.
1 - 4	2x4	DRY	No.2	SPF
4 - 7	2x4	DRY	No.2	SPF
14 - 2	2x4	DRY	No.2	SPF
8 - 6	2x4	DRY	No.2	SPF
14 - 13	2x4	DRY	No.2	SPF
13 - 3	2x3	DRY	No.2	SPF
12 - 10	2x4	DRY	No.2	SPF
9 - 5	2x3	DRY	No.2	SPF
9 - 8	2x4	DRY	No.2	SPF
ALL WEBS	2x3	DRY	No.2	SPF
EXCEPT				
ALL GABLE WEBS	2x3	DRY	No.2	SPF

DRY: SEASONED LUMBER.

GABLE STUDS SPACED AT 2-0-0 OC.

PLATES (table is in inches)

JT	TYPE	PLATES	W	LEN	Y	X
2	TMVW-t	MT20	3.0	5.0	1.50	2.00
3	TMVW-t	MT20	3.0	4.0	1.50	1.50
4	TTW+p	MT20	3.0	4.0	2.25	1.50
5	TMVW-t	MT20	3.0	4.0	1.50	1.50
6	TMVW-t	MT20	3.0	5.0	1.50	2.00
8	BMV1+p	MT20	2.0	4.0		
9	BMVW-t	MT20	3.0	4.0		
10	BVM-l	MT20	3.0	4.0		
11	BMWWW-t	MT20	3.0	6.0		
12	BVM-l	MT20	3.0	4.0		
13	BMVW-t	MT20	3.0	4.0		
14	BMV1+p	MT20	2.0	4.0		
15, 16, 17, 18						
15	NP+w	MT20	2.0	4.0		

A SIZE FOR SIZE SUBSTITUTION OF MITEK MII20 WITH TEE-LOK TL20 PLATES IS ALLOWED.

READ ALL NOTES ON THIS PAGE AND ON THE ENGINEERING NOTE PAGE ENP-1. THE NOTE PAGE IS AN INTEGRAL PART OF THIS DRAWING AS IT CONTAINS SPECIFICATIONS AND CRITERIA USED IN THE DESIGN OF THIS COMPONENT.

LICENSED PROFESSIONAL ENGINEER
C.G. CARSON
100076892
PROVINCE OF ONTARIO

21 MAR 2017

DIMENSIONS, SUPPORTS AND LOADINGS SPECIFIED BY FABRICATOR TO BE VERIFIED BY BUILDING DESIGNER

BEARINGS

JT	FACTORED GROSS REACTION VERT	HORZ	MAXIMUM GROSS REACTION DOWN	HORZ	FACTORED UPLIFT	INPUT BRG IN-SX	REQRD BRG IN-SX
14	588	0	588	0	0	5-8	5-8
8	588	0	588	0	0	5-8	5-8

UNFACTORED REACTIONS

JT	1ST LCASE COMBINED	MAX./MIN. COMPONENT REACTIONS SNOW	LIVE	PERM.LIVE	WIND	DEAD	SOIL
14	411	301 / 0	0 / 0	0 / 0	0 / 0	110 / 0	0 / 0
8	411	301 / 0	0 / 0	0 / 0	0 / 0	110 / 0	0 / 0

BEARING MATERIAL TO BE SPF NO.2 OR BETTER AT JOINT(S) 14, 8

BRACING

TOP CHORD TO BE SHEATHED OR MAX. PURLIN SPACING = 6.25 FT.
MAX. UNBRACED BOTTOM CHORD LENGTH = 7.81 FT. OR RIGID CEILING DIRECTLY APPLIED.

ALL PITCH BREAKS AND PERIMETER CORNER JOINTS MUST BE LATERALLY RESTRAINED.

LOADING

TOTAL LOAD CASES: (4)

CHORDS MEMB. FR-TO	MAX. FACTORED FORCE (LBS)	FACTORED VERT. LOAD (PLF) FROM	TO	LC1 CSI (LC)	MAX UNBRAC LENGTH	WEBS MEMB. FR-TO	MAX. FACTORED FORCE (LBS)	MAX CSI (LC)
1- 2	0 / 29	-77.3	-77.3	0.10 (1)	10.00	11- 4	0 / 147	0.04 (4)
2- 3	-306 / 0	-77.3	-77.3	0.10 (1)	6.25	11- 5	-150 / 0	0.04 (1)
3- 4	-409 / 0	-77.3	-77.3	0.21 (1)	6.25	3-11	-150 / 0	0.04 (1)
4- 5	-409 / 0	-77.3	-77.3	0.21 (1)	6.25	2-13	0 / 307	0.07 (1)
5- 6	-306 / 0	-77.3	-77.3	0.10 (1)	6.25	9- 6	0 / 307	0.07 (1)
6- 7	0 / 29	-77.3	-77.3	0.10 (1)	10.00			
14- 2	-578 / 0	0.0	0.0	0.06 (1)	7.81			
8- 6	-578 / 0	0.0	0.0	0.06 (1)	7.81			
14-13	0 / 0	-17.5	-17.5	0.01 (4)	10.00			
13-12	-200 / 0	0.0	0.0	0.60 (1)	7.81			
12- 3	-174 / 0	0.0	0.0	0.60 (1)	7.81			
12-11	0 / 488	-17.5	-17.5	0.12 (1)	10.00			
11-10	0 / 488	-17.5	-17.5	0.12 (1)	10.00			
9-10	-200 / 0	0.0	0.0	0.60 (1)	7.81			
10- 5	-174 / 0	0.0	0.0	0.60 (1)	7.81			
9- 8	0 / 0	-17.5	-17.5	0.01 (4)	10.00			

DESIGN CRITERIA

SPECIFIED LOADS:

TOP CH.	LL	=	23.3	PSF
	DL	=	3.0	PSF
BOT CH.	LL	=	0.0	PSF
	DL	=	7.0	PSF
TOTAL LOAD		=	33.3	PSF

SPACING = 24.0 IN. C/C

THIS TRUSS IS DESIGNED FOR RESIDENTIAL OR SMALL BUILDING REQUIREMENTS OF PART 9, NBCC 2010

THIS DESIGN COMPLIES WITH:
- PART 9 OF OBC 2012 , BCBC 2012 , ABC 2014
- CSA 086-09
- TPIC 2011

DESIGN ASSUMPTIONS
-OVERHANG NOT TO BE ALTERED OR CUT OFF.

(55 % OF 27.2 P.S.F. G.S.L. PLUS 8.4 P.S.F. RAIN LOAD) EQUALS 23.3 P.S.F. SPECIFIED ROOF LIVE LOAD

ALLOWABLE DEFL.(LL)= L/360 (0.34")
CALCULATED VERT. DEFL.(LL) = L/ 999 (0.03")
ALLOWABLE DEFL.(TL)= L/360 (0.34")
CALCULATED VERT. DEFL.(TL) = L/ 999 (0.06")

CSI: TC=0.21 (4-5:1) , BC=0.60 (9-10:1) , WB=0.07 (6-9:1) , SSI=0.29 (5-10:1)

DOL LUMBER=1.00 NAIL=1.00 LS BEND=1.10 COMP=1.10 SHEAR=1.10 TENS= 1.10

COMPANION LIVE LOAD FACTOR = 0.50

TRUSS PLATE MANUFACTURER IS NOT RESPONSIBLE FOR QUALITY CONTROL IN THE TRUSS MANUFACTURING PLANT .

NAIL VALUES

PLATE	GRIP(DRY) (PSI) MAX	MIN	SHEAR (PLI) MAX	MIN	SECTION (PLI) MAX	MIN
MT20	618	354	1667	822	2284	1656

PLATE PLACEMENT TOL. = 0.250 inches

PLATE ROTATION TOL. = 5.0 Deg.

JSI GRIP= 0.70 (6) (INPUT = 0.90)
JSI METAL= 0.12 (12) (INPUT = 1.00)

RECEIVED
TOWN OF MILTON
MAR 29, 2017
JUNIPER 2
BUILDING DIVISION

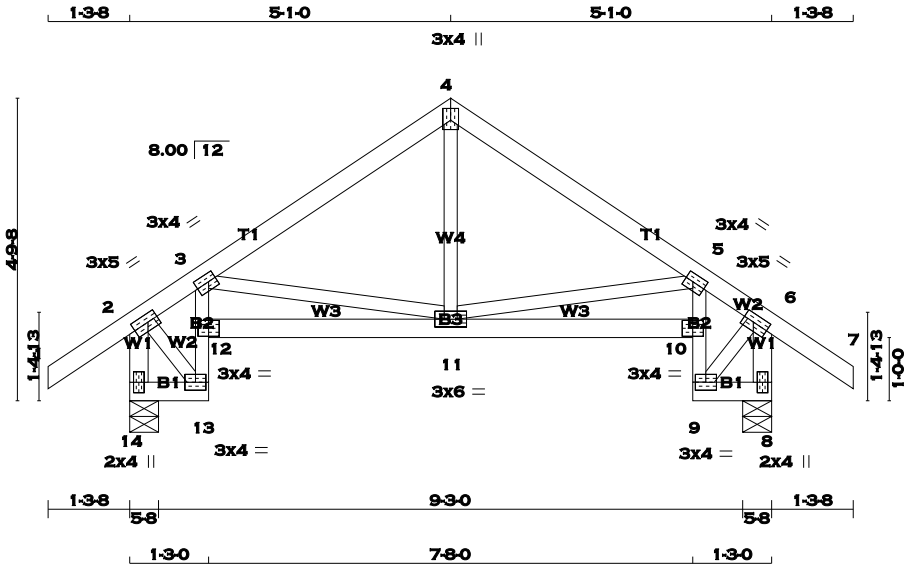

TOTAL WEIGHT = 45 lb [M]

LUMBER

N. L. G. A. RULES

CHORDS	SIZE		LUMBER	DESCR.
1 - 4	2x4	DRY	No.2	SPF
4 - 7	2x4	DRY	No.2	SPF
14 - 2	2x4	DRY	No.2	SPF
8 - 6	2x4	DRY	No.2	SPF
14 - 13	2x4	DRY	No.2	SPF
13 - 3	2x3	DRY	No.2	SPF
12 - 10	2x4	DRY	No.2	SPF
9 - 5	2x3	DRY	No.2	SPF
9 - 8	2x4	DRY	No.2	SPF
ALL WEBS EXCEPT	2x3	DRY	No.2	SPF

DRY: SEASONED LUMBER.

PLATES (table is in inches)

JT	TYPE	PLATES	W	LEN	Y	X
2	TMVW-t	MT20	3.0	5.0	1.50	2.00
3	TMVW-t	MT20	3.0	4.0	1.50	1.50
4	TTW+p	MT20	3.0	4.0	2.25	1.50
5	TMVW-t	MT20	3.0	4.0	1.50	1.50
6	TMVW-t	MT20	3.0	5.0	1.50	2.00
8	BMV1+p	MT20	2.0	4.0		
9	BMVW-t	MT20	3.0	4.0		
10	BVM-l	MT20	3.0	4.0		
11	BMWWW-t	MT20	3.0	6.0		
12	BVM-l	MT20	3.0	4.0		
13	BMVW-t	MT20	3.0	4.0		
14	BMV1+p	MT20	2.0	4.0		

A SIZE FOR SIZE SUBSTITUTION OF MITEK MII20 WITH TEE-LOK TL20 PLATES IS ALLOWED.

READ ALL NOTES ON THIS PAGE AND ON THE ENGINEERING NOTE PAGE ENP-1. THE NOTE PAGE IS AN INTEGRAL PART OF THIS DRAWING AS IT CONTAINS SPECIFICATIONS AND CRITERIA USED IN THE DESIGN OF THIS COMPONENT.

LICENSED PROFESSIONAL ENGINEER
C.G. CARSON
100076892
PROVINCE OF ONTARIO

21 MAR 2017

DIMENSIONS, SUPPORTS AND LOADINGS SPECIFIED BY FABRICATOR TO BE VERIFIED BY BUILDING DESIGNER

BEARINGS

JT	FACTORED GROSS REACTION VERT	HORZ	MAXIMUM FACTORED GROSS REACTION DOWN	HORZ	UPLIFT	INPUT BRG IN-SX	REQRD BRG IN-SX
14	588	0	588	0	0	5-8	5-8
8	588	0	588	0	0	5-8	5-8

UNFACTORED REACTIONS

JT	1ST LCASE COMBINED	MAX./MIN. COMPONENT REACTIONS SNOW	LIVE	PERM.LIVE	WIND	DEAD	SOIL
14	411	301 / 0	0 / 0	0 / 0	0 / 0	110 / 0	0 / 0
8	411	301 / 0	0 / 0	0 / 0	0 / 0	110 / 0	0 / 0

BEARING MATERIAL TO BE SPF NO.2 OR BETTER AT JOINT(S) 14, 8

BRACING

TOP CHORD TO BE SHEATHED OR MAX. PURLIN SPACING = 6.25 FT.
MAX. UNBRACED BOTTOM CHORD LENGTH = 7.81 FT. OR RIGID CEILING DIRECTLY APPLIED.

ALL PITCH BREAKS AND PERIMETER CORNER JOINTS MUST BE LATERALLY RESTRAINED.

LOADING

TOTAL LOAD CASES: (4)

CHORDS

MEMB. FR-TO	MAX. FACTORED FORCE (LBS)	FACTORED VERT. LOAD (PLF) FROM	TO	LC1 MAX CSI (LC)	MAX. UNBRAC LENGTH
1- 2	0 / 29	-77.3	-77.3	0.10 (1)	10.00
2- 3	-306 / 0	-77.3	-77.3	0.10 (1)	6.25
3- 4	-409 / 0	-77.3	-77.3	0.21 (1)	6.25
4- 5	-409 / 0	-77.3	-77.3	0.21 (1)	6.25
5- 6	-306 / 0	-77.3	-77.3	0.10 (1)	6.25
6- 7	0 / 29	-77.3	-77.3	0.10 (1)	10.00
14- 2	-578 / 0	0.0	0.0	0.06 (1)	7.81
8- 6	-578 / 0	0.0	0.0	0.06 (1)	7.81
14-13	0 / 0	-17.5	-17.5	0.01 (4)	10.00
13-12	-200 / 0	0.0	0.0	0.60 (1)	7.81
12- 3	-174 / 0	0.0	0.0	0.60 (1)	7.81
12-11	0 / 488	-17.5	-17.5	0.12 (1)	10.00
11-10	0 / 488	-17.5	-17.5	0.12 (1)	10.00
9-10	-200 / 0	0.0	0.0	0.60 (1)	7.81
10- 5	-174 / 0	0.0	0.0	0.60 (1)	7.81
9- 8	0 / 0	-17.5	-17.5	0.01 (4)	10.00

WEBS

MEMB. FR-TO	MAX. FACTORED FORCE (LBS)	MAX CSI (LC)
11- 4	0 / 147	0.04 (4)
11- 5	-150 / 0	0.04 (1)
3-11	-150 / 0	0.04 (1)
2-13	0 / 307	0.07 (1)
9- 6	0 / 307	0.07 (1)

DESIGN CRITERIA

SPECIFIED LOADS:

TOP CH.	LL	=	23.3	PSF
	DL	=	3.0	PSF
BOT CH.	LL	=	0.0	PSF
	DL	=	7.0	PSF
TOTAL LOAD		=	33.3	PSF

SPACING = 24.0 IN. C/C

THIS TRUSS IS DESIGNED FOR RESIDENTIAL OR SMALL BUILDING REQUIREMENTS OF PART 9, NBCC 2010

THIS DESIGN COMPLIES WITH:
- PART 9 OF OBC 2012 , BCBC 2012 , ABC 2014
- CSA 086-09
- TPIC 2011

DESIGN ASSUMPTIONS
-OVERHANG NOT TO BE ALTERED OR CUT OFF.

(55 % OF 27.2 P.S.F. G.S.L. PLUS 8.4 P.S.F. RAIN LOAD) EQUALS 23.3 P.S.F. SPECIFIED ROOF LIVE LOAD

ALLOWABLE DEFL.(LL)= L/360 (0.34")
CALCULATED VERT. DEFL.(LL) = L/ 999 (0.03")
ALLOWABLE DEFL.(TL)= L/360 (0.34")
CALCULATED VERT. DEFL.(TL) = L/ 999 (0.06")

CSI: TC=0.21 (4-5:1) , BC=0.60 (9-10:1) , WB=0.07 (6-9:1) , SSI=0.29 (5-10:1)

DOL LUMBER=1.00 NAIL=1.00 LS BEND=1.10 COMP=1.10 SHEAR=1.10 TENS= 1.10

COMPANION LIVE LOAD FACTOR = 0.50

TRUSS PLATE MANUFACTURER IS NOT RESPONSIBLE FOR QUALITY CONTROL IN THE TRUSS MANUFACTURING PLANT .

NAIL VALUES

PLATE	GRIP(DRY) (PSI) MAX	MIN	SHEAR (PLI) MAX	MIN	SECTION (PLI) MAX	MIN
MT20	618	354	1667	822	2284	1656

PLATE PLACEMENT TOL. = 0.250 inches

PLATE ROTATION TOL. = 5.0 Deg.

JSI GRIP= 0.70 (6) (INPUT = 0.90)
JSI METAL= 0.12 (12) (INPUT = 1.00)

RECEIVED
TOWN OF MILTON
MAR 29, 2017
JUNIPER 2
BUILDING DIVISION

SCALE = 1:58.5

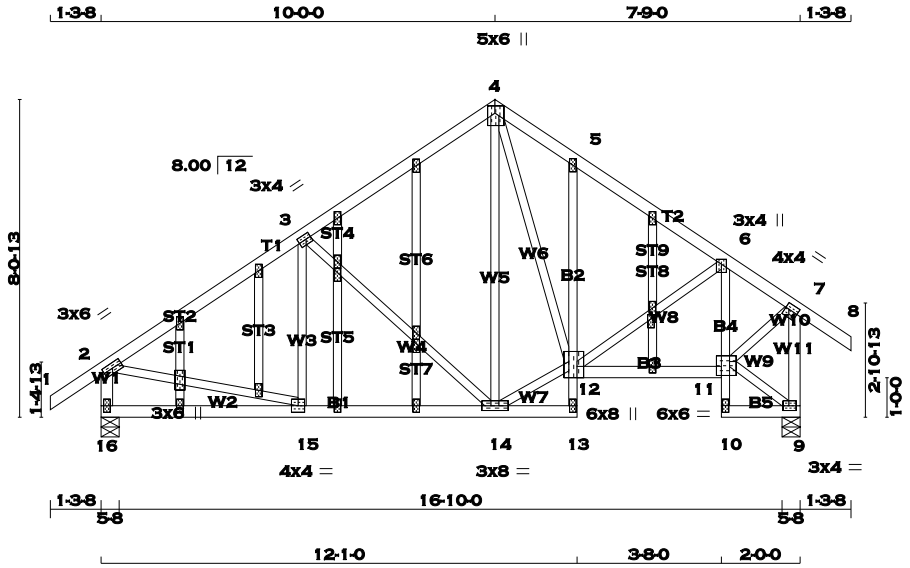

TOTAL WEIGHT = 109 lb

[M][F]

LUMBER

N. L. G. A. RULES

CHORDS	SIZE		LUMBER	DESCR.
1 - 4	2x4	DRY	No.2	SPF
4 - 8	2x4	DRY	No.2	SPF
16 - 2	2x4	DRY	No.2	SPF
9 - 7	2x4	DRY	No.2	SPF
16 - 13	2x4	DRY	No.2	SPF
13 - 5	2x3	DRY	No.2	SPF
12 - 11	2x4	DRY	No.2	SPF
10 - 6	2x3	DRY	No.2	SPF
10 - 9	2x4	DRY	No.2	SPF
ALL WEBS	2x3	DRY	No.2	SPF
EXCEPT				
ALL GABLE WEBS	2x3	DRY	No.2	SPF

DRY: SEASONED LUMBER.

GABLE STUDS SPACED AT 2-0-0 OC.

PLATES (table is in inches)

JT	TYPE	PLATES	W	LEN	Y	X
2	TMVW-t	MT20	3.0	6.0		
3	TMWW-t	MT20	3.0	4.0	1.50	1.50
4	TTWW+p	MT20	5.0	6.0	2.25	2.25
5	TMV+p	MT20	2.0	4.0		
6	TMVW+p	MT20	3.0	4.0	1.50	1.50
7	TMVW-t	MT20	4.0	4.0	1.75	1.00
9	BMVW1-t	MT20	3.0	4.0	1.50	1.75
10	BMV+p	MT20	2.0	4.0		
11	BVMWW-l	MT20	6.0	6.0	4.25	4.00
12	BVMWWW+l	MT20	6.0	8.0	Edge	2.00
13	BMV+p	MT20	2.0	4.0		
14	BMWWW-t	MT20	3.0	8.0		
15	BMWW-t	MT20	4.0	4.0		
16	BMV1+p	MT20	2.0	4.0		
17	NP+w	MT20	2.0	4.0	1.50	1.00
17, 18, 19, 20, 21, 22, 23, 24, 26, 27, 28, 29, 30						
17	NP+w	MT20	2.0	4.0		
20	NP+w	MT20	2.0	4.0	1.50	1.00
25						
25						
25	WMWW+w	MT20	3.0	6.0		
30	NP+w	MT20	2.0	4.0	2.00	0.25

Edge - INDICATES REFERENCE CORNER OF PLATE TOUCHES EDGE OF CHORD.

A SIZE FOR SIZE SUBSTITUTION OF MITEK MII20 WITH TEE-LOK TL20 PLATES IS ALLOWED.

READ ALL NOTES ON THIS PAGE AND ON THE ENGINEERING NOTE PAGE ENP-1. THE NOTE PAGE IS AN INTEGRAL PART OF THIS DRAWING AS IT CONTAINS SPECIFICATIONS AND CRITERIA USED IN THE DESIGN OF THIS COMPONENT.

LICENSED PROFESSIONAL ENGINEER
C.G. CARSON
100076892
PROVINCE OF ONTARIO

21 MAR 2017

DIMENSIONS, SUPPORTS AND LOADINGS SPECIFIED BY FABRICATOR TO BE VERIFIED BY BUILDING DESIGNER

BEARINGS

JT	FACTORED GROSS REACTION VERT	HORZ	MAXIMUM GROSS REACTION DOWN	HORZ	FACTORED UPLIFT	INPUT BRG IN-SX	REQRD BRG IN-SX
16	944	0	944	0	0	5-8	5-8
9	952	0	952	0	0	5-8	5-8

UNFACTORED REACTIONS

JT	1ST LCASE COMBINED	MAX./MIN. COMPONENT REACTIONS SNOW	LIVE	PERM.LIVE	WIND	DEAD	SOIL
16	660	475 / 0	0 / 0	0 / 0	0 / 0	185 / 0	0 / 0
9	666	480 / 0	0 / 0	0 / 0	0 / 0	186 / 0	0 / 0

BEARING MATERIAL TO BE SPF NO.2 OR BETTER AT JOINT(S) 16, 9

BRACING

TOP CHORD TO BE SHEATHED OR MAX. PURLIN SPACING = 6.25 FT.
MAX. UNBRACED BOTTOM CHORD LENGTH = 7.81 FT. OR RIGID CEILING DIRECTLY APPLIED.

ALL PITCH BREAKS AND PERIMETER CORNER JOINTS MUST BE LATERALLY RESTRAINED.

LOADING

TOTAL LOAD CASES: (4)

CHORDS

MEMB. FR-TO	MAX. FACTORED FORCE (LBS)	FACTORED VERT. LOAD (PLF) FROM	TO	LC1 MAX CSI (LC)	MAX. UNBRAC LENGTH
1- 2	0 / 29	-77.3	-77.3	0.10 (1)	10.00
2- 3	-862 / 0	-77.3	-77.3	0.26 (1)	6.25
3- 4	-595 / 0	-77.3	-77.3	0.25 (1)	6.25
4- 5	-745 / 0	-77.3	-77.3	0.08 (1)	6.25
5- 6	-732 / 0	-77.3	-77.3	0.10 (1)	6.25
6- 7	-602 / 0	-77.3	-77.3	0.08 (1)	6.25
7- 8	0 / 29	-77.3	-77.3	0.10 (1)	10.00
16- 2	-907 / 0	0.0	0.0	0.09 (1)	7.81
9- 7	-933 / 0	0.0	0.0	0.14 (1)	7.81
16-15	0 / 0	-17.5	-17.5	0.11 (4)	10.00
15-14	0 / 739	-17.5	-17.5	0.17 (1)	10.00
14-13	0 / 6	-17.5	-17.5	0.06 (4)	10.00
13-12	0 / 6	0.0	0.0	0.02 (1)	10.00
12- 5	-256 / 0	0.0	0.0	0.07 (1)	7.81
12-11	0 / 501	-17.5	-17.5	0.13 (1)	10.00
10-11	0 / 19	0.0	0.0	0.02 (1)	10.00
11- 6	-368 / 0	0.0	0.0	0.02 (1)	7.81
10- 9	0 / 5	-17.5	-17.5	0.02 (4)	10.00

WEBS

MEMB. FR-TO	MAX. FACTORED FORCE (LBS)	MAX CSI (LC)
15- 3	-60 / 67	0.02 (4)
14- 4	0 / 82	0.03 (4)
3-14	-360 / 0	0.29 (1)
14-12	0 / 523	0.12 (1)
4-12	0 / 467	0.11 (1)
12- 6	0 / 135	0.03 (1)
2-15	0 / 755	0.17 (1)
11- 7	0 / 650	0.15 (1)
11- 9	-6 / 0	0.00 (1)

DESIGN CRITERIA

SPECIFIED LOADS:

TOP CH.	LL	=	23.3	PSF
	DL	=	3.0	PSF
BOT CH.	LL	=	0.0	PSF
	DL	=	7.0	PSF
TOTAL LOAD		=	33.3	PSF

SPACING = 24.0 IN. C/C

THIS TRUSS IS DESIGNED FOR RESIDENTIAL OR SMALL BUILDING REQUIREMENTS OF PART 9, NBCC 2010

THIS DESIGN COMPLIES WITH:
- PART 9 OF OBC 2012 , BCBC 2012 , ABC 2014
- CSA 086-09
- TPIC 2011

DESIGN ASSUMPTIONS
-OVERHANG NOT TO BE ALTERED OR CUT OFF.

(55 % OF 27.2 P.S.F. G.S.L. PLUS 8.4 P.S.F. RAIN LOAD) EQUALS 23.3 P.S.F. SPECIFIED ROOF LIVE LOAD

ALLOWABLE DEFL.(LL)= L/360 (0.59")
CALCULATED VERT. DEFL.(LL) = L/ 999 (0.02")
ALLOWABLE DEFL.(TL)= L/360 (0.59")
CALCULATED VERT. DEFL.(TL) = L/ 999 (0.04")

CSI: TC=0.26 (2-3:1) , BC=0.17 (14-15:1) , WB=0.29 (3-14:1) , SSI=0.16 (2-3:1)

DOL LUMBER=1.00 NAIL=1.00 LS BEND=1.10 COMP=1.10 SHEAR=1.10 TENS= 1.10

COMPANION LIVE LOAD FACTOR = 0.50

AUTOSOLVE LEFT HEEL ONLY

TRUSS PLATE MANUFACTURER IS NOT RESPONSIBLE FOR QUALITY CONTROL IN THE TRUSS MANUFACTURING PLANT .

NAIL VALUES

PLATE	GRIP(DRY) (PSI) MAX	MIN	SHEAR (PLI) MAX	MIN	SECTION (PLI) MAX	MIN
MT20	618	354	1667	822	2284	1656

PLATE PLACEMENT TOL. = 0.250 inches

PLATE ROTATION TOL. = 5.0 Deg.

JSI GRIP= 0.88 (9) (INPUT = 0.90)
JSI METAL= 0.28 (15) (INPUT = 1.00)

KOTT

RECEIVED
TOWN OF MILTON
MAR 29, 2017
JUNIPER 2
BUILDING DIVISION

CONTINUED ON PAGE 2

READ ALL NOTES ON THIS PAGE AND ON THE ENGINEERING NOTE PAGE ENP-1. THE NOTE PAGE IS AN INTEGRAL PART OF THIS DRAWING AS IT CONTAINS SPECIFICATIONS AND CRITERIA USED IN THE DESIGN OF THIS COMPONENT.

LICENSED PROFESSIONAL ENGINEER
C.G. CARSON
100076892
PROVINCE OF ONTARIO

21 MAR 2017

KOTT

RECEIVED
TOWN OF MILTON
MAR 29, 2017
JUNIPER 2
BUILDING DIVISION

SCALE = 1:58.5

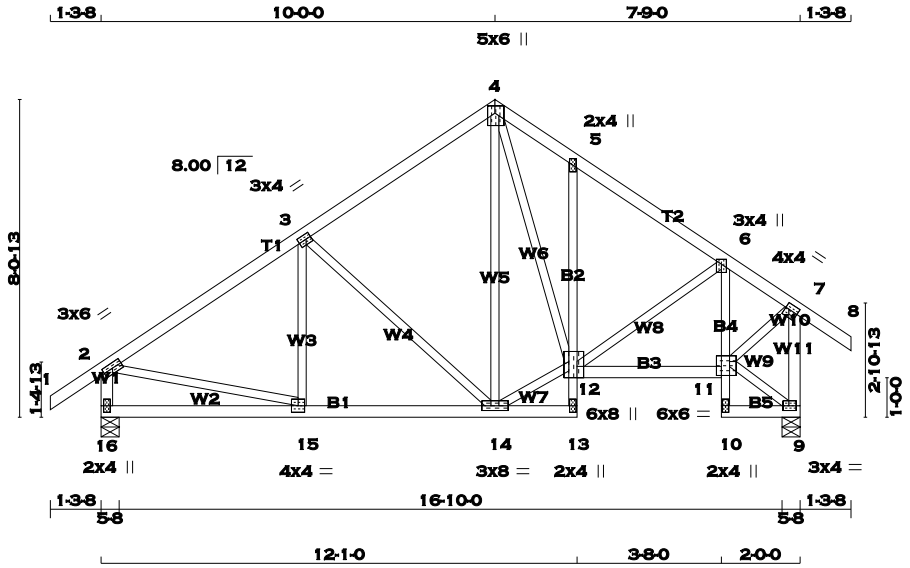

TOTAL WEIGHT = 93 lb

[M][F]

LUMBER

N. L. G. A. RULES

CHORDS	SIZE		LUMBER	DESCR.
1 - 4	2x4	DRY	No.2	SPF
4 - 8	2x4	DRY	No.2	SPF
16 - 2	2x4	DRY	No.2	SPF
9 - 7	2x4	DRY	No.2	SPF
16 - 13	2x4	DRY	No.2	SPF
13 - 5	2x3	DRY	No.2	SPF
12 - 11	2x4	DRY	No.2	SPF
10 - 6	2x3	DRY	No.2	SPF
10 - 9	2x4	DRY	No.2	SPF
ALL WEBS EXCEPT	2x3	DRY	No.2	SPF

DRY: SEASONED LUMBER.

PLATES (table is in inches)

JT	TYPE	PLATES	W	LEN	Y	X
2	TMVW-t	MT20	3.0	6.0		
3	TMWW-t	MT20	3.0	4.0	1.50	1.50
4	TTWW+p	MT20	5.0	6.0	2.25	2.25
5	TMV+p	MT20	2.0	4.0		
6	TMVW+p	MT20	3.0	4.0	1.50	1.50
7	TMVW-t	MT20	4.0	4.0	1.75	1.00
9	BMVW1-t	MT20	3.0	4.0	1.50	1.75
10	BMV+p	MT20	2.0	4.0		
11	BVMWW-l	MT20	6.0	6.0	4.25	4.00
12	BVMWWW+l	MT20	6.0	8.0	Edge	2.00
13	BMV+p	MT20	2.0	4.0		
14	BMWWW-t	MT20	3.0	8.0		
15	BMWW-t	MT20	4.0	4.0		
16	BMV1+p	MT20	2.0	4.0		

Edge - INDICATES REFERENCE CORNER OF PLATE TOUCHES EDGE OF CHORD.

A SIZE FOR SIZE SUBSTITUTION OF MITEK MII20 WITH TEE-LOK TL20 PLATES IS ALLOWED.

READ ALL NOTES ON THIS PAGE AND ON THE ENGINEERING NOTE PAGE ENP-1. THE NOTE PAGE IS AN INTEGRAL PART OF THIS DRAWING AS IT CONTAINS SPECIFICATIONS AND CRITERIA USED IN THE DESIGN OF THIS COMPONENT.

LICENSED PROFESSIONAL ENGINEER
C.G. CARSON
100076892
PROVINCE OF ONTARIO

21 MAR 2017

DIMENSIONS, SUPPORTS AND LOADINGS SPECIFIED BY FABRICATOR TO BE VERIFIED BY BUILDING DESIGNER

BEARINGS

JT	FACTORED GROSS REACTION VERT	HORZ	MAXIMUM FACTORED GROSS REACTION DOWN	HORZ	UPLIFT	INPUT BRG IN-SX	REQRD BRG IN-SX
16	944	0	944	0	0	5-8	5-8
9	952	0	952	0	0	5-8	5-8

UNFACTORED REACTIONS

JT	1ST LCASE COMBINED	MAX./MIN. COMPONENT REACTIONS SNOW	LIVE	PERM.LIVE	WIND	DEAD	SOIL
16	660	475 / 0	0 / 0	0 / 0	0 / 0	185 / 0	0 / 0
9	666	480 / 0	0 / 0	0 / 0	0 / 0	186 / 0	0 / 0

BEARING MATERIAL TO BE SPF NO.2 OR BETTER AT JOINT(S) 16, 9

BRACING

TOP CHORD TO BE SHEATHED OR MAX. PURLIN SPACING = 6.25 FT.
MAX. UNBRACED BOTTOM CHORD LENGTH = 7.81 FT. OR RIGID CEILING DIRECTLY APPLIED.

ALL PITCH BREAKS AND PERIMETER CORNER JOINTS MUST BE LATERALLY RESTRAINED.

LOADING

TOTAL LOAD CASES: (4)

CHORDS MEMB. FR-TO	MAX. FACTORED FORCE (LBS)	FACTORED VERT. LOAD (PLF) FROM	TO	LC1 MAX CSI (LC)	MAX. UNBRAC LENGTH
1- 2	0 / 29	-77.3	-77.3	0.10 (1)	10.00
2- 3	-862 / 0	-77.3	-77.3	0.26 (1)	6.25
3- 4	-595 / 0	-77.3	-77.3	0.25 (1)	6.25
4- 5	-745 / 0	-77.3	-77.3	0.08 (1)	6.25
5- 6	-732 / 0	-77.3	-77.3	0.10 (1)	6.25
6- 7	-602 / 0	-77.3	-77.3	0.08 (1)	6.25
7- 8	0 / 29	-77.3	-77.3	0.10 (1)	10.00
16- 2	-907 / 0	0.0	0.0	0.09 (1)	7.81
9- 7	-933 / 0	0.0	0.0	0.14 (1)	7.81
16-15	0 / 0	-17.5	-17.5	0.11 (4)	10.00
15-14	0 / 739	-17.5	-17.5	0.17 (1)	10.00
14-13	0 / 6	-17.5	-17.5	0.06 (4)	10.00
13-12	0 / 6	0.0	0.0	0.02 (1)	10.00
12- 5	-256 / 0	0.0	0.0	0.07 (1)	7.81
12-11	0 / 501	-17.5	-17.5	0.13 (1)	10.00
10-11	0 / 19	0.0	0.0	0.02 (1)	10.00
11- 6	-368 / 0	0.0	0.0	0.02 (1)	7.81
10- 9	0 / 5	-17.5	-17.5	0.02 (4)	10.00

WEBS MEMB. FR-TO	MAX. FACTORED FORCE (LBS)	MAX CSI (LC)
15- 3	-60 / 67	0.02 (4)
14- 4	0 / 82	0.03 (4)
3-14	-360 / 0	0.29 (1)
14-12	0 / 523	0.12 (1)
4-12	0 / 467	0.11 (1)
12- 6	0 / 135	0.03 (1)
2-15	0 / 755	0.17 (1)
11- 7	0 / 650	0.15 (1)
11- 9	-6 / 0	0.00 (1)

DESIGN CRITERIA

SPECIFIED LOADS:

TOP CH.	LL	=	23.3	PSF
	DL	=	3.0	PSF
BOT CH.	LL	=	0.0	PSF
	DL	=	7.0	PSF
TOTAL LOAD		=	33.3	PSF

SPACING = 24.0 IN. C/C

THIS TRUSS IS DESIGNED FOR RESIDENTIAL OR SMALL BUILDING REQUIREMENTS OF PART 9, NBCC 2010

THIS DESIGN COMPLIES WITH:
- PART 9 OF OBC 2012 , BCBC 2012 , ABC 2014
- CSA 086-09
- TPIC 2011

DESIGN ASSUMPTIONS
-OVERHANG NOT TO BE ALTERED OR CUT OFF.

(55 % OF 27.2 P.S.F. G.S.L. PLUS 8.4 P.S.F. RAIN LOAD) EQUALS 23.3 P.S.F. SPECIFIED ROOF LIVE LOAD

ALLOWABLE DEFL.(LL)= L/360 (0.59")
CALCULATED VERT. DEFL.(LL) = L/ 999 (0.02")
ALLOWABLE DEFL.(TL)= L/360 (0.59")
CALCULATED VERT. DEFL.(TL) = L/ 999 (0.04")

CSI: TC=0.26 (2-3:1) , BC=0.17 (14-15:1) , WB=0.29 (3-14:1) , SSI=0.16 (2-3:1)

DOL LUMBER=1.00 NAIL=1.00 LS BEND=1.10 COMP=1.10 SHEAR=1.10 TENS= 1.10

COMPANION LIVE LOAD FACTOR = 0.50

AUTOSOLVE LEFT HEEL ONLY

TRUSS PLATE MANUFACTURER IS NOT RESPONSIBLE FOR QUALITY CONTROL IN THE TRUSS MANUFACTURING PLANT .

NAIL VALUES

PLATE	GRIP(DRY) (PSI) MAX	MIN	SHEAR (PLI) MAX	MIN	SECTION (PLI) MAX	MIN
MT20	618	354	1667	822	2284	1656

PLATE PLACEMENT TOL. = 0.250 inches

PLATE ROTATION TOL. = 5.0 Deg.

JSI GRIP= 0.88 (9) (INPUT = 0.90)
JSI METAL= 0.28 (15) (INPUT = 1.00)

KOTT

RECEIVED
TOWN OF MILTON
MAR 29, 2017
JUNIPER 2
BUILDING DIVISION

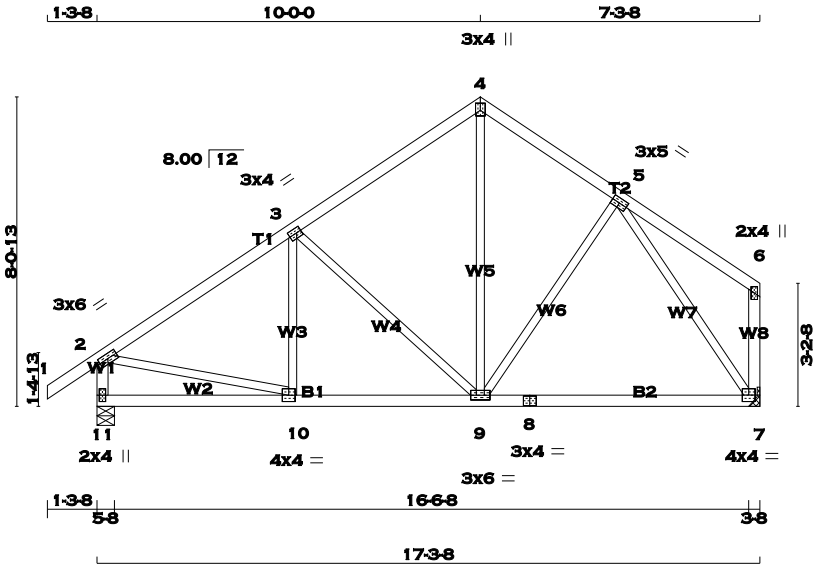

TOTAL WEIGHT = 3 X 78 = 235 lb

[M][F]

LUMBER

N. L. G. A. RULES

CHORDS	SIZE		LUMBER	DESCR.
1 - 4	2x4	DRY	No.2	SPF
4 - 6	2x4	DRY	No.2	SPF
11 - 2	2x4	DRY	No.2	SPF
7 - 6	2x4	DRY	No.2	SPF
11 - 8	2x4	DRY	No.2	SPF
8 - 7	2x4	DRY	No.2	SPF
ALL WEBS EXCEPT	2x3	DRY	No.2	SPF

DRY: SEASONED LUMBER.

PLATES (table is in inches)

JT	TYPE	PLATES	W	LEN	Y	X
2	TMVW-t	MT20	3.0	6.0		
3	TMWW-t	MT20	3.0	4.0	1.50	1.50
4	TTW+p	MT20	3.0	4.0	2.25	1.50
5	TMWW-t	MT20	3.0	5.0		
6	TMV+p	MT20	2.0	4.0		
7	BMVW1-t	MT20	4.0	4.0		
8	BS-t	MT20	3.0	4.0		
9	BMWWW-t	MT20	3.0	6.0		
10	BMWW-t	MT20	4.0	4.0		
11	BMV1+p	MT20	2.0	4.0		

A SIZE FOR SIZE SUBSTITUTION OF MITEK MII20 WITH TEE-LOK TL20 PLATES IS ALLOWED.

READ ALL NOTES ON THIS PAGE AND ON THE ENGINEERING NOTE PAGE ENP-1. THE NOTE PAGE IS AN INTEGRAL PART OF THIS DRAWING AS IT CONTAINS SPECIFICATIONS AND CRITERIA USED IN THE DESIGN OF THIS COMPONENT.

21 MAR 2017

DIMENSIONS, SUPPORTS AND LOADINGS SPECIFIED BY FABRICATOR TO BE VERIFIED BY BUILDING DESIGNER

BEARINGS

JT	FACTORED GROSS REACTION VERT	HORZ	MAXIMUM FACTORED GROSS REACTION DOWN	HORZ	UPLIFT	INPUT BRG IN-SX	REQRD BRG IN-SX
11	926	0	926	0	0	5-8	5-8
7	820	0	820	0	0	HANGER BY OTHERS	
						MIN. SEAT SIZE: 3-8	

UNFACTORED REACTIONS

JT	1ST LCASE COMBINED	MAX./MIN. COMPONENT REACTIONS SNOW	LIVE	PERM.LIVE	WIND	DEAD	SOIL
11	648	467 / 0	0 / 0	0 / 0	0 / 0	181 / 0	0 / 0
7	576	403 / 0	0 / 0	0 / 0	0 / 0	173 / 0	0 / 0

BEARING MATERIAL TO BE SPF NO.2 OR BETTER AT JOINT(S) 11

BRACING

TOP CHORD TO BE SHEATHED OR MAX. PURLIN SPACING = 6.25 FT.
MAX. UNBRACED BOTTOM CHORD LENGTH = 10.00 FT. OR RIGID CEILING DIRECTLY APPLIED.

ALL PITCH BREAKS AND PERIMETER CORNER JOINTS MUST BE LATERALLY RESTRAINED.

LOADING

TOTAL LOAD CASES: (4)

CHORDS

MEMB. FR-TO	MAX. FACTORED FORCE (LBS)	VERT. LOAD (PLF) FROM	TO	LC1 MAX CSI (LC)	MAX. UNBRAC LENGTH
1- 2	0 / 29	-77.3	-77.3	0.10 (1)	10.00
2- 3	-835 / 0	-77.3	-77.3	0.26 (1)	6.25
3- 4	-575 / 0	-77.3	-77.3	0.25 (1)	6.25
4- 5	-567 / 0	-77.3	-77.3	0.13 (1)	6.25
5- 6	0 / 18	-77.3	-77.3	0.16 (1)	10.00
11- 2	-887 / 0	0.0	0.0	0.09 (1)	7.81
7- 6	-110 / 0	0.0	0.0	0.02 (1)	7.81
11-10	0 / 0	-17.5	-17.5	0.10 (4)	10.00
10- 9	0 / 716	-17.5	-17.5	0.25 (4)	10.00
9- 8	0 / 452	-17.5	-17.5	0.22 (4)	10.00
8- 7	0 / 452	-17.5	-17.5	0.22 (4)	10.00

WEBS

MEMB. FR-TO	MAX. FACTORED FORCE (LBS)	MAX CSI (LC)
10- 3	-70 / 49	0.02 (1)
3- 9	-351 / 0	0.28 (1)
9- 4	0 / 360	0.08 (1)
9- 5	0 / 47	0.02 (4)
2-10	0 / 732	0.16 (1)
5- 7	-798 / 0	0.58 (1)

DESIGN CRITERIA

SPECIFIED LOADS:

TOP	CH.	LL	=	23.3	PSF
		DL	=	3.0	PSF
BOT	CH.	LL	=	0.0	PSF
		DL	=	7.0	PSF
TOTAL	LOAD		=	33.3	PSF

SPACING = 24.0 IN. C/C

THIS TRUSS IS DESIGNED FOR RESIDENTIAL OR SMALL BUILDING REQUIREMENTS OF PART 9, NBCC 2010

THIS DESIGN COMPLIES WITH:
- PART 9 OF OBC 2012 , BCBC 2012 , ABC 2014
- CSA 086-09
- TPIC 2011

(55 % OF 27.2 P.S.F. G.S.L. PLUS 8.4 P.S.F. RAIN LOAD) EQUALS 23.3 P.S.F. SPECIFIED ROOF LIVE LOAD

ALLOWABLE DEFL.(LL)= L/360 (0.58")
CALCULATED VERT. DEFL.(LL) = L/ 999 (0.02")
ALLOWABLE DEFL.(TL)= L/360 (0.58")
CALCULATED VERT. DEFL.(TL) = L/ 999 (0.09")

CSI: TC=0.26 (2-3:1) , BC=0.25 (9-10:4) , WB=0.58 (5-7:1) , SSI=0.16 (2-3:1)

DOL LUMBER=1.00 NAIL=1.00 LS BEND=1.10 COMP=1.10 SHEAR=1.10 TENS= 1.10

COMPANION LIVE LOAD FACTOR = 0.50

TRUSS PLATE MANUFACTURER IS NOT RESPONSIBLE FOR QUALITY CONTROL IN THE TRUSS MANUFACTURING PLANT .

NAIL VALUES

PLATE	GRIP(DRY) (PSI) MAX	MIN	SHEAR (PLI) MAX	MIN	SECTION (PLI) MAX	MIN
MT20	618	354	1667	822	2284	1656

PLATE PLACEMENT TOL. = 0.250 inches

PLATE ROTATION TOL. = 5.0 Deg.

JSI GRIP= 0.88 (9) (INPUT = 0.90)
JSI METAL= 0.27 (10) (INPUT = 1.00)

KOTT

RECEIVED
TOWN OF MILTON
MAR 29, 2017
JUNIPER 2
BUILDING DIVISION

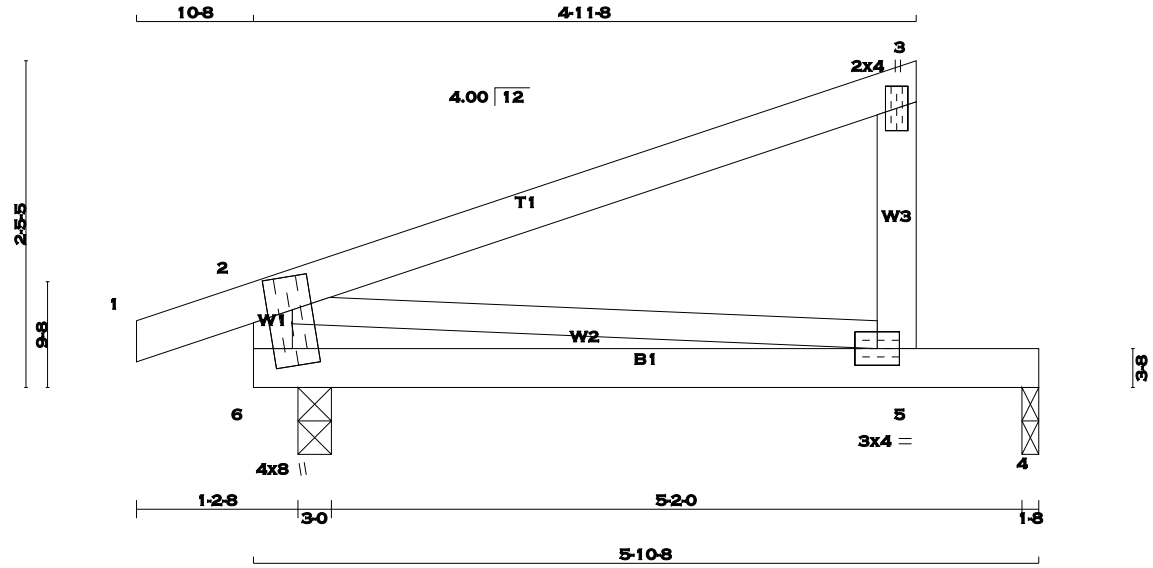

TOTAL WEIGHT = 5 X 20 = 99 lb

[M][F]

LUMBER

N. L. G. A. RULES

CHORDS	SIZE		LUMBER	DESCR.
1 - 3	2x4	DRY	No.2	SPF
5 - 3	2x4	DRY	No.2	SPF
6 - 2	2x4	DRY	No.2	SPF
6 - 4	2x4	DRY	No.2	SPF
ALL WEBS	2x3	DRY	No.2	SPF

DRY: SEASONED LUMBER.

PLATES (table is in inches)

JT	TYPE	PLATES	W	LEN	Y	X
2						
3	TMV+p	MT20	2.0	4.0		
5	BMVW-t	MT20	3.0	4.0		
6						
6	TMBMVW1*+m	MT20	4.0	8.0	3.00	1.75

A SIZE FOR SIZE SUBSTITUTION OF MITEK MII20 WITH TEE-LOK TL20 PLATES IS ALLOWED.

READ ALL NOTES ON THIS PAGE AND ON THE ENGINEERING NOTE PAGE ENP-1. THE NOTE PAGE IS AN INTEGRAL PART OF THIS DRAWING AS IT CONTAINS SPECIFICATIONS AND CRITERIA USED IN THE DESIGN OF THIS COMPONENT.

LICENSED PROFESSIONAL ENGINEER
C.G. CARSON
100076892
PROVINCE OF ONTARIO

21 MAR 2017

DIMENSIONS, SUPPORTS AND LOADINGS SPECIFIED BY FABRICATOR TO BE VERIFIED BY BUILDING DESIGNER

BEARINGS

JT	FACTORED GROSS REACTION VERT	HORZ	MAXIMUM FACTORED GROSS REACTION DOWN	HORZ	UPLIFT	INPUT BRG IN-SX	REQRD BRG IN-SX
6	344	0	344	0	0	3-0	3-0
4	213	0	213	0	0	1-8	1-8

UNFACTORED REACTIONS

JT	1ST LCASE COMBINED	MAX./MIN. COMPONENT REACTIONS SNOW	LIVE	PERM.LIVE	WIND	DEAD	SOIL
6	240	176 / 0	0 / 0	0 / 0	0 / 0	64 / 0	0 / 0
4	151	97 / 0	0 / 0	0 / 0	0 / 0	54 / 0	0 / 0

BEARING MATERIAL TO BE SPF NO.2 OR BETTER AT JOINT(S) 6, 4

BRACING

TOP CHORD TO BE SHEATHED OR MAX. PURLIN SPACING = 10.00 FT.
MAX. UNBRACED BOTTOM CHORD LENGTH = 10.00 FT. OR RIGID CEILING DIRECTLY APPLIED.

ALL PITCH BREAKS AND PERIMETER CORNER JOINTS MUST BE LATERALLY RESTRAINED.

LOADING

TOTAL LOAD CASES: (4)

CHORDS

MEMB. FR-TO	MAX. FACTORED FORCE (LBS)	FACTORED VERT. LOAD (PLF) FROM	TO	LC1 MAX CSI (LC)	MAX. UNBRAC LENGTH
1- 2	0 / 11	-77.3	-77.3	0.05 (1)	10.00
2- 3	0 / 0	-77.3	-77.3	0.32 (1)	10.00
5- 3	-192 / 0	0.0	0.0	0.02 (1)	7.81
6- 2	-263 / 0	0.0	0.0	0.03 (1)	7.81
6- 5	0 / 0	-17.5	-17.5	0.26 (1)	10.00
5- 4	0 / 0	-17.5	-17.5	0.26 (1)	10.00

WEBS

MEMB. FR-TO	MAX. FACTORED FORCE (LBS)	MAX CSI (LC)
2- 5	0 / 0	0.00 (1)

DESIGN CRITERIA

SPECIFIED LOADS:

TOP CH.	LL =	23.3	PSF
	DL =	3.0	PSF
BOT CH.	LL =	0.0	PSF
	DL =	7.0	PSF
TOTAL LOAD	=	33.3	PSF

SPACING = 24.0 IN. C/C

THIS TRUSS IS DESIGNED FOR RESIDENTIAL OR SMALL BUILDING REQUIREMENTS OF PART 9, NBCC 2010

THIS DESIGN COMPLIES WITH:
- PART 9 OF OBC 2012 , BCBC 2012 , ABC 2014
- CSA 086-09
- TPIC 2011

(55 % OF 27.2 P.S.F. G.S.L. PLUS 8.4 P.S.F. RAIN LOAD) EQUALS 23.3 P.S.F. SPECIFIED ROOF LIVE LOAD

ALLOWABLE DEFL.(LL)= L/360 (0.20")
CALCULATED VERT. DEFL.(LL) = L/ 999 (0.05")
ALLOWABLE DEFL.(TL)= L/360 (0.20")
CALCULATED VERT. DEFL.(TL) = L/ 554 (0.13")

CSI: TC=0.32 (2-3:1) , BC=0.26 (5-6:1) , WB=0.00 (2-5:1) , SSI=0.17 (4-5:1)

DOL LUMBER=1.00 NAIL=1.00 LS BEND=1.10 COMP=1.10 SHEAR=1.10 TENS= 1.10

COMPANION LIVE LOAD FACTOR = 0.50

TRUSS PLATE MANUFACTURER IS NOT RESPONSIBLE FOR QUALITY CONTROL IN THE TRUSS MANUFACTURING PLANT .

NAIL VALUES

PLATE	GRIP(DRY) (PSI) MAX	MIN	SHEAR (PLI) MAX	MIN	SECTION (PLI) MAX	MIN
MT20	618	354	1667	822	2284	1656

PLATE PLACEMENT TOL. = 0.250 inches

PLATE ROTATION TOL. = 5.0 Deg.

JSI GRIP= 0.19 (5) (INPUT = 0.90)
JSI METAL= 0.03 (3) (INPUT = 1.00)

KOTT

RECEIVED
TOWN OF MILTON
MAR 29, 2017
JUNIPER 2
BUILDING DIVISION

SCALE = 1:23.4

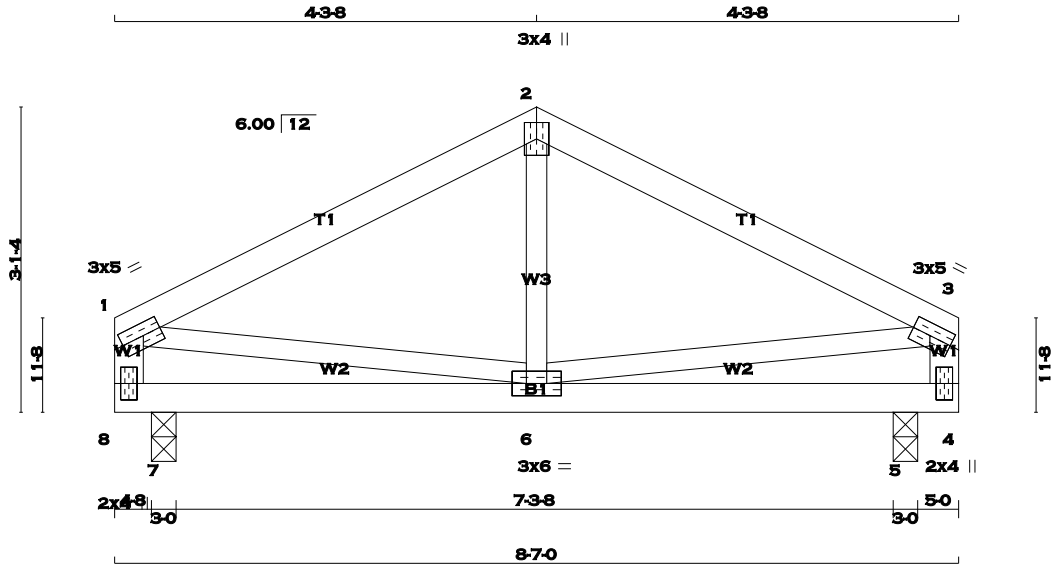

TOTAL WEIGHT = 2 X 31 = 61 lb [M]

LUMBER

N. L. G. A. RULES

CHORDS	SIZE		LUMBER	DESCR.
1 - 2	2x4	DRY	No.2	SPF
2 - 3	2x4	DRY	No.2	SPF
8 - 1	2x4	DRY	No.2	SPF
4 - 3	2x4	DRY	No.2	SPF
8 - 4	2x4	DRY	No.2	SPF
ALL WEBS EXCEPT	2x3	DRY	No.2	SPF

DRY: SEASONED LUMBER.

PLATES (table is in inches)

JT	TYPE	PLATES	W	LEN	Y	X
1	TMVW-t	MT20	3.0	5.0	1.50	2.25
2	TTW+p	MT20	3.0	4.0		
3	TMVW-t	MT20	3.0	5.0	1.50	2.25
4	BMV+p	MT20	2.0	4.0		
6	BMWWW-t	MT20	3.0	6.0		
8	BMV+p	MT20	2.0	4.0		

A SIZE FOR SIZE SUBSTITUTION OF MITEK MII20 WITH TEE-LOK TL20 PLATES IS ALLOWED.

READ ALL NOTES ON THIS PAGE AND ON THE ENGINEERING NOTE PAGE ENP-1. THE NOTE PAGE IS AN INTEGRAL PART OF THIS DRAWING AS IT CONTAINS SPECIFICATIONS AND CRITERIA USED IN THE DESIGN OF THIS COMPONENT.

LICENSED PROFESSIONAL ENGINEER
C.G. CARSON
100076892
PROVINCE OF ONTARIO

21 MAR 2017

DIMENSIONS, SUPPORTS AND LOADINGS SPECIFIED BY FABRICATOR TO BE VERIFIED BY BUILDING DESIGNER

BEARINGS

JT	FACTORED GROSS REACTION VERT	HORZ	MAXIMUM FACTORED GROSS REACTION DOWN	HORZ	UPLIFT	INPUT BRG IN-SX	REQRD BRG IN-SX
7	405	0	405	0	0	3-0	3-0
5	409	0	409	0	0	3-0	3-0

UNFACTORED REACTIONS

JT	1ST LCASE COMBINED	MAX./MIN. COMPONENT REACTIONS SNOW	LIVE	PERM.LIVE	WIND	DEAD	SOIL
7	284	199 / 0	0 / 0	0 / 0	0 / 0	85 / 0	0 / 0
5	287	201 / 0	0 / 0	0 / 0	0 / 0	86 / 0	0 / 0

BEARING MATERIAL TO BE SPF NO.2 OR BETTER AT JOINT(S) 7, 5

BRACING

TOP CHORD TO BE SHEATHED OR MAX. PURLIN SPACING = 6.25 FT.
MAX. UNBRACED BOTTOM CHORD LENGTH = 10.00 FT. OR RIGID CEILING DIRECTLY APPLIED.

ALL PITCH BREAKS AND PERIMETER CORNER JOINTS MUST BE LATERALLY RESTRAINED.

LOADING

TOTAL LOAD CASES: (4)

CHORDS

MEMB. FR-TO	MAX. FACTORED FORCE (LBS)	FACTORED VERT. LOAD (PLF) FROM	TO	LC1 MAX CSI (LC)	MAX. UNBRAC LENGTH
1- 2	-237 / 0	-77.3	-77.3	0.25 (1)	6.25
2- 3	-237 / 0	-77.3	-77.3	0.25 (1)	6.25
8- 1	-304 / 0	0.0	0.0	0.03 (1)	7.81
4- 3	-304 / 0	0.0	0.0	0.03 (1)	7.81
8- 7	0 / 0	-17.5	-17.5	0.21 (1)	10.00
7- 6	0 / 0	-17.5	-17.5	0.21 (1)	10.00
6- 5	0 / 0	-17.5	-17.5	0.23 (1)	10.00
5- 4	0 / 0	-17.5	-17.5	0.23 (1)	10.00

WEBS

MEMB. FR-TO	MAX. FACTORED FORCE (LBS)	MAX CSI (LC)
6- 2	-120 / 38	0.02 (1)
1- 6	0 / 215	0.05 (1)
6- 3	0 / 215	0.05 (1)

DESIGN CRITERIA

SPECIFIED LOADS:

TOP CH.	LL	=	23.3	PSF
	DL	=	3.0	PSF
BOT CH.	LL	=	0.0	PSF
	DL	=	7.0	PSF
TOTAL LOAD		=	33.3	PSF

SPACING = 24.0 IN. C/C

THIS TRUSS IS DESIGNED FOR RESIDENTIAL OR SMALL BUILDING REQUIREMENTS OF PART 9, NBCC 2010

THIS DESIGN COMPLIES WITH:
- PART 9 OF OBC 2012 , BCBC 2012 , ABC 2014
- CSA 086-09
- TPIC 2011

(55 % OF 27.2 P.S.F. G.S.L. PLUS 8.4 P.S.F. RAIN LOAD) EQUALS 23.3 P.S.F. SPECIFIED ROOF LIVE LOAD

ALLOWABLE DEFL.(LL)= L/360 (0.25")
CALCULATED VERT. DEFL.(LL) = L/ 999 (0.01")
ALLOWABLE DEFL.(TL)= L/360 (0.25")
CALCULATED VERT. DEFL.(TL) = L/ 999 (0.02")

CANTILEVER DEFLECTION:
ALLOWABLE DEFL.(LL)= L/120 (0.19")
CALCULATED VERT. DEFL.(LL) = L/ 643 (0.01")
ALLOWABLE DEFL.(TL)= L/120 (0.19")
CALCULATED VERT. DEFL.(TL) = L/ 437 (0.01")

CSI: TC=0.25 (1-2:1) , BC=0.23 (4-5:1) , WB=0.05 (3-6:1) , SSI=0.24 (4-5:1)

DOL LUMBER=1.00 NAIL=1.00 LS BEND=1.10 COMP=1.10 SHEAR=1.10 TENS= 1.10

COMPANION LIVE LOAD FACTOR = 0.50

AUTOSOLVE HEELS OFF

TRUSS PLATE MANUFACTURER IS NOT RESPONSIBLE FOR QUALITY CONTROL IN THE TRUSS MANUFACTURING PLANT .

NAIL VALUES

PLATE	GRIP(DRY) (PSI) MAX	MIN	SHEAR (PLI) MAX	MIN	SECTION (PLI) MAX	MIN
MT20	618	354	1667	822	2284	1656

PLATE PLACEMENT TOL. = 0.250 inches

PLATE ROTATION TOL. = 5.0 Deg.

JSI GRIP= 0.43 (6) (INPUT = 0.90)
JSI METAL= 0.09 (1) (INPUT = 1.00)

KOTT

RECEIVED
TOWN OF MILTON
MAR 29, 2017
JUNIPER 2
BUILDING DIVISION

SCALE = 1:23.4

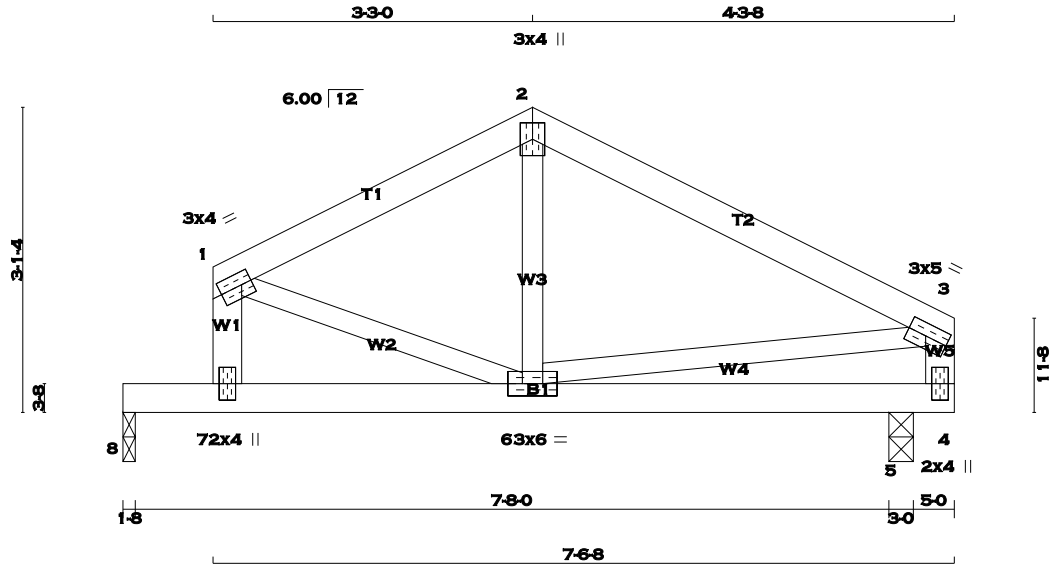

TOTAL WEIGHT = 29 lb [M]

LUMBER

N. L. G. A. RULES

CHORDS	SIZE		LUMBER	DESCR.
1 - 2	2x4	DRY	No.2	SPF
2 - 3	2x4	DRY	No.2	SPF
7 - 1	2x4	DRY	No.2	SPF
4 - 3	2x4	DRY	No.2	SPF
8 - 4	2x4	DRY	No.2	SPF
ALL WEBS EXCEPT	2x3	DRY	No.2	SPF

DRY: SEASONED LUMBER.

PLATES (table is in inches)

JT	TYPE	PLATES	W	LEN	Y	X
1	TMVW-t	MT20	3.0	4.0	1.50	1.25
2	TTW+p	MT20	3.0	4.0		
3	TMVW-t	MT20	3.0	5.0	1.50	2.25
4	BMV+p	MT20	2.0	4.0		
6	BMWWW-t	MT20	3.0	6.0		
7	BMV+p	MT20	2.0	4.0		

A SIZE FOR SIZE SUBSTITUTION OF MITEK MII20 WITH TEE-LOK TL20 PLATES IS ALLOWED.

READ ALL NOTES ON THIS PAGE AND ON THE ENGINEERING NOTE PAGE ENP-1. THE NOTE PAGE IS AN INTEGRAL PART OF THIS DRAWING AS IT CONTAINS SPECIFICATIONS AND CRITERIA USED IN THE DESIGN OF THIS COMPONENT.

LICENSED PROFESSIONAL ENGINEER
C.G. CARSON
100076892
PROVINCE OF ONTARIO

21 MAR 2017

DIMENSIONS, SUPPORTS AND LOADINGS SPECIFIED BY FABRICATOR TO BE VERIFIED BY BUILDING DESIGNER

BEARINGS

JT	FACTORED GROSS REACTION VERT	HORZ	MAXIMUM FACTORED GROSS REACTION DOWN	HORZ	UPLIFT	INPUT BRG IN-SX	REQRD BRG IN-SX
8	374	0	374	0	0	1-8	1-8
5	429	0	429	0	0	3-0	3-0

UNFACTORED REACTIONS

JT	1ST LCASE COMBINED	MAX./MIN. COMPONENT REACTIONS SNOW	LIVE	PERM.LIVE	WIND	DEAD	SOIL
8	262	183 / 0	0 / 0	0 / 0	0 / 0	79 / 0	0 / 0
5	301	210 / 0	0 / 0	0 / 0	0 / 0	90 / 0	0 / 0

BEARING MATERIAL TO BE SPF NO.2 OR BETTER AT JOINT(S) 8, 5

BRACING

TOP CHORD TO BE SHEATHED OR MAX. PURLIN SPACING = 6.25 FT.
MAX. UNBRACED BOTTOM CHORD LENGTH = 10.00 FT. OR RIGID CEILING DIRECTLY APPLIED.

ALL PITCH BREAKS AND PERIMETER CORNER JOINTS MUST BE LATERALLY RESTRAINED.

LOADING

TOTAL LOAD CASES: (4)

CHORDS

MEMB. FR-TO	MAX. FACTORED FORCE (LBS)	FACTORED VERT. LOAD (PLF) FROM	TO	LC1 MAX CSI (LC)	MAX. UNBRAC LENGTH
1- 2	-332 / 0	-77.3	-77.3	0.13 (1)	6.25
2- 3	-338 / 0	-77.3	-77.3	0.17 (1)	6.25
7- 1	-282 / 0	0.0	0.0	0.33 (1)	7.81
4- 3	-364 / 0	0.0	0.0	0.16 (1)	7.81
8- 7	0 / 0	-94.8	-94.8	0.41 (1)	10.00
7- 6	0 / 263	-17.5	-17.5	0.13 (1)	10.00
6- 5	0 / 10	-17.5	-17.5	0.12 (1)	10.00
5- 4	0 / 10	-17.5	-17.5	0.16 (1)	10.00

WEBS

MEMB. FR-TO	MAX. FACTORED FORCE (LBS)	MAX CSI (LC)
6- 2	0 / 61	0.02 (4)
1- 6	0 / 40	0.01 (1)
6- 3	0 / 293	0.07 (1)

DESIGN CRITERIA

SPECIFIED LOADS:

TOP	CH.	LL	=	23.3	PSF
		DL	=	3.0	PSF
BOT	CH.	LL	=	0.0	PSF
		DL	=	7.0	PSF
TOTAL	LOAD		=	33.3	PSF

SPACING = 24.0 IN. C/C

THIS TRUSS IS DESIGNED FOR RESIDENTIAL OR SMALL BUILDING REQUIREMENTS OF PART 9, NBCC 2010

THIS DESIGN COMPLIES WITH:
- PART 9 OF OBC 2012 , BCBC 2012 , ABC 2014
- CSA 086-09
- TPIC 2011

(55 % OF 27.2 P.S.F. G.S.L. PLUS 8.4 P.S.F. RAIN LOAD) EQUALS 23.3 P.S.F. SPECIFIED ROOF LIVE LOAD

ALLOWABLE DEFL.(LL)= L/360 (0.26")
CALCULATED VERT. DEFL.(LL) = L/ 999 (0.02")
ALLOWABLE DEFL.(TL)= L/360 (0.26")
CALCULATED VERT. DEFL.(TL) = L/ 999 (0.04")

CANTILEVER DEFLECTION:
ALLOWABLE DEFL.(LL)= L/120 (0.19")
CALCULATED VERT. DEFL.(LL) = L/ 999 (0.00")
ALLOWABLE DEFL.(TL)= L/120 (0.19")
CALCULATED VERT. DEFL.(TL) = L/ 999 (0.01")

CSI: TC=0.33 (1-7:1) , BC=0.41 (7-8:1) , WB=0.07 (3-6:1) , SSI=0.29 (4-5:1)

DOL LUMBER=1.00 NAIL=1.00 LS BEND=1.10 COMP=1.10 SHEAR=1.10 TENS= 1.10

COMPANION LIVE LOAD FACTOR = 0.50

AUTOSOLVE LEFT HEEL ONLY

TRUSS PLATE MANUFACTURER IS NOT RESPONSIBLE FOR QUALITY CONTROL IN THE TRUSS MANUFACTURING PLANT .

NAIL VALUES

PLATE	GRIP(DRY) (PSI) MAX	MIN	SHEAR (PLI) MAX	MIN	SECTION (PLI) MAX	MIN
MT20	618	354	1667	822	2284	1656

PLATE PLACEMENT TOL. = 0.250 inches

PLATE ROTATION TOL. = 5.0 Deg.

JSI GRIP= 0.67 (1) (INPUT = 0.90)
JSI METAL= 0.17 (7) (INPUT = 1.00)

RECEIVED
TOWN OF MILTON
MAR 29, 2017
JUNIPER 2
BUILDING DIVISION

KOTT

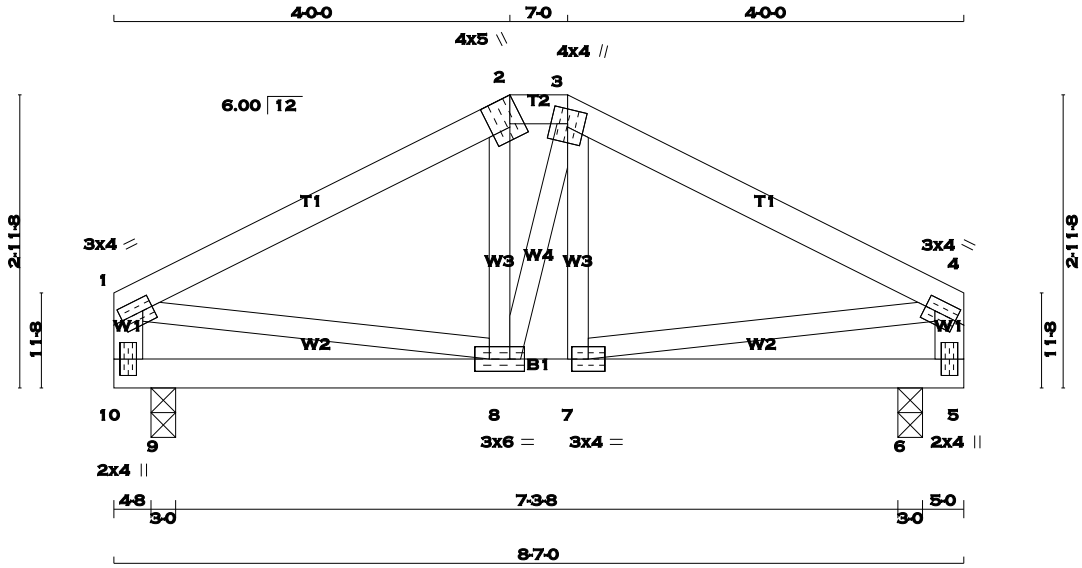

SCALE = 1:23.3

TOTAL WEIGHT = 34 lb [M]

LUMBER

N. L. G. A. RULES

CHORDS	SIZE		LUMBER	DESCR.
1 - 2	2x4	DRY	No.2	SPF
2 - 3	2x4	DRY	No.2	SPF
3 - 4	2x4	DRY	No.2	SPF
10 - 1	2x4	DRY	No.2	SPF
5 - 4	2x4	DRY	No.2	SPF
10 - 5	2x4	DRY	No.2	SPF
ALL WEBS EXCEPT	2x3	DRY	No.2	SPF

DRY: SEASONED LUMBER.

PLATES (table is in inches)

JT	TYPE	PLATES	W	LEN	Y	X
1	TMVW-t	MT20	3.0	4.0	1.50	1.25
2	TTW+h	MT20	4.0	5.0	Edge	1.50
3	TTWW+m	MT20	4.0	4.0	1.75	2.00
4	TMVW-t	MT20	3.0	4.0	1.50	1.25
5	BMV+p	MT20	2.0	4.0		
7	BMWW-t	MT20	3.0	4.0		
8	BMWWW-t	MT20	3.0	6.0		
10	BMV+p	MT20	2.0	4.0		

Edge - INDICATES REFERENCE CORNER OF PLATE TOUCHES EDGE OF CHORD.

A SIZE FOR SIZE SUBSTITUTION OF MITEK MII20 WITH TEE-LOK TL20 PLATES IS ALLOWED.

READ ALL NOTES ON THIS PAGE AND ON THE ENGINEERING NOTE PAGE ENP-1. THE NOTE PAGE IS AN INTEGRAL PART OF THIS DRAWING AS IT CONTAINS SPECIFICATIONS AND CRITERIA USED IN THE DESIGN OF THIS COMPONENT.

LICENSED PROFESSIONAL ENGINEER
C.G. CARSON
100076892
PROVINCE OF ONTARIO

21 MAR 2017

DIMENSIONS, SUPPORTS AND LOADINGS SPECIFIED BY FABRICATOR TO BE VERIFIED BY BUILDING DESIGNER

BEARINGS

JT	FACTORED GROSS REACTION VERT	HORZ	MAXIMUM FACTORED GROSS REACTION DOWN	HORZ	UPLIFT	INPUT BRG IN-SX	REQRD BRG IN-SX
9	405	0	405	0	0	3-0	3-0
6	409	0	409	0	0	3-0	3-0

UNFACTORED REACTIONS

JT	1ST LCASE COMBINED	MAX./MIN. COMPONENT REACTIONS SNOW	LIVE	PERM.LIVE	WIND	DEAD	SOIL
9	284	199 / 0	0 / 0	0 / 0	0 / 0	85 / 0	0 / 0
6	287	201 / 0	0 / 0	0 / 0	0 / 0	86 / 0	0 / 0

BEARING MATERIAL TO BE SPF NO.2 OR BETTER AT JOINT(S) 9, 6

BRACING

TOP CHORD TO BE SHEATHED OR MAX. PURLIN SPACING = 6.25 FT.
MAX. UNBRACED BOTTOM CHORD LENGTH = 10.00 FT. OR RIGID CEILING DIRECTLY APPLIED.

ALL PITCH BREAKS AND PERIMETER CORNER JOINTS MUST BE LATERALLY RESTRAINED.

LOADING

TOTAL LOAD CASES: (4)

CHORDS

MEMB. FR-TO	MAX. FACTORED FORCE (LBS)	FACTORED VERT. LOAD (PLF) FROM	TO	LC1 MAX CSI (LC)	MAX. UNBRAC LENGTH
1- 2	-252 / 0	-77.3	-77.3	0.21 (1)	6.25
2- 3	-226 / 0	-77.3	-77.3	0.00 (1)	6.25
3- 4	-247 / 0	-77.3	-77.3	0.21 (1)	6.25
10- 1	-305 / 0	0.0	0.0	0.03 (1)	7.81
5- 4	-303 / 0	0.0	0.0	0.03 (1)	7.81
10- 9	0 / 0	-17.5	-17.5	0.21 (1)	10.00
9- 8	0 / 0	-17.5	-17.5	0.21 (1)	10.00
8- 7	0 / 224	-17.5	-17.5	0.12 (1)	10.00
7- 6	0 / 0	-17.5	-17.5	0.23 (1)	10.00
6- 5	0 / 0	-17.5	-17.5	0.23 (1)	10.00

WEBS

MEMB. FR-TO	MAX. FACTORED FORCE (LBS)	MAX CSI (LC)
8- 2	-64 / 19	0.01 (1)
8- 3	0 / 9	0.00 (4)
7- 3	-75 / 12	0.01 (1)
1- 8	0 / 228	0.05 (1)
7- 4	0 / 224	0.05 (1)

DESIGN CRITERIA

SPECIFIED LOADS:

TOP	CH.	LL	=	23.3	PSF
		DL	=	3.0	PSF
BOT	CH.	LL	=	0.0	PSF
		DL	=	7.0	PSF
TOTAL	LOAD		=	33.3	PSF

SPACING = 24.0 IN. C/C

LOADING IN FLAT SECTION BASED ON A SLOPE OF 2.00/12 MINIMUM

THIS TRUSS IS DESIGNED FOR RESIDENTIAL OR SMALL BUILDING REQUIREMENTS OF PART 9, NBCC 2010

THIS DESIGN COMPLIES WITH:
- PART 9 OF OBC 2012 , BCBC 2012 , ABC 2014
- CSA 086-09
- TPIC 2011

(55 % OF 27.2 P.S.F. G.S.L. PLUS 8.4 P.S.F. RAIN LOAD) EQUALS 23.3 P.S.F. SPECIFIED ROOF LIVE LOAD

ALLOWABLE DEFL.(LL)= L/360 (0.25")
CALCULATED VERT. DEFL.(LL) = L/ 999 (0.01")
ALLOWABLE DEFL.(TL)= L/360 (0.25")
CALCULATED VERT. DEFL.(TL) = L/ 999 (0.02")

CANTILEVER DEFLECTION:
ALLOWABLE DEFL.(LL)= L/120 (0.19")
CALCULATED VERT. DEFL.(LL) = L/ 679 (0.01")
ALLOWABLE DEFL.(TL)= L/120 (0.19")
CALCULATED VERT. DEFL.(TL) = L/ 459 (0.01")

CSI: TC=0.21 (1-2:1) , BC=0.23 (6-7:1) , WB=0.05 (1-8:1) , SSI=0.24 (9-10:1)

DOL LUMBER=1.00 NAIL=1.00 LS BEND=1.10 COMP=1.10 SHEAR=1.10 TENS= 1.10

COMPANION LIVE LOAD FACTOR = 0.50

AUTOSOLVE HEELS OFF

TRUSS PLATE MANUFACTURER IS NOT RESPONSIBLE FOR QUALITY CONTROL IN THE TRUSS MANUFACTURING PLANT .

NAIL VALUES

PLATE	GRIP(DRY) (PSI) MAX	MIN	SHEAR (PLI) MAX	MIN	SECTION (PLI) MAX	MIN
MT20	618	354	1667	822	2284	1656

PLATE PLACEMENT TOL. = 0.250 inches

PLATE ROTATION TOL. = 5.0 Deg.

JSI GRIP= 0.55 (1) (INPUT = 0.90)
JSI METAL= 0.12 (1) (INPUT = 1.00)

RECEIVED
TOWN OF MILTON
MAR 29, 2017
JUNIPER 2
BUILDING DIVISION

KOTT