TOWN OF MILTON
PLANNING AND DEVELOPMENT
BUILDING PERMIT: 17-5419
BUILDING: REVIEWED
SCOTT SHERRIFFS APR 26, 2017
PLANS EXAMINER DATE
Neither the issuance of a permit nor carrying out of inspections by the Town of Milton relives the owner from full responsibility for compliance with the provisions of the Ontario Building Code Act and the Ontario Building Code, both as amended, as well as other applicable statutes and regulations of the Province on Ontario, By-laws of the Region of Halton and Town of Milton

RECEIVED
TOWN OF MILTON
MAR 29, 2017
17-5419
BUILDING DIVISION

KOTT

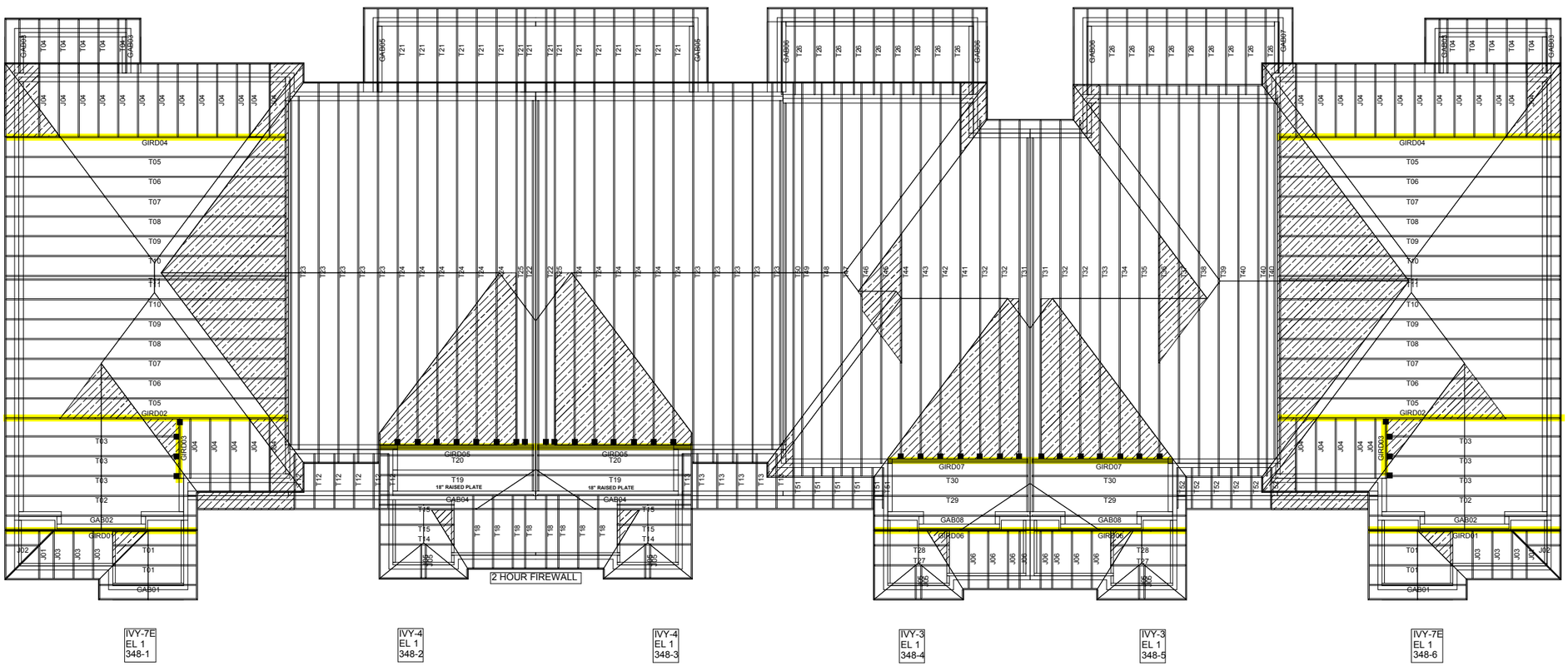

TOP OF ALL PORCH BEAMS
AT 8' 7 1/4 A.F.F.

UNDERSIDE OF SOFFIT
FOR PORCHES AT
8' 6" A.F.F.

GARAGE WALL PLATES
AT 9' 1 2/16" A.F.F.

PARTY WALLS TO BE
FRAMED ON SITE A.P.P.

HANGER LEGEND:

▼ LUS24 ■ LJS26DS
● HGUS26 ╳ HGUS26-2

CONVENTIONAL
FRAMING BY OTHERS

SIZE AND LOCATION OF CONVENTIONAL FRAMING IS APPROXIMATE. ALL AREAS MAY NOT BE SHOWN. REFER TO ARCHITECTURAL PLANS FOR DETAILS.

ALL CONVENTIONAL FRAMING TO CONFORM WITH PART 9 OF THE O.B.C
ROOF RAFTERS THAT CROSS MEET OVER TRUSSES TO BE 2x4 S.P.F. @ 24"O/C WITH A 2x4 VERTICAL POST TO THE TRUSS UNDERNEATH EACH CROSS POINT. VERTICAL POST LONGER THAN 6' TO HAVE LATERAL BRACING SO THAT THE DISTANCE BETWEEN END POINT AND BETWEEN ROWS OF BRACING DOES NOT EXCEED 6'.

Model: **BLOCK 348**
Customer: GREENPARK
Project: LECCO RIDGE
Location: MILTON
Date: 3/17/2017 Drawn by: BB

ENGINEERING NOTE PAGE (ENP-1)
PLEASE READ PRIOR TO INSTALLATION

RESPONSIBILITIES

THIS DESIGN IS FOR AN INDIVIDUAL BUILDING COMPONENT AND HAS BEEN BASED ON INFORMATION PROVIDED BY THE DESIGN OFFICE OF KOTT LUMBER. THE UNDERSIGNED ENGINEER DISCLAIMS ANY RESPONSIBILITY FOR DAMAGES AS A RESULT OF FAULTY OR INCORRECT INFORMATION, SPECIFICATION AND/OR DESIGNS FURNISHED TO THE ENGINEER. THE UNDERSIGNED ENGINEER IS ONLY RESPONSIBLE FOR THE STRUCTURAL INTEGRITY OF THIS BUILDING COMPONENT FOR THE CONDITIONS AND LOADS SHOWN ON THIS DRAWING. THE STRUCTURAL INTEGRITY OF THE BUILDING AND THE VERIFICATION OF THE DIMENSIONS AND THE DESIGN LOADS USED ARE THE RESPONSIBILITY OF THE BUILDING DESIGNER.

TRUSSES ARE DESIGNED IN CONFORMANCE WITH THE RELEVANT SECTIONS OF THE NATIONAL BUILDING CODE OF CANADA OR THE CANADIAN CODE FOR FARM BUILDINGS, WHICHEVER APPLIES TO THE BUILDING TYPE INDICATED ON THE DRAWING

IT IS THE RESPONSIBILITY OF KOTT LUMBER TO ENSURE THAT TRUSSES ARE MANUFACTURED IN CONFORMANCE WITH THESE DESIGNS AND WITH THE SPECIFICATIONS OUTLINED BELOW. THE UNDERSIGNED ENGINEER IS NOT RESPONSIBLE FOR QUALITY CONTROL IN THE TRUSS MANUFACTURING PLANT.

USE AND OCCUPANCY

- The building is of the type indicated on the drawing

LOADING

- The truss loading intensity and distribution as well as load transfer mechanism is that indicated on the drawing
- No buildings, trees, parapets or other projections higher than the roof for which the trusses are used are located within a distance less than ten (10) times the difference in height, or five metres (16 ft) whichever is greater, unless the drawing indicates that the snow drifting has been taken into account

HANDLING, INSTALLATION AND BRACING

- The trusses must be handled and installed by a qualified professional as per the supplied document titled *Information for Truss Installers* and the BCSI-B1 and BCSI-B3 Summary Sheets
- The compression chords are laterally braced by continuous rigid diaphragm sheathing or as specified on the drawing
- Temporary and permanent bracing must be installed as indicated on the truss drawing and according to the BCSI-B1 and BCSI-B3 Summary Sheets. Bracing for the lateral stability of the truss is to be provided by the building designer
- **It is recommended that a Professional Engineer's advice be obtained for the bracing of trusses spanning more than 12.37m (40'-7")**

SUPPORTS

- The trusses are to be supported at the bearing points indicated and anchored to the supports where considered necessary by the designer of the overall structure
- Bearing sizes shown are the minimum required to prevent crushing of the truss members and do not necessarily take into account stability of the overall building structure
- Elevation of bearings must be carefully checked and shimmed to alignment for solid bearings
- Adequate wood truss bearing is the responsibility of the building designer.

DIMENSIONS

- Geometry of the truss and dimensions indicated on the drawing are identical to those of the installed truss.

RECEIVED
TOWN OF MILTON
MAR 29, 2017
17-5419
BUILDING DIVISION

JOB NAME	TRUSS NAME	QUANTITY	PLY	JOB DESC.	DRWG NO.
PT0317-122	**GAB01**	**2**	**1**	TRUSS DESC. LECCO RIDGE-BLOCK 348	Page 2 of 75 ENG JOB: PT0317-122

KOTT , Stouffville, ON, CGC

Version 8.100 S Feb 9 2017 MiTek Industries, Inc. Mon Mar 20 10:10:19 2017 Page 1
ID:Mn2zxnCa6NqoASkSkmtLJtyfhrl-u_rv94wAW3tjiRjCjsrt?ZPqoKL66aHP6GdDzwzZ4wo

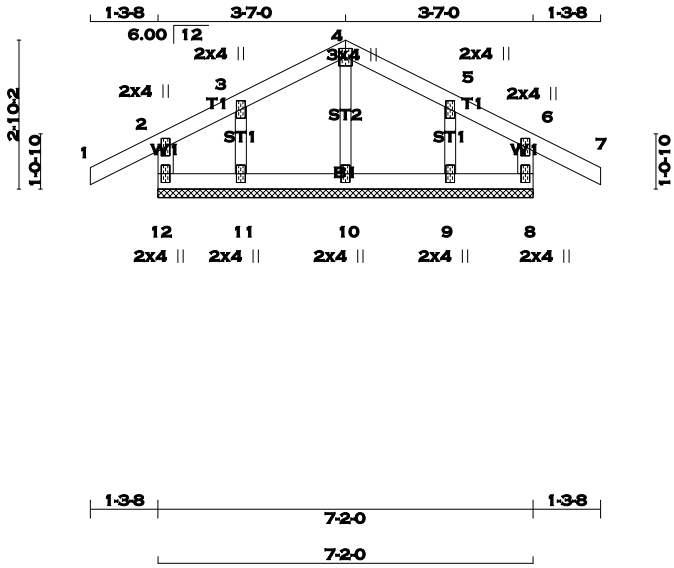

SCALE = 1:44.0

TOTAL WEIGHT = 2 X 26 = 52 lb [M]

LUMBER

N. L. G. A. RULES

CHORDS	SIZE		LUMBER	DESCR.
12 - 2	2x4	DRY	No.2	SPF
1 - 4	2x4	DRY	No.2	SPF
4 - 7	2x4	DRY	No.2	SPF
8 - 6	2x4	DRY	No.2	SPF
12 - 8	2x4	DRY	No.2	SPF
ALL WEBS	2x3	DRY	No.2	SPF
ALL GABLE WEBS	2x3	DRY	No.2	SPF

DRY: SEASONED LUMBER.

GABLE STUDS SPACED AT 2-0-0 OC.

PLATES (table is in inches)

JT	TYPE	PLATES	W	LEN	Y	X
2	TMV+p	MT20	2.0	4.0		
3	TMW+w	MT20	2.0	4.0		
4	TTW+p	MT20	3.0	4.0		
5	TMW+w	MT20	2.0	4.0		
6	TMV+p	MT20	2.0	4.0		
8	BMV1+p	MT20	2.0	4.0		
9, 10, 11						
9	BMW1+w	MT20	2.0	4.0		
12	BMV1+p	MT20	2.0	4.0		

A SIZE FOR SIZE SUBSTITUTION OF MITEK MII20 WITH TEE-LOK TL20 PLATES IS ALLOWED.

DIMENSIONS, SUPPORTS AND LOADINGS SPECIFIED BY FABRICATOR TO BE VERIFIED BY BUILDING DESIGNER

BEARINGS

THIS TRUSS DESIGNED FOR CONTINUOUS BEARINGS.

THIS TRUSS REQUIRES RIGID SHEATHING ON EXPOSED FACE.

BEARING MATERIAL TO BE SPF NO.2 OR BETTER AT JOINT(S)

BRACING

TOP CHORD TO BE SHEATHED OR MAX. PURLIN SPACING = 10.00 FT.
MAX. UNBRACED BOTTOM CHORD LENGTH = 6.25 FT. OR RIGID CEILING DIRECTLY APPLIED.

ALL PITCH BREAKS AND PERIMETER CORNER JOINTS MUST BE LATERALLY RESTRAINED.

LOADING

TOTAL LOAD CASES: (4)

CHORDS

MEMB. FR-TO	MAX. FORCE (LBS)	FACTORED VERT. LOAD (PLF) FROM	TO	LC1	MAX CSI (LC)	MAX. UNBRAC LENGTH
12- 2	-162 / 0	0.0	0.0	0.04 (1)	7.81	
1- 2	0 / 23	-77.4	-77.4	0.10 (1)	10.00	
2- 3	0 / 31	-77.4	-77.4	0.06 (1)	10.00	
3- 4	0 / 47	-77.4	-77.4	0.05 (1)	10.00	
4- 5	0 / 47	-77.4	-77.4	0.05 (1)	10.00	
5- 6	0 / 31	-77.4	-77.4	0.06 (1)	10.00	
6- 7	0 / 23	-77.4	-77.4	0.10 (1)	10.00	
8- 6	-162 / 0	0.0	0.0	0.04 (1)	7.81	
12-11	-34 / 0	-17.5	-17.5	0.01 (4)	6.25	
11-10	-39 / 0	-17.5	-17.5	0.01 (4)	6.25	
10- 9	-39 / 0	-17.5	-17.5	0.01 (4)	6.25	
9- 8	-34 / 0	-17.5	-17.5	0.01 (4)	6.25	

WEBS

MEMB. FR-TO	MAX. FORCE (LBS)	MAX CSI (LC)
10- 4	-212 / 0	0.04 (1)
11- 3	-114 / 0	0.02 (1)
9- 5	-114 / 0	0.02 (1)

DESIGN CRITERIA

SPECIFIED LOADS:

TOP	CH.	LL	=	23.3	PSF
		DL	=	3.0	PSF
BOT	CH.	LL	=	0.0	PSF
		DL	=	7.0	PSF
TOTAL	LOAD		=	33.3	PSF

SPACING = 24.0 IN. C/C

THIS TRUSS IS DESIGNED FOR RESIDENTIAL OR SMALL BUILDING REQUIREMENTS OF PART 9, NBCC 2010

THIS DESIGN COMPLIES WITH:
- PART 9 OF OBC 2012 , BCBC 2012 , ABC 2014
- CSA 086-09
- TPIC 2011

DESIGN ASSUMPTIONS
-OVERHANG NOT TO BE ALTERED OR CUT OFF.

(55 % OF 27.2 P.S.F. G.S.L. PLUS 8.4 P.S.F. RAIN LOAD) EQUALS 23.3 P.S.F. SPECIFIED ROOF LIVE LOAD

CSI: TC=0.10 (6-7:1) , BC=0.01 (9-10:4) , WB=0.04 (4-10:1) , SSI=0.07 (1-2:1)

DOL LUMBER=1.00 NAIL=1.00 LS BEND=1.10 COMP=1.10 SHEAR=1.10 TENS= 1.10

COMPANION LIVE LOAD FACTOR = 0.50

TRUSS PLATE MANUFACTURER IS NOT RESPONSIBLE FOR QUALITY CONTROL IN THE TRUSS MANUFACTURING PLANT .

NAIL VALUES

PLATE	GRIP(DRY) (PSI) MAX	MIN	SHEAR (PLI) MAX	MIN	SECTION (PLI) MAX	MIN
MT20	618	354	1667	822	2284	1656

PLATE PLACEMENT TOL. = 0.250 inches

PLATE ROTATION TOL. = 5.0 Deg.

JSI GRIP= 0.13 (4) (INPUT = 0.90)
JSI METAL= 0.08 (4) (INPUT = 1.00)

LICENSED PROFESSIONAL ENGINEER
P.M. TREVISAN
100136551
March 20th, 2017
PROVINCE OF ONTARIO

RECEIVED
TOWN OF MILTON
MAR 29, 2017
17-5419
BUILDING DIVISION

READ ALL NOTES ON THIS PAGE AND ON THE ENGINEERING NOTE PAGE ENP-1. THE NOTE PAGE IS AN INTEGRAL PART OF THIS DRAWING AS IT CONTAINS SPECIFICATIONS AND CRITERIA USED IN THE DESIGN OF THIS COMPONENT.

KOTT

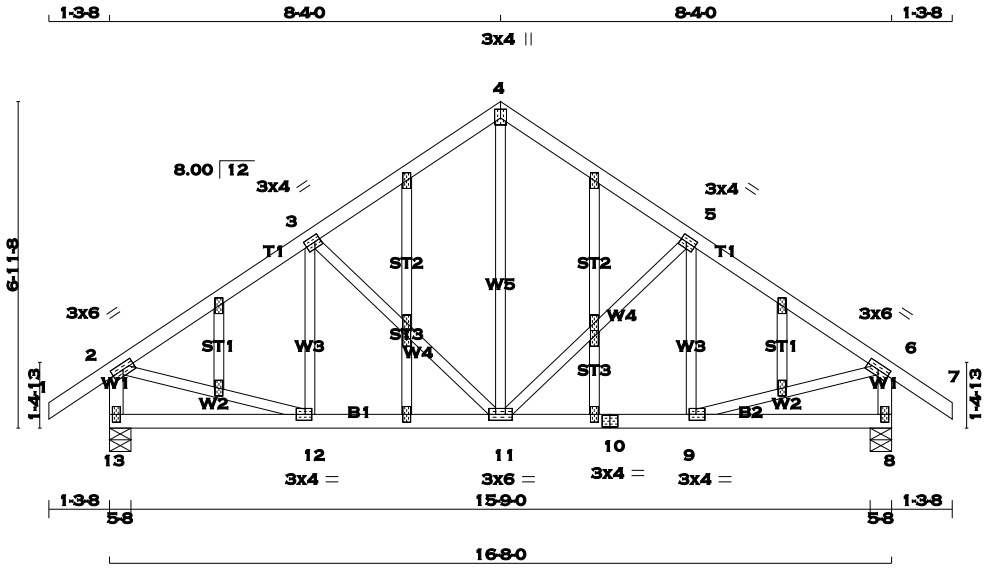

TOTAL WEIGHT = 2 X 85 = 171 lb

[M][F]

LUMBER

N. L. G. A. RULES

CHORDS	SIZE		LUMBER	DESCR.
1 - 4	2x4	DRY	No.2	SPF
4 - 7	2x4	DRY	No.2	SPF
13 - 2	2x4	DRY	No.2	SPF
8 - 6	2x4	DRY	No.2	SPF
13 - 10	2x4	DRY	No.2	SPF
10 - 8	2x4	DRY	No.2	SPF
ALL WEBS EXCEPT	2x3	DRY	No.2	SPF
ALL GABLE WEBS	2x3	DRY	No.2	SPF

DRY: SEASONED LUMBER.

GABLE STUDS SPACED AT 2-0-0 OC.

PLATES (table is in inches)

JT	TYPE	PLATES	W	LEN	Y	X
2	TMVW-t	MT20	3.0	6.0		
3	TMWW-t	MT20	3.0	4.0	1.50	1.50
4	TTW+p	MT20	3.0	4.0	2.25	1.50
5	TMWW-t	MT20	3.0	4.0	1.50	1.50
6	TMVW-t	MT20	3.0	6.0		
8	BMV1+p	MT20	2.0	4.0		
9	BMWW-t	MT20	3.0	4.0	1.50	1.75
10	BS-t	MT20	3.0	4.0		
11	BMWWW-t	MT20	3.0	6.0		
12	BMWW-t	MT20	3.0	4.0	1.50	1.75
13	BMV1+p	MT20	2.0	4.0		
14	NP+w	MT20	2.0	4.0	1.50	1.00
14, 15, 16, 17, 18, 19, 20, 21, 22, 23						
14	NP+w	MT20	2.0	4.0		
21	NP+w	MT20	2.0	4.0	1.50	1.00

A SIZE FOR SIZE SUBSTITUTION OF MITEK MII20 WITH TEE-LOK TL20 PLATES IS ALLOWED.

DIMENSIONS, SUPPORTS AND LOADINGS SPECIFIED BY FABRICATOR TO BE VERIFIED BY BUILDING DESIGNER

BEARINGS

JT	FACTORED GROSS REACTION VERT	HORZ	MAXIMUM FACTORED GROSS REACTION DOWN	HORZ	UPLIFT	INPUT BRG IN-SX	REQRD BRG IN-SX
13	897	0	897	0	0	5-8	5-8
8	897	0	897	0	0	5-8	5-8

UNFACTORED REACTIONS

JT	1ST LCASE COMBINED	MAX./MIN. COMPONENT REACTIONS SNOW	LIVE	PERM.LIVE	WIND	DEAD	SOIL
13	627	452 / 0	0 / 0	0 / 0	0 / 0	175 / 0	0 / 0
8	627	452 / 0	0 / 0	0 / 0	0 / 0	175 / 0	0 / 0

BEARING MATERIAL TO BE SPF NO.2 OR BETTER AT JOINT(S) 13, 8

BRACING

TOP CHORD TO BE SHEATHED OR MAX. PURLIN SPACING = 6.25 FT.
MAX. UNBRACED BOTTOM CHORD LENGTH = 10.00 FT. OR RIGID CEILING DIRECTLY APPLIED.

ALL PITCH BREAKS AND PERIMETER CORNER JOINTS MUST BE LATERALLY RESTRAINED.

LOADING

TOTAL LOAD CASES: (4)

CHORDS

MEMB. FR-TO	MAX. FACTORED FORCE (LBS)	FACTORED VERT. LOAD (PLF) FROM	TO	LC1 MAX CSI (LC)	MAX. UNBRAC LENGTH
1- 2	0 / 29	-77.4	-77.4	0.10 (1)	10.00
2- 3	-803 / 0	-77.4	-77.4	0.17 (1)	6.25
3- 4	-622 / 0	-77.4	-77.4	0.17 (1)	6.25
4- 5	-622 / 0	-77.4	-77.4	0.17 (1)	6.25
5- 6	-803 / 0	-77.4	-77.4	0.17 (1)	6.25
6- 7	0 / 29	-77.4	-77.4	0.10 (1)	10.00
13- 2	-865 / 0	0.0	0.0	0.09 (1)	7.81
8- 6	-865 / 0	0.0	0.0	0.09 (1)	7.81
13-12	0 / 0	-17.5	-17.5	0.07 (4)	10.00
12-11	0 / 686	-17.5	-17.5	0.14 (1)	10.00
11-10	0 / 686	-17.5	-17.5	0.14 (1)	10.00
10- 9	0 / 686	-17.5	-17.5	0.14 (1)	10.00
9- 8	0 / 0	-17.5	-17.5	0.07 (4)	10.00

WEBS

MEMB. FR-TO	MAX. FACTORED FORCE (LBS)	MAX CSI (LC)
11- 4	0 / 430	0.10 (1)
11- 5	-259 / 0	0.14 (1)
9- 5	-95 / 41	0.03 (1)
3-11	-259 / 0	0.14 (1)
12- 3	-95 / 41	0.03 (1)
2-12	0 / 707	0.16 (1)
9- 6	0 / 707	0.16 (1)

DESIGN CRITERIA

SPECIFIED LOADS:

TOP	CH.	LL	=	23.3	PSF
		DL	=	3.0	PSF
BOT	CH.	LL	=	0.0	PSF
		DL	=	7.0	PSF
TOTAL	LOAD		=	33.3	PSF

SPACING = 24.0 IN. C/C

THIS TRUSS IS DESIGNED FOR RESIDENTIAL OR SMALL BUILDING REQUIREMENTS OF PART 9, NBCC 2010

THIS DESIGN COMPLIES WITH:
- PART 9 OF OBC 2012 , BCBC 2012 , ABC 2014
- CSA 086-09
- TPIC 2011

(55 % OF 27.2 P.S.F. G.S.L. PLUS 8.4 P.S.F. RAIN LOAD) EQUALS 23.3 P.S.F. SPECIFIED ROOF LIVE LOAD

ALLOWABLE DEFL.(LL)= L/360 (0.56")
CALCULATED VERT. DEFL.(LL) = L/ 999 (0.02")
ALLOWABLE DEFL.(TL)= L/360 (0.56")
CALCULATED VERT. DEFL.(TL) = L/ 999 (0.03")

CSI: TC=0.17 (2-3:1) , BC=0.14 (11-12:1) , WB=0.16 (2-12:1) , SSI=0.13 (2-3:1)

DOL LUMBER=1.00 NAIL=1.00 LS BEND=1.10 COMP=1.10 SHEAR=1.10 TENS= 1.10

COMPANION LIVE LOAD FACTOR = 0.50

TRUSS PLATE MANUFACTURER IS NOT RESPONSIBLE FOR QUALITY CONTROL IN THE TRUSS MANUFACTURING PLANT .

NAIL VALUES

PLATE	GRIP(DRY) (PSI) MAX	MIN	SHEAR (PLI) MAX	MIN	SECTION (PLI) MAX	MIN
MT20	618	354	1667	822	2284	1656

PLATE PLACEMENT TOL. = 0.250 inches

PLATE ROTATION TOL. = 5.0 Deg.

JSI GRIP= 0.90 (9) (INPUT = 0.90)
JSI METAL= 0.26 (12) (INPUT = 1.00)

LICENSED PROFESSIONAL ENGINEER
P.M. TREVISAN
100136551
March 20th, 2017
PROVINCE OF ONTARIO

RECEIVED
TOWN OF MILTON
MAR 29, 2017
17-5419
BUILDING DIVISION

READ ALL NOTES ON THIS PAGE AND ON THE ENGINEERING NOTE PAGE ENP-1. THE NOTE PAGE IS AN INTEGRAL PART OF THIS DRAWING AS IT CONTAINS SPECIFICATIONS AND CRITERIA USED IN THE DESIGN OF THIS COMPONENT.

KOTT

SCALE = 1:16.4

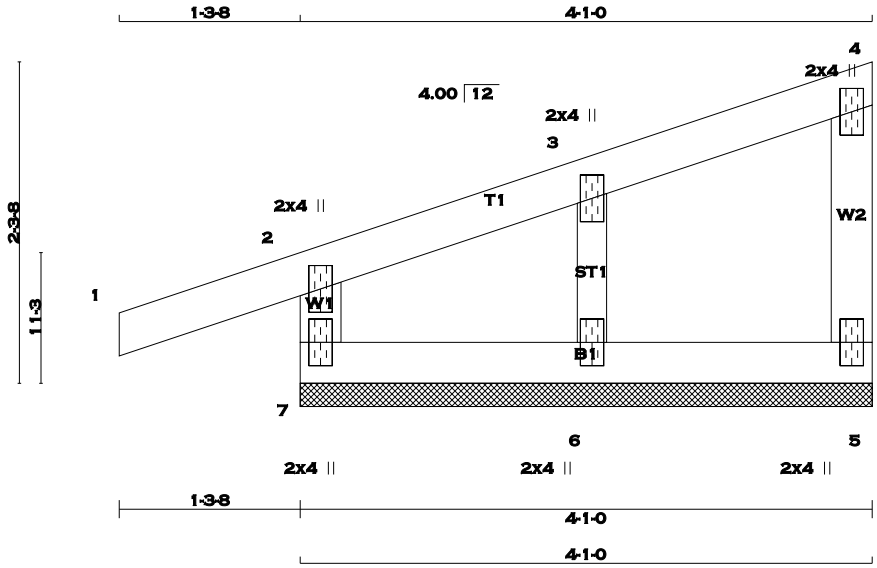

TOTAL WEIGHT = 4 X 15 = 58 lb [M]

LUMBER

N. L. G. A. RULES

CHORDS	SIZE		LUMBER	DESCR.
7 - 2	2x4	DRY	No.2	SPF
1 - 4	2x4	DRY	No.2	SPF
5 - 4	2x4	DRY	No.2	SPF
7 - 5	2x4	DRY	No.2	SPF
ALL WEBS	2x3	DRY	No.2	SPF
ALL GABLE WEBS	2x3	DRY	No.2	SPF

DRY: SEASONED LUMBER.

GABLE STUDS SPACED AT 2-0-0 OC.

PLATES (table is in inches)

JT	TYPE	PLATES	W	LEN	Y	X
2	TMV+p	MT20	2.0	4.0		
3	TMW+w	MT20	2.0	4.0		
4	TMV+p	MT20	2.0	4.0		
5	BMV1+p	MT20	2.0	4.0		
6	BMW1+w	MT20	2.0	4.0		
7	BMV1+p	MT20	2.0	4.0		

A SIZE FOR SIZE SUBSTITUTION OF MITEK MII20 WITH TEE-LOK TL20 PLATES IS ALLOWED.

DIMENSIONS, SUPPORTS AND LOADINGS SPECIFIED BY FABRICATOR TO BE VERIFIED BY BUILDING DESIGNER

BEARINGS

THIS TRUSS DESIGNED FOR CONTINUOUS BEARINGS.

THIS TRUSS REQUIRES RIGID SHEATHING ON EXPOSED FACE.

BEARING MATERIAL TO BE SPF NO.2 OR BETTER AT JOINT(S)

BRACING

TOP CHORD TO BE SHEATHED OR MAX. PURLIN SPACING = 6.25 FT.
MAX. UNBRACED BOTTOM CHORD LENGTH = 10.00 FT. OR RIGID CEILING DIRECTLY APPLIED.

ALL PITCH BREAKS AND PERIMETER CORNER JOINTS MUST BE LATERALLY RESTRAINED.

LOADING

TOTAL LOAD CASES: (4)

CHORDS

MEMB. FR-TO	MAX. FACTORED FORCE (LBS)	FACTORED VERT. LOAD (PLF) FROM	TO	LC1	MAX CSI (LC)	MAX. UNBRAC LENGTH
7- 2	-186 / 0	0.0	0.0	0.01 (1)		7.81
1- 2	0 / 16	-77.4	-77.4	0.10 (1)		10.00
2- 3	-17 / 0	-77.4	-77.4	0.04 (1)		6.25
3- 4	-13 / 0	-77.4	-77.4	0.04 (1)		6.25
5- 4	-69 / 0	0.0	0.0	0.02 (1)		7.81
7- 6	0 / 16	-17.5	-17.5	0.02 (4)		10.00
6- 5	0 / 11	-17.5	-17.5	0.02 (4)		10.00

WEBS

MEMB. FR-TO	MAX. FACTORED FORCE (LBS)	MAX CSI (LC)
6- 3	-164 / 0	0.02 (1)

DESIGN CRITERIA

SPECIFIED LOADS:

TOP	CH.	LL	=	23.3	PSF
		DL	=	3.0	PSF
BOT	CH.	LL	=	0.0	PSF
		DL	=	7.0	PSF
TOTAL	LOAD		=	33.3	PSF

SPACING = 24.0 IN. C/C

THIS TRUSS IS DESIGNED FOR RESIDENTIAL OR SMALL BUILDING REQUIREMENTS OF PART 9, NBCC 2010

THIS DESIGN COMPLIES WITH:
- PART 9 OF OBC 2012 , BCBC 2012 , ABC 2014
- CSA 086-09
- TPIC 2011

DESIGN ASSUMPTIONS
-OVERHANG NOT TO BE ALTERED OR CUT OFF.

(55 % OF 27.2 P.S.F. G.S.L. PLUS 8.4 P.S.F. RAIN LOAD) EQUALS 23.3 P.S.F. SPECIFIED ROOF LIVE LOAD

CSI: TC=0.10 (1-2:1) , BC=0.02 (6-7:4) , WB=0.02 (3-6:1) , SSI=0.08 (1-2:1)

DOL LUMBER=1.00 NAIL=1.00 LS BEND=1.10 COMP=1.10 SHEAR=1.10 TENS= 1.10

COMPANION LIVE LOAD FACTOR = 0.50

TRUSS PLATE MANUFACTURER IS NOT RESPONSIBLE FOR QUALITY CONTROL IN THE TRUSS MANUFACTURING PLANT .

NAIL VALUES

PLATE	GRIP(DRY) (PSI) MAX	MIN	SHEAR (PLI) MAX	MIN	SECTION (PLI) MAX	MIN
MT20	618	354	1667	822	2284	1656

PLATE PLACEMENT TOL. = 0.250 inches

PLATE ROTATION TOL. = 5.0 Deg.

JSI GRIP= 0.10 (2) (INPUT = 0.90)
JSI METAL= 0.04 (2) (INPUT = 1.00)

LICENSED PROFESSIONAL ENGINEER
P.M. TREVISAN
100136551
March 20th, 2017
PROVINCE OF ONTARIO

RECEIVED
TOWN OF MILTON
MAR 29, 2017
17-5419
BUILDING DIVISION

READ ALL NOTES ON THIS PAGE AND ON THE ENGINEERING NOTE PAGE ENP-1. THE NOTE PAGE IS AN INTEGRAL PART OF THIS DRAWING AS IT CONTAINS SPECIFICATIONS AND CRITERIA USED IN THE DESIGN OF THIS COMPONENT.

KOTT

Version 8.100 S Feb 9 2017 MiTek Industries, Inc. Mon Mar 20 10:10:20 2017 Page 1
ID:Mn2zxnCa6NqoASkSkmtLJtyfhrl-MBOHMQxoHN?aKaHOGaM6Xny?VkgJr_RYLwMnVMzZ4wn

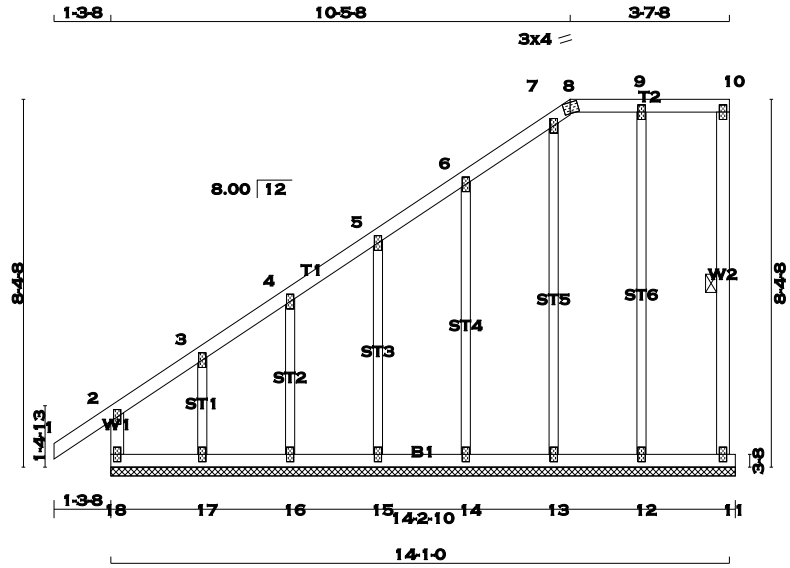

TOTAL WEIGHT = 2 X 73 = 146 lb [M]

LUMBER
N. L. G. A. RULES

CHORDS	SIZE		LUMBER	DESCR.
18 - 2	2x4	DRY	No.2	SPF
1 - 8	2x4	DRY	No.2	SPF
8 - 10	2x4	DRY	No.2	SPF
11 - 10	2x4	DRY	No.2	SPF
18 - 11	2x4	DRY	No.2	SPF
ALL WEBS	2x3	DRY	No.2	SPF
ALL GABLE WEBS	2x3	DRY	No.2	SPF

DRY: SEASONED LUMBER.

GABLE STUDS SPACED AT 2-0-0 OC.

PLATES (table is in inches)

JT	TYPE	PLATES	W	LEN	Y	X
2	TMV+p	MT20	2.0	4.0		
3, 4, 5, 6, 7, 9						
3	TMW+w	MT20	2.0	4.0		
8	TT-m	MT20	3.0	4.0	Edge	
10	TMV+p	MT20	2.0	4.0		
11	BMV1+p	MT20	2.0	4.0		
12, 13, 14, 15, 16, 17						
12	BMW1+w	MT20	2.0	4.0		
18	BMV1+p	MT20	2.0	4.0		

Edge - INDICATES REFERENCE CORNER OF PLATE TOUCHES EDGE OF CHORD.

A SIZE FOR SIZE SUBSTITUTION OF MITEK MII20 WITH TEE-LOK TL20 PLATES IS ALLOWED.

DIMENSIONS, SUPPORTS AND LOADINGS SPECIFIED BY FABRICATOR TO BE VERIFIED BY BUILDING DESIGNER

BEARINGS

THIS TRUSS DESIGNED FOR CONTINUOUS BEARINGS.

THIS TRUSS REQUIRES RIGID SHEATHING ON EXPOSED FACE.

BEARING MATERIAL TO BE SPF NO.2 OR BETTER AT JOINT(S)

BRACING
TOP CHORD TO BE SHEATHED OR MAX. PURLIN SPACING = 6.25 FT.
MAX. UNBRACED BOTTOM CHORD LENGTH = 10.00 FT. OR RIGID CEILING DIRECTLY APPLIED.

ALL PITCH BREAKS AND PERIMETER CORNER JOINTS MUST BE LATERALLY RESTRAINED.

1 - 2x3 SPF No.2 LATERAL BRACE(S) AT 1/ 2 LENGTH OF 10-11. DBS = 20-0-0 . CBF = 8 LBS.

DBS = DIAGONAL BRACE SPACING (MAX). CBF = CUMULATIVE BRACING FORCE. FASTEN LATERAL BRACE(S) USING (0.122"X3") SPIRAL NAILS : 1 NAIL FOR 2x3 BRACE(S), 2 FOR 1x4, 2x4, 2x5, 3 FOR 2x6, 4 FOR 2x8, 5 FOR 2x10, AND 6 FOR 2x12.

END VERTICAL(S) MUST BE SHEATHED OR HAVE BRACES AS INDICATED IN THE MAX. UNBRACED LENGTH COLUMN OF THE TABLE BELOW

LOADING
TOTAL LOAD CASES: (4)

CHORDS

MEMB. FR-TO	MAX. FORCE (LBS)	FACTORED VERT. LOAD (PLF) FROM	TO	LC1	MAX CSI (LC)	MAX. UNBRAC LENGTH
18- 2	-195 / 0	0.0	0.0	0.01 (1)	7.81	
1- 2	0 / 29	-77.4	-77.4	0.10 (1)	10.00	
2- 3	-20 / 0	-77.4	-77.4	0.04 (1)	6.25	
3- 4	-13 / 0	-77.4	-77.4	0.04 (1)	6.25	
4- 5	-9 / 0	-77.4	-77.4	0.04 (1)	10.00	
5- 6	-6 / 0	-77.4	-77.4	0.04 (1)	10.00	
6- 7	-4 / 0	-77.4	-77.4	0.04 (1)	10.00	
7- 8	-37 / 0	-77.4	-77.4	0.04 (1)	6.25	
8- 9	-1 / 0	-77.4	-77.4	0.04 (1)	10.00	
9-10	-2 / 0	-77.4	-77.4	0.04 (1)	10.00	
11-10	-68 / 0	0.0	0.0	0.01 (1)	6.25	
18-17	0 / 16	-17.5	-17.5	0.02 (4)	10.00	
17-16	0 / 11	-17.5	-17.5	0.02 (4)	10.00	
16-15	0 / 8	-17.5	-17.5	0.01 (4)	10.00	
15-14	0 / 5	-17.5	-17.5	0.01 (4)	10.00	
14-13	0 / 3	-17.5	-17.5	0.01 (4)	10.00	
13-12	0 / 2	-17.5	-17.5	0.02 (4)	10.00	
12-11	0 / 2	-17.5	-17.5	0.02 (4)	10.00	

WEBS

MEMB. FR-TO	MAX. FORCE (LBS)	MAX CSI (LC)
12- 9	-168 / 0	0.23 (1)
13- 7	-155 / 0	0.20 (1)
14- 6	-153 / 0	0.12 (1)
15- 5	-153 / 0	0.07 (1)
16- 4	-153 / 0	0.04 (1)
17- 3	-150 / 0	0.03 (1)

DESIGN CRITERIA

SPECIFIED LOADS:

TOP	CH.	LL	=	23.3	PSF
		DL	=	3.0	PSF
BOT	CH.	LL	=	0.0	PSF
		DL	=	7.0	PSF
TOTAL	LOAD		=	33.3	PSF

SPACING = 24.0 IN. C/C

LOADING IN FLAT SECTION BASED ON A SLOPE OF 6.00/12

THIS TRUSS IS DESIGNED FOR RESIDENTIAL OR SMALL BUILDING REQUIREMENTS OF PART 9, NBCC 2010

THIS DESIGN COMPLIES WITH:
- PART 9 OF OBC 2012 , BCBC 2012 , ABC 2014
- CSA 086-09
- TPIC 2011

DESIGN ASSUMPTIONS
-OVERHANG NOT TO BE ALTERED OR CUT OFF.

(55 % OF 27.2 P.S.F. G.S.L. PLUS 8.4 P.S.F. RAIN LOAD) EQUALS 23.3 P.S.F. SPECIFIED ROOF LIVE LOAD

CSI: TC=0.10 (1-2:1) , BC=0.02 (17-18:4) , WB=0.23 (9-12:1) , SSI=0.07 (1-2:1)

DOL LUMBER=1.00 NAIL=1.00 LS BEND=1.10 COMP=1.10 SHEAR=1.10 TENS= 1.10

COMPANION LIVE LOAD FACTOR = 0.50

TRUSS PLATE MANUFACTURER IS NOT RESPONSIBLE FOR QUALITY CONTROL IN THE TRUSS MANUFACTURING PLANT .

NAIL VALUES

PLATE	GRIP(DRY) (PSI) MAX	MIN	SHEAR (PLI) MAX	MIN	SECTION (PLI) MAX	MIN
MT20	618	354	1667	822	2284	1656

PLATE PLACEMENT TOL. = 0.250 inches

PLATE ROTATION TOL. = 5.0 Deg.

JSI GRIP= 0.14 (2) (INPUT = 0.90)
JSI METAL= 0.05 (2) (INPUT = 1.00)

LICENSED PROFESSIONAL ENGINEER
P.M. TREVISAN
100136551
March 20th, 2017
PROVINCE OF ONTARIO

RECEIVED
TOWN OF MILTON
MAR 29, 2017
17-5419
BUILDING DIVISION

READ ALL NOTES ON THIS PAGE AND ON THE ENGINEERING NOTE PAGE ENP-1. THE NOTE PAGE IS AN INTEGRAL PART OF THIS DRAWING AS IT CONTAINS SPECIFICATIONS AND CRITERIA USED IN THE DESIGN OF THIS COMPONENT.

KOTT

SCALE = 1:22.4

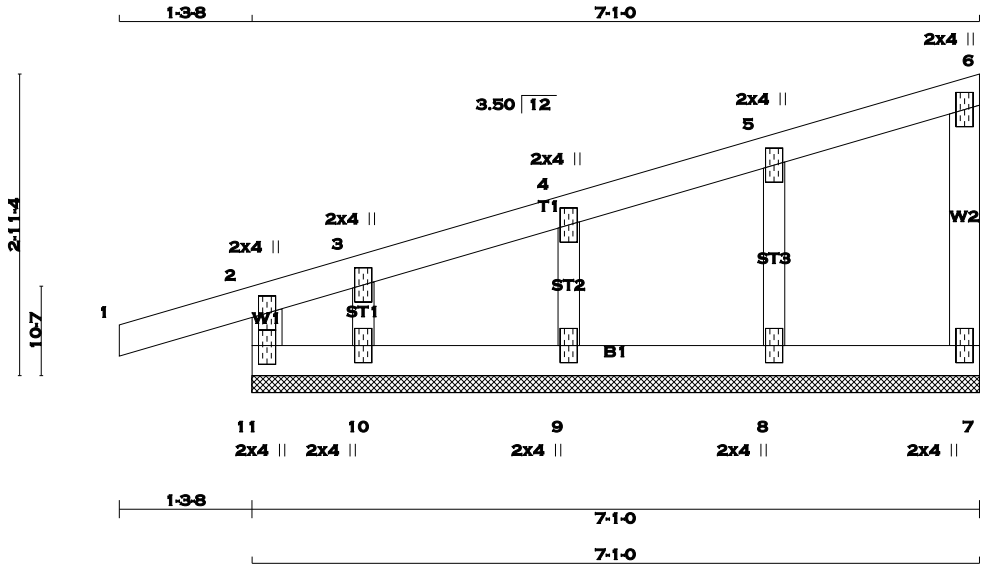

TOTAL WEIGHT = 2 X 24 = 48 lb [M]

LUMBER

N. L. G. A. RULES

CHORDS	SIZE		LUMBER	DESCR.
11 - 2	2x4	DRY	No.2	SPF
1 - 6	2x4	DRY	No.2	SPF
7 - 6	2x4	DRY	No.2	SPF
11 - 7	2x4	DRY	No.2	SPF
ALL WEBS	2x3	DRY	No.2	SPF
ALL GABLE WEBS	2x3	DRY	No.2	SPF

DRY: SEASONED LUMBER.

GABLE STUDS SPACED AT 2-0-0 OC.

PLATES (table is in inches)

JT	TYPE	PLATES	W	LEN	Y	X
2	TMV+p	MT20	2.0	4.0		
3, 4, 5						
3	TMW+w	MT20	2.0	4.0		
6	TMV+p	MT20	2.0	4.0		
7	BMV1+p	MT20	2.0	4.0		
8, 9, 10						
8	BMW1+w	MT20	2.0	4.0		
11	BMV1+p	MT20	2.0	4.0	2.25	1.00

A SIZE FOR SIZE SUBSTITUTION OF MITEK MII20 WITH TEE-LOK TL20 PLATES IS ALLOWED.

DIMENSIONS, SUPPORTS AND LOADINGS SPECIFIED BY FABRICATOR TO BE VERIFIED BY BUILDING DESIGNER

BEARINGS

THIS TRUSS DESIGNED FOR CONTINUOUS BEARINGS.

THIS TRUSS REQUIRES RIGID SHEATHING ON EXPOSED FACE.

BEARING MATERIAL TO BE SPF NO.2 OR BETTER AT JOINT(S)

BRACING

TOP CHORD TO BE SHEATHED OR MAX. PURLIN SPACING = 6.25 FT.
MAX. UNBRACED BOTTOM CHORD LENGTH = 10.00 FT. OR RIGID CEILING DIRECTLY APPLIED.

ALL PITCH BREAKS AND PERIMETER CORNER JOINTS MUST BE LATERALLY RESTRAINED.

LOADING

TOTAL LOAD CASES: (4)

CHORDS

MEMB. FR-TO	MAX. FACTORED FORCE (LBS)	FACTORED VERT. LOAD (PLF) FROM	TO	LC1 MAX CSI (LC)	MAX. UNBRAC LENGTH
11- 2	-191 / 0	0.0	0.0	0.03 (1)	7.81
1- 2	0 / 14	-77.4	-77.4	0.10 (1)	10.00
2- 3	-29 / 0	-77.4	-77.4	0.07 (1)	6.25
3- 4	-12 / 0	-77.4	-77.4	0.04 (1)	6.25
4- 5	-9 / 0	-77.4	-77.4	0.04 (1)	10.00
5- 6	-8 / 0	-77.4	-77.4	0.04 (1)	10.00
7- 6	-69 / 0	0.0	0.0	0.02 (1)	7.81
11-10	0 / 16	-17.5	-17.5	0.03 (1)	10.00
10- 9	0 / 13	-17.5	-17.5	0.01 (4)	10.00
9- 8	0 / 9	-17.5	-17.5	0.02 (4)	10.00
8- 7	0 / 6	-17.5	-17.5	0.02 (4)	10.00

WEBS

MEMB. FR-TO	MAX. FACTORED FORCE (LBS)	MAX CSI (LC)
8- 5	-164 / 0	0.03 (1)
9- 4	-162 / 0	0.02 (1)
10- 3	-66 / 0	0.01 (1)

DESIGN CRITERIA

SPECIFIED LOADS:

TOP	CH.	LL	=	23.3	PSF
		DL	=	3.0	PSF
BOT	CH.	LL	=	0.0	PSF
		DL	=	7.0	PSF
TOTAL	LOAD		=	33.3	PSF

SPACING = 24.0 IN. C/C

THIS TRUSS IS DESIGNED FOR RESIDENTIAL OR SMALL BUILDING REQUIREMENTS OF PART 9, NBCC 2010

THIS DESIGN COMPLIES WITH:
- PART 9 OF OBC 2012 , BCBC 2012 , ABC 2014
- CSA 086-09
- TPIC 2011

DESIGN ASSUMPTIONS
-OVERHANG NOT TO BE ALTERED OR CUT OFF.

(55 % OF 27.2 P.S.F. G.S.L. PLUS 8.4 P.S.F. RAIN LOAD) EQUALS 23.3 P.S.F. SPECIFIED ROOF LIVE LOAD

CSI: TC=0.10 (1-2:1) , BC=0.03 (10-11:1) , WB=0.03 (5-8:1) , SSI=0.08 (1-2:1)

DOL LUMBER=1.00 NAIL=1.00 LS BEND=1.10 COMP=1.10 SHEAR=1.10 TENS= 1.10

COMPANION LIVE LOAD FACTOR = 0.50

TRUSS PLATE MANUFACTURER IS NOT RESPONSIBLE FOR QUALITY CONTROL IN THE TRUSS MANUFACTURING PLANT .

NAIL VALUES

PLATE	GRIP(DRY) (PSI) MAX	MIN	SHEAR (PLI) MAX	MIN	SECTION (PLI) MAX	MIN
MT20	618	354	1667	822	2284	1656

PLATE PLACEMENT TOL. = 0.250 inches

PLATE ROTATION TOL. = 5.0 Deg.

JSI GRIP= 0.10 (2) (INPUT = 0.90)
JSI METAL= 0.04 (2) (INPUT = 1.00)

LICENSED PROFESSIONAL ENGINEER
P.M. TREVISAN
100136551
March 20th, 2017
PROVINCE OF ONTARIO

RECEIVED
TOWN OF MILTON
MAR 29, 2017
17-5419
BUILDING DIVISION

READ ALL NOTES ON THIS PAGE AND ON THE ENGINEERING NOTE PAGE ENP-1. THE NOTE PAGE IS AN INTEGRAL PART OF THIS DRAWING AS IT CONTAINS SPECIFICATIONS AND CRITERIA USED IN THE DESIGN OF THIS COMPONENT.

KOTT

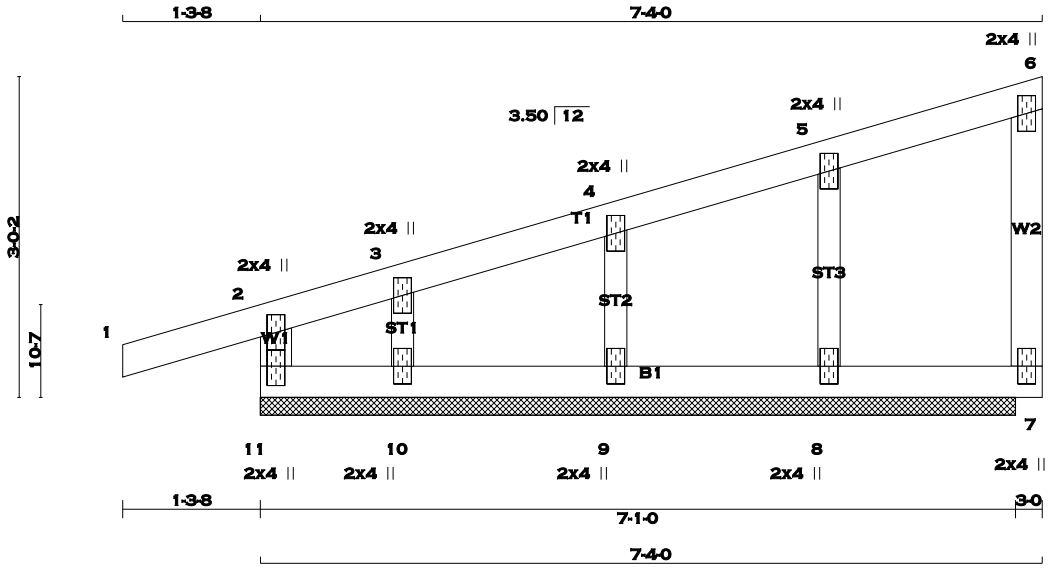

TOTAL WEIGHT = 3 X 25 = 75 lb [M]

LUMBER

N. L. G. A. RULES

CHORDS	SIZE		LUMBER	DESCR.
11 - 2	2x4	DRY	No.2	SPF
1 - 6	2x4	DRY	No.2	SPF
7 - 6	2x4	DRY	No.2	SPF
11 - 7	2x4	DRY	No.2	SPF
ALL WEBS	2x3	DRY	No.2	SPF
ALL GABLE WEBS	2x3	DRY	No.2	SPF

DRY: SEASONED LUMBER.

GABLE STUDS SPACED AT 2-0-0 OC.

PLATES (table is in inches)

JT	TYPE	PLATES	W	LEN	Y	X
2	TMV+p	MT20	2.0	4.0		
3, 4, 5						
3	TMW+w	MT20	2.0	4.0		
6	TMV+p	MT20	2.0	4.0		
7	BMV1+p	MT20	2.0	4.0		
8, 9, 10						
8	BMW1+w	MT20	2.0	4.0		
11	BMV1+p	MT20	2.0	4.0	2.25	1.00

A SIZE FOR SIZE SUBSTITUTION OF MITEK MII20 WITH TEE-LOK TL20 PLATES IS ALLOWED.

DIMENSIONS, SUPPORTS AND LOADINGS SPECIFIED BY FABRICATOR TO BE VERIFIED BY BUILDING DESIGNER

BEARINGS

THIS TRUSS DESIGNED FOR CONTINUOUS BEARINGS.

THIS TRUSS REQUIRES RIGID SHEATHING ON EXPOSED FACE.

BEARING MATERIAL TO BE SPF NO.2 OR BETTER AT JOINT(S)

BRACING

TOP CHORD TO BE SHEATHED OR MAX. PURLIN SPACING = 6.25 FT.
MAX. UNBRACED BOTTOM CHORD LENGTH = 10.00 FT. OR RIGID CEILING DIRECTLY APPLIED.

ALL PITCH BREAKS AND PERIMETER CORNER JOINTS MUST BE LATERALLY RESTRAINED.

LOADING

TOTAL LOAD CASES: (4)

CHORDS

MEMB. FR-TO	MAX. FACTORED FORCE (LBS)	FACTORED VERT. LOAD (PLF) FROM	TO	LC1 MAX CSI (LC)	MAX. UNBRAC LENGTH
11- 2	-192 / 0	0.0	0.0	0.03 (1)	7.81
1- 2	0 / 14	-77.4	-77.4	0.10 (1)	10.00
2- 3	-27 / 0	-77.4	-77.4	0.07 (1)	6.25
3- 4	-11 / 0	-77.4	-77.4	0.04 (1)	6.25
4- 5	-9 / 0	-77.4	-77.4	0.04 (1)	10.00
5- 6	-8 / 0	-77.4	-77.4	0.04 (1)	10.00
7- 6	-69 / 0	0.0	0.0	0.02 (1)	7.81
11-10	0 / 16	-17.5	-17.5	0.03 (1)	10.00
10- 9	0 / 13	-17.5	-17.5	0.01 (4)	10.00
9- 8	0 / 8	-17.5	-17.5	0.02 (4)	10.00
8- 7	0 / 5	-17.5	-17.5	0.02 (4)	10.00

WEBS

MEMB. FR-TO	MAX. FACTORED FORCE (LBS)	MAX CSI (LC)
8- 5	-164 / 0	0.03 (1)
9- 4	-162 / 0	0.02 (1)
10- 3	-84 / 0	0.01 (1)

DESIGN CRITERIA

SPECIFIED LOADS:

TOP	CH.	LL	=	23.3	PSF
		DL	=	3.0	PSF
BOT	CH.	LL	=	0.0	PSF
		DL	=	7.0	PSF
TOTAL	LOAD		=	33.3	PSF

SPACING = 24.0 IN. C/C

THIS TRUSS IS DESIGNED FOR RESIDENTIAL OR SMALL BUILDING REQUIREMENTS OF PART 9, NBCC 2010

THIS DESIGN COMPLIES WITH:
- PART 9 OF OBC 2012 , BCBC 2012 , ABC 2014
- CSA 086-09
- TPIC 2011

DESIGN ASSUMPTIONS
-OVERHANG NOT TO BE ALTERED OR CUT OFF.

(55 % OF 27.2 P.S.F. G.S.L. PLUS 8.4 P.S.F. RAIN LOAD) EQUALS 23.3 P.S.F. SPECIFIED ROOF LIVE LOAD

CSI: TC=0.10 (1-2:1) , BC=0.03 (10-11:1) , WB=0.03 (5-8:1) , SSI=0.08 (1-2:1)

DOL LUMBER=1.00 NAIL=1.00 LS BEND=1.10 COMP=1.10 SHEAR=1.10 TENS= 1.10

COMPANION LIVE LOAD FACTOR = 0.50

TRUSS PLATE MANUFACTURER IS NOT RESPONSIBLE FOR QUALITY CONTROL IN THE TRUSS MANUFACTURING PLANT .

NAIL VALUES

PLATE	GRIP(DRY) (PSI) MAX	MIN	SHEAR (PLI) MAX	MIN	SECTION (PLI) MAX	MIN
MT20	618	354	1667	822	2284	1656

PLATE PLACEMENT TOL. = 0.250 inches

PLATE ROTATION TOL. = 5.0 Deg.

JSI GRIP= 0.10 (2) (INPUT = 0.90)
JSI METAL= 0.04 (2) (INPUT = 1.00)

LICENSED PROFESSIONAL ENGINEER
P.M. TREVISAN
100136551
March 20th, 2017
PROVINCE OF ONTARIO

RECEIVED
TOWN OF MILTON
MAR 29, 2017
17-5419
BUILDING DIVISION

READ ALL NOTES ON THIS PAGE AND ON THE ENGINEERING NOTE PAGE ENP-1. THE NOTE PAGE IS AN INTEGRAL PART OF THIS DRAWING AS IT CONTAINS SPECIFICATIONS AND CRITERIA USED IN THE DESIGN OF THIS COMPONENT.

KOTT

SCALE = 1:18.0

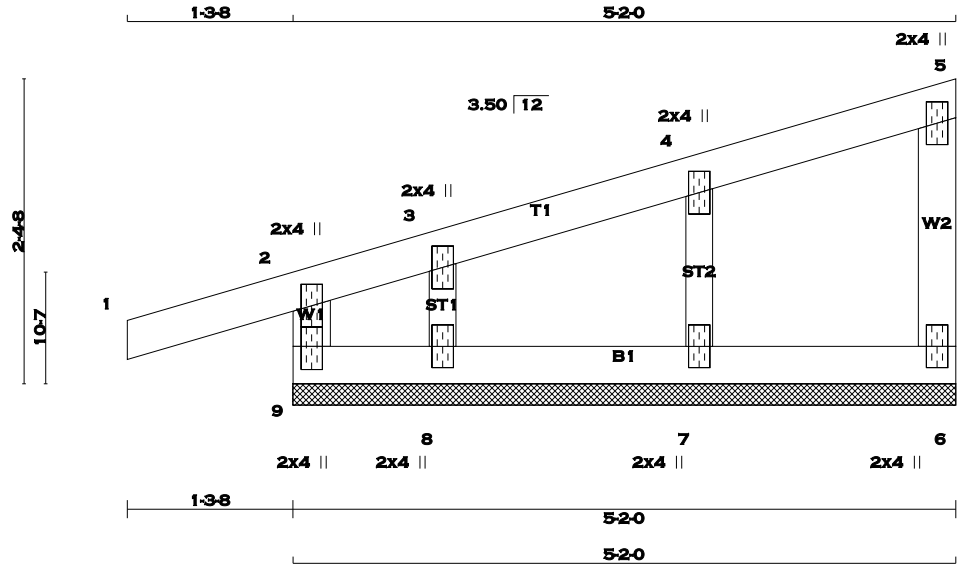

TOTAL WEIGHT = 18 lb [M]

LUMBER

N. L. G. A. RULES

CHORDS	SIZE		LUMBER	DESCR.
9 - 2	2x4	DRY	No.2	SPF
1 - 5	2x4	DRY	No.2	SPF
6 - 5	2x4	DRY	No.2	SPF
9 - 6	2x4	DRY	No.2	SPF
ALL WEBS	2x3	DRY	No.2	SPF
ALL GABLE WEBS	2x3	DRY	No.2	SPF

DRY: SEASONED LUMBER.

GABLE STUDS SPACED AT 2-0-0 OC.

PLATES (table is in inches)

JT	TYPE	PLATES	W	LEN	Y	X
2	TMV+p	MT20	2.0	4.0		
3	TMW+w	MT20	2.0	4.0		
4	TMW+w	MT20	2.0	4.0		
5	TMV+p	MT20	2.0	4.0		
6	BMV1+p	MT20	2.0	4.0		
7	BMW1+w	MT20	2.0	4.0		
8	BMW1+w	MT20	2.0	4.0		
9	BMV1+p	MT20	2.0	4.0	2.25	1.00

A SIZE FOR SIZE SUBSTITUTION OF MITEK MII20 WITH TEE-LOK TL20 PLATES IS ALLOWED.

DIMENSIONS, SUPPORTS AND LOADINGS SPECIFIED BY FABRICATOR TO BE VERIFIED BY BUILDING DESIGNER

BEARINGS

THIS TRUSS DESIGNED FOR CONTINUOUS BEARINGS.

THIS TRUSS REQUIRES RIGID SHEATHING ON EXPOSED FACE.

BEARING MATERIAL TO BE SPF NO.2 OR BETTER AT JOINT(S)

BRACING

TOP CHORD TO BE SHEATHED OR MAX. PURLIN SPACING = 6.25 FT.
MAX. UNBRACED BOTTOM CHORD LENGTH = 10.00 FT. OR RIGID CEILING DIRECTLY APPLIED.

ALL PITCH BREAKS AND PERIMETER CORNER JOINTS MUST BE LATERALLY RESTRAINED.

LOADING

TOTAL LOAD CASES: (4)

CHORDS

MEMB. FR-TO	MAX. FACTORED FORCE (LBS)	FACTORED VERT. LOAD (PLF) FROM	TO	LC1	MAX CSI (LC)	MAX. UNBRAC LENGTH
9- 2	-190 / 0	0.0	0.0	0.03 (1)		7.81
1- 2	0 / 14	-77.4	-77.4	0.10 (1)		10.00
2- 3	-26 / 0	-77.4	-77.4	0.07 (1)		6.25
3- 4	-8 / 0	-77.4	-77.4	0.05 (1)		10.00
4- 5	-9 / 0	-77.4	-77.4	0.05 (1)		10.00
6- 5	-66 / 0	0.0	0.0	0.01 (1)		7.81
9- 8	0 / 14	-17.5	-17.5	0.03 (1)		10.00
8- 7	0 / 11	-17.5	-17.5	0.02 (4)		10.00
7- 6	0 / 6	-17.5	-17.5	0.02 (4)		10.00

WEBS

MEMB. FR-TO	MAX. FACTORED FORCE (LBS)	MAX CSI (LC)
7- 4	-178 / 0	0.03 (1)
8- 3	-69 / 0	0.01 (1)

DESIGN CRITERIA

SPECIFIED LOADS:

TOP	CH.	LL	=	23.3	PSF
		DL	=	3.0	PSF
BOT	CH.	LL	=	0.0	PSF
		DL	=	7.0	PSF
TOTAL	LOAD		=	33.3	PSF

SPACING = 24.0 IN. C/C

THIS TRUSS IS DESIGNED FOR RESIDENTIAL OR SMALL BUILDING REQUIREMENTS OF PART 9, NBCC 2010

THIS DESIGN COMPLIES WITH:
- PART 9 OF OBC 2012 , BCBC 2012 , ABC 2014
- CSA 086-09
- TPIC 2011

DESIGN ASSUMPTIONS
-OVERHANG NOT TO BE ALTERED OR CUT OFF.

(55 % OF 27.2 P.S.F. G.S.L. PLUS 8.4 P.S.F. RAIN LOAD) EQUALS 23.3 P.S.F. SPECIFIED ROOF LIVE LOAD

CSI: TC=0.10 (1-2:1) , BC=0.03 (8-9:1) , WB=0.03 (4-7:1) , SSI=0.08 (1-2:1)

DOL LUMBER=1.00 NAIL=1.00 LS BEND=1.10 COMP=1.10 SHEAR=1.10 TENS= 1.10

COMPANION LIVE LOAD FACTOR = 0.50

TRUSS PLATE MANUFACTURER IS NOT RESPONSIBLE FOR QUALITY CONTROL IN THE TRUSS MANUFACTURING PLANT .

NAIL VALUES

PLATE	GRIP(DRY) (PSI) MAX	MIN	SHEAR (PLI) MAX	MIN	SECTION (PLI) MAX	MIN
MT20	618	354	1667	822	2284	1656

PLATE PLACEMENT TOL. = 0.250 inches

PLATE ROTATION TOL. = 5.0 Deg.

JSI GRIP= 0.10 (2) (INPUT = 0.90)
JSI METAL= 0.04 (2) (INPUT = 1.00)

LICENSED PROFESSIONAL ENGINEER
P.M. TREVISAN
100136551
March 20th, 2017
PROVINCE OF ONTARIO

RECEIVED
TOWN OF MILTON
MAR 29, 2017
17-5419
BUILDING DIVISION

READ ALL NOTES ON THIS PAGE AND ON THE ENGINEERING NOTE PAGE ENP-1. THE NOTE PAGE IS AN INTEGRAL PART OF THIS DRAWING AS IT CONTAINS SPECIFICATIONS AND CRITERIA USED IN THE DESIGN OF THIS COMPONENT.

KOTT

SCALE = 1:53.0

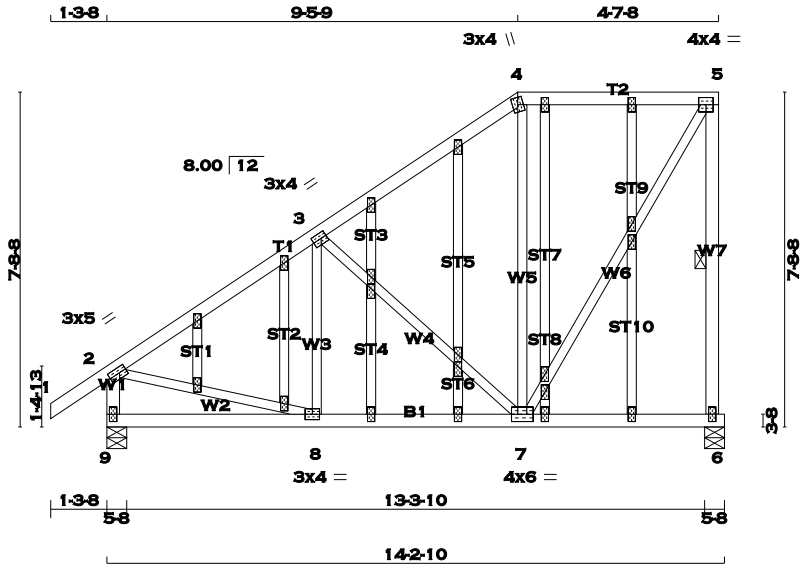

TOTAL WEIGHT = 2 X 94 = 189 lb

[M][F]

LUMBER

N. L. G. A. RULES

CHORDS	SIZE		LUMBER	DESCR.
1 - 4	2x4	DRY	No.2	SPF
4 - 5	2x4	DRY	No.2	SPF
6 - 5	2x4	DRY	No.2	SPF
9 - 2	2x4	DRY	No.2	SPF
9 - 6	2x4	DRY	No.2	SPF
ALL WEBS	2x3	DRY	No.2	SPF
EXCEPT				
ALL GABLE WEBS				
	2x3	DRY	No.2	SPF

DRY: SEASONED LUMBER.

GABLE STUDS SPACED AT 2-0-0 OC.

PLATES (table is in inches)

JT	TYPE	PLATES	W	LEN	Y	X
2	TMVW-t	MT20	3.0	5.0	1.50	2.00
3	TMWW-t	MT20	3.0	4.0	1.50	1.50
4	TTW+m	MT20	3.0	4.0		
5	TMVW-t	MT20	4.0	4.0		
6	BMV1+p	MT20	2.0	4.0		
7	BMWWW-t	MT20	4.0	6.0		
8	BMWW-t	MT20	3.0	4.0		
9	BMV1+p	MT20	2.0	4.0		
10, 11, 12, 12, 13, 14, 15, 15, 16, 17, 18, 19, 20, 21, 22, 23, 24, 25						
10	NP+w	MT20	2.0	4.0		
18	NP+w	MT20	2.0	4.0	1.25	1.00
19	NP+w	MT20	2.0	4.0	1.25	1.00

A SIZE FOR SIZE SUBSTITUTION OF MITEK MII20 WITH TEE-LOK TL20 PLATES IS ALLOWED.

DIMENSIONS, SUPPORTS AND LOADINGS SPECIFIED BY FABRICATOR TO BE VERIFIED BY BUILDING DESIGNER

BEARINGS

JT	FACTORED GROSS REACTION VERT	HORZ	MAXIMUM FACTORED GROSS REACTION DOWN	HORZ	UPLIFT	INPUT BRG IN-SX	REQRD BRG IN-SX
6	668	0	668	0	0	5-8	5-8
9	774	0	774	0	0	5-8	5-8

UNFACTORED REACTIONS

JT	1ST LCASE COMBINED	MAX./MIN. COMPONENT REACTIONS SNOW	LIVE	PERM.LIVE	WIND	DEAD	SOIL
6	469	328 / 0	0 / 0	0 / 0	0 / 0	141 / 0	0 / 0
9	541	392 / 0	0 / 0	0 / 0	0 / 0	149 / 0	0 / 0

BEARING MATERIAL TO BE SPF NO.2 OR BETTER AT JOINT(S) 6, 9

BRACING

TOP CHORD TO BE SHEATHED OR MAX. PURLIN SPACING = 6.25 FT.
MAX. UNBRACED BOTTOM CHORD LENGTH = 10.00 FT. OR RIGID CEILING DIRECTLY APPLIED.

ALL PITCH BREAKS AND PERIMETER CORNER JOINTS MUST BE LATERALLY RESTRAINED.

1 - 2x3 SPF No.2 LATERAL BRACE(S) AT 1/ 2 LENGTH OF 5-6. DBS = 20-0-0 . CBF = 79 LBS.

DBS = DIAGONAL BRACE SPACING (MAX). CBF = CUMULATIVE BRACING FORCE. FASTEN LATERAL BRACE(S) USING (0.122"X3") SPIRAL NAILS : 1 NAIL FOR 2x3 BRACE(S), 2 FOR 1x4, 2x4, 2x5, 3 FOR 2x6, 4 FOR 2x8, 5 FOR 2x10, AND 6 FOR 2x12.

END VERTICAL(S) MUST BE SHEATHED OR HAVE BRACES AS INDICATED IN THE MAX. UNBRACED LENGTH COLUMN OF THE TABLE BELOW

LOADING

TOTAL LOAD CASES: (4)

CHORDS

MEMB. FR-TO	MAX. FACTORED FORCE (LBS)	FACTORED VERT. LOAD (PLF) FROM	TO	LC1 MAX CSI (LC)	MAX. UNBRAC LENGTH
1- 2	0 / 29	-77.4	-77.4	0.10 (1)	10.00
2- 3	-637 / 0	-77.4	-77.4	0.23 (1)	6.25
3- 4	-363 / 0	-77.4	-77.4	0.22 (1)	6.25
4- 5	-279 / 0	-77.4	-77.4	0.21 (1)	6.25
6- 5	-636 / 0	0.0	0.0	0.17 (1)	6.25
9- 2	-739 / 0	0.0	0.0	0.08 (1)	7.81
9- 8	0 / 0	-17.5	-17.5	0.09 (4)	10.00
8- 7	0 / 550	-17.5	-17.5	0.13 (1)	10.00
7- 6	0 / 0	-17.5	-17.5	0.08 (4)	10.00

WEBS

MEMB. FR-TO	MAX. FACTORED FORCE (LBS)	MAX CSI (LC)
8- 3	-32 / 68	0.02 (4)
3- 7	-364 / 0	0.27 (1)
7- 4	-125 / 24	0.14 (1)
7- 5	0 / 536	0.12 (1)
2- 8	0 / 563	0.13 (1)

DESIGN CRITERIA

SPECIFIED LOADS:

TOP CH.	LL	=	23.3	PSF
	DL	=	3.0	PSF
BOT CH.	LL	=	0.0	PSF
	DL	=	7.0	PSF
TOTAL LOAD		=	33.3	PSF

SPACING = 24.0 IN. C/C

LOADING IN FLAT SECTION BASED ON A SLOPE OF 6.00/12

THIS TRUSS IS DESIGNED FOR RESIDENTIAL OR SMALL BUILDING REQUIREMENTS OF PART 9, NBCC 2010

THIS DESIGN COMPLIES WITH:
- PART 9 OF OBC 2012 , BCBC 2012 , ABC 2014
- CSA 086-09
- TPIC 2011

(55 % OF 27.2 P.S.F. G.S.L. PLUS 8.4 P.S.F. RAIN LOAD) EQUALS 23.3 P.S.F. SPECIFIED ROOF LIVE LOAD

ALLOWABLE DEFL.(LL)= L/360 (0.47")
CALCULATED VERT. DEFL.(LL) = L/ 999 (0.01")
ALLOWABLE DEFL.(TL)= L/360 (0.47")
CALCULATED VERT. DEFL.(TL) = L/ 999 (0.03")

CSI: TC=0.23 (2-3:1) , BC=0.13 (7-8:1) , WB=0.27 (3-7:1) , SSI=0.15 (2-3:1)

DOL LUMBER=1.00 NAIL=1.00 LS BEND=1.10 COMP=1.10 SHEAR=1.10 TENS= 1.10

COMPANION LIVE LOAD FACTOR = 0.50

TRUSS PLATE MANUFACTURER IS NOT RESPONSIBLE FOR QUALITY CONTROL IN THE TRUSS MANUFACTURING PLANT .

NAIL VALUES

PLATE	GRIP(DRY) (PSI) MAX	MIN	SHEAR (PLI) MAX	MIN	SECTION (PLI) MAX	MIN
MT20	618	354	1667	822	2284	1656

PLATE PLACEMENT TOL. = 0.250 inches

PLATE ROTATION TOL. = 5.0 Deg.

JSI GRIP= 0.85 (8) (INPUT = 0.90)
JSI METAL= 0.24 (2) (INPUT = 1.00)

LICENSED PROFESSIONAL ENGINEER
P.M. TREVISAN
100136551
March 20th, 2017
PROVINCE OF ONTARIO

RECEIVED
TOWN OF MILTON
MAR 29, 2017
17-5419
BUILDING DIVISION

READ ALL NOTES ON THIS PAGE AND ON THE ENGINEERING NOTE PAGE ENP-1. THE NOTE PAGE IS AN INTEGRAL PART OF THIS DRAWING AS IT CONTAINS SPECIFICATIONS AND CRITERIA USED IN THE DESIGN OF THIS COMPONENT.

KOTT

JOB NAME	TRUSS NAME	QUANTITY	PLY	JOB DESC.	DRWG NO.
PT0317-122	**GIRD01**	**2**	**1**	TRUSS DESC. LECCO RIDGE-BLOCK 348	

ENG JOB: PT0317-122

KOTT , Stouffville, ON, CGC

Version 8.100 S Feb 9 2017 MiTek Industries, Inc. Mon Mar 20 10:10:23 2017 Page 1
ID:Mn2zxnCa6NqoASkSkmtLJtyfhrl-nm4Q_SzhaIN9B20zyivp9PaTFxhO2L0?1ubR6hzZ4wk

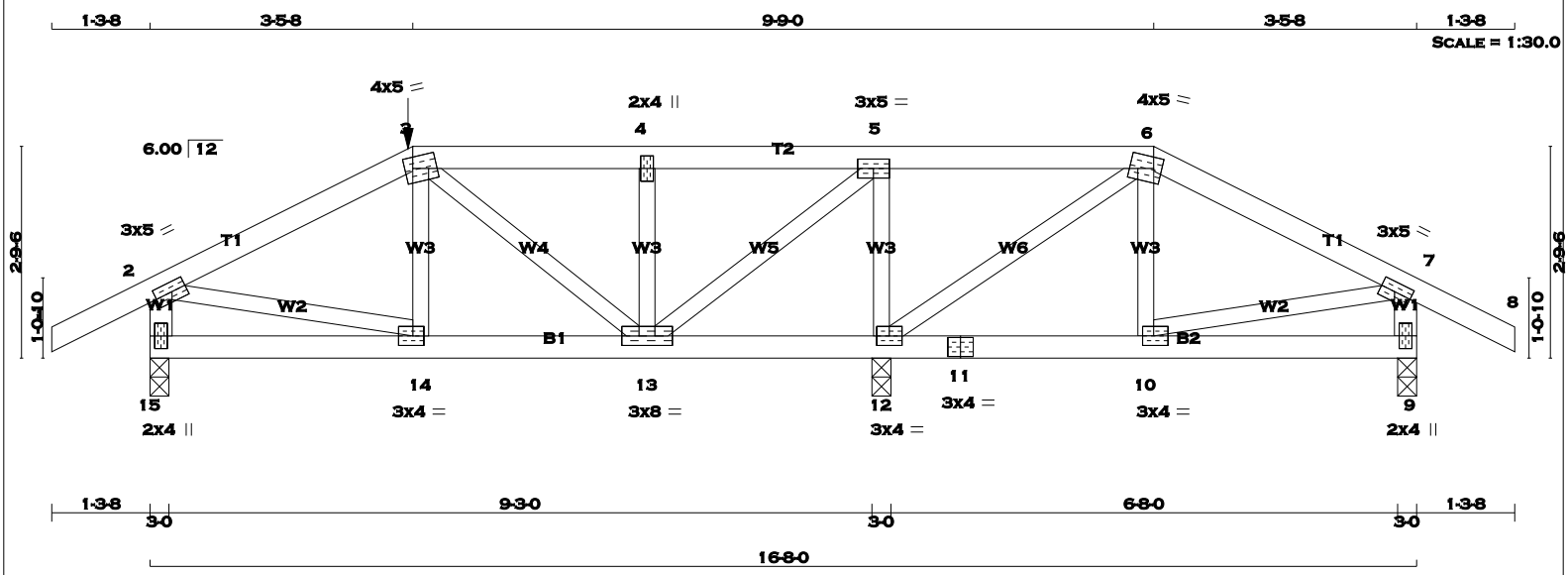

TOTAL WEIGHT = 2 X 65 = 131 lb [M]

LUMBER

N. L. G. A. RULES

CHORDS	SIZE		LUMBER	DESCR.
1 - 3	2x4	DRY	No.2	SPF
3 - 6	2x4	DRY	No.2	SPF
6 - 8	2x4	DRY	No.2	SPF
15 - 2	2x4	DRY	No.2	SPF
9 - 7	2x4	DRY	No.2	SPF
15 - 11	2x4	DRY	No.2	SPF
11 - 9	2x4	DRY	No.2	SPF
ALL WEBS EXCEPT	2x3	DRY	No.2	SPF

DRY: SEASONED LUMBER.

PLATES (table is in inches)

JT	TYPE	PLATES	W	LEN	Y	X
2	TMVW-t	MT20	3.0	5.0	1.50	2.25
3	TTWW-m	MT20	4.0	5.0	1.75	1.25
4	TMW+w	MT20	2.0	4.0		
5	TMWW-t	MT20	3.0	5.0		
6	TTWW-m	MT20	4.0	5.0	1.75	1.25
7	TMVW-t	MT20	3.0	5.0	1.50	2.25
9	BMV1+p	MT20	2.0	4.0		
10	BMWW-t	MT20	3.0	4.0	1.50	1.75
11	BS-t	MT20	3.0	4.0		
12	BMWW1-t	MT20	3.0	4.0		
13	BMWWW-t	MT20	3.0	8.0		
14	BMWW-t	MT20	3.0	4.0	1.50	1.75
15	BMV1+p	MT20	2.0	4.0		

A SIZE FOR SIZE SUBSTITUTION OF MITEK MII20 WITH TEE-LOK TL20 PLATES IS ALLOWED.

HANGERS NOTES

1) SPECIAL HANGER(S) OR CONNECTION(S) REQUIRED TO SUPPORT CONCENTRATED LOAD(S) 87.3 lbs FACTORED DOWN AT 3-5-8 ON TOP CHORD. DESIGN FOR UNSPECIFIED CONNECTION(S) IS DELEGATED TO THE BUILDING DESIGNER.

DIMENSIONS, SUPPORTS AND LOADINGS SPECIFIED BY FABRICATOR TO BE VERIFIED BY BUILDING DESIGNER

BEARINGS

JT	FACTORED GROSS REACTION VERT	HORZ	MAXIMUM GROSS REACTION DOWN	HORZ	FACTORED UPLIFT	INPUT BRG IN-SX	REQRD BRG IN-SX
15	630	0	630	0	0	3-0	3-0
12	1084	0	1084	0	0	3-0	3-0
9	359	0	359	0	0	3-0	3-0

UNFACTORED REACTIONS

JT	1ST LCASE COMBINED	SNOW	MAX./MIN. COMPONENT REACTIONS LIVE	PERM.LIVE	WIND	DEAD	SOIL
15	440	320 / 0	0 / 0	0 / 0	0 / 0	121 / 0	0 / 0
12	760	535 / 0	0 / 0	0 / 0	0 / 0	225 / 0	0 / 0
9	250	187 / 0	0 / 0	0 / 0	0 / 0	62 / 0	0 / 0

BEARING MATERIAL TO BE SPF NO.2 OR BETTER AT JOINT(S) 15, 12, 9

BRACING

TOP CHORD TO BE SHEATHED OR MAX. PURLIN SPACING = 6.25 FT.
MAX. UNBRACED BOTTOM CHORD LENGTH = 6.25 FT. OR RIGID CEILING DIRECTLY APPLIED.

ALL PITCH BREAKS AND PERIMETER CORNER JOINTS MUST BE LATERALLY RESTRAINED.

LOADING

TOTAL LOAD CASES: (4)

CHORDS

MEMB. FR-TO	MAX. FORCE (LBS)	FACTORED VERT. LOAD (PLF) FROM	TO	LC1	MAX CSI (LC)	MAX. UNBRAC LENGTH
1- 2	0 / 23	-77.4	-77.4	0.11 (1)	10.00	
2- 3	-562 / 0	-77.4	-77.4	0.18 (1)	6.25	
3- 4	-398 / 0	-100.7	-100.7	0.13 (1)	6.25	
4- 5	-398 / 0	-100.7	-100.7	0.17 (1)	6.25	
5- 6	0 / 165	-77.4	-77.4	0.20 (1)	10.00	
6- 7	-145 / 0	-77.4	-77.4	0.17 (1)	6.25	
7- 8	0 / 23	-77.4	-77.4	0.11 (1)	10.00	
15- 2	-596 / 0	0.0	0.0	0.07 (1)	7.81	
9- 7	-331 / 0	0.0	0.0	0.04 (1)	7.81	
15-14	0 / 0	-22.8	-22.8	0.07 (4)	10.00	
14-13	0 / 501	-22.8	-22.8	0.12 (1)	10.00	
13-12	-165 / 0	-22.8	-22.8	0.06 (4)	6.25	
12-11	0 / 131	-17.5	-17.5	0.08 (1)	10.00	
11-10	0 / 131	-17.5	-17.5	0.08 (1)	10.00	
10- 9	0 / 0	-17.5	-17.5	0.05 (4)	10.00	

WEBS

MEMB. FR-TO	MAX. FORCE (LBS)	MAX CSI (LC)
14- 3	-17 / 66	0.03 (4)
3-13	-132 / 0	0.04 (1)
13- 4	-324 / 0	0.06 (1)
13- 5	0 / 724	0.18 (1)
12- 5	-793 / 0	0.14 (1)
12- 6	-360 / 0	0.11 (1)
10- 6	0 / 65	0.02 (4)
2-14	0 / 513	0.13 (1)
10- 7	0 / 132	0.03 (1)

FACTORED CONCENTRATED LOADS (LBS)

JT	LOC.	LC1	MAX-	MAX+	FACE	DIR.	TYPE
3	3-5-8	-87	-87	---	FRONT	VERT	TOTAL

DESIGN CRITERIA

SPECIFIED LOADS:

TOP CH.	LL	=	23.3	PSF
	DL	=	3.0	PSF
BOT CH.	LL	=	0.0	PSF
	DL	=	7.0	PSF
TOTAL LOAD		=	33.3	PSF

SPACING = 24.0 IN. C/C

LOADING IN FLAT SECTION BASED ON A SLOPE OF 6.00/12

GIRDER TYPE: CPrimeHip
SIDE SETBACK = 3-5-8
END SETBACK = 3-5-8
END WALL WIDTH = 3-0
CORNER FRAMING TYPE: CONVENTIONAL
END JACK TYPE: CONVENTIONAL
APPLIED TO FRONT SIDE
- ADDT'L LOADS BASED ON 55 % OF GSL.
LOADS APPLIED TO FIRST 9-6-0 OF SPAN MEASURED FROM THE LEFT.

THIS TRUSS IS DESIGNED FOR RESIDENTIAL OR SMALL BUILDING REQUIREMENTS OF PART 9, NBCC 2010

THIS DESIGN COMPLIES WITH:
- PART 9 OF OBC 2012 , BCBC 2012 , ABC 2014
- CSA 086-09
- TPIC 2011

(55 % OF 27.2 P.S.F. G.S.L. PLUS 8.4 P.S.F. RAIN LOAD) EQUALS 23.3 P.S.F. SPECIFIED ROOF LIVE LOAD

ALLOWABLE DEFL.(LL)= L/360 (0.32")
CALCULATED VERT. DEFL.(LL) = L/ 999 (0.01")
ALLOWABLE DEFL.(TL)= L/360 (0.32")
CALCULATED VERT. DEFL.(TL) = L/ 999 (0.02")

CSI: TC=0.20 (5-6:1) , BC=0.12 (13-14:1) , WB=0.18 (5-13:1) , SSI=0.16 (3-4:1)

DOL LUMBER=1.00 NAIL=1.00 LS BEND=1.00 COMP=1.00 SHEAR=1.00 TENS= 1.00

COMPANION LIVE LOAD FACTOR = 0.50

TRUSS PLATE MANUFACTURER IS NOT RESPONSIBLE FOR QUALITY CONTROL IN THE TRUSS MANUFACTURING PLANT .

NAIL VALUES

PLATE	GRIP(DRY) (PSI) MAX	MIN	SHEAR (PLI) MAX	MIN	SECTION (PLI) MAX	MIN
MT20	618	354	1667	822	2284	1656

PLATE PLACEMENT TOL. = 0.250 inches

PLATE ROTATION TOL. = 5.0 Deg.

JSI GRIP= 0.90 (14) (INPUT = 0.90)
JSI METAL= 0.20 (2) (INPUT = 1.00)

LICENSED PROFESSIONAL ENGINEER
P.M. TREVISAN
100136551
March 20th, 2017
PROVINCE OF ONTARIO

RECEIVED
TOWN OF MILTON
MAR 29, 2017
17-5419
BUILDING DIVISION

READ ALL NOTES ON THIS PAGE AND ON THE ENGINEERING NOTE PAGE ENP-1. THE NOTE PAGE IS AN INTEGRAL PART OF THIS DRAWING AS IT CONTAINS SPECIFICATIONS AND CRITERIA USED IN THE DESIGN OF THIS COMPONENT.

KOTT

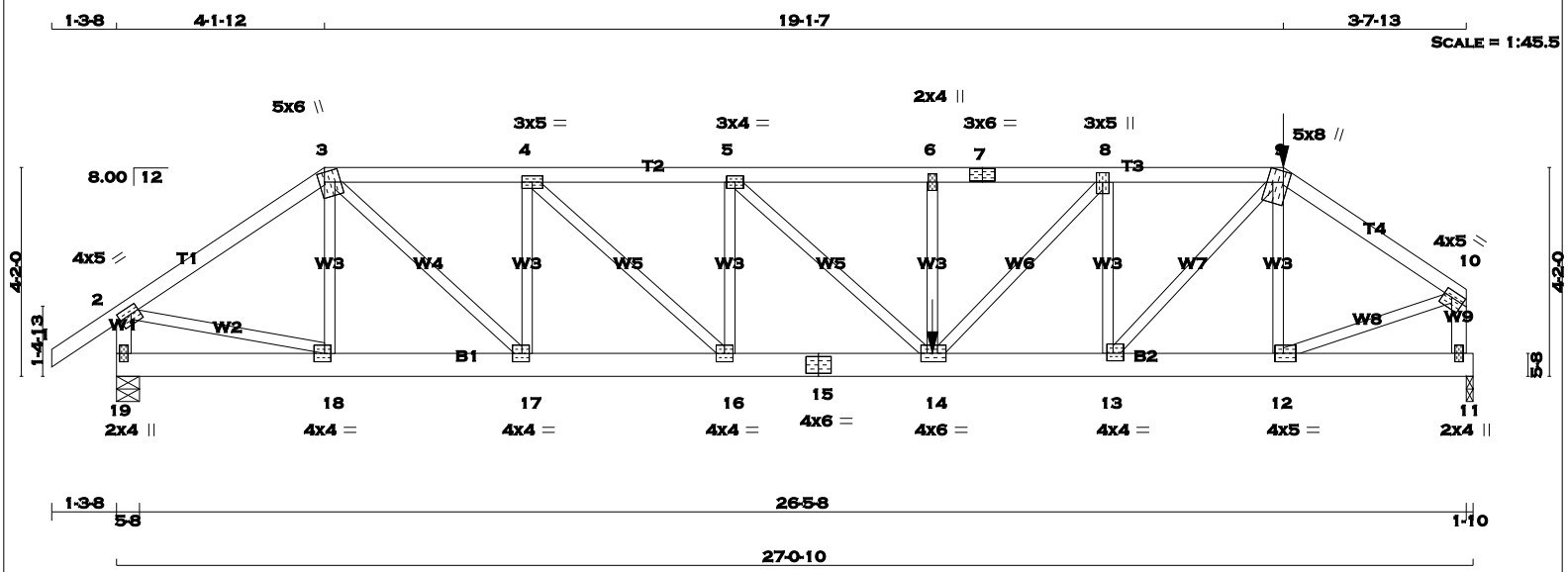

TOTAL WEIGHT = 4 X 128 = 513 lb [M]

LUMBER

N. L. G. A. RULES

CHORDS	SIZE		LUMBER	DESCR.
1 - 3	2x4	DRY	No.2	SPF
3 - 7	2x4	DRY	No.2	SPF
7 - 9	2x4	DRY	No.2	SPF
9 - 10	2x4	DRY	No.2	SPF
19 - 2	2x4	DRY	No.2	SPF
11 - 10	2x4	DRY	No.2	SPF
19 - 15	2x6	DRY	No.2	SPF
15 - 11	2x6	DRY	No.2	SPF
ALL WEBS EXCEPT	2x3	DRY	No.2	SPF

DRY: SEASONED LUMBER.

DESIGN CONSISTS OF 2 TRUSSES BUILT SEPARATELY THEN FASTENED TOGETHER AS FOLLOWS:

CHORDS #ROWS	SURFACE SPACING (IN)		LOAD(PLF)
TOP CHORDS : (0.122"X3") SPIRAL NAILS			
1- 3	1	12	TOP
3- 7	1	12	SIDE(34.2)
7- 9	1	12	SIDE(34.2)
9- 10	1	12	SIDE(0.0)
19- 2	1	12	TOP
11- 10	1	12	TOP
BOTTOM CHORDS : (0.122"X3") SPIRAL NAILS			
19- 15	2	12	TOP
15- 11	2	12	SIDE(8.7)
WEBS : (0.122"X3") SPIRAL NAILS			
2x3	1	6	

NAILS TO BE DRIVEN FROM ONE SIDE ONLY.

GIRDER NAILING ASSUMES NAILED HANGERS ARE FASTENED WITH MIN. 3-0 INCH NAILS.

TOP - COMPONENTS ARE LOADED FROM THE TOP AND MUST BE PLACED ON TOP EDGE OF ALL PLIES FOR THE LOAD TO BE TRANSFERRED TO EACH PLY.

SIDE - PLF SHOWN IS THE EQUIVALENT UDL APPLIED TO ONE SIDE THAT THE CORRESPONDING NAILING PATTERN SHALL BE CAPABLE OF TRANSFERING. REMAINING PLF MUST BE APPLIED ON THE OPPOSITE SIDE OR ON THE TOP.

PLATES (table is in inches)

JT	TYPE	PLATES	W	LEN	Y	X
2	TMVW-t	MT20	4.0	5.0	1.75	2.00

DIMENSIONS, SUPPORTS AND LOADINGS SPECIFIED BY FABRICATOR TO BE VERIFIED BY BUILDING DESIGNER

BEARINGS

JT	FACTORED GROSS REACTION VERT	HORZ	MAXIMUM FACTORED GROSS REACTION DOWN	HORZ	UPLIFT	INPUT BRG IN-SX	REQRD BRG IN-SX
19	2072	0	2072	0	0	5-8	5-8
11	2714	0	2714	0	0	1-10	1-10

UNFACTORED REACTIONS

JT	1ST LCASE COMBINED	MAX./MIN. COMPONENT REACTIONS SNOW	LIVE	PERM.LIVE	WIND	DEAD	SOIL
19	1451	1030 / 0	0 / 0	0 / 0	0 / 0	421 / 0	0 / 0
11	1906	1328 / 0	0 / 0	0 / 0	0 / 0	578 / 0	0 / 0

BEARING MATERIAL TO BE SPF NO.2 OR BETTER AT JOINT(S) 19, 11

BRACING

TOP CHORD TO BE SHEATHED OR MAX. PURLIN SPACING = 4.10 FT.
MAX. UNBRACED BOTTOM CHORD LENGTH = 10.00 FT. OR RIGID CEILING DIRECTLY APPLIED.

ALL PITCH BREAKS AND PERIMETER CORNER JOINTS MUST BE LATERALLY RESTRAINED.

LOADING

TOTAL LOAD CASES: (4)

CHORDS

MEMB. FR-TO	MAX. FACTORED FORCE (LBS)	FACTORED VERT. LOAD (PLF) FROM	TO	LC1	MAX CSI (LC)	MAX. UNBRAC LENGTH
1- 2	0 / 29	-77.4	-77.4	0.06 (1)	10.00	
2- 3	-2360 / 0	-77.4	-77.4	0.15 (1)	5.69	
3- 4	-3428 / 0	-77.4	-77.4	0.14 (1)	4.94	
4- 5	-4487 / 0	-77.4	-77.4	0.17 (1)	4.40	
5- 6	-5098 / 0	-77.4	-77.4	0.17 (1)	4.18	
6- 7	-5098 / 0	-145.9	-145.9	0.23 (1)	4.10	
7- 8	-5098 / 0	-145.9	-145.9	0.23 (1)	4.10	
8- 9	-4102 / 0	-145.9	-145.9	0.20 (1)	4.52	
9-10	-2961 / 0	-77.4	-77.4	0.13 (1)	5.24	
19- 2	-2040 / 0	0.0	0.0	0.11 (1)	7.73	
11-10	-2662 / 0	0.0	0.0	0.15 (1)	6.98	
19-18	0 / 0	-17.5	-17.5	0.02 (4)	10.00	
18-17	0 / 1950	-17.5	-17.5	0.14 (1)	10.00	
17-16	0 / 3428	-17.5	-17.5	0.25 (1)	10.00	
16-15	0 / 4487	-17.5	-17.5	0.35 (1)	10.00	
15-14	0 / 4487	-17.5	-17.5	0.35 (1)	10.00	
14-13	0 / 4102	-33.0	-33.0	0.33 (1)	10.00	
13-12	0 / 2439	-33.0	-33.0	0.17 (1)	10.00	
12-11	0 / 0	-33.0	-33.0	0.03 (4)	10.00	

WEBS

MEMB. FR-TO	MAX. FACTORED FORCE (LBS)	MAX CSI (LC)
18- 3	-368 / 0	0.05 (1)
3-17	0 / 2023	0.25 (1)
17- 4	-1330 / 0	0.17 (1)
4-16	0 / 1452	0.18 (1)
16- 5	-880 / 0	0.11 (1)
5-14	0 / 838	0.10 (1)
14- 6	-383 / 0	0.05 (1)
14- 8	0 / 1468	0.18 (1)
13- 8	-1648 / 0	0.21 (1)
13- 9	0 / 2447	0.30 (1)
12- 9	-731 / 0	0.09 (1)
2-18	0 / 2014	0.25 (1)
12-10	0 / 2609	0.32 (1)

FACTORED CONCENTRATED LOADS (LBS)

JT	LOC.	LC1	MAX-	MAX+	FACE	DIR.	TYPE
9	23-3-3	-220	-220	---	FRONT	VERT	TOTAL
14	16-3-4	-1262	-1262	---	FRONT	VERT	TOTAL

RECEIVED
TOWN OF MILTON
MAR 29, 2017
17-5419
BUILDING DIVISION

READ ALL NOTES ON THIS PAGE AND ON THE ENGINEERING NOTE PAGE ENP-1. THE NOTE PAGE IS AN INTEGRAL PART OF THIS DRAWING AS IT CONTAINS SPECIFICATIONS AND CRITERIA USED IN THE DESIGN OF THIS COMPONENT.

DESIGN CRITERIA

*** SPECIAL LOADS ANALYSIS ***
GEOMETRY AND/OR BASIC LOADS CHANGED BY USER.
LOADS WERE DERIVED FROM USER INPUT
NO FURTHER MODIFICATIONS WERE MADE

SPECIFIED LOADS:

TOP	CH.	LL	=	23.3	PSF
		DL	=	3.0	PSF
BOT	CH.	LL	=	0.0	PSF
		DL	=	7.0	PSF
TOTAL	LOAD		=	33.3	PSF

SPACING = 24.0 IN. C/C

LOADING IN FLAT SECTION BASED ON A SLOPE OF 6.00/12

GIRDER TYPE: CPrimeHip
LEFT SETBACK = 4-1-12
RIGHT SETBACK = 3-9-7
END SETBACK = 6-0-0
END WALL WIDTH = 5-8
CORNER FRAMING TYPE: CONVENTIONAL
END JACK TYPE: CONVENTIONAL
APPLIED TO FRONT SIDE
- ADDT'L LOADS BASED ON 55 % OF GSL.
LOADS APPLIED TO FIRST 10-9-6 OF SPAN MEASURED FROM THE RIGHT.

*** NON STANDARD GIRDER ***
ADDT'L USER-DEFINED LOADS APPLIED TO ALL LOAD CASES.

THIS TRUSS IS DESIGNED FOR RESIDENTIAL OR SMALL BUILDING REQUIREMENTS OF PART 9, NBCC 2010

THIS DESIGN COMPLIES WITH:
- PART 9 OF OBC 2012 , BCBC 2012 , ABC 2014
- CSA 086-09
- TPIC 2011

(55 % OF 27.2 P.S.F. G.S.L. PLUS 8.4 P.S.F. RAIN LOAD) EQUALS 23.3 P.S.F. SPECIFIED ROOF LIVE LOAD

ALLOWABLE DEFL.(LL)= L/360 (0.90")
CALCULATED VERT. DEFL.(LL) = L/ 999 (0.10")
ALLOWABLE DEFL.(TL)= L/360 (0.90")
CALCULATED VERT. DEFL.(TL) = L/ 999 (0.18")

CSI: TC=0.23 (6-8:1) , BC=0.35 (14-16:1) , WB=0.32 (10-12:1) , SSI=0.13 (8-9:1)

DOL LUMBER=1.00 NAIL=1.00 LS BEND=1.00 COMP=1.00 SHEAR=1.00 TENS= 1.00

COMPANION LIVE LOAD FACTOR = 0.50

TRUSS PLATE MANUFACTURER IS NOT RESPONSIBLE FOR QUALITY CONTROL IN THE TRUSS MANUFACTURING PLANT .

NAIL VALUES

PLATE	GRIP(DRY) (PSI) MAX	MIN	SHEAR (PLI) MAX	MIN	SECTION (PLI) MAX	MIN
MT20	618	354	1667	822	2284	1656

PLATE PLACEMENT TOL. = 0.250 inches

PLATE ROTATION TOL. = De

KOTT

CONTINUED ON PAGE 2

SCALE = 1:30.2

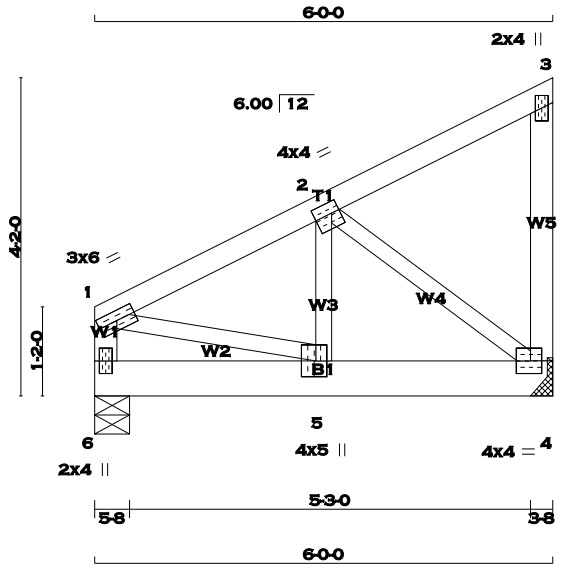

TOTAL WEIGHT = 2 X 29 = 59 lb [M]

LUMBER

N. L. G. A. RULES

CHORDS	SIZE		LUMBER	DESCR.
1 - 3	2x4	DRY	No.2	SPF
4 - 3	2x4	DRY	No.2	SPF
6 - 1	2x4	DRY	No.2	SPF
6 - 4	2x6	DRY	No.2	SPF
ALL WEBS EXCEPT	2x3	DRY	No.2	SPF

DRY: SEASONED LUMBER.

PLATES (table is in inches)

JT	TYPE	PLATES	W	LEN	Y	X
1	TMVW-t	MT20	3.0	6.0		
2	TMWW-t	MT20	4.0	4.0	1.75	1.25
3	TMV+p	MT20	2.0	4.0		
4	BMVW1-t	MT20	4.0	4.0	2.00	1.75
5	BMWW+t	MT20	4.0	5.0	2.50	1.75
6	BMV1+p	MT20	2.0	4.0		

A SIZE FOR SIZE SUBSTITUTION OF MITEK MII20 WITH TEE-LOK TL20 PLATES IS ALLOWED.

DIMENSIONS, SUPPORTS AND LOADINGS SPECIFIED BY FABRICATOR TO BE VERIFIED BY BUILDING DESIGNER

BEARINGS

JT	FACTORED GROSS REACTION VERT	HORZ	MAXIMUM FACTORED GROSS REACTION DOWN	HORZ	UPLIFT	INPUT BRG IN-SX	REQRD BRG IN-SX
4	1263	0	1263	0	0	HANGER BY OTHERS MIN. SEAT SIZE: 3-8	
6	1263	0	1263	0	0	5-8	5-8

UNFACTORED REACTIONS

JT	1ST LCASE COMBINED	MAX./MIN. COMPONENT REACTIONS SNOW	LIVE	PERM.LIVE	WIND	DEAD	SOIL
4	886	620 / 0	0 / 0	0 / 0	0 / 0	266 / 0	0 / 0
6	886	620 / 0	0 / 0	0 / 0	0 / 0	266 / 0	0 / 0

BEARING MATERIAL TO BE SPF NO.2 OR BETTER AT JOINT(S) 6

BRACING

TOP CHORD TO BE SHEATHED OR MAX. PURLIN SPACING = 5.93 FT.
MAX. UNBRACED BOTTOM CHORD LENGTH = 10.00 FT. OR RIGID CEILING DIRECTLY APPLIED.

ALL PITCH BREAKS AND PERIMETER CORNER JOINTS MUST BE LATERALLY RESTRAINED.

LOADING

TOTAL LOAD CASES: (4)

CHORDS

MEMB. FR-TO	MAX. FACTORED FORCE (LBS)	VERT. LOAD (PLF) FROM	TO	LC1 MAX CSI (LC)	MAX. UNBRAC LENGTH
1- 2	-1076 / 0	-77.4	-77.4	0.11 (1)	5.93
2- 3	-10 / 0	-77.4	-77.4	0.10 (1)	10.00
4- 3	-95 / 0	0.0	0.0	0.02 (1)	7.81
6- 1	-831 / 0	0.0	0.0	0.09 (1)	7.81
6- 5	0 / 0	-343.6	-343.6	0.20 (1)	10.00
5- 4	0 / 971	-343.6	-343.6	0.33 (1)	10.00

WEBS

MEMB. FR-TO	MAX. FACTORED FORCE (LBS)	MAX CSI (LC)
5- 2	0 / 946	0.23 (1)
2- 4	-1218 / 0	0.30 (1)
1- 5	0 / 1003	0.25 (1)

DESIGN CRITERIA

SPECIFIED LOADS:

TOP	CH.	LL	=	23.3	PSF
		DL	=	3.0	PSF
BOT	CH.	LL	=	0.0	PSF
		DL	=	7.0	PSF
TOTAL	LOAD		=	33.3	PSF

SPACING = 24.0 IN. C/C

GIRDER TYPE: CStdGirder
START DISTANCE = 0-0
START SPAN CARRIED = 16-2-8
END DISTANCE = 6-0-0
END SPAN CARRIED = 16-2-8
END WALL WIDTH = 5-8
APPLIED TO FRONT SIDE OF BOTTOM CHORD.
- ADDT'L LOADS BASED ON 55 % OF GSL. (DEFINED BY USER)

THIS TRUSS IS DESIGNED FOR RESIDENTIAL OR SMALL BUILDING REQUIREMENTS OF PART 9, NBCC 2010

THIS DESIGN COMPLIES WITH:
- PART 9 OF OBC 2012 , BCBC 2012 , ABC 2014
- CSA 086-09
- TPIC 2011

(55 % OF 27.2 P.S.F. G.S.L. PLUS 8.4 P.S.F. RAIN LOAD) EQUALS 23.3 P.S.F. SPECIFIED ROOF LIVE LOAD

ALLOWABLE DEFL.(LL)= L/360 (0.20")
CALCULATED VERT. DEFL.(LL) = L/ 999 (0.01")
ALLOWABLE DEFL.(TL)= L/360 (0.20")
CALCULATED VERT. DEFL.(TL) = L/ 999 (0.02")

CSI: TC=0.11 (1-2:1) , BC=0.33 (4-5:1) , WB=0.30 (2-4:1) , SSI=0.40 (5-6:1)

DOL LUMBER=1.00 NAIL=1.00 LS BEND=1.00 COMP=1.00 SHEAR=1.00 TENS= 1.00

COMPANION LIVE LOAD FACTOR = 0.50

TRUSS PLATE MANUFACTURER IS NOT RESPONSIBLE FOR QUALITY CONTROL IN THE TRUSS MANUFACTURING PLANT .

NAIL VALUES

PLATE	GRIP(DRY) (PSI) MAX	MIN	SHEAR (PLI) MAX	MIN	SECTION (PLI) MAX	MIN
MT20	618	354	1667	822	2284	1656

PLATE PLACEMENT TOL. = 0.250 inches

PLATE ROTATION TOL. = 0.5 Deg.

JSI GRIP= 0.90 (4) (INPUT = 0.90)
JSI METAL= 0.36 (4) (INPUT = 1.00)

LICENSED PROFESSIONAL ENGINEER
P.M. TREVISAN
100136551
March 20th, 2017
PROVINCE OF ONTARIO

RECEIVED
TOWN OF MILTON
MAR 29, 2017
17-5419
BUILDING DIVISION

READ ALL NOTES ON THIS PAGE AND ON THE ENGINEERING NOTE PAGE ENP-1. THE NOTE PAGE IS AN INTEGRAL PART OF THIS DRAWING AS IT CONTAINS SPECIFICATIONS AND CRITERIA USED IN THE DESIGN OF THIS COMPONENT.

KOTT

JOB NAME	TRUSS NAME	QUANTITY	PLY	JOB DESC.	DRWG NO.
PT0317-122	GIRD04	2	2	TRUSS DESC. LECCO RIDGE-BLOCK 348	ENG JOB: PT0317-122

KOTT , Stouffville, ON, CGC

Version 8.100 S Feb 9 2017 MiTek Industries, Inc. Mon Mar 20 10:10:25 2017 Page 1
ID:Mn2zxnCa6NqoASkSkmtLJtyfhrl-j8CAP7?x6vdtQMAM37xHEqfnJIlhWDhHUC4YBazZ4wi

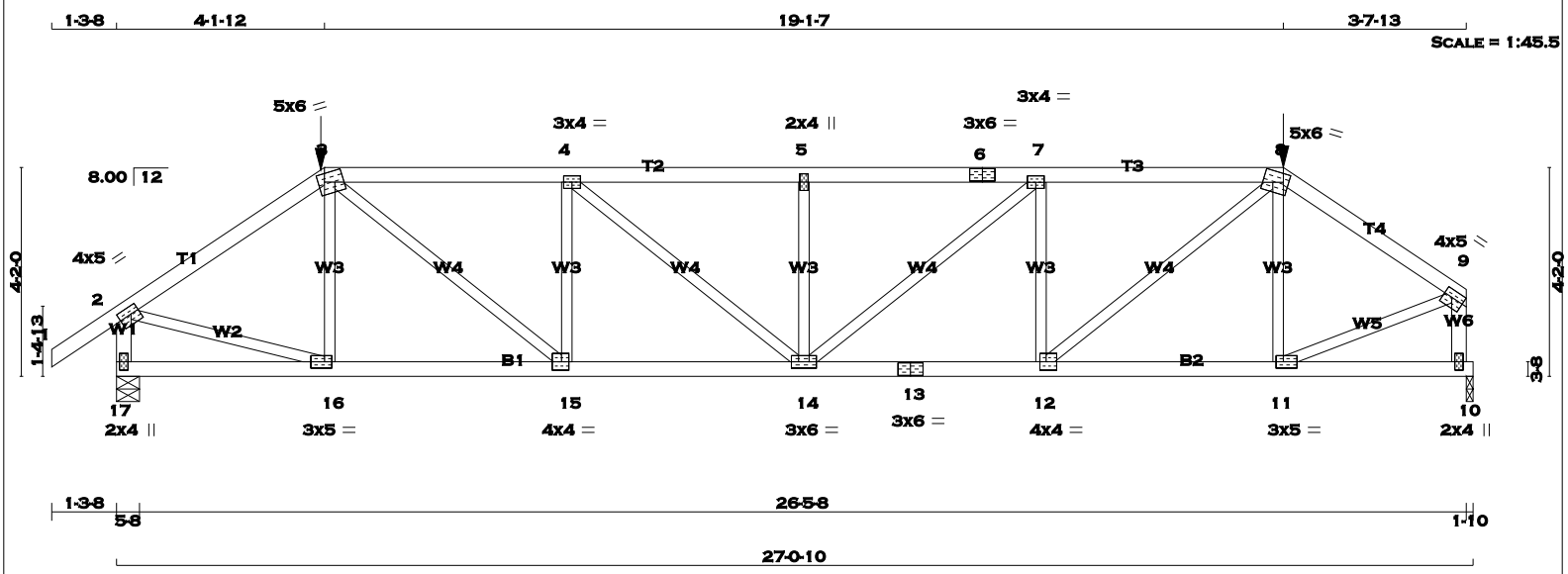

TOTAL WEIGHT = 4 X 108 = 431 lb [M]

LUMBER

N. L. G. A. RULES

CHORDS	SIZE		LUMBER	DESCR.
1 - 3	2x4	DRY	No.2	SPF
3 - 6	2x4	DRY	No.2	SPF
6 - 8	2x4	DRY	No.2	SPF
8 - 9	2x4	DRY	No.2	SPF
17 - 2	2x4	DRY	No.2	SPF
10 - 9	2x4	DRY	No.2	SPF
17 - 13	2x4	DRY	No.2	SPF
13 - 10	2x4	DRY	No.2	SPF
ALL WEBS EXCEPT	2x3	DRY	No.2	SPF

DRY: SEASONED LUMBER.

DESIGN CONSISTS OF 2 TRUSSES BUILT SEPARATELY THEN FASTENED TOGETHER AS FOLLOWS:

CHORDS #ROWS	SURFACE SPACING (IN)		LOAD(PLF)
TOP CHORDS : (0.122"X3") SPIRAL NAILS			
1- 3	1	12	SIDE(0.0)
3- 6	1	12	SIDE(34.2)
6- 8	1	12	SIDE(34.2)
8- 9	1	12	SIDE(0.0)
17- 2	1	12	TOP
10- 9	1	12	TOP
BOTTOM CHORDS : (0.122"X3") SPIRAL NAILS			
17- 13	1	12	SIDE(8.7)
13- 10	1	12	SIDE(8.7)
WEBS : (0.122"X3") SPIRAL NAILS			
2x3	1	6	

NAILS TO BE DRIVEN FROM ONE SIDE ONLY.

GIRDER NAILING ASSUMES NAILED HANGERS ARE FASTENED WITH MIN. 3-0 INCH NAILS.

TOP - COMPONENTS ARE LOADED FROM THE TOP AND MUST BE PLACED ON TOP EDGE OF ALL PLIES FOR THE LOAD TO BE TRANSFERRED TO EACH PLY.

SIDE - PLF SHOWN IS THE EQUIVALENT UDL APPLIED TO ONE SIDE THAT THE CORRESPONDING NAILING PATTERN SHALL BE CAPABLE OF TRANSFERING. REMAINING PLF MUST BE APPLIED ON THE OPPOSITE SIDE OR ON THE TOP.

PLATES (table is in inches)

JT	TYPE	PLATES	W	LEN	Y	X
2	TMVW-t	MT20	4.0	5.0	1.75	2.00

DIMENSIONS, SUPPORTS AND LOADINGS SPECIFIED BY FABRICATOR TO BE VERIFIED BY BUILDING DESIGNER

BEARINGS

JT	FACTORED GROSS REACTION VERT	HORZ	MAXIMUM FACTORED GROSS REACTION DOWN	HORZ	UPLIFT	INPUT BRG IN-SX	REQRD BRG IN-SX
17	2467	0	2467	0	0	5-8	5-8
10	2379	0	2379	0	0	1-10	1-10

UNFACTORED REACTIONS

JT	1ST LCASE COMBINED	MAX./MIN. COMPONENT REACTIONS SNOW	LIVE	PERM.LIVE	WIND	DEAD	SOIL
17	1730	1218 / 0	0 / 0	0 / 0	0 / 0	512 / 0	0 / 0
10	1670	1165 / 0	0 / 0	0 / 0	0 / 0	505 / 0	0 / 0

BEARING MATERIAL TO BE SPF NO.2 OR BETTER AT JOINT(S) 17, 10

BRACING

TOP CHORD TO BE SHEATHED OR MAX. PURLIN SPACING = 4.25 FT.
MAX. UNBRACED BOTTOM CHORD LENGTH = 10.00 FT. OR RIGID CEILING DIRECTLY APPLIED.

ALL PITCH BREAKS AND PERIMETER CORNER JOINTS MUST BE LATERALLY RESTRAINED.

LOADING

TOTAL LOAD CASES: (4)

CHORDS

MEMB. FR-TO	MAX. FACTORED FORCE (LBS)	FACTORED VERT. LOAD (PLF) FROM	TO	LC1 CSI (LC)	MAX UNBRAC LENGTH
1- 2	0 / 29	-77.4	-77.4	0.06 (1)	10.00
2- 3	-2794 / 0	-77.4	-77.4	0.17 (1)	5.32
3- 4	-3913 / 0	-145.9	-145.9	0.34 (1)	4.45
4- 5	-4338 / 0	-145.9	-145.9	0.35 (1)	4.25
5- 6	-4338 / 0	-145.9	-145.9	0.35 (1)	4.25
6- 7	-4338 / 0	-145.9	-145.9	0.35 (1)	4.25
7- 8	-3799 / 0	-145.9	-145.9	0.33 (1)	4.51
8- 9	-2520 / 0	-77.4	-77.4	0.12 (1)	5.58
17- 2	-2412 / 0	0.0	0.0	0.14 (1)	7.25
10- 9	-2333 / 0	0.0	0.0	0.14 (1)	7.35
17-16	0 / 0	-33.0	-33.0	0.08 (4)	10.00
16-15	0 / 2310	-33.0	-33.0	0.25 (1)	10.00
15-14	0 / 3913	-33.0	-33.0	0.39 (1)	10.00
14-13	0 / 3799	-33.0	-33.0	0.38 (1)	10.00
13-12	0 / 3799	-33.0	-33.0	0.38 (1)	10.00
12-11	0 / 2076	-33.0	-33.0	0.23 (1)	10.00
11-10	0 / 0	-33.0	-33.0	0.08 (4)	10.00

WEBS

MEMB. FR-TO	MAX. FACTORED FORCE (LBS)	MAX CSI (LC)
16- 3	-422 / 14	0.06 (1)
3-15	0 / 2052	0.25 (1)
15- 4	-1129 / 0	0.16 (1)
4-14	0 / 549	0.07 (1)
14- 5	-635 / 0	0.09 (1)
14- 7	0 / 697	0.09 (1)
12- 7	-1224 / 0	0.17 (1)
11- 8	0 / 2205	0.27 (1)
11- 8	-628 / 0	0.09 (1)
2-16	0 / 2395	0.30 (1)
11- 9	0 / 2237	0.28 (1)

FACTORED CONCENTRATED LOADS (LBS)

JT	LOC.	LC1	MAX-	MAX+	FACE	DIR.	TYPE
3	4-1-12	-241	-241	---	FRONT	VERT	TOTAL
8	23-3-4	-220	-220	---	FRONT	VERT	TOTAL

RECEIVED
TOWN OF MILTON
MAR 29, 2017
17-5419
BUILDING DIVISION

READ ALL NOTES ON THIS PAGE AND ON THE ENGINEERING NOTE PAGE ENP-1. THE NOTE PAGE IS AN INTEGRAL PART OF THIS DRAWING AS IT CONTAINS SPECIFICATIONS AND CRITERIA USED IN THE DESIGN OF THIS COMPONENT.

DESIGN CRITERIA

SPECIFIED LOADS:

TOP CH.	LL	=	23.3	PSF
	DL	=	3.0	PSF
BOT CH.	LL	=	0.0	PSF
	DL	=	7.0	PSF
TOTAL LOAD		=	33.3	PSF

SPACING = 24.0 IN. C/C

LOADING IN FLAT SECTION BASED ON A SLOPE OF 6.00/12

GIRDER TYPE: CPrimeHip
LEFT SETBACK = 4-1-12
RIGHT SETBACK = 3-9-7
END SETBACK = 6-0-0
END WALL WIDTH = 5-8
CORNER FRAMING TYPE: CONVENTIONAL
END JACK TYPE: CONVENTIONAL
APPLIED TO FRONT SIDE
- ADDT'L LOADS BASED ON 55 % OF GSL.

THIS TRUSS IS DESIGNED FOR RESIDENTIAL OR SMALL BUILDING REQUIREMENTS OF PART 9, NBCC 2010

THIS DESIGN COMPLIES WITH:
- PART 9 OF OBC 2012 , BCBC 2012 , ABC 2014
- CSA 086-09
- TPIC 2011

(55 % OF 27.2 P.S.F. G.S.L. PLUS 8.4 P.S.F. RAIN LOAD) EQUALS 23.3 P.S.F. SPECIFIED ROOF LIVE LOAD

ALLOWABLE DEFL.(LL)= L/360 (0.90")
CALCULATED VERT. DEFL.(LL) = L/ 999 (0.10")
ALLOWABLE DEFL.(TL)= L/360 (0.90")
CALCULATED VERT. DEFL.(TL) = L/ 999 (0.18")

CSI: TC=0.35 (5-7:1) , BC=0.39 (14-15:1) , WB=0.30 (2-16:1) , SSI=0.18 (7-8:1)

DOL LUMBER=1.00 NAIL=1.00 LS BEND=1.00 COMP=1.00 SHEAR=1.00 TENS= 1.00

COMPANION LIVE LOAD FACTOR = 0.50

TRUSS PLATE MANUFACTURER IS NOT RESPONSIBLE FOR QUALITY CONTROL IN THE TRUSS MANUFACTURING PLANT .

NAIL VALUES

PLATE	GRIP(DRY) (PSI) MAX	MIN	SHEAR (PLI) MAX	MIN	SECTION (PLI) MAX	MIN
MT20	618	354	1667	822	2284	1656

PLATE PLACEMENT TOL. = 0.250 inches

PLATE ROTATION TOL. = 5.0 Deg.

JSI GRIP= 0.90 (16) (INPUT = 0.90)
JSI METAL= 0.53 (13) (INPUT = 1.00)

KOTT

CONTINUED ON PAGE 2

SCALE = 1:71.3

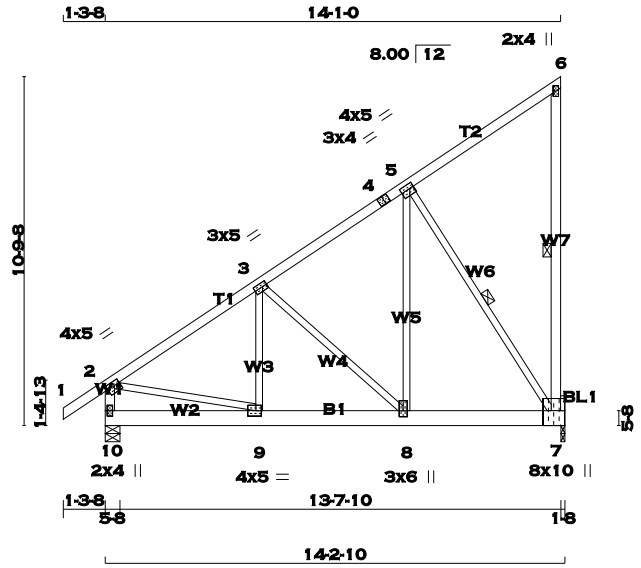

TOTAL WEIGHT = 8 X 83 = 664 lb

LUMBER

N. L. G. A. RULES

CHORDS	SIZE		LUMBER	DESCR.
1 - 4	2x4	DRY	No.2	SPF
4 - 6	2x4	DRY	No.2	SPF
7 - 6	2x4	DRY	No.2	SPF
10 - 2	2x4	DRY	No.2	SPF
10 - 7	2x6	DRY	2100F 1.8E	SPF
BEARING BLOCKS				
BL1	2x6	DRY	No.2	SPF
ALL WEBS EXCEPT	2x3	DRY	No.2	SPF

DRY: SEASONED LUMBER.

DESIGN CONSISTS OF 4 TRUSSES BUILT SEPARATELY THEN FASTENED TOGETHER AS FOLLOWS:

CHORDS	#ROWS	SURFACE SPACING (IN)	LOAD(PLF)
TOP CHORDS : (0.122"X3") SPIRAL NAILS			
1- 4	1	12	TOP
4- 6	1	12	TOP
6- 7	1	12	TOP
10- 2	1	12	TOP
BOTTOM CHORDS : (0.122"X3") SPIRAL NAILS			
10- 7	2	4	SIDE(582.5)
WEBS : (0.122"X3") SPIRAL NAILS			
2x3	1	6	

STAGGER NAILS BY HALF THE SURFACE SPACING IN ADJACENT PLIES.

IN ADDITION, PRE-DRILL ONE 0.56" DIAM. HOLE IN EACH CHORD PANEL AND INSTALL 0.50" DIAM. ASTM A307 BOLTS WITH WASHERS, BOTH SIDES. FOR OTHER BOLT TYPES SEE CSAO86 3.3.2.

TOP - COMPONENTS ARE LOADED FROM THE TOP AND MUST BE PLACED ON TOP EDGE OF ALL PLIES FOR THE LOAD TO BE TRANSFERRED TO EACH PLY.

SIDE - PLF SHOWN IS THE EQUIVALENT UDL APPLIED TO ONE SIDE THAT THE CORRESPONDING NAILING PATTERN SHALL BE CAPABLE OF TRANSFERING. REMAINING PLF MUST BE APPLIED ON THE OPPOSITE SIDE OR ON THE TOP.

DIMENSIONS, SUPPORTS AND LOADINGS SPECIFIED BY FABRICATOR TO BE VERIFIED BY BUILDING DESIGNER

BEARINGS

JT	FACTORED GROSS REACTION VERT	HORZ	MAXIMUM FACTORED GROSS REACTION DOWN	HORZ	UPLIFT	INPUT BRG IN-SX	REQRD BRG IN-SX
7	6085	0	6085	0	0	1-8	1-8 + MITEK FLUSH PLATE
10	6180	0	6180	0	0	5-8	5-8

UNFACTORED REACTIONS

JT	1ST LCASE COMBINED	MAX./MIN. COMPONENT REACTIONS SNOW	LIVE	PERM.LIVE	WIND	DEAD	SOIL
7	4270	2989 / 0	0 / 0	0 / 0	0 / 0	1281 / 0	0 / 0
10	4335	3046 / 0	0 / 0	0 / 0	0 / 0	1289 / 0	0 / 0

BEARING MATERIAL TO BE SPF NO.2 OR BETTER AT JOINT(S) 7, 10

BEARING SIZE FACTOR = 1.15 AT JNT(S) 10 (BASED ON SUPPORT DEPTH = 1-8)

BRACING

TOP CHORD TO BE SHEATHED OR MAX. PURLIN SPACING = 4.92 FT.

MAX. UNBRACED BOTTOM CHORD LENGTH = 10.00 FT. OR RIGID CEILING DIRECTLY APPLIED.

ALL PITCH BREAKS AND PERIMETER CORNER JOINTS MUST BE LATERALLY RESTRAINED.

1 - 2x3 SPF No.2 LATERAL BRACE(S) AT 1/ 2 LENGTH OF 6-7. DBS = 20-0-0 . CBF = 19 LBS.

1 - 2x4 SPF No.2 LATERAL BRACE(S) AT 1/ 2 LENGTH OF 5-7. DBS = 4-0-0 . CBF = 131 LBS.

DBS = DIAGONAL BRACE SPACING (MAX). CBF = CUMULATIVE BRACING FORCE. FASTEN LATERAL BRACE(S) TO EACH PLY USING (0.122"X3") SPIRAL NAILS : 1 NAIL FOR 2x3 BRACE(S), 2 FOR 1x4, 2x4, 2x5, 3 FOR 2x6, 4 FOR 2x8, 5 FOR 2x10, AND 6 FOR 2x12.

END VERTICAL(S) MUST BE SHEATHED OR HAVE BRACES AS INDICATED IN THE MAX. UNBRACED LENGTH COLUMN OF THE TABLE BELOW

LOADING

TOTAL LOAD CASES: (4)

CHORDS

MEMB. FR-TO	MAX. FACTORED FORCE (LBS)	FACTORED VERT. LOAD LC1 (PLF) FROM	TO	MAX CSI (LC)	MAX. UNBRAC LENGTH
1- 2	0 / 29	-77.4	-77.4	0.04 (1)	10.00
2- 3	-5904 / 0	-77.4	-77.4	0.17 (1)	4.92
3- 4	-3377 / 0	-77.4	-77.4	0.11 (1)	6.12
4- 5	-3377 / 0	-77.4	-77.4	0.11 (1)	6.12
5- 6	-18 / 0	-77.4	-77.4	0.09 (1)	6.25
7- 6	-148 / 0	0.0	0.0	0.02 (1)	6.25
10- 2	-4582 / 0	0.0	0.0	0.14 (1)	6.95
10- 9	0 / 0	-794.2	-794.2	0.18 (1)	10.00
9- 8	0 / 4922	-794.2	-794.2	0.22 (1)	10.00
8- 7	0 / 2819	-794.2	-794.2	0.20 (1)	10.00

WEBS

MEMB. FR-TO	MAX. FACTORED FORCE (LBS)	MAX CSI (LC)
9- 3	0 / 2967	0.17 (1)
3- 8	-2852 / 0	0.47 (1)
8- 5	0 / 5868	0.33 (1)
5- 7	-5230 / 0	0.64 (1)
2- 9	0 / 5028	0.28 (1)

RECEIVED
TOWN OF MILTON
MAR 29, 2017
17-5419
BUILDING DIVISION

READ ALL NOTES ON THIS PAGE AND ON THE ENGINEERING NOTE PAGE ENP-1. THE NOTE PAGE IS AN INTEGRAL PART OF THIS DRAWING AS IT CONTAINS SPECIFICATIONS AND CRITERIA USED IN THE DESIGN OF THIS COMPONENT.

[M]

DESIGN CRITERIA

SPECIFIED LOADS:

TOP CH.	LL	=	23.3	PSF
	DL	=	3.0	PSF
CH.	LL	=	0.0	PSF
	DL	=	7.0	PSF
TOTAL LOAD		=	33.3	PSF

SPACING = 24.0 IN. C/C

GIRDER TYPE: CStdGirder
START DISTANCE = 0-0
START SPAN CARRIED = 35-2-8
END DISTANCE = 14-2-10
END SPAN CARRIED = 35-2-8
END WALL WIDTH = 5-8
APPLIED TO FRONT SIDE OF BOTTOM CHORD.
- ADDT'L LOADS BASED ON 55 % OF GSL. (DEFINED BY USER)

THIS TRUSS IS DESIGNED FOR RESIDENTIAL OR SMALL BUILDING REQUIREMENTS OF PART 9, NBCC 2010

THIS DESIGN COMPLIES WITH:
- PART 9 OF OBC 2012 , BCBC 2012 , ABC 2014
- CSA 086-09
- TPIC 2011

(55 % OF 27.2 P.S.F. G.S.L. PLUS 8.4 P.S.F. RAIN LOAD) EQUALS 23.3 P.S.F. SPECIFIED ROOF LIVE LOAD

ALLOWABLE DEFL.(LL)= L/360 (0.46")
CALCULATED VERT. DEFL.(LL) = L/ 999 (0.04")
ALLOWABLE DEFL.(TL)= L/360 (0.46")
CALCULATED VERT. DEFL.(TL) = L/ 999 (0.07")

CSI: TC=0.17 (2-3:1) , BC=0.22 (8-9:1) , WB=0.64 (5-7:1) , SSI=0.37 (9-10:1)

DOL LUMBER=1.00 NAIL=1.00 LS BEND=1.10 COMP=1.10 SHEAR=1.10 TENS= 1.10

COMPANION LIVE LOAD FACTOR = 0.50

TRUSS PLATE MANUFACTURER IS NOT RESPONSIBLE FOR QUALITY CONTROL IN THE TRUSS MANUFACTURING PLANT .

NAIL VALUES

PLATE	GRIP(DRY) (PSI) MAX	MIN	SHEAR (PLI) MAX	MIN	SECTION (PLI) MAX	MIN
MT20	618	354	1667	822	2284	1656

PLATE PLACEMENT TOL. = 0.250 inches

PLATE ROTATION TOL. = 5.0 Deg.

JSI GRIP= 0.90 (5) (INPUT = 0.90)
JSI METAL= 0.45 (2) (INPUT = 1.00)

KOTT

CONTINUED ON PAGE 2

JOB NAME	TRUSS NAME	QUANTITY	PLY	JOB DESC.	DRWG NO.
PT0317-122	**GIRD06**	**2**	**1**	TRUSS DESC. LECCO RIDGE-BLOCK 348	Page 15 of 75 ENG JOB: PT0317-122

KOTT , Stouffville, ON, CGC

Version 8.100 S Feb 9 2017 MiTek Industries, Inc. Mon Mar 20 10:10:26 2017 Page 1
ID:Mn2zxnCa6NqoASkSkmtLJtyfhrl-BKmZdT0ZtDmk2VlYdrTWn2Cz58hNFgVRjsp5j0zZ4wh

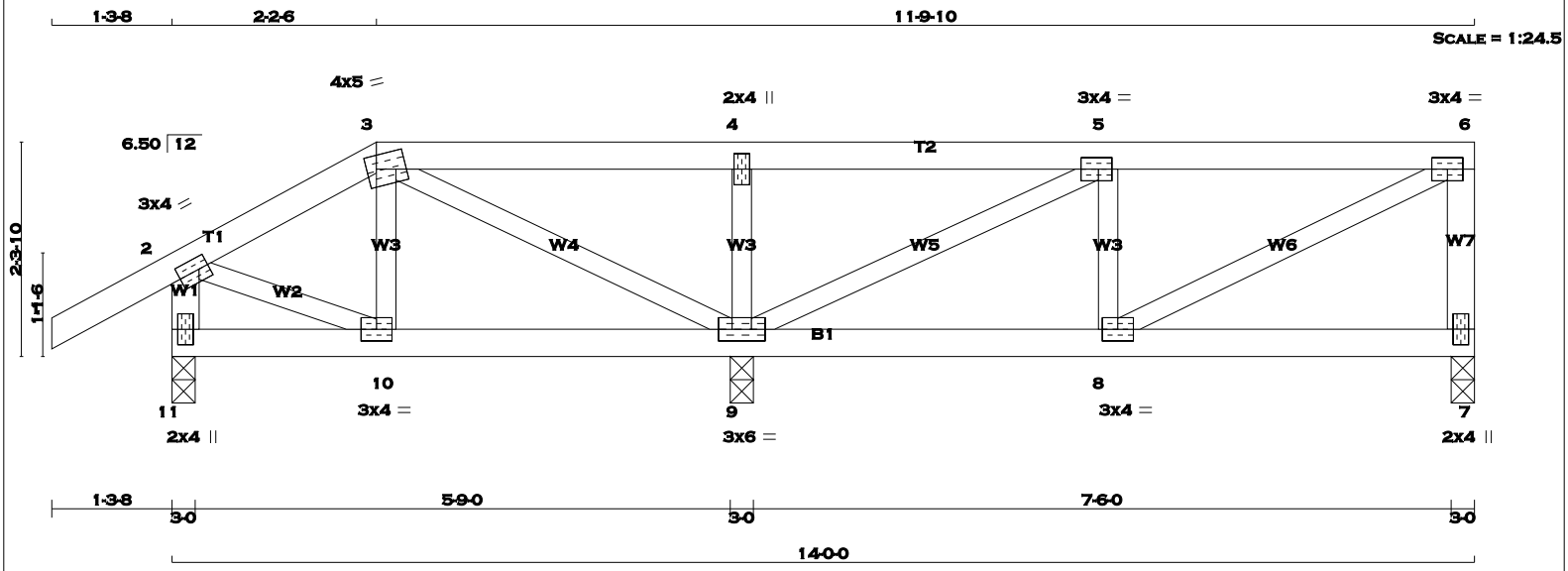

TOTAL WEIGHT = 2 X 52 = 105 lb [M]

LUMBER

N. L. G. A. RULES

CHORDS	SIZE		LUMBER	DESCR.
1 - 3	2x4	DRY	No.2	SPF
3 - 6	2x4	DRY	No.2	SPF
7 - 6	2x4	DRY	No.2	SPF
11 - 2	2x4	DRY	No.2	SPF
11 - 7	2x4	DRY	No.2	SPF
ALL WEBS EXCEPT	2x3	DRY	No.2	SPF

DRY: SEASONED LUMBER.

PLATES (table is in inches)

JT	TYPE	PLATES	W	LEN	Y	X
2	TMVW-t	MT20	3.0	4.0	1.50	1.25
3	TTWW-m	MT20	4.0	5.0	1.75	1.25
4	TMW+w	MT20	2.0	4.0		
5	TMWW-t	MT20	3.0	4.0	1.50	1.75
6	TMVW-t	MT20	3.0	4.0		
7	BMV1+p	MT20	2.0	4.0		
8	BMWW-t	MT20	3.0	4.0		
9	BMWWW1-t	MT20	3.0	6.0		
10	BMWW-t	MT20	3.0	4.0		
11	BMV1+p	MT20	2.0	4.0		

A SIZE FOR SIZE SUBSTITUTION OF MITEK MII20 WITH TEE-LOK TL20 PLATES IS ALLOWED.

DIMENSIONS, SUPPORTS AND LOADINGS SPECIFIED BY FABRICATOR TO BE VERIFIED BY BUILDING DESIGNER

BEARINGS

JT	FACTORED GROSS REACTION VERT	HORZ	MAXIMUM FACTORED GROSS REACTION DOWN	HORZ	UPLIFT	INPUT BRG IN-SX	REQRD BRG IN-SX
7	516	0	516	0	0	3-0	3-0
11	314	0	314	0	0	3-0	3-0
9	1015	0	1015	0	0	3-0	3-0

UNFACTORED REACTIONS

JT	1ST LCASE COMBINED	MAX./MIN. COMPONENT REACTIONS SNOW	LIVE	PERM.LIVE	WIND	DEAD	SOIL
7	363	252 / 0	0 / 0	0 / 0	0 / 0	110 / 0	0 / 0
11	219	164 / 0	0 / 0	0 / 0	0 / 0	54 / 0	0 / 0
9	712	501 / 0	0 / 0	0 / 0	0 / 0	211 / 0	0 / 0

BEARING MATERIAL TO BE SPF NO.2 OR BETTER AT JOINT(S) 7, 11, 9

BRACING

TOP CHORD TO BE SHEATHED OR MAX. PURLIN SPACING = 6.25 FT.
MAX. UNBRACED BOTTOM CHORD LENGTH = 10.00 FT. OR RIGID CEILING DIRECTLY APPLIED.

ALL PITCH BREAKS AND PERIMETER CORNER JOINTS MUST BE LATERALLY RESTRAINED.

LOADING

TOTAL LOAD CASES: (4)

CHORDS

MEMB. FR-TO	MAX. FACTORED FORCE (LBS)	FACTORED VERT. LOAD LC1 (PLF) FROM	TO	MAX CSI (LC)	MAX. UNBRAC LENGTH
1- 2	0 / 25	-77.4	-77.4	0.11 (1)	10.00
2- 3	-134 / 0	-77.4	-77.4	0.07 (1)	6.25
3- 4	0 / 147	-77.4	-77.4	0.26 (1)	10.00
4- 5	0 / 146	-120.1	-120.1	0.29 (1)	10.00
5- 6	-541 / 0	-120.1	-120.1	0.27 (1)	6.25
7- 6	-468 / 0	0.0	0.0	0.06 (1)	7.81
11- 2	-296 / 0	0.0	0.0	0.03 (1)	7.81
11-10	0 / 0	-17.5	-17.5	0.03 (4)	10.00
10- 9	0 / 118	-17.5	-17.5	0.10 (4)	10.00
9- 8	0 / 541	-27.2	-27.2	0.17 (1)	10.00
8- 7	0 / 0	-27.2	-27.2	0.10 (4)	10.00

WEBS

MEMB. FR-TO	MAX. FACTORED FORCE (LBS)	MAX CSI (LC)
10- 3	0 / 45	0.02 (4)
3- 9	-297 / 0	0.10 (1)
9- 4	-424 / 0	0.07 (1)
9- 5	-772 / 0	0.26 (1)
8- 5	-171 / 49	0.03 (1)
8- 6	0 / 608	0.15 (1)
2-10	0 / 125	0.03 (1)

DESIGN CRITERIA

SPECIFIED LOADS:

TOP CH.	LL	=	23.3	PSF
	DL	=	3.0	PSF
BOT CH.	LL	=	0.0	PSF
	DL	=	7.0	PSF
TOTAL LOAD		=	33.3	PSF

SPACING = 24.0 IN. C/C

LOADING IN FLAT SECTION BASED ON A SLOPE OF 6.00/12

GIRDER TYPE: CPrimeHip
LEFT SETBACK = 2-2-6
RIGHT SETBACK = 0-0
END SETBACK = 4-5-8
END WALL WIDTH = 3-0
CORNER FRAMING TYPE: CONVENTIONAL
END JACK TYPE: CONVENTIONAL
APPLIED TO FRONT SIDE
- ADDT'L LOADS BASED ON 55 % OF GSL.
LOADS APPLIED TO FIRST 7-9-0 OF SPAN MEASURED FROM THE RIGHT.

THIS TRUSS IS DESIGNED FOR RESIDENTIAL OR SMALL BUILDING REQUIREMENTS OF PART 9, NBCC 2010

THIS DESIGN COMPLIES WITH:
- PART 9 OF OBC 2012 , BCBC 2012 , ABC 2014
- CSA 086-09
- TPIC 2011

(55 % OF 27.2 P.S.F. G.S.L. PLUS 8.4 P.S.F. RAIN LOAD) EQUALS 23.3 P.S.F. SPECIFIED ROOF LIVE LOAD

ALLOWABLE DEFL.(LL)= L/360 (0.26")
CALCULATED VERT. DEFL.(LL) = L/ 999 (0.01")
ALLOWABLE DEFL.(TL)= L/360 (0.26")
CALCULATED VERT. DEFL.(TL) = L/ 999 (0.02")

CSI: TC=0.29 (4-5:1) , BC=0.17 (8-9:1) , WB=0.26 (5-9:1) , SSI=0.24 (5-6:1)

DOL LUMBER=1.00 NAIL=1.00 LS BEND=1.00 COMP=1.00 SHEAR=1.00 TENS= 1.00

COMPANION LIVE LOAD FACTOR = 0.50

TRUSS PLATE MANUFACTURER IS NOT RESPONSIBLE FOR QUALITY CONTROL IN THE TRUSS MANUFACTURING PLANT .

NAIL VALUES

PLATE	GRIP(DRY) (PSI) MAX	MIN	SHEAR (PLI) MAX	MIN	SECTION (PLI) MAX	MIN
MT20	618	354	1667	822	2284	1656

PLATE PLACEMENT TOL. = 0.250 inches

PLATE ROTATION TOL. = 5.0 Deg.

JSI GRIP= 0.89 (6) (INPUT = 0.90)
JSI METAL= 0.26 (5) (INPUT = 1.00)

LICENSED PROFESSIONAL ENGINEER
P.M. TREVISAN
100136551
March 20th, 2017
PROVINCE OF ONTARIO

RECEIVED
TOWN OF MILTON
MAR 29, 2017
17-5419
BUILDING DIVISION

READ ALL NOTES ON THIS PAGE AND ON THE ENGINEERING NOTE PAGE ENP-1. THE NOTE PAGE IS AN INTEGRAL PART OF THIS DRAWING AS IT CONTAINS SPECIFICATIONS AND CRITERIA USED IN THE DESIGN OF THIS COMPONENT.

KOTT

SCALE = 1:71.3

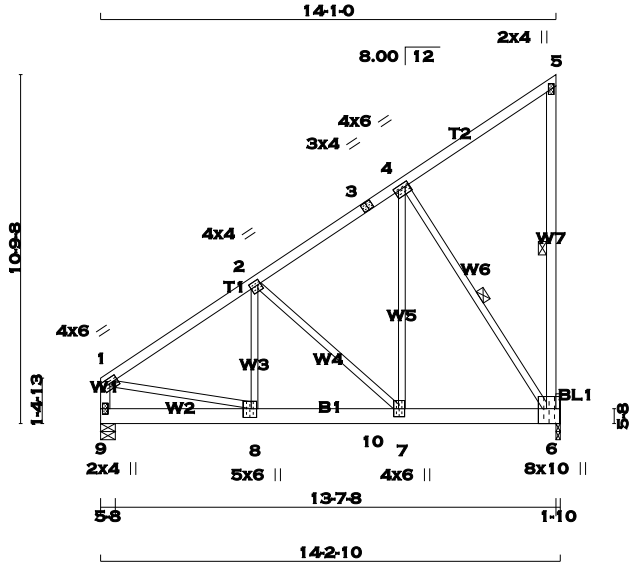

TOTAL WEIGHT = 6 X 81 = 487 lb

LUMBER

N. L. G. A. RULES

CHORDS	SIZE		LUMBER	DESCR.
1 - 3	2x4	DRY	No.2	SPF
3 - 5	2x4	DRY	No.2	SPF
6 - 5	2x4	DRY	No.2	SPF
9 - 1	2x4	DRY	No.2	SPF
9 - 6	2x6	DRY	2100F 1.8E	SPF

BEARING BLOCKS

BL1	2x6	DRY	No.2	SPF
ALL WEBS EXCEPT	2x3	DRY	No.2	SPF

DRY: SEASONED LUMBER.

DESIGN CONSISTS OF 3 TRUSSES BUILT SEPARATELY THEN FASTENED TOGETHER AS FOLLOWS:

CHORDS	#ROWS	SURFACE SPACING (IN)	LOAD(PLF)
TOP CHORDS : (0.122"X3") SPIRAL NAILS			
1- 3	1	12	TOP
3- 5	1	12	TOP
5- 6	1	12	TOP
9- 1	1	12	TOP
BOTTOM CHORDS : (0.122"X3") SPIRAL NAILS			
9- 6	2	5	SIDE(536.2)
WEBS : (0.122"X3") SPIRAL NAILS			
2x3	1	6	

STAGGER NAILS BY HALF THE SURFACE SPACING IN ADJACENT PLIES.

TOP - COMPONENTS ARE LOADED FROM THE TOP AND MUST BE PLACED ON TOP EDGE OF ALL PLIES FOR THE LOAD TO BE TRANSFERRED TO EACH PLY.

SIDE - PLF SHOWN IS THE EQUIVALENT UDL APPLIED TO ONE SIDE THAT THE CORRESPONDING NAILING PATTERN SHALL BE CAPABLE OF TRANSFERING. REMAINING PLF MUST BE APPLIED ON THE OPPOSITE SIDE OR ON THE TOP.

PLATES (table is in inches)

JT	TYPE	PLATES	W	LEN	Y	X
1	TMVW-t	MT20	4.0	6.0	1.75	Edge
2	TMWW-t	MT20	4.0	4.0	1.75	1.00
3	TS-t	MT20	3.0	4.0		
4	TMWW-t	MT20	4.0	6.0	1.50	1.50

BEARING UNDERSIZED: 6

DIMENSIONS, SUPPORTS AND LOADINGS SPECIFIED BY FABRICATOR TO BE VERIFIED BY BUILDING DESIGNER

BEARINGS

JT	FACTORED GROSS REACTION VERT	HORZ	MAXIMUM FACTORED GROSS REACTION DOWN	HORZ	UPLIFT	INPUT BRG IN-SX	REQRD BRG IN-SX
6	5900	0	5900	0	0	1-10	2-2
9	6169	0	6169	0	0	5-8	5-8

UNFACTORED REACTIONS

JT	1ST LCASE COMBINED	MAX./MIN. COMPONENT REACTIONS SNOW	LIVE	PERM.LIVE	WIND	DEAD	SOIL
6	4140	2898 / 0	0 / 0	0 / 0	0 / 0	1242 / 0	0 / 0
9	4329	3029 / 0	0 / 0	0 / 0	0 / 0	1301 / 0	0 / 0

BEARING MATERIAL TO BE SPF NO.2 OR BETTER AT JOINT(S) 6, 9

BRACING

TOP CHORD TO BE SHEATHED OR MAX. PURLIN SPACING = 4.69 FT.
MAX. UNBRACED BOTTOM CHORD LENGTH = 10.00 FT. OR RIGID CEILING DIRECTLY APPLIED.

ALL PITCH BREAKS AND PERIMETER CORNER JOINTS MUST BE LATERALLY RESTRAINED.

1 - 2x3 SPF No.2 LATERAL BRACE(S) AT 1/ 2 LENGTH OF 5-6. DBS = 20-0-0 . CBF = 19 LBS.
1 - 2x4 SPF No.2 LATERAL BRACE(S) AT 1/ 2 LENGTH OF 4-6. DBS = 4-0-0 . CBF = 129 LBS.

DBS = DIAGONAL BRACE SPACING (MAX). CBF = CUMULATIVE BRACING FORCE. FASTEN LATERAL BRACE(S) TO EACH PLY USING (0.122"X3") SPIRAL NAILS : 1 NAIL FOR 2x3 BRACE(S), 2 FOR 1x4, 2x4, 2x5, 3 FOR 2x6, 4 FOR 2x8, 5 FOR 2x10, AND 6 FOR 2x12.

END VERTICAL(S) MUST BE SHEATHED OR HAVE BRACES AS INDICATED IN THE MAX. UNBRACED LENGTH COLUMN OF THE TABLE BELOW

LOADING

TOTAL LOAD CASES: (4)

CHORDS MEMB. FR-TO	MAX. FACTORED FORCE (LBS)	FACTORED VERT. LOAD (PLF) FROM	TO	LC1 MAX CSI (LC)	MAX. UNBRAC LENGTH	WEBS MEMB. FR-TO	MAX. FACTORED FORCE (LBS)	MAX CSI (LC)
1- 2	-5964 / 0	-77.4	-77.4	0.16 (1)	4.69	8- 2	0 / 3117	0.23 (1)
2- 3	-3323 / 0	-77.4	-77.4	0.11 (1)	5.91	2- 7	-2980 / 0	0.65 (1)
3- 4	-3323 / 0	-77.4	-77.4	0.11 (1)	5.91	7- 4	0 / 5766	0.43 (1)
4- 5	-18 / 0	-77.4	-77.4	0.08 (1)	6.25	4- 6	-5146 / 0	0.84 (1)
6- 5	-148 / 0	0.0	0.0	0.03 (1)	6.25	1- 8	0 / 5079	0.38 (1)
9- 1	-4519 / 0	0.0	0.0	0.15 (1)	6.68			
9- 8	0 / 0	-821.8	-821.8	0.20 (1)	10.00			
8-10	0 / 4971	-821.8	-821.8	0.26 (1)	10.00			
10- 7	0 / 4971	-738.8	-738.8	0.26 (1)	10.00			
7- 6	0 / 2773	-738.8	-738.8	0.21 (1)	10.00			

RECEIVED
TOWN OF MILTON
MAR 29, 2017
17-5419
BUILDING DIVISION

READ ALL NOTES ON THIS PAGE AND ON THE ENGINEERING NOTE PAGE ENP-1. THE NOTE PAGE IS AN INTEGRAL PART OF THIS DRAWING AS IT CONTAINS SPECIFICATIONS AND CRITERIA USED IN THE DESIGN OF THIS COMPONENT.

[M]

DESIGN CRITERIA

SPECIFIED LOADS:

TOP	CH.	LL	=	23.3	PSF
		DL	=	3.0	PSF
BOT	CH.	LL	=	0.0	PSF
		DL	=	7.0	PSF
TOTAL	LOAD		=	33.3	PSF

SPACING = 24.0 IN. C/C

GIRDER TYPE: CStdGirder
START DISTANCE = 0-0
START SPAN CARRIED = 36-4-8
END DISTANCE = 8-2-8
END SPAN CARRIED = 36-4-8
END WALL WIDTH = 5-8
APPLIED TO FRONT SIDE OF BOTTOM CHORD.
- ADDT'L LOADS BASED ON 55 % OF GSL. (DEFINED BY USER)

GIRDER TYPE: CStdGirder
START DISTANCE = 8-2-8
START SPAN CARRIED = 32-10-8
END DISTANCE = 14-2-10
END SPAN CARRIED = 32-10-8
END WALL WIDTH = 5-8
APPLIED TO FRONT SIDE OF BOTTOM CHORD.
- ADDT'L LOADS BASED ON 55 % OF GSL. (DEFINED BY USER)

THIS TRUSS IS DESIGNED FOR RESIDENTIAL OR SMALL BUILDING REQUIREMENTS OF PART 9, NBCC 2010

THIS DESIGN COMPLIES WITH:
- PART 9 OF OBC 2012 , BCBC 2012 , ABC 2014
- CSA 086-09
- TPIC 2011

(55 % OF 27.2 P.S.F. G.S.L. PLUS 8.4 P.S.F. RAIN LOAD) EQUALS 23.3 P.S.F. SPECIFIED ROOF LIVE LOAD

ALLOWABLE DEFL.(LL)= L/360 (0.46")
CALCULATED VERT. DEFL.(LL) = L/ 999 (0.05")
ALLOWABLE DEFL.(TL)= L/360 (0.46")
CALCULATED VERT. DEFL.(TL) = L/ 999 (0.09")

CSI: TC=0.16 (1-2:1) , BC=0.26 (7-8:1) , WB=0.84 (4-6:1) , SSI=0.46 (8-9:1)

DOL LUMBER=1.00 NAIL=1.00 LS BEND=1.10 COMP=1.10 SHEAR=1.10 TENS= 1.10

COMPANION LIVE LOAD FACTOR = 0.50

TRUSS PLATE MANUFACTURER IS NOT RESPONSIBLE FOR QUALITY CONTROL IN THE TRUSS MANUFACTURING PLANT .

NAIL VALUES

PLATE	GRIP(DRY) (PSI) MAX	MIN	SHEAR (PLI) MAX	MIN	SECTION (PLI) MAX	MIN
MT20	618	354	1667	822	2284	1656

PLATE PLACEMENT TOL. = 0.250 inches

PLATE ROTATION TOL. = 5.0 Deg.

JSI GRIP= 0.89 (4) (INPUT = 0.90)
JSI METAL= 0.[illegible] (4) (INPUT = [illegible]

KOTT

CONTINUED ON PAGE 2

JOB NAME	TRUSS NAME	QUANTITY	PLY	JOB DESC.	DRWG NO.
PT0317-122	**J01**	**2**	**1**	TRUSS DESC. LECCO RIDGE-BLOCK 348	

KOTT , Stouffville, ON, CGC

Version 8.100 S Feb 9 2017 MiTek Industries, Inc. Mon Mar 20 10:10:26 2017 Page 1
ID:Mn2zxnCa6NqoASkSkmtLJtyfhrl-BKmZdT0ZtDmk2VIYdrTWn2C018jHFkZRjsp5j0zZ4wh

SCALE = 1:15.2

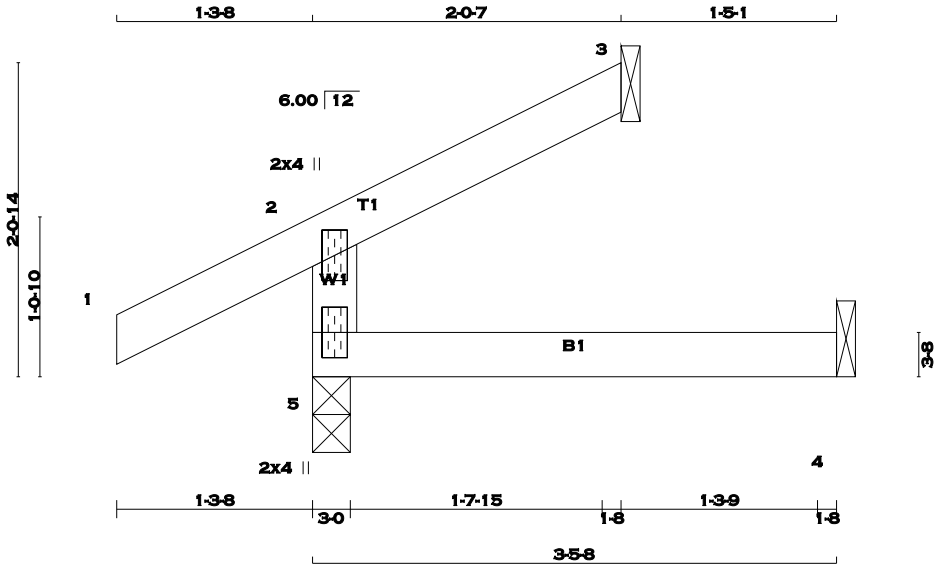

TOTAL WEIGHT = 2 X 9 = 18 lb [M]

LUMBER
N. L. G. A. RULES

CHORDS	SIZE		LUMBER	DESCR.
5 - 2	2x4	DRY	No.2	SPF
1 - 3	2x4	DRY	No.2	SPF
5 - 4	2x4	DRY	No.2	SPF

DRY: SEASONED LUMBER.

PLATES (table is in inches)

JT	TYPE	PLATES	W	LEN	Y	X
2	TMV+p	MT20	2.0	4.0		
5	BMV1+p	MT20	2.0	4.0		

A SIZE FOR SIZE SUBSTITUTION OF MITEK MII20 WITH TEE-LOK TL20 PLATES IS ALLOWED.

DIMENSIONS, SUPPORTS AND LOADINGS SPECIFIED BY FABRICATOR TO BE VERIFIED BY BUILDING DESIGNER

BEARINGS

JT	FACTORED GROSS REACTION VERT	HORZ	MAXIMUM FACTORED GROSS REACTION DOWN	HORZ	UPLIFT	INPUT BRG IN-SX	REQRD BRG IN-SX
5	238	0	238	0	0	3-0	3-0
3	59	0	59	0	0	1-8	1-8
4	26	0	29	0	0	1-8	1-8

SEE MITEK STANDARD DETAIL B37579H FOR CONNECTION TO JOINT(S) 3 , 4

UNFACTORED REACTIONS

JT	1ST LCASE COMBINED	MAX./MIN. COMPONENT REACTIONS SNOW	LIVE	PERM.LIVE	WIND	DEAD	SOIL
5	166	122 / 0	0 / 0	0 / 0	0 / 0	44 / 0	0 / 0
3	40	36 / 0	0 / 0	0 / 0	0 / 0	5 / 0	0 / 0
4	21	0 / 0	0 / 0	0 / 0	0 / 0	21 / 0	0 / 0

BEARING MATERIAL TO BE SPF NO.2 OR BETTER AT JOINT(S) 5, 3

BRACING
TOP CHORD TO BE SHEATHED OR MAX. PURLIN SPACING = 10.00 FT.
MAX. UNBRACED BOTTOM CHORD LENGTH = 10.00 FT. OR RIGID CEILING DIRECTLY APPLIED.

ALL PITCH BREAKS AND PERIMETER CORNER JOINTS MUST BE LATERALLY RESTRAINED.

LOADING
TOTAL LOAD CASES: (5)

CHORDS

MEMB. FR-TO	MAX. FACTORED FORCE (LBS)	FACTORED VERT. LOAD (PLF) FROM	TO	LC1 MAX CSI (LC)	MAX. UNBRAC LENGTH
5- 2	-203 / 0	0.0	0.0	0.04 (4)	7.81
1- 2	0 / 23	-77.4	-77.4	0.10 (1)	10.00
2- 3	-9 / 0	-77.4	-77.4	0.05 (1)	10.00
5- 4	0 / 0	-17.5	-17.5	0.04 (4)	10.00

WEBS

MEMB. FR-TO	MAX. FACTORED FORCE (LBS)	MAX CSI (LC)

CANTILEVER ANALYSIS HAS BEEN CONSIDERED IN THIS DESIGN

DESIGN CRITERIA

SPECIFIED LOADS:

TOP CH.	LL	=	23.3	PSF
	DL	=	3.0	PSF
BOT CH.	LL	=	0.0	PSF
	DL	=	7.0	PSF
TOTAL LOAD		=	33.3	PSF

SPACING = 24.0 IN. C/C

THIS TRUSS IS DESIGNED FOR RESIDENTIAL OR SMALL BUILDING REQUIREMENTS OF PART 9, NBCC 2010

THIS DESIGN COMPLIES WITH:
- PART 9 OF OBC 2012 , BCBC 2012 , ABC 2014
- CSA 086-09
- TPIC 2011

DESIGN ASSUMPTIONS
-OVERHANG NOT TO BE ALTERED OR CUT OFF.

(55 % OF 27.2 P.S.F. G.S.L. PLUS 8.4 P.S.F. RAIN LOAD) EQUALS 23.3 P.S.F. SPECIFIED ROOF LIVE LOAD

ALLOWABLE DEFL.(LL)= L/360 (0.19")
CALCULATED VERT. DEFL.(LL) = L/ 999 (0.00")
ALLOWABLE DEFL.(TL)= L/360 (0.19")
CALCULATED VERT. DEFL.(TL) = L/ 999 (0.00")

CSI: TC=0.10 (1-2:1) , BC=0.04 (4-5:4) , WB=0.00 (n/a:0) , SSI=0.07 (1-2:1)

DOL LUMBER=1.00 NAIL=1.00 LS BEND=1.10 COMP=1.10 SHEAR=1.10 TENS= 1.10

COMPANION LIVE LOAD FACTOR = 0.50

TRUSS PLATE MANUFACTURER IS NOT RESPONSIBLE FOR QUALITY CONTROL IN THE TRUSS MANUFACTURING PLANT .

NAIL VALUES

PLATE	GRIP(DRY) (PSI) MAX	MIN	SHEAR (PLI) MAX	MIN	SECTION (PLI) MAX	MIN
MT20	618	354	1667	822	2284	1656

PLATE PLACEMENT TOL. = 0.250 inches

PLATE ROTATION TOL. = 0.5 Deg.

JSI GRIP= 0.12 (2) (INPUT = 0.90)
JSI METAL= 0.05 (2) (INPUT = 1.00)

LICENSED PROFESSIONAL ENGINEER
P.M. TREVISAN
100136551
March 20th, 2017
PROVINCE OF ONTARIO

RECEIVED
TOWN OF MILTON
MAR 29, 2017
17-5419
BUILDING DIVISION

READ ALL NOTES ON THIS PAGE AND ON THE ENGINEERING NOTE PAGE ENP-1. THE NOTE PAGE IS AN INTEGRAL PART OF THIS DRAWING AS IT CONTAINS SPECIFICATIONS AND CRITERIA USED IN THE DESIGN OF THIS COMPONENT.

KOTT

Version 8.100 S Feb 9 2017 MiTek Industries, Inc. Mon Mar 20 10:10:27 2017 Page 1
ID:Mn2zxnCa6NqoASkSkmtLJtyfhrl-fXKxqp0BdWubgfKkBY_lJFkBnY3z_BpayWZfFSzZ4wg

SCALE = 1:15.3

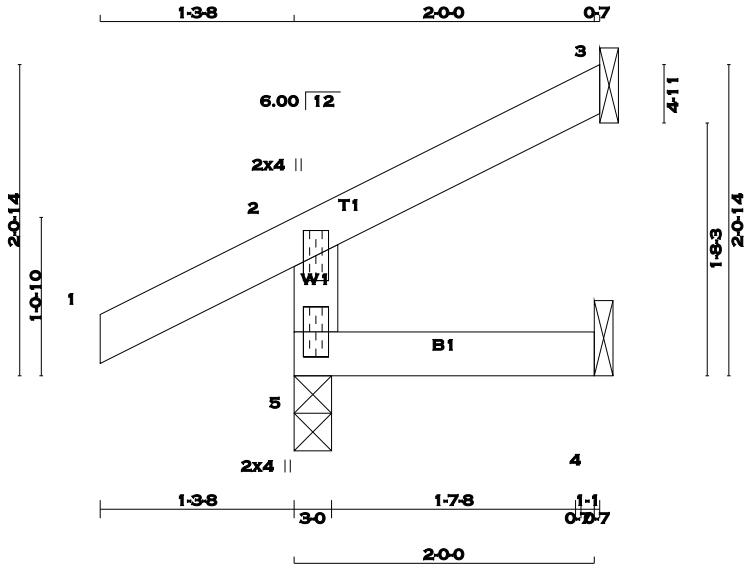

TOTAL WEIGHT = 2 X 7 = 15 lb [M]

LUMBER
N. L. G. A. RULES

CHORDS	SIZE		LUMBER	DESCR.
5 - 2	2x4	DRY	No.2	SPF
1 - 3	2x4	DRY	No.2	SPF
5 - 4	2x4	DRY	No.2	SPF

DRY: SEASONED LUMBER.

PLATES (table is in inches)

JT	TYPE	PLATES	W	LEN	Y	X
2	TMV+p	MT20	2.0	4.0		
5	BMV1+p	MT20	2.0	4.0		

A SIZE FOR SIZE SUBSTITUTION OF MITEK MII20 WITH TEE-LOK TL20 PLATES IS ALLOWED.

DIMENSIONS, SUPPORTS AND LOADINGS SPECIFIED BY FABRICATOR TO BE VERIFIED BY BUILDING DESIGNER

BEARINGS

JT	FACTORED GROSS REACTION VERT	HORZ	MAXIMUM FACTORED GROSS REACTION DOWN	HORZ	UPLIFT	INPUT BRG IN-SX	REQRD BRG IN-SX
5	223	0	223	0	0	3-0	3-0
3	59	0	59	0	0	1-8	1-8
4	15	0	17	0	0	1-8	1-8

SEE MITEK STANDARD DETAIL B37579H FOR CONNECTION TO JOINT(S) 3 , 4

UNFACTORED REACTIONS

JT	1ST LCASE COMBINED	MAX./MIN. COMPONENT REACTIONS SNOW	LIVE	PERM.LIVE	WIND	DEAD	SOIL
5	154	122 / 0	0 / 0	0 / 0	0 / 0	31 / 0	0 / 0
3	40	36 / 0	0 / 0	0 / 0	0 / 0	5 / 0	0 / 0
4	12	0 / 0	0 / 0	0 / 0	0 / 0	12 / 0	0 / 0

BEARING MATERIAL TO BE SPF NO.2 OR BETTER AT JOINT(S) 5

BRACING
TOP CHORD TO BE SHEATHED OR MAX. PURLIN SPACING = 10.00 FT.
MAX. UNBRACED BOTTOM CHORD LENGTH = 10.00 FT. OR RIGID CEILING DIRECTLY APPLIED.

ALL PITCH BREAKS AND PERIMETER CORNER JOINTS MUST BE LATERALLY RESTRAINED.

LOADING
TOTAL LOAD CASES: (5)

CHORDS MEMB. FR-TO	MAX. FACTORED FORCE (LBS)	FACTORED VERT. LOAD (PLF) FROM	TO	LC1 MAX CSI (LC)	MAX. UNBRAC LENGTH	WEBS MEMB. FR-TO	MAX. FACTORED FORCE (LBS)	MAX CSI (LC)
5- 2	-203 / 0	0.0	0.0	0.01 (4)	7.81			
1- 2	0 / 23	-77.4	-77.4	0.10 (1)	10.00			
2- 3	-9 / 0	-77.4	-77.4	0.05 (1)	10.00			
5- 4	0 / 0	-17.5	-17.5	0.02 (4)	10.00			

CANTILEVER ANALYSIS HAS BEEN CONSIDERED IN THIS DESIGN

DESIGN CRITERIA

SPECIFIED LOADS:

TOP CH.	LL	=	23.3	PSF
	DL	=	3.0	PSF
BOT CH.	LL	=	0.0	PSF
	DL	=	7.0	PSF
TOTAL LOAD		=	33.3	PSF

SPACING = 24.0 IN. C/C

THIS TRUSS IS DESIGNED FOR RESIDENTIAL OR SMALL BUILDING REQUIREMENTS OF PART 9, NBCC 2010

THIS DESIGN COMPLIES WITH:
- PART 9 OF OBC 2012 , BCBC 2012 , ABC 2014
- CSA 086-09
- TPIC 2011

DESIGN ASSUMPTIONS
-OVERHANG NOT TO BE ALTERED OR CUT OFF.

(55 % OF 27.2 P.S.F. G.S.L. PLUS 8.4 P.S.F. RAIN LOAD) EQUALS 23.3 P.S.F. SPECIFIED ROOF LIVE LOAD

ALLOWABLE DEFL.(LL)= L/360 (0.19")
CALCULATED VERT. DEFL.(LL) = L/ 999 (0.00")
ALLOWABLE DEFL.(TL)= L/360 (0.19")
CALCULATED VERT. DEFL.(TL) = L/ 999 (0.00")

CSI: TC=0.10 (1-2:1) , BC=0.02 (4-5:4) , WB=0.00 (n/a:0) , SSI=0.07 (1-2:1)

DOL LUMBER=1.00 NAIL=1.00 LS BEND=1.10 COMP=1.10 SHEAR=1.10 TENS= 1.10

COMPANION LIVE LOAD FACTOR = 0.50

TRUSS PLATE MANUFACTURER IS NOT RESPONSIBLE FOR QUALITY CONTROL IN THE TRUSS MANUFACTURING PLANT .

NAIL VALUES

PLATE	GRIP(DRY) (PSI) MAX	MIN	SHEAR (PLI) MAX	MIN	SECTION (PLI) MAX	MIN
MT20	618	354	1667	822	2284	1656

PLATE PLACEMENT TOL. = 0.250 inches

PLATE ROTATION TOL. = 5.0 Deg.

JSI GRIP= 0.12 (2) (INPUT = 0.90)
JSI METAL= 0.05 (2) (INPUT = 1.00)

LICENSED PROFESSIONAL ENGINEER
P.M. TREVISAN
100136551
March 20th, 2017
PROVINCE OF ONTARIO

RECEIVED
TOWN OF MILTON
MAR 29, 2017
17-5419
BUILDING DIVISION

READ ALL NOTES ON THIS PAGE AND ON THE ENGINEERING NOTE PAGE ENP-1. THE NOTE PAGE IS AN INTEGRAL PART OF THIS DRAWING AS IT CONTAINS SPECIFICATIONS AND CRITERIA USED IN THE DESIGN OF THIS COMPONENT.

KOTT

JOB NAME	TRUSS NAME	QUANTITY	PLY	JOB DESC.	DRWG NO.
PT0317-122	**J03**	**6**	**1**	TRUSS DESC. LECCO RIDGE-BLOCK 348	

KOTT , Stouffville, ON, CGC

Version 8.100 S Feb 9 2017 MiTek Industries, Inc. Mon Mar 20 10:10:27 2017 Page 1
ID:Mn2zxnCa6NqoASkSkmtLJtyfhrl-fXKxqp0BdWubgfKkBY_lJFkAvY3W_BpayWZfFSzZ4wg

SCALE = 1:19.4

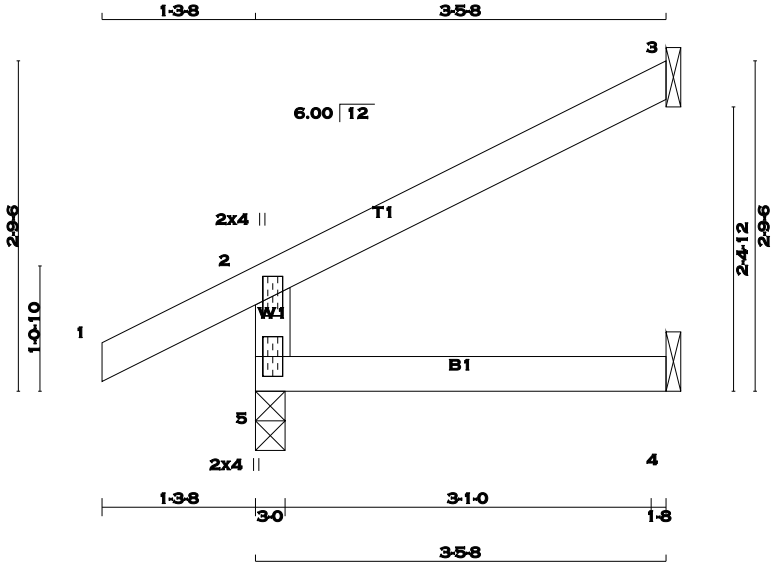

TOTAL WEIGHT = 6 X 11 = 65 lb
[M]

LUMBER
N. L. G. A. RULES

CHORDS	SIZE		LUMBER	DESCR.
5 - 2	2x4	DRY	No.2	SPF
1 - 3	2x4	DRY	No.2	SPF
5 - 4	2x4	DRY	No.2	SPF

DRY: SEASONED LUMBER.

PLATES (table is in inches)

JT	TYPE	PLATES	W	LEN	Y	X
2	TMV+p	MT20	2.0	4.0		
5	BMV1+p	MT20	2.0	4.0		

A SIZE FOR SIZE SUBSTITUTION OF MITEK MII20 WITH TEE-LOK TL20 PLATES IS ALLOWED.

DIMENSIONS, SUPPORTS AND LOADINGS SPECIFIED BY FABRICATOR TO BE VERIFIED BY BUILDING DESIGNER

BEARINGS

JT	FACTORED GROSS REACTION VERT	HORZ	MAXIMUM FACTORED GROSS REACTION DOWN	HORZ	UPLIFT	INPUT BRG IN-SX	REQRD BRG IN-SX
5	307	0	307	0	0	3-0	3-0
3	100	0	100	0	0	1-8	1-8
4	26	0	29	0	0	1-8	1-8

SEE MITEK STANDARD DETAIL B37579H FOR CONNECTION TO JOINT(S) 3 , 4

UNFACTORED REACTIONS

JT	1ST LCASE COMBINED	MAX./MIN. COMPONENT REACTIONS SNOW	LIVE	PERM.LIVE	WIND	DEAD	SOIL
5	213	164 / 0	0 / 0	0 / 0	0 / 0	49 / 0	0 / 0
3	68	60 / 0	0 / 0	0 / 0	0 / 0	8 / 0	0 / 0
4	21	0 / 0	0 / 0	0 / 0	0 / 0	21 / 0	0 / 0

BEARING MATERIAL TO BE SPF NO.2 OR BETTER AT JOINT(S) 5

BRACING
TOP CHORD TO BE SHEATHED OR MAX. PURLIN SPACING = 6.25 FT.
MAX. UNBRACED BOTTOM CHORD LENGTH = 10.00 FT. OR RIGID CEILING DIRECTLY APPLIED.

ALL PITCH BREAKS AND PERIMETER CORNER JOINTS MUST BE LATERALLY RESTRAINED.

LOADING
TOTAL LOAD CASES: (5)

CHORDS MEMB. FR-TO	MAX. FACTORED FORCE (LBS)	FACTORED VERT. LOAD (PLF) FROM	TO	LC1 MAX CSI (LC)	MAX. UNBRAC LENGTH	WEBS MEMB. FR-TO	MAX. FACTORED FORCE (LBS)	MAX CSI (LC)
5- 2	-272 / 0	0.0	0.0	0.04 (4)	7.81			
1- 2	0 / 23	-77.4	-77.4	0.10 (1)	10.00			
2- 3	-15 / 0	-77.4	-77.4	0.16 (1)	6.25			
5- 4	0 / 0	-17.5	-17.5	0.04 (4)	10.00			

CANTILEVER ANALYSIS HAS BEEN CONSIDERED IN THIS DESIGN

DESIGN CRITERIA

SPECIFIED LOADS:

TOP CH.	LL	=	23.3	PSF
	DL	=	3.0	PSF
BOT CH.	LL	=	0.0	PSF
	DL	=	7.0	PSF
TOTAL LOAD		=	33.3	PSF

SPACING = 24.0 IN. C/C

THIS TRUSS IS DESIGNED FOR RESIDENTIAL OR SMALL BUILDING REQUIREMENTS OF PART 9, NBCC 2010

THIS DESIGN COMPLIES WITH:
- PART 9 OF OBC 2012 , BCBC 2012 , ABC 2014
- CSA 086-09
- TPIC 2011

DESIGN ASSUMPTIONS
-OVERHANG NOT TO BE ALTERED OR CUT OFF.

(55 % OF 27.2 P.S.F. G.S.L. PLUS 8.4 P.S.F. RAIN LOAD) EQUALS 23.3 P.S.F. SPECIFIED ROOF LIVE LOAD

ALLOWABLE DEFL.(LL)= L/360 (0.19")
CALCULATED VERT. DEFL.(LL) = L/ 999 (0.00")
ALLOWABLE DEFL.(TL)= L/360 (0.19")
CALCULATED VERT. DEFL.(TL) = L/ 999 (0.00")

CSI: TC=0.16 (2-3:1) , BC=0.04 (4-5:4) , WB=0.00 (n/a:0) , SSI=0.12 (2-3:1)

DOL LUMBER=1.00 NAIL=1.00 LS BEND=1.10 COMP=1.10 SHEAR=1.10 TENS= 1.10

COMPANION LIVE LOAD FACTOR = 0.50

TRUSS PLATE MANUFACTURER IS NOT RESPONSIBLE FOR QUALITY CONTROL IN THE TRUSS MANUFACTURING PLANT .

NAIL VALUES

PLATE	GRIP(DRY) (PSI) MAX	MIN	SHEAR (PLI) MAX	MIN	SECTION (PLI) MAX	MIN
MT20	618	354	1667	822	2284	1656

PLATE PLACEMENT TOL. = 0.250 inches

PLATE ROTATION TOL. = 0.5 Deg.

JSI GRIP= 0.16 (2) (INPUT = 0.90)
JSI METAL= 0.06 (2) (INPUT = 1.00)

LICENSED PROFESSIONAL ENGINEER
P.M. TREVISAN
100136551
March 20th, 2017
PROVINCE OF ONTARIO

RECEIVED
TOWN OF MILTON
MAR 29, 2017
17-5419
BUILDING DIVISION

READ ALL NOTES ON THIS PAGE AND ON THE ENGINEERING NOTE PAGE ENP-1. THE NOTE PAGE IS AN INTEGRAL PART OF THIS DRAWING AS IT CONTAINS SPECIFICATIONS AND CRITERIA USED IN THE DESIGN OF THIS COMPONENT.

KOTT

SCALE = 1:28.8

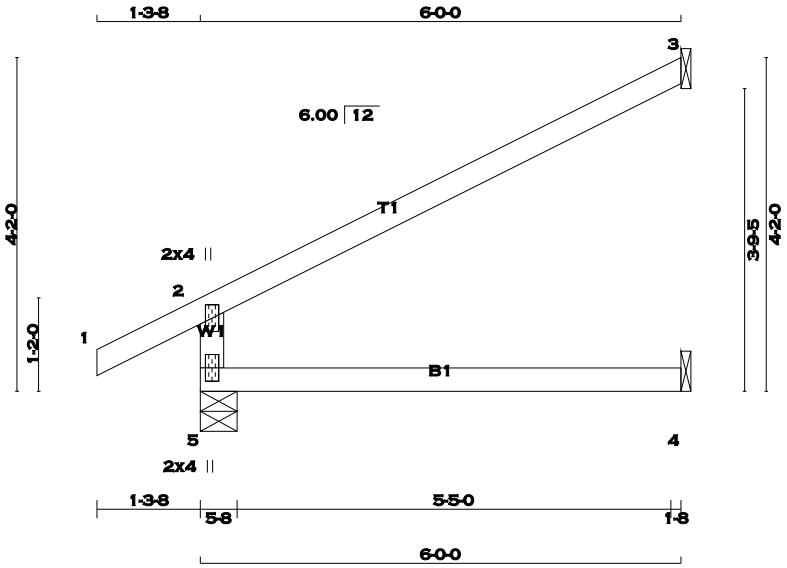

TOTAL WEIGHT = 36 X 17 = 615 lb [M]

LUMBER

N. L. G. A. RULES

CHORDS	SIZE		LUMBER	DESCR.
5 - 2	2x4	DRY	No.2	SPF
1 - 3	2x4	DRY	No.2	SPF
5 - 4	2x4	DRY	No.2	SPF

DRY: SEASONED LUMBER.

PLATES (table is in inches)

JT	TYPE	PLATES	W	LEN	Y	X
2	TMV+p	MT20	2.0	4.0		
5	BMV1+p	MT20	2.0	4.0		

A SIZE FOR SIZE SUBSTITUTION OF MITEK MII20 WITH TEE-LOK TL20 PLATES IS ALLOWED.

DIMENSIONS, SUPPORTS AND LOADINGS SPECIFIED BY FABRICATOR TO BE VERIFIED BY BUILDING DESIGNER

BEARINGS

JT	FACTORED GROSS REACTION VERT	HORZ	MAXIMUM FACTORED GROSS REACTION DOWN	HORZ	UPLIFT	INPUT BRG IN-SX	REQRD BRG IN-SX
5	457	0	457	0	0	5-8	5-8
3	174	0	174	0	0	1-8	1-8
4	43	0	49	0	0	1-8	1-8

SEE MITEK STANDARD DETAIL B37579H FOR CONNECTION TO JOINT(S) 3 , 4

UNFACTORED REACTIONS

JT	1ST LCASE COMBINED	MAX./MIN. COMPONENT REACTIONS SNOW	LIVE	PERM.LIVE	WIND	DEAD	SOIL
5	318	238 / 0	0 / 0	0 / 0	0 / 0	80 / 0	0 / 0
3	118	105 / 0	0 / 0	0 / 0	0 / 0	14 / 0	0 / 0
4	35	0 / 0	0 / 0	0 / 0	0 / 0	35 / 0	0 / 0

BEARING MATERIAL TO BE SPF NO.2 OR BETTER AT JOINT(S) 5

BRACING

TOP CHORD TO BE SHEATHED OR MAX. PURLIN SPACING = 6.25 FT.
MAX. UNBRACED BOTTOM CHORD LENGTH = 10.00 FT. OR RIGID CEILING DIRECTLY APPLIED.

ALL PITCH BREAKS AND PERIMETER CORNER JOINTS MUST BE LATERALLY RESTRAINED.

LOADING

TOTAL LOAD CASES: (4)

CHORDS MEMB. FR-TO	MAX. FACTORED FORCE (LBS)	FACTORED VERT. LOAD (PLF) FROM	TO	LC1 MAX CSI (LC)	MAX. UNBRAC LENGTH	WEBS MEMB. FR-TO	MAX. FACTORED FORCE (LBS)	MAX CSI (LC)
5- 2	-395 / 0	0.0	0.0	0.13 (4)	7.81			
1- 2	0 / 23	-77.4	-77.4	0.10 (1)	10.00			
2- 3	-26 / 0	-77.4	-77.4	0.47 (1)	6.25			
5- 4	0 / 0	-17.5	-17.5	0.13 (4)	10.00			

DESIGN CRITERIA

SPECIFIED LOADS:

TOP CH.	LL	=	23.3	PSF
	DL	=	3.0	PSF
BOT CH.	LL	=	0.0	PSF
	DL	=	7.0	PSF
TOTAL LOAD		=	33.3	PSF

SPACING = 24.0 IN. C/C

THIS TRUSS IS DESIGNED FOR RESIDENTIAL OR SMALL BUILDING REQUIREMENTS OF PART 9, NBCC 2010

THIS DESIGN COMPLIES WITH:
- PART 9 OF OBC 2012 , BCBC 2012 , ABC 2014
- CSA 086-09
- TPIC 2011

DESIGN ASSUMPTIONS
-OVERHANG NOT TO BE ALTERED OR CUT OFF.

(55 % OF 27.2 P.S.F. G.S.L. PLUS 8.4 P.S.F. RAIN LOAD) EQUALS 23.3 P.S.F. SPECIFIED ROOF LIVE LOAD

ALLOWABLE DEFL.(LL)= L/360 (0.20")
CALCULATED VERT. DEFL.(LL) = L/ 999 (0.00")
ALLOWABLE DEFL.(TL)= L/360 (0.20")
CALCULATED VERT. DEFL.(TL) = L/ 999 (0.03")

CSI: TC=0.47 (2-3:1) , BC=0.13 (4-5:4) , WB=0.00 (n/a:0) , SSI=0.20 (2-3:1)

DOL LUMBER=1.00 NAIL=1.00 LS BEND=1.10 COMP=1.10 SHEAR=1.10 TENS= 1.10

COMPANION LIVE LOAD FACTOR = 0.50

TRUSS PLATE MANUFACTURER IS NOT RESPONSIBLE FOR QUALITY CONTROL IN THE TRUSS MANUFACTURING PLANT .

NAIL VALUES

PLATE	GRIP(DRY) (PSI) MAX	MIN	SHEAR (PLI) MAX	MIN	SECTION (PLI) MAX	MIN
MT20	618	354	1667	822	2284	1656

PLATE PLACEMENT TOL. = 0.250 inches

PLATE ROTATION TOL. = 0.5 Deg.

JSI GRIP= 0.23 (2) (INPUT = 0.90)
JSI METAL= 0.09 (2) (INPUT = 1.00)

LICENSED PROFESSIONAL ENGINEER
P.M. TREVISAN
100136551
March 20th, 2017
PROVINCE OF ONTARIO

RECEIVED
TOWN OF MILTON
MAR 29, 2017
17-5419
BUILDING DIVISION

READ ALL NOTES ON THIS PAGE AND ON THE ENGINEERING NOTE PAGE ENP-1. THE NOTE PAGE IS AN INTEGRAL PART OF THIS DRAWING AS IT CONTAINS SPECIFICATIONS AND CRITERIA USED IN THE DESIGN OF THIS COMPONENT.

KOTT

SCALE = 1:18.6

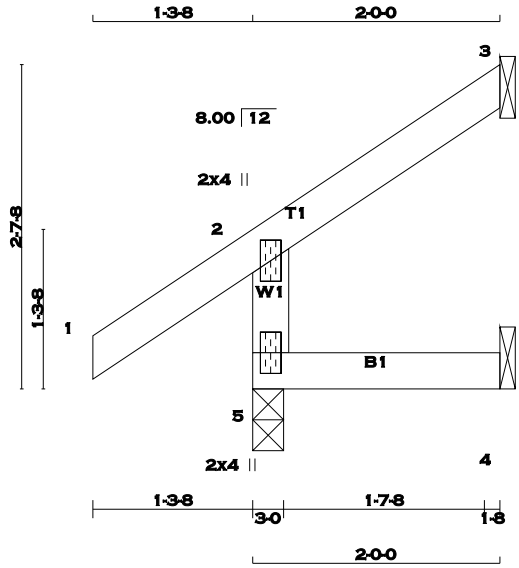

TOTAL WEIGHT = 8 X 8 = 64 lb [M]

LUMBER

N. L. G. A. RULES

CHORDS	SIZE		LUMBER	DESCR.
5 - 2	2x4	DRY	No.2	SPF
1 - 3	2x4	DRY	No.2	SPF
5 - 4	2x4	DRY	No.2	SPF

DRY: SEASONED LUMBER.

PLATES (table is in inches)

JT	TYPE	PLATES	W	LEN	Y	X
2	TMV+p	MT20	2.0	4.0		
5	BMV1+p	MT20	2.0	4.0		

A SIZE FOR SIZE SUBSTITUTION OF MITEK MII20 WITH TEE-LOK TL20 PLATES IS ALLOWED.

DIMENSIONS, SUPPORTS AND LOADINGS SPECIFIED BY FABRICATOR TO BE VERIFIED BY BUILDING DESIGNER

BEARINGS

JT	FACTORED GROSS REACTION VERT	HORZ	MAXIMUM FACTORED GROSS REACTION DOWN	HORZ	UPLIFT	INPUT BRG IN-SX	REQRD BRG IN-SX
5	222	0	222	0	0	3-0	3-0
3	58	0	58	0	0	1-8	1-8
4	16	0	18	0	0	1-8	1-8

SEE MITEK STANDARD DETAIL B37579H FOR CONNECTION TO JOINT(S) 3 , 4

UNFACTORED REACTIONS

JT	1ST LCASE COMBINED	MAX./MIN. COMPONENT REACTIONS SNOW	LIVE	PERM.LIVE	WIND	DEAD	SOIL
5	153	122 / 0	0 / 0	0 / 0	0 / 0	31 / 0	0 / 0
3	40	35 / 0	0 / 0	0 / 0	0 / 0	5 / 0	0 / 0
4	13	0 / 0	0 / 0	0 / 0	0 / 0	13 / 0	0 / 0

BEARING MATERIAL TO BE SPF NO.2 OR BETTER AT JOINT(S) 5, 3

BRACING

TOP CHORD TO BE SHEATHED OR MAX. PURLIN SPACING = 6.25 FT.
MAX. UNBRACED BOTTOM CHORD LENGTH = 10.00 FT. OR RIGID CEILING DIRECTLY APPLIED.

ALL PITCH BREAKS AND PERIMETER CORNER JOINTS MUST BE LATERALLY RESTRAINED.

LOADING

TOTAL LOAD CASES: (5)

CHORDS MEMB. FR-TO	MAX. FACTORED FORCE (LBS)	FACTORED VERT. LOAD (PLF) FROM	TO	LC1 MAX CSI (LC)	MAX. UNBRAC LENGTH
5- 2	-202 / 0	0.0	0.0	0.01 (4)	7.81
1- 2	0 / 29	-77.4	-77.4	0.10 (1)	10.00
2- 3	-10 / 0	-77.4	-77.4	0.05 (1)	6.25
5- 4	0 / 0	-17.5	-17.5	0.02 (4)	10.00

WEBS MEMB. FR-TO	MAX. FACTORED FORCE (LBS)	MAX CSI (LC)

CANTILEVER ANALYSIS HAS BEEN CONSIDERED IN THIS DESIGN

DESIGN CRITERIA

SPECIFIED LOADS:

TOP CH.	LL	=	23.3	PSF
	DL	=	3.0	PSF
BOT CH.	LL	=	0.0	PSF
	DL	=	7.0	PSF
TOTAL LOAD		=	33.3	PSF

SPACING = 24.0 IN. C/C

THIS TRUSS IS DESIGNED FOR RESIDENTIAL OR SMALL BUILDING REQUIREMENTS OF PART 9, NBCC 2010

THIS DESIGN COMPLIES WITH:
- PART 9 OF OBC 2012 , BCBC 2012 , ABC 2014
- CSA 086-09
- TPIC 2011

DESIGN ASSUMPTIONS
-OVERHANG NOT TO BE ALTERED OR CUT OFF.

(55 % OF 27.2 P.S.F. G.S.L. PLUS 8.4 P.S.F. RAIN LOAD) EQUALS 23.3 P.S.F. SPECIFIED ROOF LIVE LOAD

ALLOWABLE DEFL.(LL)= L/360 (0.19")
CALCULATED VERT. DEFL.(LL) = L/ 999 (0.00")
ALLOWABLE DEFL.(TL)= L/360 (0.19")
CALCULATED VERT. DEFL.(TL) = L/ 999 (0.00")

CSI: TC=0.10 (1-2:1) , BC=0.02 (4-5:4) , WB=0.00 (n/a:0) , SSI=0.07 (1-2:1)

DOL LUMBER=1.00 NAIL=1.00 LS BEND=1.10 COMP=1.10 SHEAR=1.10 TENS= 1.10

COMPANION LIVE LOAD FACTOR = 0.50

TRUSS PLATE MANUFACTURER IS NOT RESPONSIBLE FOR QUALITY CONTROL IN THE TRUSS MANUFACTURING PLANT .

NAIL VALUES

PLATE	GRIP(DRY) (PSI) MAX	MIN	SHEAR (PLI) MAX	MIN	SECTION (PLI) MAX	MIN
MT20	618	354	1667	822	2284	1656

PLATE PLACEMENT TOL. = 0.250 inches

PLATE ROTATION TOL. = 5.0 Deg.

JSI GRIP= 0.13 (2) (INPUT = 0.90)
JSI METAL= 0.05 (2) (INPUT = 1.00)

LICENSED PROFESSIONAL ENGINEER
P.M. TREVISAN
100136551
March 20th, 2017
PROVINCE OF ONTARIO

RECEIVED
TOWN OF MILTON
MAR 29, 2017
17-5419
BUILDING DIVISION

READ ALL NOTES ON THIS PAGE AND ON THE ENGINEERING NOTE PAGE ENP-1. THE NOTE PAGE IS AN INTEGRAL PART OF THIS DRAWING AS IT CONTAINS SPECIFICATIONS AND CRITERIA USED IN THE DESIGN OF THIS COMPONENT.

KOTT

JOB NAME	TRUSS NAME	QUANTITY	PLY	JOB DESC.	DRWG NO.
PT0317-122	**J06**	**8**	**1**	TRUSS DESC. LECCO RIDGE-BLOCK 348	

KOTT , Stouffville, ON, CGC

Version 8.100 S Feb 9 2017 MiTek Industries, Inc. Mon Mar 20 10:10:28 2017 Page 1
ID:Mn2zxnCa6NqoASkSkmtLJtyfhrl-7jtJ291pOq0SHpvxkFV_sTHJ0yOGje2kAAICnvzZ4wf

SCALE = 1:16.5

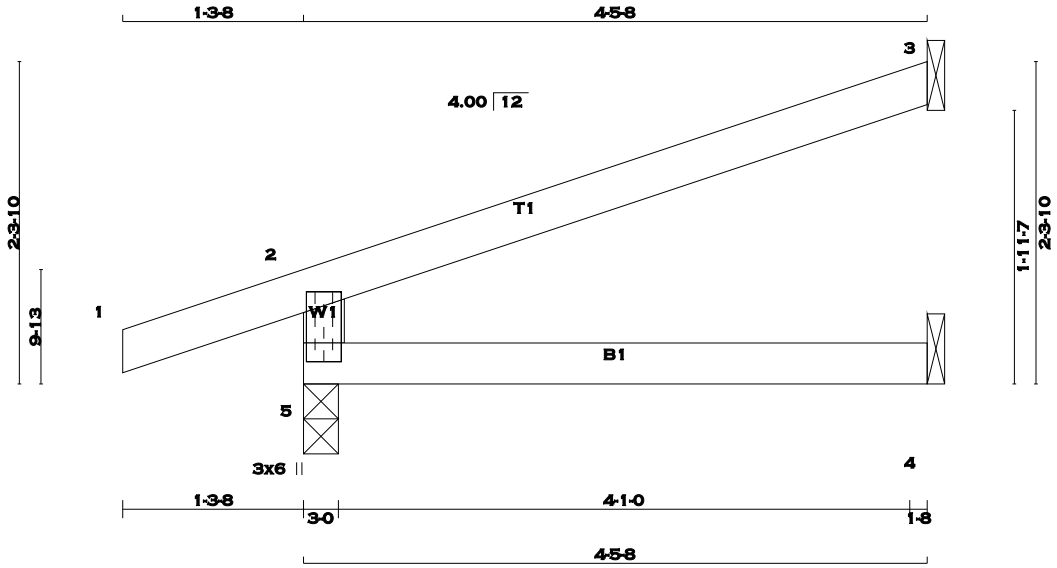

TOTAL WEIGHT = 8 X 12 = 100 lb
[M]

LUMBER
N. L. G. A. RULES

CHORDS	SIZE		LUMBER	DESCR.
5 - 2	2x4	DRY	No.2	SPF
1 - 3	2x4	DRY	No.2	SPF
5 - 4	2x4	DRY	No.2	SPF

DRY: SEASONED LUMBER.

PLATES (table is in inches)

JT	TYPE	PLATES	W	LEN	Y	X
2						
5						
5	TMBMV1+p	MT20	3.0	6.0	3.50	1.50

A SIZE FOR SIZE SUBSTITUTION OF MITEK MII20 WITH TEE-LOK TL20 PLATES IS ALLOWED.

DIMENSIONS, SUPPORTS AND LOADINGS SPECIFIED BY FABRICATOR TO BE VERIFIED BY BUILDING DESIGNER

BEARINGS

JT	FACTORED GROSS REACTION VERT	HORZ	MAXIMUM FACTORED GROSS REACTION DOWN	HORZ	UPLIFT	INPUT BRG IN-SX	REQRD BRG IN-SX
5	365	0	365	0	0	3-0	3-0
3	129	0	129	0	0	1-8	1-8
4	32	0	36	0	0	1-8	1-8

SEE MITEK STANDARD DETAIL B37579H FOR CONNECTION TO JOINT(S) 3 , 4

UNFACTORED REACTIONS

JT	1ST LCASE COMBINED	MAX./MIN. COMPONENT REACTIONS SNOW	LIVE	PERM.LIVE	WIND	DEAD	SOIL
5	254	192 / 0	0 / 0	0 / 0	0 / 0	62 / 0	0 / 0
3	88	78 / 0	0 / 0	0 / 0	0 / 0	10 / 0	0 / 0
4	25	0 / 0	0 / 0	0 / 0	0 / 0	25 / 0	0 / 0

BEARING MATERIAL TO BE SPF NO.2 OR BETTER AT JOINT(S) 5

BRACING
TOP CHORD TO BE SHEATHED OR MAX. PURLIN SPACING = 6.25 FT.
MAX. UNBRACED BOTTOM CHORD LENGTH = 10.00 FT. OR RIGID CEILING DIRECTLY APPLIED.

ALL PITCH BREAKS AND PERIMETER CORNER JOINTS MUST BE LATERALLY RESTRAINED.

LOADING
TOTAL LOAD CASES: (4)

CHORDS MEMB. FR-TO	MAX. FACTORED FORCE (LBS)	FACTORED VERT. LOAD (PLF) FROM	TO	LC1 MAX CSI (LC)	MAX. UNBRAC LENGTH
5- 2	-319 / 0	0.0	0.0	0.08 (4)	7.81
1- 2	0 / 16	-77.4	-77.4	0.10 (1)	10.00
2- 3	-14 / 0	-77.4	-77.4	0.26 (1)	6.25
5- 4	0 / 0	-17.5	-17.5	0.08 (4)	10.00

WEBS MEMB. FR-TO	MAX. FACTORED FORCE (LBS)	MAX CSI (LC)

DESIGN CRITERIA

SPECIFIED LOADS:

TOP CH.	LL	=	23.3	PSF
	DL	=	3.0	PSF
BOT CH.	LL	=	0.0	PSF
	DL	=	7.0	PSF
TOTAL LOAD		=	33.3	PSF

SPACING = 24.0 IN. C/C

THIS TRUSS IS DESIGNED FOR RESIDENTIAL OR SMALL BUILDING REQUIREMENTS OF PART 9, NBCC 2010

THIS DESIGN COMPLIES WITH:
- PART 9 OF OBC 2012 , BCBC 2012 , ABC 2014
- CSA 086-09
- TPIC 2011

DESIGN ASSUMPTIONS
-OVERHANG NOT TO BE ALTERED OR CUT OFF.

(55 % OF 27.2 P.S.F. G.S.L. PLUS 8.4 P.S.F. RAIN LOAD) EQUALS 23.3 P.S.F. SPECIFIED ROOF LIVE LOAD

ALLOWABLE DEFL.(LL)= L/360 (0.19")
CALCULATED VERT. DEFL.(LL) = L/ 999 (0.00")
ALLOWABLE DEFL.(TL)= L/360 (0.19")
CALCULATED VERT. DEFL.(TL) = L/ 999 (0.01")

CSI: TC=0.26 (2-3:1) , BC=0.08 (4-5:4) , WB=0.00 (n/a:0) , SSI=0.16 (2-3:1)

DOL LUMBER=1.00 NAIL=1.00 LS BEND=1.10 COMP=1.10 SHEAR=1.10 TENS= 1.10

COMPANION LIVE LOAD FACTOR = 0.50

TRUSS PLATE MANUFACTURER IS NOT RESPONSIBLE FOR QUALITY CONTROL IN THE TRUSS MANUFACTURING PLANT .

NAIL VALUES

PLATE	GRIP(DRY) (PSI) MAX	MIN	SHEAR (PLI) MAX	MIN	SECTION (PLI) MAX	MIN
MT20	618	354	1667	822	2284	1656

PLATE PLACEMENT TOL. = 0.250 inches

PLATE ROTATION TOL. = 0.5 Deg.

JSI GRIP= 0.27 (5) (INPUT = 0.90)
JSI METAL= 0.04 (5) (INPUT = 1.00)

LICENSED PROFESSIONAL ENGINEER
P.M. TREVISAN
100136551
March 20th, 2017
PROVINCE OF ONTARIO

RECEIVED
TOWN OF MILTON
MAR 29, 2017
17-5419
BUILDING DIVISION

READ ALL NOTES ON THIS PAGE AND ON THE ENGINEERING NOTE PAGE ENP-1. THE NOTE PAGE IS AN INTEGRAL PART OF THIS DRAWING AS IT CONTAINS SPECIFICATIONS AND CRITERIA USED IN THE DESIGN OF THIS COMPONENT.

KOTT

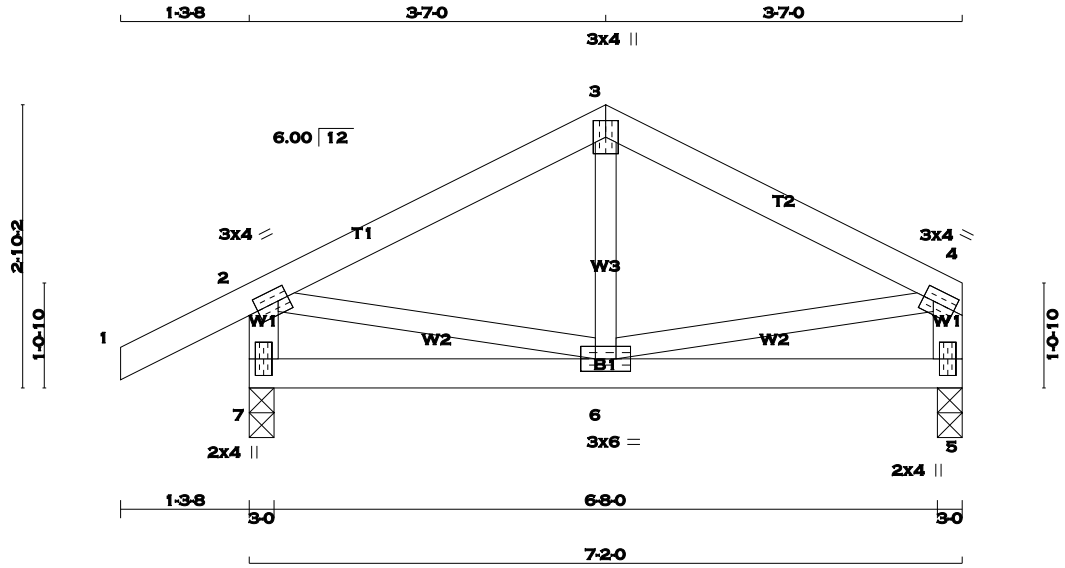

TOTAL WEIGHT = 4 X 28 = 111 lb

[M][F]

LUMBER

N. L. G. A. RULES

CHORDS	SIZE		LUMBER	DESCR.
1 - 3	2x4	DRY	No.2	SPF
3 - 4	2x4	DRY	No.2	SPF
7 - 2	2x4	DRY	No.2	SPF
5 - 4	2x4	DRY	No.2	SPF
7 - 5	2x4	DRY	No.2	SPF
ALL WEBS EXCEPT	2x3	DRY	No.2	SPF

DRY: SEASONED LUMBER.

PLATES (table is in inches)

JT	TYPE	PLATES	W	LEN	Y	X
2	TMVW-t	MT20	3.0	4.0	1.50	1.25
3	TTW+p	MT20	3.0	4.0		
4	TMVW-t	MT20	3.0	4.0	1.50	1.25
5	BMV1+p	MT20	2.0	4.0		
6	BMWWW-t	MT20	3.0	6.0		
7	BMV1+p	MT20	2.0	4.0		

A SIZE FOR SIZE SUBSTITUTION OF MITEK MII20 WITH TEE-LOK TL20 PLATES IS ALLOWED.

DIMENSIONS, SUPPORTS AND LOADINGS SPECIFIED BY FABRICATOR TO BE VERIFIED BY BUILDING DESIGNER

BEARINGS

JT	FACTORED GROSS REACTION VERT	HORZ	MAXIMUM FACTORED GROSS REACTION DOWN	HORZ	UPLIFT	INPUT BRG IN-SX	REQRD BRG IN-SX
7	445	0	445	0	0	3-0	3-0
5	340	0	340	0	0	3-0	3-0

UNFACTORED REACTIONS

JT	1ST LCASE COMBINED	MAX./MIN. COMPONENT REACTIONS SNOW	LIVE	PERM.LIVE	WIND	DEAD	SOIL
7	310	230 / 0	0 / 0	0 / 0	0 / 0	80 / 0	0 / 0
5	239	167 / 0	0 / 0	0 / 0	0 / 0	72 / 0	0 / 0

BEARING MATERIAL TO BE SPF NO.2 OR BETTER AT JOINT(S) 7, 5

BRACING

TOP CHORD TO BE SHEATHED OR MAX. PURLIN SPACING = 6.25 FT.
MAX. UNBRACED BOTTOM CHORD LENGTH = 10.00 FT. OR RIGID CEILING DIRECTLY APPLIED.

ALL PITCH BREAKS AND PERIMETER CORNER JOINTS MUST BE LATERALLY RESTRAINED.

LOADING

TOTAL LOAD CASES: (4)

CHORDS

MEMB. FR-TO	MAX. FACTORED FORCE (LBS)	FACTORED VERT. LOAD (PLF) FROM	TO	LC1 MAX CSI (LC)	MAX. UNBRAC LENGTH
1- 2	0 / 23	-77.4	-77.4	0.10 (1)	10.00
2- 3	-278 / 0	-77.4	-77.4	0.13 (1)	6.25
3- 4	-278 / 0	-77.4	-77.4	0.13 (1)	6.25
7- 2	-420 / 0	0.0	0.0	0.04 (1)	7.81
5- 4	-315 / 0	0.0	0.0	0.03 (1)	7.81
7- 6	0 / 0	-17.5	-17.5	0.06 (4)	10.00
6- 5	0 / 0	-17.5	-17.5	0.06 (4)	10.00

WEBS

MEMB. FR-TO	MAX. FACTORED FORCE (LBS)	MAX CSI (LC)
6- 3	-29 / 52	0.02 (4)
2- 6	0 / 254	0.06 (1)
6- 4	0 / 254	0.06 (1)

DESIGN CRITERIA

SPECIFIED LOADS:

TOP	CH.	LL	=	23.3	PSF
		DL	=	3.0	PSF
BOT	CH.	LL	=	0.0	PSF
		DL	=	7.0	PSF
TOTAL	LOAD		=	33.3	PSF

SPACING = 24.0 IN. C/C

THIS TRUSS IS DESIGNED FOR RESIDENTIAL OR SMALL BUILDING REQUIREMENTS OF PART 9, NBCC 2010

THIS DESIGN COMPLIES WITH:
- PART 9 OF OBC 2012 , BCBC 2012 , ABC 2014
- CSA 086-09
- TPIC 2011

(55 % OF 27.2 P.S.F. G.S.L. PLUS 8.4 P.S.F. RAIN LOAD) EQUALS 23.3 P.S.F. SPECIFIED ROOF LIVE LOAD

ALLOWABLE DEFL.(LL)= L/360 (0.24")
CALCULATED VERT. DEFL.(LL) = L/ 999 (0.00")
ALLOWABLE DEFL.(TL)= L/360 (0.24")
CALCULATED VERT. DEFL.(TL) = L/ 999 (0.01")

CSI: TC=0.13 (3-4:1) , BC=0.06 (5-6:4) , WB=0.06 (2-6:1) , SSI=0.10 (3-4:1)

DOL LUMBER=1.00 NAIL=1.00 LS BEND=1.10 COMP=1.10 SHEAR=1.10 TENS= 1.10

COMPANION LIVE LOAD FACTOR = 0.50

TRUSS PLATE MANUFACTURER IS NOT RESPONSIBLE FOR QUALITY CONTROL IN THE TRUSS MANUFACTURING PLANT .

NAIL VALUES

PLATE	GRIP(DRY) (PSI) MAX	MIN	SHEAR (PLI) MAX	MIN	SECTION (PLI) MAX	MIN
MT20	618	354	1667	822	2284	1656

PLATE PLACEMENT TOL. = 0.250 inches

PLATE ROTATION TOL. = 5.0 Deg.

JSI GRIP= 0.62 (4) (INPUT = 0.90)
JSI METAL= 0.14 (4) (INPUT = 1.00)

LICENSED PROFESSIONAL ENGINEER
P.M. TREVISAN
100136551
March 20th, 2017
PROVINCE OF ONTARIO

RECEIVED
TOWN OF MILTON
MAR 29, 2017
17-5419
BUILDING DIVISION

READ ALL NOTES ON THIS PAGE AND ON THE ENGINEERING NOTE PAGE ENP-1. THE NOTE PAGE IS AN INTEGRAL PART OF THIS DRAWING AS IT CONTAINS SPECIFICATIONS AND CRITERIA USED IN THE DESIGN OF THIS COMPONENT.

KOTT

JOB NAME	TRUSS NAME	QUANTITY	PLY	JOB DESC.	DRWG NO.
PT0317-122	T02	2	1	TRUSS DESC. LECCO RIDGE-BLOCK 348	

KOTT , Stouffville, ON, CGC

Version 8.100 S Feb 9 2017 MiTek Industries, Inc. Mon Mar 20 10:10:29 2017 Page 1
ID:Mn2zxnCa6NqoASkSkmtLJtyfhrl-bvRhFV2R988JvzT7Iz0DPgqVVMfWS_rtPq2lKLzZ4we

SCALE = 1:49.6

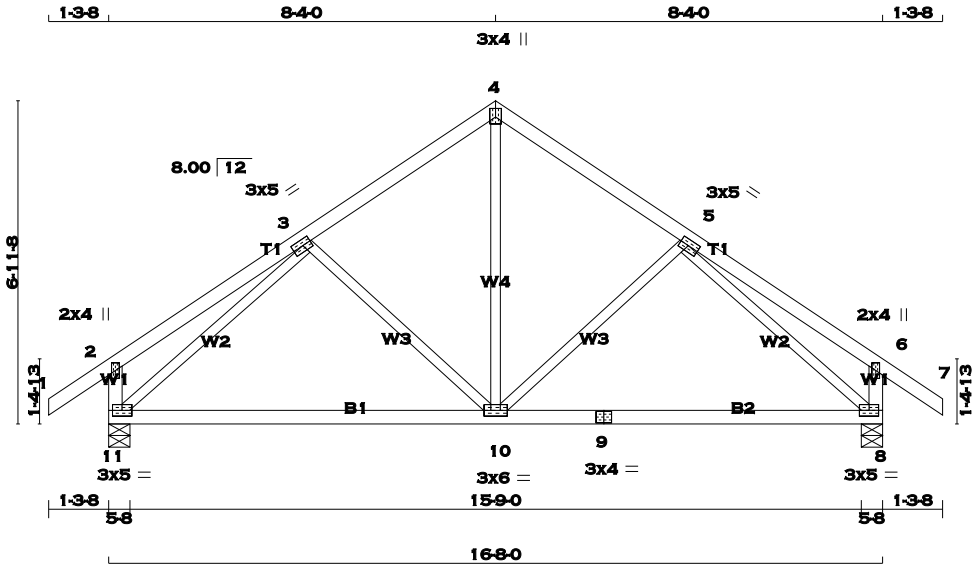

TOTAL WEIGHT = 2 X 71 = 141 lb
[M][F]

LUMBER
N. L. G. A. RULES

CHORDS	SIZE		LUMBER	DESCR.
1 - 4	2x4	DRY	No.2	SPF
4 - 7	2x4	DRY	No.2	SPF
11 - 2	2x4	DRY	No.2	SPF
8 - 6	2x4	DRY	No.2	SPF
11 - 9	2x4	DRY	No.2	SPF
9 - 8	2x4	DRY	No.2	SPF
ALL WEBS EXCEPT	2x3	DRY	No.2	SPF

DRY: SEASONED LUMBER.

PLATES (table is in inches)

JT	TYPE	PLATES	W	LEN	Y	X
2	TMV+p	MT20	2.0	4.0		
3	TMWW-t	MT20	3.0	5.0	1.50	2.25
4	TTW+p	MT20	3.0	4.0	2.25	1.50
5	TMWW-t	MT20	3.0	5.0	1.50	2.25
6	TMV+p	MT20	2.0	4.0		
8	BMVW1-t	MT20	3.0	5.0		
9	BS-t	MT20	3.0	4.0		
10	BMWWW-t	MT20	3.0	6.0		
11	BMVW1-t	MT20	3.0	5.0		

A SIZE FOR SIZE SUBSTITUTION OF MITEK MII20 WITH TEE-LOK TL20 PLATES IS ALLOWED.

DIMENSIONS, SUPPORTS AND LOADINGS SPECIFIED BY FABRICATOR TO BE VERIFIED BY BUILDING DESIGNER

BEARINGS

JT	FACTORED GROSS REACTION VERT	HORZ	MAXIMUM FACTORED GROSS REACTION DOWN	HORZ	UPLIFT	INPUT BRG IN-SX	REQRD BRG IN-SX
11	897	0	897	0	0	5-8	5-8
8	897	0	897	0	0	5-8	5-8

UNFACTORED REACTIONS

JT	1ST LCASE COMBINED	MAX./MIN. COMPONENT REACTIONS SNOW	LIVE	PERM.LIVE	WIND	DEAD	SOIL
11	627	452 / 0	0 / 0	0 / 0	0 / 0	175 / 0	0 / 0
8	627	452 / 0	0 / 0	0 / 0	0 / 0	175 / 0	0 / 0

BEARING MATERIAL TO BE SPF NO.2 OR BETTER AT JOINT(S) 11, 8

BRACING
TOP CHORD TO BE SHEATHED OR MAX. PURLIN SPACING = 6.25 FT.
MAX. UNBRACED BOTTOM CHORD LENGTH = 10.00 FT. OR RIGID CEILING DIRECTLY APPLIED.

ALL PITCH BREAKS AND PERIMETER CORNER JOINTS MUST BE LATERALLY RESTRAINED.

LOADING
TOTAL LOAD CASES: (4)

CHORDS

MEMB. FR-TO	MAX. FACTORED FORCE (LBS)	FACTORED VERT. LOAD (PLF) FROM	TO	LC1 MAX CSI (LC)	MAX. UNBRAC LENGTH
1- 2	0 / 29	-77.4	-77.4	0.10 (1)	10.00
2- 3	0 / 21	-77.4	-77.4	0.21 (1)	10.00
3- 4	-643 / 0	-77.4	-77.4	0.17 (1)	6.25
4- 5	-643 / 0	-77.4	-77.4	0.17 (1)	6.25
5- 6	0 / 21	-77.4	-77.4	0.21 (1)	10.00
6- 7	0 / 29	-77.4	-77.4	0.10 (1)	10.00
11- 2	-230 / 0	0.0	0.0	0.02 (1)	7.81
8- 6	-230 / 0	0.0	0.0	0.02 (1)	7.81
11-10	0 / 660	-17.5	-17.5	0.39 (4)	10.00
10- 9	0 / 660	-17.5	-17.5	0.39 (4)	10.00
9- 8	0 / 660	-17.5	-17.5	0.39 (4)	10.00

WEBS

MEMB. FR-TO	MAX. FACTORED FORCE (LBS)	MAX CSI (LC)
10- 4	0 / 442	0.10 (1)
10- 5	-193 / 2	0.11 (1)
3-10	-193 / 2	0.11 (1)
11- 3	-900 / 0	0.48 (1)
5- 8	-900 / 0	0.48 (1)

DESIGN CRITERIA

SPECIFIED LOADS:

TOP CH.	LL	=	23.3	PSF
	DL	=	3.0	PSF
BOT CH.	LL	=	0.0	PSF
	DL	=	7.0	PSF
TOTAL LOAD		=	33.3	PSF

SPACING = 24.0 IN. C/C

THIS TRUSS IS DESIGNED FOR RESIDENTIAL OR SMALL BUILDING REQUIREMENTS OF PART 9, NBCC 2010

THIS DESIGN COMPLIES WITH:
- PART 9 OF OBC 2012 , BCBC 2012 , ABC 2014
- CSA 086-09
- TPIC 2011

(55 % OF 27.2 P.S.F. G.S.L. PLUS 8.4 P.S.F. RAIN LOAD) EQUALS 23.3 P.S.F. SPECIFIED ROOF LIVE LOAD

ALLOWABLE DEFL.(LL)= L/360 (0.56")
CALCULATED VERT. DEFL.(LL) = L/ 999 (0.02")
ALLOWABLE DEFL.(TL)= L/360 (0.56")
CALCULATED VERT. DEFL.(TL) = L/ 999 (0.11")

CSI: TC=0.21 (2-3:1) , BC=0.39 (10-11:4) , WB=0.48 (5-8:1) , SSI=0.13 (3-4:1)

DOL LUMBER=1.00 NAIL=1.00 LS BEND=1.10 COMP=1.10 SHEAR=1.10 TENS= 1.10

COMPANION LIVE LOAD FACTOR = 0.50

TRUSS PLATE MANUFACTURER IS NOT RESPONSIBLE FOR QUALITY CONTROL IN THE TRUSS MANUFACTURING PLANT .

NAIL VALUES

PLATE	GRIP(DRY) (PSI) MAX	MIN	SHEAR (PLI) MAX	MIN	SECTION (PLI) MAX	MIN
MT20	618	354	1667	822	2284	1656

PLATE PLACEMENT TOL. = 0.250 inches

PLATE ROTATION TOL. = 5.0 Deg.

JSI GRIP= 0.89 (8) (INPUT = 0.90)
JSI METAL= 0.25 (3) (INPUT = 1.00)

LICENSED PROFESSIONAL ENGINEER
P.M. TREVISAN
100136551
March 20th, 2017
PROVINCE OF ONTARIO

RECEIVED
TOWN OF MILTON
MAR 29, 2017
17-5419
BUILDING DIVISION

READ ALL NOTES ON THIS PAGE AND ON THE ENGINEERING NOTE PAGE ENP-1. THE NOTE PAGE IS AN INTEGRAL PART OF THIS DRAWING AS IT CONTAINS SPECIFICATIONS AND CRITERIA USED IN THE DESIGN OF THIS COMPONENT.

KOTT

Version 8.100 S Feb 9 2017 MiTek Industries, Inc. Mon Mar 20 10:10:29 2017 Page 1
ID:Mn2zxnCa6NqoASkSkmtLJtyfhrl-bvRhFV2R988JvzT7Iz0DPgqVUMgqS_6tPq2lKLzZ4we

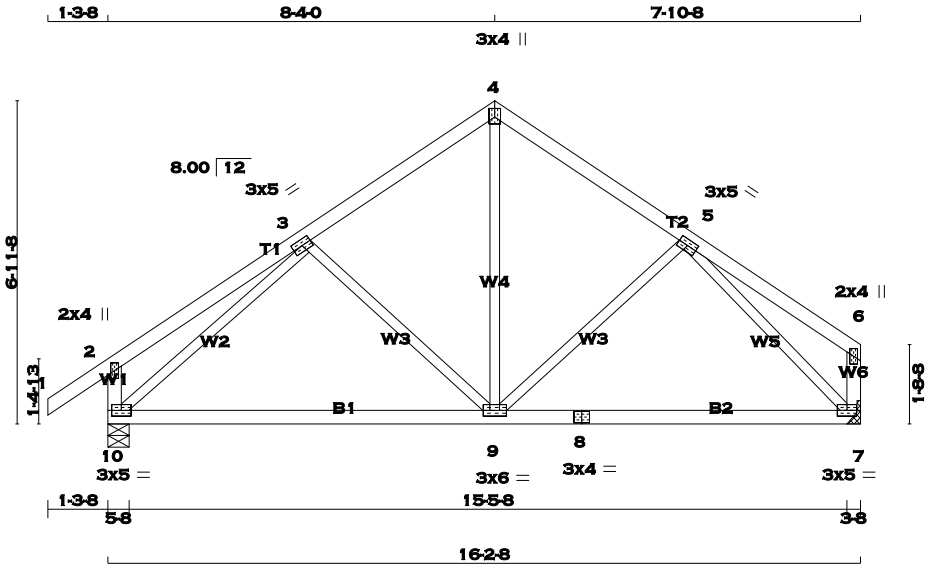

TOTAL WEIGHT = 6 X 68 = 406 lb
[M][F]

LUMBER
N. L. G. A. RULES

CHORDS	SIZE		LUMBER	DESCR.
1 - 4	2x4	DRY	No.2	SPF
4 - 6	2x4	DRY	No.2	SPF
10 - 2	2x4	DRY	No.2	SPF
7 - 6	2x4	DRY	No.2	SPF
10 - 8	2x4	DRY	No.2	SPF
8 - 7	2x4	DRY	No.2	SPF
ALL WEBS EXCEPT	2x3	DRY	No.2	SPF

DRY: SEASONED LUMBER.

PLATES (table is in inches)

JT	TYPE	PLATES	W	LEN	Y	X
2	TMV+p	MT20	2.0	4.0		
3	TMWW-t	MT20	3.0	5.0		
4	TTW+p	MT20	3.0	4.0	2.25	1.50
5	TMWW-t	MT20	3.0	5.0		
6	TMV+p	MT20	2.0	4.0		
7	BMVW1-t	MT20	3.0	5.0		
8	BS-t	MT20	3.0	4.0		
9	BMWWW-t	MT20	3.0	6.0		
10	BMVW1-t	MT20	3.0	5.0		

A SIZE FOR SIZE SUBSTITUTION OF MITEK MII20 WITH TEE-LOK TL20 PLATES IS ALLOWED.

DIMENSIONS, SUPPORTS AND LOADINGS SPECIFIED BY FABRICATOR TO BE VERIFIED BY BUILDING DESIGNER

BEARINGS

JT	FACTORED GROSS REACTION VERT	HORZ	MAXIMUM FACTORED GROSS REACTION DOWN	HORZ	UPLIFT	INPUT BRG IN-SX	REQRD BRG IN-SX
10	875	0	875	0	0	5-8	5-8
7	769	0	769	0	0	HANGER BY OTHERS	
						MIN. SEAT SIZE: 3-8	

UNFACTORED REACTIONS

JT	1ST LCASE COMBINED	MAX./MIN. COMPONENT REACTIONS SNOW	LIVE	PERM.LIVE	WIND	DEAD	SOIL
10	612	441 / 0	0 / 0	0 / 0	0 / 0	170 / 0	0 / 0
7	540	377 / 0	0 / 0	0 / 0	0 / 0	162 / 0	0 / 0

BEARING MATERIAL TO BE SPF NO.2 OR BETTER AT JOINT(S) 10

BRACING
TOP CHORD TO BE SHEATHED OR MAX. PURLIN SPACING = 6.25 FT.
MAX. UNBRACED BOTTOM CHORD LENGTH = 10.00 FT. OR RIGID CEILING DIRECTLY APPLIED.

ALL PITCH BREAKS AND PERIMETER CORNER JOINTS MUST BE LATERALLY RESTRAINED.

LOADING
TOTAL LOAD CASES: (4)

CHORDS

MEMB. FR-TO	MAX. FORCE (LBS)	FACTORED VERT. LOAD (PLF) FROM	TO	LC1 MAX CSI (LC)	MAX. UNBRAC LENGTH
1- 2	0 / 29	-77.4	-77.4	0.10 (1)	10.00
2- 3	0 / 21	-77.4	-77.4	0.22 (1)	10.00
3- 4	-609 / 0	-77.4	-77.4	0.17 (1)	6.25
4- 5	-607 / 0	-77.4	-77.4	0.15 (1)	6.25
5- 6	0 / 21	-77.4	-77.4	0.19 (1)	10.00
10- 2	-229 / 0	0.0	0.0	0.02 (1)	7.81
7- 6	-105 / 0	0.0	0.0	0.01 (1)	7.81
10- 9	0 / 636	-17.5	-17.5	0.37 (4)	10.00
9- 8	0 / 588	-17.5	-17.5	0.37 (4)	10.00
8- 7	0 / 588	-17.5	-17.5	0.37 (4)	10.00

WEBS

MEMB. FR-TO	MAX. FORCE (LBS)	MAX CSI (LC)
3- 9	-199 / 0	0.11 (1)
9- 4	0 / 401	0.09 (1)
9- 5	-133 / 15	0.07 (1)
10- 3	-867 / 0	0.46 (1)
5- 7	-848 / 0	0.39 (1)

DESIGN CRITERIA

SPECIFIED LOADS:

TOP CH.	LL	=	23.3	PSF
	DL	=	3.0	PSF
BOT CH.	LL	=	0.0	PSF
	DL	=	7.0	PSF
TOTAL LOAD		=	33.3	PSF

SPACING = 24.0 IN. C/C

THIS TRUSS IS DESIGNED FOR RESIDENTIAL OR SMALL BUILDING REQUIREMENTS OF PART 9, NBCC 2010

THIS DESIGN COMPLIES WITH:
- PART 9 OF OBC 2012 , BCBC 2012 , ABC 2014
- CSA 086-09
- TPIC 2011

(55 % OF 27.2 P.S.F. G.S.L. PLUS 8.4 P.S.F. RAIN LOAD) EQUALS 23.3 P.S.F. SPECIFIED ROOF LIVE LOAD

ALLOWABLE DEFL.(LL)= L/360 (0.54")
CALCULATED VERT. DEFL.(LL) = L/ 999 (0.02")
ALLOWABLE DEFL.(TL)= L/360 (0.54")
CALCULATED VERT. DEFL.(TL) = L/ 999 (0.11")

CSI: TC=0.22 (2-3:1) , BC=0.37 (9-10:4) , WB=0.46 (3-10:1) , SSI=0.13 (3-4:1)

DOL LUMBER=1.00 NAIL=1.00 LS BEND=1.10 COMP=1.10 SHEAR=1.10 TENS= 1.10

COMPANION LIVE LOAD FACTOR = 0.50

TRUSS PLATE MANUFACTURER IS NOT RESPONSIBLE FOR QUALITY CONTROL IN THE TRUSS MANUFACTURING PLANT .

NAIL VALUES

PLATE	GRIP(DRY) (PSI) MAX	MIN	SHEAR (PLI) MAX	MIN	SECTION (PLI) MAX	MIN
MT20	618	354	1667	822	2284	1656

PLATE PLACEMENT TOL. = 0.250 inches

PLATE ROTATION TOL. = 5.0 Deg.

JSI GRIP= 0.90 (3) (INPUT = 0.90)
JSI METAL= 0.24 (3) (INPUT = 1.00)

LICENSED PROFESSIONAL ENGINEER
P.M. TREVISAN
100136551
March 20th, 2017
PROVINCE OF ONTARIO

RECEIVED
TOWN OF MILTON
MAR 29, 2017
17-5419
BUILDING DIVISION

READ ALL NOTES ON THIS PAGE AND ON THE ENGINEERING NOTE PAGE ENP-1. THE NOTE PAGE IS AN INTEGRAL PART OF THIS DRAWING AS IT CONTAINS SPECIFICATIONS AND CRITERIA USED IN THE DESIGN OF THIS COMPONENT.

KOTT

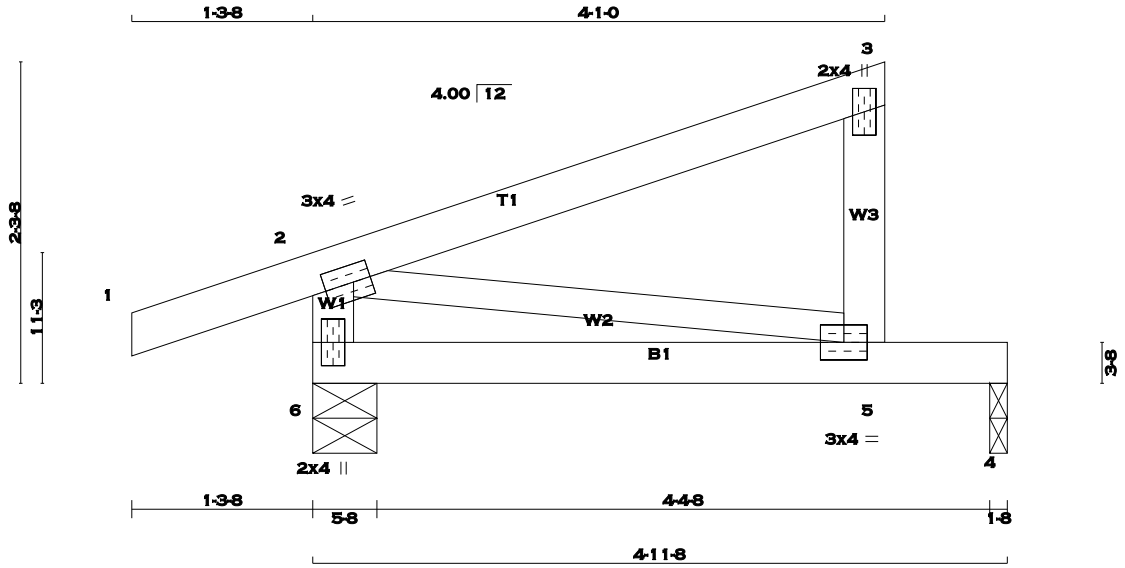

TOTAL WEIGHT = 10 X 18 = 175 lb [M]

LUMBER

N. L. G. A. RULES

CHORDS	SIZE		LUMBER	DESCR.
1 - 3	2x4	DRY	No.2	SPF
5 - 3	2x4	DRY	No.2	SPF
6 - 2	2x4	DRY	No.2	SPF
6 - 4	2x4	DRY	No.2	SPF
ALL WEBS	2x3	DRY	No.2	SPF

DRY: SEASONED LUMBER.

PLATES (table is in inches)

JT	TYPE	PLATES	W	LEN	Y	X
2	TMVW-t	MT20	3.0	4.0	1.50	1.50
3	TMV+p	MT20	2.0	4.0		
5	BMVW-t	MT20	3.0	4.0		
6	BMV1+p	MT20	2.0	4.0		

A SIZE FOR SIZE SUBSTITUTION OF MITEK MII20 WITH TEE-LOK TL20 PLATES IS ALLOWED.

DIMENSIONS, SUPPORTS AND LOADINGS SPECIFIED BY FABRICATOR TO BE VERIFIED BY BUILDING DESIGNER

BEARINGS

JT	FACTORED GROSS REACTION VERT	HORZ	MAXIMUM FACTORED GROSS REACTION DOWN	HORZ	UPLIFT	INPUT BRG IN-SX	REQRD BRG IN-SX
6	333	0	333	0	0	5-8	5-8
4	173	0	173	0	0	1-8	1-8

UNFACTORED REACTIONS

JT	1ST LCASE COMBINED	MAX./MIN. COMPONENT REACTIONS SNOW	LIVE	PERM.LIVE	WIND	DEAD	SOIL
6	231	174 / 0	0 / 0	0 / 0	0 / 0	57 / 0	0 / 0
4	123	78 / 0	0 / 0	0 / 0	0 / 0	45 / 0	0 / 0

BEARING MATERIAL TO BE SPF NO.2 OR BETTER AT JOINT(S) 6, 4

BRACING

TOP CHORD TO BE SHEATHED OR MAX. PURLIN SPACING = 10.00 FT.
MAX. UNBRACED BOTTOM CHORD LENGTH = 10.00 FT. OR RIGID CEILING DIRECTLY APPLIED.

ALL PITCH BREAKS AND PERIMETER CORNER JOINTS MUST BE LATERALLY RESTRAINED.

LOADING

TOTAL LOAD CASES: (4)

CHORDS

MEMB. FR-TO	MAX. FACTORED FORCE (LBS)	FACTORED VERT. LOAD (PLF) FROM	TO	LC1 MAX CSI (LC)	MAX. UNBRAC LENGTH
1- 2	0 / 16	-77.4	-77.4	0.10 (1)	10.00
2- 3	0 / 0	-77.4	-77.4	0.22 (1)	10.00
5- 3	-158 / 0	0.0	0.0	0.02 (1)	7.81
6- 2	-261 / 0	0.0	0.0	0.03 (1)	7.81
6- 5	0 / 0	-17.5	-17.5	0.20 (1)	10.00
5- 4	0 / 0	-17.5	-17.5	0.20 (1)	10.00

WEBS

MEMB. FR-TO	MAX. FACTORED FORCE (LBS)	MAX CSI (LC)
2- 5	0 / 0	0.00 (1)

DESIGN CRITERIA

SPECIFIED LOADS:

TOP CH.	LL =	23.3	PSF
	DL =	3.0	PSF
BOT CH.	LL =	0.0	PSF
	DL =	7.0	PSF
TOTAL LOAD	=	33.3	PSF

SPACING = 24.0 IN. C/C

THIS TRUSS IS DESIGNED FOR RESIDENTIAL OR SMALL BUILDING REQUIREMENTS OF PART 9, NBCC 2010

THIS DESIGN COMPLIES WITH:
- PART 9 OF OBC 2012 , BCBC 2012 , ABC 2014
- CSA 086-09
- TPIC 2011

(55 % OF 27.2 P.S.F. G.S.L. PLUS 8.4 P.S.F. RAIN LOAD) EQUALS 23.3 P.S.F. SPECIFIED ROOF LIVE LOAD

ALLOWABLE DEFL.(LL)= L/360 (0.19")
CALCULATED VERT. DEFL.(LL) = L/ 999 (0.03")
ALLOWABLE DEFL.(TL)= L/360 (0.19")
CALCULATED VERT. DEFL.(TL) = L/ 872 (0.07")

CSI: TC=0.22 (2-3:1) , BC=0.20 (5-6:1) , WB=0.00 (2-5:1) , SSI=0.14 (4-5:1)

DOL LUMBER=1.00 NAIL=1.00 LS BEND=1.10 COMP=1.10 SHEAR=1.10 TENS= 1.10

COMPANION LIVE LOAD FACTOR = 0.50

TRUSS PLATE MANUFACTURER IS NOT RESPONSIBLE FOR QUALITY CONTROL IN THE TRUSS MANUFACTURING PLANT .

NAIL VALUES

PLATE	GRIP(DRY) (PSI) MAX	MIN	SHEAR (PLI) MAX	MIN	SECTION (PLI) MAX	MIN
MT20	618	354	1667	822	2284	1656

PLATE PLACEMENT TOL. = 0.250 inches

PLATE ROTATION TOL. = 5.0 Deg.

JSI GRIP= 0.24 (2) (INPUT = 0.90)
JSI METAL= 0.05 (6) (INPUT = 1.00)

LICENSED PROFESSIONAL ENGINEER
P.M. TREVISAN
100136551
March 20th, 2017
PROVINCE OF ONTARIO

RECEIVED
TOWN OF MILTON
MAR 29, 2017
17-5419
BUILDING DIVISION

READ ALL NOTES ON THIS PAGE AND ON THE ENGINEERING NOTE PAGE ENP-1. THE NOTE PAGE IS AN INTEGRAL PART OF THIS DRAWING AS IT CONTAINS SPECIFICATIONS AND CRITERIA USED IN THE DESIGN OF THIS COMPONENT.

KOTT

JOB NAME	TRUSS NAME	QUANTITY	PLY	JOB DESC.	DRWG NO.
PT0317-122	T05	4	1	TRUSS DESC. LECCO RIDGE-BLOCK 348	

KOTT , Stouffville, ON, CGC

Version 8.100 S Feb 9 2017 MiTek Industries, Inc. Mon Mar 20 10:10:30 2017 Page 1
ID:Mn2zxnCa6NqoASkSkmtLJtyfhrl-46?3Sr34wRGAX72JsgXSxuMbSm0sBUJ1eUnJsnzZ4wd

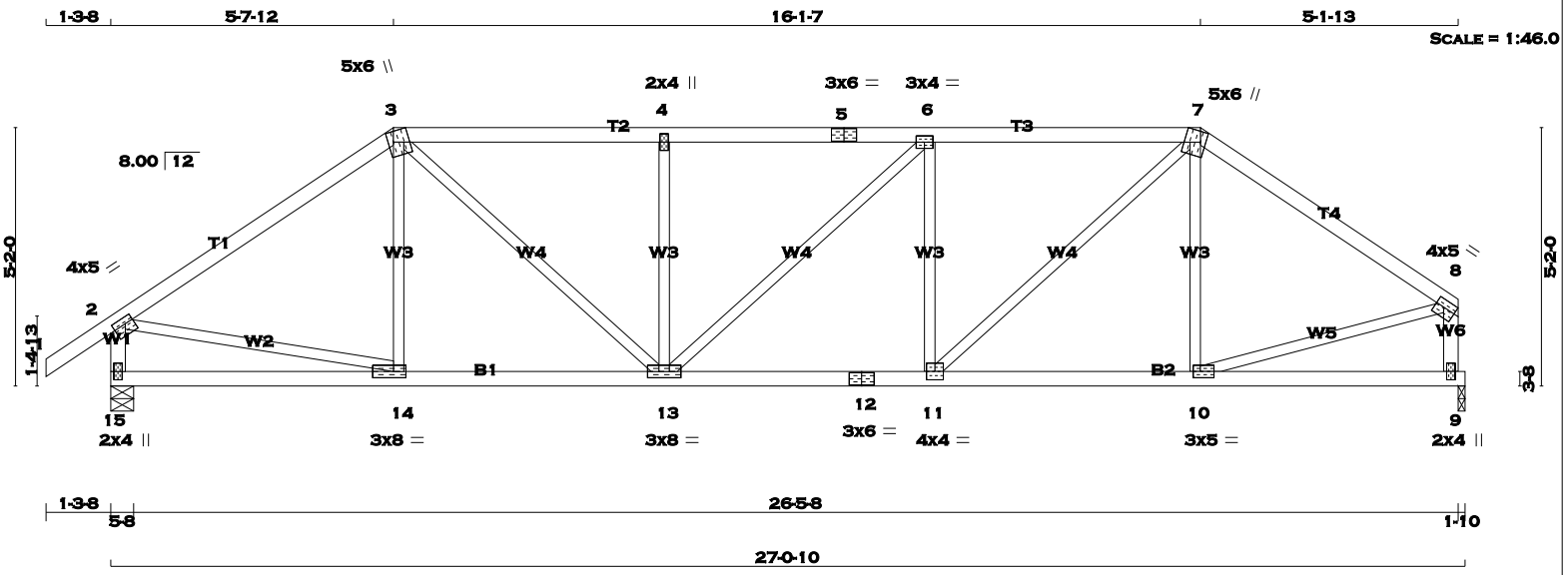

TOTAL WEIGHT = 4 X 109 = 436 lb [M]

LUMBER

N. L. G. A. RULES

CHORDS	SIZE		LUMBER	DESCR.
1 - 3	2x4	DRY	No.2	SPF
3 - 5	2x4	DRY	No.2	SPF
5 - 7	2x4	DRY	No.2	SPF
7 - 8	2x4	DRY	No.2	SPF
15 - 2	2x4	DRY	No.2	SPF
9 - 8	2x4	DRY	No.2	SPF
15 - 12	2x4	DRY	No.2	SPF
12 - 9	2x4	DRY	No.2	SPF
ALL WEBS EXCEPT	2x3	DRY	No.2	SPF

DRY: SEASONED LUMBER.

PLATES (table is in inches)

JT	TYPE	PLATES	W	LEN	Y	X
2	TMVW-t	MT20	4.0	5.0	1.50	2.00
3	TTWW+m	MT20	5.0	6.0	Edge	3.75
4	TMW+w	MT20	2.0	4.0		
5	TS-t	MT20	3.0	6.0		
6	TMWW-t	MT20	3.0	4.0		
7	TTWW+m	MT20	5.0	6.0	Edge	3.75
8	TMVW-t	MT20	4.0	5.0	1.75	Edge
9	BMV1+p	MT20	2.0	4.0		
10	BMWW-t	MT20	3.0	5.0	1.50	1.75
11	BMWW-t	MT20	4.0	4.0		
12	BS-t	MT20	3.0	6.0		
13	BMWWW-t	MT20	3.0	8.0		
14	BMWW-t	MT20	3.0	8.0	1.50	3.00
15	BMV1+p	MT20	2.0	4.0		

Edge - INDICATES REFERENCE CORNER OF PLATE TOUCHES EDGE OF CHORD.

A SIZE FOR SIZE SUBSTITUTION OF MITEK MII20 WITH TEE-LOK TL20 PLATES IS ALLOWED.

DIMENSIONS, SUPPORTS AND LOADINGS SPECIFIED BY FABRICATOR TO BE VERIFIED BY BUILDING DESIGNER

BEARINGS

JT	FACTORED GROSS REACTION VERT	HORZ	MAXIMUM FACTORED GROSS REACTION DOWN	HORZ	UPLIFT	INPUT BRG IN-SX	REQRD BRG IN-SX
15	1383	0	1383	0	0	5-8	5-8
9	1277	0	1277	0	0	1-10	1-10

UNFACTORED REACTIONS

JT	1ST LCASE COMBINED	MAX./MIN. COMPONENT REACTIONS SNOW	LIVE	PERM.LIVE	WIND	DEAD	SOIL
15	968	691 / 0	0 / 0	0 / 0	0 / 0	277 / 0	0 / 0
9	896	627 / 0	0 / 0	0 / 0	0 / 0	269 / 0	0 / 0

BEARING MATERIAL TO BE SPF NO.2 OR BETTER AT JOINT(S) 15, 9

BRACING

TOP CHORD TO BE SHEATHED OR MAX. PURLIN SPACING = 4.64 FT.
MAX. UNBRACED BOTTOM CHORD LENGTH = 10.00 FT. OR RIGID CEILING DIRECTLY APPLIED.

ALL PITCH BREAKS AND PERIMETER CORNER JOINTS MUST BE LATERALLY RESTRAINED.

LOADING

TOTAL LOAD CASES: (4)

CHORDS

MEMB. FR-TO	MAX. FACTORED FORCE (LBS)	FACTORED VERT. LOAD (PLF) FROM	TO	LC1 MAX CSI (LC)	MAX. UNBRAC LENGTH
1- 2	0 / 29	-77.4	-77.4	0.10 (1)	10.00
2- 3	-1428 / 0	-77.4	-77.4	0.52 (1)	4.83
3- 4	-1755 / 0	-77.4	-77.4	0.36 (1)	4.65
4- 5	-1755 / 0	-77.4	-77.4	0.37 (1)	4.64
5- 6	-1755 / 0	-77.4	-77.4	0.37 (1)	4.64
6- 7	-1730 / 0	-77.4	-77.4	0.37 (1)	4.68
7- 8	-1334 / 0	-77.4	-77.4	0.42 (1)	5.10
15- 2	-1342 / 0	0.0	0.0	0.14 (1)	7.00
9- 8	-1240 / 0	0.0	0.0	0.13 (1)	7.21
15-14	0 / 0	-17.5	-17.5	0.13 (4)	10.00
14-13	0 / 1185	-17.5	-17.5	0.26 (1)	10.00
13-12	0 / 1731	-17.5	-17.5	0.32 (1)	10.00
12-11	0 / 1731	-17.5	-17.5	0.32 (1)	10.00
11-10	0 / 1105	-17.5	-17.5	0.24 (1)	10.00
10- 9	0 / 0	-17.5	-17.5	0.12 (4)	10.00

WEBS

MEMB. FR-TO	MAX. FACTORED FORCE (LBS)	MAX CSI (LC)
14- 3	-112 / 57	0.04 (1)
3-13	0 / 766	0.17 (1)
13- 4	-448 / 0	0.18 (1)
13- 6	0 / 33	0.01 (1)
11- 6	-472 / 0	0.19 (1)
11- 7	0 / 842	0.19 (1)
10- 7	-194 / 27	0.08 (1)
2-14	0 / 1208	0.27 (1)
10- 8	0 / 1148	0.26 (1)

DESIGN CRITERIA

SPECIFIED LOADS:

TOP CH.	LL	=	23.3	PSF
	DL	=	3.0	PSF
BOT CH.	LL	=	0.0	PSF
	DL	=	7.0	PSF
TOTAL LOAD		=	33.3	PSF

SPACING = 24.0 IN. C/C

LOADING IN FLAT SECTION BASED ON A SLOPE OF 6.00/12

THIS TRUSS IS DESIGNED FOR RESIDENTIAL OR SMALL BUILDING REQUIREMENTS OF PART 9, NBCC 2010

THIS DESIGN COMPLIES WITH:
- PART 9 OF OBC 2012 , BCBC 2012 , ABC 2014
- CSA 086-09
- TPIC 2011

(55 % OF 27.2 P.S.F. G.S.L. PLUS 8.4 P.S.F. RAIN LOAD) EQUALS 23.3 P.S.F. SPECIFIED ROOF LIVE LOAD

ALLOWABLE DEFL.(LL)= L/360 (0.90")
CALCULATED VERT. DEFL.(LL) = L/ 999 (0.07")
ALLOWABLE DEFL.(TL)= L/360 (0.90")
CALCULATED VERT. DEFL.(TL) = L/ 999 (0.14")

CSI: TC=0.52 (2-3:1) , BC=0.32 (11-13:1) , WB=0.27 (2-14:1) , SSI=0.19 (6-7:1)

DOL LUMBER=1.00 NAIL=1.00 LS BEND=1.10 COMP=1.10 SHEAR=1.10 TENS= 1.10

COMPANION LIVE LOAD FACTOR = 0.50

TRUSS PLATE MANUFACTURER IS NOT RESPONSIBLE FOR QUALITY CONTROL IN THE TRUSS MANUFACTURING PLANT .

NAIL VALUES

PLATE	GRIP(DRY) (PSI) MAX	MIN	SHEAR (PLI) MAX	MIN	SECTION (PLI) MAX	MIN
MT20	618	354	1667	822	2284	1656

PLATE PLACEMENT TOL. = 0.250 inches

PLATE ROTATION TOL. = 5.0 Deg.

JSI GRIP= 0.90 (10) (INPUT = 0.90)
JSI METAL= 0.48 (2) (INPUT = 1.00)

LICENSED PROFESSIONAL ENGINEER
P.M. TREVISAN
100136551
March 20th, 2017
PROVINCE OF ONTARIO

RECEIVED
TOWN OF MILTON
MAR 29, 2017
17-5419
BUILDING DIVISION

READ ALL NOTES ON THIS PAGE AND ON THE ENGINEERING NOTE PAGE ENP-1. THE NOTE PAGE IS AN INTEGRAL PART OF THIS DRAWING AS IT CONTAINS SPECIFICATIONS AND CRITERIA USED IN THE DESIGN OF THIS COMPONENT.

KOTT

JOB NAME	TRUSS NAME	QUANTITY	PLY	JOB DESC.	DRWG NO.
PT0317-122	T06	4	1	TRUSS DESC. LECCO RIDGE-BLOCK 348	ENG JOB: PT0317-122

KOTT , Stouffville, ON, CGC

Version 8.100 S Feb 9 2017 MiTek Industries, Inc. Mon Mar 20 10:10:31 2017 Page 1

ID:Mn2zxnCa6NqoASkSkmtLJtyfhrl-YIZSgB3ihlO08HdWQO2hU5vn09NMwsxAt8XsOEzZ4wc

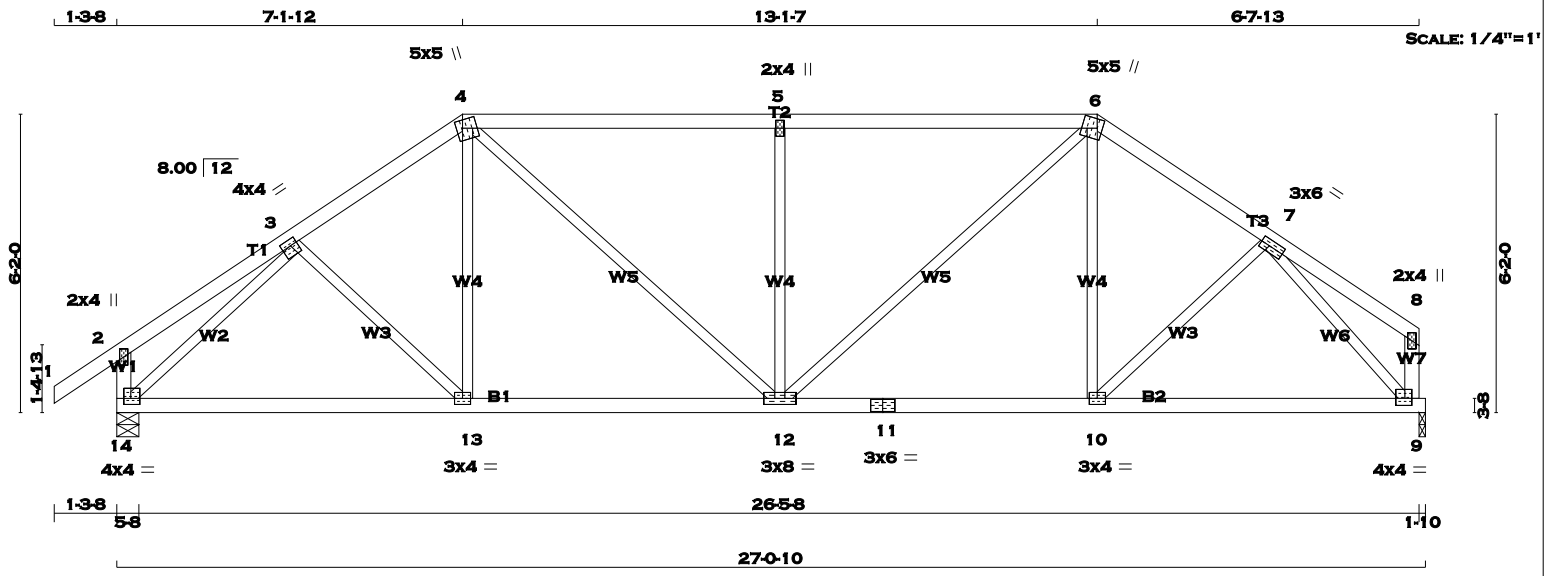

TOTAL WEIGHT = 4 X 112 = 447 lb

[M][F]

LUMBER

N. L. G. A. RULES

CHORDS	SIZE		LUMBER	DESCR.
1 - 4	2x4	DRY	No.2	SPF
4 - 6	2x4	DRY	No.2	SPF
6 - 8	2x4	DRY	No.2	SPF
14 - 2	2x4	DRY	No.2	SPF
9 - 8	2x4	DRY	No.2	SPF
14 - 11	2x4	DRY	No.2	SPF
11 - 9	2x4	DRY	No.2	SPF
ALL WEBS EXCEPT	2x3	DRY	No.2	SPF

DRY: SEASONED LUMBER.

PLATES (table is in inches)

JT	TYPE	PLATES	W	LEN	Y	X
2	TMV+p	MT20	2.0	4.0		
3	TMWW-t	MT20	4.0	4.0	1.50	1.75
4	TTWW+m	MT20	5.0	5.0	2.00	1.50
5	TMW+w	MT20	2.0	4.0		
6	TTWW+m	MT20	5.0	5.0	2.25	1.25
7	TMWW-t	MT20	3.0	6.0	1.50	2.25
8	TMV+p	MT20	2.0	4.0		
9	BMVW1-t	MT20	4.0	4.0	1.75	1.75
10	BMWW-t	MT20	3.0	4.0		
11	BS-t	MT20	3.0	6.0		
12	BMWWW-t	MT20	3.0	8.0		
13	BMWW-t	MT20	3.0	4.0		
14	BMVW1-t	MT20	4.0	4.0	1.50	1.75

A SIZE FOR SIZE SUBSTITUTION OF MITEK MII20 WITH TEE-LOK TL20 PLATES IS ALLOWED.

DIMENSIONS, SUPPORTS AND LOADINGS SPECIFIED BY FABRICATOR TO BE VERIFIED BY BUILDING DESIGNER

BEARINGS

JT	FACTORED GROSS REACTION VERT	HORZ	MAXIMUM FACTORED GROSS REACTION DOWN	HORZ	UPLIFT	INPUT BRG IN-SX	REQRD BRG IN-SX
14	1383	0	1383	0	0	5-8	5-8
9	1277	0	1277	0	0	1-10	1-10

UNFACTORED REACTIONS

JT	1ST LCASE COMBINED	MAX./MIN. COMPONENT REACTIONS SNOW	LIVE	PERM.LIVE	WIND	DEAD	SOIL
14	968	691 / 0	0 / 0	0 / 0	0 / 0	277 / 0	0 / 0
9	896	627 / 0	0 / 0	0 / 0	0 / 0	269 / 0	0 / 0

BEARING MATERIAL TO BE SPF NO.2 OR BETTER AT JOINT(S) 14, 9

BRACING

TOP CHORD TO BE SHEATHED OR MAX. PURLIN SPACING = 4.76 FT.
MAX. UNBRACED BOTTOM CHORD LENGTH = 10.00 FT. OR RIGID CEILING DIRECTLY APPLIED.

ALL PITCH BREAKS AND PERIMETER CORNER JOINTS MUST BE LATERALLY RESTRAINED.

LOADING

TOTAL LOAD CASES: (4)

CHORDS

MEMB. FR-TO	MAX. FACTORED FORCE (LBS)	FACTORED VERT. LOAD (PLF) FROM	TO	LC1 MAX CSI (LC)	MAX. UNBRAC LENGTH
1- 2	0 / 29	-77.4	-77.4	0.10 (1)	10.00
2- 3	0 / 16	-77.4	-77.4	0.14 (1)	10.00
3- 4	-1410 / 0	-77.4	-77.4	0.13 (1)	5.37
4- 5	-1537 / 0	-77.4	-77.4	0.47 (1)	4.76
5- 6	-1537 / 0	-77.4	-77.4	0.47 (1)	4.76
6- 7	-1344 / 0	-77.4	-77.4	0.13 (1)	5.47
7- 8	0 / 16	-77.4	-77.4	0.13 (1)	10.00
14- 2	-215 / 0	0.0	0.0	0.02 (1)	7.81
9- 8	-89 / 0	0.0	0.0	0.01 (1)	7.81
14-13	0 / 1151	-17.5	-17.5	0.30 (1)	10.00
13-12	0 / 1160	-17.5	-17.5	0.31 (1)	10.00
12-11	0 / 1105	-17.5	-17.5	0.29 (1)	10.00
11-10	0 / 1105	-17.5	-17.5	0.29 (1)	10.00
10- 9	0 / 1012	-17.5	-17.5	0.27 (1)	10.00

WEBS

MEMB. FR-TO	MAX. FACTORED FORCE (LBS)	MAX CSI (LC)
3-13	0 / 51	0.02 (4)
13- 4	0 / 134	0.04 (4)
4-12	0 / 506	0.11 (1)
12- 5	-623 / 0	0.37 (1)
12- 6	0 / 579	0.13 (1)
10- 6	0 / 94	0.03 (4)
10- 7	0 / 128	0.03 (1)
14- 3	-1604 / 0	0.63 (1)
7- 9	-1524 / 0	0.52 (1)

DESIGN CRITERIA

SPECIFIED LOADS:

TOP CH.	LL	=	23.3	PSF
	DL	=	3.0	PSF
BOT CH.	LL	=	0.0	PSF
	DL	=	7.0	PSF
TOTAL LOAD		=	33.3	PSF

SPACING = 24.0 IN. C/C

LOADING IN FLAT SECTION BASED ON A SLOPE OF 6.00/12

THIS TRUSS IS DESIGNED FOR RESIDENTIAL OR SMALL BUILDING REQUIREMENTS OF PART 9, NBCC 2010

THIS DESIGN COMPLIES WITH:
- PART 9 OF OBC 2012 , BCBC 2012 , ABC 2014
- CSA 086-09
- TPIC 2011

(55 % OF 27.2 P.S.F. G.S.L. PLUS 8.4 P.S.F. RAIN LOAD) EQUALS 23.3 P.S.F. SPECIFIED ROOF LIVE LOAD

ALLOWABLE DEFL.(LL)= L/360 (0.90")
CALCULATED VERT. DEFL.(LL) = L/ 999 (0.06")
ALLOWABLE DEFL.(TL)= L/360 (0.90")
CALCULATED VERT. DEFL.(TL) = L/ 999 (0.11")

CSI: TC=0.47 (4-5:1) , BC=0.31 (12-13:1) , WB=0.63 (3-14:1) , SSI=0.25 (4-5:1)

DOL LUMBER=1.00 NAIL=1.00 LS BEND=1.10 COMP=1.10 SHEAR=1.10 TENS= 1.10

COMPANION LIVE LOAD FACTOR = 0.50

TRUSS PLATE MANUFACTURER IS NOT RESPONSIBLE FOR QUALITY CONTROL IN THE TRUSS MANUFACTURING PLANT .

NAIL VALUES

PLATE	GRIP(DRY) (PSI) MAX	MIN	SHEAR (PLI) MAX	MIN	SECTION (PLI) MAX	MIN
MT20	618	354	1667	822	2284	1656

PLATE PLACEMENT TOL. = 0.250 inches

PLATE ROTATION TOL. = 5.0 Deg.

JSI GRIP= 0.90 (9) (INPUT = 0.90)
JSI METAL= 0.59 (3) (INPUT = 1.00)

LICENSED PROFESSIONAL ENGINEER
P.M. TREVISAN
100136551
March 20th, 2017
PROVINCE OF ONTARIO

RECEIVED
TOWN OF MILTON
MAR 29, 2017
17-5419
BUILDING DIVISION

READ ALL NOTES ON THIS PAGE AND ON THE ENGINEERING NOTE PAGE ENP-1. THE NOTE PAGE IS AN INTEGRAL PART OF THIS DRAWING AS IT CONTAINS SPECIFICATIONS AND CRITERIA USED IN THE DESIGN OF THIS COMPONENT.

KOTT

JOB NAME	TRUSS NAME	QUANTITY	PLY	JOB DESC.	DRWG NO.
PT0317-122	T07	4	1	TRUSS DESC. LECCO RIDGE-BLOCK 348	

KOTT , Stouffville, ON, CGC

Version 8.100 S Feb 9 2017 MiTek Industries, Inc. Mon Mar 20 10:10:31 2017 Page 1
ID:Mn2zxnCa6NqoASkSkmtLJtyfhrl-YIZSgB3ihlO08HdWQO2hU5vq79MEwnOAt8XsOEzZ4wc

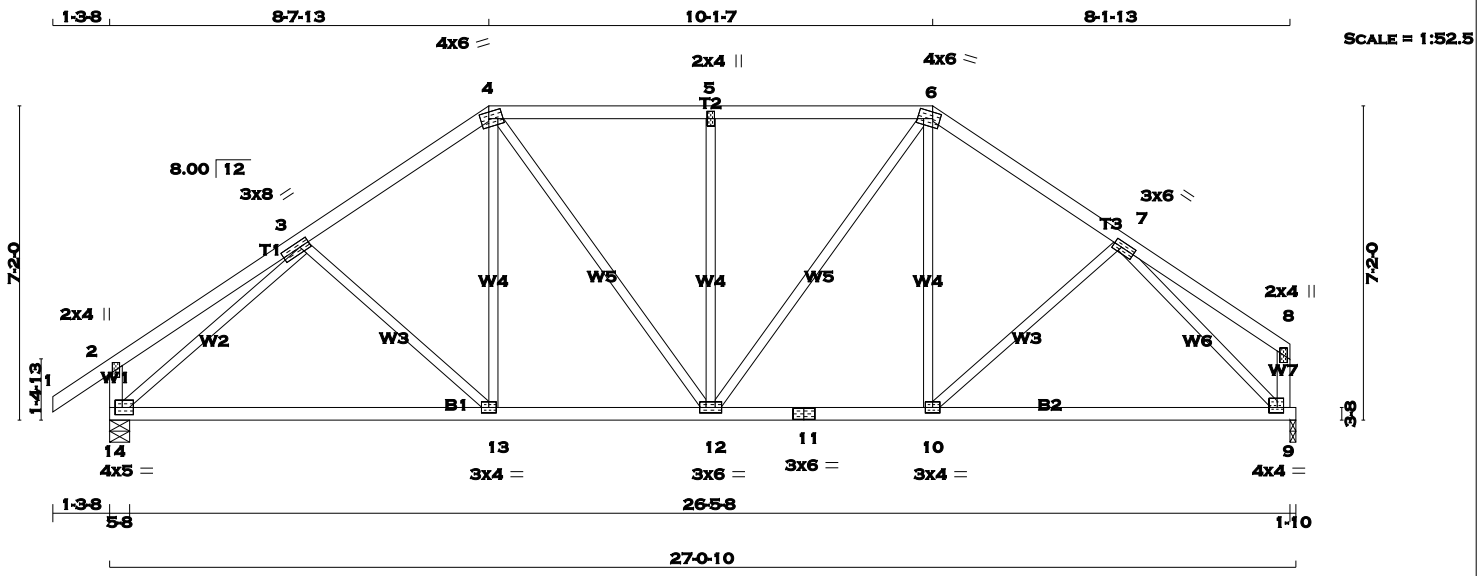

TOTAL WEIGHT = 4 X 117 = 469 lb
[M][F]

LUMBER

N. L. G. A. RULES

CHORDS	SIZE		LUMBER	DESCR.
1 - 4	2x4	DRY	No.2	SPF
4 - 6	2x4	DRY	No.2	SPF
6 - 8	2x4	DRY	No.2	SPF
14 - 2	2x4	DRY	No.2	SPF
9 - 8	2x4	DRY	No.2	SPF
14 - 11	2x4	DRY	No.2	SPF
11 - 9	2x4	DRY	No.2	SPF
ALL WEBS EXCEPT	2x3	DRY	No.2	SPF

DRY: SEASONED LUMBER.

PLATES (table is in inches)

JT	TYPE	PLATES	W	LEN	Y	X
2	TMV+p	MT20	2.0	4.0		
3	TMWW-t	MT20	3.0	8.0	1.50	2.75
4	TTWW-m	MT20	4.0	6.0	1.75	2.25
5	TMW+w	MT20	2.0	4.0		
6	TTWW-m	MT20	4.0	6.0	1.75	2.00
7	TMWW-t	MT20	3.0	6.0	1.50	2.25
8	TMV+p	MT20	2.0	4.0		
9	BMVW1-t	MT20	4.0	4.0	1.50	1.75
10	BMWW-t	MT20	3.0	4.0		
11	BS-t	MT20	3.0	6.0		
12	BMWWW-t	MT20	3.0	6.0		
13	BMWW-t	MT20	3.0	4.0		
14	BMVW1-t	MT20	4.0	5.0	2.00	2.00

A SIZE FOR SIZE SUBSTITUTION OF MITEK MII20 WITH TEE-LOK TL20 PLATES IS ALLOWED.

DIMENSIONS, SUPPORTS AND LOADINGS SPECIFIED BY FABRICATOR TO BE VERIFIED BY BUILDING DESIGNER

BEARINGS

JT	FACTORED GROSS REACTION VERT	HORZ	MAXIMUM FACTORED GROSS REACTION DOWN	HORZ	UPLIFT	INPUT BRG IN-SX	REQRD BRG IN-SX
14	1383	0	1383	0	0	5-8	5-8
9	1277	0	1277	0	0	1-10	1-10

UNFACTORED REACTIONS

JT	1ST LCASE COMBINED	MAX./MIN. COMPONENT REACTIONS SNOW	LIVE	PERM.LIVE	WIND	DEAD	SOIL
14	968	691 / 0	0 / 0	0 / 0	0 / 0	277 / 0	0 / 0
9	896	627 / 0	0 / 0	0 / 0	0 / 0	269 / 0	0 / 0

BEARING MATERIAL TO BE SPF NO.2 OR BETTER AT JOINT(S) 14, 9

BRACING

TOP CHORD TO BE SHEATHED OR MAX. PURLIN SPACING = 5.38 FT.
MAX. UNBRACED BOTTOM CHORD LENGTH = 10.00 FT. OR RIGID CEILING DIRECTLY APPLIED.

ALL PITCH BREAKS AND PERIMETER CORNER JOINTS MUST BE LATERALLY RESTRAINED.

LOADING

TOTAL LOAD CASES: (4)

CHORDS

MEMB. FR-TO	MAX. FACTORED FORCE (LBS)	FACTORED VERT. LOAD (PLF) FROM	TO	LC1 CSI (LC)	MAX UNBRAC LENGTH
1- 2	0 / 29	-77.4	-77.4	0.10 (1)	10.00
2- 3	0 / 21	-77.4	-77.4	0.23 (1)	10.00
3- 4	-1354 / 0	-77.4	-77.4	0.20 (1)	5.38
4- 5	-1282 / 0	-77.4	-77.4	0.27 (1)	5.40
5- 6	-1282 / 0	-77.4	-77.4	0.27 (1)	5.40
6- 7	-1309 / 0	-77.4	-77.4	0.18 (1)	5.46
7- 8	0 / 21	-77.4	-77.4	0.20 (1)	10.00
14- 2	-235 / 0	0.0	0.0	0.02 (1)	7.81
9- 8	-109 / 0	0.0	0.0	0.01 (1)	7.81
14-13	0 / 1183	-17.5	-17.5	0.37 (4)	10.00
13-12	0 / 1111	-17.5	-17.5	0.38 (4)	10.00
12-11	0 / 1074	-17.5	-17.5	0.34 (4)	10.00
11-10	0 / 1074	-17.5	-17.5	0.34 (4)	10.00
10- 9	0 / 1069	-17.5	-17.5	0.33 (4)	10.00

WEBS

MEMB. FR-TO	MAX. FACTORED FORCE (LBS)	MAX CSI (LC)
3-13	-101 / 31	0.06 (1)
13- 4	0 / 227	0.06 (4)
4-12	0 / 288	0.06 (1)
12- 5	-477 / 0	0.43 (1)
12- 6	0 / 350	0.08 (1)
10- 6	0 / 150	0.05 (4)
10- 7	0 / 56	0.02 (4)
14- 3	-1605 / 0	0.92 (1)
7- 9	-1539 / 0	0.75 (1)

DESIGN CRITERIA

SPECIFIED LOADS:

TOP CH.	LL	=	23.3	PSF
	DL	=	3.0	PSF
BOT CH.	LL	=	0.0	PSF
	DL	=	7.0	PSF
TOTAL LOAD		=	33.3	PSF

SPACING = 24.0 IN. C/C

LOADING IN FLAT SECTION BASED ON A SLOPE OF 6.00/12

THIS TRUSS IS DESIGNED FOR RESIDENTIAL OR SMALL BUILDING REQUIREMENTS OF PART 9, NBCC 2010

THIS DESIGN COMPLIES WITH:
- PART 9 OF OBC 2012 , BCBC 2012 , ABC 2014
- CSA 086-09
- TPIC 2011

(55 % OF 27.2 P.S.F. G.S.L. PLUS 8.4 P.S.F. RAIN LOAD) EQUALS 23.3 P.S.F. SPECIFIED ROOF LIVE LOAD

ALLOWABLE DEFL.(LL)= L/360 (0.90")
CALCULATED VERT. DEFL.(LL) = L/ 999 (0.05")
ALLOWABLE DEFL.(TL)= L/360 (0.90")
CALCULATED VERT. DEFL.(TL) = L/ 999 (0.18")

CSI: TC=0.27 (4-5:1) , BC=0.38 (12-13:4) , WB=0.92 (3-14:1) , SSI=0.19 (4-5:1)

DOL LUMBER=1.00 NAIL=1.00 LS BEND=1.10 COMP=1.10 SHEAR=1.10 TENS= 1.10

COMPANION LIVE LOAD FACTOR = 0.50

TRUSS PLATE MANUFACTURER IS NOT RESPONSIBLE FOR QUALITY CONTROL IN THE TRUSS MANUFACTURING PLANT .

NAIL VALUES

PLATE	GRIP(DRY) (PSI) MAX	MIN	SHEAR (PLI) MAX	MIN	SECTION (PLI) MAX	MIN
MT20	618	354	1667	822	2284	1656

PLATE PLACEMENT TOL. = 0.250 inches

PLATE ROTATION TOL. = 5.0 Deg.

JSI GRIP= 0.90 (3) (INPUT = 0.90)
JSI METAL= 0.40 (9) (INPUT = 1.00)

LICENSED PROFESSIONAL ENGINEER
P.M. TREVISAN
100136551
March 20th, 2017
PROVINCE OF ONTARIO

RECEIVED
TOWN OF MILTON
MAR 29, 2017
17-5419
BUILDING DIVISION

READ ALL NOTES ON THIS PAGE AND ON THE ENGINEERING NOTE PAGE ENP-1. THE NOTE PAGE IS AN INTEGRAL PART OF THIS DRAWING AS IT CONTAINS SPECIFICATIONS AND CRITERIA USED IN THE DESIGN OF THIS COMPONENT.

KOTT

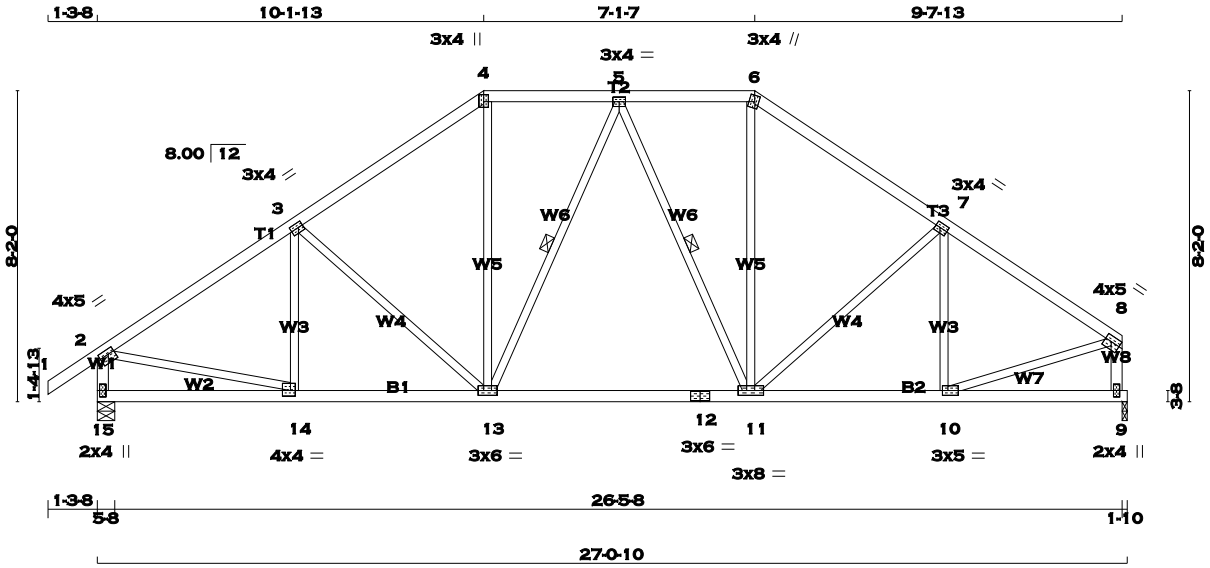

TOTAL WEIGHT = 4 X 122 = 487 lb

[M][F]

LUMBER

N. L. G. A. RULES

CHORDS	SIZE		LUMBER	DESCR.
1 - 4	2x4	DRY	No.2	SPF
4 - 6	2x4	DRY	No.2	SPF
6 - 8	2x4	DRY	No.2	SPF
15 - 2	2x4	DRY	No.2	SPF
9 - 8	2x4	DRY	No.2	SPF
15 - 12	2x4	DRY	No.2	SPF
12 - 9	2x4	DRY	No.2	SPF
ALL WEBS EXCEPT	2x3	DRY	No.2	SPF

DRY: SEASONED LUMBER.

PLATES (table is in inches)

JT	TYPE	PLATES	W	LEN	Y	X
2	TMVW-t	MT20	4.0	5.0	1.50	2.00
3	TMWW-t	MT20	3.0	4.0	1.50	1.50
4	TTW+p	MT20	3.0	4.0	2.25	1.50
5	TMWW-t	MT20	3.0	4.0		
6	TTW+m	MT20	3.0	4.0	2.00	1.25
7	TMWW-t	MT20	3.0	4.0	1.50	1.50
8	TMVW-t	MT20	4.0	5.0	1.75	Edge
9	BMV1+p	MT20	2.0	4.0		
10	BMWW-t	MT20	3.0	5.0	1.50	1.75
11	BMWWW-t	MT20	3.0	8.0		
12	BS-t	MT20	3.0	6.0		
13	BMWWW-t	MT20	3.0	6.0		
14	BMWW-t	MT20	4.0	4.0	1.75	1.50
15	BMV1+p	MT20	2.0	4.0		

Edge - INDICATES REFERENCE CORNER OF PLATE TOUCHES EDGE OF CHORD.

A SIZE FOR SIZE SUBSTITUTION OF MITEK MII20 WITH TEE-LOK TL20 PLATES IS ALLOWED.

DIMENSIONS, SUPPORTS AND LOADINGS SPECIFIED BY FABRICATOR TO BE VERIFIED BY BUILDING DESIGNER

BEARINGS

JT	FACTORED GROSS REACTION VERT	HORZ	MAXIMUM FACTORED GROSS REACTION DOWN	HORZ	UPLIFT	INPUT BRG IN-SX	REQRD BRG IN-SX
15	1383	0	1383	0	0	5-8	5-8
9	1277	0	1277	0	0	1-10	1-10

UNFACTORED REACTIONS

JT	1ST LCASE COMBINED	MAX./MIN. COMPONENT REACTIONS SNOW	LIVE	PERM.LIVE	WIND	DEAD	SOIL
15	968	691 / 0	0 / 0	0 / 0	0 / 0	277 / 0	0 / 0
9	896	627 / 0	0 / 0	0 / 0	0 / 0	269 / 0	0 / 0

BEARING MATERIAL TO BE SPF NO.2 OR BETTER AT JOINT(S) 15, 9

BRACING

TOP CHORD TO BE SHEATHED OR MAX. PURLIN SPACING = 5.12 FT.
MAX. UNBRACED BOTTOM CHORD LENGTH = 10.00 FT. OR RIGID CEILING DIRECTLY APPLIED.

ALL PITCH BREAKS AND PERIMETER CORNER JOINTS MUST BE LATERALLY RESTRAINED.

1 - 2x3 SPF No.2 LATERAL BRACE(S) AT 1/ 2 LENGTH OF 5-13, 5-11. DBS = 20-0-0 . CBF = 26 LBS.

DBS = DIAGONAL BRACE SPACING (MAX). CBF = CUMULATIVE BRACING FORCE. FASTEN LATERAL BRACE(S) USING (0.122"X3") SPIRAL NAILS : 1 NAIL FOR 2x3 BRACE(S), 2 FOR 1x4, 2x4, 2x5, 3 FOR 2x6, 4 FOR 2x8, 5 FOR 2x10, AND 6 FOR 2x12.

END VERTICAL(S) MUST BE SHEATHED OR HAVE BRACES AS INDICATED IN THE MAX. UNBRACED LENGTH COLUMN OF THE TABLE BELOW

LOADING

TOTAL LOAD CASES: (4)

CHORDS

MEMB. FR-TO	MAX. FACTORED FORCE (LBS)	FACTORED VERT. LOAD LC1 (PLF) FROM	TO	MAX CSI (LC)	MAX. UNBRAC LENGTH
1- 2	0 / 29	-77.4	-77.4	0.10 (1)	10.00
2- 3	-1461 / 0	-77.4	-77.4	0.29 (1)	5.12
3- 4	-1267 / 0	-77.4	-77.4	0.28 (1)	5.42
4- 5	-1037 / 0	-77.4	-77.4	0.13 (1)	6.04
5- 6	-1016 / 0	-77.4	-77.4	0.12 (1)	6.08
6- 7	-1240 / 0	-77.4	-77.4	0.25 (1)	5.49
7- 8	-1347 / 0	-77.4	-77.4	0.25 (1)	5.32
15- 2	-1343 / 0	0.0	0.0	0.14 (1)	6.99
9- 8	-1241 / 0	0.0	0.0	0.13 (1)	7.20
15-14	0 / 0	-17.5	-17.5	0.10 (4)	10.00
14-13	0 / 1237	-17.5	-17.5	0.28 (1)	10.00
13-12	0 / 1098	-17.5	-17.5	0.26 (1)	10.00
12-11	0 / 1098	-17.5	-17.5	0.26 (1)	10.00
11-10	0 / 1141	-17.5	-17.5	0.26 (1)	10.00
10- 9	0 / 0	-17.5	-17.5	0.08 (4)	10.00

WEBS

MEMB. FR-TO	MAX. FACTORED FORCE (LBS)	MAX CSI (LC)
14- 3	-168 / 29	0.06 (1)
3-13	-276 / 0	0.24 (1)
13- 4	0 / 434	0.10 (1)
13- 5	-153 / 0	0.08 (1)
5-11	-205 / 0	0.10 (1)
11- 6	0 / 416	0.09 (1)
11- 7	-176 / 0	0.15 (1)
10- 7	-261 / 0	0.09 (1)
2-14	0 / 1263	0.28 (1)
10- 8	0 / 1192	0.27 (1)

RECEIVED
TOWN OF MILTON
MAR 29, 2017
17-5419
BUILDING DIVISION

READ ALL NOTES ON THIS PAGE AND ON THE ENGINEERING NOTE PAGE ENP-1. THE NOTE PAGE IS AN INTEGRAL PART OF THIS DRAWING AS IT CONTAINS SPECIFICATIONS AND CRITERIA USED IN THE DESIGN OF THIS COMPONENT.

DESIGN CRITERIA

SPECIFIED LOADS:

TOP CH.	LL	=	23.3	PSF
	DL	=	3.0	PSF
BOT CH.	LL	=	0.0	PSF
	DL	=	7.0	PSF
TOTAL LOAD		=	33.3	PSF

SPACING = 24.0 IN. C/C

LOADING IN FLAT SECTION BASED ON A SLOPE OF 6.00/12

THIS TRUSS IS DESIGNED FOR RESIDENTIAL OR SMALL BUILDING REQUIREMENTS OF PART 9, NBCC 2010

THIS DESIGN COMPLIES WITH:
- PART 9 OF OBC 2012 , BCBC 2012 , ABC 2014
- CSA 086-09
- TPIC 2011

(55 % OF 27.2 P.S.F. G.S.L. PLUS 8.4 P.S.F. RAIN LOAD) EQUALS 23.3 P.S.F. SPECIFIED ROOF LIVE LOAD

ALLOWABLE DEFL.(LL)= L/360 (0.90")
CALCULATED VERT. DEFL.(LL) = L/ 999 (0.04")
ALLOWABLE DEFL.(TL)= L/360 (0.90")
CALCULATED VERT. DEFL.(TL) = L/ 999 (0.11")

CSI: TC=0.29 (2-3:1) , BC=0.28 (13-14:1) , WB=0.28 (2-14:1) , SSI=0.16 (2-3:1)

DOL LUMBER=1.00 NAIL=1.00 LS BEND=1.10 COMP=1.10 SHEAR=1.10 TENS= 1.10

COMPANION LIVE LOAD FACTOR = 0.50

TRUSS PLATE MANUFACTURER IS NOT RESPONSIBLE FOR QUALITY CONTROL IN THE TRUSS MANUFACTURING PLANT .

NAIL VALUES

PLATE	GRIP(DRY) (PSI) MAX	MIN	SHEAR (PLI) MAX	MIN	SECTION (PLI) MAX	MIN
MT20	618	354	1667	822	2284	1656

PLATE PLACEMENT TOL. = 0.250 inches

PLATE ROTATION TOL. = 5.0 Deg.

JSI GRIP= 0.90 (4) (INPUT = 0.90)
JSI METAL= 0.49 (2) (INPUT = 1.00)

KOTT

JOB NAME	TRUSS NAME	QUANTITY	PLY	JOB DESC.	DRWG NO.
PT0317-122	T09	4	1	TRUSS DESC. LECCO RIDGE-BLOCK 348	

KOTT , Stouffville, ON, CGC

Version 8.100 S Feb 9 2017 MiTek Industries, Inc. Mon Mar 20 10:10:32 2017 Page 1
ID:Mn2zxnCa6NqoASkSkmtLJtyfhrl-0U7qtX4KS3WtmQCiz5Zw0JSz0Zj3fLkJ5oGPwgzZ4wb

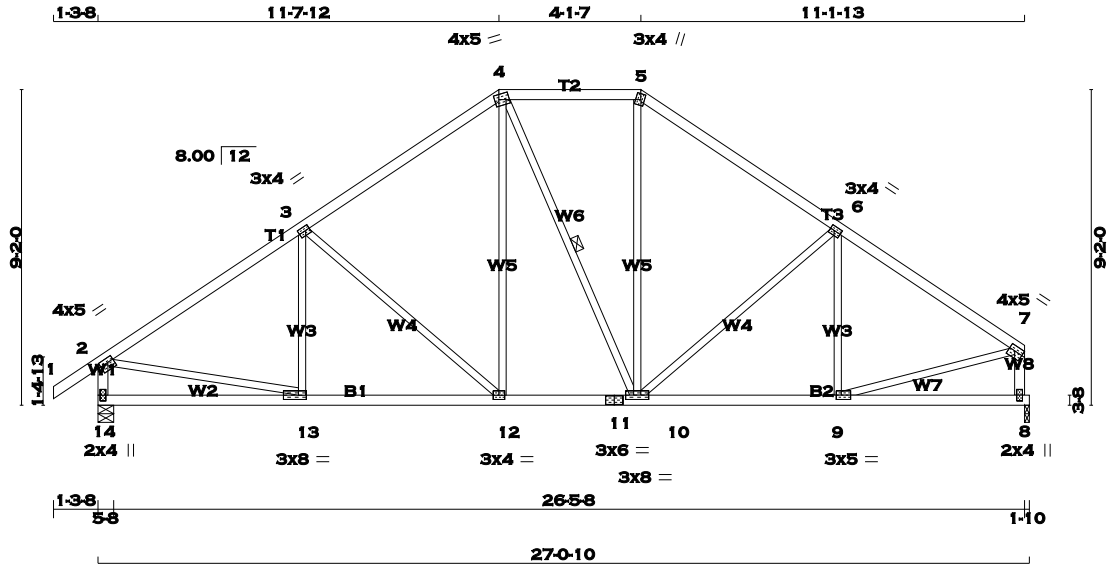

TOTAL WEIGHT = 4 X 122 = 487 lb
[M][F]

LUMBER
N. L. G. A. RULES

CHORDS	SIZE		LUMBER	DESCR.
1 - 4	2x4	DRY	No.2	SPF
4 - 5	2x4	DRY	No.2	SPF
5 - 7	2x4	DRY	No.2	SPF
14 - 2	2x4	DRY	No.2	SPF
8 - 7	2x4	DRY	No.2	SPF
14 - 11	2x4	DRY	No.2	SPF
11 - 8	2x4	DRY	No.2	SPF
ALL WEBS EXCEPT	2x3	DRY	No.2	SPF

DRY: SEASONED LUMBER.

PLATES (table is in inches)

JT	TYPE	PLATES	W	LEN	Y	X
2	TMVW-t	MT20	4.0	5.0	1.50	2.00
3	TMWW-t	MT20	3.0	4.0	1.50	1.50
4	TTWW-m	MT20	4.0	5.0	1.75	1.50
5	TTW+m	MT20	3.0	4.0	2.00	1.25
6	TMWW-t	MT20	3.0	4.0	1.50	1.50
7	TMVW-t	MT20	4.0	5.0	1.75	Edge
8	BMV1+p	MT20	2.0	4.0		
9	BMWW-t	MT20	3.0	5.0	1.50	1.75
10	BMWWW-t	MT20	3.0	8.0		
11	BS-t	MT20	3.0	6.0		
12	BMWW-t	MT20	3.0	4.0		
13	BMWW-t	MT20	3.0	8.0	1.50	2.75
14	BMV1+p	MT20	2.0	4.0		

Edge - INDICATES REFERENCE CORNER OF PLATE TOUCHES EDGE OF CHORD.

A SIZE FOR SIZE SUBSTITUTION OF MITEK MII20 WITH TEE-LOK TL20 PLATES IS ALLOWED.

DIMENSIONS, SUPPORTS AND LOADINGS SPECIFIED BY FABRICATOR TO BE VERIFIED BY BUILDING DESIGNER

BEARINGS

JT	FACTORED GROSS REACTION VERT	HORZ	MAXIMUM FACTORED GROSS REACTION DOWN	HORZ	UPLIFT	INPUT BRG IN-SX	REQRD BRG IN-SX
14	1383	0	1383	0	0	5-8	5-8
8	1277	0	1277	0	0	1-10	1-10

UNFACTORED REACTIONS

JT	1ST LCASE COMBINED	MAX./MIN. COMPONENT REACTIONS SNOW	LIVE	PERM.LIVE	WIND	DEAD	SOIL
14	968	691 / 0	0 / 0	0 / 0	0 / 0	277 / 0	0 / 0
8	896	627 / 0	0 / 0	0 / 0	0 / 0	269 / 0	0 / 0

BEARING MATERIAL TO BE SPF NO.2 OR BETTER AT JOINT(S) 14, 8

BRACING
TOP CHORD TO BE SHEATHED OR MAX. PURLIN SPACING = 4.99 FT.
MAX. UNBRACED BOTTOM CHORD LENGTH = 10.00 FT. OR RIGID CEILING DIRECTLY APPLIED.

ALL PITCH BREAKS AND PERIMETER CORNER JOINTS MUST BE LATERALLY RESTRAINED.

1 - 2x3 SPF No.2 LATERAL BRACE(S) AT 1/ 2 LENGTH OF 4-10. DBS = 20-0-0 . CBF = 3 LBS.

DBS = DIAGONAL BRACE SPACING (MAX). CBF = CUMULATIVE BRACING FORCE. FASTEN LATERAL BRACE(S) USING (0.122"X3") SPIRAL NAILS : 1 NAIL FOR 2x3 BRACE(S), 2 FOR 1x4, 2x4, 2x5, 3 FOR 2x6, 4 FOR 2x8, 5 FOR 2x10, AND 6 FOR 2x12.

END VERTICAL(S) MUST BE SHEATHED OR HAVE BRACES AS INDICATED IN THE MAX. UNBRACED LENGTH COLUMN OF THE TABLE BELOW

LOADING
TOTAL LOAD CASES: (4)

CHORDS

MEMB. FR-TO	MAX. FACTORED FORCE (LBS)	FACTORED VERT. LOAD LC1 (PLF) FROM	TO	MAX CSI (LC)	MAX. UNBRAC LENGTH
1- 2	0 / 29	-77.4	-77.4	0.10 (1)	10.00
2- 3	-1469 / 0	-77.4	-77.4	0.39 (1)	4.99
3- 4	-1176 / 0	-77.4	-77.4	0.36 (1)	5.45
4- 5	-946 / 0	-77.4	-77.4	0.18 (1)	6.17
5- 6	-1162 / 0	-77.4	-77.4	0.34 (1)	5.51
6- 7	-1373 / 0	-77.4	-77.4	0.34 (1)	5.17
14- 2	-1340 / 0	0.0	0.0	0.14 (1)	7.00
8- 7	-1238 / 0	0.0	0.0	0.13 (1)	7.22
14-13	0 / 0	-17.5	-17.5	0.15 (4)	10.00
13-12	0 / 1247	-17.5	-17.5	0.28 (1)	10.00
12-11	0 / 956	-17.5	-17.5	0.20 (1)	10.00
11-10	0 / 956	-17.5	-17.5	0.20 (1)	10.00
10- 9	0 / 1167	-17.5	-17.5	0.25 (1)	10.00
9- 8	0 / 0	-17.5	-17.5	0.13 (4)	10.00

WEBS

MEMB. FR-TO	MAX. FACTORED FORCE (LBS)	MAX CSI (LC)
13- 3	-110 / 67	0.05 (1)
3-12	-390 / 0	0.47 (1)
12- 4	0 / 333	0.07 (1)
4-10	-24 / 0	0.02 (1)
10- 5	0 / 301	0.07 (1)
10- 6	-297 / 0	0.36 (1)
9- 6	-194 / 37	0.08 (1)
2-13	0 / 1267	0.29 (1)
9- 7	0 / 1206	0.27 (1)

DESIGN CRITERIA

SPECIFIED LOADS:

TOP CH.	LL	=	23.3	PSF
	DL	=	3.0	PSF
BOT CH.	LL	=	0.0	PSF
	DL	=	7.0	PSF
TOTAL LOAD		=	33.3	PSF

SPACING = 24.0 IN. C/C

LOADING IN FLAT SECTION BASED ON A SLOPE OF 6.00/12

THIS TRUSS IS DESIGNED FOR RESIDENTIAL OR SMALL BUILDING REQUIREMENTS OF PART 9, NBCC 2010

THIS DESIGN COMPLIES WITH:
- PART 9 OF OBC 2012 , BCBC 2012 , ABC 2014
- CSA 086-09
- TPIC 2011

(55 % OF 27.2 P.S.F. G.S.L. PLUS 8.4 P.S.F. RAIN LOAD) EQUALS 23.3 P.S.F. SPECIFIED ROOF LIVE LOAD

ALLOWABLE DEFL.(LL)= L/360 (0.90")
CALCULATED VERT. DEFL.(LL) = L/ 999 (0.05")
ALLOWABLE DEFL.(TL)= L/360 (0.90")
CALCULATED VERT. DEFL.(TL) = L/ 999 (0.09")

CSI: TC=0.39 (2-3:1) , BC=0.28 (12-13:1) , WB=0.47 (3-12:1) , SSI=0.18 (2-3:1)

DOL LUMBER=1.00 NAIL=1.00 LS BEND=1.10 COMP=1.10 SHEAR=1.10 TENS= 1.10

COMPANION LIVE LOAD FACTOR = 0.50

TRUSS PLATE MANUFACTURER IS NOT RESPONSIBLE FOR QUALITY CONTROL IN THE TRUSS MANUFACTURING PLANT .

NAIL VALUES

PLATE	GRIP(DRY) (PSI) MAX	MIN	SHEAR (PLI) MAX	MIN	SECTION (PLI) MAX	MIN
MT20	618	354	1667	822	2284	1656

PLATE PLACEMENT TOL. = 0.250 inches

PLATE ROTATION TOL. = 5.0 Deg.

JSI GRIP= 0.90 (10) (INPUT = 0.90)
JSI METAL= 0.50 (2) (INPUT = 1.00)

LICENSED PROFESSIONAL ENGINEER
P.M. TREVISAN
100136551
March 20th, 2017
PROVINCE OF ONTARIO

RECEIVED
TOWN OF MILTON
MAR 29, 2017
17-5419
BUILDING DIVISION

READ ALL NOTES ON THIS PAGE AND ON THE ENGINEERING NOTE PAGE ENP-1. THE NOTE PAGE IS AN INTEGRAL PART OF THIS DRAWING AS IT CONTAINS SPECIFICATIONS AND CRITERIA USED IN THE DESIGN OF THIS COMPONENT.

KOTT

JOB NAME	TRUSS NAME	QUANTITY	PLY	JOB DESC.	DRWG NO.
PT0317-122	T10	4	1	TRUSS DESC. LECCO RIDGE-BLOCK 348	ENG JOB: PT0317-122

KOTT , Stouffville, ON, CGC

Version 8.100 S Feb 9 2017 MiTek Industries, Inc. Mon Mar 20 10:10:33 2017 Page 1

ID:Mn2zxnCa6NqoASkSkmtLJtyfhrl-UhhC5s5yDMekOanuXp59ZW_7sz2rOrsTKS0zT6zZ4wa

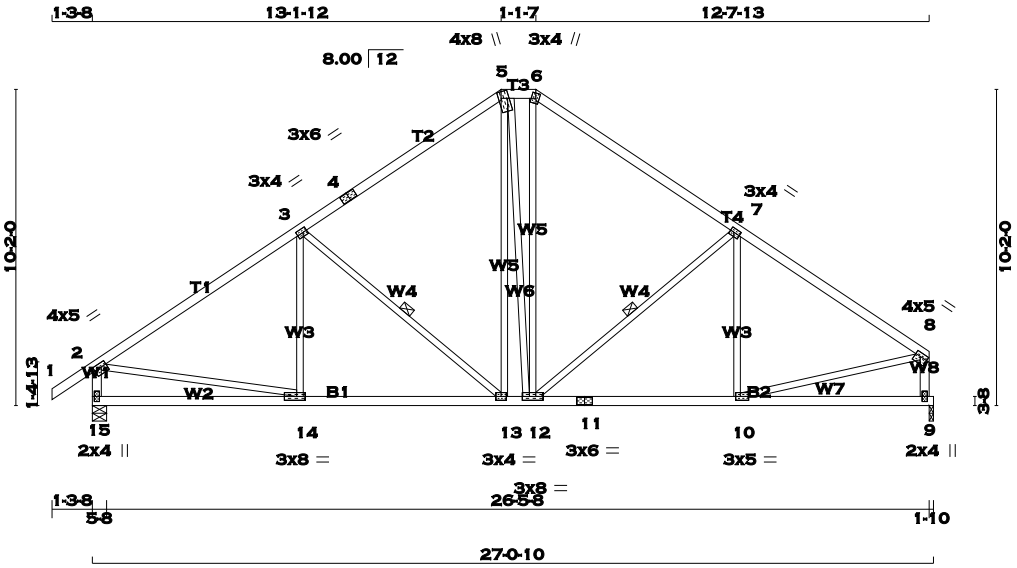

TOTAL WEIGHT = 4 X 128 = 511 lb

[M][F]

LUMBER

N. L. G. A. RULES

CHORDS	SIZE		LUMBER	DESCR.
1 - 4	2x4	DRY	No.2	SPF
4 - 5	2x4	DRY	No.2	SPF
5 - 6	2x4	DRY	No.2	SPF
6 - 8	2x4	DRY	No.2	SPF
15 - 2	2x4	DRY	No.2	SPF
9 - 8	2x4	DRY	No.2	SPF
15 - 11	2x4	DRY	No.2	SPF
11 - 9	2x4	DRY	No.2	SPF
ALL WEBS EXCEPT	2x3	DRY	No.2	SPF

DRY: SEASONED LUMBER.

PLATES (table is in inches)

JT	TYPE	PLATES	W	LEN	Y	X
2	TMVW-t	MT20	4.0	5.0	1.50	2.00
3	TMWW-t	MT20	3.0	4.0	1.50	1.50
4	TS-t	MT20	3.0	6.0		
5	TTWW+m	MT20	4.0	8.0	2.50	1.00
6	TTW+m	MT20	3.0	4.0	2.00	1.25
7	TMWW-t	MT20	3.0	4.0	1.50	1.50
8	TMVW-t	MT20	4.0	5.0	1.50	2.00
9	BMV1+p	MT20	2.0	4.0		
10	BMWW-t	MT20	3.0	5.0	1.50	1.75
11	BS-t	MT20	3.0	6.0		
12	BMWWW-t	MT20	3.0	8.0		
13	BMWW-t	MT20	3.0	4.0		
14	BMWW-t	MT20	3.0	8.0	1.50	3.25
15	BMV1+p	MT20	2.0	4.0		

A SIZE FOR SIZE SUBSTITUTION OF MITEK MII20 WITH TEE-LOK TL20 PLATES IS ALLOWED.

DIMENSIONS, SUPPORTS AND LOADINGS SPECIFIED BY FABRICATOR TO BE VERIFIED BY BUILDING DESIGNER

BEARINGS

JT	FACTORED GROSS REACTION VERT	HORZ	MAXIMUM FACTORED GROSS REACTION DOWN	HORZ	UPLIFT	INPUT BRG IN-SX	REQRD BRG IN-SX
15	1383	0	1383	0	0	5-8	5-8
9	1277	0	1277	0	0	1-10	1-10

UNFACTORED REACTIONS

JT	1ST LCASE COMBINED	MAX./MIN. COMPONENT REACTIONS SNOW	LIVE	PERM.LIVE	WIND	DEAD	SOIL
15	968	691 / 0	0 / 0	0 / 0	0 / 0	277 / 0	0 / 0
9	896	627 / 0	0 / 0	0 / 0	0 / 0	269 / 0	0 / 0

BEARING MATERIAL TO BE SPF NO.2 OR BETTER AT JOINT(S) 15, 9

BRACING

TOP CHORD TO BE SHEATHED OR MAX. PURLIN SPACING = 4.82 FT.
MAX. UNBRACED BOTTOM CHORD LENGTH = 10.00 FT. OR RIGID CEILING DIRECTLY APPLIED.

ALL PITCH BREAKS AND PERIMETER CORNER JOINTS MUST BE LATERALLY RESTRAINED.

1 - 2x3 SPF No.2 LATERAL BRACE(S) AT 1/ 2 LENGTH OF 3-13, 7-12. DBS = 20-0-0 . CBF = 62 LBS.

DBS = DIAGONAL BRACE SPACING (MAX). CBF = CUMULATIVE BRACING FORCE. FASTEN LATERAL BRACE(S) USING (0.122"X3") SPIRAL NAILS : 1 NAIL FOR 2x3 BRACE(S), 2 FOR 1x4, 2x4, 2x5, 3 FOR 2x6, 4 FOR 2x8, 5 FOR 2x10, AND 6 FOR 2x12.

END VERTICAL(S) MUST BE SHEATHED OR HAVE BRACES AS INDICATED IN THE MAX. UNBRACED LENGTH COLUMN OF THE TABLE BELOW

LOADING

TOTAL LOAD CASES: (4)

CHORDS MEMB. FR-TO	MAX. FACTORED FORCE (LBS)	FACTORED VERT. LOAD (PLF) FROM	TO	LC1	MAX CSI (LC)	MAX. UNBRAC LENGTH	WEBS MEMB. FR-TO	MAX. FACTORED FORCE (LBS)	MAX CSI (LC)
1- 2	0 / 29	-77.4	-77.4		0.10 (1)	10.00	14- 3	-67 / 92	0.04 (1)
2- 3	-1464 / 0	-77.4	-77.4		0.51 (1)	4.82	3-13	-492 / 0	0.25 (1)
3- 4	-1082 / 0	-77.4	-77.4		0.47 (1)	5.46	13- 5	0 / 336	0.08 (1)
4- 5	-1082 / 0	-77.4	-77.4		0.47 (1)	5.46	5-12	0 / 16	0.00 (4)
5- 6	-875 / 0	-77.4	-77.4		0.02 (1)	6.25	12- 6	0 / 348	0.08 (1)
6- 7	-1081 / 0	-77.4	-77.4		0.44 (1)	5.51	12- 7	-400 / 0	0.20 (1)
7- 8	-1382 / 0	-77.4	-77.4		0.44 (1)	5.02	10- 7	-149 / 62	0.08 (1)
15- 2	-1336 / 0	0.0	0.0		0.14 (1)	7.00	2-14	0 / 1263	0.28 (1)
9- 8	-1232 / 0	0.0	0.0		0.13 (1)	7.23	10- 8	0 / 1208	0.27 (1)
15-14	0 / 0	-17.5	-17.5		0.19 (4)	10.00			
14-13	0 / 1246	-17.5	-17.5		0.30 (1)	10.00			
13-12	0 / 874	-17.5	-17.5		0.23 (1)	10.00			
12-11	0 / 1178	-17.5	-17.5		0.28 (1)	10.00			
11-10	0 / 1178	-17.5	-17.5		0.28 (1)	10.00			
10- 9	0 / 0	-17.5	-17.5		0.17 (4)	10.00			

DESIGN CRITERIA

SPECIFIED LOADS:

TOP	CH.	LL	=	23.3	PSF
		DL	=	3.0	PSF
BOT	CH.	LL	=	0.0	PSF
		DL	=	7.0	PSF
TOTAL	LOAD		=	33.3	PSF

SPACING = 24.0 IN. C/C

LOADING IN FLAT SECTION BASED ON A SLOPE OF 6.00/12

THIS TRUSS IS DESIGNED FOR RESIDENTIAL OR SMALL BUILDING REQUIREMENTS OF PART 9, NBCC 2010

THIS DESIGN COMPLIES WITH:
- PART 9 OF OBC 2012 , BCBC 2012 , ABC 2014
- CSA 086-09
- TPIC 2011

(55 % OF 27.2 P.S.F. G.S.L. PLUS 8.4 P.S.F. RAIN LOAD) EQUALS 23.3 P.S.F. SPECIFIED ROOF LIVE LOAD

ALLOWABLE DEFL.(LL)= L/360 (0.90")
CALCULATED VERT. DEFL.(LL) = L/ 999 (0.05")
ALLOWABLE DEFL.(TL)= L/360 (0.90")
CALCULATED VERT. DEFL.(TL) = L/ 999 (0.11")

CSI: TC=0.51 (2-3:1) , BC=0.30 (13-14:1) , WB=0.28 (2-14:1) , SSI=0.21 (2-3:1)

DOL LUMBER=1.00 NAIL=1.00 LS BEND=1.10 COMP=1.10 SHEAR=1.10 TENS= 1.10

COMPANION LIVE LOAD FACTOR = 0.50

TRUSS PLATE MANUFACTURER IS NOT RESPONSIBLE FOR QUALITY CONTROL IN THE TRUSS MANUFACTURING PLANT .

NAIL VALUES

PLATE	GRIP(DRY) (PSI) MAX	MIN	SHEAR (PLI) MAX	MIN	SECTION (PLI) MAX	MIN
MT20	618	354	1667	822	2284	1656

PLATE PLACEMENT TOL. = 0.250 inches

PLATE ROTATION TOL. = 5.0 Deg.

JSI GRIP= 0.90 (10) (INPUT = 0.90)
JSI METAL= 0.50 (2) (INPUT = 1.00)

LICENSED PROFESSIONAL ENGINEER
P.M. TREVISAN
100136551
March 20th, 2017
PROVINCE OF ONTARIO

RECEIVED
TOWN OF MILTON
MAR 29, 2017
17-5419
BUILDING DIVISION

READ ALL NOTES ON THIS PAGE AND ON THE ENGINEERING NOTE PAGE ENP-1. THE NOTE PAGE IS AN INTEGRAL PART OF THIS DRAWING AS IT CONTAINS SPECIFICATIONS AND CRITERIA USED IN THE DESIGN OF THIS COMPONENT.

KOTT

JOB NAME	TRUSS NAME	QUANTITY	PLY	JOB DESC.	DRWG NO.
PT0317-122	T11	4	1	TRUSS DESC. LECCO RIDGE-BLOCK 348	ENG JOB: PT0317-122

KOTT , Stouffville, ON, CGC

Version 8.100 S Feb 9 2017 MiTek Industries, Inc. Mon Mar 20 10:10:33 2017 Page 1
ID:Mn2zxnCa6NqoASkSkmtLJtyfhrl-UhhC5s5yDMekOanuXp59ZW_66z2sOruTKS0zT6zZ4wa

SCALE = 1:73.9

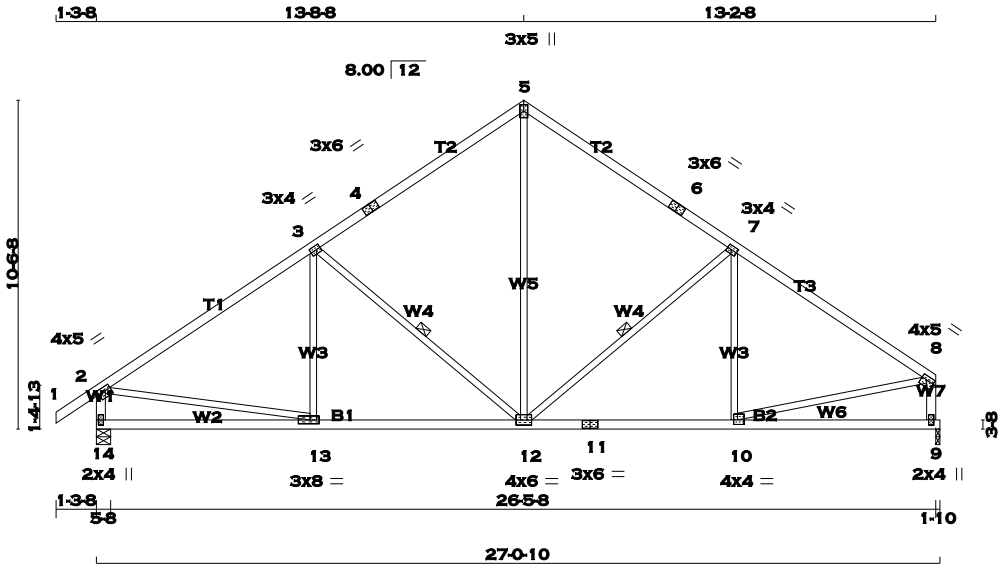

TOTAL WEIGHT = 4 X 114 = 455 lb

[M][F]

LUMBER

N. L. G. A. RULES

CHORDS	SIZE		LUMBER	DESCR.
1 - 4	2x4	DRY	No.2	SPF
4 - 5	2x4	DRY	No.2	SPF
5 - 6	2x4	DRY	No.2	SPF
6 - 8	2x4	DRY	No.2	SPF
14 - 2	2x4	DRY	No.2	SPF
9 - 8	2x4	DRY	No.2	SPF
14 - 11	2x4	DRY	No.2	SPF
11 - 9	2x4	DRY	No.2	SPF
ALL WEBS EXCEPT	2x3	DRY	No.2	SPF

DRY: SEASONED LUMBER.

PLATES (table is in inches)

JT	TYPE	PLATES	W	LEN	Y	X
2	TMVW-t	MT20	4.0	5.0	1.50	2.00
3	TMWW-t	MT20	3.0	4.0	1.50	1.50
4	TS-t	MT20	3.0	6.0		
5	TTW+p	MT20	3.0	5.0		
6	TS-t	MT20	3.0	6.0		
7	TMWW-t	MT20	3.0	4.0	1.50	1.50
8	TMVW-t	MT20	4.0	5.0	1.50	2.00
9	BMV1+p	MT20	2.0	4.0		
10	BMWW-t	MT20	4.0	4.0	1.75	1.50
11	BS-t	MT20	3.0	6.0		
12	BMWWW-t	MT20	4.0	6.0		
13	BMWW-t	MT20	3.0	8.0	1.50	3.50
14	BMV1+p	MT20	2.0	4.0		

A SIZE FOR SIZE SUBSTITUTION OF MITEK MII20 WITH TEE-LOK TL20 PLATES IS ALLOWED.

DIMENSIONS, SUPPORTS AND LOADINGS SPECIFIED BY FABRICATOR TO BE VERIFIED BY BUILDING DESIGNER

BEARINGS

JT	FACTORED GROSS REACTION VERT	HORZ	MAXIMUM FACTORED GROSS REACTION DOWN	HORZ	UPLIFT	INPUT BRG IN-SX	REQRD BRG IN-SX
14	1383	0	1383	0	0	5-8	5-8
9	1277	0	1277	0	0	1-10	1-10

UNFACTORED REACTIONS

JT	1ST LCASE COMBINED	MAX./MIN. COMPONENT REACTIONS SNOW	LIVE	PERM.LIVE	WIND	DEAD	SOIL
14	968	691 / 0	0 / 0	0 / 0	0 / 0	277 / 0	0 / 0
9	896	627 / 0	0 / 0	0 / 0	0 / 0	269 / 0	0 / 0

BEARING MATERIAL TO BE SPF NO.2 OR BETTER AT JOINT(S) 14, 9

BRACING

TOP CHORD TO BE SHEATHED OR MAX. PURLIN SPACING = 4.75 FT.
MAX. UNBRACED BOTTOM CHORD LENGTH = 10.00 FT. OR RIGID CEILING DIRECTLY APPLIED.

ALL PITCH BREAKS AND PERIMETER CORNER JOINTS MUST BE LATERALLY RESTRAINED.

1 - 2x3 SPF No.2 LATERAL BRACE(S) AT 1/ 2 LENGTH OF 3-12, 7-12. DBS = 20-0-0 . CBF = 65 LBS.

DBS = DIAGONAL BRACE SPACING (MAX). CBF = CUMULATIVE BRACING FORCE. FASTEN LATERAL BRACE(S) USING (0.122"X3") SPIRAL NAILS : 1 NAIL FOR 2x3 BRACE(S), 2 FOR 1x4, 2x4, 2x5, 3 FOR 2x6, 4 FOR 2x8, 5 FOR 2x10, AND 6 FOR 2x12.

END VERTICAL(S) MUST BE SHEATHED OR HAVE BRACES AS INDICATED IN THE MAX. UNBRACED LENGTH COLUMN OF THE TABLE BELOW

LOADING

TOTAL LOAD CASES: (4)

CHORDS

MEMB. FR-TO	MAX. FACTORED FORCE (LBS)	FACTORED VERT. LOAD (PLF) FROM	TO	LC1 MAX CSI (LC)	MAX. UNBRAC LENGTH
1- 2	0 / 29	-77.4	-77.4	0.10 (1)	10.00
2- 3	-1458 / 0	-77.4	-77.4	0.56 (1)	4.75
3- 4	-1054 / 0	-77.4	-77.4	0.51 (1)	5.44
4- 5	-1054 / 0	-77.4	-77.4	0.51 (1)	5.44
5- 6	-1051 / 0	-77.4	-77.4	0.48 (1)	5.49
6- 7	-1051 / 0	-77.4	-77.4	0.48 (1)	5.49
7- 8	-1383 / 0	-77.4	-77.4	0.49 (1)	4.95
14- 2	-1333 / 0	0.0	0.0	0.14 (1)	7.01
9- 8	-1231 / 0	0.0	0.0	0.13 (1)	7.23
14-13	0 / 0	-17.5	-17.5	0.20 (4)	10.00
13-12	0 / 1243	-17.5	-17.5	0.30 (1)	10.00
12-11	0 / 1180	-17.5	-17.5	0.28 (1)	10.00
11-10	0 / 1180	-17.5	-17.5	0.28 (1)	10.00
10- 9	0 / 0	-17.5	-17.5	0.18 (4)	10.00

WEBS

MEMB. FR-TO	MAX. FACTORED FORCE (LBS)	MAX CSI (LC)
13- 3	-60 / 96	0.03 (1)
3-12	-519 / 0	0.28 (1)
12- 5	0 / 733	0.16 (1)
12- 7	-437 / 0	0.24 (1)
10- 7	-131 / 70	0.07 (1)
2-13	0 / 1257	0.28 (1)
10- 8	0 / 1208	0.27 (1)

DESIGN CRITERIA

SPECIFIED LOADS:

TOP	CH.	LL	=	23.3	PSF
		DL	=	3.0	PSF
BOT	CH.	LL	=	0.0	PSF
		DL	=	7.0	PSF
TOTAL	LOAD		=	33.3	PSF

SPACING = 24.0 IN. C/C

THIS TRUSS IS DESIGNED FOR RESIDENTIAL OR SMALL BUILDING REQUIREMENTS OF PART 9, NBCC 2010

THIS DESIGN COMPLIES WITH:
- PART 9 OF OBC 2012 , BCBC 2012 , ABC 2014
- CSA 086-09
- TPIC 2011

(55 % OF 27.2 P.S.F. G.S.L. PLUS 8.4 P.S.F. RAIN LOAD) EQUALS 23.3 P.S.F. SPECIFIED ROOF LIVE LOAD

ALLOWABLE DEFL.(LL)= L/360 (0.90")
CALCULATED VERT. DEFL.(LL) = L/ 999 (0.05")
ALLOWABLE DEFL.(TL)= L/360 (0.90")
CALCULATED VERT. DEFL.(TL) = L/ 999 (0.10")

CSI: TC=0.56 (2-3:1) , BC=0.30 (12-13:1) , WB=0.28 (2-13:1) , SSI=0.22 (2-3:1)

DOL LUMBER=1.00 NAIL=1.00 LS BEND=1.10 COMP=1.10 SHEAR=1.10 TENS= 1.10

COMPANION LIVE LOAD FACTOR = 0.50

TRUSS PLATE MANUFACTURER IS NOT RESPONSIBLE FOR QUALITY CONTROL IN THE TRUSS MANUFACTURING PLANT .

NAIL VALUES

PLATE	GRIP(DRY) (PSI) MAX	MIN	SHEAR (PLI) MAX	MIN	SECTION (PLI) MAX	MIN
MT20	618	354	1667	822	2284	1656

PLATE PLACEMENT TOL. = 0.250 inches

PLATE ROTATION TOL. = 5.0 Deg.

JSI GRIP= 0.89 (13) (INPUT = 0.90)
JSI METAL= 0.50 (2) (INPUT = 1.00)

LICENSED PROFESSIONAL ENGINEER
P.M. TREVISAN
100136551
March 20th, 2017
PROVINCE OF ONTARIO

RECEIVED
TOWN OF MILTON
MAR 29, 2017
17-5419
BUILDING DIVISION

READ ALL NOTES ON THIS PAGE AND ON THE ENGINEERING NOTE PAGE ENP-1. THE NOTE PAGE IS AN INTEGRAL PART OF THIS DRAWING AS IT CONTAINS SPECIFICATIONS AND CRITERIA USED IN THE DESIGN OF THIS COMPONENT.

KOTT

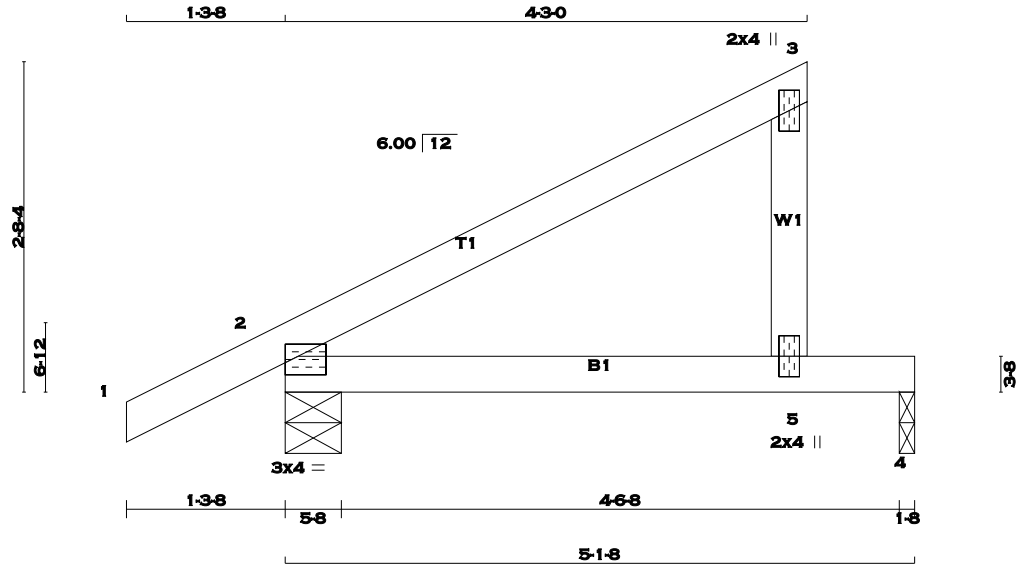

TOTAL WEIGHT = 6 X 15 = 93 lb [M]

LUMBER

N. L. G. A. RULES

CHORDS	SIZE		LUMBER	DESCR.
1 - 3	2x4	DRY	No.2	SPF
5 - 3	2x4	DRY	No.2	SPF
2 - 4	2x4	DRY	No.2	SPF

DRY: SEASONED LUMBER.

PLATES (table is in inches)

JT	TYPE	PLATES	W	LEN	Y	X
2	TMB1-I	MT20	3.0	4.0		Edge
3	TMV+p	MT20	2.0	4.0		
5	BMV+p	MT20	2.0	4.0		

Edge - INDICATES REFERENCE CORNER OF PLATE TOUCHES EDGE OF CHORD.

A SIZE FOR SIZE SUBSTITUTION OF MITEK MII20 WITH TEE-LOK TL20 PLATES IS ALLOWED.

DIMENSIONS, SUPPORTS AND LOADINGS SPECIFIED BY FABRICATOR TO BE VERIFIED BY BUILDING DESIGNER

BEARINGS

JT	FACTORED GROSS REACTION VERT	HORZ	MAXIMUM FACTORED GROSS REACTION DOWN	HORZ	UPLIFT	INPUT BRG IN-SX	REQRD BRG IN-SX
2	342	0	342	0	0	5-8	5-8
4	181	0	181	0	0	1-8	1-8

UNFACTORED REACTIONS

JT	1ST LCASE COMBINED	MAX./MIN. COMPONENT REACTIONS SNOW	LIVE	PERM.LIVE	WIND	DEAD	SOIL
2	238	179 / 0	0 / 0	0 / 0	0 / 0	59 / 0	0 / 0
4	129	82 / 0	0 / 0	0 / 0	0 / 0	46 / 0	0 / 0

BEARING MATERIAL TO BE SPF NO.2 OR BETTER AT JOINT(S) 2, 4

BRACING

TOP CHORD TO BE SHEATHED OR MAX. PURLIN SPACING = 10.00 FT.
MAX. UNBRACED BOTTOM CHORD LENGTH = 10.00 FT. OR RIGID CEILING DIRECTLY APPLIED.

ALL PITCH BREAKS AND PERIMETER CORNER JOINTS MUST BE LATERALLY RESTRAINED.

LOADING

TOTAL LOAD CASES: (4)

CHORDS MEMB. FR-TO	MAX. FACTORED FORCE (LBS)	FACTORED VERT. LOAD (PLF) FROM	TO	LC1 MAX CSI (LC)	MAX. UNBRAC LENGTH
1- 2	0 / 16	-77.4	-77.4	0.10 (1)	10.00
2- 3	0 / 0	-77.4	-77.4	0.24 (1)	10.00
5- 3	-164 / 0	0.0	0.0	0.02 (1)	7.81
2- 5	0 / 0	-17.5	-17.5	0.21 (1)	10.00
5- 4	0 / 0	-17.5	-17.5	0.21 (1)	10.00

WEBS MEMB. FR-TO	MAX. FACTORED FORCE (LBS)	MAX CSI (LC)

DESIGN CRITERIA

SPECIFIED LOADS:

TOP CH.	LL =	23.3	PSF
	DL =	3.0	PSF
BOT CH.	LL =	0.0	PSF
	DL =	7.0	PSF
TOTAL LOAD	=	33.3	PSF

SPACING = 24.0 IN. C/C

THIS TRUSS IS DESIGNED FOR RESIDENTIAL OR SMALL BUILDING REQUIREMENTS OF PART 9, NBCC 2010

THIS DESIGN COMPLIES WITH:
- PART 9 OF OBC 2012 , BCBC 2012 , ABC 2014
- CSA 086-09
- TPIC 2011

(55 % OF 27.2 P.S.F. G.S.L. PLUS 8.4 P.S.F. RAIN LOAD) EQUALS 23.3 P.S.F. SPECIFIED ROOF LIVE LOAD

ALLOWABLE DEFL.(LL)= L/360 (0.19")
CALCULATED VERT. DEFL.(LL) = L/ 999 (0.03")
ALLOWABLE DEFL.(TL)= L/360 (0.19")
CALCULATED VERT. DEFL.(TL) = L/ 801 (0.08")

CSI: TC=0.24 (2-3:1) , BC=0.21 (2-5:1) , WB=0.00 (n/a:0) , SSI=0.14 (4-5:1)

DOL LUMBER=1.00 NAIL=1.00 LS BEND=1.10 COMP=1.10 SHEAR=1.10 TENS= 1.10

COMPANION LIVE LOAD FACTOR = 0.50

TRUSS PLATE MANUFACTURER IS NOT RESPONSIBLE FOR QUALITY CONTROL IN THE TRUSS MANUFACTURING PLANT .

NAIL VALUES

PLATE	GRIP(DRY) (PSI) MAX	MIN	SHEAR (PLI) MAX	MIN	SECTION (PLI) MAX	MIN
MT20	618	354	1667	822	2284	1656

PLATE PLACEMENT TOL. = 0.250 inches

PLATE ROTATION TOL. = 5.0 Deg.

JSI GRIP= 0.48 (2) (INPUT = 0.90)
JSI METAL= 0.04 (3) (INPUT = 1.00)

LICENSED PROFESSIONAL ENGINEER
P.M. TREVISAN
100136551
March 20th, 2017
PROVINCE OF ONTARIO

RECEIVED
TOWN OF MILTON
MAR 29, 2017
17-5419
BUILDING DIVISION

READ ALL NOTES ON THIS PAGE AND ON THE ENGINEERING NOTE PAGE ENP-1. THE NOTE PAGE IS AN INTEGRAL PART OF THIS DRAWING AS IT CONTAINS SPECIFICATIONS AND CRITERIA USED IN THE DESIGN OF THIS COMPONENT.

KOTT

JOB NAME	TRUSS NAME	QUANTITY	PLY	JOB DESC.	DRWG NO.
PT0317-122	**T13**	**6**	**1**	TRUSS DESC. LECCO RIDGE-BLOCK 348	

KOTT , Stouffville, ON, CGC

Version 8.100 S Feb 9 2017 MiTek Industries, Inc. Mon Mar 20 10:10:34 2017 Page 1
ID:Mn2zxnCa6NqoASkSkmtLJtyfhrl-ytFaIC6a_gmb?kM55WcO6kXMJNPX7MYcZ6lW?YzZ4wZ

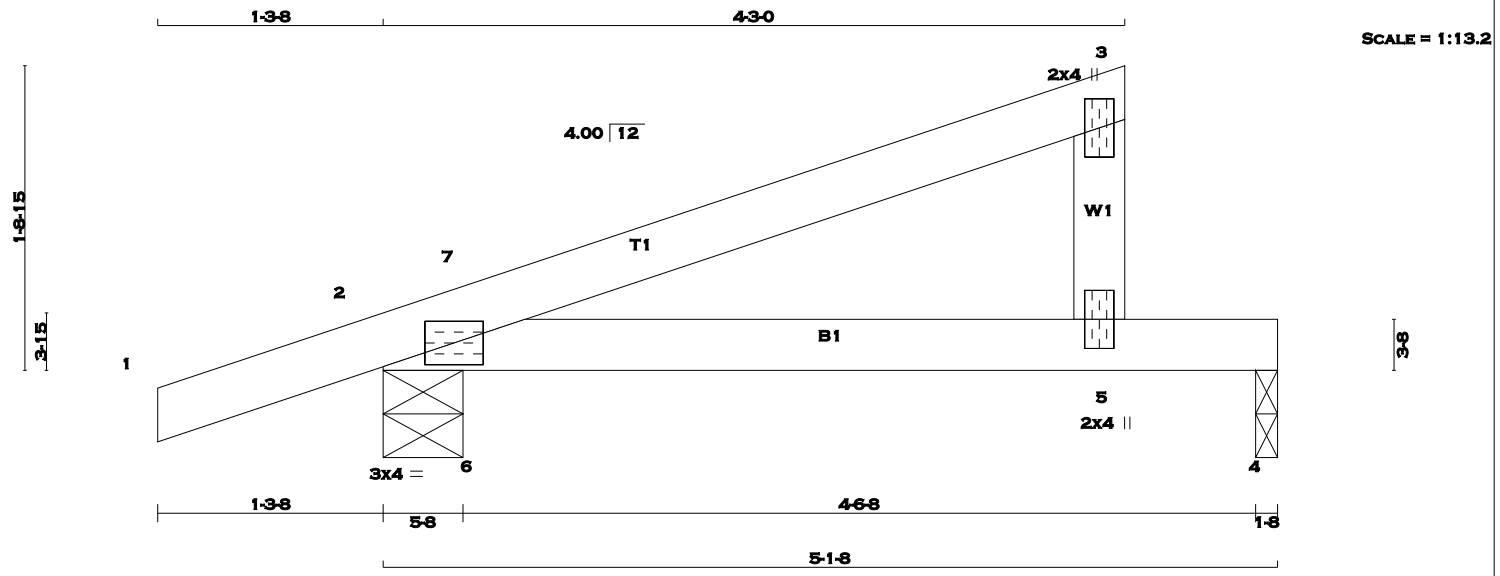

TOTAL WEIGHT = 6 X 14 = 84 lb [M]

LUMBER
N. L. G. A. RULES

CHORDS	SIZE		LUMBER	DESCR.
1 - 3	2x4	DRY	No.2	SPF
5 - 3	2x4	DRY	No.2	SPF
2 - 4	2x4	DRY	No.2	SPF

DRY: SEASONED LUMBER.

PLATES (table is in inches)

JT	TYPE	PLATES	W	LEN	Y	X
2	TMB1-I	MT20	3.0	4.0		
3	TMV+p	MT20	2.0	4.0		
5	BMV+p	MT20	2.0	4.0		

A SIZE FOR SIZE SUBSTITUTION OF MITEK MII20 WITH TEE-LOK TL20 PLATES IS ALLOWED.

DIMENSIONS, SUPPORTS AND LOADINGS SPECIFIED BY FABRICATOR TO BE VERIFIED BY BUILDING DESIGNER

BEARINGS

JT	FACTORED GROSS REACTION VERT	HORZ	MAXIMUM FACTORED GROSS REACTION DOWN	HORZ	UPLIFT	INPUT BRG IN-SX	REQRD BRG IN-SX
2	341	0	341	0	0	5-8	5-8
4	181	0	181	0	0	1-8	1-8

UNFACTORED REACTIONS

JT	1ST LCASE COMBINED	MAX./MIN. COMPONENT REACTIONS SNOW	LIVE	PERM.LIVE	WIND	DEAD	SOIL
2	237	178 / 0	0 / 0	0 / 0	0 / 0	59 / 0	0 / 0
4	129	82 / 0	0 / 0	0 / 0	0 / 0	46 / 0	0 / 0

BEARING MATERIAL TO BE SPF NO.2 OR BETTER AT JOINT(S) 2, 4

BRACING
TOP CHORD TO BE SHEATHED OR MAX. PURLIN SPACING = 6.25 FT.
MAX. UNBRACED BOTTOM CHORD LENGTH = 10.00 FT. OR RIGID CEILING DIRECTLY APPLIED.

ALL PITCH BREAKS AND PERIMETER CORNER JOINTS MUST BE LATERALLY RESTRAINED.

LOADING
TOTAL LOAD CASES: (4)

CHORDS

MEMB. FR-TO	MAX. FACTORED FORCE (LBS)	FACTORED VERT. LOAD (PLF) FROM	TO	LC1 MAX CSI (LC)	MAX. UNBRAC LENGTH
1- 2	0 / 15	-77.4	-77.4	0.10 (1)	10.00
2- 7	-29 / 0	-77.4	-77.4	0.08 (4)	6.25
7- 3	0 / 4	-77.4	-77.4	0.21 (1)	10.00
5- 3	-154 / 0	0.0	0.0	0.02 (1)	7.81
2- 6	0 / 0	-17.5	-17.5	0.11 (1)	10.00
6- 5	0 / 0	-17.5	-17.5	0.21 (1)	10.00
5- 4	0 / 0	-17.5	-17.5	0.21 (1)	10.00

WEBS

MEMB. FR-TO	MAX. FACTORED FORCE (LBS)	MAX CSI (LC)
6- 7	-71 / 51	0.00 (1)

DESIGN CRITERIA

SPECIFIED LOADS:

TOP	CH.	LL	=	23.3	PSF
		DL	=	3.0	PSF
BOT	CH.	LL	=	0.0	PSF
		DL	=	7.0	PSF
TOTAL	LOAD		=	33.3	PSF

SPACING = 24.0 IN. C/C

THIS TRUSS IS DESIGNED FOR RESIDENTIAL OR SMALL BUILDING REQUIREMENTS OF PART 9, NBCC 2010

THIS DESIGN COMPLIES WITH:
- PART 9 OF OBC 2012 , BCBC 2012 , ABC 2014
- CSA 086-09
- TPIC 2011

(55 % OF 27.2 P.S.F. G.S.L. PLUS 8.4 P.S.F. RAIN LOAD) EQUALS 23.3 P.S.F. SPECIFIED ROOF LIVE LOAD

ALLOWABLE DEFL.(LL)= L/360 (0.19")
CALCULATED VERT. DEFL.(LL) = L/ 999 (0.05")
ALLOWABLE DEFL.(TL)= L/360 (0.19")
CALCULATED VERT. DEFL.(TL) = L/ 694 (0.09")

CSI: TC=0.21 (3-7:1) , BC=0.21 (5-6:1) , WB=0.00 (6-7:1) , SSI=0.14 (4-5:1)

DOL LUMBER=1.00 NAIL=1.00 LS BEND=1.10 COMP=1.10 SHEAR=1.10 TENS= 1.10

COMPANION LIVE LOAD FACTOR = 0.50

TRUSS PLATE MANUFACTURER IS NOT RESPONSIBLE FOR QUALITY CONTROL IN THE TRUSS MANUFACTURING PLANT .

NAIL VALUES

PLATE	GRIP(DRY) (PSI) MAX	MIN	SHEAR (PLI) MAX	MIN	SECTION (PLI) MAX	MIN
MT20	618	354	1667	822	2284	1656

PLATE PLACEMENT TOL. = 0.250 inches

PLATE ROTATION TOL. = 5.0 Deg.

JSI GRIP= 0.17 (2) (INPUT = 0.90)
JSI METAL= 0.05 (2) (INPUT = 1.00)

LICENSED PROFESSIONAL ENGINEER
P.M. TREVISAN
100136551
March 20th, 2017
PROVINCE OF ONTARIO

RECEIVED
TOWN OF MILTON
MAR 29, 2017
17-5419
BUILDING DIVISION

READ ALL NOTES ON THIS PAGE AND ON THE ENGINEERING NOTE PAGE ENP-1. THE NOTE PAGE IS AN INTEGRAL PART OF THIS DRAWING AS IT CONTAINS SPECIFICATIONS AND CRITERIA USED IN THE DESIGN OF THIS COMPONENT.

KOTT

JOB NAME	TRUSS NAME	QUANTITY	PLY	JOB DESC.	DRWG NO.
PT0317-122	**T14**	**2**	**1**	TRUSS DESC. LECCO RIDGE-BLOCK 348	

KOTT , Stouffville, ON, CGC

Version 8.100 S Feb 9 2017 MiTek Industries, Inc. Mon Mar 20 10:10:34 2017 Page 1
ID:Mn2zxnCa6NqoASkSkmtLJtyfhrl-ytFaIC6a_gmb?kM55WcO6kXO?NSC7MrcZ6lW?YzZ4wZ

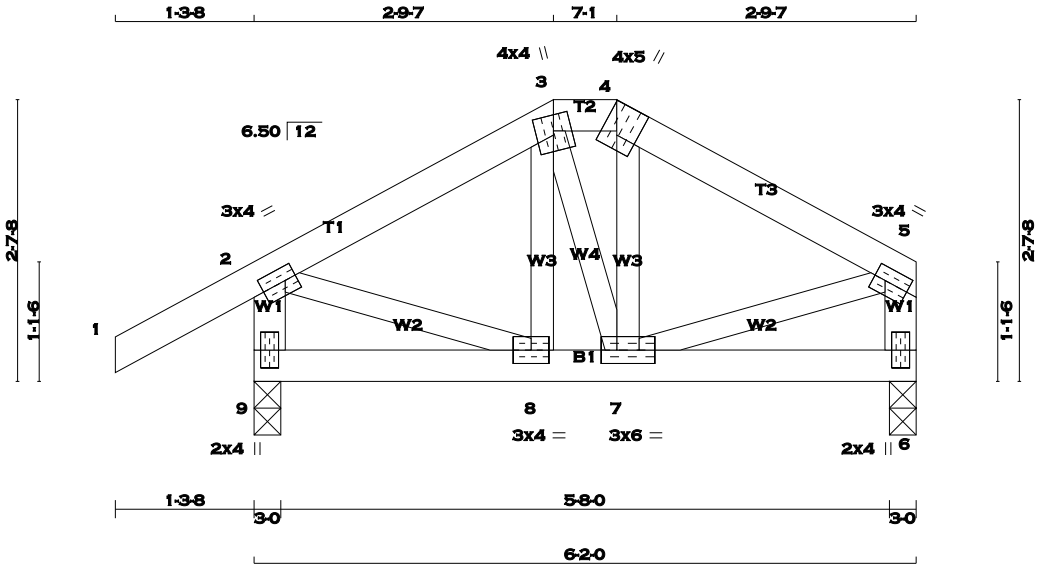

TOTAL WEIGHT = 2 X 27 = 55 lb

LUMBER

N. L. G. A. RULES

CHORDS	SIZE		LUMBER	DESCR.
1 - 3	2x4	DRY	No.2	SPF
3 - 4	2x4	DRY	No.2	SPF
4 - 5	2x4	DRY	No.2	SPF
9 - 2	2x4	DRY	No.2	SPF
6 - 5	2x4	DRY	No.2	SPF
9 - 6	2x4	DRY	No.2	SPF
ALL WEBS EXCEPT	2x3	DRY	No.2	SPF

DRY: SEASONED LUMBER.

PLATES (table is in inches)

JT	TYPE	PLATES	W	LEN	Y	X
2	TMVW-t	MT20	3.0	4.0	1.50	1.25
3	TTWW+m	MT20	4.0	4.0	1.75	2.00
4	TTW+h	MT20	4.0	5.0	3.00	1.50
5	TMVW-t	MT20	3.0	4.0	1.50	1.25
6	BMV1+p	MT20	2.0	4.0		
7	BMWWW-t	MT20	3.0	6.0		
8	BMWW-t	MT20	3.0	4.0		
9	BMV1+p	MT20	2.0	4.0		

A SIZE FOR SIZE SUBSTITUTION OF MITEK MII20 WITH TEE-LOK TL20 PLATES IS ALLOWED.

DIMENSIONS, SUPPORTS AND LOADINGS SPECIFIED BY FABRICATOR TO BE VERIFIED BY BUILDING DESIGNER

BEARINGS

JT	FACTORED GROSS REACTION VERT	HORZ	MAXIMUM FACTORED GROSS REACTION DOWN	HORZ	UPLIFT	INPUT BRG IN-SX	REQRD BRG IN-SX
9	398	0	398	0	0	3-0	3-0
6	292	0	292	0	0	3-0	3-0

UNFACTORED REACTIONS

JT	1ST LCASE COMBINED	MAX./MIN. COMPONENT REACTIONS SNOW	LIVE	PERM.LIVE	WIND	DEAD	SOIL
9	277	207 / 0	0 / 0	0 / 0	0 / 0	70 / 0	0 / 0
6	205	144 / 0	0 / 0	0 / 0	0 / 0	62 / 0	0 / 0

BEARING MATERIAL TO BE SPF NO.2 OR BETTER AT JOINT(S) 9, 6

BRACING

TOP CHORD TO BE SHEATHED OR MAX. PURLIN SPACING = 6.25 FT.
MAX. UNBRACED BOTTOM CHORD LENGTH = 10.00 FT. OR RIGID CEILING DIRECTLY APPLIED.

ALL PITCH BREAKS AND PERIMETER CORNER JOINTS MUST BE LATERALLY RESTRAINED.

LOADING

TOTAL LOAD CASES: (4)

CHORDS

MEMB. FR-TO	MAX. FACTORED FORCE (LBS)	FACTORED VERT. LOAD (PLF) FROM	TO	LC1 MAX CSI (LC)	MAX. UNBRAC LENGTH
1- 2	0 / 25	-77.4	-77.4	0.10 (1)	10.00
2- 3	-221 / 0	-77.4	-77.4	0.08 (1)	6.25
3- 4	-195 / 0	-77.4	-77.4	0.00 (1)	6.25
4- 5	-221 / 0	-77.4	-77.4	0.08 (1)	6.25
9- 2	-377 / 0	0.0	0.0	0.04 (1)	7.81
6- 5	-271 / 0	0.0	0.0	0.03 (1)	7.81
9- 8	0 / 0	-17.5	-17.5	0.03 (4)	10.00
8- 7	0 / 195	-17.5	-17.5	0.04 (1)	10.00
7- 6	0 / 0	-17.5	-17.5	0.03 (4)	10.00

WEBS

MEMB. FR-TO	MAX. FACTORED FORCE (LBS)	MAX CSI (LC)
8- 3	-24 / 18	0.01 (4)
7- 4	-25 / 20	0.01 (4)
2- 8	0 / 203	0.05 (1)
7- 5	0 / 202	0.05 (1)
3- 7	-1 / 1	0.00 (4)

DESIGN CRITERIA

SPECIFIED LOADS:

TOP CH.	LL	=	23.3	PSF
	DL	=	3.0	PSF
BOT CH.	LL	=	0.0	PSF
	DL	=	7.0	PSF
TOTAL LOAD		=	33.3	PSF

SPACING = 24.0 IN. C/C

LOADING IN FLAT SECTION BASED ON A SLOPE OF 6.00/12

THIS TRUSS IS DESIGNED FOR RESIDENTIAL OR SMALL BUILDING REQUIREMENTS OF PART 9, NBCC 2010

THIS DESIGN COMPLIES WITH:
- PART 9 OF OBC 2012 , BCBC 2012 , ABC 2014
- CSA 086-09
- TPIC 2011

(55 % OF 27.2 P.S.F. G.S.L. PLUS 8.4 P.S.F. RAIN LOAD) EQUALS 23.3 P.S.F. SPECIFIED ROOF LIVE LOAD

ALLOWABLE DEFL.(LL)= L/360 (0.21")
CALCULATED VERT. DEFL.(LL) = L/ 999 (0.00")
ALLOWABLE DEFL.(TL)= L/360 (0.21")
CALCULATED VERT. DEFL.(TL) = L/ 999 (0.00")

CSI: TC=0.10 (1-2:1) , BC=0.04 (7-8:1) , WB=0.05 (2-8:1) , SSI=0.07 (2-3:1)

DOL LUMBER=1.00 NAIL=1.00 LS BEND=1.10 COMP=1.10 SHEAR=1.10 TENS= 1.10

COMPANION LIVE LOAD FACTOR = 0.50

TRUSS PLATE MANUFACTURER IS NOT RESPONSIBLE FOR QUALITY CONTROL IN THE TRUSS MANUFACTURING PLANT .

NAIL VALUES

PLATE	GRIP(DRY) (PSI) MAX	MIN	SHEAR (PLI) MAX	MIN	SECTION (PLI) MAX	MIN
MT20	618	354	1667	822	2284	1656

PLATE PLACEMENT TOL. = 0.250 inches

PLATE ROTATION TOL. = 5.0 Deg.

JSI GRIP= 0.51 (2) (INPUT = 0.90)
JSI METAL= 0.12 (2) (INPUT = 1.00)

LICENSED PROFESSIONAL ENGINEER
P.M. TREVISAN
100136551
March 20th, 2017
PROVINCE OF ONTARIO

RECEIVED
TOWN OF MILTON
MAR 29, 2017
17-5419
BUILDING DIVISION

READ ALL NOTES ON THIS PAGE AND ON THE ENGINEERING NOTE PAGE ENP-1. THE NOTE PAGE IS AN INTEGRAL PART OF THIS DRAWING AS IT CONTAINS SPECIFICATIONS AND CRITERIA USED IN THE DESIGN OF THIS COMPONENT.

KOTT

Version 8.100 S Feb 9 2017 MiTek Industries, Inc. Mon Mar 20 10:10:35 2017 Page 1
ID:Mn2zxnCa6NqoASkSkmtLJtyfhrl-Q3oyWY7Cl_uSduxHfE7dex3ZlnoNsp6mnmV4X?zZ4wY

SCALE = 1:22.9

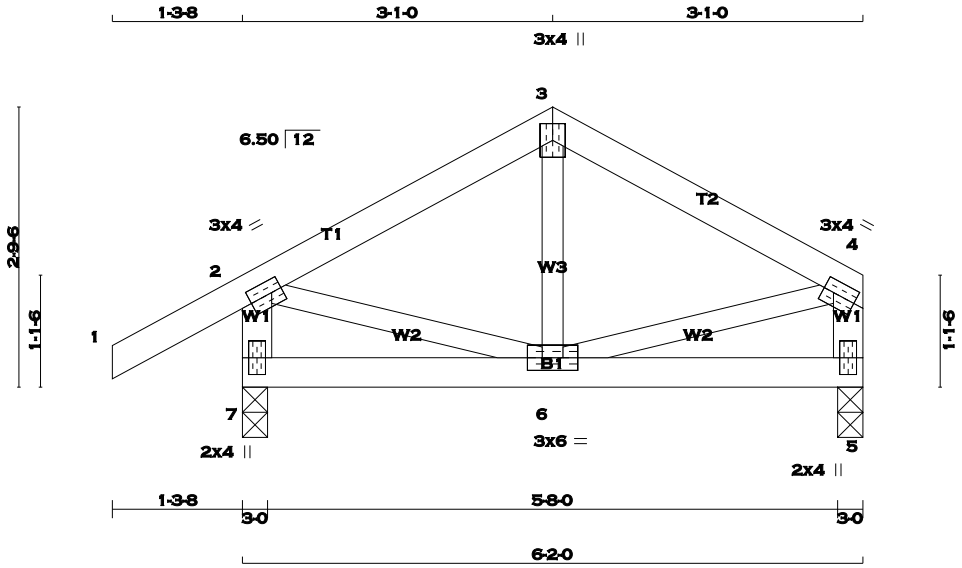

TOTAL WEIGHT = 4 X 25 = 99 lb

[M][F]

LUMBER

N. L. G. A. RULES

CHORDS	SIZE		LUMBER	DESCR.
1 - 3	2x4	DRY	No.2	SPF
3 - 4	2x4	DRY	No.2	SPF
7 - 2	2x4	DRY	No.2	SPF
5 - 4	2x4	DRY	No.2	SPF
7 - 5	2x4	DRY	No.2	SPF
ALL WEBS EXCEPT	2x3	DRY	No.2	SPF

DRY: SEASONED LUMBER.

PLATES (table is in inches)

JT	TYPE	PLATES	W	LEN	Y	X
2	TMVW-t	MT20	3.0	4.0	1.50	1.25
3	TTW+p	MT20	3.0	4.0		
4	TMVW-t	MT20	3.0	4.0	1.50	1.25
5	BMV1+p	MT20	2.0	4.0		
6	BMWWW-t	MT20	3.0	6.0		
7	BMV1+p	MT20	2.0	4.0		

A SIZE FOR SIZE SUBSTITUTION OF MITEK MII20 WITH TEE-LOK TL20 PLATES IS ALLOWED.

DIMENSIONS, SUPPORTS AND LOADINGS SPECIFIED BY FABRICATOR TO BE VERIFIED BY BUILDING DESIGNER

BEARINGS

JT	FACTORED GROSS REACTION VERT	HORZ	MAXIMUM FACTORED GROSS REACTION DOWN	HORZ	UPLIFT	INPUT BRG IN-SX	REQRD BRG IN-SX
7	398	0	398	0	0	3-0	3-0
5	292	0	292	0	0	3-0	3-0

UNFACTORED REACTIONS

JT	1ST LCASE COMBINED	MAX./MIN. COMPONENT REACTIONS SNOW	LIVE	PERM.LIVE	WIND	DEAD	SOIL
7	277	207 / 0	0 / 0	0 / 0	0 / 0	70 / 0	0 / 0
5	205	144 / 0	0 / 0	0 / 0	0 / 0	62 / 0	0 / 0

BEARING MATERIAL TO BE SPF NO.2 OR BETTER AT JOINT(S) 7, 5

BRACING

TOP CHORD TO BE SHEATHED OR MAX. PURLIN SPACING = 6.25 FT.
MAX. UNBRACED BOTTOM CHORD LENGTH = 10.00 FT. OR RIGID CEILING DIRECTLY APPLIED.

ALL PITCH BREAKS AND PERIMETER CORNER JOINTS MUST BE LATERALLY RESTRAINED.

LOADING

TOTAL LOAD CASES: (4)

CHORDS

MEMB. FR-TO	MAX. FACTORED FORCE (LBS)	FACTORED VERT. LOAD (PLF) FROM	TO	LC1 MAX CSI (LC)	MAX. UNBRAC LENGTH
1- 2	0 / 25	-77.4	-77.4	0.10 (1)	10.00
2- 3	-215 / 0	-77.4	-77.4	0.09 (1)	6.25
3- 4	-215 / 0	-77.4	-77.4	0.09 (1)	6.25
7- 2	-376 / 0	0.0	0.0	0.04 (1)	7.81
5- 4	-271 / 0	0.0	0.0	0.03 (1)	7.81
7- 6	0 / 0	-17.5	-17.5	0.04 (4)	10.00
6- 5	0 / 0	-17.5	-17.5	0.04 (4)	10.00

WEBS

MEMB. FR-TO	MAX. FACTORED FORCE (LBS)	MAX CSI (LC)
6- 3	-34 / 42	0.01 (4)
2- 6	0 / 195	0.04 (1)
6- 4	0 / 195	0.04 (1)

DESIGN CRITERIA

SPECIFIED LOADS:

TOP	CH.	LL	=	23.3	PSF
		DL	=	3.0	PSF
BOT	CH.	LL	=	0.0	PSF
		DL	=	7.0	PSF
TOTAL	LOAD		=	33.3	PSF

SPACING = 24.0 IN. C/C

THIS TRUSS IS DESIGNED FOR RESIDENTIAL OR SMALL BUILDING REQUIREMENTS OF PART 9, NBCC 2010

THIS DESIGN COMPLIES WITH:
- PART 9 OF OBC 2012 , BCBC 2012 , ABC 2014
- CSA 086-09
- TPIC 2011

(55 % OF 27.2 P.S.F. G.S.L. PLUS 8.4 P.S.F. RAIN LOAD) EQUALS 23.3 P.S.F. SPECIFIED ROOF LIVE LOAD

ALLOWABLE DEFL.(LL)= L/360 (0.21")
CALCULATED VERT. DEFL.(LL) = L/ 999 (0.00")
ALLOWABLE DEFL.(TL)= L/360 (0.21")
CALCULATED VERT. DEFL.(TL) = L/ 999 (0.00")

CSI: TC=0.10 (1-2:1) , BC=0.04 (6-7:4) , WB=0.04 (4-6:1) , SSI=0.08 (2-3:1)

DOL LUMBER=1.00 NAIL=1.00 LS BEND=1.10 COMP=1.10 SHEAR=1.10 TENS= 1.10

COMPANION LIVE LOAD FACTOR = 0.50

TRUSS PLATE MANUFACTURER IS NOT RESPONSIBLE FOR QUALITY CONTROL IN THE TRUSS MANUFACTURING PLANT .

NAIL VALUES

PLATE	GRIP(DRY) (PSI) MAX	MIN	SHEAR (PLI) MAX	MIN	SECTION (PLI) MAX	MIN
MT20	618	354	1667	822	2284	1656

PLATE PLACEMENT TOL. = 0.250 inches

PLATE ROTATION TOL. = 5.0 Deg.

JSI GRIP= 0.49 (2) (INPUT = 0.90)
JSI METAL= 0.12 (4) (INPUT = 1.00)

LICENSED PROFESSIONAL ENGINEER
P.M. TREVISAN
100136551
March 20th, 2017
PROVINCE OF ONTARIO

RECEIVED
TOWN OF MILTON
MAR 29, 2017
17-5419
BUILDING DIVISION

READ ALL NOTES ON THIS PAGE AND ON THE ENGINEERING NOTE PAGE ENP-1. THE NOTE PAGE IS AN INTEGRAL PART OF THIS DRAWING AS IT CONTAINS SPECIFICATIONS AND CRITERIA USED IN THE DESIGN OF THIS COMPONENT.

KOTT

JOB NAME	TRUSS NAME	QUANTITY	PLY	JOB DESC.	DRWG NO.
PT0317-122	**T18**	**8**	**1**	TRUSS DESC. LECCO RIDGE-BLOCK 348	

KOTT , Stouffville, ON, CGC

Version 8.100 S Feb 9 2017 MiTek Industries, Inc. Mon Mar 20 10:10:35 2017 Page 1
ID:Mn2zxnCa6NqoASkSkmtLJtyfhrl-Q3oyWY7Cl_uSduxHfE7dex3ZqnjDsoDmnmV4X?zZ4wY

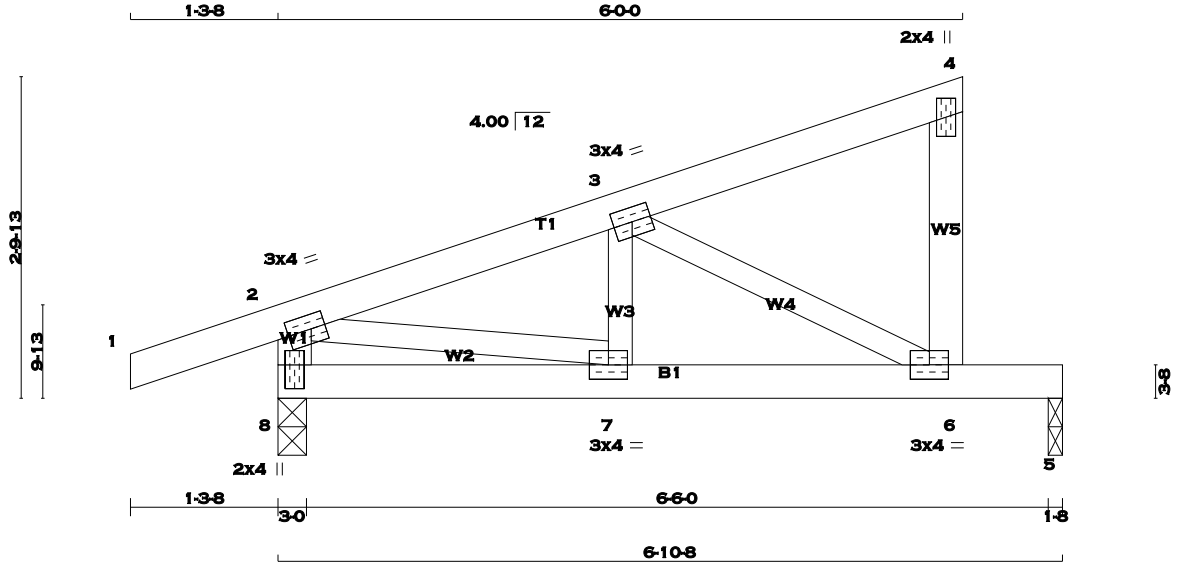

SCALE = 1:20.2

TOTAL WEIGHT = 8 X 25 = 201 lb

LUMBER
N. L. G. A. RULES

CHORDS	SIZE		LUMBER	DESCR.
1 - 4	2x4	DRY	No.2	SPF
6 - 4	2x4	DRY	No.2	SPF
8 - 2	2x4	DRY	No.2	SPF
8 - 5	2x4	DRY	No.2	SPF
ALL WEBS EXCEPT	2x3	DRY	No.2	SPF

DRY: SEASONED LUMBER.

PLATES (table is in inches)

JT	TYPE	PLATES	W	LEN	Y	X
2	TMVW-t	MT20	3.0	4.0	1.50	1.50
3	TMWW-t	MT20	3.0	4.0		
4	TMV+p	MT20	2.0	4.0		
6	BMVW-t	MT20	3.0	4.0		
7	BMWW-t	MT20	3.0	4.0		
8	BMV1+p	MT20	2.0	4.0	2.50	1.00

A SIZE FOR SIZE SUBSTITUTION OF MITEK MII20 WITH TEE-LOK TL20 PLATES IS ALLOWED.

DIMENSIONS, SUPPORTS AND LOADINGS SPECIFIED BY FABRICATOR TO BE VERIFIED BY BUILDING DESIGNER

BEARINGS

JT	FACTORED GROSS REACTION VERT	HORZ	MAXIMUM FACTORED GROSS REACTION DOWN	HORZ	UPLIFT	INPUT BRG IN-SX	REQRD BRG IN-SX
8	425	0	425	0	0	3-0	3-0
5	263	0	263	0	0	1-8	1-8

UNFACTORED REACTIONS

JT	1ST LCASE COMBINED	MAX./MIN. COMPONENT REACTIONS SNOW	LIVE	PERM.LIVE	WIND	DEAD	SOIL
8	296	220 / 0	0 / 0	0 / 0	0 / 0	76 / 0	0 / 0
5	186	122 / 0	0 / 0	0 / 0	0 / 0	64 / 0	0 / 0

BEARING MATERIAL TO BE SPF NO.2 OR BETTER AT JOINT(S) 8, 5

BRACING
TOP CHORD TO BE SHEATHED OR MAX. PURLIN SPACING = 6.25 FT.
MAX. UNBRACED BOTTOM CHORD LENGTH = 10.00 FT. OR RIGID CEILING DIRECTLY APPLIED.

ALL PITCH BREAKS AND PERIMETER CORNER JOINTS MUST BE LATERALLY RESTRAINED.

LOADING
TOTAL LOAD CASES: (4)

CHORDS

MEMB. FR-TO	MAX. FACTORED FORCE (LBS)	FACTORED VERT. LOAD (PLF) FROM	TO	LC1 MAX CSI (LC)	MAX. UNBRAC LENGTH
1- 2	0 / 16	-77.4	-77.4	0.10 (1)	10.00
2- 3	-456 / 0	-77.4	-77.4	0.08 (1)	6.25
3- 4	-8 / 0	-77.4	-77.4	0.07 (1)	10.00
6- 4	-92 / 0	0.0	0.0	0.01 (1)	7.81
8- 2	-418 / 0	0.0	0.0	0.04 (1)	7.81
8- 7	0 / 0	-17.5	-17.5	0.08 (1)	10.00
7- 6	0 / 440	-17.5	-17.5	0.37 (1)	10.00
6- 5	0 / 0	-17.5	-17.5	0.30 (1)	10.00

WEBS

MEMB. FR-TO	MAX. FACTORED FORCE (LBS)	MAX CSI (LC)
7- 3	0 / 89	0.03 (4)
3- 6	-493 / 0	0.10 (1)
2- 7	0 / 446	0.10 (1)

DESIGN CRITERIA

SPECIFIED LOADS:

TOP	CH.	LL	=	23.3	PSF
		DL	=	3.0	PSF
BOT	CH.	LL	=	0.0	PSF
		DL	=	7.0	PSF
TOTAL	LOAD		=	33.3	PSF

SPACING = 24.0 IN. C/C

THIS TRUSS IS DESIGNED FOR RESIDENTIAL OR SMALL BUILDING REQUIREMENTS OF PART 9, NBCC 2010

THIS DESIGN COMPLIES WITH:
- PART 9 OF OBC 2012 , BCBC 2012 , ABC 2014
- CSA 086-09
- TPIC 2011

(55 % OF 27.2 P.S.F. G.S.L. PLUS 8.4 P.S.F. RAIN LOAD) EQUALS 23.3 P.S.F. SPECIFIED ROOF LIVE LOAD

ALLOWABLE DEFL.(LL)= L/360 (0.23")
CALCULATED VERT. DEFL.(LL) = L/ 999 (0.03")
ALLOWABLE DEFL.(TL)= L/360 (0.23")
CALCULATED VERT. DEFL.(TL) = L/ 999 (0.06")

CSI: TC=0.10 (1-2:1) , BC=0.37 (6-7:1) , WB=0.10 (2-7:1) , SSI=0.20 (5-6:1)

DOL LUMBER=1.00 NAIL=1.00 LS BEND=1.10 COMP=1.10 SHEAR=1.10 TENS= 1.10

COMPANION LIVE LOAD FACTOR = 0.50

TRUSS PLATE MANUFACTURER IS NOT RESPONSIBLE FOR QUALITY CONTROL IN THE TRUSS MANUFACTURING PLANT .

NAIL VALUES

PLATE	GRIP(DRY) (PSI) MAX	MIN	SHEAR (PLI) MAX	MIN	SECTION (PLI) MAX	MIN
MT20	618	354	1667	822	2284	1656

PLATE PLACEMENT TOL. = 0.250 inches

PLATE ROTATION TOL. = 5.0 Deg.

JSI GRIP= 0.88 (2) (INPUT = 0.90)
JSI METAL= 0.20 (2) (INPUT = 1.00)

LICENSED PROFESSIONAL ENGINEER
P.M. TREVISAN
100136551
March 20th, 2017
PROVINCE OF ONTARIO

RECEIVED
TOWN OF MILTON
MAR 29, 2017
17-5419
BUILDING DIVISION

READ ALL NOTES ON THIS PAGE AND ON THE ENGINEERING NOTE PAGE ENP-1. THE NOTE PAGE IS AN INTEGRAL PART OF THIS DRAWING AS IT CONTAINS SPECIFICATIONS AND CRITERIA USED IN THE DESIGN OF THIS COMPONENT.

KOTT

Version 8.100 S Feb 9 2017 MiTek Industries, Inc. Mon Mar 20 10:10:35 2017 Page 1
ID:Mn2zxnCa6NqoASkSkmtLJtyfhrl-Q3oyWY7Cl_uSduxHfE7dex3S9nkaskymnmV4X?zZ4wY

SCALE = 1:70.4

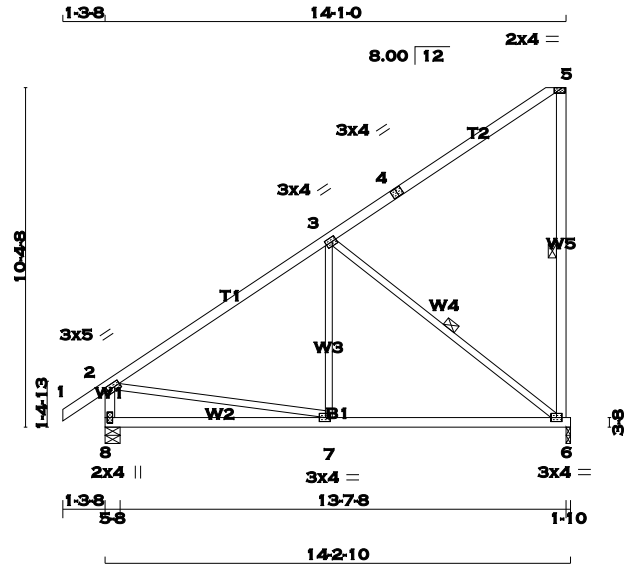

TOTAL WEIGHT = 2 X 67 = 133 lb

[M][F]

LUMBER

N. L. G. A. RULES

CHORDS	SIZE		LUMBER	DESCR.
1 - 4	2x4	DRY	No.2	SPF
4 - 5	2x4	DRY	No.2	SPF
6 - 5	2x4	DRY	No.2	SPF
8 - 2	2x4	DRY	No.2	SPF
8 - 6	2x4	DRY	No.2	SPF
ALL WEBS EXCEPT	2x3	DRY	No.2	SPF

DRY: SEASONED LUMBER.

PLATES (table is in inches)

JT	TYPE	PLATES	W	LEN	Y	X
2	TMVW-t	MT20	3.0	5.0	1.50	2.00
3	TMWW-t	MT20	3.0	4.0	1.50	1.50
4	TS-t	MT20	3.0	4.0		
5	TMV-p	MT20	2.0	4.0	Edge	
6	BMVW1-t	MT20	3.0	4.0		
7	BMWW-t	MT20	3.0	4.0	1.50	1.75
8	BMV1+p	MT20	2.0	4.0		

Edge - INDICATES REFERENCE CORNER OF PLATE TOUCHES EDGE OF CHORD.

A SIZE FOR SIZE SUBSTITUTION OF MITEK MII20 WITH TEE-LOK TL20 PLATES IS ALLOWED.

DIMENSIONS, SUPPORTS AND LOADINGS SPECIFIED BY FABRICATOR TO BE VERIFIED BY BUILDING DESIGNER

BEARINGS

JT	FACTORED GROSS REACTION VERT	HORZ	MAXIMUM FACTORED GROSS REACTION DOWN	HORZ	UPLIFT	INPUT BRG IN-SX	REQRD BRG IN-SX
6	668	0	668	0	0	1-10	1-10
8	774	0	774	0	0	5-8	5-8

UNFACTORED REACTIONS

JT	1ST LCASE COMBINED	MAX./MIN. COMPONENT REACTIONS SNOW	LIVE	PERM.LIVE	WIND	DEAD	SOIL
6	469	328 / 0	0 / 0	0 / 0	0 / 0	141 / 0	0 / 0
8	541	392 / 0	0 / 0	0 / 0	0 / 0	149 / 0	0 / 0

BEARING MATERIAL TO BE SPF NO.2 OR BETTER AT JOINT(S) 6, 8

BRACING

TOP CHORD TO BE SHEATHED OR MAX. PURLIN SPACING = 6.25 FT.
MAX. UNBRACED BOTTOM CHORD LENGTH = 10.00 FT. OR RIGID CEILING DIRECTLY APPLIED.

ALL PITCH BREAKS AND PERIMETER CORNER JOINTS MUST BE LATERALLY RESTRAINED.

1 - 2x3 SPF No.2 LATERAL BRACE(S) AT 1/ 2 LENGTH OF 5-6, 3-6. DBS = 20-0-0 . CBF = 82 LBS.

DBS = DIAGONAL BRACE SPACING (MAX). CBF = CUMULATIVE BRACING FORCE. FASTEN LATERAL BRACE(S) USING (0.122"X3") SPIRAL NAILS : 1 NAIL FOR 2x3 BRACE(S), 2 FOR 1x4, 2x4, 2x5, 3 FOR 2x6, 4 FOR 2x8, 5 FOR 2x10, AND 6 FOR 2x12.

END VERTICAL(S) MUST BE SHEATHED OR HAVE BRACES AS INDICATED IN THE MAX. UNBRACED LENGTH COLUMN OF THE TABLE BELOW

LOADING

TOTAL LOAD CASES: (4)

CHORDS

MEMB. FR-TO	MAX. FACTORED FORCE (LBS)	FACTORED VERT. LOAD LC1 (PLF) FROM	TO	MAX CSI (LC)	MAX. UNBRAC LENGTH
1- 2	0 / 29	-77.4	-77.4	0.10 (1)	10.00
2- 3	-586 / 0	-77.4	-77.4	0.51 (1)	6.25
3- 4	-36 / 0	-77.4	-77.4	0.52 (1)	6.25
4- 5	-36 / 0	-77.4	-77.4	0.52 (1)	6.25
6- 5	-215 / 0	0.0	0.0	0.12 (1)	6.25
8- 2	-729 / 0	0.0	0.0	0.08 (1)	7.81
8- 7	0 / 0	-17.5	-17.5	0.25 (4)	10.00
7- 6	0 / 519	-17.5	-17.5	0.29 (4)	10.00

WEBS

MEMB. FR-TO	MAX. FACTORED FORCE (LBS)	MAX CSI (LC)
7- 3	0 / 148	0.05 (4)
3- 6	-658 / 0	0.37 (1)
2- 7	0 / 526	0.12 (1)

DESIGN CRITERIA

SPECIFIED LOADS:

TOP CH.	LL	=	23.3	PSF
	DL	=	3.0	PSF
BOT CH.	LL	=	0.0	PSF
	DL	=	7.0	PSF
TOTAL LOAD		=	33.3	PSF

SPACING = 24.0 IN. C/C

THIS TRUSS IS DESIGNED FOR RESIDENTIAL OR SMALL BUILDING REQUIREMENTS OF PART 9, NBCC 2010

THIS DESIGN COMPLIES WITH:
- PART 9 OF OBC 2012 , BCBC 2012 , ABC 2014
- CSA 086-09
- TPIC 2011

(55 % OF 27.2 P.S.F. G.S.L. PLUS 8.4 P.S.F. RAIN LOAD) EQUALS 23.3 P.S.F. SPECIFIED ROOF LIVE LOAD

ALLOWABLE DEFL.(LL)= L/360 (0.47")
CALCULATED VERT. DEFL.(LL) = L/ 999 (0.01")
ALLOWABLE DEFL.(TL)= L/360 (0.47")
CALCULATED VERT. DEFL.(TL) = L/ 999 (0.07")

CSI: TC=0.52 (3-5:1) , BC=0.29 (6-7:4) , WB=0.37 (3-6:1) , SSI=0.22 (3-5:1)

DOL LUMBER=1.00 NAIL=1.00 LS BEND=1.10 COMP=1.10 SHEAR=1.10 TENS= 1.10

COMPANION LIVE LOAD FACTOR = 0.50

TRUSS PLATE MANUFACTURER IS NOT RESPONSIBLE FOR QUALITY CONTROL IN THE TRUSS MANUFACTURING PLANT .

NAIL VALUES

PLATE	GRIP(DRY) (PSI) MAX	MIN	SHEAR (PLI) MAX	MIN	SECTION (PLI) MAX	MIN
MT20	618	354	1667	822	2284	1656

PLATE PLACEMENT TOL. = 0.250 inches

PLATE ROTATION TOL. = 0.5 Deg.

JSI GRIP= 0.86 (6) (INPUT = 0.90)
JSI METAL= 0.24 (2) (INPUT = 1.00)

LICENSED PROFESSIONAL ENGINEER
P.M. TREVISAN
100136551
March 20th, 2017
PROVINCE OF ONTARIO

RECEIVED
TOWN OF MILTON
MAR 29, 2017
17-5419
BUILDING DIVISION

READ ALL NOTES ON THIS PAGE AND ON THE ENGINEERING NOTE PAGE ENP-1. THE NOTE PAGE IS AN INTEGRAL PART OF THIS DRAWING AS IT CONTAINS SPECIFICATIONS AND CRITERIA USED IN THE DESIGN OF THIS COMPONENT.

KOTT

SCALE = 1:71.3

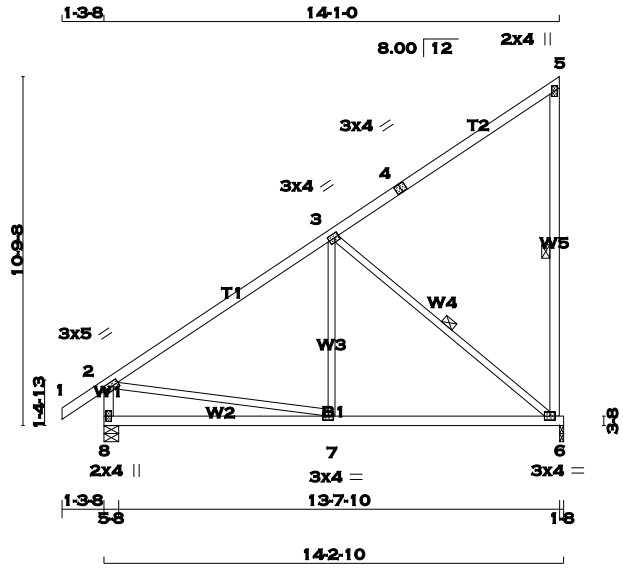

TOTAL WEIGHT = 2 X 67 = 134 lb

[M][F]

LUMBER

N. L. G. A. RULES

CHORDS	SIZE		LUMBER	DESCR.
1 - 4	2x4	DRY	No.2	SPF
4 - 5	2x4	DRY	No.2	SPF
6 - 5	2x4	DRY	No.2	SPF
8 - 2	2x4	DRY	No.2	SPF
8 - 6	2x4	DRY	No.2	SPF
ALL WEBS EXCEPT	2x3	DRY	No.2	SPF

DRY: SEASONED LUMBER.

PLATES (table is in inches)

JT	TYPE	PLATES	W	LEN	Y	X
2	TMVW-t	MT20	3.0	5.0	1.50	2.00
3	TMWW-t	MT20	3.0	4.0	1.50	1.50
4	TS-t	MT20	3.0	4.0		
5	TMV+p	MT20	2.0	4.0		
6	BMVW1-t	MT20	3.0	4.0		
7	BMWW-t	MT20	3.0	4.0		
8	BMV1+p	MT20	2.0	4.0		

A SIZE FOR SIZE SUBSTITUTION OF MITEK MII20 WITH TEE-LOK TL20 PLATES IS ALLOWED.

DIMENSIONS, SUPPORTS AND LOADINGS SPECIFIED BY FABRICATOR TO BE VERIFIED BY BUILDING DESIGNER

BEARINGS

JT	FACTORED GROSS REACTION VERT	HORZ	MAXIMUM FACTORED GROSS REACTION DOWN	HORZ	UPLIFT	INPUT BRG IN-SX	REQRD BRG IN-SX
6	668	0	668	0	0	1-8	1-8
8	774	0	774	0	0	5-8	5-8

UNFACTORED REACTIONS

JT	1ST LCASE COMBINED	MAX./MIN. COMPONENT REACTIONS SNOW	LIVE	PERM.LIVE	WIND	DEAD	SOIL
6	469	328 / 0	0 / 0	0 / 0	0 / 0	141 / 0	0 / 0
8	541	392 / 0	0 / 0	0 / 0	0 / 0	149 / 0	0 / 0

BEARING MATERIAL TO BE SPF NO.2 OR BETTER AT JOINT(S) 6, 8

BRACING

TOP CHORD TO BE SHEATHED OR MAX. PURLIN SPACING = 6.25 FT.
MAX. UNBRACED BOTTOM CHORD LENGTH = 10.00 FT. OR RIGID CEILING DIRECTLY APPLIED.

ALL PITCH BREAKS AND PERIMETER CORNER JOINTS MUST BE LATERALLY RESTRAINED.

1 - 2x3 SPF No.2 LATERAL BRACE(S) AT 1/ 2 LENGTH OF 5-6, 3-6. DBS = 20-0-0 . CBF = 82 LBS.

DBS = DIAGONAL BRACE SPACING (MAX). CBF = CUMULATIVE BRACING FORCE. FASTEN LATERAL BRACE(S) USING (0.122"X3") SPIRAL NAILS : 1 NAIL FOR 2x3 BRACE(S), 2 FOR 1x4, 2x4, 2x5, 3 FOR 2x6, 4 FOR 2x8, 5 FOR 2x10, AND 6 FOR 2x12.

END VERTICAL(S) MUST BE SHEATHED OR HAVE BRACES AS INDICATED IN THE MAX. UNBRACED LENGTH COLUMN OF THE TABLE BELOW

LOADING

TOTAL LOAD CASES: (4)

CHORDS

MEMB. FR-TO	MAX. FACTORED FORCE (LBS)	FACTORED VERT. LOAD LC1 (PLF) FROM	TO	MAX CSI (LC)	MAX. UNBRAC LENGTH
1- 2	0 / 29	-77.4	-77.4	0.10 (1)	10.00
2- 3	-572 / 0	-77.4	-77.4	0.52 (1)	6.25
3- 4	-37 / 0	-77.4	-77.4	0.51 (1)	6.25
4- 5	-37 / 0	-77.4	-77.4	0.51 (1)	6.25
6- 5	-205 / 0	0.0	0.0	0.12 (1)	6.25
8- 2	-727 / 0	0.0	0.0	0.07 (1)	7.81
8- 7	0 / 0	-17.5	-17.5	0.25 (4)	10.00
7- 6	0 / 507	-17.5	-17.5	0.29 (4)	10.00

WEBS

MEMB. FR-TO	MAX. FACTORED FORCE (LBS)	MAX CSI (LC)
7- 3	0 / 149	0.05 (4)
3- 6	-656 / 0	0.37 (1)
2- 7	0 / 513	0.12 (1)

DESIGN CRITERIA

SPECIFIED LOADS:

TOP	CH.	LL	=	23.3	PSF
		DL	=	3.0	PSF
BOT	CH.	LL	=	0.0	PSF
		DL	=	7.0	PSF
TOTAL	LOAD		=	33.3	PSF

SPACING = 24.0 IN. C/C

THIS TRUSS IS DESIGNED FOR RESIDENTIAL OR SMALL BUILDING REQUIREMENTS OF PART 9, NBCC 2010

THIS DESIGN COMPLIES WITH:
- PART 9 OF OBC 2012 , BCBC 2012 , ABC 2014
- CSA 086-09
- TPIC 2011

(55 % OF 27.2 P.S.F. G.S.L. PLUS 8.4 P.S.F. RAIN LOAD) EQUALS 23.3 P.S.F. SPECIFIED ROOF LIVE LOAD

ALLOWABLE DEFL.(LL)= L/360 (0.47")
CALCULATED VERT. DEFL.(LL) = L/ 999 (0.01")
ALLOWABLE DEFL.(TL)= L/360 (0.47")
CALCULATED VERT. DEFL.(TL) = L/ 999 (0.06")

CSI: TC=0.52 (2-3:1) , BC=0.29 (6-7:4) , WB=0.37 (3-6:1) , SSI=0.22 (2-3:1)

DOL LUMBER=1.00 NAIL=1.00 LS BEND=1.10 COMP=1.10 SHEAR=1.10 TENS= 1.10

COMPANION LIVE LOAD FACTOR = 0.50

TRUSS PLATE MANUFACTURER IS NOT RESPONSIBLE FOR QUALITY CONTROL IN THE TRUSS MANUFACTURING PLANT .

NAIL VALUES

PLATE	GRIP(DRY) (PSI) MAX	MIN	SHEAR (PLI) MAX	MIN	SECTION (PLI) MAX	MIN
MT20	618	354	1667	822	2284	1656

PLATE PLACEMENT TOL. = 0.250 inches

PLATE ROTATION TOL. = 0.5 Deg.

JSI GRIP= 0.87 (7) (INPUT = 0.90)
JSI METAL= 0.23 (2) (INPUT = 1.00)

LICENSED PROFESSIONAL ENGINEER
P.M. TREVISAN
100136551
March 20th, 2017
PROVINCE OF ONTARIO

RECEIVED
TOWN OF MILTON
MAR 29, 2017
17-5419
BUILDING DIVISION

READ ALL NOTES ON THIS PAGE AND ON THE ENGINEERING NOTE PAGE ENP-1. THE NOTE PAGE IS AN INTEGRAL PART OF THIS DRAWING AS IT CONTAINS SPECIFICATIONS AND CRITERIA USED IN THE DESIGN OF THIS COMPONENT.

KOTT

JOB NAME	TRUSS NAME	QUANTITY	PLY	JOB DESC.	DRWG NO.
PT0317-122	T21	16	1	TRUSS DESC. LECCO RIDGE-BLOCK 348	

KOTT , Stouffville, ON, CGC

Version 8.100 S Feb 9 2017 MiTek Industries, Inc. Mon Mar 20 10:10:36 2017 Page 1
ID:Mn2zxnCa6NqoASkSkmtLJtyfhrl-uGMLju7qWH0JF2WTCxesB9ckLA1CbEgv0QEd4RzZ4wX

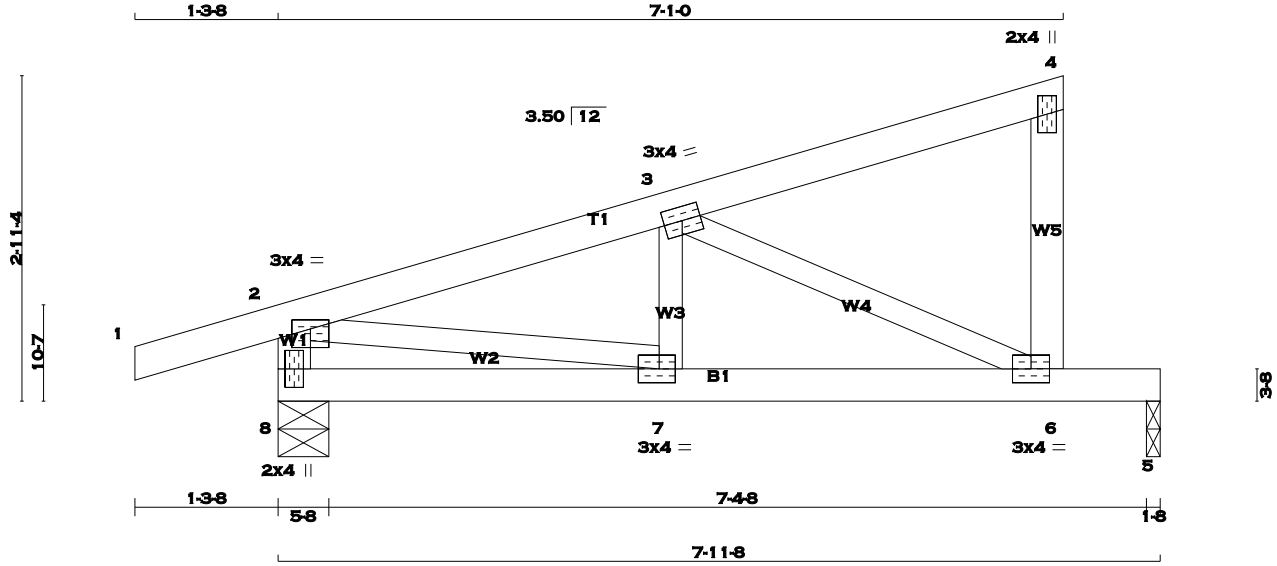

TOTAL WEIGHT = 16 X 29 = 458 lb
[M][F]

LUMBER
N. L. G. A. RULES

CHORDS	SIZE		LUMBER	DESCR.
1 - 4	2x4	DRY	No.2	SPF
6 - 4	2x4	DRY	No.2	SPF
8 - 2	2x4	DRY	No.2	SPF
8 - 5	2x4	DRY	No.2	SPF
ALL WEBS EXCEPT	2x3	DRY	No.2	SPF

DRY: SEASONED LUMBER.

PLATES (table is in inches)

JT	TYPE	PLATES	W	LEN	Y	X
2	TMVW-p	MT20	3.0	4.0	1.00	2.00
3	TMWW-t	MT20	3.0	4.0		
4	TMV+p	MT20	2.0	4.0		
6	BMVW-t	MT20	3.0	4.0		
7	BMWW-t	MT20	3.0	4.0	1.50	1.75
8	BMV1+p	MT20	2.0	4.0		

A SIZE FOR SIZE SUBSTITUTION OF MITEK MII20 WITH TEE-LOK TL20 PLATES IS ALLOWED.

DIMENSIONS, SUPPORTS AND LOADINGS SPECIFIED BY FABRICATOR TO BE VERIFIED BY BUILDING DESIGNER

BEARINGS

JT	FACTORED GROSS REACTION VERT	HORZ	MAXIMUM FACTORED GROSS REACTION DOWN	HORZ	UPLIFT	INPUT BRG IN-SX	REQRD BRG IN-SX
8	477	0	477	0	0	5-8	5-8
5	313	0	313	0	0	1-8	1-8

UNFACTORED REACTIONS

JT	1ST LCASE COMBINED	MAX./MIN. COMPONENT REACTIONS SNOW	LIVE	PERM.LIVE	WIND	DEAD	SOIL
8	332	245 / 0	0 / 0	0 / 0	0 / 0	87 / 0	0 / 0
5	221	147 / 0	0 / 0	0 / 0	0 / 0	75 / 0	0 / 0

BEARING MATERIAL TO BE SPF NO.2 OR BETTER AT JOINT(S) 8, 5

BRACING
TOP CHORD TO BE SHEATHED OR MAX. PURLIN SPACING = 6.25 FT.
MAX. UNBRACED BOTTOM CHORD LENGTH = 10.00 FT. OR RIGID CEILING DIRECTLY APPLIED.

ALL PITCH BREAKS AND PERIMETER CORNER JOINTS MUST BE LATERALLY RESTRAINED.

LOADING
TOTAL LOAD CASES: (4)

CHORDS

MEMB. FR-TO	MAX. FACTORED FORCE (LBS)	FACTORED VERT. LOAD (PLF) FROM	TO	LC1 MAX CSI (LC)	MAX. UNBRAC LENGTH
1- 2	0 / 14	-77.4	-77.4	0.10 (1)	10.00
2- 3	-579 / 0	-77.4	-77.4	0.11 (1)	6.25
3- 4	-8 / 0	-77.4	-77.4	0.11 (1)	10.00
6- 4	-108 / 0	0.0	0.0	0.02 (1)	7.81
8- 2	-467 / 0	0.0	0.0	0.05 (1)	7.81
8- 7	0 / 0	-17.5	-17.5	0.10 (1)	10.00
7- 6	0 / 564	-17.5	-17.5	0.45 (1)	10.00
6- 5	0 / 0	-17.5	-17.5	0.36 (1)	10.00

WEBS

MEMB. FR-TO	MAX. FACTORED FORCE (LBS)	MAX CSI (LC)
7- 3	0 / 91	0.03 (4)
3- 6	-619 / 0	0.15 (1)
2- 7	0 / 571	0.13 (1)

DESIGN CRITERIA

SPECIFIED LOADS:

TOP	CH.	LL	=	23.3	PSF
		DL	=	3.0	PSF
BOT	CH.	LL	=	0.0	PSF
		DL	=	7.0	PSF
TOTAL	LOAD		=	33.3	PSF

SPACING = 24.0 IN. C/C

THIS TRUSS IS DESIGNED FOR RESIDENTIAL OR SMALL BUILDING REQUIREMENTS OF PART 9, NBCC 2010

THIS DESIGN COMPLIES WITH:
- PART 9 OF OBC 2012 , BCBC 2012 , ABC 2014
- CSA 086-09
- TPIC 2011

(55 % OF 27.2 P.S.F. G.S.L. PLUS 8.4 P.S.F. RAIN LOAD) EQUALS 23.3 P.S.F. SPECIFIED ROOF LIVE LOAD

ALLOWABLE DEFL.(LL)= L/360 (0.27")
CALCULATED VERT. DEFL.(LL) = L/ 999 (0.05")
ALLOWABLE DEFL.(TL)= L/360 (0.27")
CALCULATED VERT. DEFL.(TL) = L/ 973 (0.10")

CSI: TC=0.11 (2-3:1) , BC=0.45 (6-7:1) , WB=0.15 (3-6:1) , SSI=0.24 (5-6:1)

DOL LUMBER=1.00 NAIL=1.00 LS BEND=1.10 COMP=1.10 SHEAR=1.10 TENS= 1.10

COMPANION LIVE LOAD FACTOR = 0.50

TRUSS PLATE MANUFACTURER IS NOT RESPONSIBLE FOR QUALITY CONTROL IN THE TRUSS MANUFACTURING PLANT .

NAIL VALUES

PLATE	GRIP(DRY) (PSI) MAX	MIN	SHEAR (PLI) MAX	MIN	SECTION (PLI) MAX	MIN
MT20	618	354	1667	822	2284	1656

PLATE PLACEMENT TOL. = 0.250 inches

PLATE ROTATION TOL. = 5.0 Deg.

JSI GRIP= 0.85 (6) (INPUT = 0.90)
JSI METAL= 0.21 (2) (INPUT = 1.00)

LICENSED PROFESSIONAL ENGINEER
P.M. TREVISAN
100136551
March 20th, 2017
PROVINCE OF ONTARIO

RECEIVED
TOWN OF MILTON
MAR 29, 2017
17-5419
BUILDING DIVISION

READ ALL NOTES ON THIS PAGE AND ON THE ENGINEERING NOTE PAGE ENP-1. THE NOTE PAGE IS AN INTEGRAL PART OF THIS DRAWING AS IT CONTAINS SPECIFICATIONS AND CRITERIA USED IN THE DESIGN OF THIS COMPONENT.

KOTT

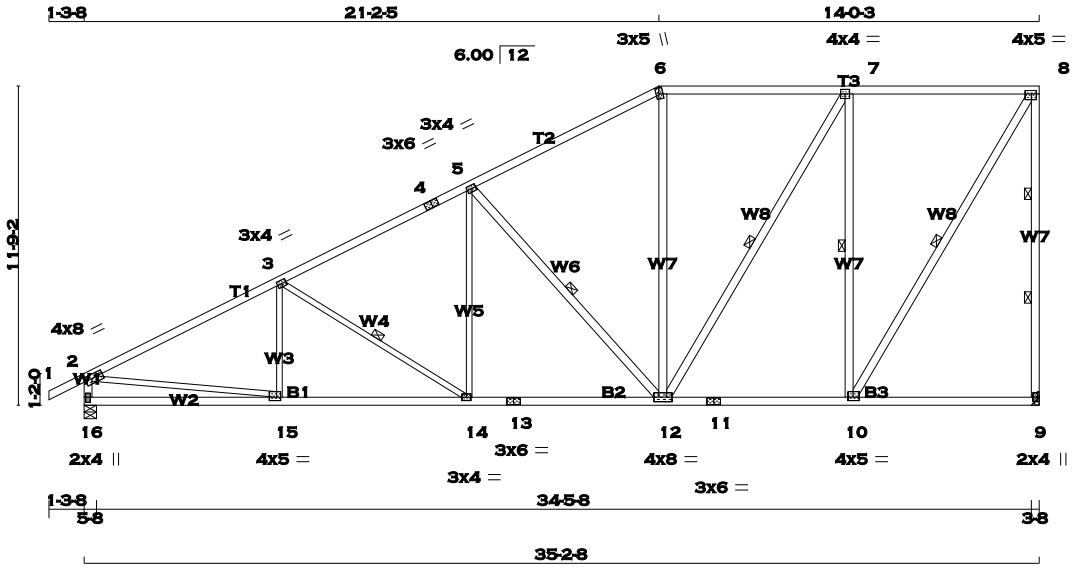

TOTAL WEIGHT = 2 X 187 = 374 lb

[M][F]

LUMBER

N. L. G. A. RULES

CHORDS	SIZE		LUMBER	DESCR.
1 - 4	2x4	DRY	No.2	SPF
4 - 6	2x4	DRY	No.2	SPF
6 - 8	2x4	DRY	No.2	SPF
9 - 8	2x4	DRY	No.2	SPF
16 - 2	2x4	DRY	No.2	SPF
16 - 13	2x4	DRY	No.2	SPF
13 - 11	2x4	DRY	No.2	SPF
11 - 9	2x4	DRY	No.2	SPF
ALL WEBS	2x4	DRY	No.2	SPF
EXCEPT				
15 - 3	2x3	DRY	No.2	SPF
3 - 14	2x3	DRY	No.2	SPF
14 - 5	2x3	DRY	No.2	SPF
2 - 15	2x3	DRY	No.2	SPF

DRY: SEASONED LUMBER.

PLATES (table is in inches)

JT	TYPE	PLATES	W	LEN	Y	X
2	TMVW-t	MT20	4.0	8.0	1.75	3.00
3	TMWW-t	MT20	3.0	4.0	1.50	1.75
4	TS-t	MT20	3.0	6.0		
5	TMWW-t	MT20	3.0	4.0	1.50	1.75
6	TTW+m	MT20	3.0	5.0	2.75	1.25
7	TMWW-t	MT20	4.0	4.0		
8	TMVW-t	MT20	4.0	5.0	1.50	2.25
9	BMV1+p	MT20	2.0	4.0		
10	BMWW-t	MT20	4.0	5.0	1.50	2.25
11	BS-t	MT20	3.0	6.0		
12	BMWWW-t	MT20	4.0	8.0		
13	BS-t	MT20	3.0	6.0		
14	BMWW-t	MT20	3.0	4.0		
15	BMWW-t	MT20	4.0	5.0	1.50	1.75
16	BMV1+p	MT20	2.0	4.0	2.25	1.00

A SIZE FOR SIZE SUBSTITUTION OF MITEK MII20 WITH TEE-LOK TL20 PLATES IS ALLOWED.

DIMENSIONS, SUPPORTS AND LOADINGS SPECIFIED BY FABRICATOR TO BE VERIFIED BY BUILDING DESIGNER

BEARINGS

JT	FACTORED GROSS REACTION VERT	HORZ		MAXIMUM FACTORED GROSS REACTION DOWN	HORZ	UPLIFT	INPUT BRG IN-SX	REQRD BRG IN-SX
9	1670	0		1670	0	0	HANGER BY OTHERS MIN. SEAT SIZE: 3-8	
16	1775	0		1775	0	0	5-8	5-8

UNFACTORED REACTIONS

JT	1ST LCASE COMBINED	SNOW	MAX./MIN. COMPONENT REACTIONS LIVE	PERM.LIVE	WIND	DEAD	SOIL
9	1172	820 / 0	0 / 0	0 / 0	0 / 0	352 / 0	0 / 0
16	1243	883 / 0	0 / 0	0 / 0	0 / 0	360 / 0	0 / 0

BEARING MATERIAL TO BE SPF NO.2 OR BETTER AT JOINT(S) 16

BRACING

TOP CHORD TO BE SHEATHED OR MAX. PURLIN SPACING = 3.75 FT.
MAX. UNBRACED BOTTOM CHORD LENGTH = 10.00 FT. OR RIGID CEILING DIRECTLY APPLIED.

ALL PITCH BREAKS AND PERIMETER CORNER JOINTS MUST BE LATERALLY RESTRAINED.

2 - 2x3 SPF No.2 LATERAL BRACE(S) AT 1/ 3 LENGTH OF 8-9. DBS = 8-0-0 . CBF = 81 LBS.
1 - 2x3 SPF No.2 LATERAL BRACE(S) AT 1/ 2 LENGTH OF 3-14, 7-12. DBS = 20-0-0 . CBF = 61 LBS.
1 - 2x3 SPF No.2 LATERAL BRACE(S) AT 1/ 2 LENGTH OF 5-12. DBS = 16-0-0 . CBF = 91 LBS.
1 - 2x3 SPF No.2 LATERAL BRACE(S) AT 1/ 2 LENGTH OF 7-10. DBS = 10-0-0 . CBF = 80 LBS.
1 - 2x3 SPF No.2 LATERAL BRACE(S) AT 1/ 2 LENGTH OF 8-10. DBS = 18-0-0 . CBF = 93 LBS.

DBS = DIAGONAL BRACE SPACING (MAX). CBF = CUMULATIVE BRACING FORCE. FASTEN LATERAL BRACE(S) USING (0.122"X3") SPIRAL NAILS : 1 NAIL FOR 2x3 BRACE(S), 2 FOR 1x4, 2x4, 2x5, 3 FOR 2x6, 4 FOR 2x8, 5 FOR 2x10, AND 6 FOR 2x12.

END VERTICAL(S) MUST BE SHEATHED OR HAVE BRACES AS INDICATED IN THE MAX. UNBRACED LENGTH COLUMN OF THE TABLE BELOW

LOADING

TOTAL LOAD CASES: (4)

CHORDS MEMB. FR-TO	MAX. FACTORED FORCE (LBS)	FACTORED VERT. LOAD LC1 (PLF) FROM	TO	MAX CSI (LC)	MAX. UNBRAC LENGTH	WEBS MEMB. FR-TO	MAX. FACTORED FORCE (LBS)	MAX CSI (LC)
1- 2	0 / 23	-77.4	-77.4	0.10 (1)	10.00	15- 3	-133 / 77	0.04 (1)
2- 3	-2487 / 0	-77.4	-77.4	0.68 (1)	3.75	3-14	-489 / 0	0.23 (1)
3- 4	-2050 / 0	-77.4	-77.4	0.53 (1)	4.25	14- 5	0 / 386	0.09 (1)
4- 5	-2050 / 0	-77.4	-77.4	0.53 (1)	4.25	5-12	-911 / 0	0.55 (1)
5- 6	-1395 / 0	-77.4	-77.4	0.51 (1)	4.91	12- 6	0 / 191	0.03 (4)
6- 7	-1228 / 0	-77.4	-77.4	0.52 (1)	5.09	12- 7	0 / 706	0.11 (1)
7- 8	-865 / 0	-77.4	-77.4	0.51 (1)	5.83	10- 7	-1280 / 0	0.95 (1)
9- 8	-1621 / 0	0.0	0.0	0.51 (1)	5.20	10- 8	0 / 1659	0.27 (1)
16- 2	-1722 / 0	0.0	0.0	0.17 (1)	6.35	2-15	0 / 2261	0.51 (1)
16-15	0 / 0	-17.5	-17.5	0.20 (4)	10.00			
15-14	0 / 2246	-17.5	-17.5	0.46 (1)	10.00			
14-13	0 / 1834	-17.5	-17.5	0.39 (1)	10.00			
13-12	0 / 1834	-17.5	-17.5	0.39 (1)	10.00			
12-11	0 / 865	-17.5	-17.5	0.27 (4)	10.00			
11-10	0 / 865	-17.5	-17.5	0.27 (4)	10.00			
10- 9	0 / 0	-17.5	-17.5	0.20 (4)	10.00			

RECEIVED
TOWN OF MILTON
MAR 29, 2017
17-5419
BUILDING DIVISION

READ ALL NOTES ON THIS PAGE AND ON THE ENGINEERING NOTE PAGE ENP-1. THE NOTE PAGE IS AN INTEGRAL PART OF THIS DRAWING AS IT CONTAINS SPECIFICATIONS AND CRITERIA USED IN THE DESIGN OF THIS COMPONENT.

DESIGN CRITERIA

SPECIFIED LOADS:

TOP	CH.	LL	=	23.3	PSF
		DL	=	3.0	PSF
BOT	CH.	LL	=	0.0	PSF
		DL	=	7.0	PSF
TOTAL	LOAD		=	33.3	PSF

SPACING = 24.0 IN. C/C

LOADING IN FLAT SECTION BASED ON A SLOPE OF 6.00/12

THIS TRUSS IS DESIGNED FOR RESIDENTIAL OR SMALL BUILDING REQUIREMENTS OF PART 9, NBCC 2010

THIS DESIGN COMPLIES WITH:
- PART 9 OF OBC 2012 , BCBC 2012 , ABC 2014
- CSA 086-09
- TPIC 2011

(55 % OF 27.2 P.S.F. G.S.L. PLUS 8.4 P.S.F. RAIN LOAD) EQUALS 23.3 P.S.F. SPECIFIED ROOF LIVE LOAD

ALLOWABLE DEFL.(LL)= L/360 (1.17")
CALCULATED VERT. DEFL.(LL) = L/ 999 (0.12")
ALLOWABLE DEFL.(TL)= L/360 (1.17")
CALCULATED VERT. DEFL.(TL) = L/ 999 (0.23")

CSI: TC=0.68 (2-3:1) , BC=0.46 (14-15:1) , WB=0.95 (7-10:1) , SSI=0.26 (7-8:1)

DOL LUMBER=1.00 NAIL=1.00 LS BEND=1.10 COMP=1.10 SHEAR=1.10 TENS= 1.10

COMPANION LIVE LOAD FACTOR = 0.50

TRUSS PLATE MANUFACTURER IS NOT RESPONSIBLE FOR QUALITY CONTROL IN THE TRUSS MANUFACTURING PLANT .

NAIL VALUES

PLATE	GRIP(DRY) (PSI) MAX	MIN	SHEAR (PLI) MAX	MIN	SECTION (PLI) MAX	MIN
MT20	618	354	1667	822	2284	1656

PLATE PLACEMENT TOL. = 0.250 inches

PLATE ROTATION TOL. = 5.0 Deg.

JSI GRIP= 0.89 (15) (INPUT = 0.90)
JSI METAL= 0.67 (15) (INPUT = 1.00)

KOTT

JOB NAME	TRUSS NAME	QUANTITY	PLY	JOB DESC.	DRWG NO.
PT0317-122	T23	10	1	TRUSS DESC. LECCO RIDGE-BLOCK 348	

KOTT , Stouffville, ON, CGC

Version 8.100 S Feb 9 2017 MiTek Industries, Inc. Mon Mar 20 10:10:37 2017 Page 1
ID:Mn2zxnCa6NqoASkSkmtLJtyfhrl-MSwjxE8THb8AsC5fme95jM9pRaOwKbE2F4_ActzZ4wW

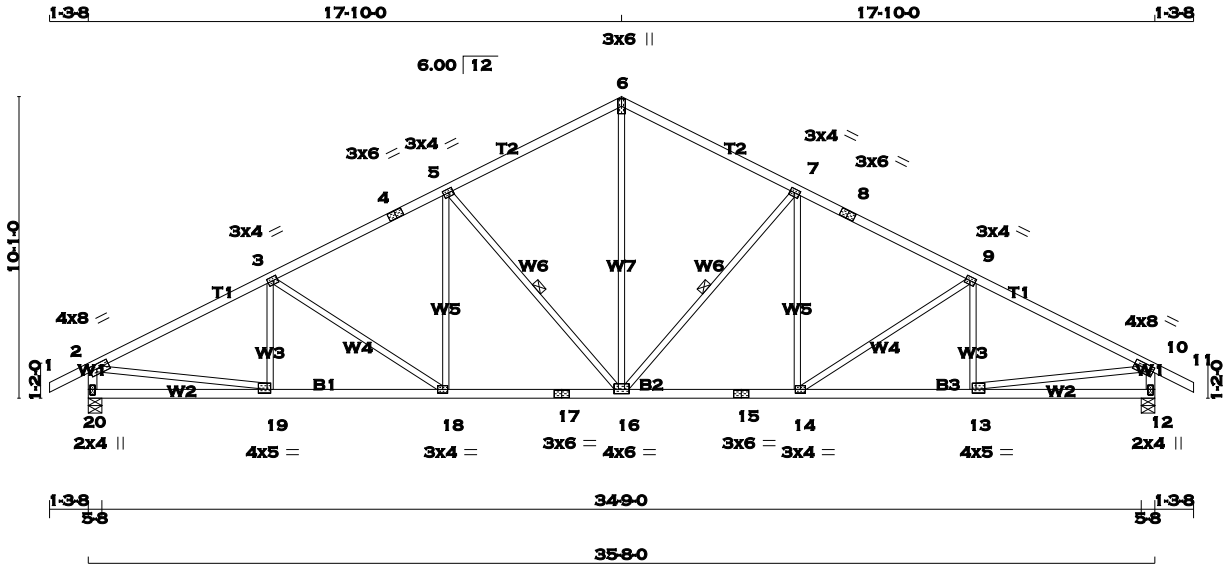

TOTAL WEIGHT = 10 X 150 = 1502 lb

LUMBER
N. L. G. A. RULES

CHORDS	SIZE		LUMBER	DESCR.
1 - 4	2x4	DRY	No.2	SPF
4 - 6	2x4	DRY	No.2	SPF
6 - 8	2x4	DRY	No.2	SPF
8 - 11	2x4	DRY	No.2	SPF
20 - 2	2x4	DRY	No.2	SPF
12 - 10	2x4	DRY	No.2	SPF
20 - 17	2x4	DRY	No.2	SPF
17 - 15	2x4	DRY	No.2	SPF
15 - 12	2x4	DRY	No.2	SPF
ALL WEBS EXCEPT	2x3	DRY	No.2	SPF

DRY: SEASONED LUMBER.

PLATES (table is in inches)

JT	TYPE	PLATES	W	LEN	Y	X
2 3, 5, 7, 9	TMVW-t	MT20	4.0	8.0	1.75	3.00
3	TMWW-t	MT20	3.0	4.0	1.50	1.75
4	TS-t	MT20	3.0	6.0		
6	TTW+p	MT20	3.0	6.0		
8	TS-t	MT20	3.0	6.0		
10	TMVW-t	MT20	4.0	8.0	1.75	3.00
12	BMV1+p	MT20	2.0	4.0	2.25	1.00
13	BMWW-t	MT20	4.0	5.0	1.50	1.50
14	BMWW-t	MT20	3.0	4.0		
15	BS-t	MT20	3.0	6.0		
16	BMWWW-t	MT20	4.0	6.0	1.75	3.00
17	BS-t	MT20	3.0	6.0		
18	BMWW-t	MT20	3.0	4.0		
19	BMWW-t	MT20	4.0	5.0	1.50	1.50
20	BMV1+p	MT20	2.0	4.0	2.25	1.00

A SIZE FOR SIZE SUBSTITUTION OF MITEK MII20 WITH TEE-LOK TL20 PLATES IS ALLOWED.

DIMENSIONS, SUPPORTS AND LOADINGS SPECIFIED BY FABRICATOR TO BE VERIFIED BY BUILDING DESIGNER

BEARINGS

JT	FACTORED GROSS REACTION VERT	HORZ	MAXIMUM FACTORED GROSS REACTION DOWN	HORZ	UPLIFT	INPUT BRG IN-SX	REQRD BRG IN-SX
20	1797	0	1797	0	0	5-8	5-8
12	1797	0	1797	0	0	5-8	5-8

UNFACTORED REACTIONS

JT	1ST LCASE COMBINED	MAX./MIN. COMPONENT REACTIONS SNOW	LIVE	PERM.LIVE	WIND	DEAD	SOIL
20	1259	894 / 0	0 / 0	0 / 0	0 / 0	365 / 0	0 / 0
12	1259	894 / 0	0 / 0	0 / 0	0 / 0	365 / 0	0 / 0

BEARING MATERIAL TO BE SPF NO.2 OR BETTER AT JOINT(S) 20, 12

BRACING
TOP CHORD TO BE SHEATHED OR MAX. PURLIN SPACING = 3.95 FT.
MAX. UNBRACED BOTTOM CHORD LENGTH = 10.00 FT. OR RIGID CEILING DIRECTLY APPLIED.

ALL PITCH BREAKS AND PERIMETER CORNER JOINTS MUST BE LATERALLY RESTRAINED.

1 - 2x3 SPF No.2 LATERAL BRACE(S) AT 1/ 2 LENGTH OF 7-16, 5-16. DBS = 20-0-0 . CBF = 88 LBS.

DBS = DIAGONAL BRACE SPACING (MAX). CBF = CUMULATIVE BRACING FORCE. FASTEN LATERAL BRACE(S) USING (0.122"X3") SPIRAL NAILS : 1 NAIL FOR 2x3 BRACE(S), 2 FOR 1x4, 2x4, 2x5, 3 FOR 2x6, 4 FOR 2x8, 5 FOR 2x10, AND 6 FOR 2x12.

END VERTICAL(S) MUST BE SHEATHED OR HAVE BRACES AS INDICATED IN THE MAX. UNBRACED LENGTH COLUMN OF THE TABLE BELOW

LOADING
TOTAL LOAD CASES: (4)

CHORDS

MEMB. FR-TO	MAX. FACTORED FORCE (LBS)	FACTORED VERT. LOAD LC1 (PLF) FROM	TO	MAX CSI (LC)	MAX. UNBRAC LENGTH
1- 2	0 / 23	-77.4	-77.4	0.10 (1)	10.00
2- 3	-2515 / 0	-77.4	-77.4	0.47 (1)	3.95
3- 4	-2248 / 0	-77.4	-77.4	0.38 (1)	4.24
4- 5	-2248 / 0	-77.4	-77.4	0.38 (1)	4.24
5- 6	-1751 / 0	-77.4	-77.4	0.37 (1)	4.68
6- 7	-1751 / 0	-77.4	-77.4	0.37 (1)	4.68
7- 8	-2248 / 0	-77.4	-77.4	0.38 (1)	4.24
8- 9	-2248 / 0	-77.4	-77.4	0.38 (1)	4.24
9-10	-2515 / 0	-77.4	-77.4	0.47 (1)	3.95
10-11	0 / 23	-77.4	-77.4	0.10 (1)	10.00
20- 2	-1751 / 0	0.0	0.0	0.18 (1)	6.30
12-10	-1751 / 0	0.0	0.0	0.18 (1)	6.30
20-19	0 / 0	-17.5	-17.5	0.14 (4)	10.00
19-18	0 / 2267	-17.5	-17.5	0.42 (1)	10.00
18-17	0 / 2010	-17.5	-17.5	0.40 (1)	10.00
17-16	0 / 2010	-17.5	-17.5	0.40 (1)	10.00
16-15	0 / 2010	-17.5	-17.5	0.40 (1)	10.00
15-14	0 / 2010	-17.5	-17.5	0.40 (1)	10.00
14-13	0 / 2267	-17.5	-17.5	0.42 (1)	10.00
13-12	0 / 0	-17.5	-17.5	0.14 (4)	10.00

WEBS

MEMB. FR-TO	MAX. FACTORED FORCE (LBS)	MAX CSI (LC)
16- 6	0 / 1182	0.27 (1)
16- 7	-708 / 0	0.40 (1)
14- 7	0 / 270	0.06 (1)
14- 9	-308 / 0	0.29 (1)
13- 9	-207 / 37	0.06 (1)
5-16	-708 / 0	0.40 (1)
18- 5	0 / 270	0.06 (1)
3-18	-308 / 0	0.29 (1)
19- 3	-207 / 37	0.06 (1)
2-19	0 / 2289	0.52 (1)
13-10	0 / 2289	0.52 (1)

DESIGN CRITERIA

SPECIFIED LOADS:

TOP CH.	LL	=	23.3	PSF
	DL	=	3.0	PSF
BOT CH.	LL	=	0.0	PSF
	DL	=	7.0	PSF
TOTAL LOAD		=	33.3	PSF

SPACING = 24.0 IN. C/C

THIS TRUSS IS DESIGNED FOR RESIDENTIAL OR SMALL BUILDING REQUIREMENTS OF PART 9, NBCC 2010

THIS DESIGN COMPLIES WITH:
- PART 9 OF OBC 2012 , BCBC 2012 , ABC 2014
- CSA 086-09
- TPIC 2011

(55 % OF 27.2 P.S.F. G.S.L. PLUS 8.4 P.S.F. RAIN LOAD) EQUALS 23.3 P.S.F. SPECIFIED ROOF LIVE LOAD

ALLOWABLE DEFL.(LL)= L/360 (1.19")
CALCULATED VERT. DEFL.(LL) = L/ 999 (0.14")
ALLOWABLE DEFL.(TL)= L/360 (1.19")
CALCULATED VERT. DEFL.(TL) = L/ 999 (0.25")

CSI: TC=0.47 (9-10:1) , BC=0.42 (13-14:1) , WB=0.52 (10-13:1) , SSI=0.19 (9-10:1)

DOL LUMBER=1.00 NAIL=1.00 LS BEND=1.10 COMP=1.10 SHEAR=1.10 TENS= 1.10

COMPANION LIVE LOAD FACTOR = 0.50

TRUSS PLATE MANUFACTURER IS NOT RESPONSIBLE FOR QUALITY CONTROL IN THE TRUSS MANUFACTURING PLANT .

NAIL VALUES

PLATE	GRIP(DRY) (PSI) MAX	MIN	SHEAR (PLI) MAX	MIN	SECTION (PLI) MAX	MIN
MT20	618	354	1667	822	2284	1656

PLATE PLACEMENT TOL. = 0.250 inches

PLATE ROTATION TOL. = 5.0 Deg.

JSI GRIP= 0.88 (16) (INPUT = 0.90)
JSI METAL= 0.68 (13) (INPUT = 1.00)

LICENSED PROFESSIONAL ENGINEER
P.M. TREVISAN
100136551
March 20th, 2017
PROVINCE OF ONTARIO

RECEIVED
TOWN OF MILTON
MAR 29, 2017
17-5419
BUILDING DIVISION

READ ALL NOTES ON THIS PAGE AND ON THE ENGINEERING NOTE PAGE ENP-1. THE NOTE PAGE IS AN INTEGRAL PART OF THIS DRAWING AS IT CONTAINS SPECIFICATIONS AND CRITERIA USED IN THE DESIGN OF THIS COMPONENT.

KOTT

Version 8.100 S Feb 9 2017 MiTek Industries, Inc. Mon Mar 20 10:10:38 2017 Page 1
ID:Mn2zxnCa6NqoASkSkmtLJtyfhrl-reU58a952vG1ULfsKMgKGZh_F_kE33cCUkjk8KzZ4wV

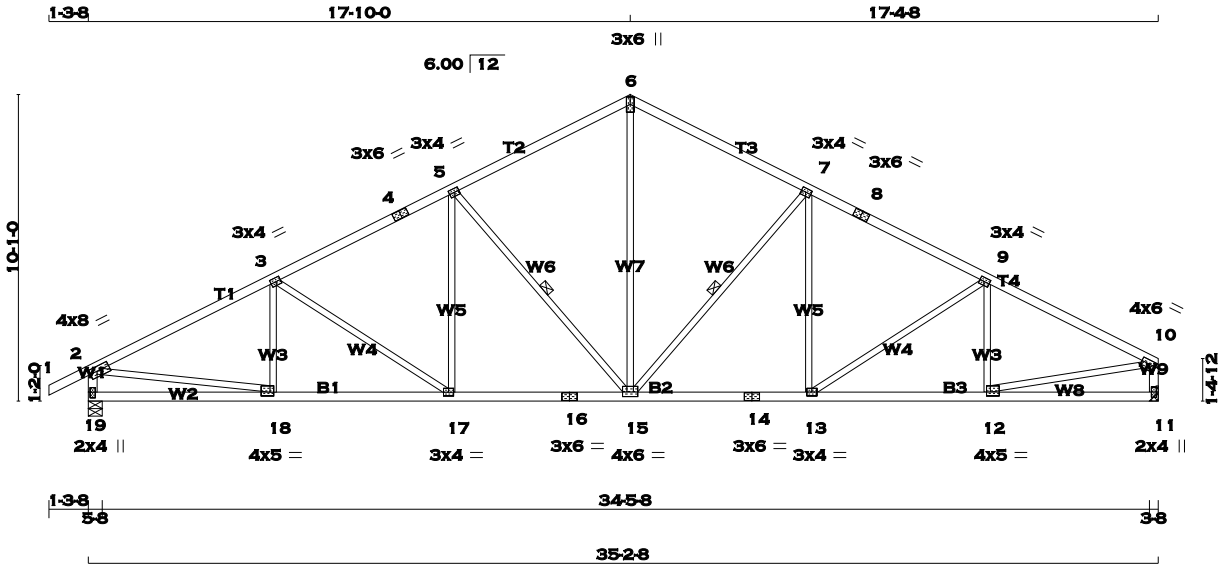

TOTAL WEIGHT = 12 X 147 = 1768 lb

[M][F]

LUMBER

N. L. G. A. RULES

CHORDS	SIZE		LUMBER	DESCR.
1 - 4	2x4	DRY	No.2	SPF
4 - 6	2x4	DRY	No.2	SPF
6 - 8	2x4	DRY	No.2	SPF
8 - 10	2x4	DRY	No.2	SPF
19 - 2	2x4	DRY	No.2	SPF
11 - 10	2x4	DRY	No.2	SPF
19 - 16	2x4	DRY	No.2	SPF
16 - 14	2x4	DRY	No.2	SPF
14 - 11	2x4	DRY	No.2	SPF
ALL WEBS EXCEPT	2x3	DRY	No.2	SPF

DRY: SEASONED LUMBER.

PLATES (table is in inches)

JT	TYPE	PLATES	W	LEN	Y	X
2 3, 5, 7, 9	TMVW-t	MT20	4.0	8.0	1.75	3.00
3	TMWW-t	MT20	3.0	4.0	1.50	1.75
4	TS-t	MT20	3.0	6.0		
6	TTW+p	MT20	3.0	6.0		
8	TS-t	MT20	3.0	6.0		
10	TMVW-t	MT20	4.0	6.0	1.50	2.75
11	BMV1+p	MT20	2.0	4.0		
12	BMWW-t	MT20	4.0	5.0	1.50	1.50
13	BMWW-t	MT20	3.0	4.0		
14	BS-t	MT20	3.0	6.0		
15	BMWWW-t	MT20	4.0	6.0	1.75	3.00
16	BS-t	MT20	3.0	6.0		
17	BMWW-t	MT20	3.0	4.0		
18	BMWW-t	MT20	4.0	5.0	1.50	1.50
19	BMV1+p	MT20	2.0	4.0	2.25	1.00

A SIZE FOR SIZE SUBSTITUTION OF MITEK MII20 WITH TEE-LOK TL20 PLATES IS ALLOWED.

DIMENSIONS, SUPPORTS AND LOADINGS SPECIFIED BY FABRICATOR TO BE VERIFIED BY BUILDING DESIGNER

BEARINGS

JT	FACTORED GROSS REACTION VERT	HORZ	MAXIMUM FACTORED GROSS REACTION DOWN	HORZ	UPLIFT	INPUT BRG IN-SX	REQRD BRG IN-SX
19	1775	0	1775	0	0	5-8	5-8
11	1670	0	1670	0	0	HANGER BY OTHERS MIN. SEAT SIZE: 3-8	

UNFACTORED REACTIONS

JT	1ST LCASE COMBINED	SNOW	MAX./MIN. COMPONENT REACTIONS LIVE	PERM.LIVE	WIND	DEAD	SOIL
19	1243	883 / 0	0 / 0	0 / 0	0 / 0	360 / 0	0 / 0
11	1172	820 / 0	0 / 0	0 / 0	0 / 0	352 / 0	0 / 0

BEARING MATERIAL TO BE SPF NO.2 OR BETTER AT JOINT(S) 19

BRACING

TOP CHORD TO BE SHEATHED OR MAX. PURLIN SPACING = 3.98 FT.
MAX. UNBRACED BOTTOM CHORD LENGTH = 10.00 FT. OR RIGID CEILING DIRECTLY APPLIED.

ALL PITCH BREAKS AND PERIMETER CORNER JOINTS MUST BE LATERALLY RESTRAINED.

1 - 2x3 SPF No.2 LATERAL BRACE(S) AT 1/ 2 LENGTH OF 5-15, 7-15. DBS = 20-0-0 . CBF = 89 LBS.

DBS = DIAGONAL BRACE SPACING (MAX). CBF = CUMULATIVE BRACING FORCE. FASTEN LATERAL BRACE(S) USING (0.122"X3") SPIRAL NAILS : 1 NAIL FOR 2x3 BRACE(S), 2 FOR 1x4, 2x4, 2x5, 3 FOR 2x6, 4 FOR 2x8, 5 FOR 2x10, AND 6 FOR 2x12.

END VERTICAL(S) MUST BE SHEATHED OR HAVE BRACES AS INDICATED IN THE MAX. UNBRACED LENGTH COLUMN OF THE TABLE BELOW

LOADING

TOTAL LOAD CASES: (4)

CHORDS

MEMB. FR-TO	MAX. FACTORED FORCE (LBS)	FACTORED VERT. LOAD LC1 (PLF) FROM	TO	MAX CSI (LC)	MAX. UNBRAC LENGTH
1- 2	0 / 23	-77.4	-77.4	0.10 (1)	10.00
2- 3	-2477 / 0	-77.4	-77.4	0.47 (1)	3.98
3- 4	-2205 / 0	-77.4	-77.4	0.38 (1)	4.28
4- 5	-2205 / 0	-77.4	-77.4	0.38 (1)	4.28
5- 6	-1707 / 0	-77.4	-77.4	0.37 (1)	4.74
6- 7	-1707 / 0	-77.4	-77.4	0.37 (1)	4.73
7- 8	-2162 / 0	-77.4	-77.4	0.38 (1)	4.31
8- 9	-2162 / 0	-77.4	-77.4	0.38 (1)	4.31
9-10	-2322 / 0	-77.4	-77.4	0.38 (1)	4.17
19- 2	-1729 / 0	0.0	0.0	0.17 (1)	6.33
11-10	-1628 / 0	0.0	0.0	0.17 (1)	6.48
19-18	0 / 0	-17.5	-17.5	0.14 (4)	10.00
18-17	0 / 2233	-17.5	-17.5	0.42 (1)	10.00
17-16	0 / 1972	-17.5	-17.5	0.39 (1)	10.00
16-15	0 / 1972	-17.5	-17.5	0.39 (1)	10.00
15-14	0 / 1936	-17.5	-17.5	0.38 (1)	10.00
14-13	0 / 1936	-17.5	-17.5	0.38 (1)	10.00
13-12	0 / 2094	-17.5	-17.5	0.39 (1)	10.00
12-11	0 / 0	-17.5	-17.5	0.13 (4)	10.00

WEBS

MEMB. FR-TO	MAX. FACTORED FORCE (LBS)	MAX CSI (LC)
18- 3	-202 / 39	0.05 (1)
3-17	-313 / 0	0.30 (1)
17- 5	0 / 273	0.06 (1)
5-15	-710 / 0	0.40 (1)
15- 6	0 / 1143	0.26 (1)
15- 7	-655 / 0	0.37 (1)
13- 7	0 / 206	0.05 (4)
13- 9	-190 / 0	0.18 (1)
12- 9	-297 / 6	0.08 (1)
2-18	0 / 2255	0.51 (1)
12-10	0 / 2132	0.48 (1)

DESIGN CRITERIA

SPECIFIED LOADS:

TOP CH.	LL	=	23.3	PSF
	DL	=	3.0	PSF
BOT CH.	LL	=	0.0	PSF
	DL	=	7.0	PSF
TOTAL LOAD		=	33.3	PSF

SPACING = 24.0 IN. C/C

THIS TRUSS IS DESIGNED FOR RESIDENTIAL OR SMALL BUILDING REQUIREMENTS OF PART 9, NBCC 2010

THIS DESIGN COMPLIES WITH:
- PART 9 OF OBC 2012 , BCBC 2012 , ABC 2014
- CSA 086-09
- TPIC 2011

(55 % OF 27.2 P.S.F. G.S.L. PLUS 8.4 P.S.F. RAIN LOAD) EQUALS 23.3 P.S.F. SPECIFIED ROOF LIVE LOAD

ALLOWABLE DEFL.(LL)= L/360 (1.17")
CALCULATED VERT. DEFL.(LL) = L/ 999 (0.13")
ALLOWABLE DEFL.(TL)= L/360 (1.17")
CALCULATED VERT. DEFL.(TL) = L/ 999 (0.24")

CSI: TC=0.47 (2-3:1) , BC=0.42 (17-18:1) , WB=0.51 (2-18:1) , SSI=0.19 (2-3:1)

DOL LUMBER=1.00 NAIL=1.00 LS BEND=1.10 COMP=1.10 SHEAR=1.10 TENS= 1.10

COMPANION LIVE LOAD FACTOR = 0.50

TRUSS PLATE MANUFACTURER IS NOT RESPONSIBLE FOR QUALITY CONTROL IN THE TRUSS MANUFACTURING PLANT .

NAIL VALUES

PLATE	GRIP(DRY) (PSI) MAX	MIN	SHEAR (PLI) MAX	MIN	SECTION (PLI) MAX	MIN
MT20	618	354	1667	822	2284	1656

PLATE PLACEMENT TOL. = 0.250 inches

PLATE ROTATION TOL. = 0.5 Deg.

JSI GRIP= 0.88 (10) (INPUT = 0.90)
JSI METAL= 0.67 (18) (INPUT = 1.00)

LICENSED PROFESSIONAL ENGINEER
P.M. TREVISAN
100136551
March 20th, 2017
PROVINCE OF ONTARIO

RECEIVED
TOWN OF MILTON
MAR 29, 2017
17-5419
BUILDING DIVISION

READ ALL NOTES ON THIS PAGE AND ON THE ENGINEERING NOTE PAGE ENP-1. THE NOTE PAGE IS AN INTEGRAL PART OF THIS DRAWING AS IT CONTAINS SPECIFICATIONS AND CRITERIA USED IN THE DESIGN OF THIS COMPONENT.

KOTT

JOB NAME	TRUSS NAME	QUANTITY	PLY	JOB DESC.	DRWG NO.
PT0317-122	T25	2	1	TRUSS DESC. LECCO RIDGE-BLOCK 348	ENG JOB: PT0317-122

KOTT , Stouffville, ON, CGC

Version 8.100 S Feb 9 2017 MiTek Industries, Inc. Mon Mar 20 10:10:38 2017 Page 1

ID:Mn2zxnCa6NqoASkSkmtLJtyfhrl-reU58a952vG1ULfsKMgKGZhyk_kq3_vCUkjk8KzZ4wV

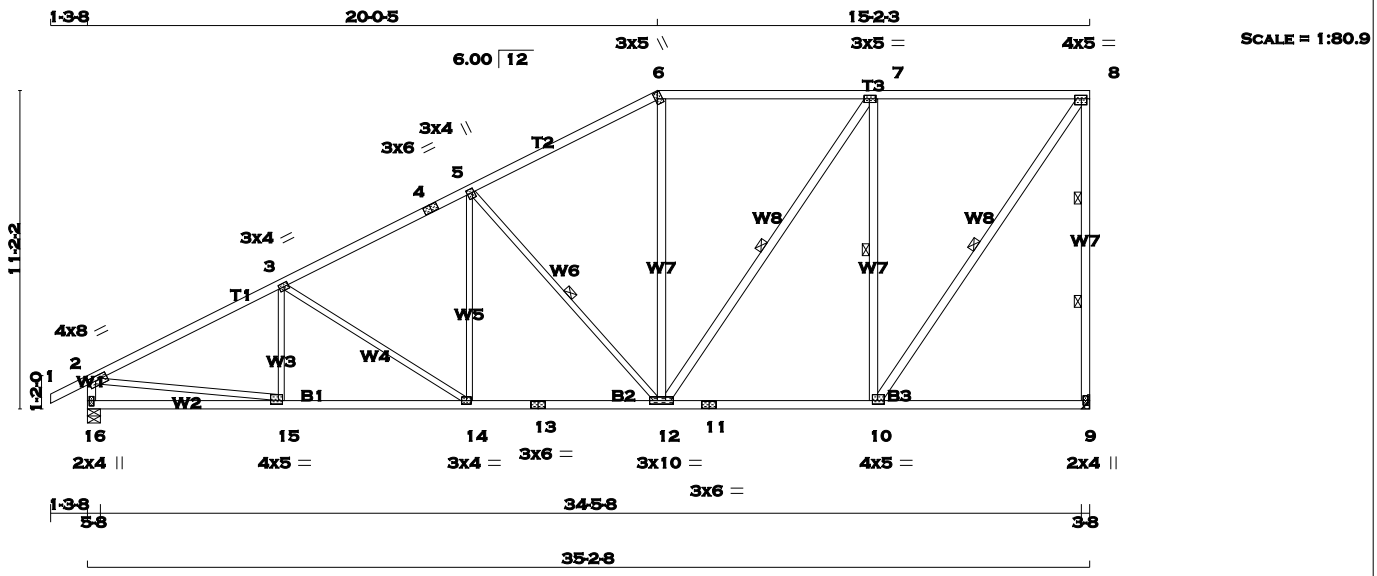

TOTAL WEIGHT = 2 X 180 = 359 lb

[M][F]

LUMBER

N. L. G. A. RULES

CHORDS	SIZE		LUMBER	DESCR.
1 - 4	2x4	DRY	No.2	SPF
4 - 6	2x4	DRY	No.2	SPF
6 - 8	2x4	DRY	No.2	SPF
9 - 8	2x4	DRY	No.2	SPF
16 - 2	2x4	DRY	No.2	SPF
16 - 13	2x4	DRY	No.2	SPF
13 - 11	2x4	DRY	No.2	SPF
11 - 9	2x4	DRY	No.2	SPF
ALL WEBS	2x3	DRY	No.2	SPF
EXCEPT				
12 - 6	2x4	DRY	No.2	SPF
12 - 7	2x4	DRY	No.2	SPF
10 - 7	2x4	DRY	No.2	SPF
10 - 8	2x4	DRY	No.2	SPF

DRY: SEASONED LUMBER.

PLATES (table is in inches)

JT	TYPE	PLATES	W	LEN	Y	X
2	TMVW-t	MT20	4.0	8.0	1.75	3.00
3	TMWW-t	MT20	3.0	4.0	1.50	1.75
4	TS-t	MT20	3.0	6.0		
5	TMWW+t	MT20	3.0	4.0	1.75	0.75
6	TTW+h	MT20	3.0	5.0	2.75	1.00
7	TMWW-t	MT20	3.0	5.0	1.50	2.25
8	TMVW-t	MT20	4.0	5.0	1.50	2.25
9	BMV1+p	MT20	2.0	4.0		
10	BMWW-t	MT20	4.0	5.0	1.50	2.25
11	BS-t	MT20	3.0	6.0		
12	BMWWW-t	MT20	3.0	10.0		
13	BS-t	MT20	3.0	6.0		
14	BMWW-t	MT20	3.0	4.0		
15	BMWW-t	MT20	4.0	5.0	1.50	1.75
16	BMV1+p	MT20	2.0	4.0	2.25	1.00

A SIZE FOR SIZE SUBSTITUTION OF MITEK MII20 WITH TEE-LOK TL20 PLATES IS ALLOWED.

DIMENSIONS, SUPPORTS AND LOADINGS SPECIFIED BY FABRICATOR TO BE VERIFIED BY BUILDING DESIGNER

BEARINGS

JT	FACTORED GROSS REACTION VERT	HORZ	MAXIMUM FACTORED GROSS REACTION DOWN	HORZ	UPLIFT	INPUT BRG IN-SX	REQRD BRG IN-SX
9	1670	0	1670	0	0	HANGER BY OTHERS MIN. SEAT SIZE: 3-8	
16	1775	0	1775	0	0	5-8	5-8

UNFACTORED REACTIONS

JT	1ST LCASE COMBINED	SNOW	MAX./MIN. COMPONENT REACTIONS LIVE	PERM.LIVE	WIND	DEAD	SOIL
9	1172	820 / 0	0 / 0	0 / 0	0 / 0	352 / 0	0 / 0
16	1243	883 / 0	0 / 0	0 / 0	0 / 0	360 / 0	0 / 0

BEARING MATERIAL TO BE SPF NO.2 OR BETTER AT JOINT(S) 16

BRACING

TOP CHORD TO BE SHEATHED OR MAX. PURLIN SPACING = 3.84 FT.
MAX. UNBRACED BOTTOM CHORD LENGTH = 10.00 FT. OR RIGID CEILING DIRECTLY APPLIED.

ALL PITCH BREAKS AND PERIMETER CORNER JOINTS MUST BE LATERALLY RESTRAINED.

2 - 2x3 SPF No.2 LATERAL BRACE(S) AT 1/ 3 LENGTH OF 8-9. DBS = 8-0-0 . CBF = 81 LBS.
1 - 2x3 SPF No.2 LATERAL BRACE(S) AT 1/ 2 LENGTH OF 5-12, 8-10. DBS = 16-0-0 . CBF = 85 LBS.
1 - 2x3 SPF No.2 LATERAL BRACE(S) AT 1/ 2 LENGTH OF 7-12. DBS = 20-0-0 . CBF = 39 LBS.
1 - 2x3 SPF No.2 LATERAL BRACE(S) AT 1/ 2 LENGTH OF 7-10. DBS = 12-0-0 . CBF = 93 LBS.

DBS = DIAGONAL BRACE SPACING (MAX). CBF = CUMULATIVE BRACING FORCE. FASTEN LATERAL BRACE(S) USING (0.122"X3") SPIRAL NAILS : 1 NAIL FOR 2x3 BRACE(S), 2 FOR 1x4, 2x4, 2x5, 3 FOR 2x6, 4 FOR 2x8, 5 FOR 2x10, AND 6 FOR 2x12.

END VERTICAL(S) MUST BE SHEATHED OR HAVE BRACES AS INDICATED IN THE MAX. UNBRACED LENGTH COLUMN OF THE TABLE BELOW

LOADING

TOTAL LOAD CASES: (4)

CHORDS MEMB. FR-TO	MAX. FACTORED FORCE (LBS)	FACTORED VERT. LOAD LC1 (PLF) FROM	TO	MAX CSI (LC)	MAX. UNBRAC LENGTH	WEBS MEMB. FR-TO	MAX. FACTORED FORCE (LBS)	MAX CSI (LC)
1- 2	0 / 23	-77.4	-77.4	0.10 (1)	10.00	15- 3	-155 / 64	0.05 (1)
2- 3	-2487 / 0	-77.4	-77.4	0.60 (1)	3.84	3-14	-429 / 0	0.55 (1)
3- 4	-2106 / 0	-77.4	-77.4	0.47 (1)	4.26	14- 5	0 / 347	0.08 (1)
4- 5	-2106 / 0	-77.4	-77.4	0.47 (1)	4.26	5-12	-843 / 0	0.63 (1)
5- 6	-1502 / 0	-77.4	-77.4	0.45 (1)	4.85	12- 6	0 / 235	0.04 (1)
6- 7	-1326 / 0	-77.4	-77.4	0.63 (1)	4.74	12- 7	0 / 624	0.10 (1)
7- 8	-973 / 0	-77.4	-77.4	0.61 (1)	5.36	10- 7	-1246 / 0	0.81 (1)
9- 8	-1617 / 0	0.0	0.0	0.46 (1)	5.20	10- 8	0 / 1701	0.27 (1)
16- 2	-1724 / 0	0.0	0.0	0.17 (1)	6.34	2-15	0 / 2262	0.51 (1)
16-15	0 / 0	-17.5	-17.5	0.18 (4)	10.00			
15-14	0 / 2244	-17.5	-17.5	0.44 (1)	10.00			
14-13	0 / 1884	-17.5	-17.5	0.39 (1)	10.00			
13-12	0 / 1884	-17.5	-17.5	0.39 (1)	10.00			
12-11	0 / 973	-17.5	-17.5	0.32 (4)	10.00			
11-10	0 / 973	-17.5	-17.5	0.32 (4)	10.00			
10- 9	0 / 0	-17.5	-17.5	0.25 (4)	10.00			

RECEIVED
TOWN OF MILTON
MAR 29, 2017
17-5419
BUILDING DIVISION

READ ALL NOTES ON THIS PAGE AND ON THE ENGINEERING NOTE PAGE ENP-1. THE NOTE PAGE IS AN INTEGRAL PART OF THIS DRAWING AS IT CONTAINS SPECIFICATIONS AND CRITERIA USED IN THE DESIGN OF THIS COMPONENT.

DESIGN CRITERIA

SPECIFIED LOADS:

TOP	CH.	LL	=	23.3	PSF
		DL	=	3.0	PSF
BOT	CH.	LL	=	0.0	PSF
		DL	=	7.0	PSF
TOTAL	LOAD		=	33.3	PSF

SPACING = 24.0 IN. C/C

LOADING IN FLAT SECTION BASED ON A SLOPE OF 6.00/12

THIS TRUSS IS DESIGNED FOR RESIDENTIAL OR SMALL BUILDING REQUIREMENTS OF PART 9, NBCC 2010

THIS DESIGN COMPLIES WITH:
- PART 9 OF OBC 2012 , BCBC 2012 , ABC 2014
- CSA 086-09
- TPIC 2011

(55 % OF 27.2 P.S.F. G.S.L. PLUS 8.4 P.S.F. RAIN LOAD) EQUALS 23.3 P.S.F. SPECIFIED ROOF LIVE LOAD

ALLOWABLE DEFL.(LL)= L/360 (1.17")
CALCULATED VERT. DEFL.(LL) = L/ 999 (0.12")
ALLOWABLE DEFL.(TL)= L/360 (1.17")
CALCULATED VERT. DEFL.(TL) = L/ 999 (0.22")

CSI: TC=0.63 (6-7:1) , BC=0.44 (14-15:1) , WB=0.81 (7-10:1) , SSI=0.29 (7-8:1)

DOL LUMBER=1.00 NAIL=1.00 LS BEND=1.10 COMP=1.10 SHEAR=1.10 TENS= 1.10

COMPANION LIVE LOAD FACTOR = 0.50

TRUSS PLATE MANUFACTURER IS NOT RESPONSIBLE FOR QUALITY CONTROL IN THE TRUSS MANUFACTURING PLANT .

NAIL VALUES

PLATE	GRIP(DRY) (PSI) MAX	MIN	SHEAR (PLI) MAX	MIN	SECTION (PLI) MAX	MIN
MT20	618	354	1667	822	2284	1656

PLATE PLACEMENT TOL. = 0.250 inches

PLATE ROTATION TOL. = 5.0 Deg.

JSI GRIP= 0.89 (15) (INPUT = 0.90)
JSI METAL= 0.67 (15) (INPUT = 1.00)

KOTT

JOB NAME	TRUSS NAME	QUANTITY	PLY	JOB DESC.	DRWG NO.
PT0317-122	T26	18	1	TRUSS DESC. LECCO RIDGE-BLOCK 348	

KOTT , Stouffville, ON, CGC

Version 8.100 S Feb 9 2017 MiTek Industries, Inc. Mon Mar 20 10:10:39 2017 Page 1
ID:Mn2zxnCa6NqoASkSkmtLJtyfhrl-Jr2TLwAjpCOu6VE2u3BZonEERO2dobBLiOTHgmzZ4wU

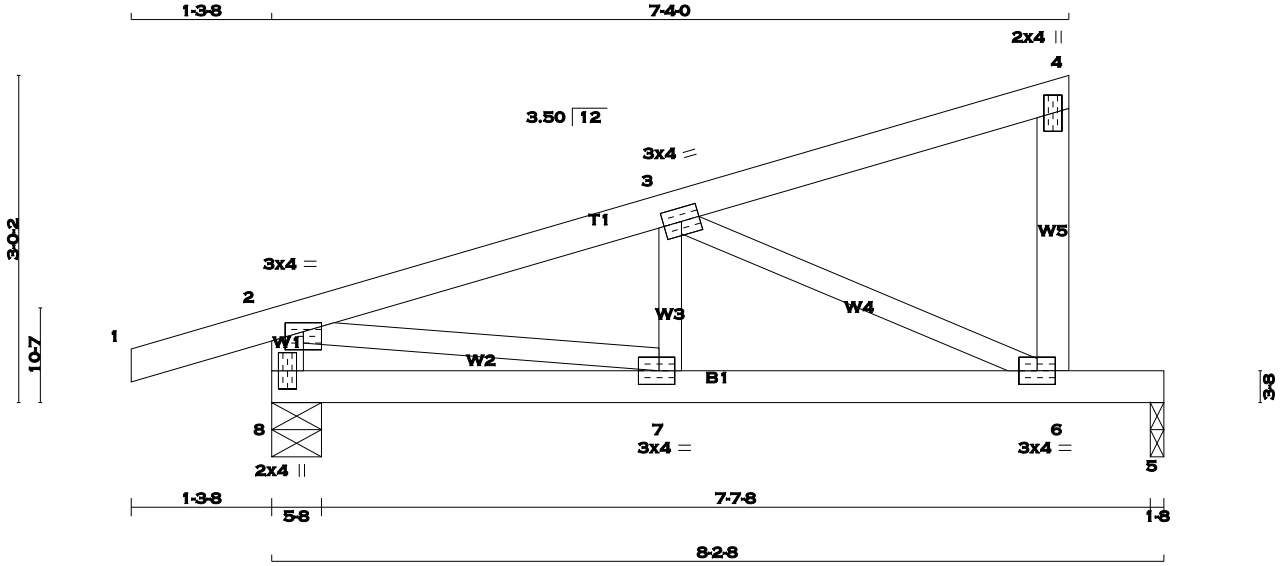

TOTAL WEIGHT = 18 X 30 = 532 lb

[M][F]

LUMBER

N. L. G. A. RULES

CHORDS	SIZE		LUMBER	DESCR.
1 - 4	2x4	DRY	No.2	SPF
6 - 4	2x4	DRY	No.2	SPF
8 - 2	2x4	DRY	No.2	SPF
8 - 5	2x4	DRY	No.2	SPF
ALL WEBS EXCEPT	2x3	DRY	No.2	SPF

DRY: SEASONED LUMBER.

PLATES (table is in inches)

JT	TYPE	PLATES	W	LEN	Y	X
2	TMVW-p	MT20	3.0	4.0	1.00	2.00
3	TMWW-t	MT20	3.0	4.0		
4	TMV+p	MT20	2.0	4.0		
6	BMVW-t	MT20	3.0	4.0		
7	BMWW-t	MT20	3.0	4.0	1.50	1.75
8	BMV1+p	MT20	2.0	4.0		

A SIZE FOR SIZE SUBSTITUTION OF MITEK MII20 WITH TEE-LOK TL20 PLATES IS ALLOWED.

DIMENSIONS, SUPPORTS AND LOADINGS SPECIFIED BY FABRICATOR TO BE VERIFIED BY BUILDING DESIGNER

BEARINGS

JT	FACTORED GROSS REACTION VERT	HORZ	MAXIMUM FACTORED GROSS REACTION DOWN	HORZ	UPLIFT	INPUT BRG IN-SX	REQRD BRG IN-SX
8	489	0	489	0	0	5-8	5-8
5	325	0	325	0	0	1-8	1-8

UNFACTORED REACTIONS

JT	1ST LCASE COMBINED	MAX./MIN. COMPONENT REACTIONS SNOW	LIVE	PERM.LIVE	WIND	DEAD	SOIL
8	341	251 / 0	0 / 0	0 / 0	0 / 0	90 / 0	0 / 0
5	230	153 / 0	0 / 0	0 / 0	0 / 0	77 / 0	0 / 0

BEARING MATERIAL TO BE SPF NO.2 OR BETTER AT JOINT(S) 8, 5

BRACING

TOP CHORD TO BE SHEATHED OR MAX. PURLIN SPACING = 6.25 FT.
MAX. UNBRACED BOTTOM CHORD LENGTH = 10.00 FT. OR RIGID CEILING DIRECTLY APPLIED.

ALL PITCH BREAKS AND PERIMETER CORNER JOINTS MUST BE LATERALLY RESTRAINED.

LOADING

TOTAL LOAD CASES: (4)

CHORDS

MEMB. FR-TO	MAX. FACTORED FORCE (LBS)	FACTORED VERT. LOAD (PLF) FROM	TO	LC1 MAX CSI (LC)	MAX. UNBRAC LENGTH
1- 2	0 / 14	-77.4	-77.4	0.10 (1)	10.00
2- 3	-604 / 0	-77.4	-77.4	0.12 (1)	6.25
3- 4	-8 / 0	-77.4	-77.4	0.12 (1)	10.00
6- 4	-112 / 0	0.0	0.0	0.02 (1)	7.81
8- 2	-478 / 0	0.0	0.0	0.05 (1)	7.81
8- 7	0 / 0	-17.5	-17.5	0.11 (1)	10.00
7- 6	0 / 588	-17.5	-17.5	0.47 (1)	10.00
6- 5	0 / 0	-17.5	-17.5	0.38 (1)	10.00

WEBS

MEMB. FR-TO	MAX. FACTORED FORCE (LBS)	MAX CSI (LC)
7- 3	0 / 94	0.03 (4)
3- 6	-644 / 0	0.17 (1)
2- 7	0 / 595	0.13 (1)

DESIGN CRITERIA

SPECIFIED LOADS:

TOP	CH.	LL	=	23.3	PSF
		DL	=	3.0	PSF
BOT	CH.	LL	=	0.0	PSF
		DL	=	7.0	PSF
TOTAL	LOAD		=	33.3	PSF

SPACING = 24.0 IN. C/C

THIS TRUSS IS DESIGNED FOR RESIDENTIAL OR SMALL BUILDING REQUIREMENTS OF PART 9, NBCC 2010

THIS DESIGN COMPLIES WITH:
- PART 9 OF OBC 2012 , BCBC 2012 , ABC 2014
- CSA 086-09
- TPIC 2011

(55 % OF 27.2 P.S.F. G.S.L. PLUS 8.4 P.S.F. RAIN LOAD) EQUALS 23.3 P.S.F. SPECIFIED ROOF LIVE LOAD

ALLOWABLE DEFL.(LL)= L/360 (0.27")
CALCULATED VERT. DEFL.(LL) = L/ 999 (0.06")
ALLOWABLE DEFL.(TL)= L/360 (0.27")
CALCULATED VERT. DEFL.(TL) = L/ 921 (0.11")

CSI: TC=0.12 (2-3:1) , BC=0.47 (6-7:1) , WB=0.17 (3-6:1) , SSI=0.25 (5-6:1)

DOL LUMBER=1.00 NAIL=1.00 LS BEND=1.10 COMP=1.10 SHEAR=1.10 TENS= 1.10

COMPANION LIVE LOAD FACTOR = 0.50

TRUSS PLATE MANUFACTURER IS NOT RESPONSIBLE FOR QUALITY CONTROL IN THE TRUSS MANUFACTURING PLANT .

NAIL VALUES

PLATE	GRIP(DRY) (PSI) MAX	MIN	SHEAR (PLI) MAX	MIN	SECTION (PLI) MAX	MIN
MT20	618	354	1667	822	2284	1656

PLATE PLACEMENT TOL. = 0.250 inches

PLATE ROTATION TOL. = 5.0 Deg.

JSI GRIP= 0.89 (6) (INPUT = 0.90)
JSI METAL= 0.22 (2) (INPUT = 1.00)

LICENSED PROFESSIONAL ENGINEER
P.M. TREVISAN
100136551
March 20th, 2017
PROVINCE OF ONTARIO

RECEIVED
TOWN OF MILTON
MAR 29, 2017
17-5419
BUILDING DIVISION

READ ALL NOTES ON THIS PAGE AND ON THE ENGINEERING NOTE PAGE ENP-1. THE NOTE PAGE IS AN INTEGRAL PART OF THIS DRAWING AS IT CONTAINS SPECIFICATIONS AND CRITERIA USED IN THE DESIGN OF THIS COMPONENT.

KOTT

JOB NAME	TRUSS NAME	QUANTITY	PLY	JOB DESC.	DRWG NO.
PT0317-122	**T27**	**2**	**1**	TRUSS DESC. LECCO RIDGE-BLOCK 348	Page 47 of 75 ENG JOB: PT0317-122

KOTT , Stouffville, ON, CGC

Version 8.100 S Feb 9 2017 MiTek Industries, Inc. Mon Mar 20 10:10:39 2017 Page 1
ID:Mn2zxnCa6NqoASkSkmtLJtyfhrl-Jr2TLwAjpCOu6VE2u3BZonEEkO9Fod2LiOTHgmzZ4wU

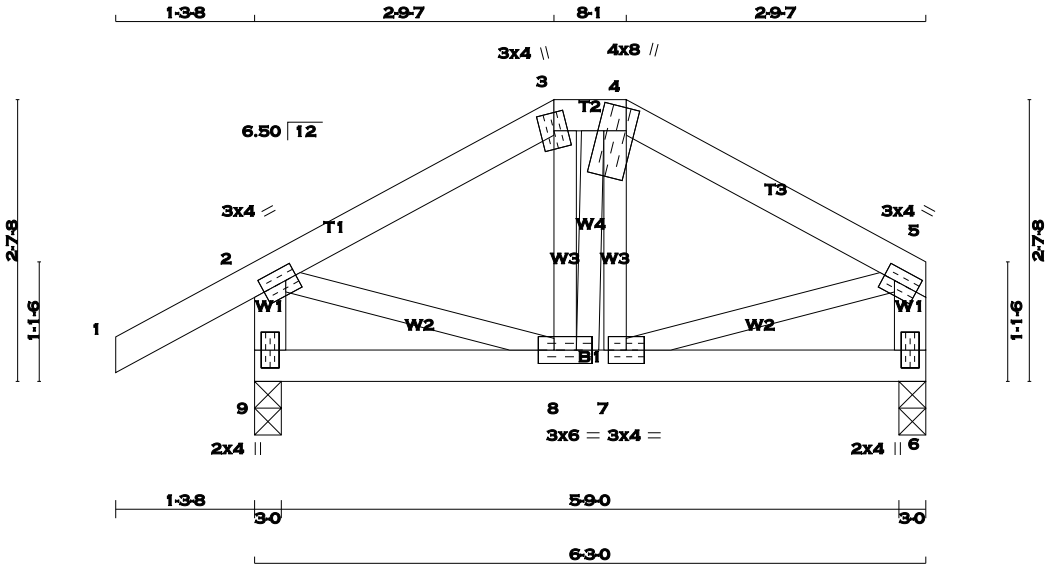

TOTAL WEIGHT = 2 X 28 = 56 lb

LUMBER

N. L. G. A. RULES

CHORDS	SIZE		LUMBER	DESCR.
1 - 3	2x4	DRY	No.2	SPF
3 - 4	2x4	DRY	No.2	SPF
4 - 5	2x4	DRY	No.2	SPF
9 - 2	2x4	DRY	No.2	SPF
6 - 5	2x4	DRY	No.2	SPF
9 - 6	2x4	DRY	No.2	SPF
ALL WEBS EXCEPT	2x3	DRY	No.2	SPF

DRY: SEASONED LUMBER.

PLATES (table is in inches)

JT	TYPE	PLATES	W	LEN	Y	X
2	TMVW-t	MT20	3.0	4.0	1.50	1.25
3	TTW+m	MT20	3.0	4.0		
4	TTWW+m	MT20	4.0	8.0	2.50	1.00
5	TMVW-t	MT20	3.0	4.0	1.50	1.25
6	BMV1+p	MT20	2.0	4.0		
7	BMWW-t	MT20	3.0	4.0		
8	BMWWW-t	MT20	3.0	6.0		
9	BMV1+p	MT20	2.0	4.0		

A SIZE FOR SIZE SUBSTITUTION OF MITEK MII20 WITH TEE-LOK TL20 PLATES IS ALLOWED.

DIMENSIONS, SUPPORTS AND LOADINGS SPECIFIED BY FABRICATOR TO BE VERIFIED BY BUILDING DESIGNER

BEARINGS

JT	FACTORED GROSS REACTION VERT	HORZ	MAXIMUM FACTORED GROSS REACTION DOWN	HORZ	UPLIFT	INPUT BRG IN-SX	REQRD BRG IN-SX
9	402	0	402	0	0	3-0	3-0
6	296	0	296	0	0	3-0	3-0

UNFACTORED REACTIONS

JT	1ST LCASE COMBINED	MAX./MIN. COMPONENT REACTIONS SNOW	LIVE	PERM.LIVE	WIND	DEAD	SOIL
9	280	209 / 0	0 / 0	0 / 0	0 / 0	71 / 0	0 / 0
6	208	146 / 0	0 / 0	0 / 0	0 / 0	62 / 0	0 / 0

BEARING MATERIAL TO BE SPF NO.2 OR BETTER AT JOINT(S) 9, 6

BRACING

TOP CHORD TO BE SHEATHED OR MAX. PURLIN SPACING = 6.25 FT.
MAX. UNBRACED BOTTOM CHORD LENGTH = 10.00 FT. OR RIGID CEILING DIRECTLY APPLIED.

ALL PITCH BREAKS AND PERIMETER CORNER JOINTS MUST BE LATERALLY RESTRAINED.

LOADING

TOTAL LOAD CASES: (4)

CHORDS

MEMB. FR-TO	MAX. FACTORED FORCE (LBS)	FACTORED VERT. LOAD (PLF) FROM	TO	LC1 MAX CSI (LC)	MAX. UNBRAC LENGTH
1- 2	0 / 25	-77.4	-77.4	0.10 (1)	10.00
2- 3	-230 / 0	-77.4	-77.4	0.08 (1)	6.25
3- 4	-201 / 0	-77.4	-77.4	0.00 (1)	6.25
4- 5	-231 / 0	-77.4	-77.4	0.08 (1)	6.25
9- 2	-379 / 0	0.0	0.0	0.04 (1)	7.81
6- 5	-275 / 0	0.0	0.0	0.03 (1)	7.81
9- 8	0 / 0	-17.5	-17.5	0.03 (4)	10.00
8- 7	0 / 202	-17.5	-17.5	0.05 (4)	10.00
7- 6	0 / 0	-17.5	-17.5	0.03 (4)	10.00

WEBS

MEMB. FR-TO	MAX. FACTORED FORCE (LBS)	MAX CSI (LC)
8- 3	-24 / 21	0.01 (4)
8- 4	-4 / 3	0.00 (4)
7- 4	-20 / 17	0.01 (4)
2- 8	0 / 210	0.05 (1)
7- 5	0 / 211	0.05 (1)

DESIGN CRITERIA

SPECIFIED LOADS:

TOP CH.	LL	=	23.3	PSF
	DL	=	3.0	PSF
BOT CH.	LL	=	0.0	PSF
	DL	=	7.0	PSF
TOTAL LOAD		=	33.3	PSF

SPACING = 24.0 IN. C/C

LOADING IN FLAT SECTION BASED ON A SLOPE OF 6.00/12

THIS TRUSS IS DESIGNED FOR RESIDENTIAL OR SMALL BUILDING REQUIREMENTS OF PART 9, NBCC 2010

THIS DESIGN COMPLIES WITH:
- PART 9 OF OBC 2012 , BCBC 2012 , ABC 2014
- CSA 086-09
- TPIC 2011

(55 % OF 27.2 P.S.F. G.S.L. PLUS 8.4 P.S.F. RAIN LOAD) EQUALS 23.3 P.S.F. SPECIFIED ROOF LIVE LOAD

ALLOWABLE DEFL.(LL)= L/360 (0.21")
CALCULATED VERT. DEFL.(LL) = L/ 999 (0.00")
ALLOWABLE DEFL.(TL)= L/360 (0.21")
CALCULATED VERT. DEFL.(TL) = L/ 999 (0.00")

CSI: TC=0.10 (1-2:1) , BC=0.05 (7-8:4) , WB=0.05 (5-7:1) , SSI=0.07 (4-5:1)

DOL LUMBER=1.00 NAIL=1.00 LS BEND=1.10 COMP=1.10 SHEAR=1.10 TENS= 1.10

COMPANION LIVE LOAD FACTOR = 0.50

TRUSS PLATE MANUFACTURER IS NOT RESPONSIBLE FOR QUALITY CONTROL IN THE TRUSS MANUFACTURING PLANT .

NAIL VALUES

PLATE	GRIP(DRY) (PSI) MAX	MIN	SHEAR (PLI) MAX	MIN	SECTION (PLI) MAX	MIN
MT20	618	354	1667	822	2284	1656

PLATE PLACEMENT TOL. = 0.250 inches

PLATE ROTATION TOL. = 5.0 Deg.

JSI GRIP= 0.52 (5) (INPUT = 0.90)
JSI METAL= 0.12 (2) (INPUT = 1.00)

LICENSED PROFESSIONAL ENGINEER
P.M. TREVISAN
100136551
March 20th, 2017
PROVINCE OF ONTARIO

RECEIVED
TOWN OF MILTON
MAR 29, 2017
17-5419
BUILDING DIVISION

READ ALL NOTES ON THIS PAGE AND ON THE ENGINEERING NOTE PAGE ENP-1. THE NOTE PAGE IS AN INTEGRAL PART OF THIS DRAWING AS IT CONTAINS SPECIFICATIONS AND CRITERIA USED IN THE DESIGN OF THIS COMPONENT.

KOTT

JOB NAME	TRUSS NAME	QUANTITY	PLY	JOB DESC.	DRWG NO.
PT0317-122	**T28**	**2**	**1**	TRUSS DESC. LECCO RIDGE-BLOCK 348	

KOTT , Stouffville, ON, CGC

Version 8.100 S Feb 9 2017 MiTek Industries, Inc. Mon Mar 20 10:10:39 2017 Page 1
ID:Mn2zxnCa6NqoASkSkmtLJtyfhrI-Jr2TLwAjpCOu6VE2u3BZonEEkO9Iod5LiOTHgmzZ4wU

SCALE = 1:23.0

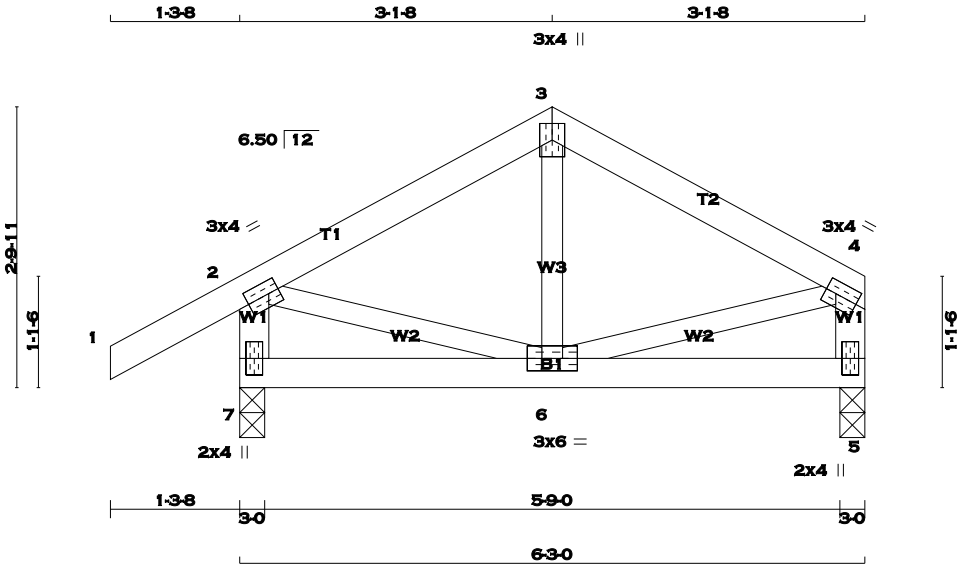

TOTAL WEIGHT = 2 X 25 = 50 lb

[M][F]

LUMBER

N. L. G. A. RULES

CHORDS	SIZE		LUMBER	DESCR.
1 - 3	2x4	DRY	No.2	SPF
3 - 4	2x4	DRY	No.2	SPF
7 - 2	2x4	DRY	No.2	SPF
5 - 4	2x4	DRY	No.2	SPF
7 - 5	2x4	DRY	No.2	SPF
ALL WEBS	2x3	DRY	No.2	SPF
EXCEPT				

DRY: SEASONED LUMBER.

PLATES (table is in inches)

JT	TYPE	PLATES	W	LEN	Y	X
2	TMVW-t	MT20	3.0	4.0	1.50	1.25
3	TTW+p	MT20	3.0	4.0		
4	TMVW-t	MT20	3.0	4.0	1.50	1.25
5	BMV1+p	MT20	2.0	4.0		
6	BMWWW-t	MT20	3.0	6.0		
7	BMV1+p	MT20	2.0	4.0		

A SIZE FOR SIZE SUBSTITUTION OF MITEK MII20 WITH TEE-LOK TL20 PLATES IS ALLOWED.

DIMENSIONS, SUPPORTS AND LOADINGS SPECIFIED BY FABRICATOR TO BE VERIFIED BY BUILDING DESIGNER

BEARINGS

JT	FACTORED GROSS REACTION VERT	HORZ	MAXIMUM FACTORED GROSS REACTION DOWN	HORZ	UPLIFT	INPUT BRG IN-SX	REQRD BRG IN-SX
7	402	0	402	0	0	3-0	3-0
5	296	0	296	0	0	3-0	3-0

UNFACTORED REACTIONS

JT	1ST LCASE COMBINED	MAX./MIN. COMPONENT REACTIONS SNOW	LIVE	PERM.LIVE	WIND	DEAD	SOIL
7	280	209 / 0	0 / 0	0 / 0	0 / 0	71 / 0	0 / 0
5	208	146 / 0	0 / 0	0 / 0	0 / 0	62 / 0	0 / 0

BEARING MATERIAL TO BE SPF NO.2 OR BETTER AT JOINT(S) 7, 5

BRACING

TOP CHORD TO BE SHEATHED OR MAX. PURLIN SPACING = 6.25 FT.
MAX. UNBRACED BOTTOM CHORD LENGTH = 10.00 FT. OR RIGID CEILING DIRECTLY APPLIED.

ALL PITCH BREAKS AND PERIMETER CORNER JOINTS MUST BE LATERALLY RESTRAINED.

LOADING

TOTAL LOAD CASES: (4)

CHORDS

MEMB. FR-TO	MAX. FACTORED FORCE (LBS)	FACTORED VERT. LOAD (PLF) FROM	TO	LC1 MAX CSI (LC)	MAX. UNBRAC LENGTH
1- 2	0 / 25	-77.4	-77.4	0.10 (1)	10.00
2- 3	-219 / 0	-77.4	-77.4	0.10 (1)	6.25
3- 4	-219 / 0	-77.4	-77.4	0.10 (1)	6.25
7- 2	-380 / 0	0.0	0.0	0.04 (1)	7.81
5- 4	-274 / 0	0.0	0.0	0.03 (1)	7.81
7- 6	0 / 0	-17.5	-17.5	0.05 (4)	10.00
6- 5	0 / 0	-17.5	-17.5	0.05 (4)	10.00

WEBS

MEMB. FR-TO	MAX. FACTORED FORCE (LBS)	MAX CSI (LC)
6- 3	-34 / 43	0.01 (4)
2- 6	0 / 198	0.04 (1)
6- 4	0 / 198	0.04 (1)

DESIGN CRITERIA

SPECIFIED LOADS:

TOP	CH.	LL	=	23.3	PSF
		DL	=	3.0	PSF
BOT	CH.	LL	=	0.0	PSF
		DL	=	7.0	PSF
TOTAL	LOAD		=	33.3	PSF

SPACING = 24.0 IN. C/C

THIS TRUSS IS DESIGNED FOR RESIDENTIAL OR SMALL BUILDING REQUIREMENTS OF PART 9, NBCC 2010

THIS DESIGN COMPLIES WITH:
- PART 9 OF OBC 2012 , BCBC 2012 , ABC 2014
- CSA 086-09
- TPIC 2011

(55 % OF 27.2 P.S.F. G.S.L. PLUS 8.4 P.S.F. RAIN LOAD) EQUALS 23.3 P.S.F. SPECIFIED ROOF LIVE LOAD

ALLOWABLE DEFL.(LL)= L/360 (0.21")
CALCULATED VERT. DEFL.(LL) = L/ 999 (0.00")
ALLOWABLE DEFL.(TL)= L/360 (0.21")
CALCULATED VERT. DEFL.(TL) = L/ 999 (0.00")

CSI: TC=0.10 (1-2:1) , BC=0.05 (5-6:4) , WB=0.04 (4-6:1) , SSI=0.08 (2-3:1)

DOL LUMBER=1.00 NAIL=1.00 LS BEND=1.10 COMP=1.10 SHEAR=1.10 TENS= 1.10

COMPANION LIVE LOAD FACTOR = 0.50

TRUSS PLATE MANUFACTURER IS NOT RESPONSIBLE FOR QUALITY CONTROL IN THE TRUSS MANUFACTURING PLANT .

NAIL VALUES

PLATE	GRIP(DRY) (PSI) MAX	MIN	SHEAR (PLI) MAX	MIN	SECTION (PLI) MAX	MIN
MT20	618	354	1667	822	2284	1656

PLATE PLACEMENT TOL. = 0.250 inches

PLATE ROTATION TOL. = 5.0 Deg.

JSI GRIP= 0.49 (2) (INPUT = 0.90)
JSI METAL= 0.12 (4) (INPUT = 1.00)

LICENSED PROFESSIONAL ENGINEER
P.M. TREVISAN
100136551
March 20th, 2017
PROVINCE OF ONTARIO

RECEIVED
TOWN OF MILTON
MAR 29, 2017
17-5419
BUILDING DIVISION

READ ALL NOTES ON THIS PAGE AND ON THE ENGINEERING NOTE PAGE ENP-1. THE NOTE PAGE IS AN INTEGRAL PART OF THIS DRAWING AS IT CONTAINS SPECIFICATIONS AND CRITERIA USED IN THE DESIGN OF THIS COMPONENT.

KOTT

JOB NAME	TRUSS NAME	QUANTITY	PLY	JOB DESC.	DRWG NO.
PT0317-122	T29	2	1	TRUSS DESC. LECCO RIDGE-BLOCK 348	

KOTT , Stouffville, ON, CGC

Version 8.100 S Feb 9 2017 MiTek Industries, Inc. Mon Mar 20 10:10:40 2017 Page 1
ID:Mn2zxnCa6NqoASkSkmtLJtyfhrl-n1crZGALaWWljfpERnjoL_nKknSsX05Vx2CrDCzZ4wT

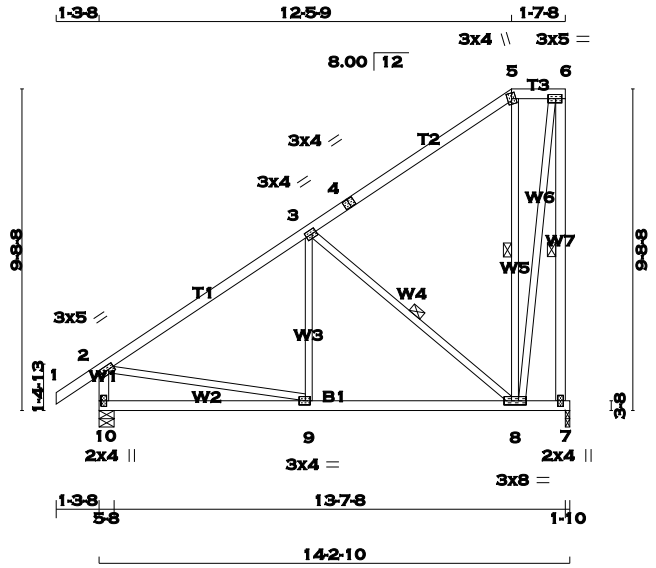

SCALE = 1:69.6

TOTAL WEIGHT = 2 X 79 = 158 lb
[M][F]

LUMBER
N. L. G. A. RULES

CHORDS	SIZE		LUMBER	DESCR.
1 - 4	2x4	DRY	No.2	SPF
4 - 5	2x4	DRY	No.2	SPF
5 - 6	2x4	DRY	No.2	SPF
7 - 6	2x4	DRY	No.2	SPF
10 - 2	2x4	DRY	No.2	SPF
10 - 7	2x4	DRY	No.2	SPF
ALL WEBS EXCEPT	2x3	DRY	No.2	SPF

DRY: SEASONED LUMBER.

PLATES (table is in inches)

JT	TYPE	PLATES	W	LEN	Y	X
2	TMVW-t	MT20	3.0	5.0	1.50	2.00
3	TMWW-t	MT20	3.0	4.0	1.50	1.50
4	TS-t	MT20	3.0	4.0		
5	TTW+m	MT20	3.0	4.0		
6	TMVW-t	MT20	3.0	5.0	1.50	2.25
7	BMV1+p	MT20	2.0	4.0		
8	BMWWW-t	MT20	3.0	8.0		
9	BMWW-t	MT20	3.0	4.0	1.50	1.75
10	BMV1+p	MT20	2.0	4.0		

A SIZE FOR SIZE SUBSTITUTION OF MITEK MII20 WITH TEE-LOK TL20 PLATES IS ALLOWED.

DIMENSIONS, SUPPORTS AND LOADINGS SPECIFIED BY FABRICATOR TO BE VERIFIED BY BUILDING DESIGNER

BEARINGS

JT	FACTORED GROSS REACTION VERT	HORZ	MAXIMUM FACTORED GROSS REACTION DOWN	HORZ	UPLIFT	INPUT BRG IN-SX	REQRD BRG IN-SX
7	668	0	668	0	0	1-10	1-10
10	774	0	774	0	0	5-8	5-8

UNFACTORED REACTIONS

JT	1ST LCASE COMBINED	MAX./MIN. COMPONENT REACTIONS SNOW	LIVE	PERM.LIVE	WIND	DEAD	SOIL
7	469	328 / 0	0 / 0	0 / 0	0 / 0	141 / 0	0 / 0
10	541	392 / 0	0 / 0	0 / 0	0 / 0	149 / 0	0 / 0

BEARING MATERIAL TO BE SPF NO.2 OR BETTER AT JOINT(S) 7, 10

BRACING
TOP CHORD TO BE SHEATHED OR MAX. PURLIN SPACING = 6.25 FT.
MAX. UNBRACED BOTTOM CHORD LENGTH = 10.00 FT. OR RIGID CEILING DIRECTLY APPLIED.

ALL PITCH BREAKS AND PERIMETER CORNER JOINTS MUST BE LATERALLY RESTRAINED.

1 - 2x3 SPF No.2 LATERAL BRACE(S) AT 1/ 2 LENGTH OF 6-7, 3-8, 5-8. DBS = 20-0-0 . CBF = 83 LBS.

DBS = DIAGONAL BRACE SPACING (MAX). CBF = CUMULATIVE BRACING FORCE. FASTEN LATERAL BRACE(S) USING (0.122"X3") SPIRAL NAILS : 1 NAIL FOR 2x3 BRACE(S), 2 FOR 1x4, 2x4, 2x5, 3 FOR 2x6, 4 FOR 2x8, 5 FOR 2x10, AND 6 FOR 2x12.

END VERTICAL(S) MUST BE SHEATHED OR HAVE BRACES AS INDICATED IN THE MAX. UNBRACED LENGTH COLUMN OF THE TABLE BELOW

LOADING
TOTAL LOAD CASES: (4)

CHORDS

MEMB. FR-TO	MAX. FACTORED FORCE (LBS)	FACTORED VERT. LOAD (PLF) FROM	TO	LC1 MAX CSI (LC)	MAX. UNBRAC LENGTH
1- 2	0 / 29	-77.4	-77.4	0.10 (1)	10.00
2- 3	-596 / 0	-77.4	-77.4	0.41 (1)	6.25
3- 4	-153 / 0	-77.4	-77.4	0.39 (1)	6.25
4- 5	-153 / 0	-77.4	-77.4	0.39 (1)	6.25
5- 6	-97 / 0	-77.4	-77.4	0.03 (1)	6.25
7- 6	-665 / 0	0.0	0.0	0.30 (1)	6.25
10- 2	-731 / 0	0.0	0.0	0.08 (1)	7.81
10- 9	0 / 0	-17.5	-17.5	0.18 (4)	10.00
9- 8	0 / 523	-17.5	-17.5	0.22 (4)	10.00
8- 7	0 / 0	-17.5	-17.5	0.07 (4)	10.00

WEBS

MEMB. FR-TO	MAX. FACTORED FORCE (LBS)	MAX CSI (LC)
9- 3	0 / 118	0.04 (4)
3- 8	-557 / 0	0.25 (1)
8- 5	-174 / 0	0.11 (1)
8- 6	0 / 611	0.14 (1)
2- 9	0 / 531	0.12 (1)

DESIGN CRITERIA

SPECIFIED LOADS:

TOP CH.	LL	=	23.3	PSF
	DL	=	3.0	PSF
BOT CH.	LL	=	0.0	PSF
	DL	=	7.0	PSF
TOTAL LOAD		=	33.3	PSF

SPACING = 24.0 IN. C/C

LOADING IN FLAT SECTION BASED ON A SLOPE OF 6.00/12

THIS TRUSS IS DESIGNED FOR RESIDENTIAL OR SMALL BUILDING REQUIREMENTS OF PART 9, NBCC 2010

THIS DESIGN COMPLIES WITH:
- PART 9 OF OBC 2012 , BCBC 2012 , ABC 2014
- CSA 086-09
- TPIC 2011

(55 % OF 27.2 P.S.F. G.S.L. PLUS 8.4 P.S.F. RAIN LOAD) EQUALS 23.3 P.S.F. SPECIFIED ROOF LIVE LOAD

ALLOWABLE DEFL.(LL)= L/360 (0.47")
CALCULATED VERT. DEFL.(LL) = L/ 999 (0.02")
ALLOWABLE DEFL.(TL)= L/360 (0.47")
CALCULATED VERT. DEFL.(TL) = L/ 999 (0.05")

CSI: TC=0.41 (2-3:1) , BC=0.22 (8-9:4) , WB=0.25 (3-8:1) , SSI=0.20 (2-3:1)

DOL LUMBER=1.00 NAIL=1.00 LS BEND=1.10 COMP=1.10 SHEAR=1.10 TENS= 1.10

COMPANION LIVE LOAD FACTOR = 0.50

TRUSS PLATE MANUFACTURER IS NOT RESPONSIBLE FOR QUALITY CONTROL IN THE TRUSS MANUFACTURING PLANT .

NAIL VALUES

PLATE	GRIP(DRY) (PSI) MAX	MIN	SHEAR (PLI) MAX	MIN	SECTION (PLI) MAX	MIN
MT20	618	354	1667	822	2284	1656

PLATE PLACEMENT TOL. = 0.250 inches

PLATE ROTATION TOL. = 5.0 Deg.

JSI GRIP= 0.89 (8) (INPUT = 0.90)
JSI METAL= 0.24 (2) (INPUT = 1.00)

LICENSED PROFESSIONAL ENGINEER
P.M. TREVISAN
100136551
March 20th, 2017
PROVINCE OF ONTARIO

RECEIVED
TOWN OF MILTON
MAR 29, 2017
17-5419
BUILDING DIVISION

READ ALL NOTES ON THIS PAGE AND ON THE ENGINEERING NOTE PAGE ENP-1. THE NOTE PAGE IS AN INTEGRAL PART OF THIS DRAWING AS IT CONTAINS SPECIFICATIONS AND CRITERIA USED IN THE DESIGN OF THIS COMPONENT.

KOTT

JOB NAME	TRUSS NAME	QUANTITY	PLY	JOB DESC.	DRWG NO.
PT0317-122	T30	2	1	TRUSS DESC. LECCO RIDGE-BLOCK 348	

KOTT , Stouffville, ON, CGC

Version 8.100 S Feb 9 2017 MiTek Industries, Inc. Mon Mar 20 10:10:40 2017 Page 1
ID:Mn2zxnCa6NqoASkSkmtLJtyfhrl-n1crZGALaWWljfpERnjoL_nIvnRmX_KVx2CrDCzZ4wT

SCALE = 1:71.3

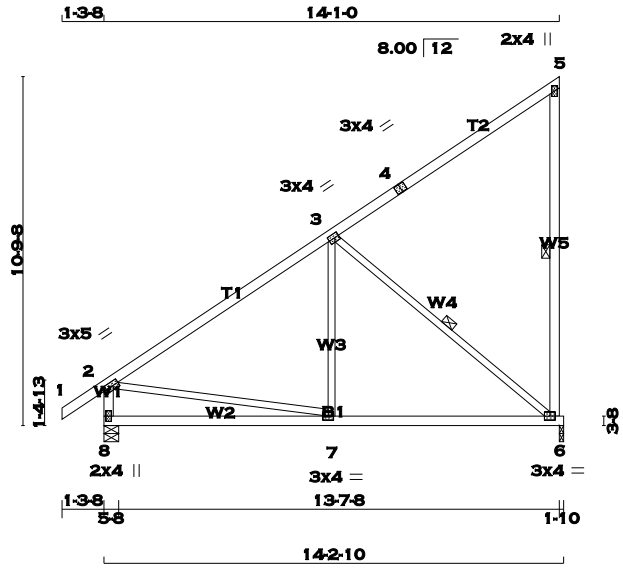

TOTAL WEIGHT = 2 X 67 = 134 lb
[M][F]

LUMBER
N. L. G. A. RULES

CHORDS	SIZE		LUMBER	DESCR.
1 - 4	2x4	DRY	No.2	SPF
4 - 5	2x4	DRY	No.2	SPF
6 - 5	2x4	DRY	No.2	SPF
8 - 2	2x4	DRY	No.2	SPF
8 - 6	2x4	DRY	No.2	SPF
ALL WEBS EXCEPT	2x3	DRY	No.2	SPF

DRY: SEASONED LUMBER.

PLATES (table is in inches)

JT	TYPE	PLATES	W	LEN	Y	X
2	TMVW-t	MT20	3.0	5.0	1.50	2.00
3	TMWW-t	MT20	3.0	4.0	1.50	1.50
4	TS-t	MT20	3.0	4.0		
5	TMV+p	MT20	2.0	4.0		
6	BMVW1-t	MT20	3.0	4.0		
7	BMWW-t	MT20	3.0	4.0		
8	BMV1+p	MT20	2.0	4.0		

A SIZE FOR SIZE SUBSTITUTION OF MITEK MII20 WITH TEE-LOK TL20 PLATES IS ALLOWED.

DIMENSIONS, SUPPORTS AND LOADINGS SPECIFIED BY FABRICATOR TO BE VERIFIED BY BUILDING DESIGNER

BEARINGS

JT	FACTORED GROSS REACTION VERT	HORZ	MAXIMUM FACTORED GROSS REACTION DOWN	HORZ	UPLIFT	INPUT BRG IN-SX	REQRD BRG IN-SX
6	668	0	668	0	0	1-10	1-10
8	774	0	774	0	0	5-8	5-8

UNFACTORED REACTIONS

JT	1ST LCASE COMBINED	MAX./MIN. COMPONENT REACTIONS SNOW	LIVE	PERM.LIVE	WIND	DEAD	SOIL
6	469	328 / 0	0 / 0	0 / 0	0 / 0	141 / 0	0 / 0
8	541	392 / 0	0 / 0	0 / 0	0 / 0	149 / 0	0 / 0

BEARING MATERIAL TO BE SPF NO.2 OR BETTER AT JOINT(S) 6, 8

BRACING
TOP CHORD TO BE SHEATHED OR MAX. PURLIN SPACING = 6.25 FT.
MAX. UNBRACED BOTTOM CHORD LENGTH = 10.00 FT. OR RIGID CEILING DIRECTLY APPLIED.

ALL PITCH BREAKS AND PERIMETER CORNER JOINTS MUST BE LATERALLY RESTRAINED.

1 - 2x3 SPF No.2 LATERAL BRACE(S) AT 1/ 2 LENGTH OF 5-6, 3-6. DBS = 20-0-0 . CBF = 82 LBS.

DBS = DIAGONAL BRACE SPACING (MAX). CBF = CUMULATIVE BRACING FORCE. FASTEN LATERAL BRACE(S) USING (0.122"X3") SPIRAL NAILS : 1 NAIL FOR 2x3 BRACE(S), 2 FOR 1x4, 2x4, 2x5, 3 FOR 2x6, 4 FOR 2x8, 5 FOR 2x10, AND 6 FOR 2x12.

END VERTICAL(S) MUST BE SHEATHED OR HAVE BRACES AS INDICATED IN THE MAX. UNBRACED LENGTH COLUMN OF THE TABLE BELOW

LOADING
TOTAL LOAD CASES: (4)

CHORDS

MEMB. FR-TO	MAX. FACTORED FORCE (LBS)	FACTORED VERT. LOAD LC1 (PLF) FROM	TO	MAX CSI (LC)	MAX. UNBRAC LENGTH
1- 2	0 / 29	-77.4	-77.4	0.10 (1)	10.00
2- 3	-572 / 0	-77.4	-77.4	0.52 (1)	6.25
3- 4	-37 / 0	-77.4	-77.4	0.51 (1)	6.25
4- 5	-37 / 0	-77.4	-77.4	0.51 (1)	6.25
6- 5	-205 / 0	0.0	0.0	0.12 (1)	6.25
8- 2	-727 / 0	0.0	0.0	0.07 (1)	7.81
8- 7	0 / 0	-17.5	-17.5	0.25 (4)	10.00
7- 6	0 / 507	-17.5	-17.5	0.29 (4)	10.00

WEBS

MEMB. FR-TO	MAX. FACTORED FORCE (LBS)	MAX CSI (LC)
7- 3	0 / 149	0.05 (4)
3- 6	-656 / 0	0.37 (1)
2- 7	0 / 513	0.12 (1)

DESIGN CRITERIA

SPECIFIED LOADS:

TOP	CH.	LL	=	23.3	PSF
		DL	=	3.0	PSF
BOT	CH.	LL	=	0.0	PSF
		DL	=	7.0	PSF
TOTAL	LOAD		=	33.3	PSF

SPACING = 24.0 IN. C/C

THIS TRUSS IS DESIGNED FOR RESIDENTIAL OR SMALL BUILDING REQUIREMENTS OF PART 9, NBCC 2010

THIS DESIGN COMPLIES WITH:
- PART 9 OF OBC 2012 , BCBC 2012 , ABC 2014
- CSA 086-09
- TPIC 2011

(55 % OF 27.2 P.S.F. G.S.L. PLUS 8.4 P.S.F. RAIN LOAD) EQUALS 23.3 P.S.F. SPECIFIED ROOF LIVE LOAD

ALLOWABLE DEFL.(LL)= L/360 (0.47")
CALCULATED VERT. DEFL.(LL) = L/ 999 (0.01")
ALLOWABLE DEFL.(TL)= L/360 (0.47")
CALCULATED VERT. DEFL.(TL) = L/ 999 (0.06")

CSI: TC=0.52 (2-3:1) , BC=0.29 (6-7:4) , WB=0.37 (3-6:1) , SSI=0.22 (3-5:1)

DOL LUMBER=1.00 NAIL=1.00 LS BEND=1.10 COMP=1.10 SHEAR=1.10 TENS= 1.10

COMPANION LIVE LOAD FACTOR = 0.50

TRUSS PLATE MANUFACTURER IS NOT RESPONSIBLE FOR QUALITY CONTROL IN THE TRUSS MANUFACTURING PLANT .

NAIL VALUES

PLATE	GRIP(DRY) (PSI) MAX	MIN	SHEAR (PLI) MAX	MIN	SECTION (PLI) MAX	MIN
MT20	618	354	1667	822	2284	1656

PLATE PLACEMENT TOL. = 0.250 inches

PLATE ROTATION TOL. = 0.5 Deg.

JSI GRIP= 0.87 (7) (INPUT = 0.90)
JSI METAL= 0.23 (2) (INPUT = 1.00)

LICENSED PROFESSIONAL ENGINEER
P.M. TREVISAN
100136551
March 20th, 2017
PROVINCE OF ONTARIO

RECEIVED
TOWN OF MILTON
MAR 29, 2017
17-5419
BUILDING DIVISION

READ ALL NOTES ON THIS PAGE AND ON THE ENGINEERING NOTE PAGE ENP-1. THE NOTE PAGE IS AN INTEGRAL PART OF THIS DRAWING AS IT CONTAINS SPECIFICATIONS AND CRITERIA USED IN THE DESIGN OF THIS COMPONENT.

KOTT

JOB NAME	TRUSS NAME	QUANTITY	PLY	JOB DESC.	DRWG NO.
PT0317-122	T31	2	1	TRUSS DESC. LECCO RIDGE-BLOCK 348	

KOTT , Stouffville, ON, CGC

Version 8.100 S Feb 9 2017 MiTek Industries, Inc. Mon Mar 20 10:10:41 2017 Page 1
ID:Mn2zxnCa6NqoASkSkmtLJtyfhrl-FDAEmbBzKqecLpOR?UE1uCJPbBlHGJFeAiyOlezZ4wS

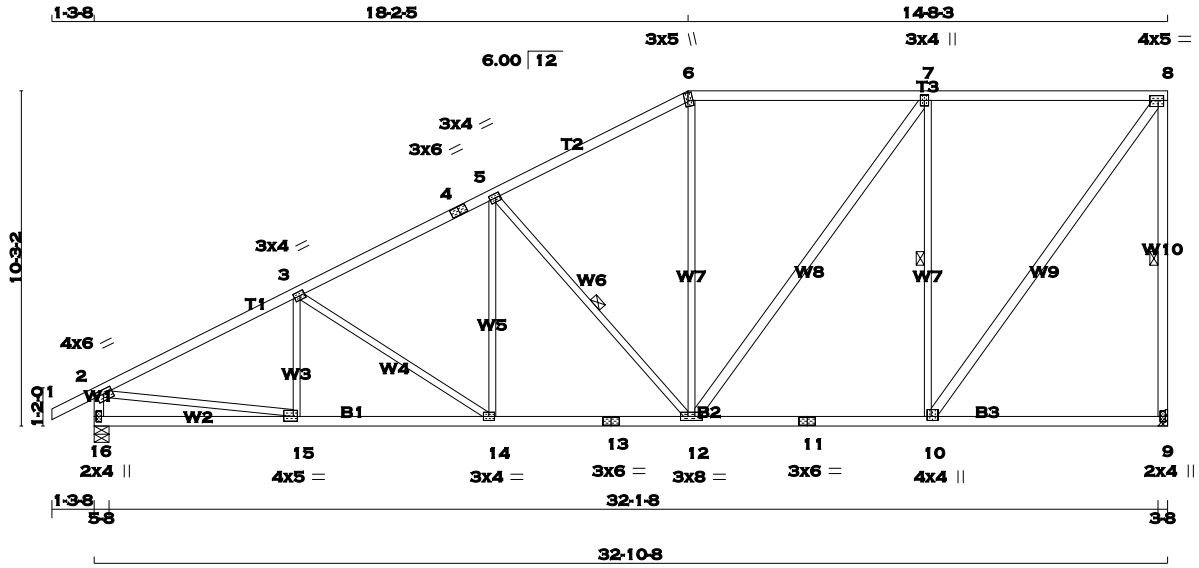

SCALE = 1:70.6

TOTAL WEIGHT = 2 X 160 = 320 lb
[M][F]

LUMBER
N. L. G. A. RULES

CHORDS	SIZE		LUMBER	DESCR.
1 - 4	2x4	DRY	No.2	SPF
4 - 6	2x4	DRY	No.2	SPF
6 - 8	2x4	DRY	No.2	SPF
9 - 8	2x4	DRY	No.2	SPF
16 - 2	2x4	DRY	No.2	SPF
16 - 13	2x4	DRY	No.2	SPF
13 - 11	2x4	DRY	No.2	SPF
11 - 9	2x4	DRY	No.2	SPF
ALL WEBS	2x3	DRY	No.2	SPF
EXCEPT				
12 - 7	2x4	DRY	No.2	SPF
10 - 8	2x4	DRY	No.2	SPF

DRY: SEASONED LUMBER.

PLATES (table is in inches)

JT	TYPE	PLATES	W	LEN	Y	X
2	TMVW-t	MT20	4.0	6.0	1.50	2.75
3	TMWW-t	MT20	3.0	4.0	1.50	1.75
4	TS-t	MT20	3.0	6.0		
5	TMWW-t	MT20	3.0	4.0	1.50	1.75
6	TTW+m	MT20	3.0	5.0	2.75	1.25
7	TMWW+t	MT20	3.0	4.0		
8	TMVW-t	MT20	4.0	5.0	1.75	2.00
9	BMV1+p	MT20	2.0	4.0		
10	BMWW+t	MT20	4.0	4.0	1.50	1.50
11	BS-t	MT20	3.0	6.0		
12	BMWWW-t	MT20	3.0	8.0		
13	BS-t	MT20	3.0	6.0		
14	BMWW-t	MT20	3.0	4.0		
15	BMWW-t	MT20	4.0	5.0	1.75	1.50
16	BMV1+p	MT20	2.0	4.0		

A SIZE FOR SIZE SUBSTITUTION OF MITEK MII20 WITH TEE-LOK TL20 PLATES IS ALLOWED.

DIMENSIONS, SUPPORTS AND LOADINGS SPECIFIED BY FABRICATOR TO BE VERIFIED BY BUILDING DESIGNER

BEARINGS

JT	FACTORED GROSS REACTION VERT	HORZ	MAXIMUM FACTORED GROSS REACTION DOWN	HORZ	UPLIFT	INPUT BRG	REQRD BRG
9	1559	0	1559	0	0	HANGER BY OTHERS	
						MIN. SEAT SIZE: 3-8	
16	1664	0	1664	0	0	5-8	5-8

UNFACTORED REACTIONS

JT	1ST LCASE COMBINED	SNOW	MAX./MIN. COMPONENT REACTIONS LIVE	PERM.LIVE	WIND	DEAD	SOIL
9	1094	766 / 0	0 / 0	0 / 0	0 / 0	329 / 0	0 / 0
16	1166	829 / 0	0 / 0	0 / 0	0 / 0	337 / 0	0 / 0

BEARING MATERIAL TO BE SPF NO.2 OR BETTER AT JOINT(S) 16

BRACING
TOP CHORD TO BE SHEATHED OR MAX. PURLIN SPACING = 4.11 FT.
MAX. UNBRACED BOTTOM CHORD LENGTH = 10.00 FT. OR RIGID CEILING DIRECTLY APPLIED.

ALL PITCH BREAKS AND PERIMETER CORNER JOINTS MUST BE LATERALLY RESTRAINED.

1 - 2x3 SPF No.2 LATERAL BRACE(S) AT 1/ 2 LENGTH OF 8-9. DBS = 8-0-0 . CBF = 75 LBS.
1 - 2x3 SPF No.2 LATERAL BRACE(S) AT 1/ 2 LENGTH OF 5-12. DBS = 18-0-0 . CBF = 84 LBS.
1 - 2x3 SPF No.2 LATERAL BRACE(S) AT 1/ 2 LENGTH OF 7-10. DBS = 12-0-0 . CBF = 86 LBS.

DBS = DIAGONAL BRACE SPACING (MAX). CBF = CUMULATIVE BRACING FORCE. FASTEN LATERAL BRACE(S) USING (0.122"X3") SPIRAL NAILS : 1 NAIL FOR 2x3 BRACE(S), 2 FOR 1x4, 2x4, 2x5, 3 FOR 2x6, 4 FOR 2x8, 5 FOR 2x10, AND 6 FOR 2x12.

END VERTICAL(S) MUST BE SHEATHED OR HAVE BRACES AS INDICATED IN THE MAX. UNBRACED LENGTH COLUMN OF THE TABLE BELOW

LOADING
TOTAL LOAD CASES: (4)

CHORDS

MEMB. FR-TO	MAX. FACTORED FORCE (LBS)	FACTORED VERT. LOAD LC1 (PLF) FROM	TO	MAX CSI (LC)	MAX. UNBRAC LENGTH
1- 2	0 / 23	-77.4	-77.4	0.10 (1)	10.00
2- 3	-2287 / 0	-77.4	-77.4	0.47 (1)	4.11
3- 4	-1973 / 0	-77.4	-77.4	0.37 (1)	4.47
4- 5	-1973 / 0	-77.4	-77.4	0.37 (1)	4.47
5- 6	-1442 / 0	-77.4	-77.4	0.36 (1)	5.05
6- 7	-1273 / 0	-77.4	-77.4	0.58 (1)	4.91
7- 8	-953 / 0	-77.4	-77.4	0.56 (1)	5.51
9- 8	-1508 / 0	0.0	0.0	0.78 (1)	5.35
16- 2	-1618 / 0	0.0	0.0	0.16 (1)	6.50
16-15	0 / 0	-17.5	-17.5	0.15 (4)	10.00
15-14	0 / 2063	-17.5	-17.5	0.40 (1)	10.00
14-13	0 / 1765	-17.5	-17.5	0.36 (1)	10.00
13-12	0 / 1765	-17.5	-17.5	0.36 (1)	10.00
12-11	0 / 953	-17.5	-17.5	0.30 (4)	10.00
11-10	0 / 953	-17.5	-17.5	0.30 (4)	10.00
10- 9	0 / 0	-17.5	-17.5	0.23 (4)	10.00

WEBS

MEMB. FR-TO	MAX. FACTORED FORCE (LBS)	MAX CSI (LC)
15- 3	-170 / 50	0.05 (1)
3-14	-357 / 0	0.36 (1)
14- 5	0 / 299	0.07 (1)
5-12	-749 / 0	0.45 (1)
12- 6	0 / 235	0.05 (1)
12- 7	0 / 546	0.09 (1)
10- 7	-1148 / 0	0.83 (1)
10- 8	0 / 1607	0.26 (1)
2-15	0 / 2082	0.47 (1)

DESIGN CRITERIA

SPECIFIED LOADS:

TOP CH.	LL	=	23.3	PSF
	DL	=	3.0	PSF
BOT CH.	LL	=	0.0	PSF
	DL	=	7.0	PSF
TOTAL LOAD		=	33.3	PSF

SPACING = 24.0 IN. C/C

LOADING IN FLAT SECTION BASED ON A SLOPE OF 6.00/12

THIS TRUSS IS DESIGNED FOR RESIDENTIAL OR SMALL BUILDING REQUIREMENTS OF PART 9, NBCC 2010

THIS DESIGN COMPLIES WITH:
- PART 9 OF OBC 2012 , BCBC 2012 , ABC 2014
- CSA 086-09
- TPIC 2011

(55 % OF 27.2 P.S.F. G.S.L. PLUS 8.4 P.S.F. RAIN LOAD) EQUALS 23.3 P.S.F. SPECIFIED ROOF LIVE LOAD

ALLOWABLE DEFL.(LL)= L/360 (1.10")
CALCULATED VERT. DEFL.(LL) = L/ 999 (0.10")
ALLOWABLE DEFL.(TL)= L/360 (1.10")
CALCULATED VERT. DEFL.(TL) = L/ 999 (0.19")

CSI: TC=0.78 (8-9:1) , BC=0.40 (14-15:1) , WB=0.83 (7-10:1) , SSI=0.28 (7-8:1)

DOL LUMBER=1.00 NAIL=1.00 LS BEND=1.10 COMP=1.10 SHEAR=1.10 TENS= 1.10

COMPANION LIVE LOAD FACTOR = 0.50

TRUSS PLATE MANUFACTURER IS NOT RESPONSIBLE FOR QUALITY CONTROL IN THE TRUSS MANUFACTURING PLANT .

NAIL VALUES

PLATE	GRIP(DRY) (PSI) MAX	MIN	SHEAR (PLI) MAX	MIN	SECTION (PLI) MAX	MIN
MT20	618	354	1667	822	2284	1656

PLATE PLACEMENT TOL. = 0.250 inches

PLATE ROTATION TOL. = 5.0 Deg.

JSI GRIP= 0.90 (8) (INPUT = 0.90)
JSI METAL= 0.62 (15) (INPUT = 1.00)

LICENSED PROFESSIONAL ENGINEER
P.M. TREVISAN
100136551
March 20th, 2017
PROVINCE OF ONTARIO

RECEIVED
TOWN OF MILTON
MAR 29, 2017
17-5419
BUILDING DIVISION

READ ALL NOTES ON THIS PAGE AND ON THE ENGINEERING NOTE PAGE ENP-1. THE NOTE PAGE IS AN INTEGRAL PART OF THIS DRAWING AS IT CONTAINS SPECIFICATIONS AND CRITERIA USED IN THE DESIGN OF THIS COMPONENT.

KOTT

Version 8.100 S Feb 9 2017 MiTek Industries, Inc. Mon Mar 20 10:10:41 2017 Page 1
ID:Mn2zxnCa6NqoASkSkmtLJtyfhrl-FDAEmbBzKqecLpOR?UE1uCJVkBmZGR_eAiyOlezZ4wS

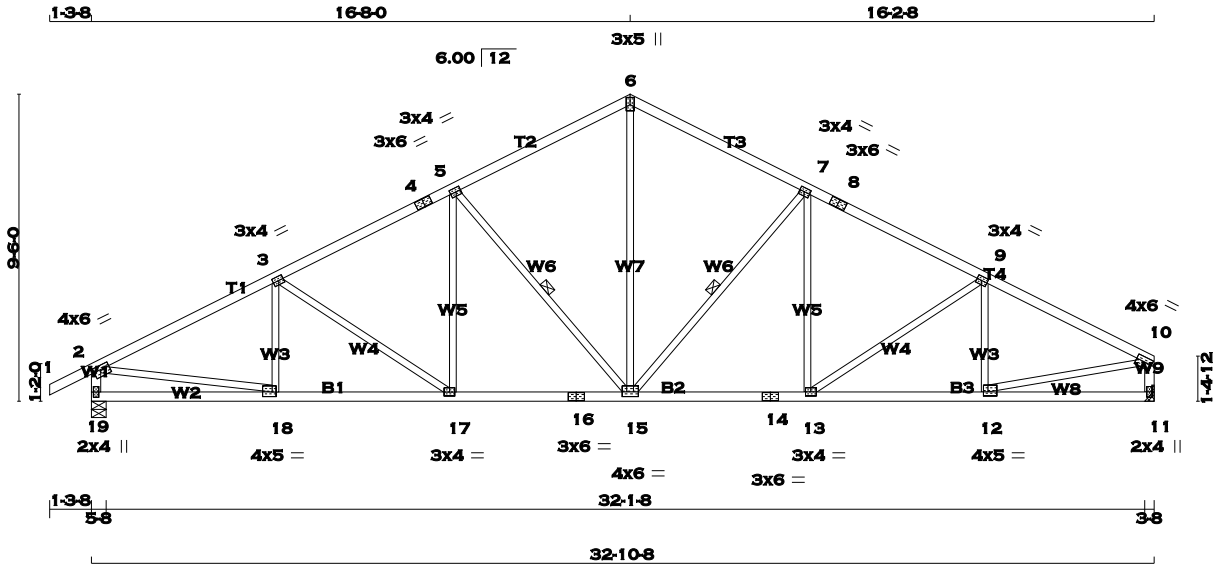

TOTAL WEIGHT = 4 X 138 = 552 lb

[M][F]

LUMBER

N. L. G. A. RULES

CHORDS	SIZE		LUMBER	DESCR.
1 - 4	2x4	DRY	No.2	SPF
4 - 6	2x4	DRY	No.2	SPF
6 - 8	2x4	DRY	No.2	SPF
8 - 10	2x4	DRY	No.2	SPF
19 - 2	2x4	DRY	No.2	SPF
11 - 10	2x4	DRY	No.2	SPF
19 - 16	2x4	DRY	No.2	SPF
16 - 14	2x4	DRY	No.2	SPF
14 - 11	2x4	DRY	No.2	SPF
ALL WEBS EXCEPT	2x3	DRY	No.2	SPF

DRY: SEASONED LUMBER.

PLATES (table is in inches)

JT	TYPE	PLATES	W	LEN	Y	X
2 3, 5, 7, 9	TMVW-t	MT20	4.0	6.0	1.50	2.75
3	TMWW-t	MT20	3.0	4.0	1.50	1.75
4	TS-t	MT20	3.0	6.0		
6	TTW+p	MT20	3.0	5.0	2.75	1.50
8	TS-t	MT20	3.0	6.0		
10	TMVW-t	MT20	4.0	6.0	1.75	2.75
11	BMV1+p	MT20	2.0	4.0		
12	BMWW-t	MT20	4.0	5.0	1.50	1.75
13	BMWW-t	MT20	3.0	4.0		
14	BS-t	MT20	3.0	6.0		
15	BMWWW-t	MT20	4.0	6.0	1.75	3.00
16	BS-t	MT20	3.0	6.0		
17	BMWW-t	MT20	3.0	4.0		
18	BMWW-t	MT20	4.0	5.0	1.75	1.50
19	BMV1+p	MT20	2.0	4.0		

A SIZE FOR SIZE SUBSTITUTION OF MITEK MII20 WITH TEE-LOK TL20 PLATES IS ALLOWED.

DIMENSIONS, SUPPORTS AND LOADINGS SPECIFIED BY FABRICATOR TO BE VERIFIED BY BUILDING DESIGNER

BEARINGS

JT	FACTORED GROSS REACTION VERT	HORZ	MAXIMUM FACTORED GROSS REACTION DOWN	HORZ	UPLIFT	INPUT BRG IN-SX	REQRD BRG IN-SX
19	1664	0	1664	0	0	5-8	5-8
11	1559	0	1559	0	0	HANGER BY OTHERS MIN. SEAT SIZE: 3-8	

UNFACTORED REACTIONS

JT	1ST LCASE COMBINED	SNOW	MAX./MIN. COMPONENT REACTIONS LIVE	PERM.LIVE	WIND	DEAD	SOIL
19	1166	829 / 0	0 / 0	0 / 0	0 / 0	337 / 0	0 / 0
11	1094	766 / 0	0 / 0	0 / 0	0 / 0	329 / 0	0 / 0

BEARING MATERIAL TO BE SPF NO.2 OR BETTER AT JOINT(S) 19

BRACING

TOP CHORD TO BE SHEATHED OR MAX. PURLIN SPACING = 4.20 FT.
MAX. UNBRACED BOTTOM CHORD LENGTH = 10.00 FT. OR RIGID CEILING DIRECTLY APPLIED.

ALL PITCH BREAKS AND PERIMETER CORNER JOINTS MUST BE LATERALLY RESTRAINED.

1 - 2x3 SPF No.2 LATERAL BRACE(S) AT 1/ 2 LENGTH OF 5-15, 7-15. DBS = 20-0-0 . CBF = 82 LBS.

DBS = DIAGONAL BRACE SPACING (MAX). CBF = CUMULATIVE BRACING FORCE. FASTEN LATERAL BRACE(S) USING (0.122"X3") SPIRAL NAILS : 1 NAIL FOR 2x3 BRACE(S), 2 FOR 1x4, 2x4, 2x5, 3 FOR 2x6, 4 FOR 2x8, 5 FOR 2x10, AND 6 FOR 2x12.

END VERTICAL(S) MUST BE SHEATHED OR HAVE BRACES AS INDICATED IN THE MAX. UNBRACED LENGTH COLUMN OF THE TABLE BELOW

LOADING

TOTAL LOAD CASES: (4)

CHORDS

MEMB. FR-TO	MAX. FACTORED FORCE (LBS)	FACTORED VERT. LOAD LC1 (PLF) FROM	TO	MAX CSI (LC)	MAX. UNBRAC LENGTH
1- 2	0 / 23	-77.4	-77.4	0.10 (1)	10.00
2- 3	-2277 / 0	-77.4	-77.4	0.39 (1)	4.20
3- 4	-2039 / 0	-77.4	-77.4	0.32 (1)	4.47
4- 5	-2039 / 0	-77.4	-77.4	0.32 (1)	4.47
5- 6	-1582 / 0	-77.4	-77.4	0.31 (1)	4.94
6- 7	-1583 / 0	-77.4	-77.4	0.31 (1)	4.94
7- 8	-1997 / 0	-77.4	-77.4	0.31 (1)	4.51
8- 9	-1997 / 0	-77.4	-77.4	0.31 (1)	4.51
9-10	-2125 / 0	-77.4	-77.4	0.32 (1)	4.39
19- 2	-1621 / 0	0.0	0.0	0.16 (1)	6.50
11-10	-1520 / 0	0.0	0.0	0.16 (1)	6.67
19-18	0 / 0	-17.5	-17.5	0.12 (4)	10.00
18-17	0 / 2052	-17.5	-17.5	0.38 (1)	10.00
17-16	0 / 1824	-17.5	-17.5	0.36 (1)	10.00
16-15	0 / 1824	-17.5	-17.5	0.36 (1)	10.00
15-14	0 / 1788	-17.5	-17.5	0.35 (1)	10.00
14-13	0 / 1788	-17.5	-17.5	0.35 (1)	10.00
13-12	0 / 1915	-17.5	-17.5	0.35 (1)	10.00
12-11	0 / 0	-17.5	-17.5	0.11 (4)	10.00

WEBS

MEMB. FR-TO	MAX. FACTORED FORCE (LBS)	MAX CSI (LC)
18- 3	-205 / 32	0.05 (1)
3-17	-275 / 0	0.22 (1)
17- 5	0 / 247	0.06 (1)
5-15	-655 / 0	0.32 (1)
15- 6	0 / 1057	0.24 (1)
15- 7	-600 / 0	0.29 (1)
13- 7	0 / 180	0.05 (4)
13- 9	-154 / 0	0.12 (1)
12- 9	-298 / 0	0.07 (1)
2-18	0 / 2075	0.47 (1)
12-10	0 / 1956	0.44 (1)

DESIGN CRITERIA

SPECIFIED LOADS:

TOP	CH.	LL	=	23.3	PSF
		DL	=	3.0	PSF
BOT	CH.	LL	=	0.0	PSF
		DL	=	7.0	PSF
TOTAL	LOAD		=	33.3	PSF

SPACING = 24.0 IN. C/C

THIS TRUSS IS DESIGNED FOR RESIDENTIAL OR SMALL BUILDING REQUIREMENTS OF PART 9, NBCC 2010

THIS DESIGN COMPLIES WITH:
- PART 9 OF OBC 2012 , BCBC 2012 , ABC 2014
- CSA 086-09
- TPIC 2011

(55 % OF 27.2 P.S.F. G.S.L. PLUS 8.4 P.S.F. RAIN LOAD) EQUALS 23.3 P.S.F. SPECIFIED ROOF LIVE LOAD

ALLOWABLE DEFL.(LL)= L/360 (1.10")
CALCULATED VERT. DEFL.(LL) = L/ 999 (0.11")
ALLOWABLE DEFL.(TL)= L/360 (1.10")
CALCULATED VERT. DEFL.(TL) = L/ 999 (0.20")

CSI: TC=0.39 (2-3:1) , BC=0.38 (17-18:1) , WB=0.47 (2-18:1) , SSI=0.18 (2-3:1)

DOL LUMBER=1.00 NAIL=1.00 LS BEND=1.10 COMP=1.10 SHEAR=1.10 TENS= 1.10

COMPANION LIVE LOAD FACTOR = 0.50

TRUSS PLATE MANUFACTURER IS NOT RESPONSIBLE FOR QUALITY CONTROL IN THE TRUSS MANUFACTURING PLANT .

NAIL VALUES

PLATE	GRIP(DRY) (PSI) MAX	MIN	SHEAR (PLI) MAX	MIN	SECTION (PLI) MAX	MIN
MT20	618	354	1667	822	2284	1656

PLATE PLACEMENT TOL. = 0.250 inches

PLATE ROTATION TOL. = 5.0 Deg.

JSI GRIP= 0.90 (10) (INPUT = 0.90)
JSI METAL= 0.62 (18) (INPUT = 1.00)

LICENSED PROFESSIONAL ENGINEER
P.M. TREVISAN
100136551
March 20th, 2017
PROVINCE OF ONTARIO

RECEIVED
TOWN OF MILTON
MAR 29, 2017
17-5419
BUILDING DIVISION

READ ALL NOTES ON THIS PAGE AND ON THE ENGINEERING NOTE PAGE ENP-1. THE NOTE PAGE IS AN INTEGRAL PART OF THIS DRAWING AS IT CONTAINS SPECIFICATIONS AND CRITERIA USED IN THE DESIGN OF THIS COMPONENT.

KOTT

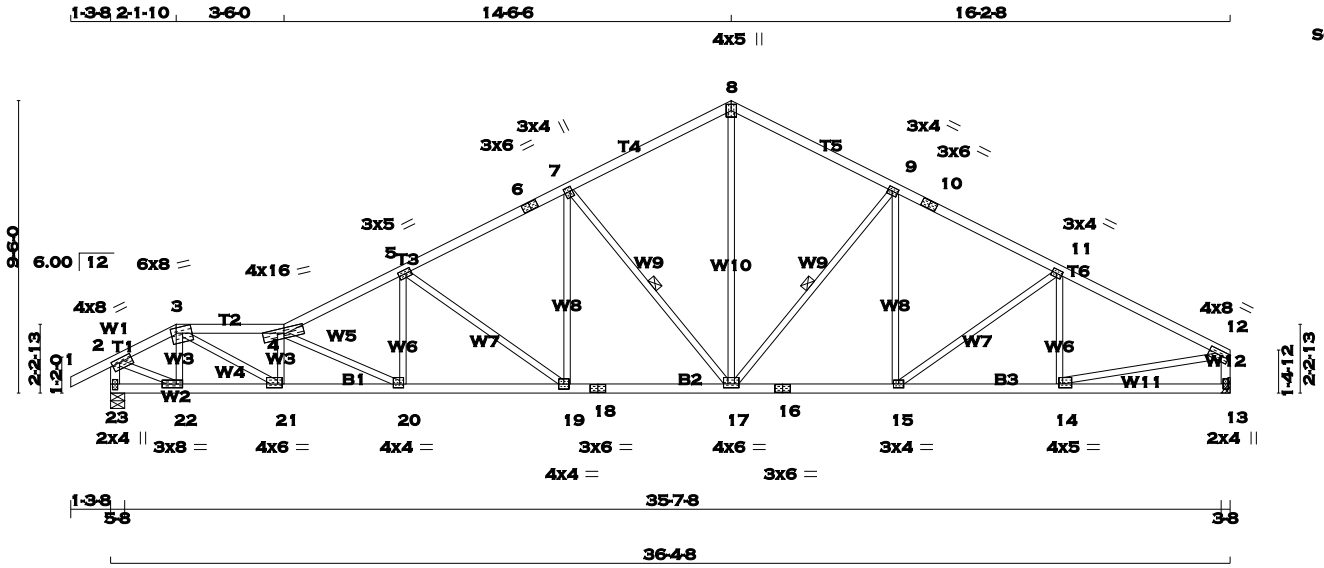

TOTAL WEIGHT = 153 lb

[M][F]

LUMBER

N. L. G. A. RULES

CHORDS	SIZE		LUMBER	DESCR.
1 - 3	2x4	DRY	No.2	SPF
3 - 4	2x4	DRY	No.2	SPF
4 - 6	2x4	DRY	No.2	SPF
6 - 8	2x4	DRY	No.2	SPF
8 - 10	2x4	DRY	No.2	SPF
10 - 12	2x4	DRY	No.2	SPF
23 - 2	2x4	DRY	No.2	SPF
13 - 12	2x4	DRY	No.2	SPF
23 - 18	2x4	DRY	No.2	SPF
18 - 16	2x4	DRY	No.2	SPF
16 - 13	2x4	DRY	No.2	SPF
ALL WEBS EXCEPT	2x3	DRY	No.2	SPF

DRY: SEASONED LUMBER.

PLATES (table is in inches)

JT	TYPE	PLATES	W	LEN	Y	X
2	TMVW-t	MT20	4.0	8.0	1.50	3.00
3	TTWW-m	MT20	6.0	8.0	2.00	2.00
4	TTWW-m	MT20	4.0	16.0	2.00	7.75
5	TMWW-t	MT20	3.0	5.0	1.50	2.00
6	TS-t	MT20	3.0	6.0		
7	TMWW+t	MT20	3.0	4.0	1.75	0.75
8	TTW+p	MT20	4.0	5.0		
9	TMWW-t	MT20	3.0	4.0	1.50	1.75
10	TS-t	MT20	3.0	6.0		
11	TMWW-t	MT20	3.0	4.0	1.50	1.75
12	TMVW-t	MT20	4.0	8.0	1.75	Edge
13	BMV1+p	MT20	2.0	4.0		
14	BMWW-t	MT20	4.0	5.0	1.50	1.50
15	BMWW-t	MT20	3.0	4.0		
16	BS-t	MT20	3.0	6.0		
17	BMWWW-t	MT20	4.0	6.0	1.50	3.00
18	BS-t	MT20	3.0	6.0		
19	BMWW-t	MT20	4.0	4.0		
20	BMWW-t	MT20	4.0	4.0	1.50	1.50
21	BMWW-t	MT20	4.0	6.0	1.50	1.75
22	BMWW-t	MT20	3.0	8.0	1.50	2.50
23	BMV1+p	MT20	2.0	4.0	2.25	1.00

Edge - INDICATES REFERENCE CORNER OF PLATE TOUCHES EDGE OF CHORD.

A SIZE FOR SIZE SUBSTITUTION OF MITEK MII20 WITH TEE-LOK TL20 PLATES IS ALLOWED.

DIMENSIONS, SUPPORTS AND LOADINGS SPECIFIED BY FABRICATOR TO BE VERIFIED BY BUILDING DESIGNER

BEARINGS

JT	FACTORED GROSS REACTION VERT	HORZ	MAXIMUM FACTORED GROSS REACTION DOWN	HORZ	UPLIFT	INPUT BRG IN-SX	REQRD BRG IN-SX
23	1830	0	1830	0	0	5-8	5-8
13	1725	0	1725	0	0	HANGER BY OTHERS	
						MIN. SEAT SIZE: 3-8	

UNFACTORED REACTIONS

JT	1ST LCASE COMBINED	SNOW	MAX./MIN. COMPONENT REACTIONS LIVE	PERM.LIVE	WIND	DEAD	SOIL
23	1282	910 / 0	0 / 0	0 / 0	0 / 0	372 / 0	0 / 0
13	1211	847 / 0	0 / 0	0 / 0	0 / 0	364 / 0	0 / 0

BEARING MATERIAL TO BE SPF NO.2 OR BETTER AT JOINT(S) 23

BRACING

TOP CHORD TO BE SHEATHED OR MAX. PURLIN SPACING = 3.25 FT.
MAX. UNBRACED BOTTOM CHORD LENGTH = 10.00 FT. OR RIGID CEILING DIRECTLY APPLIED.

ALL PITCH BREAKS AND PERIMETER CORNER JOINTS MUST BE LATERALLY RESTRAINED.

1 - 2x3 SPF No.2 LATERAL BRACE(S) AT 1/ 2 LENGTH OF 7-17. DBS = 14-0-0 . CBF = 93 LBS.
1 - 2x3 SPF No.2 LATERAL BRACE(S) AT 1/ 2 LENGTH OF 9-17. DBS = 20-0-0 . CBF = 71 LBS.

DBS = DIAGONAL BRACE SPACING (MAX). CBF = CUMULATIVE BRACING FORCE. FASTEN LATERAL BRACE(S) USING (0.122"X3") SPIRAL NAILS : 1 NAIL FOR 2x3 BRACE(S), 2 FOR 1x4, 2x4, 2x5, 3 FOR 2x6, 4 FOR 2x8, 5 FOR 2x10, AND 6 FOR 2x12.

END VERTICAL(S) MUST BE SHEATHED OR HAVE BRACES AS INDICATED IN THE MAX. UNBRACED LENGTH COLUMN OF THE TABLE BELOW

LOADING

TOTAL LOAD CASES: (4)

CHORDS

MEMB. FR-TO	MAX. FORCE (LBS)	FACTORED VERT. LOAD LC1 (PLF) FROM	TO	MAX CSI (LC)	MAX. UNBRAC LENGTH
1- 2	0 / 23	-77.4	-77.4	0.10 (1)	10.00
2- 3	-2070 / 0	-77.4	-77.4	0.09 (1)	4.66
3- 4	-4141 / 0	-77.4	-77.4	0.31 (1)	3.25
4- 5	-3538 / 0	-77.4	-77.4	0.30 (1)	3.53
5- 6	-2633 / 0	-77.4	-77.4	0.36 (1)	3.98
6- 7	-2633 / 0	-77.4	-77.4	0.36 (1)	3.98
7- 8	-1911 / 0	-77.4	-77.4	0.31 (1)	4.58
8- 9	-1909 / 0	-77.4	-77.4	0.31 (1)	4.59
9-10	-2295 / 0	-77.4	-77.4	0.32 (1)	4.26
10-11	-2295 / 0	-77.4	-77.4	0.32 (1)	4.26
11-12	-2403 / 0	-77.4	-77.4	0.38 (1)	4.11
23- 2	-1828 / 0	0.0	0.0	0.18 (1)	6.20
13-12	-1683 / 0	0.0	0.0	0.17 (1)	6.40
23-22	0 / 0	-17.5	-17.5	0.05 (1)	10.00
22-21	0 / 1816	-17.5	-17.5	0.39 (1)	10.00
21-20	0 / 4212	-17.5	-17.5	0.78 (1)	10.00
20-19	0 / 3181	-17.5	-17.5	0.56 (1)	10.00
19-18	0 / 2362	-17.5	-17.5	0.44 (1)	10.00
18-17	0 / 2362	-17.5	-17.5	0.44 (1)	10.00
17-16	0 / 2052	-17.5	-17.5	0.39 (1)	10.00
16-15	0 / 2052	-17.5	-17.5	0.39 (1)	10.00
15-14	0 / 2165	-17.5	-17.5	0.39 (1)	10.00
14-13	0 / 0	-17.5	-17.5	0.12 (4)	10.00

WEBS

MEMB. FR-TO	MAX. FORCE (LBS)	MAX CSI (LC)
22- 3	-611 / 0	0.09 (1)
3-21	0 / 2675	0.60 (1)
21- 4	-1320 / 0	0.20 (1)
4-20	-1152 / 0	0.37 (1)
20- 5	0 / 622	0.14 (1)
5-19	-1011 / 0	0.80 (1)
19- 7	0 / 682	0.15 (1)
7-17	-1059 / 0	0.51 (1)
17- 8	0 / 1361	0.31 (1)
17- 9	-569 / 0	0.27 (1)
15- 9	0 / 171	0.04 (4)
15-11	-139 / 0	0.11 (1)
14-11	-323 / 0	0.08 (1)
2-22	0 / 1980	0.45 (1)
14-12	0 / 2206	0.50 (1)

RECEIVED
TOWN OF MILTON
MAR 29, 2017
17-5419
BUILDING DIVISION

READ ALL NOTES ON THIS PAGE AND ON THE ENGINEERING NOTE PAGE ENP-1. THE NOTE PAGE IS AN INTEGRAL PART OF THIS DRAWING AS IT CONTAINS SPECIFICATIONS AND CRITERIA USED IN THE DESIGN OF THIS COMPONENT.

DESIGN CRITERIA

SPECIFIED LOADS:

TOP CH.	LL	=	23.3	PSF
	DL	=	3.0	PSF
BOT CH.	LL	=	0.0	PSF
	DL	=	7.0	PSF
TOTAL LOAD		=	33.3	PSF

SPACING = 24.0 IN. C/C

LOADING IN ALL FLAT SECTIONS BASED ON A SLOPE OF 6.00/12

THIS TRUSS IS DESIGNED FOR RESIDENTIAL OR SMALL BUILDING REQUIREMENTS OF PART 9, NBCC 2010

THIS DESIGN COMPLIES WITH:
- PART 9 OF OBC 2012 , BCBC 2012 , ABC 2014
- CSA 086-09
- TPIC 2011

(55 % OF 27.2 P.S.F. G.S.L. PLUS 8.4 P.S.F. RAIN LOAD) EQUALS 23.3 P.S.F. SPECIFIED ROOF LIVE LOAD

ALLOWABLE DEFL.(LL)= L/360 (1.21")
CALCULATED VERT. DEFL.(LL) = L/ 999 (0.23")
ALLOWABLE DEFL.(TL)= L/360 (1.21")
CALCULATED VERT. DEFL.(TL) = L/ 999 (0.41")

CSI: TC=0.38 (11-12:1) , BC=0.78 (20-21:1) , WB=0.80 (5-19:1) , SSI=0.18 (11-12:1)

DOL LUMBER=1.00 NAIL=1.00 LS BEND=1.10 COMP=1.10 SHEAR=1.10 TENS= 1.10

COMPANION LIVE LOAD FACTOR = 0.50

TRUSS PLATE MANUFACTURER IS NOT RESPONSIBLE FOR QUALITY CONTROL IN THE TRUSS MANUFACTURING PLANT .

NAIL VALUES

PLATE	GRIP(DRY) (PSI) MAX	MIN	SHEAR (PLI) MAX	MIN	SECTION (PLI) MAX	MIN
MT20	618	354	1667	822	2284	1656

PLATE PLACEMENT TOL. = 0.250 inches

PLATE ROTATION TOL. = 5.0 Deg.

JSI GRIP= 0.90 (19) (INPUT = 0.90)
JSI METAL= 0.65 (14) (INPUT = 1.00)

KOTT

CONTINUED ON PAGE 2

JOB NAME	TRUSS NAME	QUANTITY	PLY	JOB DESC.	DRWG NO.
PT0317-122	T34	1	1	TRUSS DESC. LECCO RIDGE-BLOCK 348	

KOTT , Stouffville, ON, CGC

Version 8.100 S Feb 9 2017 MiTek Industries, Inc. Mon Mar 20 10:10:43 2017 Page 1
ID:Mn2zxnCa6NqoASkSkmtLJtyfhrl-BcH_BHDDsRvJa7Yp7vGVzdPsO?OckGwxd?RVpXzZ4wQ

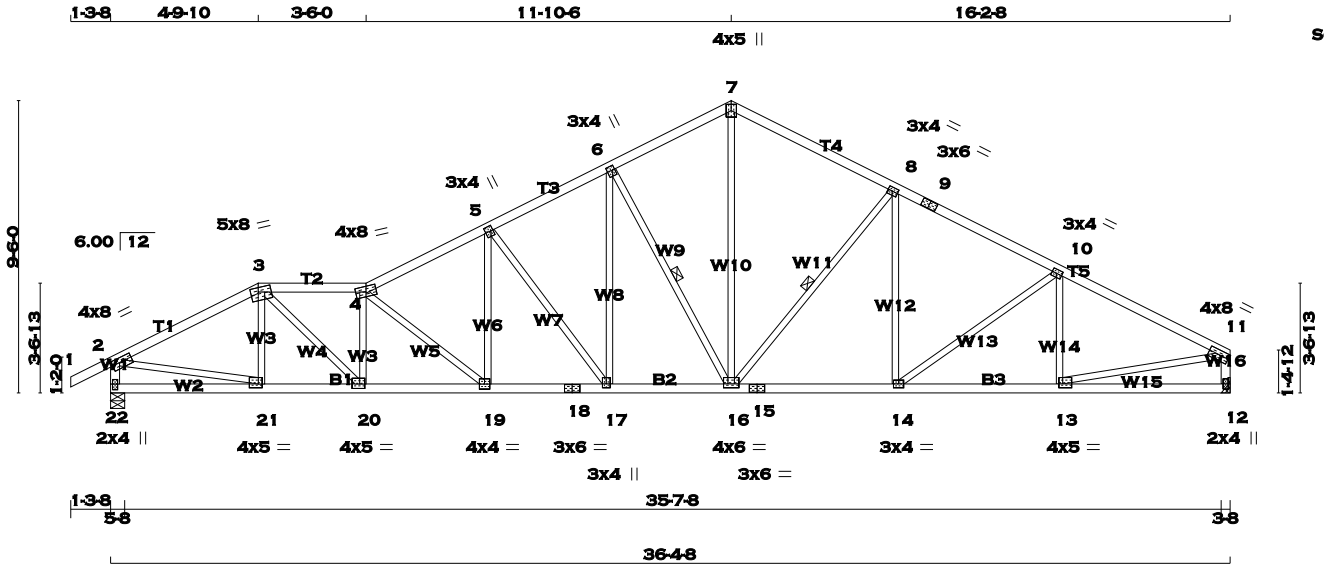

TOTAL WEIGHT = 160 lb
[M][F]

LUMBER
N. L. G. A. RULES

CHORDS	SIZE		LUMBER	DESCR.
1 - 3	2x4	DRY	No.2	SPF
3 - 4	2x4	DRY	No.2	SPF
4 - 7	2x4	DRY	No.2	SPF
7 - 9	2x4	DRY	No.2	SPF
9 - 11	2x4	DRY	No.2	SPF
22 - 2	2x4	DRY	No.2	SPF
12 - 11	2x4	DRY	No.2	SPF
22 - 18	2x4	DRY	No.2	SPF
18 - 15	2x4	DRY	No.2	SPF
15 - 12	2x4	DRY	No.2	SPF
ALL WEBS EXCEPT	2x3	DRY	No.2	SPF

DRY: SEASONED LUMBER.

PLATES (table is in inches)

JT	TYPE	PLATES	W	LEN	Y	X
2	TMVW-t	MT20	4.0	8.0	1.75	3.00
3	TTWW-m	MT20	5.0	8.0	1.75	3.00
4	TTWW-m	MT20	4.0	8.0	2.25	4.00
5	TMWW+t	MT20	3.0	4.0	2.00	0.75
6	TMWW+t	MT20	3.0	4.0	1.75	0.75
7	TTW+p	MT20	4.0	5.0		
8	TMWW-t	MT20	3.0	4.0	1.50	1.75
9	TS-t	MT20	3.0	6.0		
10	TMWW-t	MT20	3.0	4.0	1.50	1.75
11	TMVW-t	MT20	4.0	8.0	1.75	Edge
12	BMV1+p	MT20	2.0	4.0		
13	BMWW-t	MT20	4.0	5.0	1.50	1.50
14	BMWW-t	MT20	3.0	4.0		
15	BS-t	MT20	3.0	6.0		
16	BMWWW-t	MT20	4.0	6.0	1.50	3.00
17	BMWW+t	MT20	3.0	4.0	1.50	1.50
18	BS-t	MT20	3.0	6.0		
19	BMWW-t	MT20	4.0	4.0		
20	BMWW-t	MT20	4.0	5.0	1.75	2.00
21	BMWW-t	MT20	4.0	5.0	1.50	1.50
22	BMV1+p	MT20	2.0	4.0	2.25	1.00

Edge - INDICATES REFERENCE CORNER OF PLATE TOUCHES EDGE OF CHORD.

A SIZE FOR SIZE SUBSTITUTION OF MITEK MII20 WITH TEE-LOK TL20 PLATES IS ALLOWED.

DIMENSIONS, SUPPORTS AND LOADINGS SPECIFIED BY FABRICATOR TO BE VERIFIED BY BUILDING DESIGNER

BEARINGS

JT	FACTORED GROSS REACTION VERT	HORZ	MAXIMUM FACTORED GROSS REACTION DOWN	HORZ	UPLIFT	INPUT BRG IN-SX	REQRD BRG IN-SX
22	1830	0	1830	0	0	5-8	5-8
12	1725	0	1725	0	0	HANGER BY OTHERS	
						MIN. SEAT SIZE: 3-8	

UNFACTORED REACTIONS

JT	1ST LCASE COMBINED	SNOW	MAX./MIN. COMPONENT REACTIONS LIVE	PERM.LIVE	WIND	DEAD	SOIL
22	1282	910 / 0	0 / 0	0 / 0	0 / 0	372 / 0	0 / 0
12	1211	847 / 0	0 / 0	0 / 0	0 / 0	364 / 0	0 / 0

BEARING MATERIAL TO BE SPF NO.2 OR BETTER AT JOINT(S) 22

BRACING
TOP CHORD TO BE SHEATHED OR MAX. PURLIN SPACING = 3.66 FT.
MAX. UNBRACED BOTTOM CHORD LENGTH = 10.00 FT. OR RIGID CEILING DIRECTLY APPLIED.

ALL PITCH BREAKS AND PERIMETER CORNER JOINTS MUST BE LATERALLY RESTRAINED.

1 - 2x3 SPF No.2 LATERAL BRACE(S) AT 1/ 2 LENGTH OF 6-16. DBS = 14-0-0 . CBF = 86 LBS.
1 - 2x3 SPF No.2 LATERAL BRACE(S) AT 1/ 2 LENGTH OF 8-16. DBS = 20-0-0 . CBF = 71 LBS.

DBS = DIAGONAL BRACE SPACING (MAX). CBF = CUMULATIVE BRACING FORCE. FASTEN LATERAL BRACE(S) USING (0.122"X3") SPIRAL NAILS : 1 NAIL FOR 2x3 BRACE(S), 2 FOR 1x4, 2x4, 2x5, 3 FOR 2x6, 4 FOR 2x8, 5 FOR 2x10, AND 6 FOR 2x12.

END VERTICAL(S) MUST BE SHEATHED OR HAVE BRACES AS INDICATED IN THE MAX. UNBRACED LENGTH COLUMN OF THE TABLE BELOW

LOADING
TOTAL LOAD CASES: (4)

CHORDS

MEMB. FR-TO	MAX. FORCE (LBS)	FACTORED VERT. LOAD LC1 (PLF) FROM	TO	MAX CSI (LC)	MAX. UNBRAC LENGTH
1- 2	0 / 23	-77.4	-77.4	0.10 (1)	10.00
2- 3	-2484 / 0	-77.4	-77.4	0.32 (1)	4.10
3- 4	-3343 / 0	-77.4	-77.4	0.25 (1)	3.66
4- 5	-3005 / 0	-77.4	-77.4	0.24 (1)	3.86
5- 6	-2420 / 0	-77.4	-77.4	0.19 (1)	4.28
6- 7	-1903 / 0	-77.4	-77.4	0.18 (1)	4.74
7- 8	-1909 / 0	-77.4	-77.4	0.31 (1)	4.59
8- 9	-2295 / 0	-77.4	-77.4	0.32 (1)	4.26
9-10	-2295 / 0	-77.4	-77.4	0.32 (1)	4.26
10-11	-2403 / 0	-77.4	-77.4	0.38 (1)	4.11
22- 2	-1793 / 0	0.0	0.0	0.18 (1)	6.24
12-11	-1683 / 0	0.0	0.0	0.17 (1)	6.40
22-21	0 / 0	-17.5	-17.5	0.09 (4)	10.00
21-20	0 / 2211	-17.5	-17.5	0.39 (1)	10.00
20-19	0 / 3376	-17.5	-17.5	0.60 (1)	10.00
19-18	0 / 2701	-17.5	-17.5	0.47 (1)	10.00
18-17	0 / 2701	-17.5	-17.5	0.47 (1)	10.00
17-16	0 / 2165	-17.5	-17.5	0.41 (1)	10.00
16-15	0 / 2052	-17.5	-17.5	0.39 (1)	10.00
15-14	0 / 2052	-17.5	-17.5	0.39 (1)	10.00
14-13	0 / 2165	-17.5	-17.5	0.39 (1)	10.00
13-12	0 / 0	-17.5	-17.5	0.12 (4)	10.00

WEBS

MEMB. FR-TO	MAX. FORCE (LBS)	MAX CSI (LC)
21- 3	-297 / 0	0.06 (1)
3-20	0 / 1571	0.35 (1)
20- 4	-1049 / 0	0.22 (1)
4-19	-876 / 0	0.39 (1)
19- 5	0 / 639	0.14 (1)
5-17	-890 / 0	0.69 (1)
17- 6	0 / 767	0.17 (1)
6-16	-984 / 0	0.45 (1)
16- 7	0 / 1398	0.31 (1)
16- 8	-570 / 0	0.28 (1)
14- 8	0 / 172	0.04 (4)
14-10	-139 / 0	0.11 (1)
13-10	-323 / 0	0.09 (1)
2-21	0 / 2254	0.51 (1)
13-11	0 / 2206	0.50 (1)

RECEIVED
TOWN OF MILTON
MAR 29, 2017
17-5419
BUILDING DIVISION

READ ALL NOTES ON THIS PAGE AND ON THE ENGINEERING NOTE PAGE ENP-1. THE NOTE PAGE IS AN INTEGRAL PART OF THIS DRAWING AS IT CONTAINS SPECIFICATIONS AND CRITERIA USED IN THE DESIGN OF THIS COMPONENT.

DESIGN CRITERIA

SPECIFIED LOADS:

TOP CH.	LL	=	23.3	PSF
	DL	=	3.0	PSF
BOT CH.	LL	=	0.0	PSF
	DL	=	7.0	PSF
TOTAL LOAD		=	33.3	PSF

SPACING = 24.0 IN. C/C

LOADING IN ALL FLAT SECTIONS BASED ON A SLOPE OF 6.00/12

THIS TRUSS IS DESIGNED FOR RESIDENTIAL OR SMALL BUILDING REQUIREMENTS OF PART 9, NBCC 2010

THIS DESIGN COMPLIES WITH:
- PART 9 OF OBC 2012 , BCBC 2012 , ABC 2014
- CSA 086-09
- TPIC 2011

(55 % OF 27.2 P.S.F. G.S.L. PLUS 8.4 P.S.F. RAIN LOAD) EQUALS 23.3 P.S.F. SPECIFIED ROOF LIVE LOAD

ALLOWABLE DEFL.(LL)= L/360 (1.21")
CALCULATED VERT. DEFL.(LL) = L/ 999 (0.20")
ALLOWABLE DEFL.(TL)= L/360 (1.21")
CALCULATED VERT. DEFL.(TL) = L/ 999 (0.35")

CSI: TC=0.38 (10-11:1) , BC=0.60 (19-20:1) , WB=0.69 (5-17:1) , SSI=0.18 (10-11:1)

DOL LUMBER=1.00 NAIL=1.00 LS BEND=1.10 COMP=1.10 SHEAR=1.10 TENS= 1.10

COMPANION LIVE LOAD FACTOR = 0.50

TRUSS PLATE MANUFACTURER IS NOT RESPONSIBLE FOR QUALITY CONTROL IN THE TRUSS MANUFACTURING PLANT .

NAIL VALUES

PLATE	GRIP(DRY) (PSI) MAX	MIN	SHEAR (PLI) MAX	MIN	SECTION (PLI) MAX	MIN
MT20	618	354	1667	822	2284	1656

PLATE PLACEMENT TOL. = 0.250 inches

PLATE ROTATION TOL. = 5.0 Deg.

JSI GRIP= 0.90 (20) (INPUT = 0.90)
JSI METAL= 0.71 (18) (INPUT = 1.00)

KOTT

CONTINUED ON PAGE 2

JOB NAME	TRUSS NAME	QUANTITY	PLY	JOB DESC.	DRWG NO.
PT0317-122	**T35**	**1**	**1**	TRUSS DESC. LECCO RIDGE-BLOCK 348	

KOTT , Stouffville, ON, CGC

Version 8.100 S Feb 9 2017 MiTek Industries, Inc. Mon Mar 20 10:10:44 2017 Page 1
ID:Mn2zxnCa6NqoASkSkmtLJtyfhrl-forMPdEsdl1ACG70gcnkVqx18Pl8TjX4sfA2MzzZ4wP

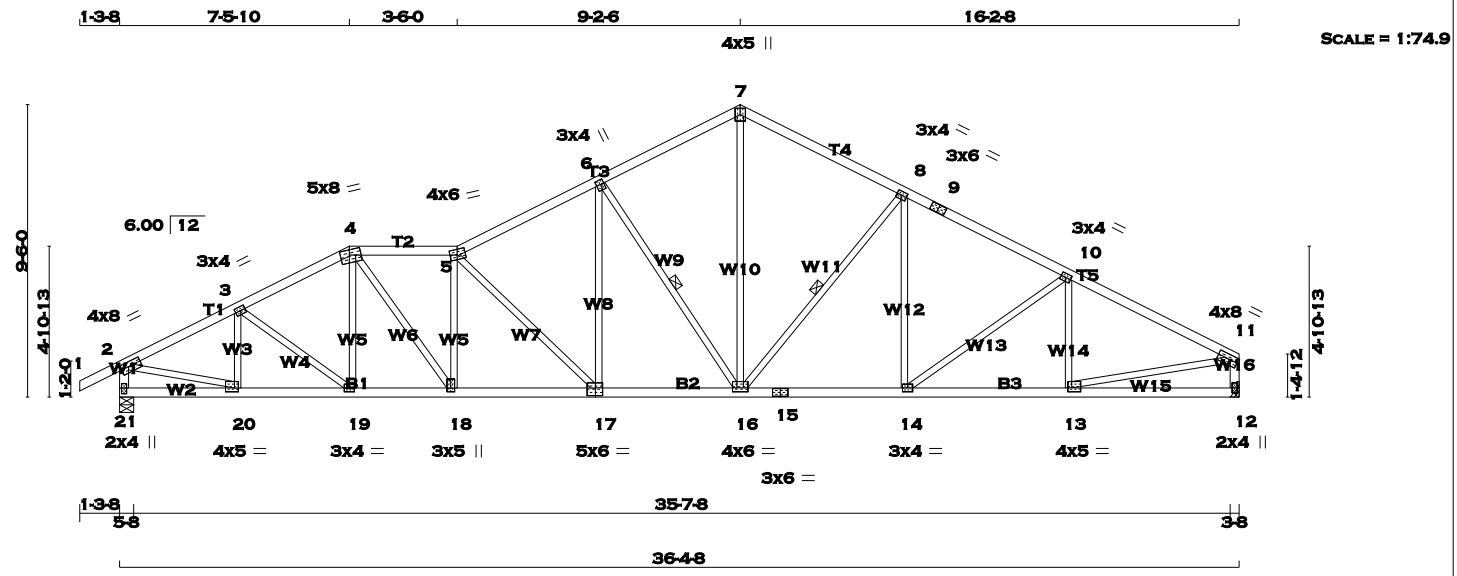

TOTAL WEIGHT = 159 lb
[M][F]

LUMBER
N. L. G. A. RULES

CHORDS	SIZE		LUMBER	DESCR.
1 - 4	2x4	DRY	No.2	SPF
4 - 5	2x4	DRY	No.2	SPF
5 - 7	2x4	DRY	No.2	SPF
7 - 9	2x4	DRY	No.2	SPF
9 - 11	2x4	DRY	No.2	SPF
21 - 2	2x4	DRY	No.2	SPF
12 - 11	2x4	DRY	No.2	SPF
21 - 17	2x4	DRY	No.2	SPF
17 - 15	2x4	DRY	No.2	SPF
15 - 12	2x4	DRY	No.2	SPF
ALL WEBS EXCEPT	2x3	DRY	No.2	SPF

DRY: SEASONED LUMBER.

PLATES (table is in inches)

JT	TYPE	PLATES	W	LEN	Y	X
2 3, 8, 10	TMVW-t	MT20	4.0	8.0	1.75	3.00
3	TMWW-t	MT20	3.0	4.0	1.50	1.75
4	TTWW-m	MT20	5.0	8.0	2.00	3.50
5	TTWW-m	MT20	4.0	6.0	2.25	2.75
6	TMWW+t	MT20	3.0	4.0	1.75	0.75
7	TTW+p	MT20	4.0	5.0		
9	TS-t	MT20	3.0	6.0		
11	TMVW-t	MT20	4.0	8.0	1.75	Edge
12	BMV1+p	MT20	2.0	4.0		
13	BMWW-t	MT20	4.0	5.0	1.50	1.50
14	BMWW-t	MT20	3.0	4.0		
15	BS-t	MT20	3.0	6.0		
16	BMWWW-t	MT20	4.0	6.0	1.50	3.00
17	BSWW-l	MT20	5.0	6.0	3.00	2.75
18	BMWW+t	MT20	3.0	5.0	1.50	1.50
19	BMWW-t	MT20	3.0	4.0		
20	BMWW-t	MT20	4.0	5.0	1.50	1.50
21	BMV1+p	MT20	2.0	4.0	2.25	1.00

Edge - INDICATES REFERENCE CORNER OF PLATE TOUCHES EDGE OF CHORD.

A SIZE FOR SIZE SUBSTITUTION OF MITEK MII20 WITH TEE-LOK TL20 PLATES IS ALLOWED.

DIMENSIONS, SUPPORTS AND LOADINGS SPECIFIED BY FABRICATOR TO BE VERIFIED BY BUILDING DESIGNER

BEARINGS

JT	FACTORED GROSS REACTION VERT	HORZ	MAXIMUM FACTORED GROSS REACTION DOWN	HORZ	UPLIFT	INPUT BRG IN-SX	REQRD BRG IN-SX
21	1830	0	1830	0	0	5-8	5-8
12	1725	0	1725	0	0	HANGER BY OTHERS	
						MIN. SEAT SIZE: 3-8	

UNFACTORED REACTIONS

JT	1ST LCASE COMBINED	SNOW	MAX./MIN. COMPONENT REACTIONS LIVE	PERM.LIVE	WIND	DEAD	SOIL
21	1282	910 / 0	0 / 0	0 / 0	0 / 0	372 / 0	0 / 0
12	1211	847 / 0	0 / 0	0 / 0	0 / 0	364 / 0	0 / 0

BEARING MATERIAL TO BE SPF NO.2 OR BETTER AT JOINT(S) 21

BRACING
TOP CHORD TO BE SHEATHED OR MAX. PURLIN SPACING = 3.96 FT.
MAX. UNBRACED BOTTOM CHORD LENGTH = 10.00 FT. OR RIGID CEILING DIRECTLY APPLIED.

ALL PITCH BREAKS AND PERIMETER CORNER JOINTS MUST BE LATERALLY RESTRAINED.

1 - 2x3 SPF No.2 LATERAL BRACE(S) AT 1/ 2 LENGTH OF 6-16. DBS = 14-0-0 . CBF = 89 LBS.
1 - 2x3 SPF No.2 LATERAL BRACE(S) AT 1/ 2 LENGTH OF 8-16. DBS = 20-0-0 . CBF = 71 LBS.

DBS = DIAGONAL BRACE SPACING (MAX). CBF = CUMULATIVE BRACING FORCE. FASTEN LATERAL BRACE(S) USING (0.122"X3") SPIRAL NAILS : 1 NAIL FOR 2x3 BRACE(S), 2 FOR 1x4, 2x4, 2x5, 3 FOR 2x6, 4 FOR 2x8, 5 FOR 2x10, AND 6 FOR 2x12.

END VERTICAL(S) MUST BE SHEATHED OR HAVE BRACES AS INDICATED IN THE MAX. UNBRACED LENGTH COLUMN OF THE TABLE BELOW

LOADING
TOTAL LOAD CASES: (4)

CHORDS

MEMB. FR-TO	MAX. FORCE (LBS)	FACTORED VERT. LOAD LC1 (PLF) FROM	TO	MAX CSI (LC)	MAX. UNBRAC LENGTH
1- 2	0 / 23	-77.4	-77.4	0.10 (1)	10.00
2- 3	-2413 / 0	-77.4	-77.4	0.19 (1)	4.28
3- 4	-2510 / 0	-77.4	-77.4	0.19 (1)	4.22
4- 5	-2855 / 0	-77.4	-77.4	0.21 (1)	3.96
5- 6	-2506 / 0	-77.4	-77.4	0.29 (1)	4.13
6- 7	-1910 / 0	-77.4	-77.4	0.25 (1)	4.65
7- 8	-1909 / 0	-77.4	-77.4	0.31 (1)	4.59
8- 9	-2295 / 0	-77.4	-77.4	0.32 (1)	4.26
9-10	-2295 / 0	-77.4	-77.4	0.32 (1)	4.26
10-11	-2403 / 0	-77.4	-77.4	0.38 (1)	4.11
21- 2	-1795 / 0	0.0	0.0	0.18 (1)	6.24
12-11	-1683 / 0	0.0	0.0	0.17 (1)	6.40
21-20	0 / 0	-17.5	-17.5	0.05 (4)	10.00
20-19	0 / 2169	-17.5	-17.5	0.38 (1)	10.00
19-18	0 / 2232	-17.5	-17.5	0.39 (1)	10.00
18-17	0 / 2873	-17.5	-17.5	0.51 (1)	10.00
17-16	0 / 2259	-17.5	-17.5	0.42 (1)	10.00
16-15	0 / 2052	-17.5	-17.5	0.39 (1)	10.00
15-14	0 / 2052	-17.5	-17.5	0.39 (1)	10.00
14-13	0 / 2165	-17.5	-17.5	0.39 (1)	10.00
13-12	0 / 0	-17.5	-17.5	0.12 (4)	10.00

WEBS

MEMB. FR-TO	MAX. FORCE (LBS)	MAX CSI (LC)
20- 3	-427 / 0	0.08 (1)
3-19	0 / 77	0.02 (1)
19- 4	0 / 51	0.02 (4)
4-18	0 / 1050	0.24 (1)
18- 5	-784 / 0	0.28 (1)
5-17	-868 / 0	0.67 (1)
17- 6	0 / 692	0.16 (1)
6-16	-1022 / 0	0.48 (1)
16- 7	0 / 1387	0.31 (1)
16- 8	-570 / 0	0.28 (1)
14- 8	0 / 172	0.04 (4)
14-10	-139 / 0	0.11 (1)
13-10	-323 / 0	0.09 (1)
2-20	0 / 2223	0.50 (1)
13-11	0 / 2206	0.50 (1)

RECEIVED
TOWN OF MILTON
MAR 29, 2017
17-5419
BUILDING DIVISION

READ ALL NOTES ON THIS PAGE AND ON THE ENGINEERING NOTE PAGE ENP-1. THE NOTE PAGE IS AN INTEGRAL PART OF THIS DRAWING AS IT CONTAINS SPECIFICATIONS AND CRITERIA USED IN THE DESIGN OF THIS COMPONENT.

DESIGN CRITERIA

SPECIFIED LOADS:

TOP CH.	LL	=	23.3	PSF
	DL	=	3.0	PSF
BOT CH.	LL	=	0.0	PSF
	DL	=	7.0	PSF
TOTAL LOAD		=	33.3	PSF

SPACING = 24.0 IN. C/C

LOADING IN ALL FLAT SECTIONS BASED ON A SLOPE OF 6.00/12

THIS TRUSS IS DESIGNED FOR RESIDENTIAL OR SMALL BUILDING REQUIREMENTS OF PART 9, NBCC 2010

THIS DESIGN COMPLIES WITH:
- PART 9 OF OBC 2012 , BCBC 2012 , ABC 2014
- CSA 086-09
- TPIC 2011

(55 % OF 27.2 P.S.F. G.S.L. PLUS 8.4 P.S.F. RAIN LOAD) EQUALS 23.3 P.S.F. SPECIFIED ROOF LIVE LOAD

ALLOWABLE DEFL.(LL)= L/360 (1.21")
CALCULATED VERT. DEFL.(LL) = L/ 999 (0.17")
ALLOWABLE DEFL.(TL)= L/360 (1.21")
CALCULATED VERT. DEFL.(TL) = L/ 999 (0.31")

CSI: TC=0.38 (10-11:1) , BC=0.51 (17-18:1) , WB=0.67 (5-17:1) , SSI=0.18 (10-11:1)

DOL LUMBER=1.00 NAIL=1.00 LS BEND=1.10 COMP=1.10 SHEAR=1.10 TENS= 1.10

COMPANION LIVE LOAD FACTOR = 0.50

TRUSS PLATE MANUFACTURER IS NOT RESPONSIBLE FOR QUALITY CONTROL IN THE TRUSS MANUFACTURING PLANT .

NAIL VALUES

PLATE	GRIP(DRY) (PSI) MAX	MIN	SHEAR (PLI) MAX	MIN	SECTION (PLI) MAX	MIN
MT20	618	354	1667	822	2284	1656

PLATE PLACEMENT TOL. = 0.250 inches

PLATE ROTATION TOL. = 5.0 Deg.

JSI GRIP= 0.89 (18) (INPUT = 0.90)
JSI METAL= 0.65 (20) (INPUT = 1.00)

KOTT

JOB NAME	TRUSS NAME	QUANTITY	PLY	JOB DESC.	DRWG NO.
PT0317-122	T36	1	1	TRUSS DESC. LECCO RIDGE-BLOCK 348	

KOTT , Stouffville, ON, CGC

Version 8.100 S Feb 9 2017 MiTek Industries, Inc. Mon Mar 20 10:10:44 2017 Page 1
ID:Mn2zxnCa6NqoASkSkmtLJtyfhrl-forMPdEsdl1ACG70gcnkVqx1BPmtTls4sfA2MzzZ4wP

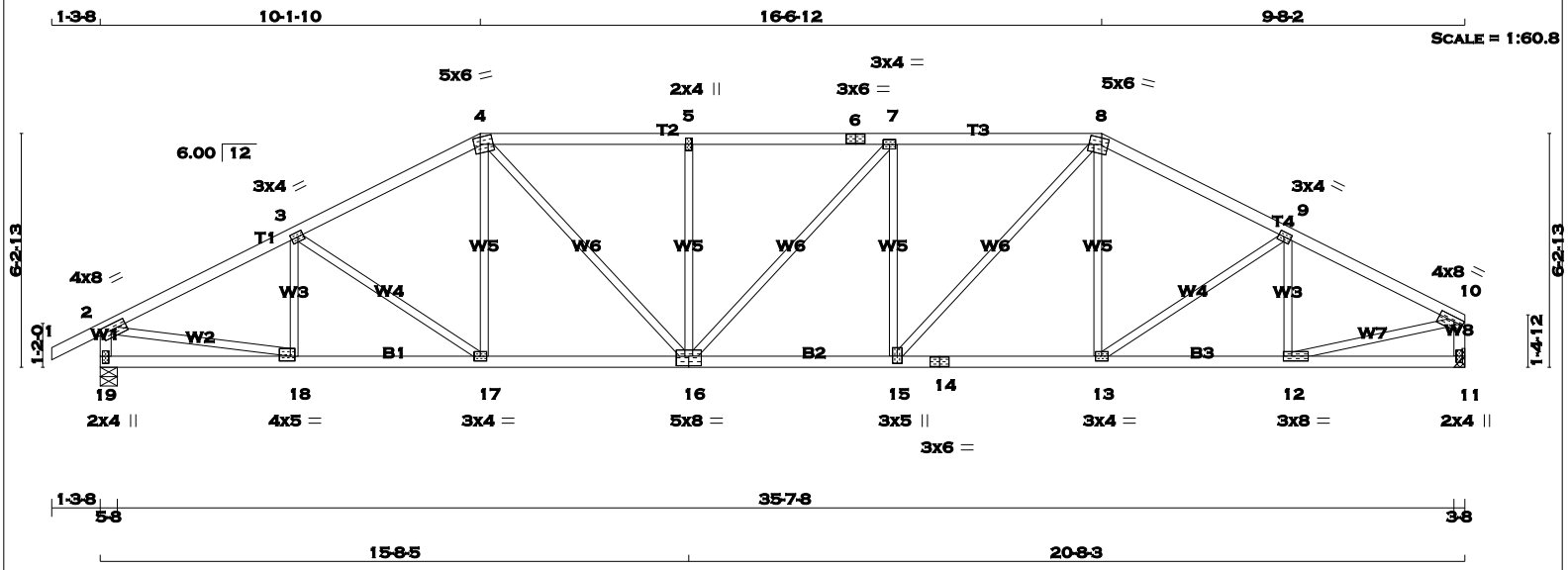

TOTAL WEIGHT = 149 lb

LUMBER
N. L. G. A. RULES

CHORDS	SIZE		LUMBER	DESCR.
1 - 4	2x4	DRY	No.2	SPF
4 - 6	2x4	DRY	No.2	SPF
6 - 8	2x4	DRY	No.2	SPF
8 - 10	2x4	DRY	No.2	SPF
19 - 2	2x4	DRY	No.2	SPF
11 - 10	2x4	DRY	No.2	SPF
19 - 16	2x4	DRY	No.2	SPF
16 - 14	2x4	DRY	No.2	SPF
14 - 11	2x4	DRY	No.2	SPF
ALL WEBS EXCEPT	2x3	DRY	No.2	SPF

DRY: SEASONED LUMBER.

PLATES (table is in inches)

JT	TYPE	PLATES	W	LEN	Y	X
2	TMVW-t	MT20	4.0	8.0	1.75	3.00
3	TMWW-t	MT20	3.0	4.0	1.50	1.75
4	TTWW-m	MT20	5.0	6.0	2.25	2.00
5	TMW+w	MT20	2.0	4.0		
6	TS-t	MT20	3.0	6.0		
7	TMWW-t	MT20	3.0	4.0		
8	TTWW-m	MT20	5.0	6.0	2.00	2.00
9	TMWW-t	MT20	3.0	4.0	1.50	1.75
10	TMVW-t	MT20	4.0	8.0	1.50	3.00
11	BMV1+p	MT20	2.0	4.0		
12	BMWW-t	MT20	3.0	8.0	1.50	2.75
13	BMWW-t	MT20	3.0	4.0		
14	BS-t	MT20	3.0	6.0		
15	BMWW+t	MT20	3.0	5.0	2.25	1.50
16	BSWWW-l	MT20	5.0	8.0	3.00	4.00
17	BMWW-t	MT20	3.0	4.0		
18	BMWW-t	MT20	4.0	5.0	1.50	1.50
19	BMV1+p	MT20	2.0	4.0	2.25	1.00

A SIZE FOR SIZE SUBSTITUTION OF MITEK MII20 WITH TEE-LOK TL20 PLATES IS ALLOWED.

DIMENSIONS, SUPPORTS AND LOADINGS SPECIFIED BY FABRICATOR TO BE VERIFIED BY BUILDING DESIGNER

BEARINGS

JT	FACTORED GROSS REACTION VERT	HORZ	MAXIMUM FACTORED GROSS REACTION DOWN	HORZ	UPLIFT	INPUT BRG IN-SX	REQRD BRG IN-SX
19	1830	0	1830	0	0	5-8	5-8
11	1725	0	1725	0	0	HANGER BY OTHERS	
						MIN. SEAT SIZE: 3-8	

UNFACTORED REACTIONS

JT	1ST LCASE COMBINED	SNOW	MAX./MIN. COMPONENT REACTIONS LIVE	PERM.LIVE	WIND	DEAD	SOIL
19	1282	910 / 0	0 / 0	0 / 0	0 / 0	372 / 0	0 / 0
11	1211	847 / 0	0 / 0	0 / 0	0 / 0	364 / 0	0 / 0

BEARING MATERIAL TO BE SPF NO.2 OR BETTER AT JOINT(S) 19

BRACING
TOP CHORD TO BE SHEATHED OR MAX. PURLIN SPACING = 3.95 FT.
MAX. UNBRACED BOTTOM CHORD LENGTH = 10.00 FT. OR RIGID CEILING DIRECTLY APPLIED.

ALL PITCH BREAKS AND PERIMETER CORNER JOINTS MUST BE LATERALLY RESTRAINED.

LOADING
TOTAL LOAD CASES: (4)

CHORDS

MEMB. FR-TO	MAX. FACTORED FORCE (LBS)	FROM	FACTORED VERT. LOAD LC1 (PLF) TO	MAX CSI (LC)	MAX. UNBRAC LENGTH
1- 2	0 / 23	-77.4	-77.4	0.10 (1)	10.00
2- 3	-2544 / 0	-77.4	-77.4	0.34 (1)	4.05
3- 4	-2403 / 0	-77.4	-77.4	0.32 (1)	4.16
4- 5	-2633 / 0	-77.4	-77.4	0.38 (1)	3.95
5- 6	-2633 / 0	-77.4	-77.4	0.35 (1)	3.99
6- 7	-2633 / 0	-77.4	-77.4	0.35 (1)	3.99
7- 8	-2614 / 0	-77.4	-77.4	0.37 (1)	3.96
8- 9	-2335 / 0	-77.4	-77.4	0.30 (1)	4.24
9-10	-2350 / 0	-77.4	-77.4	0.29 (1)	4.23
19- 2	-1789 / 0	0.0	0.0	0.18 (1)	6.24
11-10	-1688 / 0	0.0	0.0	0.17 (1)	6.39
19-18	0 / 0	-17.5	-17.5	0.09 (4)	10.00
18-17	0 / 2293	-17.5	-17.5	0.43 (1)	10.00
17-16	0 / 2134	-17.5	-17.5	0.40 (1)	10.00
16-15	0 / 2614	-17.5	-17.5	0.47 (1)	10.00
15-14	0 / 2073	-17.5	-17.5	0.39 (1)	10.00
14-13	0 / 2073	-17.5	-17.5	0.39 (1)	10.00
13-12	0 / 2119	-17.5	-17.5	0.40 (1)	10.00
12-11	0 / 0	-17.5	-17.5	0.08 (4)	10.00

WEBS

MEMB. FR-TO	MAX. FACTORED FORCE (LBS)	MAX CSI (LC)
18- 3	-292 / 0	0.07 (1)
3-17	-197 / 0	0.13 (1)
17- 4	0 / 209	0.05 (1)
4-16	0 / 730	0.16 (1)
16- 5	-461 / 0	0.28 (1)
16- 7	0 / 28	0.01 (1)
15- 7	-483 / 0	0.30 (1)
15- 8	0 / 792	0.18 (1)
13- 8	0 / 132	0.04 (4)
13- 9	-59 / 0	0.04 (1)
12- 9	-405 / 0	0.09 (1)
2-18	0 / 2324	0.52 (1)
12-10	0 / 2175	0.49 (1)

DESIGN CRITERIA

SPECIFIED LOADS:

TOP CH.	LL	=	23.3	PSF
	DL	=	3.0	PSF
BOT CH.	LL	=	0.0	PSF
	DL	=	7.0	PSF
TOTAL LOAD		=	33.3	PSF

SPACING = 24.0 IN. C/C

LOADING IN FLAT SECTION BASED ON A SLOPE OF 6.00/12

THIS TRUSS IS DESIGNED FOR RESIDENTIAL OR SMALL BUILDING REQUIREMENTS OF PART 9, NBCC 2010

THIS DESIGN COMPLIES WITH:
- PART 9 OF OBC 2012 , BCBC 2012 , ABC 2014
- CSA 086-09
- TPIC 2011

(55 % OF 27.2 P.S.F. G.S.L. PLUS 8.4 P.S.F. RAIN LOAD) EQUALS 23.3 P.S.F. SPECIFIED ROOF LIVE LOAD

ALLOWABLE DEFL.(LL)= L/360 (1.21")
CALCULATED VERT. DEFL.(LL) = L/ 999 (0.16")
ALLOWABLE DEFL.(TL)= L/360 (1.21")
CALCULATED VERT. DEFL.(TL) = L/ 999 (0.29")

CSI: TC=0.38 (4-5:1) , BC=0.47 (15-16:1) , WB=0.52 (2-18:1) , SSI=0.20 (7-8:1)

DOL LUMBER=1.00 NAIL=1.00 LS BEND=1.10 COMP=1.10 SHEAR=1.10 TENS= 1.10

COMPANION LIVE LOAD FACTOR = 0.50

TRUSS PLATE MANUFACTURER IS NOT RESPONSIBLE FOR QUALITY CONTROL IN THE TRUSS MANUFACTURING PLANT .

NAIL VALUES

PLATE	GRIP(DRY) (PSI) MAX	MIN	SHEAR (PLI) MAX	MIN	SECTION (PLI) MAX	MIN
MT20	618	354	1667	822	2284	1656

PLATE PLACEMENT TOL. = 0.250 inches

PLATE ROTATION TOL. = 5.0 Deg.

JSI GRIP= 0.90 (12) (INPUT = 0.90)
JSI METAL= 0.69 (18) (INPUT = 1.00)

LICENSED PROFESSIONAL ENGINEER
P.M. TREVISAN
100136551
March 20th, 2017
PROVINCE OF ONTARIO

RECEIVED
TOWN OF MILTON
MAR 29, 2017
17-5419
BUILDING DIVISION

READ ALL NOTES ON THIS PAGE AND ON THE ENGINEERING NOTE PAGE ENP-1. THE NOTE PAGE IS AN INTEGRAL PART OF THIS DRAWING AS IT CONTAINS SPECIFICATIONS AND CRITERIA USED IN THE DESIGN OF THIS COMPONENT.

KOTT

JOB NAME	TRUSS NAME	QUANTITY	PLY	JOB DESC.	DRWG NO.
PT0317-122	**T37**	**1**	**1**	TRUSS DESC. LECCO RIDGE-BLOCK 348	Page 57 of 75 ENG JOB: PT0317-122

KOTT , Stouffville, ON, CGC

Version 8.100 S Feb 9 2017 MiTek Industries, Inc. Mon Mar 20 10:10:45 2017 Page 1

ID:Mn2zxnCa6NqoASkSkmtLJtyfhrl-7_PkczEUO291qQiCEKIz22U9po5JCCdE5JwcuQzZ4wO

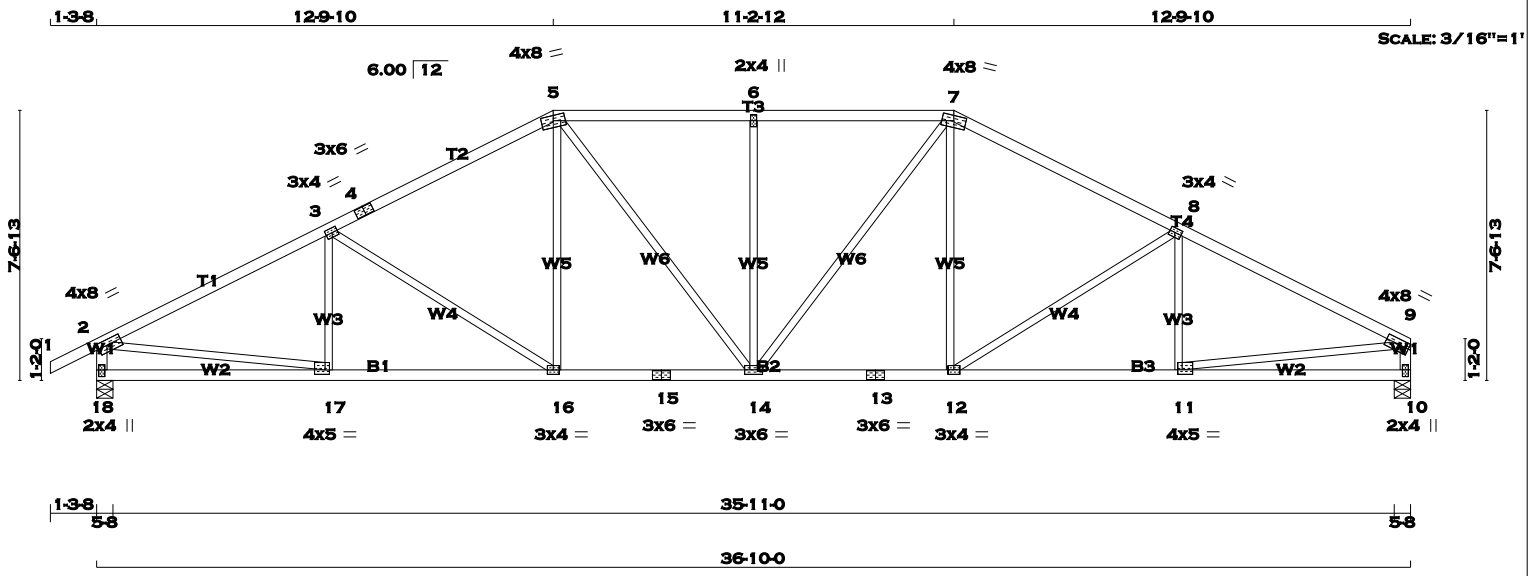

TOTAL WEIGHT = 151 lb

[M][F]

LUMBER

N. L. G. A. RULES

CHORDS	SIZE		LUMBER	DESCR.
1 - 4	2x4	DRY	No.2	SPF
4 - 5	2x4	DRY	No.2	SPF
5 - 7	2x4	DRY	No.2	SPF
7 - 9	2x4	DRY	No.2	SPF
18 - 2	2x4	DRY	No.2	SPF
10 - 9	2x4	DRY	No.2	SPF
18 - 15	2x4	DRY	No.2	SPF
15 - 13	2x4	DRY	No.2	SPF
13 - 10	2x4	DRY	No.2	SPF
ALL WEBS EXCEPT	2x3	DRY	No.2	SPF

DRY: SEASONED LUMBER.

PLATES (table is in inches)

JT	TYPE	PLATES	W	LEN	Y	X
2	TMVW-t	MT20	4.0	8.0	1.75	3.00
3	TMWW-t	MT20	3.0	4.0	1.50	1.75
4	TS-t	MT20	3.0	6.0		
5	TTWW-m	MT20	4.0	8.0	1.75	4.00
6	TMW+w	MT20	2.0	4.0		
7	TTWW-m	MT20	4.0	8.0	1.75	4.00
8	TMWW-t	MT20	3.0	4.0	1.50	1.75
9	TMVW-t	MT20	4.0	8.0	1.75	Edge
10	BMV1+p	MT20	2.0	4.0	2.25	1.00
11	BMWW-t	MT20	4.0	5.0	1.50	1.50
12	BMWW-t	MT20	3.0	4.0		
13	BS-t	MT20	3.0	6.0		
14	BMWWW-t	MT20	3.0	6.0		
15	BS-t	MT20	3.0	6.0		
16	BMWW-t	MT20	3.0	4.0		
17	BMWW-t	MT20	4.0	5.0	1.50	1.50
18	BMV1+p	MT20	2.0	4.0	2.25	1.00

Edge - INDICATES REFERENCE CORNER OF PLATE TOUCHES EDGE OF CHORD.

A SIZE FOR SIZE SUBSTITUTION OF MITEK MII20 WITH TEE-LOK TL20 PLATES IS ALLOWED.

DIMENSIONS, SUPPORTS AND LOADINGS SPECIFIED BY FABRICATOR TO BE VERIFIED BY BUILDING DESIGNER

BEARINGS

JT	FACTORED GROSS REACTION VERT	HORZ	MAXIMUM FACTORED GROSS REACTION DOWN	HORZ	UPLIFT	INPUT BRG IN-SX	REQRD BRG IN-SX
18	1852	0	1852	0	0	5-8	5-8
10	1747	0	1747	0	0	5-8	5-8

UNFACTORED REACTIONS

JT	1ST LCASE COMBINED	MAX./MIN. COMPONENT REACTIONS SNOW	LIVE	PERM.LIVE	WIND	DEAD	SOIL
18	1297	921 / 0	0 / 0	0 / 0	0 / 0	376 / 0	0 / 0
10	1226	858 / 0	0 / 0	0 / 0	0 / 0	368 / 0	0 / 0

BEARING MATERIAL TO BE SPF NO.2 OR BETTER AT JOINT(S) 18, 10

BRACING

TOP CHORD TO BE SHEATHED OR MAX. PURLIN SPACING = 3.75 FT.
MAX. UNBRACED BOTTOM CHORD LENGTH = 10.00 FT. OR RIGID CEILING DIRECTLY APPLIED.

ALL PITCH BREAKS AND PERIMETER CORNER JOINTS MUST BE LATERALLY RESTRAINED.

LOADING

TOTAL LOAD CASES: (4)

CHORDS

MEMB. FR-TO	MAX. FACTORED FORCE (LBS)	FACTORED VERT. LOAD (PLF) FROM	TO	LC1 CSI (LC)	MAX UNBRAC LENGTH
1- 2	0 / 23	-77.4	-77.4	0.10 (1)	10.00
2- 3	-2636 / 0	-77.4	-77.4	0.58 (1)	3.75
3- 4	-2276 / 0	-77.4	-77.4	0.51 (1)	4.05
4- 5	-2276 / 0	-77.4	-77.4	0.51 (1)	4.05
5- 6	-2255 / 0	-77.4	-77.4	0.38 (1)	4.19
6- 7	-2255 / 0	-77.4	-77.4	0.38 (1)	4.19
7- 8	-2276 / 0	-77.4	-77.4	0.51 (1)	4.05
8- 9	-2635 / 0	-77.4	-77.4	0.57 (1)	3.75
18- 2	-1803 / 0	0.0	0.0	0.18 (1)	6.23
10- 9	-1698 / 0	0.0	0.0	0.17 (1)	6.38
18-17	0 / 0	-17.5	-17.5	0.17 (4)	10.00
17-16	0 / 2380	-17.5	-17.5	0.45 (1)	10.00
16-15	0 / 2016	-17.5	-17.5	0.39 (1)	10.00
15-14	0 / 2016	-17.5	-17.5	0.39 (1)	10.00
14-13	0 / 2016	-17.5	-17.5	0.39 (1)	10.00
13-12	0 / 2016	-17.5	-17.5	0.39 (1)	10.00
12-11	0 / 2380	-17.5	-17.5	0.45 (1)	10.00
11-10	0 / 0	-17.5	-17.5	0.17 (4)	10.00

WEBS

MEMB. FR-TO	MAX. FACTORED FORCE (LBS)	MAX CSI (LC)
17- 3	-193 / 51	0.06 (1)
3-16	-439 / 0	0.51 (1)
16- 5	0 / 345	0.08 (1)
5-14	0 / 392	0.09 (1)
14- 6	-531 / 0	0.55 (1)
14- 7	0 / 392	0.09 (1)
12- 7	0 / 345	0.08 (1)
12- 8	-439 / 0	0.51 (1)
11- 8	-193 / 51	0.06 (1)
2-17	0 / 2401	0.54 (1)
11- 9	0 / 2401	0.54 (1)

DESIGN CRITERIA

SPECIFIED LOADS:

TOP CH.	LL	=	23.3	PSF
	DL	=	3.0	PSF
BOT CH.	LL	=	0.0	PSF
	DL	=	7.0	PSF
TOTAL LOAD		=	33.3	PSF

SPACING = 24.0 IN. C/C

LOADING IN FLAT SECTION BASED ON A SLOPE OF 6.00/12

THIS TRUSS IS DESIGNED FOR RESIDENTIAL OR SMALL BUILDING REQUIREMENTS OF PART 9, NBCC 2010

THIS DESIGN COMPLIES WITH:
- PART 9 OF OBC 2012 , BCBC 2012 , ABC 2014
- CSA 086-09
- TPIC 2011

(55 % OF 27.2 P.S.F. G.S.L. PLUS 8.4 P.S.F. RAIN LOAD) EQUALS 23.3 P.S.F. SPECIFIED ROOF LIVE LOAD

ALLOWABLE DEFL.(LL)= L/360 (1.23")
CALCULATED VERT. DEFL.(LL) = L/ 999 (0.15")
ALLOWABLE DEFL.(TL)= L/360 (1.23")
CALCULATED VERT. DEFL.(TL) = L/ 999 (0.27")

CSI: TC=0.58 (2-3:1) , BC=0.45 (16-17:1) , WB=0.55 (6-14:1) , SSI=0.22 (2-3:1)

DOL LUMBER=1.00 NAIL=1.00 LS BEND=1.10 COMP=1.10 SHEAR=1.10 TENS= 1.10

COMPANION LIVE LOAD FACTOR = 0.50

TRUSS PLATE MANUFACTURER IS NOT RESPONSIBLE FOR QUALITY CONTROL IN THE TRUSS MANUFACTURING PLANT .

NAIL VALUES

PLATE	GRIP(DRY) (PSI) MAX	MIN	SHEAR (PLI) MAX	MIN	SECTION (PLI) MAX	MIN
MT20	618	354	1667	822	2284	1656

PLATE PLACEMENT TOL. = 0.250 inches

PLATE ROTATION TOL. = 5.0 Deg.

JSI GRIP= 0.87 (17) (INPUT = 0.90)
JSI METAL= 0.71 (17) (INPUT = 1.00)

LICENSED PROFESSIONAL ENGINEER
P.M. TREVISAN
100136551
March 20th, 2017
PROVINCE OF ONTARIO

RECEIVED
TOWN OF MILTON
MAR 29, 2017
17-5419
BUILDING DIVISION

READ ALL NOTES ON THIS PAGE AND ON THE ENGINEERING NOTE PAGE ENP-1. THE NOTE PAGE IS AN INTEGRAL PART OF THIS DRAWING AS IT CONTAINS SPECIFICATIONS AND CRITERIA USED IN THE DESIGN OF THIS COMPONENT.

KOTT

JOB NAME	TRUSS NAME	QUANTITY	PLY	JOB DESC.	DRWG NO.
PT0317-122	T38	1	1	TRUSS DESC. LECCO RIDGE-BLOCK 348	

KOTT , Stouffville, ON, CGC

Version 8.100 S Feb 9 2017 MiTek Industries, Inc. Mon Mar 20 10:10:45 2017 Page 1
ID:Mn2zxnCa6NqoASkSkmtLJtyfhrl-7_PkczEUO291qQiCEKIz22U3ho4OCCpE5JwcuQzZ4wO

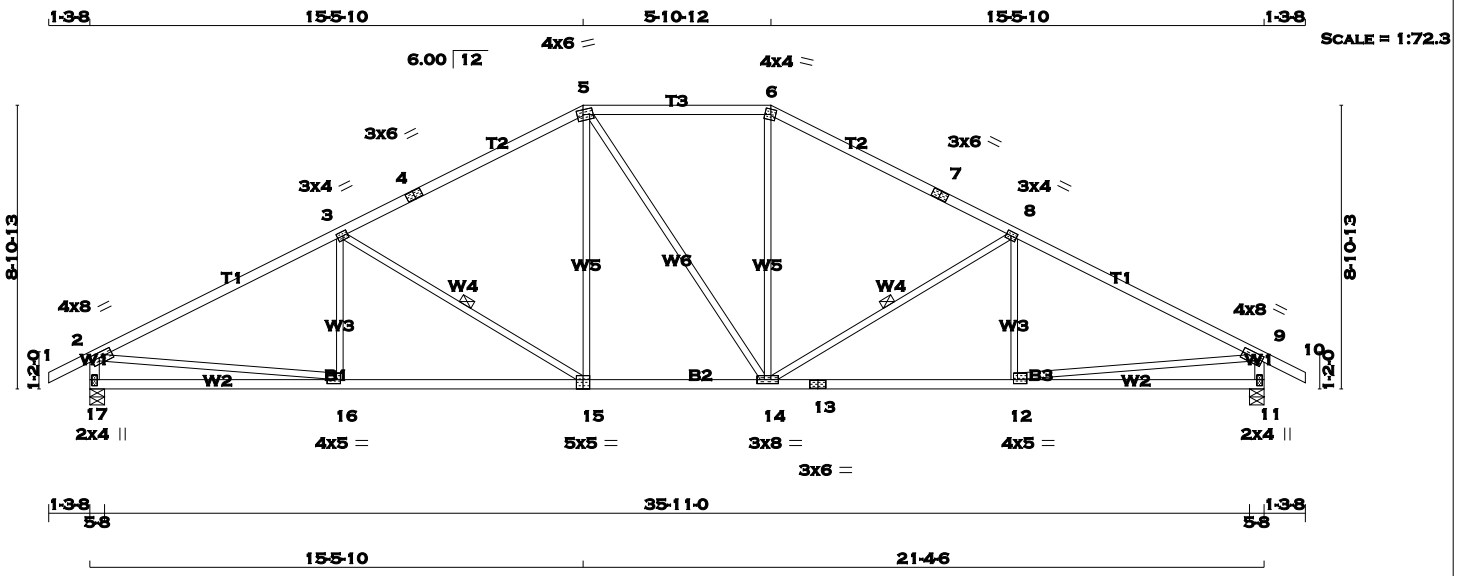

TOTAL WEIGHT = 149 lb

LUMBER

N. L. G. A. RULES

CHORDS	SIZE		LUMBER	DESCR.
1 - 4	2x4	DRY	No.2	SPF
4 - 5	2x4	DRY	No.2	SPF
5 - 6	2x4	DRY	No.2	SPF
6 - 7	2x4	DRY	No.2	SPF
7 - 10	2x4	DRY	No.2	SPF
17 - 2	2x4	DRY	No.2	SPF
11 - 9	2x4	DRY	No.2	SPF
17 - 15	2x4	DRY	No.2	SPF
15 - 13	2x4	DRY	No.2	SPF
13 - 11	2x4	DRY	No.2	SPF
ALL WEBS EXCEPT	2x3	DRY	No.2	SPF

DRY: SEASONED LUMBER.

PLATES (table is in inches)

JT	TYPE	PLATES	W	LEN	Y	X
2	TMVW-t	MT20	4.0	8.0	1.75	3.00
3	TMWW-t	MT20	3.0	4.0	1.50	1.75
4	TS-t	MT20	3.0	6.0		
5	TTWW-m	MT20	4.0	6.0	1.75	2.25
6	TTW-m	MT20	4.0	4.0	2.00	1.75
7	TS-t	MT20	3.0	6.0		
8	TMWW-t	MT20	3.0	4.0	1.50	1.75
9	TMVW-t	MT20	4.0	8.0	1.75	3.00
11	BMV1+p	MT20	2.0	4.0	2.25	1.00
12	BMWW-t	MT20	4.0	5.0	1.50	1.50
13	BS-t	MT20	3.0	6.0		
14	BMWWW-t	MT20	3.0	8.0		
15	BSWW-l	MT20	5.0	5.0	Edge	2.50
16	BMWW-t	MT20	4.0	5.0	1.50	1.50
17	BMV1+p	MT20	2.0	4.0	2.25	1.00

Edge - INDICATES REFERENCE CORNER OF PLATE TOUCHES EDGE OF CHORD.

A SIZE FOR SIZE SUBSTITUTION OF MITEK MII20 WITH TEE-LOK TL20 PLATES IS ALLOWED.

DIMENSIONS, SUPPORTS AND LOADINGS SPECIFIED BY FABRICATOR TO BE VERIFIED BY BUILDING DESIGNER

BEARINGS

JT	FACTORED GROSS REACTION VERT	HORZ	MAXIMUM FACTORED GROSS REACTION DOWN	HORZ	UPLIFT	INPUT BRG IN-SX	REQRD BRG IN-SX
17	1852	0	1852	0	0	5-8	5-8
11	1852	0	1852	0	0	5-8	5-8

UNFACTORED REACTIONS

JT	1ST LCASE COMBINED	MAX./MIN. COMPONENT REACTIONS SNOW	LIVE	PERM.LIVE	WIND	DEAD	SOIL
17	1297	921 / 0	0 / 0	0 / 0	0 / 0	376 / 0	0 / 0
11	1297	921 / 0	0 / 0	0 / 0	0 / 0	376 / 0	0 / 0

BEARING MATERIAL TO BE SPF NO.2 OR BETTER AT JOINT(S) 17, 11

BRACING

TOP CHORD TO BE SHEATHED OR MAX. PURLIN SPACING = 3.33 FT.
MAX. UNBRACED BOTTOM CHORD LENGTH = 10.00 FT. OR RIGID CEILING DIRECTLY APPLIED.

ALL PITCH BREAKS AND PERIMETER CORNER JOINTS MUST BE LATERALLY RESTRAINED.

1 - 2x3 SPF No.2 LATERAL BRACE(S) AT 1/ 2 LENGTH OF 3-15, 8-14. DBS = 20-0-0 . CBF = 84 LBS.

DBS = DIAGONAL BRACE SPACING (MAX). CBF = CUMULATIVE BRACING FORCE. FASTEN LATERAL BRACE(S) USING (0.122"X3") SPIRAL NAILS : 1 NAIL FOR 2x3 BRACE(S), 2 FOR 1x4, 2x4, 2x5, 3 FOR 2x6, 4 FOR 2x8, 5 FOR 2x10, AND 6 FOR 2x12.

END VERTICAL(S) MUST BE SHEATHED OR HAVE BRACES AS INDICATED IN THE MAX. UNBRACED LENGTH COLUMN OF THE TABLE BELOW

LOADING

TOTAL LOAD CASES: (4)

CHORDS

MEMB. FR-TO	MAX. FACTORED FORCE (LBS)	FACTORED VERT. LOAD (PLF) FROM	TO	LC1	MAX CSI (LC)	MAX. UNBRAC LENGTH
1- 2	0 / 23	-77.4	-77.4	0.10 (1)	10.00	
2- 3	-2644 / 0	-77.4	-77.4	0.90 (1)	3.33	
3- 4	-2073 / 0	-77.4	-77.4	0.77 (1)	3.82	
4- 5	-2073 / 0	-77.4	-77.4	0.77 (1)	3.82	
5- 6	-1830 / 0	-77.4	-77.4	0.40 (1)	4.54	
6- 7	-2074 / 0	-77.4	-77.4	0.77 (1)	3.82	
7- 8	-2074 / 0	-77.4	-77.4	0.77 (1)	3.82	
8- 9	-2644 / 0	-77.4	-77.4	0.90 (1)	3.33	
9-10	0 / 23	-77.4	-77.4	0.10 (1)	10.00	
17- 2	-1796 / 0	0.0	0.0	0.18 (1)	6.24	
11- 9	-1795 / 0	0.0	0.0	0.18 (1)	6.24	
17-16	0 / 0	-17.5	-17.5	0.26 (4)	10.00	
16-15	0 / 2394	-17.5	-17.5	0.51 (1)	10.00	
15-14	0 / 1830	-17.5	-17.5	0.38 (1)	10.00	
14-13	0 / 2393	-17.5	-17.5	0.51 (1)	10.00	
13-12	0 / 2393	-17.5	-17.5	0.51 (1)	10.00	
12-11	0 / 0	-17.5	-17.5	0.26 (4)	10.00	

WEBS

MEMB. FR-TO	MAX. FACTORED FORCE (LBS)	MAX CSI (LC)
16- 3	-109 / 99	0.04 (1)
3-15	-669 / 0	0.39 (1)
15- 5	0 / 464	0.10 (1)
5-14	0 / 0	0.00 (1)
14- 6	0 / 465	0.10 (1)
14- 8	-668 / 0	0.39 (1)
12- 8	-110 / 99	0.04 (1)
2-16	0 / 2408	0.54 (1)
12- 9	0 / 2408	0.54 (1)

DESIGN CRITERIA

SPECIFIED LOADS:

TOP CH.	LL	=	23.3	PSF
	DL	=	3.0	PSF
BOT CH.	LL	=	0.0	PSF
	DL	=	7.0	PSF
TOTAL LOAD		=	33.3	PSF

SPACING = 24.0 IN. C/C

LOADING IN FLAT SECTION BASED ON A SLOPE OF 6.00/12

THIS TRUSS IS DESIGNED FOR RESIDENTIAL OR SMALL BUILDING REQUIREMENTS OF PART 9, NBCC 2010

THIS DESIGN COMPLIES WITH:
- PART 9 OF OBC 2012 , BCBC 2012 , ABC 2014
- CSA 086-09
- TPIC 2011

(55 % OF 27.2 P.S.F. G.S.L. PLUS 8.4 P.S.F. RAIN LOAD) EQUALS 23.3 P.S.F. SPECIFIED ROOF LIVE LOAD

ALLOWABLE DEFL.(LL)= L/360 (1.23")
CALCULATED VERT. DEFL.(LL) = L/ 999 (0.15")
ALLOWABLE DEFL.(TL)= L/360 (1.23")
CALCULATED VERT. DEFL.(TL) = L/ 999 (0.29")

CSI: TC=0.90 (2-3:1) , BC=0.51 (15-16:1) , WB=0.54 (2-16:1) , SSI=0.26 (8-9:1)

DOL LUMBER=1.00 NAIL=1.00 LS BEND=1.10 COMP=1.10 SHEAR=1.10 TENS= 1.10

COMPANION LIVE LOAD FACTOR = 0.50

TRUSS PLATE MANUFACTURER IS NOT RESPONSIBLE FOR QUALITY CONTROL IN THE TRUSS MANUFACTURING PLANT .

NAIL VALUES

PLATE	GRIP(DRY) (PSI) MAX	MIN	SHEAR (PLI) MAX	MIN	SECTION (PLI) MAX	MIN
MT20	618	354	1667	822	2284	1656

PLATE PLACEMENT TOL. = 0.250 inches

PLATE ROTATION TOL. = 5.0 Deg.

JSI GRIP= 0.87 (16) (INPUT = 0.90)
JSI METAL= 0.72 (16) (INPUT = 1.00)

LICENSED PROFESSIONAL ENGINEER
P.M. TREVISAN
100136551
March 20th, 2017
PROVINCE OF ONTARIO

RECEIVED
TOWN OF MILTON
MAR 29, 2017
17-5419
BUILDING DIVISION

READ ALL NOTES ON THIS PAGE AND ON THE ENGINEERING NOTE PAGE ENP-1. THE NOTE PAGE IS AN INTEGRAL PART OF THIS DRAWING AS IT CONTAINS SPECIFICATIONS AND CRITERIA USED IN THE DESIGN OF THIS COMPONENT.

KOTT

JOB NAME	TRUSS NAME	QUANTITY	PLY	JOB DESC.	DRWG NO.
PT0317-122	T39	1	1	TRUSS DESC. LECCO RIDGE-BLOCK 348	

KOTT , Stouffville, ON, CGC

Version 8.100 S Feb 9 2017 MiTek Industries, Inc. Mon Mar 20 10:10:46 2017 Page 1
ID:Mn2zxnCa6NqoASkSkmtLJtyfhrl-cBz6pJF69MHuSaHOo1qCbF1LgCSoxfANJzf9QszZ4wN

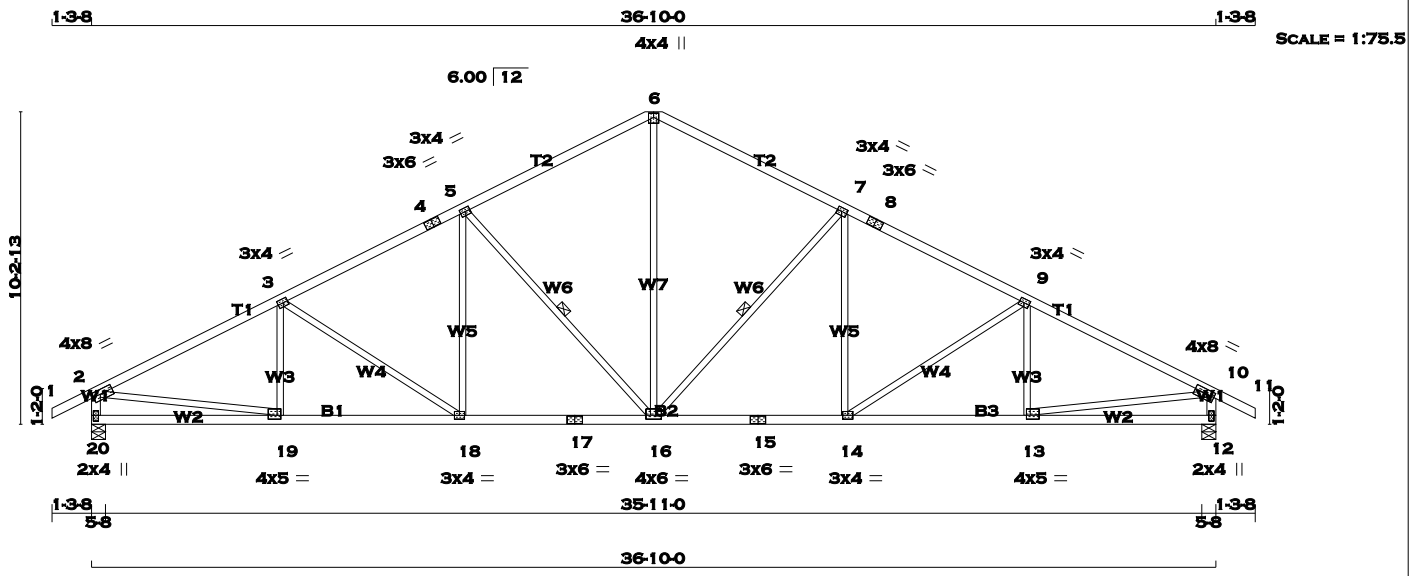

TOTAL WEIGHT = 154 lb
[M][F]

LUMBER
N. L. G. A. RULES

CHORDS	SIZE		LUMBER	DESCR.
1 - 4	2x4	DRY	No.2	SPF
4 - 6	2x4	DRY	No.2	SPF
6 - 8	2x4	DRY	No.2	SPF
8 - 11	2x4	DRY	No.2	SPF
20 - 2	2x4	DRY	No.2	SPF
12 - 10	2x4	DRY	No.2	SPF
20 - 17	2x4	DRY	No.2	SPF
17 - 15	2x4	DRY	No.2	SPF
15 - 12	2x4	DRY	No.2	SPF
ALL WEBS EXCEPT	2x3	DRY	No.2	SPF

DRY: SEASONED LUMBER.

PLATES (table is in inches)

JT	TYPE	PLATES	W	LEN	Y	X
2 3, 5, 7, 9	TMVW-t	MT20	4.0	8.0	1.75	3.00
3	TMWW-t	MT20	3.0	4.0	1.50	1.75
4	TS-t	MT20	3.0	6.0		
6	TTW+p	MT20	4.0	4.0	1.75	2.00
8	TS-t	MT20	3.0	6.0		
10	TMVW-t	MT20	4.0	8.0	1.75	3.00
12	BMV1+p	MT20	2.0	4.0	2.25	1.00
13	BMWW-t	MT20	4.0	5.0	1.50	1.50
14	BMWW-t	MT20	3.0	4.0		
15	BS-t	MT20	3.0	6.0		
16	BMWWW-t	MT20	4.0	6.0	1.50	3.00
17	BS-t	MT20	3.0	6.0		
18	BMWW-t	MT20	3.0	4.0		
19	BMWW-t	MT20	4.0	5.0	1.50	1.50
20	BMV1+p	MT20	2.0	4.0	2.25	1.00

A SIZE FOR SIZE SUBSTITUTION OF MITEK MII20 WITH TEE-LOK TL20 PLATES IS ALLOWED.

DIMENSIONS, SUPPORTS AND LOADINGS SPECIFIED BY FABRICATOR TO BE VERIFIED BY BUILDING DESIGNER

BEARINGS

JT	FACTORED GROSS REACTION VERT	HORZ	MAXIMUM FACTORED GROSS REACTION DOWN	HORZ	UPLIFT	INPUT BRG IN-SX	REQRD BRG IN-SX
20	1852	0	1852	0	0	5-8	5-8
12	1852	0	1852	0	0	5-8	5-8

UNFACTORED REACTIONS

JT	1ST LCASE COMBINED	MAX./MIN. COMPONENT REACTIONS SNOW	LIVE	PERM.LIVE	WIND	DEAD	SOIL
20	1297	921 / 0	0 / 0	0 / 0	0 / 0	376 / 0	0 / 0
12	1297	921 / 0	0 / 0	0 / 0	0 / 0	376 / 0	0 / 0

BEARING MATERIAL TO BE SPF NO.2 OR BETTER AT JOINT(S) 20, 12

BRACING
TOP CHORD TO BE SHEATHED OR MAX. PURLIN SPACING = 3.86 FT.
MAX. UNBRACED BOTTOM CHORD LENGTH = 10.00 FT. OR RIGID CEILING DIRECTLY APPLIED.

ALL PITCH BREAKS AND PERIMETER CORNER JOINTS MUST BE LATERALLY RESTRAINED.

1 - 2x3 SPF No.2 LATERAL BRACE(S) AT 1/ 2 LENGTH OF 5-16, 7-16. DBS = 20-0-0 . CBF = 92 LBS.

DBS = DIAGONAL BRACE SPACING (MAX). CBF = CUMULATIVE BRACING FORCE. FASTEN LATERAL BRACE(S) USING (0.122"X3") SPIRAL NAILS : 1 NAIL FOR 2x3 BRACE(S), 2 FOR 1x4, 2x4, 2x5, 3 FOR 2x6, 4 FOR 2x8, 5 FOR 2x10, AND 6 FOR 2x12.

END VERTICAL(S) MUST BE SHEATHED OR HAVE BRACES AS INDICATED IN THE MAX. UNBRACED LENGTH COLUMN OF THE TABLE BELOW

LOADING
TOTAL LOAD CASES: (4)

CHORDS

MEMB. FR-TO	MAX. FACTORED FORCE (LBS)	FACTORED VERT. LOAD (PLF) FROM	TO	LC1 CSI (LC)	MAX UNBRAC LENGTH
1- 2	0 / 23	-77.4	-77.4	0.10 (1)	10.00
2- 3	-2613 / 0	-77.4	-77.4	0.50 (1)	3.86
3- 4	-2345 / 0	-77.4	-77.4	0.42 (1)	4.13
4- 5	-2345 / 0	-77.4	-77.4	0.42 (1)	4.13
5- 6	-1814 / 0	-77.4	-77.4	0.43 (1)	4.55
6- 7	-1814 / 0	-77.4	-77.4	0.43 (1)	4.55
7- 8	-2345 / 0	-77.4	-77.4	0.42 (1)	4.13
8- 9	-2345 / 0	-77.4	-77.4	0.42 (1)	4.13
9-10	-2613 / 0	-77.4	-77.4	0.50 (1)	3.86
10-11	0 / 23	-77.4	-77.4	0.10 (1)	10.00
20- 2	-1805 / 0	0.0	0.0	0.18 (1)	6.23
12-10	-1805 / 0	0.0	0.0	0.18 (1)	6.23
20-19	0 / 0	-17.5	-17.5	0.15 (4)	10.00
19-18	0 / 2354	-17.5	-17.5	0.44 (1)	10.00
18-17	0 / 2099	-17.5	-17.5	0.42 (1)	10.00
17-16	0 / 2099	-17.5	-17.5	0.42 (1)	10.00
16-15	0 / 2099	-17.5	-17.5	0.42 (1)	10.00
15-14	0 / 2099	-17.5	-17.5	0.42 (1)	10.00
14-13	0 / 2354	-17.5	-17.5	0.44 (1)	10.00
13-12	0 / 0	-17.5	-17.5	0.15 (4)	10.00

WEBS

MEMB. FR-TO	MAX. FACTORED FORCE (LBS)	MAX CSI (LC)
19- 3	-213 / 37	0.06 (1)
3-18	-306 / 0	0.30 (1)
18- 5	0 / 273	0.06 (1)
5-16	-738 / 0	0.45 (1)
16- 7	-738 / 0	0.45 (1)
14- 7	0 / 273	0.06 (1)
14- 9	-306 / 0	0.30 (1)
13- 9	-213 / 37	0.06 (1)
2-19	0 / 2377	0.53 (1)
13-10	0 / 2377	0.53 (1)
16- 6	0 / 1211	0.27 (1)

DESIGN CRITERIA

SPECIFIED LOADS:

TOP	CH.	LL	=	23.3	PSF
		DL	=	3.0	PSF
BOT	CH.	LL	=	0.0	PSF
		DL	=	7.0	PSF
TOTAL	LOAD		=	33.3	PSF

SPACING = 24.0 IN. C/C

THIS TRUSS IS DESIGNED FOR RESIDENTIAL OR SMALL BUILDING REQUIREMENTS OF PART 9, NBCC 2010

THIS DESIGN COMPLIES WITH:
- PART 9 OF OBC 2012 , BCBC 2012 , ABC 2014
- CSA 086-09
- TPIC 2011

(55 % OF 27.2 P.S.F. G.S.L. PLUS 8.4 P.S.F. RAIN LOAD) EQUALS 23.3 P.S.F. SPECIFIED ROOF LIVE LOAD

ALLOWABLE DEFL.(LL)= L/360 (1.23")
CALCULATED VERT. DEFL.(LL) = L/ 999 (0.15")
ALLOWABLE DEFL.(TL)= L/360 (1.23")
CALCULATED VERT. DEFL.(TL) = L/ 999 (0.28")

CSI: TC=0.50 (9-10:1) , BC=0.44 (13-14:1) , WB=0.53 (10-13:1) , SSI=0.20 (5-6:1)

DOL LUMBER=1.00 NAIL=1.00 LS BEND=1.10 COMP=1.10 SHEAR=1.10 TENS= 1.10

COMPANION LIVE LOAD FACTOR = 0.50

TRUSS PLATE MANUFACTURER IS NOT RESPONSIBLE FOR QUALITY CONTROL IN THE TRUSS MANUFACTURING PLANT .

NAIL VALUES

PLATE	GRIP(DRY) (PSI) MAX	MIN	SHEAR (PLI) MAX	MIN	SECTION (PLI) MAX	MIN
MT20	618	354	1667	822	2284	1656

PLATE PLACEMENT TOL. = 0.250 inches

PLATE ROTATION TOL. = 5.0 Deg.

JSI GRIP= 0.90 (6) (INPUT = 0.90)
JSI METAL= 0.71 (13) (INPUT = 1.00)

LICENSED PROFESSIONAL ENGINEER
P.M. TREVISAN
100136551
March 20th, 2017
PROVINCE OF ONTARIO

RECEIVED
TOWN OF MILTON
MAR 29, 2017
17-5419
BUILDING DIVISION

READ ALL NOTES ON THIS PAGE AND ON THE ENGINEERING NOTE PAGE ENP-1. THE NOTE PAGE IS AN INTEGRAL PART OF THIS DRAWING AS IT CONTAINS SPECIFICATIONS AND CRITERIA USED IN THE DESIGN OF THIS COMPONENT.

KOTT

Version 8.100 S Feb 9 2017 MiTek Industries, Inc. Mon Mar 20 10:10:46 2017 Page 1
ID:Mn2zxnCa6NqoASkSkmtLJtyfhrl-cBz6pJF69MHuSaHOo1qCbF1KSCSjxf9NJzf9QszZ4wN

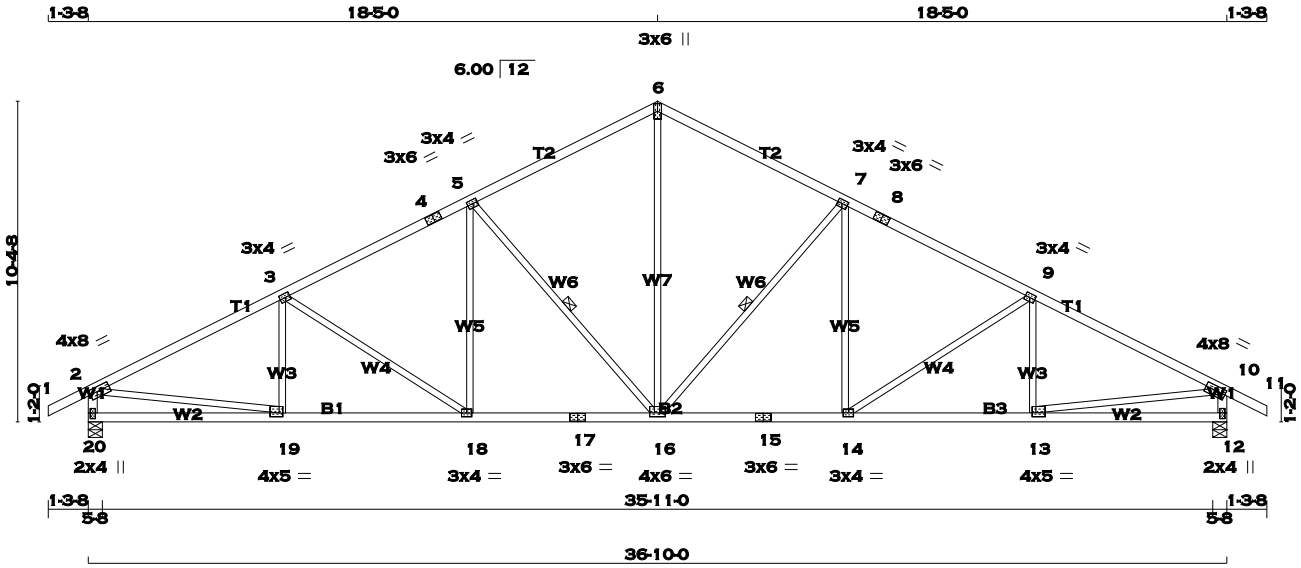

TOTAL WEIGHT = 3 X 155 = 464 lb
[M][F]

LUMBER

N. L. G. A. RULES

CHORDS	SIZE		LUMBER	DESCR.
1 - 4	2x4	DRY	No.2	SPF
4 - 6	2x4	DRY	No.2	SPF
6 - 8	2x4	DRY	No.2	SPF
8 - 11	2x4	DRY	No.2	SPF
20 - 2	2x4	DRY	No.2	SPF
12 - 10	2x4	DRY	No.2	SPF
20 - 17	2x4	DRY	No.2	SPF
17 - 15	2x4	DRY	No.2	SPF
15 - 12	2x4	DRY	No.2	SPF
ALL WEBS EXCEPT	2x3	DRY	No.2	SPF

DRY: SEASONED LUMBER.

PLATES (table is in inches)

JT	TYPE	PLATES	W	LEN	Y	X
2 3, 5, 7, 9	TMVW-t	MT20	4.0	8.0	1.75	3.00
3	TMWW-t	MT20	3.0	4.0	1.50	1.75
4	TS-t	MT20	3.0	6.0		
6	TTW+p	MT20	3.0	6.0		
8	TS-t	MT20	3.0	6.0		
10	TMVW-t	MT20	4.0	8.0	1.75	3.00
12	BMV1+p	MT20	2.0	4.0	2.25	1.00
13	BMWW-t	MT20	4.0	5.0	1.50	1.50
14	BMWW-t	MT20	3.0	4.0		
15	BS-t	MT20	3.0	6.0		
16	BMWWW-t	MT20	4.0	6.0	1.50	3.00
17	BS-t	MT20	3.0	6.0		
18	BMWW-t	MT20	3.0	4.0		
19	BMWW-t	MT20	4.0	5.0	1.50	1.50
20	BMV1+p	MT20	2.0	4.0	2.25	1.00

A SIZE FOR SIZE SUBSTITUTION OF MITEK MII20 WITH TEE-LOK TL20 PLATES IS ALLOWED.

DIMENSIONS, SUPPORTS AND LOADINGS SPECIFIED BY FABRICATOR TO BE VERIFIED BY BUILDING DESIGNER

BEARINGS

JT	FACTORED GROSS REACTION VERT	HORZ	MAXIMUM FACTORED GROSS REACTION DOWN	HORZ	UPLIFT	INPUT BRG IN-SX	REQRD BRG IN-SX
20	1852	0	1852	0	0	5-8	5-8
12	1852	0	1852	0	0	5-8	5-8

UNFACTORED REACTIONS

JT	1ST LCASE COMBINED	MAX./MIN. COMPONENT REACTIONS SNOW	LIVE	PERM.LIVE	WIND	DEAD	SOIL
20	1297	921 / 0	0 / 0	0 / 0	0 / 0	376 / 0	0 / 0
12	1297	921 / 0	0 / 0	0 / 0	0 / 0	376 / 0	0 / 0

BEARING MATERIAL TO BE SPF NO.2 OR BETTER AT JOINT(S) 20, 12

BRACING

TOP CHORD TO BE SHEATHED OR MAX. PURLIN SPACING = 3.85 FT.
MAX. UNBRACED BOTTOM CHORD LENGTH = 10.00 FT. OR RIGID CEILING DIRECTLY APPLIED.

ALL PITCH BREAKS AND PERIMETER CORNER JOINTS MUST BE LATERALLY RESTRAINED.

1 - 2x3 SPF No.2 LATERAL BRACE(S) AT 1/ 2 LENGTH OF 7-16, 5-16. DBS = 20-0-0 . CBF = 92 LBS.

DBS = DIAGONAL BRACE SPACING (MAX). CBF = CUMULATIVE BRACING FORCE. FASTEN LATERAL BRACE(S) USING (0.122"X3") SPIRAL NAILS : 1 NAIL FOR 2x3 BRACE(S), 2 FOR 1x4, 2x4, 2x5, 3 FOR 2x6, 4 FOR 2x8, 5 FOR 2x10, AND 6 FOR 2x12.

END VERTICAL(S) MUST BE SHEATHED OR HAVE BRACES AS INDICATED IN THE MAX. UNBRACED LENGTH COLUMN OF THE TABLE BELOW

LOADING

TOTAL LOAD CASES: (4)

CHORDS

MEMB. FR-TO	MAX. FACTORED FORCE (LBS)	FACTORED VERT. LOAD (PLF) FROM	TO	LC1 CSI (LC)	MAX UNBRAC LENGTH
1- 2	0 / 23	-77.4	-77.4	0.10 (1)	10.00
2- 3	-2616 / 0	-77.4	-77.4	0.52 (1)	3.85
3- 4	-2331 / 0	-77.4	-77.4	0.42 (1)	4.14
4- 5	-2331 / 0	-77.4	-77.4	0.42 (1)	4.14
5- 6	-1813 / 0	-77.4	-77.4	0.40 (1)	4.58
6- 7	-1813 / 0	-77.4	-77.4	0.40 (1)	4.58
7- 8	-2331 / 0	-77.4	-77.4	0.42 (1)	4.14
8- 9	-2331 / 0	-77.4	-77.4	0.42 (1)	4.14
9-10	-2616 / 0	-77.4	-77.4	0.52 (1)	3.85
10-11	0 / 23	-77.4	-77.4	0.10 (1)	10.00
20- 2	-1805 / 0	0.0	0.0	0.18 (1)	6.23
12-10	-1805 / 0	0.0	0.0	0.18 (1)	6.23
20-19	0 / 0	-17.5	-17.5	0.15 (4)	10.00
19-18	0 / 2358	-17.5	-17.5	0.44 (1)	10.00
18-17	0 / 2084	-17.5	-17.5	0.41 (1)	10.00
17-16	0 / 2084	-17.5	-17.5	0.41 (1)	10.00
16-15	0 / 2084	-17.5	-17.5	0.41 (1)	10.00
15-14	0 / 2084	-17.5	-17.5	0.41 (1)	10.00
14-13	0 / 2358	-17.5	-17.5	0.44 (1)	10.00
13-12	0 / 0	-17.5	-17.5	0.15 (4)	10.00

WEBS

MEMB. FR-TO	MAX. FACTORED FORCE (LBS)	MAX CSI (LC)
16- 6	0 / 1225	0.28 (1)
16- 7	-735 / 0	0.44 (1)
14- 7	0 / 283	0.06 (1)
14- 9	-327 / 0	0.34 (1)
13- 9	-206 / 41	0.06 (1)
5-16	-735 / 0	0.44 (1)
18- 5	0 / 283	0.06 (1)
3-18	-327 / 0	0.34 (1)
19- 3	-206 / 41	0.06 (1)
2-19	0 / 2380	0.54 (1)
13-10	0 / 2380	0.54 (1)

DESIGN CRITERIA

SPECIFIED LOADS:

TOP	CH.	LL	=	23.3	PSF
		DL	=	3.0	PSF
BOT	CH.	LL	=	0.0	PSF
		DL	=	7.0	PSF
TOTAL	LOAD		=	33.3	PSF

SPACING = 24.0 IN. C/C

THIS TRUSS IS DESIGNED FOR RESIDENTIAL OR SMALL BUILDING REQUIREMENTS OF PART 9, NBCC 2010

THIS DESIGN COMPLIES WITH:
- PART 9 OF OBC 2012 , BCBC 2012 , ABC 2014
- CSA 086-09
- TPIC 2011

(55 % OF 27.2 P.S.F. G.S.L. PLUS 8.4 P.S.F. RAIN LOAD) EQUALS 23.3 P.S.F. SPECIFIED ROOF LIVE LOAD

ALLOWABLE DEFL.(LL)= L/360 (1.23")
CALCULATED VERT. DEFL.(LL) = L/ 999 (0.15")
ALLOWABLE DEFL.(TL)= L/360 (1.23")
CALCULATED VERT. DEFL.(TL) = L/ 999 (0.27")

CSI: TC=0.52 (9-10:1) , BC=0.44 (13-14:1) , WB=0.54 (10-13:1) , SSI=0.20 (9-10:1)

DOL LUMBER=1.00 NAIL=1.00 LS BEND=1.10 COMP=1.10 SHEAR=1.10 TENS= 1.10

COMPANION LIVE LOAD FACTOR = 0.50

TRUSS PLATE MANUFACTURER IS NOT RESPONSIBLE FOR QUALITY CONTROL IN THE TRUSS MANUFACTURING PLANT .

NAIL VALUES

PLATE	GRIP(DRY) (PSI) MAX	MIN	SHEAR (PLI) MAX	MIN	SECTION (PLI) MAX	MIN
MT20	618	354	1667	822	2284	1656

PLATE PLACEMENT TOL. = 0.250 inches

PLATE ROTATION TOL. = 5.0 Deg.

JSI GRIP= 0.90 (6) (INPUT = 0.90)
JSI METAL= 0.71 (13) (INPUT = 1.00)

LICENSED PROFESSIONAL ENGINEER
P.M. TREVISAN
100136551
March 20th, 2017
PROVINCE OF ONTARIO

RECEIVED
TOWN OF MILTON
MAR 29, 2017
17-5419
BUILDING DIVISION

READ ALL NOTES ON THIS PAGE AND ON THE ENGINEERING NOTE PAGE ENP-1. THE NOTE PAGE IS AN INTEGRAL PART OF THIS DRAWING AS IT CONTAINS SPECIFICATIONS AND CRITERIA USED IN THE DESIGN OF THIS COMPONENT.

KOTT

JOB NAME	TRUSS NAME	QUANTITY	PLY	JOB DESC.	DRWG NO.
PT0317-122	T41	1	1	TRUSS DESC. LECCO RIDGE-BLOCK 348	

KOTT , Stouffville, ON, CGC

Version 8.100 S Feb 9 2017 MiTek Industries, Inc. Mon Mar 20 10:10:47 2017 Page 1
ID:Mn2zxnCa6NqoASkSkmtLJtyfhrl-4NXV1fGkwgPl3ksaMlLR7TZYNciqg2RXYdPiyIzZ4wM

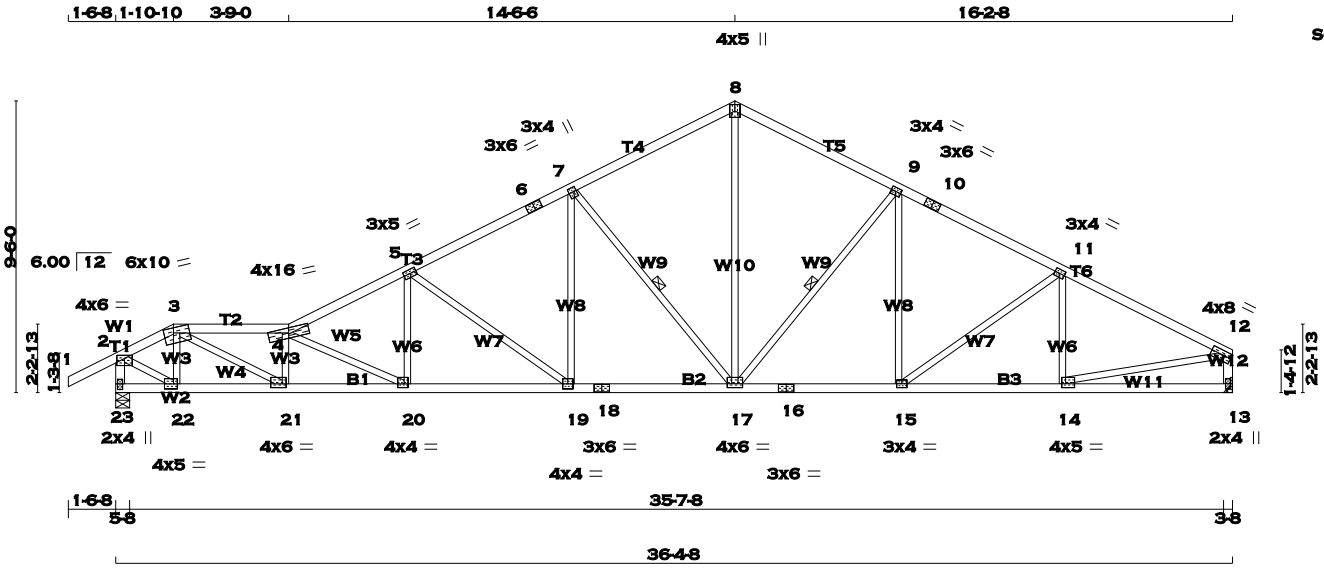

TOTAL WEIGHT = 153 lb

[M][F]

LUMBER

N. L. G. A. RULES

CHORDS	SIZE		LUMBER	DESCR.
1 - 3	2x4	DRY	No.2	SPF
3 - 4	2x4	DRY	No.2	SPF
4 - 6	2x4	DRY	No.2	SPF
6 - 8	2x4	DRY	No.2	SPF
8 - 10	2x4	DRY	No.2	SPF
10 - 12	2x4	DRY	No.2	SPF
23 - 2	2x4	DRY	No.2	SPF
13 - 12	2x4	DRY	No.2	SPF
23 - 18	2x4	DRY	No.2	SPF
18 - 16	2x4	DRY	No.2	SPF
16 - 13	2x4	DRY	No.2	SPF
ALL WEBS EXCEPT	2x3	DRY	No.2	SPF

DRY: SEASONED LUMBER.

PLATES (table is in inches)

JT	TYPE	PLATES	W	LEN	Y	X
2	TMVW-p	MT20	4.0	6.0	1.25	3.00
3	TTWW-m	MT20	6.0	10.0	2.00	3.75
4	TTWW-m	MT20	4.0	16.0		
5	TMWW-t	MT20	3.0	5.0	1.50	2.25
6	TS-t	MT20	3.0	6.0		
7	TMWW+t	MT20	3.0	4.0	1.75	0.75
8	TTW+p	MT20	4.0	5.0		
9	TMWW-t	MT20	3.0	4.0	1.50	1.75
10	TS-t	MT20	3.0	6.0		
11	TMWW-t	MT20	3.0	4.0	1.50	1.75
12	TMVW-t	MT20	4.0	8.0	1.75	Edge
13	BMV1+p	MT20	2.0	4.0		
14	BMWW-t	MT20	4.0	5.0	1.50	1.50
15	BMWW-t	MT20	3.0	4.0		
16	BS-t	MT20	3.0	6.0		
17	BMWWW-t	MT20	4.0	6.0	1.50	3.00
18	BS-t	MT20	3.0	6.0		
19	BMWW-t	MT20	4.0	4.0		
20	BMWW-t	MT20	4.0	4.0	1.50	1.50
21	BMWW-t	MT20	4.0	6.0	1.50	1.50
22	BMWW-t	MT20	4.0	5.0	2.00	1.50
23	BMV1+p	MT20	2.0	4.0	2.25	1.00

Edge - INDICATES REFERENCE CORNER OF PLATE TOUCHES EDGE OF CHORD.

A SIZE FOR SIZE SUBSTITUTION OF MITEK MII20 WITH TEE-LOK TL20 PLATES IS ALLOWED.

DIMENSIONS, SUPPORTS AND LOADINGS SPECIFIED BY FABRICATOR TO BE VERIFIED BY BUILDING DESIGNER

BEARINGS

JT	FACTORED GROSS REACTION VERT	HORZ	MAXIMUM FACTORED GROSS REACTION DOWN	HORZ	UPLIFT	INPUT BRG IN-SX	REQRD BRG IN-SX
23	1852	0	1852	0	0	5-8	5-8
13	1723	0	1723	0	0	HANGER BY OTHERS	
						MIN. SEAT SIZE: 3-8	

UNFACTORED REACTIONS

JT	1ST LCASE COMBINED	SNOW	MAX./MIN. COMPONENT REACTIONS LIVE	PERM.LIVE	WIND	DEAD	SOIL
23	1297	924 / 0	0 / 0	0 / 0	0 / 0	374 / 0	0 / 0
13	1209	845 / 0	0 / 0	0 / 0	0 / 0	364 / 0	0 / 0

BEARING MATERIAL TO BE SPF NO.2 OR BETTER AT JOINT(S) 23

BRACING

TOP CHORD TO BE SHEATHED OR MAX. PURLIN SPACING = 3.26 FT.
MAX. UNBRACED BOTTOM CHORD LENGTH = 10.00 FT. OR RIGID CEILING DIRECTLY APPLIED.

ALL PITCH BREAKS AND PERIMETER CORNER JOINTS MUST BE LATERALLY RESTRAINED.

1 - 2x3 SPF No.2 LATERAL BRACE(S) AT 1/ 2 LENGTH OF 7-17. DBS = 14-0-0 . CBF = 92 LBS.
1 - 2x3 SPF No.2 LATERAL BRACE(S) AT 1/ 2 LENGTH OF 9-17. DBS = 20-0-0 . CBF = 71 LBS.

DBS = DIAGONAL BRACE SPACING (MAX). CBF = CUMULATIVE BRACING FORCE. FASTEN LATERAL BRACE(S) USING (0.122"X3") SPIRAL NAILS : 1 NAIL FOR 2x3 BRACE(S), 2 FOR 1x4, 2x4, 2x5, 3 FOR 2x6, 4 FOR 2x8, 5 FOR 2x10, AND 6 FOR 2x12.

END VERTICAL(S) MUST BE SHEATHED OR HAVE BRACES AS INDICATED IN THE MAX. UNBRACED LENGTH COLUMN OF THE TABLE BELOW

LOADING

TOTAL LOAD CASES: (4)

CHORDS

MEMB. FR-TO	MAX. FACTORED FORCE (LBS)	VERT. LOAD LC1 (PLF) FROM	TO	MAX CSI (LC)	MAX. UNBRAC LENGTH
1- 2	0 / 28	-77.4	-77.4	0.14 (1)	10.00
2- 3	-1830 / 0	-77.4	-77.4	0.14 (1)	4.84
3- 4	-4095 / 0	-77.4	-77.4	0.33 (1)	3.26
4- 5	-3517 / 0	-77.4	-77.4	0.30 (1)	3.55
5- 6	-2623 / 0	-77.4	-77.4	0.36 (1)	3.99
6- 7	-2623 / 0	-77.4	-77.4	0.36 (1)	3.99
7- 8	-1905 / 0	-77.4	-77.4	0.31 (1)	4.59
8- 9	-1904 / 0	-77.4	-77.4	0.31 (1)	4.60
9-10	-2290 / 0	-77.4	-77.4	0.32 (1)	4.27
10-11	-2290 / 0	-77.4	-77.4	0.32 (1)	4.27
11-12	-2399 / 0	-77.4	-77.4	0.38 (1)	4.12
23- 2	-1860 / 0	0.0	0.0	0.19 (1)	6.15
13-12	-1680 / 0	0.0	0.0	0.17 (1)	6.41
23-22	0 / 0	-17.5	-17.5	0.07 (1)	10.00
22-21	0 / 1575	-17.5	-17.5	0.35 (1)	10.00
21-20	0 / 4167	-17.5	-17.5	0.77 (1)	10.00
20-19	0 / 3162	-17.5	-17.5	0.55 (1)	10.00
19-18	0 / 2353	-17.5	-17.5	0.44 (1)	10.00
18-17	0 / 2353	-17.5	-17.5	0.44 (1)	10.00
17-16	0 / 2048	-17.5	-17.5	0.39 (1)	10.00
16-15	0 / 2048	-17.5	-17.5	0.39 (1)	10.00
15-14	0 / 2161	-17.5	-17.5	0.39 (1)	10.00
14-13	0 / 0	-17.5	-17.5	0.12 (4)	10.00

WEBS

MEMB. FR-TO	MAX. FACTORED FORCE (LBS)	MAX CSI (LC)
22- 3	-689 / 0	0.10 (1)
3-21	0 / 2852	0.64 (1)
21- 4	-1333 / 0	0.20 (1)
4-20	-1123 / 0	0.36 (1)
20- 5	0 / 610	0.14 (1)
5-19	-999 / 0	0.79 (1)
19- 7	0 / 675	0.15 (1)
7-17	-1052 / 0	0.51 (1)
17- 8	0 / 1356	0.31 (1)
17- 9	-570 / 0	0.28 (1)
15- 9	0 / 171	0.04 (4)
15-11	-140 / 0	0.11 (1)
14-11	-322 / 0	0.08 (1)
2-22	0 / 1798	0.40 (1)
14-12	0 / 2202	0.50 (1)

RECEIVED
TOWN OF MILTON
MAR 29, 2017
17-5419
BUILDING DIVISION

READ ALL NOTES ON THIS PAGE AND ON THE ENGINEERING NOTE PAGE ENP-1. THE NOTE PAGE IS AN INTEGRAL PART OF THIS DRAWING AS IT CONTAINS SPECIFICATIONS AND CRITERIA USED IN THE DESIGN OF THIS COMPONENT.

DESIGN CRITERIA

SPECIFIED LOADS:

TOP CH.	LL	=	23.3	PSF
	DL	=	3.0	PSF
BOT CH.	LL	=	0.0	PSF
	DL	=	7.0	PSF
TOTAL LOAD		=	33.3	PSF

SPACING = 24.0 IN. C/C

LOADING IN ALL FLAT SECTIONS BASED ON A SLOPE OF 6.00/12

THIS TRUSS IS DESIGNED FOR RESIDENTIAL OR SMALL BUILDING REQUIREMENTS OF PART 9, NBCC 2010

THIS DESIGN COMPLIES WITH:
- PART 9 OF OBC 2012 , BCBC 2012 , ABC 2014
- CSA 086-09
- TPIC 2011

DESIGN ASSUMPTIONS
-OVERHANG NOT TO BE ALTERED OR CUT OFF.

(55 % OF 27.2 P.S.F. G.S.L. PLUS 8.4 P.S.F. RAIN LOAD) EQUALS 23.3 P.S.F. SPECIFIED ROOF LIVE LOAD

ALLOWABLE DEFL.(LL)= L/360 (1.21")
CALCULATED VERT. DEFL.(LL) = L/ 999 (0.23")
ALLOWABLE DEFL.(TL)= L/360 (1.21")
CALCULATED VERT. DEFL.(TL) = L/ 999 (0.41")

CSI: TC=0.38 (11-12:1) , BC=0.77 (20-21:1) , WB=0.79 (5-19:1) , SSI=0.18 (11-12:1)

DOL LUMBER=1.00 NAIL=1.00 LS BEND=1.10 COMP=1.10 SHEAR=1.10 TENS= 1.10

COMPANION LIVE LOAD FACTOR = 0.50

TRUSS PLATE MANUFACTURER IS NOT RESPONSIBLE FOR QUALITY CONTROL IN THE TRUSS MANUFACTURING PLANT .

NAIL VALUES

PLATE	GRIP(DRY) (PSI) MAX	MIN	SHEAR (PLI) MAX	MIN	SECTION (PLI) MAX	MIN
MT20	618	354	1667	822	2284	1656

PLATE PLACEMENT TOL. = 0.250 inches

PLATE ROTATION TOL. = 5.0 Deg.

JSI GRIP= 0.90 (3) (INPUT = 0.90)
JSI METAL= 0.65 (14) (INPUT = 1.00)

KOTT

CONTINUED ON PAGE 2

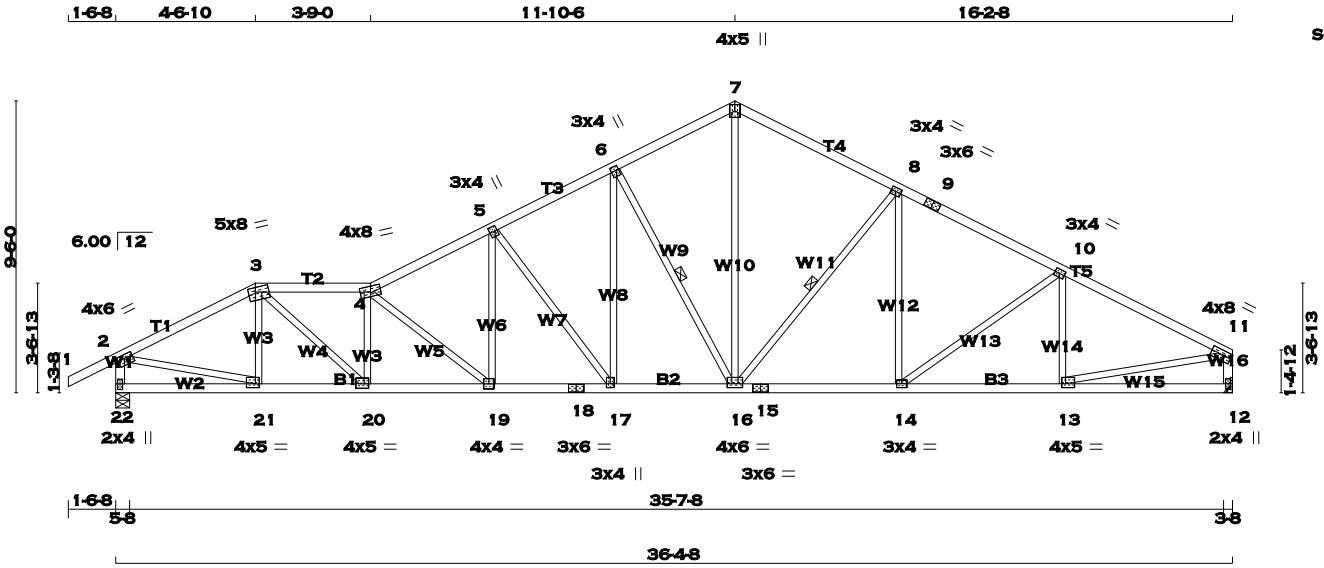

TOTAL WEIGHT = 160 lb

[M][F]

LUMBER

N. L. G. A. RULES

CHORDS	SIZE		LUMBER	DESCR.
1 - 3	2x4	DRY	No.2	SPF
3 - 4	2x4	DRY	No.2	SPF
4 - 7	2x4	DRY	No.2	SPF
7 - 9	2x4	DRY	No.2	SPF
9 - 11	2x4	DRY	No.2	SPF
22 - 2	2x4	DRY	No.2	SPF
12 - 11	2x4	DRY	No.2	SPF
22 - 18	2x4	DRY	No.2	SPF
18 - 15	2x4	DRY	No.2	SPF
15 - 12	2x4	DRY	No.2	SPF
ALL WEBS EXCEPT	2x3	DRY	No.2	SPF

DRY: SEASONED LUMBER.

PLATES (table is in inches)

JT	TYPE	PLATES	W	LEN	Y	X
2	TMVW-t	MT20	4.0	6.0	1.50	2.75
3	TTWW-m	MT20	5.0	8.0	1.75	2.75
4	TTWW-m	MT20	4.0	8.0	2.25	4.00
5	TMWW+t	MT20	3.0	4.0	2.00	0.75
6	TMWW+t	MT20	3.0	4.0	1.75	0.75
7	TTW+p	MT20	4.0	5.0		
8	TMWW-t	MT20	3.0	4.0	1.50	1.75
9	TS-t	MT20	3.0	6.0		
10	TMWW-t	MT20	3.0	4.0	1.50	1.75
11	TMVW-t	MT20	4.0	8.0	1.75	Edge
12	BMV1+p	MT20	2.0	4.0		
13	BMWW-t	MT20	4.0	5.0	1.50	1.50
14	BMWW-t	MT20	3.0	4.0		
15	BS-t	MT20	3.0	6.0		
16	BMWWW-t	MT20	4.0	6.0	1.50	3.00
17	BMWW+t	MT20	3.0	4.0	1.50	1.50
18	BS-t	MT20	3.0	6.0		
19	BMWW-t	MT20	4.0	4.0		
20	BMWW-t	MT20	4.0	5.0	1.75	1.75
21	BMWW-t	MT20	4.0	5.0	1.50	1.50
22	BMV1+p	MT20	2.0	4.0	2.25	1.00

Edge - INDICATES REFERENCE CORNER OF PLATE TOUCHES EDGE OF CHORD.

A SIZE FOR SIZE SUBSTITUTION OF MITEK MII20 WITH TEE-LOK TL20 PLATES IS ALLOWED.

DIMENSIONS, SUPPORTS AND LOADINGS SPECIFIED BY FABRICATOR TO BE VERIFIED BY BUILDING DESIGNER

BEARINGS

JT	FACTORED GROSS REACTION VERT	HORZ	MAXIMUM FACTORED GROSS REACTION DOWN	HORZ	UPLIFT	INPUT BRG	REQRD BRG
22	1850	0	1850	0	0	5-8	5-8
12	1725	0	1725	0	0	HANGER BY OTHERS	
						MIN. SEAT SIZE: 3-8	

UNFACTORED REACTIONS

JT	1ST LCASE COMBINED	SNOW	MAX./MIN. COMPONENT REACTIONS LIVE	PERM.LIVE	WIND	DEAD	SOIL
22	1295	922 / 0	0 / 0	0 / 0	0 / 0	373 / 0	0 / 0
12	1211	847 / 0	0 / 0	0 / 0	0 / 0	364 / 0	0 / 0

BEARING MATERIAL TO BE SPF NO.2 OR BETTER AT JOINT(S) 22

BRACING

TOP CHORD TO BE SHEATHED OR MAX. PURLIN SPACING = 3.64 FT.
MAX. UNBRACED BOTTOM CHORD LENGTH = 10.00 FT. OR RIGID CEILING DIRECTLY APPLIED.

ALL PITCH BREAKS AND PERIMETER CORNER JOINTS MUST BE LATERALLY RESTRAINED.

1 - 2x3 SPF No.2 LATERAL BRACE(S) AT 1/ 2 LENGTH OF 6-16. DBS = 14-0-0 . CBF = 86 LBS.
1 - 2x3 SPF No.2 LATERAL BRACE(S) AT 1/ 2 LENGTH OF 8-16. DBS = 20-0-0 . CBF = 71 LBS.

DBS = DIAGONAL BRACE SPACING (MAX). CBF = CUMULATIVE BRACING FORCE. FASTEN LATERAL BRACE(S) USING (0.122"X3") SPIRAL NAILS : 1 NAIL FOR 2x3 BRACE(S), 2 FOR 1x4, 2x4, 2x5, 3 FOR 2x6, 4 FOR 2x8, 5 FOR 2x10, AND 6 FOR 2x12.

END VERTICAL(S) MUST BE SHEATHED OR HAVE BRACES AS INDICATED IN THE MAX. UNBRACED LENGTH COLUMN OF THE TABLE BELOW

LOADING

TOTAL LOAD CASES: (4)

CHORDS

MEMB. FR-TO	MAX. FORCE (LBS)	FACTORED VERT. LOAD LC1 (PLF) FROM	TO	MAX CSI (LC)	MAX. UNBRAC LENGTH
1- 2	0 / 28	-77.4	-77.4	0.14 (1)	10.00
2- 3	-2377 / 0	-77.4	-77.4	0.29 (1)	4.22
3- 4	-3343 / 0	-77.4	-77.4	0.27 (1)	3.64
4- 5	-3005 / 0	-77.4	-77.4	0.24 (1)	3.86
5- 6	-2420 / 0	-77.4	-77.4	0.19 (1)	4.28
6- 7	-1903 / 0	-77.4	-77.4	0.18 (1)	4.74
7- 8	-1909 / 0	-77.4	-77.4	0.31 (1)	4.59
8- 9	-2295 / 0	-77.4	-77.4	0.32 (1)	4.26
9-10	-2295 / 0	-77.4	-77.4	0.32 (1)	4.26
10-11	-2403 / 0	-77.4	-77.4	0.38 (1)	4.11
22- 2	-1815 / 0	0.0	0.0	0.18 (1)	6.21
12-11	-1683 / 0	0.0	0.0	0.17 (1)	6.40
22-21	0 / 0	-17.5	-17.5	0.08 (4)	10.00
21-20	0 / 2113	-17.5	-17.5	0.38 (1)	10.00
20-19	0 / 3377	-17.5	-17.5	0.60 (1)	10.00
19-18	0 / 2701	-17.5	-17.5	0.47 (1)	10.00
18-17	0 / 2701	-17.5	-17.5	0.47 (1)	10.00
17-16	0 / 2165	-17.5	-17.5	0.41 (1)	10.00
16-15	0 / 2052	-17.5	-17.5	0.39 (1)	10.00
15-14	0 / 2052	-17.5	-17.5	0.39 (1)	10.00
14-13	0 / 2165	-17.5	-17.5	0.39 (1)	10.00
13-12	0 / 0	-17.5	-17.5	0.12 (4)	10.00

WEBS

MEMB. FR-TO	MAX. FORCE (LBS)	MAX CSI (LC)
21- 3	-358 / 0	0.08 (1)
3-20	0 / 1652	0.37 (1)
20- 4	-1058 / 0	0.22 (1)
4-19	-876 / 0	0.39 (1)
19- 5	0 / 639	0.14 (1)
5-17	-890 / 0	0.69 (1)
17- 6	0 / 767	0.17 (1)
6-16	-984 / 0	0.45 (1)
16- 7	0 / 1398	0.31 (1)
16- 8	-570 / 0	0.28 (1)
14- 8	0 / 172	0.04 (4)
14-10	-139 / 0	0.11 (1)
13-10	-323 / 0	0.09 (1)
2-21	0 / 2171	0.49 (1)
13-11	0 / 2206	0.50 (1)

RECEIVED
TOWN OF MILTON
MAR 29, 2017
17-5419
BUILDING DIVISION

READ ALL NOTES ON THIS PAGE AND ON THE ENGINEERING NOTE PAGE ENP-1. THE NOTE PAGE IS AN INTEGRAL PART OF THIS DRAWING AS IT CONTAINS SPECIFICATIONS AND CRITERIA USED IN THE DESIGN OF THIS COMPONENT.

DESIGN CRITERIA

SPECIFIED LOADS:

TOP CH.	LL	=	23.3	PSF
	DL	=	3.0	PSF
BOT CH.	LL	=	0.0	PSF
	DL	=	7.0	PSF
TOTAL LOAD		=	33.3	PSF

SPACING = 24.0 IN. C/C

LOADING IN ALL FLAT SECTIONS BASED ON A SLOPE OF 6.00/12

THIS TRUSS IS DESIGNED FOR RESIDENTIAL OR SMALL BUILDING REQUIREMENTS OF PART 9, NBCC 2010

THIS DESIGN COMPLIES WITH:
- PART 9 OF OBC 2012 , BCBC 2012 , ABC 2014
- CSA 086-09
- TPIC 2011

(55 % OF 27.2 P.S.F. G.S.L. PLUS 8.4 P.S.F. RAIN LOAD) EQUALS 23.3 P.S.F. SPECIFIED ROOF LIVE LOAD

ALLOWABLE DEFL.(LL)= L/360 (1.21")
CALCULATED VERT. DEFL.(LL) = L/ 999 (0.20")
ALLOWABLE DEFL.(TL)= L/360 (1.21")
CALCULATED VERT. DEFL.(TL) = L/ 999 (0.35")

CSI: TC=0.38 (10-11:1) , BC=0.60 (19-20:1) , WB=0.69 (5-17:1) , SSI=0.18 (10-11:1)

DOL LUMBER=1.00 NAIL=1.00 LS BEND=1.10 COMP=1.10 SHEAR=1.10 TENS= 1.10

COMPANION LIVE LOAD FACTOR = 0.50

TRUSS PLATE MANUFACTURER IS NOT RESPONSIBLE FOR QUALITY CONTROL IN THE TRUSS MANUFACTURING PLANT .

NAIL VALUES

PLATE	GRIP(DRY) (PSI) MAX	MIN	SHEAR (PLI) MAX	MIN	SECTION (PLI) MAX	MIN
MT20	618	354	1667	822	2284	1656

PLATE PLACEMENT TOL. = 0.250 inches

PLATE ROTATION TOL. = 5.0 Deg.

JSI GRIP= 0.90 (2) (INPUT = 0.90)
JSI METAL= 0.71 (18) (INPUT = 1.00)

KOTT

CONTINUED ON PAGE 2

JOB NAME	TRUSS NAME	QUANTITY	PLY	JOB DESC.	DRWG NO.
PT0317-122	T43	1	1	TRUSS DESC. LECCO RIDGE-BLOCK 348	ENG JOB: PT0317-122

KOTT , Stouffville, ON, CGC

Version 8.100 S Feb 9 2017 MiTek Industries, Inc. Mon Mar 20 10:10:49 2017 Page 1
ID:Mn2zxnCa6NqoASkSkmtLJtyfhrl-0mfFSLH_SHfTJ2?zTANvCufutQSK8_mq0xup1BzZ4wK

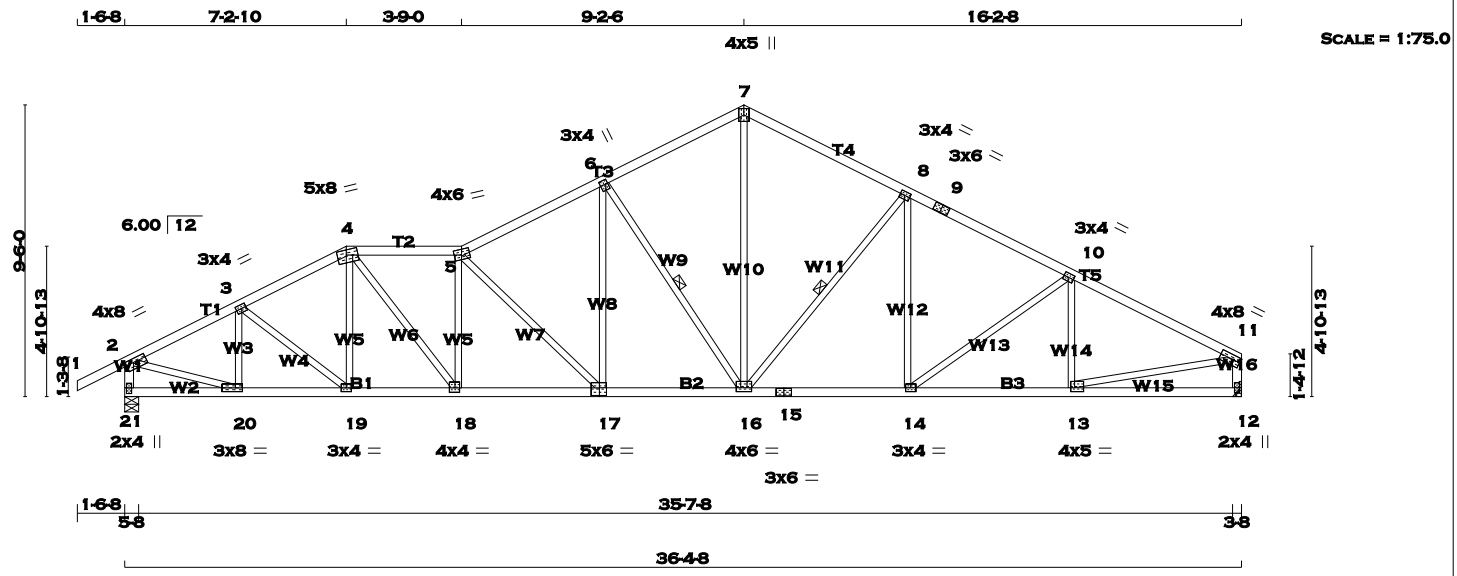

TOTAL WEIGHT = 160 lb
[M][F]

LUMBER
N. L. G. A. RULES

CHORDS	SIZE		LUMBER	DESCR.
1 - 4	2x4	DRY	No.2	SPF
4 - 5	2x4	DRY	No.2	SPF
5 - 7	2x4	DRY	No.2	SPF
7 - 9	2x4	DRY	No.2	SPF
9 - 11	2x4	DRY	No.2	SPF
21 - 2	2x4	DRY	No.2	SPF
12 - 11	2x4	DRY	No.2	SPF
21 - 17	2x4	DRY	No.2	SPF
17 - 15	2x4	DRY	No.2	SPF
15 - 12	2x4	DRY	No.2	SPF
ALL WEBS EXCEPT	2x3	DRY	No.2	SPF

DRY: SEASONED LUMBER.

PLATES (table is in inches)

JT	TYPE	PLATES	W	LEN	Y	X
2 3, 8, 10	TMVW-t	MT20	4.0	8.0	1.50	3.00
3	TMWW-t	MT20	3.0	4.0	1.50	1.75
4	TTWW-m	MT20	5.0	8.0	2.00	3.50
5	TTWW-m	MT20	4.0	6.0	2.25	2.75
6	TMWW+t	MT20	3.0	4.0	1.75	0.75
7	TTW+p	MT20	4.0	5.0		
9	TS-t	MT20	3.0	6.0		
11	TMVW-t	MT20	4.0	8.0	1.75	Edge
12	BMV1+p	MT20	2.0	4.0		
13	BMWW-t	MT20	4.0	5.0	1.50	1.50
14	BMWW-t	MT20	3.0	4.0		
15	BS-t	MT20	3.0	6.0		
16	BMWWW-t	MT20	4.0	6.0	1.50	3.00
17	BSWW-l	MT20	5.0	6.0	3.00	2.75
18	BMWW-t	MT20	4.0	4.0	1.75	1.75
19	BMWW-t	MT20	3.0	4.0		
20	BMWW-t	MT20	3.0	8.0	1.50	2.75
21	BMV1+p	MT20	2.0	4.0	2.25	1.00

Edge - INDICATES REFERENCE CORNER OF PLATE TOUCHES EDGE OF CHORD.

A SIZE FOR SIZE SUBSTITUTION OF MITEK MII20 WITH TEE-LOK TL20 PLATES IS ALLOWED.

DIMENSIONS, SUPPORTS AND LOADINGS SPECIFIED BY FABRICATOR TO BE VERIFIED BY BUILDING DESIGNER

BEARINGS

JT	FACTORED GROSS REACTION VERT	HORZ	MAXIMUM FACTORED GROSS REACTION DOWN	HORZ	UPLIFT	INPUT BRG IN-SX	REQRD BRG IN-SX
21	1850	0	1850	0	0	5-8	5-8
12	1725	0	1725	0	0	HANGER BY OTHERS	
						MIN. SEAT SIZE: 3-8	

UNFACTORED REACTIONS

JT	1ST LCASE COMBINED	SNOW	MAX./MIN. COMPONENT REACTIONS LIVE	PERM.LIVE	WIND	DEAD	SOIL
21	1295	922 / 0	0 / 0	0 / 0	0 / 0	373 / 0	0 / 0
12	1211	847 / 0	0 / 0	0 / 0	0 / 0	364 / 0	0 / 0

BEARING MATERIAL TO BE SPF NO.2 OR BETTER AT JOINT(S) 21

BRACING
TOP CHORD TO BE SHEATHED OR MAX. PURLIN SPACING = 3.94 FT.
MAX. UNBRACED BOTTOM CHORD LENGTH = 10.00 FT. OR RIGID CEILING DIRECTLY APPLIED.

ALL PITCH BREAKS AND PERIMETER CORNER JOINTS MUST BE LATERALLY RESTRAINED.

1 - 2x3 SPF No.2 LATERAL BRACE(S) AT 1/ 2 LENGTH OF 6-16. DBS = 14-0-0 . CBF = 89 LBS.
1 - 2x3 SPF No.2 LATERAL BRACE(S) AT 1/ 2 LENGTH OF 8-16. DBS = 20-0-0 . CBF = 71 LBS.

DBS = DIAGONAL BRACE SPACING (MAX). CBF = CUMULATIVE BRACING FORCE. FASTEN LATERAL BRACE(S) USING (0.122"X3") SPIRAL NAILS : 1 NAIL FOR 2x3 BRACE(S), 2 FOR 1x4, 2x4, 2x5, 3 FOR 2x6, 4 FOR 2x8, 5 FOR 2x10, AND 6 FOR 2x12.

END VERTICAL(S) MUST BE SHEATHED OR HAVE BRACES AS INDICATED IN THE MAX. UNBRACED LENGTH COLUMN OF THE TABLE BELOW

LOADING
TOTAL LOAD CASES: (4)

CHORDS

MEMB. FR-TO	MAX. FORCE (LBS)	FACTORED VERT. LOAD LC1 (PLF) FROM	TO	MAX CSI (LC)	MAX. UNBRAC LENGTH
1- 2	0 / 28	-77.4	-77.4	0.14 (1)	10.00
2- 3	-2290 / 0	-77.4	-77.4	0.18 (1)	4.39
3- 4	-2448 / 0	-77.4	-77.4	0.17 (1)	4.27
4- 5	-2855 / 0	-77.4	-77.4	0.23 (1)	3.94
5- 6	-2506 / 0	-77.4	-77.4	0.29 (1)	4.13
6- 7	-1910 / 0	-77.4	-77.4	0.25 (1)	4.65
7- 8	-1909 / 0	-77.4	-77.4	0.31 (1)	4.59
8- 9	-2295 / 0	-77.4	-77.4	0.32 (1)	4.26
9-10	-2295 / 0	-77.4	-77.4	0.32 (1)	4.26
10-11	-2403 / 0	-77.4	-77.4	0.38 (1)	4.11
21- 2	-1816 / 0	0.0	0.0	0.18 (1)	6.21
12-11	-1683 / 0	0.0	0.0	0.17 (1)	6.40
21-20	0 / 0	-17.5	-17.5	0.05 (4)	10.00
20-19	0 / 2059	-17.5	-17.5	0.36 (1)	10.00
19-18	0 / 2176	-17.5	-17.5	0.38 (1)	10.00
18-17	0 / 2873	-17.5	-17.5	0.51 (1)	10.00
17-16	0 / 2259	-17.5	-17.5	0.42 (1)	10.00
16-15	0 / 2052	-17.5	-17.5	0.39 (1)	10.00
15-14	0 / 2052	-17.5	-17.5	0.39 (1)	10.00
14-13	0 / 2165	-17.5	-17.5	0.39 (1)	10.00
13-12	0 / 0	-17.5	-17.5	0.12 (4)	10.00

WEBS

MEMB. FR-TO	MAX. FORCE (LBS)	MAX CSI (LC)
20- 3	-490 / 0	0.09 (1)
3-19	0 / 149	0.03 (1)
19- 4	-16 / 39	0.01 (4)
4-18	0 / 1094	0.25 (1)
18- 5	-793 / 0	0.28 (1)
5-17	-868 / 0	0.67 (1)
17- 6	0 / 692	0.16 (1)
6-16	-1022 / 0	0.48 (1)
16- 7	0 / 1387	0.31 (1)
16- 8	-570 / 0	0.28 (1)
14- 8	0 / 172	0.04 (4)
14-10	-139 / 0	0.11 (1)
13-10	-323 / 0	0.09 (1)
2-20	0 / 2130	0.48 (1)
13-11	0 / 2206	0.50 (1)

RECEIVED
TOWN OF MILTON
MAR 29, 2017
17-5419
BUILDING DIVISION

READ ALL NOTES ON THIS PAGE AND ON THE ENGINEERING NOTE PAGE ENP-1. THE NOTE PAGE IS AN INTEGRAL PART OF THIS DRAWING AS IT CONTAINS SPECIFICATIONS AND CRITERIA USED IN THE DESIGN OF THIS COMPONENT.

DESIGN CRITERIA

SPECIFIED LOADS:

TOP	CH.	LL	=	23.3	PSF
		DL	=	3.0	PSF
BOT	CH.	LL	=	0.0	PSF
		DL	=	7.0	PSF
TOTAL	LOAD		=	33.3	PSF

SPACING = 24.0 IN. C/C

LOADING IN ALL FLAT SECTIONS BASED ON A SLOPE OF 6.00/12

THIS TRUSS IS DESIGNED FOR RESIDENTIAL OR SMALL BUILDING REQUIREMENTS OF PART 9, NBCC 2010

THIS DESIGN COMPLIES WITH:
- PART 9 OF OBC 2012 , BCBC 2012 , ABC 2014
- CSA 086-09
- TPIC 2011

(55 % OF 27.2 P.S.F. G.S.L. PLUS 8.4 P.S.F. RAIN LOAD) EQUALS 23.3 P.S.F. SPECIFIED ROOF LIVE LOAD

ALLOWABLE DEFL.(LL)= L/360 (1.21")
CALCULATED VERT. DEFL.(LL) = L/ 999 (0.17")
ALLOWABLE DEFL.(TL)= L/360 (1.21")
CALCULATED VERT. DEFL.(TL) = L/ 999 (0.31")

CSI: TC=0.38 (10-11:1) , BC=0.51 (17-18:1) , WB=0.67 (5-17:1) , SSI=0.18 (10-11:1)

DOL LUMBER=1.00 NAIL=1.00 LS BEND=1.10 COMP=1.10 SHEAR=1.10 TENS= 1.10

COMPANION LIVE LOAD FACTOR = 0.50

TRUSS PLATE MANUFACTURER IS NOT RESPONSIBLE FOR QUALITY CONTROL IN THE TRUSS MANUFACTURING PLANT .

NAIL VALUES

PLATE	GRIP(DRY) (PSI) MAX	MIN	SHEAR (PLI) MAX	MIN	SECTION (PLI) MAX	MIN
MT20	618	354	1667	822	2284	1656

PLATE PLACEMENT TOL. = 0.250 inches

PLATE ROTATION TOL. = 5.0 Deg.

JSI GRIP= 0.89 (5) (INPUT = 0.90)
JSI METAL= 0.65 (13) (INPUT = 1.00)

KOTT

JOB NAME	TRUSS NAME	QUANTITY	PLY	JOB DESC.	DRWG NO.
PT0317-122	T44	1	1	TRUSS DESC. LECCO RIDGE-BLOCK 348	

KOTT , Stouffville, ON, CGC

Version 8.100 S Feb 9 2017 MiTek Industries, Inc. Mon Mar 20 10:10:49 2017 Page 1
ID:Mn2zxnCa6NqoASkSkmtLJtyfhrl-0mfFSLH_SHfTJ2?zTANvCuftlQT?81Mq0xup1BzZ4wK

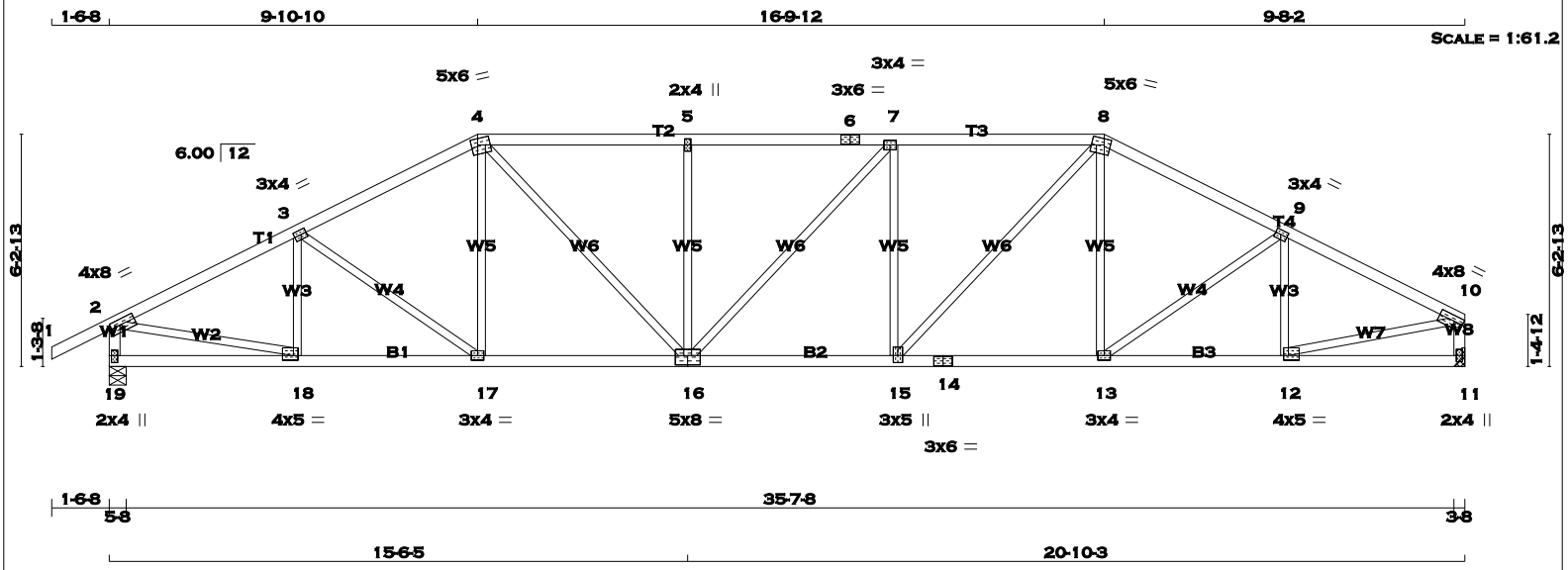

TOTAL WEIGHT = 149 lb
[M][F]

LUMBER
N. L. G. A. RULES

CHORDS	SIZE		LUMBER	DESCR.
1 - 4	2x4	DRY	No.2	SPF
4 - 6	2x4	DRY	No.2	SPF
6 - 8	2x4	DRY	No.2	SPF
8 - 10	2x4	DRY	No.2	SPF
19 - 2	2x4	DRY	No.2	SPF
11 - 10	2x4	DRY	No.2	SPF
19 - 16	2x4	DRY	No.2	SPF
16 - 14	2x4	DRY	No.2	SPF
14 - 11	2x4	DRY	No.2	SPF
ALL WEBS EXCEPT	2x3	DRY	No.2	SPF

DRY: SEASONED LUMBER.

PLATES (table is in inches)

JT	TYPE	PLATES	W	LEN	Y	X
2	TMVW-t	MT20	4.0	8.0	1.75	3.00
3	TMWW-t	MT20	3.0	4.0	1.50	1.75
4	TTWW-m	MT20	5.0	6.0	2.00	2.00
5	TMW+w	MT20	2.0	4.0		
6	TS-t	MT20	3.0	6.0		
7	TMWW-t	MT20	3.0	4.0		
8	TTWW-m	MT20	5.0	6.0	2.00	2.00
9	TMWW-t	MT20	3.0	4.0	1.50	1.75
10	TMVW-t	MT20	4.0	8.0	1.75	Edge
11	BMV1+p	MT20	2.0	4.0		
12	BMWW-t	MT20	4.0	5.0	1.50	1.50
13	BMWW-t	MT20	3.0	4.0		
14	BS-t	MT20	3.0	6.0		
15	BMWW+t	MT20	3.0	5.0	2.25	1.50
16	BSWWW-l	MT20	5.0	8.0	3.00	4.00
17	BMWW-t	MT20	3.0	4.0		
18	BMWW-t	MT20	4.0	5.0	1.50	1.50
19	BMV1+p	MT20	2.0	4.0	2.25	1.00

Edge - INDICATES REFERENCE CORNER OF PLATE TOUCHES EDGE OF CHORD.

A SIZE FOR SIZE SUBSTITUTION OF MITEK MII20 WITH TEE-LOK TL20 PLATES IS ALLOWED.

DIMENSIONS, SUPPORTS AND LOADINGS SPECIFIED BY FABRICATOR TO BE VERIFIED BY BUILDING DESIGNER

BEARINGS

JT	FACTORED GROSS REACTION VERT	HORZ	MAXIMUM FACTORED GROSS REACTION DOWN	HORZ	UPLIFT	INPUT BRG	REQRD BRG
19	1850	0	1850	0	0	5-8	5-8
11	1725	0	1725	0	0	HANGER BY OTHERS	
						MIN. SEAT SIZE: 3-8	

UNFACTORED REACTIONS

JT	1ST LCASE COMBINED	SNOW	MAX./MIN. COMPONENT REACTIONS LIVE	PERM.LIVE	WIND	DEAD	SOIL
19	1295	922 / 0	0 / 0	0 / 0	0 / 0	373 / 0	0 / 0
11	1211	847 / 0	0 / 0	0 / 0	0 / 0	364 / 0	0 / 0

BEARING MATERIAL TO BE SPF NO.2 OR BETTER AT JOINT(S) 19

BRACING
TOP CHORD TO BE SHEATHED OR MAX. PURLIN SPACING = 3.94 FT.
MAX. UNBRACED BOTTOM CHORD LENGTH = 10.00 FT. OR RIGID CEILING DIRECTLY APPLIED.

ALL PITCH BREAKS AND PERIMETER CORNER JOINTS MUST BE LATERALLY RESTRAINED.

LOADING
TOTAL LOAD CASES: (4)

CHORDS

MEMB. FR-TO	MAX. FACTORED FORCE (LBS)	FACTORED VERT. LOAD LC1 (PLF) FROM	TO	MAX CSI (LC)	MAX. UNBRAC LENGTH
1- 2	0 / 28	-77.4	-77.4	0.14 (1)	10.00
2- 3	-2446 / 0	-77.4	-77.4	0.32 (1)	4.14
3- 4	-2367 / 0	-77.4	-77.4	0.31 (1)	4.21
4- 5	-2627 / 0	-77.4	-77.4	0.39 (1)	3.94
5- 6	-2627 / 0	-77.4	-77.4	0.36 (1)	3.98
6- 7	-2627 / 0	-77.4	-77.4	0.36 (1)	3.98
7- 8	-2619 / 0	-77.4	-77.4	0.39 (1)	3.95
8- 9	-2335 / 0	-77.4	-77.4	0.30 (1)	4.24
9-10	-2359 / 0	-77.4	-77.4	0.30 (1)	4.22
19- 2	-1809 / 0	0.0	0.0	0.18 (1)	6.22
11-10	-1686 / 0	0.0	0.0	0.17 (1)	6.39
19-18	0 / 0	-17.5	-17.5	0.09 (4)	10.00
18-17	0 / 2204	-17.5	-17.5	0.41 (1)	10.00
17-16	0 / 2101	-17.5	-17.5	0.40 (1)	10.00
16-15	0 / 2619	-17.5	-17.5	0.47 (1)	10.00
15-14	0 / 2073	-17.5	-17.5	0.39 (1)	10.00
14-13	0 / 2073	-17.5	-17.5	0.39 (1)	10.00
13-12	0 / 2127	-17.5	-17.5	0.40 (1)	10.00
12-11	0 / 0	-17.5	-17.5	0.08 (4)	10.00

WEBS

MEMB. FR-TO	MAX. FACTORED FORCE (LBS)	MAX CSI (LC)
18- 3	-343 / 0	0.08 (1)
3-17	-130 / 0	0.08 (1)
17- 4	0 / 174	0.04 (4)
4-16	0 / 764	0.17 (1)
16- 5	-468 / 0	0.29 (1)
16- 7	0 / 12	0.00 (1)
15- 7	-479 / 0	0.30 (1)
15- 8	0 / 793	0.18 (1)
13- 8	0 / 138	0.04 (4)
13- 9	-69 / 0	0.04 (1)
12- 9	-394 / 0	0.09 (1)
2-18	0 / 2246	0.51 (1)
12-10	0 / 2180	0.49 (1)

DESIGN CRITERIA

SPECIFIED LOADS:

TOP	CH.	LL	=	23.3	PSF
		DL	=	3.0	PSF
BOT	CH.	LL	=	0.0	PSF
		DL	=	7.0	PSF
TOTAL	LOAD		=	33.3	PSF

SPACING = 24.0 IN. C/C

LOADING IN FLAT SECTION BASED ON A SLOPE OF 6.00/12

THIS TRUSS IS DESIGNED FOR RESIDENTIAL OR SMALL BUILDING REQUIREMENTS OF PART 9, NBCC 2010

THIS DESIGN COMPLIES WITH:
- PART 9 OF OBC 2012 , BCBC 2012 , ABC 2014
- CSA 086-09
- TPIC 2011

(55 % OF 27.2 P.S.F. G.S.L. PLUS 8.4 P.S.F. RAIN LOAD) EQUALS 23.3 P.S.F. SPECIFIED ROOF LIVE LOAD

ALLOWABLE DEFL.(LL)= L/360 (1.21")
CALCULATED VERT. DEFL.(LL) = L/ 999 (0.16")
ALLOWABLE DEFL.(TL)= L/360 (1.21")
CALCULATED VERT. DEFL.(TL) = L/ 999 (0.29")

CSI: TC=0.39 (4-5:1) , BC=0.47 (15-16:1) , WB=0.51 (2-18:1) , SSI=0.20 (7-8:1)

DOL LUMBER=1.00 NAIL=1.00 LS BEND=1.10 COMP=1.10 SHEAR=1.10 TENS= 1.10

COMPANION LIVE LOAD FACTOR = 0.50

TRUSS PLATE MANUFACTURER IS NOT RESPONSIBLE FOR QUALITY CONTROL IN THE TRUSS MANUFACTURING PLANT .

NAIL VALUES

PLATE	GRIP(DRY) (PSI) MAX	MIN	SHEAR (PLI) MAX	MIN	SECTION (PLI) MAX	MIN
MT20	618	354	1667	822	2284	1656

PLATE PLACEMENT TOL. = 0.250 inches

PLATE ROTATION TOL. = 5.0 Deg.

JSI GRIP= 0.90 (15) (INPUT = 0.90)
JSI METAL= 0.66 (18) (INPUT = 1.00)

LICENSED PROFESSIONAL ENGINEER
P.M. TREVISAN
100136551
March 20th, 2017
PROVINCE OF ONTARIO

RECEIVED
TOWN OF MILTON
MAR 29, 2017
17-5419
BUILDING DIVISION

READ ALL NOTES ON THIS PAGE AND ON THE ENGINEERING NOTE PAGE ENP-1. THE NOTE PAGE IS AN INTEGRAL PART OF THIS DRAWING AS IT CONTAINS SPECIFICATIONS AND CRITERIA USED IN THE DESIGN OF THIS COMPONENT.

KOTT

JOB NAME	TRUSS NAME	QUANTITY	PLY	JOB DESC.	DRWG NO.
PT0317-122	T45	1	1	TRUSS DESC. LECCO RIDGE-BLOCK 348	

KOTT , Stouffville, ON, CGC

Version 8.100 S Feb 9 2017 MiTek Industries, Inc. Mon Mar 20 10:10:50 2017 Page 1
ID:Mn2zxnCa6NqoASkSkmtLJtyfhrl-UyCdfgIcDbnKwBa91tu8l5B0appUtTfzEbdMZdzZ4wJ

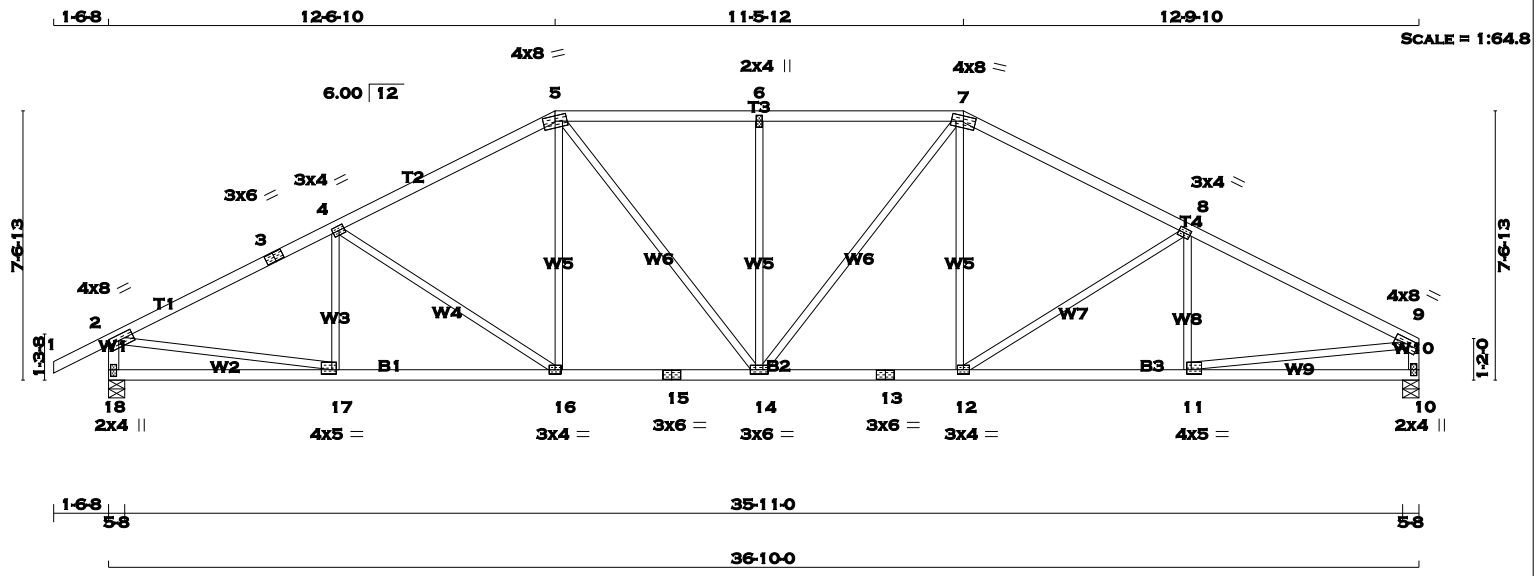

TOTAL WEIGHT = 151 lb
[M][F]

LUMBER
N. L. G. A. RULES

CHORDS	SIZE		LUMBER	DESCR.
1 - 3	2x4	DRY	No.2	SPF
3 - 5	2x4	DRY	No.2	SPF
5 - 7	2x4	DRY	No.2	SPF
7 - 9	2x4	DRY	No.2	SPF
18 - 2	2x4	DRY	No.2	SPF
10 - 9	2x4	DRY	No.2	SPF
18 - 15	2x4	DRY	No.2	SPF
15 - 13	2x4	DRY	No.2	SPF
13 - 10	2x4	DRY	No.2	SPF
ALL WEBS EXCEPT	2x3	DRY	No.2	SPF

DRY: SEASONED LUMBER.

PLATES (table is in inches)

JT	TYPE	PLATES	W	LEN	Y	X
2	TMVW-t	MT20	4.0	8.0	1.75	3.00
3	TS-t	MT20	3.0	6.0		
4	TMWW-t	MT20	3.0	4.0	1.50	1.75
5	TTWW-m	MT20	4.0	8.0	1.75	4.00
6	TMW+w	MT20	2.0	4.0		
7	TTWW-m	MT20	4.0	8.0	1.75	4.00
8	TMWW-t	MT20	3.0	4.0	1.50	1.75
9	TMVW-t	MT20	4.0	8.0	1.75	Edge
10	BMV1+p	MT20	2.0	4.0		
11	BMWW-t	MT20	4.0	5.0	1.50	1.50
12	BMWW-t	MT20	3.0	4.0		
13	BS-t	MT20	3.0	6.0		
14	BMWWW-t	MT20	3.0	6.0		
15	BS-t	MT20	3.0	6.0		
16	BMWW-t	MT20	3.0	4.0		
17	BMWW-t	MT20	4.0	5.0	1.50	1.50
18	BMV1+p	MT20	2.0	4.0	2.25	1.00

Edge - INDICATES REFERENCE CORNER OF PLATE TOUCHES EDGE OF CHORD.

A SIZE FOR SIZE SUBSTITUTION OF MITEK MII20 WITH TEE-LOK TL20 PLATES IS ALLOWED.

DIMENSIONS, SUPPORTS AND LOADINGS SPECIFIED BY FABRICATOR TO BE VERIFIED BY BUILDING DESIGNER

BEARINGS

JT	FACTORED GROSS REACTION VERT	HORZ	MAXIMUM FACTORED GROSS REACTION DOWN	HORZ	UPLIFT	INPUT BRG IN-SX	REQRD BRG IN-SX
18	1871	0	1871	0	0	5-8	5-8
10	1747	0	1747	0	0	5-8	5-8

UNFACTORED REACTIONS

JT	1ST LCASE COMBINED	MAX./MIN. COMPONENT REACTIONS SNOW	LIVE	PERM.LIVE	WIND	DEAD	SOIL
18	1311	933 / 0	0 / 0	0 / 0	0 / 0	378 / 0	0 / 0
10	1226	858 / 0	0 / 0	0 / 0	0 / 0	368 / 0	0 / 0

BEARING MATERIAL TO BE SPF NO.2 OR BETTER AT JOINT(S) 18, 10

BRACING
TOP CHORD TO BE SHEATHED OR MAX. PURLIN SPACING = 3.75 FT.
MAX. UNBRACED BOTTOM CHORD LENGTH = 10.00 FT. OR RIGID CEILING DIRECTLY APPLIED.

ALL PITCH BREAKS AND PERIMETER CORNER JOINTS MUST BE LATERALLY RESTRAINED.

LOADING
TOTAL LOAD CASES: (4)

CHORDS

MEMB. FR-TO	MAX. FACTORED FORCE (LBS)	FACTORED VERT. LOAD (PLF) FROM	TO	LC1 MAX CSI (LC)	MAX. UNBRAC LENGTH
1- 2	0 / 28	-77.4	-77.4	0.14 (1)	10.00
2- 3	-2554 / 0	-77.4	-77.4	0.54 (1)	3.84
3- 4	-2554 / 0	-77.4	-77.4	0.54 (1)	3.84
4- 5	-2255 / 0	-77.4	-77.4	0.49 (1)	4.09
5- 6	-2257 / 0	-77.4	-77.4	0.40 (1)	4.17
6- 7	-2257 / 0	-77.4	-77.4	0.40 (1)	4.17
7- 8	-2276 / 0	-77.4	-77.4	0.51 (1)	4.05
8- 9	-2635 / 0	-77.4	-77.4	0.57 (1)	3.75
18- 2	-1823 / 0	0.0	0.0	0.19 (1)	6.20
10- 9	-1698 / 0	0.0	0.0	0.17 (1)	6.38
18-17	0 / 0	-17.5	-17.5	0.16 (4)	10.00
17-16	0 / 2306	-17.5	-17.5	0.44 (1)	10.00
16-15	0 / 1997	-17.5	-17.5	0.39 (1)	10.00
15-14	0 / 1997	-17.5	-17.5	0.39 (1)	10.00
14-13	0 / 2016	-17.5	-17.5	0.40 (1)	10.00
13-12	0 / 2016	-17.5	-17.5	0.40 (1)	10.00
12-11	0 / 2380	-17.5	-17.5	0.45 (1)	10.00
11-10	0 / 0	-17.5	-17.5	0.17 (4)	10.00

WEBS

MEMB. FR-TO	MAX. FACTORED FORCE (LBS)	MAX CSI (LC)
17- 4	-237 / 35	0.07 (1)
4-16	-377 / 0	0.43 (1)
16- 5	0 / 316	0.07 (1)
5-14	0 / 420	0.09 (1)
14- 6	-543 / 0	0.57 (1)
14- 7	0 / 390	0.09 (1)
12- 7	0 / 346	0.08 (1)
12- 8	-439 / 0	0.51 (1)
11- 8	-193 / 51	0.06 (1)
2-17	0 / 2334	0.53 (1)
11- 9	0 / 2401	0.54 (1)

DESIGN CRITERIA

SPECIFIED LOADS:

TOP CH.	LL	=	23.3	PSF
	DL	=	3.0	PSF
BOT CH.	LL	=	0.0	PSF
	DL	=	7.0	PSF
TOTAL LOAD		=	33.3	PSF

SPACING = 24.0 IN. C/C

LOADING IN FLAT SECTION BASED ON A SLOPE OF 6.00/12

THIS TRUSS IS DESIGNED FOR RESIDENTIAL OR SMALL BUILDING REQUIREMENTS OF PART 9, NBCC 2010

THIS DESIGN COMPLIES WITH:
- PART 9 OF OBC 2012 , BCBC 2012 , ABC 2014
- CSA 086-09
- TPIC 2011

(55 % OF 27.2 P.S.F. G.S.L. PLUS 8.4 P.S.F. RAIN LOAD) EQUALS 23.3 P.S.F. SPECIFIED ROOF LIVE LOAD

ALLOWABLE DEFL.(LL)= L/360 (1.23")
CALCULATED VERT. DEFL.(LL) = L/ 999 (0.15")
ALLOWABLE DEFL.(TL)= L/360 (1.23")
CALCULATED VERT. DEFL.(TL) = L/ 999 (0.26")

CSI: TC=0.57 (8-9:1) , BC=0.45 (11-12:1) , WB=0.57 (6-14:1) , SSI=0.22 (8-9:1)

DOL LUMBER=1.00 NAIL=1.00 LS BEND=1.10 COMP=1.10 SHEAR=1.10 TENS= 1.10

COMPANION LIVE LOAD FACTOR = 0.50

TRUSS PLATE MANUFACTURER IS NOT RESPONSIBLE FOR QUALITY CONTROL IN THE TRUSS MANUFACTURING PLANT .

NAIL VALUES

PLATE	GRIP(DRY) (PSI) MAX	MIN	SHEAR (PLI) MAX	MIN	SECTION (PLI) MAX	MIN
MT20	618	354	1667	822	2284	1656

PLATE PLACEMENT TOL. = 0.250 inches

PLATE ROTATION TOL. = 5.0 Deg.

JSI GRIP= 0.89 (10) (INPUT = 0.90)
JSI METAL= 0.71 (11) (INPUT = 1.00)

LICENSED PROFESSIONAL ENGINEER
P.M. TREVISAN
100136551
March 20th, 2017
PROVINCE OF ONTARIO

RECEIVED
TOWN OF MILTON
MAR 29, 2017
17-5419
BUILDING DIVISION

READ ALL NOTES ON THIS PAGE AND ON THE ENGINEERING NOTE PAGE ENP-1. THE NOTE PAGE IS AN INTEGRAL PART OF THIS DRAWING AS IT CONTAINS SPECIFICATIONS AND CRITERIA USED IN THE DESIGN OF THIS COMPONENT.

KOTT

JOB NAME	TRUSS NAME	QUANTITY	PLY	JOB DESC.	DRWG NO.
PT0317-122	T46	1	1	TRUSS DESC. LECCO RIDGE-BLOCK 348	ENG JOB: PT0317-122

KOTT , Stouffville, ON, CGC

Version 8.100 S Feb 9 2017 MiTek Industries, Inc. Mon Mar 20 10:10:51 2017 Page 1
ID:Mn2zxnCa6NqoASkSkmtLJtyfhrl-y8m?t0JF_uvBYL9MbbPNIJkDeDAxcrJ6TFNw53zZ4wI

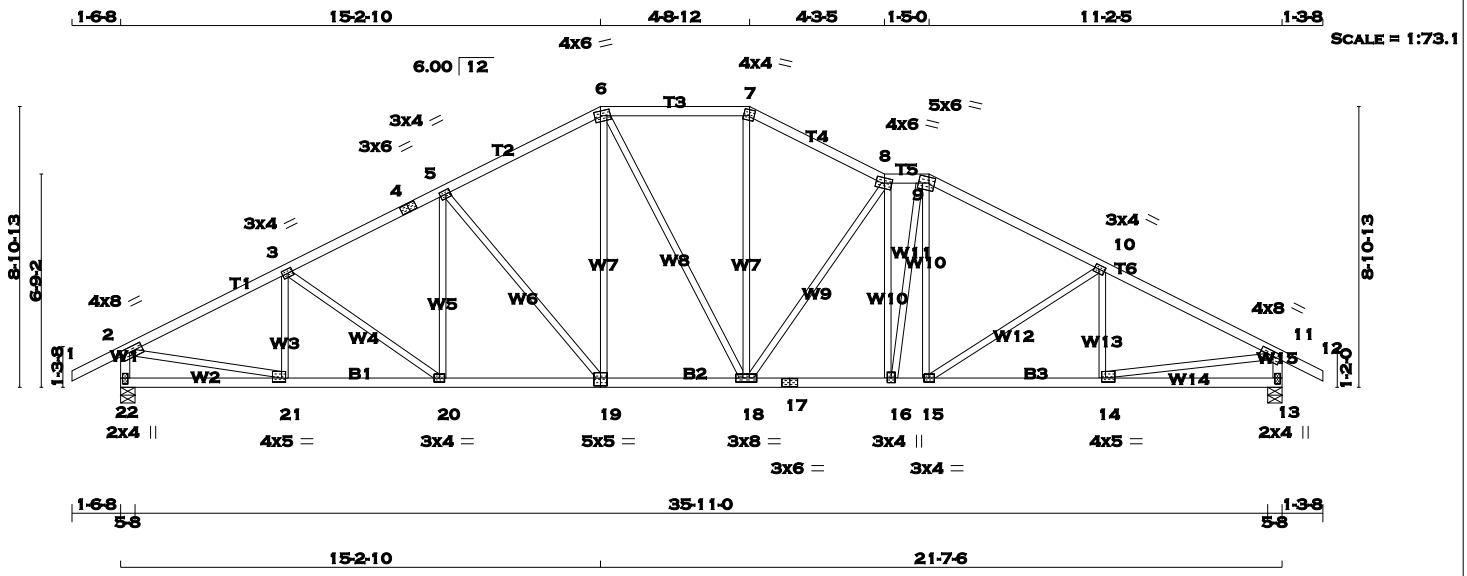

TOTAL WEIGHT = 171 lb

[M][F]

LUMBER

N. L. G. A. RULES

CHORDS	SIZE		LUMBER	DESCR.
1 - 4	2x4	DRY	No.2	SPF
4 - 6	2x4	DRY	No.2	SPF
6 - 7	2x4	DRY	No.2	SPF
7 - 8	2x4	DRY	No.2	SPF
8 - 9	2x4	DRY	No.2	SPF
9 - 12	2x4	DRY	No.2	SPF
22 - 2	2x4	DRY	No.2	SPF
13 - 11	2x4	DRY	No.2	SPF
22 - 19	2x4	DRY	No.2	SPF
19 - 17	2x4	DRY	No.2	SPF
17 - 13	2x4	DRY	No.2	SPF
ALL WEBS EXCEPT	2x3	DRY	No.2	SPF

DRY: SEASONED LUMBER.

PLATES (table is in inches)

JT	TYPE	PLATES	W	LEN	Y	X
2 3, 5, 10	TMVW-t	MT20	4.0	8.0	1.75	3.00
3	TMWW-t	MT20	3.0	4.0	1.50	1.75
4	TS-t	MT20	3.0	6.0		
6	TTWW-m	MT20	4.0	6.0	1.75	2.25
7	TTW-m	MT20	4.0	4.0	2.25	1.75
8	TTWW-m	MT20	4.0	6.0	2.00	2.75
9	TTWW-m	MT20	5.0	6.0	2.25	2.00
11	TMVW-t	MT20	4.0	8.0	1.75	3.00
13	BMV1+p	MT20	2.0	4.0	2.25	1.00
14	BMWW-t	MT20	4.0	5.0	1.50	1.50
15	BMWW-t	MT20	3.0	4.0		
16	BMWW+t	MT20	3.0	4.0	1.75	1.50
17	BS-t	MT20	3.0	6.0		
18	BMWWW-t	MT20	3.0	8.0		
19	BSWW-l	MT20	5.0	5.0	3.00	2.50
20	BMWW-t	MT20	3.0	4.0		
21	BMWW-t	MT20	4.0	5.0	1.50	1.50
22	BMV1+p	MT20	2.0	4.0	2.25	1.00

A SIZE FOR SIZE SUBSTITUTION OF MITEK MII20 WITH TEE-LOK TL20 PLATES IS ALLOWED.

DIMENSIONS, SUPPORTS AND LOADINGS SPECIFIED BY FABRICATOR TO BE VERIFIED BY BUILDING DESIGNER

BEARINGS

JT	FACTORED GROSS REACTION VERT	HORZ	MAXIMUM FACTORED GROSS REACTION DOWN	HORZ	UPLIFT	INPUT BRG IN-SX	REQRD BRG IN-SX
22	1871	0	1871	0	0	5-8	5-8
13	1852	0	1852	0	0	5-8	5-8

UNFACTORED REACTIONS

JT	1ST LCASE COMBINED	MAX./MIN. COMPONENT REACTIONS SNOW	LIVE	PERM.LIVE	WIND	DEAD	SOIL
22	1311	933 / 0	0 / 0	0 / 0	0 / 0	378 / 0	0 / 0
13	1297	921 / 0	0 / 0	0 / 0	0 / 0	376 / 0	0 / 0

BEARING MATERIAL TO BE SPF NO.2 OR BETTER AT JOINT(S) 22, 13

BRACING

TOP CHORD TO BE SHEATHED OR MAX. PURLIN SPACING = 3.92 FT.
MAX. UNBRACED BOTTOM CHORD LENGTH = 10.00 FT. OR RIGID CEILING DIRECTLY APPLIED.

ALL PITCH BREAKS AND PERIMETER CORNER JOINTS MUST BE LATERALLY RESTRAINED.

LOADING

TOTAL LOAD CASES: (4)

CHORDS

MEMB. FR-TO	MAX. FACTORED FORCE (LBS)	FACTORED VERT. LOAD (PLF) FROM	TO	LC1 CSI (LC)	MAX UNBRAC LENGTH
1- 2	0 / 28	-77.4	-77.4	0.14 (1)	10.00
2- 3	-2484 / 0	-77.4	-77.4	0.35 (1)	4.09
3- 4	-2407 / 0	-77.4	-77.4	0.29 (1)	4.21
4- 5	-2407 / 0	-77.4	-77.4	0.29 (1)	4.21
5- 6	-2044 / 0	-77.4	-77.4	0.28 (1)	4.50
6- 7	-1861 / 0	-77.4	-77.4	0.27 (1)	4.67
7- 8	-2073 / 0	-77.4	-77.4	0.24 (1)	4.51
8- 9	-2214 / 0	-77.4	-77.4	0.07 (1)	4.55
9-10	-2383 / 0	-77.4	-77.4	0.39 (1)	4.10
10-11	-2609 / 0	-77.4	-77.4	0.43 (1)	3.92
11-12	0 / 23	-77.4	-77.4	0.10 (1)	10.00
22- 2	-1830 / 0	0.0	0.0	0.19 (1)	6.19
13-11	-1808 / 0	0.0	0.0	0.18 (1)	6.22
22-21	0 / 0	-17.5	-17.5	0.10 (4)	10.00
21-20	0 / 2236	-17.5	-17.5	0.40 (1)	10.00
20-19	0 / 2153	-17.5	-17.5	0.39 (1)	10.00
19-18	0 / 1818	-17.5	-17.5	0.34 (1)	10.00
18-17	0 / 2240	-17.5	-17.5	0.41 (1)	10.00
17-16	0 / 2240	-17.5	-17.5	0.41 (1)	10.00
16-15	0 / 2114	-17.5	-17.5	0.40 (1)	10.00
15-14	0 / 2353	-17.5	-17.5	0.44 (1)	10.00
14-13	0 / 0	-17.5	-17.5	0.13 (4)	10.00

WEBS

MEMB. FR-TO	MAX. FACTORED FORCE (LBS)	MAX CSI (LC)
21- 3	-329 / 0	0.08 (1)
3-20	-103 / 0	0.07 (1)
20- 5	0 / 149	0.04 (4)
5-19	-530 / 0	0.69 (1)
19- 6	0 / 489	0.11 (1)
6-18	0 / 91	0.02 (1)
18- 7	0 / 579	0.13 (1)
18- 8	-688 / 0	0.86 (1)
16- 8	-578 / 0	0.44 (1)
16- 9	0 / 583	0.13 (1)
15- 9	0 / 267	0.06 (1)
15-10	-292 / 0	0.24 (1)
14-10	-253 / 21	0.06 (1)
2-21	0 / 2275	0.51 (1)
14-11	0 / 2380	0.54 (1)

DESIGN CRITERIA

SPECIFIED LOADS:

TOP CH.	LL	=	23.3	PSF
	DL	=	3.0	PSF
BOT CH.	LL	=	0.0	PSF
	DL	=	7.0	PSF
TOTAL LOAD		=	33.3	PSF

SPACING = 24.0 IN. C/C

LOADING IN ALL FLAT SECTIONS BASED ON A SLOPE OF 6.00/12

THIS TRUSS IS DESIGNED FOR RESIDENTIAL OR SMALL BUILDING REQUIREMENTS OF PART 9, NBCC 2010

THIS DESIGN COMPLIES WITH:
- PART 9 OF OBC 2012 , BCBC 2012 , ABC 2014
- CSA 086-09
- TPIC 2011

(55 % OF 27.2 P.S.F. G.S.L. PLUS 8.4 P.S.F. RAIN LOAD) EQUALS 23.3 P.S.F. SPECIFIED ROOF LIVE LOAD

ALLOWABLE DEFL.(LL)= L/360 (1.23")
CALCULATED VERT. DEFL.(LL) = L/ 999 (0.14")
ALLOWABLE DEFL.(TL)= L/360 (1.23")
CALCULATED VERT. DEFL.(TL) = L/ 999 (0.26")

CSI: TC=0.43 (10-11:1) , BC=0.44 (14-15:1) , WB=0.86 (8-18:1) , SSI=0.19 (10-11:1)

DOL LUMBER=1.00 NAIL=1.00 LS BEND=1.10 COMP=1.10 SHEAR=1.10 TENS= 1.10

COMPANION LIVE LOAD FACTOR = 0.50

TRUSS PLATE MANUFACTURER IS NOT RESPONSIBLE FOR QUALITY CONTROL IN THE TRUSS MANUFACTURING PLANT .

NAIL VALUES

PLATE	GRIP(DRY) (PSI) MAX	MIN	SHEAR (PLI) MAX	MIN	SECTION (PLI) MAX	MIN
MT20	618	354	1667	822	2284	1656

PLATE PLACEMENT TOL. = 0.250 inches

PLATE ROTATION TOL. = 5.0 Deg.

JSI GRIP= 0.89 (19) (INPUT = 0.90)
JSI METAL= 0.71 (14) (INPUT = 1.00)

LICENSED PROFESSIONAL ENGINEER
P.M. TREVISAN
100136551
March 20th, 2017
PROVINCE OF ONTARIO

RECEIVED
TOWN OF MILTON
MAR 29, 2017
17-5419
BUILDING DIVISION

READ ALL NOTES ON THIS PAGE AND ON THE ENGINEERING NOTE PAGE ENP-1. THE NOTE PAGE IS AN INTEGRAL PART OF THIS DRAWING AS IT CONTAINS SPECIFICATIONS AND CRITERIA USED IN THE DESIGN OF THIS COMPONENT.

KOTT

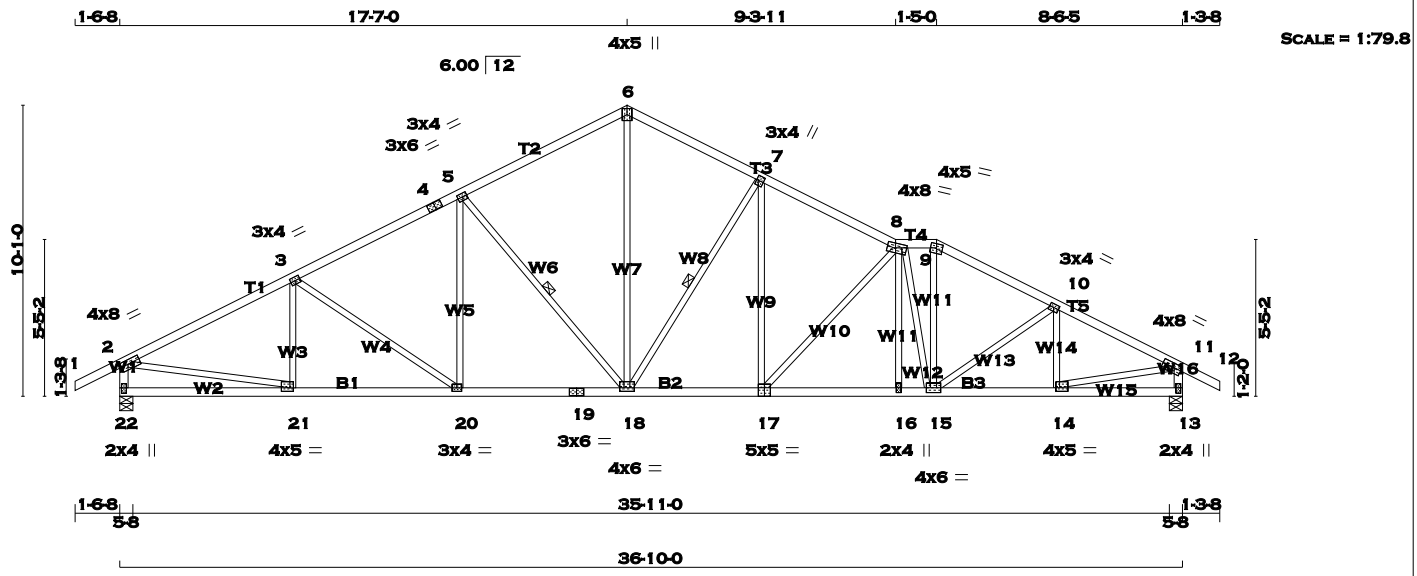

TOTAL WEIGHT = 167 lb

[M][F]

LUMBER

N. L. G. A. RULES

CHORDS	SIZE		LUMBER	DESCR.
1 - 4	2x4	DRY	No.2	SPF
4 - 6	2x4	DRY	No.2	SPF
6 - 8	2x4	DRY	No.2	SPF
8 - 9	2x4	DRY	No.2	SPF
9 - 12	2x4	DRY	No.2	SPF
22 - 2	2x4	DRY	No.2	SPF
13 - 11	2x4	DRY	No.2	SPF
22 - 19	2x4	DRY	No.2	SPF
19 - 17	2x4	DRY	No.2	SPF
17 - 13	2x4	DRY	No.2	SPF
ALL WEBS EXCEPT	2x3	DRY	No.2	SPF

DRY: SEASONED LUMBER.

PLATES (table is in inches)

JT	TYPE	PLATES	W	LEN	Y	X
2 3, 5, 10	TMVW-t	MT20	4.0	8.0	1.75	3.00
3	TMWW-t	MT20	3.0	4.0	1.50	1.75
4	TS-t	MT20	3.0	6.0		
6	TTW+p	MT20	4.0	5.0		
7	TMWW+t	MT20	3.0	4.0	2.00	0.75
8	TTWWW-m	MT20	4.0	8.0	2.00	3.50
9	TTW-m	MT20	4.0	5.0	1.75	2.50
11	TMVW-t	MT20	4.0	8.0	1.75	3.00
13	BMV1+p	MT20	2.0	4.0	2.25	1.00
14	BMWW-t	MT20	4.0	5.0	1.50	1.50
15	BMWWW-t	MT20	4.0	6.0		
16	BMW+w	MT20	2.0	4.0		
17	BSWW-l	MT20	5.0	5.0	Edge	2.50
18	BMWWW-t	MT20	4.0	6.0	1.50	3.00
19	BS-t	MT20	3.0	6.0		
20	BMWW-t	MT20	3.0	4.0		
21	BMWW-t	MT20	4.0	5.0	1.50	1.50
22	BMV1+p	MT20	2.0	4.0	2.25	1.00

Edge - INDICATES REFERENCE CORNER OF PLATE TOUCHES EDGE OF CHORD.

A SIZE FOR SIZE SUBSTITUTION OF MITEK MII20 WITH TEE-LOK TL20 PLATES IS ALLOWED.

DIMENSIONS, SUPPORTS AND LOADINGS SPECIFIED BY FABRICATOR TO BE VERIFIED BY BUILDING DESIGNER

BEARINGS

JT	FACTORED GROSS REACTION VERT	HORZ	MAXIMUM FACTORED GROSS REACTION DOWN	HORZ	UPLIFT	INPUT BRG IN-SX	REQRD BRG IN-SX
22	1871	0	1871	0	0	5-8	5-8
13	1852	0	1852	0	0	5-8	5-8

UNFACTORED REACTIONS

JT	1ST LCASE COMBINED	MAX./MIN. COMPONENT REACTIONS SNOW	LIVE	PERM.LIVE	WIND	DEAD	SOIL
22	1311	933 / 0	0 / 0	0 / 0	0 / 0	378 / 0	0 / 0
13	1297	921 / 0	0 / 0	0 / 0	0 / 0	376 / 0	0 / 0

BEARING MATERIAL TO BE SPF NO.2 OR BETTER AT JOINT(S) 22, 13

BRACING

TOP CHORD TO BE SHEATHED OR MAX. PURLIN SPACING = 3.96 FT.
MAX. UNBRACED BOTTOM CHORD LENGTH = 10.00 FT. OR RIGID CEILING DIRECTLY APPLIED.

ALL PITCH BREAKS AND PERIMETER CORNER JOINTS MUST BE LATERALLY RESTRAINED.

1 - 2x3 SPF No.2 LATERAL BRACE(S) AT 1/ 2 LENGTH OF 5-18. DBS = 20-0-0 . CBF = 84 LBS.
1 - 2x3 SPF No.2 LATERAL BRACE(S) AT 1/ 2 LENGTH OF 7-18. DBS = 16-0-0 . CBF = 85 LBS.

DBS = DIAGONAL BRACE SPACING (MAX). CBF = CUMULATIVE BRACING FORCE. FASTEN LATERAL BRACE(S) USING (0.122"X3") SPIRAL NAILS : 1 NAIL FOR 2x3 BRACE(S), 2 FOR 1x4, 2x4, 2x5, 3 FOR 2x6, 4 FOR 2x8, 5 FOR 2x10, AND 6 FOR 2x12.

END VERTICAL(S) MUST BE SHEATHED OR HAVE BRACES AS INDICATED IN THE MAX. UNBRACED LENGTH COLUMN OF THE TABLE BELOW

LOADING

TOTAL LOAD CASES: (4)

CHORDS MEMB. FR-TO	MAX. FACTORED FORCE (LBS)	FACTORED VERT. LOAD (PLF) FROM	TO	LC1	MAX CSI (LC)	MAX. UNBRAC LENGTH	WEBS MEMB. FR-TO	MAX. FACTORED FORCE (LBS)	MAX CSI (LC)
1- 2	0 / 28	-77.4	-77.4	0.14	(1)	10.00	21- 3	-262 / 19	0.07 (1)
2- 3	-2527 / 0	-77.4	-77.4	0.46	(1)	3.96	3-20	-242 / 0	0.23 (1)
3- 4	-2323 / 0	-77.4	-77.4	0.38	(1)	4.19	20- 5	0 / 237	0.05 (1)
4- 5	-2323 / 0	-77.4	-77.4	0.38	(1)	4.19	5-18	-669 / 0	0.37 (1)
5- 6	-1861 / 0	-77.4	-77.4	0.37	(1)	4.58	18- 6	0 / 1328	0.30 (1)
6- 7	-1860 / 0	-77.4	-77.4	0.25	(1)	4.69	18- 7	-848 / 0	0.45 (1)
7- 8	-2324 / 0	-77.4	-77.4	0.28	(1)	4.26	17- 7	0 / 496	0.11 (1)
8- 9	-2257 / 0	-77.4	-77.4	0.07	(1)	4.52	17- 8	-556 / 0	0.50 (1)
9-10	-2520 / 0	-77.4	-77.4	0.23	(1)	4.17	16- 8	0 / 49	0.02 (4)
10-11	-2511 / 0	-77.4	-77.4	0.25	(1)	4.16	8-15	-860 / 0	0.40 (1)
11-12	0 / 23	-77.4	-77.4	0.10	(1)	10.00	15- 9	0 / 943	0.21 (1)
22- 2	-1826 / 0	0.0	0.0	0.19	(1)	6.20	15-10	-26 / 0	0.01 (1)
13-11	-1814 / 0	0.0	0.0	0.18	(1)	6.21	14-10	-377 / 0	0.07 (1)
							2-21	0 / 2307	0.52 (1)
22-21	0 / 0	-17.5	-17.5	0.14	(4)	10.00	14-11	0 / 2302	0.52 (1)
21-20	0 / 2277	-17.5	-17.5	0.42	(1)	10.00			
20-19	0 / 2078	-17.5	-17.5	0.40	(1)	10.00			
19-18	0 / 2078	-17.5	-17.5	0.40	(1)	10.00			
18-17	0 / 2097	-17.5	-17.5	0.40	(1)	10.00			
17-16	0 / 2470	-17.5	-17.5	0.46	(1)	10.00			
16-15	0 / 2470	-17.5	-17.5	0.45	(1)	10.00			
15-14	0 / 2259	-17.5	-17.5	0.41	(1)	10.00			
14-13	0 / 0	-17.5	-17.5	0.07	(4)	10.00			

RECEIVED
TOWN OF MILTON
MAR 29, 2017
17-5419
BUILDING DIVISION

READ ALL NOTES ON THIS PAGE AND ON THE ENGINEERING NOTE PAGE ENP-1. THE NOTE PAGE IS AN INTEGRAL PART OF THIS DRAWING AS IT CONTAINS SPECIFICATIONS AND CRITERIA USED IN THE DESIGN OF THIS COMPONENT.

DESIGN CRITERIA

SPECIFIED LOADS:

TOP	CH.	LL	=	23.3	PSF
		DL	=	3.0	PSF
BOT	CH.	LL	=	0.0	PSF
		DL	=	7.0	PSF
TOTAL	LOAD		=	33.3	PSF

SPACING = 24.0 IN. C/C

LOADING IN ALL FLAT SECTIONS BASED ON A SLOPE OF 6.00/12

THIS TRUSS IS DESIGNED FOR RESIDENTIAL OR SMALL BUILDING REQUIREMENTS OF PART 9, NBCC 2010

THIS DESIGN COMPLIES WITH:
- PART 9 OF OBC 2012 , BCBC 2012 , ABC 2014
- CSA 086-09
- TPIC 2011

(55 % OF 27.2 P.S.F. G.S.L. PLUS 8.4 P.S.F. RAIN LOAD) EQUALS 23.3 P.S.F. SPECIFIED ROOF LIVE LOAD

ALLOWABLE DEFL.(LL)= L/360 (1.23")
CALCULATED VERT. DEFL.(LL) = L/ 999 (0.16")
ALLOWABLE DEFL.(TL)= L/360 (1.23")
CALCULATED VERT. DEFL.(TL) = L/ 999 (0.29")

CSI: TC=0.46 (2-3:1) , BC=0.46 (16-17:1) , WB=0.52 (2-21:1) , SSI=0.19 (2-3:1)

DOL LUMBER=1.00 NAIL=1.00 LS BEND=1.10 COMP=1.10 SHEAR=1.10 TENS= 1.10

COMPANION LIVE LOAD FACTOR = 0.50

TRUSS PLATE MANUFACTURER IS NOT RESPONSIBLE FOR QUALITY CONTROL IN THE TRUSS MANUFACTURING PLANT .

NAIL VALUES

PLATE	GRIP(DRY) (PSI) MAX	MIN	SHEAR (PLI) MAX	MIN	SECTION (PLI) MAX	MIN
MT20	618	354	1667	822	2284	1656

PLATE PLACEMENT TOL. = 0.250 inches

PLATE ROTATION TOL. = 5.0 Deg.

JSI GRIP= 0.89 (14) (INPUT = 0.90)
JSI METAL= 0.84 (8) (INPUT = 1.00)

KOTT

JOB NAME	TRUSS NAME	QUANTITY	PLY	JOB DESC.	DRWG NO.
PT0317-122	**T48**	**1**	**1**	TRUSS DESC. LECCO RIDGE-BLOCK 348	

KOTT , Stouffville, ON, CGC

Version 8.100 S Feb 9 2017 MiTek Industries, Inc. Mon Mar 20 10:10:52 2017 Page 1
ID:Mn2zxnCa6NqoASkSkmtLJtyfhrl-QLKO4MKtlC12AVkY8IwcqWHNhdUFLMdGiv6TeWzZ4wH

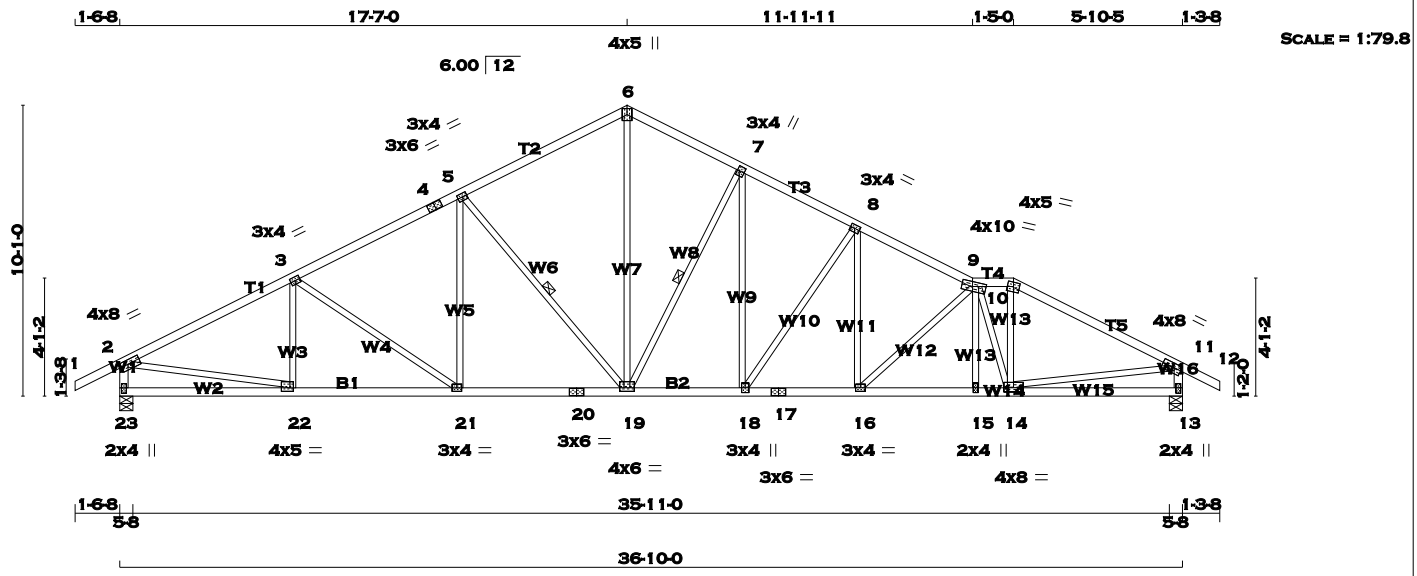

TOTAL WEIGHT = 168 lb

LUMBER

N. L. G. A. RULES

CHORDS	SIZE		LUMBER	DESCR.
1 - 4	2x4	DRY	No.2	SPF
4 - 6	2x4	DRY	No.2	SPF
6 - 9	2x4	DRY	No.2	SPF
9 - 10	2x4	DRY	No.2	SPF
10 - 12	2x4	DRY	No.2	SPF
23 - 2	2x4	DRY	No.2	SPF
13 - 11	2x4	DRY	No.2	SPF
23 - 20	2x4	DRY	No.2	SPF
20 - 17	2x4	DRY	No.2	SPF
17 - 13	2x4	DRY	No.2	SPF
ALL WEBS EXCEPT	2x3	DRY	No.2	SPF

DRY: SEASONED LUMBER.

PLATES (table is in inches)

JT	TYPE	PLATES	W	LEN	Y	X
2	TMVW-t	MT20	4.0	8.0	1.75	3.00
3, 5, 8						
3	TMWW-t	MT20	3.0	4.0	1.50	1.75
4	TS-t	MT20	3.0	6.0		
6	TTW+p	MT20	4.0	5.0		
7	TMWW+t	MT20	3.0	4.0	2.00	0.75
9	TTWWW-m	MT20	4.0	10.0	2.00	4.50
10	TTW-m	MT20	4.0	5.0	1.75	2.50
11	TMVW-t	MT20	4.0	8.0	1.75	3.00
13	BMV1+p	MT20	2.0	4.0	2.25	1.00
14	BMWWW-t	MT20	4.0	8.0	1.75	1.50
15	BMW+w	MT20	2.0	4.0		
16	BMWW-t	MT20	3.0	4.0		
17	BS-t	MT20	3.0	6.0		
18	BMWW+t	MT20	3.0	4.0		
19	BMWWW-t	MT20	4.0	6.0	1.50	3.00
20	BS-t	MT20	3.0	6.0		
21	BMWW-t	MT20	3.0	4.0		
22	BMWW-t	MT20	4.0	5.0	1.50	1.50
23	BMV1+p	MT20	2.0	4.0	2.25	1.00

A SIZE FOR SIZE SUBSTITUTION OF MITEK MII20 WITH TEE-LOK TL20 PLATES IS ALLOWED.

DIMENSIONS, SUPPORTS AND LOADINGS SPECIFIED BY FABRICATOR TO BE VERIFIED BY BUILDING DESIGNER

BEARINGS

JT	FACTORED GROSS REACTION VERT	HORZ	MAXIMUM FACTORED GROSS REACTION DOWN	HORZ	UPLIFT	INPUT BRG IN-SX	REQRD BRG IN-SX
23	1871	0	1871	0	0	5-8	5-8
13	1852	0	1852	0	0	5-8	5-8

UNFACTORED REACTIONS

JT	1ST LCASE COMBINED	MAX./MIN. COMPONENT REACTIONS SNOW	LIVE	PERM.LIVE	WIND	DEAD	SOIL
23	1311	933 / 0	0 / 0	0 / 0	0 / 0	378 / 0	0 / 0
13	1297	921 / 0	0 / 0	0 / 0	0 / 0	376 / 0	0 / 0

BEARING MATERIAL TO BE SPF NO.2 OR BETTER AT JOINT(S) 23, 13

BRACING

TOP CHORD TO BE SHEATHED OR MAX. PURLIN SPACING = 3.90 FT.
MAX. UNBRACED BOTTOM CHORD LENGTH = 10.00 FT. OR RIGID CEILING DIRECTLY APPLIED.

ALL PITCH BREAKS AND PERIMETER CORNER JOINTS MUST BE LATERALLY RESTRAINED.

1 - 2x3 SPF No.2 LATERAL BRACE(S) AT 1/ 2 LENGTH OF 5-19. DBS = 20-0-0 . CBF = 84 LBS.
1 - 2x3 SPF No.2 LATERAL BRACE(S) AT 1/ 2 LENGTH OF 7-19. DBS = 18-0-0 . CBF = 92 LBS.

DBS = DIAGONAL BRACE SPACING (MAX). CBF = CUMULATIVE BRACING FORCE. FASTEN LATERAL BRACE(S) USING (0.122"X3") SPIRAL NAILS : 1 NAIL FOR 2x3 BRACE(S), 2 FOR 1x4, 2x4, 2x5, 3 FOR 2x6, 4 FOR 2x8, 5 FOR 2x10, AND 6 FOR 2x12.

END VERTICAL(S) MUST BE SHEATHED OR HAVE BRACES AS INDICATED IN THE MAX. UNBRACED LENGTH COLUMN OF THE TABLE BELOW

LOADING

TOTAL LOAD CASES: (4)

CHORDS MEMB. FR-TO	MAX. FACTORED FORCE (LBS)	FACTORED VERT. LOAD LC1 (PLF) FROM	TO	MAX CSI (LC)	MAX. UNBRAC LENGTH	WEBS MEMB. FR-TO	MAX. FACTORED FORCE (LBS)	MAX CSI (LC)
1- 2	0 / 28	-77.4	-77.4	0.14 (1)	10.00	22- 3	-262 / 19	0.07 (1)
2- 3	-2527 / 0	-77.4	-77.4	0.46 (1)	3.96	3-21	-242 / 0	0.23 (1)
3- 4	-2323 / 0	-77.4	-77.4	0.38 (1)	4.19	21- 5	0 / 236	0.05 (1)
4- 5	-2323 / 0	-77.4	-77.4	0.38 (1)	4.19	5-19	-668 / 0	0.37 (1)
5- 6	-1861 / 0	-77.4	-77.4	0.37 (1)	4.58	19- 6	0 / 1339	0.30 (1)
6- 7	-1854 / 0	-77.4	-77.4	0.18 (1)	4.79	19- 7	-820 / 0	0.43 (1)
7- 8	-2261 / 0	-77.4	-77.4	0.18 (1)	4.41	18- 7	0 / 581	0.13 (1)
8- 9	-2653 / 0	-77.4	-77.4	0.22 (1)	4.09	18- 8	-642 / 0	0.60 (1)
9-10	-2328 / 0	-77.4	-77.4	0.07 (1)	4.46	16- 8	0 / 368	0.08 (1)
10-11	-2564 / 0	-77.4	-77.4	0.47 (1)	3.90	16- 9	-404 / 0	0.21 (1)
11-12	0 / 23	-77.4	-77.4	0.10 (1)	10.00	15- 9	-36 / 0	0.01 (1)
23- 2	-1826 / 0	0.0	0.0	0.19 (1)	6.20	9-14	-1112 / 0	0.30 (1)
13-11	-1808 / 0	0.0	0.0	0.18 (1)	6.22	14-10	0 / 869	0.20 (1)
						2-22	0 / 2308	0.52 (1)
23-22	0 / 0	-17.5	-17.5	0.14 (4)	10.00	14-11	0 / 2315	0.52 (1)
22-21	0 / 2277	-17.5	-17.5	0.42 (1)	10.00			
21-20	0 / 2078	-17.5	-17.5	0.40 (1)	10.00			
20-19	0 / 2078	-17.5	-17.5	0.40 (1)	10.00			
19-18	0 / 2022	-17.5	-17.5	0.39 (1)	10.00			
18-17	0 / 2387	-17.5	-17.5	0.42 (1)	10.00			
17-16	0 / 2387	-17.5	-17.5	0.42 (1)	10.00			
16-15	0 / 2679	-17.5	-17.5	0.49 (1)	10.00			
15-14	0 / 2678	-17.5	-17.5	0.50 (1)	10.00			
14-13	0 / 0	-17.5	-17.5	0.14 (4)	10.00			

RECEIVED
TOWN OF MILTON
MAR 29, 2017
17-5419
BUILDING DIVISION

READ ALL NOTES ON THIS PAGE AND ON THE ENGINEERING NOTE PAGE ENP-1. THE NOTE PAGE IS AN INTEGRAL PART OF THIS DRAWING AS IT CONTAINS SPECIFICATIONS AND CRITERIA USED IN THE DESIGN OF THIS COMPONENT.

[M][F]

DESIGN CRITERIA

SPECIFIED LOADS:

TOP CH.	LL	=	23.3	PSF
	DL	=	3.0	PSF
BOT CH.	LL	=	0.0	PSF
	DL	=	7.0	PSF
TOTAL LOAD		=	33.3	PSF

SPACING = 24.0 IN. C/C

LOADING IN ALL FLAT SECTIONS BASED ON A SLOPE OF 6.00/12

THIS TRUSS IS DESIGNED FOR RESIDENTIAL OR SMALL BUILDING REQUIREMENTS OF PART 9, NBCC 2010

THIS DESIGN COMPLIES WITH:
- PART 9 OF OBC 2012 , BCBC 2012 , ABC 2014
- CSA 086-09
- TPIC 2011

(55 % OF 27.2 P.S.F. G.S.L. PLUS 8.4 P.S.F. RAIN LOAD) EQUALS 23.3 P.S.F. SPECIFIED ROOF LIVE LOAD

ALLOWABLE DEFL.(LL)= L/360 (1.23")
CALCULATED VERT. DEFL.(LL) = L/ 999 (0.17")
ALLOWABLE DEFL.(TL)= L/360 (1.23")
CALCULATED VERT. DEFL.(TL) = L/ 999 (0.30")

CSI: TC=0.47 (10-11:1) , BC=0.50 (14-15:1) , WB=0.60 (8-18:1) , SSI=0.19 (2-3:1)

DOL LUMBER=1.00 NAIL=1.00 LS BEND=1.10 COMP=1.10 SHEAR=1.10 TENS= 1.10

COMPANION LIVE LOAD FACTOR = 0.50

TRUSS PLATE MANUFACTURER IS NOT RESPONSIBLE FOR QUALITY CONTROL IN THE TRUSS MANUFACTURING PLANT .

NAIL VALUES

PLATE	GRIP(DRY) (PSI) MAX	MIN	SHEAR (PLI) MAX	MIN	SECTION (PLI) MAX	MIN
MT20	618	354	1667	822	2284	1656

PLATE PLACEMENT TOL. = 0.250 inches

PLATE ROTATION TOL. = 5.0 Deg.

JSI GRIP= 0.89 (9) (INPUT = 0.90)
JSI METAL= 0.71 (9) (INPUT = 1.00)

KOTT

JOB NAME	TRUSS NAME	QUANTITY	PLY	JOB DESC.	DRWG NO.
PT0317-122	T49	1	1	TRUSS DESC. LECCO RIDGE-BLOCK 348	

KOTT , Stouffville, ON, CGC

Version 8.100 S Feb 9 2017 MiTek Industries, Inc. Mon Mar 20 10:10:53 2017 Page 1
ID:Mn2zxnCa6NqoASkSkmtLJtyfhrl-uXumHiLVWW9vnfJki?SrNkpYb1p54qTPwZs1AyzZ4wG

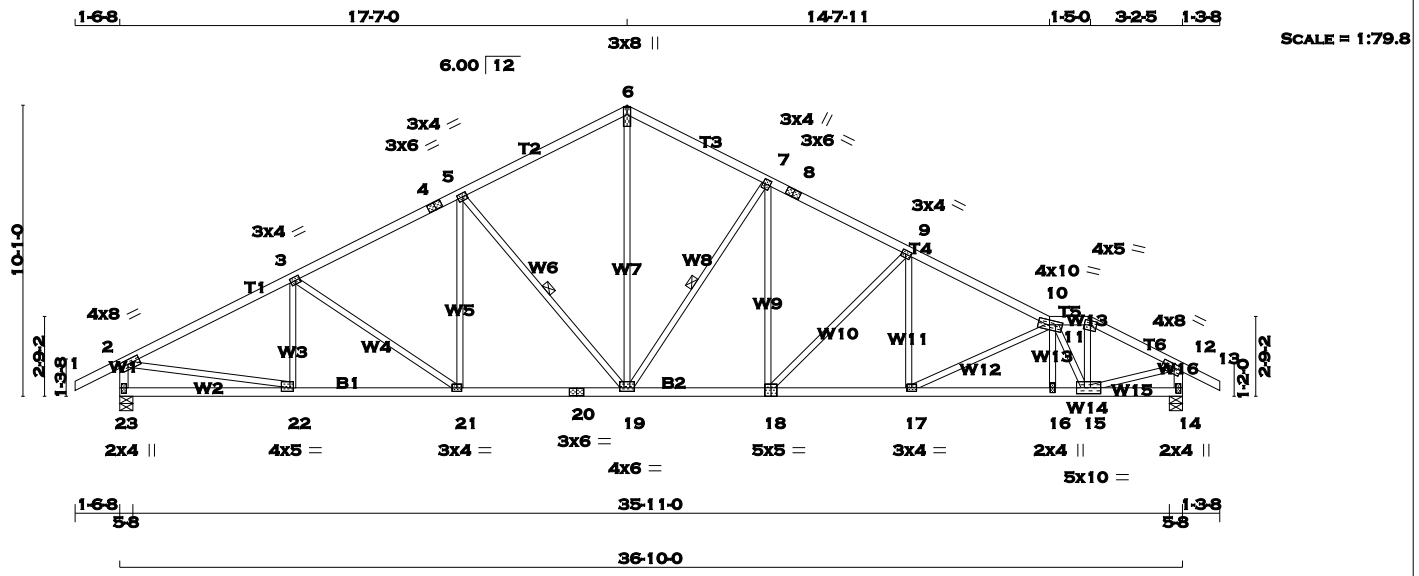

TOTAL WEIGHT = 162 lb
[M][F]

LUMBER
N. L. G. A. RULES

CHORDS	SIZE		LUMBER	DESCR.
1 - 4	2x4	DRY	No.2	SPF
4 - 6	2x4	DRY	No.2	SPF
6 - 8	2x4	DRY	No.2	SPF
8 - 10	2x4	DRY	No.2	SPF
10 - 11	2x4	DRY	No.2	SPF
11 - 13	2x4	DRY	No.2	SPF
23 - 2	2x4	DRY	No.2	SPF
14 - 12	2x4	DRY	No.2	SPF
23 - 20	2x4	DRY	No.2	SPF
20 - 18	2x4	DRY	No.2	SPF
18 - 14	2x4	DRY	No.2	SPF
ALL WEBS EXCEPT	2x3	DRY	No.2	SPF

DRY: SEASONED LUMBER.

PLATES (table is in inches)

JT	TYPE	PLATES	W	LEN	Y	X
2 3, 5, 9	TMVW-t	MT20	4.0	8.0	1.75	3.00
3	TMWW-t	MT20	3.0	4.0	1.50	1.75
4	TS-t	MT20	3.0	6.0		
6	TTW+p	MT20	3.0	8.0	Edge	
7	TMWW+t	MT20	3.0	4.0	2.00	0.75
8	TS-t	MT20	3.0	6.0		
10	TTWWW-m	MT20	4.0	10.0	2.00	4.75
11	TTW-m	MT20	4.0	5.0	1.75	2.50
12	TMVW-t	MT20	4.0	8.0	1.50	3.00
14	BMV1+p	MT20	2.0	4.0	2.25	1.00
15	BMWWW-t	MT20	5.0	10.0	2.50	3.25
16	BMW+w	MT20	2.0	4.0		
17	BMWW-t	MT20	3.0	4.0		
18	BSWW-l	MT20	5.0	5.0	Edge	2.50
19	BMWWW-t	MT20	4.0	6.0	1.50	3.00
20	BS-t	MT20	3.0	6.0		
21	BMWW-t	MT20	3.0	4.0		
22	BMWW-t	MT20	4.0	5.0	1.50	1.50
23	BMV1+p	MT20	2.0	4.0	2.25	1.00

Edge - INDICATES REFERENCE CORNER OF PLATE TOUCHES EDGE OF CHORD.

A SIZE FOR SIZE SUBSTITUTION OF MITEK MII20 WITH TEE-LOK TL20 PLATES IS ALLOWED.

DIMENSIONS, SUPPORTS AND LOADINGS SPECIFIED BY FABRICATOR TO BE VERIFIED BY BUILDING DESIGNER

BEARINGS

JT	FACTORED GROSS REACTION VERT	HORZ	MAXIMUM FACTORED GROSS REACTION DOWN	HORZ	UPLIFT	INPUT BRG IN-SX	REQRD BRG IN-SX
23	1871	0	1871	0	0	5-8	5-8
14	1852	0	1852	0	0	5-8	5-8

UNFACTORED REACTIONS

JT	1ST LCASE COMBINED	MAX./MIN. COMPONENT REACTIONS SNOW	LIVE	PERM.LIVE	WIND	DEAD	SOIL
23	1311	933 / 0	0 / 0	0 / 0	0 / 0	378 / 0	0 / 0
14	1297	921 / 0	0 / 0	0 / 0	0 / 0	376 / 0	0 / 0

BEARING MATERIAL TO BE SPF NO.2 OR BETTER AT JOINT(S) 23, 14

BRACING
TOP CHORD TO BE SHEATHED OR MAX. PURLIN SPACING = 3.88 FT.
MAX. UNBRACED BOTTOM CHORD LENGTH = 10.00 FT. OR RIGID CEILING DIRECTLY APPLIED.

ALL PITCH BREAKS AND PERIMETER CORNER JOINTS MUST BE LATERALLY RESTRAINED.

1 - 2x3 SPF No.2 LATERAL BRACE(S) AT 1/ 2 LENGTH OF 5-19. DBS = 20-0-0 . CBF = 83 LBS.
1 - 2x3 SPF No.2 LATERAL BRACE(S) AT 1/ 2 LENGTH OF 7-19. DBS = 16-0-0 . CBF = 84 LBS.

DBS = DIAGONAL BRACE SPACING (MAX). CBF = CUMULATIVE BRACING FORCE. FASTEN LATERAL BRACE(S) USING (0.122"X3") SPIRAL NAILS : 1 NAIL FOR 2x3 BRACE(S), 2 FOR 1x4, 2x4, 2x5, 3 FOR 2x6, 4 FOR 2x8, 5 FOR 2x10, AND 6 FOR 2x12.

END VERTICAL(S) MUST BE SHEATHED OR HAVE BRACES AS INDICATED IN THE MAX. UNBRACED LENGTH COLUMN OF THE TABLE BELOW

LOADING
TOTAL LOAD CASES: (4)

CHORDS

MEMB. FR-TO	MAX. FACTORED FORCE (LBS)	FACTORED VERT. LOAD (PLF) FROM	TO	LC1	MAX CSI (LC)	MAX. UNBRAC LENGTH
1- 2	0 / 28	-77.4	-77.4	0.14	(1)	10.00
2- 3	-2527 / 0	-77.4	-77.4	0.46	(1)	3.96
3- 4	-2323 / 0	-77.4	-77.4	0.38	(1)	4.19
4- 5	-2323 / 0	-77.4	-77.4	0.38	(1)	4.19
5- 6	-1861 / 0	-77.4	-77.4	0.37	(1)	4.58
6- 7	-1858 / 0	-77.4	-77.4	0.26	(1)	4.70
7- 8	-2363 / 0	-77.4	-77.4	0.27	(1)	4.25
8- 9	-2363 / 0	-77.4	-77.4	0.27	(1)	4.25
9-10	-2841 / 0	-77.4	-77.4	0.33	(1)	3.88
10-11	-2127 / 0	-77.4	-77.4	0.07	(1)	4.63
11-12	-2339 / 0	-77.4	-77.4	0.16	(1)	4.36
12-13	0 / 23	-77.4	-77.4	0.10	(1)	10.00
23- 2	-1826 / 0	0.0	0.0	0.19	(1)	6.20
14-12	-1823 / 0	0.0	0.0	0.18	(1)	6.20
23-22	0 / 0	-17.5	-17.5	0.14	(4)	10.00
22-21	0 / 2277	-17.5	-17.5	0.42	(1)	10.00
21-20	0 / 2078	-17.5	-17.5	0.40	(1)	10.00
20-19	0 / 2078	-17.5	-17.5	0.40	(1)	10.00
19-18	0 / 2114	-17.5	-17.5	0.41	(1)	10.00
18-17	0 / 2557	-17.5	-17.5	0.46	(1)	10.00
17-16	0 / 2852	-17.5	-17.5	0.52	(1)	10.00
16-15	0 / 2853	-17.5	-17.5	0.48	(1)	10.00
15-14	0 / 0	-17.5	-17.5	0.04	(4)	10.00

WEBS

MEMB. FR-TO	MAX. FACTORED FORCE (LBS)	MAX CSI (LC)
22- 3	-262 / 19	0.07 (1)
3-21	-242 / 0	0.23 (1)
21- 5	0 / 236	0.05 (1)
5-19	-668 / 0	0.37 (1)
19- 6	0 / 1313	0.30 (1)
19- 7	-841 / 0	0.45 (1)
18- 7	0 / 520	0.12 (1)
18- 9	-628 / 0	0.56 (1)
17- 9	0 / 250	0.06 (1)
17-10	-330 / 0	0.17 (1)
16-10	0 / 58	0.02 (4)
10-15	-1543 / 0	0.27 (1)
15-11	0 / 873	0.20 (1)
2-22	0 / 2308	0.52 (1)
15-12	0 / 2160	0.49 (1)

RECEIVED
TOWN OF MILTON
MAR 29, 2017
17-5419
BUILDING DIVISION

READ ALL NOTES ON THIS PAGE AND ON THE ENGINEERING NOTE PAGE ENP-1. THE NOTE PAGE IS AN INTEGRAL PART OF THIS DRAWING AS IT CONTAINS SPECIFICATIONS AND CRITERIA USED IN THE DESIGN OF THIS COMPONENT.

DESIGN CRITERIA

SPECIFIED LOADS:

TOP CH.	LL	=	23.3	PSF
	DL	=	3.0	PSF
BOT CH.	LL	=	0.0	PSF
	DL	=	7.0	PSF
TOTAL LOAD		=	33.3	PSF

SPACING = 24.0 IN. C/C

LOADING IN ALL FLAT SECTIONS BASED ON A SLOPE OF 6.00/12

THIS TRUSS IS DESIGNED FOR RESIDENTIAL OR SMALL BUILDING REQUIREMENTS OF PART 9, NBCC 2010

THIS DESIGN COMPLIES WITH:
- PART 9 OF OBC 2012 , BCBC 2012 , ABC 2014
- CSA 086-09
- TPIC 2011

(55 % OF 27.2 P.S.F. G.S.L. PLUS 8.4 P.S.F. RAIN LOAD) EQUALS 23.3 P.S.F. SPECIFIED ROOF LIVE LOAD

ALLOWABLE DEFL.(LL)= L/360 (1.23")
CALCULATED VERT. DEFL.(LL) = L/ 999 (0.16")
ALLOWABLE DEFL.(TL)= L/360 (1.23")
CALCULATED VERT. DEFL.(TL) = L/ 999 (0.29")

CSI: TC=0.46 (2-3:1) , BC=0.52 (16-17:1) , WB=0.56 (9-18:1) , SSI=0.19 (2-3:1)

DOL LUMBER=1.00 NAIL=1.00 LS BEND=1.10 COMP=1.10 SHEAR=1.10 TENS= 1.10

COMPANION LIVE LOAD FACTOR = 0.50

TRUSS PLATE MANUFACTURER IS NOT RESPONSIBLE FOR QUALITY CONTROL IN THE TRUSS MANUFACTURING PLANT .

NAIL VALUES

PLATE	GRIP(DRY) (PSI) MAX	MIN	SHEAR (PLI) MAX	MIN	SECTION (PLI) MAX	MIN
MT20	618	354	1667	822	2284	1656

PLATE PLACEMENT TOL. = 0.250 inches

PLATE ROTATION TOL. = 5.0 Deg.

JSI GRIP= 0.89 (6) (INPUT = 0.90)
JSI METAL= 0.92 (10) (INPUT = 1.00)

KOTT

CONTINUED ON PAGE 2

JOB NAME	TRUSS NAME	QUANTITY	PLY	JOB DESC.	DRWG NO.
PT0317-122	T50	1	1	TRUSS DESC. LECCO RIDGE-BLOCK 348	

KOTT , Stouffville, ON, CGC

Version 8.100 S Feb 9 2017 MiTek Industries, Inc. Mon Mar 20 10:10:53 2017 Page 1
ID:Mn2zxnCa6NqoASkSkmtLJtyfhrl-uXumHiLVWW9vnfJki?SrNkpYb1pr4qMPwZs1AyzZ4wG

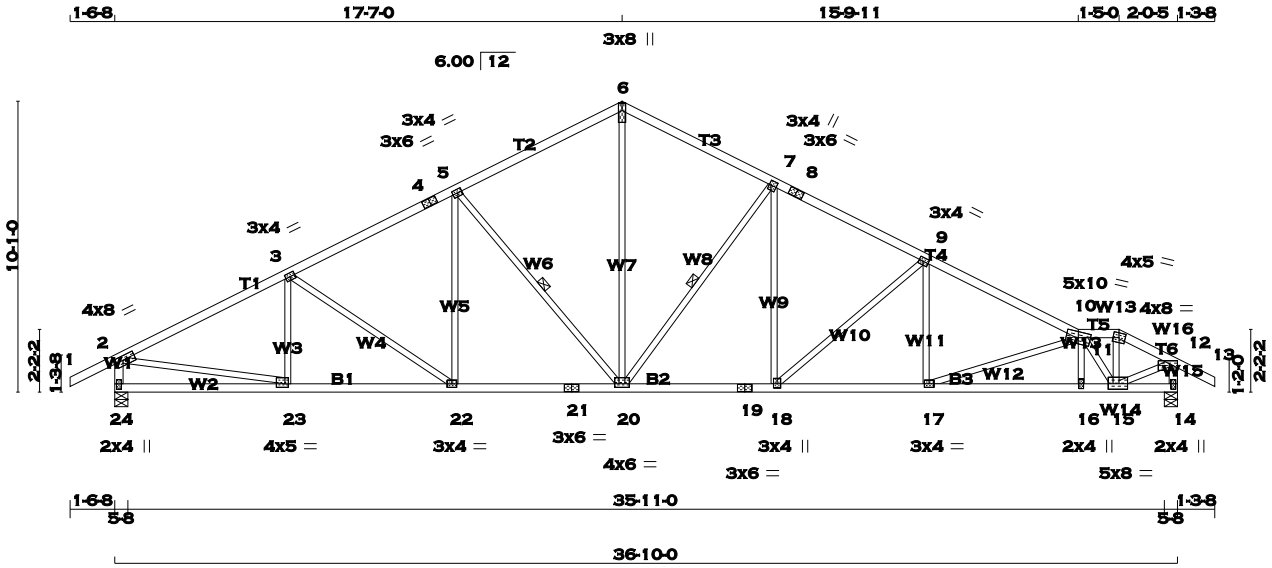

TOTAL WEIGHT = 159 lb
[M][F]

LUMBER
N. L. G. A. RULES

CHORDS	SIZE		LUMBER	DESCR.
1 - 4	2x4	DRY	No.2	SPF
4 - 6	2x4	DRY	No.2	SPF
6 - 8	2x4	DRY	No.2	SPF
8 - 10	2x4	DRY	No.2	SPF
10 - 11	2x4	DRY	No.2	SPF
11 - 13	2x4	DRY	No.2	SPF
24 - 2	2x4	DRY	No.2	SPF
14 - 12	2x4	DRY	No.2	SPF
24 - 21	2x4	DRY	No.2	SPF
21 - 19	2x4	DRY	No.2	SPF
19 - 14	2x4	DRY	No.2	SPF
ALL WEBS EXCEPT	2x3	DRY	No.2	SPF

DRY: SEASONED LUMBER.

PLATES (table is in inches)

JT	TYPE	PLATES	W	LEN	Y	X
2 3, 5, 9	TMVW-t	MT20	4.0	8.0	1.75	3.00
3	TMWW-t	MT20	3.0	4.0	1.50	1.75
4	TS-t	MT20	3.0	6.0		
6	TTW+p	MT20	3.0	8.0	Edge	
7	TMWW+t	MT20	3.0	4.0	2.00	0.75
8	TS-t	MT20	3.0	6.0		
10	TTWWW-m	MT20	5.0	10.0		
11	TTW-m	MT20	4.0	5.0		
12	TMVW-p	MT20	4.0	8.0	1.25	3.50
14	BMV1+p	MT20	2.0	4.0	2.25	1.00
15	BMWWW-t	MT20	5.0	8.0	2.25	2.00
16	BMW+w	MT20	2.0	4.0		
17	BMWW-t	MT20	3.0	4.0		
18	BMWW+t	MT20	3.0	4.0	1.75	1.50
19	BS-t	MT20	3.0	6.0		
20	BMWWW-t	MT20	4.0	6.0	1.50	3.00
21	BS-t	MT20	3.0	6.0		
22	BMWW-t	MT20	3.0	4.0		
23	BMWW-t	MT20	4.0	5.0	1.50	1.50
24	BMV1+p	MT20	2.0	4.0	2.25	1.00

Edge - INDICATES REFERENCE CORNER OF PLATE TOUCHES EDGE OF CHORD.

A SIZE FOR SIZE SUBSTITUTION OF MITEK MII20 WITH TEE-LOK TL20 PLATES IS ALLOWED.

DIMENSIONS, SUPPORTS AND LOADINGS SPECIFIED BY FABRICATOR TO BE VERIFIED BY BUILDING DESIGNER

BEARINGS

JT	FACTORED GROSS REACTION VERT	HORZ	MAXIMUM FACTORED GROSS REACTION DOWN	HORZ	UPLIFT	INPUT BRG IN-SX	REQRD BRG IN-SX
24	1871	0	1871	0	0	5-8	5-8
14	1852	0	1852	0	0	5-8	5-8

UNFACTORED REACTIONS

JT	1ST LCASE COMBINED	MAX./MIN. COMPONENT REACTIONS SNOW	LIVE	PERM.LIVE	WIND	DEAD	SOIL
24	1311	933 / 0	0 / 0	0 / 0	0 / 0	378 / 0	0 / 0
14	1297	921 / 0	0 / 0	0 / 0	0 / 0	376 / 0	0 / 0

BEARING MATERIAL TO BE SPF NO.2 OR BETTER AT JOINT(S) 24, 14

BRACING
TOP CHORD TO BE SHEATHED OR MAX. PURLIN SPACING = 3.78 FT.
MAX. UNBRACED BOTTOM CHORD LENGTH = 10.00 FT. OR RIGID CEILING DIRECTLY APPLIED.

ALL PITCH BREAKS AND PERIMETER CORNER JOINTS MUST BE LATERALLY RESTRAINED.

1 - 2x3 SPF No.2 LATERAL BRACE(S) AT 1/ 2 LENGTH OF 5-20. DBS = 20-0-0 . CBF = 83 LBS.
1 - 2x3 SPF No.2 LATERAL BRACE(S) AT 1/ 2 LENGTH OF 7-20. DBS = 16-0-0 . CBF = 85 LBS.

DBS = DIAGONAL BRACE SPACING (MAX). CBF = CUMULATIVE BRACING FORCE. FASTEN LATERAL BRACE(S) USING (0.122"X3") SPIRAL NAILS : 1 NAIL FOR 2x3 BRACE(S), 2 FOR 1x4, 2x4, 2x5, 3 FOR 2x6, 4 FOR 2x8, 5 FOR 2x10, AND 6 FOR 2x12.

END VERTICAL(S) MUST BE SHEATHED OR HAVE BRACES AS INDICATED IN THE MAX. UNBRACED LENGTH COLUMN OF THE TABLE BELOW

LOADING
TOTAL LOAD CASES: (4)

CHORDS MEMB. FR-TO	MAX. FACTORED FORCE (LBS)	FACTORED VERT. LOAD (PLF) FROM	TO	LC1	MAX CSI (LC)	MAX. UNBRAC LENGTH	WEBS MEMB. FR-TO	MAX. FACTORED FORCE (LBS)	MAX CSI (LC)
1- 2	0 / 28	-77.4	-77.4	0.14 (1)	10.00	23- 3	-262 / 19	0.07 (1)
2- 3	-2527 / 0	-77.4	-77.4	0.46 (1)	3.96	3-22	-242 / 0	0.23 (1)
3- 4	-2323 / 0	-77.4	-77.4	0.38 (1)	4.19	22- 5	0 / 236	0.05 (1)
4- 5	-2323 / 0	-77.4	-77.4	0.38 (1)	4.19	5-20	-667 / 0	0.37 (1)
5- 6	-1861 / 0	-77.4	-77.4	0.37 (1)	4.58	20- 6	0 / 1301	0.29 (1)
6- 7	-1860 / 0	-77.4	-77.4	0.30 (1)	4.65	20- 7	-853 / 0	0.46 (1)
7- 8	-2409 / 0	-77.4	-77.4	0.32 (1)	4.18	18- 7	0 / 493	0.11 (1)
8- 9	-2409 / 0	-77.4	-77.4	0.32 (1)	4.18	18- 9	-630 / 0	0.57 (1)
9-10	-2925 / 0	-77.4	-77.4	0.39 (1)	3.78	17- 9	0 / 199	0.05 (4)
10-11	-1859 / 0	-77.4	-77.4	0.05 (1)	4.90	17-10	-271 / 0	0.15 (1)
11-12	-2033 / 0	-77.4	-77.4	0.08 (1)	4.70	16-10	0 / 76	0.03 (4)
12-13	0 / 23	-77.4	-77.4	0.10 (1)	10.00	10-15	-1801 / 0	0.28 (1)
24- 2	-1826 / 0	0.0	0.0	0.19 (1)	6.20	15-11	0 / 783	0.18 (1)
14-12	-1830 / 0	0.0	0.0	0.18 (1)	6.19	2-23	0 / 2308	0.52 (1)
						15-12	0 / 1957	0.44 (1)
24-23	0 / 0	-17.5	-17.5	0.14 (4)	10.00			
23-22	0 / 2277	-17.5	-17.5	0.42 (1)	10.00			
22-21	0 / 2078	-17.5	-17.5	0.40 (1)	10.00			
21-20	0 / 2078	-17.5	-17.5	0.40 (1)	10.00			
20-19	0 / 2155	-17.5	-17.5	0.42 (1)	10.00			
19-18	0 / 2155	-17.5	-17.5	0.42 (1)	10.00			
18-17	0 / 2633	-17.5	-17.5	0.48 (1)	10.00			
17-16	0 / 2888	-17.5	-17.5	0.54 (1)	10.00			
16-15	0 / 2890	-17.5	-17.5	0.49 (1)	10.00			
15-14	0 / 0	-17.5	-17.5	0.02 (4)	10.00			

RECEIVED
TOWN OF MILTON
MAR 29, 2017
17-5419
BUILDING DIVISION

READ ALL NOTES ON THIS PAGE AND ON THE ENGINEERING NOTE PAGE ENP-1. THE NOTE PAGE IS AN INTEGRAL PART OF THIS DRAWING AS IT CONTAINS SPECIFICATIONS AND CRITERIA USED IN THE DESIGN OF THIS COMPONENT.

DESIGN CRITERIA

SPECIFIED LOADS:

TOP	CH.	LL	=	23.3	PSF
		DL	=	3.0	PSF
BOT	CH.	LL	=	0.0	PSF
		DL	=	7.0	PSF
TOTAL	LOAD		=	33.3	PSF

SPACING = 24.0 IN. C/C

LOADING IN ALL FLAT SECTIONS BASED ON A SLOPE OF 6.00/12

THIS TRUSS IS DESIGNED FOR RESIDENTIAL OR SMALL BUILDING REQUIREMENTS OF PART 9, NBCC 2010

THIS DESIGN COMPLIES WITH:
- PART 9 OF OBC 2012 , BCBC 2012 , ABC 2014
- CSA 086-09
- TPIC 2011

(55 % OF 27.2 P.S.F. G.S.L. PLUS 8.4 P.S.F. RAIN LOAD) EQUALS 23.3 P.S.F. SPECIFIED ROOF LIVE LOAD

ALLOWABLE DEFL.(LL)= L/360 (1.23")
CALCULATED VERT. DEFL.(LL) = L/ 999 (0.16")
ALLOWABLE DEFL.(TL)= L/360 (1.23")
CALCULATED VERT. DEFL.(TL) = L/ 999 (0.29")

CSI: TC=0.46 (2-3:1) , BC=0.54 (16-17:1) , WB=0.57 (9-18:1) , SSI=0.19 (2-3:1)

DOL LUMBER=1.00 NAIL=1.00 LS BEND=1.10 COMP=1.10 SHEAR=1.10 TENS= 1.10

COMPANION LIVE LOAD FACTOR = 0.50

TRUSS PLATE MANUFACTURER IS NOT RESPONSIBLE FOR QUALITY CONTROL IN THE TRUSS MANUFACTURING PLANT .

NAIL VALUES

PLATE	GRIP(DRY) (PSI) MAX	MIN	SHEAR (PLI) MAX	MIN	SECTION (PLI) MAX	MIN
MT20	618	354	1667	822	2284	1656

PLATE PLACEMENT TOL. = 0.250 inches

PLATE ROTATION TOL. = 5.0 Deg.

JSI GRIP= 0.89 (6) (INPUT = 0.90)
JSI METAL= 0.80 (10) (INPUT = 1.00)

KOTT

CONTINUED ON PAGE 2

JOB NAME	TRUSS NAME	QUANTITY	PLY	JOB DESC.	DRWG NO.
PT0317-122	T51	6	1	TRUSS DESC. LECCO RIDGE-BLOCK 348	

KOTT , Stouffville, ON, CGC

Version 8.100 S Feb 9 2017 MiTek Industries, Inc. Mon Mar 20 10:10:54 2017 Page 1
ID:Mn2zxnCa6NqoASkSkmtLJtyfhrl-NjS8V2L7HpHmPpuxGjz4vxMp_RFVpPUZ9DbaiOzZ4wF

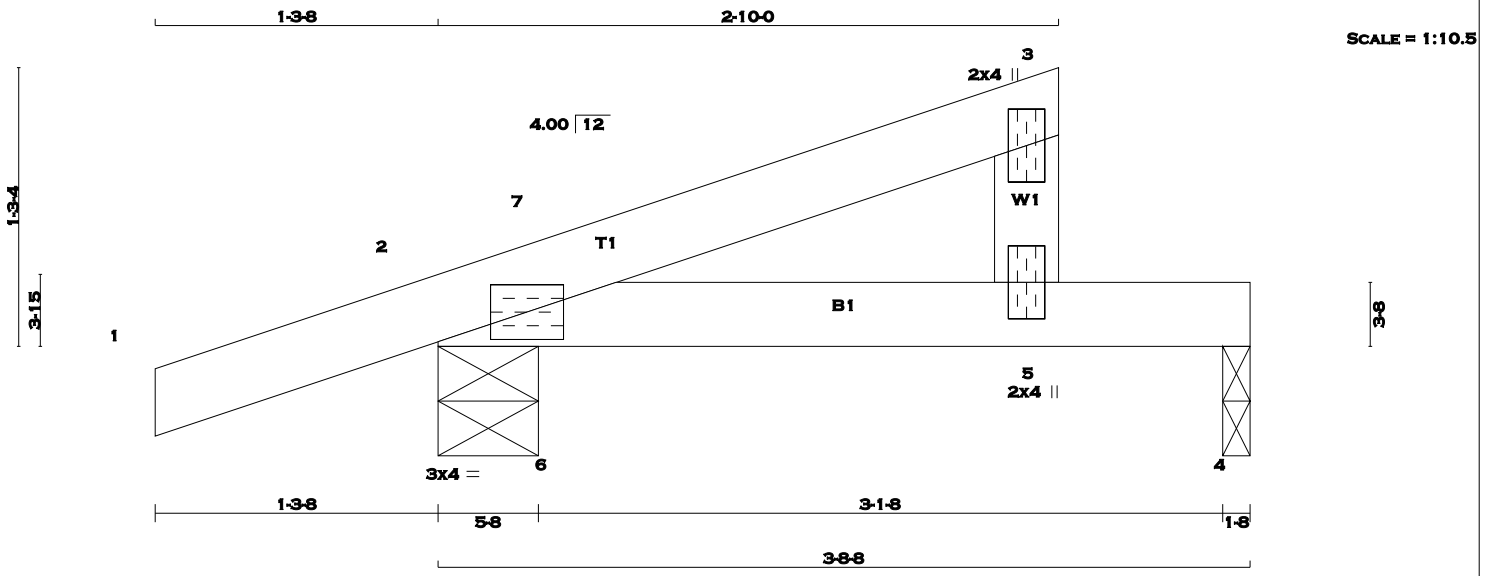

TOTAL WEIGHT = 6 X 10 = 60 lb
[M]

LUMBER
N. L. G. A. RULES

CHORDS	SIZE		LUMBER	DESCR.
1 - 3	2x4	DRY	No.2	SPF
5 - 3	2x4	DRY	No.2	SPF
2 - 4	2x4	DRY	No.2	SPF

DRY: SEASONED LUMBER.

PLATES (table is in inches)

JT	TYPE	PLATES	W	LEN	Y	X
2	TMB1-I	MT20	3.0	4.0		
3	TMV+p	MT20	2.0	4.0		
5	BMV+p	MT20	2.0	4.0		

A SIZE FOR SIZE SUBSTITUTION OF MITEK MII20 WITH TEE-LOK TL20 PLATES IS ALLOWED.

DIMENSIONS, SUPPORTS AND LOADINGS SPECIFIED BY FABRICATOR TO BE VERIFIED BY BUILDING DESIGNER

BEARINGS

JT	FACTORED GROSS REACTION VERT	HORZ	MAXIMUM FACTORED GROSS REACTION DOWN	HORZ	UPLIFT	INPUT BRG IN-SX	REQRD BRG IN-SX
2	271	0	271	0	0	5-8	5-8
4	116	0	116	0	0	1-8	1-8

UNFACTORED REACTIONS

JT	1ST LCASE COMBINED	MAX./MIN. COMPONENT REACTIONS SNOW	LIVE	PERM.LIVE	WIND	DEAD	SOIL
2	188	144 / 0	0 / 0	0 / 0	0 / 0	44 / 0	0 / 0
4	83	50 / 0	0 / 0	0 / 0	0 / 0	32 / 0	0 / 0

BEARING MATERIAL TO BE SPF NO.2 OR BETTER AT JOINT(S) 2, 4

BRACING
TOP CHORD TO BE SHEATHED OR MAX. PURLIN SPACING = 6.25 FT.
MAX. UNBRACED BOTTOM CHORD LENGTH = 10.00 FT. OR RIGID CEILING DIRECTLY APPLIED.

ALL PITCH BREAKS AND PERIMETER CORNER JOINTS MUST BE LATERALLY RESTRAINED.

LOADING
TOTAL LOAD CASES: (5)

CHORDS

MEMB. FR-TO	MAX. FACTORED FORCE (LBS)	FACTORED VERT. LOAD (PLF) FROM	TO	LC1 MAX CSI (LC)	MAX. UNBRAC LENGTH
1- 2	0 / 15	-77.4	-77.4	0.10 (1)	10.00
2- 7	-25 / 0	-77.4	-77.4	0.06 (1)	6.25
7- 3	0 / 6	-77.4	-77.4	0.10 (1)	10.00
5- 3	-106 / 0	0.0	0.0	0.01 (1)	7.81
2- 6	0 / 0	-17.5	-17.5	0.06 (1)	10.00
6- 5	0 / 0	-17.5	-17.5	0.13 (1)	10.00
5- 4	0 / 0	-17.5	-17.5	0.13 (1)	10.00

WEBS

MEMB. FR-TO	MAX. FACTORED FORCE (LBS)	MAX CSI (LC)
6- 7	-18 / 32	0.00 (1)

CANTILEVER ANALYSIS HAS BEEN CONSIDERED IN THIS DESIGN

DESIGN CRITERIA

SPECIFIED LOADS:

TOP CH.	LL	=	23.3	PSF
	DL	=	3.0	PSF
BOT CH.	LL	=	0.0	PSF
	DL	=	7.0	PSF
TOTAL LOAD		=	33.3	PSF

SPACING = 24.0 IN. C/C

THIS TRUSS IS DESIGNED FOR RESIDENTIAL OR SMALL BUILDING REQUIREMENTS OF PART 9, NBCC 2010

THIS DESIGN COMPLIES WITH:
- PART 9 OF OBC 2012 , BCBC 2012 , ABC 2014
- CSA 086-09
- TPIC 2011

(55 % OF 27.2 P.S.F. G.S.L. PLUS 8.4 P.S.F. RAIN LOAD) EQUALS 23.3 P.S.F. SPECIFIED ROOF LIVE LOAD

ALLOWABLE DEFL.(LL)= L/360 (0.19")
CALCULATED VERT. DEFL.(LL) = L/ 999 (0.01")
ALLOWABLE DEFL.(TL)= L/360 (0.19")
CALCULATED VERT. DEFL.(TL) = L/ 999 (0.03")

CSI: TC=0.10 (3-7:1) , BC=0.13 (5-6:1) , WB=0.00 (6-7:1) , SSI=0.09 (4-5:1)

DOL LUMBER=1.00 NAIL=1.00 LS BEND=1.10 COMP=1.10 SHEAR=1.10 TENS= 1.10

COMPANION LIVE LOAD FACTOR = 0.50

TRUSS PLATE MANUFACTURER IS NOT RESPONSIBLE FOR QUALITY CONTROL IN THE TRUSS MANUFACTURING PLANT .

NAIL VALUES

PLATE	GRIP(DRY) (PSI) MAX	MIN	SHEAR (PLI) MAX	MIN	SECTION (PLI) MAX	MIN
MT20	618	354	1667	822	2284	1656

PLATE PLACEMENT TOL. = 0.250 inches

PLATE ROTATION TOL. = 5.0 Deg.

JSI GRIP= 0.12 (2) (INPUT = 0.90)
JSI METAL= 0.04 (2) (INPUT = 1.00)

LICENSED PROFESSIONAL ENGINEER
P.M. TREVISAN
100136551
March 20th, 2017
PROVINCE OF ONTARIO

RECEIVED
TOWN OF MILTON
MAR 29, 2017
17-5419
BUILDING DIVISION

READ ALL NOTES ON THIS PAGE AND ON THE ENGINEERING NOTE PAGE ENP-1. THE NOTE PAGE IS AN INTEGRAL PART OF THIS DRAWING AS IT CONTAINS SPECIFICATIONS AND CRITERIA USED IN THE DESIGN OF THIS COMPONENT.

KOTT

Version 8.100 S Feb 9 2017 MiTek Industries, Inc. Mon Mar 20 10:10:54 2017 Page 1
ID:Mn2zxnCa6NqoASkSkmtLJtyfhrl-NjS8V2L7HpHmPpuxGjz4vxMp_RFVpPUZ9DbaiOzZ4wF

SCALE = 1:14.7

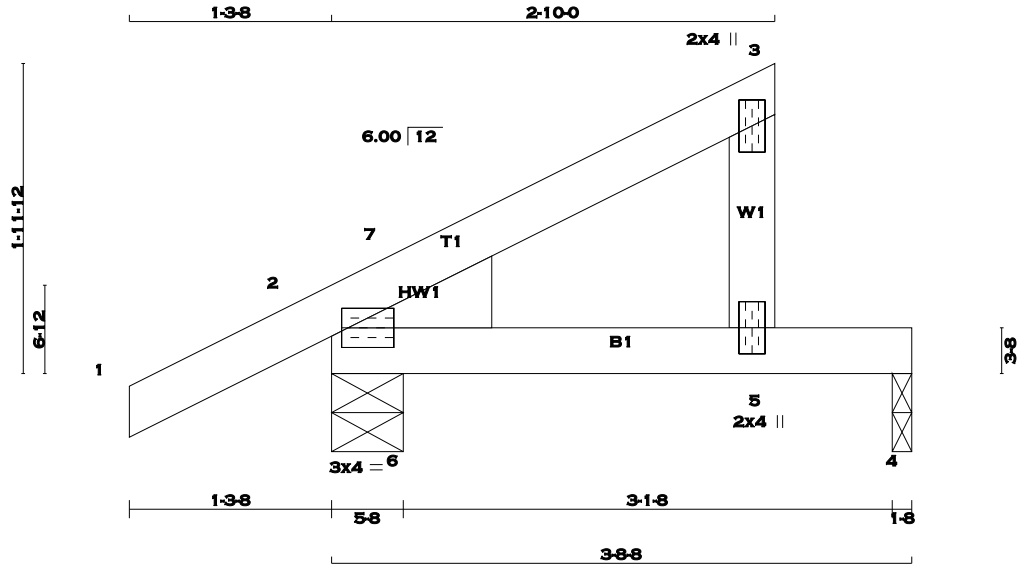

TOTAL WEIGHT = 6 X 13 = 77 lb [M]

LUMBER
N. L. G. A. RULES

CHORDS	SIZE		LUMBER	DESCR.
1 - 3	2x4	DRY	No.2	SPF
5 - 3	2x4	DRY	No.2	SPF
2 - 4	2x4	DRY	No.2	SPF

DRY: SEASONED LUMBER.

PLATES (table is in inches)

JT	TYPE	PLATES	W	LEN	Y	X
2	TMBH1-I	MT20	3.0	4.0	1.50	0.50
3	TMV+p	MT20	2.0	4.0		
5	BMV+p	MT20	2.0	4.0		

A SIZE FOR SIZE SUBSTITUTION OF MITEK MII20 WITH TEE-LOK TL20 PLATES IS ALLOWED.

DIMENSIONS, SUPPORTS AND LOADINGS SPECIFIED BY FABRICATOR TO BE VERIFIED BY BUILDING DESIGNER

BEARINGS

JT	FACTORED GROSS REACTION VERT	HORZ	MAXIMUM FACTORED GROSS REACTION DOWN	HORZ	UPLIFT	INPUT BRG IN-SX	REQRD BRG IN-SX	HEEL WEDGE
2	273	0	273	0	0	5-8	5-8	2x6 L
4	116	0	116	0	0	1-8	1-8	

UNFACTORED REACTIONS

JT	1ST LCASE COMBINED	MAX./MIN. COMPONENT REACTIONS SNOW	LIVE	PERM.LIVE	WIND	DEAD	SOIL
2	189	145 / 0	0 / 0	0 / 0	0 / 0	45 / 0	0 / 0
4	83	50 / 0	0 / 0	0 / 0	0 / 0	32 / 0	0 / 0

BEARING MATERIAL TO BE SPF NO.2 OR BETTER AT JOINT(S) 2, 4

BRACING
TOP CHORD TO BE SHEATHED OR MAX. PURLIN SPACING = 6.25 FT.
MAX. UNBRACED BOTTOM CHORD LENGTH = 10.00 FT. OR RIGID CEILING DIRECTLY APPLIED.

ALL PITCH BREAKS AND PERIMETER CORNER JOINTS MUST BE LATERALLY RESTRAINED.

LOADING
TOTAL LOAD CASES: (5)

CHORDS

MEMB. FR-TO	MAX. FACTORED FORCE (LBS)	FACTORED VERT. LOAD (PLF) FROM	TO	LC1 MAX CSI (LC)	MAX. UNBRAC LENGTH
1- 2	0 / 16	-77.4	-77.4	0.10 (1)	10.00
2- 7	-46 / 0	-77.4	-77.4	0.05 (1)	6.25
7- 3	0 / 7	-77.4	-77.4	0.10 (1)	10.00
5- 3	-104 / 0	0.0	0.0	0.01 (1)	7.81
2- 6	0 / 0	-17.5	-17.5	0.05 (1)	10.00
6- 5	0 / 0	-17.5	-17.5	0.13 (1)	10.00
5- 4	0 / 0	-17.5	-17.5	0.13 (1)	10.00

WEBS

MEMB. FR-TO	MAX. FACTORED FORCE (LBS)	MAX CSI (LC)
6- 7	-29 / 33	0.00 (1)

CANTILEVER ANALYSIS HAS BEEN CONSIDERED IN THIS DESIGN

DESIGN CRITERIA

SPECIFIED LOADS:

TOP CH.	LL	=	23.3	PSF
	DL	=	3.0	PSF
BOT CH.	LL	=	0.0	PSF
	DL	=	7.0	PSF
TOTAL LOAD		=	33.3	PSF

SPACING = 24.0 IN. C/C

THIS TRUSS IS DESIGNED FOR RESIDENTIAL OR SMALL BUILDING REQUIREMENTS OF PART 9, NBCC 2010

THIS DESIGN COMPLIES WITH:
- PART 9 OF OBC 2012 , BCBC 2012 , ABC 2014
- CSA 086-09
- TPIC 2011

(55 % OF 27.2 P.S.F. G.S.L. PLUS 8.4 P.S.F. RAIN LOAD) EQUALS 23.3 P.S.F. SPECIFIED ROOF LIVE LOAD

ALLOWABLE DEFL.(LL)= L/360 (0.19")
CALCULATED VERT. DEFL.(LL) = L/ 999 (0.01")
ALLOWABLE DEFL.(TL)= L/360 (0.19")
CALCULATED VERT. DEFL.(TL) = L/ 999 (0.03")

CSI: TC=0.10 (1-2:1) , BC=0.13 (5-6:1) , WB=0.00 (6-7:1) , SSI=0.09 (4-5:1)

DOL LUMBER=1.00 NAIL=1.00 LS BEND=1.10 COMP=1.10 SHEAR=1.10 TENS= 1.10

COMPANION LIVE LOAD FACTOR = 0.50

TRUSS PLATE MANUFACTURER IS NOT RESPONSIBLE FOR QUALITY CONTROL IN THE TRUSS MANUFACTURING PLANT .

NAIL VALUES

PLATE	GRIP(DRY) (PSI) MAX	MIN	SHEAR (PLI) MAX	MIN	SECTION (PLI) MAX	MIN
MT20	618	354	1667	822	2284	1656

PLATE PLACEMENT TOL. = 0.250 inches

PLATE ROTATION TOL. = 5.0 Deg.

JSI GRIP= 0.61 (2) (INPUT = 0.90)
JSI METAL= 0.04 (2) (INPUT = 1.00)

LICENSED PROFESSIONAL ENGINEER
P.M. TREVISAN
100136551
March 20th, 2017
PROVINCE OF ONTARIO

RECEIVED
TOWN OF MILTON
MAR 29, 2017
17-5419
BUILDING DIVISION

READ ALL NOTES ON THIS PAGE AND ON THE ENGINEERING NOTE PAGE ENP-1. THE NOTE PAGE IS AN INTEGRAL PART OF THIS DRAWING AS IT CONTAINS SPECIFICATIONS AND CRITERIA USED IN THE DESIGN OF THIS COMPONENT.

KOTT

JOB NAME	DETAILS	JOB DESC.	HIP END FRAMING	DRAWING NO.	B37579J

LEGGO RIDGE-BLOCK 348

EMC JOB: T0317-122

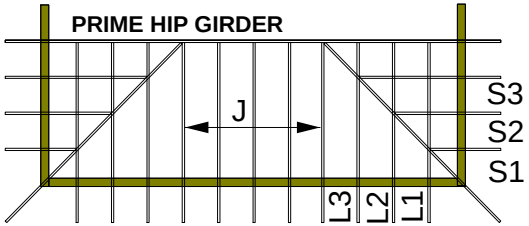

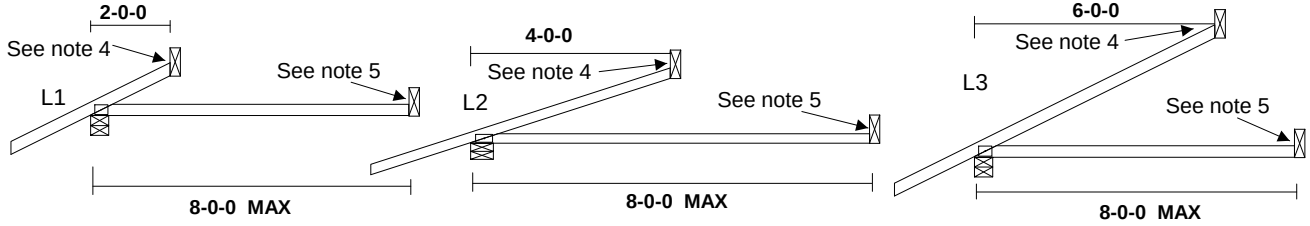

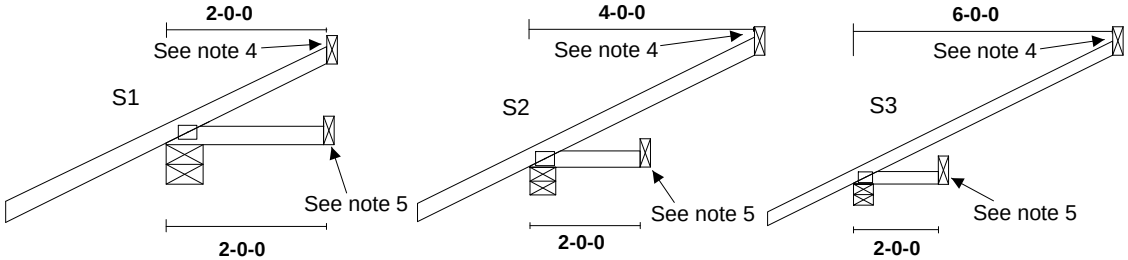

DETAIL "A"

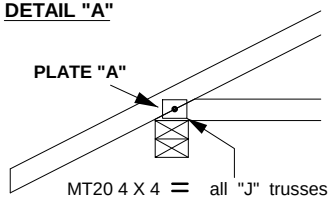

MT20 4 X 4 = all "J" trusses
MT20 3 X 4 = all other trusses

DETAIL "B"

RAISED HEEL

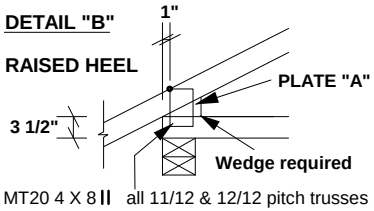

MT20 4 X 8 II all 11/12 & 12/12 pitch trusses
MT20 4 X 7 II all other trusses

DETAIL "C"

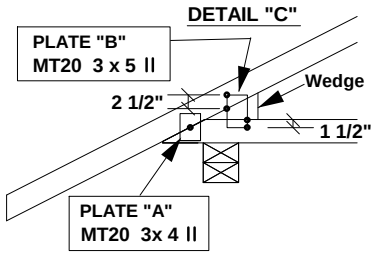

CANTILEVER DETAIL "C"

SLOPE	MAX CANTILEVER	PLATE "B"	WEDGE SIZE
3/12	17"	3 X 5	2 X 3
4/12	14"	3 X 5	2 X 3
5/12	12"	3 X 5	2 X 4
6/12	10"	3 X 5	2 X 4
7/12	9"	3 X 5	2 X 6
8/12	8.5"	3 X 5	2 X 6
9/12	8"	3 X 5	2 X 6
10/12	7.5"	3 X 5	2 X 6

"J"

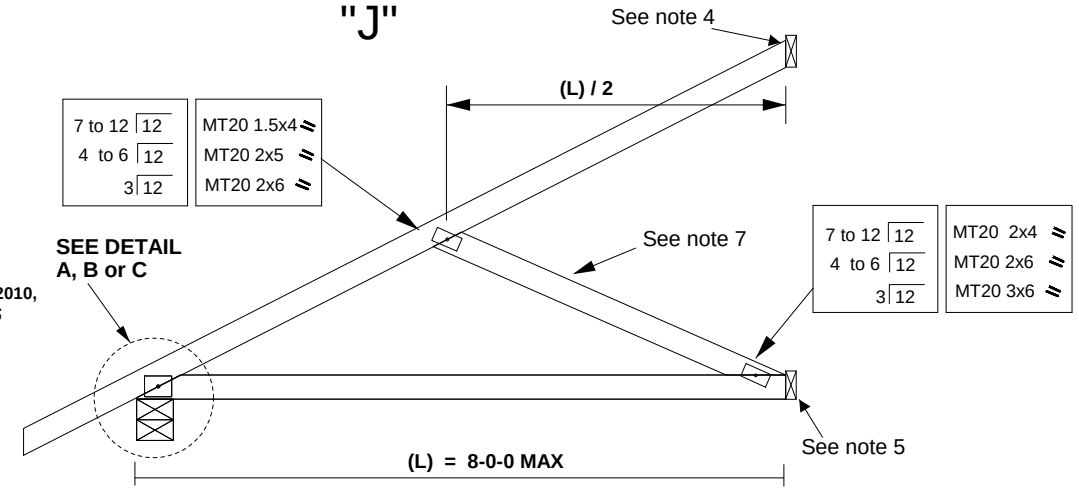

NOTES:

1. ALL LUMBER SHALL BE 2x4 SPF OR D. Fir No. 2 DRY OR BETTER.
2. THIS TRUSS IS DESIGNED FOR HOUSING AND SMALL BUILDING REQUIREMENTS OF PART 9 NBCC 2010, WHERE GROUND SNOW LOAD IS 60.0 PSF OR LESS AND RAIN LOAD DOES NOT EXCEED 12.53 PSF; TOP CHORD DEAD LOAD IS 6 PSF OR LESS; BC LIVE LOAD IS 0 PSF AND BC DEAD LOAD IS 7 PSF.
3. HIP RAFTER DESIGN SHALL CONFORM TO SECTION 9.23.14.6 OF NBCC 2010.
4. FASTEN HIGH END OF RAFTERS USING MITEK CANADA INC. "BEARING ANCHORAGE BY TOE-NAILS FOR LATERAL CAPACITY" STANDARD DETAIL B37579H1.
5. FASTEN RIGHT END OF CEILING USING MITEK CANADA INC. "BEARING ANCHORAGE BY TOE-NAILS FOR LATERAL CAPACITY" STANDARD DETAIL B37579H1.
6. OVERHANG LENGTH SHALL NOT EXCEED 2 FT.
7. WHEN SETBACK IS 6 FT OR LESS, DIAGONAL WEB MAY BE OMITTED AND HIGH END OF TOP CHORD SHALL BE CONNECTED AS PER NOTE 4.
8. ALL PLATES SPECIFIED ARE PRESSED INTO BOTH FACES OF THE TRUSS.
9. MITEK REFERENCE PAGE MII-7473C FORMS AN INTEGRAL PART OF THIS DETAIL.
10. THIS DETAIL IS NOT VALID AFTER APRIL 30, 2017

MiTek Canada, Inc.
100 Industrial Rd.
Bradford, Ontario, L3Z 3G7

PEO
Certificate No. 10889485

LICENSED PROFESSIONAL ENGINEER
C. Cordogiannis
90553736
PROVINCE OF ONTARIO

RECEIVED
TOWN OF MILTON
MAR 29, 2017
17-5419
BUILDING DIVISION

April 24, 2015

STANDARD GABLE END DETAIL

LECCO RIDGE-BLOCK 348

DRAWING NO.: ENG JOB: P70017-122 B37579K

MINIMUM ROOF PITCH: 2/12

MAXIMUM ROOF PITCH: 12/12

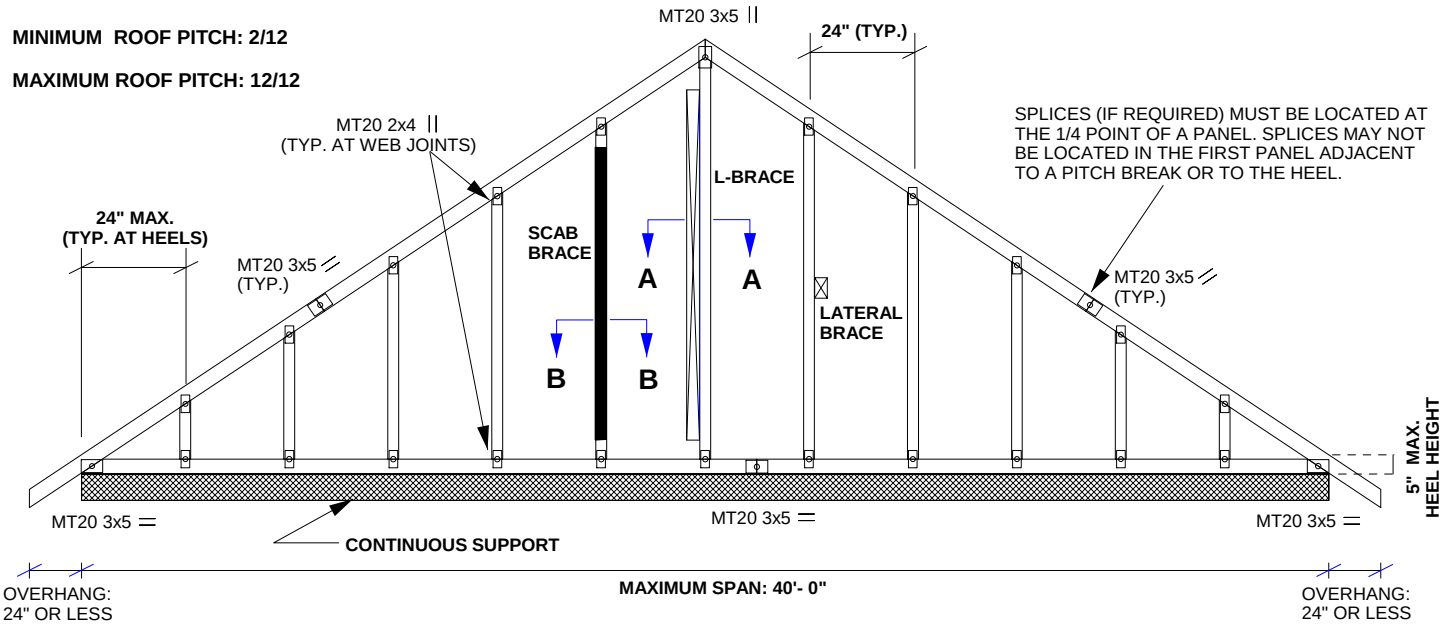

LUMBER

TOP CHORD:	**2 X 4 No. 2 DRY SPF or D- Fir**
BOTTOM CHORD:	**2 X 3 or 2 X 4 No. 2 DRY SPF or D- Fir**
GABLE WEB:	**2 X 3 or 2 X 4 No. 2 DRY SPF or D- Fir**

PLATES

JOINT	PLATES
HEELS	MT20 3 X 5
PEAK	MT20 3 X 5
TC SPLICES	MT20 3 X 5
BC SPLICES	MT20 3 X 5
WEB JOINTS	MT20 2 X 4

DESIGN CRITERIA

TOP CHORD LL = 60.0 PSF OR LESS
TOP CHORD DL = 6.0 PSF OR LESS
BOTTOM CHORD LL = 0 PSF
BOTTOM CHORD DL = 7.0 PSF

TOTAL LOAD = 73.0 PSF OR LESS

BRACING

TOP CHORD TO BE SHEATHED OR MAX. PURLIN SPACING = 2 FT.
MAX. UNBRACED BOTTOM CHORD LENGTH = 10 FT. OR RIGID CEILING DIRECTLY APPLIED.
WEBS MUST BE LATERALLY BRACED, SCAB BRACED OR L-BRACED AS INDICATED IN TABLE BELOW:

WEB LENGTH (L)	SCAB BRACE	L-BRACE	LATERAL BRACE
L < 6 FT.	NOT REQUIRED	NOT REQUIRED	NOT REQUIRED
6 FT. < L < 12 FT.	REQUIRED	2x4 L-BRACE	1 LATERAL AT 1/2 LENGTH OF WEB

SCAB BRACE DETAIL

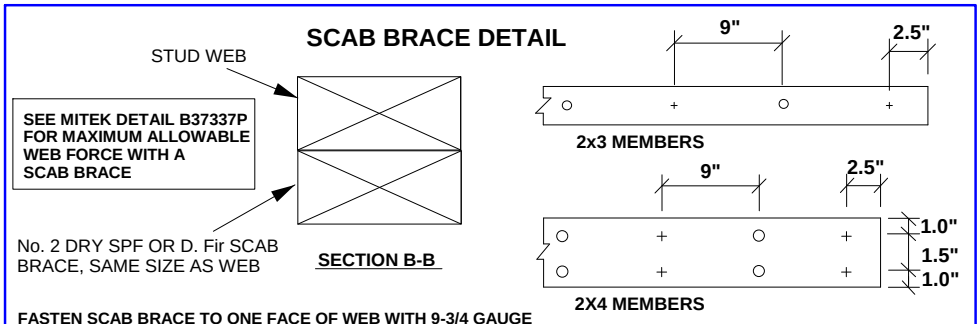

FASTEN SCAB BRACE TO ONE FACE OF WEB WITH 9-3/4 GAUGE 0.122" X 3" COMMON SPIRAL NAILS SPACED @ 9" C/C (MAX) WITH 2.5" MINIMUM END DISTANCE. SCAB BRACE MUST COVER 90% OF WEB LENGTH. DRIVE NAILS ALTERNATELY FROM FRONT AND BACK FACES.

+ NAIL FROM FRONT FACE
o NAIL FROM BACK FACE

CANTILEVER DETAIL

Note: Gable end may be cantilevered up to 6 inches past end wall as shown. Gable end to be continuously supported by 2x4 SPF No.2 (DRY) members at 12" o.c. along the bottom chord. Roof design loads shall not exceed the loading shown above.

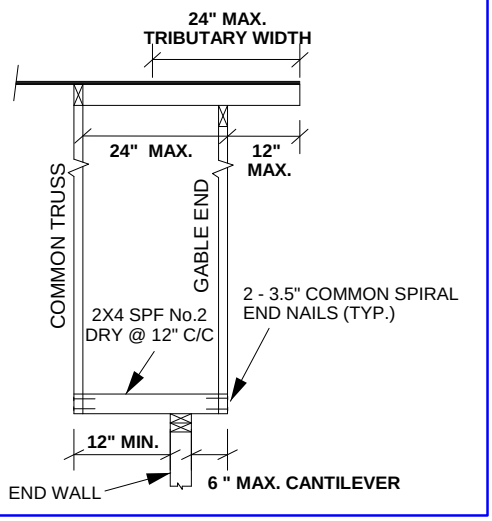

L-BRACE DETAIL

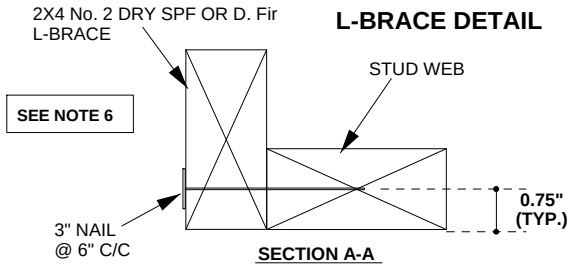

FASTEN L-BRACE TO NARROW EDGE OF WEB WITH ONE ROW OF 9-3/4 GAUGE 0.122" X 3" COMMON SPIRAL NAILS SPACED AT 6" C/C WITH 3" MINIMUM END DISTANCE. BRACE MUST COVER 90% OF WEB LENGTH.

PEO
Certificate No. 10889485

NOTES:

1. **Gable studs are spaced at 24" C/C (max.) with a max. length of 12 ft.**
2. **All plates specified are MiTek MT20, centered at each joint, and pressed into both faces of truss.**
3. **Truss spacing is 24" C/C, maximum.**
4. **Gable truss is designed for continuous support. Bearing material must be of the same species as chord member and of grade No. 2 or better.**
5. **This truss requires rigid sheathing attached to exposed face.**
6. **2x3 or 2x4 T-braces shown for gable webs in the MiTek engineering drawings may be replaced by a 2x4 L-brace as shown above.**
7. **This truss is designed for residential or small building requirements, conforming to Part 9, NBCC 2010.**
8. **This detail is not valid after April 30, 2017.**

RECEIVED
TOWN OF MILTON
MAR 29, 2017
17-5419
BUILDING DIVISION

April 24, 2015

MiTek Canada, Inc.
100 Industrial Rd.
Bradford, Ontario, L3Z 3G7

VALLEY SET DETAIL

LECCO RIDGE-BLOCK 348

ENG JOB: PT0317-122

DRAWING No.: B37579L

VALLEY SET ROOF FRAMING PLAN

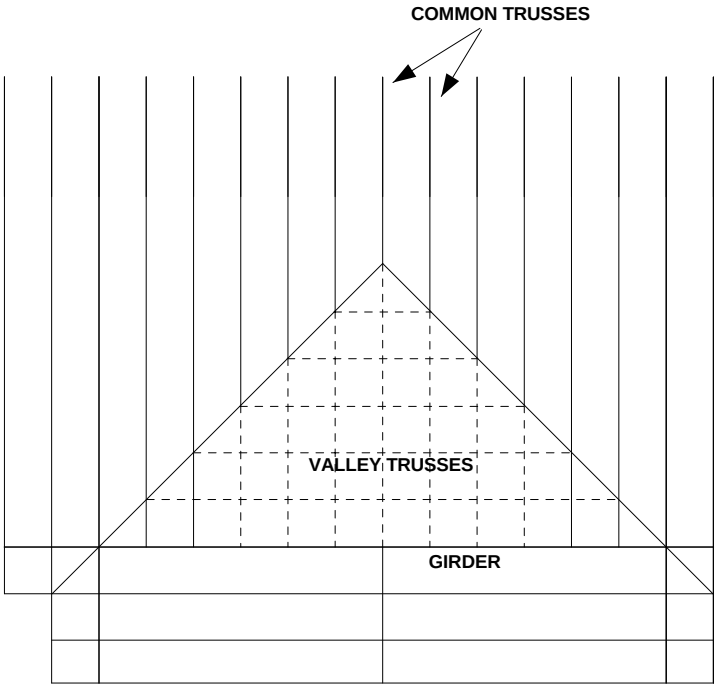

VALLEY TRUSS LUMBER (SPF OR D- Fir, No. 2 DRY OR BETTER) :

TOP CHORD SIZE : 2X4
BOTTOM CHORD SIZE : 2X3 or 2X4
WEB SIZE : 2X3 or 2X4

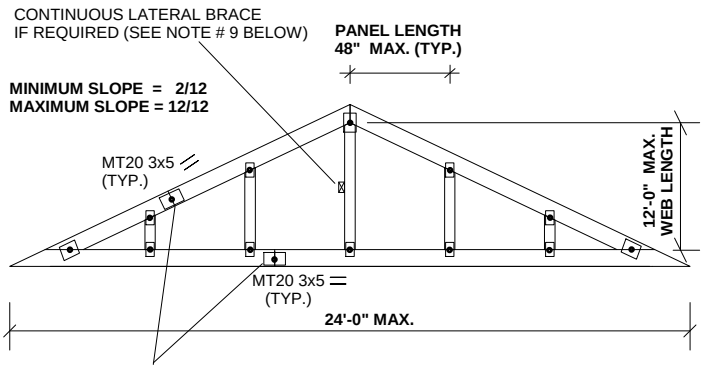

SPLICES (IF REQUIRED) MUST BE LOCATED AT THE 1/4 POINT OF A PANEL. SPLICES MAY NOT BE LOCATED NEAR A PITCH BREAK OR IN THE FIRST PANEL ADJACENT TO THE HEEL. IF BEVELING THE BOTTOM CHORD, SPLICE PLATES MUST BE FLUSH WITH THE TOP EDGE OF THE BOTTOM CHORD.

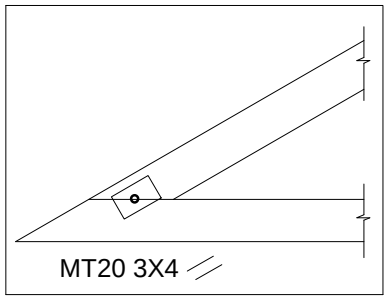

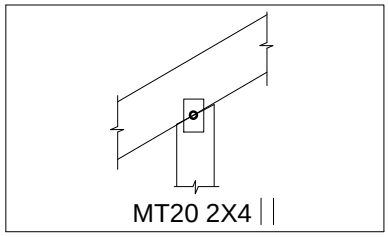

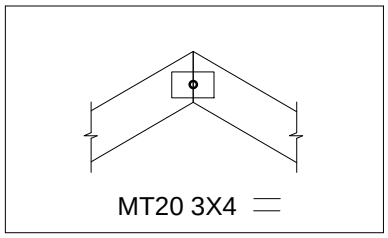

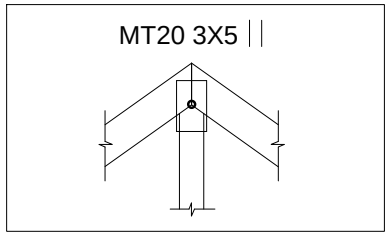

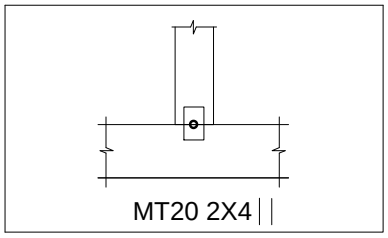

NOTES:

(1) Specified roof loads are not to exceed the loads shown below:

TOP CHORD LL = 60.0 PSF OR LESS
TOP CHORD DL = 6.0 PSF OR LESS
BOTTOM CHORD LL = 0 PSF
BOTTOM CHORD DL = 7.0 PSF

TOTAL LOAD = 73.0 PSF OR LESS

(2) Use MT20 3x5 plates for top and bottom chord splices when required.

(3) Valley trusses assume continuous support by the truss system underneath.

(4) Spacing of both valley set and truss system underneath must not exceed 24" C/C.

(5) Bottom chord may be beveled to match the slope of the intersecting roof. If beveling, a minimum 2x4 bottom chord is required, with a maximum bevel slope of 8/12 (or 33.7°). For bevel slopes greater than 8/12 use 2x6 (min) bottom chord size.

(6) Truss plates are required on both front and back face of the truss and centered at each joint.

(7) This detail is not valid for projects that require a wind analysis to be incorporated into the truss design.

(8) Valley trusses must be toe-nailed to each supporting truss with 2 - 3" common spiral / wire nails.

(9) One continuous lateral brace is required at ½ length of any web that exceeds 6 ft in length. Maximum allowable web length is 12 ft.

(10) This detail applies to Part 9 of NBCC 2010 designs only.

(11) Maximum vertical stud spacing shall not exceed 48" C/C.

(12) This detail is not valid after April 30, 2017

PEO
Certificate No. 10889485

LICENSED PROFESSIONAL ENGINEER
C. Cordogiannis
90553736
PROVINCE OF ONTARIO

RECEIVED
TOWN OF MILTON
MAR 29, 2017
17-5419
BUILDING DIVISION

MiTek Canada, Inc.
100 Industrial Rd.
Bradford, Ontario, L3Z 3G7

April 24, 2015