TOWN OF MILTON
PLANNING AND DEVELOPMENT
17-5337 MODEL
BUILDING: REVIEWED
SCOTT SHERRIFFS APR 25, 2017
PLANS EXAMINER DATE
Neither the issuance of a permit nor carrying out of inspections by the Town of Milton relives the owner from full responsibility for compliance with the provisions of the Ontario Building Code Act and the Ontario Building Code, both as amended, as well as other applicable statutes and regulations of the Province on Ontario, By-laws of the Region of Halton and Town of Milton

RECEIVED
TOWN OF MILTON
MAR 29, 2017
17-5337
BUILDING DIVISION

KOTT

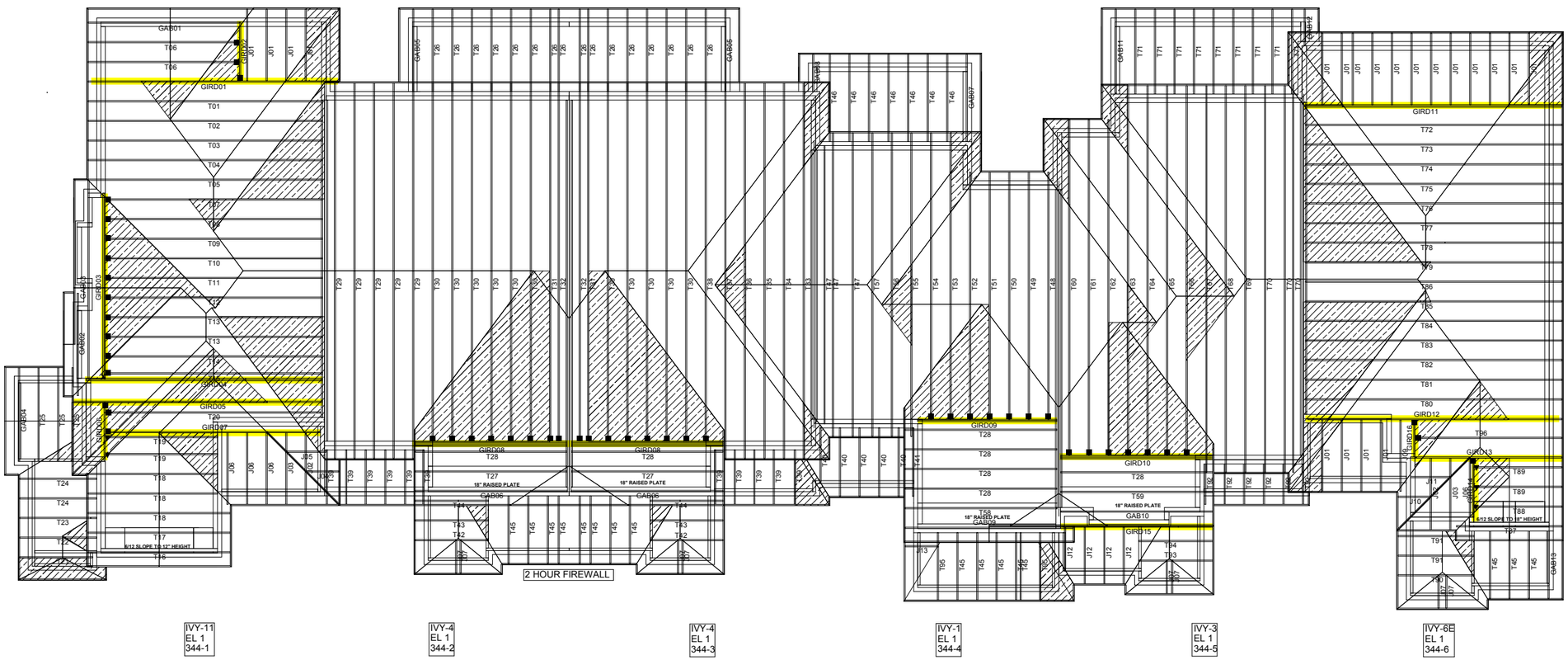

TOP OF ALL PORCH BEAMS
AT 8' 7 1/4 A.F.F.

UNDERSIDE OF SOFFIT
FOR PORCHES AT
8' 6" A.F.F.

GARAGE WALL PLATES
AT 9' 1 2/16" A.F.F.

PARTY WALLS TO BE
FRAMED ON SITE A.P.P.

HANGER LEGEND:

▼ LUS24 ■ LJS26DS
● HGUS26 ╳ HGUS26-2

CONVENTIONAL
FRAMING BY OTHERS

SIZE AND LOCATION OF CONVENTIONAL FRAMING IS APPROXIMATE. ALL AREAS MAY NOT BE SHOWN. REFER TO ARCHITECTURAL PLANS FOR DETAILS.

ALL CONVENTIONAL FRAMING TO CONFORM WITH PART 9 OF THE O.B.C
ROOF RAFTERS THAT CROSS MEET OVER TRUSSES TO BE 2x4 S.P.F. @ 24"O/C WITH A 2x4 VERTICAL POST TO THE TRUSS UNDERNEATH EACH CROSS POINT. VERTICAL POST LONGER THAN 6' TO HAVE LATERAL BRACING SO THAT THE DISTANCE BETWEEN END POINT AND BETWEEN ROWS OF BRACING DOES NOT EXCEED 6'.

Model: **BLOCK 344**
Customer: GREENPARK
Project: LECCO RIDGE
Location: MILTON
Date: 3/16/2017 Drawn by: BB

ENGINEERING NOTE PAGE (ENP-1)
PLEASE READ PRIOR TO INSTALLATION

RESPONSIBILITIES

THIS DESIGN IS FOR AN INDIVIDUAL BUILDING COMPONENT AND HAS BEEN BASED ON INFORMATION PROVIDED BY THE DESIGN OFFICE OF KOTT LUMBER. THE UNDERSIGNED ENGINEER DISCLAIMS ANY RESPONSIBILITY FOR DAMAGES AS A RESULT OF FAULTY OR INCORRECT INFORMATION, SPECIFICATION AND/OR DESIGNS FURNISHED TO THE ENGINEER. THE UNDERSIGNED ENGINEER IS ONLY RESPONSIBLE FOR THE STRUCTURAL INTEGRITY OF THIS BUILDING COMPONENT FOR THE CONDITIONS AND LOADS SHOWN ON THIS DRAWING. THE STRUCTURAL INTEGRITY OF THE BUILDING AND THE VERIFICATION OF THE DIMENSIONS AND THE DESIGN LOADS USED ARE THE RESPONSIBILITY OF THE BUILDING DESIGNER.

TRUSSES ARE DESIGNED IN CONFORMANCE WITH THE RELEVANT SECTIONS OF THE NATIONAL BUILDING CODE OF CANADA OR THE CANADIAN CODE FOR FARM BUILDINGS, WHICHEVER APPLIES TO THE BUILDING TYPE INDICATED ON THE DRAWING

IT IS THE RESPONSIBILITY OF KOTT LUMBER TO ENSURE THAT TRUSSES ARE MANUFACTURED IN CONFORMANCE WITH THESE DESIGNS AND WITH THE SPECIFICATIONS OUTLINED BELOW. THE UNDERSIGNED ENGINEER IS NOT RESPONSIBLE FOR QUALITY CONTROL IN THE TRUSS MANUFACTURING PLANT.

USE AND OCCUPANCY

- The building is of the type indicated on the drawing

LOADING

- The truss loading intensity and distribution as well as load transfer mechanism is that indicated on the drawing
- No buildings, trees, parapets or other projections higher than the roof for which the trusses are used are located within a distance less than ten (10) times the difference in height, or five metres (16 ft) whichever is greater, unless the drawing indicates that the snow drifting has been taken into account

HANDLING, INSTALLATION AND BRACING

- The trusses must be handled and installed by a qualified professional as per the supplied document titled *Information for Truss Installers* and the BCSI-B1 and BCSI-B3 Summary Sheets
- The compression chords are laterally braced by continuous rigid diaphragm sheathing or as specified on the drawing
- Temporary and permanent bracing must be installed as indicated on the truss drawing and according to the BCSI-B1 and BCSI-B3 Summary Sheets. Bracing for the lateral stability of the truss is to be provided by the building designer
- **It is recommended that a Professional Engineer's advice be obtained for the bracing of trusses spanning more than 12.37m (40'-7")**

SUPPORTS

- The trusses are to be supported at the bearing points indicated and anchored to the supports where considered necessary by the designer of the overall structure
- Bearing sizes shown are the minimum required to prevent crushing of the truss members and do not necessarily take into account stability of the overall building structure
- Elevation of bearings must be carefully checked and shimmed to alignment for solid bearings
- Adequate wood truss bearing is the responsibility of the building designer.

DIMENSIONS

- Geometry of the truss and dimensions indicated on the drawing are identical to those of the installed truss.

WHERE CONTINUOUS LATERAL BRACING IS REQUIRED FOR WEBS BUT CAN NOT BE PROVIDED SUBSTITUTE EACH WITH ONE SPF #2 2" X 4" T-BRACE COVERING 90% OF WEB LENGTH AND FASTENED TO EDGE OF WEB USING 3 1/4" SPIRAL NAILS @ 6" C/C

RECEIVED
TOWN OF MILTON
MAR 29, 2017
17-5337
BUILDING DIVISION

01/29/2013

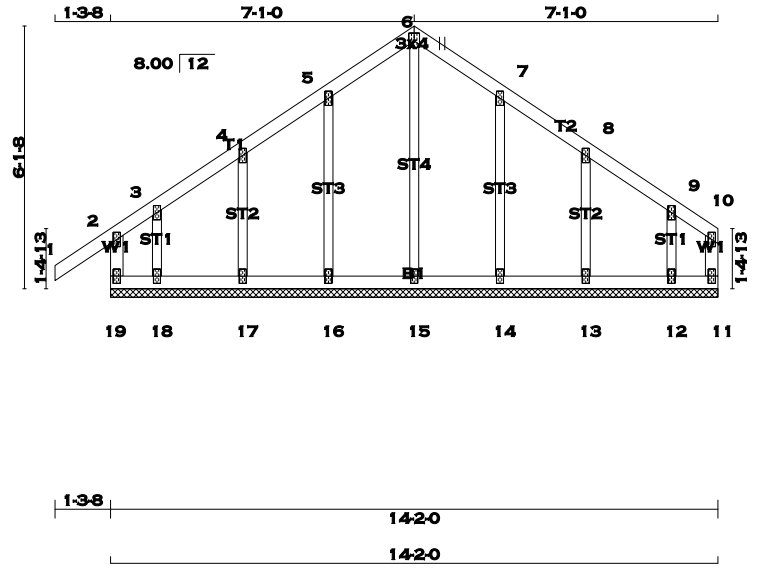

TOTAL WEIGHT = 59 lb [M]

LUMBER

N. L. G. A. RULES

CHORDS	SIZE		LUMBER	DESCR.
19 - 2	2x4	DRY	No.2	SPF
1 - 6	2x4	DRY	No.2	SPF
6 - 10	2x4	DRY	No.2	SPF
11 - 10	2x4	DRY	No.2	SPF
19 - 11	2x4	DRY	No.2	SPF
ALL WEBS	2x3	DRY	No.2	SPF
ALL GABLE WEBS	2x3	DRY	No.2	SPF

DRY: SEASONED LUMBER.

GABLE STUDS SPACED AT 2-0-0 OC.

PLATES (table is in inches)

JT	TYPE	PLATES	W	LEN	Y	X
2	TMV+p	MT20	2.0	4.0		
3, 4, 5, 7, 8, 9						
3	TMW+w	MT20	2.0	4.0		
6	TTW+p	MT20	3.0	4.0	2.25	1.50
10	TMV+p	MT20	2.0	4.0		
11	BMV1+p	MT20	2.0	4.0		
12, 13, 14, 15, 16, 17, 18						
12	BMW1+w	MT20	2.0	4.0		
19	BMV1+p	MT20	2.0	4.0		

A SIZE FOR SIZE SUBSTITUTION OF MITEK MII20 WITH TEE-LOK TL20 PLATES IS ALLOWED.

DIMENSIONS, SUPPORTS AND LOADINGS SPECIFIED BY FABRICATOR TO BE VERIFIED BY BUILDING DESIGNER

BEARINGS

THIS TRUSS DESIGNED FOR CONTINUOUS BEARINGS.

THIS TRUSS REQUIRES RIGID SHEATHING ON EXPOSED FACE.

BEARING MATERIAL TO BE SPF NO.2 OR BETTER AT JOINT(S)

BRACING

TOP CHORD TO BE SHEATHED OR MAX. PURLIN SPACING = 6.25 FT.
MAX. UNBRACED BOTTOM CHORD LENGTH = 6.25 FT. OR RIGID CEILING DIRECTLY APPLIED.

ALL PITCH BREAKS AND PERIMETER CORNER JOINTS MUST BE LATERALLY RESTRAINED.

LOADING

TOTAL LOAD CASES: (4)

CHORDS

MEMB. FR-TO	MAX. FACTORED FORCE (LBS)	FACTORED VERT. LOAD (PLF) FROM	TO	LC1	MAX CSI (LC)	MAX. UNBRAC LENGTH
19- 2	-191 / 0	0.0	0.0	0.02 (1)	7.81	
1- 2	0 / 29	-77.4	-77.4	0.10 (1)	10.00	
2- 3	-25 / 0	-77.4	-77.4	0.08 (1)	6.25	
3- 4	0 / 8	-77.4	-77.4	0.04 (1)	10.00	
4- 5	0 / 8	-77.4	-77.4	0.04 (1)	10.00	
5- 6	0 / 12	-77.4	-77.4	0.04 (1)	10.00	
6- 7	0 / 12	-77.4	-77.4	0.04 (1)	10.00	
7- 8	0 / 9	-77.4	-77.4	0.04 (1)	10.00	
8- 9	0 / 6	-77.4	-77.4	0.04 (1)	10.00	
9-10	0 / 6	-77.4	-77.4	0.03 (1)	10.00	
11-10	-24 / 0	0.0	0.0	0.00 (1)	7.81	
19-18	0 / 0	-17.5	-17.5	0.02 (1)	10.00	
18-17	-3 / 0	-17.5	-17.5	0.01 (4)	10.00	
17-16	-7 / 0	-17.5	-17.5	0.01 (4)	10.00	
16-15	-10 / 0	-17.5	-17.5	0.01 (4)	6.25	
15-14	-10 / 0	-17.5	-17.5	0.01 (4)	6.25	
14-13	-7 / 0	-17.5	-17.5	0.01 (4)	10.00	
13-12	-3 / 0	-17.5	-17.5	0.01 (4)	10.00	
12-11	0 / 3	-17.5	-17.5	0.01 (4)	10.00	

WEBS

MEMB. FR-TO	MAX. FACTORED FORCE (LBS)	MAX CSI (LC)
15- 6	-174 / 0	0.10 (1)
16- 5	-155 / 0	0.05 (1)
17- 4	-161 / 0	0.03 (1)
18- 3	-60 / 0	0.01 (1)
14- 7	-157 / 0	0.05 (1)
13- 8	-156 / 0	0.03 (1)
12- 9	-125 / 0	0.02 (1)

DESIGN CRITERIA

SPECIFIED LOADS:

TOP	CH.	LL	=	23.3	PSF
		DL	=	3.0	PSF
BOT	CH.	LL	=	0.0	PSF
		DL	=	7.0	PSF
TOTAL	LOAD		=	33.3	PSF

SPACING = 24.0 IN. C/C

THIS TRUSS IS DESIGNED FOR RESIDENTIAL OR SMALL BUILDING REQUIREMENTS OF PART 9, NBCC 2010

THIS DESIGN COMPLIES WITH:
- PART 9 OF OBC 2012 , BCBC 2012 , ABC 2014
- CSA 086-09
- TPIC 2011

DESIGN ASSUMPTIONS
-OVERHANG NOT TO BE ALTERED OR CUT OFF.

(55 % OF 27.2 P.S.F. G.S.L. PLUS 8.4 P.S.F. RAIN LOAD) EQUALS 23.3 P.S.F. SPECIFIED ROOF LIVE LOAD

CSI: TC=0.10 (1-2:1) , BC=0.02 (18-19:1) , WB=0.10 (6-15:1) , SSI=0.07 (1-2:1)

DOL LUMBER=1.00 NAIL=1.00 LS BEND=1.10 COMP=1.10 SHEAR=1.10 TENS= 1.10

COMPANION LIVE LOAD FACTOR = 0.50

TRUSS PLATE MANUFACTURER IS NOT RESPONSIBLE FOR QUALITY CONTROL IN THE TRUSS MANUFACTURING PLANT .

NAIL VALUES

PLATE	GRIP(DRY) (PSI) MAX	MIN	SHEAR (PLI) MAX	MIN	SECTION (PLI) MAX	MIN
MT20	618	354	1667	822	2284	1656

PLATE PLACEMENT TOL. = 0.250 inches

PLATE ROTATION TOL. = 0.5 Deg.

JSI GRIP= 0.12 (2) (INPUT = 0.90)
JSI METAL= 0.06 (6) (INPUT = 1.00)

LICENSED PROFESSIONAL ENGINEER
R.M. TREVISAN
100136551
March 16th, 2017
PROVINCE OF ONTARIO

RECEIVED
TOWN OF MILTON
MAR 29, 2017
17-5337
BUILDING DIVISION

KOTT

SCALE = 1:30.9

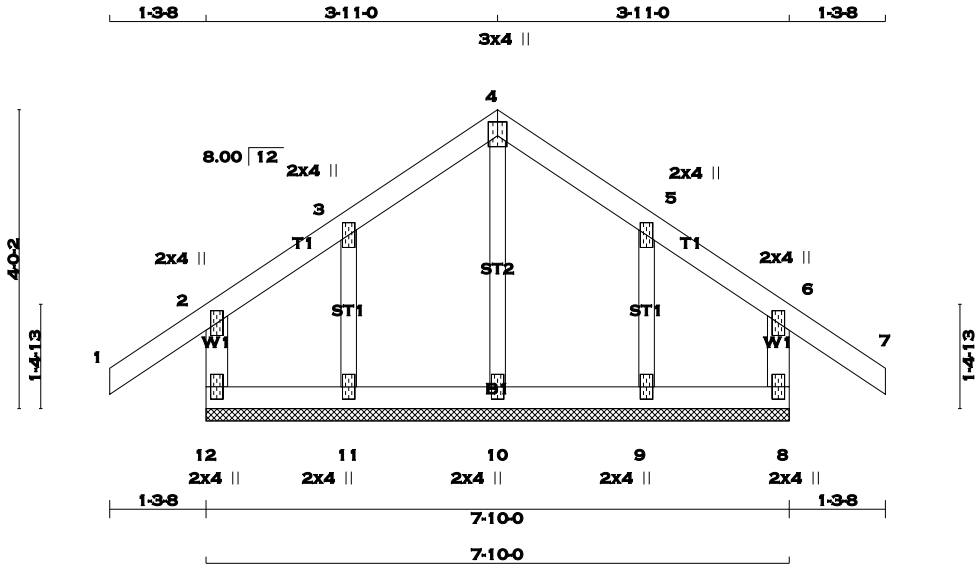

TOTAL WEIGHT = 32 lb [M]

LUMBER

N. L. G. A. RULES

CHORDS	SIZE		LUMBER	DESCR.
12 - 2	2x4	DRY	No.2	SPF
1 - 4	2x4	DRY	No.2	SPF
4 - 7	2x4	DRY	No.2	SPF
8 - 6	2x4	DRY	No.2	SPF
12 - 8	2x4	DRY	No.2	SPF
ALL WEBS	2x3	DRY	No.2	SPF
ALL GABLE WEBS	2x3	DRY	No.2	SPF

DRY: SEASONED LUMBER.

GABLE STUDS SPACED AT 2-0-0 OC.

PLATES (table is in inches)

JT	TYPE	PLATES	W	LEN	Y	X
2	TMV+p	MT20	2.0	4.0		
3	TMW+w	MT20	2.0	4.0		
4	TTW+p	MT20	3.0	4.0	2.25	1.50
5	TMW+w	MT20	2.0	4.0		
6	TMV+p	MT20	2.0	4.0		
8	BMV1+p	MT20	2.0	4.0		
9, 10, 11						
9	BMW1+w	MT20	2.0	4.0		
12	BMV1+p	MT20	2.0	4.0		

A SIZE FOR SIZE SUBSTITUTION OF MITEK MII20 WITH TEE-LOK TL20 PLATES IS ALLOWED.

DIMENSIONS, SUPPORTS AND LOADINGS SPECIFIED BY FABRICATOR TO BE VERIFIED BY BUILDING DESIGNER

BEARINGS

THIS TRUSS DESIGNED FOR CONTINUOUS BEARINGS.

THIS TRUSS REQUIRES RIGID SHEATHING ON EXPOSED FACE.

BEARING MATERIAL TO BE SPF NO.2 OR BETTER AT JOINT(S)

BRACING

TOP CHORD TO BE SHEATHED OR MAX. PURLIN SPACING = 10.00 FT.
MAX. UNBRACED BOTTOM CHORD LENGTH = 6.25 FT. OR RIGID CEILING DIRECTLY APPLIED.

ALL PITCH BREAKS AND PERIMETER CORNER JOINTS MUST BE LATERALLY RESTRAINED.

LOADING

TOTAL LOAD CASES: (4)

CHORDS

MEMB. FR-TO	MAX. FACTORED FORCE (LBS)	FACTORED VERT. LOAD (PLF) FROM	TO	LC1 MAX CSI (LC)	MAX. UNBRAC LENGTH
12- 2	-177 / 0	0.0	0.0	0.04 (1)	7.81
1- 2	0 / 29	-77.4	-77.4	0.10 (1)	10.00
2- 3	-2 / 18	-77.4	-77.4	0.07 (1)	10.00
3- 4	0 / 34	-77.4	-77.4	0.05 (1)	10.00
4- 5	0 / 34	-77.4	-77.4	0.05 (1)	10.00
5- 6	-2 / 18	-77.4	-77.4	0.07 (1)	10.00
6- 7	0 / 29	-77.4	-77.4	0.10 (1)	10.00
8- 6	-177 / 0	0.0	0.0	0.04 (1)	7.81
12-11	-22 / 0	-17.5	-17.5	0.01 (4)	6.25
11-10	-26 / 0	-17.5	-17.5	0.01 (4)	6.25
10- 9	-26 / 0	-17.5	-17.5	0.01 (4)	6.25
9- 8	-22 / 0	-17.5	-17.5	0.01 (4)	6.25

WEBS

MEMB. FR-TO	MAX. FACTORED FORCE (LBS)	MAX CSI (LC)
10- 4	-205 / 0	0.05 (1)
11- 3	-130 / 0	0.02 (1)
9- 5	-130 / 0	0.02 (1)

DESIGN CRITERIA

SPECIFIED LOADS:

TOP	CH.	LL	=	23.3	PSF
		DL	=	3.0	PSF
BOT	CH.	LL	=	0.0	PSF
		DL	=	7.0	PSF
TOTAL	LOAD		=	33.3	PSF

SPACING = 24.0 IN. C/C

THIS TRUSS IS DESIGNED FOR RESIDENTIAL OR SMALL BUILDING REQUIREMENTS OF PART 9, NBCC 2010

THIS DESIGN COMPLIES WITH:
- PART 9 OF OBC 2012 , BCBC 2012 , ABC 2014
- CSA 086-09
- TPIC 2011

DESIGN ASSUMPTIONS
-OVERHANG NOT TO BE ALTERED OR CUT OFF.

(55 % OF 27.2 P.S.F. G.S.L. PLUS 8.4 P.S.F. RAIN LOAD) EQUALS 23.3 P.S.F. SPECIFIED ROOF LIVE LOAD

CSI: TC=0.10 (1-2:1) , BC=0.01 (8-9:4) , WB=0.05 (4-10:1) , SSI=0.07 (6-7:1)

DOL LUMBER=1.00 NAIL=1.00 LS BEND=1.10 COMP=1.10 SHEAR=1.10 TENS= 1.10

COMPANION LIVE LOAD FACTOR = 0.50

TRUSS PLATE MANUFACTURER IS NOT RESPONSIBLE FOR QUALITY CONTROL IN THE TRUSS MANUFACTURING PLANT .

NAIL VALUES

PLATE	GRIP(DRY) (PSI) MAX	MIN	SHEAR (PLI) MAX	MIN	SECTION (PLI) MAX	MIN
MT20	618	354	1667	822	2284	1656

PLATE PLACEMENT TOL. = 0.250 inches

PLATE ROTATION TOL. = 0.5 Deg.

JSI GRIP= 0.14 (4) (INPUT = 0.90)
JSI METAL= 0.07 (4) (INPUT = 1.00)

LICENSED PROFESSIONAL ENGINEER
P. M. TREVISAN
100136551
March 16th, 2017
PROVINCE OF ONTARIO

RECEIVED
TOWN OF MILTON
MAR 29, 2017
17-5337
BUILDING DIVISION

KOTT

Version 8.100 S Feb 9 2017 MiTek Industries, Inc. Thu Mar 16 11:57:28 2017 Page 1
ID:EvTixTQDI5yR1QLotZTBr_yE?HJ-C3IHblH6mmv8W7KF9OO07FTszRk2H2XPsS0I9HzaNkL

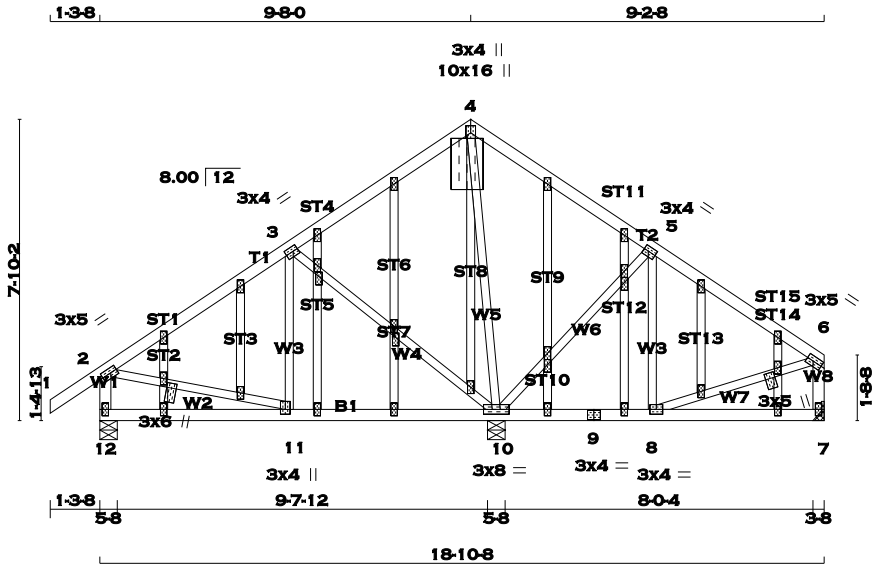

TOTAL WEIGHT = 112 lb

[M][F]

LUMBER

N. L. G. A. RULES

CHORDS	SIZE		LUMBER	DESCR.
1 - 4	2x4	DRY	No.2	SPF
4 - 6	2x4	DRY	No.2	SPF
12 - 2	2x4	DRY	No.2	SPF
7 - 6	2x4	DRY	No.2	SPF
12 - 9	2x4	DRY	No.2	SPF
9 - 7	2x4	DRY	No.2	SPF
ALL WEBS EXCEPT	2x3	DRY	No.2	SPF
ALL GABLE WEBS	2x3	DRY	No.2	SPF

DRY: SEASONED LUMBER.

GABLE STUDS SPACED AT 2-0-0 OC.

PLATES (table is in inches)

JT	TYPE	PLATES	W	LEN	Y	X
2	TMVW-t	MT20	3.0	5.0	1.50	2.00
3	TMWW-t	MT20	3.0	4.0	1.50	1.50
4	TTW+p	MT20	3.0	4.0	2.25	1.50
4	NP+p	MT20	10.0	16.0	1.00	5.00
5	TMWW-t	MT20	3.0	4.0	1.50	1.50
6	TMVW-t	MT20	3.0	5.0	1.50	2.00
7	BMV1+p	MT20	2.0	4.0		
8	BMWW-t	MT20	3.0	4.0		
9	BS-t	MT20	3.0	4.0		
10	BMWWW1-t	MT20	3.0	8.0		
11	BMWW+t	MT20	3.0	4.0	1.50	1.50
12	BMV1+p	MT20	2.0	4.0		
13, 14, 15, 16, 17, 18, 19, 20, 21, 22, 23, 24, 25, 26, 27, 28, 29, 30, 31, 32, 33, 34, 35						
13	NP+w	MT20	2.0	4.0		
14	NP+w	MT20	2.0	4.0	2.00	0.25
17	NP+w	MT20	2.0	4.0	2.00	0.25
22	NP+t	MT20	3.0	6.0	1.50	0.25
27	NP+w	MT20	2.0	4.0	1.75	1.00
30	NP+w	MT20	2.0	4.0	1.75	1.00
35	NP+t	MT20	3.0	5.0	1.75	0.25

A SIZE FOR SIZE SUBSTITUTION OF MITEK MII20 WITH TEE-LOK TL20 PLATES IS ALLOWED.

DIMENSIONS, SUPPORTS AND LOADINGS SPECIFIED BY FABRICATOR TO BE VERIFIED BY BUILDING DESIGNER

BEARINGS

JT	FACTORED GROSS REACTION VERT	HORZ	MAXIMUM FACTORED GROSS REACTION DOWN	HORZ	UPLIFT	INPUT BRG IN-SX	REQRD BRG IN-SX
12	530	0	530	0	0	5-8	5-8
10	1042	0	1042	0	0	5-8	5-8
7	324	0	324	0	0	HANGER BY OTHERS MIN. SEAT SIZE: 3-8	

UNFACTORED REACTIONS

JT	1ST LCASE COMBINED	MAX./MIN. COMPONENT REACTIONS SNOW	LIVE	PERM.LIVE	WIND	DEAD	SOIL
12	369	276 / 0	0 / 0	0 / 0	0 / 0	94 / 0	0 / 0
10	733	504 / 0	0 / 0	0 / 0	0 / 0	229 / 0	0 / 0
7	226	163 / 0	0 / 0	0 / 0	0 / 0	63 / 0	0 / 0

BEARING MATERIAL TO BE SPF NO.2 OR BETTER AT JOINT(S) 12, 10

BRACING

TOP CHORD TO BE SHEATHED OR MAX. PURLIN SPACING = 6.25 FT.
MAX. UNBRACED BOTTOM CHORD LENGTH = 10.00 FT. OR RIGID CEILING DIRECTLY APPLIED.

ALL PITCH BREAKS AND PERIMETER CORNER JOINTS MUST BE LATERALLY RESTRAINED.

LOADING

TOTAL LOAD CASES: (4)

CHORDS MEMB. FR-TO	MAX. FACTORED FORCE (LBS)	FACTORED VERT. LOAD (PLF) FROM	TO	LC1 MAX CSI (LC)	MAX. UNBRAC LENGTH	WEBS MEMB. FR-TO	MAX. FACTORED FORCE (LBS)	MAX CSI (LC)
1- 2	0 / 29	-77.4	-77.4	0.10 (1)	10.00	11- 3	0 / 99	0.03 (4)
2- 3	-306 / 0	-77.4	-77.4	0.24 (1)	6.25	3-10	-441 / 0	0.40 (1)
3- 4	0 / 55	-77.4	-77.4	0.31 (1)	10.00	4-10	-390 / 0	0.45 (1)
4- 5	0 / 99	-77.4	-77.4	0.29 (1)	10.00	10- 5	-396 / 0	0.24 (1)
5- 6	-175 / 0	-77.4	-77.4	0.21 (1)	6.25	8- 5	0 / 78	0.03 (4)
12- 2	-496 / 0	0.0	0.0	0.05 (1)	7.81	2-11	0 / 282	0.06 (1)
7- 6	-290 / 0	0.0	0.0	0.03 (1)	7.81	8- 6	0 / 175	0.04 (1)
12-11	0 / 0	-17.5	-17.5	0.11 (4)	10.00			
11-10	0 / 276	-17.5	-17.5	0.13 (4)	10.00			
10- 9	0 / 167	-17.5	-17.5	0.09 (4)	10.00			
9- 8	0 / 167	-17.5	-17.5	0.09 (4)	10.00			
8- 7	0 / 0	-17.5	-17.5	0.07 (4)	10.00			

DESIGN CRITERIA

SPECIFIED LOADS:

TOP	CH.	LL	=	23.3	PSF
		DL	=	3.0	PSF
BOT	CH.	LL	=	0.0	PSF
		DL	=	7.0	PSF
TOTAL	LOAD		=	33.3	PSF

SPACING = 24.0 IN. C/C

THIS TRUSS IS DESIGNED FOR RESIDENTIAL OR SMALL BUILDING REQUIREMENTS OF PART 9, NBCC 2010

THIS DESIGN COMPLIES WITH:
- PART 9 OF OBC 2012 , BCBC 2012 , ABC 2014
- CSA 086-09
- TPIC 2011

(55 % OF 27.2 P.S.F. G.S.L. PLUS 8.4 P.S.F. RAIN LOAD) EQUALS 23.3 P.S.F. SPECIFIED ROOF LIVE LOAD

ALLOWABLE DEFL.(LL)= L/360 (0.34")
CALCULATED VERT. DEFL.(LL) = L/ 999 (0.01")
ALLOWABLE DEFL.(TL)= L/360 (0.34")
CALCULATED VERT. DEFL.(TL) = L/ 999 (0.02")

CSI: TC=0.31 (3-4:1) , BC=0.13 (10-11:4) , WB=0.45 (4-10:1) , SSI=0.15 (2-3:1)

DOL LUMBER=1.00 NAIL=1.00 LS BEND=1.10 COMP=1.10 SHEAR=1.10 TENS= 1.10

COMPANION LIVE LOAD FACTOR = 0.50

TRUSS PLATE MANUFACTURER IS NOT RESPONSIBLE FOR QUALITY CONTROL IN THE TRUSS MANUFACTURING PLANT .

NAIL VALUES

PLATE	GRIP(DRY) (PSI) MAX	MIN	SHEAR (PLI) MAX	MIN	SECTION (PLI) MAX	MIN
MT20	618	354	1667	822	2284	1656

PLATE PLACEMENT TOL. = 0.250 inches

PLATE ROTATION TOL. = 5.0 Deg.

JSI GRIP= 0.83 (11) (INPUT = 0.90)
JSI METAL= 0.14 (2) (INPUT = 1.00)

LICENSED PROFESSIONAL ENGINEER
P. M. TREVISAN
100136551
March 16th, 2017
PROVINCE OF ONTARIO

RECEIVED
TOWN OF MILTON
MAR 29, 2017
17-5337
BUILDING DIVISION

KOTT

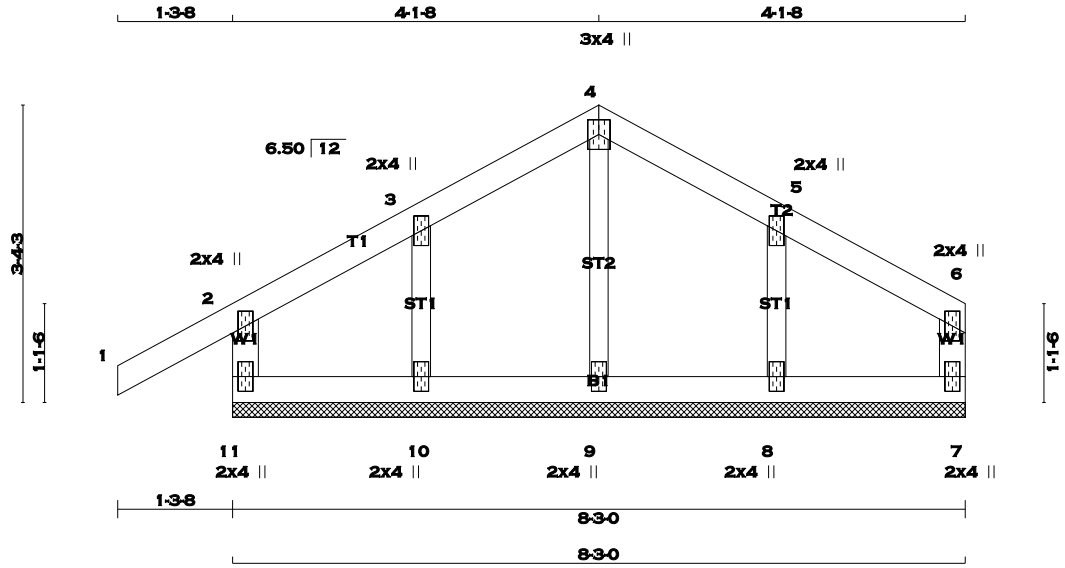

TOTAL WEIGHT = 29 lb

LUMBER

N. L. G. A. RULES

CHORDS	SIZE		LUMBER	DESCR.
11 - 2	2x4	DRY	No.2	SPF
1 - 4	2x4	DRY	No.2	SPF
4 - 6	2x4	DRY	No.2	SPF
7 - 6	2x4	DRY	No.2	SPF
11 - 7	2x4	DRY	No.2	SPF
ALL WEBS	2x3	DRY	No.2	SPF
ALL GABLE WEBS	2x3	DRY	No.2	SPF

DRY: SEASONED LUMBER.

GABLE STUDS SPACED AT 2-0-0 OC.

PLATES (table is in inches)

JT	TYPE	PLATES	W	LEN	Y	X
2	TMV+p	MT20	2.0	4.0		
3	TMW+w	MT20	2.0	4.0		
4	TTW+p	MT20	3.0	4.0		
5	TMW+w	MT20	2.0	4.0		
6	TMV+p	MT20	2.0	4.0		
7	BMV1+p	MT20	2.0	4.0		
8, 9, 10						
8	BMW1+w	MT20	2.0	4.0		
11	BMV1+p	MT20	2.0	4.0		

A SIZE FOR SIZE SUBSTITUTION OF MITEK MII20 WITH TEE-LOK TL20 PLATES IS ALLOWED.

DIMENSIONS, SUPPORTS AND LOADINGS SPECIFIED BY FABRICATOR TO BE VERIFIED BY BUILDING DESIGNER

BEARINGS

THIS TRUSS DESIGNED FOR CONTINUOUS BEARINGS.

THIS TRUSS REQUIRES RIGID SHEATHING ON EXPOSED FACE.

BEARING MATERIAL TO BE SPF NO.2 OR BETTER AT JOINT(S)

BRACING

TOP CHORD TO BE SHEATHED OR MAX. PURLIN SPACING = 6.25 FT.
MAX. UNBRACED BOTTOM CHORD LENGTH = 10.00 FT. OR RIGID CEILING DIRECTLY APPLIED.

ALL PITCH BREAKS AND PERIMETER CORNER JOINTS MUST BE LATERALLY RESTRAINED.

LOADING

TOTAL LOAD CASES: (4)

CHORDS

MEMB. FR-TO	MAX. FACTORED FORCE (LBS)	FACTORED VERT. LOAD (PLF) FROM	TO	LC1 MAX CSI (LC)	MAX. UNBRAC LENGTH
11- 2	-201 / 0	0.0	0.0	0.02 (1)	7.81
1- 2	0 / 25	-77.4	-77.4	0.10 (1)	10.00
2- 3	-33 / 0	-77.4	-77.4	0.04 (1)	6.25
3- 4	-26 / 0	-77.4	-77.4	0.04 (1)	6.25
4- 5	-27 / 0	-77.4	-77.4	0.04 (1)	6.25
5- 6	-30 / 0	-77.4	-77.4	0.04 (1)	6.25
7- 6	-90 / 0	0.0	0.0	0.03 (1)	7.81
11-10	0 / 29	-17.5	-17.5	0.02 (4)	10.00
10- 9	0 / 23	-17.5	-17.5	0.02 (4)	10.00
9- 8	0 / 23	-17.5	-17.5	0.02 (4)	10.00
8- 7	0 / 29	-17.5	-17.5	0.02 (4)	10.00

WEBS

MEMB. FR-TO	MAX. FACTORED FORCE (LBS)	MAX CSI (LC)
9- 4	-134 / 0	0.03 (1)
10- 3	-156 / 0	0.02 (1)
8- 5	-163 / 0	0.02 (1)

DESIGN CRITERIA

SPECIFIED LOADS:

TOP	CH.	LL	=	23.3	PSF
		DL	=	3.0	PSF
BOT	CH.	LL	=	0.0	PSF
		DL	=	7.0	PSF
TOTAL	LOAD		=	33.3	PSF

SPACING = 24.0 IN. C/C

THIS TRUSS IS DESIGNED FOR RESIDENTIAL OR SMALL BUILDING REQUIREMENTS OF PART 9, NBCC 2010

THIS DESIGN COMPLIES WITH:
- PART 9 OF OBC 2012 , BCBC 2012 , ABC 2014
- CSA 086-09
- TPIC 2011

DESIGN ASSUMPTIONS
-OVERHANG NOT TO BE ALTERED OR CUT OFF.

(55 % OF 27.2 P.S.F. G.S.L. PLUS 8.4 P.S.F. RAIN LOAD) EQUALS 23.3 P.S.F. SPECIFIED ROOF LIVE LOAD

CSI: TC=0.10 (1-2:1) , BC=0.02 (7-8:4) , WB=0.03 (4-9:1) , SSI=0.07 (1-2:1)

DOL LUMBER=1.00 NAIL=1.00 LS BEND=1.10 COMP=1.10 SHEAR=1.10 TENS= 1.10

COMPANION LIVE LOAD FACTOR = 0.50

TRUSS PLATE MANUFACTURER IS NOT RESPONSIBLE FOR QUALITY CONTROL IN THE TRUSS MANUFACTURING PLANT .

NAIL VALUES

PLATE	GRIP(DRY) (PSI) MAX	MIN	SHEAR (PLI) MAX	MIN	SECTION (PLI) MAX	MIN
MT20	618	354	1667	822	2284	1656

PLATE PLACEMENT TOL. = 0.250 inches

PLATE ROTATION TOL. = 5.0 Deg.

JSI GRIP= 0.14 (2) (INPUT = 0.90)
JSI METAL= 0.06 (2) (INPUT = 1.00)

LICENSED PROFESSIONAL ENGINEER
P. M. TREVISAN
100136551
March 16th, 2017
PROVINCE OF ONTARIO

RECEIVED
TOWN OF MILTON
MAR 29, 2017
17-5337
BUILDING DIVISION

KOTT

JOB NAME	TRUSS NAME	QUANTITY	PLY	JOB DESC.	DRWG NO.
PT0317-097	GAB05	2	1	TRUSS DESC. LECCO RIDGE-BLOCK 344	

KOTT , Stouffville, ON, CGC

Version 8.100 S Feb 9 2017 MiTek Industries, Inc. Thu Mar 16 11:57:29 2017 Page 1
ID:EvTixTQDI5yR1QLotZTBr_yE?HJ-gFsfp5HkX41?8GvRj6vFfT046r6p0bNY56mrikzaNkK

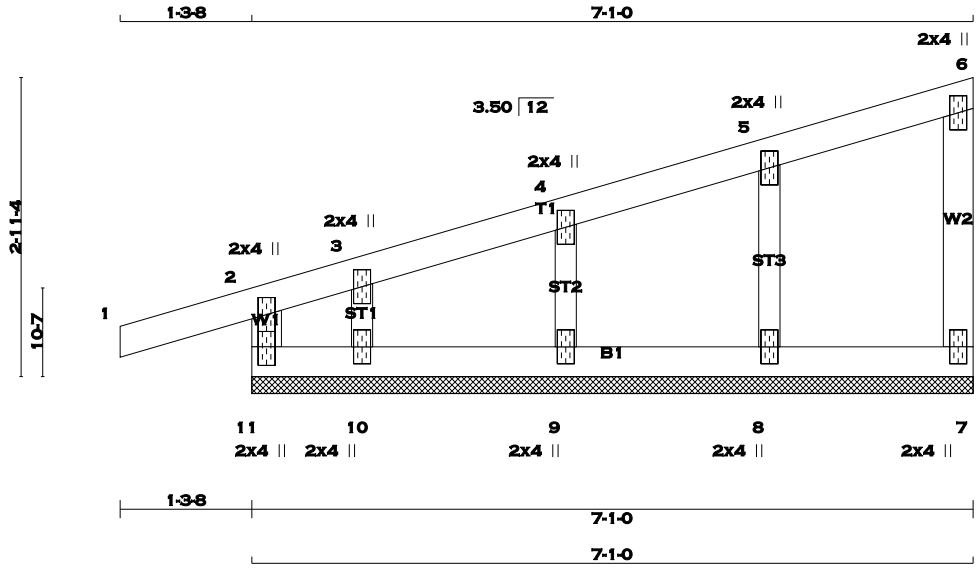

SCALE = 1:22.6

TOTAL WEIGHT = 2 X 24 = 48 lb [M]

LUMBER

N. L. G. A. RULES

CHORDS	SIZE		LUMBER	DESCR.
11 - 2	2x4	DRY	No.2	SPF
1 - 6	2x4	DRY	No.2	SPF
7 - 6	2x4	DRY	No.2	SPF
11 - 7	2x4	DRY	No.2	SPF
ALL WEBS	2x3	DRY	No.2	SPF
ALL GABLE WEBS	2x3	DRY	No.2	SPF

DRY: SEASONED LUMBER.

GABLE STUDS SPACED AT 2-0-0 OC.

PLATES (table is in inches)

JT	TYPE	PLATES	W	LEN	Y	X
2	TMV+p	MT20	2.0	4.0		
3, 4, 5						
3	TMW+w	MT20	2.0	4.0		
6	TMV+p	MT20	2.0	4.0		
7	BMV1+p	MT20	2.0	4.0		
8, 9, 10						
8	BMW1+w	MT20	2.0	4.0		
11	BMV1+p	MT20	2.0	4.0	2.25	1.00

A SIZE FOR SIZE SUBSTITUTION OF MITEK MII20 WITH TEE-LOK TL20 PLATES IS ALLOWED.

DIMENSIONS, SUPPORTS AND LOADINGS SPECIFIED BY FABRICATOR TO BE VERIFIED BY BUILDING DESIGNER

BEARINGS

THIS TRUSS DESIGNED FOR CONTINUOUS BEARINGS.

THIS TRUSS REQUIRES RIGID SHEATHING ON EXPOSED FACE.

BEARING MATERIAL TO BE SPF NO.2 OR BETTER AT JOINT(S)

BRACING

TOP CHORD TO BE SHEATHED OR MAX. PURLIN SPACING = 6.25 FT.
MAX. UNBRACED BOTTOM CHORD LENGTH = 10.00 FT. OR RIGID CEILING DIRECTLY APPLIED.

ALL PITCH BREAKS AND PERIMETER CORNER JOINTS MUST BE LATERALLY RESTRAINED.

LOADING

TOTAL LOAD CASES: (4)

CHORDS

MEMB. FR-TO	MAX. FACTORED FORCE (LBS)	FACTORED VERT. LOAD (PLF) FROM	TO	LC1 MAX CSI (LC)	MAX. UNBRAC LENGTH
11- 2	-191 / 0	0.0	0.0	0.03 (1)	7.81
1- 2	0 / 14	-77.4	-77.4	0.10 (1)	10.00
2- 3	-29 / 0	-77.4	-77.4	0.07 (1)	6.25
3- 4	-12 / 0	-77.4	-77.4	0.04 (1)	6.25
4- 5	-9 / 0	-77.4	-77.4	0.04 (1)	10.00
5- 6	-8 / 0	-77.4	-77.4	0.04 (1)	10.00
7- 6	-69 / 0	0.0	0.0	0.02 (1)	7.81
11-10	0 / 16	-17.5	-17.5	0.03 (1)	10.00
10- 9	0 / 13	-17.5	-17.5	0.01 (4)	10.00
9- 8	0 / 9	-17.5	-17.5	0.02 (4)	10.00
8- 7	0 / 6	-17.5	-17.5	0.02 (4)	10.00

WEBS

MEMB. FR-TO	MAX. FACTORED FORCE (LBS)	MAX CSI (LC)
8- 5	-164 / 0	0.03 (1)
9- 4	-162 / 0	0.02 (1)
10- 3	-66 / 0	0.01 (1)

DESIGN CRITERIA

SPECIFIED LOADS:

TOP	CH.	LL	=	23.3	PSF
		DL	=	3.0	PSF
BOT	CH.	LL	=	0.0	PSF
		DL	=	7.0	PSF
TOTAL	LOAD		=	33.3	PSF

SPACING = 24.0 IN. C/C

THIS TRUSS IS DESIGNED FOR RESIDENTIAL OR SMALL BUILDING REQUIREMENTS OF PART 9, NBCC 2010

THIS DESIGN COMPLIES WITH:
- PART 9 OF OBC 2012 , BCBC 2012 , ABC 2014
- CSA 086-09
- TPIC 2011

DESIGN ASSUMPTIONS
-OVERHANG NOT TO BE ALTERED OR CUT OFF.

(55 % OF 27.2 P.S.F. G.S.L. PLUS 8.4 P.S.F. RAIN LOAD) EQUALS 23.3 P.S.F. SPECIFIED ROOF LIVE LOAD

CSI: TC=0.10 (1-2:1) , BC=0.03 (10-11:1) , WB=0.03 (5-8:1) , SSI=0.08 (1-2:1)

DOL LUMBER=1.00 NAIL=1.00 LS BEND=1.10 COMP=1.10 SHEAR=1.10 TENS= 1.10

COMPANION LIVE LOAD FACTOR = 0.50

TRUSS PLATE MANUFACTURER IS NOT RESPONSIBLE FOR QUALITY CONTROL IN THE TRUSS MANUFACTURING PLANT .

NAIL VALUES

PLATE	GRIP(DRY) (PSI) MAX	MIN	SHEAR (PLI) MAX	MIN	SECTION (PLI) MAX	MIN
MT20	618	354	1667	822	2284	1656

PLATE PLACEMENT TOL. = 0.250 inches

PLATE ROTATION TOL. = 5.0 Deg.

JSI GRIP= 0.10 (2) (INPUT = 0.90)
JSI METAL= 0.04 (2) (INPUT = 1.00)

LICENSED PROFESSIONAL ENGINEER
P. M. TREVISAN
100136551
March 16th, 2017
PROVINCE OF ONTARIO

RECEIVED
TOWN OF MILTON
MAR 29, 2017
17-5337
BUILDING DIVISION

KOTT

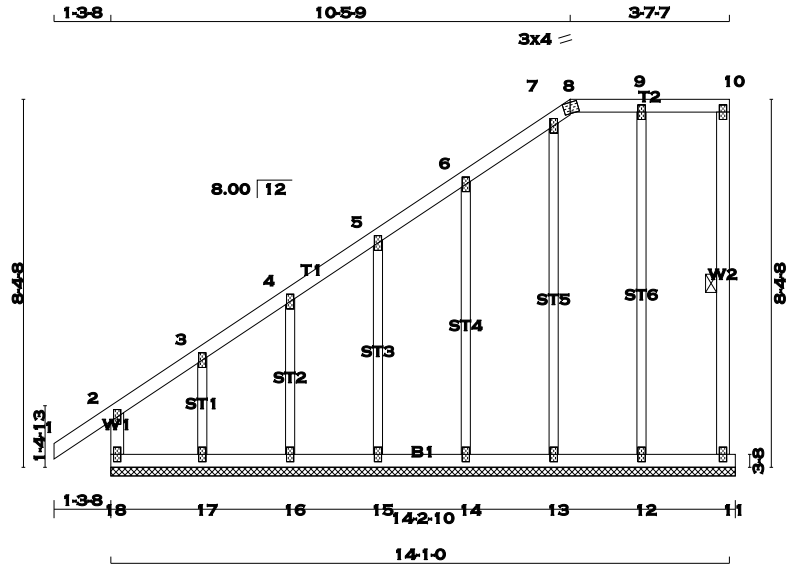

TOTAL WEIGHT = 2 X 73 = 146 lb [M]

LUMBER

N. L. G. A. RULES

CHORDS	SIZE		LUMBER	DESCR.
18 - 2	2x4	DRY	No.2	SPF
1 - 8	2x4	DRY	No.2	SPF
8 - 10	2x4	DRY	No.2	SPF
11 - 10	2x4	DRY	No.2	SPF
18 - 11	2x4	DRY	No.2	SPF
ALL WEBS	2x3	DRY	No.2	SPF
ALL GABLE WEBS	2x3	DRY	No.2	SPF

DRY: SEASONED LUMBER.

GABLE STUDS SPACED AT 2-0-0 OC.

PLATES (table is in inches)

JT	TYPE	PLATES	W	LEN	Y	X
2	TMV+p	MT20	2.0	4.0		
3, 4, 5, 6, 7, 9						
3	TMW+w	MT20	2.0	4.0		
8	TT-m	MT20	3.0	4.0	Edge	
10	TMV+p	MT20	2.0	4.0		
11	BMV1+p	MT20	2.0	4.0		
12, 13, 14, 15, 16, 17						
12	BMW1+w	MT20	2.0	4.0		
18	BMV1+p	MT20	2.0	4.0		

Edge - INDICATES REFERENCE CORNER OF PLATE TOUCHES EDGE OF CHORD.

A SIZE FOR SIZE SUBSTITUTION OF MITEK MII20 WITH TEE-LOK TL20 PLATES IS ALLOWED.

DIMENSIONS, SUPPORTS AND LOADINGS SPECIFIED BY FABRICATOR TO BE VERIFIED BY BUILDING DESIGNER

BEARINGS

THIS TRUSS DESIGNED FOR CONTINUOUS BEARINGS.

THIS TRUSS REQUIRES RIGID SHEATHING ON EXPOSED FACE.

BEARING MATERIAL TO BE SPF NO.2 OR BETTER AT JOINT(S)

BRACING

TOP CHORD TO BE SHEATHED OR MAX. PURLIN SPACING = 6.25 FT.
MAX. UNBRACED BOTTOM CHORD LENGTH = 10.00 FT. OR RIGID CEILING DIRECTLY APPLIED.

ALL PITCH BREAKS AND PERIMETER CORNER JOINTS MUST BE LATERALLY RESTRAINED.

1 - 2x3 SPF No.2 LATERAL BRACE(S) AT 1/ 2 LENGTH OF 10-11. DBS = 20-0-0 . CBF = 8 LBS.

DBS = DIAGONAL BRACE SPACING (MAX). CBF = CUMULATIVE BRACING FORCE. FASTEN LATERAL BRACE(S) USING (0.122"X3") SPIRAL NAILS : 1 NAIL FOR 2x3 BRACE(S), 2 FOR 1x4, 2x4, 2x5, 3 FOR 2x6, 4 FOR 2x8, 5 FOR 2x10, AND 6 FOR 2x12.

END VERTICAL(S) MUST BE SHEATHED OR HAVE BRACES AS INDICATED IN THE MAX. UNBRACED LENGTH COLUMN OF THE TABLE BELOW

LOADING

TOTAL LOAD CASES: (4)

CHORDS

MEMB. FR-TO	MAX. FACTORED FORCE (LBS)	FACTORED VERT. LOAD LC1 (PLF) FROM	TO	MAX CSI (LC)	MAX. UNBRAC LENGTH
18- 2	-195 / 0	0.0	0.0	0.01 (1)	7.81
1- 2	0 / 29	-77.4	-77.4	0.10 (1)	10.00
2- 3	-20 / 0	-77.4	-77.4	0.04 (1)	6.25
3- 4	-13 / 0	-77.4	-77.4	0.04 (1)	6.25
4- 5	-9 / 0	-77.4	-77.4	0.04 (1)	10.00
5- 6	-6 / 0	-77.4	-77.4	0.04 (1)	10.00
6- 7	-4 / 0	-77.4	-77.4	0.04 (1)	10.00
7- 8	-37 / 0	-77.4	-77.4	0.04 (1)	6.25
8- 9	-1 / 0	-77.4	-77.4	0.04 (1)	10.00
9-10	-2 / 0	-77.4	-77.4	0.04 (1)	10.00
11-10	-68 / 0	0.0	0.0	0.01 (1)	6.25
18-17	0 / 16	-17.5	-17.5	0.02 (4)	10.00
17-16	0 / 11	-17.5	-17.5	0.02 (4)	10.00
16-15	0 / 8	-17.5	-17.5	0.01 (4)	10.00
15-14	0 / 5	-17.5	-17.5	0.01 (4)	10.00
14-13	0 / 3	-17.5	-17.5	0.01 (4)	10.00
13-12	0 / 2	-17.5	-17.5	0.02 (4)	10.00
12-11	0 / 2	-17.5	-17.5	0.02 (4)	10.00

WEBS

MEMB. FR-TO	MAX. FACTORED FORCE (LBS)	MAX CSI (LC)
12- 9	-168 / 0	0.23 (1)
13- 7	-155 / 0	0.20 (1)
14- 6	-153 / 0	0.12 (1)
15- 5	-153 / 0	0.07 (1)
16- 4	-153 / 0	0.04 (1)
17- 3	-150 / 0	0.03 (1)

DESIGN CRITERIA

SPECIFIED LOADS:

TOP	CH.	LL	=	23.3	PSF
		DL	=	3.0	PSF
BOT	CH.	LL	=	0.0	PSF
		DL	=	7.0	PSF
TOTAL	LOAD		=	33.3	PSF

SPACING = 24.0 IN. C/C

LOADING IN FLAT SECTION BASED ON A SLOPE OF 6.00/12

THIS TRUSS IS DESIGNED FOR RESIDENTIAL OR SMALL BUILDING REQUIREMENTS OF PART 9, NBCC 2010

THIS DESIGN COMPLIES WITH:
- PART 9 OF OBC 2012 , BCBC 2012 , ABC 2014
- CSA 086-09
- TPIC 2011

DESIGN ASSUMPTIONS
-OVERHANG NOT TO BE ALTERED OR CUT OFF.

(55 % OF 27.2 P.S.F. G.S.L. PLUS 8.4 P.S.F. RAIN LOAD) EQUALS 23.3 P.S.F. SPECIFIED ROOF LIVE LOAD

CSI: TC=0.10 (1-2:1) , BC=0.02 (17-18:4) , WB=0.23 (9-12:1) , SSI=0.07 (1-2:1)

DOL LUMBER=1.00 NAIL=1.00 LS BEND=1.10 COMP=1.10 SHEAR=1.10 TENS= 1.10

COMPANION LIVE LOAD FACTOR = 0.50

TRUSS PLATE MANUFACTURER IS NOT RESPONSIBLE FOR QUALITY CONTROL IN THE TRUSS MANUFACTURING PLANT .

NAIL VALUES

PLATE	GRIP(DRY) (PSI) MAX	MIN	SHEAR (PLI) MAX	MIN	SECTION (PLI) MAX	MIN
MT20	618	354	1667	822	2284	1656

PLATE PLACEMENT TOL. = 0.250 inches

PLATE ROTATION TOL. = 5.0 Deg.

JSI GRIP= 0.14 (2) (INPUT = 0.90)
JSI METAL= 0.05 (2) (INPUT = 1.00)

LICENSED PROFESSIONAL ENGINEER
P. M. TREVISAN
100136551
March 16th, 2017
PROVINCE OF ONTARIO

RECEIVED
TOWN OF MILTON
MAR 29, 2017
17-5337
BUILDING DIVISION

KOTT

SCALE = 1:22.6

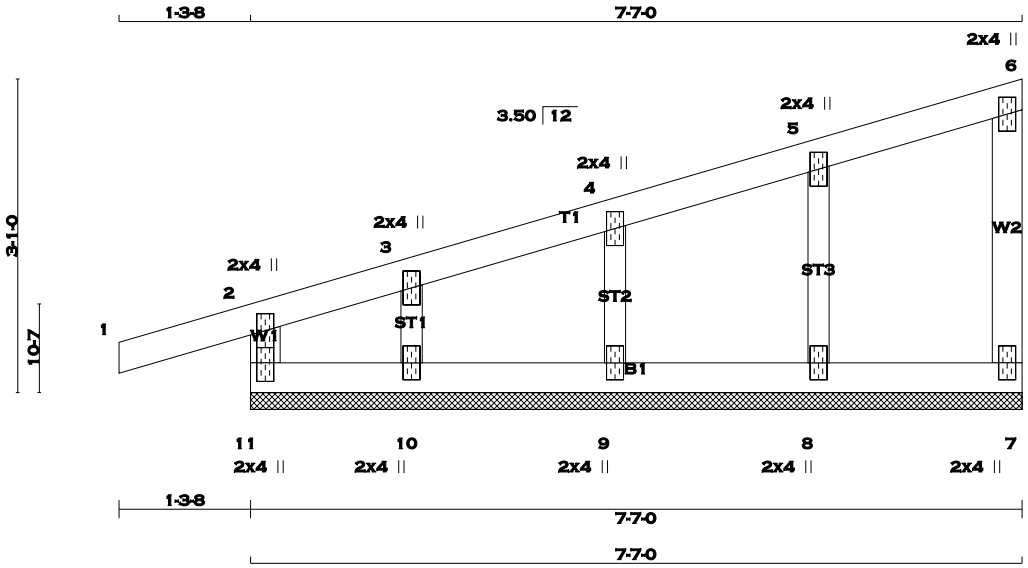

TOTAL WEIGHT = 26 lb

[M]

LUMBER

N. L. G. A. RULES

CHORDS	SIZE		LUMBER	DESCR.
11 - 2	2x4	DRY	No.2	SPF
1 - 6	2x4	DRY	No.2	SPF
7 - 6	2x4	DRY	No.2	SPF
11 - 7	2x4	DRY	No.2	SPF
ALL WEBS	2x3	DRY	No.2	SPF
ALL GABLE WEBS	2x3	DRY	No.2	SPF

DRY: SEASONED LUMBER.

GABLE STUDS SPACED AT 2-0-0 OC.

PLATES (table is in inches)

JT	TYPE	PLATES	W	LEN	Y	X
2	TMV+p	MT20	2.0	4.0		
3, 4, 5						
3	TMW+w	MT20	2.0	4.0		
6	TMV+p	MT20	2.0	4.0		
7	BMV1+p	MT20	2.0	4.0		
8, 9, 10						
8	BMW1+w	MT20	2.0	4.0		
11	BMV1+p	MT20	2.0	4.0	2.25	1.00

A SIZE FOR SIZE SUBSTITUTION OF MITEK MII20 WITH TEE-LOK TL20 PLATES IS ALLOWED.

DIMENSIONS, SUPPORTS AND LOADINGS SPECIFIED BY FABRICATOR TO BE VERIFIED BY BUILDING DESIGNER

BEARINGS

THIS TRUSS DESIGNED FOR CONTINUOUS BEARINGS.

THIS TRUSS REQUIRES RIGID SHEATHING ON EXPOSED FACE.

BEARING MATERIAL TO BE SPF NO.2 OR BETTER AT JOINT(S)

BRACING

TOP CHORD TO BE SHEATHED OR MAX. PURLIN SPACING = 6.25 FT.
MAX. UNBRACED BOTTOM CHORD LENGTH = 10.00 FT. OR RIGID CEILING DIRECTLY APPLIED.

ALL PITCH BREAKS AND PERIMETER CORNER JOINTS MUST BE LATERALLY RESTRAINED.

LOADING

TOTAL LOAD CASES: (4)

CHORDS

MEMB. FR-TO	MAX. FACTORED FORCE (LBS)	FACTORED VERT. LOAD (PLF) FROM	TO	LC1 MAX CSI (LC)	MAX. UNBRAC LENGTH
11- 2	-195 / 0	0.0	0.0	0.03 (1)	7.81
1- 2	0 / 14	-77.4	-77.4	0.10 (1)	10.00
2- 3	-25 / 0	-77.4	-77.4	0.07 (1)	6.25
3- 4	-10 / 0	-77.4	-77.4	0.04 (1)	6.25
4- 5	-8 / 0	-77.4	-77.4	0.04 (1)	10.00
5- 6	-8 / 0	-77.4	-77.4	0.04 (1)	10.00
7- 6	-69 / 0	0.0	0.0	0.01 (1)	7.81
11-10	0 / 16	-17.5	-17.5	0.03 (1)	10.00
10- 9	0 / 12	-17.5	-17.5	0.01 (4)	10.00
9- 8	0 / 8	-17.5	-17.5	0.02 (4)	10.00
8- 7	0 / 5	-17.5	-17.5	0.02 (4)	10.00

WEBS

MEMB. FR-TO	MAX. FACTORED FORCE (LBS)	MAX CSI (LC)
8- 5	-164 / 0	0.03 (1)
9- 4	-161 / 0	0.02 (1)
10- 3	-100 / 0	0.01 (1)

DESIGN CRITERIA

SPECIFIED LOADS:

TOP	CH.	LL	=	23.3	PSF
		DL	=	3.0	PSF
BOT	CH.	LL	=	0.0	PSF
		DL	=	7.0	PSF
TOTAL	LOAD		=	33.3	PSF

SPACING = 24.0 IN. C/C

THIS TRUSS IS DESIGNED FOR RESIDENTIAL OR SMALL BUILDING REQUIREMENTS OF PART 9, NBCC 2010

THIS DESIGN COMPLIES WITH:
- PART 9 OF OBC 2012 , BCBC 2012 , ABC 2014
- CSA 086-09
- TPIC 2011

DESIGN ASSUMPTIONS
-OVERHANG NOT TO BE ALTERED OR CUT OFF.

(55 % OF 27.2 P.S.F. G.S.L. PLUS 8.4 P.S.F. RAIN LOAD) EQUALS 23.3 P.S.F. SPECIFIED ROOF LIVE LOAD

CSI: TC=0.10 (1-2:1) , BC=0.03 (10-11:1) , WB=0.03 (5-8:1) , SSI=0.08 (1-2:1)

DOL LUMBER=1.00 NAIL=1.00 LS BEND=1.10 COMP=1.10 SHEAR=1.10 TENS= 1.10

COMPANION LIVE LOAD FACTOR = 0.50

TRUSS PLATE MANUFACTURER IS NOT RESPONSIBLE FOR QUALITY CONTROL IN THE TRUSS MANUFACTURING PLANT .

NAIL VALUES

PLATE	GRIP(DRY) (PSI) MAX	MIN	SHEAR (PLI) MAX	MIN	SECTION (PLI) MAX	MIN
MT20	618	354	1667	822	2284	1656

PLATE PLACEMENT TOL. = 0.250 inches

PLATE ROTATION TOL. = 5.0 Deg.

JSI GRIP= 0.11 (2) (INPUT = 0.90)
JSI METAL= 0.04 (2) (INPUT = 1.00)

LICENSED PROFESSIONAL ENGINEER
P. M. TREVISAN
100136551
March 16th, 2017
PROVINCE OF ONTARIO

RECEIVED
TOWN OF MILTON
MAR 29, 2017
17-5337
BUILDING DIVISION

KOTT

JOB NAME	TRUSS NAME	QUANTITY	PLY	JOB DESC.	DRWG NO.
PT0317-097	GAB08	1	1	TRUSS DESC. LECCO RIDGE-BLOCK 344	

KOTT , Stouffville, ON, CGC

Version 8.100 S Feb 9 2017 MiTek Industries, Inc. Thu Mar 16 11:57:31 2017 Page 1
ID:EvTixTQDI5yR1QLotZTBr_yE?HJ-ce_PDmJ_3hHjNa3qrXxjku5QbenVUVGrYQFymczaNkl

SCALE = 1:12.5

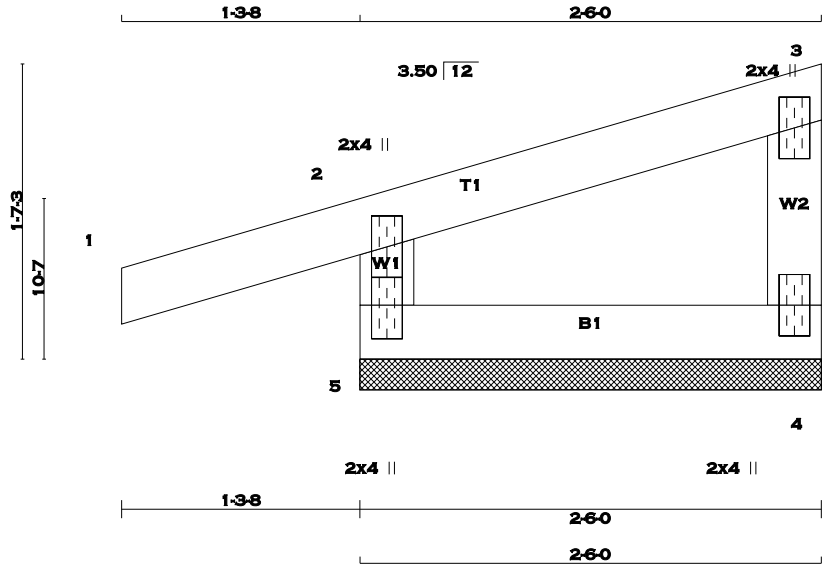

TOTAL WEIGHT = 9 lb
[M]

LUMBER
N. L. G. A. RULES

CHORDS	SIZE		LUMBER	DESCR.
5 - 2	2x4	DRY	No.2	SPF
1 - 3	2x4	DRY	No.2	SPF
4 - 3	2x4	DRY	No.2	SPF
5 - 4	2x4	DRY	No.2	SPF

DRY: SEASONED LUMBER.

GABLE STUDS SPACED AT 2-0-0 OC.

PLATES (table is in inches)

JT	TYPE	PLATES	W	LEN	Y	X
2	TMV+p	MT20	2.0	4.0		
3	TMV+p	MT20	2.0	4.0		
4	BMV1+p	MT20	2.0	4.0		
5	BMV1+p	MT20	2.0	4.0	2.25	1.00

A SIZE FOR SIZE SUBSTITUTION OF MITEK MII20 WITH TEE-LOK TL20 PLATES IS ALLOWED.

DIMENSIONS, SUPPORTS AND LOADINGS SPECIFIED BY FABRICATOR TO BE VERIFIED BY BUILDING DESIGNER

BEARINGS

THIS TRUSS DESIGNED FOR CONTINUOUS BEARINGS.

THIS TRUSS REQUIRES RIGID SHEATHING ON EXPOSED FACE.

BEARING MATERIAL TO BE SPF NO.2 OR BETTER AT JOINT(S)

BRACING
TOP CHORD TO BE SHEATHED OR MAX. PURLIN SPACING = 6.25 FT.
MAX. UNBRACED BOTTOM CHORD LENGTH = 10.00 FT. OR RIGID CEILING DIRECTLY APPLIED.

ALL PITCH BREAKS AND PERIMETER CORNER JOINTS MUST BE LATERALLY RESTRAINED.

LOADING
TOTAL LOAD CASES: (5)

CHORDS

MEMB. FR-TO	MAX. FACTORED FORCE (LBS)	FACTORED VERT. LOAD (PLF) FROM	TO	LC1 MAX CSI (LC)
5- 2	-217 / 0	0.0	0.0	0.02 (4)
1- 2	0 / 14	-77.4	-77.4	0.10 (1)
2- 3	-31 / 0	-77.4	-77.4	0.06 (1)
4- 3	-80 / 0	0.0	0.0	0.03 (1)
5- 4	0 / 27	-17.5	-17.5	0.02 (4)

WEBS

MAX. UNBRAC LENGTH	MEMB. FR-TO	MAX. FACTORED FORCE (LBS)	MAX CSI (LC)
7.81			
10.00			
6.25			
7.81			
10.00			

CANTILEVER ANALYSIS HAS BEEN CONSIDERED IN THIS DESIGN

DESIGN CRITERIA

SPECIFIED LOADS:

TOP	CH.	LL	=	23.3	PSF
		DL	=	3.0	PSF
BOT	CH.	LL	=	0.0	PSF
		DL	=	7.0	PSF
TOTAL	LOAD		=	33.3	PSF

SPACING = 24.0 IN. C/C

THIS TRUSS IS DESIGNED FOR RESIDENTIAL OR SMALL BUILDING REQUIREMENTS OF PART 9, NBCC 2010

THIS DESIGN COMPLIES WITH:
- PART 9 OF OBC 2012 , BCBC 2012 , ABC 2014
- CSA 086-09
- TPIC 2011

DESIGN ASSUMPTIONS
-OVERHANG NOT TO BE ALTERED OR CUT OFF.

(55 % OF 27.2 P.S.F. G.S.L. PLUS 8.4 P.S.F. RAIN LOAD) EQUALS 23.3 P.S.F. SPECIFIED ROOF LIVE LOAD

CSI: TC=0.10 (1-2:1) , BC=0.02 (4-5:4) , WB=0.00 (n/a:0) , SSI=0.08 (2-3:1)

DOL LUMBER=1.00 NAIL=1.00 LS BEND=1.10 COMP=1.10 SHEAR=1.10 TENS= 1.10

COMPANION LIVE LOAD FACTOR = 0.50

TRUSS PLATE MANUFACTURER IS NOT RESPONSIBLE FOR QUALITY CONTROL IN THE TRUSS MANUFACTURING PLANT .

NAIL VALUES

PLATE	GRIP(DRY) (PSI) MAX	MIN	SHEAR (PLI) MAX	MIN	SECTION (PLI) MAX	MIN
MT20	618	354	1667	822	2284	1656

PLATE PLACEMENT TOL. = 0.250 inches

PLATE ROTATION TOL. = 5.0 Deg.

JSI GRIP= 0.12 (2) (INPUT = 0.90)
JSI METAL= 0.05 (2) (INPUT = 1.00)

LICENSED PROFESSIONAL ENGINEER
P. M. TREVISAN
100136551
March 16th, 2017
PROVINCE OF ONTARIO

RECEIVED
TOWN OF MILTON
MAR 29, 2017
17-5337
BUILDING DIVISION

KOTT

JOB NAME	TRUSS NAME	QUANTITY	PLY	JOB DESC.	DRWG NO.
PT0317-097	GAB09	1	1	TRUSS DESC. LECCO RIDGE-BLOCK 344	

KOTT , Stouffville, ON, CGC

Version 8.100 S Feb 9 2017 MiTek Industries, Inc. Thu Mar 16 11:57:31 2017 Page 1
ID:EvTixTQDI5yR1QLotZTBr_yE?HJ-ce_PDmJ_3hHjNa3qrXxjku5QTenbUUQrYQFymczaNkl

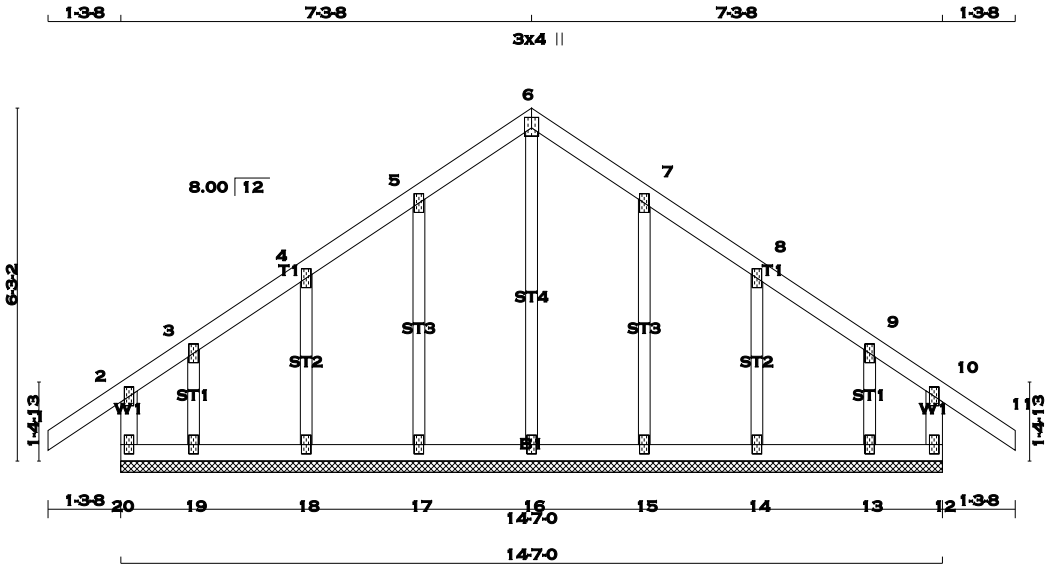

TOTAL WEIGHT = 62 lb
[M]

LUMBER
N. L. G. A. RULES

CHORDS	SIZE		LUMBER	DESCR.
20 - 2	2x4	DRY	No.2	SPF
1 - 6	2x4	DRY	No.2	SPF
6 - 11	2x4	DRY	No.2	SPF
12 - 10	2x4	DRY	No.2	SPF
20 - 12	2x4	DRY	No.2	SPF
ALL WEBS	2x3	DRY	No.2	SPF
ALL GABLE WEBS	2x3	DRY	No.2	SPF

DRY: SEASONED LUMBER.

GABLE STUDS SPACED AT 2-0-0 OC.

PLATES (table is in inches)

JT	TYPE	PLATES	W	LEN	Y	X
2	TMV+p	MT20	2.0	4.0		
3, 4, 5, 7, 8, 9						
3	TMW+w	MT20	2.0	4.0		
6	TTW+p	MT20	3.0	4.0	2.25	1.50
10	TMV+p	MT20	2.0	4.0		
12	BMV1+p	MT20	2.0	4.0		
13, 14, 15, 16, 17, 18, 19						
13	BMW1+w	MT20	2.0	4.0		
20	BMV1+p	MT20	2.0	4.0		

A SIZE FOR SIZE SUBSTITUTION OF MITEK MII20 WITH TEE-LOK TL20 PLATES IS ALLOWED.

DIMENSIONS, SUPPORTS AND LOADINGS SPECIFIED BY FABRICATOR TO BE VERIFIED BY BUILDING DESIGNER

BEARINGS

THIS TRUSS DESIGNED FOR CONTINUOUS BEARINGS.

THIS TRUSS REQUIRES RIGID SHEATHING ON EXPOSED FACE.

BEARING MATERIAL TO BE SPF NO.2 OR BETTER AT JOINT(S)

BRACING
TOP CHORD TO BE SHEATHED OR MAX. PURLIN SPACING = 10.00 FT.
MAX. UNBRACED BOTTOM CHORD LENGTH = 6.25 FT. OR RIGID CEILING DIRECTLY APPLIED.

ALL PITCH BREAKS AND PERIMETER CORNER JOINTS MUST BE LATERALLY RESTRAINED.

LOADING
TOTAL LOAD CASES: (4)

CHORDS

MEMB. FR-TO	MAX. FORCE (LBS)	FACTORED VERT. LOAD (PLF) FROM	TO	LC1	MAX CSI (LC)	MAX. UNBRAC LENGTH
20- 2	-172 / 0	0.0	0.0	0.03	(1)	7.81
1- 2	0 / 29	-77.4	-77.4	0.10	(1)	10.00
2- 3	0 / 3	-77.4	-77.4	0.07	(1)	10.00
3- 4	0 / 28	-77.4	-77.4	0.04	(1)	10.00
4- 5	0 / 28	-77.4	-77.4	0.04	(1)	10.00
5- 6	0 / 31	-77.4	-77.4	0.04	(1)	10.00
6- 7	0 / 31	-77.4	-77.4	0.04	(1)	10.00
7- 8	0 / 28	-77.4	-77.4	0.04	(1)	10.00
8- 9	0 / 28	-77.4	-77.4	0.04	(1)	10.00
9-10	0 / 3	-77.4	-77.4	0.07	(1)	10.00
10-11	0 / 29	-77.4	-77.4	0.10	(1)	10.00
12-10	-172 / 0	0.0	0.0	0.03	(1)	7.81

WEBS

MEMB. FR-TO	MAX. FORCE (LBS)	MAX CSI (LC)
16- 6	-194 / 0	0.12 (1)
17- 5	-157 / 0	0.06 (1)
18- 4	-160 / 0	0.03 (1)
19- 3	-84 / 0	0.01 (1)
15- 7	-157 / 0	0.06 (1)
14- 8	-160 / 0	0.03 (1)
13- 9	-84 / 0	0.01 (1)

20-19	-16 / 0	-17.5	-17.5	0.01	(4) 6.25
19-18	-20 / 0	-17.5	-17.5	0.01	(4) 6.25
18-17	-24 / 0	-17.5	-17.5	0.01	(4) 6.25
17-16	-27 / 0	-17.5	-17.5	0.01	(4) 6.25
16-15	-27 / 0	-17.5	-17.5	0.01	(4) 6.25
15-14	-24 / 0	-17.5	-17.5	0.01	(4) 6.25
14-13	-20 / 0	-17.5	-17.5	0.01	(4) 6.25
13-12	-16 / 0	-17.5	-17.5	0.01	(4) 6.25

DESIGN CRITERIA

SPECIFIED LOADS:

TOP	CH.	LL	=	23.3	PSF
		DL	=	3.0	PSF
BOT	CH.	LL	=	0.0	PSF
		DL	=	7.0	PSF
TOTAL	LOAD		=	33.3	PSF

SPACING = 24.0 IN. C/C

THIS TRUSS IS DESIGNED FOR RESIDENTIAL OR SMALL BUILDING REQUIREMENTS OF PART 9, NBCC 2010

THIS DESIGN COMPLIES WITH:
- PART 9 OF OBC 2012 , BCBC 2012 , ABC 2014
- CSA 086-09
- TPIC 2011

DESIGN ASSUMPTIONS
-OVERHANG NOT TO BE ALTERED OR CUT OFF.

(55 % OF 27.2 P.S.F. G.S.L. PLUS 8.4 P.S.F. RAIN LOAD) EQUALS 23.3 P.S.F. SPECIFIED ROOF LIVE LOAD

CSI: TC=0.10 (1-2:1) , BC=0.01 (17-18:4) , WB=0.12 (6-16:1) , SSI=0.07 (1-2:1)

DOL LUMBER=1.00 NAIL=1.00 LS BEND=1.10 COMP=1.10 SHEAR=1.10 TENS= 1.10

COMPANION LIVE LOAD FACTOR = 0.50

TRUSS PLATE MANUFACTURER IS NOT RESPONSIBLE FOR QUALITY CONTROL IN THE TRUSS MANUFACTURING PLANT .

NAIL VALUES

PLATE	GRIP(DRY) (PSI) MAX	MIN	SHEAR (PLI) MAX	MIN	SECTION (PLI) MAX	MIN
MT20	618	354	1667	822	2284	1656

PLATE PLACEMENT TOL. = 0.250 inches

PLATE ROTATION TOL. = 0.5 Deg.

JSI GRIP= 0.13 (6) (INPUT = 0.90)
JSI METAL= 0.07 (6) (INPUT = 1.00)

LICENSED PROFESSIONAL ENGINEER
P. M. TREVISAN
100136551
March 16th, 2017
PROVINCE OF ONTARIO

RECEIVED
TOWN OF MILTON
MAR 29, 2017
17-5337
BUILDING DIVISION

KOTT

JOB NAME	TRUSS NAME	QUANTITY	PLY	JOB DESC.	DRWG NO.
PT0317-097	GAB10	1	1	TRUSS DESC. LECCO RIDGE-BLOCK 344	

KOTT , Stouffville, ON, CGC

Version 8.100 S Feb 9 2017 MiTek Industries, Inc. Thu Mar 16 11:57:32 2017 Page 1
ID:EvTixTQDI5yR1QLotZTBr_yE?HJ-4qYoR6Kdq_Pa?ke0OESyH5eXO242DpG_n4_VI3zaNkH

SCALE = 1:63.1

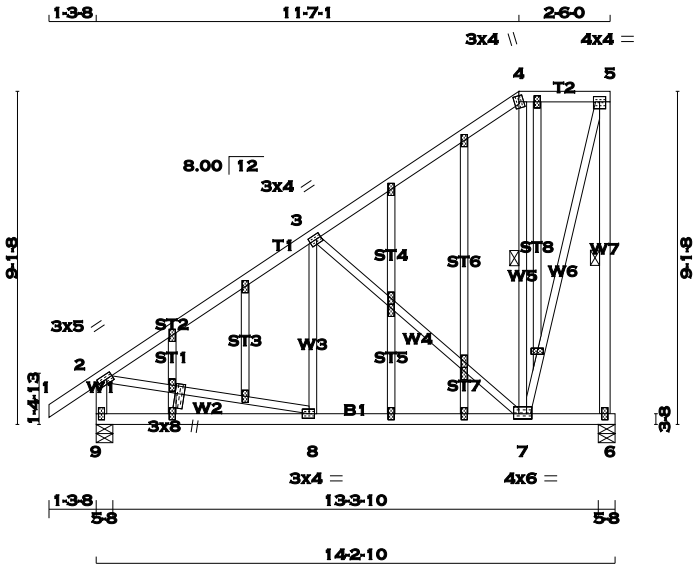

TOTAL WEIGHT = 97 lb
[M][F]

LUMBER
N. L. G. A. RULES

CHORDS	SIZE		LUMBER	DESCR.
1 - 4	2x4	DRY	No.2	SPF
4 - 5	2x4	DRY	No.2	SPF
6 - 5	2x4	DRY	No.2	SPF
9 - 2	2x4	DRY	No.2	SPF
9 - 6	2x4	DRY	No.2	SPF
ALL WEBS	2x3	DRY	No.2	SPF
EXCEPT				
ALL GABLE WEBS				
	2x3	DRY	No.2	SPF

DRY: SEASONED LUMBER.

GABLE STUDS SPACED AT 2-0-0 OC.

PLATES (table is in inches)

JT	TYPE	PLATES	W	LEN	Y	X
2	TMVW-t	MT20	3.0	5.0	1.50	2.00
3	TMWW-t	MT20	3.0	4.0	1.50	1.50
4	TTW+m	MT20	3.0	4.0		
5	TMVW-t	MT20	4.0	4.0	1.75	2.00
6	BMV1+p	MT20	2.0	4.0		
7	BMWWW-t	MT20	4.0	6.0	1.75	3.00
8	BMWW-t	MT20	3.0	4.0	1.50	1.75
9	BMV1+p	MT20	2.0	4.0		
10	NP-p	MT20	2.0	4.0	0.75	2.00
11, 12, 13, 14, 15, 16, 17, 18, 19, 20, 21, 22						
11	NP+w	MT20	2.0	4.0		
14	NP+w	MT20	2.0	4.0	1.25	1.00
17	NP+w	MT20	2.0	4.0	1.25	1.00
20	NP+t	MT20	3.0	8.0	3.25	0.25

A SIZE FOR SIZE SUBSTITUTION OF MITEK MII20 WITH TEE-LOK TL20 PLATES IS ALLOWED.

DIMENSIONS, SUPPORTS AND LOADINGS SPECIFIED BY FABRICATOR TO BE VERIFIED BY BUILDING DESIGNER

BEARINGS

JT	FACTORED GROSS REACTION VERT	HORZ	MAXIMUM FACTORED GROSS REACTION DOWN	HORZ	UPLIFT	INPUT BRG IN-SX	REQRD BRG IN-SX
6	668	0	668	0	0	5-8	5-8
9	774	0	774	0	0	5-8	5-8

UNFACTORED REACTIONS

JT	1ST LCASE COMBINED	MAX./MIN. COMPONENT REACTIONS SNOW	LIVE	PERM.LIVE	WIND	DEAD	SOIL
6	469	328 / 0	0 / 0	0 / 0	0 / 0	141 / 0	0 / 0
9	541	392 / 0	0 / 0	0 / 0	0 / 0	149 / 0	0 / 0

BEARING MATERIAL TO BE SPF NO.2 OR BETTER AT JOINT(S) 6, 9

BRACING
TOP CHORD TO BE SHEATHED OR MAX. PURLIN SPACING = 6.25 FT.
MAX. UNBRACED BOTTOM CHORD LENGTH = 10.00 FT. OR RIGID CEILING DIRECTLY APPLIED.

ALL PITCH BREAKS AND PERIMETER CORNER JOINTS MUST BE LATERALLY RESTRAINED.

1 - 2x3 SPF No.2 LATERAL BRACE(S) AT 1/ 2 LENGTH OF 5-6, 4-7. DBS = 20-0-0 . CBF = 82 LBS.

DBS = DIAGONAL BRACE SPACING (MAX). CBF = CUMULATIVE BRACING FORCE. FASTEN LATERAL BRACE(S) USING (0.122"X3") SPIRAL NAILS : 1 NAIL FOR 2x3 BRACE(S), 2 FOR 1x4, 2x4, 2x5, 3 FOR 2x6, 4 FOR 2x8, 5 FOR 2x10, AND 6 FOR 2x12.

END VERTICAL(S) MUST BE SHEATHED OR HAVE BRACES AS INDICATED IN THE MAX. UNBRACED LENGTH COLUMN OF THE TABLE BELOW

LOADING
TOTAL LOAD CASES: (4)

CHORDS

MEMB. FR-TO	MAX. FACTORED FORCE (LBS)	FACTORED VERT. LOAD (PLF) FROM	TO	LC1 MAX CSI (LC)	MAX. UNBRAC LENGTH
1- 2	0 / 29	-77.4	-77.4	0.10 (1)	10.00
2- 3	-608 / 0	-77.4	-77.4	0.35 (1)	6.25
3- 4	-216 / 0	-77.4	-77.4	0.34 (1)	6.25
4- 5	-152 / 0	-77.4	-77.4	0.06 (1)	6.25
6- 5	-655 / 0	0.0	0.0	0.25 (1)	6.25
9- 2	-733 / 0	0.0	0.0	0.08 (1)	7.81
9- 8	0 / 0	-17.5	-17.5	0.15 (4)	10.00
8- 7	0 / 531	-17.5	-17.5	0.19 (4)	10.00
7- 6	0 / 0	-17.5	-17.5	0.07 (4)	10.00

WEBS

MEMB. FR-TO	MAX. FACTORED FORCE (LBS)	MAX CSI (LC)
8- 3	0 / 106	0.04 (4)
3- 7	-502 / 0	0.59 (1)
7- 4	-157 / 3	0.08 (1)
7- 5	0 / 580	0.13 (1)
2- 8	0 / 540	0.12 (1)

DESIGN CRITERIA

SPECIFIED LOADS:

TOP CH.	LL	=	23.3	PSF
	DL	=	3.0	PSF
BOT CH.	LL	=	0.0	PSF
	DL	=	7.0	PSF
TOTAL LOAD		=	33.3	PSF

SPACING = 24.0 IN. C/C

LOADING IN FLAT SECTION BASED ON A SLOPE OF 6.00/12

THIS TRUSS IS DESIGNED FOR RESIDENTIAL OR SMALL BUILDING REQUIREMENTS OF PART 9, NBCC 2010

THIS DESIGN COMPLIES WITH:
- PART 9 OF OBC 2012 , BCBC 2012 , ABC 2014
- CSA 086-09
- TPIC 2011

(55 % OF 27.2 P.S.F. G.S.L. PLUS 8.4 P.S.F. RAIN LOAD) EQUALS 23.3 P.S.F. SPECIFIED ROOF LIVE LOAD

ALLOWABLE DEFL.(LL)= L/360 (0.47")
CALCULATED VERT. DEFL.(LL) = L/ 999 (0.02")
ALLOWABLE DEFL.(TL)= L/360 (0.47")
CALCULATED VERT. DEFL.(TL) = L/ 999 (0.04")

CSI: TC=0.35 (2-3:1) , BC=0.19 (7-8:4) , WB=0.59 (3-7:1) , SSI=0.18 (2-3:1)

DOL LUMBER=1.00 NAIL=1.00 LS BEND=1.10 COMP=1.10 SHEAR=1.10 TENS= 1.10

COMPANION LIVE LOAD FACTOR = 0.50

TRUSS PLATE MANUFACTURER IS NOT RESPONSIBLE FOR QUALITY CONTROL IN THE TRUSS MANUFACTURING PLANT .

NAIL VALUES

PLATE	GRIP(DRY) (PSI) MAX	MIN	SHEAR (PLI) MAX	MIN	SECTION (PLI) MAX	MIN
MT20	618	354	1667	822	2284	1656

PLATE PLACEMENT TOL. = 0.250 inches

PLATE ROTATION TOL. = 5.0 Deg.

JSI GRIP= 0.82 (8) (INPUT = 0.90)
JSI METAL= 0.24 (2) (INPUT = 1.00)

LICENSED PROFESSIONAL ENGINEER
P. M. TREVISAN
100136551
March 16th, 2017
PROVINCE OF ONTARIO

RECEIVED
TOWN OF MILTON
MAR 29, 2017
17-5337
BUILDING DIVISION

KOTT

JOB NAME	TRUSS NAME	QUANTITY	PLY	JOB DESC.	DRWG NO.
PT0317-097	GAB11	1	1	TRUSS DESC. LECCO RIDGE-BLOCK 344	

KOTT , Stouffville, ON, CGC

Version 8.100 S Feb 9 2017 MiTek Industries, Inc. Thu Mar 16 11:57:33 2017 Page 1
ID:EvTixTQDI5yR1QLotZTBr_yE?HJ-Z06AeSKFbIXQduDDyyzBpJAm5STlyPM8?kk2rVzaNkG

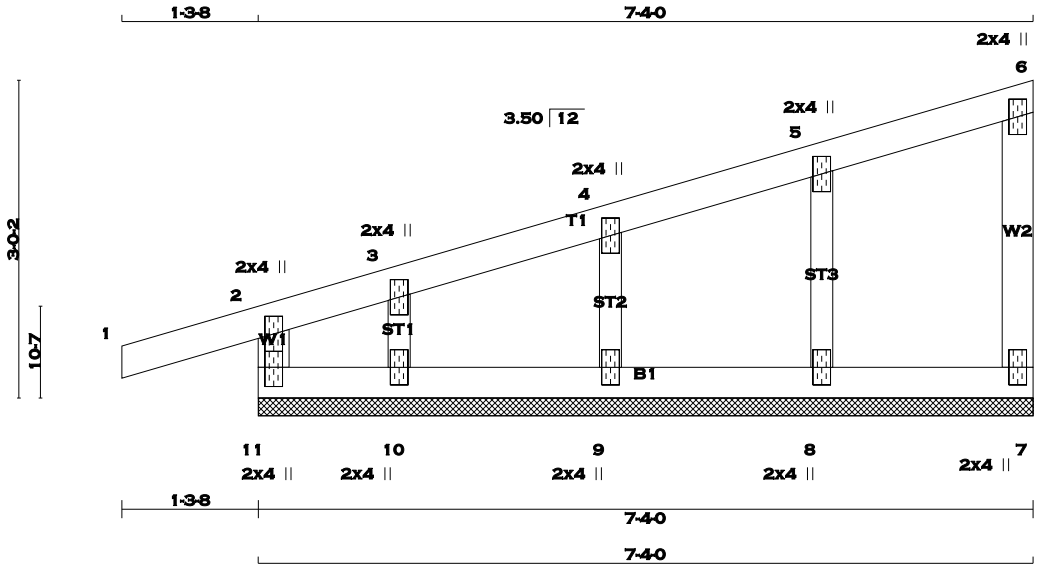

TOTAL WEIGHT = 25 lb
[M]

LUMBER
N. L. G. A. RULES

CHORDS	SIZE		LUMBER	DESCR.
11 - 2	2x4	DRY	No.2	SPF
1 - 6	2x4	DRY	No.2	SPF
7 - 6	2x4	DRY	No.2	SPF
11 - 7	2x4	DRY	No.2	SPF
ALL WEBS	2x3	DRY	No.2	SPF
ALL GABLE WEBS	2x3	DRY	No.2	SPF

DRY: SEASONED LUMBER.

GABLE STUDS SPACED AT 2-0-0 OC.

PLATES (table is in inches)

JT	TYPE	PLATES	W	LEN	Y	X
2	TMV+p	MT20	2.0	4.0		
3, 4, 5						
3	TMW+w	MT20	2.0	4.0		
6	TMV+p	MT20	2.0	4.0		
7	BMV1+p	MT20	2.0	4.0		
8, 9, 10						
8	BMW1+w	MT20	2.0	4.0		
11	BMV1+p	MT20	2.0	4.0	2.25	1.00

A SIZE FOR SIZE SUBSTITUTION OF MITEK MII20 WITH TEE-LOK TL20 PLATES IS ALLOWED.

DIMENSIONS, SUPPORTS AND LOADINGS SPECIFIED BY FABRICATOR TO BE VERIFIED BY BUILDING DESIGNER

BEARINGS

THIS TRUSS DESIGNED FOR CONTINUOUS BEARINGS.

THIS TRUSS REQUIRES RIGID SHEATHING ON EXPOSED FACE.

BEARING MATERIAL TO BE SPF NO.2 OR BETTER AT JOINT(S)

BRACING
TOP CHORD TO BE SHEATHED OR MAX. PURLIN SPACING = 6.25 FT.
MAX. UNBRACED BOTTOM CHORD LENGTH = 10.00 FT. OR RIGID CEILING DIRECTLY APPLIED.

ALL PITCH BREAKS AND PERIMETER CORNER JOINTS MUST BE LATERALLY RESTRAINED.

LOADING
TOTAL LOAD CASES: (4)

CHORDS

MEMB. FR-TO	MAX. FACTORED FORCE (LBS)	FACTORED VERT. LOAD (PLF) FROM	TO	LC1 MAX CSI (LC)	MAX. UNBRAC LENGTH
11- 2	-192 / 0	0.0	0.0	0.03 (1)	7.81
1- 2	0 / 14	-77.4	-77.4	0.10 (1)	10.00
2- 3	-27 / 0	-77.4	-77.4	0.07 (1)	6.25
3- 4	-11 / 0	-77.4	-77.4	0.04 (1)	6.25
4- 5	-9 / 0	-77.4	-77.4	0.04 (1)	10.00
5- 6	-8 / 0	-77.4	-77.4	0.04 (1)	10.00
7- 6	-69 / 0	0.0	0.0	0.02 (1)	7.81
11-10	0 / 16	-17.5	-17.5	0.03 (1)	10.00
10- 9	0 / 13	-17.5	-17.5	0.01 (4)	10.00
9- 8	0 / 8	-17.5	-17.5	0.02 (4)	10.00
8- 7	0 / 5	-17.5	-17.5	0.02 (4)	10.00

WEBS

MEMB. FR-TO	MAX. FACTORED FORCE (LBS)	MAX CSI (LC)
8- 5	-164 / 0	0.03 (1)
9- 4	-162 / 0	0.02 (1)
10- 3	-84 / 0	0.01 (1)

DESIGN CRITERIA

SPECIFIED LOADS:

TOP	CH.	LL	=	23.3	PSF
		DL	=	3.0	PSF
BOT	CH.	LL	=	0.0	PSF
		DL	=	7.0	PSF
TOTAL	LOAD		=	33.3	PSF

SPACING = 24.0 IN. C/C

THIS TRUSS IS DESIGNED FOR RESIDENTIAL OR SMALL BUILDING REQUIREMENTS OF PART 9, NBCC 2010

THIS DESIGN COMPLIES WITH:
- PART 9 OF OBC 2012 , BCBC 2012 , ABC 2014
- CSA 086-09
- TPIC 2011

DESIGN ASSUMPTIONS
-OVERHANG NOT TO BE ALTERED OR CUT OFF.

(55 % OF 27.2 P.S.F. G.S.L. PLUS 8.4 P.S.F. RAIN LOAD) EQUALS 23.3 P.S.F. SPECIFIED ROOF LIVE LOAD

CSI: TC=0.10 (1-2:1) , BC=0.03 (10-11:1) , WB=0.03 (5-8:1) , SSI=0.08 (1-2:1)

DOL LUMBER=1.00 NAIL=1.00 LS BEND=1.10 COMP=1.10 SHEAR=1.10 TENS= 1.10

COMPANION LIVE LOAD FACTOR = 0.50

TRUSS PLATE MANUFACTURER IS NOT RESPONSIBLE FOR QUALITY CONTROL IN THE TRUSS MANUFACTURING PLANT .

NAIL VALUES

PLATE	GRIP(DRY) (PSI) MAX	MIN	SHEAR (PLI) MAX	MIN	SECTION (PLI) MAX	MIN
MT20	618	354	1667	822	2284	1656

PLATE PLACEMENT TOL. = 0.250 inches

PLATE ROTATION TOL. = 0.5 Deg.

JSI GRIP= 0.10 (2) (INPUT = 0.90)
JSI METAL= 0.04 (2) (INPUT = 1.00)

LICENSED PROFESSIONAL ENGINEER
P. M. TREVISAN
100136551
March 16th, 2017
PROVINCE OF ONTARIO

RECEIVED
TOWN OF MILTON
MAR 29, 2017
17-5337
BUILDING DIVISION

KOTT

SCALE = 1:12.3

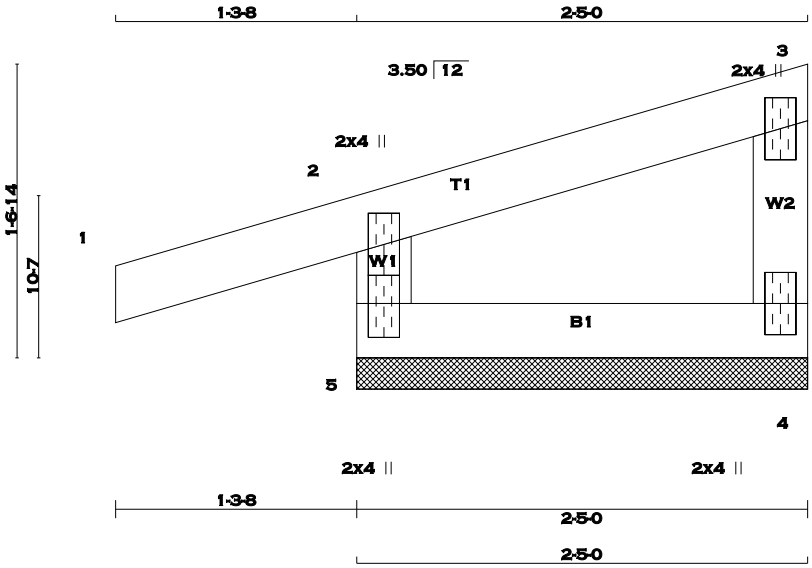

TOTAL WEIGHT = 9 lb [M]

LUMBER

N. L. G. A. RULES

CHORDS	SIZE		LUMBER	DESCR.
5 - 2	2x4	DRY	No.2	SPF
1 - 3	2x4	DRY	No.2	SPF
4 - 3	2x4	DRY	No.2	SPF
5 - 4	2x4	DRY	No.2	SPF

DRY: SEASONED LUMBER.

GABLE STUDS SPACED AT 2-0-0 OC.

PLATES (table is in inches)

JT	TYPE	PLATES	W	LEN	Y	X
2	TMV+p	MT20	2.0	4.0		
3	TMV+p	MT20	2.0	4.0		
4	BMV1+p	MT20	2.0	4.0		
5	BMV1+p	MT20	2.0	4.0	2.25	1.00

A SIZE FOR SIZE SUBSTITUTION OF MITEK MII20 WITH TEE-LOK TL20 PLATES IS ALLOWED.

DIMENSIONS, SUPPORTS AND LOADINGS SPECIFIED BY FABRICATOR TO BE VERIFIED BY BUILDING DESIGNER

BEARINGS

THIS TRUSS DESIGNED FOR CONTINUOUS BEARINGS.

THIS TRUSS REQUIRES RIGID SHEATHING ON EXPOSED FACE.

BEARING MATERIAL TO BE SPF NO.2 OR BETTER AT JOINT(S)

BRACING

TOP CHORD TO BE SHEATHED OR MAX. PURLIN SPACING = 6.25 FT.
MAX. UNBRACED BOTTOM CHORD LENGTH = 10.00 FT. OR RIGID CEILING DIRECTLY APPLIED.

ALL PITCH BREAKS AND PERIMETER CORNER JOINTS MUST BE LATERALLY RESTRAINED.

LOADING

TOTAL LOAD CASES: (5)

CHORDS

MEMB. FR-TO	MAX. FACTORED FORCE (LBS)	FACTORED VERT. LOAD (PLF) FROM	TO	LC1 MAX CSI (LC)
5- 2	-213 / 0	0.0	0.0	0.02 (4)
1- 2	0 / 14	-77.4	-77.4	0.10 (1)
2- 3	-29 / 0	-77.4	-77.4	0.06 (1)
4- 3	-77 / 0	0.0	0.0	0.03 (1)
5- 4	0 / 25	-17.5	-17.5	0.02 (4)

WEBS

MAX. UNBRAC LENGTH	MEMB. FR-TO	MAX. FACTORED FORCE (LBS)	MAX CSI (LC)
7.81			
10.00			
6.25			
7.81			
10.00			

CANTILEVER ANALYSIS HAS BEEN CONSIDERED IN THIS DESIGN

DESIGN CRITERIA

SPECIFIED LOADS:

TOP	CH.	LL	=	23.3	PSF
		DL	=	3.0	PSF
BOT	CH.	LL	=	0.0	PSF
		DL	=	7.0	PSF
TOTAL	LOAD		=	33.3	PSF

SPACING = 24.0 IN. C/C

THIS TRUSS IS DESIGNED FOR RESIDENTIAL OR SMALL BUILDING REQUIREMENTS OF PART 9, NBCC 2010

THIS DESIGN COMPLIES WITH:
- PART 9 OF OBC 2012 , BCBC 2012 , ABC 2014
- CSA 086-09
- TPIC 2011

DESIGN ASSUMPTIONS
-OVERHANG NOT TO BE ALTERED OR CUT OFF.

(55 % OF 27.2 P.S.F. G.S.L. PLUS 8.4 P.S.F. RAIN LOAD) EQUALS 23.3 P.S.F. SPECIFIED ROOF LIVE LOAD

CSI: TC=0.10 (1-2:1) , BC=0.02 (4-5:4) , WB=0.00 (n/a:0) , SSI=0.08 (1-2:1)

DOL LUMBER=1.00 NAIL=1.00 LS BEND=1.10 COMP=1.10 SHEAR=1.10 TENS= 1.10

COMPANION LIVE LOAD FACTOR = 0.50

TRUSS PLATE MANUFACTURER IS NOT RESPONSIBLE FOR QUALITY CONTROL IN THE TRUSS MANUFACTURING PLANT .

NAIL VALUES

PLATE	GRIP(DRY) (PSI) MAX	MIN	SHEAR (PLI) MAX	MIN	SECTION (PLI) MAX	MIN
MT20	618	354	1667	822	2284	1656

PLATE PLACEMENT TOL. = 0.250 inches

PLATE ROTATION TOL. = 0.5 Deg.

JSI GRIP= 0.12 (2) (INPUT = 0.90)
JSI METAL= 0.05 (2) (INPUT = 1.00)

LICENSED PROFESSIONAL ENGINEER
P. M. TREVISAN
100136551
March 16th, 2017
PROVINCE OF ONTARIO

RECEIVED
TOWN OF MILTON
MAR 29, 2017
17-5337
BUILDING DIVISION

KOTT

SCALE = 1:19.7

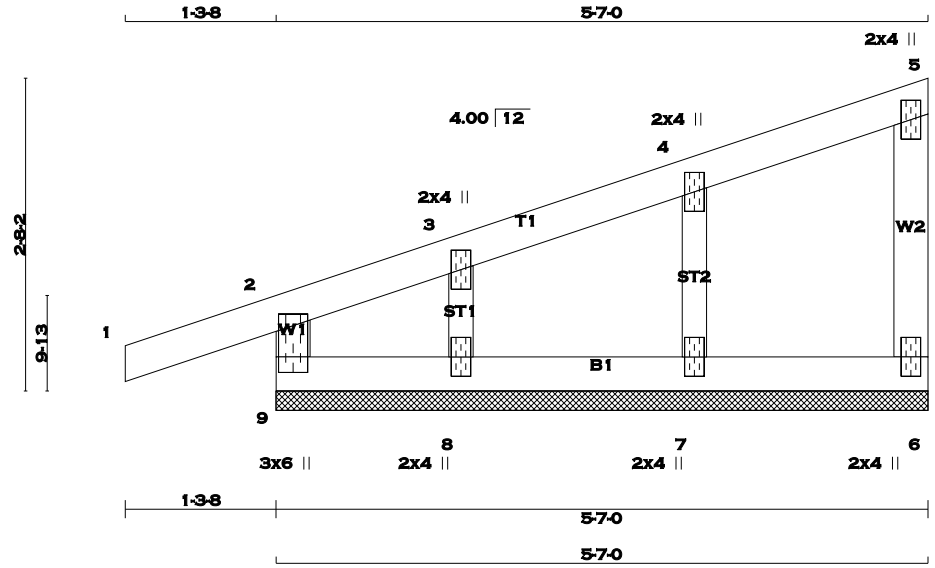

TOTAL WEIGHT = 19 lb [M]

LUMBER

N. L. G. A. RULES

CHORDS	SIZE		LUMBER	DESCR.
9 - 2	2x4	DRY	No.2	SPF
1 - 5	2x4	DRY	No.2	SPF
6 - 5	2x4	DRY	No.2	SPF
9 - 6	2x4	DRY	No.2	SPF
ALL WEBS	2x3	DRY	No.2	SPF
ALL GABLE WEBS	2x3	DRY	No.2	SPF

DRY: SEASONED LUMBER.

GABLE STUDS SPACED AT 2-0-0 OC.

PLATES (table is in inches)

JT	TYPE	PLATES	W	LEN	Y	X
2						
3	TMW+w	MT20	2.0	4.0		
4	TMW+w	MT20	2.0	4.0		
5	TMV+p	MT20	2.0	4.0		
6	BMV1+p	MT20	2.0	4.0		
7	BMW1+w	MT20	2.0	4.0		
8	BMW1+w	MT20	2.0	4.0		
9						
9	TMBMV1+p	MT20	3.0	6.0	3.50	1.50

A SIZE FOR SIZE SUBSTITUTION OF MITEK MII20 WITH TEE-LOK TL20 PLATES IS ALLOWED.

DIMENSIONS, SUPPORTS AND LOADINGS SPECIFIED BY FABRICATOR TO BE VERIFIED BY BUILDING DESIGNER

BEARINGS

THIS TRUSS DESIGNED FOR CONTINUOUS BEARINGS.

THIS TRUSS REQUIRES RIGID SHEATHING ON EXPOSED FACE.

BEARING MATERIAL TO BE SPF NO.2 OR BETTER AT JOINT(S)

BRACING

TOP CHORD TO BE SHEATHED OR MAX. PURLIN SPACING = 6.25 FT.
MAX. UNBRACED BOTTOM CHORD LENGTH = 10.00 FT. OR RIGID CEILING DIRECTLY APPLIED.

ALL PITCH BREAKS AND PERIMETER CORNER JOINTS MUST BE LATERALLY RESTRAINED.

LOADING

TOTAL LOAD CASES: (4)

CHORDS

MEMB. FR-TO	MAX. FORCE (LBS)	FACTORED VERT. LOAD (PLF) FROM	TO	LC1	MAX CSI (LC)	MAX. UNBRAC LENGTH
9- 2	-195 / 0	0.0	0.0	0.03 (1)		7.81
1- 2	0 / 16	-77.4	-77.4	0.10 (1)		10.00
2- 3	-24 / 0	-77.4	-77.4	0.07 (1)		6.25
3- 4	-7 / 0	-77.4	-77.4	0.04 (1)		10.00
4- 5	-9 / 0	-77.4	-77.4	0.04 (1)		10.00
6- 5	-66 / 0	0.0	0.0	0.01 (1)		7.81
9- 8	0 / 15	-17.5	-17.5	0.03 (1)		10.00
8- 7	0 / 10	-17.5	-17.5	0.02 (4)		10.00
7- 6	0 / 5	-17.5	-17.5	0.02 (4)		10.00

WEBS

MEMB. FR-TO	MAX. FORCE (LBS)	MAX CSI (LC)
7- 4	-177 / 0	0.03 (1)
8- 3	-97 / 0	0.01 (1)

DESIGN CRITERIA

SPECIFIED LOADS:

TOP CH.	LL	=	23.3	PSF
	DL	=	3.0	PSF
BOT CH.	LL	=	0.0	PSF
	DL	=	7.0	PSF
TOTAL LOAD		=	33.3	PSF

SPACING = 24.0 IN. C/C

THIS TRUSS IS DESIGNED FOR RESIDENTIAL OR SMALL BUILDING REQUIREMENTS OF PART 9, NBCC 2010

THIS DESIGN COMPLIES WITH:
- PART 9 OF OBC 2012 , BCBC 2012 , ABC 2014
- CSA 086-09
- TPIC 2011

DESIGN ASSUMPTIONS
-OVERHANG NOT TO BE ALTERED OR CUT OFF.

(55 % OF 27.2 P.S.F. G.S.L. PLUS 8.4 P.S.F. RAIN LOAD) EQUALS 23.3 P.S.F. SPECIFIED ROOF LIVE LOAD

CSI: TC=0.10 (1-2:1) , BC=0.03 (8-9:1) , WB=0.03 (4-7:1) , SSI=0.08 (1-2:1)

DOL LUMBER=1.00 NAIL=1.00 LS BEND=1.10 COMP=1.10 SHEAR=1.10 TENS= 1.10

COMPANION LIVE LOAD FACTOR = 0.50

TRUSS PLATE MANUFACTURER IS NOT RESPONSIBLE FOR QUALITY CONTROL IN THE TRUSS MANUFACTURING PLANT .

NAIL VALUES

PLATE	GRIP(DRY) (PSI) MAX	MIN	SHEAR (PLI) MAX	MIN	SECTION (PLI) MAX	MIN
MT20	618	354	1667	822	2284	1656

PLATE PLACEMENT TOL. = 0.250 inches

PLATE ROTATION TOL. = 5.0 Deg.

JSI GRIP= 0.17 (9) (INPUT = 0.90)
JSI METAL= 0.03 (7) (INPUT = 1.00)

LICENSED PROFESSIONAL ENGINEER
P. M. TREVISAN
100136551
March 16th, 2017
PROVINCE OF ONTARIO

RECEIVED
TOWN OF MILTON
MAR 29, 2017
17-5337
BUILDING DIVISION

KOTT

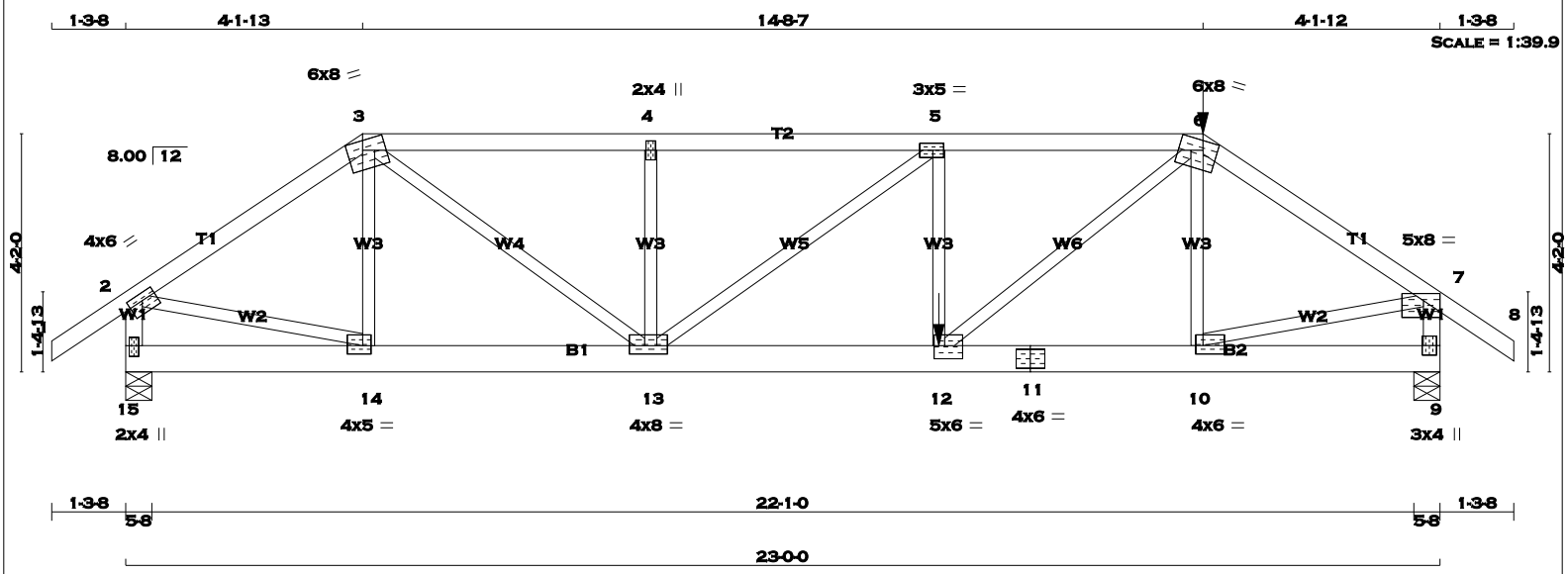

TOTAL WEIGHT = 107 lb

LUMBER

N. L. G. A. RULES

CHORDS	SIZE		LUMBER	DESCR.
1 - 3	2x4	DRY	No.2	SPF
3 - 6	2x4	DRY	No.2	SPF
6 - 8	2x4	DRY	No.2	SPF
15 - 2	2x4	DRY	No.2	SPF
9 - 7	2x4	DRY	No.2	SPF
15 - 11	2x6	DRY	No.2	SPF
11 - 9	2x6	DRY	No.2	SPF
ALL WEBS EXCEPT	2x3	DRY	No.2	SPF

DRY: SEASONED LUMBER.

PLATES (table is in inches)

JT	TYPE	PLATES	W	LEN	Y	X
2	TMVW-t	MT20	4.0	6.0	1.50	3.00
3	TTWW-m	MT20	6.0	8.0	2.00	3.25
4	TMW+w	MT20	2.0	4.0		
5	TMWW-t	MT20	3.0	5.0	1.50	2.25
6	TTWW-m	MT20	6.0	8.0	2.00	3.00
7	TMVW-p	MT20	5.0	8.0	1.50	3.50
9	BMV1+p	MT20	3.0	4.0	2.00	0.25
10	BMWW-t	MT20	4.0	6.0	1.75	1.50
11	BS-t	MT20	4.0	6.0		
12	BMWW-t	MT20	5.0	6.0	2.75	2.25
13	BMWWW-t	MT20	4.0	8.0	1.75	3.25
14	BMWW-t	MT20	4.0	5.0	1.75	1.75
15	BMV1+p	MT20	2.0	4.0	2.25	1.00

A SIZE FOR SIZE SUBSTITUTION OF MITEK MII20 WITH TEE-LOK TL20 PLATES IS ALLOWED.

HANGERS NOTES

1) SPECIAL HANGER(S) OR CONNECTION(S) REQUIRED TO SUPPORT CONCENTRATED LOAD(S) 240.5 lbs FACTORED DOWN AT 18-10-3 ON TOP CHORD, AND 1117.1 lbs FACTORED DOWN AT 14-2-12 ON BOTTOM CHORD. DESIGN FOR UNSPECIFIED CONNECTION(S) IS DELEGATED TO THE BUILDING DESIGNER.

DIMENSIONS, SUPPORTS AND LOADINGS SPECIFIED BY FABRICATOR TO BE VERIFIED BY BUILDING DESIGNER

BEARINGS

JT	FACTORED GROSS REACTION VERT	HORZ	MAXIMUM FACTORED GROSS REACTION DOWN	HORZ	UPLIFT	INPUT BRG IN-SX	REQRD BRG IN-SX
15	1781	0	1781	0	0	5-8	5-8
9	2423	0	2423	0	0	5-8	5-8

UNFACTORED REACTIONS

JT	1ST LCASE COMBINED	MAX./MIN. COMPONENT REACTIONS SNOW	LIVE	PERM.LIVE	WIND	DEAD	SOIL
15	1247	888 / 0	0 / 0	0 / 0	0 / 0	359 / 0	0 / 0
9	1700	1195 / 0	0 / 0	0 / 0	0 / 0	505 / 0	0 / 0

BEARING MATERIAL TO BE SPF NO.2 OR BETTER AT JOINT(S) 15, 9

BRACING

TOP CHORD TO BE SHEATHED OR MAX. PURLIN SPACING = 2.84 FT.
MAX. UNBRACED BOTTOM CHORD LENGTH = 10.00 FT. OR RIGID CEILING DIRECTLY APPLIED.

ALL PITCH BREAKS AND PERIMETER CORNER JOINTS MUST BE LATERALLY RESTRAINED.

LOADING

TOTAL LOAD CASES: (4)

CHORDS

MEMB. FR-TO	MAX. FACTORED FORCE (LBS)	FACTORED VERT. LOAD (PLF) FROM	TO	LC1 CSI (LC)	MAX UNBRAC LENGTH
1- 2	0 / 29	-77.4	-77.4	0.11 (1)	10.00
2- 3	-1978 / 0	-77.4	-77.4	0.34 (1)	4.43
3- 4	-3040 / 0	-77.4	-77.4	0.45 (1)	3.58
4- 5	-3040 / 0	-77.4	-77.4	0.57 (1)	3.42
5- 6	-3795 / 0	-145.9	-145.9	0.72 (1)	2.84
6- 7	-2795 / 0	-77.4	-77.4	0.41 (1)	3.75
7- 8	0 / 29	-77.4	-77.4	0.11 (1)	10.00
15- 2	-1753 / 0	0.0	0.0	0.20 (1)	6.26
9- 7	-2367 / 0	0.0	0.0	0.26 (1)	5.49
15-14	0 / 0	-17.5	-17.5	0.04 (4)	10.00
14-13	0 / 1635	-17.5	-17.5	0.25 (1)	10.00
13-12	0 / 3795	-17.5	-17.5	0.58 (1)	10.00
12-11	0 / 2312	-33.0	-33.0	0.38 (1)	10.00
11-10	0 / 2312	-33.0	-33.0	0.38 (1)	10.00
10- 9	0 / 0	-33.0	-33.0	0.08 (4)	10.00

WEBS

MEMB. FR-TO	MAX. FACTORED FORCE (LBS)	MAX CSI (LC)
14- 3	-284 / 0	0.07 (1)
3-13	0 / 1756	0.43 (1)
13- 4	-398 / 0	0.10 (1)
13- 5	-945 / 0	0.66 (1)
12- 5	-19 / 103	0.04 (4)
12- 6	0 / 1915	0.47 (1)
10- 6	-354 / 32	0.09 (1)
2-14	0 / 1687	0.42 (1)
10- 7	0 / 2385	0.59 (1)

FACTORED CONCENTRATED LOADS (LBS)

JT	LOC.	LC1	MAX-	MAX+	FACE	DIR.	TYPE
6	18-10-3	-241	-241	---	FRONT	VERT	TOTAL
12	14-2-12	-1117	-1117	---	FRONT	VERT	TOTAL

DESIGN CRITERIA

*** SPECIAL LOADS ANALYSIS ***
GEOMETRY AND/OR BASIC LOADS CHANGED BY USER.
LOADS WERE DERIVED FROM USER INPUT
NO FURTHER MODIFICATIONS WERE MADE

SPECIFIED LOADS:

TOP	CH.	LL	=	23.3	PSF
		DL	=	3.0	PSF
BOT	CH.	LL	=	0.0	PSF
		DL	=	7.0	PSF
TOTAL	LOAD		=	33.3	PSF

SPACING = 24.0 IN. C/C

LOADING IN FLAT SECTION BASED ON A SLOPE OF 6.00/12

GIRDER TYPE: CPrimeHip
LEFT SETBACK = 4-1-13
RIGHT SETBACK = 4-1-12
END SETBACK = 6-0-0
END WALL WIDTH = 5-8
CORNER FRAMING TYPE: CONVENTIONAL
END JACK TYPE: CONVENTIONAL
APPLIED TO FRONT SIDE
- ADDT'L LOADS BASED ON 55 % OF GSL.
LOADS APPLIED TO FIRST 8-9-4 OF SPAN MEASURED FROM THE RIGHT.

*** NON STANDARD GIRDER ***
ADDT'L USER-DEFINED LOADS APPLIED TO ALL LOAD CASES.

THIS TRUSS IS DESIGNED FOR RESIDENTIAL OR SMALL BUILDING REQUIREMENTS OF PART 9, NBCC 2010

THIS DESIGN COMPLIES WITH:
- PART 9 OF OBC 2012 , BCBC 2012 , ABC 2014
- CSA 086-09
- TPIC 2011

(55 % OF 27.2 P.S.F. G.S.L. PLUS 8.4 P.S.F. RAIN LOAD) EQUALS 23.3 P.S.F. SPECIFIED ROOF LIVE LOAD

ALLOWABLE DEFL.(LL)= L/360 (0.77")
CALCULATED VERT. DEFL.(LL) = L/ 999 (0.12")
ALLOWABLE DEFL.(TL)= L/360 (0.77")
CALCULATED VERT. DEFL.(TL) = L/ 999 (0.21")

CSI: TC=0.72 (5-6:1) , BC=0.58 (12-13:1) , WB=0.66 (5-13:1) , SSI=0.33 (5-6:1)

DOL LUMBER=1.00 NAIL=1.00 LS BEND=1.00 COMP=1.00 SHEAR=1.00 TENS= 1.00

COMPANION LIVE LOAD FACTOR = 0.50

TRUSS PLATE MANUFACTURER IS NOT RESPONSIBLE FOR QUALITY CONTROL IN THE TRUSS MANUFACTURING PLANT .

NAIL VALUES

PLATE	GRIP(DRY) (PSI) MAX	MIN	SHEAR (PLI) MAX	MIN	SECTION (PLI) MAX	MIN
MT20	618	354	1667	822	2284	1656

PLATE PLACEMENT TOL. = 0.250 inches

PLATE ROTATION TOL. = Deg

LICENSED PROFESSIONAL ENGINEER
R. M. TREVISAN
100136551
March 16th, 2017
PROVINCE OF ONTARIO

RECEIVED
TOWN OF MILTON
MAR 29, 2017
17-5337
BUILDING DIVISION

CONTINUED ON PAGE 2

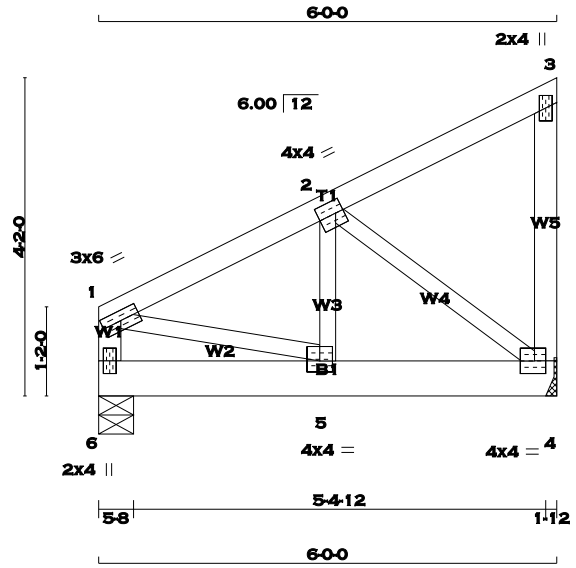

SCALE = 1:30.2

TOTAL WEIGHT = 29 lb [M]

LUMBER

N. L. G. A. RULES

CHORDS	SIZE		LUMBER	DESCR.
6 - 1	2x4	DRY	No.2	SPF
1 - 3	2x4	DRY	No.2	SPF
4 - 3	2x4	DRY	No.2	SPF
6 - 4	2x6	DRY	No.2	SPF
ALL WEBS	2x3	DRY	No.2	SPF

DRY: SEASONED LUMBER.

PLATES (table is in inches)

JT	TYPE	PLATES	W	LEN	Y	X
1	TMVW-t	MT20	3.0	6.0		
2	TMWW-t	MT20	4.0	4.0	2.00	1.25
3	TMV+p	MT20	2.0	4.0		
4	BMVW1-t	MT20	4.0	4.0	2.00	1.75
5	BMWW-t	MT20	4.0	4.0	1.75	2.00
6	BMV1+p	MT20	2.0	4.0		

A SIZE FOR SIZE SUBSTITUTION OF MITEK MII20 WITH TEE-LOK TL20 PLATES IS ALLOWED.

DIMENSIONS, SUPPORTS AND LOADINGS SPECIFIED BY FABRICATOR TO BE VERIFIED BY BUILDING DESIGNER

BEARINGS

JT	FACTORED GROSS REACTION VERT	HORZ	MAXIMUM FACTORED GROSS REACTION DOWN	HORZ	UPLIFT	INPUT BRG IN-SX	REQRD BRG IN-SX
6	1118	0	1118	0	0	5-8	5-8
4	1118	0	1118	0	0	HANGER BY OTHERS	
						MIN. SEAT SIZE: 1-12	

UNFACTORED REACTIONS

JT	1ST LCASE COMBINED	MAX./MIN. COMPONENT REACTIONS SNOW	LIVE	PERM.LIVE	WIND	DEAD	SOIL
6	784	549 / 0	0 / 0	0 / 0	0 / 0	236 / 0	0 / 0
4	784	549 / 0	0 / 0	0 / 0	0 / 0	236 / 0	0 / 0

BEARING MATERIAL TO BE SPF NO.2 OR BETTER AT JOINT(S) 6

BRACING

TOP CHORD TO BE SHEATHED OR MAX. PURLIN SPACING = 6.21 FT.
MAX. UNBRACED BOTTOM CHORD LENGTH = 10.00 FT. OR RIGID CEILING DIRECTLY APPLIED.

ALL PITCH BREAKS AND PERIMETER CORNER JOINTS MUST BE LATERALLY RESTRAINED.

LOADING

TOTAL LOAD CASES: (4)

CHORDS

MEMB. FR-TO	MAX. FACTORED FORCE (LBS)	FACTORED VERT. LOAD (PLF) FROM	TO	LC1 MAX CSI (LC)	MAX. UNBRAC LENGTH
6- 1	-745 / 0	0.0	0.0	0.08 (1)	7.81
1- 2	-951 / 0	-77.4	-77.4	0.11 (1)	6.21
2- 3	-10 / 0	-77.4	-77.4	0.10 (1)	10.00
4- 3	-94 / 0	0.0	0.0	0.02 (1)	7.81
6- 5	0 / 0	-295.2	-295.2	0.17 (1)	10.00
5- 4	0 / 859	-295.2	-295.2	0.28 (1)	10.00

WEBS

MEMB. FR-TO	MAX. FACTORED FORCE (LBS)	MAX CSI (LC)
1- 5	0 / 888	0.22 (1)
5- 2	0 / 804	0.20 (1)
2- 4	-1078 / 0	0.26 (1)

DESIGN CRITERIA

SPECIFIED LOADS:

TOP CH.	LL	=	23.3	PSF
	DL	=	3.0	PSF
BOT CH.	LL	=	0.0	PSF
	DL	=	7.0	PSF
TOTAL LOAD		=	33.3	PSF

SPACING = 24.0 IN. C/C

GIRDER TYPE: CStdGirder
START DISTANCE = 0-0
START SPAN CARRIED = 14-2-0
END DISTANCE = 6-0-0
END SPAN CARRIED = 14-2-0
END WALL WIDTH = 5-8
APPLIED TO FRONT SIDE OF BOTTOM CHORD.
- ADDT'L LOADS BASED ON 55 % OF GSL.

THIS TRUSS IS DESIGNED FOR RESIDENTIAL OR SMALL BUILDING REQUIREMENTS OF PART 9, NBCC 2010

THIS DESIGN COMPLIES WITH:
- PART 9 OF OBC 2012 , BCBC 2012 , ABC 2014
- CSA 086-09
- TPIC 2011

(55 % OF 27.2 P.S.F. G.S.L. PLUS 8.4 P.S.F. RAIN LOAD) EQUALS 23.3 P.S.F. SPECIFIED ROOF LIVE LOAD

ALLOWABLE DEFL.(LL)= L/360 (0.20")
CALCULATED VERT. DEFL.(LL) = L/ 999 (0.01")
ALLOWABLE DEFL.(TL)= L/360 (0.20")
CALCULATED VERT. DEFL.(TL) = L/ 999 (0.02")

CSI: TC=0.11 (1-2:1) , BC=0.28 (4-5:1) , WB=0.26 (2-4:1) , SSI=0.34 (5-6:1)

DOL LUMBER=1.00 NAIL=1.00 LS BEND=1.00 COMP=1.00 SHEAR=1.00 TENS= 1.00

COMPANION LIVE LOAD FACTOR = 0.50

TRUSS PLATE MANUFACTURER IS NOT RESPONSIBLE FOR QUALITY CONTROL IN THE TRUSS MANUFACTURING PLANT .

NAIL VALUES

PLATE	GRIP(DRY) (PSI) MAX	MIN	SHEAR (PLI) MAX	MIN	SECTION (PLI) MAX	MIN
MT20	618	354	1667	822	2284	1656

PLATE PLACEMENT TOL. = 0.250 inches

PLATE ROTATION TOL. = 5.0 Deg.

JSI GRIP= 0.88 (2) (INPUT = 0.90)
JSI METAL= 0.32 (5) (INPUT = 1.00)

RECEIVED
TOWN OF MILTON
MAR 29, 2017
17-5337
BUILDING DIVISION

KOTT

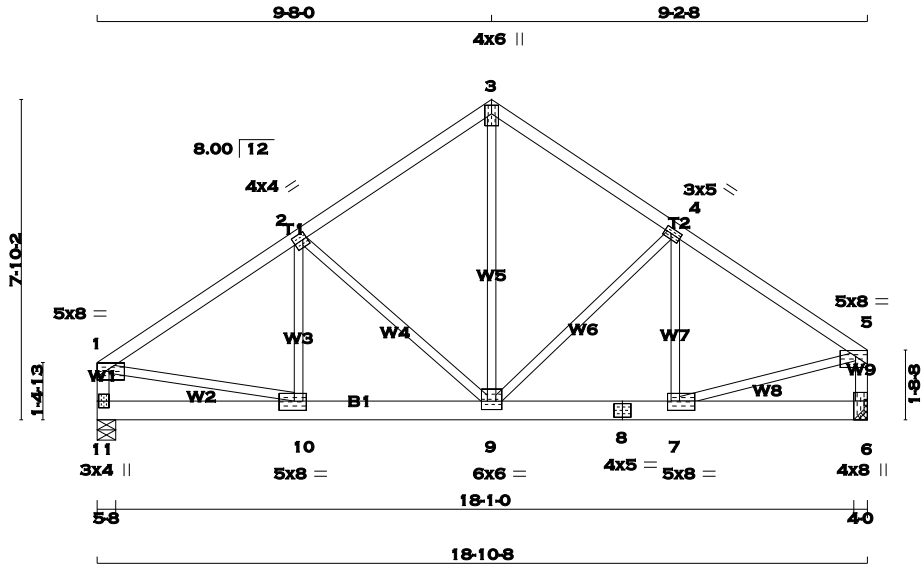

TOTAL WEIGHT = 2 X 92 = 183 lb [M]

LUMBER

N. L. G. A. RULES

CHORDS	SIZE		LUMBER	DESCR.
1 - 3	2x4	DRY	No.2	SPF
3 - 5	2x4	DRY	No.2	SPF
11 - 1	2x4	DRY	No.2	SPF
6 - 5	2x4	DRY	No.2	SPF
11 - 8	2x6	DRY	No.2	SPF
8 - 6	2x6	DRY	No.2	SPF
ALL WEBS EXCEPT	2x3	DRY	No.2	SPF

DRY: SEASONED LUMBER.

DESIGN CONSISTS OF 2 TRUSSES BUILT SEPARATELY THEN FASTENED TOGETHER AS FOLLOWS:

CHORDS #ROWS	SURFACE SPACING (IN)		LOAD(PLF)
TOP CHORDS : (0.122"X3") SPIRAL NAILS			
1- 3	1	12	TOP
3- 5	1	12	TOP
11- 1	1	12	TOP
6- 5	1	12	TOP
BOTTOM CHORDS : (0.122"X3") SPIRAL NAILS			
11- 8	2	9	SIDE(237.8)
8- 6	2	9	SIDE(237.8)
WEBS : (0.122"X3") SPIRAL NAILS			
2x3	1	6	

NAILS TO BE DRIVEN FROM ONE SIDE ONLY.

TOP - COMPONENTS ARE LOADED FROM THE TOP AND MUST BE PLACED ON TOP EDGE OF ALL PLIES FOR THE LOAD TO BE TRANSFERRED TO EACH PLY.

SIDE - PLF SHOWN IS THE EQUIVALENT UDL APPLIED TO ONE SIDE THAT THE CORRESPONDING NAILING PATTERN SHALL BE CAPABLE OF TRANSFERING. REMAINING PLF MUST BE APPLIED ON THE OPPOSITE SIDE OR ON THE TOP.

PLATES (table is in inches)

JT	TYPE	PLATES	W	LEN	Y	X
1	TMVW-p	MT20	5.0	8.0	1.75	Edge
2	TMWW-t	MT20	4.0	4.0	2.00	1.25
3	TTW+p	MT20	4.0	6.0	2.50	2.00
4	TMWW-t	MT20	3.0	5.0	1.50	2.00
5	TMVW-p	MT20	5.0	8.0	1.75	Edge
6	BMV1+t	MT20	4.0	8.0	Edge	0.50
7	BMWW-t	MT20	5.0	8.0	2.75	3.50
8	BS-t	MT20	4.0	5.0		

DIMENSIONS, SUPPORTS AND LOADINGS SPECIFIED BY FABRICATOR TO BE VERIFIED BY BUILDING DESIGNER

BEARINGS

JT	FACTORED GROSS REACTION VERT	HORZ	MAXIMUM FACTORED GROSS REACTION DOWN	HORZ	UPLIFT	INPUT BRG	REQRD BRG
11	5383	0	5383	0	0	5-8	5-8
6	5383	0	5383	0	0	HANGER BY OTHERS	
						MIN. SEAT SIZE: 4-0	

UNFACTORED REACTIONS

JT	1ST LCASE COMBINED	SNOW	LIVE	PERM.LIVE	WIND	DEAD	SOIL
		MAX./MIN. COMPONENT REACTIONS					
11	3778	2643 / 0	0 / 0	0 / 0	0 / 0	1135 / 0	0 / 0
6	3778	2643 / 0	0 / 0	0 / 0	0 / 0	1135 / 0	0 / 0

BEARING MATERIAL TO BE SPF NO.2 OR BETTER AT JOINT(S) 11

BRACING

TOP CHORD TO BE SHEATHED OR MAX. PURLIN SPACING = 3.85 FT.
MAX. UNBRACED BOTTOM CHORD LENGTH = 10.00 FT. OR RIGID CEILING DIRECTLY APPLIED.

ALL PITCH BREAKS AND PERIMETER CORNER JOINTS MUST BE LATERALLY RESTRAINED.

LOADING

TOTAL LOAD CASES: (4)

CHORDS

MEMB. FR-TO	MAX. FORCE (LBS)	FACTORED VERT. LOAD (PLF) FROM	TO	MAX CSI (LC)	MAX. UNBRAC LENGTH
1- 2	-5804 / 0	-77.4	-77.4	0.32 (1)	3.85
2- 3	-4247 / 0	-77.4	-77.4	0.22 (1)	4.46
3- 4	-4245 / 0	-77.4	-77.4	0.20 (1)	4.48
4- 5	-5408 / 0	-77.4	-77.4	0.27 (1)	4.00
11- 1	-4366 / 0	0.0	0.0	0.24 (1)	5.69
6- 5	-4409 / 0	0.0	0.0	0.25 (1)	5.68
11-10	0 / 0	-493.0	-493.0	0.39 (1)	10.00
10- 9	0 / 4845	-493.0	-493.0	0.68 (1)	10.00
9- 8	0 / 4514	-493.0	-493.0	0.62 (1)	10.00
8- 7	0 / 4514	-493.0	-493.0	0.62 (1)	10.00
7- 6	0 / 0	-493.0	-493.0	0.35 (1)	10.00

WEBS

MEMB. FR-TO	MAX. FACTORED FORCE (LBS)	MAX CSI (LC)
10- 2	0 / 1647	0.20 (1)
2- 9	-1791 / 0	0.65 (1)
9- 3	0 / 4400	0.54 (1)
9- 4	-1399 / 0	0.50 (1)
7- 4	0 / 1228	0.15 (1)
1-10	0 / 4942	0.61 (1)
7- 5	0 / 4683	0.58 (1)

RECEIVED
TOWN OF MILTON
MAR 29, 2017
17-5337
BUILDING DIVISION

DESIGN CRITERIA

SPECIFIED LOADS:

TOP CH.	LL =	23.3	PSF
	DL =	3.0	PSF
BOT CH.	LL =	0.0	PSF
	DL =	7.0	PSF
TOTAL LOAD	=	33.3	PSF

SPACING = 24.0 IN. C/C

GIRDER TYPE: CStdGirder
START DISTANCE = 0-0
START SPAN CARRIED = 22-2-2
END DISTANCE = 18-10-8
END SPAN CARRIED = 22-2-2
END WALL WIDTH = 1-8
APPLIED TO FRONT SIDE OF BOTTOM CHORD.
- ADDT'L LOADS BASED ON 55 % OF GSL.

THIS TRUSS IS DESIGNED FOR RESIDENTIAL OR SMALL BUILDING REQUIREMENTS OF PART 9, NBCC 2010

THIS DESIGN COMPLIES WITH:
- PART 9 OF OBC 2012 , BCBC 2012 , ABC 2014
- CSA 086-09
- TPIC 2011

(55 % OF 27.2 P.S.F. G.S.L. PLUS 8.4 P.S.F. RAIN LOAD) EQUALS 23.3 P.S.F. SPECIFIED ROOF LIVE LOAD

ALLOWABLE DEFL.(LL)= L/360 (0.63")
CALCULATED VERT. DEFL.(LL) = L/ 999 (0.08")
ALLOWABLE DEFL.(TL)= L/360 (0.63")
CALCULATED VERT. DEFL.(TL) = L/ 999 (0.14")

CSI: TC=0.32 (1-2:1) , BC=0.68 (9-10:1) , WB=0.65 (2-9:1) , SSI=0.47 (10-11:1)

DOL LUMBER=1.00 NAIL=1.00 LS BEND=1.00 COMP=1.00 SHEAR=1.00 TENS= 1.00

COMPANION LIVE LOAD FACTOR = 0.50

TRUSS PLATE MANUFACTURER IS NOT RESPONSIBLE FOR QUALITY CONTROL IN THE TRUSS MANUFACTURING PLANT .

NAIL VALUES

PLATE	GRIP(DRY) (PSI) MAX	MIN	SHEAR (PLI) MAX	MIN	SECTION (PLI) MAX	MIN
MT20	618	354	1667	822	2284	1656

PLATE PLACEMENT TOL. = 0.250 inches

PLATE ROTATION TOL. = 5.0 Deg.

JSI GRIP= 0.90 (9) (INPUT = 0.90)
JSI METAL= 0.53 (8) (INPUT = 1.00)

CONTINUED ON PAGE 2

JOB NAME	TRUSS NAME	QUANTITY	PLY	JOB DESC.	DRWG NO.
PT0317-097	GIRD04	1	2	TRUSS DESC. LECCO RIDGE-BLOCK 344	

KOTT , Stouffville, ON, CGC

Version 8.100 S Feb 9 2017 MiTek Industries, Inc. Thu Mar 16 11:57:36 2017 Page 1
ID:EvTixTQDI5yR1QLotZTBr_yE?HJ-zbnIHUN7tDv?ULynd4XuRxoFPfN?9bVaiiyjRqzaNkD

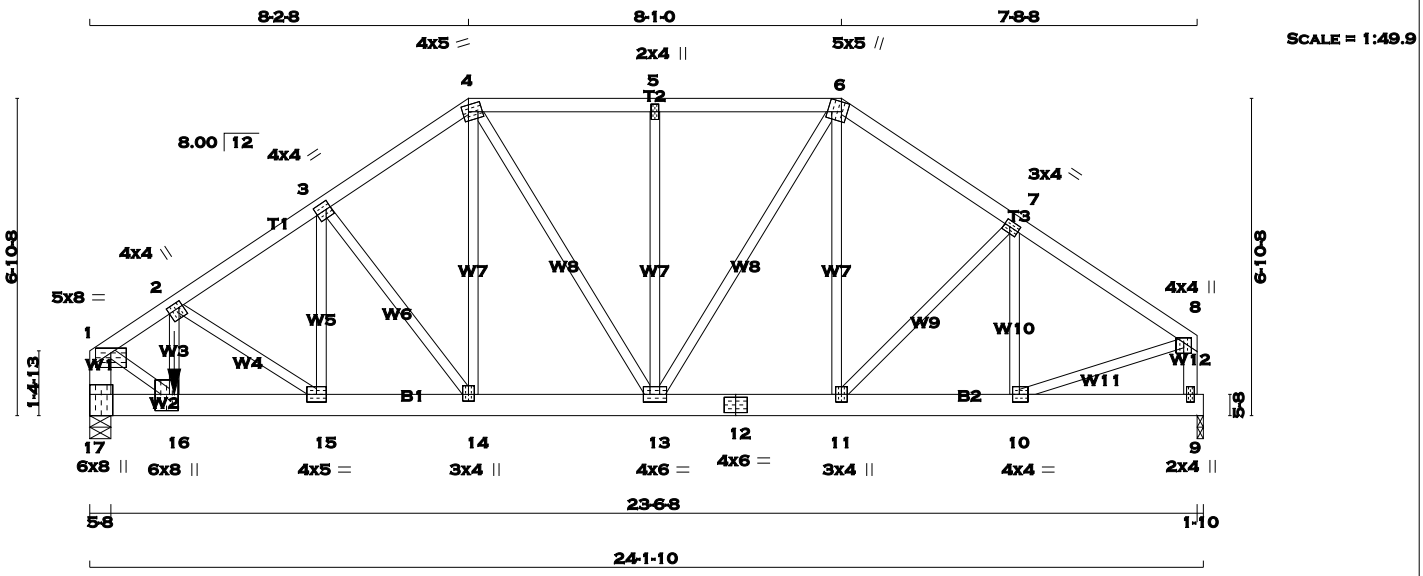

TOTAL WEIGHT = 2 X 128 = 255 lb
[M]

LUMBER
N. L. G. A. RULES

CHORDS	SIZE		LUMBER	DESCR.
1 - 4	2x4	DRY	No.2	SPF
4 - 6	2x4	DRY	No.2	SPF
6 - 8	2x4	DRY	No.2	SPF
17 - 1	2x6	DRY	No.2	SPF
9 - 8	2x4	DRY	No.2	SPF
17 - 12	2x6	DRY	No.2	SPF
12 - 9	2x6	DRY	No.2	SPF
ALL WEBS EXCEPT	2x3	DRY	No.2	SPF

DRY: SEASONED LUMBER.

DESIGN CONSISTS OF 2 TRUSSES BUILT SEPARATELY THEN FASTENED TOGETHER AS FOLLOWS:

CHORDS #ROWS	SURFACE SPACING (IN)		LOAD(PLF)
TOP CHORDS : (0.122"X3") SPIRAL NAILS			
1- 4	1	12	TOP
4- 6	1	12	TOP
6- 8	1	12	TOP
9- 8	1	12	TOP
17- 1	2	12	TOP
BOTTOM CHORDS : (0.122"X3") SPIRAL NAILS			
17- 12	2	12	SIDE(194.7)
12- 9	2	12	TOP
WEBS : (0.122"X3") SPIRAL NAILS			
2x3	1	6	

NAILS TO BE DRIVEN FROM ONE SIDE ONLY.

GIRDER NAILING ASSUMES NAILED HANGERS ARE FASTENED WITH MIN. 3-0 INCH NAILS.

TOP - COMPONENTS ARE LOADED FROM THE TOP AND MUST BE PLACED ON TOP EDGE OF ALL PLIES FOR THE LOAD TO BE TRANSFERRED TO EACH PLY.

SIDE - PLF SHOWN IS THE EQUIVALENT UDL APPLIED TO ONE SIDE THAT THE CORRESPONDING NAILING PATTERN SHALL BE CAPABLE OF TRANSFERING. REMAINING PLF MUST BE APPLIED ON THE OPPOSITE SIDE OR ON THE TOP.

PLATES (table is in inches)

JT	TYPE	PLATES	W	LEN	Y	X
1	TMVW-p	MT20	5.0	8.0	1.25	4.00
2	TMWW+t	MT20	4.0	4.0	1.50	1.00
3	TMWW-t	MT20	4.0	4.0	2.00	1.25

DIMENSIONS, SUPPORTS AND LOADINGS SPECIFIED BY FABRICATOR TO BE VERIFIED BY BUILDING DESIGNER

BEARINGS

JT	FACTORED GROSS REACTION VERT	HORZ	MAXIMUM FACTORED GROSS REACTION DOWN	HORZ	UPLIFT	INPUT BRG IN-SX	REQRD BRG IN-SX
17	6797	0	6797	0	0	5-8	5-8
9	1577	0	1577	0	0	1-10	1-10

UNFACTORED REACTIONS

JT	1ST LCASE COMBINED	MAX./MIN. COMPONENT REACTIONS SNOW	LIVE	PERM.LIVE	WIND	DEAD	SOIL
17	4770	3337 / 0	0 / 0	0 / 0	0 / 0	1433 / 0	0 / 0
9	1107	774 / 0	0 / 0	0 / 0	0 / 0	332 / 0	0 / 0

BEARING MATERIAL TO BE SPF NO.2 OR BETTER AT JOINT(S) 17, 9

BRACING
TOP CHORD TO BE SHEATHED OR MAX. PURLIN SPACING = 3.87 FT.
MAX. UNBRACED BOTTOM CHORD LENGTH = 10.00 FT. OR RIGID CEILING DIRECTLY APPLIED.

ALL PITCH BREAKS AND PERIMETER CORNER JOINTS MUST BE LATERALLY RESTRAINED.

LOADING
TOTAL LOAD CASES: (4)

CHORDS MEMB. FR-TO	MAX. FACTORED FORCE (LBS)	FACTORED VERT. LOAD (PLF) FROM	TO	LC1 CSI (LC)	MAX UNBRAC LENGTH	WEBS MEMB. FR-TO	MAX. FACTORED FORCE (LBS)	MAX CSI (LC)
1- 2	-6022 / 0	-77.4	-77.4	0.16 (1)	3.87	16- 2	0 / 2617	0.32 (1)
2- 3	-3566 / 0	-77.4	-77.4	0.12 (1)	4.88	2-15	-2450 / 0	0.33 (1)
3- 4	-2418 / 0	-77.4	-77.4	0.09 (1)	5.71	15- 3	0 / 1644	0.20 (1)
4- 5	-1868 / 0	-77.4	-77.4	0.12 (1)	6.24	3-14	-1643 / 0	0.41 (1)
5- 6	-1868 / 0	-77.4	-77.4	0.12 (1)	6.24	14- 4	0 / 1353	0.17 (1)
6- 7	-1759 / 0	-77.4	-77.4	0.11 (1)	6.25	4-13	-279 / 0	0.16 (1)
7- 8	-1678 / 0	-77.4	-77.4	0.11 (1)	6.25	13- 5	-370 / 0	0.14 (1)
17- 1	-6147 / 0	0.0	0.0	0.22 (1)	5.97	13- 6	0 / 800	0.10 (1)
9- 8	-1535 / 0	0.0	0.0	0.09 (1)	7.81	11- 6	0 / 64	0.01 (4)
						11- 7	0 / 47	0.01 (1)
17-16	0 / 0	-406.8	-406.8	0.19 (1)	10.00	10- 7	-428 / 0	0.06 (1)
16-15	0 / 4998	-17.5	-17.5	0.51 (1)	10.00	1-16	0 / 5689	0.70 (1)
15-14	0 / 2987	-17.5	-17.5	0.21 (1)	10.00	10- 8	0 / 1489	0.18 (1)
14-13	0 / 2016	-17.5	-17.5	0.14 (1)	10.00			
13-12	0 / 1445	-17.5	-17.5	0.11 (1)	10.00			
12-11	0 / 1445	-17.5	-17.5	0.11 (1)	10.00			
11-10	0 / 1412	-17.5	-17.5	0.11 (1)	10.00			
10- 9	0 / 0	-17.5	-17.5	0.02 (1)	10.00			

FACTORED CONCENTRATED LOADS (LBS)

JT	LOC.	LC1	MAX-	MAX+	FACE	DIR.	TYPE
16	1-10-0	-5383	-5383	---	FRONT	VERT	TOTAL

RECEIVED
TOWN OF MILTON
MAR 29, 2017
17-5337
BUILDING DIVISION

DESIGN CRITERIA

*** SPECIAL LOADS ANALYSIS ***
GEOMETRY AND/OR BASIC LOADS CHANGED BY USER.
LOADS WERE DERIVED FROM USER INPUT
NO FURTHER MODIFICATIONS WERE MADE

SPECIFIED LOADS:

TOP	CH.	LL	=	23.3	PSF
		DL	=	3.0	PSF
BOT	CH.	LL	=	0.0	PSF
		DL	=	7.0	PSF
TOTAL	LOAD		=	33.3	PSF

SPACING = 24.0 IN. C/C

LOADING IN FLAT SECTION BASED ON A SLOPE OF 6.00/12

GIRDER TYPE: CStdGirder
START DISTANCE = 0-0
START SPAN CARRIED = 18-10-8
END DISTANCE = 1-10-0
END SPAN CARRIED = 18-10-8
END WALL WIDTH = 5-8
APPLIED TO FRONT SIDE OF BOTTOM CHORD.
- ADDT'L LOADS BASED ON 55 % OF GSL.

*** NON STANDARD GIRDER ***
ADDT'L USER-DEFINED LOADS APPLIED TO ALL LOAD CASES.

THIS TRUSS IS DESIGNED FOR RESIDENTIAL OR SMALL BUILDING REQUIREMENTS OF PART 9, NBCC 2010

THIS DESIGN COMPLIES WITH:
- PART 9 OF OBC 2012 , BCBC 2012 , ABC 2014
- CSA 086-09
- TPIC 2011

(55 % OF 27.2 P.S.F. G.S.L. PLUS 8.4 P.S.F. RAIN LOAD) EQUALS 23.3 P.S.F. SPECIFIED ROOF LIVE LOAD

ALLOWABLE DEFL.(LL)= L/360 (0.80")
CALCULATED VERT. DEFL.(LL) = L/ 999 (0.04")
ALLOWABLE DEFL.(TL)= L/360 (0.80")
CALCULATED VERT. DEFL.(TL) = L/ 999 (0.07")

CSI: TC=0.22 (1-17:1) , BC=0.51 (15-16:1) , WB=0.70 (1-16:1) , SSI=0.22 (16-17:1)

DOL LUMBER=1.00 NAIL=1.00 LS BEND=1.00 COMP=1.00 SHEAR=1.00 TENS= 1.00

COMPANION LIVE LOAD FACTOR = 0.50

TRUSS PLATE MANUFACTURER IS NOT RESPONSIBLE FOR QUALITY CONTROL IN THE TRUSS MANUFACTURING PLANT .

NAIL VALUES

PLATE	GRIP(DRY) (PSI) MAX	MIN	SHEAR (PLI) MAX	MIN	SECTION (PLI) MAX	MIN
MT20	618	354	1667	822	2284	1656

PLATE PLACEMENT TOL. = 0.250 inches

PLATE ROTATION TOL. = 5.0 Deg.

JSI GRIP= 0.90 (0.96) INPUT = 0.90
JSI METAL= 0.94 (MIN = 1.00)

CONTINUED ON PAGE 2

JOB NAME	TRUSS NAME	QUANTITY	PLY	JOB DESC.	DRWG NO.
PT0317-097	GIRD05	1	1	TRUSS DESC. LECCO RIDGE-BLOCK 344	

KOTT , Stouffville, ON, CGC

Version 8.100 S Feb 9 2017 MiTek Industries, Inc. Thu Mar 16 11:57:37 2017 Page 1
ID:EvTixTQDI5yR1QLotZTBr_yE?HJ-RoLhUqOleX1s6VW_Bn27_9LPp3klu4OjwMiG_GzaNkC

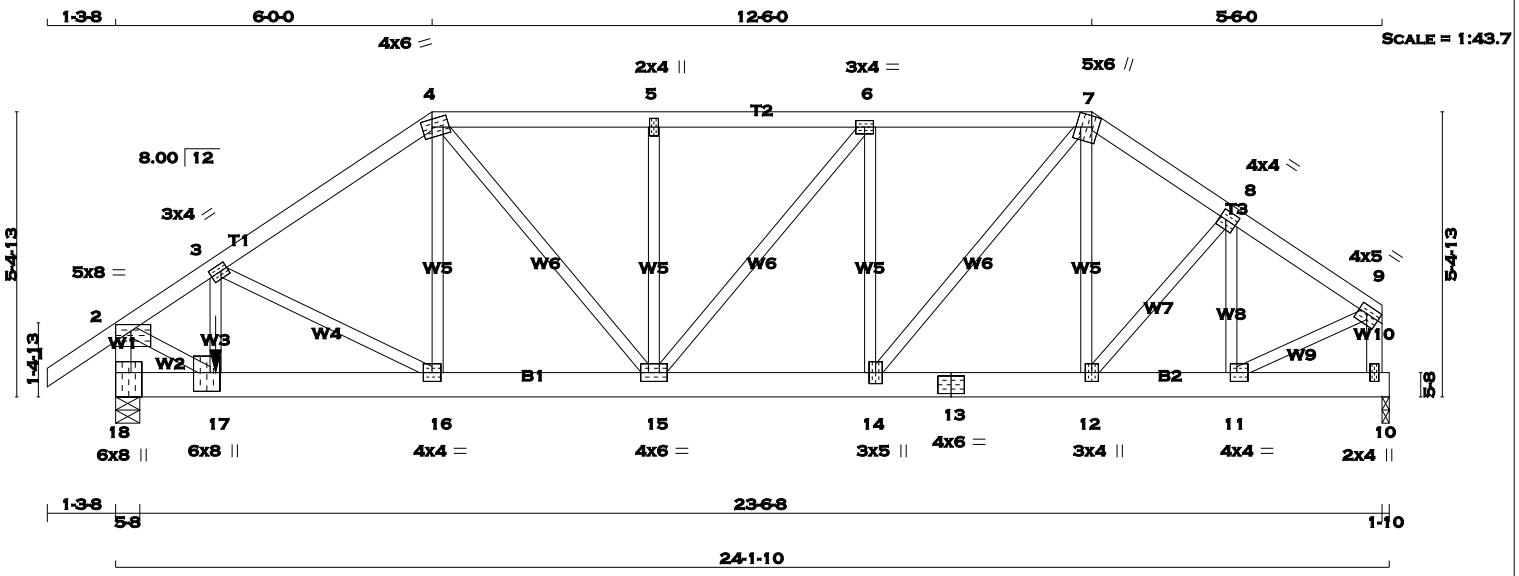

TOTAL WEIGHT = 122 lb

LUMBER
N. L. G. A. RULES

CHORDS	SIZE		LUMBER	DESCR.
1 - 4	2x4	DRY	No.2	SPF
4 - 7	2x4	DRY	No.2	SPF
7 - 9	2x4	DRY	No.2	SPF
18 - 2	2x4	DRY	No.2	SPF
10 - 9	2x4	DRY	No.2	SPF
18 - 13	2x6	DRY	No.2	SPF
13 - 10	2x6	DRY	No.2	SPF
ALL WEBS EXCEPT	2x3	DRY	No.2	SPF

DRY: SEASONED LUMBER.

PLATES (table is in inches)

JT	TYPE	PLATES	W	LEN	Y	X
2	TMVW-p	MT20	5.0	8.0	1.50	3.50
3	TMWW-t	MT20	3.0	4.0	1.50	1.50
4	TTWW-m	MT20	4.0	6.0	1.75	2.25
5	TMW+w	MT20	2.0	4.0		
6	TMWW-t	MT20	3.0	4.0		
7	TTWW+m	MT20	5.0	6.0	2.50	1.50
8	TMWW-t	MT20	4.0	4.0	2.00	1.50
9	TMVW-t	MT20	4.0	5.0	1.75	Edge
10	BMV1+p	MT20	2.0	4.0		
11	BMWW-t	MT20	4.0	4.0	2.00	1.50
12	BMWW+t	MT20	3.0	4.0		
13	BS-t	MT20	4.0	6.0		
14	BMWW+t	MT20	3.0	5.0		
15	BMWWW-t	MT20	4.0	6.0		
16	BMWW-t	MT20	4.0	4.0		
17	BMWW+t	MT20	6.0	8.0	4.25	2.25
18	BMV1+t	MT20	6.0	8.0	5.50	

Edge - INDICATES REFERENCE CORNER OF PLATE TOUCHES EDGE OF CHORD.

A SIZE FOR SIZE SUBSTITUTION OF MITEK MII20 WITH TEE-LOK TL20 PLATES IS ALLOWED.

HANGERS NOTES

1) SPECIAL HANGER(S) OR CONNECTION(S) REQUIRED TO SUPPORT CONCENTRATED LOAD(S) 1735.5 lbs FACTORED DOWN AT 1-10-12 ON BOTTOM CHORD. DESIGN FOR UNSPECIFIED CONNECTION(S) IS DELEGATED TO THE BUILDING DESIGNER.

DIMENSIONS, SUPPORTS AND LOADINGS SPECIFIED BY FABRICATOR TO BE VERIFIED BY BUILDING DESIGNER

BEARINGS

JT	FACTORED GROSS REACTION VERT	HORZ	MAXIMUM FACTORED GROSS REACTION DOWN	HORZ	UPLIFT	INPUT BRG IN-SX	REQRD BRG IN-SX
18	2846	0	2846	0	0	5-8	5-8
10	1272	0	1272	0	0	1-10	1-10

UNFACTORED REACTIONS

JT	1ST LCASE COMBINED	MAX./MIN. COMPONENT REACTIONS SNOW	LIVE	PERM.LIVE	WIND	DEAD	SOIL
18	1995	1409 / 0	0 / 0	0 / 0	0 / 0	585 / 0	0 / 0
10	893	624 / 0	0 / 0	0 / 0	0 / 0	269 / 0	0 / 0

BEARING MATERIAL TO BE SPF NO.2 OR BETTER AT JOINT(S) 18, 10

BRACING

TOP CHORD TO BE SHEATHED OR MAX. PURLIN SPACING = 4.10 FT.
MAX. UNBRACED BOTTOM CHORD LENGTH = 10.00 FT. OR RIGID CEILING DIRECTLY APPLIED.

ALL PITCH BREAKS AND PERIMETER CORNER JOINTS MUST BE LATERALLY RESTRAINED.

LOADING

TOTAL LOAD CASES: (4)

CHORDS

MEMB. FR-TO	MAX. FACTORED FORCE (LBS)	FACTORED VERT. LOAD (PLF) FROM	TO	LC1 CSI (LC)	MAX UNBRAC LENGTH
1- 2	0 / 29	-77.4	-77.4	0.11 (1)	10.00
2- 3	-2574 / 0	-77.4	-77.4	0.20 (1)	4.10
3- 4	-1827 / 0	-77.4	-77.4	0.26 (1)	4.68
4- 5	-1715 / 0	-77.4	-77.4	0.24 (1)	4.82
5- 6	-1716 / 0	-77.4	-77.4	0.24 (1)	4.80
6- 7	-1594 / 0	-77.4	-77.4	0.24 (1)	4.95
7- 8	-1359 / 0	-77.4	-77.4	0.12 (1)	5.42
8- 9	-1206 / 0	-77.4	-77.4	0.11 (1)	5.68
18- 2	-2732 / 0	0.0	0.0	0.30 (1)	5.14
10- 9	-1237 / 0	0.0	0.0	0.14 (1)	7.19
18-17	0 / 0	-17.5	-17.5	0.14 (1)	10.00
17-16	0 / 2142	-17.5	-17.5	0.41 (1)	10.00
16-15	0 / 1519	-17.5	-17.5	0.25 (1)	10.00
15-14	0 / 1594	-17.5	-17.5	0.24 (1)	10.00
14-13	0 / 1117	-17.5	-17.5	0.17 (1)	10.00
13-12	0 / 1117	-17.5	-17.5	0.17 (1)	10.00
12-11	0 / 1014	-17.5	-17.5	0.15 (1)	10.00
11-10	0 / 0	-17.5	-17.5	0.03 (1)	10.00

WEBS

MEMB. FR-TO	MAX. FACTORED FORCE (LBS)	MAX CSI (LC)
17- 3	0 / 504	0.12 (1)
3-16	-719 / 0	0.28 (1)
16- 4	0 / 498	0.12 (1)
4-15	0 / 305	0.08 (1)
15- 5	-343 / 0	0.14 (1)
15- 6	0 / 192	0.05 (1)
14- 6	-496 / 0	0.21 (1)
14- 7	0 / 743	0.18 (1)
12- 7	-36 / 34	0.01 (1)
12- 8	0 / 160	0.04 (1)
11- 8	-455 / 0	0.10 (1)
2-17	0 / 2420	0.60 (1)
11- 9	0 / 1118	0.28 (1)

FACTORED CONCENTRATED LOADS (LBS)

JT	LOC.	LC1	MAX-	MAX+	FACE	DIR.	TYPE
17	1-10-12	-1736	-1736	---	FRONT	VERT	TOTAL

RECEIVED
TOWN OF MILTON
MAR 29, 2017
17-5337
BUILDING DIVISION

DESIGN CRITERIA

*** SPECIAL LOADS ANALYSIS ***
GEOMETRY AND/OR BASIC LOADS CHANGED BY USER.
LOADS WERE DERIVED FROM USER INPUT
NO FURTHER MODIFICATIONS WERE MADE

SPECIFIED LOADS:

TOP	CH.	LL	=	23.3	PSF
		DL	=	3.0	PSF
BOT	CH.	LL	=	0.0	PSF
		DL	=	7.0	PSF
TOTAL	LOAD		=	33.3	PSF

SPACING = 24.0 IN. C/C

LOADING IN FLAT SECTION BASED ON A SLOPE OF 6.00/12

*** NON STANDARD GIRDER ***
ADDT'L USER-DEFINED LOADS APPLIED TO ALL LOAD CASES.

THIS TRUSS IS DESIGNED FOR RESIDENTIAL OR SMALL BUILDING REQUIREMENTS OF PART 9, NBCC 2010

THIS DESIGN COMPLIES WITH:
- PART 9 OF OBC 2012 , BCBC 2012 , ABC 2014
- CSA 086-09
- TPIC 2011

DESIGN ASSUMPTIONS
-OVERHANG NOT TO BE ALTERED OR CUT OFF.

(55 % OF 27.2 P.S.F. G.S.L. PLUS 8.4 P.S.F. RAIN LOAD) EQUALS 23.3 P.S.F. SPECIFIED ROOF LIVE LOAD

ALLOWABLE DEFL.(LL)= L/360 (0.80")
CALCULATED VERT. DEFL.(LL) = L/ 999 (0.05")
ALLOWABLE DEFL.(TL)= L/360 (0.80")
CALCULATED VERT. DEFL.(TL) = L/ 999 (0.09")

CSI: TC=0.30 (2-18:1) , BC=0.41 (16-17:1) , WB=0.60 (2-17:1) , SSI=0.17 (6-7:1)

DOL LUMBER=1.00 NAIL=1.00 LS BEND=1.00 COMP=1.00 SHEAR=1.00 TENS= 1.00

COMPANION LIVE LOAD FACTOR = 0.50

TRUSS PLATE MANUFACTURER IS NOT RESPONSIBLE FOR QUALITY CONTROL IN THE TRUSS MANUFACTURING PLANT .

NAIL VALUES

PLATE	GRIP(DRY) (PSI) MAX	MIN	SHEAR (PLI) MAX	MIN	SECTION (PLI) MAX	MIN
MT20	618	354	1667	822	2284	1656

PLATE PLACEMENT TOL. = 0.250 inches

PLATE ROTATION TOL. = 5.0 Deg.

JSI GRIP= 0.90 (4) (INPUT = 0.90)
JSI METAL= 0.47 (17) (INPUT = 1.00)

KOTT

SCALE = 1:20.6

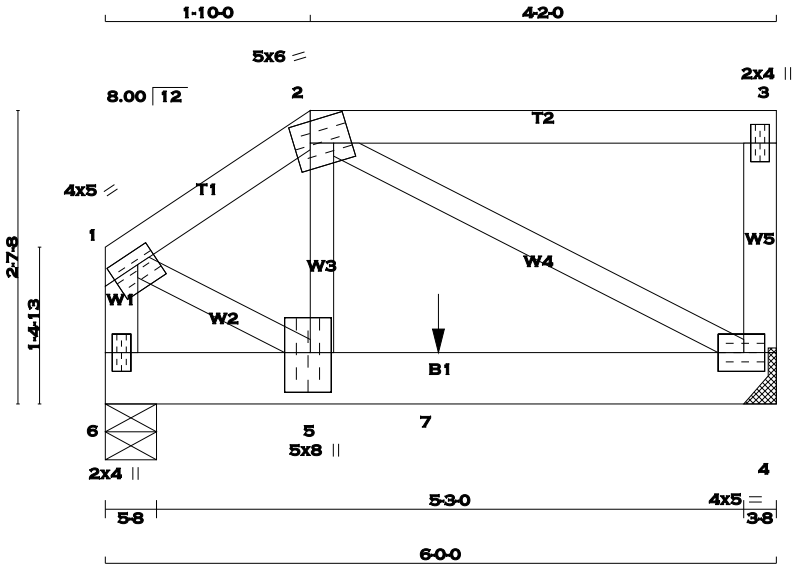

TOTAL WEIGHT = 28 lb [M]

LUMBER

N. L. G. A. RULES

CHORDS	SIZE		LUMBER	DESCR.
1 - 2	2x4	DRY	No.2	SPF
2 - 3	2x4	DRY	No.2	SPF
4 - 3	2x4	DRY	No.2	SPF
6 - 1	2x4	DRY	No.2	SPF
6 - 4	2x6	DRY	No.2	SPF
ALL WEBS EXCEPT	2x3	DRY	No.2	SPF

DRY: SEASONED LUMBER.

PLATES (table is in inches)

JT	TYPE	PLATES	W	LEN	Y	X
1	TMVW-t	MT20	4.0	5.0	1.50	2.00
2	TTWW-m	MT20	5.0	6.0	2.25	1.75
3	TMV+p	MT20	2.0	4.0		
4	BMVW1-t	MT20	4.0	5.0	2.00	2.25
5	BMWW+t	MT20	5.0	8.0	4.25	2.25
6	BMV1+p	MT20	2.0	4.0		

A SIZE FOR SIZE SUBSTITUTION OF MITEK MII20 WITH TEE-LOK TL20 PLATES IS ALLOWED.

HANGERS NOTES

1) SPECIAL HANGER(S) OR CONNECTION(S) REQUIRED TO SUPPORT CONCENTRATED LOAD(S) 461.7 lbs FACTORED DOWN AT 2-11-12 ON BOTTOM CHORD. DESIGN FOR UNSPECIFIED CONNECTION(S) IS DELEGATED TO THE BUILDING DESIGNER.

DIMENSIONS, SUPPORTS AND LOADINGS SPECIFIED BY FABRICATOR TO BE VERIFIED BY BUILDING DESIGNER

BEARINGS

JT	FACTORED GROSS REACTION VERT	HORZ	MAXIMUM FACTORED GROSS REACTION DOWN	HORZ	UPLIFT	INPUT BRG IN-SX	REQRD BRG IN-SX
4	1735	0	1735	0	0	HANGER BY OTHERS MIN. SEAT SIZE: 3-8	
6	1353	0	1353	0	0	5-8	5-8

UNFACTORED REACTIONS

JT	1ST LCASE COMBINED	SNOW	MAX./MIN. COMPONENT REACTIONS LIVE	PERM.LIVE	WIND	DEAD	SOIL
4	1218	852 / 0	0 / 0	0 / 0	0 / 0	366 / 0	0 / 0
6	949	664 / 0	0 / 0	0 / 0	0 / 0	285 / 0	0 / 0

BEARING MATERIAL TO BE SPF NO.2 OR BETTER AT JOINT(S) 6

BRACING

TOP CHORD TO BE SHEATHED OR MAX. PURLIN SPACING = 5.37 FT.
MAX. UNBRACED BOTTOM CHORD LENGTH = 10.00 FT. OR RIGID CEILING DIRECTLY APPLIED.

ALL PITCH BREAKS AND PERIMETER CORNER JOINTS MUST BE LATERALLY RESTRAINED.

LOADING

TOTAL LOAD CASES: (4)

CHORDS

MEMB. FR-TO	MAX. FACTORED FORCE (LBS)	FACTORED VERT. LOAD LC1 (PLF) FROM	TO	MAX CSI (LC)	MAX. UNBRAC LENGTH
1- 2	-1429 / 0	-77.4	-77.4	0.07 (1)	5.37
2- 3	0 / 0	-77.4	-77.4	0.25 (1)	10.00
4- 3	-161 / 0	0.0	0.0	0.02 (1)	7.81
6- 1	-1480 / 0	0.0	0.0	0.17 (1)	6.70
6- 5	0 / 0	-230.9	-230.9	0.50 (1)	10.00
5- 7	0 / 1242	-230.9	-230.9	0.78 (1)	10.00
7- 4	0 / 1242	-487.9	-487.9	0.78 (1)	10.00

WEBS

MEMB. FR-TO	MAX. FACTORED FORCE (LBS)	MAX CSI (LC)
5- 2	0 / 1235	0.31 (1)
2- 4	-1410 / 0	0.48 (1)
1- 5	0 / 1332	0.33 (1)

FACTORED CONCENTRATED LOADS (LBS)

JT	LOC.	LC1	MAX-	MAX+	FACE	DIR.	TYPE
7	2-11-12	-462	-462	---	FRONT	VERT	TOTAL

RECEIVED
TOWN OF MILTON
MAR 29, 2017
17-5337
BUILDING DIVISION

DESIGN CRITERIA

*** SPECIAL LOADS ANALYSIS ***
GEOMETRY AND/OR BASIC LOADS CHANGED BY USER.
LOADS WERE DERIVED FROM USER INPUT
NO FURTHER MODIFICATIONS WERE MADE

SPECIFIED LOADS:

TOP	CH.	LL	=	23.3	PSF
		DL	=	3.0	PSF
BOT	CH.	LL	=	0.0	PSF
		DL	=	7.0	PSF
TOTAL	LOAD		=	33.3	PSF

SPACING = 24.0 IN. C/C

LOADING IN FLAT SECTION BASED ON A SLOPE OF 6.00/12

GIRDER TYPE: CStdGirder
START DISTANCE = 0-0
START SPAN CARRIED = 11-5-8
END DISTANCE = 2-11-12
END SPAN CARRIED = 11-5-8
END WALL WIDTH = 5-8
APPLIED TO FRONT SIDE OF BOTTOM CHORD.
- ADDT'L LOADS BASED ON 55 % OF GSL.

GIRDER TYPE: CStdGirder
START DISTANCE = 2-11-12
START SPAN CARRIED = 21-11-8
END DISTANCE = 6-0-0
END SPAN CARRIED = 21-11-8
END WALL WIDTH = 1-8
APPLIED TO FRONT SIDE OF BOTTOM CHORD.
- ADDT'L LOADS BASED ON 55 % OF GSL.

*** NON STANDARD GIRDER ***
ADDT'L USER-DEFINED LOADS APPLIED TO ALL LOAD CASES.

THIS TRUSS IS DESIGNED FOR RESIDENTIAL OR SMALL BUILDING REQUIREMENTS OF PART 9, NBCC 2010

THIS DESIGN COMPLIES WITH:
- PART 9 OF OBC 2012 , BCBC 2012 , ABC 2014
- CSA 086-09
- TPIC 2011

(55 % OF 27.2 P.S.F. G.S.L. PLUS 8.4 P.S.F. RAIN LOAD) EQUALS 23.3 P.S.F. SPECIFIED ROOF LIVE LOAD

ALLOWABLE DEFL.(LL)= L/360 (0.20")
CALCULATED VERT. DEFL.(LL) = L/ 999 (0.05")
ALLOWABLE DEFL.(TL)= L/360 (0.20")
CALCULATED VERT. DEFL.(TL) = L/ 877 (0.08")

CSI: TC=0.25 (2-3:1) , BC=0.78 (4-5:1) , WB=0.48 (2-4:1) , SSI=0.84 (4-5:1)

DOL LUMBER=1.00 NAIL=1.00 LS BEND=1.00 COMP=1.00 SHEAR=1.00 TENS= 1.00

COMPANION LIVE LOAD FACTOR = 0.50

TRUSS PLATE MANUFACTURER IS NOT RESPONSIBLE FOR QUALITY CONTROL IN THE TRUSS MANUFACTURING PLANT .

KOTT

CONTINUED ON PAGE 2

JOB NAME	TRUSS NAME	QUANTITY	PLY	JOB DESC.	DRWG NO.
PT0317-097	GIRD07	1	1	TRUSS DESC. LECCO RIDGE-BLOCK 344	

KOTT , Stouffville, ON, CGC

Version 8.100 S Feb 9 2017 MiTek Industries, Inc. Thu Mar 16 11:57:38 2017 Page 1
ID:EvTixTQDI5yR1QLotZTBr_yE?HJ-v_v3hAONPqAjjf5AlVZMWMuWLT5RdTct90RpWizaNkB

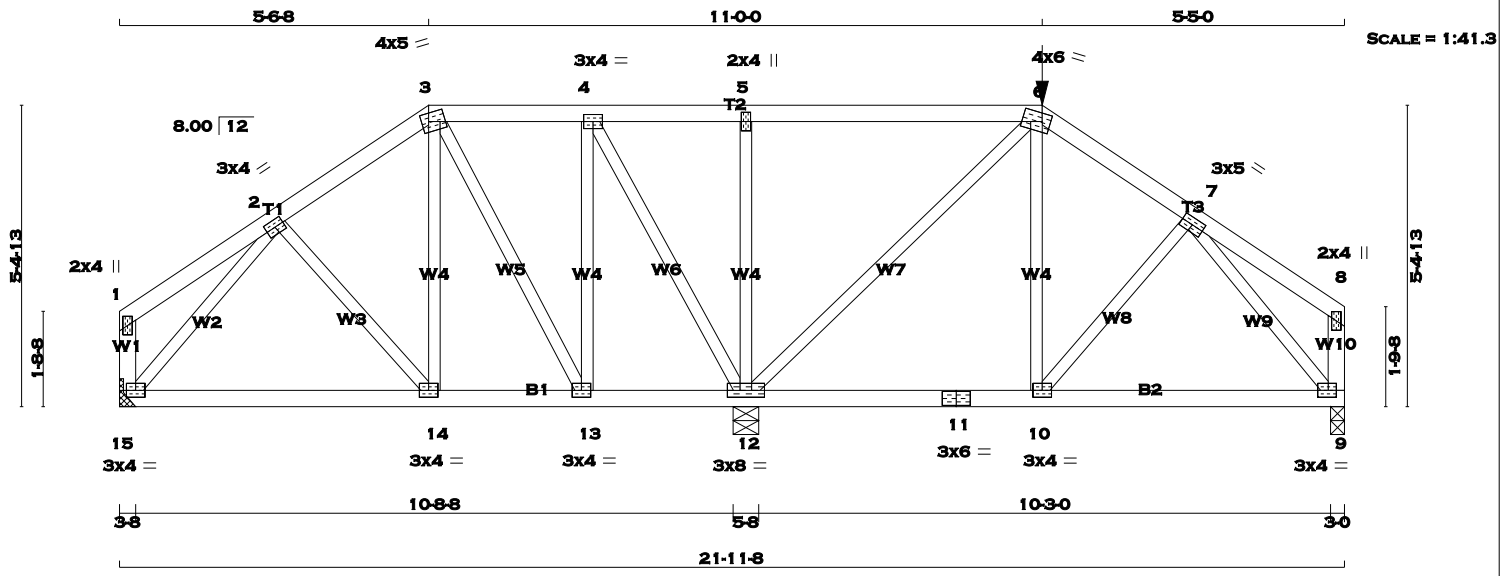

TOTAL WEIGHT = 99 lb
[M]

LUMBER
N. L. G. A. RULES

CHORDS	SIZE		LUMBER	DESCR.
1 - 3	2x4	DRY	No.2	SPF
3 - 6	2x4	DRY	No.2	SPF
6 - 8	2x4	DRY	No.2	SPF
15 - 1	2x4	DRY	No.2	SPF
9 - 8	2x4	DRY	No.2	SPF
15 - 11	2x4	DRY	No.2	SPF
11 - 9	2x4	DRY	No.2	SPF
ALL WEBS EXCEPT	2x3	DRY	No.2	SPF

DRY: SEASONED LUMBER.

PLATES (table is in inches)

JT	TYPE	PLATES	W	LEN	Y	X
1	TMV+p	MT20	2.0	4.0		
2	TMWW-t	MT20	3.0	4.0		
3	TTWW-m	MT20	4.0	5.0	1.75	1.50
4	TMWW-t	MT20	3.0	4.0		
5	TMW+w	MT20	2.0	4.0		
6	TTWW-m	MT20	4.0	6.0	1.75	1.75
7	TMWW-t	MT20	3.0	5.0		
8	TMV+p	MT20	2.0	4.0		
9	BMVW1-t	MT20	3.0	4.0	1.50	1.75
10, 13, 14						
10	BMWW-t	MT20	3.0	4.0		
11	BS-t	MT20	3.0	6.0		
12	BMWWW1-t	MT20	3.0	8.0		
15	BMVW1-t	MT20	3.0	4.0		

A SIZE FOR SIZE SUBSTITUTION OF MITEK MII20 WITH TEE-LOK TL20 PLATES IS ALLOWED.

HANGERS NOTES

1) SPECIAL HANGER(S) OR CONNECTION(S) REQUIRED TO SUPPORT CONCENTRATED LOAD(S) 314.3 lbs FACTORED DOWN AT 16-6-8 ON TOP CHORD. DESIGN FOR UNSPECIFIED CONNECTION(S) IS DELEGATED TO THE BUILDING DESIGNER.

DIMENSIONS, SUPPORTS AND LOADINGS SPECIFIED BY FABRICATOR TO BE VERIFIED BY BUILDING DESIGNER

BEARINGS

JT	FACTORED GROSS REACTION VERT	HORZ	MAXIMUM FACTORED GROSS REACTION DOWN	HORZ	UPLIFT	INPUT BRG IN-SX	REQRD BRG IN-SX
12	1726	0	1726	0	0	5-8	5-8
15	460	0	460	0	0	HANGER BY OTHERS	
						MIN. SEAT SIZE: 3-8	
9	772	0	772	0	0	3-0	3-0

UNFACTORED REACTIONS

JT	1ST LCASE COMBINED	MAX./MIN. COMPONENT REACTIONS SNOW	LIVE	PERM.LIVE	WIND	DEAD	SOIL
12	1208	866 / 0	0 / 0	0 / 0	0 / 0	342 / 0	0 / 0
15	324	220 / 0	0 / 0	0 / 0	0 / 0	104 / 0	0 / 0
9	546	358 / 0	0 / 0	0 / 0	0 / 0	189 / 0	0 / 0

BEARING MATERIAL TO BE SPF NO.2 OR BETTER AT JOINT(S) 9

BRACING

TOP CHORD TO BE SHEATHED OR MAX. PURLIN SPACING = 6.25 FT.
MAX. UNBRACED BOTTOM CHORD LENGTH = 10.00 FT. OR RIGID CEILING DIRECTLY APPLIED.

ALL PITCH BREAKS AND PERIMETER CORNER JOINTS MUST BE LATERALLY RESTRAINED.

LOADING

TOTAL LOAD CASES: (4)

CHORDS

MEMB. FR-TO	MAX. FORCE (LBS)	FACTORED VERT. LOAD (PLF) FROM	TO	LC1 MAX CSI (LC)	MAX. UNBRAC LENGTH
1- 2	0 / 13	-77.4	-77.4	0.10 (1)	10.00
2- 3	-280 / 0	-77.4	-77.4	0.10 (1)	6.25
3- 4	-98 / 0	-77.4	-77.4	0.12 (1)	6.25
4- 5	0 / 73	-77.4	-77.4	0.57 (1)	10.00
5- 6	0 / 74	-149.9	-149.9	0.57 (1)	10.00
6- 7	-635 / 0	-77.4	-77.4	0.09 (1)	6.25
7- 8	0 / 12	-77.4	-77.4	0.09 (1)	10.00
15- 1	-84 / 0	0.0	0.0	0.01 (1)	7.81
9- 8	-84 / 0	0.0	0.0	0.01 (1)	7.81
15-14	0 / 288	-17.5	-17.5	0.15 (4)	10.00
14-13	0 / 225	-17.5	-17.5	0.16 (4)	10.00
13-12	0 / 98	-17.5	-17.5	0.14 (4)	10.00
12-11	0 / 521	-33.9	-33.9	0.32 (4)	10.00
11-10	0 / 521	-33.9	-33.9	0.32 (4)	10.00
10- 9	0 / 507	-33.9	-33.9	0.31 (4)	10.00

WEBS

MEMB. FR-TO	FORCE (LBS)	MAX CSI (LC)
2-14	-100 / 9	0.03 (1)
14- 3	0 / 179	0.04 (1)
13-13	-260 / 0	0.15 (1)
13- 4	0 / 227	0.06 (1)
4-12	-353 / 0	0.21 (1)
12- 5	-714 / 0	0.32 (1)
12- 6	-824 / 0	0.86 (1)
10- 6	0 / 205	0.08 (4)
10- 7	0 / 42	0.02 (4)
15- 2	-442 / 0	0.13 (1)
7- 9	-795 / 0	0.24 (1)

FACTORED CONCENTRATED LOADS (LBS)

JT	LOC.	LC1	MAX-	MAX+	FACE	DIR.	TYPE
6	16-6-8	-314	-314	---	FRONT	VERT	TOTAL

DESIGN CRITERIA

SPECIFIED LOADS:

TOP	CH.	LL	=	23.3	PSF
		DL	=	3.0	PSF
BOT	CH.	LL	=	0.0	PSF
		DL	=	7.0	PSF
TOTAL	LOAD		=	33.3	PSF

SPACING = 24.0 IN. C/C

LOADING IN FLAT SECTION BASED ON A SLOPE OF 6.00/12

GIRDER TYPE: CPrimeHip
LEFT SETBACK = 5-6-8
RIGHT SETBACK = 5-5-0
END SETBACK = 6-0-0
END WALL WIDTH = 3-0
CORNER FRAMING TYPE: CONVENTIONAL
END JACK TYPE: CONVENTIONAL
APPLIED TO FRONT SIDE
- ADDT'L LOADS BASED ON 55 % OF GSL.
LOADS APPLIED TO FIRST 10-6-0 OF SPAN MEASURED FROM THE RIGHT.

THIS TRUSS IS DESIGNED FOR RESIDENTIAL OR SMALL BUILDING REQUIREMENTS OF PART 9, NBCC 2010

THIS DESIGN COMPLIES WITH:
- PART 9 OF OBC 2012 , BCBC 2012 , ABC 2014
- CSA 086-09
- TPIC 2011

(55 % OF 27.2 P.S.F. G.S.L. PLUS 8.4 P.S.F. RAIN LOAD) EQUALS 23.3 P.S.F. SPECIFIED ROOF LIVE LOAD

ALLOWABLE DEFL.(LL)= L/360 (0.36")
CALCULATED VERT. DEFL.(LL) = L/ 999 (0.01")
ALLOWABLE DEFL.(TL)= L/360 (0.36")
CALCULATED VERT. DEFL.(TL) = L/ 999 (0.05")

CSI: TC=0.57 (5-6:1) , BC=0.32 (10-12:4) , WB=0.86 (6-12:1) , SSI=0.40 (5-6:1)

DOL LUMBER=1.00 NAIL=1.00 LS BEND=1.00 COMP=1.00 SHEAR=1.00 TENS= 1.00

COMPANION LIVE LOAD FACTOR = 0.50

TRUSS PLATE MANUFACTURER IS NOT RESPONSIBLE FOR QUALITY CONTROL IN THE TRUSS MANUFACTURING PLANT .

NAIL VALUES

PLATE	GRIP(DRY) (PSI) MAX	MIN	SHEAR (PLI) MAX	MIN	SECTION (PLI) MAX	MIN
MT20	618	354	1667	822	2284	1656

PLATE PLACEMENT TOL. = 0.250 inches

PLATE ROTATION TOL. = 5.0 Deg.

JSI GRIP= 0.90 (9) (INPUT = 0.90)
JSI METAL= 0.27 (6) (INPUT = 1.00)

LICENSED PROFESSIONAL ENGINEER
P. M. TREVISAN
100136551
March 16th, 2017
PROVINCE OF ONTARIO

RECEIVED
TOWN OF MILTON
MAR 29, 2017
17-5337
BUILDING DIVISION

KOTT

SCALE = 1:81.8

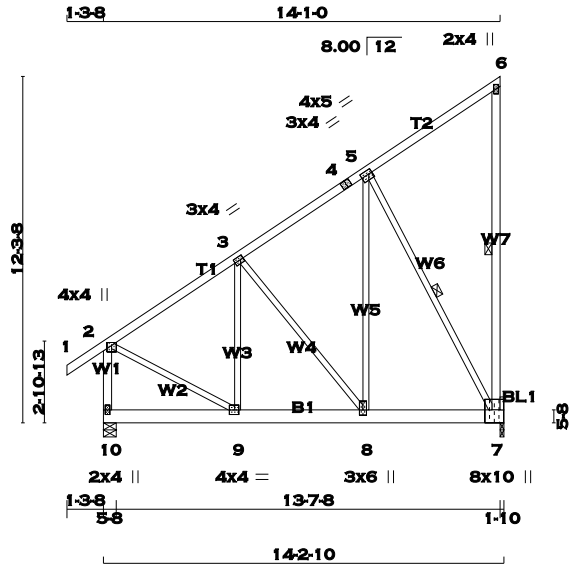

TOTAL WEIGHT = 8 X 91 = 730 lb

[M]

LUMBER

N. L. G. A. RULES

CHORDS	SIZE		LUMBER	DESCR.
1 - 4	2x4	DRY	No.2	SPF
4 - 6	2x4	DRY	No.2	SPF
7 - 6	2x4	DRY	No.2	SPF
10 - 2	2x4	DRY	No.2	SPF
10 - 7	2x6	DRY	2100F 1.8E	SPF

BEARING BLOCKS

BL1	2x6	DRY	No.2	SPF
ALL WEBS EXCEPT	2x3	DRY	No.2	SPF

DRY: SEASONED LUMBER.

DESIGN CONSISTS OF 4 TRUSSES BUILT SEPARATELY THEN FASTENED TOGETHER AS FOLLOWS:

CHORDS #ROWS		SURFACE SPACING (IN)	LOAD(PLF)
TOP CHORDS : (0.122"X3") SPIRAL NAILS			
1- 4	1	12	TOP
4- 6	1	12	TOP
6- 7	1	12	TOP
10- 2	1	12	TOP
BOTTOM CHORDS : (0.122"X3") SPIRAL NAILS			
10- 7	2	4	SIDE(582.5)
WEBS : (0.122"X3") SPIRAL NAILS			
2x3	1	6	

STAGGER NAILS BY HALF THE SURFACE SPACING IN ADJACENT PLIES.

IN ADDITION, PRE-DRILL ONE 0.56" DIAM. HOLE IN EACH CHORD PANEL AND INSTALL 0.50" DIAM. ASTM A307 BOLTS WITH WASHERS, BOTH SIDES. FOR OTHER BOLT TYPES SEE CSAO86 3.3.2.

TOP - COMPONENTS ARE LOADED FROM THE TOP AND MUST BE PLACED ON TOP EDGE OF ALL PLIES FOR THE LOAD TO BE TRANSFERRED TO EACH PLY.

SIDE - PLF SHOWN IS THE EQUIVALENT UDL APPLIED TO ONE SIDE THAT THE CORRESPONDING NAILING PATTERN SHALL BE CAPABLE OF TRANSFERING. REMAINING PLF MUST BE APPLIED ON THE OPPOSITE SIDE OR ON THE TOP.

PLATES (table is in inches)

JT	TYPE	PLATES	W	LEN	Y	X
2	TMVW+p	MT20	4.0	4.0	1.25	2.00

DIMENSIONS, SUPPORTS AND LOADINGS SPECIFIED BY FABRICATOR TO BE VERIFIED BY BUILDING DESIGNER

BEARINGS

JT	FACTORED GROSS REACTION VERT	HORZ	MAXIMUM FACTORED GROSS REACTION DOWN	HORZ	UPLIFT	INPUT BRG IN-SX	REQRD BRG IN-SX
7	6085	0	6085	0	0	1-10	1-10
10	6180	0	6180	0	0	5-8	5-8

UNFACTORED REACTIONS

JT	1ST LCASE COMBINED	MAX./MIN. COMPONENT REACTIONS SNOW	LIVE	PERM.LIVE	WIND	DEAD	SOIL
7	4270	2989 / 0	0 / 0	0 / 0	0 / 0	1281 / 0	0 / 0
10	4335	3046 / 0	0 / 0	0 / 0	0 / 0	1289 / 0	0 / 0

BEARING MATERIAL TO BE SPF NO.2 OR BETTER AT JOINT(S) 7, 10

BRACING

TOP CHORD TO BE SHEATHED OR MAX. PURLIN SPACING = 5.55 FT.
MAX. UNBRACED BOTTOM CHORD LENGTH = 10.00 FT. OR RIGID CEILING DIRECTLY APPLIED.

ALL PITCH BREAKS AND PERIMETER CORNER JOINTS MUST BE LATERALLY RESTRAINED.

1 - 2x3 SPF No.2 LATERAL BRACE(S) AT 1/ 2 LENGTH OF 6-7. DBS = 20-0-0 . CBF = 19 LBS.
1 - 2x4 SPF No.2 LATERAL BRACE(S) AT 1/ 2 LENGTH OF 5-7. DBS = 6-0-0 . CBF = 186 LBS.

DBS = DIAGONAL BRACE SPACING (MAX). CBF = CUMULATIVE BRACING FORCE. FASTEN LATERAL BRACE(S) TO EACH PLY USING (0.122"X3") SPIRAL NAILS : 1 NAIL FOR 2x3 BRACE(S), 2 FOR 1x4, 2x4, 2x5, 3 FOR 2x6, 4 FOR 2x8, 5 FOR 2x10, AND 6 FOR 2x12.

END VERTICAL(S) MUST BE SHEATHED OR HAVE BRACES AS INDICATED IN THE MAX. UNBRACED LENGTH COLUMN OF THE TABLE BELOW

LOADING

TOTAL LOAD CASES: (4)

CHORDS

MEMB. FR-TO	MAX. FACTORED FORCE (LBS)	FACTORED VERT. LOAD (PLF) FROM	TO	LC1 MAX CSI (LC)	MAX. UNBRAC LENGTH
1- 2	0 / 29	-77.4	-77.4	0.04 (1)	10.00
2- 3	-4367 / 0	-77.4	-77.4	0.13 (1)	5.55
3- 4	-2789 / 0	-77.4	-77.4	0.11 (1)	6.25
4- 5	-2789 / 0	-77.4	-77.4	0.11 (1)	6.25
5- 6	-18 / 0	-77.4	-77.4	0.09 (1)	6.25
7- 6	-148 / 0	0.0	0.0	0.04 (1)	6.25
10- 2	-4607 / 0	0.0	0.0	0.20 (1)	6.94
10- 9	0 / 0	-794.2	-794.2	0.18 (1)	10.00
9- 8	0 / 3644	-794.2	-794.2	0.22 (1)	10.00
8- 7	0 / 2328	-794.2	-794.2	0.20 (1)	10.00

WEBS

MEMB. FR-TO	MAX. FACTORED FORCE (LBS)	MAX CSI (LC)
9- 3	0 / 2149	0.12 (1)
3- 8	-2102 / 0	0.53 (1)
8- 5	0 / 5533	0.31 (1)
5- 7	-4972 / 0	0.85 (1)
2- 9	0 / 4114	0.23 (1)

RECEIVED
TOWN OF MILTON
MAR 29, 2017
17-5337
BUILDING DIVISION

DESIGN CRITERIA

SPECIFIED LOADS:

TOP CH.	LL	=	23.3	PSF
	DL	=	3.0	PSF
BOT CH.	LL	=	0.0	PSF
	DL	=	7.0	PSF
TOTAL LOAD		=	33.3	PSF

SPACING = 24.0 IN. C/C

GIRDER TYPE: CStdGirder
START DISTANCE = 0-0
START SPAN CARRIED = 35-2-8
END DISTANCE = 14-2-10
END SPAN CARRIED = 35-2-8
END WALL WIDTH = 5-8
APPLIED TO FRONT SIDE OF BOTTOM CHORD.
- ADDT'L LOADS BASED ON 55 % OF GSL.

THIS TRUSS IS DESIGNED FOR RESIDENTIAL OR SMALL BUILDING REQUIREMENTS OF PART 9, NBCC 2010

THIS DESIGN COMPLIES WITH:
- PART 9 OF OBC 2012 , BCBC 2012 , ABC 2014
- CSA 086-09
- TPIC 2011

(55 % OF 27.2 P.S.F. G.S.L. PLUS 8.4 P.S.F. RAIN LOAD) EQUALS 23.3 P.S.F. SPECIFIED ROOF LIVE LOAD

ALLOWABLE DEFL.(LL)= L/360 (0.46")
CALCULATED VERT. DEFL.(LL) = L/ 999 (0.03")
ALLOWABLE DEFL.(TL)= L/360 (0.46")
CALCULATED VERT. DEFL.(TL) = L/ 999 (0.06")

CSI: TC=0.20 (2-10:1) , BC=0.22 (8-9:1) , WB=0.85 (5-7:1) , SSI=0.37 (9-10:1)

DOL LUMBER=1.00 NAIL=1.00 LS BEND=1.10 COMP=1.10 SHEAR=1.10 TENS= 1.10

COMPANION LIVE LOAD FACTOR = 0.50

TRUSS PLATE MANUFACTURER IS NOT RESPONSIBLE FOR QUALITY CONTROL IN THE TRUSS MANUFACTURING PLANT .

NAIL VALUES

PLATE	GRIP(DRY) (PSI) MAX	MIN	SHEAR (PLI) MAX	MIN	SECTION (PLI) MAX	MIN
MT20	618	354	1667	822	2284	1656

PLATE PLACEMENT TOL. = 0.250 inches

PLATE ROTATION TOL. = 5.0 Deg.

JSI GRIP= 0.90 (9) (INPUT = 0.90)
JSI METAL= 0.34 (9) (INPUT = 1.00)

KOTT

CONTINUED ON PAGE 2

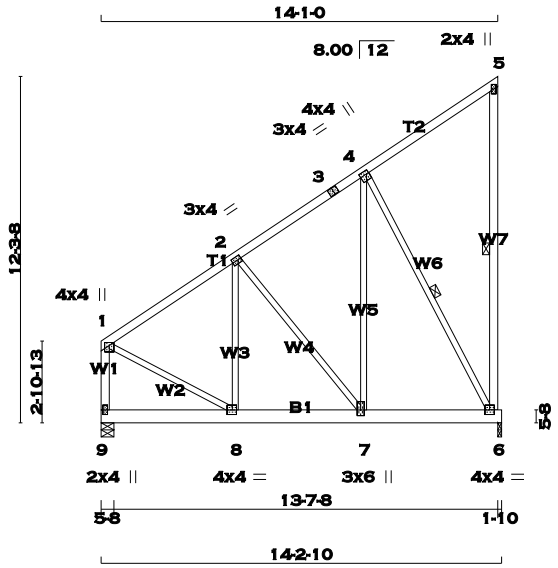

SCALE = 1:81.8

TOTAL WEIGHT = 3 X 89 = 268 lb [M]

LUMBER

N. L. G. A. RULES

CHORDS	SIZE		LUMBER	DESCR.
1 - 3	2x4	DRY	No.2	SPF
3 - 5	2x4	DRY	No.2	SPF
6 - 5	2x4	DRY	No.2	SPF
9 - 1	2x4	DRY	No.2	SPF
9 - 6	2x6	DRY	No.2	SPF
ALL WEBS EXCEPT	2x3	DRY	No.2	SPF

DRY: SEASONED LUMBER.

DESIGN CONSISTS OF 3 TRUSSES BUILT SEPARATELY THEN FASTENED TOGETHER AS FOLLOWS:

CHORDS #ROWS	SURFACE SPACING (IN)		LOAD(PLF)
TOP CHORDS : (0.122"X3") SPIRAL NAILS			
1- 3	1	12	TOP
3- 5	1	12	TOP
5- 6	1	12	TOP
9- 1	1	12	TOP
BOTTOM CHORDS : (0.122"X3") SPIRAL NAILS			
9- 6	2	6	SIDE(401.8)
WEBS : (0.122"X3") SPIRAL NAILS			
2x3	1	6	

STAGGER NAILS BY HALF THE SURFACE SPACING IN ADJACENT PLIES.

TOP - COMPONENTS ARE LOADED FROM THE TOP AND MUST BE PLACED ON TOP EDGE OF ALL PLIES FOR THE LOAD TO BE TRANSFERRED TO EACH PLY.

SIDE - PLF SHOWN IS THE EQUIVALENT UDL APPLIED TO ONE SIDE THAT THE CORRESPONDING NAILING PATTERN SHALL BE CAPABLE OF TRANSFERING. REMAINING PLF MUST BE APPLIED ON THE OPPOSITE SIDE OR ON THE TOP.

PLATES (table is in inches)

JT	TYPE	PLATES	W	LEN	Y	X
1	TMVW+p	MT20	4.0	4.0	1.25	2.00
2	TMWW-t	MT20	3.0	4.0	1.50	1.25
3	TS-t	MT20	3.0	4.0		
4	TMWW+t	MT20	4.0	4.0	1.50	1.00
5	TMV+p	MT20	2.0	4.0		
6	BMVW1-t	MT20	4.0	4.0		
7	BMWW+t	MT20	3.0	6.0	2.50	1.50
8	BMWW-t	MT20	4.0	4.0	2.00	1.75
9	BMV1+p	MT20	2.0	4.0		

DIMENSIONS, SUPPORTS AND LOADINGS SPECIFIED BY FABRICATOR TO BE VERIFIED BY BUILDING DESIGNER

BEARINGS

JT	FACTORED GROSS REACTION VERT	HORZ	MAXIMUM FACTORED GROSS REACTION DOWN	HORZ	UPLIFT	INPUT BRG IN-SX	REQRD BRG IN-SX
6	4321	0	4321	0	0	1-10	1-10
9	4620	0	4620	0	0	5-8	5-8

UNFACTORED REACTIONS

JT	1ST LCASE COMBINED	MAX./MIN. COMPONENT REACTIONS SNOW	LIVE	PERM.LIVE	WIND	DEAD	SOIL
6	3032	2121 / 0	0 / 0	0 / 0	0 / 0	911 / 0	0 / 0
9	3242	2268 / 0	0 / 0	0 / 0	0 / 0	974 / 0	0 / 0

BEARING MATERIAL TO BE SPF NO.2 OR BETTER AT JOINT(S) 6, 9

BRACING

TOP CHORD TO BE SHEATHED OR MAX. PURLIN SPACING = 5.98 FT.
MAX. UNBRACED BOTTOM CHORD LENGTH = 10.00 FT. OR RIGID CEILING DIRECTLY APPLIED.

ALL PITCH BREAKS AND PERIMETER CORNER JOINTS MUST BE LATERALLY RESTRAINED.

1 - 2x3 SPF No.2 LATERAL BRACE(S) AT 1/ 2 LENGTH OF 5-6. DBS = 20-0-0 . CBF = 18 LBS.
1 - 2x3 SPF No.2 LATERAL BRACE(S) AT 1/ 2 LENGTH OF 4-6. DBS = 4-0-0 . CBF = 89 LBS.

DBS = DIAGONAL BRACE SPACING (MAX). CBF = CUMULATIVE BRACING FORCE. FASTEN LATERAL BRACE(S) TO EACH PLY USING (0.122"X3") SPIRAL NAILS : 1 NAIL FOR 2x3 BRACE(S), 2 FOR 1x4, 2x4, 2x5, 3 FOR 2x6, 4 FOR 2x8, 5 FOR 2x10, AND 6 FOR 2x12.

END VERTICAL(S) MUST BE SHEATHED OR HAVE BRACES AS INDICATED IN THE MAX. UNBRACED LENGTH COLUMN OF THE TABLE BELOW

LOADING

TOTAL LOAD CASES: (4)

CHORDS

MEMB. FR-TO	MAX. FACTORED FORCE (LBS)	FACTORED VERT. LOAD (PLF) FROM	TO	LC1	MAX CSI (LC)	MAX. UNBRAC LENGTH
1- 2	-3242 / 0	-77.4	-77.4		0.10 (1)	5.98
2- 3	-2046 / 0	-77.4	-77.4		0.09 (1)	6.25
3- 4	-2046 / 0	-77.4	-77.4		0.09 (1)	6.25
4- 5	-20 / 0	-77.4	-77.4		0.08 (1)	6.25
6- 5	-148 / 0	0.0	0.0		0.04 (1)	6.25
9- 1	-3384 / 0	0.0	0.0		0.16 (1)	7.48
9- 8	0 / 0	-620.3	-620.3		0.27 (1)	10.00
8- 7	0 / 2709	-525.4	-525.4		0.36 (1)	10.00
7- 6	0 / 1708	-525.4	-525.4		0.30 (1)	10.00

WEBS

MEMB. FR-TO	MAX. FACTORED FORCE (LBS)	MAX CSI (LC)
8- 2	0 / 1540	0.12 (1)
2- 7	-1600 / 0	0.54 (1)
7- 4	0 / 3852	0.29 (1)
4- 6	-3559 / 0	0.81 (1)
1- 8	0 / 3059	0.23 (1)

RECEIVED
TOWN OF MILTON
MAR 29, 2017
17-5337
BUILDING DIVISION

DESIGN CRITERIA

SPECIFIED LOADS:

TOP CH.	LL	=	23.3	PSF
	DL	=	3.0	PSF
BOT CH.	LL	=	0.0	PSF
	DL	=	7.0	PSF
TOTAL LOAD		=	33.3	PSF

SPACING = 24.0 IN. C/C

GIRDER TYPE: CStdGirder
START DISTANCE = 0-0
START SPAN CARRIED = 27-10-8
END DISTANCE = 4-7-8
END SPAN CARRIED = 27-10-8
END WALL WIDTH = 5-8
APPLIED TO FRONT SIDE OF BOTTOM CHORD.
- ADDT'L LOADS BASED ON 55 % OF GSL.

GIRDER TYPE: CStdGirder
START DISTANCE = 4-7-8
START SPAN CARRIED = 23-10-8
END DISTANCE = 14-2-10
END SPAN CARRIED = 23-10-8
END WALL WIDTH = 5-8
APPLIED TO FRONT SIDE OF BOTTOM CHORD.
- ADDT'L LOADS BASED ON 55 % OF GSL.

THIS TRUSS IS DESIGNED FOR RESIDENTIAL OR SMALL BUILDING REQUIREMENTS OF PART 9, NBCC 2010

THIS DESIGN COMPLIES WITH:
- PART 9 OF OBC 2012 , BCBC 2012 , ABC 2014
- CSA 086-09
- TPIC 2011

(55 % OF 27.2 P.S.F. G.S.L. PLUS 8.4 P.S.F. RAIN LOAD) EQUALS 23.3 P.S.F. SPECIFIED ROOF LIVE LOAD

ALLOWABLE DEFL.(LL)= L/360 (0.47")
CALCULATED VERT. DEFL.(LL) = L/ 999 (0.04")
ALLOWABLE DEFL.(TL)= L/360 (0.47")
CALCULATED VERT. DEFL.(TL) = L/ 999 (0.07")

CSI: TC=0.16 (1-9:1) , BC=0.36 (7-8:1) , WB=0.81 (4-6:1) , SSI=0.35 (8-9:1)

DOL LUMBER=1.00 NAIL=1.00 LS BEND=1.10 COMP=1.10 SHEAR=1.10 TENS= 1.10

COMPANION LIVE LOAD FACTOR = 0.50

TRUSS PLATE MANUFACTURER IS NOT RESPONSIBLE FOR QUALITY CONTROL IN THE TRUSS MANUFACTURING PLANT .

NAIL VALUES

PLATE	GRIP(DRY) (PSI) MAX	MIN	SHEAR (PLI) MAX	MIN	SECTION (PLI) MAX	MIN
MT20	618	354	1667	822	2284	1656

PLATE PLACEMENT TOL. = 0.250 inches

PLATE ROTATION TOL. = 5.0 Deg.

JSI GRIP= 0.89 (8) (INPUT = 0.90)
JSI METAL= 0.34 (8) (INPUT = 1.00)

KOTT

CONTINUED ON PAGE 2

JOB NAME	TRUSS NAME	QUANTITY	PLY	JOB DESC.	DRWG NO.
PT0317-097	**GIRD10**	**1**	**3**	TRUSS DESC. LECCO RIDGE-BLOCK 344	

KOTT , Stouffville, ON, CGC

Version 8.100 S Feb 9 2017 MiTek Industries, Inc. Thu Mar 16 11:57:39 2017 Page 1
ID:EvTixTQDI5yR1QLotZTBr_yE?HJ-NATRvVP0A8IaLpgMJC4b3aQmatToMxh0OgBN29zaNkA

SCALE = 1:81.8

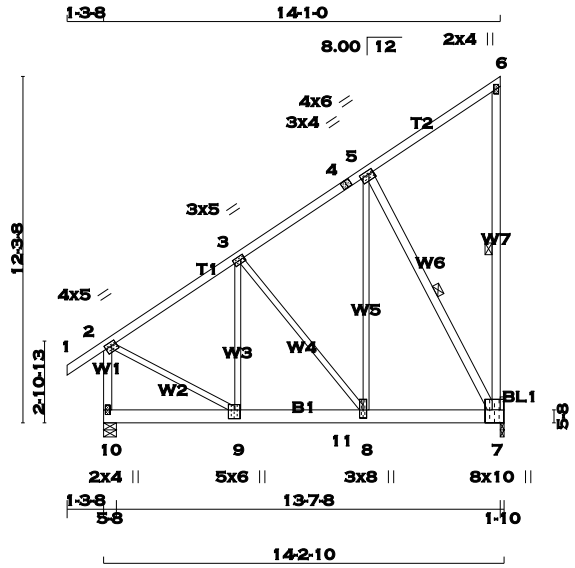

TOTAL WEIGHT = 3 X 94 = 283 lb

LUMBER
N. L. G. A. RULES

CHORDS	SIZE		LUMBER	DESCR.
1 - 4	2x4	DRY	No.2	SPF
4 - 6	2x4	DRY	No.2	SPF
7 - 6	2x4	DRY	No.2	SPF
10 - 2	2x4	DRY	No.2	SPF
10 - 7	2x6	DRY	2100F 1.8E	SPF
BEARING BLOCKS				
BL1	2x6	DRY	No.2	SPF
ALL WEBS EXCEPT	2x3	DRY	No.2	SPF
5 - 7	2x4	DRY	No.2	SPF

DRY: SEASONED LUMBER.

DESIGN CONSISTS OF 3 TRUSSES BUILT SEPARATELY THEN FASTENED TOGETHER AS FOLLOWS:

CHORDS	#ROWS	SURFACE SPACING (IN)	LOAD(PLF)
TOP CHORDS : (0.122"X3") SPIRAL NAILS			
1- 4	1	12	TOP
4- 6	1	12	TOP
6- 7	1	12	TOP
10- 2	1	12	TOP
BOTTOM CHORDS : (0.122"X3") SPIRAL NAILS			
10- 7	2	5	SIDE(536.2)
WEBS : (0.122"X3") SPIRAL NAILS			
2x3	1	6	
2x4	1	6	

STAGGER NAILS BY HALF THE SURFACE SPACING IN ADJACENT PLIES.

TOP - COMPONENTS ARE LOADED FROM THE TOP AND MUST BE PLACED ON TOP EDGE OF ALL PLIES FOR THE LOAD TO BE TRANSFERRED TO EACH PLY.

SIDE - PLF SHOWN IS THE EQUIVALENT UDL APPLIED TO ONE SIDE THAT THE CORRESPONDING NAILING PATTERN SHALL BE CAPABLE OF TRANSFERING. REMAINING PLF MUST BE APPLIED ON THE OPPOSITE SIDE OR ON THE TOP.

PLATES (table is in inches)

JT	TYPE	PLATES	W	LEN	Y	X
2	TMVW-t	MT20	4.0	5.0	1.50	2.00
3	TMWW-t	MT20	3.0	5.0	1.50	1.75

DIMENSIONS, SUPPORTS AND LOADINGS SPECIFIED BY FABRICATOR TO BE VERIFIED BY BUILDING DESIGNER

BEARINGS

JT	FACTORED GROSS REACTION VERT	HORZ	MAXIMUM FACTORED GROSS REACTION DOWN	HORZ	UPLIFT	INPUT BRG IN-SX	REQRD BRG IN-SX
7	5900	0	5900	0	0	1-10	1-10 + FLUSH PLATE
10	6275	0	6275	0	0	5-8	5-8

UNFACTORED REACTIONS

JT	1ST LCASE COMBINED	MAX./MIN. COMPONENT REACTIONS SNOW	LIVE	PERM.LIVE	WIND	DEAD	SOIL
7	4140	2898 / 0	0 / 0	0 / 0	0 / 0	1242 / 0	0 / 0
10	4401	3092 / 0	0 / 0	0 / 0	0 / 0	1309 / 0	0 / 0

BEARING MATERIAL TO BE SPF NO.2 OR BETTER AT JOINT(S) 7, 10

BRACING

TOP CHORD TO BE SHEATHED OR MAX. PURLIN SPACING = 5.31 FT.
MAX. UNBRACED BOTTOM CHORD LENGTH = 10.00 FT. OR RIGID CEILING DIRECTLY APPLIED.

ALL PITCH BREAKS AND PERIMETER CORNER JOINTS MUST BE LATERALLY RESTRAINED.

1 - 2x3 SPF No.2 LATERAL BRACE(S) AT 1/ 2 LENGTH OF 6-7. DBS = 20-0-0 . CBF = 18 LBS.
1 - 2x4 SPF No.2 LATERAL BRACE(S) AT 1/ 2 LENGTH OF 5-7. DBS = 6-0-0 . CBF = 184 LBS.

DBS = DIAGONAL BRACE SPACING (MAX). CBF = CUMULATIVE BRACING FORCE. FASTEN LATERAL BRACE(S) TO EACH PLY USING (0.122"X3") SPIRAL NAILS : 1 NAIL FOR 2x3 BRACE(S), 2 FOR 1x4, 2x4, 2x5, 3 FOR 2x6, 4 FOR 2x8, 5 FOR 2x10, AND 6 FOR 2x12.

END VERTICAL(S) MUST BE SHEATHED OR HAVE BRACES AS INDICATED IN THE MAX. UNBRACED LENGTH COLUMN OF THE TABLE BELOW

LOADING

TOTAL LOAD CASES: (4)

CHORDS

MEMB. FR-TO	MAX. FACTORED FORCE (LBS)	FACTORED VERT. LOAD (PLF) FROM	TO	LC1 MAX CSI (LC)	MAX. UNBRAC LENGTH
1- 2	0 / 29	-77.4	-77.4	0.03 (1)	10.00
2- 3	-4408 / 0	-77.4	-77.4	0.12 (1)	5.31
3- 4	-2752 / 0	-77.4	-77.4	0.10 (1)	6.25
4- 5	-2752 / 0	-77.4	-77.4	0.10 (1)	6.25
5- 6	-20 / 0	-77.4	-77.4	0.09 (1)	6.25
7- 6	-146 / 0	0.0	0.0	0.04 (1)	6.25
10- 2	-4647 / 0	0.0	0.0	0.22 (1)	6.61
10- 9	0 / 0	-821.8	-821.8	0.20 (1)	10.00
9-11	0 / 3678	-821.8	-821.8	0.25 (1)	10.00
11- 8	0 / 3678	-738.8	-738.8	0.25 (1)	10.00
8- 7	0 / 2298	-738.8	-738.8	0.20 (1)	10.00

WEBS

MEMB. FR-TO	MAX. FACTORED FORCE (LBS)	MAX CSI (LC)
9- 3	0 / 2274	0.17 (1)
3- 8	-2204 / 0	0.74 (1)
8- 5	0 / 5452	0.41 (1)
5- 7	-4909 / 0	0.80 (1)
2- 9	0 / 4152	0.31 (1)

RECEIVED
TOWN OF MILTON
MAR 29, 2017
17-5337
BUILDING DIVISION

[M]

DESIGN CRITERIA

SPECIFIED LOADS:

TOP	CH.	LL	=	23.3	PSF
		DL	=	3.0	PSF
BOT	CH.	LL	=	0.0	PSF
		DL	=	7.0	PSF
TOTAL	LOAD		=	33.3	PSF

SPACING = 24.0 IN. C/C

GIRDER TYPE: CStdGirder
START DISTANCE = 0-0
START SPAN CARRIED = 36-4-8
END DISTANCE = 8-2-8
END SPAN CARRIED = 36-4-8
END WALL WIDTH = 5-8
APPLIED TO FRONT SIDE OF BOTTOM CHORD.
- ADDT'L LOADS BASED ON 55 % OF GSL.

GIRDER TYPE: CStdGirder
START DISTANCE = 8-2-8
START SPAN CARRIED = 32-10-8
END DISTANCE = 14-2-10
END SPAN CARRIED = 32-10-8
END WALL WIDTH = 5-8
APPLIED TO FRONT SIDE OF BOTTOM CHORD.
- ADDT'L LOADS BASED ON 55 % OF GSL.

THIS TRUSS IS DESIGNED FOR RESIDENTIAL OR SMALL BUILDING REQUIREMENTS OF PART 9, NBCC 2010

THIS DESIGN COMPLIES WITH:
- PART 9 OF OBC 2012 , BCBC 2012 , ABC 2014
- CSA 086-09
- TPIC 2011

(55 % OF 27.2 P.S.F. G.S.L. PLUS 8.4 P.S.F. RAIN LOAD) EQUALS 23.3 P.S.F. SPECIFIED ROOF LIVE LOAD

ALLOWABLE DEFL.(LL)= L/360 (0.46")
CALCULATED VERT. DEFL.(LL) = L/ 999 (0.04")
ALLOWABLE DEFL.(TL)= L/360 (0.46")
CALCULATED VERT. DEFL.(TL) = L/ 999 (0.08")

CSI: TC=0.22 (2-10:1) , BC=0.25 (8-9:1) , WB=0.80 (5-7:1) , SSI=0.46 (9-10:1)

DOL LUMBER=1.00 NAIL=1.00 LS BEND=1.10 COMP=1.10 SHEAR=1.10 TENS= 1.10

COMPANION LIVE LOAD FACTOR = 0.50

TRUSS PLATE MANUFACTURER IS NOT RESPONSIBLE FOR QUALITY CONTROL IN THE TRUSS MANUFACTURING PLANT .

NAIL VALUES

PLATE	GRIP(DRY) (PSI) MAX	MIN	SHEAR (PLI) MAX	MIN	SECTION (PLI) MAX	MIN
MT20	618	354	1667	822	2284	1656

PLATE PLACEMENT TOL. = 0.250 inches

PLATE ROTATION TOL. = 5.0 Deg.

JSI GRIP= 0.90 (9) (INPUT = 0.90)
JSI METAL= 0.46 (2) (INPUT = 1.00)

KOTT

CONTINUED ON PAGE 2

JOB NAME	TRUSS NAME	QUANTITY	PLY	JOB DESC.	DRWG NO.
PT0317-097	GIRD11	1	2	TRUSS DESC. LECCO RIDGE-BLOCK 344	

KOTT , Stouffville, ON, CGC

Version 8.100 S Feb 9 2017 MiTek Industries, Inc. Thu Mar 16 11:57:40 2017 Page 1
ID:EvTixTQDI5yR1QLotZTBr_yE?HJ-rN1p6rQexSQRzzFZswbqcnzwnGnl5WHAdKxwbbzaNk9

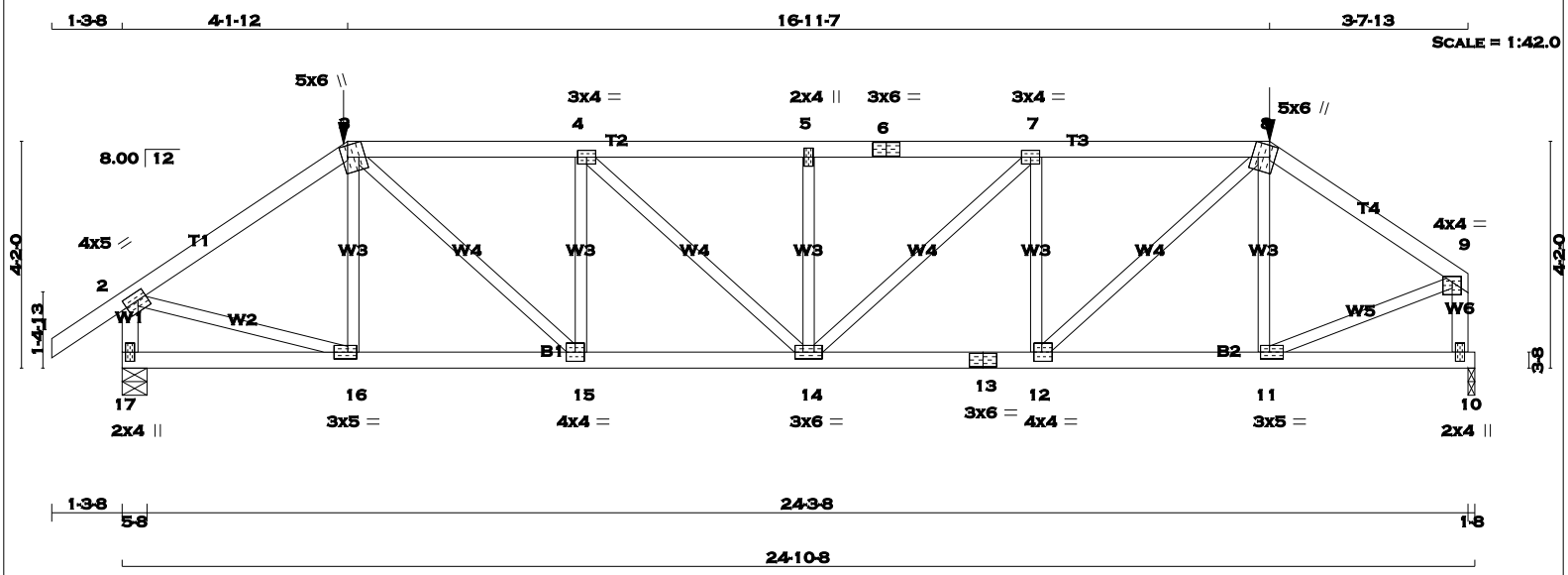

TOTAL WEIGHT = 2 X 101 = 203 lb [M]

LUMBER
N. L. G. A. RULES

CHORDS	SIZE		LUMBER	DESCR.
1 - 3	2x4	DRY	No.2	SPF
3 - 6	2x4	DRY	No.2	SPF
6 - 8	2x4	DRY	No.2	SPF
8 - 9	2x4	DRY	No.2	SPF
17 - 2	2x4	DRY	No.2	SPF
10 - 9	2x4	DRY	No.2	SPF
17 - 13	2x4	DRY	No.2	SPF
13 - 10	2x4	DRY	No.2	SPF
ALL WEBS EXCEPT	2x3	DRY	No.2	SPF

DRY: SEASONED LUMBER.

DESIGN CONSISTS OF 2 TRUSSES BUILT SEPARATELY THEN FASTENED TOGETHER AS FOLLOWS:

CHORDS #ROWS	SURFACE SPACING (IN)		LOAD(PLF)
TOP CHORDS : (0.122"X3") SPIRAL NAILS			
1- 3	1	12	SIDE(0.0)
3- 6	1	12	SIDE(34.2)
6- 8	1	12	SIDE(34.2)
8- 9	1	12	SIDE(0.0)
17- 2	1	12	TOP
10- 9	1	12	TOP
BOTTOM CHORDS : (0.122"X3") SPIRAL NAILS			
17- 13	1	12	SIDE(8.7)
13- 10	1	12	SIDE(8.7)
WEBS : (0.122"X3") SPIRAL NAILS			
2x3	1	6	

NAILS TO BE DRIVEN FROM ONE SIDE ONLY.

GIRDER NAILING ASSUMES NAILED HANGERS ARE FASTENED WITH MIN. 3-0 INCH NAILS.

TOP - COMPONENTS ARE LOADED FROM THE TOP AND MUST BE PLACED ON TOP EDGE OF ALL PLIES FOR THE LOAD TO BE TRANSFERRED TO EACH PLY.

SIDE - PLF SHOWN IS THE EQUIVALENT UDL APPLIED TO ONE SIDE THAT THE CORRESPONDING NAILING PATTERN SHALL BE CAPABLE OF TRANSFERING. REMAINING PLF MUST BE APPLIED ON THE OPPOSITE SIDE OR ON THE TOP.

PLATES (table is in inches)

JT	TYPE	PLATES	W	LEN	Y	X
2	TMVW-t	MT20	4.0	5.0	1.75	2.00

DIMENSIONS, SUPPORTS AND LOADINGS SPECIFIED BY FABRICATOR TO BE VERIFIED BY BUILDING DESIGNER

BEARINGS

JT	FACTORED GROSS REACTION VERT	HORZ	MAXIMUM FACTORED GROSS REACTION DOWN	HORZ	UPLIFT	INPUT BRG IN-SX	REQRD BRG IN-SX
17	2273	0	2273	0	0	5-8	5-8
10	2185	0	2185	0	0	1-8	1-8

UNFACTORED REACTIONS

JT	1ST LCASE COMBINED	MAX./MIN. COMPONENT REACTIONS SNOW	LIVE	PERM.LIVE	WIND	DEAD	SOIL
17	1594	1123 / 0	0 / 0	0 / 0	0 / 0	471 / 0	0 / 0
10	1534	1070 / 0	0 / 0	0 / 0	0 / 0	464 / 0	0 / 0

BEARING MATERIAL TO BE SPF NO.2 OR BETTER AT JOINT(S) 17, 10

BRACING
TOP CHORD TO BE SHEATHED OR MAX. PURLIN SPACING = 4.66 FT.
MAX. UNBRACED BOTTOM CHORD LENGTH = 10.00 FT. OR RIGID CEILING DIRECTLY APPLIED.

ALL PITCH BREAKS AND PERIMETER CORNER JOINTS MUST BE LATERALLY RESTRAINED.

LOADING
TOTAL LOAD CASES: (4)

CHORDS

MEMB. FR-TO	MAX. FACTORED FORCE (LBS)	FACTORED VERT. LOAD (PLF) FROM	TO	LC1 CSI (LC)	MAX UNBRAC LENGTH
1- 2	0 / 29	-77.4	-77.4	0.06 (1)	10.00
2- 3	-2539 / 0	-77.4	-77.4	0.16 (1)	5.52
3- 4	-3350 / 0	-145.9	-145.9	0.25 (1)	4.85
4- 5	-3677 / 0	-145.9	-145.9	0.26 (1)	4.66
5- 6	-3677 / 0	-145.9	-145.9	0.26 (1)	4.66
6- 7	-3677 / 0	-145.9	-145.9	0.26 (1)	4.66
7- 8	-3248 / 0	-145.9	-145.9	0.25 (1)	4.91
8- 9	-2295 / 0	-77.4	-77.4	0.12 (1)	5.79
17- 2	-2216 / 0	0.0	0.0	0.13 (1)	7.49
10- 9	-2137 / 0	0.0	0.0	0.13 (1)	7.60
17-16	0 / 0	-33.0	-33.0	0.08 (4)	10.00
16-15	0 / 2099	-33.0	-33.0	0.23 (1)	10.00
15-14	0 / 3350	-33.0	-33.0	0.33 (1)	10.00
14-13	0 / 3248	-33.0	-33.0	0.32 (1)	10.00
13-12	0 / 3248	-33.0	-33.0	0.32 (1)	10.00
12-11	0 / 1890	-33.0	-33.0	0.21 (1)	10.00
11-10	0 / 0	-33.0	-33.0	0.07 (4)	10.00

WEBS

MEMB. FR-TO	MAX. FACTORED FORCE (LBS)	MAX CSI (LC)
16- 3	-377 / 21	0.05 (1)
3-15	0 / 1683	0.21 (1)
15- 4	-994 / 0	0.14 (1)
4-14	0 / 445	0.06 (1)
14- 5	-562 / 0	0.08 (1)
14- 7	0 / 583	0.07 (1)
12- 7	-1089 / 0	0.15 (1)
12- 8	0 / 1827	0.23 (1)
11- 8	-568 / 0	0.08 (1)
2-16	0 / 2176	0.27 (1)
11- 9	0 / 2036	0.25 (1)

FACTORED CONCENTRATED LOADS (LBS)

JT	LOC.	LC1	MAX-	MAX+	FACE	DIR.	TYPE
3	4-1-12	-241	-241	---	FRONT	VERT	TOTAL
8	21-1-3	-219	-219	---	FRONT	VERT	TOTAL

RECEIVED
TOWN OF MILTON
MAR 29, 2017
17-5337
BUILDING DIVISION

DESIGN CRITERIA

SPECIFIED LOADS:

TOP	CH.	LL	=	23.3	PSF
		DL	=	3.0	PSF
BOT	CH.	LL	=	0.0	PSF
		DL	=	7.0	PSF
TOTAL	LOAD		=	33.3	PSF

SPACING = 24.0 IN. C/C

LOADING IN FLAT SECTION BASED ON A SLOPE OF 6.00/12

GIRDER TYPE: CPrimeHip
LEFT SETBACK = 4-1-12
RIGHT SETBACK = 3-9-5
END SETBACK = 6-0-0
END WALL WIDTH = 5-8
CORNER FRAMING TYPE: CONVENTIONAL
END JACK TYPE: CONVENTIONAL
APPLIED TO FRONT SIDE
- ADDT'L LOADS BASED ON 55 % OF GSL.

THIS TRUSS IS DESIGNED FOR RESIDENTIAL OR SMALL BUILDING REQUIREMENTS OF PART 9, NBCC 2010

THIS DESIGN COMPLIES WITH:
- PART 9 OF OBC 2012 , BCBC 2012 , ABC 2014
- CSA 086-09
- TPIC 2011

(55 % OF 27.2 P.S.F. G.S.L. PLUS 8.4 P.S.F. RAIN LOAD) EQUALS 23.3 P.S.F. SPECIFIED ROOF LIVE LOAD

ALLOWABLE DEFL.(LL)= L/360 (0.82")
CALCULATED VERT. DEFL.(LL) = L/ 999 (0.07")
ALLOWABLE DEFL.(TL)= L/360 (0.82")
CALCULATED VERT. DEFL.(TL) = L/ 999 (0.13")

CSI: TC=0.26 (5-7:1) , BC=0.33 (14-15:1) , WB=0.27 (2-16:1) , SSI=0.16 (7-8:1)

DOL LUMBER=1.00 NAIL=1.00 LS BEND=1.00 COMP=1.00 SHEAR=1.00 TENS= 1.00

COMPANION LIVE LOAD FACTOR = 0.50

TRUSS PLATE MANUFACTURER IS NOT RESPONSIBLE FOR QUALITY CONTROL IN THE TRUSS MANUFACTURING PLANT .

NAIL VALUES

PLATE	GRIP(DRY) (PSI) MAX	MIN	SHEAR (PLI) MAX	MIN	SECTION (PLI) MAX	MIN
MT20	618	354	1667	822	2284	1656

PLATE PLACEMENT TOL. = 0.250 inches

PLATE ROTATION TOL. = 5.0 Deg.

JSI GRIP= 0.90 (16) (INPUT = 0.90)
JSI METAL= 0.43 (13) (INPUT = 1.00)

KOTT

CONTINUED ON PAGE 2

JOB NAME	TRUSS NAME	QUANTITY	PLY	JOB DESC.	DRWG NO.
PT0317-097	GIRD12	1	1	TRUSS DESC. LECCO RIDGE-BLOCK 344	

KOTT , Stouffville, ON, CGC

Version 8.100 S Feb 9 2017 MiTek Industries, Inc. Thu Mar 16 11:57:41 2017 Page 1
ID:EvTixTQDI5yR1QLotZTBr_yE?HJ-KZbBKBRGilYIa6qlQd638?W17g9yqvfJr_gU71zaNk8

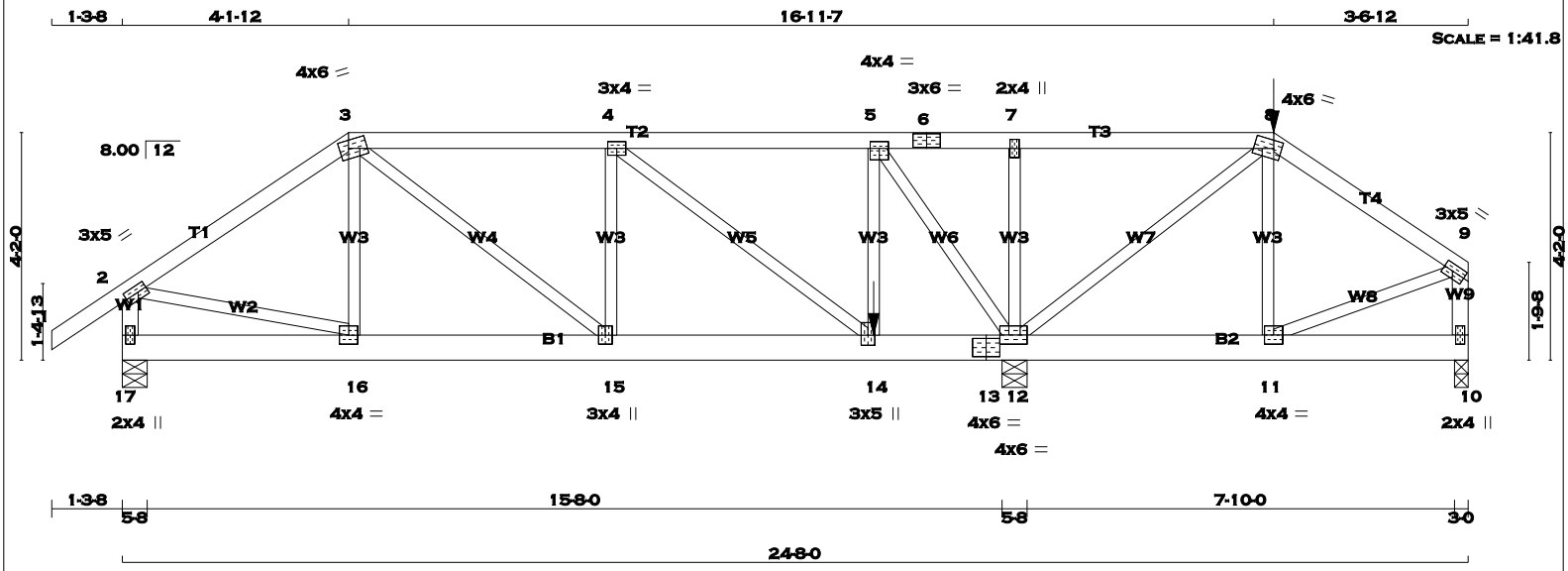

TOTAL WEIGHT = 116 lb
[M]

LUMBER
N. L. G. A. RULES

CHORDS	SIZE		LUMBER	DESCR.
1 - 3	2x4	DRY	No.2	SPF
3 - 6	2x4	DRY	No.2	SPF
6 - 8	2x4	DRY	No.2	SPF
8 - 9	2x4	DRY	No.2	SPF
17 - 2	2x4	DRY	No.2	SPF
10 - 9	2x4	DRY	No.2	SPF
17 - 13	2x6	DRY	No.2	SPF
13 - 10	2x6	DRY	No.2	SPF
ALL WEBS EXCEPT	2x3	DRY	No.2	SPF

DRY: SEASONED LUMBER.

PLATES (table is in inches)

JT	TYPE	PLATES	W	LEN	Y	X
2	TMVW-t	MT20	3.0	5.0	1.50	2.00
3	TTWW-m	MT20	4.0	6.0	1.75	2.00
4	TMWW-t	MT20	3.0	4.0		
5	TMWW-t	MT20	4.0	4.0	1.50	2.00
6	TS-t	MT20	3.0	6.0		
7	TMW+w	MT20	2.0	4.0		
8	TTWW-m	MT20	4.0	6.0	1.75	1.75
9	TMVW-t	MT20	3.0	5.0	1.50	2.00
10	BMV1+p	MT20	2.0	4.0		
11	BMWW-t	MT20	4.0	4.0		
12	BMWWW1-t	MT20	4.0	6.0	2.00	2.00
13	BS-t	MT20	4.0	6.0		
14	BMWW+t	MT20	3.0	5.0	2.25	1.50
15	BMWW+t	MT20	3.0	4.0		
16	BMWW-t	MT20	4.0	4.0		
17	BMV1+p	MT20	2.0	4.0		

A SIZE FOR SIZE SUBSTITUTION OF MITEK MII20 WITH TEE-LOK TL20 PLATES IS ALLOWED.

HANGERS NOTES

1) SPECIAL HANGER(S) OR CONNECTION(S) REQUIRED TO SUPPORT CONCENTRATED LOAD(S) 206.7 lbs FACTORED DOWN AT 21-1-3 ON TOP CHORD, AND 685.4 lbs FACTORED DOWN AT 13-9-4 ON BOTTOM CHORD. DESIGN FOR UNSPECIFIED CONNECTION(S) IS DELEGATED TO THE BUILDING DESIGNER.

DIMENSIONS, SUPPORTS AND LOADINGS SPECIFIED BY FABRICATOR TO BE VERIFIED BY BUILDING DESIGNER

BEARINGS

JT	FACTORED GROSS REACTION VERT	HORZ	MAXIMUM FACTORED GROSS REACTION DOWN	HORZ	UPLIFT	INPUT BRG IN-SX	REQRD BRG IN-SX
17	897	0	897	0	0	5-8	5-8
12	2691	0	2691	0	0	5-8	5-8
10	460	0	460	0	0	3-0	3-0

UNFACTORED REACTIONS

JT	1ST LCASE COMBINED	MAX./MIN. COMPONENT REACTIONS SNOW	LIVE	PERM.LIVE	WIND	DEAD	SOIL
17	628	450 / 0	0 / 0	0 / 0	0 / 0	178 / 0	0 / 0
12	1887	1332 / 0	0 / 0	0 / 0	0 / 0	555 / 0	0 / 0
10	326	212 / 0	0 / 0	0 / 0	0 / 0	114 / 0	0 / 0

BEARING MATERIAL TO BE SPF NO.2 OR BETTER AT JOINT(S) 17, 12, 10

BRACING

TOP CHORD TO BE SHEATHED OR MAX. PURLIN SPACING = 5.98 FT.
MAX. UNBRACED BOTTOM CHORD LENGTH = 10.00 FT. OR RIGID CEILING DIRECTLY APPLIED.

ALL PITCH BREAKS AND PERIMETER CORNER JOINTS MUST BE LATERALLY RESTRAINED.

LOADING

TOTAL LOAD CASES: (4)

CHORDS

MEMB. FR-TO	MAX. FACTORED FORCE (LBS)	FACTORED VERT. LOAD (PLF) FROM	TO	LC1 MAX CSI (LC)	MAX. UNBRAC LENGTH
1- 2	0 / 29	-77.4	-77.4	0.11 (1)	10.00
2- 3	-796 / 0	-77.4	-77.4	0.27 (1)	6.25
3- 4	-922 / 0	-77.4	-77.4	0.32 (1)	5.98
4- 5	-501 / 0	-77.4	-77.4	0.30 (1)	6.25
5- 6	0 / 344	-149.9	-149.9	0.54 (1)	10.00
6- 7	0 / 344	-149.9	-149.9	0.54 (1)	10.00
7- 8	0 / 345	-149.9	-149.9	0.54 (1)	10.00
8- 9	-295 / 0	-77.4	-77.4	0.19 (1)	6.25
17- 2	-865 / 0	0.0	0.0	0.10 (1)	7.81
10- 9	-395 / 0	0.0	0.0	0.05 (1)	7.81
17-16	0 / 0	-17.5	-17.5	0.04 (4)	10.00
16-15	0 / 659	-17.5	-17.5	0.11 (1)	10.00
15-14	0 / 922	-17.5	-17.5	0.18 (1)	10.00
14-13	0 / 501	-33.9	-33.9	0.21 (1)	10.00
13-12	0 / 501	-33.9	-33.9	0.21 (1)	10.00
12-11	0 / 245	-33.9	-33.9	0.17 (1)	10.00
11-10	0 / 0	-33.9	-33.9	0.05 (4)	10.00

WEBS

MEMB. FR-TO	MAX. FACTORED FORCE (LBS)	MAX CSI (LC)
16- 3	-72 / 47	0.02 (1)
3-15	0 / 335	0.08 (1)
15- 4	-105 / 45	0.03 (1)
4-14	-536 / 0	0.35 (1)
14- 5	0 / 986	0.24 (1)
5-12	-1501 / 0	0.52 (1)
12- 7	-716 / 0	0.19 (1)
12- 8	-754 / 0	0.47 (1)
11- 8	0 / 128	0.05 (4)
2-16	0 / 679	0.17 (1)
11- 9	0 / 262	0.06 (1)

FACTORED CONCENTRATED LOADS (LBS)

JT	LOC.	LC1	MAX-	MAX+	FACE	DIR.	TYPE
8	21-1-3	-207	-207	---	FRONT	VERT	TOTAL
14	13-9-4	-685	-685	---	FRONT	VERT	TOTAL

RECEIVED
TOWN OF MILTON
MAR 29, 2017
17-5337
BUILDING DIVISION

DESIGN CRITERIA

*** SPECIAL LOADS ANALYSIS ***
GEOMETRY AND/OR BASIC LOADS CHANGED BY USER.
LOADS WERE DERIVED FROM USER INPUT
NO FURTHER MODIFICATIONS WERE MADE

SPECIFIED LOADS:

TOP	CH.	LL	=	23.3	PSF
		DL	=	3.0	PSF
BOT	CH.	LL	=	0.0	PSF
		DL	=	7.0	PSF
TOTAL	LOAD		=	33.3	PSF

SPACING = 24.0 IN. C/C

LOADING IN FLAT SECTION BASED ON A SLOPE OF 6.00/12

GIRDER TYPE: CPrimeHip
LEFT SETBACK = 4-1-12
RIGHT SETBACK = 3-6-12
END SETBACK = 6-0-0
END WALL WIDTH = 3-0
CORNER FRAMING TYPE: CONVENTIONAL
END JACK TYPE: CONVENTIONAL
APPLIED TO FRONT SIDE
- ADDT'L LOADS BASED ON 55 % OF GSL.
LOADS APPLIED TO FIRST 10-10-12 OF SPAN MEASURED FROM THE RIGHT.

*** NON STANDARD GIRDER ***
ADDT'L USER-DEFINED LOADS APPLIED TO ALL LOAD CASES.

THIS TRUSS IS DESIGNED FOR RESIDENTIAL OR SMALL BUILDING REQUIREMENTS OF PART 9, NBCC 2010

THIS DESIGN COMPLIES WITH:
- PART 9 OF OBC 2012 , BCBC 2012 , ABC 2014
- CSA 086-09
- TPIC 2011

(55 % OF 27.2 P.S.F. G.S.L. PLUS 8.4 P.S.F. RAIN LOAD) EQUALS 23.3 P.S.F. SPECIFIED ROOF LIVE LOAD

ALLOWABLE DEFL.(LL)= L/360 (0.55")
CALCULATED VERT. DEFL.(LL) = L/ 999 (0.02")
ALLOWABLE DEFL.(TL)= L/360 (0.55")
CALCULATED VERT. DEFL.(TL) = L/ 999 (0.05")

CSI: TC=0.54 (7-8:1) , BC=0.21 (12-14:1) , WB=0.52 (5-12:1) , SSI=0.36 (7-8:1)

DOL LUMBER=1.00 NAIL=1.00 LS BEND=1.00 COMP=1.00 SHEAR=1.00 TENS= 1.00

COMPANION LIVE LOAD FACTOR = 0.50

TRUSS PLATE MANUFACTURER IS NOT RESPONSIBLE FOR QUALITY CONTROL IN THE TRUSS MANUFACTURING PLANT .

NAIL VALUES

PLATE	GRIP(DRY) (PSI) MAX	MIN	SHEAR (PLI) MAX	MIN	SECTION (PLI) MAX	MIN
MT20	618	354	1667	822	2284	1656

PLATE PLACEMENT TOL. = 0.250 inches

PLATE ROTATION TOL. = 0 Deg

CONTINUED ON PAGE 2

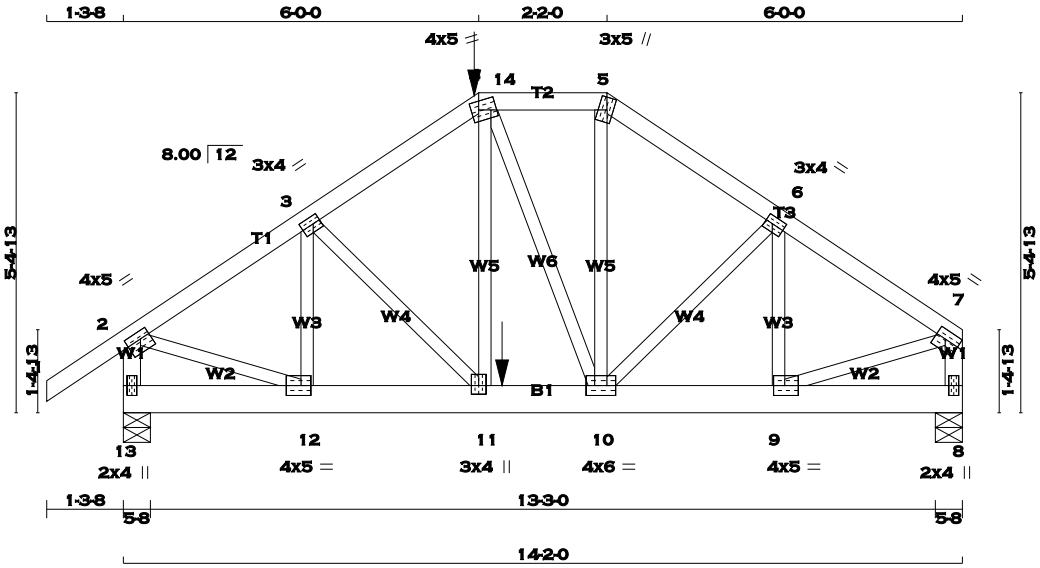

TOTAL WEIGHT = 75 lb [M]

LUMBER

N. L. G. A. RULES

CHORDS	SIZE		LUMBER	DESCR.
1 - 4	2x4	DRY	No.2	SPF
4 - 5	2x4	DRY	No.2	SPF
5 - 7	2x4	DRY	No.2	SPF
13 - 2	2x4	DRY	No.2	SPF
8 - 7	2x4	DRY	No.2	SPF
13 - 8	2x6	DRY	No.2	SPF
ALL WEBS EXCEPT	2x3	DRY	No.2	SPF

DRY: SEASONED LUMBER.

PLATES (table is in inches)

JT	TYPE	PLATES	W	LEN	Y	X
2	TMVW-t	MT20	4.0	5.0	1.50	2.00
3	TMWW-t	MT20	3.0	4.0	1.50	1.50
4	TTWW-m	MT20	4.0	5.0	1.75	1.50
5	TTW+m	MT20	3.0	5.0	2.50	1.25
6	TMWW-t	MT20	3.0	4.0	1.50	1.50
7	TMVW-t	MT20	4.0	5.0	1.75	Edge
8	BMV1+p	MT20	2.0	4.0		
9	BMWW-t	MT20	4.0	5.0	2.00	2.25
10	BMWWW-t	MT20	4.0	6.0		
11	BMWW+t	MT20	3.0	4.0	1.75	1.50
12	BMWW-t	MT20	4.0	5.0	2.00	2.00
13	BMV1+p	MT20	2.0	4.0		

Edge - INDICATES REFERENCE CORNER OF PLATE TOUCHES EDGE OF CHORD.

A SIZE FOR SIZE SUBSTITUTION OF MITEK MII20 WITH TEE-LOK TL20 PLATES IS ALLOWED.

HANGERS NOTES

1) SPECIAL HANGER(S) OR CONNECTION(S) REQUIRED TO SUPPORT CONCENTRATED LOAD(S) 348.1 lbs FACTORED DOWN AT 6-0-0 ON TOP CHORD, AND 658.3 lbs FACTORED DOWN AT 6-4-12 ON BOTTOM CHORD. DESIGN FOR UNSPECIFIED CONNECTION(S) IS DELEGATED TO THE BUILDING DESIGNER.

DIMENSIONS, SUPPORTS AND LOADINGS SPECIFIED BY FABRICATOR TO BE VERIFIED BY BUILDING DESIGNER

BEARINGS

JT	FACTORED GROSS REACTION VERT	HORZ	MAXIMUM FACTORED GROSS REACTION DOWN	HORZ	UPLIFT	INPUT BRG IN-SX	REQRD BRG IN-SX
13	1443	0	1443	0	0	5-8	5-8
8	1135	0	1135	0	0	5-8	5-8

UNFACTORED REACTIONS

JT	1ST LCASE COMBINED	MAX./MIN. COMPONENT REACTIONS SNOW	LIVE	PERM.LIVE	WIND	DEAD	SOIL
13	1013	708 / 0	0 / 0	0 / 0	0 / 0	305 / 0	0 / 0
8	795	565 / 0	0 / 0	0 / 0	0 / 0	230 / 0	0 / 0

BEARING MATERIAL TO BE SPF NO.2 OR BETTER AT JOINT(S) 13, 8

BRACING

TOP CHORD TO BE SHEATHED OR MAX. PURLIN SPACING = 5.29 FT.
MAX. UNBRACED BOTTOM CHORD LENGTH = 10.00 FT. OR RIGID CEILING DIRECTLY APPLIED.

ALL PITCH BREAKS AND PERIMETER CORNER JOINTS MUST BE LATERALLY RESTRAINED.

LOADING

TOTAL LOAD CASES: (4)

CHORDS MEMB. FR-TO	MAX. FACTORED FORCE (LBS)	FACTORED VERT. LOAD (PLF) FROM	TO	LC1 CSI (LC)	MAX UNBRAC LENGTH	WEBS MEMB. FR-TO	MAX. FACTORED FORCE (LBS)	MAX CSI (LC)
1- 2	0 / 29	-77.4	-77.4	0.11 (1)	10.00	12- 3	-255 / 19	0.05 (1)
2- 3	-1432 / 0	-77.4	-77.4	0.13 (1)	5.30	3-11	-41 / 0	0.02 (4)
3- 4	-1440 / 0	-77.4	-77.4	0.13 (1)	5.29	11- 4	0 / 627	0.16 (1)
4-14	-1043 / 0	-145.9	-145.9	0.09 (1)	6.04	4-10	-407 / 0	0.19 (1)
14- 5	-1043 / 0	-77.4	-77.4	0.09 (1)	6.04	10- 5	0 / 520	0.13 (1)
5- 6	-1257 / 0	-77.4	-77.4	0.13 (1)	5.57	10- 6	0 / 33	0.01 (1)
6- 7	-1200 / 0	-77.4	-77.4	0.13 (1)	5.68	9- 6	-324 / 0	0.07 (1)
13- 2	-1391 / 0	0.0	0.0	0.16 (1)	6.87	2-12	0 / 1262	0.31 (1)
8- 7	-1094 / 0	0.0	0.0	0.12 (1)	7.53	9- 7	0 / 1060	0.26 (1)
13-12	0 / 0	-33.0	-33.0	0.04 (4)	10.00			
12-11	0 / 1201	-33.0	-33.0	0.23 (1)	10.00			
11-10	0 / 1198	-17.5	-17.5	0.22 (1)	10.00			
10- 9	0 / 1009	-17.5	-17.5	0.18 (1)	10.00			
9- 8	0 / 0	-17.5	-17.5	0.04 (1)	10.00			

FACTORED CONCENTRATED LOADS (LBS)

JT	LOC.	LC1	MAX-	MAX+	FACE	DIR.	TYPE
4	6-0-0	-348	-348	---	FRONT	VERT	TOTAL
11	6-4-12	-658	-658	---	FRONT	VERT	TOTAL

RECEIVED
TOWN OF MILTON
MAR 29, 2017
17-5337
BUILDING DIVISION

DESIGN CRITERIA

*** SPECIAL LOADS ANALYSIS ***
GEOMETRY AND/OR BASIC LOADS CHANGED BY USER.
LOADS WERE DERIVED FROM USER INPUT
NO FURTHER MODIFICATIONS WERE MADE

SPECIFIED LOADS:

TOP	CH.	LL	=	23.3	PSF
		DL	=	3.0	PSF
BOT	CH.	LL	=	0.0	PSF
		DL	=	7.0	PSF
TOTAL	LOAD		=	33.3	PSF

SPACING = 24.0 IN. C/C

LOADING IN FLAT SECTION BASED ON A SLOPE OF 6.00/12

GIRDER TYPE: CPrimeHip
SIDE SETBACK = 6-0-0
END SETBACK = 6-0-0
END WALL WIDTH = 5-8
CORNER FRAMING TYPE: CONVENTIONAL
END JACK TYPE: CONVENTIONAL
APPLIED TO FRONT SIDE
- ADDT'L LOADS BASED ON 55 % OF GSL.
LOADS APPLIED TO FIRST 6-4-12 OF SPAN MEASURED FROM THE LEFT.

*** NON STANDARD GIRDER ***
ADDT'L USER-DEFINED LOADS APPLIED TO ALL LOAD CASES.

THIS TRUSS IS DESIGNED FOR RESIDENTIAL OR SMALL BUILDING REQUIREMENTS OF PART 9, NBCC 2010

THIS DESIGN COMPLIES WITH:
- PART 9 OF OBC 2012 , BCBC 2012 , ABC 2014
- CSA 086-09
- TPIC 2011

(55 % OF 27.2 P.S.F. G.S.L. PLUS 8.4 P.S.F. RAIN LOAD) EQUALS 23.3 P.S.F. SPECIFIED ROOF LIVE LOAD

ALLOWABLE DEFL.(LL)= L/360 (0.47")
CALCULATED VERT. DEFL.(LL) = L/ 999 (0.03")
ALLOWABLE DEFL.(TL)= L/360 (0.47")
CALCULATED VERT. DEFL.(TL) = L/ 999 (0.05")

CSI: TC=0.16 (2-13:1) , BC=0.23 (11-12:1) , WB=0.31 (2-12:1) , SSI=0.10 (6-7:1)

DOL LUMBER=1.00 NAIL=1.00 LS BEND=1.00 COMP=1.00 SHEAR=1.00 TENS= 1.00

COMPANION LIVE LOAD FACTOR = 0.50

TRUSS PLATE MANUFACTURER IS NOT RESPONSIBLE FOR QUALITY CONTROL IN THE TRUSS MANUFACTURING PLANT .

NAIL VALUES

PLATE	GRIP(DRY) (PSI) MAX	MIN	SHEAR (PLI) MAX	MIN	SECTION (PLI) MAX	MIN
MT20	618	354	1667	822	2284	1656

PLATE PLACEMENT TOL. = 0.250 inches

PLATE ROTATION TOL. = 10 Deg

CONTINUED ON PAGE 2

SCALE = 1:37.9

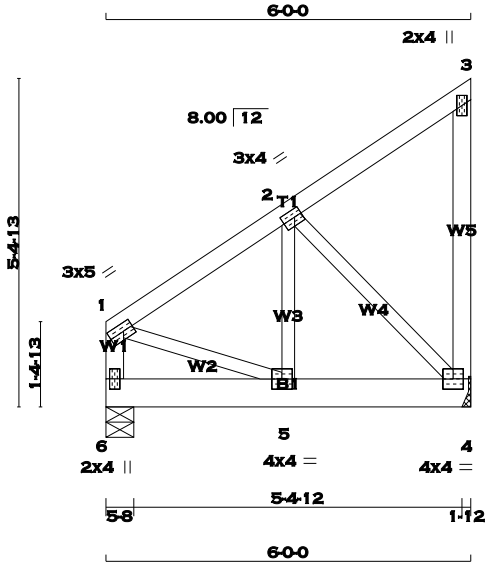

TOTAL WEIGHT = 33 lb [M]

LUMBER

N. L. G. A. RULES

CHORDS	SIZE		LUMBER	DESCR.
6 - 1	2x4	DRY	No.2	SPF
1 - 3	2x4	DRY	No.2	SPF
4 - 3	2x4	DRY	No.2	SPF
6 - 4	2x6	DRY	No.2	SPF
ALL WEBS	2x3	DRY	No.2	SPF

DRY: SEASONED LUMBER.

PLATES (table is in inches)

JT	TYPE	PLATES	W	LEN	Y	X
1	TMVW-t	MT20	3.0	5.0	1.50	2.00
2	TMWW-t	MT20	3.0	4.0	1.50	1.50
3	TMV+p	MT20	2.0	4.0		
4	BMVW1-t	MT20	4.0	4.0		
5	BMWW-t	MT20	4.0	4.0		
6	BMV1+p	MT20	2.0	4.0		

A SIZE FOR SIZE SUBSTITUTION OF MITEK MII20 WITH TEE-LOK TL20 PLATES IS ALLOWED.

DIMENSIONS, SUPPORTS AND LOADINGS SPECIFIED BY FABRICATOR TO BE VERIFIED BY BUILDING DESIGNER

BEARINGS

JT	FACTORED GROSS REACTION VERT	HORZ	MAXIMUM FACTORED GROSS REACTION DOWN	HORZ	UPLIFT	INPUT BRG IN-SX	REQRD BRG IN-SX
6	658	0	658	0	0	5-8	5-8
4	658	0	658	0	0	HANGER BY OTHERS	
						MIN. SEAT SIZE: 1-12	

UNFACTORED REACTIONS

JT	1ST LCASE COMBINED	MAX./MIN. COMPONENT REACTIONS SNOW	LIVE	PERM.LIVE	WIND	DEAD	SOIL
6	462	323 / 0	0 / 0	0 / 0	0 / 0	139 / 0	0 / 0
4	462	323 / 0	0 / 0	0 / 0	0 / 0	139 / 0	0 / 0

BEARING MATERIAL TO BE SPF NO.2 OR BETTER AT JOINT(S) 6

BRACING

TOP CHORD TO BE SHEATHED OR MAX. PURLIN SPACING = 6.25 FT.
MAX. UNBRACED BOTTOM CHORD LENGTH = 10.00 FT. OR RIGID CEILING DIRECTLY APPLIED.

ALL PITCH BREAKS AND PERIMETER CORNER JOINTS MUST BE LATERALLY RESTRAINED.

LOADING

TOTAL LOAD CASES: (4)

CHORDS

MEMB. FR-TO	MAX. FACTORED FORCE (LBS)	VERT. LOAD LC1 (PLF) FROM	TO	MAX CSI (LC)	MAX. UNBRAC LENGTH
6- 1	-480 / 0	0.0	0.0	0.05 (1)	7.81
1- 2	-455 / 0	-77.4	-77.4	0.12 (1)	6.25
2- 3	-15 / 0	-77.4	-77.4	0.12 (1)	6.25
4- 3	-89 / 0	0.0	0.0	0.04 (1)	7.81
6- 5	0 / 0	-142.0	-142.0	0.08 (1)	10.00
5- 4	0 / 391	-142.0	-142.0	0.13 (1)	10.00

WEBS

MEMB. FR-TO	MAX. FACTORED FORCE (LBS)	MAX CSI (LC)
1- 5	0 / 411	0.10 (1)
5- 2	0 / 365	0.09 (1)
2- 4	-552 / 0	0.16 (1)

DESIGN CRITERIA

SPECIFIED LOADS:

TOP CH.	LL	=	23.3	PSF
	DL	=	3.0	PSF
BOT CH.	LL	=	0.0	PSF
	DL	=	7.0	PSF
TOTAL LOAD		=	33.3	PSF

SPACING = 24.0 IN. C/C

GIRDER TYPE: CStdGirder
START DISTANCE = 0-0
START SPAN CARRIED = 7-8-8
END DISTANCE = 6-0-0
END SPAN CARRIED = 7-8-8
END WALL WIDTH = 5-8
APPLIED TO FRONT SIDE OF BOTTOM CHORD.
- ADDT'L LOADS BASED ON 55 % OF GSL.

THIS TRUSS IS DESIGNED FOR RESIDENTIAL OR SMALL BUILDING REQUIREMENTS OF PART 9, NBCC 2010

THIS DESIGN COMPLIES WITH:
- PART 9 OF OBC 2012 , BCBC 2012 , ABC 2014
- CSA 086-09
- TPIC 2011

(55 % OF 27.2 P.S.F. G.S.L. PLUS 8.4 P.S.F. RAIN LOAD) EQUALS 23.3 P.S.F. SPECIFIED ROOF LIVE LOAD

ALLOWABLE DEFL.(LL)= L/360 (0.20")
CALCULATED VERT. DEFL.(LL) = L/ 999 (0.01")
ALLOWABLE DEFL.(TL)= L/360 (0.20")
CALCULATED VERT. DEFL.(TL) = L/ 999 (0.01")

CSI: TC=0.12 (1-2:1) , BC=0.13 (4-5:1) , WB=0.16 (2-4:1) , SSI=0.16 (5-6:1)

DOL LUMBER=1.00 NAIL=1.00 LS BEND=1.00 COMP=1.00 SHEAR=1.00 TENS= 1.00

COMPANION LIVE LOAD FACTOR = 0.50

TRUSS PLATE MANUFACTURER IS NOT RESPONSIBLE FOR QUALITY CONTROL IN THE TRUSS MANUFACTURING PLANT .

NAIL VALUES

PLATE	GRIP(DRY) (PSI) MAX	MIN	SHEAR (PLI) MAX	MIN	SECTION (PLI) MAX	MIN
MT20	618	354	1667	822	2284	1656

PLATE PLACEMENT TOL. = 0.250 inches

PLATE ROTATION TOL. = 0.5 Deg.

JSI GRIP= 0.64 (2) (INPUT = 0.90)
JSI METAL= 0.16 (1) (INPUT = 1.00)

LICENSED PROFESSIONAL ENGINEER
P. M. TREVISAN
100136551
March 16th, 2017
PROVINCE OF ONTARIO

RECEIVED
TOWN OF MILTON
MAR 29, 2017
17-5337
BUILDING DIVISION

KOTT

JOB NAME	TRUSS NAME	QUANTITY	PLY	JOB DESC.	DRWG NO.
PT0317-097	GIRD15	1	1	TRUSS DESC. LECCO RIDGE-BLOCK 344	

KOTT , Stouffville, ON, CGC

Version 8.100 S Feb 9 2017 MiTek Industries, Inc. Thu Mar 16 11:57:42 2017 Page 1
ID:EvTixTQDI5yR1QLotZTBr_yE?HJ-ol9aXXRuT3g9CGPx_LeJhC2Ea4VCZPsT4eQ1fUzaNk7

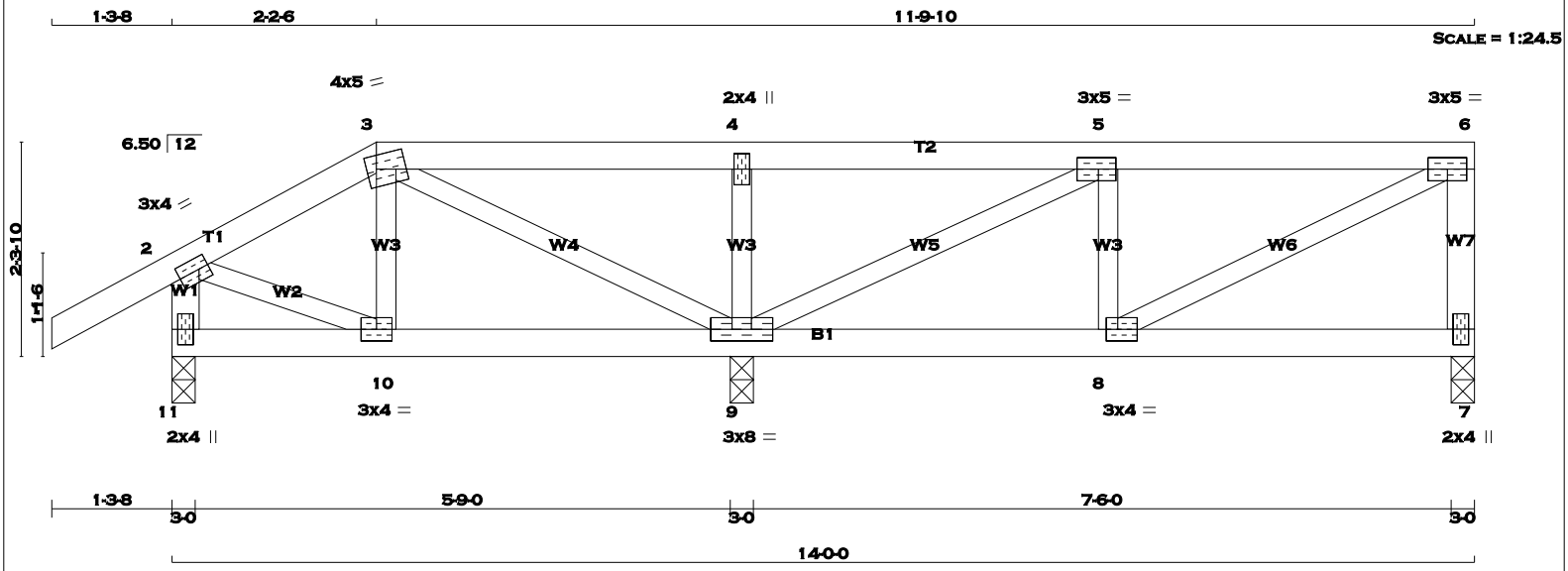

TOTAL WEIGHT = 52 lb
[M]

LUMBER
N. L. G. A. RULES

CHORDS	SIZE		LUMBER	DESCR.
1 - 3	2x4	DRY	No.2	SPF
3 - 6	2x4	DRY	No.2	SPF
7 - 6	2x4	DRY	No.2	SPF
11 - 2	2x4	DRY	No.2	SPF
11 - 7	2x4	DRY	No.2	SPF
ALL WEBS EXCEPT	2x3	DRY	No.2	SPF

DRY: SEASONED LUMBER.

PLATES (table is in inches)

JT	TYPE	PLATES	W	LEN	Y	X
2	TMVW-t	MT20	3.0	4.0	1.50	1.25
3	TTWW-m	MT20	4.0	5.0	1.75	1.25
4	TMW+w	MT20	2.0	4.0		
5	TMWW-t	MT20	3.0	5.0	1.50	2.25
6	TMVW-t	MT20	3.0	5.0		
7	BMV1+p	MT20	2.0	4.0		
8	BMWW-t	MT20	3.0	4.0	1.50	1.50
9	BMWWW1-t	MT20	3.0	8.0		
10	BMWW-t	MT20	3.0	4.0		
11	BMV1+p	MT20	2.0	4.0		

A SIZE FOR SIZE SUBSTITUTION OF MITEK MII20 WITH TEE-LOK TL20 PLATES IS ALLOWED.

DIMENSIONS, SUPPORTS AND LOADINGS SPECIFIED BY FABRICATOR TO BE VERIFIED BY BUILDING DESIGNER

BEARINGS

JT	FACTORED GROSS REACTION VERT	HORZ	MAXIMUM FACTORED GROSS REACTION DOWN	HORZ	UPLIFT	INPUT BRG IN-SX	REQRD BRG IN-SX
7	647	0	647	0	0	3-0	3-0
11	297	0	297	0	0	3-0	3-0
9	1190	0	1190	0	0	3-0	3-0

UNFACTORED REACTIONS

JT	1ST LCASE COMBINED	MAX./MIN. COMPONENT REACTIONS SNOW	LIVE	PERM.LIVE	WIND	DEAD	SOIL
7	454	316 / 0	0 / 0	0 / 0	0 / 0	138 / 0	0 / 0
11	206	156 / 0	0 / 0	0 / 0	0 / 0	51 / 0	0 / 0
9	835	588 / 0	0 / 0	0 / 0	0 / 0	247 / 0	0 / 0

BEARING MATERIAL TO BE SPF NO.2 OR BETTER AT JOINT(S) 7, 11, 9

BRACING
TOP CHORD TO BE SHEATHED OR MAX. PURLIN SPACING = 6.25 FT.
MAX. UNBRACED BOTTOM CHORD LENGTH = 10.00 FT. OR RIGID CEILING DIRECTLY APPLIED.

ALL PITCH BREAKS AND PERIMETER CORNER JOINTS MUST BE LATERALLY RESTRAINED.

LOADING
TOTAL LOAD CASES: (4)

CHORDS

MEMB. FR-TO	MAX. FACTORED FORCE (LBS)	FACTORED VERT. LOAD LC1 (PLF) FROM	TO	MAX CSI (LC)	MAX. UNBRAC LENGTH
1- 2	0 / 25	-77.4	-77.4	0.11 (1)	10.00
2- 3	-110 / 0	-77.4	-77.4	0.07 (1)	6.25
3- 4	0 / 186	-77.4	-77.4	0.30 (1)	10.00
4- 5	0 / 186	-149.9	-149.9	0.37 (1)	10.00
5- 6	-682 / 0	-149.9	-149.9	0.35 (1)	6.25
7- 6	-587 / 0	0.0	0.0	0.08 (1)	7.81
11- 2	-277 / 0	0.0	0.0	0.03 (1)	7.81
11-10	0 / 0	-17.5	-17.5	0.03 (4)	10.00
10- 9	0 / 97	-17.5	-17.5	0.11 (4)	10.00
9- 8	0 / 682	-33.9	-33.9	0.20 (1)	10.00
8- 7	0 / 0	-33.9	-33.9	0.13 (4)	10.00

WEBS

MEMB. FR-TO	MAX. FACTORED FORCE (LBS)	MAX CSI (LC)
10- 3	0 / 44	0.02 (4)
3- 9	-318 / 0	0.10 (1)
9- 4	-480 / 0	0.08 (1)
9- 5	-975 / 0	0.33 (1)
8- 5	-215 / 62	0.04 (1)
8- 6	0 / 766	0.19 (1)
2-10	0 / 103	0.03 (1)

DESIGN CRITERIA

SPECIFIED LOADS:

TOP	CH.	LL	=	23.3	PSF
		DL	=	3.0	PSF
BOT	CH.	LL	=	0.0	PSF
		DL	=	7.0	PSF
TOTAL	LOAD		=	33.3	PSF

SPACING = 24.0 IN. C/C

LOADING IN FLAT SECTION BASED ON A SLOPE OF 6.00/12

GIRDER TYPE: CPrimeHip
LEFT SETBACK = 2-2-6
RIGHT SETBACK = 0-0
END SETBACK = 6-0-0
END WALL WIDTH = 3-0
CORNER FRAMING TYPE: CONVENTIONAL
END JACK TYPE: CONVENTIONAL
APPLIED TO FRONT SIDE
- ADDT'L LOADS BASED ON 55 % OF GSL.
LOADS APPLIED TO FIRST 7-9-0 OF SPAN MEASURED FROM THE RIGHT.

THIS TRUSS IS DESIGNED FOR RESIDENTIAL OR SMALL BUILDING REQUIREMENTS OF PART 9, NBCC 2010

THIS DESIGN COMPLIES WITH:
- PART 9 OF OBC 2012 , BCBC 2012 , ABC 2014
- CSA 086-09
- TPIC 2011

(55 % OF 27.2 P.S.F. G.S.L. PLUS 8.4 P.S.F. RAIN LOAD) EQUALS 23.3 P.S.F. SPECIFIED ROOF LIVE LOAD

ALLOWABLE DEFL.(LL)= L/360 (0.26")
CALCULATED VERT. DEFL.(LL) = L/ 999 (0.01")
ALLOWABLE DEFL.(TL)= L/360 (0.26")
CALCULATED VERT. DEFL.(TL) = L/ 999 (0.03")

CSI: TC=0.37 (4-5:1) , BC=0.20 (8-9:1) , WB=0.33 (5-9:1) , SSI=0.30 (5-6:1)

DOL LUMBER=1.00 NAIL=1.00 LS BEND=1.00 COMP=1.00 SHEAR=1.00 TENS= 1.00

COMPANION LIVE LOAD FACTOR = 0.50

TRUSS PLATE MANUFACTURER IS NOT RESPONSIBLE FOR QUALITY CONTROL IN THE TRUSS MANUFACTURING PLANT .

NAIL VALUES

PLATE	GRIP(DRY) (PSI) MAX	MIN	SHEAR (PLI) MAX	MIN	SECTION (PLI) MAX	MIN
MT20	618	354	1667	822	2284	1656

PLATE PLACEMENT TOL. = 0.250 inches

PLATE ROTATION TOL. = 5.0 Deg.

JSI GRIP= 0.85 (5) (INPUT = 0.90)
JSI METAL= 0.26 (5) (INPUT = 1.00)

LICENSED PROFESSIONAL ENGINEER
P. M. TREVISAN
100136551
March 16th, 2017
PROVINCE OF ONTARIO

RECEIVED
TOWN OF MILTON
MAR 29, 2017
17-5337
BUILDING DIVISION

KOTT

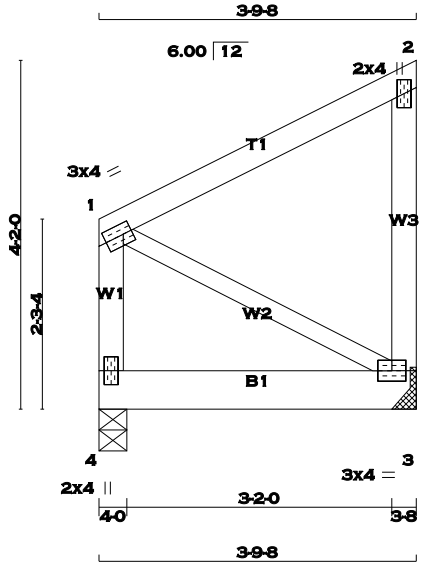

SCALE = 1:27.5

TOTAL WEIGHT = 20 lb [M]

LUMBER

N. L. G. A. RULES

CHORDS	SIZE		LUMBER	DESCR.
4 - 1	2x4	DRY	No.2	SPF
1 - 2	2x4	DRY	No.2	SPF
3 - 2	2x4	DRY	No.2	SPF
4 - 3	2x6	DRY	No.2	SPF
ALL WEBS	2x3	DRY	No.2	SPF

DRY: SEASONED LUMBER.

PLATES (table is in inches)

JT	TYPE	PLATES	W	LEN	Y	X
1	TMVW-t	MT20	3.0	4.0	1.50	1.25
2	TMV+p	MT20	2.0	4.0		
3	BMVW1-t	MT20	3.0	4.0		
4	BMV1+p	MT20	2.0	4.0		

A SIZE FOR SIZE SUBSTITUTION OF MITEK MII20 WITH TEE-LOK TL20 PLATES IS ALLOWED.

DIMENSIONS, SUPPORTS AND LOADINGS SPECIFIED BY FABRICATOR TO BE VERIFIED BY BUILDING DESIGNER

BEARINGS

JT	FACTORED GROSS REACTION VERT	HORZ	MAXIMUM FACTORED GROSS REACTION DOWN	HORZ	UPLIFT	INPUT BRG IN-SX	REQRD BRG IN-SX
4	686	0	686	0	0	4-0	4-0
3	686	0	686	0	0	HANGER BY OTHERS	
						MIN. SEAT SIZE: 3-8	

UNFACTORED REACTIONS

JT	1ST LCASE COMBINED	MAX./MIN. COMPONENT REACTIONS SNOW	LIVE	PERM.LIVE	WIND	DEAD	SOIL
4	481	337 / 0	0 / 0	0 / 0	0 / 0	145 / 0	0 / 0
3	481	337 / 0	0 / 0	0 / 0	0 / 0	145 / 0	0 / 0

BEARING MATERIAL TO BE SPF NO.2 OR BETTER AT JOINT(S) 4

BRACING

TOP CHORD TO BE SHEATHED OR MAX. PURLIN SPACING = 10.00 FT.
MAX. UNBRACED BOTTOM CHORD LENGTH = 10.00 FT. OR RIGID CEILING DIRECTLY APPLIED.

ALL PITCH BREAKS AND PERIMETER CORNER JOINTS MUST BE LATERALLY RESTRAINED.

LOADING

TOTAL LOAD CASES: (4)

CHORDS

MEMB. FR-TO	MAX. FACTORED FORCE (LBS)	VERT. LOAD (PLF) FROM	TO	LC1 MAX CSI (LC)	MAX. UNBRAC LENGTH
4- 1	-147 / 0	0.0	0.0	0.02 (1)	7.81
1- 2	0 / 0	-77.4	-77.4	0.21 (1)	10.00
3- 2	-147 / 0	0.0	0.0	0.04 (1)	7.81
4- 3	0 / 0	-284.3	-284.3	0.38 (1)	10.00

WEBS

MEMB. FR-TO	MAX. FACTORED FORCE (LBS)	MAX CSI (LC)
1- 3	0 / 0	0.00 (1)

DESIGN CRITERIA

SPECIFIED LOADS:

TOP CH.	LL =	23.3	PSF
	DL =	3.0	PSF
BOT CH.	LL =	0.0	PSF
	DL =	7.0	PSF
TOTAL LOAD	=	33.3	PSF

SPACING = 24.0 IN. C/C

GIRDER TYPE: CStdGirder
START DISTANCE = 0-0
START SPAN CARRIED = 13-8-8
END DISTANCE = 3-9-8
END SPAN CARRIED = 13-8-8
END WALL WIDTH = 5-8
APPLIED TO FRONT SIDE OF BOTTOM CHORD.
- ADDT'L LOADS BASED ON 55 % OF GSL.

THIS TRUSS IS DESIGNED FOR RESIDENTIAL OR SMALL BUILDING REQUIREMENTS OF PART 9, NBCC 2010

THIS DESIGN COMPLIES WITH:
- PART 9 OF OBC 2012 , BCBC 2012 , ABC 2014
- CSA 086-09
- TPIC 2011

(55 % OF 27.2 P.S.F. G.S.L. PLUS 8.4 P.S.F. RAIN LOAD) EQUALS 23.3 P.S.F. SPECIFIED ROOF LIVE LOAD

ALLOWABLE DEFL.(LL)= L/360 (0.19")
CALCULATED VERT. DEFL.(LL) = L/ 999 (0.02")
ALLOWABLE DEFL.(TL)= L/360 (0.19")
CALCULATED VERT. DEFL.(TL) = L/ 999 (0.04")

CSI: TC=0.21 (1-2:1) , BC=0.38 (3-4:1) , WB=0.00 (1-3:1) , SSI=0.36 (3-4:1)

DOL LUMBER=1.00 NAIL=1.00 LS BEND=1.00 COMP=1.00 SHEAR=1.00 TENS= 1.00

COMPANION LIVE LOAD FACTOR = 0.50

TRUSS PLATE MANUFACTURER IS NOT RESPONSIBLE FOR QUALITY CONTROL IN THE TRUSS MANUFACTURING PLANT .

NAIL VALUES

PLATE	GRIP(DRY) (PSI) MAX	MIN	SHEAR (PLI) MAX	MIN	SECTION (PLI) MAX	MIN
MT20	618	354	1667	822	2284	1656

PLATE PLACEMENT TOL. = 0.250 inches

PLATE ROTATION TOL. = 5.0 Deg.

JSI GRIP= 0.15 (3) (INPUT = 0.90)
JSI METAL= 0.03 (2) (INPUT = 1.00)

LICENSED PROFESSIONAL ENGINEER
P. M. TREVISAN
100136551
March 16th, 2017
PROVINCE OF ONTARIO

RECEIVED
TOWN OF MILTON
MAR 29, 2017
17-5337
BUILDING DIVISION

KOTT

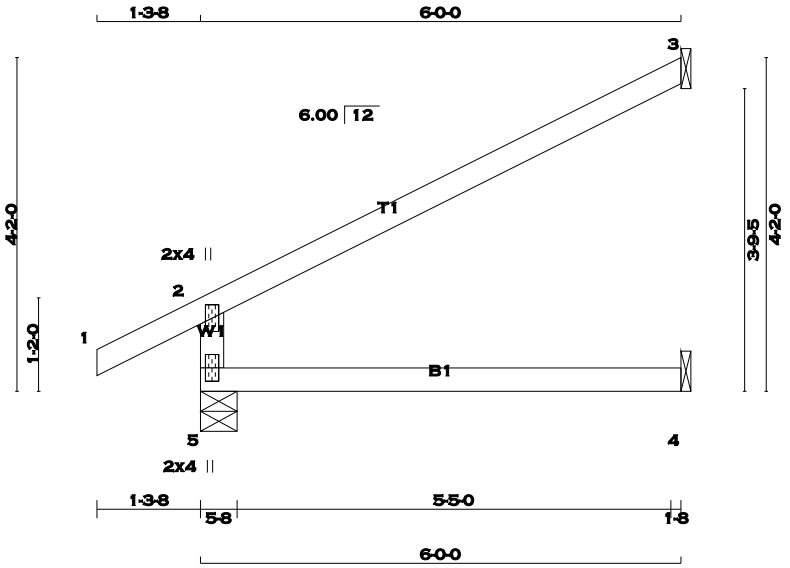

TOTAL WEIGHT = 20 X 17 = 342 lb

LUMBER

N. L. G. A. RULES

CHORDS	SIZE		LUMBER	DESCR.
5 - 2	2x4	DRY	No.2	SPF
1 - 3	2x4	DRY	No.2	SPF
5 - 4	2x4	DRY	No.2	SPF

DRY: SEASONED LUMBER.

PLATES (table is in inches)

JT	TYPE	PLATES	W	LEN	Y	X
2	TMV+p	MT20	2.0	4.0		
5	BMV1+p	MT20	2.0	4.0		

A SIZE FOR SIZE SUBSTITUTION OF MITEK MII20 WITH TEE-LOK TL20 PLATES IS ALLOWED.

DIMENSIONS, SUPPORTS AND LOADINGS SPECIFIED BY FABRICATOR TO BE VERIFIED BY BUILDING DESIGNER

BEARINGS

JT	FACTORED GROSS REACTION VERT	HORZ	MAXIMUM FACTORED GROSS REACTION DOWN	HORZ	UPLIFT	INPUT BRG IN-SX	REQRD BRG IN-SX
5	457	0	457	0	0	5-8	5-8
3	174	0	174	0	0	1-8	1-8
4	43	0	49	0	0	1-8	1-8

SEE MITEK STANDARD DETAIL B37579H FOR CONNECTION TO JOINT(S) 3 , 4

UNFACTORED REACTIONS

JT	1ST LCASE COMBINED	MAX./MIN. COMPONENT REACTIONS SNOW	LIVE	PERM.LIVE	WIND	DEAD	SOIL
5	318	238 / 0	0 / 0	0 / 0	0 / 0	80 / 0	0 / 0
3	118	105 / 0	0 / 0	0 / 0	0 / 0	14 / 0	0 / 0
4	35	0 / 0	0 / 0	0 / 0	0 / 0	35 / 0	0 / 0

BEARING MATERIAL TO BE SPF NO.2 OR BETTER AT JOINT(S) 5

BRACING

TOP CHORD TO BE SHEATHED OR MAX. PURLIN SPACING = 6.25 FT.
MAX. UNBRACED BOTTOM CHORD LENGTH = 10.00 FT. OR RIGID CEILING DIRECTLY APPLIED.

ALL PITCH BREAKS AND PERIMETER CORNER JOINTS MUST BE LATERALLY RESTRAINED.

LOADING

TOTAL LOAD CASES: (4)

CHORDS MEMB. FR-TO	MAX. FACTORED FORCE (LBS)	FACTORED VERT. LOAD (PLF) FROM	TO	LC1 MAX CSI (LC)	MAX. UNBRAC LENGTH	WEBS MEMB. FR-TO	MAX. FACTORED FORCE (LBS)	MAX CSI (LC)
5- 2	-395 / 0	0.0	0.0	0.13 (4)	7.81			
1- 2	0 / 23	-77.4	-77.4	0.10 (1)	10.00			
2- 3	-26 / 0	-77.4	-77.4	0.47 (1)	6.25			
5- 4	0 / 0	-17.5	-17.5	0.13 (4)	10.00			

[M]

DESIGN CRITERIA

SPECIFIED LOADS:

TOP CH.	LL	=	23.3	PSF
	DL	=	3.0	PSF
BOT CH.	LL	=	0.0	PSF
	DL	=	7.0	PSF
TOTAL LOAD		=	33.3	PSF

SPACING = 24.0 IN. C/C

THIS TRUSS IS DESIGNED FOR RESIDENTIAL OR SMALL BUILDING REQUIREMENTS OF PART 9, NBCC 2010

THIS DESIGN COMPLIES WITH:
- PART 9 OF OBC 2012 , BCBC 2012 , ABC 2014
- CSA 086-09
- TPIC 2011

DESIGN ASSUMPTIONS
-OVERHANG NOT TO BE ALTERED OR CUT OFF.

(55 % OF 27.2 P.S.F. G.S.L. PLUS 8.4 P.S.F. RAIN LOAD) EQUALS 23.3 P.S.F. SPECIFIED ROOF LIVE LOAD

ALLOWABLE DEFL.(LL)= L/360 (0.20")
CALCULATED VERT. DEFL.(LL) = L/ 999 (0.00")
ALLOWABLE DEFL.(TL)= L/360 (0.20")
CALCULATED VERT. DEFL.(TL) = L/ 999 (0.03")

CSI: TC=0.47 (2-3:1) , BC=0.13 (4-5:4) , WB=0.00 (n/a:0) , SSI=0.20 (2-3:1)

DOL LUMBER=1.00 NAIL=1.00 LS BEND=1.10 COMP=1.10 SHEAR=1.10 TENS= 1.10

COMPANION LIVE LOAD FACTOR = 0.50

TRUSS PLATE MANUFACTURER IS NOT RESPONSIBLE FOR QUALITY CONTROL IN THE TRUSS MANUFACTURING PLANT .

NAIL VALUES

PLATE	GRIP(DRY) (PSI) MAX	MIN	SHEAR (PLI) MAX	MIN	SECTION (PLI) MAX	MIN
MT20	618	354	1667	822	2284	1656

PLATE PLACEMENT TOL. = 0.250 inches

PLATE ROTATION TOL. = 0.5 Deg.

JSI GRIP= 0.23 (2) (INPUT = 0.90)
JSI METAL= 0.09 (2) (INPUT = 1.00)

LICENSED PROFESSIONAL ENGINEER
P. M. TREVISAN
100136551
March 16th, 2017
PROVINCE OF ONTARIO

RECEIVED
TOWN OF MILTON
MAR 29, 2017
17-5337
BUILDING DIVISION

KOTT

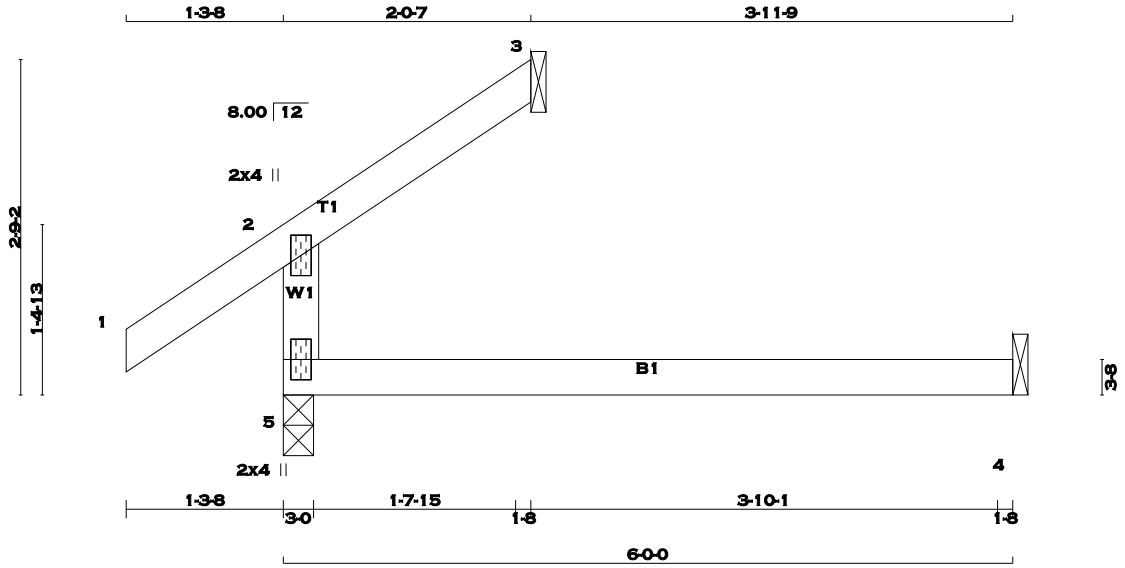

TOTAL WEIGHT = 2 X 13 = 25 lb

[M][F]

LUMBER

N. L. G. A. RULES

CHORDS	SIZE		LUMBER	DESCR.
5 - 2	2x4	DRY	No.2	SPF
1 - 3	2x4	DRY	No.2	SPF
5 - 4	2x4	DRY	No.2	SPF

DRY: SEASONED LUMBER.

PLATES (table is in inches)

JT	TYPE	PLATES	W	LEN	Y	X
2	TMV+p	MT20	2.0	4.0		
5	BMV1+p	MT20	2.0	4.0		

A SIZE FOR SIZE SUBSTITUTION OF MITEK MII20 WITH TEE-LOK TL20 PLATES IS ALLOWED.

DIMENSIONS, SUPPORTS AND LOADINGS SPECIFIED BY FABRICATOR TO BE VERIFIED BY BUILDING DESIGNER

BEARINGS

JT	FACTORED GROSS REACTION VERT	HORZ	MAXIMUM FACTORED GROSS REACTION DOWN	HORZ	UPLIFT	INPUT BRG IN-SX	REQRD BRG IN-SX
5	265	0	265	0	0	3-0	3-0
3	60	0	60	0	0	1-8	1-8
4	44	0	49	0	0	1-8	1-8

SEE MITEK STANDARD DETAIL B37579H FOR CONNECTION TO JOINT(S) 3 , 4

UNFACTORED REACTIONS

JT	1ST LCASE COMBINED	MAX./MIN. COMPONENT REACTIONS SNOW	LIVE	PERM.LIVE	WIND	DEAD	SOIL
5	188	123 / 0	0 / 0	0 / 0	0 / 0	65 / 0	0 / 0
3	40	36 / 0	0 / 0	0 / 0	0 / 0	5 / 0	0 / 0
4	35	0 / 0	0 / 0	0 / 0	0 / 0	35 / 0	0 / 0

BEARING MATERIAL TO BE SPF NO.2 OR BETTER AT JOINT(S) 5, 3

BRACING

TOP CHORD TO BE SHEATHED OR MAX. PURLIN SPACING = 6.25 FT.
MAX. UNBRACED BOTTOM CHORD LENGTH = 10.00 FT. OR RIGID CEILING DIRECTLY APPLIED.

ALL PITCH BREAKS AND PERIMETER CORNER JOINTS MUST BE LATERALLY RESTRAINED.

LOADING

TOTAL LOAD CASES: (4)

CHORDS MEMB. FR-TO	MAX. FACTORED FORCE (LBS)	FACTORED VERT. LOAD (PLF) FROM	TO	LC1 MAX CSI (LC)	MAX. UNBRAC LENGTH
5- 2	-204 / 0	0.0	0.0	0.10 (4)	7.81
1- 2	0 / 29	-77.4	-77.4	0.10 (1)	10.00
2- 3	-11 / 0	-77.4	-77.4	0.04 (1)	6.25
5- 4	0 / 0	-17.5	-17.5	0.13 (4)	10.00

WEBS: MEMB. FR-TO, MAX. FACTORED FORCE (LBS), MAX CSI (LC)

DESIGN CRITERIA

SPECIFIED LOADS:

TOP CH.	LL	=	23.3	PSF
	DL	=	3.0	PSF
BOT CH.	LL	=	0.0	PSF
	DL	=	7.0	PSF
TOTAL LOAD		=	33.3	PSF

SPACING = 24.0 IN. C/C

THIS TRUSS IS DESIGNED FOR RESIDENTIAL OR SMALL BUILDING REQUIREMENTS OF PART 9, NBCC 2010

THIS DESIGN COMPLIES WITH:
- PART 9 OF OBC 2012 , BCBC 2012 , ABC 2014
- CSA 086-09
- TPIC 2011

DESIGN ASSUMPTIONS
-OVERHANG NOT TO BE ALTERED OR CUT OFF.

(55 % OF 27.2 P.S.F. G.S.L. PLUS 8.4 P.S.F. RAIN LOAD) EQUALS 23.3 P.S.F. SPECIFIED ROOF LIVE LOAD

ALLOWABLE DEFL.(LL)= L/360 (0.20")
CALCULATED VERT. DEFL.(LL) = L/ 999 (0.00")
ALLOWABLE DEFL.(TL)= L/360 (0.20")
CALCULATED VERT. DEFL.(TL) = L/ 999 (0.03")

CSI: TC=0.10 (2-5:4) , BC=0.13 (4-5:4) , WB=0.00 (n/a:0) , SSI=0.08 (4-5:4)

DOL LUMBER=1.00 NAIL=1.00 LS BEND=1.10 COMP=1.10 SHEAR=1.10 TENS= 1.10

COMPANION LIVE LOAD FACTOR = 0.50

TRUSS PLATE MANUFACTURER IS NOT RESPONSIBLE FOR QUALITY CONTROL IN THE TRUSS MANUFACTURING PLANT .

NAIL VALUES

PLATE	GRIP(DRY) (PSI) MAX	MIN	SHEAR (PLI) MAX	MIN	SECTION (PLI) MAX	MIN
MT20	618	354	1667	822	2284	1656

PLATE PLACEMENT TOL. = 0.250 inches

PLATE ROTATION TOL. = 0.5 Deg.

JSI GRIP= 0.13 (2) (INPUT = 0.90)
JSI METAL= 0.05 (2) (INPUT = 1.00)

LICENSED PROFESSIONAL ENGINEER
R. M. TREVISAN
100136551
March 16th, 2017
PROVINCE OF ONTARIO

RECEIVED
TOWN OF MILTON
MAR 29, 2017
17-5337
BUILDING DIVISION

KOTT

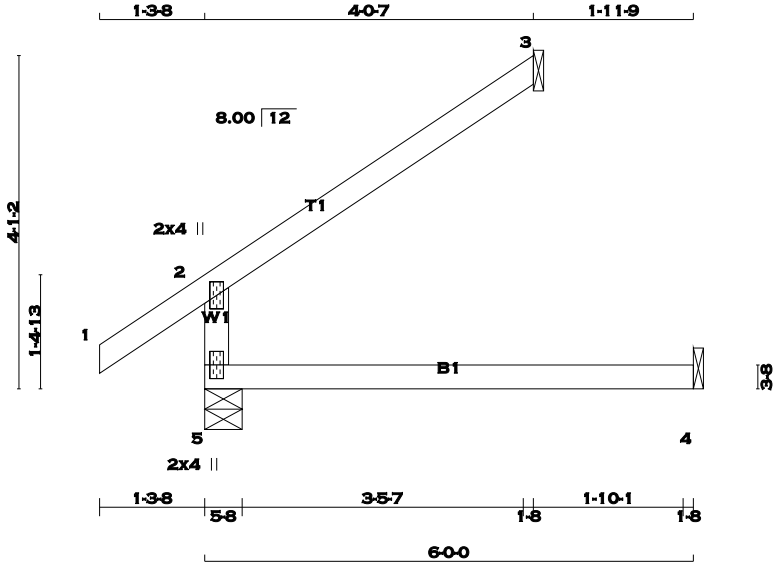

TOTAL WEIGHT = 2 X 15 = 31 lb [M]

LUMBER

N. L. G. A. RULES

CHORDS	SIZE		LUMBER	DESCR.
5 - 2	2x4	DRY	No.2	SPF
1 - 3	2x4	DRY	No.2	SPF
5 - 4	2x4	DRY	No.2	SPF

DRY: SEASONED LUMBER.

PLATES (table is in inches)

JT	TYPE	PLATES	W	LEN	Y	X
2	TMV+p	MT20	2.0	4.0		
5	BMV1+p	MT20	2.0	4.0		

A SIZE FOR SIZE SUBSTITUTION OF MITEK MII20 WITH TEE-LOK TL20 PLATES IS ALLOWED.

DIMENSIONS, SUPPORTS AND LOADINGS SPECIFIED BY FABRICATOR TO BE VERIFIED BY BUILDING DESIGNER

BEARINGS

JT	FACTORED GROSS REACTION VERT	HORZ	MAXIMUM FACTORED GROSS REACTION DOWN	HORZ	UPLIFT	INPUT BRG IN-SX	REQRD BRG IN-SX
5	362	0	362	0	0	5-8	5-8
3	117	0	117	0	0	1-8	1-8
4	44	0	49	0	0	1-8	1-8

SEE MITEK STANDARD DETAIL B37579H FOR CONNECTION TO JOINT(S) 3 , 4

UNFACTORED REACTIONS

JT	1ST LCASE COMBINED	MAX./MIN. COMPONENT REACTIONS SNOW	LIVE	PERM.LIVE	WIND	DEAD	SOIL
5	254	181 / 0	0 / 0	0 / 0	0 / 0	72 / 0	0 / 0
3	80	71 / 0	0 / 0	0 / 0	0 / 0	9 / 0	0 / 0
4	35	0 / 0	0 / 0	0 / 0	0 / 0	35 / 0	0 / 0

BEARING MATERIAL TO BE SPF NO.2 OR BETTER AT JOINT(S) 5, 3

BRACING

TOP CHORD TO BE SHEATHED OR MAX. PURLIN SPACING = 6.25 FT.
MAX. UNBRACED BOTTOM CHORD LENGTH = 10.00 FT. OR RIGID CEILING DIRECTLY APPLIED.

ALL PITCH BREAKS AND PERIMETER CORNER JOINTS MUST BE LATERALLY RESTRAINED.

LOADING

TOTAL LOAD CASES: (4)

CHORDS MEMB. FR-TO	MAX. FACTORED FORCE (LBS)	FACTORED VERT. LOAD (PLF) FROM	TO	LC1 MAX CSI (LC)	MAX. UNBRAC LENGTH
5- 2	-301 / 0	0.0	0.0	0.12 (4)	7.81
1- 2	0 / 29	-77.4	-77.4	0.10 (1)	10.00
2- 3	-22 / 0	-77.4	-77.4	0.21 (1)	6.25
5- 4	0 / 0	-17.5	-17.5	0.13 (4)	10.00

WEBS MEMB. FR-TO	MAX. FACTORED FORCE (LBS)	MAX CSI (LC)

DESIGN CRITERIA

SPECIFIED LOADS:

TOP CH.	LL	=	23.3	PSF
	DL	=	3.0	PSF
BOT CH.	LL	=	0.0	PSF
	DL	=	7.0	PSF
TOTAL LOAD		=	33.3	PSF

SPACING = 24.0 IN. C/C

THIS TRUSS IS DESIGNED FOR RESIDENTIAL OR SMALL BUILDING REQUIREMENTS OF PART 9, NBCC 2010

THIS DESIGN COMPLIES WITH:
- PART 9 OF OBC 2012 , BCBC 2012 , ABC 2014
- CSA 086-09
- TPIC 2011

DESIGN ASSUMPTIONS
-OVERHANG NOT TO BE ALTERED OR CUT OFF.

(55 % OF 27.2 P.S.F. G.S.L. PLUS 8.4 P.S.F. RAIN LOAD) EQUALS 23.3 P.S.F. SPECIFIED ROOF LIVE LOAD

ALLOWABLE DEFL.(TL)= L/360 (0.20")
CALCULATED VERT. DEFL.(TL) = L/ 999 (0.03")

CSI: TC=0.21 (2-3:1) , BC=0.13 (4-5:4) , WB=0.00 (n/a:0) , SSI=0.13 (2-3:1)

DOL LUMBER=1.00 NAIL=1.00 LS BEND=1.10 COMP=1.10 SHEAR=1.10 TENS= 1.10

COMPANION LIVE LOAD FACTOR = 0.50

TRUSS PLATE MANUFACTURER IS NOT RESPONSIBLE FOR QUALITY CONTROL IN THE TRUSS MANUFACTURING PLANT .

NAIL VALUES

PLATE	GRIP(DRY) (PSI) MAX	MIN	SHEAR (PLI) MAX	MIN	SECTION (PLI) MAX	MIN
MT20	618	354	1667	822	2284	1656

PLATE PLACEMENT TOL. = 0.250 inches

PLATE ROTATION TOL. = 5.0 Deg.

JSI GRIP= 0.19 (2) (INPUT = 0.90)
JSI METAL= 0.07 (2) (INPUT = 1.00)

LICENSED PROFESSIONAL ENGINEER
P. M. TREVISAN
100136551
March 16th, 2017
PROVINCE OF ONTARIO

RECEIVED
TOWN OF MILTON
MAR 29, 2017
17-5337
BUILDING DIVISION

KOTT

JOB NAME	TRUSS NAME	QUANTITY	PLY	JOB DESC.	DRWG NO.
PT0317-097	J04	1	1	TRUSS DESC. LECCO RIDGE-BLOCK 344	

KOTT , Stouffville, ON, CGC

Version 8.100 S Feb 9 2017 MiTek Industries, Inc. Thu Mar 16 11:57:44 2017 Page 1
ID:EvTixTQDI5yR1QLotZTBr_yE?HJ-k8GKyDT8?gwtRaZK5lgnmd8eBtCv1NUlXyv8kMzaNk5

SCALE = 1:19.4

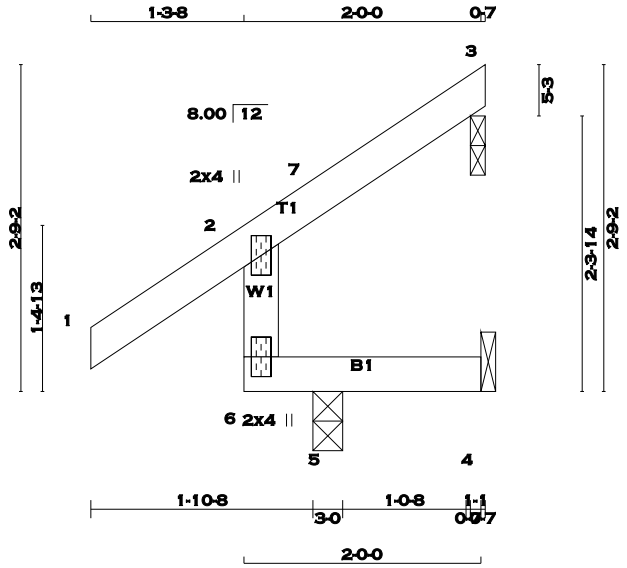

TOTAL WEIGHT = 8 lb
[M]

LUMBER
N. L. G. A. RULES

CHORDS	SIZE		LUMBER	DESCR.
6 - 2	2x4	DRY	No.2	SPF
1 - 3	2x4	DRY	No.2	SPF
6 - 4	2x4	DRY	No.2	SPF

DRY: SEASONED LUMBER.

PLATES (table is in inches)

JT	TYPE	PLATES	W	LEN	Y	X
2	TMV+p	MT20	2.0	4.0		
6	BMV+p	MT20	2.0	4.0		

A SIZE FOR SIZE SUBSTITUTION OF MITEK MII20 WITH TEE-LOK TL20 PLATES IS ALLOWED.

DIMENSIONS, SUPPORTS AND LOADINGS SPECIFIED BY FABRICATOR TO BE VERIFIED BY BUILDING DESIGNER

BEARINGS

JT	FACTORED GROSS REACTION VERT	HORZ	MAXIMUM FACTORED GROSS REACTION DOWN	HORZ	UPLIFT	INPUT BRG IN-SX	REQRD BRG IN-SX
3	71	0	71	0	0	1-8	1-8
4	-60	0	2	0	-60	1-8	1-8
5	288	0	288	0	0	3-0	3-0

BEVELED PLATE OR SHIM REQUIRED TO PROVIDE FULL BEARING SURFACE WITH TRUSS CHORD AT JT(S): 3

SEE MITEK STANDARD DETAIL B37579H FOR CONNECTION TO JOINT(S) 4

PROVIDE ANCHORAGE AT BEARING JOINT 4 FOR 150 LBS FACTORED UPLIFT

UNFACTORED REACTIONS

JT	1ST LCASE COMBINED	MAX./MIN. COMPONENT REACTIONS SNOW	LIVE	PERM.LIVE	WIND	DEAD	SOIL
3	48	43 / 0	0 / 0	0 / 0	0 / 0	6 / 0	0 / 0
4	-40	0 / -41	0 / 0	0 / 0	0 / 0	1 / 0	0 / 0
5	199	157 / 0	0 / 0	0 / 0	0 / 0	41 / 0	0 / 0

BEARING MATERIAL TO BE SPF NO.2 OR BETTER AT JOINT(S) 3, 4, 5

BRACING
TOP CHORD TO BE SHEATHED OR MAX. PURLIN SPACING = 10.00 FT.
MAX. UNBRACED BOTTOM CHORD LENGTH = 10.00 FT. OR RIGID CEILING DIRECTLY APPLIED.

ALL PITCH BREAKS AND PERIMETER CORNER JOINTS MUST BE LATERALLY RESTRAINED.

LOADING
TOTAL LOAD CASES: (5)

CHORDS

MEMB. FR-TO	MAX. FACTORED FORCE (LBS)	FACTORED VERT. LOAD (PLF) FROM	TO	LC1 MAX CSI (LC)	MAX. UNBRAC LENGTH
6- 2	-193 / 0	0.0	0.0	0.07 (1)	7.81
1- 2	0 / 29	-77.4	-77.4	0.10 (1)	10.00
2- 7	-8 / 0	-77.4	-77.4	0.04 (1)	10.00
7- 3	-8 / 0	-77.4	-77.4	0.04 (1)	10.00
6- 5	0 / 0	-17.5	-17.5	0.13 (1)	10.00
5- 4	0 / 0	-17.5	-17.5	0.13 (1)	10.00

WEBS

MEMB. FR-TO	MAX. FACTORED FORCE (LBS)	MAX CSI (LC)

CANTILEVER ANALYSIS HAS BEEN CONSIDERED IN THIS DESIGN

DESIGN CRITERIA

SPECIFIED LOADS:

TOP CH.	LL	=	23.3	PSF
	DL	=	3.0	PSF
BOT CH.	LL	=	0.0	PSF
	DL	=	7.0	PSF
TOTAL LOAD		=	33.3	PSF

SPACING = 24.0 IN. C/C

THIS TRUSS IS DESIGNED FOR RESIDENTIAL OR SMALL BUILDING REQUIREMENTS OF PART 9, NBCC 2010

THIS DESIGN COMPLIES WITH:
- PART 9 OF OBC 2012 , BCBC 2012 , ABC 2014
- CSA 086-09
- TPIC 2011

DESIGN ASSUMPTIONS
-OVERHANG NOT TO BE ALTERED OR CUT OFF.

(55 % OF 27.2 P.S.F. G.S.L. PLUS 8.4 P.S.F. RAIN LOAD) EQUALS 23.3 P.S.F. SPECIFIED ROOF LIVE LOAD

ALLOWABLE DEFL.(LL)= L/360 (0.19")
CALCULATED VERT. DEFL.(LL) = L/ 999 (0.00")
ALLOWABLE DEFL.(TL)= L/360 (0.19")
CALCULATED VERT. DEFL.(TL) = L/ 999 (0.00")

CANTILEVER DEFLECTION:
ALLOWABLE DEFL.(LL)= L/120 (0.19")
CALCULATED VERT. DEFL.(LL) = L/ 999 (0.01")
ALLOWABLE DEFL.(TL)= L/120 (0.19")
CALCULATED VERT. DEFL.(TL) = L/ 999 (0.01")

CSI: TC=0.10 (1-2:1) , BC=0.13 (4-5:1) , WB=0.00 (n/a:0) , SSI=0.16 (5-6:1)

DOL LUMBER=1.00 NAIL=1.00 LS BEND=1.10 COMP=1.10 SHEAR=1.10 TENS= 1.10

COMPANION LIVE LOAD FACTOR = 0.50

AUTOSOLVE HEELS OFF

TRUSS PLATE MANUFACTURER IS NOT RESPONSIBLE FOR QUALITY CONTROL IN THE TRUSS MANUFACTURING PLANT .

NAIL VALUES

PLATE	GRIP(DRY) (PSI) MAX	MIN	SHEAR (PLI) MAX	MIN	SECTION (PLI) MAX	MIN
MT20	618	354	1667	822	2284	1656

PLATE PLACEMENT TOL. = 0.250 inches

PLATE ROTATION TOL. = 0.5 Deg.

JSI GRIP= 0.12 (2) (INPUT = 0.90)
JSI METAL= 0.05 (2) (INPUT = 1.00)

LICENSED PROFESSIONAL ENGINEER
P. M. TREVISAN
100136551
March 16th, 2017
PROVINCE OF ONTARIO

RECEIVED
TOWN OF MILTON
MAR 29, 2017
17-5337
BUILDING DIVISION

KOTT

JOB NAME	TRUSS NAME	QUANTITY	PLY	JOB DESC.	DRWG NO.
PT0317-097	J05	1	1	TRUSS DESC. LECCO RIDGE-BLOCK 344	

KOTT , Stouffville, ON, CGC

Version 8.100 S Feb 9 2017 MiTek Industries, Inc. Thu Mar 16 11:57:45 2017 Page 1
ID:EvTixTQDI5yR1QLotZTBr_yE?HJ-CKqi9ZUmm_2k3k8WfTB0Jrgo6HY8mqkvmcehGozaNk4

SCALE = 1:27.4

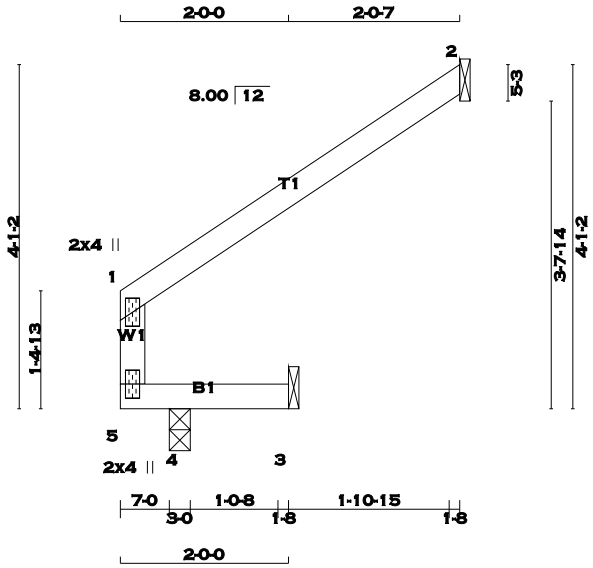

TOTAL WEIGHT = 9 lb
[M]

LUMBER
N. L. G. A. RULES

CHORDS	SIZE		LUMBER	DESCR.
5 - 1	2x4	DRY	No.2	SPF
1 - 2	2x4	DRY	No.2	SPF
5 - 3	2x4	DRY	No.2	SPF

DRY: SEASONED LUMBER.

PLATES (table is in inches)

JT	TYPE	PLATES	W	LEN	Y	X
1	TMV+p	MT20	2.0	4.0		
5	BMV+p	MT20	2.0	4.0		

A SIZE FOR SIZE SUBSTITUTION OF MITEK MII20 WITH TEE-LOK TL20 PLATES IS ALLOWED.

DIMENSIONS, SUPPORTS AND LOADINGS SPECIFIED BY FABRICATOR TO BE VERIFIED BY BUILDING DESIGNER

BEARINGS

JT	FACTORED GROSS REACTION VERT	HORZ	MAXIMUM FACTORED GROSS REACTION DOWN	HORZ	UPLIFT	INPUT BRG IN-SX	REQRD BRG IN-SX
2	133	0	133	0	0	1-8	1-8
3	-19	0	6	0	-19	1-8	1-8
4	233	0	233	0	0	3-0	3-0

SEE MITEK STANDARD DETAIL B37579H FOR CONNECTION TO JOINT(S) 2 , 3

PROVIDE ANCHORAGE AT BEARING JOINT 3 FOR 150 LBS FACTORED UPLIFT

UNFACTORED REACTIONS

JT	1ST LCASE COMBINED	MAX./MIN. COMPONENT REACTIONS SNOW	LIVE	PERM.LIVE	WIND	DEAD	SOIL
2	91	80 / 0	0 / 0	0 / 0	0 / 0	10 / 0	0 / 0
3	-12	0 / -16	0 / 0	0 / 0	0 / 0	4 / 0	0 / 0
4	162	124 / 0	0 / 0	0 / 0	0 / 0	38 / 0	0 / 0

BEARING MATERIAL TO BE SPF NO.2 OR BETTER AT JOINT(S) 4

BRACING
TOP CHORD TO BE SHEATHED OR MAX. PURLIN SPACING = 6.25 FT.
MAX. UNBRACED BOTTOM CHORD LENGTH = 10.00 FT. OR RIGID CEILING DIRECTLY APPLIED.

ALL PITCH BREAKS AND PERIMETER CORNER JOINTS MUST BE LATERALLY RESTRAINED.

LOADING
TOTAL LOAD CASES: (4)

CHORDS

MEMB. FR-TO	MAX. FACTORED FORCE (LBS)	FACTORED VERT. LOAD (PLF) FROM	TO	LC1 MAX CSI (LC)	MAX. UNBRAC LENGTH
5- 1	-179 / 0	0.0	0.0	0.13 (1)	7.81
1- 2	-13 / 0	-77.4	-77.4	0.16 (1)	6.25
5- 4	0 / 0	-17.5	-17.5	0.13 (1)	10.00
4- 3	0 / 0	-17.5	-17.5	0.05 (1)	10.00

WEBS

MEMB. FR-TO	MAX. FACTORED FORCE (LBS)	MAX CSI (LC)

DESIGN CRITERIA

SPECIFIED LOADS:

TOP CH.	LL	=	23.3	PSF
	DL	=	3.0	PSF
BOT CH.	LL	=	0.0	PSF
	DL	=	7.0	PSF
TOTAL LOAD		=	33.3	PSF

SPACING = 24.0 IN. C/C

THIS TRUSS IS DESIGNED FOR RESIDENTIAL OR SMALL BUILDING REQUIREMENTS OF PART 9, NBCC 2010

THIS DESIGN COMPLIES WITH:
- PART 9 OF OBC 2012 , BCBC 2012 , ABC 2014
- CSA 086-09
- TPIC 2011

(55 % OF 27.2 P.S.F. G.S.L. PLUS 8.4 P.S.F. RAIN LOAD) EQUALS 23.3 P.S.F. SPECIFIED ROOF LIVE LOAD

ALLOWABLE DEFL.(LL)= L/360 (0.19")
CALCULATED VERT. DEFL.(LL) = L/ 999 (0.00")
ALLOWABLE DEFL.(TL)= L/360 (0.19")
CALCULATED VERT. DEFL.(TL) = L/ 999 (0.00")

CANTILEVER DEFLECTION:
ALLOWABLE DEFL.(LL)= L/120 (0.19")
CALCULATED VERT. DEFL.(LL) = L/ 999 (0.00")
ALLOWABLE DEFL.(TL)= L/120 (0.19")
CALCULATED VERT. DEFL.(TL) = L/ 999 (0.00")

CSI: TC=0.16 (1-2:1) , BC=0.13 (4-5:1) , WB=0.00 (n/a:0) , SSI=0.15 (4-5:1)

DOL LUMBER=1.00 NAIL=1.00 LS BEND=1.10 COMP=1.10 SHEAR=1.10 TENS= 1.10

COMPANION LIVE LOAD FACTOR = 0.50

AUTOSOLVE HEELS OFF

TRUSS PLATE MANUFACTURER IS NOT RESPONSIBLE FOR QUALITY CONTROL IN THE TRUSS MANUFACTURING PLANT .

NAIL VALUES

PLATE	GRIP(DRY) (PSI) MAX	MIN	SHEAR (PLI) MAX	MIN	SECTION (PLI) MAX	MIN
MT20	618	354	1667	822	2284	1656

PLATE PLACEMENT TOL. = 0.250 inches

PLATE ROTATION TOL. = 5.0 Deg.

JSI GRIP= 0.12 (1) (INPUT = 0.90)
JSI METAL= 0.04 (1) (INPUT = 1.00)

LICENSED PROFESSIONAL ENGINEER
P. M. TREVISAN
100136551
March 16th, 2017
PROVINCE OF ONTARIO

RECEIVED
TOWN OF MILTON
MAR 29, 2017
17-5337
BUILDING DIVISION

KOTT

JOB NAME	TRUSS NAME	QUANTITY	PLY	JOB DESC.	DRWG NO.
PT0317-097	**J06**	**4**	**1**	TRUSS DESC. LECCO RIDGE-BLOCK 344	

KOTT , Stouffville, ON, CGC

Version 8.100 S Feb 9 2017 MiTek Industries, Inc. Thu Mar 16 11:57:45 2017 Page 1
ID:EvTixTQDI5yR1QLotZTBr_yE?HJ-CKqi9ZUmm_2k3k8WfTB0JrglsHX4mqkvmcehGozaNk4

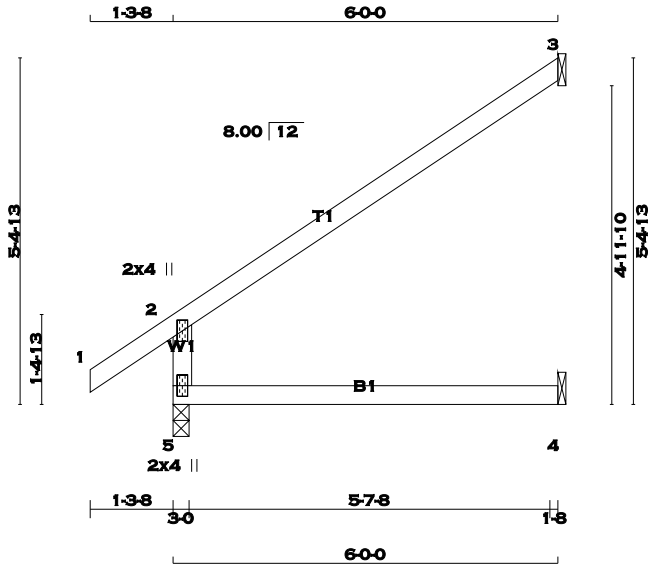

SCALE = 1:35.9

TOTAL WEIGHT = 4 X 18 = 73 lb

LUMBER
N. L. G. A. RULES

CHORDS	SIZE		LUMBER	DESCR.
5 - 2	2x4	DRY	No.2	SPF
1 - 3	2x4	DRY	No.2	SPF
5 - 4	2x4	DRY	No.2	SPF

DRY: SEASONED LUMBER.

PLATES (table is in inches)

JT	TYPE	PLATES	W	LEN	Y	X
2	TMV+p	MT20	2.0	4.0		
5	BMV1+p	MT20	2.0	4.0		

A SIZE FOR SIZE SUBSTITUTION OF MITEK MII20 WITH TEE-LOK TL20 PLATES IS ALLOWED.

DIMENSIONS, SUPPORTS AND LOADINGS SPECIFIED BY FABRICATOR TO BE VERIFIED BY BUILDING DESIGNER

BEARINGS

JT	FACTORED GROSS REACTION VERT	HORZ	MAXIMUM FACTORED GROSS REACTION DOWN	HORZ	UPLIFT	INPUT BRG IN-SX	REQRD BRG IN-SX
5	457	0	457	0	0	3-0	3-0
3	174	0	174	0	0	1-8	1-8
4	44	0	49	0	0	1-8	1-8

SEE MITEK STANDARD DETAIL B37579H FOR CONNECTION TO JOINT(S) 3 , 4

UNFACTORED REACTIONS

JT	1ST LCASE COMBINED	MAX./MIN. COMPONENT REACTIONS SNOW	LIVE	PERM.LIVE	WIND	DEAD	SOIL
5	318	239 / 0	0 / 0	0 / 0	0 / 0	80 / 0	0 / 0
3	118	105 / 0	0 / 0	0 / 0	0 / 0	14 / 0	0 / 0
4	35	0 / 0	0 / 0	0 / 0	0 / 0	35 / 0	0 / 0

BEARING MATERIAL TO BE SPF NO.2 OR BETTER AT JOINT(S) 5

BRACING
TOP CHORD TO BE SHEATHED OR MAX. PURLIN SPACING = 6.25 FT.
MAX. UNBRACED BOTTOM CHORD LENGTH = 10.00 FT. OR RIGID CEILING DIRECTLY APPLIED.

ALL PITCH BREAKS AND PERIMETER CORNER JOINTS MUST BE LATERALLY RESTRAINED.

LOADING
TOTAL LOAD CASES: (4)

CHORDS MEMB. FR-TO	MAX. FACTORED FORCE (LBS)	FACTORED VERT. LOAD (PLF) FROM	TO	LC1 MAX CSI (LC)	MAX. UNBRAC LENGTH	WEBS MEMB. FR-TO	MAX. FACTORED FORCE (LBS)	MAX CSI (LC)
5- 2	-396 / 0	0.0	0.0	0.10 (4)	7.81			
1- 2	0 / 29	-77.4	-77.4	0.10 (1)	10.00			
2- 3	-32 / 0	-77.4	-77.4	0.36 (1)	6.25			
5- 4	0 / 0	-17.5	-17.5	0.13 (4)	10.00			

DESIGN CRITERIA

SPECIFIED LOADS:

TOP CH.	LL	=	23.3	PSF
	DL	=	3.0	PSF
BOT CH.	LL	=	0.0	PSF
	DL	=	7.0	PSF
TOTAL LOAD		=	33.3	PSF

SPACING = 24.0 IN. C/C

THIS TRUSS IS DESIGNED FOR RESIDENTIAL OR SMALL BUILDING REQUIREMENTS OF PART 9, NBCC 2010

THIS DESIGN COMPLIES WITH:
- PART 9 OF OBC 2012 , BCBC 2012 , ABC 2014
- CSA 086-09
- TPIC 2011

DESIGN ASSUMPTIONS
-OVERHANG NOT TO BE ALTERED OR CUT OFF.

(55 % OF 27.2 P.S.F. G.S.L. PLUS 8.4 P.S.F. RAIN LOAD) EQUALS 23.3 P.S.F. SPECIFIED ROOF LIVE LOAD

ALLOWABLE DEFL.(LL)= L/360 (0.20")
CALCULATED VERT. DEFL.(LL) = L/ 999 (0.00")
ALLOWABLE DEFL.(TL)= L/360 (0.20")
CALCULATED VERT. DEFL.(TL) = L/ 999 (0.03")

CSI: TC=0.36 (2-3:1) , BC=0.13 (4-5:4) , WB=0.00 (n/a:0) , SSI=0.19 (2-3:1)

DOL LUMBER=1.00 NAIL=1.00 LS BEND=1.10 COMP=1.10 SHEAR=1.10 TENS= 1.10

COMPANION LIVE LOAD FACTOR = 0.50

TRUSS PLATE MANUFACTURER IS NOT RESPONSIBLE FOR QUALITY CONTROL IN THE TRUSS MANUFACTURING PLANT .

NAIL VALUES

PLATE	GRIP(DRY) (PSI) MAX	MIN	SHEAR (PLI) MAX	MIN	SECTION (PLI) MAX	MIN
MT20	618	354	1667	822	2284	1656

PLATE PLACEMENT TOL. = 0.250 inches

PLATE ROTATION TOL. = 0.5 Deg.

JSI GRIP= 0.25 (2) (INPUT = 0.90)
JSI METAL= 0.10 (2) (INPUT = 1.00)

LICENSED PROFESSIONAL ENGINEER
P.M. TREVISAN
100136551
March 16th, 2017
PROVINCE OF ONTARIO

RECEIVED
TOWN OF MILTON
MAR 29, 2017
17-5337
BUILDING DIVISION

KOTT

JOB NAME	TRUSS NAME	QUANTITY	PLY	JOB DESC.	DRWG NO.
PT0317-097	**J07**	**8**	**1**	TRUSS DESC. LECCO RIDGE-BLOCK 344	

KOTT , Stouffville, ON, CGC

Version 8.100 S Feb 9 2017 MiTek Industries, Inc. Thu Mar 16 11:57:45 2017 Page 1
ID:EvTixTQDI5yR1QLotZTBr_yE?HJ-CKqi9ZUmm_2k3k8WfTB0JrgpxHZrmqkvmcehGozaNk4

SCALE = 1:18.6

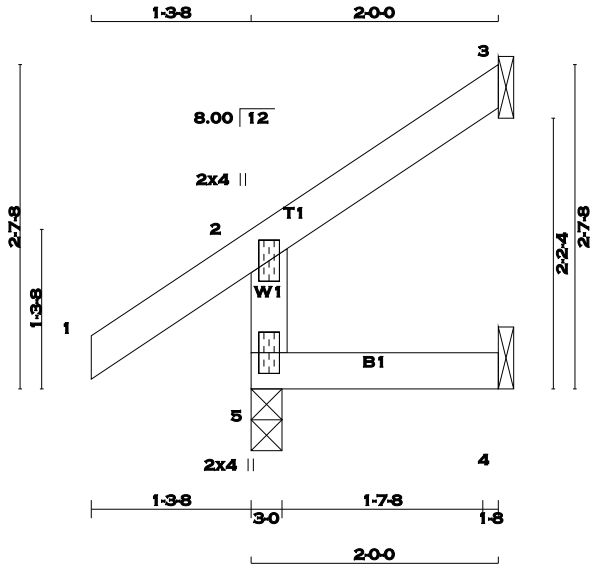

TOTAL WEIGHT = 8 X 8 = 64 lb [M]

LUMBER
N. L. G. A. RULES

CHORDS	SIZE		LUMBER	DESCR.
5 - 2	2x4	DRY	No.2	SPF
1 - 3	2x4	DRY	No.2	SPF
5 - 4	2x4	DRY	No.2	SPF

DRY: SEASONED LUMBER.

PLATES (table is in inches)

JT	TYPE	PLATES	W	LEN	Y	X
2	TMV+p	MT20	2.0	4.0		
5	BMV1+p	MT20	2.0	4.0		

A SIZE FOR SIZE SUBSTITUTION OF MITEK MII20 WITH TEE-LOK TL20 PLATES IS ALLOWED.

DIMENSIONS, SUPPORTS AND LOADINGS SPECIFIED BY FABRICATOR TO BE VERIFIED BY BUILDING DESIGNER

BEARINGS

JT	FACTORED GROSS REACTION VERT	HORZ	MAXIMUM GROSS REACTION DOWN	HORZ	FACTORED UPLIFT	INPUT BRG IN-SX	REQRD BRG IN-SX
5	222	0	222	0	0	3-0	3-0
3	58	0	58	0	0	1-8	1-8
4	16	0	18	0	0	1-8	1-8

SEE MITEK STANDARD DETAIL B37579H FOR CONNECTION TO JOINT(S) 3 , 4

UNFACTORED REACTIONS

JT	1ST LCASE COMBINED	MAX./MIN. COMPONENT REACTIONS SNOW	LIVE	PERM.LIVE	WIND	DEAD	SOIL
5	153	122 / 0	0 / 0	0 / 0	0 / 0	31 / 0	0 / 0
3	40	35 / 0	0 / 0	0 / 0	0 / 0	5 / 0	0 / 0
4	13	0 / 0	0 / 0	0 / 0	0 / 0	13 / 0	0 / 0

BEARING MATERIAL TO BE SPF NO.2 OR BETTER AT JOINT(S) 5

BRACING
TOP CHORD TO BE SHEATHED OR MAX. PURLIN SPACING = 6.25 FT.
MAX. UNBRACED BOTTOM CHORD LENGTH = 10.00 FT. OR RIGID CEILING DIRECTLY APPLIED.

ALL PITCH BREAKS AND PERIMETER CORNER JOINTS MUST BE LATERALLY RESTRAINED.

LOADING
TOTAL LOAD CASES: (5)

CHORDS MEMB. FR-TO	MAX. FACTORED FORCE (LBS)	FACTORED VERT. LOAD (PLF) FROM	TO	LC1 MAX CSI (LC)	MAX. UNBRAC LENGTH
5- 2	-202 / 0	0.0	0.0	0.01 (4)	7.81
1- 2	0 / 29	-77.4	-77.4	0.10 (1)	10.00
2- 3	-10 / 0	-77.4	-77.4	0.05 (1)	6.25
5- 4	0 / 0	-17.5	-17.5	0.02 (4)	10.00

WEBS MEMB. FR-TO	MAX. FACTORED FORCE (LBS)	MAX CSI (LC)

CANTILEVER ANALYSIS HAS BEEN CONSIDERED IN THIS DESIGN

DESIGN CRITERIA

SPECIFIED LOADS:

TOP CH.	LL	=	23.3	PSF
	DL	=	3.0	PSF
BOT CH.	LL	=	0.0	PSF
	DL	=	7.0	PSF
TOTAL LOAD		=	33.3	PSF

SPACING = 24.0 IN. C/C

THIS TRUSS IS DESIGNED FOR RESIDENTIAL OR SMALL BUILDING REQUIREMENTS OF PART 9, NBCC 2010

THIS DESIGN COMPLIES WITH:
- PART 9 OF OBC 2012 , BCBC 2012 , ABC 2014
- CSA 086-09
- TPIC 2011

DESIGN ASSUMPTIONS
-OVERHANG NOT TO BE ALTERED OR CUT OFF.

(55 % OF 27.2 P.S.F. G.S.L. PLUS 8.4 P.S.F. RAIN LOAD) EQUALS 23.3 P.S.F. SPECIFIED ROOF LIVE LOAD

ALLOWABLE DEFL.(LL)= L/360 (0.19")
CALCULATED VERT. DEFL.(LL) = L/ 999 (0.00")
ALLOWABLE DEFL.(TL)= L/360 (0.19")
CALCULATED VERT. DEFL.(TL) = L/ 999 (0.00")

CSI: TC=0.10 (1-2:1) , BC=0.02 (4-5:4) , WB=0.00 (n/a:0) , SSI=0.07 (1-2:1)

DOL LUMBER=1.00 NAIL=1.00 LS BEND=1.10 COMP=1.10 SHEAR=1.10 TENS= 1.10

COMPANION LIVE LOAD FACTOR = 0.50

TRUSS PLATE MANUFACTURER IS NOT RESPONSIBLE FOR QUALITY CONTROL IN THE TRUSS MANUFACTURING PLANT .

NAIL VALUES

PLATE	GRIP(DRY) (PSI) MAX	MIN	SHEAR (PLI) MAX	MIN	SECTION (PLI) MAX	MIN
MT20	618	354	1667	822	2284	1656

PLATE PLACEMENT TOL. = 0.250 inches

PLATE ROTATION TOL. = 5.0 Deg.

JSI GRIP= 0.13 (2) (INPUT = 0.90)
JSI METAL= 0.05 (2) (INPUT = 1.00)

LICENSED PROFESSIONAL ENGINEER
P. M. TREVISAN
100136551
March 16th, 2017
PROVINCE OF ONTARIO

RECEIVED
TOWN OF MILTON
MAR 29, 2017
17-5337
BUILDING DIVISION

KOTT

JOB NAME	TRUSS NAME	QUANTITY	PLY	JOB DESC.	DRWG NO.
PT0317-097	J09	1	1	TRUSS DESC. LECCO RIDGE-BLOCK 344	

KOTT , Stouffville, ON, CGC

Version 8.100 S Feb 9 2017 MiTek Industries, Inc. Thu Mar 16 11:57:46 2017 Page 1
ID:EvTixTQDI5yR1QLotZTBr_yE?HJ-gWO4NvUPXIAahuiiDAiFr2DwchtJVHz2?GOFoFzaNk3

SCALE = 1:28.8

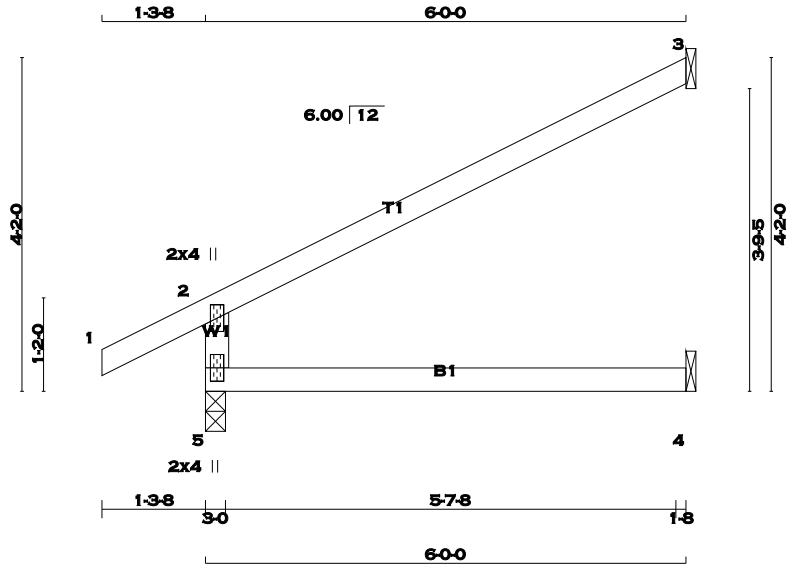

TOTAL WEIGHT = 17 lb

LUMBER
N. L. G. A. RULES

CHORDS	SIZE		LUMBER	DESCR.
5 - 2	2x4	DRY	No.2	SPF
1 - 3	2x4	DRY	No.2	SPF
5 - 4	2x4	DRY	No.2	SPF

DRY: SEASONED LUMBER.

PLATES (table is in inches)

JT	TYPE	PLATES	W	LEN	Y	X
2	TMV+p	MT20	2.0	4.0		
5	BMV1+p	MT20	2.0	4.0		

A SIZE FOR SIZE SUBSTITUTION OF MITEK MII20 WITH TEE-LOK TL20 PLATES IS ALLOWED.

DIMENSIONS, SUPPORTS AND LOADINGS SPECIFIED BY FABRICATOR TO BE VERIFIED BY BUILDING DESIGNER

BEARINGS

JT	FACTORED GROSS REACTION VERT	HORZ	MAXIMUM FACTORED GROSS REACTION DOWN	HORZ	UPLIFT	INPUT BRG IN-SX	REQRD BRG IN-SX
5	457	0	457	0	0	3-0	3-0
3	174	0	174	0	0	1-8	1-8
4	43	0	49	0	0	1-8	1-8

SEE MITEK STANDARD DETAIL B37579H FOR CONNECTION TO JOINT(S) 3 , 4

UNFACTORED REACTIONS

JT	1ST LCASE COMBINED	MAX./MIN. COMPONENT REACTIONS SNOW	LIVE	PERM.LIVE	WIND	DEAD	SOIL
5	318	238 / 0	0 / 0	0 / 0	0 / 0	80 / 0	0 / 0
3	118	105 / 0	0 / 0	0 / 0	0 / 0	14 / 0	0 / 0
4	35	0 / 0	0 / 0	0 / 0	0 / 0	35 / 0	0 / 0

BEARING MATERIAL TO BE SPF NO.2 OR BETTER AT JOINT(S) 5

BRACING
TOP CHORD TO BE SHEATHED OR MAX. PURLIN SPACING = 6.25 FT.
MAX. UNBRACED BOTTOM CHORD LENGTH = 10.00 FT. OR RIGID CEILING DIRECTLY APPLIED.

ALL PITCH BREAKS AND PERIMETER CORNER JOINTS MUST BE LATERALLY RESTRAINED.

LOADING
TOTAL LOAD CASES: (4)

CHORDS MEMB. FR-TO	MAX. FACTORED FORCE (LBS)	FACTORED VERT. LOAD (PLF) FROM	TO	LC1 MAX CSI (LC)	MAX. UNBRAC LENGTH	WEBS MEMB. FR-TO	MAX. FACTORED FORCE (LBS)	MAX CSI (LC)
5- 2	-395 / 0	0.0	0.0	0.11 (4)	7.81			
1- 2	0 / 23	-77.4	-77.4	0.10 (1)	10.00			
2- 3	-26 / 0	-77.4	-77.4	0.36 (1)	6.25			
5- 4	0 / 0	-17.5	-17.5	0.13 (4)	10.00			

DESIGN CRITERIA

SPECIFIED LOADS:

TOP CH.	LL	=	23.3	PSF
	DL	=	3.0	PSF
BOT CH.	LL	=	0.0	PSF
	DL	=	7.0	PSF
TOTAL LOAD		=	33.3	PSF

SPACING = 24.0 IN. C/C

THIS TRUSS IS DESIGNED FOR RESIDENTIAL OR SMALL BUILDING REQUIREMENTS OF PART 9, NBCC 2010

THIS DESIGN COMPLIES WITH:
- PART 9 OF OBC 2012 , BCBC 2012 , ABC 2014
- CSA 086-09
- TPIC 2011

DESIGN ASSUMPTIONS
-OVERHANG NOT TO BE ALTERED OR CUT OFF.

(55 % OF 27.2 P.S.F. G.S.L. PLUS 8.4 P.S.F. RAIN LOAD) EQUALS 23.3 P.S.F. SPECIFIED ROOF LIVE LOAD

ALLOWABLE DEFL.(LL)= L/360 (0.20")
CALCULATED VERT. DEFL.(LL) = L/ 999 (0.00")
ALLOWABLE DEFL.(TL)= L/360 (0.20")
CALCULATED VERT. DEFL.(TL) = L/ 999 (0.03")

CSI: TC=0.36 (2-3:1) , BC=0.13 (4-5:4) , WB=0.00 (n/a:0) , SSI=0.20 (2-3:1)

DOL LUMBER=1.00 NAIL=1.00 LS BEND=1.10 COMP=1.10 SHEAR=1.10 TENS= 1.10

COMPANION LIVE LOAD FACTOR = 0.50

TRUSS PLATE MANUFACTURER IS NOT RESPONSIBLE FOR QUALITY CONTROL IN THE TRUSS MANUFACTURING PLANT .

NAIL VALUES

PLATE	GRIP(DRY) (PSI) MAX	MIN	SHEAR (PLI) MAX	MIN	SECTION (PLI) MAX	MIN
MT20	618	354	1667	822	2284	1656

PLATE PLACEMENT TOL. = 0.250 inches

PLATE ROTATION TOL. = 0.5 Deg.

JSI GRIP= 0.23 (2) (INPUT = 0.90)
JSI METAL= 0.09 (2) (INPUT = 1.00)

LICENSED PROFESSIONAL ENGINEER
P. M. TREVISAN
100136551
March 16th, 2017
PROVINCE OF ONTARIO

RECEIVED
TOWN OF MILTON
MAR 29, 2017
17-5337
BUILDING DIVISION

KOTT

JOB NAME	TRUSS NAME	QUANTITY	PLY	JOB DESC.	DRWG NO.
PT0317-097	J10	1	1	TRUSS DESC. LECCO RIDGE-BLOCK 344	

KOTT , Stouffville, ON, CGC

Version 8.100 S Feb 9 2017 MiTek Industries, Inc. Thu Mar 16 11:57:46 2017 Page 1
ID:EvTixTQDI5yR1QLotZTBr_yE?HJ-gWO4NvUPXIAahuiiDAiFr2D_hhv4VHz2?GOFoFzaNk3

SCALE = 1:19.4

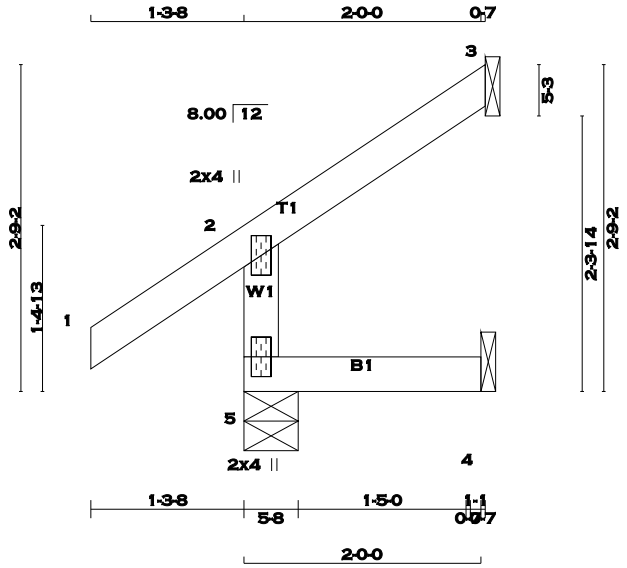

TOTAL WEIGHT = 8 lb [M]

LUMBER
N. L. G. A. RULES

CHORDS	SIZE		LUMBER	DESCR.
5 - 2	2x4	DRY	No.2	SPF
1 - 3	2x4	DRY	No.2	SPF
5 - 4	2x4	DRY	No.2	SPF

DRY: SEASONED LUMBER.

PLATES (table is in inches)

JT	TYPE	PLATES	W	LEN	Y	X
2	TMV+p	MT20	2.0	4.0		
5	BMV1+p	MT20	2.0	4.0		

A SIZE FOR SIZE SUBSTITUTION OF MITEK MII20 WITH TEE-LOK TL20 PLATES IS ALLOWED.

DIMENSIONS, SUPPORTS AND LOADINGS SPECIFIED BY FABRICATOR TO BE VERIFIED BY BUILDING DESIGNER

BEARINGS

JT	FACTORED GROSS REACTION VERT	HORZ	MAXIMUM FACTORED GROSS REACTION DOWN	HORZ	UPLIFT	INPUT BRG IN-SX	REQRD BRG IN-SX
5	223	0	223	0	0	5-8	5-8
3	60	0	60	0	0	1-8	1-8
4	16	0	18	0	0	1-8	1-8

SEE MITEK STANDARD DETAIL B37579H FOR CONNECTION TO JOINT(S) 3 , 4

UNFACTORED REACTIONS

JT	1ST LCASE COMBINED	MAX./MIN. COMPONENT REACTIONS SNOW	LIVE	PERM.LIVE	WIND	DEAD	SOIL
5	154	123 / 0	0 / 0	0 / 0	0 / 0	31 / 0	0 / 0
3	40	36 / 0	0 / 0	0 / 0	0 / 0	5 / 0	0 / 0
4	13	0 / 0	0 / 0	0 / 0	0 / 0	13 / 0	0 / 0

BEARING MATERIAL TO BE SPF NO.2 OR BETTER AT JOINT(S) 5

BRACING
TOP CHORD TO BE SHEATHED OR MAX. PURLIN SPACING = 6.25 FT.
MAX. UNBRACED BOTTOM CHORD LENGTH = 10.00 FT. OR RIGID CEILING DIRECTLY APPLIED.

ALL PITCH BREAKS AND PERIMETER CORNER JOINTS MUST BE LATERALLY RESTRAINED.

LOADING
TOTAL LOAD CASES: (5)

CHORDS

MEMB. FR-TO	MAX. FACTORED FORCE (LBS)	FACTORED VERT. LOAD (PLF) FROM	TO	LC1 MAX CSI (LC)	MAX. UNBRAC LENGTH
5- 2	-204 / 0	0.0	0.0	0.01 (4)	7.81
1- 2	0 / 29	-77.4	-77.4	0.10 (1)	10.00
2- 3	-11 / 0	-77.4	-77.4	0.05 (1)	6.25
5- 4	0 / 0	-17.5	-17.5	0.02 (4)	10.00

WEBS

MEMB. FR-TO	MAX. FACTORED FORCE (LBS)	MAX CSI (LC)

CANTILEVER ANALYSIS HAS BEEN CONSIDERED IN THIS DESIGN

DESIGN CRITERIA

SPECIFIED LOADS:

TOP CH.	LL	=	23.3	PSF
	DL	=	3.0	PSF
BOT CH.	LL	=	0.0	PSF
	DL	=	7.0	PSF
TOTAL LOAD		=	33.3	PSF

SPACING = 24.0 IN. C/C

THIS TRUSS IS DESIGNED FOR RESIDENTIAL OR SMALL BUILDING REQUIREMENTS OF PART 9, NBCC 2010

THIS DESIGN COMPLIES WITH:
- PART 9 OF OBC 2012 , BCBC 2012 , ABC 2014
- CSA 086-09
- TPIC 2011

DESIGN ASSUMPTIONS
-OVERHANG NOT TO BE ALTERED OR CUT OFF.

(55 % OF 27.2 P.S.F. G.S.L. PLUS 8.4 P.S.F. RAIN LOAD) EQUALS 23.3 P.S.F. SPECIFIED ROOF LIVE LOAD

ALLOWABLE DEFL.(LL)= L/360 (0.19")
CALCULATED VERT. DEFL.(LL) = L/ 999 (0.00")
ALLOWABLE DEFL.(TL)= L/360 (0.19")
CALCULATED VERT. DEFL.(TL) = L/ 999 (0.00")

CSI: TC=0.10 (1-2:1) , BC=0.02 (4-5:4) , WB=0.00 (n/a:0) , SSI=0.07 (1-2:1)

DOL LUMBER=1.00 NAIL=1.00 LS BEND=1.10 COMP=1.10 SHEAR=1.10 TENS= 1.10

COMPANION LIVE LOAD FACTOR = 0.50

TRUSS PLATE MANUFACTURER IS NOT RESPONSIBLE FOR QUALITY CONTROL IN THE TRUSS MANUFACTURING PLANT .

NAIL VALUES

PLATE	GRIP(DRY) (PSI) MAX	MIN	SHEAR (PLI) MAX	MIN	SECTION (PLI) MAX	MIN
MT20	618	354	1667	822	2284	1656

PLATE PLACEMENT TOL. = 0.250 inches

PLATE ROTATION TOL. = 0.5 Deg.

JSI GRIP= 0.13 (2) (INPUT = 0.90)
JSI METAL= 0.05 (2) (INPUT = 1.00)

LICENSED PROFESSIONAL ENGINEER
R. M. TREVISAN
100136551
March 16th, 2017
PROVINCE OF ONTARIO

RECEIVED
TOWN OF MILTON
MAR 29, 2017
17-5337
BUILDING DIVISION

KOTT

JOB NAME	TRUSS NAME	QUANTITY	PLY	JOB DESC.	DRWG NO.
PT0317-097	**J11**	**1**	**1**	TRUSS DESC. LECCO RIDGE-BLOCK 344	

KOTT , Stouffville, ON, CGC

Version 8.100 S Feb 9 2017 MiTek Industries, Inc. Thu Mar 16 11:57:47 2017 Page 1
ID:EvTixTQDI5yR1QLotZTBr_yE?HJ-8jyTaFV1IbIRI1HvnuDUOGm8Z5E?EkDCEw7oKhzaNk2

SCALE = 1:27.4

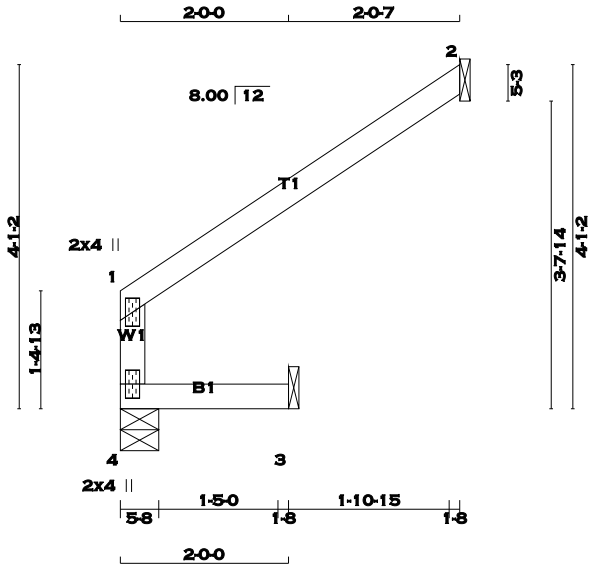

TOTAL WEIGHT = 9 lb
[M][F]

LUMBER
N. L. G. A. RULES

CHORDS	SIZE		LUMBER	DESCR.
4 - 1	2x4	DRY	No.2	SPF
1 - 2	2x4	DRY	No.2	SPF
4 - 3	2x4	DRY	No.2	SPF

DRY: SEASONED LUMBER.

PLATES (table is in inches)

JT	TYPE	PLATES	W	LEN	Y	X
1	TMV+p	MT20	2.0	4.0		
4	BMV1+p	MT20	2.0	4.0		

A SIZE FOR SIZE SUBSTITUTION OF MITEK MII20 WITH TEE-LOK TL20 PLATES IS ALLOWED.

DIMENSIONS, SUPPORTS AND LOADINGS SPECIFIED BY FABRICATOR TO BE VERIFIED BY BUILDING DESIGNER

BEARINGS

JT	FACTORED GROSS REACTION VERT	HORZ	MAXIMUM FACTORED GROSS REACTION DOWN	HORZ	UPLIFT	INPUT BRG IN-SX	REQRD BRG IN-SX
4	155	0	155	0	0	5-8	5-8
2	138	0	138	0	0	1-8	1-8
3	54	0	54	0	0	1-8	1-8

SEE MITEK STANDARD DETAIL B37579H FOR CONNECTION TO JOINT(S) 2 , 3

UNFACTORED REACTIONS

JT	1ST LCASE COMBINED	MAX./MIN. COMPONENT REACTIONS SNOW	LIVE	PERM.LIVE	WIND	DEAD	SOIL
4	107	83 / 0	0 / 0	0 / 0	0 / 0	25 / 0	0 / 0
2	94	83 / 0	0 / 0	0 / 0	0 / 0	11 / 0	0 / 0
3	39	23 / 0	0 / 0	0 / 0	0 / 0	16 / 0	0 / 0

BEARING MATERIAL TO BE SPF NO.2 OR BETTER AT JOINT(S) 4

BRACING
TOP CHORD TO BE SHEATHED OR MAX. PURLIN SPACING = 6.25 FT.
MAX. UNBRACED BOTTOM CHORD LENGTH = 10.00 FT. OR RIGID CEILING DIRECTLY APPLIED.

ALL PITCH BREAKS AND PERIMETER CORNER JOINTS MUST BE LATERALLY RESTRAINED.

LOADING
TOTAL LOAD CASES: (4)

CHORDS

MEMB. FR-TO	MAX. FACTORED FORCE (LBS)	FACTORED VERT. LOAD (PLF) FROM	TO	LC1 MAX CSI (LC)	MAX. UNBRAC LENGTH
4- 1	-174 / 0	0.0	0.0	0.09 (1)	7.81
1- 2	-10 / 0	-77.4	-77.4	0.16 (1)	6.25
4- 3	0 / 0	-17.5	-17.5	0.10 (1)	10.00

WEBS

MEMB. FR-TO	MAX. FACTORED FORCE (LBS)	MAX CSI (LC)

DESIGN CRITERIA

SPECIFIED LOADS:

TOP CH.	LL	=	23.3	PSF
	DL	=	3.0	PSF
BOT CH.	LL	=	0.0	PSF
	DL	=	7.0	PSF
TOTAL LOAD		=	33.3	PSF

SPACING = 24.0 IN. C/C

THIS TRUSS IS DESIGNED FOR RESIDENTIAL OR SMALL BUILDING REQUIREMENTS OF PART 9, NBCC 2010

THIS DESIGN COMPLIES WITH:
- PART 9 OF OBC 2012 , BCBC 2012 , ABC 2014
- CSA 086-09
- TPIC 2011

(55 % OF 27.2 P.S.F. G.S.L. PLUS 8.4 P.S.F. RAIN LOAD) EQUALS 23.3 P.S.F. SPECIFIED ROOF LIVE LOAD

ALLOWABLE DEFL.(LL)= L/360 (0.19")
CALCULATED VERT. DEFL.(LL) = L/ 999 (0.00")
ALLOWABLE DEFL.(TL)= L/360 (0.19")
CALCULATED VERT. DEFL.(TL) = L/ 999 (0.00")

CSI: TC=0.16 (1-2:1) , BC=0.10 (3-4:1) , WB=0.00 (n/a:0) , SSI=0.11 (1-2:1)

DOL LUMBER=1.00 NAIL=1.00 LS BEND=1.10 COMP=1.10 SHEAR=1.10 TENS= 1.10

COMPANION LIVE LOAD FACTOR = 0.50

TRUSS PLATE MANUFACTURER IS NOT RESPONSIBLE FOR QUALITY CONTROL IN THE TRUSS MANUFACTURING PLANT .

NAIL VALUES

PLATE	GRIP(DRY) (PSI) MAX	MIN	SHEAR (PLI) MAX	MIN	SECTION (PLI) MAX	MIN
MT20	618	354	1667	822	2284	1656

PLATE PLACEMENT TOL. = 0.250 inches

PLATE ROTATION TOL. = 5.0 Deg.

JSI GRIP= 0.11 (1) (INPUT = 0.90)
JSI METAL= 0.04 (1) (INPUT = 1.00)

LICENSED PROFESSIONAL ENGINEER
P. M. TREVISAN
100136551
March 16th, 2017
PROVINCE OF ONTARIO

RECEIVED
TOWN OF MILTON
MAR 29, 2017
17-5337
BUILDING DIVISION

KOTT

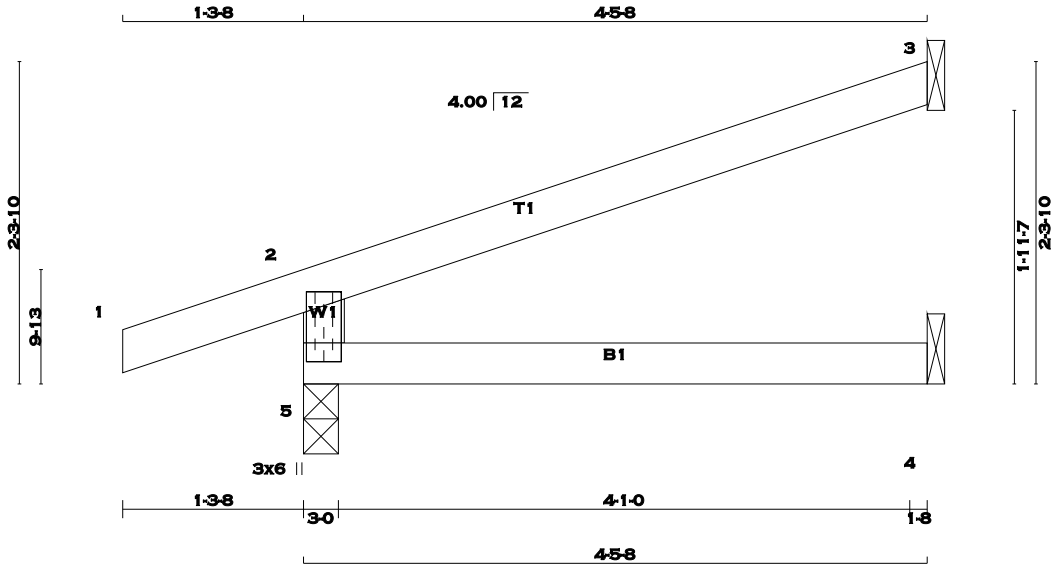

TOTAL WEIGHT = 4 X 12 = 50 lb [M]

LUMBER

N. L. G. A. RULES

CHORDS	SIZE		LUMBER	DESCR.
5 - 2	2x4	DRY	No.2	SPF
1 - 3	2x4	DRY	No.2	SPF
5 - 4	2x4	DRY	No.2	SPF

DRY: SEASONED LUMBER.

PLATES (table is in inches)

JT	TYPE	PLATES	W	LEN	Y	X
2						
5						
5	TMBMV1+p	MT20	3.0	6.0	3.50	1.50

A SIZE FOR SIZE SUBSTITUTION OF MITEK MII20 WITH TEE-LOK TL20 PLATES IS ALLOWED.

DIMENSIONS, SUPPORTS AND LOADINGS SPECIFIED BY FABRICATOR TO BE VERIFIED BY BUILDING DESIGNER

BEARINGS

JT	FACTORED GROSS REACTION VERT	HORZ	MAXIMUM FACTORED GROSS REACTION DOWN	HORZ	UPLIFT	INPUT BRG IN-SX	REQRD BRG IN-SX
5	365	0	365	0	0	3-0	3-0
3	129	0	129	0	0	1-8	1-8
4	32	0	36	0	0	1-8	1-8

SEE MITEK STANDARD DETAIL B37579H FOR CONNECTION TO JOINT(S) 3 , 4

UNFACTORED REACTIONS

JT	1ST LCASE COMBINED	MAX./MIN. COMPONENT REACTIONS SNOW	LIVE	PERM.LIVE	WIND	DEAD	SOIL
5	254	192 / 0	0 / 0	0 / 0	0 / 0	62 / 0	0 / 0
3	88	78 / 0	0 / 0	0 / 0	0 / 0	10 / 0	0 / 0
4	25	0 / 0	0 / 0	0 / 0	0 / 0	25 / 0	0 / 0

BEARING MATERIAL TO BE SPF NO.2 OR BETTER AT JOINT(S) 5

BRACING

TOP CHORD TO BE SHEATHED OR MAX. PURLIN SPACING = 6.25 FT.
MAX. UNBRACED BOTTOM CHORD LENGTH = 10.00 FT. OR RIGID CEILING DIRECTLY APPLIED.

ALL PITCH BREAKS AND PERIMETER CORNER JOINTS MUST BE LATERALLY RESTRAINED.

LOADING

TOTAL LOAD CASES: (4)

CHORDS MEMB. FR-TO	MAX. FACTORED FORCE (LBS)	FACTORED VERT. LOAD (PLF) FROM	TO	LC1 MAX CSI (LC)	MAX. UNBRAC LENGTH
5- 2	-319 / 0	0.0	0.0	0.08 (4)	7.81
1- 2	0 / 16	-77.4	-77.4	0.10 (1)	10.00
2- 3	-14 / 0	-77.4	-77.4	0.26 (1)	6.25
5- 4	0 / 0	-17.5	-17.5	0.08 (4)	10.00

WEBS MEMB. FR-TO	MAX. FACTORED FORCE (LBS)	MAX CSI (LC)

DESIGN CRITERIA

SPECIFIED LOADS:

TOP CH.	LL	=	23.3	PSF
	DL	=	3.0	PSF
BOT CH.	LL	=	0.0	PSF
	DL	=	7.0	PSF
TOTAL LOAD		=	33.3	PSF

SPACING = 24.0 IN. C/C

THIS TRUSS IS DESIGNED FOR RESIDENTIAL OR SMALL BUILDING REQUIREMENTS OF PART 9, NBCC 2010

THIS DESIGN COMPLIES WITH:
- PART 9 OF OBC 2012 , BCBC 2012 , ABC 2014
- CSA 086-09
- TPIC 2011

DESIGN ASSUMPTIONS
-OVERHANG NOT TO BE ALTERED OR CUT OFF.

(55 % OF 27.2 P.S.F. G.S.L. PLUS 8.4 P.S.F. RAIN LOAD) EQUALS 23.3 P.S.F. SPECIFIED ROOF LIVE LOAD

ALLOWABLE DEFL.(LL)= L/360 (0.19")
CALCULATED VERT. DEFL.(LL) = L/ 999 (0.00")
ALLOWABLE DEFL.(TL)= L/360 (0.19")
CALCULATED VERT. DEFL.(TL) = L/ 999 (0.01")

CSI: TC=0.26 (2-3:1) , BC=0.08 (4-5:4) , WB=0.00 (n/a:0) , SSI=0.16 (2-3:1)

DOL LUMBER=1.00 NAIL=1.00 LS BEND=1.10 COMP=1.10 SHEAR=1.10 TENS= 1.10

COMPANION LIVE LOAD FACTOR = 0.50

TRUSS PLATE MANUFACTURER IS NOT RESPONSIBLE FOR QUALITY CONTROL IN THE TRUSS MANUFACTURING PLANT .

NAIL VALUES

PLATE	GRIP(DRY) (PSI) MAX	MIN	SHEAR (PLI) MAX	MIN	SECTION (PLI) MAX	MIN
MT20	618	354	1667	822	2284	1656

PLATE PLACEMENT TOL. = 0.250 inches

PLATE ROTATION TOL. = 5.0 Deg.

JSI GRIP= 0.27 (5) (INPUT = 0.90)
JSI METAL= 0.04 (5) (INPUT = 1.00)

LICENSED PROFESSIONAL ENGINEER
P. M. TREVISAN
100136551
March 16th, 2017
PROVINCE OF ONTARIO

RECEIVED
TOWN OF MILTON
MAR 29, 2017
17-5337
BUILDING DIVISION

KOTT

JOB NAME	TRUSS NAME	QUANTITY	PLY	JOB DESC.	DRWG NO.
PT0317-097	**J13**	**1**	**1**	TRUSS DESC. LECCO RIDGE-BLOCK 344	

KOTT , Stouffville, ON, CGC

Version 8.100 S Feb 9 2017 MiTek Industries, Inc. Thu Mar 16 11:57:47 2017 Page 1
ID:EvTixTQDI5yR1QLotZTBr_yE?HJ-8jyTaFV1IbIRI1HvnuDUOGm9T5FJEkDCEw7oKhzaNk2

SCALE: 3/4"=1'

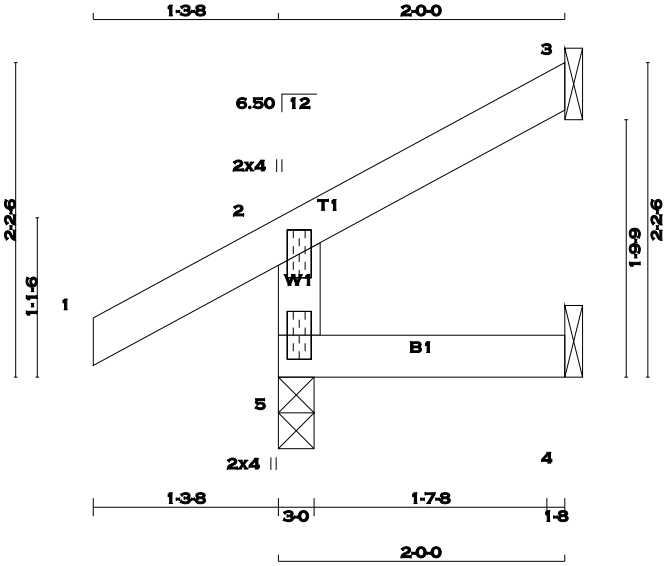

TOTAL WEIGHT = 7 lb
[M]

LUMBER
N. L. G. A. RULES

CHORDS	SIZE		LUMBER	DESCR.
5 - 2	2x4	DRY	No.2	SPF
1 - 3	2x4	DRY	No.2	SPF
5 - 4	2x4	DRY	No.2	SPF

DRY: SEASONED LUMBER.

PLATES (table is in inches)

JT	TYPE	PLATES	W	LEN	Y	X
2	TMV+p	MT20	2.0	4.0		
5	BMV1+p	MT20	2.0	4.0		

A SIZE FOR SIZE SUBSTITUTION OF MITEK MII20 WITH TEE-LOK TL20 PLATES IS ALLOWED.

DIMENSIONS, SUPPORTS AND LOADINGS SPECIFIED BY FABRICATOR TO BE VERIFIED BY BUILDING DESIGNER

BEARINGS

JT	FACTORED GROSS REACTION VERT	HORZ	MAXIMUM FACTORED GROSS REACTION DOWN	HORZ	UPLIFT	INPUT BRG IN-SX	REQRD BRG IN-SX
5	221	0	221	0	0	3-0	3-0
3	58	0	58	0	0	1-8	1-8
4	16	0	17	0	0	1-8	1-8

SEE MITEK STANDARD DETAIL B37579H FOR CONNECTION TO JOINT(S) 3 , 4

UNFACTORED REACTIONS

JT	1ST LCASE COMBINED	MAX./MIN. COMPONENT REACTIONS SNOW	LIVE	PERM.LIVE	WIND	DEAD	SOIL
5	153	121 / 0	0 / 0	0 / 0	0 / 0	31 / 0	0 / 0
3	40	35 / 0	0 / 0	0 / 0	0 / 0	5 / 0	0 / 0
4	12	0 / 0	0 / 0	0 / 0	0 / 0	12 / 0	0 / 0

BEARING MATERIAL TO BE SPF NO.2 OR BETTER AT JOINT(S) 5

BRACING
TOP CHORD TO BE SHEATHED OR MAX. PURLIN SPACING = 10.00 FT.
MAX. UNBRACED BOTTOM CHORD LENGTH = 10.00 FT. OR RIGID CEILING DIRECTLY APPLIED.

ALL PITCH BREAKS AND PERIMETER CORNER JOINTS MUST BE LATERALLY RESTRAINED.

LOADING
TOTAL LOAD CASES: (5)

CHORDS MEMB. FR-TO	MAX. FACTORED FORCE (LBS)	FACTORED VERT. LOAD (PLF) FROM	TO	LC1 MAX CSI (LC)	MAX. UNBRAC LENGTH	WEBS MEMB. FR-TO	MAX. FACTORED FORCE (LBS)	MAX CSI (LC)
5- 2	-202 / 0	0.0	0.0	0.01 (4)	7.81			
1- 2	0 / 25	-77.4	-77.4	0.10 (1)	10.00			
2- 3	-9 / 0	-77.4	-77.4	0.05 (1)	10.00			
5- 4	0 / 0	-17.5	-17.5	0.02 (4)	10.00			

CANTILEVER ANALYSIS HAS BEEN CONSIDERED IN THIS DESIGN

DESIGN CRITERIA

SPECIFIED LOADS:

TOP	CH.	LL	=	23.3	PSF
		DL	=	3.0	PSF
BOT	CH.	LL	=	0.0	PSF
		DL	=	7.0	PSF
TOTAL	LOAD		=	33.3	PSF

SPACING = 24.0 IN. C/C

THIS TRUSS IS DESIGNED FOR RESIDENTIAL OR SMALL BUILDING REQUIREMENTS OF PART 9, NBCC 2010

THIS DESIGN COMPLIES WITH:
- PART 9 OF OBC 2012 , BCBC 2012 , ABC 2014
- CSA 086-09
- TPIC 2011

DESIGN ASSUMPTIONS
-OVERHANG NOT TO BE ALTERED OR CUT OFF.

(55 % OF 27.2 P.S.F. G.S.L. PLUS 8.4 P.S.F. RAIN LOAD) EQUALS 23.3 P.S.F. SPECIFIED ROOF LIVE LOAD

ALLOWABLE DEFL.(LL)= L/360 (0.19")
CALCULATED VERT. DEFL.(LL) = L/ 999 (0.00")
ALLOWABLE DEFL.(TL)= L/360 (0.19")
CALCULATED VERT. DEFL.(TL) = L/ 999 (0.00")

CSI: TC=0.10 (1-2:1) , BC=0.02 (4-5:4) , WB=0.00 (n/a:0) , SSI=0.07 (1-2:1)

DOL LUMBER=1.00 NAIL=1.00 LS BEND=1.10 COMP=1.10 SHEAR=1.10 TENS= 1.10

COMPANION LIVE LOAD FACTOR = 0.50

TRUSS PLATE MANUFACTURER IS NOT RESPONSIBLE FOR QUALITY CONTROL IN THE TRUSS MANUFACTURING PLANT .

NAIL VALUES

PLATE	GRIP(DRY) (PSI) MAX	MIN	SHEAR (PLI) MAX	MIN	SECTION (PLI) MAX	MIN
MT20	618	354	1667	822	2284	1656

PLATE PLACEMENT TOL. = 0.250 inches

PLATE ROTATION TOL. = 5.0 Deg.

JSI GRIP= 0.12 (2) (INPUT = 0.90)
JSI METAL= 0.05 (2) (INPUT = 1.00)

LICENSED PROFESSIONAL ENGINEER
P. M. TREVISAN
100136551
March 16th, 2017
PROVINCE OF ONTARIO

RECEIVED
TOWN OF MILTON
MAR 29, 2017
17-5337
BUILDING DIVISION

KOTT

JOB NAME	TRUSS NAME	QUANTITY	PLY	JOB DESC.	DRWG NO.
PT0317-097	T01	1	1	TRUSS DESC. LECCO RIDGE-BLOCK 344	

KOTT , Stouffville, ON, CGC

Version 8.100 S Feb 9 2017 MiTek Industries, Inc. Thu Mar 16 11:57:48 2017 Page 1
ID:EvTixTQDI5yR1QLotZTBr_yE?HJ-cvWroaWf2vQIwBs5KbljwTIE?VYCz83LSatLt7zaNk1

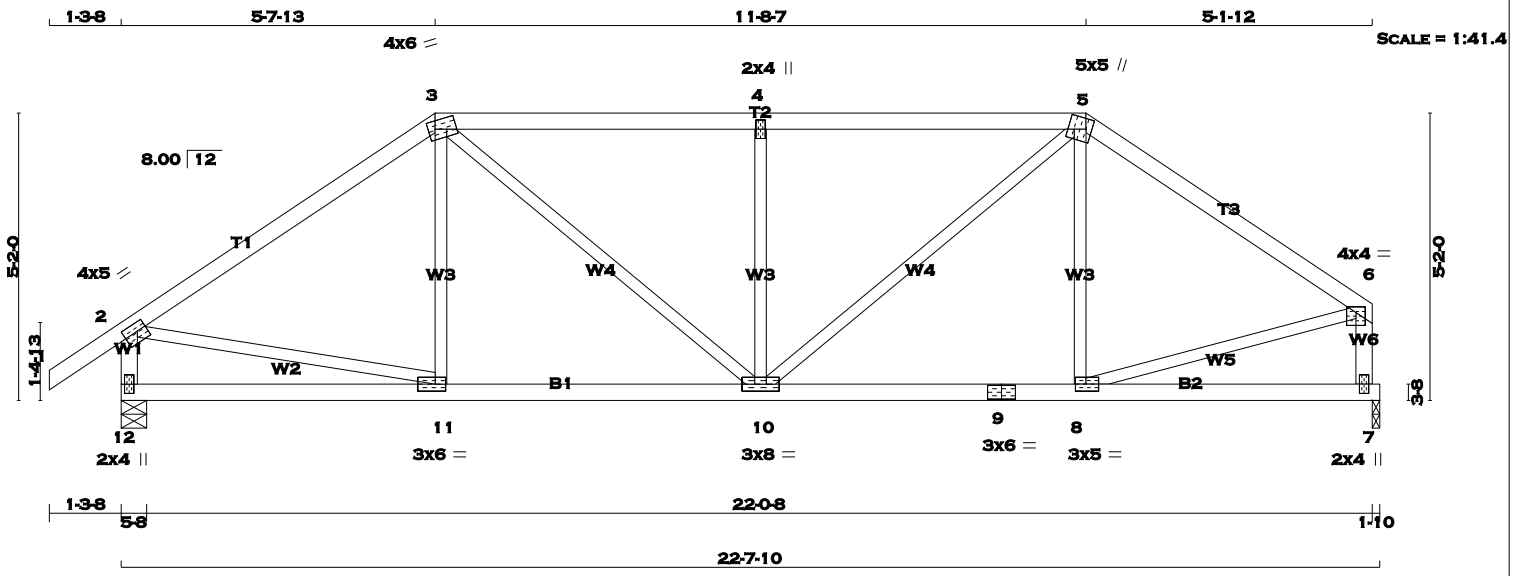

TOTAL WEIGHT = 90 lb
[M]

LUMBER
N. L. G. A. RULES

CHORDS	SIZE		LUMBER	DESCR.
1 - 3	2x4	DRY	No.2	SPF
3 - 5	2x4	DRY	No.2	SPF
5 - 6	2x4	DRY	No.2	SPF
12 - 2	2x4	DRY	No.2	SPF
7 - 6	2x4	DRY	No.2	SPF
12 - 9	2x4	DRY	No.2	SPF
9 - 7	2x4	DRY	No.2	SPF
ALL WEBS EXCEPT	2x3	DRY	No.2	SPF

DRY: SEASONED LUMBER.

PLATES (table is in inches)

JT	TYPE	PLATES	W	LEN	Y	X
2	TMVW-t	MT20	4.0	5.0	1.75	2.00
3	TTWW-m	MT20	4.0	6.0	1.75	1.50
4	TMW+w	MT20	2.0	4.0		
5	TTWW+m	MT20	5.0	5.0	2.25	1.25
6	TMVW-p	MT20	4.0	4.0	1.25	2.00
7	BMV1+p	MT20	2.0	4.0		
8	BMWW-t	MT20	3.0	5.0	1.50	2.25
9	BS-t	MT20	3.0	6.0		
10	BMWWW-t	MT20	3.0	8.0		
11	BMWW-t	MT20	3.0	6.0	1.50	2.25
12	BMV1+p	MT20	2.0	4.0		

A SIZE FOR SIZE SUBSTITUTION OF MITEK MII20 WITH TEE-LOK TL20 PLATES IS ALLOWED.

DIMENSIONS, SUPPORTS AND LOADINGS SPECIFIED BY FABRICATOR TO BE VERIFIED BY BUILDING DESIGNER

BEARINGS

JT	FACTORED GROSS REACTION VERT	HORZ	MAXIMUM FACTORED GROSS REACTION DOWN	HORZ	UPLIFT	INPUT BRG IN-SX	REQRD BRG IN-SX
12	1173	0	1173	0	0	5-8	5-8
7	1067	0	1067	0	0	1-10	1-10

UNFACTORED REACTIONS

JT	1ST LCASE COMBINED	MAX./MIN. COMPONENT REACTIONS SNOW	LIVE	PERM.LIVE	WIND	DEAD	SOIL
12	821	588 / 0	0 / 0	0 / 0	0 / 0	233 / 0	0 / 0
7	749	524 / 0	0 / 0	0 / 0	0 / 0	225 / 0	0 / 0

BEARING MATERIAL TO BE SPF NO.2 OR BETTER AT JOINT(S) 12, 7

BRACING
TOP CHORD TO BE SHEATHED OR MAX. PURLIN SPACING = 4.99 FT.
MAX. UNBRACED BOTTOM CHORD LENGTH = 10.00 FT. OR RIGID CEILING DIRECTLY APPLIED.

ALL PITCH BREAKS AND PERIMETER CORNER JOINTS MUST BE LATERALLY RESTRAINED.

LOADING
TOTAL LOAD CASES: (4)

CHORDS

MEMB. FR-TO	MAX. FACTORED FORCE (LBS)	FACTORED VERT. LOAD (PLF) FROM	TO	LC1 MAX CSI (LC)	MAX. UNBRAC LENGTH
1- 2	0 / 29	-77.4	-77.4	0.10 (1)	10.00
2- 3	-1135 / 0	-77.4	-77.4	0.49 (1)	5.30
3- 4	-1303 / 0	-77.4	-77.4	0.50 (1)	4.99
4- 5	-1303 / 0	-77.4	-77.4	0.50 (1)	4.99
5- 6	-1067 / 0	-77.4	-77.4	0.40 (1)	5.57
12- 2	-1133 / 0	0.0	0.0	0.12 (1)	7.46
7- 6	-1031 / 0	0.0	0.0	0.11 (1)	7.73
12-11	0 / 0	-17.5	-17.5	0.14 (4)	10.00
11-10	0 / 942	-17.5	-17.5	0.23 (1)	10.00
10- 9	0 / 884	-17.5	-17.5	0.21 (1)	10.00
9- 8	0 / 884	-17.5	-17.5	0.21 (1)	10.00
8- 7	0 / 0	-17.5	-17.5	0.13 (4)	10.00

WEBS

MEMB. FR-TO	MAX. FACTORED FORCE (LBS)	MAX CSI (LC)
11- 3	-62 / 74	0.03 (4)
3-10	0 / 469	0.11 (1)
10- 4	-555 / 0	0.22 (1)
10- 5	0 / 545	0.12 (1)
8- 5	-129 / 49	0.05 (1)
2-11	0 / 960	0.22 (1)
8- 6	0 / 918	0.21 (1)

DESIGN CRITERIA

SPECIFIED LOADS:

TOP	CH.	LL	=	23.3	PSF
		DL	=	3.0	PSF
BOT	CH.	LL	=	0.0	PSF
		DL	=	7.0	PSF
TOTAL	LOAD		=	33.3	PSF

SPACING = 24.0 IN. C/C

LOADING IN FLAT SECTION BASED ON A SLOPE OF 6.00/12

THIS TRUSS IS DESIGNED FOR RESIDENTIAL OR SMALL BUILDING REQUIREMENTS OF PART 9, NBCC 2010

THIS DESIGN COMPLIES WITH:
- PART 9 OF OBC 2012 , BCBC 2012 , ABC 2014
- CSA 086-09
- TPIC 2011

(55 % OF 27.2 P.S.F. G.S.L. PLUS 8.4 P.S.F. RAIN LOAD) EQUALS 23.3 P.S.F. SPECIFIED ROOF LIVE LOAD

ALLOWABLE DEFL.(LL)= L/360 (0.75")
CALCULATED VERT. DEFL.(LL) = L/ 999 (0.04")
ALLOWABLE DEFL.(TL)= L/360 (0.75")
CALCULATED VERT. DEFL.(TL) = L/ 999 (0.08")

CSI: TC=0.50 (4-5:1) , BC=0.23 (10-11:1) , WB=0.22 (4-10:1) , SSI=0.22 (3-4:1)

DOL LUMBER=1.00 NAIL=1.00 LS BEND=1.10 COMP=1.10 SHEAR=1.10 TENS= 1.10

COMPANION LIVE LOAD FACTOR = 0.50

TRUSS PLATE MANUFACTURER IS NOT RESPONSIBLE FOR QUALITY CONTROL IN THE TRUSS MANUFACTURING PLANT .

NAIL VALUES

PLATE	GRIP(DRY) (PSI) MAX	MIN	SHEAR (PLI) MAX	MIN	SECTION (PLI) MAX	MIN
MT20	618	354	1667	822	2284	1656

PLATE PLACEMENT TOL. = 0.250 inches

PLATE ROTATION TOL. = 5.0 Deg.

JSI GRIP= 0.89 (6) (INPUT = 0.90)
JSI METAL= 0.39 (2) (INPUT = 1.00)

LICENSED PROFESSIONAL ENGINEER
P. M. TREVISAN
100136551
March 16th, 2017
PROVINCE OF ONTARIO

RECEIVED
TOWN OF MILTON
MAR 29, 2017
17-5337
BUILDING DIVISION

KOTT

JOB NAME	TRUSS NAME	QUANTITY	PLY	JOB DESC.	DRWG NO.
PT0317-097	T02	1	1	TRUSS DESC. LECCO RIDGE-BLOCK 344	

KOTT , Stouffville, ON, CGC

Version 8.100 S Feb 9 2017 MiTek Industries, Inc. Thu Mar 16 11:57:48 2017 Page 1
ID:EvTixTQDI5yR1QLotZTBr_yE?HJ-cvWroaWf2vQlwBs5KbljwTlJpVWfz3RLSatLt7zaNk1

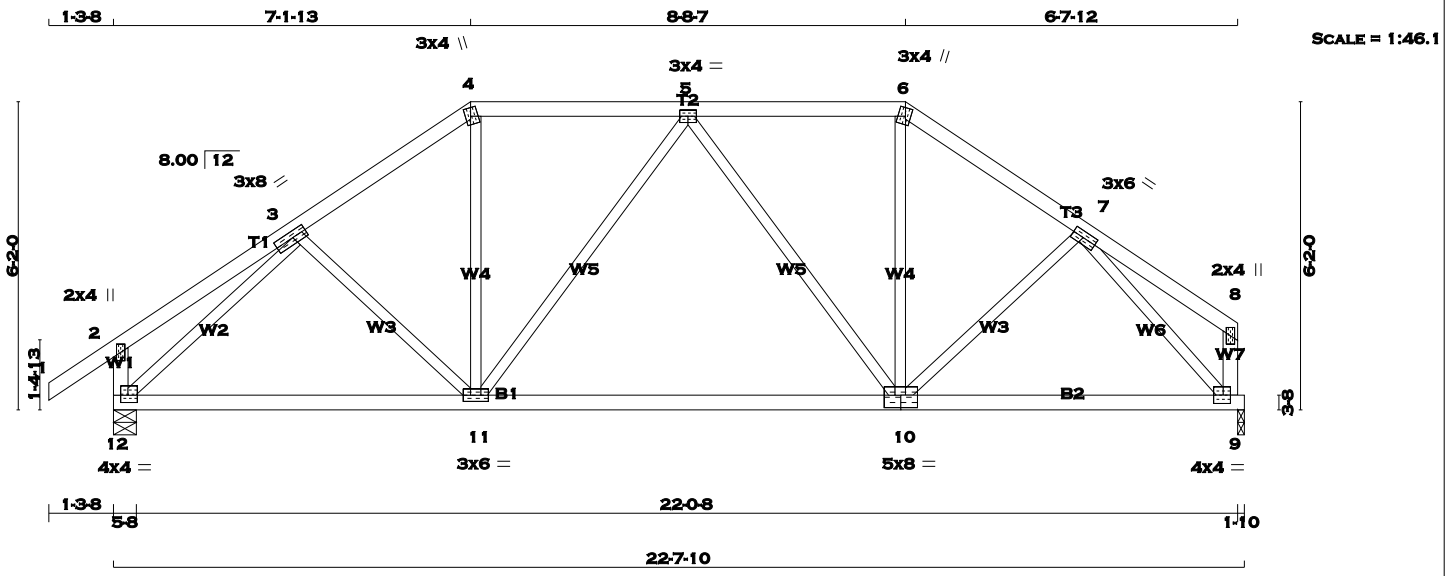

TOTAL WEIGHT = 95 lb
[M][F]

LUMBER

N. L. G. A. RULES

CHORDS	SIZE		LUMBER	DESCR.
1 - 4	2x4	DRY	No.2	SPF
4 - 6	2x4	DRY	No.2	SPF
6 - 8	2x4	DRY	No.2	SPF
12 - 2	2x4	DRY	No.2	SPF
9 - 8	2x4	DRY	No.2	SPF
12 - 10	2x4	DRY	No.2	SPF
10 - 9	2x4	DRY	No.2	SPF
ALL WEBS EXCEPT	2x3	DRY	No.2	SPF

DRY: SEASONED LUMBER.

PLATES (table is in inches)

JT	TYPE	PLATES	W	LEN	Y	X
2	TMV+p	MT20	2.0	4.0		
3	TMWW-t	MT20	3.0	8.0	1.50	3.50
4	TTW+m	MT20	3.0	4.0	2.00	1.25
5	TMWW-t	MT20	3.0	4.0		
6	TTW+m	MT20	3.0	4.0	2.00	1.25
7	TMWW-t	MT20	3.0	6.0	1.50	2.75
8	TMV+p	MT20	2.0	4.0		
9	BMVW1-t	MT20	4.0	4.0	2.00	1.75
10	BSWWW-l	MT20	5.0	8.0	3.00	4.00
11	BMWWW-t	MT20	3.0	6.0		
12	BMVW1-t	MT20	4.0	4.0	1.75	1.75

A SIZE FOR SIZE SUBSTITUTION OF MITEK MII20 WITH TEE-LOK TL20 PLATES IS ALLOWED.

DIMENSIONS, SUPPORTS AND LOADINGS SPECIFIED BY FABRICATOR TO BE VERIFIED BY BUILDING DESIGNER

BEARINGS

JT	FACTORED GROSS REACTION VERT	HORZ	MAXIMUM FACTORED GROSS REACTION DOWN	HORZ	UPLIFT	INPUT BRG IN-SX	REQRD BRG IN-SX
12	1173	0	1173	0	0	5-8	5-8
9	1067	0	1067	0	0	1-10	1-10

UNFACTORED REACTIONS

JT	1ST LCASE COMBINED	MAX./MIN. COMPONENT REACTIONS SNOW	LIVE	PERM.LIVE	WIND	DEAD	SOIL
12	821	588 / 0	0 / 0	0 / 0	0 / 0	233 / 0	0 / 0
9	749	524 / 0	0 / 0	0 / 0	0 / 0	225 / 0	0 / 0

BEARING MATERIAL TO BE SPF NO.2 OR BETTER AT JOINT(S) 12, 9

BRACING

TOP CHORD TO BE SHEATHED OR MAX. PURLIN SPACING = 5.90 FT.
MAX. UNBRACED BOTTOM CHORD LENGTH = 10.00 FT. OR RIGID CEILING DIRECTLY APPLIED.

ALL PITCH BREAKS AND PERIMETER CORNER JOINTS MUST BE LATERALLY RESTRAINED.

LOADING

TOTAL LOAD CASES: (4)

CHORDS

MEMB. FR-TO	MAX. FACTORED FORCE (LBS)	FACTORED VERT. LOAD (PLF) FROM	TO	LC1 CSI (LC)	MAX UNBRAC LENGTH
1- 2	0 / 29	-77.4	-77.4	0.10 (1)	10.00
2- 3	0 / 16	-77.4	-77.4	0.15 (1)	10.00
3- 4	-1105 / 0	-77.4	-77.4	0.13 (1)	5.90
4- 5	-911 / 0	-77.4	-77.4	0.19 (1)	6.24
5- 6	-874 / 0	-77.4	-77.4	0.19 (1)	6.25
6- 7	-1060 / 0	-77.4	-77.4	0.12 (1)	5.99
7- 8	0 / 17	-77.4	-77.4	0.13 (1)	10.00
12- 2	-214 / 0	0.0	0.0	0.02 (1)	7.81
9- 8	-89 / 0	0.0	0.0	0.01 (1)	7.81
12-11	0 / 938	-17.5	-17.5	0.32 (4)	10.00
11-10	0 / 1041	-17.5	-17.5	0.33 (4)	10.00
10- 9	0 / 828	-17.5	-17.5	0.29 (4)	10.00

WEBS

MEMB. FR-TO	MAX. FACTORED FORCE (LBS)	MAX CSI (LC)
3-11	-47 / 36	0.02 (1)
11- 4	0 / 366	0.08 (1)
11- 5	-222 / 0	0.23 (1)
5-10	-284 / 0	0.29 (1)
10- 6	0 / 338	0.08 (1)
10- 7	0 / 61	0.02 (4)
12- 3	-1307 / 0	0.51 (1)
7- 9	-1248 / 0	0.42 (1)

DESIGN CRITERIA

SPECIFIED LOADS:

TOP CH.	LL	=	23.3	PSF
	DL	=	3.0	PSF
BOT CH.	LL	=	0.0	PSF
	DL	=	7.0	PSF
TOTAL LOAD		=	33.3	PSF

SPACING = 24.0 IN. C/C

LOADING IN FLAT SECTION BASED ON A SLOPE OF 6.00/12

THIS TRUSS IS DESIGNED FOR RESIDENTIAL OR SMALL BUILDING REQUIREMENTS OF PART 9, NBCC 2010

THIS DESIGN COMPLIES WITH:
- PART 9 OF OBC 2012 , BCBC 2012 , ABC 2014
- CSA 086-09
- TPIC 2011

(55 % OF 27.2 P.S.F. G.S.L. PLUS 8.4 P.S.F. RAIN LOAD) EQUALS 23.3 P.S.F. SPECIFIED ROOF LIVE LOAD

ALLOWABLE DEFL.(LL)= L/360 (0.75")
CALCULATED VERT. DEFL.(LL) = L/ 999 (0.04")
ALLOWABLE DEFL.(TL)= L/360 (0.75")
CALCULATED VERT. DEFL.(TL) = L/ 999 (0.11")

CSI: TC=0.19 (4-5:1) , BC=0.33 (10-11:4) , WB=0.51 (3-12:1) , SSI=0.16 (4-5:1)

DOL LUMBER=1.00 NAIL=1.00 LS BEND=1.10 COMP=1.10 SHEAR=1.10 TENS= 1.10

COMPANION LIVE LOAD FACTOR = 0.50

TRUSS PLATE MANUFACTURER IS NOT RESPONSIBLE FOR QUALITY CONTROL IN THE TRUSS MANUFACTURING PLANT .

NAIL VALUES

PLATE	GRIP(DRY) (PSI) MAX	MIN	SHEAR (PLI) MAX	MIN	SECTION (PLI) MAX	MIN
MT20	618	354	1667	822	2284	1656

PLATE PLACEMENT TOL. = 0.250 inches

PLATE ROTATION TOL. = 5.0 Deg.

JSI GRIP= 0.90 (3) (INPUT = 0.90)
JSI METAL= 0.35 (12) (INPUT = 1.00)

LICENSED PROFESSIONAL ENGINEER
P. M. TREVISAN
100136551
March 16th, 2017
PROVINCE OF ONTARIO

RECEIVED
TOWN OF MILTON
MAR 29, 2017
17-5337
BUILDING DIVISION

KOTT

JOB NAME	TRUSS NAME	QUANTITY	PLY	JOB DESC.	DRWG NO.
PT0317-097	T03	1	1	TRUSS DESC. LECCO RIDGE-BLOCK 344	

KOTT , Stouffville, ON, CGC

Version 8.100 S Feb 9 2017 MiTek Industries, Inc. Thu Mar 16 11:57:49 2017 Page 1
ID:EvTixTQDI5yR1QLotZTBr_yE?HJ-554D?wXHpDY9YLRHuJGyThrRNutpib9VhDcvPazaNk0

SCALE = 1:51.5

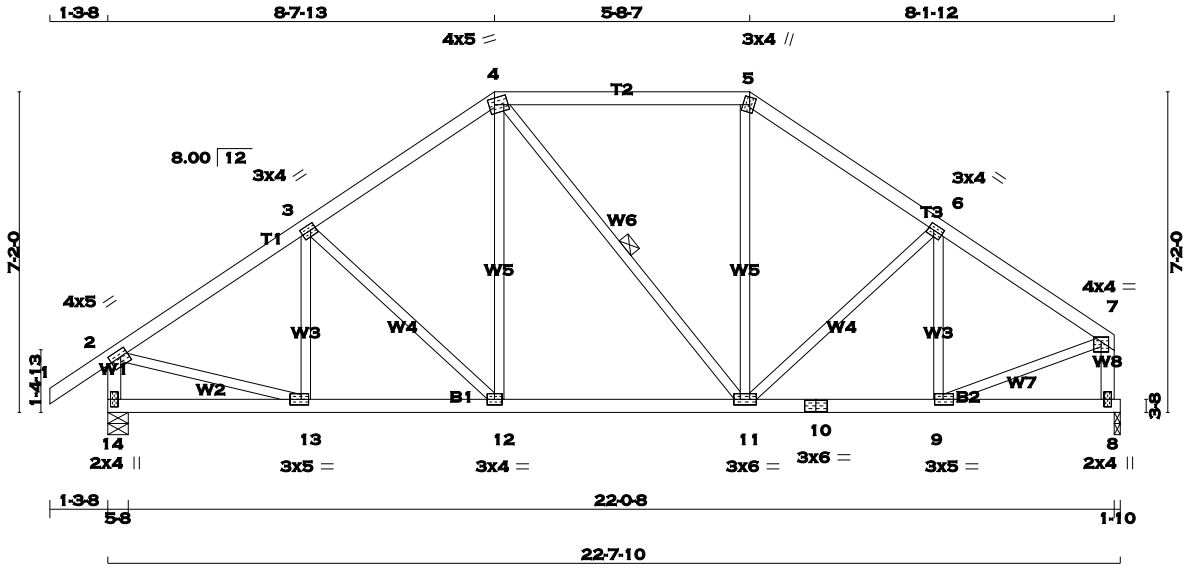

TOTAL WEIGHT = 99 lb
[M][F]

LUMBER
N. L. G. A. RULES

CHORDS	SIZE		LUMBER	DESCR.
1 - 4	2x4	DRY	No.2	SPF
4 - 5	2x4	DRY	No.2	SPF
5 - 7	2x4	DRY	No.2	SPF
14 - 2	2x4	DRY	No.2	SPF
8 - 7	2x4	DRY	No.2	SPF
14 - 10	2x4	DRY	No.2	SPF
10 - 8	2x4	DRY	No.2	SPF
ALL WEBS EXCEPT	2x3	DRY	No.2	SPF

DRY: SEASONED LUMBER.

PLATES (table is in inches)

JT	TYPE	PLATES	W	LEN	Y	X
2	TMVW-t	MT20	4.0	5.0	1.75	2.00
3	TMWW-t	MT20	3.0	4.0	1.50	1.50
4	TTWW-m	MT20	4.0	5.0	1.75	1.50
5	TTW+m	MT20	3.0	4.0	2.00	1.25
6	TMWW-t	MT20	3.0	4.0	1.50	1.50
7	TMVW-p	MT20	4.0	4.0	1.25	2.00
8	BMV1+p	MT20	2.0	4.0		
9	BMWW-t	MT20	3.0	5.0	1.50	2.25
10	BS-t	MT20	3.0	6.0		
11	BMWWW-t	MT20	3.0	6.0		
12	BMWW-t	MT20	3.0	4.0		
13	BMWW-t	MT20	3.0	5.0	1.50	2.00
14	BMV1+p	MT20	2.0	4.0		

A SIZE FOR SIZE SUBSTITUTION OF MITEK MII20 WITH TEE-LOK TL20 PLATES IS ALLOWED.

DIMENSIONS, SUPPORTS AND LOADINGS SPECIFIED BY FABRICATOR TO BE VERIFIED BY BUILDING DESIGNER

BEARINGS

JT	FACTORED GROSS REACTION VERT	HORZ	MAXIMUM FACTORED GROSS REACTION DOWN	HORZ	UPLIFT	INPUT BRG IN-SX	REQRD BRG IN-SX
14	1173	0	1173	0	0	5-8	5-8
8	1067	0	1067	0	0	1-10	1-10

UNFACTORED REACTIONS

JT	1ST LCASE COMBINED	MAX./MIN. COMPONENT REACTIONS SNOW	LIVE	PERM.LIVE	WIND	DEAD	SOIL
14	821	588 / 0	0 / 0	0 / 0	0 / 0	233 / 0	0 / 0
8	749	524 / 0	0 / 0	0 / 0	0 / 0	225 / 0	0 / 0

BEARING MATERIAL TO BE SPF NO.2 OR BETTER AT JOINT(S) 14, 8

BRACING
TOP CHORD TO BE SHEATHED OR MAX. PURLIN SPACING = 5.69 FT.
MAX. UNBRACED BOTTOM CHORD LENGTH = 10.00 FT. OR RIGID CEILING DIRECTLY APPLIED.

ALL PITCH BREAKS AND PERIMETER CORNER JOINTS MUST BE LATERALLY RESTRAINED.

1 - 2x3 SPF No.2 LATERAL BRACE(S) AT 1/ 2 LENGTH OF 4-11. DBS = 20-0-0 . CBF = 4 LBS.

DBS = DIAGONAL BRACE SPACING (MAX). CBF = CUMULATIVE BRACING FORCE. FASTEN LATERAL BRACE(S) USING (0.122"X3") SPIRAL NAILS : 1 NAIL FOR 2x3 BRACE(S), 2 FOR 1x4, 2x4, 2x5, 3 FOR 2x6, 4 FOR 2x8, 5 FOR 2x10, AND 6 FOR 2x12.

END VERTICAL(S) MUST BE SHEATHED OR HAVE BRACES AS INDICATED IN THE MAX. UNBRACED LENGTH COLUMN OF THE TABLE BELOW

LOADING
TOTAL LOAD CASES: (4)

CHORDS

MEMB. FR-TO	MAX. FACTORED FORCE (LBS)	FACTORED VERT. LOAD (PLF) FROM	TO	LC1 MAX CSI (LC)	MAX. UNBRAC LENGTH
1- 2	0 / 29	-77.4	-77.4	0.10 (1)	10.00
2- 3	-1167 / 0	-77.4	-77.4	0.20 (1)	5.69
3- 4	-1022 / 0	-77.4	-77.4	0.19 (1)	5.98
4- 5	-815 / 0	-77.4	-77.4	0.33 (1)	6.25
5- 6	-998 / 0	-77.4	-77.4	0.17 (1)	6.06
6- 7	-1060 / 0	-77.4	-77.4	0.17 (1)	5.93
14- 2	-1139 / 0	0.0	0.0	0.12 (1)	7.45
8- 7	-1037 / 0	0.0	0.0	0.11 (1)	7.71
14-13	0 / 0	-17.5	-17.5	0.07 (4)	10.00
13-12	0 / 989	-17.5	-17.5	0.21 (1)	10.00
12-11	0 / 834	-17.5	-17.5	0.19 (1)	10.00
11-10	0 / 900	-17.5	-17.5	0.20 (1)	10.00
10- 9	0 / 900	-17.5	-17.5	0.20 (1)	10.00
9- 8	0 / 0	-17.5	-17.5	0.06 (4)	10.00

WEBS

MEMB. FR-TO	MAX. FACTORED FORCE (LBS)	MAX CSI (LC)
13- 3	-163 / 21	0.05 (1)
3-12	-216 / 0	0.13 (1)
12- 4	0 / 236	0.05 (1)
4-11	-30 / 0	0.02 (1)
11- 5	0 / 196	0.04 (1)
11- 6	-120 / 0	0.07 (1)
9- 6	-252 / 0	0.07 (1)
2-13	0 / 1018	0.23 (1)
9- 7	0 / 956	0.22 (1)

DESIGN CRITERIA

SPECIFIED LOADS:

TOP CH.	LL	=	23.3	PSF
	DL	=	3.0	PSF
BOT CH.	LL	=	0.0	PSF
	DL	=	7.0	PSF
TOTAL LOAD		=	33.3	PSF

SPACING = 24.0 IN. C/C

LOADING IN FLAT SECTION BASED ON A SLOPE OF 6.00/12

THIS TRUSS IS DESIGNED FOR RESIDENTIAL OR SMALL BUILDING REQUIREMENTS OF PART 9, NBCC 2010

THIS DESIGN COMPLIES WITH:
- PART 9 OF OBC 2012 , BCBC 2012 , ABC 2014
- CSA 086-09
- TPIC 2011

(55 % OF 27.2 P.S.F. G.S.L. PLUS 8.4 P.S.F. RAIN LOAD) EQUALS 23.3 P.S.F. SPECIFIED ROOF LIVE LOAD

ALLOWABLE DEFL.(LL)= L/360 (0.75")
CALCULATED VERT. DEFL.(LL) = L/ 999 (0.03")
ALLOWABLE DEFL.(TL)= L/360 (0.75")
CALCULATED VERT. DEFL.(TL) = L/ 999 (0.06")

CSI: TC=0.33 (4-5:1) , BC=0.21 (12-13:1) , WB=0.23 (2-13:1) , SSI=0.17 (4-5:1)

DOL LUMBER=1.00 NAIL=1.00 LS BEND=1.10 COMP=1.10 SHEAR=1.10 TENS= 1.10

COMPANION LIVE LOAD FACTOR = 0.50

TRUSS PLATE MANUFACTURER IS NOT RESPONSIBLE FOR QUALITY CONTROL IN THE TRUSS MANUFACTURING PLANT .

NAIL VALUES

PLATE	GRIP(DRY) (PSI) MAX	MIN	SHEAR (PLI) MAX	MIN	SECTION (PLI) MAX	MIN
MT20	618	354	1667	822	2284	1656

PLATE PLACEMENT TOL. = 0.250 inches

PLATE ROTATION TOL. = 5.0 Deg.

JSI GRIP= 0.89 (9) (INPUT = 0.90)
JSI METAL= 0.40 (2) (INPUT = 1.00)

LICENSED PROFESSIONAL ENGINEER
P. M. TREVISAN
100136551
March 16th, 2017
PROVINCE OF ONTARIO

RECEIVED
TOWN OF MILTON
MAR 29, 2017
17-5337
BUILDING DIVISION

KOTT

JOB NAME	TRUSS NAME	QUANTITY	PLY	JOB DESC.	DRWG NO.
PT0317-097	**T04**	**1**	**1**	TRUSS DESC. LECCO RIDGE-BLOCK 344	

KOTT , Stouffville, ON, CGC

Version 8.100 S Feb 9 2017 MiTek Industries, Inc. Thu Mar 16 11:57:50 2017 Page 1
ID:EvTixTQDI5yR1QLotZTBr_yE?HJ-ZIdbDGYvaWg09V0US0nB0uNd_IDtR1YewtMSx0zaNk?

SCALE = 1:58.1

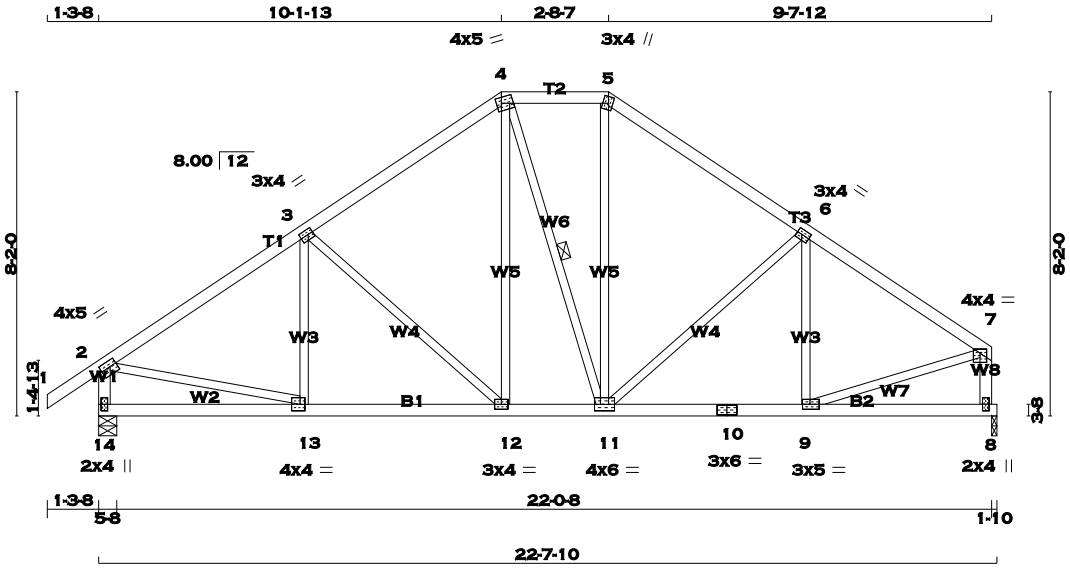

TOTAL WEIGHT = 105 lb

[M][F]

LUMBER

N. L. G. A. RULES

CHORDS	SIZE		LUMBER	DESCR.
1 - 4	2x4	DRY	No.2	SPF
4 - 5	2x4	DRY	No.2	SPF
5 - 7	2x4	DRY	No.2	SPF
14 - 2	2x4	DRY	No.2	SPF
8 - 7	2x4	DRY	No.2	SPF
14 - 10	2x4	DRY	No.2	SPF
10 - 8	2x4	DRY	No.2	SPF
ALL WEBS EXCEPT	2x3	DRY	No.2	SPF

DRY: SEASONED LUMBER.

PLATES (table is in inches)

JT	TYPE	PLATES	W	LEN	Y	X
2	TMVW-t	MT20	4.0	5.0	1.75	2.00
3	TMWW-t	MT20	3.0	4.0	1.50	1.50
4	TTWW-m	MT20	4.0	5.0	1.75	1.50
5	TTW+m	MT20	3.0	4.0	2.00	1.25
6	TMWW-t	MT20	3.0	4.0	1.50	1.50
7	TMVW-p	MT20	4.0	4.0	1.25	2.00
8	BMV1+p	MT20	2.0	4.0		
9	BMWW-t	MT20	3.0	5.0	1.50	2.25
10	BS-t	MT20	3.0	6.0		
11	BMWWW-t	MT20	4.0	6.0		
12	BMWW-t	MT20	3.0	4.0		
13	BMWW-t	MT20	4.0	4.0	2.00	1.50
14	BMV1+p	MT20	2.0	4.0		

A SIZE FOR SIZE SUBSTITUTION OF MITEK MII20 WITH TEE-LOK TL20 PLATES IS ALLOWED.

DIMENSIONS, SUPPORTS AND LOADINGS SPECIFIED BY FABRICATOR TO BE VERIFIED BY BUILDING DESIGNER

BEARINGS

JT	FACTORED GROSS REACTION VERT	HORZ	MAXIMUM FACTORED GROSS REACTION DOWN	HORZ	UPLIFT	INPUT BRG IN-SX	REQRD BRG IN-SX
14	1173	0	1173	0	0	5-8	5-8
8	1067	0	1067	0	0	1-10	1-10

UNFACTORED REACTIONS

JT	1ST LCASE COMBINED	MAX./MIN. COMPONENT REACTIONS SNOW	LIVE	PERM.LIVE	WIND	DEAD	SOIL
14	821	588 / 0	0 / 0	0 / 0	0 / 0	233 / 0	0 / 0
8	749	524 / 0	0 / 0	0 / 0	0 / 0	225 / 0	0 / 0

BEARING MATERIAL TO BE SPF NO.2 OR BETTER AT JOINT(S) 14, 8

BRACING

TOP CHORD TO BE SHEATHED OR MAX. PURLIN SPACING = 5.57 FT.
MAX. UNBRACED BOTTOM CHORD LENGTH = 10.00 FT. OR RIGID CEILING DIRECTLY APPLIED.

ALL PITCH BREAKS AND PERIMETER CORNER JOINTS MUST BE LATERALLY RESTRAINED.

1 - 2x3 SPF No.2 LATERAL BRACE(S) AT 1/ 2 LENGTH OF 4-11. DBS = 20-0-0 . CBF = 3 LBS.

DBS = DIAGONAL BRACE SPACING (MAX). CBF = CUMULATIVE BRACING FORCE. FASTEN LATERAL BRACE(S) USING (0.122"X3") SPIRAL NAILS : 1 NAIL FOR 2x3 BRACE(S), 2 FOR 1x4, 2x4, 2x5, 3 FOR 2x6, 4 FOR 2x8, 5 FOR 2x10, AND 6 FOR 2x12.

END VERTICAL(S) MUST BE SHEATHED OR HAVE BRACES AS INDICATED IN THE MAX. UNBRACED LENGTH COLUMN OF THE TABLE BELOW

LOADING

TOTAL LOAD CASES: (4)

CHORDS

MEMB. FR-TO	MAX. FACTORED FORCE (LBS)	FACTORED VERT. LOAD (PLF) FROM	TO	LC1 MAX CSI (LC)	MAX. UNBRAC LENGTH
1- 2	0 / 29	-77.4	-77.4	0.10 (1)	10.00
2- 3	-1177 / 0	-77.4	-77.4	0.28 (1)	5.57
3- 4	-936 / 0	-77.4	-77.4	0.26 (1)	6.08
4- 5	-752 / 0	-77.4	-77.4	0.08 (1)	6.25
5- 6	-926 / 0	-77.4	-77.4	0.24 (1)	6.14
6- 7	-1089 / 0	-77.4	-77.4	0.24 (1)	5.77
14- 2	-1136 / 0	0.0	0.0	0.12 (1)	7.45
8- 7	-1034 / 0	0.0	0.0	0.11 (1)	7.72
14-13	0 / 0	-17.5	-17.5	0.12 (4)	10.00
13-12	0 / 1000	-17.5	-17.5	0.22 (1)	10.00
12-11	0 / 759	-17.5	-17.5	0.16 (1)	10.00
11-10	0 / 928	-17.5	-17.5	0.20 (1)	10.00
10- 9	0 / 928	-17.5	-17.5	0.20 (1)	10.00
9- 8	0 / 0	-17.5	-17.5	0.10 (4)	10.00

WEBS

MEMB. FR-TO	MAX. FACTORED FORCE (LBS)	MAX CSI (LC)
13- 3	-106 / 56	0.04 (1)
3-12	-329 / 0	0.28 (1)
12- 4	0 / 276	0.06 (1)
4-11	-20 / 0	0.01 (1)
11- 5	0 / 248	0.06 (1)
11- 6	-240 / 0	0.21 (1)
9- 6	-186 / 27	0.06 (1)
2-13	0 / 1022	0.23 (1)
9- 7	0 / 969	0.22 (1)

DESIGN CRITERIA

SPECIFIED LOADS:

TOP CH.	LL	=	23.3	PSF
	DL	=	3.0	PSF
BOT CH.	LL	=	0.0	PSF
	DL	=	7.0	PSF
TOTAL LOAD		=	33.3	PSF

SPACING = 24.0 IN. C/C

LOADING IN FLAT SECTION BASED ON A SLOPE OF 6.00/12

THIS TRUSS IS DESIGNED FOR RESIDENTIAL OR SMALL BUILDING REQUIREMENTS OF PART 9, NBCC 2010

THIS DESIGN COMPLIES WITH:
- PART 9 OF OBC 2012 , BCBC 2012 , ABC 2014
- CSA 086-09
- TPIC 2011

(55 % OF 27.2 P.S.F. G.S.L. PLUS 8.4 P.S.F. RAIN LOAD) EQUALS 23.3 P.S.F. SPECIFIED ROOF LIVE LOAD

ALLOWABLE DEFL.(LL)= L/360 (0.75")
CALCULATED VERT. DEFL.(LL) = L/ 999 (0.03")
ALLOWABLE DEFL.(TL)= L/360 (0.75")
CALCULATED VERT. DEFL.(TL) = L/ 999 (0.06")

CSI: TC=0.28 (2-3:1) , BC=0.22 (12-13:1) , WB=0.28 (3-12:1) , SSI=0.16 (2-3:1)

DOL LUMBER=1.00 NAIL=1.00 LS BEND=1.10 COMP=1.10 SHEAR=1.10 TENS= 1.10

COMPANION LIVE LOAD FACTOR = 0.50

TRUSS PLATE MANUFACTURER IS NOT RESPONSIBLE FOR QUALITY CONTROL IN THE TRUSS MANUFACTURING PLANT .

NAIL VALUES

PLATE	GRIP(DRY) (PSI) MAX	MIN	SHEAR (PLI) MAX	MIN	SECTION (PLI) MAX	MIN
MT20	618	354	1667	822	2284	1656

PLATE PLACEMENT TOL. = 0.250 inches

PLATE ROTATION TOL. = 5.0 Deg.

JSI GRIP= 0.90 (9) (INPUT = 0.90)
JSI METAL= 0.40 (2) (INPUT = 1.00)

LICENSED PROFESSIONAL ENGINEER
P. M. TREVISAN
100136551
March 16th, 2017
PROVINCE OF ONTARIO

RECEIVED
TOWN OF MILTON
MAR 29, 2017
17-5337
BUILDING DIVISION

KOTT

JOB NAME	TRUSS NAME	QUANTITY	PLY	JOB DESC.	DRWG NO.
PT0317-097	T05	1	1	TRUSS DESC. LECCO RIDGE-BLOCK 344	

KOTT , Stouffville, ON, CGC

Version 8.100 S Feb 9 2017 MiTek Industries, Inc. Thu Mar 16 11:57:50 2017 Page 1
ID:EvTixTQDI5yR1QLotZTBr_yE?HJ-ZIdbDGYvaWg09V0US0nB0uNcfIDhR_hewtMSx0zaNk?

SCALE = 1:65.1

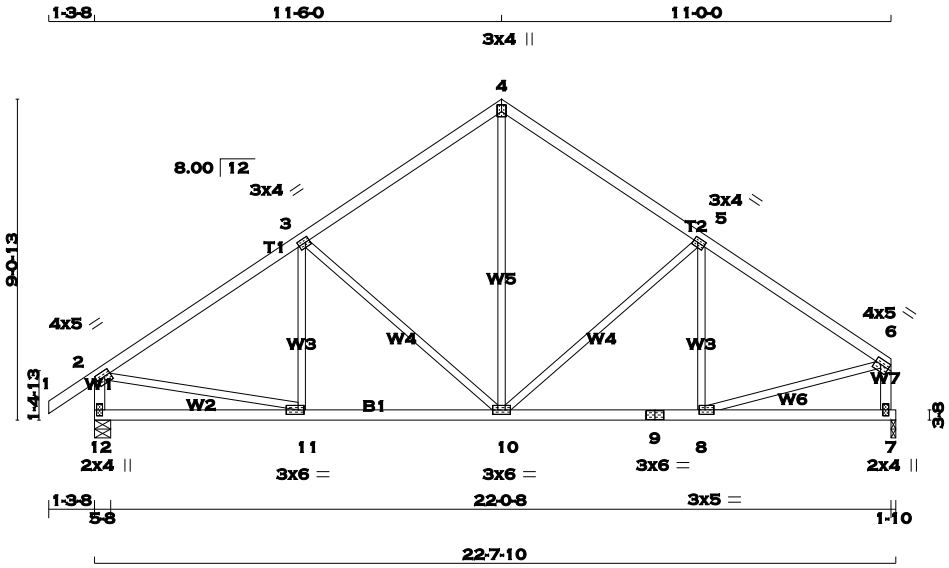

TOTAL WEIGHT = 96 lb
[M][F]

LUMBER
N. L. G. A. RULES

CHORDS	SIZE		LUMBER	DESCR.
1 - 4	2x4	DRY	No.2	SPF
4 - 6	2x4	DRY	No.2	SPF
12 - 2	2x4	DRY	No.2	SPF
7 - 6	2x4	DRY	No.2	SPF
12 - 9	2x4	DRY	No.2	SPF
9 - 7	2x4	DRY	No.2	SPF
ALL WEBS EXCEPT	2x3	DRY	No.2	SPF

DRY: SEASONED LUMBER.

PLATES (table is in inches)

JT	TYPE	PLATES	W	LEN	Y	X
2	TMVW-t	MT20	4.0	5.0	1.75	2.00
3	TMWW-t	MT20	3.0	4.0	1.50	1.50
4	TTW+p	MT20	3.0	4.0	2.25	1.50
5	TMWW-t	MT20	3.0	4.0	1.50	1.50
6	TMVW-t	MT20	4.0	5.0	1.75	Edge
7	BMV1+p	MT20	2.0	4.0		
8	BMWW-t	MT20	3.0	5.0	1.50	2.00
9	BS-t	MT20	3.0	6.0		
10	BMWWW-t	MT20	3.0	6.0		
11	BMWW-t	MT20	3.0	6.0	1.50	2.00
12	BMV1+p	MT20	2.0	4.0		

Edge - INDICATES REFERENCE CORNER OF PLATE TOUCHES EDGE OF CHORD.

A SIZE FOR SIZE SUBSTITUTION OF MITEK MII20 WITH TEE-LOK TL20 PLATES IS ALLOWED.

DIMENSIONS, SUPPORTS AND LOADINGS SPECIFIED BY FABRICATOR TO BE VERIFIED BY BUILDING DESIGNER

BEARINGS

JT	FACTORED GROSS REACTION VERT	HORZ	MAXIMUM FACTORED GROSS REACTION DOWN	HORZ	UPLIFT	INPUT BRG IN-SX	REQRD BRG IN-SX
12	1173	0	1173	0	0	5-8	5-8
7	1067	0	1067	0	0	1-10	1-10

UNFACTORED REACTIONS

JT	1ST LCASE COMBINED	MAX./MIN. COMPONENT REACTIONS SNOW	LIVE	PERM.LIVE	WIND	DEAD	SOIL
12	821	588 / 0	0 / 0	0 / 0	0 / 0	233 / 0	0 / 0
7	749	524 / 0	0 / 0	0 / 0	0 / 0	225 / 0	0 / 0

BEARING MATERIAL TO BE SPF NO.2 OR BETTER AT JOINT(S) 12, 7

BRACING
TOP CHORD TO BE SHEATHED OR MAX. PURLIN SPACING = 5.46 FT.
MAX. UNBRACED BOTTOM CHORD LENGTH = 10.00 FT. OR RIGID CEILING DIRECTLY APPLIED.

ALL PITCH BREAKS AND PERIMETER CORNER JOINTS MUST BE LATERALLY RESTRAINED.

LOADING
TOTAL LOAD CASES: (4)

CHORDS

MEMB. FR-TO	MAX. FACTORED FORCE (LBS)	FACTORED VERT. LOAD (PLF) FROM	TO	LC1	MAX CSI (LC)	MAX. UNBRAC LENGTH
1- 2	0 / 29	-77.4	-77.4	0.10	(1)	10.00
2- 3	-1172 / 0	-77.4	-77.4	0.36	(1)	5.46
3- 4	-861 / 0	-77.4	-77.4	0.34	(1)	6.15
4- 5	-858 / 0	-77.4	-77.4	0.32	(1)	6.20
5- 6	-1100 / 0	-77.4	-77.4	0.32	(1)	5.65
12- 2	-1131 / 0	0.0	0.0	0.12	(1)	7.46
7- 6	-1029 / 0	0.0	0.0	0.11	(1)	7.74
12-11	0 / 0	-17.5	-17.5	0.14	(4)	10.00
11-10	0 / 1000	-17.5	-17.5	0.23	(1)	10.00
10- 9	0 / 940	-17.5	-17.5	0.21	(1)	10.00
9- 8	0 / 940	-17.5	-17.5	0.21	(1)	10.00
8- 7	0 / 0	-17.5	-17.5	0.12	(4)	10.00

WEBS

MEMB. FR-TO	MAX. FACTORED FORCE (LBS)	MAX CSI (LC)
11- 3	-74 / 73	0.03 (1)
3-10	-412 / 0	0.47 (1)
10- 4	0 / 589	0.13 (1)
10- 5	-332 / 0	0.38 (1)
8- 5	-143 / 48	0.06 (1)
2-11	0 / 1017	0.23 (1)
8- 6	0 / 972	0.22 (1)

DESIGN CRITERIA

SPECIFIED LOADS:

TOP	CH.	LL	=	23.3	PSF
		DL	=	3.0	PSF
BOT	CH.	LL	=	0.0	PSF
		DL	=	7.0	PSF
TOTAL	LOAD		=	33.3	PSF

SPACING = 24.0 IN. C/C

THIS TRUSS IS DESIGNED FOR RESIDENTIAL OR SMALL BUILDING REQUIREMENTS OF PART 9, NBCC 2010

THIS DESIGN COMPLIES WITH:
- PART 9 OF OBC 2012 , BCBC 2012 , ABC 2014
- CSA 086-09
- TPIC 2011

(55 % OF 27.2 P.S.F. G.S.L. PLUS 8.4 P.S.F. RAIN LOAD) EQUALS 23.3 P.S.F. SPECIFIED ROOF LIVE LOAD

ALLOWABLE DEFL.(LL)= L/360 (0.75")
CALCULATED VERT. DEFL.(LL) = L/ 999 (0.03")
ALLOWABLE DEFL.(TL)= L/360 (0.75")
CALCULATED VERT. DEFL.(TL) = L/ 999 (0.07")

CSI: TC=0.36 (2-3:1) , BC=0.23 (10-11:1) , WB=0.47 (3-10:1) , SSI=0.18 (2-3:1)

DOL LUMBER=1.00 NAIL=1.00 LS BEND=1.10 COMP=1.10 SHEAR=1.10 TENS= 1.10

COMPANION LIVE LOAD FACTOR = 0.50

TRUSS PLATE MANUFACTURER IS NOT RESPONSIBLE FOR QUALITY CONTROL IN THE TRUSS MANUFACTURING PLANT .

NAIL VALUES

PLATE	GRIP(DRY) (PSI) MAX	MIN	SHEAR (PLI) MAX	MIN	SECTION (PLI) MAX	MIN
MT20	618	354	1667	822	2284	1656

PLATE PLACEMENT TOL. = 0.250 inches

PLATE ROTATION TOL. = 0.5 Deg.

JSI GRIP= 0.88 (10) (INPUT = 0.90)
JSI METAL= 0.41 (2) (INPUT = 1.00)

LICENSED PROFESSIONAL ENGINEER
P. M. TREVISAN
100136551
March 16th, 2017
PROVINCE OF ONTARIO

RECEIVED
TOWN OF MILTON
MAR 29, 2017
17-5337
BUILDING DIVISION

KOTT

SCALE = 1:44.0

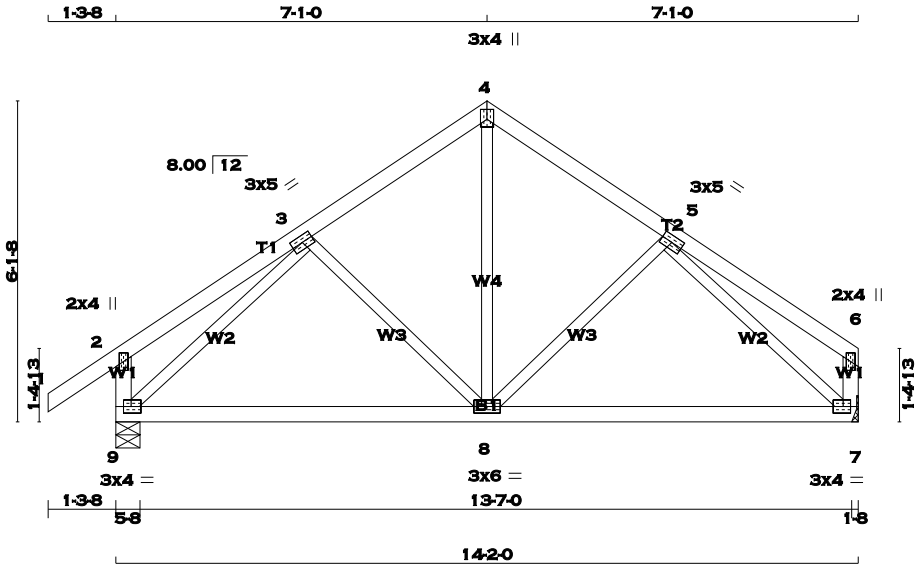

TOTAL WEIGHT = 2 X 59 = 119 lb

[M][F]

LUMBER

N. L. G. A. RULES

CHORDS	SIZE		LUMBER	DESCR.
1 - 4	2x4	DRY	No.2	SPF
4 - 6	2x4	DRY	No.2	SPF
9 - 2	2x4	DRY	No.2	SPF
7 - 6	2x4	DRY	No.2	SPF
9 - 7	2x4	DRY	No.2	SPF
ALL WEBS EXCEPT	2x3	DRY	No.2	SPF

DRY: SEASONED LUMBER.

PLATES (table is in inches)

JT	TYPE	PLATES	W	LEN	Y	X
2	TMV+p	MT20	2.0	4.0		
3	TMWW-t	MT20	3.0	5.0		
4	TTW+p	MT20	3.0	4.0	2.25	1.50
5	TMWW-t	MT20	3.0	5.0		
6	TMV+p	MT20	2.0	4.0		
7	BMVW1-t	MT20	3.0	4.0	1.50	1.75
8	BMWWW-t	MT20	3.0	6.0		
9	BMVW1-t	MT20	3.0	4.0	1.50	1.75

A SIZE FOR SIZE SUBSTITUTION OF MITEK MII20 WITH TEE-LOK TL20 PLATES IS ALLOWED.

DIMENSIONS, SUPPORTS AND LOADINGS SPECIFIED BY FABRICATOR TO BE VERIFIED BY BUILDING DESIGNER

BEARINGS

JT	FACTORED GROSS REACTION VERT	HORZ	MAXIMUM FACTORED GROSS REACTION DOWN	HORZ	UPLIFT	INPUT BRG IN-SX	REQRD BRG IN-SX
9	778	0	778	0	0	5-8	5-8
7	672	0	672	0	0	HANGER BY OTHERS MIN. SEAT SIZE: 1-8	

UNFACTORED REACTIONS

JT	1ST LCASE COMBINED	MAX./MIN. COMPONENT REACTIONS SNOW	LIVE	PERM.LIVE	WIND	DEAD	SOIL
9	544	394 / 0	0 / 0	0 / 0	0 / 0	150 / 0	0 / 0
7	472	330 / 0	0 / 0	0 / 0	0 / 0	142 / 0	0 / 0

BEARING MATERIAL TO BE SPF NO.2 OR BETTER AT JOINT(S) 9

BRACING

TOP CHORD TO BE SHEATHED OR MAX. PURLIN SPACING = 6.25 FT.
MAX. UNBRACED BOTTOM CHORD LENGTH = 10.00 FT. OR RIGID CEILING DIRECTLY APPLIED.

ALL PITCH BREAKS AND PERIMETER CORNER JOINTS MUST BE LATERALLY RESTRAINED.

LOADING

TOTAL LOAD CASES: (4)

CHORDS

MEMB. FR-TO	MAX. FORCE (LBS)	FACTORED VERT. LOAD (PLF) FROM	TO	LC1 MAX CSI (LC)	MAX. UNBRAC LENGTH
1- 2	0 / 29	-77.4	-77.4	0.10 (1)	10.00
2- 3	0 / 17	-77.4	-77.4	0.15 (1)	10.00
3- 4	-531 / 0	-77.4	-77.4	0.12 (1)	6.25
4- 5	-531 / 0	-77.4	-77.4	0.12 (1)	6.25
5- 6	0 / 17	-77.4	-77.4	0.15 (1)	10.00
9- 2	-212 / 0	0.0	0.0	0.02 (1)	7.81
7- 6	-106 / 0	0.0	0.0	0.01 (1)	7.81
9- 8	0 / 534	-17.5	-17.5	0.29 (4)	10.00
8- 7	0 / 534	-17.5	-17.5	0.29 (4)	10.00

WEBS

MEMB. FR-TO	MAX. FORCE (LBS)	MAX CSI (LC)
8- 4	0 / 357	0.08 (1)
8- 5	-147 / 6	0.06 (1)
3- 8	-147 / 6	0.06 (1)
9- 3	-744 / 0	0.29 (1)
5- 7	-744 / 0	0.29 (1)

DESIGN CRITERIA

SPECIFIED LOADS:

TOP	CH.	LL	=	23.3	PSF
		DL	=	3.0	PSF
BOT	CH.	LL	=	0.0	PSF
		DL	=	7.0	PSF
TOTAL	LOAD		=	33.3	PSF

SPACING = 24.0 IN. C/C

THIS TRUSS IS DESIGNED FOR RESIDENTIAL OR SMALL BUILDING REQUIREMENTS OF PART 9, NBCC 2010

THIS DESIGN COMPLIES WITH:
- PART 9 OF OBC 2012 , BCBC 2012 , ABC 2014
- CSA 086-09
- TPIC 2011

(55 % OF 27.2 P.S.F. G.S.L. PLUS 8.4 P.S.F. RAIN LOAD) EQUALS 23.3 P.S.F. SPECIFIED ROOF LIVE LOAD

ALLOWABLE DEFL.(LL)= L/360 (0.47")
CALCULATED VERT. DEFL.(LL) = L/ 999 (0.01")
ALLOWABLE DEFL.(TL)= L/360 (0.47")
CALCULATED VERT. DEFL.(TL) = L/ 999 (0.06")

CSI: TC=0.15 (2-3:1) , BC=0.29 (8-9:4) , WB=0.29 (3-9:1) , SSI=0.11 (3-4:1)

DOL LUMBER=1.00 NAIL=1.00 LS BEND=1.10 COMP=1.10 SHEAR=1.10 TENS= 1.10

COMPANION LIVE LOAD FACTOR = 0.50

TRUSS PLATE MANUFACTURER IS NOT RESPONSIBLE FOR QUALITY CONTROL IN THE TRUSS MANUFACTURING PLANT .

NAIL VALUES

PLATE	GRIP(DRY) (PSI) MAX	MIN	SHEAR (PLI) MAX	MIN	SECTION (PLI) MAX	MIN
MT20	618	354	1667	822	2284	1656

PLATE PLACEMENT TOL. = 0.250 inches

PLATE ROTATION TOL. = 5.0 Deg.

JSI GRIP= 0.82 (3) (INPUT = 0.90)
JSI METAL= 0.21 (5) (INPUT = 1.00)

LICENSED PROFESSIONAL ENGINEER
P. M. TREVISAN
100136551
March 16th, 2017
PROVINCE OF ONTARIO

RECEIVED
TOWN OF MILTON
MAR 29, 2017
17-5337
BUILDING DIVISION

KOTT

JOB NAME	TRUSS NAME	QUANTITY	PLY	JOB DESC.	DRWG NO.
PT0317-097	T07	1	1	TRUSS DESC. LECCO RIDGE-BLOCK 344	

KOTT , Stouffville, ON, CGC

Version 8.100 S Feb 9 2017 MiTek Industries, Inc. Thu Mar 16 11:57:51 2017 Page 1
ID:EvTixTQDI5yR1QLotZTBr_yE?HJ-1UBzQcYXLqotnfbg0kIQY6wj2iYUAO3n8X5?TSzaNk_

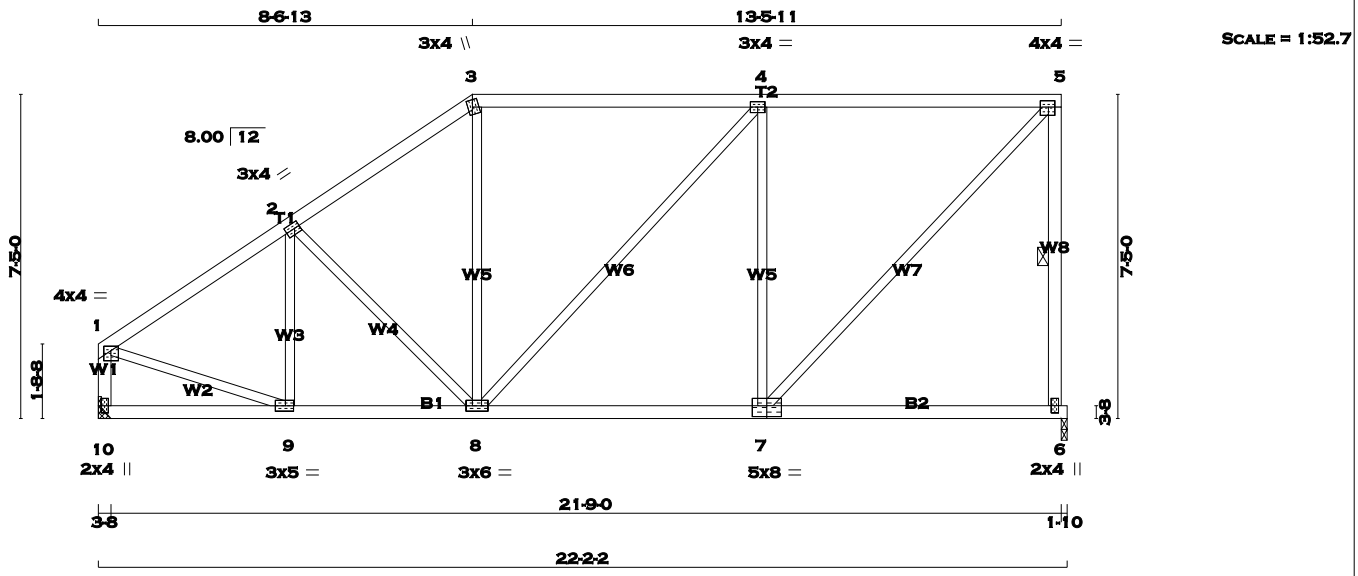

TOTAL WEIGHT = 100 lb
[M]

LUMBER
N. L. G. A. RULES

CHORDS	SIZE		LUMBER	DESCR.
1 - 3	2x4	DRY	No.2	SPF
3 - 5	2x4	DRY	No.2	SPF
6 - 5	2x4	DRY	No.2	SPF
10 - 1	2x4	DRY	No.2	SPF
10 - 7	2x4	DRY	No.2	SPF
7 - 6	2x4	DRY	No.2	SPF
ALL WEBS EXCEPT	2x3	DRY	No.2	SPF

DRY: SEASONED LUMBER.

PLATES (table is in inches)

JT	TYPE	PLATES	W	LEN	Y	X
1	TMVW-p	MT20	4.0	4.0	1.25	2.00
2	TMWW-t	MT20	3.0	4.0	1.50	1.50
3	TTW+m	MT20	3.0	4.0	2.00	1.25
4	TMWW-t	MT20	3.0	4.0		
5	TMVW-t	MT20	4.0	4.0	1.75	1.75
6	BMV1+p	MT20	2.0	4.0		
7	BSWW-l	MT20	5.0	8.0	3.00	4.00
8	BMWWW-t	MT20	3.0	6.0		
9	BMWW-t	MT20	3.0	5.0	1.50	2.25
10	BMV1+p	MT20	2.0	4.0		

A SIZE FOR SIZE SUBSTITUTION OF MITEK MII20 WITH TEE-LOK TL20 PLATES IS ALLOWED.

DIMENSIONS, SUPPORTS AND LOADINGS SPECIFIED BY FABRICATOR TO BE VERIFIED BY BUILDING DESIGNER

BEARINGS

JT	FACTORED GROSS REACTION VERT	HORZ	MAXIMUM FACTORED GROSS REACTION DOWN	HORZ	UPLIFT	INPUT BRG IN-SX	REQRD BRG IN-SX
6	1045	0	1045	0	0	1-10	1-10
10	1045	0	1045	0	0	HANGER BY OTHERS	
						MIN. SEAT SIZE: 3-8	

UNFACTORED REACTIONS

JT	1ST LCASE COMBINED	MAX./MIN. COMPONENT REACTIONS SNOW	LIVE	PERM.LIVE	WIND	DEAD	SOIL
6	734	513 / 0	0 / 0	0 / 0	0 / 0	220 / 0	0 / 0
10	734	513 / 0	0 / 0	0 / 0	0 / 0	220 / 0	0 / 0

BEARING MATERIAL TO BE SPF NO.2 OR BETTER AT JOINT(S) 6

BRACING
TOP CHORD TO BE SHEATHED OR MAX. PURLIN SPACING = 5.71 FT.
MAX. UNBRACED BOTTOM CHORD LENGTH = 10.00 FT. OR RIGID CEILING DIRECTLY APPLIED.

ALL PITCH BREAKS AND PERIMETER CORNER JOINTS MUST BE LATERALLY RESTRAINED.

1 - 2x3 SPF No.2 LATERAL BRACE(S) AT 1/ 2 LENGTH OF 5-6. DBS = 14-0-0 . CBF = 87 LBS.

DBS = DIAGONAL BRACE SPACING (MAX). CBF = CUMULATIVE BRACING FORCE. FASTEN LATERAL BRACE(S) USING (0.122"X3") SPIRAL NAILS : 1 NAIL FOR 2x3 BRACE(S), 2 FOR 1x4, 2x4, 2x5, 3 FOR 2x6, 4 FOR 2x8, 5 FOR 2x10, AND 6 FOR 2x12.

END VERTICAL(S) MUST BE SHEATHED OR HAVE BRACES AS INDICATED IN THE MAX. UNBRACED LENGTH COLUMN OF THE TABLE BELOW

LOADING
TOTAL LOAD CASES: (4)

CHORDS

MEMB. FR-TO	MAX. FACTORED FORCE (LBS)	FACTORED VERT. LOAD (PLF) FROM	TO	LC1 MAX CSI (LC)	MAX. UNBRAC LENGTH
1- 2	-1056 / 0	-77.4	-77.4	0.26 (1)	5.80
2- 3	-953 / 0	-77.4	-77.4	0.25 (1)	6.03
3- 4	-776 / 0	-77.4	-77.4	0.64 (1)	5.71
4- 5	-764 / 0	-77.4	-77.4	0.64 (1)	5.75
6- 5	-997 / 0	0.0	0.0	0.25 (1)	6.25
10- 1	-1012 / 0	0.0	0.0	0.11 (1)	7.78
10- 9	0 / 0	-17.5	-17.5	0.07 (4)	10.00
9- 8	0 / 896	-17.5	-17.5	0.20 (1)	10.00
8- 7	0 / 764	-17.5	-17.5	0.26 (4)	10.00
7- 6	0 / 0	-17.5	-17.5	0.20 (4)	10.00

WEBS

MEMB. FR-TO	MAX. FACTORED FORCE (LBS)	MAX CSI (LC)
9- 2	-206 / 6	0.07 (1)
2- 8	-175 / 0	0.11 (1)
8- 3	0 / 203	0.05 (1)
8- 4	0 / 17	0.01 (4)
7- 4	-660 / 0	0.65 (1)
7- 5	0 / 1103	0.25 (1)
1- 9	0 / 940	0.21 (1)

DESIGN CRITERIA

SPECIFIED LOADS:

TOP	CH.	LL	=	23.3	PSF
		DL	=	3.0	PSF
BOT	CH.	LL	=	0.0	PSF
		DL	=	7.0	PSF
TOTAL	LOAD		=	33.3	PSF

SPACING = 24.0 IN. C/C

LOADING IN FLAT SECTION BASED ON A SLOPE OF 6.00/12

THIS TRUSS IS DESIGNED FOR RESIDENTIAL OR SMALL BUILDING REQUIREMENTS OF PART 9, NBCC 2010

THIS DESIGN COMPLIES WITH:
- PART 9 OF OBC 2012 , BCBC 2012 , ABC 2014
- CSA 086-09
- TPIC 2011

(55 % OF 27.2 P.S.F. G.S.L. PLUS 8.4 P.S.F. RAIN LOAD) EQUALS 23.3 P.S.F. SPECIFIED ROOF LIVE LOAD

ALLOWABLE DEFL.(LL)= L/360 (0.73")
CALCULATED VERT. DEFL.(LL) = L/ 999 (0.03")
ALLOWABLE DEFL.(TL)= L/360 (0.73")
CALCULATED VERT. DEFL.(TL) = L/ 999 (0.07")

CSI: TC=0.64 (4-5:1) , BC=0.26 (7-8:4) , WB=0.65 (4-7:1) , SSI=0.26 (4-5:1)

DOL LUMBER=1.00 NAIL=1.00 LS BEND=1.10 COMP=1.10 SHEAR=1.10 TENS= 1.10

COMPANION LIVE LOAD FACTOR = 0.50

TRUSS PLATE MANUFACTURER IS NOT RESPONSIBLE FOR QUALITY CONTROL IN THE TRUSS MANUFACTURING PLANT .

NAIL VALUES

PLATE	GRIP(DRY) (PSI) MAX	MIN	SHEAR (PLI) MAX	MIN	SECTION (PLI) MAX	MIN
MT20	618	354	1667	822	2284	1656

PLATE PLACEMENT TOL. = 0.250 inches

PLATE ROTATION TOL. = 5.0 Deg.

JSI GRIP= 0.88 (8) (INPUT = 0.90)
JSI METAL= 0.31 (1) (INPUT = 1.00)

LICENSED PROFESSIONAL ENGINEER
R. M. TREVISAN
100136551
March 16th, 2017
PROVINCE OF ONTARIO

RECEIVED
TOWN OF MILTON
MAR 29, 2017
17-5337
BUILDING DIVISION

KOTT

JOB NAME	TRUSS NAME	QUANTITY	PLY	JOB DESC.	DRWG NO.
PT0317-097	**T08**	**1**	**1**	TRUSS DESC. LECCO RIDGE-BLOCK 344	

KOTT , Stouffville, ON, CGC

Version 8.100 S Feb 9 2017 MiTek Industries, Inc. Thu Mar 16 11:57:52 2017 Page 1
ID:EvTixTQDI5yR1QLotZTBr_yE?HJ-VglMdyZ968wkPpAsZRpf5JTw76vbvxWxNBrZ?uzaNjz

SCALE = 1:62.2

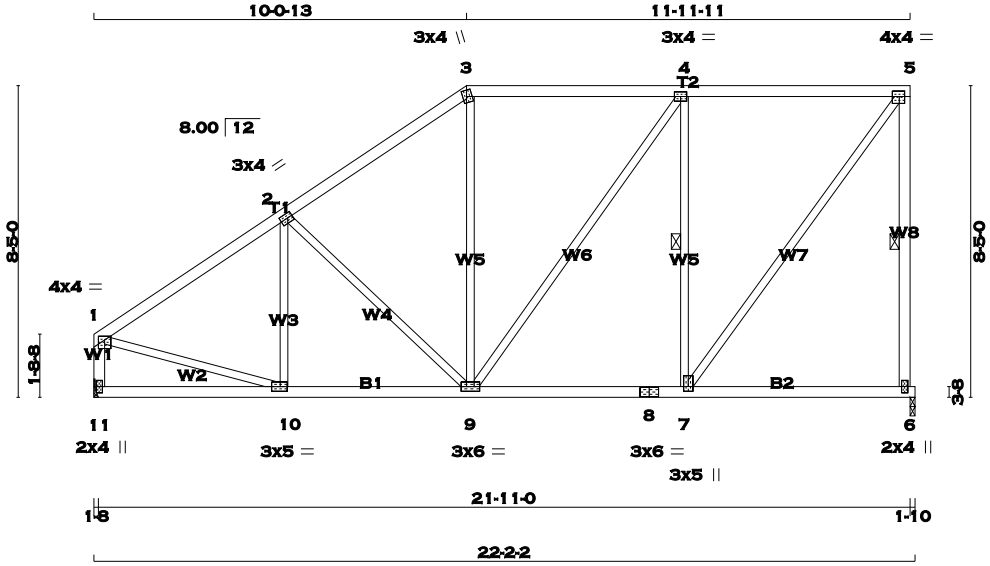

TOTAL WEIGHT = 105 lb
[M]

LUMBER
N. L. G. A. RULES

CHORDS	SIZE		LUMBER	DESCR.
1 - 3	2x4	DRY	No.2	SPF
3 - 5	2x4	DRY	No.2	SPF
6 - 5	2x4	DRY	No.2	SPF
11 - 1	2x4	DRY	No.2	SPF
11 - 8	2x4	DRY	No.2	SPF
8 - 6	2x4	DRY	No.2	SPF
ALL WEBS EXCEPT	2x3	DRY	No.2	SPF

DRY: SEASONED LUMBER.

PLATES (table is in inches)

JT	TYPE	PLATES	W	LEN	Y	X
1	TMVW-p	MT20	4.0	4.0	1.25	2.00
2	TMWW-t	MT20	3.0	4.0	1.50	1.50
3	TTW+m	MT20	3.0	4.0	2.00	1.25
4	TMWW-t	MT20	3.0	4.0		
5	TMVW-t	MT20	4.0	4.0	1.75	1.75
6	BMV1+p	MT20	2.0	4.0		
7	BMWW+t	MT20	3.0	5.0	1.50	1.50
8	BS-t	MT20	3.0	6.0		
9	BMWWW-t	MT20	3.0	6.0		
10	BMWW-t	MT20	3.0	5.0	1.50	2.25
11	BMV1+p	MT20	2.0	4.0		

A SIZE FOR SIZE SUBSTITUTION OF MITEK MII20 WITH TEE-LOK TL20 PLATES IS ALLOWED.

DIMENSIONS, SUPPORTS AND LOADINGS SPECIFIED BY FABRICATOR TO BE VERIFIED BY BUILDING DESIGNER

BEARINGS

JT	FACTORED GROSS REACTION VERT	HORZ	MAXIMUM FACTORED GROSS REACTION DOWN	HORZ	UPLIFT	INPUT BRG IN-SX	REQRD BRG IN-SX
6	1045	0	1045	0	0	1-10	1-10
11	1045	0	1045	0	0	HANGER BY OTHERS	
						MIN. SEAT SIZE: 1-8	

UNFACTORED REACTIONS

JT	1ST LCASE COMBINED	MAX./MIN. COMPONENT REACTIONS SNOW	LIVE	PERM.LIVE	WIND	DEAD	SOIL
6	734	513 / 0	0 / 0	0 / 0	0 / 0	220 / 0	0 / 0
11	734	513 / 0	0 / 0	0 / 0	0 / 0	220 / 0	0 / 0

BEARING MATERIAL TO BE SPF NO.2 OR BETTER AT JOINT(S) 6

BRACING
TOP CHORD TO BE SHEATHED OR MAX. PURLIN SPACING = 5.61 FT.
MAX. UNBRACED BOTTOM CHORD LENGTH = 10.00 FT. OR RIGID CEILING DIRECTLY APPLIED.

ALL PITCH BREAKS AND PERIMETER CORNER JOINTS MUST BE LATERALLY RESTRAINED.

1 - 2x3 SPF No.2 LATERAL BRACE(S) AT 1/ 2 LENGTH OF 5-6. DBS = 14-0-0 . CBF = 88 LBS.
1 - 2x3 SPF No.2 LATERAL BRACE(S) AT 1/ 2 LENGTH OF 4-7. DBS = 20-0-0 . CBF = 88 LBS.

DBS = DIAGONAL BRACE SPACING (MAX). CBF = CUMULATIVE BRACING FORCE. FASTEN LATERAL BRACE(S) USING (0.122"X3") SPIRAL NAILS : 1 NAIL FOR 2x3 BRACE(S), 2 FOR 1x4, 2x4, 2x5, 3 FOR 2x6, 4 FOR 2x8, 5 FOR 2x10, AND 6 FOR 2x12.

END VERTICAL(S) MUST BE SHEATHED OR HAVE BRACES AS INDICATED IN THE MAX. UNBRACED LENGTH COLUMN OF THE TABLE BELOW

LOADING
TOTAL LOAD CASES: (4)

CHORDS

MEMB. FR-TO	MAX. FACTORED FORCE (LBS)	FACTORED VERT. LOAD LC1 (PLF) FROM	TO	MAX CSI (LC)	MAX. UNBRAC LENGTH
1- 2	-1072 / 0	-77.4	-77.4	0.37 (1)	5.61
2- 3	-876 / 0	-77.4	-77.4	0.35 (1)	6.06
3- 4	-708 / 0	-77.4	-77.4	0.49 (1)	6.25
4- 5	-617 / 0	-77.4	-77.4	0.49 (1)	6.25
6- 5	-1002 / 0	0.0	0.0	0.32 (1)	6.25
11- 1	-1008 / 0	0.0	0.0	0.11 (1)	7.80
11-10	0 / 0	-17.5	-17.5	0.11 (4)	10.00
10- 9	0 / 913	-17.5	-17.5	0.20 (1)	10.00
9- 8	0 / 617	-17.5	-17.5	0.20 (4)	10.00
8- 7	0 / 617	-17.5	-17.5	0.20 (4)	10.00
7- 6	0 / 0	-17.5	-17.5	0.16 (4)	10.00

WEBS

MEMB. FR-TO	MAX. FACTORED FORCE (LBS)	MAX CSI (LC)
10- 2	-149 / 39	0.06 (1)
2- 9	-287 / 0	0.26 (1)
9- 3	0 / 158	0.04 (4)
9- 4	0 / 158	0.04 (1)
7- 4	-703 / 0	0.32 (1)
7- 5	0 / 1028	0.23 (1)
1-10	0 / 946	0.21 (1)

DESIGN CRITERIA

SPECIFIED LOADS:

TOP	CH.	LL	=	23.3	PSF
		DL	=	3.0	PSF
BOT	CH.	LL	=	0.0	PSF
		DL	=	7.0	PSF
TOTAL	LOAD		=	33.3	PSF

SPACING = 24.0 IN. C/C

LOADING IN FLAT SECTION BASED ON A SLOPE OF 6.00/12

THIS TRUSS IS DESIGNED FOR RESIDENTIAL OR SMALL BUILDING REQUIREMENTS OF PART 9, NBCC 2010

THIS DESIGN COMPLIES WITH:
- PART 9 OF OBC 2012 , BCBC 2012 , ABC 2014
- CSA 086-09
- TPIC 2011

(55 % OF 27.2 P.S.F. G.S.L. PLUS 8.4 P.S.F. RAIN LOAD) EQUALS 23.3 P.S.F. SPECIFIED ROOF LIVE LOAD

ALLOWABLE DEFL.(LL)= L/360 (0.73")
CALCULATED VERT. DEFL.(LL) = L/ 999 (0.03")
ALLOWABLE DEFL.(TL)= L/360 (0.73")
CALCULATED VERT. DEFL.(TL) = L/ 999 (0.06")

CSI: TC=0.49 (3-4:1) , BC=0.20 (7-9:4) , WB=0.32 (4-7:1) , SSI=0.23 (4-5:1)

DOL LUMBER=1.00 NAIL=1.00 LS BEND=1.10 COMP=1.10 SHEAR=1.10 TENS= 1.10

COMPANION LIVE LOAD FACTOR = 0.50

TRUSS PLATE MANUFACTURER IS NOT RESPONSIBLE FOR QUALITY CONTROL IN THE TRUSS MANUFACTURING PLANT .

NAIL VALUES

PLATE	GRIP(DRY) (PSI) MAX	MIN	SHEAR (PLI) MAX	MIN	SECTION (PLI) MAX	MIN
MT20	618	354	1667	822	2284	1656

PLATE PLACEMENT TOL. = 0.250 inches

PLATE ROTATION TOL. = 5.0 Deg.

JSI GRIP= 0.89 (7) (INPUT = 0.90)
JSI METAL= 0.31 (1) (INPUT = 1.00)

LICENSED PROFESSIONAL ENGINEER
P. M. TREVISAN
100136551
March 16th, 2017
PROVINCE OF ONTARIO

RECEIVED
TOWN OF MILTON
MAR 29, 2017
17-5337
BUILDING DIVISION

KOTT

JOB NAME	TRUSS NAME	QUANTITY	PLY	JOB DESC.	DRWG NO.
PT0317-097	T09	1	1	TRUSS DESC. LECCO RIDGE-BLOCK 344	

KOTT , Stouffville, ON, CGC

Version 8.100 S Feb 9 2017 MiTek Industries, Inc. Thu Mar 16 11:57:52 2017 Page 1
ID:EvTixTQDI5yR1QLotZTBr_yE?HJ-VglMdyZ968wkPpAsZRpf5JTxC6vEvuhxNBrZ?uzaNjz

SCALE = 1:69.5

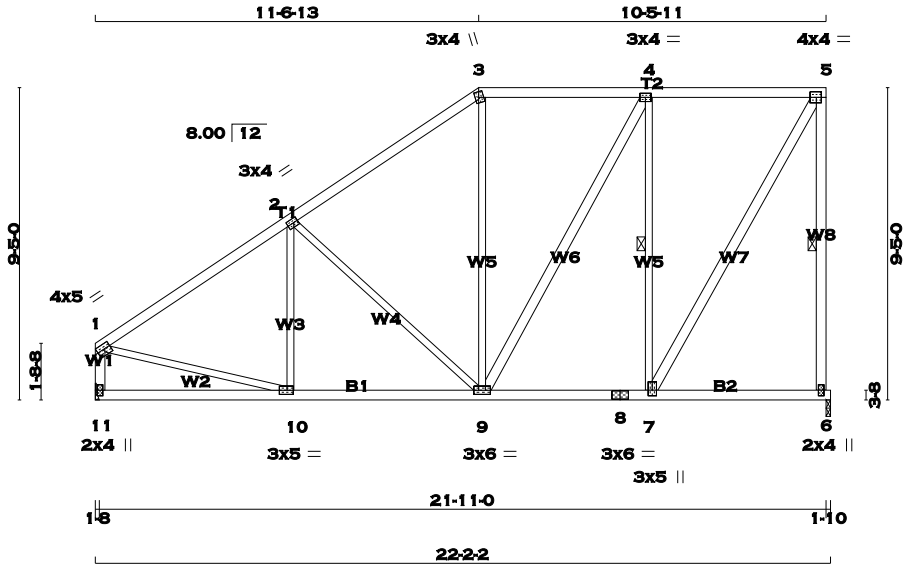

TOTAL WEIGHT = 117 lb

[M][F]

LUMBER

N. L. G. A. RULES

CHORDS	SIZE		LUMBER	DESCR.
1 - 3	2x4	DRY	No.2	SPF
3 - 5	2x4	DRY	No.2	SPF
6 - 5	2x4	DRY	No.2	SPF
11 - 1	2x4	DRY	No.2	SPF
11 - 8	2x4	DRY	No.2	SPF
8 - 6	2x4	DRY	No.2	SPF
ALL WEBS EXCEPT	2x3	DRY	No.2	SPF
9 - 4	2x4	DRY	No.2	SPF
7 - 5	2x4	DRY	No.2	SPF

DRY: SEASONED LUMBER.

PLATES (table is in inches)

JT	TYPE	PLATES	W	LEN	Y	X
1	TMVW-t	MT20	4.0	5.0	1.75	Edge
2	TMWW-t	MT20	3.0	4.0	1.50	1.50
3	TTW+m	MT20	3.0	4.0	2.00	1.25
4	TMWW-t	MT20	3.0	4.0		
5	TMVW-t	MT20	4.0	4.0	2.00	1.75
6	BMV1+p	MT20	2.0	4.0		
7	BMWW+t	MT20	3.0	5.0	2.00	1.50
8	BS-t	MT20	3.0	6.0		
9	BMWWW-t	MT20	3.0	6.0		
10	BMWW-t	MT20	3.0	5.0	1.50	2.25
11	BMV1+p	MT20	2.0	4.0		

Edge - INDICATES REFERENCE CORNER OF PLATE TOUCHES EDGE OF CHORD.

A SIZE FOR SIZE SUBSTITUTION OF MITEK MII20 WITH TEE-LOK TL20 PLATES IS ALLOWED.

DIMENSIONS, SUPPORTS AND LOADINGS SPECIFIED BY FABRICATOR TO BE VERIFIED BY BUILDING DESIGNER

BEARINGS

JT	FACTORED GROSS REACTION VERT	HORZ	MAXIMUM FACTORED GROSS REACTION DOWN	HORZ	UPLIFT	INPUT BRG IN-SX	REQRD BRG IN-SX
6	1045	0	1045	0	0	1-10	1-10
11	1045	0	1045	0	0	HANGER BY OTHERS	
						MIN. SEAT SIZE: 1-8	

UNFACTORED REACTIONS

JT	1ST LCASE COMBINED	MAX./MIN. COMPONENT REACTIONS SNOW	LIVE	PERM.LIVE	WIND	DEAD	SOIL
6	734	513 / 0	0 / 0	0 / 0	0 / 0	220 / 0	0 / 0
11	734	513 / 0	0 / 0	0 / 0	0 / 0	220 / 0	0 / 0

BEARING MATERIAL TO BE SPF NO.2 OR BETTER AT JOINT(S) 6

BRACING

TOP CHORD TO BE SHEATHED OR MAX. PURLIN SPACING = 5.64 FT.
MAX. UNBRACED BOTTOM CHORD LENGTH = 10.00 FT. OR RIGID CEILING DIRECTLY APPLIED.

ALL PITCH BREAKS AND PERIMETER CORNER JOINTS MUST BE LATERALLY RESTRAINED.

1 - 2x3 SPF No.2 LATERAL BRACE(S) AT 1/ 2 LENGTH OF 5-6. DBS = 14-0-0 . CBF = 88 LBS.
1 - 2x3 SPF No.2 LATERAL BRACE(S) AT 1/ 2 LENGTH OF 4-7. DBS = 20-0-0 . CBF = 93 LBS.

DBS = DIAGONAL BRACE SPACING (MAX). CBF = CUMULATIVE BRACING FORCE. FASTEN LATERAL BRACE(S) USING (0.122"X3") SPIRAL NAILS : 1 NAIL FOR 2x3 BRACE(S), 2 FOR 1x4, 2x4, 2x5, 3 FOR 2x6, 4 FOR 2x8, 5 FOR 2x10, AND 6 FOR 2x12.

END VERTICAL(S) MUST BE SHEATHED OR HAVE BRACES AS INDICATED IN THE MAX. UNBRACED LENGTH COLUMN OF THE TABLE BELOW

LOADING

TOTAL LOAD CASES: (4)

CHORDS

MEMB. FR-TO	MAX. FACTORED FORCE (LBS)	VERT. LOAD (PLF) FROM	TO	LC1 MAX CSI (LC)	MAX. UNBRAC LENGTH
1- 2	-1075 / 0	-77.4	-77.4	0.36 (1)	5.64
2- 3	-790 / 0	-77.4	-77.4	0.34 (1)	6.25
3- 4	-632 / 0	-77.4	-77.4	0.27 (1)	6.25
4- 5	-497 / 0	-77.4	-77.4	0.27 (1)	6.25
6- 5	-1008 / 0	0.0	0.0	0.42 (1)	6.24
11- 1	-1004 / 0	0.0	0.0	0.11 (1)	7.80
11-10	0 / 0	-17.5	-17.5	0.15 (4)	10.00
10- 9	0 / 920	-17.5	-17.5	0.22 (1)	10.00
9- 8	0 / 497	-17.5	-17.5	0.15 (4)	10.00
8- 7	0 / 497	-17.5	-17.5	0.15 (4)	10.00
7- 6	0 / 0	-17.5	-17.5	0.12 (4)	10.00

WEBS

MEMB. FR-TO	MAX. FACTORED FORCE (LBS)	MAX CSI (LC)
10- 2	-101 / 68	0.05 (1)
2- 9	-392 / 0	0.50 (1)
9- 3	0 / 108	0.03 (4)
9- 4	0 / 280	0.04 (1)
7- 4	-747 / 0	0.44 (1)
7- 5	0 / 984	0.16 (1)
1-10	0 / 945	0.21 (1)

DESIGN CRITERIA

SPECIFIED LOADS:

TOP CH.	LL	=	23.3	PSF
	DL	=	3.0	PSF
BOT CH.	LL	=	0.0	PSF
	DL	=	7.0	PSF
TOTAL LOAD		=	33.3	PSF

SPACING = 24.0 IN. C/C

LOADING IN FLAT SECTION BASED ON A SLOPE OF 6.00/12

THIS TRUSS IS DESIGNED FOR RESIDENTIAL OR SMALL BUILDING REQUIREMENTS OF PART 9, NBCC 2010

THIS DESIGN COMPLIES WITH:
- PART 9 OF OBC 2012 , BCBC 2012 , ABC 2014
- CSA 086-09
- TPIC 2011

(55 % OF 27.2 P.S.F. G.S.L. PLUS 8.4 P.S.F. RAIN LOAD) EQUALS 23.3 P.S.F. SPECIFIED ROOF LIVE LOAD

ALLOWABLE DEFL.(LL)= L/360 (0.73")
CALCULATED VERT. DEFL.(LL) = L/ 999 (0.03")
ALLOWABLE DEFL.(TL)= L/360 (0.73")
CALCULATED VERT. DEFL.(TL) = L/ 999 (0.07")

CSI: TC=0.42 (5-6:1) , BC=0.22 (9-10:1) , WB=0.50 (2-9:1) , SSI=0.20 (4-5:1)

DOL LUMBER=1.00 NAIL=1.00 LS BEND=1.10 COMP=1.10 SHEAR=1.10 TENS= 1.10

COMPANION LIVE LOAD FACTOR = 0.50

TRUSS PLATE MANUFACTURER IS NOT RESPONSIBLE FOR QUALITY CONTROL IN THE TRUSS MANUFACTURING PLANT .

NAIL VALUES

PLATE	GRIP(DRY) (PSI) MAX	MIN	SHEAR (PLI) MAX	MIN	SECTION (PLI) MAX	MIN
MT20	618	354	1667	822	2284	1656

PLATE PLACEMENT TOL. = 0.250 inches

PLATE ROTATION TOL. = 0.5 Deg.

JSI GRIP= 0.89 (5) (INPUT = 0.90)
JSI METAL= 0.36 (1) (INPUT = 1.00)

LICENSED PROFESSIONAL ENGINEER
P. M. TREVISAN
100136551
March 16th, 2017
PROVINCE OF ONTARIO

RECEIVED
TOWN OF MILTON
MAR 29, 2017
17-5337
BUILDING DIVISION

KOTT

JOB NAME	TRUSS NAME	QUANTITY	PLY	JOB DESC.	DRWG NO.
PT0317-097	T10	1	1	TRUSS DESC. LECCO RIDGE-BLOCK 344	

KOTT , Stouffville, ON, CGC

Version 8.100 S Feb 9 2017 MiTek Industries, Inc. Thu Mar 16 11:57:53 2017 Page 1
ID:EvTixTQDI5yR1QLotZTBr_yE?HJ-ztJkrIaotR2b0yl378KudX?40WEveJO4cra6XLzaNjy

SCALE = 1:72.6

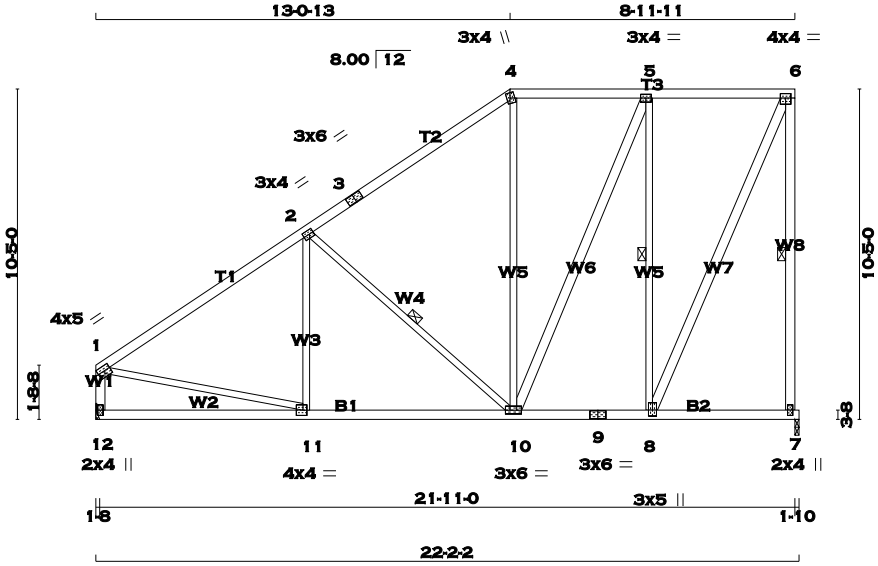

TOTAL WEIGHT = 123 lb
[M][F]

LUMBER
N. L. G. A. RULES

CHORDS	SIZE		LUMBER	DESCR.
1 - 3	2x4	DRY	No.2	SPF
3 - 4	2x4	DRY	No.2	SPF
4 - 6	2x4	DRY	No.2	SPF
7 - 6	2x4	DRY	No.2	SPF
12 - 1	2x4	DRY	No.2	SPF
12 - 9	2x4	DRY	No.2	SPF
9 - 7	2x4	DRY	No.2	SPF
ALL WEBS EXCEPT	2x3	DRY	No.2	SPF
10 - 5	2x4	DRY	No.2	SPF
8 - 6	2x4	DRY	No.2	SPF

DRY: SEASONED LUMBER.

PLATES (table is in inches)

JT	TYPE	PLATES	W	LEN	Y	X
1	TMVW-t	MT20	4.0	5.0	1.75	Edge
2	TMWW-t	MT20	3.0	4.0	1.50	1.50
3	TS-t	MT20	3.0	6.0		
4	TTW+m	MT20	3.0	4.0	2.00	1.25
5	TMWW-t	MT20	3.0	4.0		
6	TMVW-t	MT20	4.0	4.0	1.75	2.00
7	BMV1+p	MT20	2.0	4.0		
8	BMWW+t	MT20	3.0	5.0	2.25	1.50
9	BS-t	MT20	3.0	6.0		
10	BMWWW-t	MT20	3.0	6.0		
11	BMWW-t	MT20	4.0	4.0	2.00	1.50
12	BMV1+p	MT20	2.0	4.0		

Edge - INDICATES REFERENCE CORNER OF PLATE TOUCHES EDGE OF CHORD.

A SIZE FOR SIZE SUBSTITUTION OF MITEK MII20 WITH TEE-LOK TL20 PLATES IS ALLOWED.

DIMENSIONS, SUPPORTS AND LOADINGS SPECIFIED BY FABRICATOR TO BE VERIFIED BY BUILDING DESIGNER

BEARINGS

JT	FACTORED GROSS REACTION VERT	HORZ	MAXIMUM FACTORED GROSS REACTION DOWN	HORZ	UPLIFT	INPUT BRG IN-SX	REQRD BRG IN-SX
7	1045	0	1045	0	0	1-10	1-10
12	1045	0	1045	0	0	HANGER BY OTHERS	
						MIN. SEAT SIZE: 1-8	

UNFACTORED REACTIONS

JT	1ST LCASE COMBINED	SNOW	MAX./MIN. COMPONENT REACTIONS LIVE	PERM.LIVE	WIND	DEAD	SOIL
7	734	513 / 0	0 / 0	0 / 0	0 / 0	220 / 0	0 / 0
12	734	513 / 0	0 / 0	0 / 0	0 / 0	220 / 0	0 / 0

BEARING MATERIAL TO BE SPF NO.2 OR BETTER AT JOINT(S) 7

BRACING
TOP CHORD TO BE SHEATHED OR MAX. PURLIN SPACING = 5.47 FT.
MAX. UNBRACED BOTTOM CHORD LENGTH = 10.00 FT. OR RIGID CEILING DIRECTLY APPLIED.

ALL PITCH BREAKS AND PERIMETER CORNER JOINTS MUST BE LATERALLY RESTRAINED.

1 - 2x3 SPF No.2 LATERAL BRACE(S) AT 1/ 2 LENGTH OF 6-7. DBS = 14-0-0 . CBF = 89 LBS.
1 - 2x3 SPF No.2 LATERAL BRACE(S) AT 1/ 2 LENGTH OF 2-10. DBS = 20-0-0 . CBF = 62 LBS.
1 - 2x3 SPF No.2 LATERAL BRACE(S) AT 1/ 2 LENGTH OF 5-8. DBS = 18-0-0 . CBF = 89 LBS.

DBS = DIAGONAL BRACE SPACING (MAX). CBF = CUMULATIVE BRACING FORCE. FASTEN LATERAL BRACE(S) USING (0.122"X3") SPIRAL NAILS : 1 NAIL FOR 2x3 BRACE(S), 2 FOR 1x4, 2x4, 2x5, 3 FOR 2x6, 4 FOR 2x8, 5 FOR 2x10, AND 6 FOR 2x12.

END VERTICAL(S) MUST BE SHEATHED OR HAVE BRACES AS INDICATED IN THE MAX. UNBRACED LENGTH COLUMN OF THE TABLE BELOW

LOADING
TOTAL LOAD CASES: (4)

CHORDS MEMB. FR-TO	MAX. FACTORED FORCE (LBS)	FACTORED VERT. LOAD LC1 (PLF) FROM	TO	MAX CSI (LC)	MAX. UNBRAC LENGTH	WEBS MEMB. FR-TO	MAX. FACTORED FORCE (LBS)	MAX CSI (LC)
1- 2	-1069 / 0	-77.4	-77.4	0.47 (1)	5.47	11- 2	-58 / 94	0.03 (1)
2- 3	-696 / 0	-77.4	-77.4	0.44 (1)	6.25	2-10	-492 / 0	0.26 (1)
3- 4	-696 / 0	-77.4	-77.4	0.44 (1)	6.25	10- 4	0 / 75	0.03 (4)
4- 5	-550 / 0	-77.4	-77.4	0.20 (1)	6.25	10- 5	0 / 395	0.06 (1)
5- 6	-397 / 0	-77.4	-77.4	0.20 (1)	6.25	8- 5	-791 / 0	0.60 (1)
7- 6	-1012 / 0	0.0	0.0	0.55 (1)	6.23	8- 6	0 / 960	0.15 (1)
12- 1	-999 / 0	0.0	0.0	0.11 (1)	7.81	1-11	0 / 938	0.21 (1)
12-11	0 / 0	-17.5	-17.5	0.19 (4)	10.00			
11-10	0 / 918	-17.5	-17.5	0.26 (4)	10.00			
10- 9	0 / 397	-17.5	-17.5	0.12 (4)	10.00			
9- 8	0 / 397	-17.5	-17.5	0.12 (4)	10.00			
8- 7	0 / 0	-17.5	-17.5	0.08 (4)	10.00			

DESIGN CRITERIA

SPECIFIED LOADS:

TOP CH.	LL	=	23.3	PSF
	DL	=	3.0	PSF
BOT CH.	LL	=	0.0	PSF
	DL	=	7.0	PSF
TOTAL LOAD		=	33.3	PSF

SPACING = 24.0 IN. C/C

LOADING IN FLAT SECTION BASED ON A SLOPE OF 6.00/12

THIS TRUSS IS DESIGNED FOR RESIDENTIAL OR SMALL BUILDING REQUIREMENTS OF PART 9, NBCC 2010

THIS DESIGN COMPLIES WITH:
- PART 9 OF OBC 2012 , BCBC 2012 , ABC 2014
- CSA 086-09
- TPIC 2011

(55 % OF 27.2 P.S.F. G.S.L. PLUS 8.4 P.S.F. RAIN LOAD) EQUALS 23.3 P.S.F. SPECIFIED ROOF LIVE LOAD

ALLOWABLE DEFL.(LL)= L/360 (0.73")
CALCULATED VERT. DEFL.(LL) = L/ 999 (0.04")
ALLOWABLE DEFL.(TL)= L/360 (0.73")
CALCULATED VERT. DEFL.(TL) = L/ 999 (0.08")

CSI: TC=0.55 (6-7:1) , BC=0.26 (10-11:4) , WB=0.60 (5-8:1) , SSI=0.21 (1-2:1)

DOL LUMBER=1.00 NAIL=1.00 LS BEND=1.10 COMP=1.10 SHEAR=1.10 TENS= 1.10

COMPANION LIVE LOAD FACTOR = 0.50

TRUSS PLATE MANUFACTURER IS NOT RESPONSIBLE FOR QUALITY CONTROL IN THE TRUSS MANUFACTURING PLANT .

NAIL VALUES

PLATE	GRIP(DRY) (PSI) MAX	MIN	SHEAR (PLI) MAX	MIN	SECTION (PLI) MAX	MIN
MT20	618	354	1667	822	2284	1656

PLATE PLACEMENT TOL. = 0.250 inches

PLATE ROTATION TOL. = 5.0 Deg.

JSI GRIP= 0.89 (8) (INPUT = 0.90)
JSI METAL= 0.36 (1) (INPUT = 1.00)

LICENSED PROFESSIONAL ENGINEER
P. M. TREVISAN
100136551
March 16th, 2017
PROVINCE OF ONTARIO

RECEIVED
TOWN OF MILTON
MAR 29, 2017
17-5337
BUILDING DIVISION

KOTT

JOB NAME	TRUSS NAME	QUANTITY	PLY	JOB DESC.	DRWG NO.
PT0317-097	**T11**	**1**	**1**	TRUSS DESC. LECCO RIDGE-BLOCK 344	

KOTT , Stouffville, ON, CGC

Version 8.100 S Feb 9 2017 MiTek Industries, Inc. Thu Mar 16 11:57:53 2017 Page 1
ID:EvTixTQDI5yR1QLotZTBr_yE?HJ-ztJkrIaotR2b0yl378KudX?3QWEheLS4cra6XLzaNjy

SCALE = 1:77.7

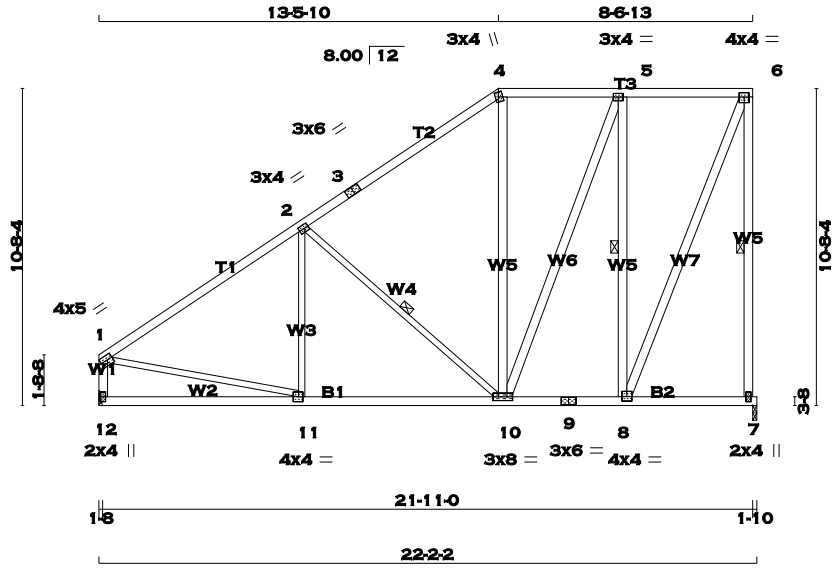

TOTAL WEIGHT = 131 lb
[M][F]

LUMBER
N. L. G. A. RULES

CHORDS	SIZE		LUMBER	DESCR.
1 - 3	2x4	DRY	No.2	SPF
3 - 4	2x4	DRY	No.2	SPF
4 - 6	2x4	DRY	No.2	SPF
7 - 6	2x4	DRY	No.2	SPF
12 - 1	2x4	DRY	No.2	SPF
12 - 9	2x4	DRY	No.2	SPF
9 - 7	2x4	DRY	No.2	SPF
ALL WEBS EXCEPT	2x4	DRY	No.2	SPF
11 - 2	2x3	DRY	No.2	SPF
2 - 10	2x3	DRY	No.2	SPF
1 - 11	2x3	DRY	No.2	SPF

DRY: SEASONED LUMBER.

PLATES (table is in inches)

JT	TYPE	PLATES	W	LEN	Y	X
1	TMVW-t	MT20	4.0	5.0	1.75	Edge
2	TMWW-t	MT20	3.0	4.0	1.50	1.50
3	TS-t	MT20	3.0	6.0		
4	TTW+m	MT20	3.0	4.0	2.00	1.25
5	TMWW-t	MT20	3.0	4.0		
6	TMVW-t	MT20	4.0	4.0	1.75	2.00
7	BMV1+p	MT20	2.0	4.0		
8	BMWW-t	MT20	4.0	4.0	1.75	2.00
9	BS-t	MT20	3.0	6.0		
10	BMWWW-t	MT20	3.0	8.0		
11	BMWW-t	MT20	4.0	4.0	2.00	1.75
12	BMV1+p	MT20	2.0	4.0		

Edge - INDICATES REFERENCE CORNER OF PLATE TOUCHES EDGE OF CHORD.

A SIZE FOR SIZE SUBSTITUTION OF MITEK MII20 WITH TEE-LOK TL20 PLATES IS ALLOWED.

DIMENSIONS, SUPPORTS AND LOADINGS SPECIFIED BY FABRICATOR TO BE VERIFIED BY BUILDING DESIGNER

BEARINGS

JT	FACTORED GROSS REACTION VERT	HORZ	MAXIMUM FACTORED GROSS REACTION DOWN	HORZ	UPLIFT	INPUT BRG IN-SX	REQRD BRG IN-SX
7	1045	0	1045	0	0	1-10	1-10
12	1045	0	1045	0	0	HANGER BY OTHERS	
						MIN. SEAT SIZE: 1-8	

UNFACTORED REACTIONS

JT	1ST LCASE COMBINED	SNOW	LIVE	PERM.LIVE	WIND	DEAD	SOIL
		MAX./MIN. COMPONENT REACTIONS					
7	734	513 / 0	0 / 0	0 / 0	0 / 0	220 / 0	0 / 0
12	734	513 / 0	0 / 0	0 / 0	0 / 0	220 / 0	0 / 0

BEARING MATERIAL TO BE SPF NO.2 OR BETTER AT JOINT(S) 7

BRACING
TOP CHORD TO BE SHEATHED OR MAX. PURLIN SPACING = 5.42 FT.
MAX. UNBRACED BOTTOM CHORD LENGTH = 10.00 FT. OR RIGID CEILING DIRECTLY APPLIED.

ALL PITCH BREAKS AND PERIMETER CORNER JOINTS MUST BE LATERALLY RESTRAINED.

1 - 2x3 SPF No.2 LATERAL BRACE(S) AT 1/ 2 LENGTH OF 6-7. DBS = 14-0-0 . CBF = 89 LBS.
1 - 2x3 SPF No.2 LATERAL BRACE(S) AT 1/ 2 LENGTH OF 2-10. DBS = 20-0-0 . CBF = 65 LBS.
1 - 2x3 SPF No.2 LATERAL BRACE(S) AT 1/ 2 LENGTH OF 5-8. DBS = 18-0-0 . CBF = 91 LBS.

DBS = DIAGONAL BRACE SPACING (MAX). CBF = CUMULATIVE BRACING FORCE. FASTEN LATERAL BRACE(S) USING (0.122"X3") SPIRAL NAILS : 1 NAIL FOR 2x3 BRACE(S), 2 FOR 1x4, 2x4, 2x5, 3 FOR 2x6, 4 FOR 2x8, 5 FOR 2x10, AND 6 FOR 2x12.

END VERTICAL(S) MUST BE SHEATHED OR HAVE BRACES AS INDICATED IN THE MAX. UNBRACED LENGTH COLUMN OF THE TABLE BELOW

LOADING
TOTAL LOAD CASES: (4)

CHORDS

MEMB. FR-TO	MAX. FACTORED FORCE (LBS)	FACTORED VERT. LOAD LC1 (PLF) FROM	TO	MAX CSI (LC)	MAX. UNBRAC LENGTH
1- 2	-1066 / 0	-77.4	-77.4	0.51 (1)	5.42
2- 3	-669 / 0	-77.4	-77.4	0.47 (1)	6.25
3- 4	-669 / 0	-77.4	-77.4	0.47 (1)	6.25
4- 5	-526 / 0	-77.4	-77.4	0.18 (1)	6.25
5- 6	-372 / 0	-77.4	-77.4	0.18 (1)	6.25
7- 6	-1013 / 0	0.0	0.0	0.58 (1)	6.23
12- 1	-998 / 0	0.0	0.0	0.11 (1)	7.81
12-11	0 / 0	-17.5	-17.5	0.21 (4)	10.00
11-10	0 / 916	-17.5	-17.5	0.27 (4)	10.00
10- 9	0 / 372	-17.5	-17.5	0.13 (4)	10.00
9- 8	0 / 372	-17.5	-17.5	0.13 (4)	10.00
8- 7	0 / 0	-17.5	-17.5	0.07 (4)	10.00

WEBS

MEMB. FR-TO	MAX. FACTORED FORCE (LBS)	MAX CSI (LC)
11- 2	-48 / 101	0.03 (4)
2-10	-519 / 0	0.29 (1)
10- 4	0 / 71	0.02 (4)
10- 5	0 / 426	0.07 (1)
8- 5	-806 / 0	0.46 (1)
8- 6	0 / 957	0.15 (1)
1-11	0 / 935	0.21 (1)

DESIGN CRITERIA

SPECIFIED LOADS:

TOP CH.	LL	=	23.3	PSF
	DL	=	3.0	PSF
BOT CH.	LL	=	0.0	PSF
	DL	=	7.0	PSF
TOTAL LOAD		=	33.3	PSF

SPACING = 24.0 IN. C/C

LOADING IN FLAT SECTION BASED ON A SLOPE OF 6.00/12

THIS TRUSS IS DESIGNED FOR RESIDENTIAL OR SMALL BUILDING REQUIREMENTS OF PART 9, NBCC 2010

THIS DESIGN COMPLIES WITH:
- PART 9 OF OBC 2012 , BCBC 2012 , ABC 2014
- CSA 086-09
- TPIC 2011

(55 % OF 27.2 P.S.F. G.S.L. PLUS 8.4 P.S.F. RAIN LOAD) EQUALS 23.3 P.S.F. SPECIFIED ROOF LIVE LOAD

ALLOWABLE DEFL.(LL)= L/360 (0.73")
CALCULATED VERT. DEFL.(LL) = L/ 999 (0.04")
ALLOWABLE DEFL.(TL)= L/360 (0.73")
CALCULATED VERT. DEFL.(TL) = L/ 999 (0.08")

CSI: TC=0.58 (6-7:1) , BC=0.27 (10-11:4) , WB=0.46 (5-8:1) , SSI=0.21 (1-2:1)

DOL LUMBER=1.00 NAIL=1.00 LS BEND=1.10 COMP=1.10 SHEAR=1.10 TENS= 1.10

COMPANION LIVE LOAD FACTOR = 0.50

TRUSS PLATE MANUFACTURER IS NOT RESPONSIBLE FOR QUALITY CONTROL IN THE TRUSS MANUFACTURING PLANT .

NAIL VALUES

PLATE	GRIP(DRY) (PSI) MAX	MIN	SHEAR (PLI) MAX	MIN	SECTION (PLI) MAX	MIN
MT20	618	354	1667	822	2284	1656

PLATE PLACEMENT TOL. = 0.250 inches

PLATE ROTATION TOL. = 5.0 Deg.

JSI GRIP= 0.90 (11) (INPUT = 0.90)
JSI METAL= 0.36 (1) (INPUT = 1.00)

LICENSED PROFESSIONAL ENGINEER
P. M. TREVISAN
100136551
March 16th, 2017
PROVINCE OF ONTARIO

RECEIVED
TOWN OF MILTON
MAR 29, 2017
17-5337
BUILDING DIVISION

KOTT

JOB NAME	TRUSS NAME	QUANTITY	PLY	JOB DESC.	DRWG NO.
PT0317-097	T12	1	1	TRUSS DESC. LECCO RIDGE-BLOCK 344	

KOTT , Stouffville, ON, CGC

Version 8.100 S Feb 9 2017 MiTek Industries, Inc. Thu Mar 16 11:57:54 2017 Page 1
ID:EvTixTQDI5yR1QLotZTBr_yE?HJ-R3t62ebQeIBSe6KFhsr7AkYGDvbZNmvErVKg3nzaNjx

SCALE = 1:71.5

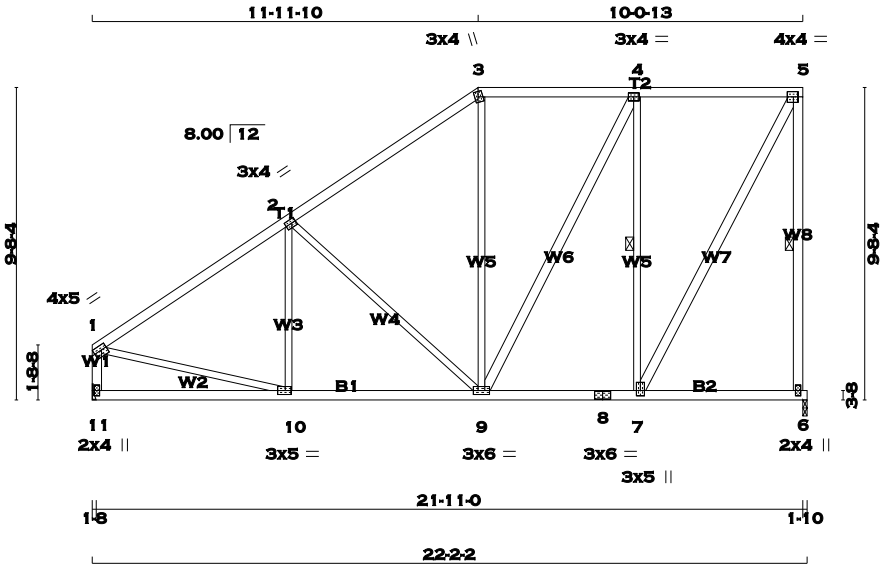

TOTAL WEIGHT = 119 lb

[M][F]

LUMBER

N. L. G. A. RULES

CHORDS	SIZE		LUMBER	DESCR.
1 - 3	2x4	DRY	No.2	SPF
3 - 5	2x4	DRY	No.2	SPF
6 - 5	2x4	DRY	No.2	SPF
11 - 1	2x4	DRY	No.2	SPF
11 - 8	2x4	DRY	No.2	SPF
8 - 6	2x4	DRY	No.2	SPF
ALL WEBS EXCEPT	2x3	DRY	No.2	SPF
9 - 4	2x4	DRY	No.2	SPF
7 - 5	2x4	DRY	No.2	SPF

DRY: SEASONED LUMBER.

PLATES (table is in inches)

JT	TYPE	PLATES	W	LEN	Y	X
1	TMVW-t	MT20	4.0	5.0	1.75	Edge
2	TMWW-t	MT20	3.0	4.0	1.50	1.50
3	TTW+m	MT20	3.0	4.0	2.00	1.25
4	TMWW-t	MT20	3.0	4.0		
5	TMVW-t	MT20	4.0	4.0	2.00	1.75
6	BMV1+p	MT20	2.0	4.0		
7	BMWW+t	MT20	3.0	5.0	2.00	1.50
8	BS-t	MT20	3.0	6.0		
9	BMWWW-t	MT20	3.0	6.0		
10	BMWW-t	MT20	3.0	5.0	1.50	2.25
11	BMV1+p	MT20	2.0	4.0		

Edge - INDICATES REFERENCE CORNER OF PLATE TOUCHES EDGE OF CHORD.

A SIZE FOR SIZE SUBSTITUTION OF MITEK MII20 WITH TEE-LOK TL20 PLATES IS ALLOWED.

DIMENSIONS, SUPPORTS AND LOADINGS SPECIFIED BY FABRICATOR TO BE VERIFIED BY BUILDING DESIGNER

BEARINGS

JT	FACTORED GROSS REACTION VERT	HORZ	MAXIMUM FACTORED GROSS REACTION DOWN	HORZ	UPLIFT	INPUT BRG IN-SX	REQRD BRG IN-SX
6	1045	0	1045	0	0	1-10	1-10
11	1045	0	1045	0	0	HANGER BY OTHERS	
						MIN. SEAT SIZE: 1-8	

UNFACTORED REACTIONS

JT	1ST LCASE COMBINED	MAX./MIN. COMPONENT REACTIONS SNOW	LIVE	PERM.LIVE	WIND	DEAD	SOIL
6	734	513 / 0	0 / 0	0 / 0	0 / 0	220 / 0	0 / 0
11	734	513 / 0	0 / 0	0 / 0	0 / 0	220 / 0	0 / 0

BEARING MATERIAL TO BE SPF NO.2 OR BETTER AT JOINT(S) 6

BRACING

TOP CHORD TO BE SHEATHED OR MAX. PURLIN SPACING = 5.60 FT.
MAX. UNBRACED BOTTOM CHORD LENGTH = 10.00 FT. OR RIGID CEILING DIRECTLY APPLIED.

ALL PITCH BREAKS AND PERIMETER CORNER JOINTS MUST BE LATERALLY RESTRAINED.

1 - 2x3 SPF No.2 LATERAL BRACE(S) AT 1/ 2 LENGTH OF 5-6. DBS = 14-0-0 . CBF = 88 LBS.
1 - 2x3 SPF No.2 LATERAL BRACE(S) AT 1/ 2 LENGTH OF 4-7. DBS = 18-0-0 . CBF = 85 LBS.

DBS = DIAGONAL BRACE SPACING (MAX). CBF = CUMULATIVE BRACING FORCE. FASTEN LATERAL BRACE(S) USING (0.122"X3") SPIRAL NAILS : 1 NAIL FOR 2x3 BRACE(S), 2 FOR 1x4, 2x4, 2x5, 3 FOR 2x6, 4 FOR 2x8, 5 FOR 2x10, AND 6 FOR 2x12.

END VERTICAL(S) MUST BE SHEATHED OR HAVE BRACES AS INDICATED IN THE MAX. UNBRACED LENGTH COLUMN OF THE TABLE BELOW

LOADING

TOTAL LOAD CASES: (4)

CHORDS

MEMB. FR-TO	MAX. FACTORED FORCE (LBS)	FACTORED VERT. LOAD LC1 (PLF) FROM	TO	MAX CSI (LC)	MAX. UNBRAC LENGTH
1- 2	-1074 / 0	-77.4	-77.4	0.39 (1)	5.60
2- 3	-765 / 0	-77.4	-77.4	0.37 (1)	6.25
3- 4	-610 / 0	-77.4	-77.4	0.25 (1)	6.25
4- 5	-468 / 0	-77.4	-77.4	0.25 (1)	6.25
6- 5	-1009 / 0	0.0	0.0	0.45 (1)	6.23
11- 1	-1002 / 0	0.0	0.0	0.11 (1)	7.81
11-10	0 / 0	-17.5	-17.5	0.16 (4)	10.00
10- 9	0 / 920	-17.5	-17.5	0.23 (1)	10.00
9- 8	0 / 468	-17.5	-17.5	0.14 (4)	10.00
8- 7	0 / 468	-17.5	-17.5	0.14 (4)	10.00
7- 6	0 / 0	-17.5	-17.5	0.10 (4)	10.00

WEBS

MEMB. FR-TO	MAX. FACTORED FORCE (LBS)	MAX CSI (LC)
10- 2	-89 / 75	0.05 (1)
2- 9	-420 / 0	0.58 (1)
9- 3	0 / 93	0.03 (4)
9- 4	0 / 311	0.05 (1)
7- 4	-758 / 0	0.48 (1)
7- 5	0 / 976	0.16 (1)
1-10	0 / 943	0.21 (1)

DESIGN CRITERIA

SPECIFIED LOADS:

TOP CH.	LL	=	23.3	PSF
	DL	=	3.0	PSF
BOT CH.	LL	=	0.0	PSF
	DL	=	7.0	PSF
TOTAL LOAD		=	33.3	PSF

SPACING = 24.0 IN. C/C

LOADING IN FLAT SECTION BASED ON A SLOPE OF 6.00/12

THIS TRUSS IS DESIGNED FOR RESIDENTIAL OR SMALL BUILDING REQUIREMENTS OF PART 9, NBCC 2010

THIS DESIGN COMPLIES WITH:
- PART 9 OF OBC 2012 , BCBC 2012 , ABC 2014
- CSA 086-09
- TPIC 2011

(55 % OF 27.2 P.S.F. G.S.L. PLUS 8.4 P.S.F. RAIN LOAD) EQUALS 23.3 P.S.F. SPECIFIED ROOF LIVE LOAD

ALLOWABLE DEFL.(LL)= L/360 (0.73")
CALCULATED VERT. DEFL.(LL) = L/ 999 (0.03")
ALLOWABLE DEFL.(TL)= L/360 (0.73")
CALCULATED VERT. DEFL.(TL) = L/ 999 (0.07")

CSI: TC=0.45 (5-6:1) , BC=0.23 (9-10:1) , WB=0.58 (2-9:1) , SSI=0.19 (4-5:1)

DOL LUMBER=1.00 NAIL=1.00 LS BEND=1.10 COMP=1.10 SHEAR=1.10 TENS= 1.10

COMPANION LIVE LOAD FACTOR = 0.50

TRUSS PLATE MANUFACTURER IS NOT RESPONSIBLE FOR QUALITY CONTROL IN THE TRUSS MANUFACTURING PLANT .

NAIL VALUES

PLATE	GRIP(DRY) (PSI) MAX	MIN	SHEAR (PLI) MAX	MIN	SECTION (PLI) MAX	MIN
MT20	618	354	1667	822	2284	1656

PLATE PLACEMENT TOL. = 0.250 inches

PLATE ROTATION TOL. = 5.0 Deg.

JSI GRIP= 0.89 (5) (INPUT = 0.90)
JSI METAL= 0.36 (1) (INPUT = 1.00)

LICENSED PROFESSIONAL ENGINEER
P. M. TREVISAN
100136551
March 16th, 2017
PROVINCE OF ONTARIO

RECEIVED
TOWN OF MILTON
MAR 29, 2017
17-5337
BUILDING DIVISION

KOTT

JOB NAME	TRUSS NAME	QUANTITY	PLY	JOB DESC.	DRWG NO.
PT0317-097	T13	2	1	TRUSS DESC. LECCO RIDGE-BLOCK 344	ENG JOB: PT0317-097

KOTT , Stouffville, ON, CGC

Version 8.100 S Feb 9 2017 MiTek Industries, Inc. Thu Mar 16 11:57:54 2017 Page 1
ID:EvTixTQDI5yR1QLotZTBr_yE?HJ-R3t62ebQelBSe6KFhsr7AkYITvbkNozErVKg3nzaNjx

SCALE = 1:72.0

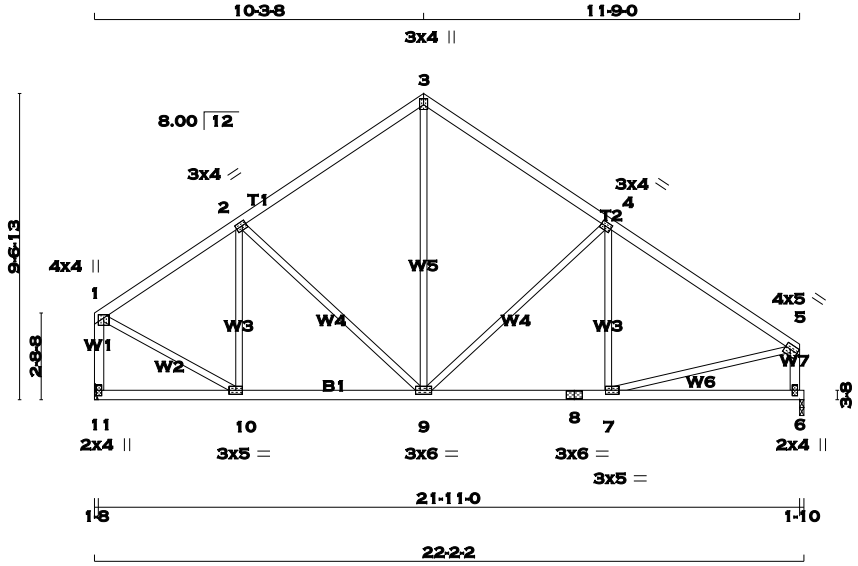

TOTAL WEIGHT = 2 X 96 = 193 lb
[M][F]

LUMBER
N. L. G. A. RULES

CHORDS	SIZE		LUMBER	DESCR.
1 - 3	2x4	DRY	No.2	SPF
3 - 5	2x4	DRY	No.2	SPF
11 - 1	2x4	DRY	No.2	SPF
6 - 5	2x4	DRY	No.2	SPF
11 - 8	2x4	DRY	No.2	SPF
8 - 6	2x4	DRY	No.2	SPF
ALL WEBS EXCEPT	2x3	DRY	No.2	SPF

DRY: SEASONED LUMBER.

PLATES (table is in inches)

JT	TYPE	PLATES	W	LEN	Y	X
1	TMVW+p	MT20	4.0	4.0	1.25	2.00
2	TMWW-t	MT20	3.0	4.0	1.50	1.50
3	TTW+p	MT20	3.0	4.0	2.25	1.50
4	TMWW-t	MT20	3.0	4.0	1.50	1.50
5	TMVW-t	MT20	4.0	5.0	1.75	Edge
6	BMV1+p	MT20	2.0	4.0		
7	BMWW-t	MT20	3.0	5.0	1.50	2.25
8	BS-t	MT20	3.0	6.0		
9	BMWWW-t	MT20	3.0	6.0		
10	BMWW-t	MT20	3.0	5.0		
11	BMV1+p	MT20	2.0	4.0		

Edge - INDICATES REFERENCE CORNER OF PLATE TOUCHES EDGE OF CHORD.

A SIZE FOR SIZE SUBSTITUTION OF MITEK MII20 WITH TEE-LOK TL20 PLATES IS ALLOWED.

DIMENSIONS, SUPPORTS AND LOADINGS SPECIFIED BY FABRICATOR TO BE VERIFIED BY BUILDING DESIGNER

BEARINGS

JT	FACTORED GROSS REACTION VERT	HORZ	MAXIMUM FACTORED GROSS REACTION DOWN	HORZ	UPLIFT	INPUT BRG IN-SX	REQRD BRG IN-SX
11	1045	0	1045	0	0	HANGER BY OTHERS MIN. SEAT SIZE: 1-8	
6	1045	0	1045	0	0	1-10	1-10

UNFACTORED REACTIONS

JT	1ST LCASE COMBINED	MAX./MIN. COMPONENT REACTIONS SNOW	LIVE	PERM.LIVE	WIND	DEAD	SOIL
11	734	513 / 0	0 / 0	0 / 0	0 / 0	220 / 0	0 / 0
6	734	513 / 0	0 / 0	0 / 0	0 / 0	220 / 0	0 / 0

BEARING MATERIAL TO BE SPF NO.2 OR BETTER AT JOINT(S) 6

BRACING
TOP CHORD TO BE SHEATHED OR MAX. PURLIN SPACING = 5.64 FT.
MAX. UNBRACED BOTTOM CHORD LENGTH = 10.00 FT. OR RIGID CEILING DIRECTLY APPLIED.

ALL PITCH BREAKS AND PERIMETER CORNER JOINTS MUST BE LATERALLY RESTRAINED.

LOADING
TOTAL LOAD CASES: (4)

CHORDS

MEMB. FR-TO	MAX. FORCE (LBS)	FACTORED VERT. LOAD LC1 (PLF) FROM	TO	MAX CSI (LC)	MAX. UNBRAC LENGTH
1- 2	-871 / 0	-77.4	-77.4	0.28 (1)	6.21
2- 3	-776 / 0	-77.4	-77.4	0.31 (1)	6.25
3- 4	-783 / 0	-77.4	-77.4	0.35 (1)	6.25
4- 5	-1068 / 0	-77.4	-77.4	0.37 (1)	5.64
11- 1	-1015 / 0	0.0	0.0	0.14 (1)	7.77
6- 5	-1002 / 0	0.0	0.0	0.11 (1)	7.81
11-10	0 / 0	-17.5	-17.5	0.11 (4)	10.00
10- 9	0 / 751	-17.5	-17.5	0.18 (1)	10.00
9- 8	0 / 914	-17.5	-17.5	0.22 (1)	10.00
8- 7	0 / 914	-17.5	-17.5	0.22 (1)	10.00
7- 6	0 / 0	-17.5	-17.5	0.14 (4)	10.00

WEBS

MEMB. FR-TO	MAX. FORCE (LBS)	MAX CSI (LC)
10- 2	-298 / 0	0.15 (1)
2- 9	-173 / 0	0.22 (1)
9- 3	0 / 488	0.11 (1)
9- 4	-395 / 0	0.51 (1)
7- 4	-102 / 67	0.05 (1)
1-10	0 / 849	0.19 (1)
7- 5	0 / 939	0.21 (1)

DESIGN CRITERIA

SPECIFIED LOADS:

TOP	CH.	LL	=	23.3	PSF
		DL	=	3.0	PSF
BOT	CH.	LL	=	0.0	PSF
		DL	=	7.0	PSF
TOTAL	LOAD		=	33.3	PSF

SPACING = 24.0 IN. C/C

THIS TRUSS IS DESIGNED FOR RESIDENTIAL OR SMALL BUILDING REQUIREMENTS OF PART 9, NBCC 2010

THIS DESIGN COMPLIES WITH:
- PART 9 OF OBC 2012 , BCBC 2012 , ABC 2014
- CSA 086-09
- TPIC 2011

(55 % OF 27.2 P.S.F. G.S.L. PLUS 8.4 P.S.F. RAIN LOAD) EQUALS 23.3 P.S.F. SPECIFIED ROOF LIVE LOAD

ALLOWABLE DEFL.(LL)= L/360 (0.73")
CALCULATED VERT. DEFL.(LL) = L/ 999 (0.03")
ALLOWABLE DEFL.(TL)= L/360 (0.73")
CALCULATED VERT. DEFL.(TL) = L/ 999 (0.06")

CSI: TC=0.37 (4-5:1) , BC=0.22 (7-9:1) , WB=0.51 (4-9:1) , SSI=0.19 (4-5:1)

DOL LUMBER=1.00 NAIL=1.00 LS BEND=1.10 COMP=1.10 SHEAR=1.10 TENS= 1.10

COMPANION LIVE LOAD FACTOR = 0.50

TRUSS PLATE MANUFACTURER IS NOT RESPONSIBLE FOR QUALITY CONTROL IN THE TRUSS MANUFACTURING PLANT .

NAIL VALUES

PLATE	GRIP(DRY) (PSI) MAX	MIN	SHEAR (PLI) MAX	MIN	SECTION (PLI) MAX	MIN
MT20	618	354	1667	822	2284	1656

PLATE PLACEMENT TOL. = 0.250 inches

PLATE ROTATION TOL. = 0.5 Deg.

JSI GRIP= 0.90 (10) (INPUT = 0.90)
JSI METAL= 0.36 (5) (INPUT = 1.00)

LICENSED PROFESSIONAL ENGINEER
P. M. TREVISAN
100136551
March 16th, 2017
PROVINCE OF ONTARIO

RECEIVED
TOWN OF MILTON
MAR 29, 2017
17-5337
BUILDING DIVISION

KOTT

JOB NAME	TRUSS NAME	QUANTITY	PLY	JOB DESC.	DRWG NO.
PT0317-097	T14	1	1	TRUSS DESC. LECCO RIDGE-BLOCK 344	

KOTT , Stouffville, ON, CGC

Version 8.100 S Feb 9 2017 MiTek Industries, Inc. Thu Mar 16 11:57:55 2017 Page 1
ID:EvTixTQDI5yR1QLotZTBr_yE?HJ-vFRUG_b2P3JJGGuRFZNMjy5UpJwG6I_N393DbDzaNjw

SCALE = 1:62.9

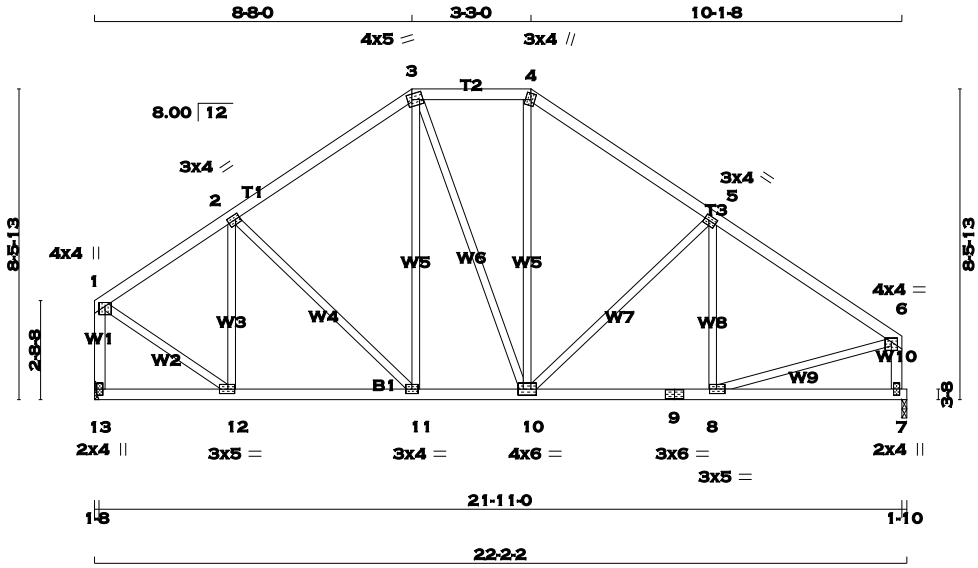

TOTAL WEIGHT = 105 lb

LUMBER

N. L. G. A. RULES

CHORDS	SIZE		LUMBER	DESCR.
1 - 3	2x4	DRY	No.2	SPF
3 - 4	2x4	DRY	No.2	SPF
4 - 6	2x4	DRY	No.2	SPF
13 - 1	2x4	DRY	No.2	SPF
7 - 6	2x4	DRY	No.2	SPF
13 - 9	2x4	DRY	No.2	SPF
9 - 7	2x4	DRY	No.2	SPF
ALL WEBS EXCEPT	2x3	DRY	No.2	SPF

DRY: SEASONED LUMBER.

PLATES (table is in inches)

JT	TYPE	PLATES	W	LEN	Y	X
1	TMVW+p	MT20	4.0	4.0	1.25	2.00
2	TMWW-t	MT20	3.0	4.0	1.50	1.50
3	TTWW-m	MT20	4.0	5.0	1.75	1.50
4	TTW+m	MT20	3.0	4.0	2.00	1.25
5	TMWW-t	MT20	3.0	4.0	1.50	1.50
6	TMVW-p	MT20	4.0	4.0	1.25	2.00
7	BMV1+p	MT20	2.0	4.0		
8	BMWW-t	MT20	3.0	5.0	1.50	2.25
9	BS-t	MT20	3.0	6.0		
10	BMWWW-t	MT20	4.0	6.0		
11	BMWW-t	MT20	3.0	4.0		
12	BMWW-t	MT20	3.0	5.0	1.50	2.25
13	BMV1+p	MT20	2.0	4.0		

A SIZE FOR SIZE SUBSTITUTION OF MITEK MII20 WITH TEE-LOK TL20 PLATES IS ALLOWED.

DIMENSIONS, SUPPORTS AND LOADINGS SPECIFIED BY FABRICATOR TO BE VERIFIED BY BUILDING DESIGNER

BEARINGS

JT	FACTORED GROSS REACTION VERT	HORZ	MAXIMUM FACTORED GROSS REACTION DOWN	HORZ	UPLIFT	INPUT BRG	REQRD BRG
13	1045	0	1045	0	0	IN-SX	IN-SX
						HANGER BY OTHERS	
						MIN. SEAT SIZE: 1-8	
7	1045	0	1045	0	0	1-10	1-10

UNFACTORED REACTIONS

JT	1ST LCASE COMBINED	MAX./MIN. COMPONENT REACTIONS SNOW	LIVE	PERM.LIVE	WIND	DEAD	SOIL
13	734	513 / 0	0 / 0	0 / 0	0 / 0	220 / 0	0 / 0
7	734	513 / 0	0 / 0	0 / 0	0 / 0	220 / 0	0 / 0

BEARING MATERIAL TO BE SPF NO.2 OR BETTER AT JOINT(S) 7

BRACING

TOP CHORD TO BE SHEATHED OR MAX. PURLIN SPACING = 5.79 FT.
MAX. UNBRACED BOTTOM CHORD LENGTH = 10.00 FT. OR RIGID CEILING DIRECTLY APPLIED.

ALL PITCH BREAKS AND PERIMETER CORNER JOINTS MUST BE LATERALLY RESTRAINED.

LOADING

TOTAL LOAD CASES: (4)

CHORDS

MEMB. FR-TO	MAX. FORCE (LBS)	FACTORED VERT. LOAD LC1 (PLF) FROM	TO	MAX CSI (LC)	MAX. UNBRAC LENGTH
1- 2	-826 / 0	-77.4	-77.4	0.20 (1)	6.25
2- 3	-832 / 0	-77.4	-77.4	0.22 (1)	6.25
3- 4	-702 / 0	-77.4	-77.4	0.11 (1)	6.25
4- 5	-869 / 0	-77.4	-77.4	0.26 (1)	6.25
5- 6	-1067 / 0	-77.4	-77.4	0.27 (1)	5.79
13- 1	-1021 / 0	0.0	0.0	0.15 (1)	7.75
7- 6	-1008 / 0	0.0	0.0	0.11 (1)	7.80
13-12	0 / 0	-17.5	-17.5	0.08 (4)	10.00
12-11	0 / 710	-17.5	-17.5	0.16 (1)	10.00
11-10	0 / 676	-17.5	-17.5	0.14 (1)	10.00
10- 9	0 / 909	-17.5	-17.5	0.20 (1)	10.00
9- 8	0 / 909	-17.5	-17.5	0.20 (1)	10.00
8- 7	0 / 0	-17.5	-17.5	0.11 (4)	10.00

WEBS

MEMB. FR-TO	MAX. FORCE (LBS)	MAX CSI (LC)
12- 2	-366 / 0	0.15 (1)
2-11	-50 / 0	0.05 (1)
11- 3	0 / 104	0.03 (4)
3-10	0 / 74	0.02 (1)
10- 4	0 / 199	0.04 (1)
10- 5	-290 / 0	0.27 (1)
8- 5	-147 / 43	0.06 (1)
1-12	0 / 842	0.19 (1)
8- 6	0 / 942	0.21 (1)

DESIGN CRITERIA

SPECIFIED LOADS:

TOP	CH.	LL	=	23.3	PSF
		DL	=	3.0	PSF
BOT	CH.	LL	=	0.0	PSF
		DL	=	7.0	PSF
TOTAL	LOAD		=	33.3	PSF

SPACING = 24.0 IN. C/C

LOADING IN FLAT SECTION BASED ON A SLOPE OF 6.00/12

THIS TRUSS IS DESIGNED FOR RESIDENTIAL OR SMALL BUILDING REQUIREMENTS OF PART 9, NBCC 2010

THIS DESIGN COMPLIES WITH:
- PART 9 OF OBC 2012 , BCBC 2012 , ABC 2014
- CSA 086-09
- TPIC 2011

(55 % OF 27.2 P.S.F. G.S.L. PLUS 8.4 P.S.F. RAIN LOAD) EQUALS 23.3 P.S.F. SPECIFIED ROOF LIVE LOAD

ALLOWABLE DEFL.(LL)= L/360 (0.73")
CALCULATED VERT. DEFL.(LL) = L/ 999 (0.02")
ALLOWABLE DEFL.(TL)= L/360 (0.73")
CALCULATED VERT. DEFL.(TL) = L/ 999 (0.05")

CSI: TC=0.27 (5-6:1) , BC=0.20 (8-10:1) , WB=0.27 (5-10:1) , SSI=0.16 (5-6:1)

DOL LUMBER=1.00 NAIL=1.00 LS BEND=1.10 COMP=1.10 SHEAR=1.10 TENS= 1.10

COMPANION LIVE LOAD FACTOR = 0.50

TRUSS PLATE MANUFACTURER IS NOT RESPONSIBLE FOR QUALITY CONTROL IN THE TRUSS MANUFACTURING PLANT .

NAIL VALUES

PLATE	GRIP(DRY) (PSI) MAX	MIN	SHEAR (PLI) MAX	MIN	SECTION (PLI) MAX	MIN
MT20	618	354	1667	822	2284	1656

PLATE PLACEMENT TOL. = 0.250 inches

PLATE ROTATION TOL. = 5.0 Deg.

JSI GRIP= 0.88 (6) (INPUT = 0.90)
JSI METAL= 0.31 (6) (INPUT = 1.00)

LICENSED PROFESSIONAL ENGINEER
P. M. TREVISAN
100136551
March 16th, 2017
PROVINCE OF ONTARIO

RECEIVED
TOWN OF MILTON
MAR 29, 2017
17-5337
BUILDING DIVISION

KOTT

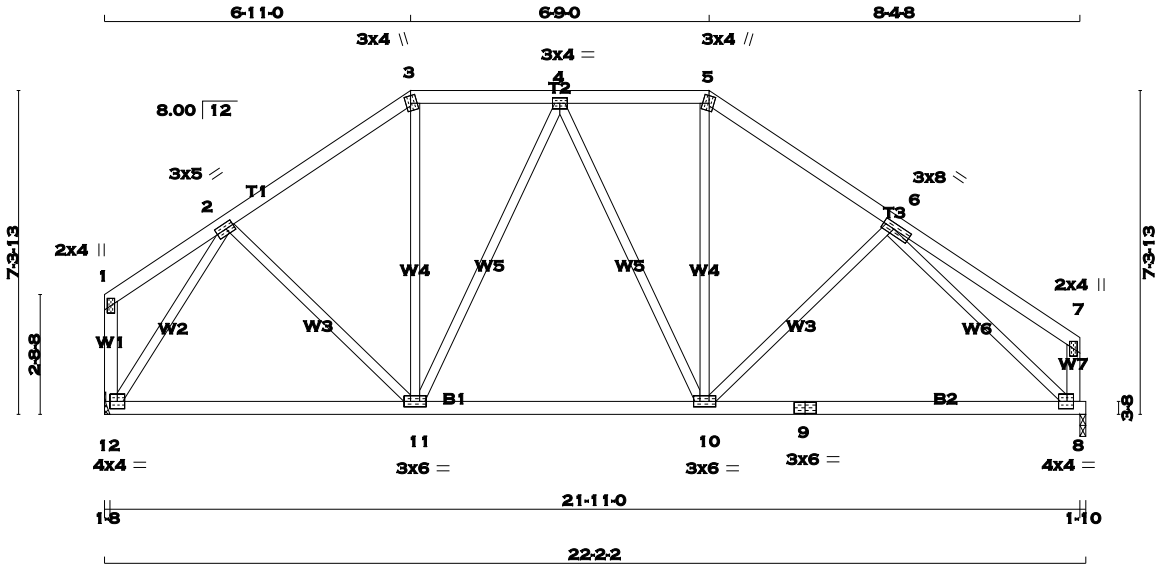

TOTAL WEIGHT = 99 lb

[M][F]

LUMBER

N. L. G. A. RULES

CHORDS	SIZE		LUMBER	DESCR.
1 - 3	2x4	DRY	No.2	SPF
3 - 5	2x4	DRY	No.2	SPF
5 - 7	2x4	DRY	No.2	SPF
12 - 1	2x4	DRY	No.2	SPF
8 - 7	2x4	DRY	No.2	SPF
12 - 9	2x4	DRY	No.2	SPF
9 - 8	2x4	DRY	No.2	SPF
ALL WEBS EXCEPT	2x3	DRY	No.2	SPF

DRY: SEASONED LUMBER.

PLATES (table is in inches)

JT	TYPE	PLATES	W	LEN	Y	X
1	TMV+p	MT20	2.0	4.0		
2	TMWW-t	MT20	3.0	5.0	1.50	2.25
3	TTW+m	MT20	3.0	4.0	2.00	1.25
4	TMWW-t	MT20	3.0	4.0		
5	TTW+m	MT20	3.0	4.0	2.00	1.25
6	TMWW-t	MT20	3.0	8.0	1.50	3.25
7	TMV+p	MT20	2.0	4.0		
8	BMVW1-t	MT20	4.0	4.0	2.00	1.75
9	BS-t	MT20	3.0	6.0		
10	BMWWW-t	MT20	3.0	6.0		
11	BMWWW-t	MT20	3.0	6.0		
12	BMVW1-t	MT20	4.0	4.0		

A SIZE FOR SIZE SUBSTITUTION OF MITEK MII20 WITH TEE-LOK TL20 PLATES IS ALLOWED.

DIMENSIONS, SUPPORTS AND LOADINGS SPECIFIED BY FABRICATOR TO BE VERIFIED BY BUILDING DESIGNER

BEARINGS

JT	FACTORED GROSS REACTION VERT	HORZ	MAXIMUM FACTORED GROSS REACTION DOWN	HORZ	UPLIFT	INPUT BRG IN-SX	REQRD BRG IN-SX
12	1045	0	1045	0	0	HANGER BY OTHERS MIN. SEAT SIZE: 1-8	
8	1045	0	1045	0	0	1-10	1-10

UNFACTORED REACTIONS

JT	1ST LCASE COMBINED	MAX./MIN. COMPONENT REACTIONS SNOW	LIVE	PERM.LIVE	WIND	DEAD	SOIL
12	734	513 / 0	0 / 0	0 / 0	0 / 0	220 / 0	0 / 0
8	734	513 / 0	0 / 0	0 / 0	0 / 0	220 / 0	0 / 0

BEARING MATERIAL TO BE SPF NO.2 OR BETTER AT JOINT(S) 8

BRACING

TOP CHORD TO BE SHEATHED OR MAX. PURLIN SPACING = 6.12 FT.
MAX. UNBRACED BOTTOM CHORD LENGTH = 10.00 FT. OR RIGID CEILING DIRECTLY APPLIED.

ALL PITCH BREAKS AND PERIMETER CORNER JOINTS MUST BE LATERALLY RESTRAINED.

LOADING

TOTAL LOAD CASES: (4)

CHORDS

MEMB. FR-TO	MAX. FACTORED FORCE (LBS)	VERT. LOAD LC1 (PLF) FROM	TO	MAX CSI (LC)	MAX. UNBRAC LENGTH
1- 2	0 / 24	-77.4	-77.4	0.16 (1)	10.00
2- 3	-880 / 0	-77.4	-77.4	0.16 (1)	6.25
3- 4	-722 / 0	-77.4	-77.4	0.11 (1)	6.25
4- 5	-792 / 0	-77.4	-77.4	0.11 (1)	6.25
5- 6	-968 / 0	-77.4	-77.4	0.18 (1)	6.12
6- 7	0 / 21	-77.4	-77.4	0.21 (1)	10.00
12- 1	-62 / 0	0.0	0.0	0.01 (1)	7.81
8- 7	-124 / 0	0.0	0.0	0.01 (1)	7.81
12-11	0 / 604	-17.5	-17.5	0.21 (4)	10.00
11-10	0 / 830	-17.5	-17.5	0.32 (4)	10.00
10- 9	0 / 855	-17.5	-17.5	0.32 (4)	10.00
9- 8	0 / 855	-17.5	-17.5	0.32 (4)	10.00

WEBS

MEMB. FR-TO	MAX. FACTORED FORCE (LBS)	MAX CSI (LC)
2-11	0 / 159	0.04 (1)
11- 3	0 / 243	0.05 (1)
11- 4	-255 / 0	0.31 (1)
4-10	-90 / 13	0.11 (1)
10- 5	0 / 298	0.07 (1)
10- 6	-95 / 28	0.06 (1)
12- 2	-1111 / 0	0.44 (1)
6- 8	-1213 / 0	0.71 (1)

DESIGN CRITERIA

SPECIFIED LOADS:

TOP	CH.	LL	=	23.3	PSF
		DL	=	3.0	PSF
BOT	CH.	LL	=	0.0	PSF
		DL	=	7.0	PSF
TOTAL	LOAD		=	33.3	PSF

SPACING = 24.0 IN. C/C

LOADING IN FLAT SECTION BASED ON A SLOPE OF 6.00/12

THIS TRUSS IS DESIGNED FOR RESIDENTIAL OR SMALL BUILDING REQUIREMENTS OF PART 9, NBCC 2010

THIS DESIGN COMPLIES WITH:
- PART 9 OF OBC 2012 , BCBC 2012 , ABC 2014
- CSA 086-09
- TPIC 2011

(55 % OF 27.2 P.S.F. G.S.L. PLUS 8.4 P.S.F. RAIN LOAD) EQUALS 23.3 P.S.F. SPECIFIED ROOF LIVE LOAD

ALLOWABLE DEFL.(LL)= L/360 (0.73")
CALCULATED VERT. DEFL.(LL) = L/ 999 (0.03")
ALLOWABLE DEFL.(TL)= L/360 (0.73")
CALCULATED VERT. DEFL.(TL) = L/ 999 (0.15")

CSI: TC=0.21 (6-7:1) , BC=0.32 (10-11:4) , WB=0.71 (6-8:1) , SSI=0.13 (5-6:1)

DOL LUMBER=1.00 NAIL=1.00 LS BEND=1.10 COMP=1.10 SHEAR=1.10 TENS= 1.10

COMPANION LIVE LOAD FACTOR = 0.50

TRUSS PLATE MANUFACTURER IS NOT RESPONSIBLE FOR QUALITY CONTROL IN THE TRUSS MANUFACTURING PLANT .

NAIL VALUES

PLATE	GRIP(DRY) (PSI) MAX	MIN	SHEAR (PLI) MAX	MIN	SECTION (PLI) MAX	MIN
MT20	618	354	1667	822	2284	1656

PLATE PLACEMENT TOL. = 0.250 inches

PLATE ROTATION TOL. = 5.0 Deg.

JSI GRIP= 0.90 (10) (INPUT = 0.90)
JSI METAL= 0.32 (8) (INPUT = 1.00)

LICENSED PROFESSIONAL ENGINEER
P. M. TREVISAN
100136551
March 16th, 2017
PROVINCE OF ONTARIO

RECEIVED
TOWN OF MILTON
MAR 29, 2017
17-5337
BUILDING DIVISION

KOTT

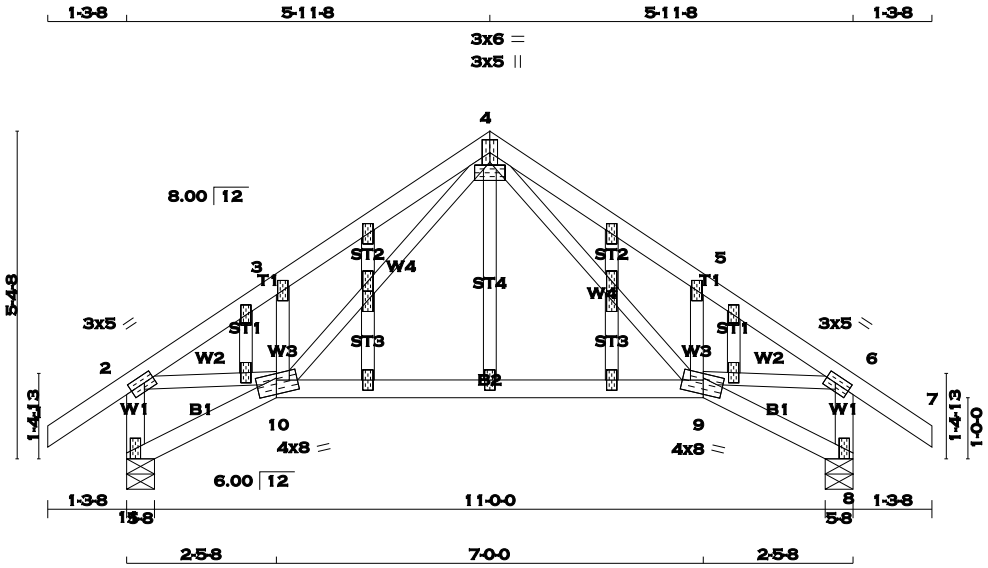

TOTAL WEIGHT = 60 lb

[M][F]

LUMBER

N. L. G. A. RULES

CHORDS	SIZE		LUMBER	DESCR.
1 - 4	2x4	DRY	No.2	SPF
4 - 7	2x4	DRY	No.2	SPF
11 - 2	2x4	DRY	No.2	SPF
8 - 6	2x4	DRY	No.2	SPF
11 - 10	2x4	DRY	No.2	SPF
10 - 9	2x4	DRY	No.2	SPF
9 - 8	2x4	DRY	No.2	SPF
ALL WEBS EXCEPT	2x3	DRY	No.2	SPF
ALL GABLE WEBS	2x3	DRY	No.2	SPF

DRY: SEASONED LUMBER.

GABLE STUDS SPACED AT 2-0-0 OC.

PLATES (table is in inches)

JT	TYPE	PLATES	W	LEN	Y	X
2	TMVW-t	MT20	3.0	5.0	1.50	2.00
3	TMW+w	MT20	2.0	4.0		
4	TTWW+p	MT20	3.0	5.0		
4	NP-p	MT20	3.0	6.0	0.50	3.00
5	TMW+w	MT20	2.0	4.0		
6	TMVW-t	MT20	3.0	5.0	1.50	2.00
8	BMV1+p	MT20	2.0	4.0		
9	BBWWW-m	MT20	4.0	8.0	2.75	4.00
10	BBWWW-m	MT20	4.0	8.0	2.75	4.00
11	BMV1+p	MT20	2.0	4.0		
12, 13, 14, 15, 16, 17, 18, 19, 20, 21, 22						
12	NP+w	MT20	2.0	4.0		
13	NP+w	MT20	2.0	4.0	1.75	1.00
20	NP+w	MT20	2.0	4.0	1.75	1.00

A SIZE FOR SIZE SUBSTITUTION OF MITEK MII20 WITH TEE-LOK TL20 PLATES IS ALLOWED.

DIMENSIONS, SUPPORTS AND LOADINGS SPECIFIED BY FABRICATOR TO BE VERIFIED BY BUILDING DESIGNER

BEARINGS

JT	FACTORED GROSS REACTION VERT	HORZ	MAXIMUM FACTORED GROSS REACTION DOWN	HORZ	UPLIFT	INPUT BRG IN-SX	REQRD BRG IN-SX
11	671	0	671	0	0	5-8	5-8
8	671	0	671	0	0	5-8	5-8

UNFACTORED REACTIONS

JT	1ST LCASE COMBINED	MAX./MIN. COMPONENT REACTIONS SNOW	LIVE	PERM.LIVE	WIND	DEAD	SOIL
11	469	341 / 0	0 / 0	0 / 0	0 / 0	127 / 0	0 / 0
8	469	341 / 0	0 / 0	0 / 0	0 / 0	127 / 0	0 / 0

BEARING MATERIAL TO BE SPF NO.2 OR BETTER AT JOINT(S) 11, 8

BRACING

TOP CHORD TO BE SHEATHED OR MAX. PURLIN SPACING = 6.25 FT.
MAX. UNBRACED BOTTOM CHORD LENGTH = 10.00 FT. OR RIGID CEILING DIRECTLY APPLIED.

ALL PITCH BREAKS AND PERIMETER CORNER JOINTS MUST BE LATERALLY RESTRAINED.

LOADING

TOTAL LOAD CASES: (4)

CHORDS

MEMB. FR-TO	MAX. FACTORED FORCE (LBS)	FACTORED VERT. LOAD (PLF) FROM	TO	LC1 CSI (LC)	MAX UNBRAC LENGTH
1- 2	0 / 29	-77.4	-77.4	0.10 (1)	10.00
2- 3	-805 / 0	-77.4	-77.4	0.08 (1)	6.25
3- 4	-835 / 0	-77.4	-77.4	0.12 (1)	6.25
4- 5	-835 / 0	-77.4	-77.4	0.12 (1)	6.25
5- 6	-805 / 0	-77.4	-77.4	0.08 (1)	6.25
6- 7	0 / 29	-77.4	-77.4	0.10 (1)	10.00
11- 2	-650 / 0	0.0	0.0	0.07 (1)	7.81
8- 6	-650 / 0	0.0	0.0	0.07 (1)	7.81
11-10	0 / 0	-17.5	-17.5	0.03 (4)	10.00
10- 9	0 / 390	-17.5	-17.5	0.27 (4)	10.00
9- 8	0 / 0	-17.5	-17.5	0.03 (4)	10.00

WEBS

MEMB. FR-TO	MAX. FACTORED FORCE (LBS)	MAX CSI (LC)
4- 9	0 / 452	0.10 (1)
9- 5	-279 / 0	0.04 (1)
10- 4	0 / 452	0.10 (1)
10- 3	-279 / 0	0.04 (1)
2-10	0 / 682	0.15 (1)
9- 6	0 / 682	0.15 (1)

DESIGN CRITERIA

SPECIFIED LOADS:

TOP CH.	LL	=	23.3	PSF
	DL	=	3.0	PSF
BOT CH.	LL	=	0.0	PSF
	DL	=	7.0	PSF
TOTAL LOAD		=	33.3	PSF

SPACING = 24.0 IN. C/C

THIS TRUSS IS DESIGNED FOR RESIDENTIAL OR SMALL BUILDING REQUIREMENTS OF PART 9, NBCC 2010

THIS DESIGN COMPLIES WITH:
- PART 9 OF OBC 2012 , BCBC 2012 , ABC 2014
- CSA 086-09
- TPIC 2011

(55 % OF 27.2 P.S.F. G.S.L. PLUS 8.4 P.S.F. RAIN LOAD) EQUALS 23.3 P.S.F. SPECIFIED ROOF LIVE LOAD

ALLOWABLE DEFL.(LL)= L/360 (0.40")
CALCULATED VERT. DEFL.(LL) = L/ 999 (0.02")
ALLOWABLE DEFL.(TL)= L/360 (0.40")
CALCULATED VERT. DEFL.(TL) = L/ 999 (0.13")

CSI: TC=0.12 (4-5:1) , BC=0.27 (9-10:4) , WB=0.15 (2-10:1) , SSI=0.10 (4-5:1)

DOL LUMBER=1.00 NAIL=1.00 LS BEND=1.10 COMP=1.10 SHEAR=1.10 TENS= 1.10

COMPANION LIVE LOAD FACTOR = 0.50

AUTOSOLVE HEELS OFF

TRUSS PLATE MANUFACTURER IS NOT RESPONSIBLE FOR QUALITY CONTROL IN THE TRUSS MANUFACTURING PLANT .

NAIL VALUES

PLATE	GRIP(DRY) (PSI) MAX	MIN	SHEAR (PLI) MAX	MIN	SECTION (PLI) MAX	MIN
MT20	618	354	1667	822	2284	1656

PLATE PLACEMENT TOL. = 0.250 inches

PLATE ROTATION TOL. = 5.0 Deg.

JSI GRIP= 0.82 (10) (INPUT = 0.90)
JSI METAL= 0.27 (2) (INPUT = 1.00)

LICENSED PROFESSIONAL ENGINEER
P. M. TREVISAN
100136551
March 16th, 2017
PROVINCE OF ONTARIO

RECEIVED
TOWN OF MILTON
MAR 29, 2017
17-5337
BUILDING DIVISION

KOTT

JOB NAME	TRUSS NAME	QUANTITY	PLY	JOB DESC.	DRWG NO.
PT0317-097	**T17**	**1**	**1**	TRUSS DESC. LECCO RIDGE-BLOCK 344	

KOTT , Stouffville, ON, CGC

Version 8.100 S Feb 9 2017 MiTek Industries, Inc. Thu Mar 16 11:57:57 2017 Page 1
ID:EvTixTQDI5yR1QLotZTBr_yE?HJ-seZEhfdIxgZ1Va2qM_PqoNAth7bcaEJgXTYKg6zaNju

SCALE = 1:40.7

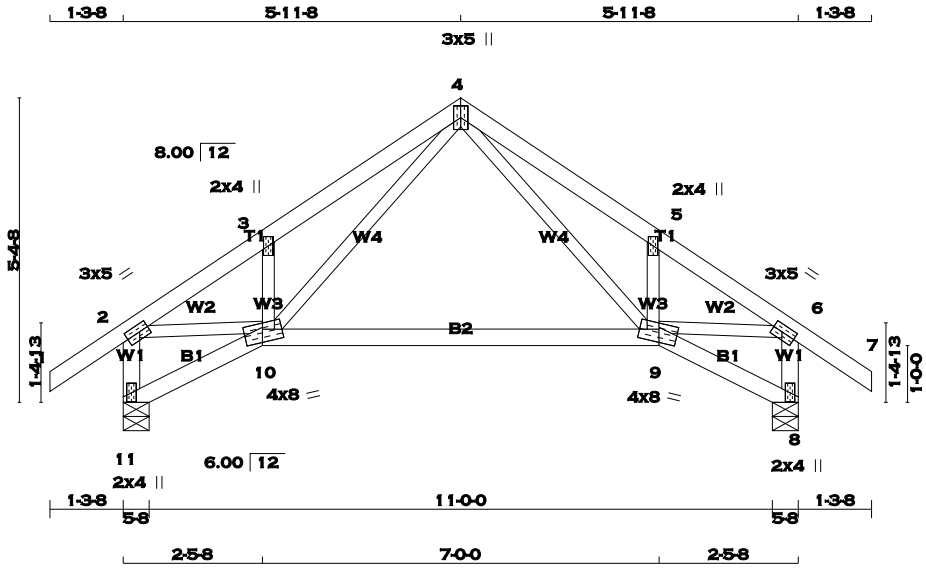

TOTAL WEIGHT = 51 lb

LUMBER
N. L. G. A. RULES

CHORDS	SIZE		LUMBER	DESCR.
1 - 4	2x4	DRY	No.2	SPF
4 - 7	2x4	DRY	No.2	SPF
11 - 2	2x4	DRY	No.2	SPF
8 - 6	2x4	DRY	No.2	SPF
11 - 10	2x4	DRY	No.2	SPF
10 - 9	2x4	DRY	No.2	SPF
9 - 8	2x4	DRY	No.2	SPF
ALL WEBS EXCEPT	2x3	DRY	No.2	SPF

DRY: SEASONED LUMBER.

PLATES (table is in inches)

JT	TYPE	PLATES	W	LEN	Y	X
2	TMVW-t	MT20	3.0	5.0	1.50	2.00
3	TMW+w	MT20	2.0	4.0		
4	TTWW+p	MT20	3.0	5.0		
5	TMW+w	MT20	2.0	4.0		
6	TMVW-t	MT20	3.0	5.0	1.50	2.00
8	BMV1+p	MT20	2.0	4.0		
9	BBWWW-m	MT20	4.0	8.0	2.75	4.00
10	BBWWW-m	MT20	4.0	8.0	2.75	4.00
11	BMV1+p	MT20	2.0	4.0		

A SIZE FOR SIZE SUBSTITUTION OF MITEK MII20 WITH TEE-LOK TL20 PLATES IS ALLOWED.

DIMENSIONS, SUPPORTS AND LOADINGS SPECIFIED BY FABRICATOR TO BE VERIFIED BY BUILDING DESIGNER

BEARINGS

JT	FACTORED GROSS REACTION VERT	HORZ	MAXIMUM FACTORED GROSS REACTION DOWN	HORZ	UPLIFT	INPUT BRG IN-SX	REQRD BRG IN-SX
11	671	0	671	0	0	5-8	5-8
8	671	0	671	0	0	5-8	5-8

UNFACTORED REACTIONS

JT	1ST LCASE COMBINED	MAX./MIN. COMPONENT REACTIONS SNOW	LIVE	PERM.LIVE	WIND	DEAD	SOIL
11	469	341 / 0	0 / 0	0 / 0	0 / 0	127 / 0	0 / 0
8	469	341 / 0	0 / 0	0 / 0	0 / 0	127 / 0	0 / 0

BEARING MATERIAL TO BE SPF NO.2 OR BETTER AT JOINT(S) 11, 8

BRACING
TOP CHORD TO BE SHEATHED OR MAX. PURLIN SPACING = 6.25 FT.
MAX. UNBRACED BOTTOM CHORD LENGTH = 10.00 FT. OR RIGID CEILING DIRECTLY APPLIED.

ALL PITCH BREAKS AND PERIMETER CORNER JOINTS MUST BE LATERALLY RESTRAINED.

LOADING
TOTAL LOAD CASES: (4)

CHORDS

MEMB. FR-TO	MAX. FACTORED FORCE (LBS)	FACTORED VERT. LOAD (PLF) FROM	TO	LC1 MAX CSI (LC)	MAX. UNBRAC LENGTH
1- 2	0 / 29	-77.4	-77.4	0.10 (1)	10.00
2- 3	-805 / 0	-77.4	-77.4	0.08 (1)	6.25
3- 4	-835 / 0	-77.4	-77.4	0.12 (1)	6.25
4- 5	-835 / 0	-77.4	-77.4	0.12 (1)	6.25
5- 6	-805 / 0	-77.4	-77.4	0.08 (1)	6.25
6- 7	0 / 29	-77.4	-77.4	0.10 (1)	10.00
11- 2	-650 / 0	0.0	0.0	0.07 (1)	7.81
8- 6	-650 / 0	0.0	0.0	0.07 (1)	7.81
11-10	0 / 0	-17.5	-17.5	0.03 (4)	10.00
10- 9	0 / 390	-17.5	-17.5	0.27 (4)	10.00
9- 8	0 / 0	-17.5	-17.5	0.03 (4)	10.00

WEBS

MEMB. FR-TO	MAX. FACTORED FORCE (LBS)	MAX CSI (LC)
4- 9	0 / 452	0.10 (1)
9- 5	-279 / 0	0.04 (1)
10- 4	0 / 452	0.10 (1)
10- 3	-279 / 0	0.04 (1)
2-10	0 / 682	0.15 (1)
9- 6	0 / 682	0.15 (1)

DESIGN CRITERIA

SPECIFIED LOADS:

TOP CH.	LL	=	23.3	PSF
	DL	=	3.0	PSF
BOT CH.	LL	=	0.0	PSF
	DL	=	7.0	PSF
TOTAL LOAD		=	33.3	PSF

SPACING = 24.0 IN. C/C

THIS TRUSS IS DESIGNED FOR RESIDENTIAL OR SMALL BUILDING REQUIREMENTS OF PART 9, NBCC 2010

THIS DESIGN COMPLIES WITH:
- PART 9 OF OBC 2012 , BCBC 2012 , ABC 2014
- CSA 086-09
- TPIC 2011

(55 % OF 27.2 P.S.F. G.S.L. PLUS 8.4 P.S.F. RAIN LOAD) EQUALS 23.3 P.S.F. SPECIFIED ROOF LIVE LOAD

ALLOWABLE DEFL.(LL)= L/360 (0.40")
CALCULATED VERT. DEFL.(LL) = L/ 999 (0.02")
ALLOWABLE DEFL.(TL)= L/360 (0.40")
CALCULATED VERT. DEFL.(TL) = L/ 999 (0.13")

CSI: TC=0.12 (4-5:1) , BC=0.27 (9-10:4) , WB=0.15 (2-10:1) , SSI=0.10 (4-5:1)

DOL LUMBER=1.00 NAIL=1.00 LS BEND=1.10 COMP=1.10 SHEAR=1.10 TENS= 1.10

COMPANION LIVE LOAD FACTOR = 0.50

AUTOSOLVE HEELS OFF

TRUSS PLATE MANUFACTURER IS NOT RESPONSIBLE FOR QUALITY CONTROL IN THE TRUSS MANUFACTURING PLANT .

NAIL VALUES

PLATE	GRIP(DRY) (PSI) MAX	MIN	SHEAR (PLI) MAX	MIN	SECTION (PLI) MAX	MIN
MT20	618	354	1667	822	2284	1656

PLATE PLACEMENT TOL. = 0.250 inches

PLATE ROTATION TOL. = 5.0 Deg.

JSI GRIP= 0.82 (10) (INPUT = 0.90)
JSI METAL= 0.27 (2) (INPUT = 1.00)

LICENSED PROFESSIONAL ENGINEER
R. M. TREVISAN
100136551
March 16th, 2017
PROVINCE OF ONTARIO

RECEIVED
TOWN OF MILTON
MAR 29, 2017
17-5337
BUILDING DIVISION

KOTT

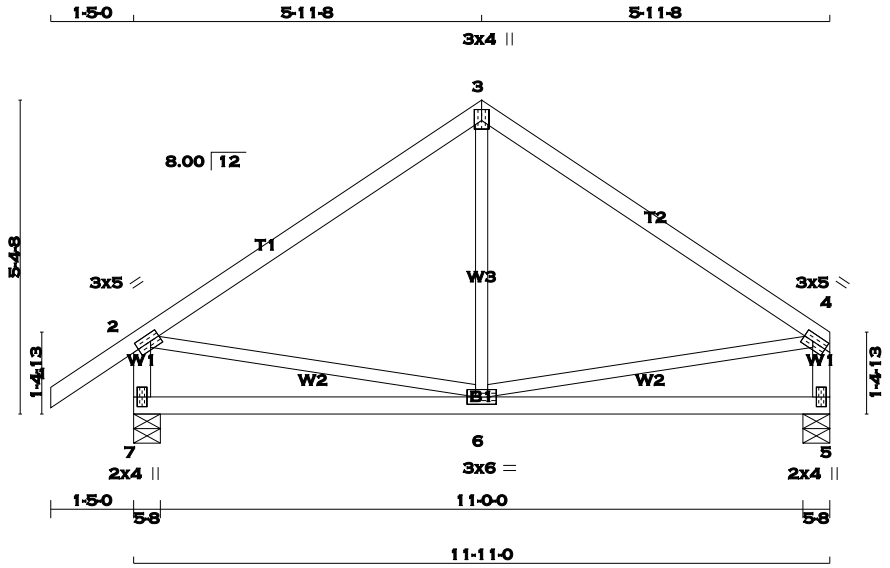

TOTAL WEIGHT = 3 X 48 = 143 lb

[M][F]

LUMBER

N. L. G. A. RULES

CHORDS	SIZE		LUMBER	DESCR.
1 - 3	2x4	DRY	No.2	SPF
3 - 4	2x4	DRY	No.2	SPF
7 - 2	2x4	DRY	No.2	SPF
5 - 4	2x4	DRY	No.2	SPF
7 - 5	2x4	DRY	No.2	SPF
ALL WEBS EXCEPT	2x3	DRY	No.2	SPF

DRY: SEASONED LUMBER.

PLATES (table is in inches)

JT	TYPE	PLATES	W	LEN	Y	X
2	TMVW-t	MT20	3.0	5.0	1.50	2.00
3	TTW+p	MT20	3.0	4.0	2.25	1.50
4	TMVW-t	MT20	3.0	5.0	1.50	2.00
5	BMV1+p	MT20	2.0	4.0		
6	BMWWW-t	MT20	3.0	6.0		
7	BMV1+p	MT20	2.0	4.0		

A SIZE FOR SIZE SUBSTITUTION OF MITEK MII20 WITH TEE-LOK TL20 PLATES IS ALLOWED.

DIMENSIONS, SUPPORTS AND LOADINGS SPECIFIED BY FABRICATOR TO BE VERIFIED BY BUILDING DESIGNER

BEARINGS

JT	FACTORED GROSS REACTION VERT	HORZ	MAXIMUM FACTORED GROSS REACTION DOWN	HORZ	UPLIFT	INPUT BRG IN-SX	REQRD BRG IN-SX
7	681	0	681	0	0	5-8	5-8
5	565	0	565	0	0	5-8	5-8

UNFACTORED REACTIONS

JT	1ST LCASE COMBINED	MAX./MIN. COMPONENT REACTIONS SNOW	LIVE	PERM.LIVE	WIND	DEAD	SOIL
7	475	347 / 0	0 / 0	0 / 0	0 / 0	128 / 0	0 / 0
5	397	278 / 0	0 / 0	0 / 0	0 / 0	119 / 0	0 / 0

BEARING MATERIAL TO BE SPF NO.2 OR BETTER AT JOINT(S) 7, 5

BRACING

TOP CHORD TO BE SHEATHED OR MAX. PURLIN SPACING = 6.25 FT.
MAX. UNBRACED BOTTOM CHORD LENGTH = 10.00 FT. OR RIGID CEILING DIRECTLY APPLIED.

ALL PITCH BREAKS AND PERIMETER CORNER JOINTS MUST BE LATERALLY RESTRAINED.

LOADING

TOTAL LOAD CASES: (4)

CHORDS

MEMB. FR-TO	MAX. FACTORED FORCE (LBS)	FACTORED VERT. LOAD (PLF) FROM	TO	LC1 MAX CSI (LC)	MAX. UNBRAC LENGTH
1- 2	0 / 32	-77.4	-77.4	0.12 (1)	10.00
2- 3	-418 / 0	-77.4	-77.4	0.35 (1)	6.25
3- 4	-418 / 0	-77.4	-77.4	0.35 (1)	6.25
7- 2	-641 / 0	0.0	0.0	0.07 (1)	7.81
5- 4	-525 / 0	0.0	0.0	0.05 (1)	7.81
7- 6	0 / 0	-17.5	-17.5	0.18 (4)	10.00
6- 5	0 / 0	-17.5	-17.5	0.18 (4)	10.00

WEBS

MEMB. FR-TO	MAX. FACTORED FORCE (LBS)	MAX CSI (LC)
6- 3	0 / 104	0.04 (4)
2- 6	0 / 353	0.08 (1)
6- 4	0 / 353	0.08 (1)

DESIGN CRITERIA

SPECIFIED LOADS:

TOP	CH.	LL	=	23.3	PSF
		DL	=	3.0	PSF
BOT	CH.	LL	=	0.0	PSF
		DL	=	7.0	PSF
TOTAL	LOAD		=	33.3	PSF

SPACING = 24.0 IN. C/C

THIS TRUSS IS DESIGNED FOR RESIDENTIAL OR SMALL BUILDING REQUIREMENTS OF PART 9, NBCC 2010

THIS DESIGN COMPLIES WITH:
- PART 9 OF OBC 2012 , BCBC 2012 , ABC 2014
- CSA 086-09
- TPIC 2011

(55 % OF 27.2 P.S.F. G.S.L. PLUS 8.4 P.S.F. RAIN LOAD) EQUALS 23.3 P.S.F. SPECIFIED ROOF LIVE LOAD

ALLOWABLE DEFL.(LL)= L/360 (0.40")
CALCULATED VERT. DEFL.(LL) = L/ 999 (0.01")
ALLOWABLE DEFL.(TL)= L/360 (0.40")
CALCULATED VERT. DEFL.(TL) = L/ 999 (0.03")

CSI: TC=0.35 (3-4:1) , BC=0.18 (6-7:4) , WB=0.08 (2-6:1) , SSI=0.15 (3-4:1)

DOL LUMBER=1.00 NAIL=1.00 LS BEND=1.10 COMP=1.10 SHEAR=1.10 TENS= 1.10

COMPANION LIVE LOAD FACTOR = 0.50

TRUSS PLATE MANUFACTURER IS NOT RESPONSIBLE FOR QUALITY CONTROL IN THE TRUSS MANUFACTURING PLANT .

NAIL VALUES

PLATE	GRIP(DRY) (PSI) MAX	MIN	SHEAR (PLI) MAX	MIN	SECTION (PLI) MAX	MIN
MT20	618	354	1667	822	2284	1656

PLATE PLACEMENT TOL. = 0.250 inches

PLATE ROTATION TOL. = 5.0 Deg.

JSI GRIP= 0.76 (6) (INPUT = 0.90)
JSI METAL= 0.18 (2) (INPUT = 1.00)

LICENSED PROFESSIONAL ENGINEER
P. M. TREVISAN
100136551
March 16th, 2017
PROVINCE OF ONTARIO

RECEIVED
TOWN OF MILTON
MAR 29, 2017
17-5337
BUILDING DIVISION

KOTT

JOB NAME	TRUSS NAME	QUANTITY	PLY	JOB DESC.	DRWG NO.
PT0317-097	**T19**	**2**	**1**	TRUSS DESC. LECCO RIDGE-BLOCK 344	

KOTT , Stouffville, ON, CGC

Version 8.100 S Feb 9 2017 MiTek Industries, Inc. Thu Mar 16 11:57:58 2017 Page 1
ID:EvTixTQDI5yR1QLotZTBr_yE?HJ-Kq6du?ewi_ht7kd0wiw3KajzlXzWJiopl7ItCYzaNjt

SCALE = 1:39.4

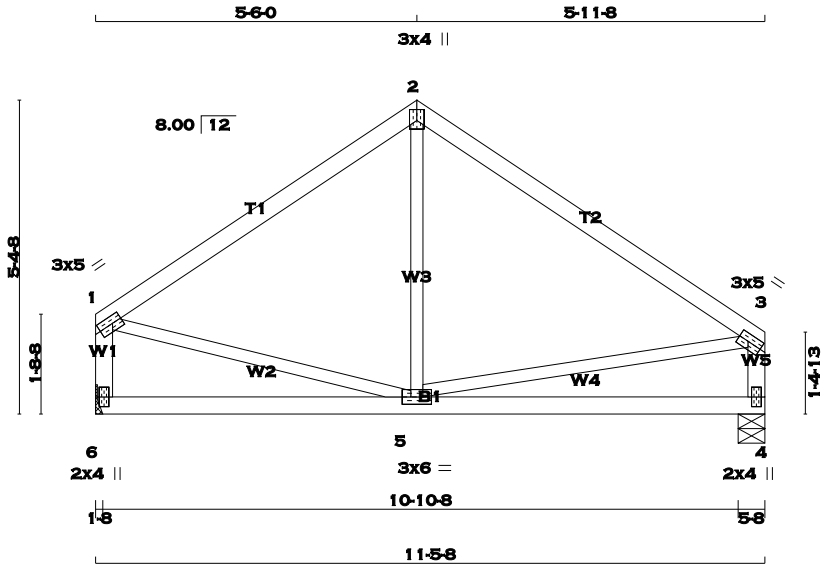

TOTAL WEIGHT = 2 X 44 = 89 lb

[M][F]

LUMBER

N. L. G. A. RULES

CHORDS	SIZE		LUMBER	DESCR.
1 - 2	2x4	DRY	No.2	SPF
2 - 3	2x4	DRY	No.2	SPF
6 - 1	2x4	DRY	No.2	SPF
4 - 3	2x4	DRY	No.2	SPF
6 - 4	2x4	DRY	No.2	SPF
ALL WEBS EXCEPT	2x3	DRY	No.2	SPF

DRY: SEASONED LUMBER.

PLATES (table is in inches)

JT	TYPE	PLATES	W	LEN	Y	X
1	TMVW-t	MT20	3.0	5.0	1.50	2.00
2	TTW+p	MT20	3.0	4.0	2.25	1.50
3	TMVW-t	MT20	3.0	5.0	1.50	2.00
4	BMV1+p	MT20	2.0	4.0		
5	BMWWW-t	MT20	3.0	6.0		
6	BMV1+p	MT20	2.0	4.0		

A SIZE FOR SIZE SUBSTITUTION OF MITEK MII20 WITH TEE-LOK TL20 PLATES IS ALLOWED.

DIMENSIONS, SUPPORTS AND LOADINGS SPECIFIED BY FABRICATOR TO BE VERIFIED BY BUILDING DESIGNER

BEARINGS

JT	FACTORED GROSS REACTION VERT	HORZ	MAXIMUM FACTORED GROSS REACTION DOWN	HORZ	UPLIFT	INPUT BRG IN-SX	REQRD BRG IN-SX
6	543	0	543	0	0	HANGER BY OTHERS MIN. SEAT SIZE: 1-8	
4	543	0	543	0	0	5-8	5-8

UNFACTORED REACTIONS

JT	1ST LCASE COMBINED	MAX./MIN. COMPONENT REACTIONS SNOW	LIVE	PERM.LIVE	WIND	DEAD	SOIL
6	381	267 / 0	0 / 0	0 / 0	0 / 0	115 / 0	0 / 0
4	381	267 / 0	0 / 0	0 / 0	0 / 0	115 / 0	0 / 0

BEARING MATERIAL TO BE SPF NO.2 OR BETTER AT JOINT(S) 4

BRACING

TOP CHORD TO BE SHEATHED OR MAX. PURLIN SPACING = 6.25 FT.
MAX. UNBRACED BOTTOM CHORD LENGTH = 10.00 FT. OR RIGID CEILING DIRECTLY APPLIED.

ALL PITCH BREAKS AND PERIMETER CORNER JOINTS MUST BE LATERALLY RESTRAINED.

LOADING

TOTAL LOAD CASES: (4)

CHORDS

MEMB. FR-TO	MAX. FACTORED FORCE (LBS)	VERT. LOAD (PLF) FROM	TO	MAX CSI (LC)	MAX. UNBRAC LENGTH
1- 2	-385 / 0	-77.4	-77.4	0.30 (1)	6.25
2- 3	-386 / 0	-77.4	-77.4	0.35 (1)	6.25
6- 1	-510 / 0	0.0	0.0	0.05 (1)	7.81
4- 3	-501 / 0	0.0	0.0	0.05 (1)	7.81
6- 5	0 / 0	-17.5	-17.5	0.17 (4)	10.00
5- 4	0 / 0	-17.5	-17.5	0.17 (4)	10.00

WEBS

MEMB. FR-TO	MAX. FACTORED FORCE (LBS)	MAX CSI (LC)
5- 2	-16 / 94	0.03 (4)
1- 5	0 / 331	0.07 (1)
5- 3	0 / 326	0.07 (1)

DESIGN CRITERIA

SPECIFIED LOADS:

TOP	CH.	LL	=	23.3	PSF
		DL	=	3.0	PSF
BOT	CH.	LL	=	0.0	PSF
		DL	=	7.0	PSF
TOTAL	LOAD		=	33.3	PSF

SPACING = 24.0 IN. C/C

THIS TRUSS IS DESIGNED FOR RESIDENTIAL OR SMALL BUILDING REQUIREMENTS OF PART 9, NBCC 2010

THIS DESIGN COMPLIES WITH:
- PART 9 OF OBC 2012 , BCBC 2012 , ABC 2014
- CSA 086-09
- TPIC 2011

(55 % OF 27.2 P.S.F. G.S.L. PLUS 8.4 P.S.F. RAIN LOAD) EQUALS 23.3 P.S.F. SPECIFIED ROOF LIVE LOAD

ALLOWABLE DEFL.(LL)= L/360 (0.38")
CALCULATED VERT. DEFL.(LL) = L/ 999 (0.01")
ALLOWABLE DEFL.(TL)= L/360 (0.38")
CALCULATED VERT. DEFL.(TL) = L/ 999 (0.04")

CSI: TC=0.35 (2-3:1) , BC=0.17 (5-6:4) , WB=0.07 (1-5:1) , SSI=0.15 (2-3:1)

DOL LUMBER=1.00 NAIL=1.00 LS BEND=1.10 COMP=1.10 SHEAR=1.10 TENS= 1.10

COMPANION LIVE LOAD FACTOR = 0.50

TRUSS PLATE MANUFACTURER IS NOT RESPONSIBLE FOR QUALITY CONTROL IN THE TRUSS MANUFACTURING PLANT .

NAIL VALUES

PLATE	GRIP(DRY) (PSI) MAX	MIN	SHEAR (PLI) MAX	MIN	SECTION (PLI) MAX	MIN
MT20	618	354	1667	822	2284	1656

PLATE PLACEMENT TOL. = 0.250 inches

PLATE ROTATION TOL. = 5.0 Deg.

JSI GRIP= 0.70 (5) (INPUT = 0.90)
JSI METAL= 0.15 (3) (INPUT = 1.00)

LICENSED PROFESSIONAL ENGINEER
P. M. TREVISAN
100136551
March 16th, 2017
PROVINCE OF ONTARIO

RECEIVED
TOWN OF MILTON
MAR 29, 2017
17-5337
BUILDING DIVISION

KOTT

JOB NAME	TRUSS NAME	QUANTITY	PLY	JOB DESC.	DRWG NO.
PT0317-097	T20	1	1	TRUSS DESC. LECCO RIDGE-BLOCK 344	

KOTT , Stouffville, ON, CGC

Version 8.100 S Feb 9 2017 MiTek Industries, Inc. Thu Mar 16 11:57:58 2017 Page 1
ID:EvTixTQDI5yR1QLotZTBr_yE?HJ-Kq6du?ewi_ht7kd0wiw3Kaj0eXxlJaypl7ItCYzaNjt

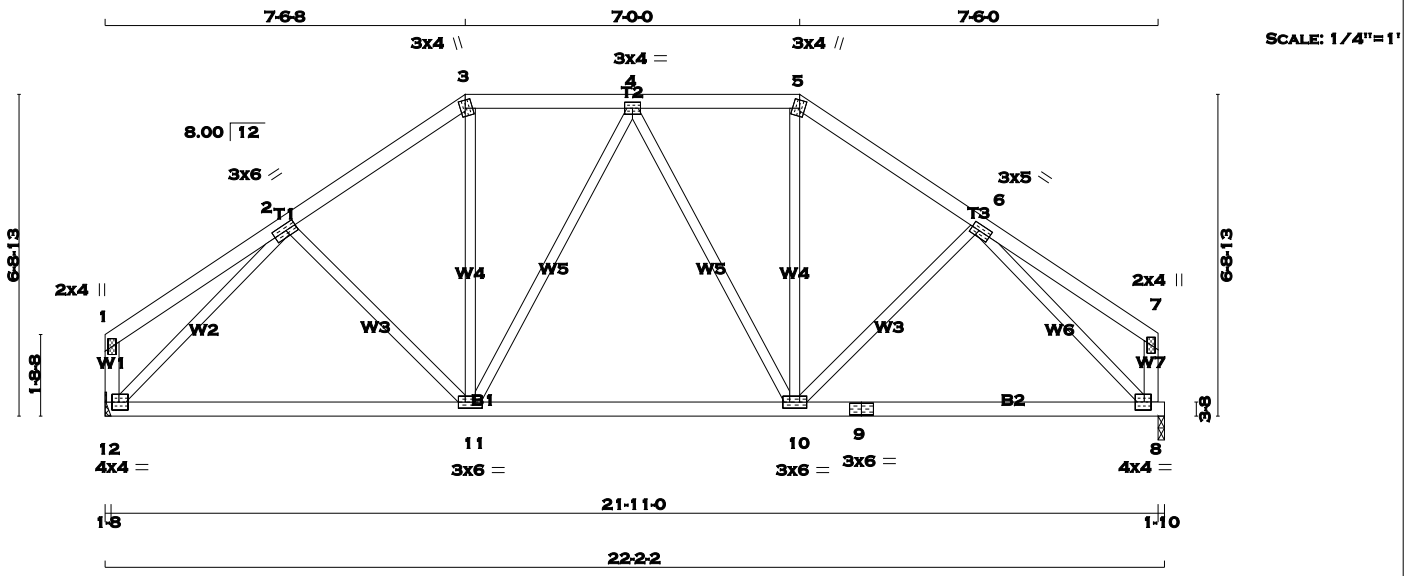

TOTAL WEIGHT = 95 lb
[M][F]

LUMBER
N. L. G. A. RULES

CHORDS	SIZE		LUMBER	DESCR.
1 - 3	2x4	DRY	No.2	SPF
3 - 5	2x4	DRY	No.2	SPF
5 - 7	2x4	DRY	No.2	SPF
12 - 1	2x4	DRY	No.2	SPF
8 - 7	2x4	DRY	No.2	SPF
12 - 9	2x4	DRY	No.2	SPF
9 - 8	2x4	DRY	No.2	SPF
ALL WEBS EXCEPT	2x3	DRY	No.2	SPF

DRY: SEASONED LUMBER.

PLATES (table is in inches)

JT	TYPE	PLATES	W	LEN	Y	X
1	TMV+p	MT20	2.0	4.0		
2	TMWW-t	MT20	3.0	6.0	1.50	2.75
3	TTW+m	MT20	3.0	4.0	2.00	1.25
4	TMWW-t	MT20	3.0	4.0		
5	TTW+m	MT20	3.0	4.0	2.00	1.25
6	TMWW-t	MT20	3.0	5.0	1.50	2.00
7	TMV+p	MT20	2.0	4.0		
8	BMVW1-t	MT20	4.0	4.0	2.00	1.75
9	BS-t	MT20	3.0	6.0		
10	BMWWW-t	MT20	3.0	6.0		
11	BMWWW-t	MT20	3.0	6.0		
12	BMVW1-t	MT20	4.0	4.0	2.00	1.75

A SIZE FOR SIZE SUBSTITUTION OF MITEK MII20 WITH TEE-LOK TL20 PLATES IS ALLOWED.

DIMENSIONS, SUPPORTS AND LOADINGS SPECIFIED BY FABRICATOR TO BE VERIFIED BY BUILDING DESIGNER

BEARINGS

JT	FACTORED GROSS REACTION VERT	HORZ	MAXIMUM FACTORED GROSS REACTION DOWN	HORZ	UPLIFT	INPUT BRG IN-SX	REQRD BRG IN-SX
12	1045	0	1045	0	0	HANGER BY OTHERS MIN. SEAT SIZE: 1-8	
8	1045	0	1045	0	0	1-10	1-10

UNFACTORED REACTIONS

JT	1ST LCASE COMBINED	MAX./MIN. COMPONENT REACTIONS SNOW	LIVE	PERM.LIVE	WIND	DEAD	SOIL
12	734	513 / 0	0 / 0	0 / 0	0 / 0	220 / 0	0 / 0
8	734	513 / 0	0 / 0	0 / 0	0 / 0	220 / 0	0 / 0

BEARING MATERIAL TO BE SPF NO.2 OR BETTER AT JOINT(S) 8

BRACING
TOP CHORD TO BE SHEATHED OR MAX. PURLIN SPACING = 6.09 FT.
MAX. UNBRACED BOTTOM CHORD LENGTH = 10.00 FT. OR RIGID CEILING DIRECTLY APPLIED.

ALL PITCH BREAKS AND PERIMETER CORNER JOINTS MUST BE LATERALLY RESTRAINED.

LOADING
TOTAL LOAD CASES: (4)

CHORDS

MEMB. FR-TO	MAX. FACTORED FORCE (LBS)	VERT. LOAD LC1 (PLF) FROM	TO	MAX CSI (LC)	MAX. UNBRAC LENGTH
1- 2	0 / 18	-77.4	-77.4	0.17 (1)	10.00
2- 3	-1004 / 0	-77.4	-77.4	0.14 (1)	6.09
3- 4	-824 / 0	-77.4	-77.4	0.12 (1)	6.25
4- 5	-822 / 0	-77.4	-77.4	0.12 (1)	6.25
5- 6	-1001 / 0	-77.4	-77.4	0.14 (1)	6.10
6- 7	0 / 18	-77.4	-77.4	0.17 (1)	10.00
12- 1	-113 / 0	0.0	0.0	0.01 (1)	7.81
8- 7	-112 / 0	0.0	0.0	0.01 (1)	7.81
12-11	0 / 848	-17.5	-17.5	0.27 (4)	10.00
11-10	0 / 909	-17.5	-17.5	0.28 (4)	10.00
10- 9	0 / 840	-17.5	-17.5	0.27 (4)	10.00
9- 8	0 / 840	-17.5	-17.5	0.27 (4)	10.00

WEBS

MEMB. FR-TO	MAX. FACTORED FORCE (LBS)	MAX CSI (LC)
2-11	-41 / 38	0.02 (1)
11- 3	0 / 327	0.07 (1)
11- 4	-181 / 0	0.19 (1)
4-10	-186 / 0	0.19 (1)
10- 5	0 / 325	0.07 (1)
10- 6	-33 / 40	0.02 (1)
12- 2	-1219 / 0	0.58 (1)
6- 8	-1216 / 0	0.57 (1)

RECEIVED
TOWN OF MILTON
MAR 29, 2017
17-5337
BUILDING DIVISION

DESIGN CRITERIA

SPECIFIED LOADS:

TOP CH.	LL	=	23.3	PSF
	DL	=	3.0	PSF
BOT CH.	LL	=	0.0	PSF
	DL	=	7.0	PSF
TOTAL LOAD		=	33.3	PSF

SPACING = 24.0 IN. C/C

LOADING IN FLAT SECTION BASED ON A SLOPE OF 6.00/12

THIS TRUSS IS DESIGNED FOR RESIDENTIAL OR SMALL BUILDING REQUIREMENTS OF PART 9, NBCC 2010

THIS DESIGN COMPLIES WITH:
- PART 9 OF OBC 2012 , BCBC 2012 , ABC 2014
- CSA 086-09
- TPIC 2011

(55 % OF 27.2 P.S.F. G.S.L. PLUS 8.4 P.S.F. RAIN LOAD) EQUALS 23.3 P.S.F. SPECIFIED ROOF LIVE LOAD

ALLOWABLE DEFL.(LL)= L/360 (0.73")
CALCULATED VERT. DEFL.(LL) = L/ 999 (0.03")
ALLOWABLE DEFL.(TL)= L/360 (0.73")
CALCULATED VERT. DEFL.(TL) = L/ 999 (0.11")

CSI: TC=0.17 (1-2:1) , BC=0.28 (10-11:4) , WB=0.58 (2-12:1) , SSI=0.13 (3-4:1)

DOL LUMBER=1.00 NAIL=1.00 LS BEND=1.10 COMP=1.10 SHEAR=1.10 TENS= 1.10

COMPANION LIVE LOAD FACTOR = 0.50

TRUSS PLATE MANUFACTURER IS NOT RESPONSIBLE FOR QUALITY CONTROL IN THE TRUSS MANUFACTURING PLANT .

NAIL VALUES

PLATE	GRIP(DRY) (PSI) MAX	MIN	SHEAR (PLI) MAX	MIN	SECTION (PLI) MAX	MIN
MT20	618	354	1667	822	2284	1656

PLATE PLACEMENT TOL. = 0.250 inches

PLATE ROTATION TOL. = 5.0 Deg.

JSI GRIP= 0.90 (6) (INPUT = 0.90)
JSI METAL= 0.35 (6) (INPUT = 1.00)

KOTT

JOB NAME	TRUSS NAME	QUANTITY	PLY	JOB DESC.	DRWG NO.
PT0317-097	T21	1	1	TRUSS DESC. LECCO RIDGE-BLOCK 344	

KOTT , Stouffville, ON, CGC

Version 8.100 S Feb 9 2017 MiTek Industries, Inc. Thu Mar 16 11:57:59 2017 Page 1
ID:EvTixTQDI5yR1QLotZTBr_yE?HJ-o0g?5LfYTHpkktCCUPRItoFCWwLk298z_n1Rk_zaNjs

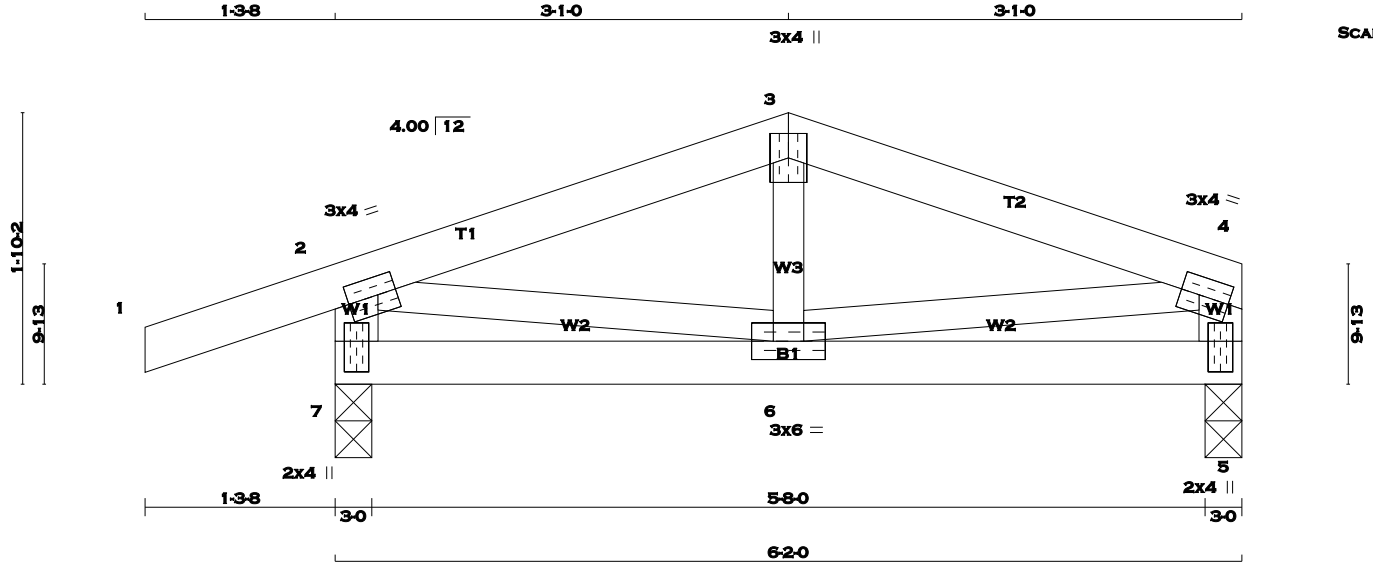

TOTAL WEIGHT = 22 lb
[M][F]

LUMBER
N. L. G. A. RULES

CHORDS	SIZE		LUMBER	DESCR.
1 - 3	2x4	DRY	No.2	SPF
3 - 4	2x4	DRY	No.2	SPF
7 - 2	2x4	DRY	No.2	SPF
5 - 4	2x4	DRY	No.2	SPF
7 - 5	2x4	DRY	No.2	SPF
ALL WEBS EXCEPT	2x3	DRY	No.2	SPF

DRY: SEASONED LUMBER.

PLATES (table is in inches)

JT	TYPE	PLATES	W	LEN	Y	X
2	TMVW-t	MT20	3.0	4.0	1.50	1.50
3	TTW+p	MT20	3.0	4.0		
4	TMVW-t	MT20	3.0	4.0	1.50	1.50
5	BMV1+p	MT20	2.0	4.0	2.50	1.00
6	BMWWW-t	MT20	3.0	6.0		
7	BMV1+p	MT20	2.0	4.0	2.50	1.00

A SIZE FOR SIZE SUBSTITUTION OF MITEK MII20 WITH TEE-LOK TL20 PLATES IS ALLOWED.

DIMENSIONS, SUPPORTS AND LOADINGS SPECIFIED BY FABRICATOR TO BE VERIFIED BY BUILDING DESIGNER

BEARINGS

JT	FACTORED GROSS REACTION VERT	HORZ	MAXIMUM FACTORED GROSS REACTION DOWN	HORZ	UPLIFT	INPUT BRG IN-SX	REQRD BRG IN-SX
7	396	0	396	0	0	3-0	3-0
5	292	0	292	0	0	3-0	3-0

UNFACTORED REACTIONS

JT	1ST LCASE COMBINED	MAX./MIN. COMPONENT REACTIONS SNOW	LIVE	PERM.LIVE	WIND	DEAD	SOIL
7	276	206 / 0	0 / 0	0 / 0	0 / 0	70 / 0	0 / 0
5	205	144 / 0	0 / 0	0 / 0	0 / 0	62 / 0	0 / 0

BEARING MATERIAL TO BE SPF NO.2 OR BETTER AT JOINT(S) 7, 5

BRACING
TOP CHORD TO BE SHEATHED OR MAX. PURLIN SPACING = 6.25 FT.
MAX. UNBRACED BOTTOM CHORD LENGTH = 10.00 FT. OR RIGID CEILING DIRECTLY APPLIED.

ALL PITCH BREAKS AND PERIMETER CORNER JOINTS MUST BE LATERALLY RESTRAINED.

LOADING
TOTAL LOAD CASES: (4)

CHORDS

MEMB. FR-TO	MAX. FACTORED FORCE (LBS)	FACTORED VERT. LOAD (PLF) FROM	TO	LC1 MAX CSI (LC)	MAX. UNBRAC LENGTH
1- 2	0 / 16	-77.4	-77.4	0.10 (1)	10.00
2- 3	-314 / 0	-77.4	-77.4	0.09 (1)	6.25
3- 4	-314 / 0	-77.4	-77.4	0.09 (1)	6.25
7- 2	-372 / 0	0.0	0.0	0.04 (1)	7.81
5- 4	-269 / 0	0.0	0.0	0.03 (1)	7.81
7- 6	0 / 0	-17.5	-17.5	0.04 (4)	10.00
6- 5	0 / 0	-17.5	-17.5	0.04 (4)	10.00

WEBS

MEMB. FR-TO	MAX. FACTORED FORCE (LBS)	MAX CSI (LC)
6- 3	-40 / 40	0.01 (4)
2- 6	0 / 302	0.07 (1)
6- 4	0 / 302	0.07 (1)

DESIGN CRITERIA

SPECIFIED LOADS:

TOP	CH.	LL	=	23.3	PSF
		DL	=	3.0	PSF
BOT	CH.	LL	=	0.0	PSF
		DL	=	7.0	PSF
TOTAL	LOAD		=	33.3	PSF

SPACING = 24.0 IN. C/C

THIS TRUSS IS DESIGNED FOR RESIDENTIAL OR SMALL BUILDING REQUIREMENTS OF PART 9, NBCC 2010

THIS DESIGN COMPLIES WITH:
- PART 9 OF OBC 2012 , BCBC 2012 , ABC 2014
- CSA 086-09
- TPIC 2011

(55 % OF 27.2 P.S.F. G.S.L. PLUS 8.4 P.S.F. RAIN LOAD) EQUALS 23.3 P.S.F. SPECIFIED ROOF LIVE LOAD

ALLOWABLE DEFL.(LL)= L/360 (0.21")
CALCULATED VERT. DEFL.(LL) = L/ 999 (0.00")
ALLOWABLE DEFL.(TL)= L/360 (0.21")
CALCULATED VERT. DEFL.(TL) = L/ 999 (0.01")

CSI: TC=0.10 (1-2:1) , BC=0.04 (5-6:4) , WB=0.07 (2-6:1) , SSI=0.09 (2-3:1)

DOL LUMBER=1.00 NAIL=1.00 LS BEND=1.10 COMP=1.10 SHEAR=1.10 TENS= 1.10

COMPANION LIVE LOAD FACTOR = 0.50

TRUSS PLATE MANUFACTURER IS NOT RESPONSIBLE FOR QUALITY CONTROL IN THE TRUSS MANUFACTURING PLANT .

NAIL VALUES

PLATE	GRIP(DRY) (PSI) MAX	MIN	SHEAR (PLI) MAX	MIN	SECTION (PLI) MAX	MIN
MT20	618	354	1667	822	2284	1656

PLATE PLACEMENT TOL. = 0.250 inches

PLATE ROTATION TOL. = 5.0 Deg.

JSI GRIP= 0.60 (2) (INPUT = 0.90)
JSI METAL= 0.14 (4) (INPUT = 1.00)

LICENSED PROFESSIONAL ENGINEER
P. M. TREVISAN
100136551
March 16th, 2017
PROVINCE OF ONTARIO

RECEIVED
TOWN OF MILTON
MAR 29, 2017
17-5337
BUILDING DIVISION

KOTT

JOB NAME	TRUSS NAME	QUANTITY	PLY	JOB DESC.	DRWG NO.
PT0317-097	T22	1	1	TRUSS DESC. LECCO RIDGE-BLOCK 344	

KOTT , Stouffville, ON, CGC

Version 8.100 S Feb 9 2017 MiTek Industries, Inc. Thu Mar 16 11:57:59 2017 Page 1
ID:EvTixTQDI5yR1QLotZTBr_yE?HJ-o0g?5LfYTHpkktCCUPRItoFBRwGZ29Xz_n1Rk_zaNjs

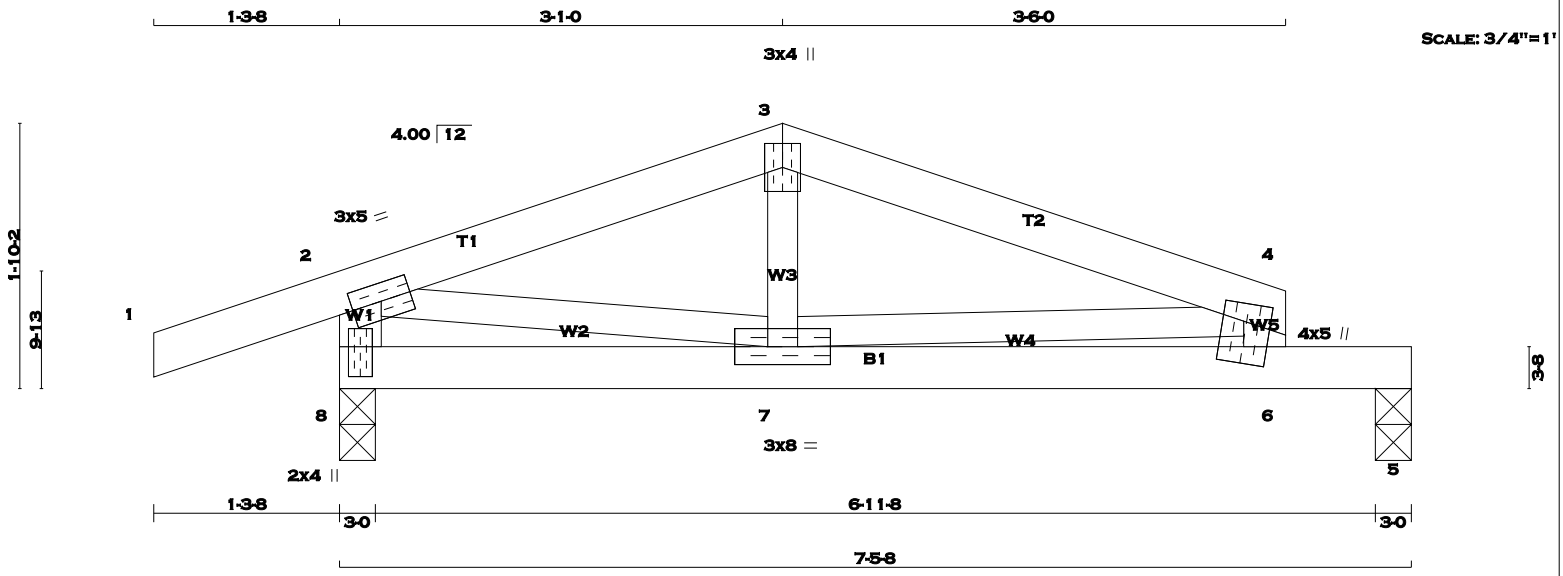

TOTAL WEIGHT = 25 lb

LUMBER
N. L. G. A. RULES

CHORDS	SIZE		LUMBER	DESCR.
1 - 3	2x4	DRY	No.2	SPF
3 - 4	2x4	DRY	No.2	SPF
8 - 2	2x4	DRY	No.2	SPF
6 - 4	2x4	DRY	No.2	SPF
8 - 5	2x4	DRY	No.2	SPF
ALL WEBS EXCEPT	2x3	DRY	No.2	SPF

DRY: SEASONED LUMBER.

PLATES (table is in inches)

JT	TYPE	PLATES	W	LEN	Y	X
2	TMVW-t	MT20	3.0	5.0		
3	TTW+p	MT20	3.0	4.0		
4						
6						
6	TMBMVW*+m	MT20	4.0	5.0	1.50	1.75
7	BMWWW-t	MT20	3.0	8.0		
8	BMV1+p	MT20	2.0	4.0	2.50	1.00

A SIZE FOR SIZE SUBSTITUTION OF MITEK MII20 WITH TEE-LOK TL20 PLATES IS ALLOWED.

DIMENSIONS, SUPPORTS AND LOADINGS SPECIFIED BY FABRICATOR TO BE VERIFIED BY BUILDING DESIGNER

BEARINGS

JT	FACTORED GROSS REACTION VERT	HORZ	MAXIMUM FACTORED GROSS REACTION DOWN	HORZ	UPLIFT	INPUT BRG IN-SX	REQRD BRG IN-SX
8	457	0	457	0	0	3-0	3-0
5	354	0	354	0	0	3-0	3-0

UNFACTORED REACTIONS

JT	1ST LCASE COMBINED	MAX./MIN. COMPONENT REACTIONS SNOW	LIVE	PERM.LIVE	WIND	DEAD	SOIL
8	319	236 / 0	0 / 0	0 / 0	0 / 0	83 / 0	0 / 0
5	248	174 / 0	0 / 0	0 / 0	0 / 0	75 / 0	0 / 0

BEARING MATERIAL TO BE SPF NO.2 OR BETTER AT JOINT(S) 8, 5

BRACING
TOP CHORD TO BE SHEATHED OR MAX. PURLIN SPACING = 6.25 FT.
MAX. UNBRACED BOTTOM CHORD LENGTH = 10.00 FT. OR RIGID CEILING DIRECTLY APPLIED.

ALL PITCH BREAKS AND PERIMETER CORNER JOINTS MUST BE LATERALLY RESTRAINED.

LOADING
TOTAL LOAD CASES: (4)

CHORDS

MEMB. FR-TO	MAX. FACTORED FORCE (LBS)	FACTORED VERT. LOAD (PLF) FROM	TO	LC1 MAX CSI (LC)	MAX. UNBRAC LENGTH
1- 2	0 / 16	-77.4	-77.4	0.10 (1)	10.00
2- 3	-490 / 0	-77.4	-77.4	0.13 (1)	6.25
3- 4	-490 / 0	-77.4	-77.4	0.17 (1)	6.25
8- 2	-456 / 0	0.0	0.0	0.05 (1)	7.81
6- 4	-341 / 0	0.0	0.0	0.03 (1)	7.81
8- 7	0 / 0	-17.5	-17.5	0.11 (1)	10.00
7- 6	0 / 0	-17.5	-17.5	0.37 (1)	10.00
6- 5	0 / 0	-94.9	-94.9	0.37 (1)	10.00

WEBS

MEMB. FR-TO	MAX. FACTORED FORCE (LBS)	MAX CSI (LC)
7- 3	0 / 72	0.02 (4)
2- 7	0 / 472	0.11 (1)
7- 4	0 / 468	0.11 (1)

DESIGN CRITERIA

SPECIFIED LOADS:

TOP	CH.	LL	=	23.3	PSF
		DL	=	3.0	PSF
BOT	CH.	LL	=	0.0	PSF
		DL	=	7.0	PSF
TOTAL	LOAD		=	33.3	PSF

SPACING = 24.0 IN. C/C

THIS TRUSS IS DESIGNED FOR RESIDENTIAL OR SMALL BUILDING REQUIREMENTS OF PART 9, NBCC 2010

THIS DESIGN COMPLIES WITH:
- PART 9 OF OBC 2012 , BCBC 2012 , ABC 2014
- CSA 086-09
- TPIC 2011

(55 % OF 27.2 P.S.F. G.S.L. PLUS 8.4 P.S.F. RAIN LOAD) EQUALS 23.3 P.S.F. SPECIFIED ROOF LIVE LOAD

ALLOWABLE DEFL.(LL)= L/360 (0.25")
CALCULATED VERT. DEFL.(LL) = L/ 999 (0.05")
ALLOWABLE DEFL.(TL)= L/360 (0.25")
CALCULATED VERT. DEFL.(TL) = L/ 953 (0.09")

CSI: TC=0.17 (3-4:1) , BC=0.37 (6-7:1) , WB=0.11 (2-7:1) , SSI=0.28 (5-6:1)

DOL LUMBER=1.00 NAIL=1.00 LS BEND=1.10 COMP=1.10 SHEAR=1.10 TENS= 1.10

COMPANION LIVE LOAD FACTOR = 0.50

TRUSS PLATE MANUFACTURER IS NOT RESPONSIBLE FOR QUALITY CONTROL IN THE TRUSS MANUFACTURING PLANT .

NAIL VALUES

PLATE	GRIP(DRY) (PSI) MAX	MIN	SHEAR (PLI) MAX	MIN	SECTION (PLI) MAX	MIN
MT20	618	354	1667	822	2284	1656

PLATE PLACEMENT TOL. = 0.250 inches

PLATE ROTATION TOL. = 5.0 Deg.

JSI GRIP= 0.85 (6) (INPUT = 0.90)
JSI METAL= 0.19 (6) (INPUT = 1.00)

LICENSED PROFESSIONAL ENGINEER
P. M. TREVISAN
100136551
March 16th, 2017
PROVINCE OF ONTARIO

RECEIVED
TOWN OF MILTON
MAR 29, 2017
17-5337
BUILDING DIVISION

KOTT

JOB NAME	TRUSS NAME	QUANTITY	PLY	JOB DESC.	DRWG NO.
PT0317-097	T23	1	1	TRUSS DESC. LECCO RIDGE-BLOCK 344	

KOTT , Stouffville, ON, CGC

Version 8.100 S Feb 9 2017 MiTek Industries, Inc. Thu Mar 16 11:58:00 2017 Page 1
ID:EvTixTQDI5yR1QLotZTBr_yE?HJ-GDENJhfBEbxbM1nP16yXQ?oNGKb6ncU6DRn_HRzaNjr

SCALE = 1:21.4

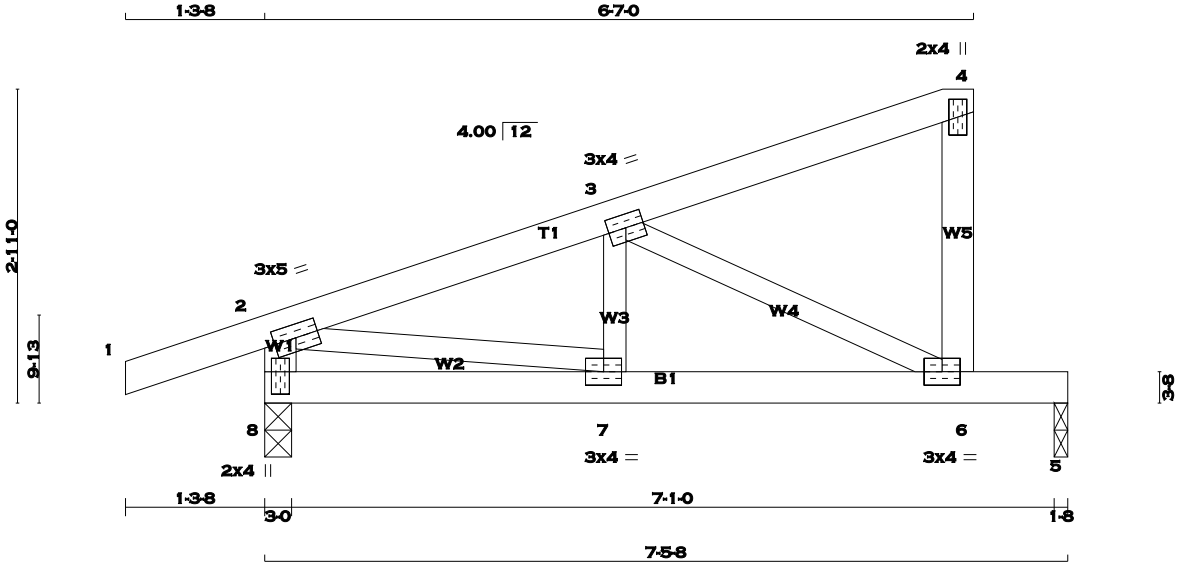

TOTAL WEIGHT = 27 lb
[M][F]

LUMBER
N. L. G. A. RULES

CHORDS	SIZE		LUMBER	DESCR.
1 - 4	2x4	DRY	No.2	SPF
6 - 4	2x4	DRY	No.2	SPF
8 - 2	2x4	DRY	No.2	SPF
8 - 5	2x4	DRY	No.2	SPF
ALL WEBS EXCEPT	2x3	DRY	No.2	SPF

DRY: SEASONED LUMBER.

PLATES (table is in inches)

JT	TYPE	PLATES	W	LEN	Y	X
2	TMVW-t	MT20	3.0	5.0		
3	TMWW-t	MT20	3.0	4.0		
4	TMV+p	MT20	2.0	4.0		
6	BMVW-t	MT20	3.0	4.0		
7	BMWW-t	MT20	3.0	4.0		
8	BMV1+p	MT20	2.0	4.0	2.50	1.00

A SIZE FOR SIZE SUBSTITUTION OF MITEK MII20 WITH TEE-LOK TL20 PLATES IS ALLOWED.

DIMENSIONS, SUPPORTS AND LOADINGS SPECIFIED BY FABRICATOR TO BE VERIFIED BY BUILDING DESIGNER

BEARINGS

JT	FACTORED GROSS REACTION VERT	HORZ	MAXIMUM FACTORED GROSS REACTION DOWN	HORZ	UPLIFT	INPUT BRG IN-SX	REQRD BRG IN-SX
8	453	0	453	0	0	3-0	3-0
5	290	0	290	0	0	1-8	1-8

UNFACTORED REACTIONS

JT	1ST LCASE COMBINED	MAX./MIN. COMPONENT REACTIONS SNOW	LIVE	PERM.LIVE	WIND	DEAD	SOIL
8	316	234 / 0	0 / 0	0 / 0	0 / 0	82 / 0	0 / 0
5	205	135 / 0	0 / 0	0 / 0	0 / 0	70 / 0	0 / 0

BEARING MATERIAL TO BE SPF NO.2 OR BETTER AT JOINT(S) 8, 5

BRACING
TOP CHORD TO BE SHEATHED OR MAX. PURLIN SPACING = 6.25 FT.
MAX. UNBRACED BOTTOM CHORD LENGTH = 10.00 FT. OR RIGID CEILING DIRECTLY APPLIED.

ALL PITCH BREAKS AND PERIMETER CORNER JOINTS MUST BE LATERALLY RESTRAINED.

LOADING
TOTAL LOAD CASES: (4)

CHORDS

MEMB. FR-TO	MAX. FACTORED FORCE (LBS)	FACTORED VERT. LOAD (PLF) FROM	TO	LC1 MAX CSI (LC)	MAX. UNBRAC LENGTH
1- 2	0 / 16	-77.4	-77.4	0.10 (1)	10.00
2- 3	-512 / 0	-77.4	-77.4	0.10 (1)	6.25
3- 4	-8 / 0	-77.4	-77.4	0.09 (1)	10.00
6- 4	-102 / 0	0.0	0.0	0.02 (1)	7.81
8- 2	-446 / 0	0.0	0.0	0.04 (1)	7.81
8- 7	0 / 0	-17.5	-17.5	0.09 (1)	10.00
7- 6	0 / 494	-17.5	-17.5	0.42 (1)	10.00
6- 5	0 / 0	-17.5	-17.5	0.34 (1)	10.00

WEBS

MEMB. FR-TO	MAX. FACTORED FORCE (LBS)	MAX CSI (LC)
7- 3	0 / 94	0.03 (4)
3- 6	-548 / 0	0.13 (1)
2- 7	0 / 501	0.11 (1)

DESIGN CRITERIA

SPECIFIED LOADS:

TOP	CH.	LL	=	23.3	PSF
		DL	=	3.0	PSF
BOT	CH.	LL	=	0.0	PSF
		DL	=	7.0	PSF
TOTAL	LOAD		=	33.3	PSF

SPACING = 24.0 IN. C/C

THIS TRUSS IS DESIGNED FOR RESIDENTIAL OR SMALL BUILDING REQUIREMENTS OF PART 9, NBCC 2010

THIS DESIGN COMPLIES WITH:
- PART 9 OF OBC 2012 , BCBC 2012 , ABC 2014
- CSA 086-09
- TPIC 2011

(55 % OF 27.2 P.S.F. G.S.L. PLUS 8.4 P.S.F. RAIN LOAD) EQUALS 23.3 P.S.F. SPECIFIED ROOF LIVE LOAD

ALLOWABLE DEFL.(LL)= L/360 (0.25")
CALCULATED VERT. DEFL.(LL) = L/ 999 (0.04")
ALLOWABLE DEFL.(TL)= L/360 (0.25")
CALCULATED VERT. DEFL.(TL) = L/ 999 (0.08")

CSI: TC=0.10 (1-2:1) , BC=0.42 (6-7:1) , WB=0.13 (3-6:1) , SSI=0.23 (5-6:1)

DOL LUMBER=1.00 NAIL=1.00 LS BEND=1.10 COMP=1.10 SHEAR=1.10 TENS= 1.10

COMPANION LIVE LOAD FACTOR = 0.50

TRUSS PLATE MANUFACTURER IS NOT RESPONSIBLE FOR QUALITY CONTROL IN THE TRUSS MANUFACTURING PLANT .

NAIL VALUES

PLATE	GRIP(DRY) (PSI) MAX	MIN	SHEAR (PLI) MAX	MIN	SECTION (PLI) MAX	MIN
MT20	618	354	1667	822	2284	1656

PLATE PLACEMENT TOL. = 0.250 inches

PLATE ROTATION TOL. = 5.0 Deg.

JSI GRIP= 0.79 (7) (INPUT = 0.90)
JSI METAL= 0.19 (7) (INPUT = 1.00)

LICENSED PROFESSIONAL ENGINEER
P. M. TREVISAN
100136551
March 16th, 2017
PROVINCE OF ONTARIO

RECEIVED
TOWN OF MILTON
MAR 29, 2017
17-5337
BUILDING DIVISION

KOTT

JOB NAME	TRUSS NAME	QUANTITY	PLY	JOB DESC.	DRWG NO.
PT0317-097	T24	2	1	TRUSS DESC. LECCO RIDGE-BLOCK 344	

KOTT , Stouffville, ON, CGC

Version 8.100 S Feb 9 2017 MiTek Industries, Inc. Thu Mar 16 11:58:00 2017 Page 1
ID:EvTixTQDI5yR1QLotZTBr_yE?HJ-GDENJhfBEbxbM1nP16yXQ?oNGKb6ncW6DRn_HRzaNjr

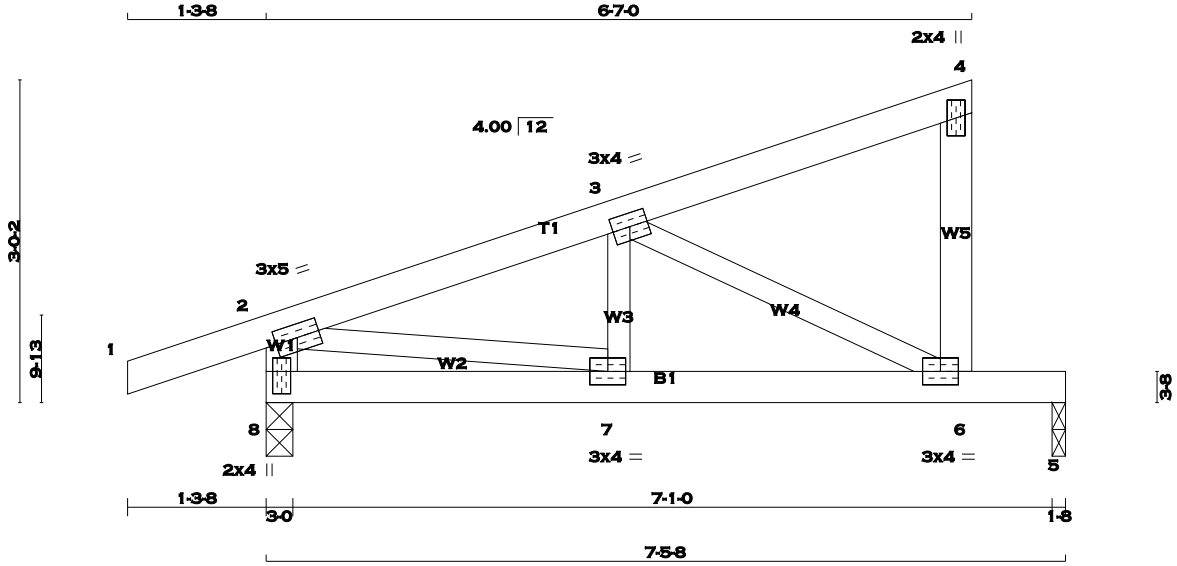

TOTAL WEIGHT = 2 X 27 = 55 lb

[M][F]

LUMBER

N. L. G. A. RULES

CHORDS	SIZE		LUMBER	DESCR.
1 - 4	2x4	DRY	No.2	SPF
6 - 4	2x4	DRY	No.2	SPF
8 - 2	2x4	DRY	No.2	SPF
8 - 5	2x4	DRY	No.2	SPF
ALL WEBS EXCEPT	2x3	DRY	No.2	SPF

DRY: SEASONED LUMBER.

PLATES (table is in inches)

JT	TYPE	PLATES	W	LEN	Y	X
2	TMVW-t	MT20	3.0	5.0		
3	TMWW-t	MT20	3.0	4.0		
4	TMV+p	MT20	2.0	4.0		
6	BMVW-t	MT20	3.0	4.0		
7	BMWW-t	MT20	3.0	4.0		
8	BMV1+p	MT20	2.0	4.0	2.50	1.00

A SIZE FOR SIZE SUBSTITUTION OF MITEK MII20 WITH TEE-LOK TL20 PLATES IS ALLOWED.

DIMENSIONS, SUPPORTS AND LOADINGS SPECIFIED BY FABRICATOR TO BE VERIFIED BY BUILDING DESIGNER

BEARINGS

JT	FACTORED GROSS REACTION VERT	HORZ	MAXIMUM FACTORED GROSS REACTION DOWN	HORZ	UPLIFT	INPUT BRG IN-SX	REQRD BRG IN-SX
8	453	0	453	0	0	3-0	3-0
5	290	0	290	0	0	1-8	1-8

UNFACTORED REACTIONS

JT	1ST LCASE COMBINED	MAX./MIN. COMPONENT REACTIONS SNOW	LIVE	PERM.LIVE	WIND	DEAD	SOIL
8	316	234 / 0	0 / 0	0 / 0	0 / 0	82 / 0	0 / 0
5	205	135 / 0	0 / 0	0 / 0	0 / 0	70 / 0	0 / 0

BEARING MATERIAL TO BE SPF NO.2 OR BETTER AT JOINT(S) 8, 5

BRACING

TOP CHORD TO BE SHEATHED OR MAX. PURLIN SPACING = 6.25 FT.
MAX. UNBRACED BOTTOM CHORD LENGTH = 10.00 FT. OR RIGID CEILING DIRECTLY APPLIED.

ALL PITCH BREAKS AND PERIMETER CORNER JOINTS MUST BE LATERALLY RESTRAINED.

LOADING

TOTAL LOAD CASES: (4)

CHORDS

MEMB. FR-TO	MAX. FACTORED FORCE (LBS)	FACTORED VERT. LOAD (PLF) FROM	TO	LC1 MAX CSI (LC)	MAX. UNBRAC LENGTH
1- 2	0 / 16	-77.4	-77.4	0.10 (1)	10.00
2- 3	-509 / 0	-77.4	-77.4	0.10 (1)	6.25
3- 4	-9 / 0	-77.4	-77.4	0.09 (1)	10.00
6- 4	-100 / 0	0.0	0.0	0.02 (1)	7.81
8- 2	-445 / 0	0.0	0.0	0.04 (1)	7.81
8- 7	0 / 0	-17.5	-17.5	0.09 (1)	10.00
7- 6	0 / 491	-17.5	-17.5	0.42 (1)	10.00
6- 5	0 / 0	-17.5	-17.5	0.34 (1)	10.00

WEBS

MEMB. FR-TO	MAX. FACTORED FORCE (LBS)	MAX CSI (LC)
7- 3	0 / 96	0.03 (4)
3- 6	-547 / 0	0.12 (1)
2- 7	0 / 497	0.11 (1)

DESIGN CRITERIA

SPECIFIED LOADS:

TOP	CH.	LL	=	23.3	PSF
		DL	=	3.0	PSF
BOT	CH.	LL	=	0.0	PSF
		DL	=	7.0	PSF
TOTAL	LOAD		=	33.3	PSF

SPACING = 24.0 IN. C/C

THIS TRUSS IS DESIGNED FOR RESIDENTIAL OR SMALL BUILDING REQUIREMENTS OF PART 9, NBCC 2010

THIS DESIGN COMPLIES WITH:
- PART 9 OF OBC 2012 , BCBC 2012 , ABC 2014
- CSA 086-09
- TPIC 2011

(55 % OF 27.2 P.S.F. G.S.L. PLUS 8.4 P.S.F. RAIN LOAD) EQUALS 23.3 P.S.F. SPECIFIED ROOF LIVE LOAD

ALLOWABLE DEFL.(LL)= L/360 (0.25")
CALCULATED VERT. DEFL.(LL) = L/ 999 (0.04")
ALLOWABLE DEFL.(TL)= L/360 (0.25")
CALCULATED VERT. DEFL.(TL) = L/ 999 (0.08")

CSI: TC=0.10 (1-2:1) , BC=0.42 (6-7:1) , WB=0.12 (3-6:1) , SSI=0.23 (5-6:1)

DOL LUMBER=1.00 NAIL=1.00 LS BEND=1.10 COMP=1.10 SHEAR=1.10 TENS= 1.10

COMPANION LIVE LOAD FACTOR = 0.50

TRUSS PLATE MANUFACTURER IS NOT RESPONSIBLE FOR QUALITY CONTROL IN THE TRUSS MANUFACTURING PLANT .

NAIL VALUES

PLATE	GRIP(DRY) (PSI) MAX	MIN	SHEAR (PLI) MAX	MIN	SECTION (PLI) MAX	MIN
MT20	618	354	1667	822	2284	1656

PLATE PLACEMENT TOL. = 0.250 inches

PLATE ROTATION TOL. = 5.0 Deg.

JSI GRIP= 0.79 (7) (INPUT = 0.90)
JSI METAL= 0.18 (7) (INPUT = 1.00)

LICENSED PROFESSIONAL ENGINEER
P. M. TREVISAN
100136551
March 16th, 2017
PROVINCE OF ONTARIO

RECEIVED
TOWN OF MILTON
MAR 29, 2017
17-5337
BUILDING DIVISION

KOTT

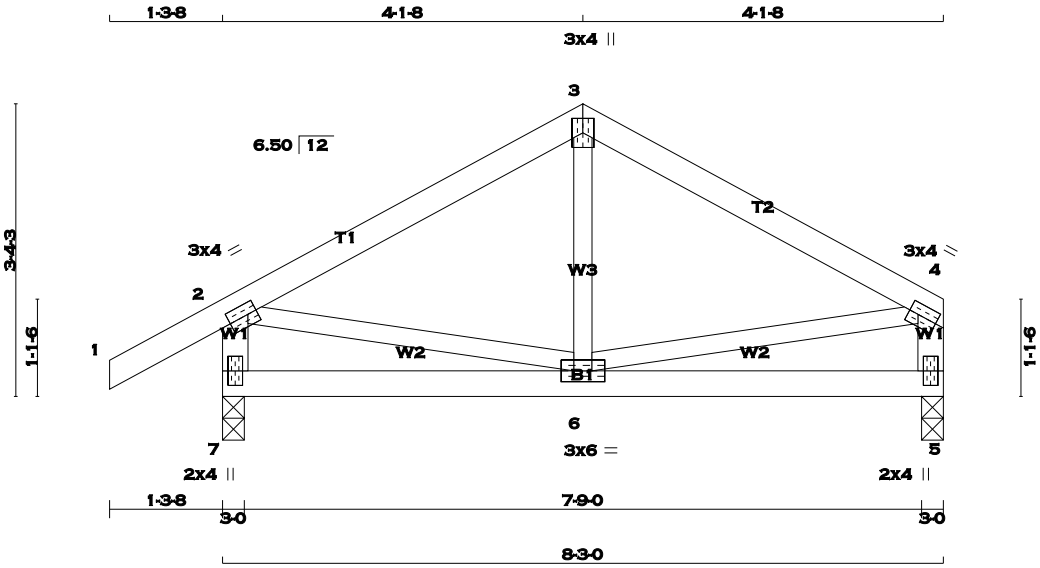

TOTAL WEIGHT = 3 X 32 = 96 lb

[M][F]

LUMBER

N. L. G. A. RULES

CHORDS	SIZE		LUMBER	DESCR.
1 - 3	2x4	DRY	No.2	SPF
3 - 4	2x4	DRY	No.2	SPF
7 - 2	2x4	DRY	No.2	SPF
5 - 4	2x4	DRY	No.2	SPF
7 - 5	2x4	DRY	No.2	SPF
ALL WEBS EXCEPT	2x3	DRY	No.2	SPF

DRY: SEASONED LUMBER.

PLATES (table is in inches)

JT	TYPE	PLATES	W	LEN	Y	X
2	TMVW-t	MT20	3.0	4.0	1.50	1.25
3	TTW+p	MT20	3.0	4.0		
4	TMVW-t	MT20	3.0	4.0	1.50	1.25
5	BMV1+p	MT20	2.0	4.0		
6	BMWWW-t	MT20	3.0	6.0		
7	BMV1+p	MT20	2.0	4.0		

A SIZE FOR SIZE SUBSTITUTION OF MITEK MII20 WITH TEE-LOK TL20 PLATES IS ALLOWED.

DIMENSIONS, SUPPORTS AND LOADINGS SPECIFIED BY FABRICATOR TO BE VERIFIED BY BUILDING DESIGNER

BEARINGS

JT	FACTORED GROSS REACTION VERT	HORZ		MAXIMUM FACTORED GROSS REACTION DOWN	HORZ	UPLIFT	INPUT BRG IN-SX	REQRD BRG IN-SX
7	497	0		497	0	0	3-0	3-0
5	391	0		391	0	0	3-0	3-0

UNFACTORED REACTIONS

JT	1ST LCASE COMBINED	MAX./MIN. COMPONENT REACTIONS SNOW	LIVE	PERM.LIVE	WIND	DEAD	SOIL
7	346	256 / 0	0 / 0	0 / 0	0 / 0	91 / 0	0 / 0
5	275	192 / 0	0 / 0	0 / 0	0 / 0	83 / 0	0 / 0

BEARING MATERIAL TO BE SPF NO.2 OR BETTER AT JOINT(S) 7, 5

BRACING

TOP CHORD TO BE SHEATHED OR MAX. PURLIN SPACING = 6.25 FT.
MAX. UNBRACED BOTTOM CHORD LENGTH = 10.00 FT. OR RIGID CEILING DIRECTLY APPLIED.

ALL PITCH BREAKS AND PERIMETER CORNER JOINTS MUST BE LATERALLY RESTRAINED.

LOADING

TOTAL LOAD CASES: (4)

CHORDS

MEMB. FR-TO	MAX. FACTORED FORCE (LBS)	FACTORED VERT. LOAD (PLF) FROM	TO	LC1 MAX CSI (LC)	MAX. UNBRAC LENGTH
1- 2	0 / 25	-77.4	-77.4	0.10 (1)	10.00
2- 3	-314 / 0	-77.4	-77.4	0.17 (1)	6.25
3- 4	-314 / 0	-77.4	-77.4	0.17 (1)	6.25
7- 2	-468 / 0	0.0	0.0	0.05 (1)	7.81
5- 4	-363 / 0	0.0	0.0	0.04 (1)	7.81
7- 6	0 / 0	-17.5	-17.5	0.08 (4)	10.00
6- 5	0 / 0	-17.5	-17.5	0.08 (4)	10.00

WEBS

MEMB. FR-TO	MAX. FACTORED FORCE (LBS)	MAX CSI (LC)
6- 3	-20 / 64	0.02 (4)
2- 6	0 / 281	0.06 (1)
6- 4	0 / 281	0.06 (1)

DESIGN CRITERIA

SPECIFIED LOADS:

TOP	CH.	LL	=	23.3	PSF
		DL	=	3.0	PSF
BOT	CH.	LL	=	0.0	PSF
		DL	=	7.0	PSF
TOTAL	LOAD		=	33.3	PSF

SPACING = 24.0 IN. C/C

THIS TRUSS IS DESIGNED FOR RESIDENTIAL OR SMALL BUILDING REQUIREMENTS OF PART 9, NBCC 2010

THIS DESIGN COMPLIES WITH:
- PART 9 OF OBC 2012 , BCBC 2012 , ABC 2014
- CSA 086-09
- TPIC 2011

(55 % OF 27.2 P.S.F. G.S.L. PLUS 8.4 P.S.F. RAIN LOAD) EQUALS 23.3 P.S.F. SPECIFIED ROOF LIVE LOAD

ALLOWABLE DEFL.(LL)= L/360 (0.28")
CALCULATED VERT. DEFL.(LL) = L/ 999 (0.00")
ALLOWABLE DEFL.(TL)= L/360 (0.28")
CALCULATED VERT. DEFL.(TL) = L/ 999 (0.01")

CSI: TC=0.17 (2-3:1) , BC=0.08 (5-6:4) , WB=0.06 (4-6:1) , SSI=0.11 (2-3:1)

DOL LUMBER=1.00 NAIL=1.00 LS BEND=1.10 COMP=1.10 SHEAR=1.10 TENS= 1.10

COMPANION LIVE LOAD FACTOR = 0.50

TRUSS PLATE MANUFACTURER IS NOT RESPONSIBLE FOR QUALITY CONTROL IN THE TRUSS MANUFACTURING PLANT .

NAIL VALUES

PLATE	GRIP(DRY) (PSI) MAX	MIN	SHEAR (PLI) MAX	MIN	SECTION (PLI) MAX	MIN
MT20	618	354	1667	822	2284	1656

PLATE PLACEMENT TOL. = 0.250 inches

PLATE ROTATION TOL. = 5.0 Deg.

JSI GRIP= 0.68 (2) (INPUT = 0.90)
JSI METAL= 0.16 (4) (INPUT = 1.00)

LICENSED PROFESSIONAL ENGINEER
P. M. TREVISAN
100136551
March 16th, 2017
PROVINCE OF ONTARIO

RECEIVED
TOWN OF MILTON
MAR 29, 2017
17-5337
BUILDING DIVISION

KOTT

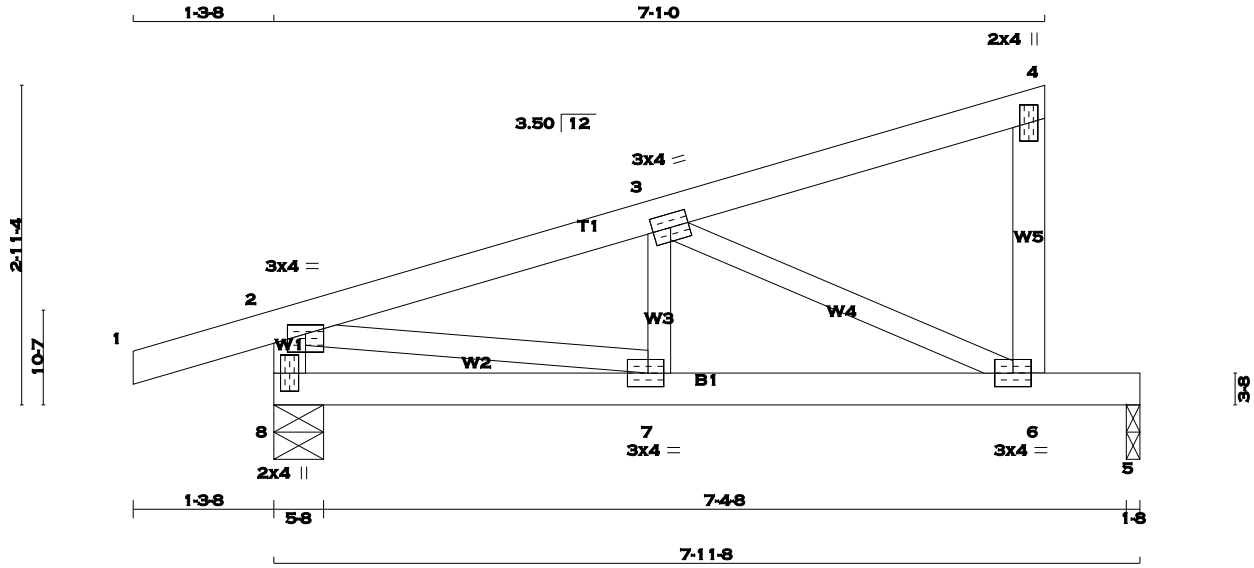

TOTAL WEIGHT = 16 X 29 = 458 lb

[M][F]

LUMBER

N. L. G. A. RULES

CHORDS	SIZE		LUMBER	DESCR.
1 - 4	2x4	DRY	No.2	SPF
6 - 4	2x4	DRY	No.2	SPF
8 - 2	2x4	DRY	No.2	SPF
8 - 5	2x4	DRY	No.2	SPF
ALL WEBS EXCEPT	2x3	DRY	No.2	SPF

DRY: SEASONED LUMBER.

PLATES (table is in inches)

JT	TYPE	PLATES	W	LEN	Y	X
2	TMVW-p	MT20	3.0	4.0	1.00	2.00
3	TMWW-t	MT20	3.0	4.0		
4	TMV+p	MT20	2.0	4.0		
6	BMVW-t	MT20	3.0	4.0		
7	BMWW-t	MT20	3.0	4.0	1.50	1.75
8	BMV1+p	MT20	2.0	4.0		

A SIZE FOR SIZE SUBSTITUTION OF MITEK MII20 WITH TEE-LOK TL20 PLATES IS ALLOWED.

DIMENSIONS, SUPPORTS AND LOADINGS SPECIFIED BY FABRICATOR TO BE VERIFIED BY BUILDING DESIGNER

BEARINGS

JT	FACTORED GROSS REACTION VERT	HORZ	MAXIMUM FACTORED GROSS REACTION DOWN	HORZ	UPLIFT	INPUT BRG IN-SX	REQRD BRG IN-SX
8	477	0	477	0	0	5-8	5-8
5	313	0	313	0	0	1-8	1-8

UNFACTORED REACTIONS

JT	1ST LCASE COMBINED	MAX./MIN. COMPONENT REACTIONS SNOW	LIVE	PERM.LIVE	WIND	DEAD	SOIL
8	332	245 / 0	0 / 0	0 / 0	0 / 0	87 / 0	0 / 0
5	221	147 / 0	0 / 0	0 / 0	0 / 0	75 / 0	0 / 0

BEARING MATERIAL TO BE SPF NO.2 OR BETTER AT JOINT(S) 8, 5

BRACING

TOP CHORD TO BE SHEATHED OR MAX. PURLIN SPACING = 6.25 FT.
MAX. UNBRACED BOTTOM CHORD LENGTH = 10.00 FT. OR RIGID CEILING DIRECTLY APPLIED.

ALL PITCH BREAKS AND PERIMETER CORNER JOINTS MUST BE LATERALLY RESTRAINED.

LOADING

TOTAL LOAD CASES: (4)

CHORDS

MEMB. FR-TO	MAX. FACTORED FORCE (LBS)	FACTORED VERT. LOAD (PLF) FROM	TO	LC1 MAX CSI (LC)	MAX. UNBRAC LENGTH
1- 2	0 / 14	-77.4	-77.4	0.10 (1)	10.00
2- 3	-579 / 0	-77.4	-77.4	0.11 (1)	6.25
3- 4	-8 / 0	-77.4	-77.4	0.11 (1)	10.00
6- 4	-108 / 0	0.0	0.0	0.02 (1)	7.81
8- 2	-467 / 0	0.0	0.0	0.05 (1)	7.81
8- 7	0 / 0	-17.5	-17.5	0.10 (1)	10.00
7- 6	0 / 564	-17.5	-17.5	0.45 (1)	10.00
6- 5	0 / 0	-17.5	-17.5	0.36 (1)	10.00

WEBS

MEMB. FR-TO	MAX. FACTORED FORCE (LBS)	MAX CSI (LC)
7- 3	0 / 91	0.03 (4)
3- 6	-619 / 0	0.15 (1)
2- 7	0 / 571	0.13 (1)

DESIGN CRITERIA

SPECIFIED LOADS:

TOP	CH.	LL	=	23.3	PSF
		DL	=	3.0	PSF
BOT	CH.	LL	=	0.0	PSF
		DL	=	7.0	PSF
TOTAL	LOAD		=	33.3	PSF

SPACING = 24.0 IN. C/C

THIS TRUSS IS DESIGNED FOR RESIDENTIAL OR SMALL BUILDING REQUIREMENTS OF PART 9, NBCC 2010

THIS DESIGN COMPLIES WITH:
- PART 9 OF OBC 2012 , BCBC 2012 , ABC 2014
- CSA 086-09
- TPIC 2011

(55 % OF 27.2 P.S.F. G.S.L. PLUS 8.4 P.S.F. RAIN LOAD) EQUALS 23.3 P.S.F. SPECIFIED ROOF LIVE LOAD

ALLOWABLE DEFL.(LL)= L/360 (0.27")
CALCULATED VERT. DEFL.(LL) = L/ 999 (0.05")
ALLOWABLE DEFL.(TL)= L/360 (0.27")
CALCULATED VERT. DEFL.(TL) = L/ 973 (0.10")

CSI: TC=0.11 (2-3:1) , BC=0.45 (6-7:1) , WB=0.15 (3-6:1) , SSI=0.24 (5-6:1)

DOL LUMBER=1.00 NAIL=1.00 LS BEND=1.10 COMP=1.10 SHEAR=1.10 TENS= 1.10

COMPANION LIVE LOAD FACTOR = 0.50

TRUSS PLATE MANUFACTURER IS NOT RESPONSIBLE FOR QUALITY CONTROL IN THE TRUSS MANUFACTURING PLANT .

NAIL VALUES

PLATE	GRIP(DRY) (PSI) MAX	MIN	SHEAR (PLI) MAX	MIN	SECTION (PLI) MAX	MIN
MT20	618	354	1667	822	2284	1656

PLATE PLACEMENT TOL. = 0.250 inches

PLATE ROTATION TOL. = 5.0 Deg.

JSI GRIP= 0.85 (6) (INPUT = 0.90)
JSI METAL= 0.21 (2) (INPUT = 1.00)

LICENSED PROFESSIONAL ENGINEER
P. M. TREVISAN
100136551
March 16th, 2017
PROVINCE OF ONTARIO

RECEIVED
TOWN OF MILTON
MAR 29, 2017
17-5337
BUILDING DIVISION

KOTT

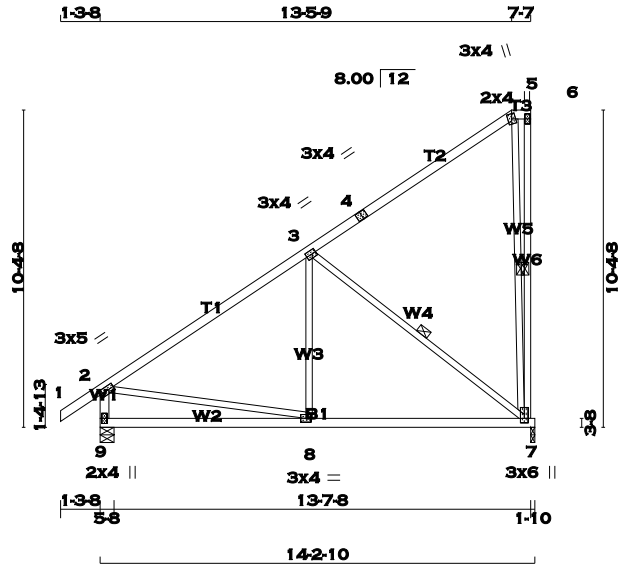

SCALE = 1:75.4

TOTAL WEIGHT = 2 X 71 = 142 lb

[M][F]

LUMBER

N. L. G. A. RULES

CHORDS	SIZE		LUMBER	DESCR.
1 - 4	2x4	DRY	No.2	SPF
4 - 5	2x4	DRY	No.2	SPF
5 - 6	2x4	DRY	No.2	SPF
7 - 6	2x3	DRY	No.2	SPF
9 - 2	2x4	DRY	No.2	SPF
9 - 7	2x4	DRY	No.2	SPF
ALL WEBS EXCEPT	2x3	DRY	No.2	SPF

DRY: SEASONED LUMBER.

PLATES (table is in inches)

JT	TYPE	PLATES	W	LEN	Y	X
2	TMVW-t	MT20	3.0	5.0	1.50	2.00
3	TMWW-t	MT20	3.0	4.0	1.50	1.50
4	TS-t	MT20	3.0	4.0		
5	TTW+m	MT20	3.0	4.0		
6	TMV+p	MT20	2.0	4.0		
7	BMVWW1+p	MT20	3.0	6.0	1.75	1.50
8	BMWW-t	MT20	3.0	4.0		
9	BMV1+p	MT20	2.0	4.0		

A SIZE FOR SIZE SUBSTITUTION OF MITEK MII20 WITH TEE-LOK TL20 PLATES IS ALLOWED.

DIMENSIONS, SUPPORTS AND LOADINGS SPECIFIED BY FABRICATOR TO BE VERIFIED BY BUILDING DESIGNER

BEARINGS

JT	FACTORED GROSS REACTION VERT	HORZ	MAXIMUM FACTORED GROSS REACTION DOWN	HORZ	UPLIFT	INPUT BRG IN-SX	REQRD BRG IN-SX
7	668	0	668	0	0	1-10	1-10
9	774	0	774	0	0	5-8	5-8

UNFACTORED REACTIONS

JT	1ST LCASE COMBINED	MAX./MIN. COMPONENT REACTIONS SNOW	LIVE	PERM.LIVE	WIND	DEAD	SOIL
7	469	328 / 0	0 / 0	0 / 0	0 / 0	141 / 0	0 / 0
9	541	392 / 0	0 / 0	0 / 0	0 / 0	149 / 0	0 / 0

BEARING MATERIAL TO BE SPF NO.2 OR BETTER AT JOINT(S) 7, 9

BRACING

TOP CHORD TO BE SHEATHED OR MAX. PURLIN SPACING = 6.25 FT.
MAX. UNBRACED BOTTOM CHORD LENGTH = 10.00 FT. OR RIGID CEILING DIRECTLY APPLIED.

ALL PITCH BREAKS AND PERIMETER CORNER JOINTS MUST BE LATERALLY RESTRAINED.

1 - 2x3 SPF No.2 LATERAL BRACE(S) AT 1/ 2 LENGTH OF 6-7, 3-7, 5-7. DBS = 20-0-0 . CBF = 79 LBS.

DBS = DIAGONAL BRACE SPACING (MAX). CBF = CUMULATIVE BRACING FORCE. FASTEN LATERAL BRACE(S) USING (0.122"X3") SPIRAL NAILS : 1 NAIL FOR 2x3 BRACE(S), 2 FOR 1x4, 2x4, 2x5, 3 FOR 2x6, 4 FOR 2x8, 5 FOR 2x10, AND 6 FOR 2x12.

END VERTICAL(S) MUST BE SHEATHED OR HAVE BRACES AS INDICATED IN THE MAX. UNBRACED LENGTH COLUMN OF THE TABLE BELOW

LOADING

TOTAL LOAD CASES: (4)

CHORDS

MEMB. FR-TO	MAX. FACTORED FORCE (LBS)	FACTORED VERT. LOAD LC1 (PLF) FROM	TO	MAX CSI (LC)	MAX. UNBRAC LENGTH
1- 2	0 / 29	-77.4	-77.4	0.10 (1)	10.00
2- 3	-580 / 0	-77.4	-77.4	0.48 (1)	6.25
3- 4	-51 / 0	-77.4	-77.4	0.46 (1)	6.25
4- 5	-51 / 0	-77.4	-77.4	0.46 (1)	6.25
5- 6	0 / 0	-77.4	-77.4	0.01 (1)	10.00
7- 6	-24 / 0	0.0	0.0	0.02 (1)	6.25
9- 2	-729 / 0	0.0	0.0	0.08 (1)	7.81
9- 8	0 / 0	-17.5	-17.5	0.25 (4)	10.00
8- 7	0 / 512	-17.5	-17.5	0.29 (4)	10.00

WEBS

MEMB. FR-TO	MAX. FACTORED FORCE (LBS)	MAX CSI (LC)
8- 3	0 / 148	0.05 (4)
3- 7	-632 / 0	0.37 (1)
5- 7	-207 / 0	0.15 (1)
2- 8	0 / 518	0.12 (1)

DESIGN CRITERIA

SPECIFIED LOADS:

TOP CH.	LL	=	23.3	PSF
	DL	=	3.0	PSF
BOT CH.	LL	=	0.0	PSF
	DL	=	7.0	PSF
TOTAL LOAD		=	33.3	PSF

SPACING = 24.0 IN. C/C

LOADING IN FLAT SECTION BASED ON A SLOPE OF 6.00/12

THIS TRUSS IS DESIGNED FOR RESIDENTIAL OR SMALL BUILDING REQUIREMENTS OF PART 9, NBCC 2010

THIS DESIGN COMPLIES WITH:
- PART 9 OF OBC 2012 , BCBC 2012 , ABC 2014
- CSA 086-09
- TPIC 2011

(55 % OF 27.2 P.S.F. G.S.L. PLUS 8.4 P.S.F. RAIN LOAD) EQUALS 23.3 P.S.F. SPECIFIED ROOF LIVE LOAD

ALLOWABLE DEFL.(LL)= L/360 (0.47")
CALCULATED VERT. DEFL.(LL) = L/ 999 (0.01")
ALLOWABLE DEFL.(TL)= L/360 (0.47")
CALCULATED VERT. DEFL.(TL) = L/ 999 (0.07")

CSI: TC=0.48 (2-3:1) , BC=0.29 (7-8:4) , WB=0.37 (3-7:1) , SSI=0.21 (2-3:1)

DOL LUMBER=1.00 NAIL=1.00 LS BEND=1.10 COMP=1.10 SHEAR=1.10 TENS= 1.10

COMPANION LIVE LOAD FACTOR = 0.50

TRUSS PLATE MANUFACTURER IS NOT RESPONSIBLE FOR QUALITY CONTROL IN THE TRUSS MANUFACTURING PLANT .

NAIL VALUES

PLATE	GRIP(DRY) (PSI) MAX	MIN	SHEAR (PLI) MAX	MIN	SECTION (PLI) MAX	MIN
MT20	618	354	1667	822	2284	1656

PLATE PLACEMENT TOL. = 0.250 inches

PLATE ROTATION TOL. = 5.0 Deg.

JSI GRIP= 0.89 (8) (INPUT = 0.90)
JSI METAL= 0.24 (2) (INPUT = 1.00)

LICENSED PROFESSIONAL ENGINEER
P. M. TREVISAN
100136551
March 16th, 2017
PROVINCE OF ONTARIO

RECEIVED
TOWN OF MILTON
MAR 29, 2017
17-5337
BUILDING DIVISION

KOTT

JOB NAME	TRUSS NAME	QUANTITY	PLY	JOB DESC.	DRWG NO.
PT0317-097	**T28**	**6**	**1**	TRUSS DESC. LECCO RIDGE-BLOCK 344	

KOTT , Stouffville, ON, CGC

Version 8.100 S Feb 9 2017 MiTek Industries, Inc. Thu Mar 16 11:58:02 2017 Page 1
ID:EvTixTQDI5yR1QLotZTBr_yE?HJ-CbM7kNhRlCBJbLxn9X??VQtc98IiFQOPgIG5LJzaNjp

SCALE = 1:81.8

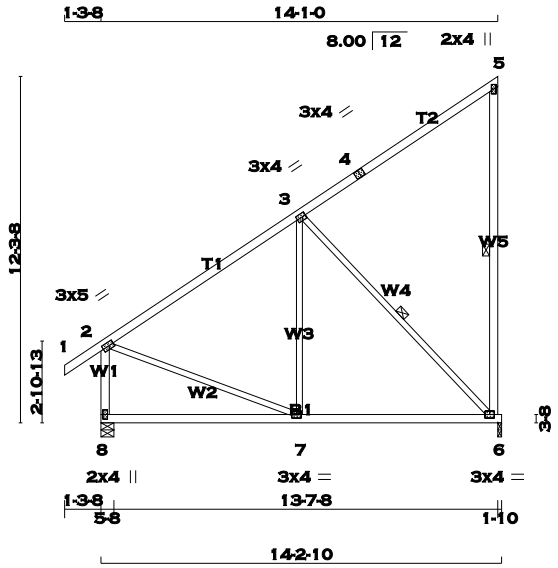

TOTAL WEIGHT = 6 X 73 = 438 lb
[M][F]

LUMBER
N. L. G. A. RULES

CHORDS	SIZE		LUMBER	DESCR.
1 - 4	2x4	DRY	No.2	SPF
4 - 5	2x4	DRY	No.2	SPF
6 - 5	2x4	DRY	No.2	SPF
8 - 2	2x4	DRY	No.2	SPF
8 - 6	2x4	DRY	No.2	SPF
ALL WEBS EXCEPT	2x3	DRY	No.2	SPF

DRY: SEASONED LUMBER.

PLATES (table is in inches)

JT	TYPE	PLATES	W	LEN	Y	X
2	TMVW-t	MT20	3.0	5.0	1.50	2.00
3	TMWW-t	MT20	3.0	4.0	1.50	1.50
4	TS-t	MT20	3.0	4.0		
5	TMV+p	MT20	2.0	4.0		
6	BMVW1-t	MT20	3.0	4.0		
7	BMWW-t	MT20	3.0	4.0		
8	BMV1+p	MT20	2.0	4.0		

A SIZE FOR SIZE SUBSTITUTION OF MITEK MII20 WITH TEE-LOK TL20 PLATES IS ALLOWED.

DIMENSIONS, SUPPORTS AND LOADINGS SPECIFIED BY FABRICATOR TO BE VERIFIED BY BUILDING DESIGNER

BEARINGS

JT	FACTORED GROSS REACTION VERT	HORZ	MAXIMUM FACTORED GROSS REACTION DOWN	HORZ	UPLIFT	INPUT BRG IN-SX	REQRD BRG IN-SX
6	668	0	668	0	0	1-10	1-10
8	774	0	774	0	0	5-8	5-8

UNFACTORED REACTIONS

JT	1ST LCASE COMBINED	MAX./MIN. COMPONENT REACTIONS SNOW	LIVE	PERM.LIVE	WIND	DEAD	SOIL
6	469	328 / 0	0 / 0	0 / 0	0 / 0	141 / 0	0 / 0
8	541	392 / 0	0 / 0	0 / 0	0 / 0	149 / 0	0 / 0

BEARING MATERIAL TO BE SPF NO.2 OR BETTER AT JOINT(S) 6, 8

BRACING
TOP CHORD TO BE SHEATHED OR MAX. PURLIN SPACING = 6.25 FT.
MAX. UNBRACED BOTTOM CHORD LENGTH = 10.00 FT. OR RIGID CEILING DIRECTLY APPLIED.

ALL PITCH BREAKS AND PERIMETER CORNER JOINTS MUST BE LATERALLY RESTRAINED.

1 - 2x3 SPF No.2 LATERAL BRACE(S) AT 1/ 2 LENGTH OF 5-6, 3-6. DBS = 20-0-0 . CBF = 72 LBS.

DBS = DIAGONAL BRACE SPACING (MAX). CBF = CUMULATIVE BRACING FORCE. FASTEN LATERAL BRACE(S) USING (0.122"X3") SPIRAL NAILS : 1 NAIL FOR 2x3 BRACE(S), 2 FOR 1x4, 2x4, 2x5, 3 FOR 2x6, 4 FOR 2x8, 5 FOR 2x10, AND 6 FOR 2x12.

END VERTICAL(S) MUST BE SHEATHED OR HAVE BRACES AS INDICATED IN THE MAX. UNBRACED LENGTH COLUMN OF THE TABLE BELOW

LOADING
TOTAL LOAD CASES: (4)

CHORDS

MEMB. FR-TO	MAX. FACTORED FORCE (LBS)	FACTORED VERT. LOAD LC1 (PLF) FROM	TO	MAX CSI (LC)	MAX. UNBRAC LENGTH
1- 2	0 / 29	-77.4	-77.4	0.10 (1)	10.00
2- 3	-447 / 0	-77.4	-77.4	0.52 (1)	6.25
3- 4	-38 / 0	-77.4	-77.4	0.51 (1)	6.25
4- 5	-38 / 0	-77.4	-77.4	0.51 (1)	6.25
6- 5	-205 / 0	0.0	0.0	0.17 (1)	6.25
8- 2	-727 / 0	0.0	0.0	0.11 (1)	7.81
8- 7	0 / 0	-17.5	-17.5	0.25 (4)	10.00
7- 6	0 / 403	-17.5	-17.5	0.28 (4)	10.00

WEBS

MEMB. FR-TO	MAX. FACTORED FORCE (LBS)	MAX CSI (LC)
7- 3	0 / 128	0.04 (4)
3- 6	-579 / 0	0.42 (1)
2- 7	0 / 429	0.10 (1)

DESIGN CRITERIA

SPECIFIED LOADS:

TOP	CH.	LL	=	23.3	PSF
		DL	=	3.0	PSF
BOT	CH.	LL	=	0.0	PSF
		DL	=	7.0	PSF
TOTAL	LOAD		=	33.3	PSF

SPACING = 24.0 IN. C/C

THIS TRUSS IS DESIGNED FOR RESIDENTIAL OR SMALL BUILDING REQUIREMENTS OF PART 9, NBCC 2010

THIS DESIGN COMPLIES WITH:
- PART 9 OF OBC 2012 , BCBC 2012 , ABC 2014
- CSA 086-09
- TPIC 2011

(55 % OF 27.2 P.S.F. G.S.L. PLUS 8.4 P.S.F. RAIN LOAD) EQUALS 23.3 P.S.F. SPECIFIED ROOF LIVE LOAD

ALLOWABLE DEFL.(LL)= L/360 (0.47")
CALCULATED VERT. DEFL.(LL) = L/ 999 (0.01")
ALLOWABLE DEFL.(TL)= L/360 (0.47")
CALCULATED VERT. DEFL.(TL) = L/ 999 (0.05")

CSI: TC=0.52 (2-3:1) , BC=0.28 (6-7:4) , WB=0.42 (3-6:1) , SSI=0.22 (3-5:1)

DOL LUMBER=1.00 NAIL=1.00 LS BEND=1.10 COMP=1.10 SHEAR=1.10 TENS= 1.10

COMPANION LIVE LOAD FACTOR = 0.50

TRUSS PLATE MANUFACTURER IS NOT RESPONSIBLE FOR QUALITY CONTROL IN THE TRUSS MANUFACTURING PLANT .

NAIL VALUES

PLATE	GRIP(DRY) (PSI) MAX	MIN	SHEAR (PLI) MAX	MIN	SECTION (PLI) MAX	MIN
MT20	618	354	1667	822	2284	1656

PLATE PLACEMENT TOL. = 0.250 inches

PLATE ROTATION TOL. = 5.0 Deg.

JSI GRIP= 0.75 (4) (INPUT = 0.90)
JSI METAL= 0.20 (2) (INPUT = 1.00)

LICENSED PROFESSIONAL ENGINEER
P. M. TREVISAN
100136551
March 16th, 2017
PROVINCE OF ONTARIO

RECEIVED
TOWN OF MILTON
MAR 29, 2017
17-5337
BUILDING DIVISION

KOTT

JOB NAME	TRUSS NAME	QUANTITY	PLY	JOB DESC.	DRWG NO.
PT0317-097	T29	5	1	TRUSS DESC. LECCO RIDGE-BLOCK 344	

KOTT , Stouffville, ON, CGC

Version 8.100 S Feb 9 2017 MiTek Industries, Inc. Thu Mar 16 11:58:02 2017 Page 1
ID:EvTixTQDI5yR1QLotZTBr_yE?HJ-CbM7kNhRlCBJbLxn9X??VQtdt8GSFOuPglG5LJzaNjp

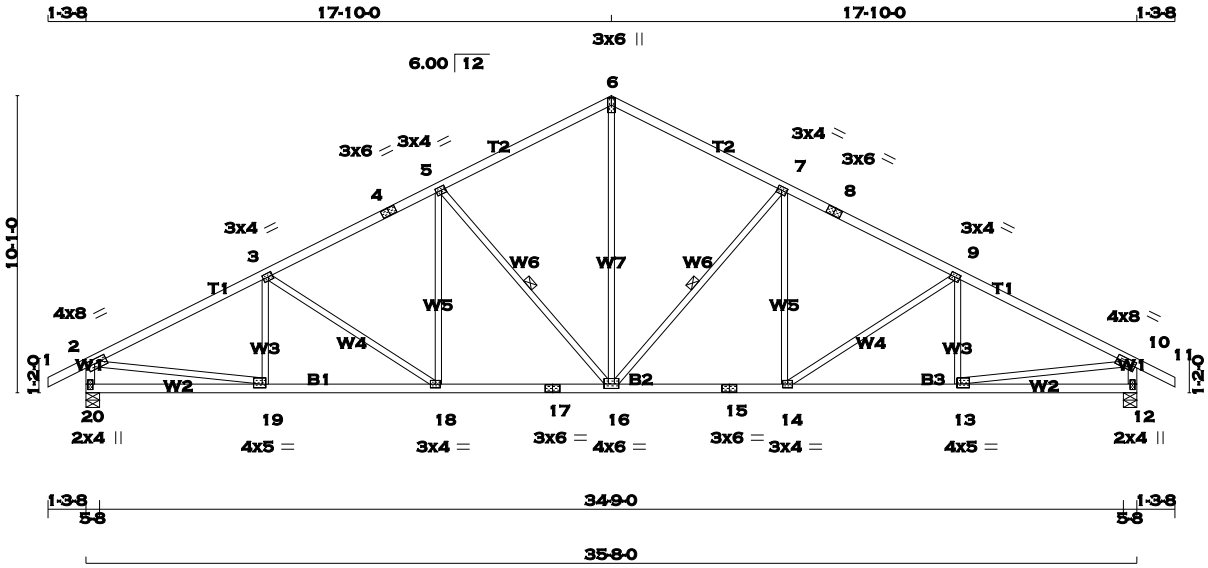

TOTAL WEIGHT = 5 X 150 = 751 lb
[M][F]

LUMBER
N. L. G. A. RULES

CHORDS	SIZE		LUMBER	DESCR.
1 - 4	2x4	DRY	No.2	SPF
4 - 6	2x4	DRY	No.2	SPF
6 - 8	2x4	DRY	No.2	SPF
8 - 11	2x4	DRY	No.2	SPF
20 - 2	2x4	DRY	No.2	SPF
12 - 10	2x4	DRY	No.2	SPF
20 - 17	2x4	DRY	No.2	SPF
17 - 15	2x4	DRY	No.2	SPF
15 - 12	2x4	DRY	No.2	SPF
ALL WEBS EXCEPT	2x3	DRY	No.2	SPF

DRY: SEASONED LUMBER.

PLATES (table is in inches)

JT	TYPE	PLATES	W	LEN	Y	X
2 3, 5, 7, 9	TMVW-t	MT20	4.0	8.0	1.75	3.00
3	TMWW-t	MT20	3.0	4.0	1.50	1.75
4	TS-t	MT20	3.0	6.0		
6	TTW+p	MT20	3.0	6.0		
8	TS-t	MT20	3.0	6.0		
10	TMVW-t	MT20	4.0	8.0	1.75	3.00
12	BMV1+p	MT20	2.0	4.0	2.25	1.00
13	BMWW-t	MT20	4.0	5.0	1.50	1.50
14	BMWW-t	MT20	3.0	4.0		
15	BS-t	MT20	3.0	6.0		
16	BMWWW-t	MT20	4.0	6.0	1.75	3.00
17	BS-t	MT20	3.0	6.0		
18	BMWW-t	MT20	3.0	4.0		
19	BMWW-t	MT20	4.0	5.0	1.50	1.50
20	BMV1+p	MT20	2.0	4.0	2.25	1.00

A SIZE FOR SIZE SUBSTITUTION OF MITEK MII20 WITH TEE-LOK TL20 PLATES IS ALLOWED.

DIMENSIONS, SUPPORTS AND LOADINGS SPECIFIED BY FABRICATOR TO BE VERIFIED BY BUILDING DESIGNER

BEARINGS

JT	FACTORED GROSS REACTION VERT	HORZ	MAXIMUM FACTORED GROSS REACTION DOWN	HORZ	UPLIFT	INPUT BRG IN-SX	REQRD BRG IN-SX
20	1797	0	1797	0	0	5-8	5-8
12	1797	0	1797	0	0	5-8	5-8

UNFACTORED REACTIONS

JT	1ST LCASE COMBINED	MAX./MIN. COMPONENT REACTIONS SNOW	LIVE	PERM.LIVE	WIND	DEAD	SOIL
20	1259	894 / 0	0 / 0	0 / 0	0 / 0	365 / 0	0 / 0
12	1259	894 / 0	0 / 0	0 / 0	0 / 0	365 / 0	0 / 0

BEARING MATERIAL TO BE SPF NO.2 OR BETTER AT JOINT(S) 20, 12

BRACING
TOP CHORD TO BE SHEATHED OR MAX. PURLIN SPACING = 3.95 FT.
MAX. UNBRACED BOTTOM CHORD LENGTH = 10.00 FT. OR RIGID CEILING DIRECTLY APPLIED.

ALL PITCH BREAKS AND PERIMETER CORNER JOINTS MUST BE LATERALLY RESTRAINED.

1 - 2x3 SPF No.2 LATERAL BRACE(S) AT 1/ 2 LENGTH OF 7-16, 5-16. DBS = 20-0-0 . CBF = 88 LBS.

DBS = DIAGONAL BRACE SPACING (MAX). CBF = CUMULATIVE BRACING FORCE. FASTEN LATERAL BRACE(S) USING (0.122"X3") SPIRAL NAILS : 1 NAIL FOR 2x3 BRACE(S), 2 FOR 1x4, 2x4, 2x5, 3 FOR 2x6, 4 FOR 2x8, 5 FOR 2x10, AND 6 FOR 2x12.

END VERTICAL(S) MUST BE SHEATHED OR HAVE BRACES AS INDICATED IN THE MAX. UNBRACED LENGTH COLUMN OF THE TABLE BELOW

LOADING
TOTAL LOAD CASES: (4)

CHORDS

MEMB. FR-TO	MAX. FACTORED FORCE (LBS)	FACTORED VERT. LOAD LC1 (PLF) FROM	TO	MAX CSI (LC)	MAX. UNBRAC LENGTH
1- 2	0 / 23	-77.4	-77.4	0.10 (1)	10.00
2- 3	-2515 / 0	-77.4	-77.4	0.47 (1)	3.95
3- 4	-2248 / 0	-77.4	-77.4	0.38 (1)	4.24
4- 5	-2248 / 0	-77.4	-77.4	0.38 (1)	4.24
5- 6	-1751 / 0	-77.4	-77.4	0.37 (1)	4.68
6- 7	-1751 / 0	-77.4	-77.4	0.37 (1)	4.68
7- 8	-2248 / 0	-77.4	-77.4	0.38 (1)	4.24
8- 9	-2248 / 0	-77.4	-77.4	0.38 (1)	4.24
9-10	-2515 / 0	-77.4	-77.4	0.47 (1)	3.95
10-11	0 / 23	-77.4	-77.4	0.10 (1)	10.00
20- 2	-1751 / 0	0.0	0.0	0.18 (1)	6.30
12-10	-1751 / 0	0.0	0.0	0.18 (1)	6.30
20-19	0 / 0	-17.5	-17.5	0.14 (4)	10.00
19-18	0 / 2267	-17.5	-17.5	0.42 (1)	10.00
18-17	0 / 2010	-17.5	-17.5	0.40 (1)	10.00
17-16	0 / 2010	-17.5	-17.5	0.40 (1)	10.00
16-15	0 / 2010	-17.5	-17.5	0.40 (1)	10.00
15-14	0 / 2010	-17.5	-17.5	0.40 (1)	10.00
14-13	0 / 2267	-17.5	-17.5	0.42 (1)	10.00
13-12	0 / 0	-17.5	-17.5	0.14 (4)	10.00

WEBS

MEMB. FR-TO	MAX. FACTORED FORCE (LBS)	MAX CSI (LC)
16- 6	0 / 1182	0.27 (1)
16- 7	-708 / 0	0.40 (1)
14- 7	0 / 270	0.06 (1)
14- 9	-308 / 0	0.29 (1)
13- 9	-207 / 37	0.06 (1)
5-16	-708 / 0	0.40 (1)
18- 5	0 / 270	0.06 (1)
3-18	-308 / 0	0.29 (1)
19- 3	-207 / 37	0.06 (1)
2-19	0 / 2289	0.52 (1)
13-10	0 / 2289	0.52 (1)

DESIGN CRITERIA

SPECIFIED LOADS:

TOP	CH.	LL	=	23.3	PSF
		DL	=	3.0	PSF
BOT	CH.	LL	=	0.0	PSF
		DL	=	7.0	PSF
TOTAL	LOAD		=	33.3	PSF

SPACING = 24.0 IN. C/C

THIS TRUSS IS DESIGNED FOR RESIDENTIAL OR SMALL BUILDING REQUIREMENTS OF PART 9, NBCC 2010

THIS DESIGN COMPLIES WITH:
- PART 9 OF OBC 2012 , BCBC 2012 , ABC 2014
- CSA 086-09
- TPIC 2011

(55 % OF 27.2 P.S.F. G.S.L. PLUS 8.4 P.S.F. RAIN LOAD) EQUALS 23.3 P.S.F. SPECIFIED ROOF LIVE LOAD

ALLOWABLE DEFL.(LL)= L/360 (1.19")
CALCULATED VERT. DEFL.(LL) = L/ 999 (0.14")
ALLOWABLE DEFL.(TL)= L/360 (1.19")
CALCULATED VERT. DEFL.(TL) = L/ 999 (0.25")

CSI: TC=0.47 (9-10:1) , BC=0.42 (13-14:1) , WB=0.52 (10-13:1) , SSI=0.19 (9-10:1)

DOL LUMBER=1.00 NAIL=1.00 LS BEND=1.10 COMP=1.10 SHEAR=1.10 TENS= 1.10

COMPANION LIVE LOAD FACTOR = 0.50

TRUSS PLATE MANUFACTURER IS NOT RESPONSIBLE FOR QUALITY CONTROL IN THE TRUSS MANUFACTURING PLANT .

NAIL VALUES

PLATE	GRIP(DRY) (PSI) MAX	MIN	SHEAR (PLI) MAX	MIN	SECTION (PLI) MAX	MIN
MT20	618	354	1667	822	2284	1656

PLATE PLACEMENT TOL. = 0.250 inches

PLATE ROTATION TOL. = 5.0 Deg.

JSI GRIP= 0.88 (16) (INPUT = 0.90)
JSI METAL= 0.68 (13) (INPUT = 1.00)

LICENSED PROFESSIONAL ENGINEER
P. M. TREVISAN
100136551
March 16th, 2017
PROVINCE OF ONTARIO

RECEIVED
TOWN OF MILTON
MAR 29, 2017
17-5337
BUILDING DIVISION

KOTT

JOB NAME	TRUSS NAME	QUANTITY	PLY	JOB DESC.	DRWG NO.
PT0317-097	T30	11	1	TRUSS DESC. LECCO RIDGE-BLOCK 344	

KOTT , Stouffville, ON, CGC

Version 8.100 S Feb 9 2017 MiTek Industries, Inc. Thu Mar 16 11:58:03 2017 Page 1
ID:EvTixTQDI5yR1QLotZTBr_yE?HJ-gowWxji3WWJADVW_jFWE1eQohYcm_sGYvP?eumzaNjo

SCALE = 1:76.9

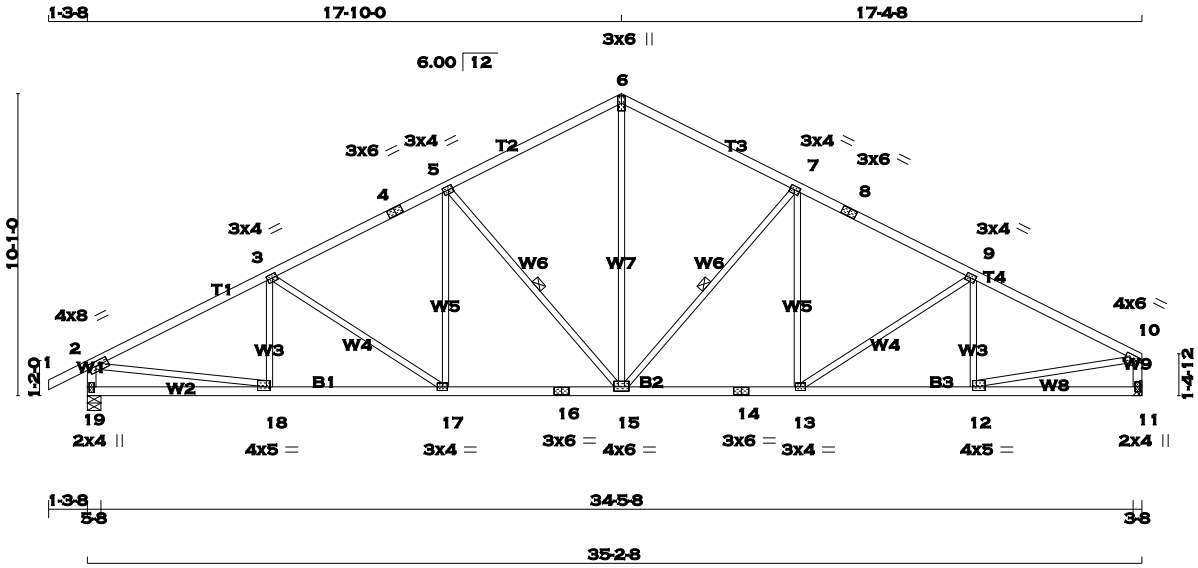

TOTAL WEIGHT = 11 X 147 = 1621 lb

[M][F]

LUMBER

N. L. G. A. RULES

CHORDS	SIZE		LUMBER	DESCR.
1 - 4	2x4	DRY	No.2	SPF
4 - 6	2x4	DRY	No.2	SPF
6 - 8	2x4	DRY	No.2	SPF
8 - 10	2x4	DRY	No.2	SPF
19 - 2	2x4	DRY	No.2	SPF
11 - 10	2x4	DRY	No.2	SPF
19 - 16	2x4	DRY	No.2	SPF
16 - 14	2x4	DRY	No.2	SPF
14 - 11	2x4	DRY	No.2	SPF
ALL WEBS EXCEPT	2x3	DRY	No.2	SPF

DRY: SEASONED LUMBER.

PLATES (table is in inches)

JT	TYPE	PLATES	W	LEN	Y	X
2 3, 5, 7, 9	TMVW-t	MT20	4.0	8.0	1.75	3.00
3	TMWW-t	MT20	3.0	4.0	1.50	1.75
4	TS-t	MT20	3.0	6.0		
6	TTW+p	MT20	3.0	6.0		
8	TS-t	MT20	3.0	6.0		
10	TMVW-t	MT20	4.0	6.0	1.50	2.75
11	BMV1+p	MT20	2.0	4.0		
12	BMWW-t	MT20	4.0	5.0	1.50	1.50
13	BMWW-t	MT20	3.0	4.0		
14	BS-t	MT20	3.0	6.0		
15	BMWWW-t	MT20	4.0	6.0	1.75	3.00
16	BS-t	MT20	3.0	6.0		
17	BMWW-t	MT20	3.0	4.0		
18	BMWW-t	MT20	4.0	5.0	1.50	1.50
19	BMV1+p	MT20	2.0	4.0	2.25	1.00

A SIZE FOR SIZE SUBSTITUTION OF MITEK MII20 WITH TEE-LOK TL20 PLATES IS ALLOWED.

DIMENSIONS, SUPPORTS AND LOADINGS SPECIFIED BY FABRICATOR TO BE VERIFIED BY BUILDING DESIGNER

BEARINGS

JT	FACTORED GROSS REACTION VERT	HORZ	MAXIMUM FACTORED GROSS REACTION DOWN	HORZ	UPLIFT	INPUT BRG IN-SX	REQRD BRG IN-SX
19	1775	0	1775	0	0	5-8	5-8
11	1670	0	1670	0	0	HANGER BY OTHERS MIN. SEAT SIZE: 3-8	

UNFACTORED REACTIONS

JT	1ST LCASE COMBINED	SNOW	MAX./MIN. COMPONENT REACTIONS LIVE	PERM.LIVE	WIND	DEAD	SOIL
19	1243	883 / 0	0 / 0	0 / 0	0 / 0	360 / 0	0 / 0
11	1172	820 / 0	0 / 0	0 / 0	0 / 0	352 / 0	0 / 0

BEARING MATERIAL TO BE SPF NO.2 OR BETTER AT JOINT(S) 19

BRACING

TOP CHORD TO BE SHEATHED OR MAX. PURLIN SPACING = 3.98 FT.
MAX. UNBRACED BOTTOM CHORD LENGTH = 10.00 FT. OR RIGID CEILING DIRECTLY APPLIED.

ALL PITCH BREAKS AND PERIMETER CORNER JOINTS MUST BE LATERALLY RESTRAINED.

1 - 2x3 SPF No.2 LATERAL BRACE(S) AT 1/ 2 LENGTH OF 5-15, 7-15. DBS = 20-0-0 . CBF = 89 LBS.

DBS = DIAGONAL BRACE SPACING (MAX). CBF = CUMULATIVE BRACING FORCE. FASTEN LATERAL BRACE(S) USING (0.122"X3") SPIRAL NAILS : 1 NAIL FOR 2x3 BRACE(S), 2 FOR 1x4, 2x4, 2x5, 3 FOR 2x6, 4 FOR 2x8, 5 FOR 2x10, AND 6 FOR 2x12.

END VERTICAL(S) MUST BE SHEATHED OR HAVE BRACES AS INDICATED IN THE MAX. UNBRACED LENGTH COLUMN OF THE TABLE BELOW

LOADING

TOTAL LOAD CASES: (4)

CHORDS

MEMB. FR-TO	MAX. FACTORED FORCE (LBS)	VERT. LOAD LC1 (PLF) FROM	TO	MAX CSI (LC)	MAX. UNBRAC LENGTH
1- 2	0 / 23	-77.4	-77.4	0.10 (1)	10.00
2- 3	-2477 / 0	-77.4	-77.4	0.47 (1)	3.98
3- 4	-2205 / 0	-77.4	-77.4	0.38 (1)	4.28
4- 5	-2205 / 0	-77.4	-77.4	0.38 (1)	4.28
5- 6	-1707 / 0	-77.4	-77.4	0.37 (1)	4.74
6- 7	-1707 / 0	-77.4	-77.4	0.37 (1)	4.73
7- 8	-2162 / 0	-77.4	-77.4	0.38 (1)	4.31
8- 9	-2162 / 0	-77.4	-77.4	0.38 (1)	4.31
9-10	-2322 / 0	-77.4	-77.4	0.38 (1)	4.17
19- 2	-1729 / 0	0.0	0.0	0.17 (1)	6.33
11-10	-1628 / 0	0.0	0.0	0.17 (1)	6.48
19-18	0 / 0	-17.5	-17.5	0.14 (4)	10.00
18-17	0 / 2233	-17.5	-17.5	0.42 (1)	10.00
17-16	0 / 1972	-17.5	-17.5	0.39 (1)	10.00
16-15	0 / 1972	-17.5	-17.5	0.39 (1)	10.00
15-14	0 / 1936	-17.5	-17.5	0.38 (1)	10.00
14-13	0 / 1936	-17.5	-17.5	0.38 (1)	10.00
13-12	0 / 2094	-17.5	-17.5	0.39 (1)	10.00
12-11	0 / 0	-17.5	-17.5	0.13 (4)	10.00

WEBS

MEMB. FR-TO	MAX. FACTORED FORCE (LBS)	MAX CSI (LC)
18- 3	-202 / 39	0.05 (1)
3-17	-313 / 0	0.30 (1)
17- 5	0 / 273	0.06 (1)
5-15	-710 / 0	0.40 (1)
15- 6	0 / 1143	0.26 (1)
15- 7	-655 / 0	0.37 (1)
13- 7	0 / 206	0.05 (4)
13- 9	-190 / 0	0.18 (1)
12- 9	-297 / 6	0.08 (1)
2-18	0 / 2255	0.51 (1)
12-10	0 / 2132	0.48 (1)

DESIGN CRITERIA

SPECIFIED LOADS:

TOP CH.	LL	=	23.3	PSF
	DL	=	3.0	PSF
BOT CH.	LL	=	0.0	PSF
	DL	=	7.0	PSF
TOTAL LOAD		=	33.3	PSF

SPACING = 24.0 IN. C/C

THIS TRUSS IS DESIGNED FOR RESIDENTIAL OR SMALL BUILDING REQUIREMENTS OF PART 9, NBCC 2010

THIS DESIGN COMPLIES WITH:
- PART 9 OF OBC 2012 , BCBC 2012 , ABC 2014
- CSA 086-09
- TPIC 2011

(55 % OF 27.2 P.S.F. G.S.L. PLUS 8.4 P.S.F. RAIN LOAD) EQUALS 23.3 P.S.F. SPECIFIED ROOF LIVE LOAD

ALLOWABLE DEFL.(LL)= L/360 (1.17")
CALCULATED VERT. DEFL.(LL) = L/ 999 (0.13")
ALLOWABLE DEFL.(TL)= L/360 (1.17")
CALCULATED VERT. DEFL.(TL) = L/ 999 (0.24")

CSI: TC=0.47 (2-3:1) , BC=0.42 (17-18:1) , WB=0.51 (2-18:1) , SSI=0.19 (2-3:1)

DOL LUMBER=1.00 NAIL=1.00 LS BEND=1.10 COMP=1.10 SHEAR=1.10 TENS= 1.10

COMPANION LIVE LOAD FACTOR = 0.50

TRUSS PLATE MANUFACTURER IS NOT RESPONSIBLE FOR QUALITY CONTROL IN THE TRUSS MANUFACTURING PLANT .

NAIL VALUES

PLATE	GRIP(DRY) (PSI) MAX	MIN	SHEAR (PLI) MAX	MIN	SECTION (PLI) MAX	MIN
MT20	618	354	1667	822	2284	1656

PLATE PLACEMENT TOL. = 0.250 inches

PLATE ROTATION TOL. = 0.5 Deg.

JSI GRIP= 0.88 (10) (INPUT = 0.90)
JSI METAL= 0.67 (18) (INPUT = 1.00)

LICENSED PROFESSIONAL ENGINEER
P. M. TREVISAN
100136551
March 16th, 2017
PROVINCE OF ONTARIO

RECEIVED
TOWN OF MILTON
MAR 29, 2017
17-5337
BUILDING DIVISION

KOTT

JOB NAME	TRUSS NAME	QUANTITY	PLY	JOB DESC.	DRWG NO.
PT0317-097	**T31**	**2**	**1**	TRUSS DESC. LECCO RIDGE-BLOCK 344	

KOTT , Stouffville, ON, CGC

Version 8.100 S Feb 9 2017 MiTek Industries, Inc. Thu Mar 16 11:58:04 2017 Page 1
ID:EvTixTQDI5yR1QLotZTBr_yE?HJ-8_Uu93ihHqR1rf5AGy1TarzxwxybjEpi83lBQCzaNjn

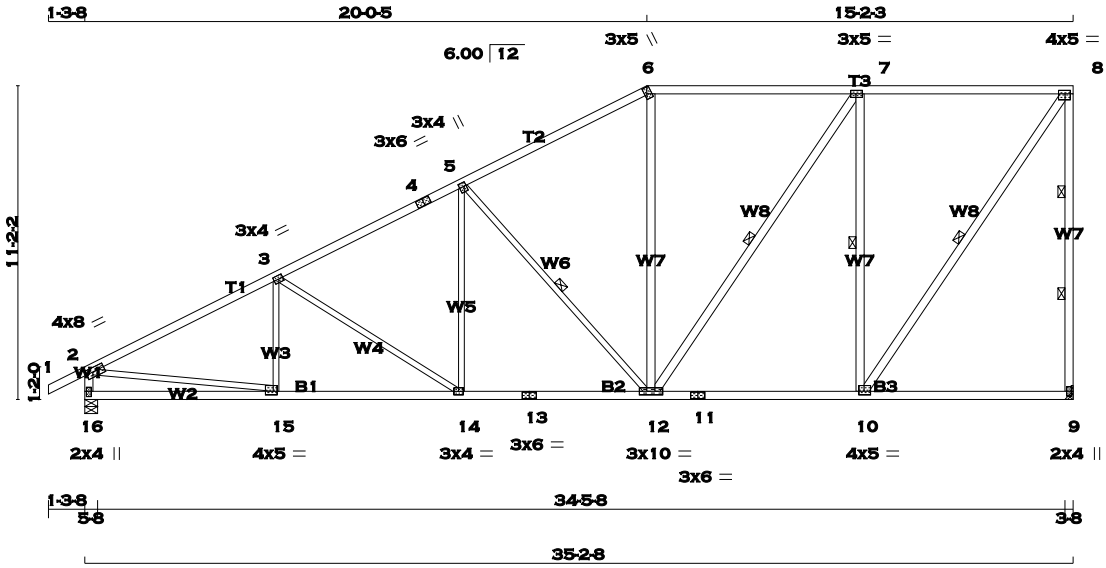

TOTAL WEIGHT = 2 X 180 = 359 lb
[M][F]

LUMBER
N. L. G. A. RULES

CHORDS	SIZE		LUMBER	DESCR.
1 - 4	2x4	DRY	No.2	SPF
4 - 6	2x4	DRY	No.2	SPF
6 - 8	2x4	DRY	No.2	SPF
9 - 8	2x4	DRY	No.2	SPF
16 - 2	2x4	DRY	No.2	SPF
16 - 13	2x4	DRY	No.2	SPF
13 - 11	2x4	DRY	No.2	SPF
11 - 9	2x4	DRY	No.2	SPF
ALL WEBS	2x3	DRY	No.2	SPF
EXCEPT				
12 - 6	2x4	DRY	No.2	SPF
12 - 7	2x4	DRY	No.2	SPF
10 - 7	2x4	DRY	No.2	SPF
10 - 8	2x4	DRY	No.2	SPF

DRY: SEASONED LUMBER.

PLATES (table is in inches)

JT	TYPE	PLATES	W	LEN	Y	X
2	TMVW-t	MT20	4.0	8.0	1.75	3.00
3	TMWW-t	MT20	3.0	4.0	1.50	1.75
4	TS-t	MT20	3.0	6.0		
5	TMWW+t	MT20	3.0	4.0	1.75	0.75
6	TTW+h	MT20	3.0	5.0	2.75	1.00
7	TMWW-t	MT20	3.0	5.0	1.50	2.25
8	TMVW-t	MT20	4.0	5.0	1.50	2.25
9	BMV1+p	MT20	2.0	4.0		
10	BMWW-t	MT20	4.0	5.0	1.50	2.25
11	BS-t	MT20	3.0	6.0		
12	BMWWW-t	MT20	3.0	10.0		
13	BS-t	MT20	3.0	6.0		
14	BMWW-t	MT20	3.0	4.0		
15	BMWW-t	MT20	4.0	5.0	1.50	1.75
16	BMV1+p	MT20	2.0	4.0	2.25	1.00

A SIZE FOR SIZE SUBSTITUTION OF MITEK MII20 WITH TEE-LOK TL20 PLATES IS ALLOWED.

DIMENSIONS, SUPPORTS AND LOADINGS SPECIFIED BY FABRICATOR TO BE VERIFIED BY BUILDING DESIGNER

BEARINGS

JT	FACTORED GROSS REACTION VERT	HORZ	MAXIMUM FACTORED GROSS REACTION DOWN	HORZ	UPLIFT	INPUT BRG	REQRD BRG
9	1670	0	1670	0	0	HANGER BY OTHERS	
						MIN. SEAT SIZE: 3-8	
16	1775	0	1775	0	0	5-8	5-8

UNFACTORED REACTIONS

JT	1ST LCASE COMBINED	SNOW	MAX./MIN. COMPONENT REACTIONS LIVE	PERM.LIVE	WIND	DEAD	SOIL
9	1172	820 / 0	0 / 0	0 / 0	0 / 0	352 / 0	0 / 0
16	1243	883 / 0	0 / 0	0 / 0	0 / 0	360 / 0	0 / 0

BEARING MATERIAL TO BE SPF NO.2 OR BETTER AT JOINT(S) 16

BRACING
TOP CHORD TO BE SHEATHED OR MAX. PURLIN SPACING = 3.84 FT.
MAX. UNBRACED BOTTOM CHORD LENGTH = 10.00 FT. OR RIGID CEILING DIRECTLY APPLIED.

ALL PITCH BREAKS AND PERIMETER CORNER JOINTS MUST BE LATERALLY RESTRAINED.

2 - 2x3 SPF No.2 LATERAL BRACE(S) AT 1/ 3 LENGTH OF 8-9. DBS = 8-0-0 . CBF = 81 LBS.
1 - 2x3 SPF No.2 LATERAL BRACE(S) AT 1/ 2 LENGTH OF 5-12, 8-10. DBS = 16-0-0 . CBF = 85 LBS.
1 - 2x3 SPF No.2 LATERAL BRACE(S) AT 1/ 2 LENGTH OF 7-12. DBS = 20-0-0 . CBF = 39 LBS.
1 - 2x3 SPF No.2 LATERAL BRACE(S) AT 1/ 2 LENGTH OF 7-10. DBS = 12-0-0 . CBF = 93 LBS.

DBS = DIAGONAL BRACE SPACING (MAX). CBF = CUMULATIVE BRACING FORCE. FASTEN LATERAL BRACE(S) USING (0.122"X3") SPIRAL NAILS : 1 NAIL FOR 2x3 BRACE(S), 2 FOR 1x4, 2x4, 2x5, 3 FOR 2x6, 4 FOR 2x8, 5 FOR 2x10, AND 6 FOR 2x12.

END VERTICAL(S) MUST BE SHEATHED OR HAVE BRACES AS INDICATED IN THE MAX. UNBRACED LENGTH COLUMN OF THE TABLE BELOW

LOADING
TOTAL LOAD CASES: (4)

CHORDS

MEMB. FR-TO	MAX. FACTORED FORCE (LBS)	FACTORED VERT. LOAD LC1 (PLF) FROM	TO	MAX CSI (LC)	MAX. UNBRAC LENGTH
1- 2	0 / 23	-77.4	-77.4	0.10 (1)	10.00
2- 3	-2487 / 0	-77.4	-77.4	0.60 (1)	3.84
3- 4	-2106 / 0	-77.4	-77.4	0.47 (1)	4.26
4- 5	-2106 / 0	-77.4	-77.4	0.47 (1)	4.26
5- 6	-1502 / 0	-77.4	-77.4	0.45 (1)	4.85
6- 7	-1326 / 0	-77.4	-77.4	0.63 (1)	4.74
7- 8	-973 / 0	-77.4	-77.4	0.61 (1)	5.36
9- 8	-1617 / 0	0.0	0.0	0.46 (1)	5.20
16- 2	-1724 / 0	0.0	0.0	0.17 (1)	6.34
16-15	0 / 0	-17.5	-17.5	0.18 (4)	10.00
15-14	0 / 2244	-17.5	-17.5	0.44 (1)	10.00
14-13	0 / 1884	-17.5	-17.5	0.39 (1)	10.00
13-12	0 / 1884	-17.5	-17.5	0.39 (1)	10.00
12-11	0 / 973	-17.5	-17.5	0.32 (4)	10.00
11-10	0 / 973	-17.5	-17.5	0.32 (4)	10.00
10- 9	0 / 0	-17.5	-17.5	0.25 (4)	10.00

WEBS

MEMB. FR-TO	MAX. FACTORED FORCE (LBS)	MAX CSI (LC)
15- 3	-155 / 64	0.05 (1)
3-14	-429 / 0	0.55 (1)
14- 5	0 / 347	0.08 (1)
5-12	-843 / 0	0.63 (1)
12- 6	0 / 235	0.04 (1)
12- 7	0 / 624	0.10 (1)
10- 7	-1246 / 0	0.81 (1)
10- 8	0 / 1701	0.27 (1)
2-15	0 / 2262	0.51 (1)

DESIGN CRITERIA

SPECIFIED LOADS:

TOP CH.	LL	=	23.3	PSF
	DL	=	3.0	PSF
BOT CH.	LL	=	0.0	PSF
	DL	=	7.0	PSF
TOTAL LOAD		=	33.3	PSF

SPACING = 24.0 IN. C/C

LOADING IN FLAT SECTION BASED ON A SLOPE OF 6.00/12

THIS TRUSS IS DESIGNED FOR RESIDENTIAL OR SMALL BUILDING REQUIREMENTS OF PART 9, NBCC 2010

THIS DESIGN COMPLIES WITH:
- PART 9 OF OBC 2012 , BCBC 2012 , ABC 2014
- CSA 086-09
- TPIC 2011

(55 % OF 27.2 P.S.F. G.S.L. PLUS 8.4 P.S.F. RAIN LOAD) EQUALS 23.3 P.S.F. SPECIFIED ROOF LIVE LOAD

ALLOWABLE DEFL.(LL)= L/360 (1.17")
CALCULATED VERT. DEFL.(LL) = L/ 999 (0.12")
ALLOWABLE DEFL.(TL)= L/360 (1.17")
CALCULATED VERT. DEFL.(TL) = L/ 999 (0.22")

CSI: TC=0.63 (6-7:1) , BC=0.44 (14-15:1) , WB=0.81 (7-10:1) , SSI=0.29 (7-8:1)

DOL LUMBER=1.00 NAIL=1.00 LS BEND=1.10 COMP=1.10 SHEAR=1.10 TENS= 1.10

COMPANION LIVE LOAD FACTOR = 0.50

TRUSS PLATE MANUFACTURER IS NOT RESPONSIBLE FOR QUALITY CONTROL IN THE TRUSS MANUFACTURING PLANT .

NAIL VALUES

PLATE	GRIP(DRY) (PSI) MAX	MIN	SHEAR (PLI) MAX	MIN	SECTION (PLI) MAX	MIN
MT20	618	354	1667	822	2284	1656

PLATE PLACEMENT TOL. = 0.250 inches

PLATE ROTATION TOL. = 5.0 Deg.

JSI GRIP= 0.89 (15) (INPUT = 0.90)
JSI METAL= 0.67 (15) (INPUT = 1.00)

LICENSED PROFESSIONAL ENGINEER
P. M. TREVISAN
100136551
March 16th, 2017
PROVINCE OF ONTARIO

RECEIVED
TOWN OF MILTON
MAR 29, 2017
17-5337
BUILDING DIVISION

KOTT

JOB NAME	TRUSS NAME	QUANTITY	PLY	JOB DESC.	DRWG NO.
PT0317-097	T32	2	1	TRUSS DESC. LECCO RIDGE-BLOCK 344	

KOTT , Stouffville, ON, CGC

Version 8.100 S Feb 9 2017 MiTek Industries, Inc. Thu Mar 16 11:58:04 2017 Page 1
ID:EvTixTQDI5yR1QLotZTBr_yE?HJ-8_Uu93ihHqR1rf5AGy1Tarzw5xxOjCYi83lBQCzaNjn

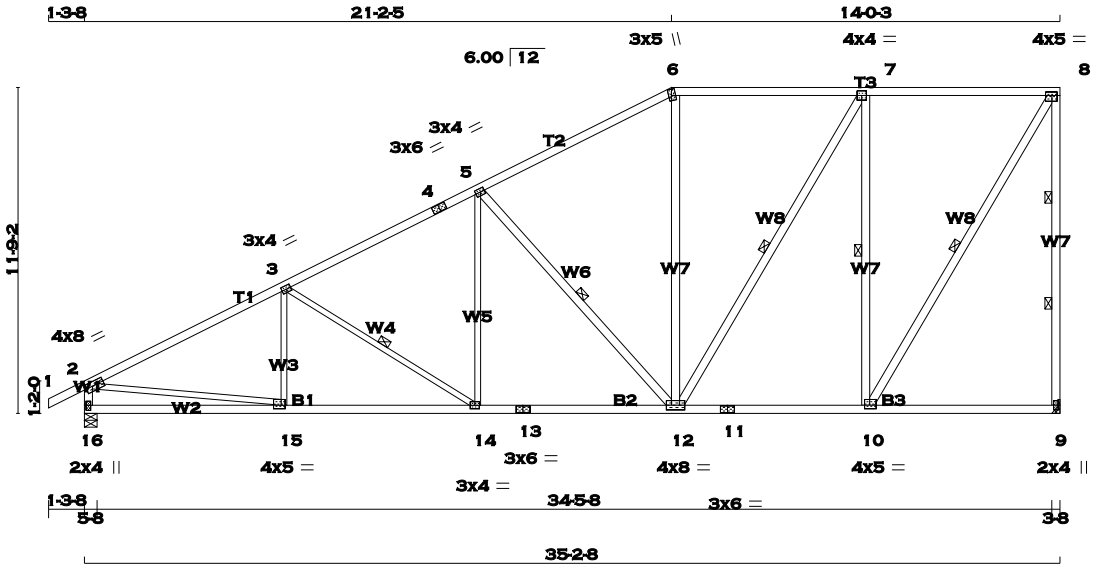

TOTAL WEIGHT = 2 X 187 = 374 lb
[M][F]

LUMBER
N. L. G. A. RULES

CHORDS	SIZE		LUMBER	DESCR.
1 - 4	2x4	DRY	No.2	SPF
4 - 6	2x4	DRY	No.2	SPF
6 - 8	2x4	DRY	No.2	SPF
9 - 8	2x4	DRY	No.2	SPF
16 - 2	2x4	DRY	No.2	SPF
16 - 13	2x4	DRY	No.2	SPF
13 - 11	2x4	DRY	No.2	SPF
11 - 9	2x4	DRY	No.2	SPF
ALL WEBS	2x4	DRY	No.2	SPF
EXCEPT				
15 - 3	2x3	DRY	No.2	SPF
3 - 14	2x3	DRY	No.2	SPF
14 - 5	2x3	DRY	No.2	SPF
2 - 15	2x3	DRY	No.2	SPF

DRY: SEASONED LUMBER.

PLATES (table is in inches)

JT	TYPE	PLATES	W	LEN	Y	X
2	TMVW-t	MT20	4.0	8.0	1.75	3.00
3	TMWW-t	MT20	3.0	4.0	1.50	1.75
4	TS-t	MT20	3.0	6.0		
5	TMWW-t	MT20	3.0	4.0	1.50	1.75
6	TTW+m	MT20	3.0	5.0	2.75	1.25
7	TMWW-t	MT20	4.0	4.0		
8	TMVW-t	MT20	4.0	5.0	1.50	2.25
9	BMV1+p	MT20	2.0	4.0		
10	BMWW-t	MT20	4.0	5.0	1.50	2.25
11	BS-t	MT20	3.0	6.0		
12	BMWWW-t	MT20	4.0	8.0		
13	BS-t	MT20	3.0	6.0		
14	BMWW-t	MT20	3.0	4.0		
15	BMWW-t	MT20	4.0	5.0	1.50	1.75
16	BMV1+p	MT20	2.0	4.0	2.25	1.00

A SIZE FOR SIZE SUBSTITUTION OF MITEK MII20 WITH TEE-LOK TL20 PLATES IS ALLOWED.

DIMENSIONS, SUPPORTS AND LOADINGS SPECIFIED BY FABRICATOR TO BE VERIFIED BY BUILDING DESIGNER

BEARINGS

JT	FACTORED GROSS REACTION VERT	HORZ	MAXIMUM FACTORED GROSS REACTION DOWN	HORZ	UPLIFT	INPUT BRG IN-SX	REQRD BRG IN-SX
9	1670	0	1670	0	0	HANGER BY OTHERS	
						MIN. SEAT SIZE: 3-8	
16	1775	0	1775	0	0	5-8	5-8

UNFACTORED REACTIONS

JT	1ST LCASE COMBINED	SNOW	MAX./MIN. COMPONENT REACTIONS LIVE	PERM.LIVE	WIND	DEAD	SOIL
9	1172	820 / 0	0 / 0	0 / 0	0 / 0	352 / 0	0 / 0
16	1243	883 / 0	0 / 0	0 / 0	0 / 0	360 / 0	0 / 0

BEARING MATERIAL TO BE SPF NO.2 OR BETTER AT JOINT(S) 16

BRACING
TOP CHORD TO BE SHEATHED OR MAX. PURLIN SPACING = 3.75 FT.
MAX. UNBRACED BOTTOM CHORD LENGTH = 10.00 FT. OR RIGID CEILING DIRECTLY APPLIED.

ALL PITCH BREAKS AND PERIMETER CORNER JOINTS MUST BE LATERALLY RESTRAINED.

2 - 2x3 SPF No.2 LATERAL BRACE(S) AT 1/ 3 LENGTH OF 8-9. DBS = 8-0-0 . CBF = 81 LBS.
1 - 2x3 SPF No.2 LATERAL BRACE(S) AT 1/ 2 LENGTH OF 3-14, 7-12. DBS = 20-0-0 . CBF = 61 LBS.
1 - 2x3 SPF No.2 LATERAL BRACE(S) AT 1/ 2 LENGTH OF 5-12. DBS = 16-0-0 . CBF = 91 LBS.
1 - 2x3 SPF No.2 LATERAL BRACE(S) AT 1/ 2 LENGTH OF 7-10. DBS = 10-0-0 . CBF = 80 LBS.
1 - 2x3 SPF No.2 LATERAL BRACE(S) AT 1/ 2 LENGTH OF 8-10. DBS = 18-0-0 . CBF = 93 LBS.

DBS = DIAGONAL BRACE SPACING (MAX). CBF = CUMULATIVE BRACING FORCE. FASTEN LATERAL BRACE(S) USING (0.122"X3") SPIRAL NAILS : 1 NAIL FOR 2x3 BRACE(S), 2 FOR 1x4, 2x4, 2x5, 3 FOR 2x6, 4 FOR 2x8, 5 FOR 2x10, AND 6 FOR 2x12.

END VERTICAL(S) MUST BE SHEATHED OR HAVE BRACES AS INDICATED IN THE MAX. UNBRACED LENGTH COLUMN OF THE TABLE BELOW

LOADING
TOTAL LOAD CASES: (4)

CHORDS

MEMB. FR-TO	MAX. FACTORED FORCE (LBS)	FACTORED VERT. LOAD LC1 (PLF) FROM	TO	MAX CSI (LC)	MAX. UNBRAC LENGTH
1- 2	0 / 23	-77.4	-77.4	0.10 (1)	10.00
2- 3	-2487 / 0	-77.4	-77.4	0.68 (1)	3.75
3- 4	-2050 / 0	-77.4	-77.4	0.53 (1)	4.25
4- 5	-2050 / 0	-77.4	-77.4	0.53 (1)	4.25
5- 6	-1395 / 0	-77.4	-77.4	0.51 (1)	4.91
6- 7	-1228 / 0	-77.4	-77.4	0.52 (1)	5.09
7- 8	-865 / 0	-77.4	-77.4	0.51 (1)	5.83
9- 8	-1621 / 0	0.0	0.0	0.51 (1)	5.20
16- 2	-1722 / 0	0.0	0.0	0.17 (1)	6.35
16-15	0 / 0	-17.5	-17.5	0.20 (4)	10.00
15-14	0 / 2246	-17.5	-17.5	0.46 (1)	10.00
14-13	0 / 1834	-17.5	-17.5	0.39 (1)	10.00
13-12	0 / 1834	-17.5	-17.5	0.39 (1)	10.00
12-11	0 / 865	-17.5	-17.5	0.27 (4)	10.00
11-10	0 / 865	-17.5	-17.5	0.27 (4)	10.00
10- 9	0 / 0	-17.5	-17.5	0.20 (4)	10.00

WEBS

MEMB. FR-TO	MAX. FACTORED FORCE (LBS)	MAX CSI (LC)
15- 3	-133 / 77	0.04 (1)
3-14	-489 / 0	0.23 (1)
14- 5	0 / 386	0.09 (1)
5-12	-911 / 0	0.55 (1)
12- 6	0 / 191	0.03 (4)
12- 7	0 / 706	0.11 (1)
10- 7	-1280 / 0	0.95 (1)
10- 8	0 / 1659	0.27 (1)
2-15	0 / 2261	0.51 (1)

RECEIVED
TOWN OF MILTON
MAR 29, 2017
17-5337
BUILDING DIVISION

DESIGN CRITERIA

SPECIFIED LOADS:

TOP	CH.	LL	=	23.3	PSF
		DL	=	3.0	PSF
BOT	CH.	LL	=	0.0	PSF
		DL	=	7.0	PSF
TOTAL	LOAD		=	33.3	PSF

SPACING = 24.0 IN. C/C

LOADING IN FLAT SECTION BASED ON A SLOPE OF 6.00/12

THIS TRUSS IS DESIGNED FOR RESIDENTIAL OR SMALL BUILDING REQUIREMENTS OF PART 9, NBCC 2010

THIS DESIGN COMPLIES WITH:
- PART 9 OF OBC 2012 , BCBC 2012 , ABC 2014
- CSA 086-09
- TPIC 2011

(55 % OF 27.2 P.S.F. G.S.L. PLUS 8.4 P.S.F. RAIN LOAD) EQUALS 23.3 P.S.F. SPECIFIED ROOF LIVE LOAD

ALLOWABLE DEFL.(LL)= L/360 (1.17")
CALCULATED VERT. DEFL.(LL) = L/ 999 (0.12")
ALLOWABLE DEFL.(TL)= L/360 (1.17")
CALCULATED VERT. DEFL.(TL) = L/ 999 (0.23")

CSI: TC=0.68 (2-3:1) , BC=0.46 (14-15:1) , WB=0.95 (7-10:1) , SSI=0.26 (7-8:1)

DOL LUMBER=1.00 NAIL=1.00 LS BEND=1.10 COMP=1.10 SHEAR=1.10 TENS= 1.10

COMPANION LIVE LOAD FACTOR = 0.50

TRUSS PLATE MANUFACTURER IS NOT RESPONSIBLE FOR QUALITY CONTROL IN THE TRUSS MANUFACTURING PLANT .

NAIL VALUES

PLATE	GRIP(DRY) (PSI) MAX	MIN	SHEAR (PLI) MAX	MIN	SECTION (PLI) MAX	MIN
MT20	618	354	1667	822	2284	1656

PLATE PLACEMENT TOL. = 0.250 inches

PLATE ROTATION TOL. = 5.0 Deg.

JSI GRIP= 0.89 (15) (INPUT = 0.90)
JSI METAL= 0.67 (15) (INPUT = 1.00)

KOTT

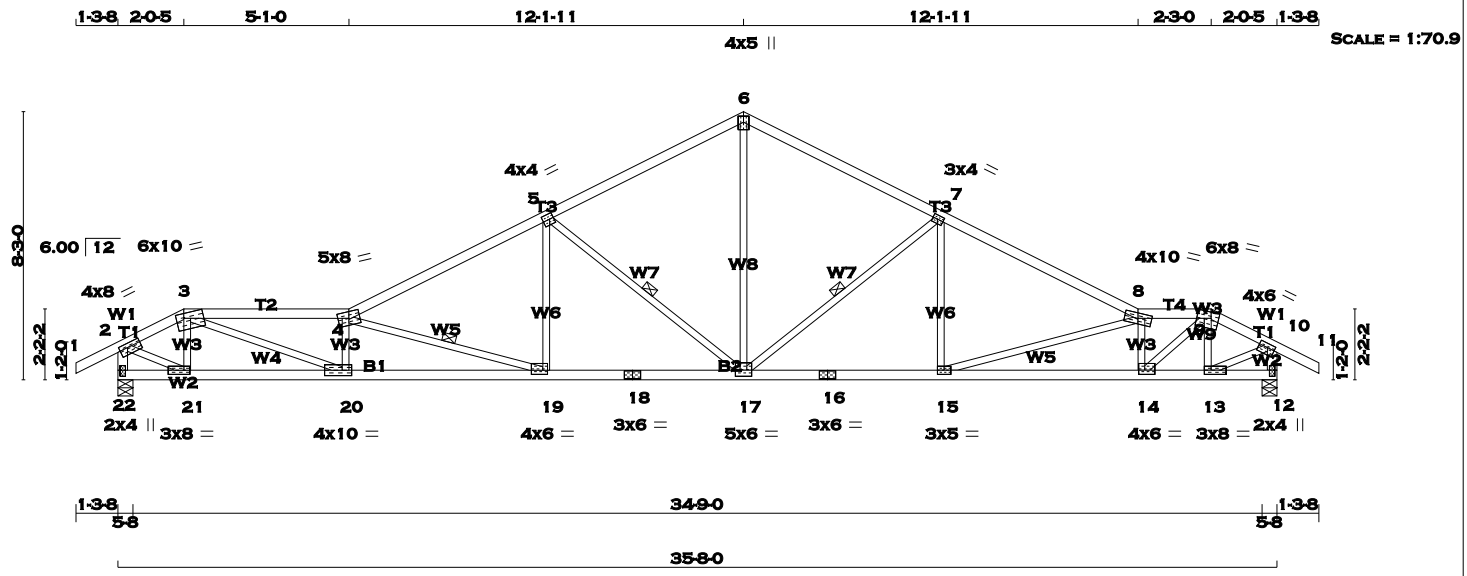

TOTAL WEIGHT = 141 lb

[M][F]

LUMBER

N. L. G. A. RULES

CHORDS	SIZE		LUMBER	DESCR.
1 - 3	2x4	DRY	No.2	SPF
3 - 4	2x4	DRY	No.2	SPF
4 - 6	2x4	DRY	No.2	SPF
6 - 8	2x4	DRY	No.2	SPF
8 - 9	2x4	DRY	No.2	SPF
9 - 11	2x4	DRY	No.2	SPF
22 - 2	2x4	DRY	No.2	SPF
12 - 10	2x4	DRY	No.2	SPF
22 - 18	2x4	DRY	No.2	SPF
18 - 16	2x4	DRY	No.2	SPF
16 - 12	2x4	DRY	No.2	SPF
ALL WEBS EXCEPT	2x3	DRY	No.2	SPF

DRY: SEASONED LUMBER.

PLATES (table is in inches)

JT	TYPE	PLATES	W	LEN	Y	X
2	TMVW-t	MT20	4.0	8.0	1.50	3.00
3	TTWW-m	MT20	6.0	10.0	1.75	2.75
4	TTWW-m	MT20	5.0	8.0		
5	TMWW-t	MT20	4.0	4.0	2.00	1.50
6	TTW+p	MT20	4.0	5.0	2.25	2.00
7	TMWW-t	MT20	3.0	4.0	1.50	1.75
8	TTWW-m	MT20	4.0	10.0		
9	TTWW-m	MT20	6.0	8.0	2.25	2.75
10	TMVW-t	MT20	4.0	6.0	1.50	2.75
12	BMV1+p	MT20	2.0	4.0	2.25	1.00
13	BMWW-t	MT20	3.0	8.0	1.50	2.50
14	BMWW-t	MT20	4.0	6.0	1.50	2.25
15	BMWW-t	MT20	3.0	5.0		
16	BS-t	MT20	3.0	6.0		
17	BMWWW-t	MT20	5.0	6.0	2.25	3.00
18	BS-t	MT20	3.0	6.0		
19	BMWW-t	MT20	4.0	6.0	1.50	1.75
20	BMWW-t	MT20	4.0	10.0	2.00	3.50
21	BMWW-t	MT20	3.0	8.0	1.50	2.25
22	BMV1+p	MT20	2.0	4.0	2.25	1.00

A SIZE FOR SIZE SUBSTITUTION OF MITEK MII20 WITH TEE-LOK TL20 PLATES IS ALLOWED.

DIMENSIONS, SUPPORTS AND LOADINGS SPECIFIED BY FABRICATOR TO BE VERIFIED BY BUILDING DESIGNER

BEARINGS

JT	FACTORED GROSS REACTION VERT	HORZ	MAXIMUM FACTORED GROSS REACTION DOWN	HORZ	UPLIFT	INPUT BRG IN-SX	REQRD BRG IN-SX
22	1797	0	1797	0	0	5-8	5-8
12	1797	0	1797	0	0	5-8	5-8

UNFACTORED REACTIONS

JT	1ST LCASE COMBINED	MAX./MIN. COMPONENT REACTIONS SNOW	LIVE	PERM.LIVE	WIND	DEAD	SOIL
22	1259	894 / 0	0 / 0	0 / 0	0 / 0	365 / 0	0 / 0
12	1259	894 / 0	0 / 0	0 / 0	0 / 0	365 / 0	0 / 0

BEARING MATERIAL TO BE SPF NO.2 OR BETTER AT JOINT(S) 22, 12

BRACING

TOP CHORD TO BE SHEATHED OR MAX. PURLIN SPACING = 2.70 FT.
MAX. UNBRACED BOTTOM CHORD LENGTH = 10.00 FT. OR RIGID CEILING DIRECTLY APPLIED.

ALL PITCH BREAKS AND PERIMETER CORNER JOINTS MUST BE LATERALLY RESTRAINED.

1 - 2x3 SPF No.2 LATERAL BRACE(S) AT 1/ 2 LENGTH OF 4-19. DBS = 6-0-0 . CBF = 84 LBS.
1 - 2x3 SPF No.2 LATERAL BRACE(S) AT 1/ 2 LENGTH OF 5-17. DBS = 10-0-0 . CBF = 85 LBS.
1 - 2x3 SPF No.2 LATERAL BRACE(S) AT 1/ 2 LENGTH OF 7-17. DBS = 16-0-0 . CBF = 93 LBS.

DBS = DIAGONAL BRACE SPACING (MAX). CBF = CUMULATIVE BRACING FORCE. FASTEN LATERAL BRACE(S) USING (0.122"X3") SPIRAL NAILS : 1 NAIL FOR 2x3 BRACE(S), 2 FOR 1x4, 2x4, 2x5, 3 FOR 2x6, 4 FOR 2x8, 5 FOR 2x10, AND 6 FOR 2x12.

END VERTICAL(S) MUST BE SHEATHED OR HAVE BRACES AS INDICATED IN THE MAX. UNBRACED LENGTH COLUMN OF THE TABLE BELOW

LOADING

TOTAL LOAD CASES: (4)

CHORDS

MEMB. FR-TO	MAX. FACTORED FORCE (LBS)	FACTORED VERT. LOAD LC1 (PLF) FROM	TO	MAX CSI (LC)	MAX. UNBRAC LENGTH
1- 2	0 / 23	-77.4	-77.4	0.10 (1)	10.00
2- 3	-2014 / 0	-77.4	-77.4	0.08 (1)	4.72
3- 4	-5018 / 0	-77.4	-77.4	0.61 (1)	2.70
4- 5	-3270 / 0	-77.4	-77.4	0.59 (1)	3.41
5- 6	-2142 / 0	-77.4	-77.4	0.45 (1)	4.22
6- 7	-2142 / 0	-77.4	-77.4	0.45 (1)	4.22
7- 8	-2896 / 0	-77.4	-77.4	0.54 (1)	3.64
8- 9	-3299 / 0	-77.4	-77.4	0.16 (1)	3.76
9-10	-1974 / 0	-77.4	-77.4	0.08 (1)	4.76
10-11	0 / 23	-77.4	-77.4	0.10 (1)	10.00
22- 2	-1815 / 0	0.0	0.0	0.18 (1)	6.21
12-10	-1782 / 0	0.0	0.0	0.18 (1)	6.26
22-21	0 / 0	-17.5	-17.5	0.11 (1)	10.00
21-20	0 / 1765	-17.5	-17.5	0.39 (1)	10.00
20-19	0 / 5084	-17.5	-17.5	0.95 (1)	10.00
19-18	0 / 2949	-17.5	-17.5	0.57 (1)	10.00
18-17	0 / 2949	-17.5	-17.5	0.57 (1)	10.00
17-16	0 / 2614	-17.5	-17.5	0.50 (1)	10.00
16-15	0 / 2614	-17.5	-17.5	0.50 (1)	10.00
15-14	0 / 3373	-17.5	-17.5	0.64 (1)	10.00
14-13	0 / 1726	-17.5	-17.5	0.31 (1)	10.00
13-12	0 / 0	-17.5	-17.5	0.02 (4)	10.00

WEBS

MEMB. FR-TO	MAX. FACTORED FORCE (LBS)	MAX CSI (LC)
21- 3	-596 / 0	0.09 (1)
3-20	0 / 3477	0.78 (1)
20- 4	-1187 / 0	0.18 (1)
4-19	-2234 / 0	0.65 (1)
19- 5	0 / 795	0.18 (1)
5-17	-1357 / 0	0.56 (1)
17- 6	0 / 1536	0.35 (1)
17- 7	-926 / 0	0.38 (1)
15- 7	0 / 357	0.08 (1)
15- 8	-795 / 0	0.61 (1)
14- 8	-1336 / 0	0.20 (1)
14- 9	0 / 2091	0.47 (1)
13- 9	-655 / 0	0.10 (1)
2-21	0 / 1939	0.44 (1)
13-10	0 / 1900	0.43 (1)

RECEIVED
TOWN OF MILTON
MAR 29, 2017
17-5337
BUILDING DIVISION

DESIGN CRITERIA

SPECIFIED LOADS:

TOP	CH.	LL	=	23.3	PSF
		DL	=	3.0	PSF
BOT	CH.	LL	=	0.0	PSF
		DL	=	7.0	PSF
TOTAL	LOAD		=	33.3	PSF

SPACING = 24.0 IN. C/C

LOADING IN ALL FLAT SECTIONS BASED ON A SLOPE OF 6.00/12

THIS TRUSS IS DESIGNED FOR RESIDENTIAL OR SMALL BUILDING REQUIREMENTS OF PART 9, NBCC 2010

THIS DESIGN COMPLIES WITH:
- PART 9 OF OBC 2012 , BCBC 2012 , ABC 2014
- CSA 086-09
- TPIC 2011

(55 % OF 27.2 P.S.F. G.S.L. PLUS 8.4 P.S.F. RAIN LOAD) EQUALS 23.3 P.S.F. SPECIFIED ROOF LIVE LOAD

ALLOWABLE DEFL.(LL)= L/360 (1.19")
CALCULATED VERT. DEFL.(LL) = L/ 999 (0.36")
ALLOWABLE DEFL.(TL)= L/360 (1.19")
CALCULATED VERT. DEFL.(TL) = L/ 657 (0.65")

CSI: TC=0.61 (3-4:1) , BC=0.95 (19-20:1) , WB=0.78 (3-20:1) , SSI=0.20 (4-5:1)

DOL LUMBER=1.00 NAIL=1.00 LS BEND=1.10 COMP=1.10 SHEAR=1.10 TENS= 1.10

COMPANION LIVE LOAD FACTOR = 0.50

TRUSS PLATE MANUFACTURER IS NOT RESPONSIBLE FOR QUALITY CONTROL IN THE TRUSS MANUFACTURING PLANT .

NAIL VALUES

PLATE	GRIP(DRY) (PSI) MAX	MIN	SHEAR (PLI) MAX	MIN	SECTION (PLI) MAX	MIN
MT20	618	354	1667	822	2284	1656

PLATE PLACEMENT TOL. = 0.250 inches

PLATE ROTATION TOL. = 5.0 Deg.

JSI GRIP= 0.90 (20) (INPUT = 0.90)
JSI METAL= 0.77 (18) (INPUT = 1.00)

KOTT

JOB NAME	TRUSS NAME	QUANTITY	PLY	JOB DESC.	DRWG NO.
PT0317-097	T34	1	1	TRUSS DESC. LECCO RIDGE-BLOCK 344	

KOTT , Stouffville, ON, CGC

Version 8.100 S Feb 9 2017 MiTek Industries, Inc. Thu Mar 16 11:58:06 2017 Page 1
ID:EvTixTQDI5yR1QLotZTBr_yE?HJ-5NbeZkkxpRhl4yEYON3xfG2JDlafB7Z?bNEIU5zaNjI

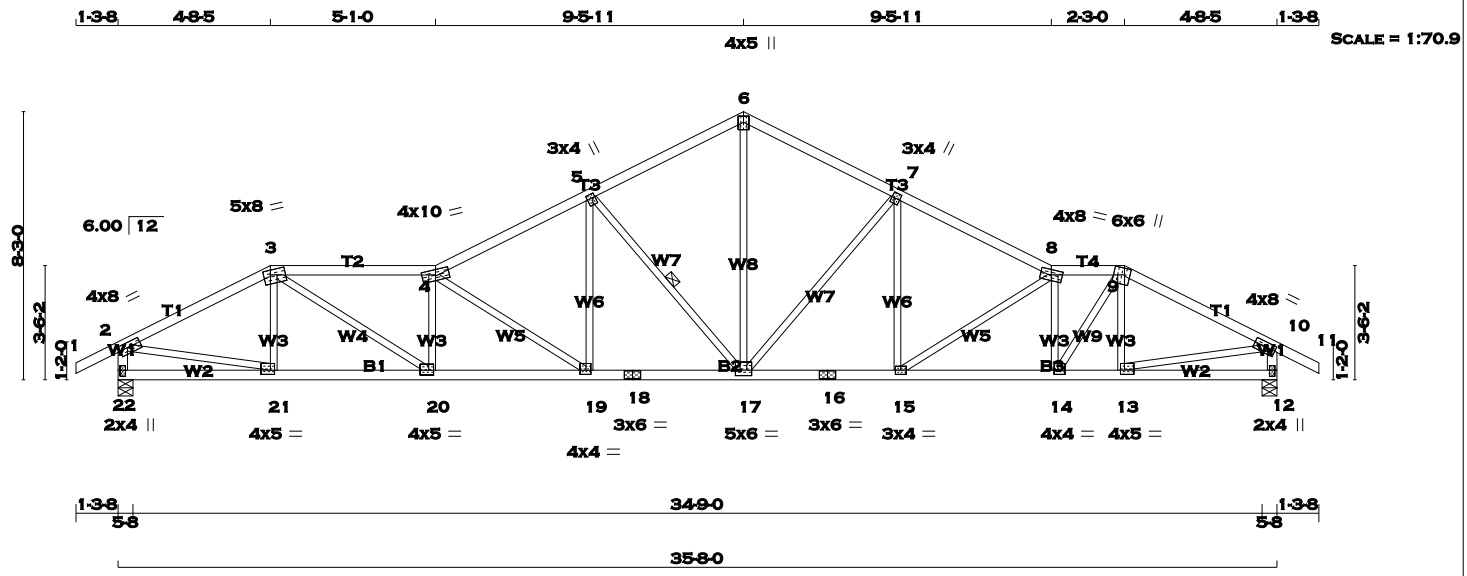

TOTAL WEIGHT = 150 lb
[M][F]

LUMBER
N. L. G. A. RULES

CHORDS	SIZE		LUMBER	DESCR.
1 - 3	2x4	DRY	No.2	SPF
3 - 4	2x4	DRY	No.2	SPF
4 - 6	2x4	DRY	No.2	SPF
6 - 8	2x4	DRY	No.2	SPF
8 - 9	2x4	DRY	No.2	SPF
9 - 11	2x4	DRY	No.2	SPF
22 - 2	2x4	DRY	No.2	SPF
12 - 10	2x4	DRY	No.2	SPF
22 - 18	2x4	DRY	No.2	SPF
18 - 16	2x4	DRY	No.2	SPF
16 - 12	2x4	DRY	No.2	SPF
ALL WEBS EXCEPT	2x3	DRY	No.2	SPF

DRY: SEASONED LUMBER.

PLATES (table is in inches)

JT	TYPE	PLATES	W	LEN	Y	X
2	TMVW-t	MT20	4.0	8.0	1.75	3.00
3	TTWW-m	MT20	5.0	8.0	1.75	2.50
4	TTWW-m	MT20	4.0	10.0		
5	TMWW+t	MT20	3.0	4.0	1.50	0.75
6	TTW+p	MT20	4.0	5.0	2.25	2.00
7	TMWW+t	MT20	3.0	4.0	2.00	0.75
8	TTWW-m	MT20	4.0	8.0		
9	TTWW+m	MT20	6.0	6.0	2.50	2.00
10	TMVW-t	MT20	4.0	8.0	1.75	3.00
12	BMV1+p	MT20	2.0	4.0	2.25	1.00
13	BMWW-t	MT20	4.0	5.0	1.50	1.50
14	BMWW-t	MT20	4.0	4.0	1.50	1.50
15	BMWW-t	MT20	3.0	4.0		
16	BS-t	MT20	3.0	6.0		
17	BMWWW-t	MT20	5.0	6.0	2.00	3.00
18	BS-t	MT20	3.0	6.0		
19	BMWW-t	MT20	4.0	4.0	1.50	1.75
20	BMWW-t	MT20	4.0	5.0	1.75	1.75
21	BMWW-t	MT20	4.0	5.0	1.50	1.50
22	BMV1+p	MT20	2.0	4.0	2.25	1.00

A SIZE FOR SIZE SUBSTITUTION OF MITEK MII20 WITH TEE-LOK TL20 PLATES IS ALLOWED.

DIMENSIONS, SUPPORTS AND LOADINGS SPECIFIED BY FABRICATOR TO BE VERIFIED BY BUILDING DESIGNER

BEARINGS

JT	FACTORED GROSS REACTION VERT	HORZ	MAXIMUM FACTORED GROSS REACTION DOWN	HORZ	UPLIFT	INPUT BRG IN-SX	REQRD BRG IN-SX
22	1797	0	1797	0	0	5-8	5-8
12	1797	0	1797	0	0	5-8	5-8

UNFACTORED REACTIONS

JT	1ST LCASE COMBINED	MAX./MIN. COMPONENT REACTIONS SNOW	LIVE	PERM.LIVE	WIND	DEAD	SOIL
22	1259	894 / 0	0 / 0	0 / 0	0 / 0	365 / 0	0 / 0
12	1259	894 / 0	0 / 0	0 / 0	0 / 0	365 / 0	0 / 0

BEARING MATERIAL TO BE SPF NO.2 OR BETTER AT JOINT(S) 22, 12

BRACING
TOP CHORD TO BE SHEATHED OR MAX. PURLIN SPACING = 3.31 FT.
MAX. UNBRACED BOTTOM CHORD LENGTH = 10.00 FT. OR RIGID CEILING DIRECTLY APPLIED.

ALL PITCH BREAKS AND PERIMETER CORNER JOINTS MUST BE LATERALLY RESTRAINED.

1 - 2x3 SPF No.2 LATERAL BRACE(S) AT 1/ 2 LENGTH OF 5-17. DBS = 12-0-0 . CBF = 88 LBS.

DBS = DIAGONAL BRACE SPACING (MAX). CBF = CUMULATIVE BRACING FORCE. FASTEN LATERAL BRACE(S) USING (0.122"X3") SPIRAL NAILS : 1 NAIL FOR 2x3 BRACE(S), 2 FOR 1x4, 2x4, 2x5, 3 FOR 2x6, 4 FOR 2x8, 5 FOR 2x10, AND 6 FOR 2x12.

END VERTICAL(S) MUST BE SHEATHED OR HAVE BRACES AS INDICATED IN THE MAX. UNBRACED LENGTH COLUMN OF THE TABLE BELOW

LOADING
TOTAL LOAD CASES: (4)

CHORDS

MEMB. FR-TO	MAX. FACTORED FORCE (LBS)	FACTORED VERT. LOAD LC1 (PLF) FROM	TO	MAX CSI (LC)	MAX. UNBRAC LENGTH
1- 2	0 / 23	-77.4	-77.4	0.10 (1)	10.00
2- 3	-2427 / 0	-77.4	-77.4	0.30 (1)	4.16
3- 4	-3704 / 0	-77.4	-77.4	0.45 (1)	3.31
4- 5	-2945 / 0	-77.4	-77.4	0.34 (1)	3.80
5- 6	-2135 / 0	-77.4	-77.4	0.28 (1)	4.42
6- 7	-2135 / 0	-77.4	-77.4	0.28 (1)	4.42
7- 8	-2690 / 0	-77.4	-77.4	0.32 (1)	3.98
8- 9	-2905 / 0	-77.4	-77.4	0.14 (1)	4.00
9-10	-2421 / 0	-77.4	-77.4	0.30 (1)	4.17
10-11	0 / 23	-77.4	-77.4	0.10 (1)	10.00
22- 2	-1763 / 0	0.0	0.0	0.18 (1)	6.29
12-10	-1759 / 0	0.0	0.0	0.18 (1)	6.29
22-21	0 / 0	-17.5	-17.5	0.10 (4)	10.00
21-20	0 / 2160	-17.5	-17.5	0.40 (1)	10.00
20-19	0 / 3734	-17.5	-17.5	0.66 (1)	10.00
19-18	0 / 2653	-17.5	-17.5	0.48 (1)	10.00
18-17	0 / 2653	-17.5	-17.5	0.48 (1)	10.00
17-16	0 / 2425	-17.5	-17.5	0.44 (1)	10.00
16-15	0 / 2425	-17.5	-17.5	0.44 (1)	10.00
15-14	0 / 2940	-17.5	-17.5	0.53 (1)	10.00
14-13	0 / 2154	-17.5	-17.5	0.38 (1)	10.00
13-12	0 / 0	-17.5	-17.5	0.08 (4)	10.00

WEBS

MEMB. FR-TO	MAX. FACTORED FORCE (LBS)	MAX CSI (LC)
21- 3	-286 / 0	0.06 (1)
3-20	0 / 1837	0.41 (1)
20- 4	-927 / 0	0.19 (1)
4-19	-1306 / 0	0.75 (1)
19- 5	0 / 819	0.18 (1)
5-17	-1174 / 0	0.42 (1)
17- 6	0 / 1610	0.36 (1)
17- 7	-822 / 0	0.86 (1)
15- 7	0 / 437	0.10 (1)
15- 8	-622 / 0	0.36 (1)
14- 8	-1088 / 0	0.22 (1)
14- 9	0 / 1352	0.30 (1)
13- 9	-307 / 0	0.06 (1)
2-21	0 / 2203	0.50 (1)
13-10	0 / 2198	0.49 (1)

RECEIVED
TOWN OF MILTON
MAR 29, 2017
17-5337
BUILDING DIVISION

DESIGN CRITERIA

SPECIFIED LOADS:

TOP CH.	LL	=	23.3	PSF
	DL	=	3.0	PSF
BOT CH.	LL	=	0.0	PSF
	DL	=	7.0	PSF
TOTAL LOAD		=	33.3	PSF

SPACING = 24.0 IN. C/C

LOADING IN ALL FLAT SECTIONS BASED ON A SLOPE OF 6.00/12

THIS TRUSS IS DESIGNED FOR RESIDENTIAL OR SMALL BUILDING REQUIREMENTS OF PART 9, NBCC 2010

THIS DESIGN COMPLIES WITH:
- PART 9 OF OBC 2012 , BCBC 2012 , ABC 2014
- CSA 086-09
- TPIC 2011

(55 % OF 27.2 P.S.F. G.S.L. PLUS 8.4 P.S.F. RAIN LOAD) EQUALS 23.3 P.S.F. SPECIFIED ROOF LIVE LOAD

ALLOWABLE DEFL.(LL)= L/360 (1.19")
CALCULATED VERT. DEFL.(LL) = L/ 999 (0.24")
ALLOWABLE DEFL.(TL)= L/360 (1.19")
CALCULATED VERT. DEFL.(TL) = L/ 992 (0.43")

CSI: TC=0.45 (3-4:1) , BC=0.66 (19-20:1) , WB=0.86 (7-17:1) , SSI=0.16 (4-5:1)

DOL LUMBER=1.00 NAIL=1.00 LS BEND=1.10 COMP=1.10 SHEAR=1.10 TENS= 1.10

COMPANION LIVE LOAD FACTOR = 0.50

TRUSS PLATE MANUFACTURER IS NOT RESPONSIBLE FOR QUALITY CONTROL IN THE TRUSS MANUFACTURING PLANT .

NAIL VALUES

PLATE	GRIP(DRY) (PSI) MAX	MIN	SHEAR (PLI) MAX	MIN	SECTION (PLI) MAX	MIN
MT20	618	354	1667	822	2284	1656

PLATE PLACEMENT TOL. = 0.250 inches

PLATE ROTATION TOL. = 5.0 Deg.

JSI GRIP= 0.90 (14) (INPUT = 0.90)
JSI METAL= 0.68 (18) (INPUT = 1.00)

KOTT

JOB NAME	TRUSS NAME	QUANTITY	PLY	JOB DESC.	DRWG NO.
PT0317-097	T35	1	1	TRUSS DESC. LECCO RIDGE-BLOCK 344	

KOTT , Stouffville, ON, CGC

Version 8.100 S Feb 9 2017 MiTek Industries, Inc. Thu Mar 16 11:58:06 2017 Page 1
ID:EvTixTQDI5yR1QLotZTBr_yE?HJ-5NbeZkkxpRhl4yEYON3xfG2LGlc_B5E?bNEIU5zaNjI

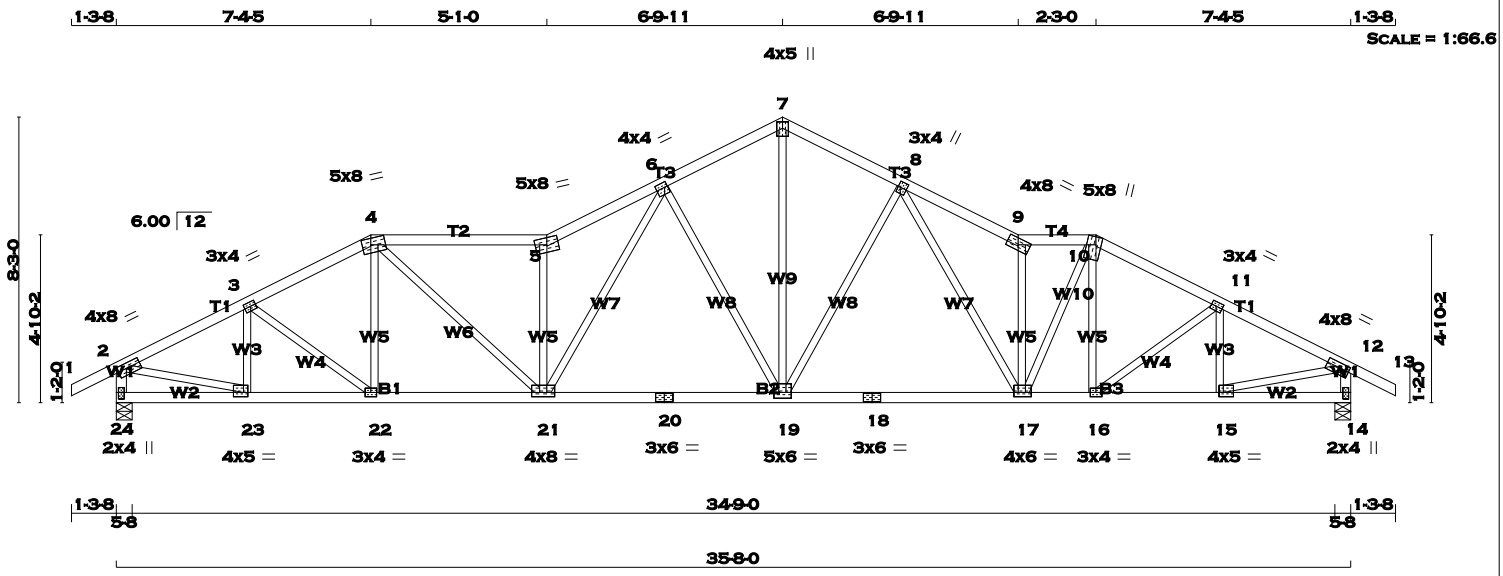

TOTAL WEIGHT = 159 lb

[M][F]

LUMBER

N. L. G. A. RULES

CHORDS	SIZE		LUMBER	DESCR.
1 - 4	2x4	DRY	No.2	SPF
4 - 5	2x4	DRY	No.2	SPF
5 - 7	2x4	DRY	No.2	SPF
7 - 9	2x4	DRY	No.2	SPF
9 - 10	2x4	DRY	No.2	SPF
10 - 13	2x4	DRY	No.2	SPF
24 - 2	2x4	DRY	No.2	SPF
14 - 12	2x4	DRY	No.2	SPF
24 - 20	2x4	DRY	No.2	SPF
20 - 18	2x4	DRY	No.2	SPF
18 - 14	2x4	DRY	No.2	SPF
ALL WEBS EXCEPT	2x3	DRY	No.2	SPF

DRY: SEASONED LUMBER.

PLATES (table is in inches)

JT	TYPE	PLATES	W	LEN	Y	X
2	TMVW-t	MT20	4.0	8.0	1.75	3.00
3	TMWW-t	MT20	3.0	4.0	1.50	1.75
4	TTWW-m	MT20	5.0	8.0	2.25	3.00
5	TTW-m	MT20	5.0	8.0		
6	TMWW-t	MT20	4.0	4.0	1.75	1.00
7	TTW+p	MT20	4.0	5.0	2.25	2.00
8	TMWW+t	MT20	3.0	4.0	2.00	0.75
9	TTW-h	MT20	4.0	8.0	2.25	4.00
10	TTWW+m	MT20	5.0	8.0	2.75	1.75
11	TMWW-t	MT20	3.0	4.0	1.50	1.75
12	TMVW-t	MT20	4.0	8.0	1.75	3.00
14	BMV1+p	MT20	2.0	4.0	2.25	1.00
15	BMWW-t	MT20	4.0	5.0	1.50	1.50
16	BMWW-t	MT20	3.0	4.0		
17	BMWWW-t	MT20	4.0	6.0	1.50	1.50
18	BS-t	MT20	3.0	6.0		
19	BMWWW-t	MT20	5.0	6.0	2.00	3.00
20	BS-t	MT20	3.0	6.0		
21	BMWWW-t	MT20	4.0	8.0	1.50	4.00
22	BMWW-t	MT20	3.0	4.0		
23	BMWW-t	MT20	4.0	5.0	1.50	1.50
24	BMV1+p	MT20	2.0	4.0	2.25	1.00

A SIZE FOR SIZE SUBSTITUTION OF MITEK MII20 WITH TEE-LOK TL20 PLATES IS ALLOWED.

DIMENSIONS, SUPPORTS AND LOADINGS SPECIFIED BY FABRICATOR TO BE VERIFIED BY BUILDING DESIGNER

BEARINGS

JT	FACTORED GROSS REACTION VERT	HORZ	MAXIMUM FACTORED GROSS REACTION DOWN	HORZ	UPLIFT	INPUT BRG IN-SX	REQRD BRG IN-SX
24	1797	0	1797	0	0	5-8	5-8
14	1797	0	1797	0	0	5-8	5-8

UNFACTORED REACTIONS

JT	1ST LCASE COMBINED	MAX./MIN. COMPONENT REACTIONS SNOW	LIVE	PERM.LIVE	WIND	DEAD	SOIL
24	1259	894 / 0	0 / 0	0 / 0	0 / 0	365 / 0	0 / 0
14	1259	894 / 0	0 / 0	0 / 0	0 / 0	365 / 0	0 / 0

BEARING MATERIAL TO BE SPF NO.2 OR BETTER AT JOINT(S) 24, 14

BRACING

TOP CHORD TO BE SHEATHED OR MAX. PURLIN SPACING = 3.65 FT.
MAX. UNBRACED BOTTOM CHORD LENGTH = 10.00 FT. OR RIGID CEILING DIRECTLY APPLIED.

ALL PITCH BREAKS AND PERIMETER CORNER JOINTS MUST BE LATERALLY RESTRAINED.

LOADING

TOTAL LOAD CASES: (4)

CHORDS

MEMB. FR-TO	MAX. FACTORED FORCE (LBS)	FACTORED VERT. LOAD LC1 (PLF) FROM	TO	MAX CSI (LC)	MAX. UNBRAC LENGTH
1- 2	0 / 23	-77.4	-77.4	0.10 (1)	10.00
2- 3	-2353 / 0	-77.4	-77.4	0.19 (1)	4.33
3- 4	-2454 / 0	-77.4	-77.4	0.18 (1)	4.27
4- 5	-3003 / 0	-77.4	-77.4	0.38 (1)	3.71
5- 6	-3386 / 0	-77.4	-77.4	0.24 (1)	3.65
6- 7	-2137 / 0	-77.4	-77.4	0.16 (1)	4.53
7- 8	-2137 / 0	-77.4	-77.4	0.16 (1)	4.53
8- 9	-2924 / 0	-77.4	-77.4	0.20 (1)	3.94
9-10	-2595 / 0	-77.4	-77.4	0.12 (1)	4.22
10-11	-2451 / 0	-77.4	-77.4	0.18 (1)	4.27
11-12	-2354 / 0	-77.4	-77.4	0.19 (1)	4.33
12-13	0 / 23	-77.4	-77.4	0.10 (1)	10.00
24- 2	-1761 / 0	0.0	0.0	0.18 (1)	6.29
14-12	-1762 / 0	0.0	0.0	0.18 (1)	6.29
24-23	0 / 0	-17.5	-17.5	0.06 (4)	10.00
23-22	0 / 2115	-17.5	-17.5	0.39 (1)	10.00
22-21	0 / 2182	-17.5	-17.5	0.40 (1)	10.00
21-20	0 / 2397	-17.5	-17.5	0.51 (1)	10.00
20-19	0 / 2397	-17.5	-17.5	0.51 (1)	10.00
19-18	0 / 2249	-17.5	-17.5	0.49 (1)	10.00
18-17	0 / 2249	-17.5	-17.5	0.49 (1)	10.00
17-16	0 / 2179	-17.5	-17.5	0.38 (1)	10.00
16-15	0 / 2116	-17.5	-17.5	0.37 (1)	10.00
15-14	0 / 0	-17.5	-17.5	0.05 (4)	10.00

WEBS

MEMB. FR-TO	MAX. FACTORED FORCE (LBS)	MAX CSI (LC)
23- 3	-428 / 0	0.08 (1)
3-22	0 / 83	0.02 (1)
22- 4	0 / 63	0.02 (4)
4-21	0 / 1111	0.25 (1)
21- 5	-1813 / 0	0.62 (1)
21- 6	0 / 1321	0.30 (1)
6-19	-1038 / 0	1.00 (1)
19- 7	0 / 1696	0.38 (1)
19- 8	-730 / 0	0.71 (1)
8-17	0 / 777	0.17 (1)
17- 9	-1498 / 0	0.52 (1)
17-10	0 / 976	0.22 (1)
16-10	0 / 20	0.01 (4)
16-11	0 / 77	0.02 (1)
15-11	-423 / 0	0.08 (1)
2-23	0 / 2169	0.49 (1)
15-12	0 / 2170	0.49 (1)

DESIGN CRITERIA

SPECIFIED LOADS:

TOP CH.	LL	=	23.3	PSF
	DL	=	3.0	PSF
BOT CH.	LL	=	0.0	PSF
	DL	=	7.0	PSF
TOTAL LOAD		=	33.3	PSF

SPACING = 24.0 IN. C/C

LOADING IN ALL FLAT SECTIONS BASED ON A SLOPE OF 6.00/12

THIS TRUSS IS DESIGNED FOR RESIDENTIAL OR SMALL BUILDING REQUIREMENTS OF PART 9, NBCC 2010

THIS DESIGN COMPLIES WITH:
- PART 9 OF OBC 2012 , BCBC 2012 , ABC 2014
- CSA 086-09
- TPIC 2011

(55 % OF 27.2 P.S.F. G.S.L. PLUS 8.4 P.S.F. RAIN LOAD) EQUALS 23.3 P.S.F. SPECIFIED ROOF LIVE LOAD

ALLOWABLE DEFL.(LL)= L/360 (1.19")
CALCULATED VERT. DEFL.(LL) = L/ 999 (0.21")
ALLOWABLE DEFL.(TL)= L/360 (1.19")
CALCULATED VERT. DEFL.(TL) = L/ 999 (0.39")

CSI: TC=0.38 (4-5:1) , BC=0.51 (19-21:1) , WB=1.00 (6-19:1) , SSI=0.15 (4-5:1)

DOL LUMBER=1.00 NAIL=1.00 LS BEND=1.10 COMP=1.10 SHEAR=1.10 TENS= 1.10

COMPANION LIVE LOAD FACTOR = 0.50

TRUSS PLATE MANUFACTURER IS NOT RESPONSIBLE FOR QUALITY CONTROL IN THE TRUSS MANUFACTURING PLANT .

NAIL VALUES

PLATE	GRIP(DRY) (PSI) MAX	MIN	SHEAR (PLI) MAX	MIN	SECTION (PLI) MAX	MIN
MT20	618	354	1667	822	2284	1656

PLATE PLACEMENT TOL. = 0.250 inches

PLATE ROTATION TOL. = 5.0 Deg.

JSI GRIP= 0.90 (21) (INPUT = 0.90)
JSI METAL= 0.70 (20) (INPUT = 1.00)

LICENSED PROFESSIONAL ENGINEER
R. M. TREVISAN
100136551
March 16th, 2017
PROVINCE OF ONTARIO

RECEIVED
TOWN OF MILTON
MAR 29, 2017
17-5337
BUILDING DIVISION

KOTT

JOB NAME	TRUSS NAME	QUANTITY	PLY	JOB DESC.	DRWG NO.
PT0317-097	T36	1	1	TRUSS DESC. LECCO RIDGE-BLOCK 344	

KOTT , Stouffville, ON, CGC

Version 8.100 S Feb 9 2017 MiTek Industries, Inc. Thu Mar 16 11:58:07 2017 Page 1
ID:EvTixTQDI5yR1QLotZTBr_yE?HJ-ZZ90n4laalpci6ply5aACUbWp9zCwgC8q1zs1XzaNjk

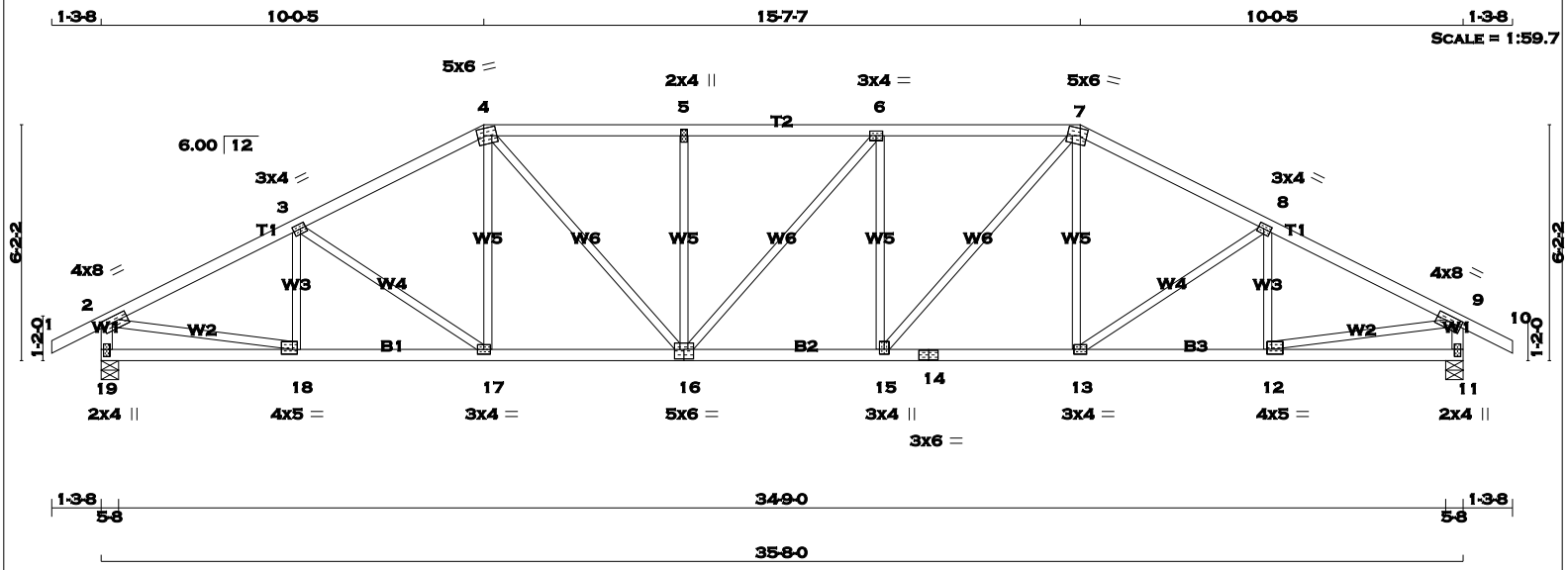

TOTAL WEIGHT = 148 lb

LUMBER
N. L. G. A. RULES

CHORDS	SIZE		LUMBER	DESCR.
1 - 4	2x4	DRY	No.2	SPF
4 - 7	2x4	DRY	No.2	SPF
7 - 10	2x4	DRY	No.2	SPF
19 - 2	2x4	DRY	No.2	SPF
11 - 9	2x4	DRY	No.2	SPF
19 - 16	2x4	DRY	No.2	SPF
16 - 14	2x4	DRY	No.2	SPF
14 - 11	2x4	DRY	No.2	SPF
ALL WEBS EXCEPT	2x3	DRY	No.2	SPF

DRY: SEASONED LUMBER.

PLATES (table is in inches)

JT	TYPE	PLATES	W	LEN	Y	X
2	TMVW-t	MT20	4.0	8.0	1.75	3.00
3	TMWW-t	MT20	3.0	4.0	1.50	1.75
4	TTWW-m	MT20	5.0	6.0	2.25	2.00
5	TMW+w	MT20	2.0	4.0		
6	TMWW-t	MT20	3.0	4.0		
7	TTWW-m	MT20	5.0	6.0	2.25	2.00
8	TMWW-t	MT20	3.0	4.0	1.50	1.75
9	TMVW-t	MT20	4.0	8.0	1.75	3.00
11	BMV1+p	MT20	2.0	4.0	2.25	1.00
12	BMWW-t	MT20	4.0	5.0	1.50	1.50
13	BMWW-t	MT20	3.0	4.0		
14	BS-t	MT20	3.0	6.0		
15	BMWW+t	MT20	3.0	4.0	1.50	1.50
16	BSWWW-l	MT20	5.0	6.0	3.00	3.00
17	BMWW-t	MT20	3.0	4.0		
18	BMWW-t	MT20	4.0	5.0	1.50	1.50
19	BMV1+p	MT20	2.0	4.0	2.25	1.00

A SIZE FOR SIZE SUBSTITUTION OF MITEK MII20 WITH TEE-LOK TL20 PLATES IS ALLOWED.

DIMENSIONS, SUPPORTS AND LOADINGS SPECIFIED BY FABRICATOR TO BE VERIFIED BY BUILDING DESIGNER

BEARINGS

JT	FACTORED GROSS REACTION VERT	HORZ	MAXIMUM FACTORED GROSS REACTION DOWN	HORZ	UPLIFT	INPUT BRG IN-SX	REQRD BRG IN-SX
19	1797	0	1797	0	0	5-8	5-8
11	1797	0	1797	0	0	5-8	5-8

UNFACTORED REACTIONS

JT	1ST LCASE COMBINED	MAX./MIN. COMPONENT REACTIONS SNOW	LIVE	PERM.LIVE	WIND	DEAD	SOIL
19	1259	894 / 0	0 / 0	0 / 0	0 / 0	365 / 0	0 / 0
11	1259	894 / 0	0 / 0	0 / 0	0 / 0	365 / 0	0 / 0

BEARING MATERIAL TO BE SPF NO.2 OR BETTER AT JOINT(S) 19, 11

BRACING
TOP CHORD TO BE SHEATHED OR MAX. PURLIN SPACING = 4.05 FT.
MAX. UNBRACED BOTTOM CHORD LENGTH = 10.00 FT. OR RIGID CEILING DIRECTLY APPLIED.

ALL PITCH BREAKS AND PERIMETER CORNER JOINTS MUST BE LATERALLY RESTRAINED.

LOADING
TOTAL LOAD CASES: (4)

CHORDS

MEMB. FR-TO	MAX. FACTORED FORCE (LBS)	FACTORED VERT. LOAD (PLF) FROM	TO	LC1 MAX CSI (LC)	MAX. UNBRAC LENGTH
1- 2	0 / 23	-77.4	-77.4	0.10 (1)	10.00
2- 3	-2485 / 0	-77.4	-77.4	0.33 (1)	4.10
3- 4	-2345 / 0	-77.4	-77.4	0.31 (1)	4.22
4- 5	-2547 / 0	-77.4	-77.4	0.33 (1)	4.05
5- 6	-2547 / 0	-77.4	-77.4	0.30 (1)	4.08
6- 7	-2548 / 0	-77.4	-77.4	0.33 (1)	4.05
7- 8	-2344 / 0	-77.4	-77.4	0.31 (1)	4.22
8- 9	-2485 / 0	-77.4	-77.4	0.33 (1)	4.10
9-10	0 / 23	-77.4	-77.4	0.10 (1)	10.00
19- 2	-1756 / 0	0.0	0.0	0.18 (1)	6.29
11- 9	-1756 / 0	0.0	0.0	0.18 (1)	6.29
19-18	0 / 0	-17.5	-17.5	0.09 (4)	10.00
18-17	0 / 2239	-17.5	-17.5	0.41 (1)	10.00
17-16	0 / 2082	-17.5	-17.5	0.39 (1)	10.00
16-15	0 / 2548	-17.5	-17.5	0.45 (1)	10.00
15-14	0 / 2081	-17.5	-17.5	0.39 (1)	10.00
14-13	0 / 2081	-17.5	-17.5	0.39 (1)	10.00
13-12	0 / 2239	-17.5	-17.5	0.41 (1)	10.00
12-11	0 / 0	-17.5	-17.5	0.09 (4)	10.00

WEBS

MEMB. FR-TO	MAX. FACTORED FORCE (LBS)	MAX CSI (LC)
18- 3	-287 / 0	0.06 (1)
3-17	-195 / 0	0.13 (1)
17- 4	0 / 206	0.05 (1)
4-16	0 / 699	0.16 (1)
16- 5	-434 / 0	0.26 (1)
16- 6	-2 / 0	0.00 (1)
15- 6	-434 / 0	0.26 (1)
15- 7	0 / 701	0.16 (1)
13- 7	0 / 205	0.05 (1)
13- 8	-196 / 0	0.13 (1)
12- 8	-287 / 0	0.06 (1)
2-18	0 / 2271	0.51 (1)
12- 9	0 / 2271	0.51 (1)

DESIGN CRITERIA

SPECIFIED LOADS:

TOP CH.	LL	=	23.3	PSF
	DL	=	3.0	PSF
BOT CH.	LL	=	0.0	PSF
	DL	=	7.0	PSF
TOTAL LOAD		=	33.3	PSF

SPACING = 24.0 IN. C/C

LOADING IN FLAT SECTION BASED ON A SLOPE OF 6.00/12

THIS TRUSS IS DESIGNED FOR RESIDENTIAL OR SMALL BUILDING REQUIREMENTS OF PART 9, NBCC 2010

THIS DESIGN COMPLIES WITH:
- PART 9 OF OBC 2012 , BCBC 2012 , ABC 2014
- CSA 086-09
- TPIC 2011

(55 % OF 27.2 P.S.F. G.S.L. PLUS 8.4 P.S.F. RAIN LOAD) EQUALS 23.3 P.S.F. SPECIFIED ROOF LIVE LOAD

ALLOWABLE DEFL.(LL)= L/360 (1.19")
CALCULATED VERT. DEFL.(LL) = L/ 999 (0.16")
ALLOWABLE DEFL.(TL)= L/360 (1.19")
CALCULATED VERT. DEFL.(TL) = L/ 999 (0.28")

CSI: TC=0.33 (8-9:1) , BC=0.45 (15-16:1) , WB=0.51 (9-12:1) , SSI=0.19 (6-7:1)

DOL LUMBER=1.00 NAIL=1.00 LS BEND=1.10 COMP=1.10 SHEAR=1.10 TENS= 1.10

COMPANION LIVE LOAD FACTOR = 0.50

TRUSS PLATE MANUFACTURER IS NOT RESPONSIBLE FOR QUALITY CONTROL IN THE TRUSS MANUFACTURING PLANT .

NAIL VALUES

PLATE	GRIP(DRY) (PSI) MAX	MIN	SHEAR (PLI) MAX	MIN	SECTION (PLI) MAX	MIN
MT20	618	354	1667	822	2284	1656

PLATE PLACEMENT TOL. = 0.250 inches

PLATE ROTATION TOL. = 5.0 Deg.

JSI GRIP= 0.88 (16) (INPUT = 0.90)
JSI METAL= 0.67 (12) (INPUT = 1.00)

LICENSED PROFESSIONAL ENGINEER
P. M. TREVISAN
100136551
March 16th, 2017
PROVINCE OF ONTARIO

RECEIVED
TOWN OF MILTON
MAR 29, 2017
17-5337
BUILDING DIVISION

KOTT

JOB NAME	TRUSS NAME	QUANTITY	PLY	JOB DESC.	DRWG NO.
PT0317-097	T37	1	1	TRUSS DESC. LECCO RIDGE-BLOCK 344	ENG JOB: PT0317-097

KOTT , Stouffville, ON, CGC

Version 8.100 S Feb 9 2017 MiTek Industries, Inc. Thu Mar 16 11:58:08 2017 Page 1

ID:EvTixTQDI5yR1QLotZTBr_yE?HJ-1ljP_QmCL2xTKGOxVo5Pkh7e8ZJcf6II3hjPZzzaNjj

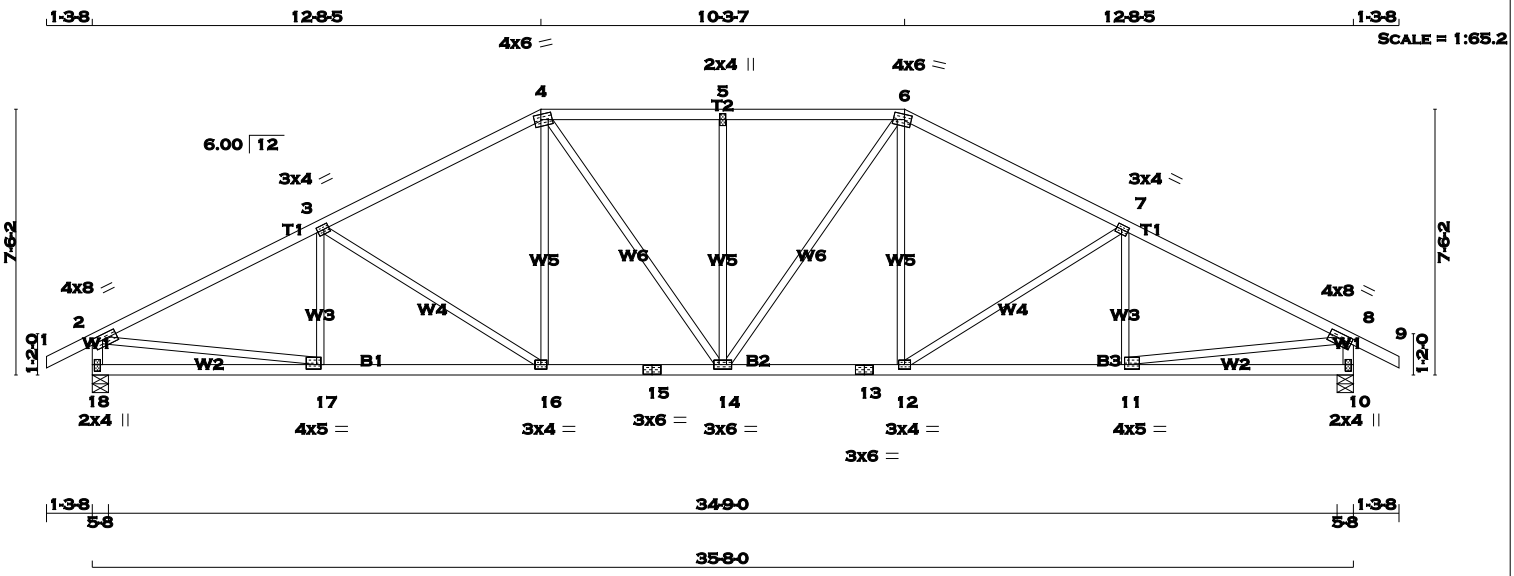

TOTAL WEIGHT = 149 lb

[M][F]

LUMBER

N. L. G. A. RULES

CHORDS	SIZE		LUMBER	DESCR.
1 - 4	2x4	DRY	No.2	SPF
4 - 6	2x4	DRY	No.2	SPF
6 - 9	2x4	DRY	No.2	SPF
18 - 2	2x4	DRY	No.2	SPF
10 - 8	2x4	DRY	No.2	SPF
18 - 15	2x4	DRY	No.2	SPF
15 - 13	2x4	DRY	No.2	SPF
13 - 10	2x4	DRY	No.2	SPF
ALL WEBS EXCEPT	2x3	DRY	No.2	SPF

DRY: SEASONED LUMBER.

PLATES (table is in inches)

JT	TYPE	PLATES	W	LEN	Y	X
2	TMVW-t	MT20	4.0	8.0	1.75	3.00
3	TMWW-t	MT20	3.0	4.0	1.50	1.75
4	TTWW-m	MT20	4.0	6.0	1.75	2.25
5	TMW+w	MT20	2.0	4.0		
6	TTWW-m	MT20	4.0	6.0	1.75	2.25
7	TMWW-t	MT20	3.0	4.0	1.50	1.75
8	TMVW-t	MT20	4.0	8.0	1.75	3.00
10	BMV1+p	MT20	2.0	4.0	2.25	1.00
11	BMWW-t	MT20	4.0	5.0	1.50	1.50
12	BMWW-t	MT20	3.0	4.0		
13	BS-t	MT20	3.0	6.0		
14	BMWWW-t	MT20	3.0	6.0		
15	BS-t	MT20	3.0	6.0		
16	BMWW-t	MT20	3.0	4.0		
17	BMWW-t	MT20	4.0	5.0	1.50	1.50
18	BMV1+p	MT20	2.0	4.0	2.25	1.00

A SIZE FOR SIZE SUBSTITUTION OF MITEK MII20 WITH TEE-LOK TL20 PLATES IS ALLOWED.

DIMENSIONS, SUPPORTS AND LOADINGS SPECIFIED BY FABRICATOR TO BE VERIFIED BY BUILDING DESIGNER

BEARINGS

JT	FACTORED GROSS REACTION VERT	HORZ	MAXIMUM FACTORED GROSS REACTION DOWN	HORZ	UPLIFT	INPUT BRG IN-SX	REQRD BRG IN-SX
18	1797	0	1797	0	0	5-8	5-8
10	1797	0	1797	0	0	5-8	5-8

UNFACTORED REACTIONS

JT	1ST LCASE COMBINED	MAX./MIN. COMPONENT REACTIONS SNOW	LIVE	PERM.LIVE	WIND	DEAD	SOIL
18	1259	894 / 0	0 / 0	0 / 0	0 / 0	365 / 0	0 / 0
10	1259	894 / 0	0 / 0	0 / 0	0 / 0	365 / 0	0 / 0

BEARING MATERIAL TO BE SPF NO.2 OR BETTER AT JOINT(S) 18, 10

BRACING

TOP CHORD TO BE SHEATHED OR MAX. PURLIN SPACING = 3.84 FT.
MAX. UNBRACED BOTTOM CHORD LENGTH = 10.00 FT. OR RIGID CEILING DIRECTLY APPLIED.

ALL PITCH BREAKS AND PERIMETER CORNER JOINTS MUST BE LATERALLY RESTRAINED.

LOADING

TOTAL LOAD CASES: (4)

CHORDS

MEMB. FR-TO	MAX. FACTORED FORCE (LBS)	FACTORED VERT. LOAD (PLF) FROM	TO	LC1 MAX CSI (LC)	MAX. UNBRAC LENGTH
1- 2	0 / 23	-77.4	-77.4	0.10 (1)	10.00
2- 3	-2537 / 0	-77.4	-77.4	0.55 (1)	3.84
3- 4	-2174 / 0	-77.4	-77.4	0.49 (1)	4.14
4- 5	-2126 / 0	-77.4	-77.4	0.32 (1)	4.37
5- 6	-2126 / 0	-77.4	-77.4	0.32 (1)	4.37
6- 7	-2174 / 0	-77.4	-77.4	0.49 (1)	4.14
7- 8	-2537 / 0	-77.4	-77.4	0.55 (1)	3.84
8- 9	0 / 23	-77.4	-77.4	0.10 (1)	10.00
18- 2	-1748 / 0	0.0	0.0	0.18 (1)	6.30
10- 8	-1748 / 0	0.0	0.0	0.18 (1)	6.30
18-17	0 / 0	-17.5	-17.5	0.17 (4)	10.00
17-16	0 / 2292	-17.5	-17.5	0.44 (1)	10.00
16-15	0 / 1925	-17.5	-17.5	0.38 (1)	10.00
15-14	0 / 1925	-17.5	-17.5	0.38 (1)	10.00
14-13	0 / 1925	-17.5	-17.5	0.38 (1)	10.00
13-12	0 / 1925	-17.5	-17.5	0.38 (1)	10.00
12-11	0 / 2292	-17.5	-17.5	0.44 (1)	10.00
11-10	0 / 0	-17.5	-17.5	0.17 (4)	10.00

WEBS

MEMB. FR-TO	MAX. FACTORED FORCE (LBS)	MAX CSI (LC)
17- 3	-184 / 53	0.05 (1)
3-16	-442 / 0	0.50 (1)
16- 4	0 / 343	0.08 (1)
4-14	0 / 346	0.08 (1)
14- 5	-485 / 0	0.49 (1)
14- 6	0 / 346	0.08 (1)
12- 6	0 / 343	0.08 (1)
12- 7	-442 / 0	0.50 (1)
11- 7	-184 / 53	0.05 (1)
2-17	0 / 2312	0.52 (1)
11- 8	0 / 2312	0.52 (1)

DESIGN CRITERIA

SPECIFIED LOADS:

TOP CH.	LL	=	23.3	PSF
	DL	=	3.0	PSF
BOT CH.	LL	=	0.0	PSF
	DL	=	7.0	PSF
TOTAL LOAD		=	33.3	PSF

SPACING = 24.0 IN. C/C

LOADING IN FLAT SECTION BASED ON A SLOPE OF 6.00/12

THIS TRUSS IS DESIGNED FOR RESIDENTIAL OR SMALL BUILDING REQUIREMENTS OF PART 9, NBCC 2010

THIS DESIGN COMPLIES WITH:
- PART 9 OF OBC 2012 , BCBC 2012 , ABC 2014
- CSA 086-09
- TPIC 2011

(55 % OF 27.2 P.S.F. G.S.L. PLUS 8.4 P.S.F. RAIN LOAD) EQUALS 23.3 P.S.F. SPECIFIED ROOF LIVE LOAD

ALLOWABLE DEFL.(LL)= L/360 (1.19")
CALCULATED VERT. DEFL.(LL) = L/ 999 (0.14")
ALLOWABLE DEFL.(TL)= L/360 (1.19")
CALCULATED VERT. DEFL.(TL) = L/ 999 (0.24")

CSI: TC=0.55 (7-8:1) , BC=0.44 (11-12:1) , WB=0.52 (2-17:1) , SSI=0.21 (7-8:1)

DOL LUMBER=1.00 NAIL=1.00 LS BEND=1.10 COMP=1.10 SHEAR=1.10 TENS= 1.10

COMPANION LIVE LOAD FACTOR = 0.50

TRUSS PLATE MANUFACTURER IS NOT RESPONSIBLE FOR QUALITY CONTROL IN THE TRUSS MANUFACTURING PLANT .

NAIL VALUES

PLATE	GRIP(DRY) (PSI) MAX	MIN	SHEAR (PLI) MAX	MIN	SECTION (PLI) MAX	MIN
MT20	618	354	1667	822	2284	1656

PLATE PLACEMENT TOL. = 0.250 inches

PLATE ROTATION TOL. = 5.0 Deg.

JSI GRIP= 0.86 (14) (INPUT = 0.90)
JSI METAL= 0.69 (11) (INPUT = 1.00)

LICENSED PROFESSIONAL ENGINEER
P. M. TREVISAN
100136551
March 16th, 2017
PROVINCE OF ONTARIO

RECEIVED
TOWN OF MILTON
MAR 29, 2017
17-5337
BUILDING DIVISION

KOTT

JOB NAME	TRUSS NAME	QUANTITY	PLY	JOB DESC.	DRWG NO.
PT0317-097	T38	1	1	TRUSS DESC. LECCO RIDGE-BLOCK 344	

KOTT , Stouffville, ON, CGC

Version 8.100 S Feb 9 2017 MiTek Industries, Inc. Thu Mar 16 11:58:08 2017 Page 1
ID:EvTixTQDI5yR1QLotZTBr_yE?HJ-1ljP_QmCL2xTKGOxVo5Pkh7ZLZIlf6PI3hjPZzzaNjj

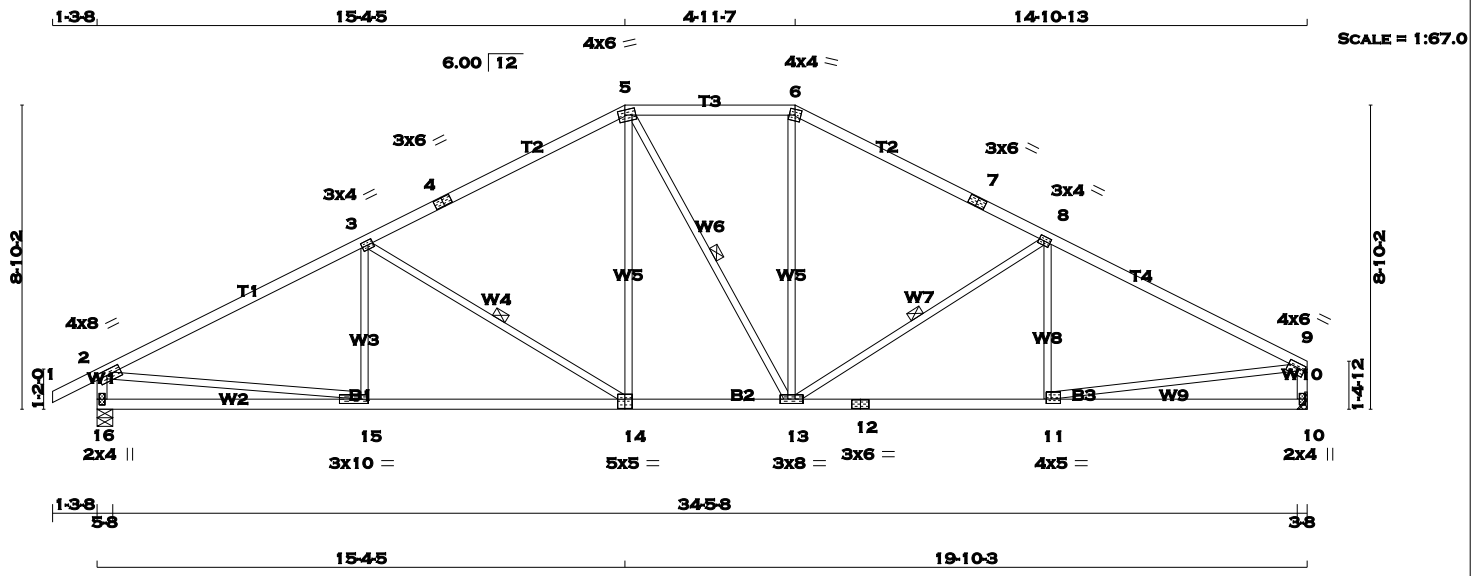

TOTAL WEIGHT = 143 lb

[M][F]

LUMBER

N. L. G. A. RULES

CHORDS	SIZE		LUMBER	DESCR.
1 - 4	2x4	DRY	No.2	SPF
4 - 5	2x4	DRY	No.2	SPF
5 - 6	2x4	DRY	No.2	SPF
6 - 7	2x4	DRY	No.2	SPF
7 - 9	2x4	DRY	No.2	SPF
16 - 2	2x4	DRY	No.2	SPF
10 - 9	2x4	DRY	No.2	SPF
16 - 14	2x4	DRY	No.2	SPF
14 - 12	2x4	DRY	No.2	SPF
12 - 10	2x4	DRY	No.2	SPF
ALL WEBS EXCEPT	2x3	DRY	No.2	SPF

DRY: SEASONED LUMBER.

PLATES (table is in inches)

JT	TYPE	PLATES	W	LEN	Y	X
2	TMVW-t	MT20	4.0	8.0	1.75	3.00
3	TMWW-t	MT20	3.0	4.0	1.50	1.75
4	TS-t	MT20	3.0	6.0		
5	TTWW-m	MT20	4.0	6.0	1.75	2.25
6	TTW-m	MT20	4.0	4.0		
7	TS-t	MT20	3.0	6.0		
8	TMWW-t	MT20	3.0	4.0	1.50	1.75
9	TMVW-t	MT20	4.0	6.0	1.50	2.75
10	BMV1+p	MT20	2.0	4.0		
11	BMWW-t	MT20	4.0	5.0	1.50	1.75
12	BS-t	MT20	3.0	6.0		
13	BMWWW-t	MT20	3.0	8.0		
14	BSWW-l	MT20	5.0	5.0	3.25	2.50
15	BMWW-t	MT20	3.0	10.0	1.50	2.50
16	BMV1+p	MT20	2.0	4.0		

A SIZE FOR SIZE SUBSTITUTION OF MITEK MII20 WITH TEE-LOK TL20 PLATES IS ALLOWED.

DIMENSIONS, SUPPORTS AND LOADINGS SPECIFIED BY FABRICATOR TO BE VERIFIED BY BUILDING DESIGNER

BEARINGS

JT	FACTORED GROSS REACTION VERT	HORZ	MAXIMUM FACTORED GROSS REACTION DOWN	HORZ	UPLIFT	INPUT BRG IN-SX	REQRD BRG IN-SX
16	1775	0	1775	0	0	5-8	5-8
10	1670	0	1670	0	0	HANGER BY OTHERS	
						MIN. SEAT SIZE: 3-8	

UNFACTORED REACTIONS

JT	1ST LCASE COMBINED	MAX./MIN. COMPONENT REACTIONS SNOW	LIVE	PERM.LIVE	WIND	DEAD	SOIL
16	1243	883 / 0	0 / 0	0 / 0	0 / 0	360 / 0	0 / 0
10	1172	820 / 0	0 / 0	0 / 0	0 / 0	352 / 0	0 / 0

BEARING MATERIAL TO BE SPF NO.2 OR BETTER AT JOINT(S) 16

BRACING

TOP CHORD TO BE SHEATHED OR MAX. PURLIN SPACING = 3.46 FT.
MAX. UNBRACED BOTTOM CHORD LENGTH = 10.00 FT. OR RIGID CEILING DIRECTLY APPLIED.

ALL PITCH BREAKS AND PERIMETER CORNER JOINTS MUST BE LATERALLY RESTRAINED.

1 - 2x3 SPF No.2 LATERAL BRACE(S) AT 1/ 2 LENGTH OF 3-14, 5-13, 8-13. DBS = 20-0-0 . CBF = 84 LBS.

DBS = DIAGONAL BRACE SPACING (MAX). CBF = CUMULATIVE BRACING FORCE. FASTEN LATERAL BRACE(S) USING (0.122"X3") SPIRAL NAILS : 1 NAIL FOR 2x3 BRACE(S), 2 FOR 1x4, 2x4, 2x5, 3 FOR 2x6, 4 FOR 2x8, 5 FOR 2x10, AND 6 FOR 2x12.

END VERTICAL(S) MUST BE SHEATHED OR HAVE BRACES AS INDICATED IN THE MAX. UNBRACED LENGTH COLUMN OF THE TABLE BELOW

LOADING

TOTAL LOAD CASES: (4)

CHORDS

MEMB. FR-TO	MAX. FACTORED FORCE (LBS)	VERT. LOAD LC1 (PLF) FROM	TO	MAX CSI (LC)	MAX. UNBRAC LENGTH
1- 2	0 / 23	-77.4	-77.4	0.10 (1)	10.00
2- 3	-2504 / 0	-77.4	-77.4	0.86 (1)	3.46
3- 4	-1926 / 0	-77.4	-77.4	0.73 (1)	3.99
4- 5	-1926 / 0	-77.4	-77.4	0.73 (1)	3.99
5- 6	-1687 / 0	-77.4	-77.4	0.28 (1)	4.84
6- 7	-1912 / 0	-77.4	-77.4	0.68 (1)	4.08
7- 8	-1912 / 0	-77.4	-77.4	0.68 (1)	4.08
8- 9	-2387 / 0	-77.4	-77.4	0.78 (1)	3.64
16- 2	-1719 / 0	0.0	0.0	0.17 (1)	6.35
10- 9	-1616 / 0	0.0	0.0	0.17 (1)	6.51
16-15	0 / 0	-17.5	-17.5	0.26 (4)	10.00
15-14	0 / 2268	-17.5	-17.5	0.49 (1)	10.00
14-13	0 / 1699	-17.5	-17.5	0.35 (1)	10.00
13-12	0 / 2162	-17.5	-17.5	0.47 (1)	10.00
12-11	0 / 2162	-17.5	-17.5	0.47 (1)	10.00
11-10	0 / 0	-17.5	-17.5	0.25 (4)	10.00

WEBS

MEMB. FR-TO	MAX. FACTORED FORCE (LBS)	MAX CSI (LC)
15- 3	-97 / 103	0.04 (1)
3-14	-676 / 0	0.38 (1)
14- 5	0 / 458	0.10 (1)
5-13	-25 / 0	0.02 (1)
13- 6	0 / 438	0.10 (1)
13- 8	-574 / 0	0.32 (1)
11- 8	-163 / 79	0.07 (1)
2-15	0 / 2282	0.51 (1)
11- 9	0 / 2185	0.49 (1)

DESIGN CRITERIA

SPECIFIED LOADS:

TOP CH.	LL	=	23.3	PSF
	DL	=	3.0	PSF
BOT CH.	LL	=	0.0	PSF
	DL	=	7.0	PSF
TOTAL LOAD		=	33.3	PSF

SPACING = 24.0 IN. C/C

LOADING IN FLAT SECTION BASED ON A SLOPE OF 6.00/12

THIS TRUSS IS DESIGNED FOR RESIDENTIAL OR SMALL BUILDING REQUIREMENTS OF PART 9, NBCC 2010

THIS DESIGN COMPLIES WITH:
- PART 9 OF OBC 2012 , BCBC 2012 , ABC 2014
- CSA 086-09
- TPIC 2011

(55 % OF 27.2 P.S.F. G.S.L. PLUS 8.4 P.S.F. RAIN LOAD) EQUALS 23.3 P.S.F. SPECIFIED ROOF LIVE LOAD

ALLOWABLE DEFL.(LL)= L/360 (1.17")
CALCULATED VERT. DEFL.(LL) = L/ 999 (0.13")
ALLOWABLE DEFL.(TL)= L/360 (1.17")
CALCULATED VERT. DEFL.(TL) = L/ 999 (0.26")

CSI: TC=0.86 (2-3:1) , BC=0.49 (14-15:1) , WB=0.51 (2-15:1) , SSI=0.26 (2-3:1)

DOL LUMBER=1.00 NAIL=1.00 LS BEND=1.10 COMP=1.10 SHEAR=1.10 TENS= 1.10

COMPANION LIVE LOAD FACTOR = 0.50

TRUSS PLATE MANUFACTURER IS NOT RESPONSIBLE FOR QUALITY CONTROL IN THE TRUSS MANUFACTURING PLANT .

NAIL VALUES

PLATE	GRIP(DRY) (PSI) MAX	MIN	SHEAR (PLI) MAX	MIN	SECTION (PLI) MAX	MIN
MT20	618	354	1667	822	2284	1656

PLATE PLACEMENT TOL. = 0.250 inches

PLATE ROTATION TOL. = 5.0 Deg.

JSI GRIP= 0.90 (16) (INPUT = 0.90)
JSI METAL= 0.65 (11) (INPUT = 1.00)

LICENSED PROFESSIONAL ENGINEER
P. M. TREVISAN
100136551
March 16th, 2017
PROVINCE OF ONTARIO

RECEIVED
TOWN OF MILTON
MAR 29, 2017
17-5337
BUILDING DIVISION

KOTT

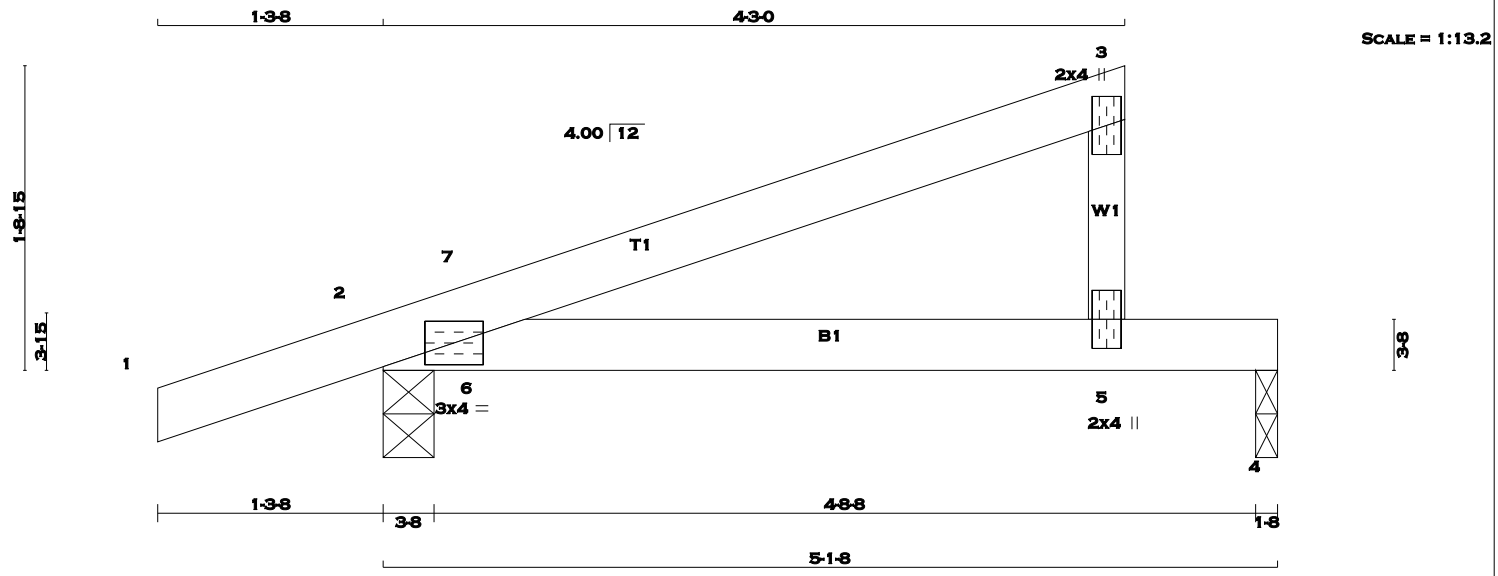

TOTAL WEIGHT = 11 X 14 = 149 lb [M]

LUMBER

N. L. G. A. RULES

CHORDS	SIZE		LUMBER	DESCR.
1 - 3	2x4	DRY	No.2	SPF
5 - 3	2x3	DRY	No.2	SPF
2 - 4	2x4	DRY	No.2	SPF

DRY: SEASONED LUMBER.

PLATES (table is in inches)

JT	TYPE	PLATES	W	LEN	Y	X
2	TMB1-I	MT20	3.0	4.0		
3	TMV+p	MT20	2.0	4.0		
5	BMV+p	MT20	2.0	4.0		

A SIZE FOR SIZE SUBSTITUTION OF MITEK MII20 WITH TEE-LOK TL20 PLATES IS ALLOWED.

DIMENSIONS, SUPPORTS AND LOADINGS SPECIFIED BY FABRICATOR TO BE VERIFIED BY BUILDING DESIGNER

BEARINGS

JT	FACTORED GROSS REACTION VERT	HORZ	MAXIMUM FACTORED GROSS REACTION DOWN	HORZ	UPLIFT	INPUT BRG IN-SX	REQRD BRG IN-SX
2	341	0	341	0	0	3-8	3-8
4	181	0	181	0	0	1-8	1-8

UNFACTORED REACTIONS

JT	1ST LCASE COMBINED	MAX./MIN. COMPONENT REACTIONS SNOW	LIVE	PERM.LIVE	WIND	DEAD	SOIL
2	237	178 / 0	0 / 0	0 / 0	0 / 0	59 / 0	0 / 0
4	129	82 / 0	0 / 0	0 / 0	0 / 0	46 / 0	0 / 0

BEARING MATERIAL TO BE SPF NO.2 OR BETTER AT JOINT(S) 2, 4

BRACING

TOP CHORD TO BE SHEATHED OR MAX. PURLIN SPACING = 6.25 FT.
MAX. UNBRACED BOTTOM CHORD LENGTH = 10.00 FT. OR RIGID CEILING DIRECTLY APPLIED.

ALL PITCH BREAKS AND PERIMETER CORNER JOINTS MUST BE LATERALLY RESTRAINED.

LOADING

TOTAL LOAD CASES: (4)

CHORDS

MEMB. FR-TO	MAX. FACTORED FORCE (LBS)	FACTORED VERT. LOAD (PLF) FROM	TO	LC1 MAX CSI (LC)	MAX. UNBRAC LENGTH
1- 2	0 / 15	-77.4	-77.4	0.10 (1)	10.00
2- 7	-28 / 0	-77.4	-77.4	0.08 (4)	6.25
7- 3	0 / 4	-77.4	-77.4	0.21 (1)	10.00
5- 3	-154 / 0	0.0	0.0	0.02 (1)	7.81
2- 6	0 / 0	-17.5	-17.5	0.11 (1)	10.00
6- 5	0 / 0	-17.5	-17.5	0.21 (1)	10.00
5- 4	0 / 0	-17.5	-17.5	0.21 (1)	10.00

WEBS

MEMB. FR-TO	MAX. FACTORED FORCE (LBS)	MAX CSI (LC)
6- 7	-71 / 51	0.00 (1)

DESIGN CRITERIA

SPECIFIED LOADS:

TOP	CH.	LL	=	23.3	PSF
		DL	=	3.0	PSF
BOT	CH.	LL	=	0.0	PSF
		DL	=	7.0	PSF
TOTAL	LOAD		=	33.3	PSF

SPACING = 24.0 IN. C/C

THIS TRUSS IS DESIGNED FOR RESIDENTIAL OR SMALL BUILDING REQUIREMENTS OF PART 9, NBCC 2010

THIS DESIGN COMPLIES WITH:
- PART 9 OF OBC 2012 , BCBC 2012 , ABC 2014
- CSA 086-09
- TPIC 2011

(55 % OF 27.2 P.S.F. G.S.L. PLUS 8.4 P.S.F. RAIN LOAD) EQUALS 23.3 P.S.F. SPECIFIED ROOF LIVE LOAD

ALLOWABLE DEFL.(LL)= L/360 (0.19")
CALCULATED VERT. DEFL.(LL) = L/ 999 (0.05")
ALLOWABLE DEFL.(TL)= L/360 (0.19")
CALCULATED VERT. DEFL.(TL) = L/ 694 (0.09")

CSI: TC=0.21 (3-7:1) , BC=0.21 (5-6:1) , WB=0.00 (6-7:1) , SSI=0.14 (4-5:1)

DOL LUMBER=1.00 NAIL=1.00 LS BEND=1.10 COMP=1.10 SHEAR=1.10 TENS= 1.10

COMPANION LIVE LOAD FACTOR = 0.50

TRUSS PLATE MANUFACTURER IS NOT RESPONSIBLE FOR QUALITY CONTROL IN THE TRUSS MANUFACTURING PLANT .

NAIL VALUES

PLATE	GRIP(DRY) (PSI) MAX	MIN	SHEAR (PLI) MAX	MIN	SECTION (PLI) MAX	MIN
MT20	618	354	1667	822	2284	1656

PLATE PLACEMENT TOL. = 0.250 inches

PLATE ROTATION TOL. = 5.0 Deg.

JSI GRIP= 0.17 (2) (INPUT = 0.90)
JSI METAL= 0.05 (2) (INPUT = 1.00)

LICENSED PROFESSIONAL ENGINEER
P. M. TREVISAN
100136551
March 16th, 2017
PROVINCE OF ONTARIO

RECEIVED
TOWN OF MILTON
MAR 29, 2017
17-5337
BUILDING DIVISION

KOTT

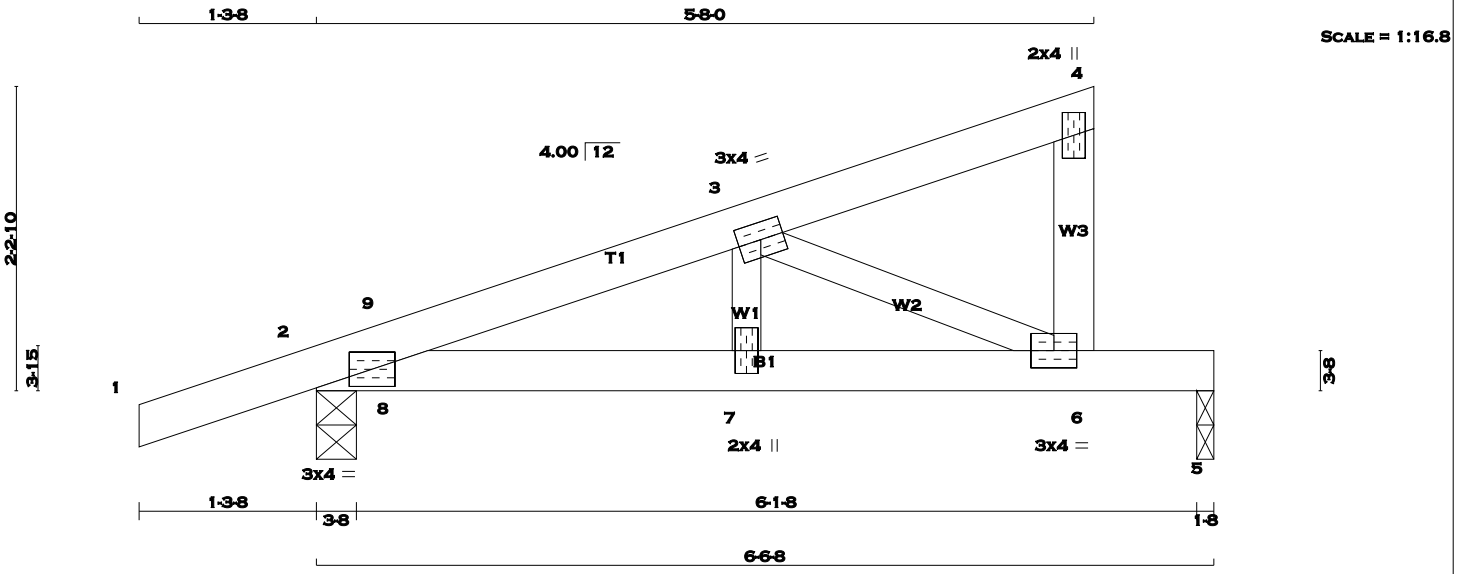

TOTAL WEIGHT = 5 X 20 = 101 lb

[M][F]

LUMBER

N. L. G. A. RULES

CHORDS	SIZE		LUMBER	DESCR.
1 - 4	2x4	DRY	No.2	SPF
6 - 4	2x4	DRY	No.2	SPF
2 - 5	2x4	DRY	No.2	SPF
ALL WEBS	2x3	DRY	No.2	SPF

DRY: SEASONED LUMBER.

PLATES (table is in inches)

JT	TYPE	PLATES	W	LEN	Y	X
2	TMB1-l	MT20	3.0	4.0		
3	TMWW-t	MT20	3.0	4.0		
4	TMV+p	MT20	2.0	4.0		
6	BMVW-t	MT20	3.0	4.0		
7	BMW+w	MT20	2.0	4.0		

A SIZE FOR SIZE SUBSTITUTION OF MITEK MII20 WITH TEE-LOK TL20 PLATES IS ALLOWED.

DIMENSIONS, SUPPORTS AND LOADINGS SPECIFIED BY FABRICATOR TO BE VERIFIED BY BUILDING DESIGNER

BEARINGS

JT	FACTORED GROSS REACTION VERT	HORZ	MAXIMUM FACTORED GROSS REACTION DOWN	HORZ	UPLIFT	INPUT BRG IN-SX	REQRD BRG IN-SX
2	409	0	409	0	0	3-8	3-8
5	247	0	247	0	0	1-8	1-8

UNFACTORED REACTIONS

JT	1ST LCASE COMBINED	MAX./MIN. COMPONENT REACTIONS SNOW	LIVE	PERM.LIVE	WIND	DEAD	SOIL
2	285	212 / 0	0 / 0	0 / 0	0 / 0	73 / 0	0 / 0
5	175	114 / 0	0 / 0	0 / 0	0 / 0	61 / 0	0 / 0

BEARING MATERIAL TO BE SPF NO.2 OR BETTER AT JOINT(S) 2, 5

BRACING

TOP CHORD TO BE SHEATHED OR MAX. PURLIN SPACING = 6.25 FT.
MAX. UNBRACED BOTTOM CHORD LENGTH = 10.00 FT. OR RIGID CEILING DIRECTLY APPLIED.

ALL PITCH BREAKS AND PERIMETER CORNER JOINTS MUST BE LATERALLY RESTRAINED.

LOADING

TOTAL LOAD CASES: (4)

CHORDS

MEMB. FR-TO	MAX. FACTORED FORCE (LBS)	FACTORED VERT. LOAD (PLF) FROM	TO	LC1 MAX CSI (LC)	MAX. UNBRAC LENGTH
1- 2	0 / 15	-77.4	-77.4	0.10 (1)	10.00
2- 9	-580 / 0	-77.4	-77.4	0.01 (4)	6.25
9- 3	-568 / 0	-77.4	-77.4	0.05 (1)	6.25
3- 4	-5 / 0	-77.4	-77.4	0.05 (1)	10.00
6- 4	-82 / 0	0.0	0.0	0.01 (1)	7.81
2- 8	0 / 543	-17.5	-17.5	0.15 (1)	10.00
8- 7	0 / 543	-17.5	-17.5	0.16 (1)	10.00
7- 6	0 / 543	-17.5	-17.5	0.37 (1)	10.00
6- 5	0 / 0	-17.5	-17.5	0.29 (1)	10.00

WEBS

MEMB. FR-TO	MAX. FACTORED FORCE (LBS)	MAX CSI (LC)
7- 3	0 / 185	0.04 (1)
3- 6	-590 / 0	0.10 (1)
8- 9	-83 / 4	0.00 (1)

DESIGN CRITERIA

SPECIFIED LOADS:

TOP	CH.	LL	=	23.3	PSF
		DL	=	3.0	PSF
BOT	CH.	LL	=	0.0	PSF
		DL	=	7.0	PSF
TOTAL	LOAD		=	33.3	PSF

SPACING = 24.0 IN. C/C

THIS TRUSS IS DESIGNED FOR RESIDENTIAL OR SMALL BUILDING REQUIREMENTS OF PART 9, NBCC 2010

THIS DESIGN COMPLIES WITH:
- PART 9 OF OBC 2012 , BCBC 2012 , ABC 2014
- CSA 086-09
- TPIC 2011

(55 % OF 27.2 P.S.F. G.S.L. PLUS 8.4 P.S.F. RAIN LOAD) EQUALS 23.3 P.S.F. SPECIFIED ROOF LIVE LOAD

ALLOWABLE DEFL.(LL)= L/360 (0.22")
CALCULATED VERT. DEFL.(LL) = L/ 999 (0.03")
ALLOWABLE DEFL.(TL)= L/360 (0.22")
CALCULATED VERT. DEFL.(TL) = L/ 999 (0.05")

CSI: TC=0.10 (1-2:1) , BC=0.37 (6-7:1) , WB=0.10 (3-6:1) , SSI=0.19 (5-6:1)

DOL LUMBER=1.00 NAIL=1.00 LS BEND=1.10 COMP=1.10 SHEAR=1.10 TENS= 1.10

COMPANION LIVE LOAD FACTOR = 0.50

TRUSS PLATE MANUFACTURER IS NOT RESPONSIBLE FOR QUALITY CONTROL IN THE TRUSS MANUFACTURING PLANT .

NAIL VALUES

PLATE	GRIP(DRY) (PSI) MAX	MIN	SHEAR (PLI) MAX	MIN	SECTION (PLI) MAX	MIN
MT20	618	354	1667	822	2284	1656

PLATE PLACEMENT TOL. = 0.250 inches

PLATE ROTATION TOL. = 5.0 Deg.

JSI GRIP= 0.83 (6) (INPUT = 0.90)
JSI METAL= 0.20 (6) (INPUT = 1.00)

LICENSED PROFESSIONAL ENGINEER
P. M. TREVISAN
100136551
March 16th, 2017
PROVINCE OF ONTARIO

RECEIVED
TOWN OF MILTON
MAR 29, 2017
17-5337
BUILDING DIVISION

KOTT

JOB NAME	TRUSS NAME	QUANTITY	PLY	JOB DESC.	DRWG NO.
PT0317-097	T41	1	1	TRUSS DESC. LECCO RIDGE-BLOCK 344	

KOTT , Stouffville, ON, CGC

Version 8.100 S Feb 9 2017 MiTek Industries, Inc. Thu Mar 16 11:58:10 2017 Page 1
ID:EvTixTQDI5yR1QLotZTBr_yE?HJ-z8r9P6nStgCAZaYKdD8tp6C5kM0777LaW?CWdszaNjh

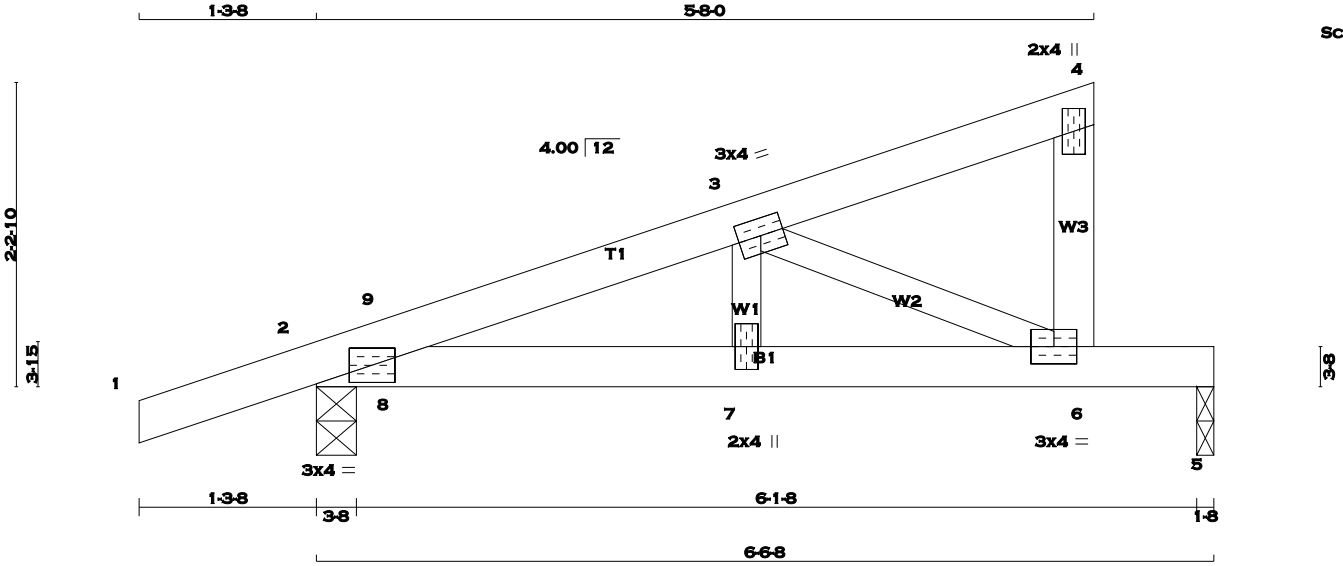

TOTAL WEIGHT = 20 lb
[M][F]

LUMBER
N. L. G. A. RULES

CHORDS	SIZE		LUMBER	DESCR.
1 - 4	2x4	DRY	No.2	SPF
6 - 4	2x4	DRY	No.2	SPF
2 - 5	2x4	DRY	No.2	SPF
ALL WEBS	2x3	DRY	No.2	SPF

DRY: SEASONED LUMBER.

PLATES (table is in inches)

JT	TYPE	PLATES	W	LEN	Y	X
2	TMB1-l	MT20	3.0	4.0		
3	TMWW-t	MT20	3.0	4.0		
4	TMV+p	MT20	2.0	4.0		
6	BMVW-t	MT20	3.0	4.0		
7	BMW+w	MT20	2.0	4.0		

A SIZE FOR SIZE SUBSTITUTION OF MITEK MII20 WITH TEE-LOK TL20 PLATES IS ALLOWED.

DIMENSIONS, SUPPORTS AND LOADINGS SPECIFIED BY FABRICATOR TO BE VERIFIED BY BUILDING DESIGNER

BEARINGS

JT	FACTORED GROSS REACTION VERT	HORZ	MAXIMUM FACTORED GROSS REACTION DOWN	HORZ	UPLIFT	INPUT BRG IN-SX	REQRD BRG IN-SX
2	409	0	409	0	0	3-8	3-8
5	247	0	247	0	0	1-8	1-8

UNFACTORED REACTIONS

JT	1ST LCASE COMBINED	MAX./MIN. COMPONENT REACTIONS SNOW	LIVE	PERM.LIVE	WIND	DEAD	SOIL
2	285	212 / 0	0 / 0	0 / 0	0 / 0	73 / 0	0 / 0
5	175	114 / 0	0 / 0	0 / 0	0 / 0	61 / 0	0 / 0

BEARING MATERIAL TO BE SPF NO.2 OR BETTER AT JOINT(S) 2, 5

BRACING
TOP CHORD TO BE SHEATHED OR MAX. PURLIN SPACING = 6.25 FT.
MAX. UNBRACED BOTTOM CHORD LENGTH = 10.00 FT. OR RIGID CEILING DIRECTLY APPLIED.

ALL PITCH BREAKS AND PERIMETER CORNER JOINTS MUST BE LATERALLY RESTRAINED.

LOADING
TOTAL LOAD CASES: (4)

CHORDS

MEMB. FR-TO	MAX. FACTORED FORCE (LBS)	FACTORED VERT. LOAD (PLF) FROM	TO	LC1 MAX CSI (LC)	MAX. UNBRAC LENGTH
1- 2	0 / 15	-77.4	-77.4	0.10 (1)	10.00
2- 9	-580 / 0	-77.4	-77.4	0.01 (4)	6.25
9- 3	-568 / 0	-77.4	-77.4	0.05 (1)	6.25
3- 4	-5 / 0	-77.4	-77.4	0.05 (1)	10.00
6- 4	-82 / 0	0.0	0.0	0.01 (1)	7.81
2- 8	0 / 543	-17.5	-17.5	0.15 (1)	10.00
8- 7	0 / 543	-17.5	-17.5	0.16 (1)	10.00
7- 6	0 / 543	-17.5	-17.5	0.37 (1)	10.00
6- 5	0 / 0	-17.5	-17.5	0.29 (1)	10.00

WEBS

MEMB. FR-TO	MAX. FACTORED FORCE (LBS)	MAX CSI (LC)
7- 3	0 / 185	0.04 (1)
3- 6	-590 / 0	0.10 (1)
8- 9	-83 / 4	0.00 (1)

DESIGN CRITERIA

SPECIFIED LOADS:

TOP	CH.	LL	=	23.3	PSF
		DL	=	3.0	PSF
BOT	CH.	LL	=	0.0	PSF
		DL	=	7.0	PSF
TOTAL	LOAD		=	33.3	PSF

SPACING = 24.0 IN. C/C

THIS TRUSS IS DESIGNED FOR RESIDENTIAL OR SMALL BUILDING REQUIREMENTS OF PART 9, NBCC 2010

THIS DESIGN COMPLIES WITH:
- PART 9 OF OBC 2012 , BCBC 2012 , ABC 2014
- CSA 086-09
- TPIC 2011

(55 % OF 27.2 P.S.F. G.S.L. PLUS 8.4 P.S.F. RAIN LOAD) EQUALS 23.3 P.S.F. SPECIFIED ROOF LIVE LOAD

ALLOWABLE DEFL.(LL)= L/360 (0.22")
CALCULATED VERT. DEFL.(LL) = L/ 999 (0.03")
ALLOWABLE DEFL.(TL)= L/360 (0.22")
CALCULATED VERT. DEFL.(TL) = L/ 999 (0.05")

CSI: TC=0.10 (1-2:1) , BC=0.37 (6-7:1) , WB=0.10 (3-6:1) , SSI=0.19 (5-6:1)

DOL LUMBER=1.00 NAIL=1.00 LS BEND=1.10 COMP=1.10 SHEAR=1.10 TENS= 1.10

COMPANION LIVE LOAD FACTOR = 0.50

TRUSS PLATE MANUFACTURER IS NOT RESPONSIBLE FOR QUALITY CONTROL IN THE TRUSS MANUFACTURING PLANT .

NAIL VALUES

PLATE	GRIP(DRY) (PSI) MAX	MIN	SHEAR (PLI) MAX	MIN	SECTION (PLI) MAX	MIN
MT20	618	354	1667	822	2284	1656

PLATE PLACEMENT TOL. = 0.250 inches

PLATE ROTATION TOL. = 5.0 Deg.

JSI GRIP= 0.83 (6) (INPUT = 0.90)
JSI METAL= 0.20 (6) (INPUT = 1.00)

LICENSED PROFESSIONAL ENGINEER
P. M. TREVISAN
100136551
March 16th, 2017
PROVINCE OF ONTARIO

RECEIVED
TOWN OF MILTON
MAR 29, 2017
17-5337
BUILDING DIVISION

KOTT

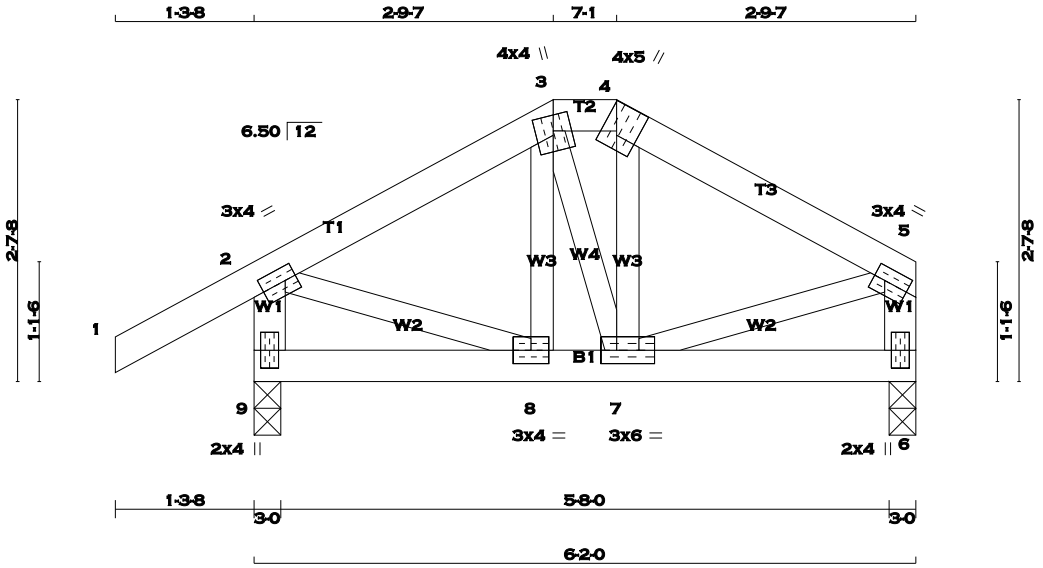

TOTAL WEIGHT = 2 X 27 = 55 lb

[M][F]

LUMBER

N. L. G. A. RULES

CHORDS	SIZE		LUMBER	DESCR.
1 - 3	2x4	DRY	No.2	SPF
3 - 4	2x4	DRY	No.2	SPF
4 - 5	2x4	DRY	No.2	SPF
9 - 2	2x4	DRY	No.2	SPF
6 - 5	2x4	DRY	No.2	SPF
9 - 6	2x4	DRY	No.2	SPF
ALL WEBS EXCEPT	2x3	DRY	No.2	SPF

DRY: SEASONED LUMBER.

PLATES (table is in inches)

JT	TYPE	PLATES	W	LEN	Y	X
2	TMVW-t	MT20	3.0	4.0	1.50	1.25
3	TTWW+m	MT20	4.0	4.0	1.75	2.00
4	TTW+h	MT20	4.0	5.0	3.00	1.50
5	TMVW-t	MT20	3.0	4.0	1.50	1.25
6	BMV1+p	MT20	2.0	4.0		
7	BMWWW-t	MT20	3.0	6.0		
8	BMWW-t	MT20	3.0	4.0		
9	BMV1+p	MT20	2.0	4.0		

A SIZE FOR SIZE SUBSTITUTION OF MITEK MII20 WITH TEE-LOK TL20 PLATES IS ALLOWED.

DIMENSIONS, SUPPORTS AND LOADINGS SPECIFIED BY FABRICATOR TO BE VERIFIED BY BUILDING DESIGNER

BEARINGS

JT	FACTORED GROSS REACTION VERT	HORZ	MAXIMUM FACTORED GROSS REACTION DOWN	HORZ	UPLIFT	INPUT BRG IN-SX	REQRD BRG IN-SX
9	398	0	398	0	0	3-0	3-0
6	292	0	292	0	0	3-0	3-0

UNFACTORED REACTIONS

JT	1ST LCASE COMBINED	MAX./MIN. COMPONENT REACTIONS SNOW	LIVE	PERM.LIVE	WIND	DEAD	SOIL
9	277	207 / 0	0 / 0	0 / 0	0 / 0	70 / 0	0 / 0
6	205	144 / 0	0 / 0	0 / 0	0 / 0	62 / 0	0 / 0

BEARING MATERIAL TO BE SPF NO.2 OR BETTER AT JOINT(S) 9, 6

BRACING

TOP CHORD TO BE SHEATHED OR MAX. PURLIN SPACING = 6.25 FT.
MAX. UNBRACED BOTTOM CHORD LENGTH = 10.00 FT. OR RIGID CEILING DIRECTLY APPLIED.

ALL PITCH BREAKS AND PERIMETER CORNER JOINTS MUST BE LATERALLY RESTRAINED.

LOADING

TOTAL LOAD CASES: (4)

CHORDS

MEMB. FR-TO	MAX. FACTORED FORCE (LBS)	FACTORED VERT. LOAD (PLF) FROM	TO	LC1 MAX CSI (LC)	MAX. UNBRAC LENGTH
1- 2	0 / 25	-77.4	-77.4	0.10 (1)	10.00
2- 3	-221 / 0	-77.4	-77.4	0.08 (1)	6.25
3- 4	-195 / 0	-77.4	-77.4	0.00 (1)	6.25
4- 5	-220 / 0	-77.4	-77.4	0.08 (1)	6.25
9- 2	-377 / 0	0.0	0.0	0.04 (1)	7.81
6- 5	-271 / 0	0.0	0.0	0.03 (1)	7.81
9- 8	0 / 0	-17.5	-17.5	0.03 (4)	10.00
8- 7	0 / 195	-17.5	-17.5	0.04 (1)	10.00
7- 6	0 / 0	-17.5	-17.5	0.03 (4)	10.00

WEBS

MEMB. FR-TO	MAX. FACTORED FORCE (LBS)	MAX CSI (LC)
8- 3	-24 / 18	0.01 (4)
7- 4	-25 / 20	0.01 (4)
2- 8	0 / 202	0.05 (1)
7- 5	0 / 202	0.05 (1)
3- 7	-1 / 1	0.00 (4)

DESIGN CRITERIA

SPECIFIED LOADS:

TOP CH.	LL	=	23.3	PSF
	DL	=	3.0	PSF
BOT CH.	LL	=	0.0	PSF
	DL	=	7.0	PSF
TOTAL LOAD		=	33.3	PSF

SPACING = 24.0 IN. C/C

LOADING IN FLAT SECTION BASED ON A SLOPE OF 6.00/12

THIS TRUSS IS DESIGNED FOR RESIDENTIAL OR SMALL BUILDING REQUIREMENTS OF PART 9, NBCC 2010

THIS DESIGN COMPLIES WITH:
- PART 9 OF OBC 2012 , BCBC 2012 , ABC 2014
- CSA 086-09
- TPIC 2011

(55 % OF 27.2 P.S.F. G.S.L. PLUS 8.4 P.S.F. RAIN LOAD) EQUALS 23.3 P.S.F. SPECIFIED ROOF LIVE LOAD

ALLOWABLE DEFL.(LL)= L/360 (0.21")
CALCULATED VERT. DEFL.(LL) = L/ 999 (0.00")
ALLOWABLE DEFL.(TL)= L/360 (0.21")
CALCULATED VERT. DEFL.(TL) = L/ 999 (0.00")

CSI: TC=0.10 (1-2:1) , BC=0.04 (7-8:1) , WB=0.05 (2-8:1) , SSI=0.07 (2-3:1)

DOL LUMBER=1.00 NAIL=1.00 LS BEND=1.10 COMP=1.10 SHEAR=1.10 TENS= 1.10

COMPANION LIVE LOAD FACTOR = 0.50

TRUSS PLATE MANUFACTURER IS NOT RESPONSIBLE FOR QUALITY CONTROL IN THE TRUSS MANUFACTURING PLANT .

NAIL VALUES

PLATE	GRIP(DRY) (PSI) MAX	MIN	SHEAR (PLI) MAX	MIN	SECTION (PLI) MAX	MIN
MT20	618	354	1667	822	2284	1656

PLATE PLACEMENT TOL. = 0.250 inches

PLATE ROTATION TOL. = 5.0 Deg.

JSI GRIP= 0.51 (2) (INPUT = 0.90)
JSI METAL= 0.12 (2) (INPUT = 1.00)

LICENSED PROFESSIONAL ENGINEER
P. M. TREVISAN
100136551
March 16th, 2017
PROVINCE OF ONTARIO

RECEIVED
TOWN OF MILTON
MAR 29, 2017
17-5337
BUILDING DIVISION

KOTT

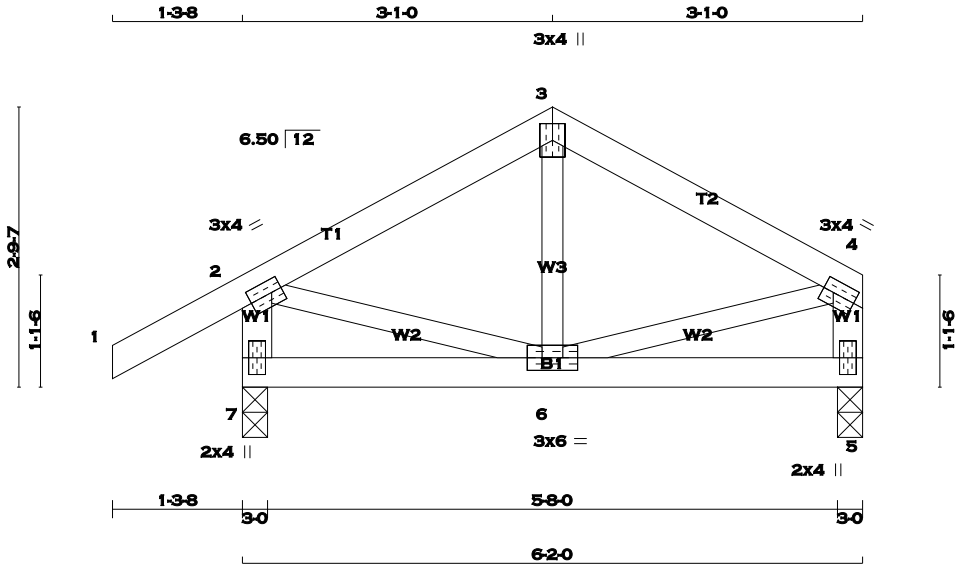

TOTAL WEIGHT = 2 X 25 = 50 lb

[M][F]

LUMBER

N. L. G. A. RULES

CHORDS	SIZE		LUMBER	DESCR.
1 - 3	2x4	DRY	No.2	SPF
3 - 4	2x4	DRY	No.2	SPF
7 - 2	2x4	DRY	No.2	SPF
5 - 4	2x4	DRY	No.2	SPF
7 - 5	2x4	DRY	No.2	SPF
ALL WEBS EXCEPT	2x3	DRY	No.2	SPF

DRY: SEASONED LUMBER.

PLATES (table is in inches)

JT	TYPE	PLATES	W	LEN	Y	X
2	TMVW-t	MT20	3.0	4.0	1.50	1.25
3	TTW+p	MT20	3.0	4.0		
4	TMVW-t	MT20	3.0	4.0	1.50	1.25
5	BMV1+p	MT20	2.0	4.0		
6	BMWWW-t	MT20	3.0	6.0		
7	BMV1+p	MT20	2.0	4.0		

A SIZE FOR SIZE SUBSTITUTION OF MITEK MII20 WITH TEE-LOK TL20 PLATES IS ALLOWED.

DIMENSIONS, SUPPORTS AND LOADINGS SPECIFIED BY FABRICATOR TO BE VERIFIED BY BUILDING DESIGNER

BEARINGS

JT	FACTORED GROSS REACTION VERT	HORZ	MAXIMUM FACTORED GROSS REACTION DOWN	HORZ	UPLIFT	INPUT BRG IN-SX	REQRD BRG IN-SX
7	398	0	398	0	0	3-0	3-0
5	292	0	292	0	0	3-0	3-0

UNFACTORED REACTIONS

JT	1ST LCASE COMBINED	MAX./MIN. COMPONENT REACTIONS SNOW	LIVE	PERM.LIVE	WIND	DEAD	SOIL
7	277	207 / 0	0 / 0	0 / 0	0 / 0	70 / 0	0 / 0
5	205	144 / 0	0 / 0	0 / 0	0 / 0	62 / 0	0 / 0

BEARING MATERIAL TO BE SPF NO.2 OR BETTER AT JOINT(S) 7, 5

BRACING

TOP CHORD TO BE SHEATHED OR MAX. PURLIN SPACING = 6.25 FT.
MAX. UNBRACED BOTTOM CHORD LENGTH = 10.00 FT. OR RIGID CEILING DIRECTLY APPLIED.

ALL PITCH BREAKS AND PERIMETER CORNER JOINTS MUST BE LATERALLY RESTRAINED.

LOADING

TOTAL LOAD CASES: (4)

CHORDS

MEMB. FR-TO	MAX. FACTORED FORCE (LBS)	FACTORED VERT. LOAD (PLF) FROM	TO	LC1 MAX CSI (LC)	MAX. UNBRAC LENGTH
1- 2	0 / 25	-77.4	-77.4	0.10 (1)	10.00
2- 3	-214 / 0	-77.4	-77.4	0.09 (1)	6.25
3- 4	-214 / 0	-77.4	-77.4	0.09 (1)	6.25
7- 2	-376 / 0	0.0	0.0	0.04 (1)	7.81
5- 4	-271 / 0	0.0	0.0	0.03 (1)	7.81
7- 6	0 / 0	-17.5	-17.5	0.04 (4)	10.00
6- 5	0 / 0	-17.5	-17.5	0.04 (4)	10.00

WEBS

MEMB. FR-TO	MAX. FACTORED FORCE (LBS)	MAX CSI (LC)
6- 3	-34 / 42	0.01 (4)
2- 6	0 / 195	0.04 (1)
6- 4	0 / 195	0.04 (1)

DESIGN CRITERIA

SPECIFIED LOADS:

TOP	CH.	LL	=	23.3	PSF
		DL	=	3.0	PSF
BOT	CH.	LL	=	0.0	PSF
		DL	=	7.0	PSF
TOTAL	LOAD		=	33.3	PSF

SPACING = 24.0 IN. C/C

THIS TRUSS IS DESIGNED FOR RESIDENTIAL OR SMALL BUILDING REQUIREMENTS OF PART 9, NBCC 2010

THIS DESIGN COMPLIES WITH:
- PART 9 OF OBC 2012 , BCBC 2012 , ABC 2014
- CSA 086-09
- TPIC 2011

(55 % OF 27.2 P.S.F. G.S.L. PLUS 8.4 P.S.F. RAIN LOAD) EQUALS 23.3 P.S.F. SPECIFIED ROOF LIVE LOAD

ALLOWABLE DEFL.(LL)= L/360 (0.21")
CALCULATED VERT. DEFL.(LL) = L/ 999 (0.00")
ALLOWABLE DEFL.(TL)= L/360 (0.21")
CALCULATED VERT. DEFL.(TL) = L/ 999 (0.00")

CSI: TC=0.10 (1-2:1) , BC=0.04 (5-6:4) , WB=0.04 (2-6:1) , SSI=0.08 (2-3:1)

DOL LUMBER=1.00 NAIL=1.00 LS BEND=1.10 COMP=1.10 SHEAR=1.10 TENS= 1.10

COMPANION LIVE LOAD FACTOR = 0.50

TRUSS PLATE MANUFACTURER IS NOT RESPONSIBLE FOR QUALITY CONTROL IN THE TRUSS MANUFACTURING PLANT .

NAIL VALUES

PLATE	GRIP(DRY) (PSI) MAX	MIN	SHEAR (PLI) MAX	MIN	SECTION (PLI) MAX	MIN
MT20	618	354	1667	822	2284	1656

PLATE PLACEMENT TOL. = 0.250 inches

PLATE ROTATION TOL. = 5.0 Deg.

JSI GRIP= 0.48 (2) (INPUT = 0.90)
JSI METAL= 0.12 (4) (INPUT = 1.00)

LICENSED PROFESSIONAL ENGINEER
P. M. TREVISAN
100136551
March 16th, 2017
PROVINCE OF ONTARIO

RECEIVED
TOWN OF MILTON
MAR 29, 2017
17-5337
BUILDING DIVISION

KOTT

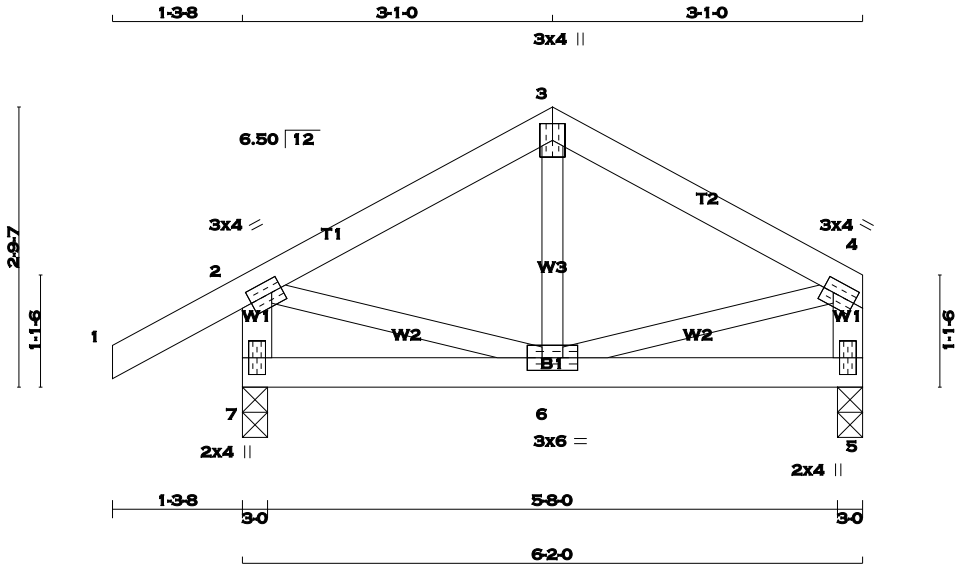

TOTAL WEIGHT = 2 X 25 = 50 lb

[M][F]

LUMBER

N. L. G. A. RULES

CHORDS	SIZE		LUMBER	DESCR.
1 - 3	2x4	DRY	No.2	SPF
3 - 4	2x4	DRY	No.2	SPF
7 - 2	2x4	DRY	No.2	SPF
5 - 4	2x4	DRY	No.2	SPF
7 - 5	2x4	DRY	No.2	SPF
ALL WEBS EXCEPT	2x3	DRY	No.2	SPF

DRY: SEASONED LUMBER.

PLATES (table is in inches)

JT	TYPE	PLATES	W	LEN	Y	X
2	TMVW-t	MT20	3.0	4.0	1.50	1.25
3	TTW+p	MT20	3.0	4.0		
4	TMVW-t	MT20	3.0	4.0	1.50	1.25
5	BMV1+p	MT20	2.0	4.0		
6	BMWWW-t	MT20	3.0	6.0		
7	BMV1+p	MT20	2.0	4.0		

A SIZE FOR SIZE SUBSTITUTION OF MITEK MII20 WITH TEE-LOK TL20 PLATES IS ALLOWED.

DIMENSIONS, SUPPORTS AND LOADINGS SPECIFIED BY FABRICATOR TO BE VERIFIED BY BUILDING DESIGNER

BEARINGS

JT	FACTORED GROSS REACTION VERT	HORZ	MAXIMUM FACTORED GROSS REACTION DOWN	HORZ	UPLIFT	INPUT BRG IN-SX	REQRD BRG IN-SX
7	398	0	398	0	0	3-0	3-0
5	292	0	292	0	0	3-0	3-0

UNFACTORED REACTIONS

JT	1ST LCASE COMBINED	MAX./MIN. COMPONENT REACTIONS SNOW	LIVE	PERM.LIVE	WIND	DEAD	SOIL
7	277	207 / 0	0 / 0	0 / 0	0 / 0	70 / 0	0 / 0
5	205	144 / 0	0 / 0	0 / 0	0 / 0	62 / 0	0 / 0

BEARING MATERIAL TO BE SPF NO.2 OR BETTER AT JOINT(S) 7, 5

BRACING

TOP CHORD TO BE SHEATHED OR MAX. PURLIN SPACING = 6.25 FT.
MAX. UNBRACED BOTTOM CHORD LENGTH = 10.00 FT. OR RIGID CEILING DIRECTLY APPLIED.

ALL PITCH BREAKS AND PERIMETER CORNER JOINTS MUST BE LATERALLY RESTRAINED.

LOADING

TOTAL LOAD CASES: (4)

CHORDS

MEMB. FR-TO	MAX. FACTORED FORCE (LBS)	FACTORED VERT. LOAD (PLF) FROM	TO	LC1 MAX CSI (LC)	MAX. UNBRAC LENGTH
1- 2	0 / 25	-77.4	-77.4	0.10 (1)	10.00
2- 3	-214 / 0	-77.4	-77.4	0.09 (1)	6.25
3- 4	-214 / 0	-77.4	-77.4	0.09 (1)	6.25
7- 2	-376 / 0	0.0	0.0	0.04 (1)	7.81
5- 4	-271 / 0	0.0	0.0	0.03 (1)	7.81
7- 6	0 / 0	-17.5	-17.5	0.04 (4)	10.00
6- 5	0 / 0	-17.5	-17.5	0.04 (4)	10.00

WEBS

MEMB. FR-TO	MAX. FACTORED FORCE (LBS)	MAX CSI (LC)
6- 3	-34 / 42	0.01 (4)
2- 6	0 / 195	0.04 (1)
6- 4	0 / 195	0.04 (1)

DESIGN CRITERIA

SPECIFIED LOADS:

TOP	CH.	LL	=	23.3	PSF
		DL	=	3.0	PSF
BOT	CH.	LL	=	0.0	PSF
		DL	=	7.0	PSF
TOTAL	LOAD		=	33.3	PSF

SPACING = 24.0 IN. C/C

THIS TRUSS IS DESIGNED FOR RESIDENTIAL OR SMALL BUILDING REQUIREMENTS OF PART 9, NBCC 2010

THIS DESIGN COMPLIES WITH:
- PART 9 OF OBC 2012 , BCBC 2012 , ABC 2014
- CSA 086-09
- TPIC 2011

(55 % OF 27.2 P.S.F. G.S.L. PLUS 8.4 P.S.F. RAIN LOAD) EQUALS 23.3 P.S.F. SPECIFIED ROOF LIVE LOAD

ALLOWABLE DEFL.(LL)= L/360 (0.21")
CALCULATED VERT. DEFL.(LL) = L/ 999 (0.00")
ALLOWABLE DEFL.(TL)= L/360 (0.21")
CALCULATED VERT. DEFL.(TL) = L/ 999 (0.00")

CSI: TC=0.10 (1-2:1) , BC=0.04 (5-6:4) , WB=0.04 (2-6:1) , SSI=0.08 (2-3:1)

DOL LUMBER=1.00 NAIL=1.00 LS BEND=1.10 COMP=1.10 SHEAR=1.10 TENS= 1.10

COMPANION LIVE LOAD FACTOR = 0.50

TRUSS PLATE MANUFACTURER IS NOT RESPONSIBLE FOR QUALITY CONTROL IN THE TRUSS MANUFACTURING PLANT .

NAIL VALUES

PLATE	GRIP(DRY) (PSI) MAX	MIN	SHEAR (PLI) MAX	MIN	SECTION (PLI) MAX	MIN
MT20	618	354	1667	822	2284	1656

PLATE PLACEMENT TOL. = 0.250 inches

PLATE ROTATION TOL. = 5.0 Deg.

JSI GRIP= 0.48 (2) (INPUT = 0.90)
JSI METAL= 0.12 (4) (INPUT = 1.00)

LICENSED PROFESSIONAL ENGINEER
P. M. TREVISAN
100136551
March 16th, 2017
PROVINCE OF ONTARIO

RECEIVED
TOWN OF MILTON
MAR 29, 2017
17-5337
BUILDING DIVISION

KOTT

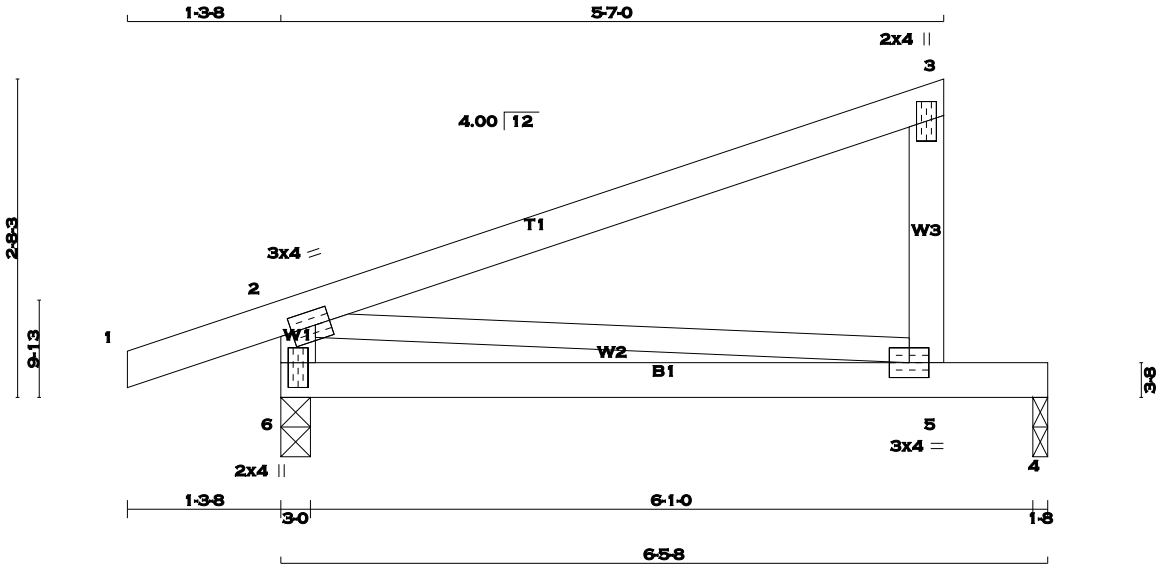

SCALE = 1:19.4

TOTAL WEIGHT = 16 X 23 = 361 lb

[M][F]

LUMBER

N. L. G. A. RULES

CHORDS	SIZE		LUMBER	DESCR.
1 - 3	2x4	DRY	No.2	SPF
5 - 3	2x4	DRY	No.2	SPF
6 - 2	2x4	DRY	No.2	SPF
6 - 4	2x4	DRY	No.2	SPF
ALL WEBS	2x3	DRY	No.2	SPF

DRY: SEASONED LUMBER.

PLATES (table is in inches)

JT	TYPE	PLATES	W	LEN	Y	X
2	TMVW-t	MT20	3.0	4.0	1.50	1.50
3	TMV+p	MT20	2.0	4.0		
5	BMVW-t	MT20	3.0	4.0		
6	BMV1+p	MT20	2.0	4.0	2.50	1.00

A SIZE FOR SIZE SUBSTITUTION OF MITEK MII20 WITH TEE-LOK TL20 PLATES IS ALLOWED.

DIMENSIONS, SUPPORTS AND LOADINGS SPECIFIED BY FABRICATOR TO BE VERIFIED BY BUILDING DESIGNER

BEARINGS

JT	FACTORED GROSS REACTION VERT	HORZ	MAXIMUM FACTORED GROSS REACTION DOWN	HORZ	UPLIFT	INPUT BRG IN-SX	REQRD BRG IN-SX
6	405	0	405	0	0	3-0	3-0
4	243	0	243	0	0	1-8	1-8

UNFACTORED REACTIONS

JT	1ST LCASE COMBINED	MAX./MIN. COMPONENT REACTIONS SNOW	LIVE	PERM.LIVE	WIND	DEAD	SOIL
6	282	210 / 0	0 / 0	0 / 0	0 / 0	72 / 0	0 / 0
4	172	112 / 0	0 / 0	0 / 0	0 / 0	60 / 0	0 / 0

BEARING MATERIAL TO BE SPF NO.2 OR BETTER AT JOINT(S) 6, 4

BRACING

TOP CHORD TO BE SHEATHED OR MAX. PURLIN SPACING = 10.00 FT.
MAX. UNBRACED BOTTOM CHORD LENGTH = 10.00 FT. OR RIGID CEILING DIRECTLY APPLIED.

ALL PITCH BREAKS AND PERIMETER CORNER JOINTS MUST BE LATERALLY RESTRAINED.

LOADING

TOTAL LOAD CASES: (4)

CHORDS

MEMB. FR-TO	MAX. FACTORED FORCE (LBS)	FACTORED VERT. LOAD (PLF) FROM	TO	LC1 MAX CSI (LC)	MAX. UNBRAC LENGTH
1- 2	0 / 16	-77.4	-77.4	0.10 (1)	10.00
2- 3	0 / 0	-77.4	-77.4	0.41 (1)	10.00
5- 3	-216 / 0	0.0	0.0	0.03 (1)	7.81
6- 2	-319 / 0	0.0	0.0	0.03 (1)	7.81
6- 5	0 / 0	-17.5	-17.5	0.29 (1)	10.00
5- 4	0 / 0	-17.5	-17.5	0.28 (1)	10.00

WEBS

MEMB. FR-TO	MAX. FACTORED FORCE (LBS)	MAX CSI (LC)
2- 5	0 / 0	0.00 (1)

DESIGN CRITERIA

SPECIFIED LOADS:

TOP	CH.	LL	=	23.3	PSF
		DL	=	3.0	PSF
BOT	CH.	LL	=	0.0	PSF
		DL	=	7.0	PSF
TOTAL	LOAD		=	33.3	PSF

SPACING = 24.0 IN. C/C

THIS TRUSS IS DESIGNED FOR RESIDENTIAL OR SMALL BUILDING REQUIREMENTS OF PART 9, NBCC 2010

THIS DESIGN COMPLIES WITH:
- PART 9 OF OBC 2012 , BCBC 2012 , ABC 2014
- CSA 086-09
- TPIC 2011

(55 % OF 27.2 P.S.F. G.S.L. PLUS 8.4 P.S.F. RAIN LOAD) EQUALS 23.3 P.S.F. SPECIFIED ROOF LIVE LOAD

ALLOWABLE DEFL.(LL)= L/360 (0.22")
CALCULATED VERT. DEFL.(LL) = L/ 999 (0.07")
ALLOWABLE DEFL.(TL)= L/360 (0.22")
CALCULATED VERT. DEFL.(TL) = L/ 444 (0.17")

CSI: TC=0.41 (2-3:1) , BC=0.29 (5-6:1) , WB=0.00 (2-5:1) , SSI=0.19 (4-5:1)

DOL LUMBER=1.00 NAIL=1.00 LS BEND=1.10 COMP=1.10 SHEAR=1.10 TENS= 1.10

COMPANION LIVE LOAD FACTOR = 0.50

TRUSS PLATE MANUFACTURER IS NOT RESPONSIBLE FOR QUALITY CONTROL IN THE TRUSS MANUFACTURING PLANT .

NAIL VALUES

PLATE	GRIP(DRY) (PSI) MAX	MIN	SHEAR (PLI) MAX	MIN	SECTION (PLI) MAX	MIN
MT20	618	354	1667	822	2284	1656

PLATE PLACEMENT TOL. = 0.250 inches

PLATE ROTATION TOL. = 5.0 Deg.

JSI GRIP= 0.29 (2) (INPUT = 0.90)
JSI METAL= 0.06 (6) (INPUT = 1.00)

LICENSED PROFESSIONAL ENGINEER
P. M. TREVISAN
100136551
March 16th, 2017
PROVINCE OF ONTARIO

RECEIVED
TOWN OF MILTON
MAR 29, 2017
17-5337
BUILDING DIVISION

KOTT

JOB NAME	TRUSS NAME	QUANTITY	PLY	JOB DESC.	DRWG NO.
PT0317-097	T46	7	1	TRUSS DESC. LECCO RIDGE-BLOCK 344	

KOTT , Stouffville, ON, CGC

Version 8.100 S Feb 9 2017 MiTek Industries, Inc. Thu Mar 16 11:58:12 2017 Page 1
ID:EvTixTQDI5yR1QLotZTBr_yE?HJ-vXzvqopiPHSuotiikeALvXIQjAglb0atzIhdikzaNjf

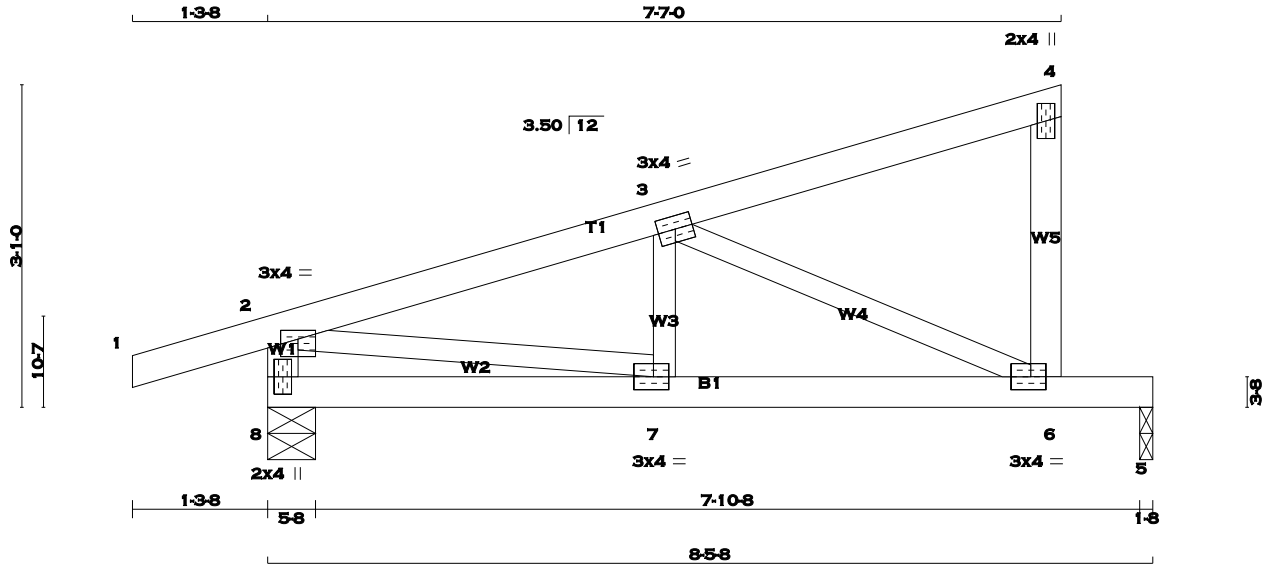

TOTAL WEIGHT = 7 X 30 = 213 lb
[M][F]

LUMBER
N. L. G. A. RULES

CHORDS	SIZE		LUMBER	DESCR.
1 - 4	2x4	DRY	No.2	SPF
6 - 4	2x4	DRY	No.2	SPF
8 - 2	2x4	DRY	No.2	SPF
8 - 5	2x4	DRY	No.2	SPF
ALL WEBS EXCEPT	2x3	DRY	No.2	SPF

DRY: SEASONED LUMBER.

PLATES (table is in inches)

JT	TYPE	PLATES	W	LEN	Y	X
2	TMVW-p	MT20	3.0	4.0	1.00	2.00
3	TMWW-t	MT20	3.0	4.0		
4	TMV+p	MT20	2.0	4.0		
6	BMVW-t	MT20	3.0	4.0	1.50	1.75
7	BMWW-t	MT20	3.0	4.0	1.50	1.75
8	BMV1+p	MT20	2.0	4.0		

A SIZE FOR SIZE SUBSTITUTION OF MITEK MII20 WITH TEE-LOK TL20 PLATES IS ALLOWED.

DIMENSIONS, SUPPORTS AND LOADINGS SPECIFIED BY FABRICATOR TO BE VERIFIED BY BUILDING DESIGNER

BEARINGS

JT	FACTORED GROSS REACTION VERT	HORZ	MAXIMUM FACTORED GROSS REACTION DOWN	HORZ	UPLIFT	INPUT BRG IN-SX	REQRD BRG IN-SX
8	501	0	501	0	0	5-8	5-8
5	337	0	337	0	0	1-8	1-8

UNFACTORED REACTIONS

JT	1ST LCASE COMBINED	MAX./MIN. COMPONENT REACTIONS SNOW	LIVE	PERM.LIVE	WIND	DEAD	SOIL
8	349	257 / 0	0 / 0	0 / 0	0 / 0	92 / 0	0 / 0
5	238	158 / 0	0 / 0	0 / 0	0 / 0	80 / 0	0 / 0

BEARING MATERIAL TO BE SPF NO.2 OR BETTER AT JOINT(S) 8, 5

BRACING
TOP CHORD TO BE SHEATHED OR MAX. PURLIN SPACING = 6.25 FT.
MAX. UNBRACED BOTTOM CHORD LENGTH = 10.00 FT. OR RIGID CEILING DIRECTLY APPLIED.

ALL PITCH BREAKS AND PERIMETER CORNER JOINTS MUST BE LATERALLY RESTRAINED.

LOADING
TOTAL LOAD CASES: (4)

CHORDS

MEMB. FR-TO	MAX. FACTORED FORCE (LBS)	FACTORED VERT. LOAD (PLF) FROM	TO	LC1 MAX CSI (LC)	MAX. UNBRAC LENGTH
1- 2	0 / 14	-77.4	-77.4	0.10 (1)	10.00
2- 3	-629 / 0	-77.4	-77.4	0.13 (1)	6.25
3- 4	-9 / 0	-77.4	-77.4	0.13 (1)	10.00
6- 4	-115 / 0	0.0	0.0	0.02 (1)	7.81
8- 2	-489 / 0	0.0	0.0	0.05 (1)	7.81
8- 7	0 / 0	-17.5	-17.5	0.11 (1)	10.00
7- 6	0 / 613	-17.5	-17.5	0.49 (1)	10.00
6- 5	0 / 0	-17.5	-17.5	0.39 (1)	10.00

WEBS

MEMB. FR-TO	MAX. FACTORED FORCE (LBS)	MAX CSI (LC)
7- 3	0 / 97	0.03 (4)
3- 6	-670 / 0	0.18 (1)
2- 7	0 / 619	0.14 (1)

DESIGN CRITERIA

SPECIFIED LOADS:

TOP	CH.	LL	=	23.3	PSF
		DL	=	3.0	PSF
BOT	CH.	LL	=	0.0	PSF
		DL	=	7.0	PSF
TOTAL	LOAD		=	33.3	PSF

SPACING = 24.0 IN. C/C

THIS TRUSS IS DESIGNED FOR RESIDENTIAL OR SMALL BUILDING REQUIREMENTS OF PART 9, NBCC 2010

THIS DESIGN COMPLIES WITH:
- PART 9 OF OBC 2012 , BCBC 2012 , ABC 2014
- CSA 086-09
- TPIC 2011

(55 % OF 27.2 P.S.F. G.S.L. PLUS 8.4 P.S.F. RAIN LOAD) EQUALS 23.3 P.S.F. SPECIFIED ROOF LIVE LOAD

ALLOWABLE DEFL.(LL)= L/360 (0.28")
CALCULATED VERT. DEFL.(LL) = L/ 999 (0.06")
ALLOWABLE DEFL.(TL)= L/360 (0.28")
CALCULATED VERT. DEFL.(TL) = L/ 873 (0.12")

CSI: TC=0.13 (2-3:1) , BC=0.49 (6-7:1) , WB=0.18 (3-6:1) , SSI=0.26 (5-6:1)

DOL LUMBER=1.00 NAIL=1.00 LS BEND=1.10 COMP=1.10 SHEAR=1.10 TENS= 1.10

COMPANION LIVE LOAD FACTOR = 0.50

TRUSS PLATE MANUFACTURER IS NOT RESPONSIBLE FOR QUALITY CONTROL IN THE TRUSS MANUFACTURING PLANT .

NAIL VALUES

PLATE	GRIP(DRY) (PSI) MAX	MIN	SHEAR (PLI) MAX	MIN	SECTION (PLI) MAX	MIN
MT20	618	354	1667	822	2284	1656

PLATE PLACEMENT TOL. = 0.250 inches

PLATE ROTATION TOL. = 5.0 Deg.

JSI GRIP= 0.83 (7) (INPUT = 0.90)
JSI METAL= 0.23 (7) (INPUT = 1.00)

LICENSED PROFESSIONAL ENGINEER
P. M. TREVISAN
100136551
March 16th, 2017
PROVINCE OF ONTARIO

RECEIVED
TOWN OF MILTON
MAR 29, 2017
17-5337
BUILDING DIVISION

KOTT

JOB NAME	TRUSS NAME	QUANTITY	PLY	JOB DESC.	DRWG NO.
PT0317-097	T47	3	1	TRUSS DESC. LECCO RIDGE-BLOCK 344	

KOTT , Stouffville, ON, CGC

Version 8.100 S Feb 9 2017 MiTek Industries, Inc. Thu Mar 16 11:58:12 2017 Page 1
ID:EvTixTQDI5yR1QLotZTBr_yE?HJ-vXzvqopiPHSuotiikeALvXIJ_AiSbyFtzIhdikzaNjf

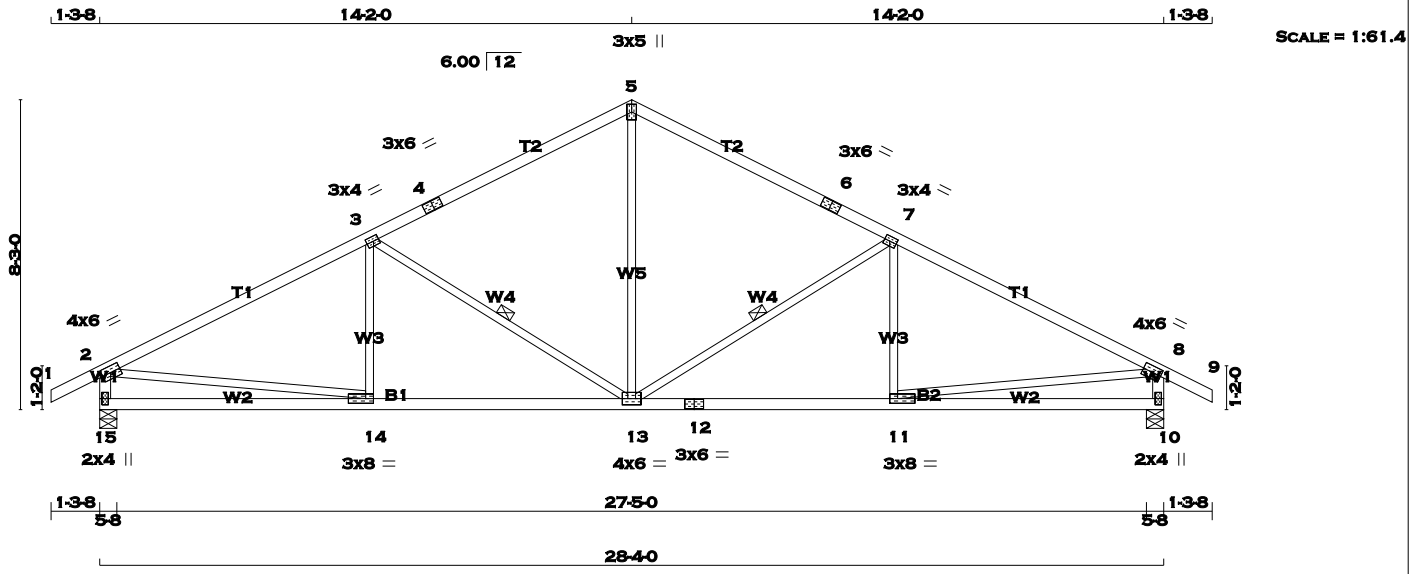

TOTAL WEIGHT = 3 X 111 = 332 lb

[M][F]

LUMBER

N. L. G. A. RULES

CHORDS	SIZE		LUMBER	DESCR.
1 - 4	2x4	DRY	No.2	SPF
4 - 5	2x4	DRY	No.2	SPF
5 - 6	2x4	DRY	No.2	SPF
6 - 9	2x4	DRY	No.2	SPF
15 - 2	2x4	DRY	No.2	SPF
10 - 8	2x4	DRY	No.2	SPF
15 - 12	2x4	DRY	No.2	SPF
12 - 10	2x4	DRY	No.2	SPF
ALL WEBS EXCEPT	2x3	DRY	No.2	SPF

DRY: SEASONED LUMBER.

PLATES (table is in inches)

JT	TYPE	PLATES	W	LEN	Y	X
2	TMVW-t	MT20	4.0	6.0	2.00	2.75
3	TMWW-t	MT20	3.0	4.0	1.50	1.75
4	TS-t	MT20	3.0	6.0		
5	TTW+p	MT20	3.0	5.0		
6	TS-t	MT20	3.0	6.0		
7	TMWW-t	MT20	3.0	4.0	1.50	1.75
8	TMVW-t	MT20	4.0	6.0	2.00	2.75
10	BMV1+p	MT20	2.0	4.0		
11	BMWW-t	MT20	3.0	8.0	1.50	2.50
12	BS-t	MT20	3.0	6.0		
13	BMWWW-t	MT20	4.0	6.0		
14	BMWW-t	MT20	3.0	8.0	1.50	2.50
15	BMV1+p	MT20	2.0	4.0		

A SIZE FOR SIZE SUBSTITUTION OF MITEK MII20 WITH TEE-LOK TL20 PLATES IS ALLOWED.

DIMENSIONS, SUPPORTS AND LOADINGS SPECIFIED BY FABRICATOR TO BE VERIFIED BY BUILDING DESIGNER

BEARINGS

JT	FACTORED GROSS REACTION VERT	HORZ	MAXIMUM FACTORED GROSS REACTION DOWN	HORZ	UPLIFT	INPUT BRG IN-SX	REQRD BRG IN-SX
15	1449	0	1449	0	0	5-8	5-8
10	1449	0	1449	0	0	5-8	5-8

UNFACTORED REACTIONS

JT	1ST LCASE COMBINED	MAX./MIN. COMPONENT REACTIONS SNOW	LIVE	PERM.LIVE	WIND	DEAD	SOIL
15	1014	723 / 0	0 / 0	0 / 0	0 / 0	291 / 0	0 / 0
10	1014	723 / 0	0 / 0	0 / 0	0 / 0	291 / 0	0 / 0

BEARING MATERIAL TO BE SPF NO.2 OR BETTER AT JOINT(S) 15, 10

BRACING

TOP CHORD TO BE SHEATHED OR MAX. PURLIN SPACING = 4.17 FT.
MAX. UNBRACED BOTTOM CHORD LENGTH = 10.00 FT. OR RIGID CEILING DIRECTLY APPLIED.

ALL PITCH BREAKS AND PERIMETER CORNER JOINTS MUST BE LATERALLY RESTRAINED.

1 - 2x3 SPF No.2 LATERAL BRACE(S) AT 1/ 2 LENGTH OF 7-13, 3-13. DBS = 20-0-0 . CBF = 79 LBS.

DBS = DIAGONAL BRACE SPACING (MAX). CBF = CUMULATIVE BRACING FORCE. FASTEN LATERAL BRACE(S) USING (0.122"X3") SPIRAL NAILS : 1 NAIL FOR 2x3 BRACE(S), 2 FOR 1x4, 2x4, 2x5, 3 FOR 2x6, 4 FOR 2x8, 5 FOR 2x10, AND 6 FOR 2x12.

END VERTICAL(S) MUST BE SHEATHED OR HAVE BRACES AS INDICATED IN THE MAX. UNBRACED LENGTH COLUMN OF THE TABLE BELOW

LOADING

TOTAL LOAD CASES: (4)

CHORDS

MEMB. FR-TO	MAX. FACTORED FORCE (LBS)	FACTORED VERT. LOAD (PLF) FROM	TO	LC1 MAX CSI (LC)	MAX. UNBRAC LENGTH
1- 2	0 / 23	-77.4	-77.4	0.10 (1)	10.00
2- 3	-1918 / 0	-77.4	-77.4	0.62 (1)	4.17
3- 4	-1379 / 0	-77.4	-77.4	0.55 (1)	4.84
4- 5	-1379 / 0	-77.4	-77.4	0.55 (1)	4.84
5- 6	-1379 / 0	-77.4	-77.4	0.55 (1)	4.84
6- 7	-1379 / 0	-77.4	-77.4	0.55 (1)	4.84
7- 8	-1918 / 0	-77.4	-77.4	0.62 (1)	4.17
8- 9	0 / 23	-77.4	-77.4	0.10 (1)	10.00
15- 2	-1396 / 0	0.0	0.0	0.14 (1)	6.89
10- 8	-1396 / 0	0.0	0.0	0.14 (1)	6.89
15-14	0 / 0	-17.5	-17.5	0.21 (4)	10.00
14-13	0 / 1741	-17.5	-17.5	0.38 (1)	10.00
13-12	0 / 1741	-17.5	-17.5	0.38 (1)	10.00
12-11	0 / 1741	-17.5	-17.5	0.38 (1)	10.00
11-10	0 / 0	-17.5	-17.5	0.21 (4)	10.00

WEBS

MEMB. FR-TO	MAX. FACTORED FORCE (LBS)	MAX CSI (LC)
13- 5	0 / 801	0.18 (1)
13- 7	-633 / 0	0.30 (1)
11- 7	-72 / 96	0.03 (4)
3-13	-633 / 0	0.30 (1)
14- 3	-72 / 96	0.03 (4)
2-14	0 / 1753	0.39 (1)
11- 8	0 / 1753	0.39 (1)

DESIGN CRITERIA

SPECIFIED LOADS:

TOP	CH.	LL	=	23.3	PSF
		DL	=	3.0	PSF
BOT	CH.	LL	=	0.0	PSF
		DL	=	7.0	PSF
TOTAL	LOAD		=	33.3	PSF

SPACING = 24.0 IN. C/C

THIS TRUSS IS DESIGNED FOR RESIDENTIAL OR SMALL BUILDING REQUIREMENTS OF PART 9, NBCC 2010

THIS DESIGN COMPLIES WITH:
- PART 9 OF OBC 2012 , BCBC 2012 , ABC 2014
- CSA 086-09
- TPIC 2011

(55 % OF 27.2 P.S.F. G.S.L. PLUS 8.4 P.S.F. RAIN LOAD) EQUALS 23.3 P.S.F. SPECIFIED ROOF LIVE LOAD

ALLOWABLE DEFL.(LL)= L/360 (0.94")
CALCULATED VERT. DEFL.(LL) = L/ 999 (0.09")
ALLOWABLE DEFL.(TL)= L/360 (0.94")
CALCULATED VERT. DEFL.(TL) = L/ 999 (0.17")

CSI: TC=0.62 (2-3:1) , BC=0.38 (13-14:1) , WB=0.39 (2-14:1) , SSI=0.24 (2-3:1)

DOL LUMBER=1.00 NAIL=1.00 LS BEND=1.10 COMP=1.10 SHEAR=1.10 TENS= 1.10

COMPANION LIVE LOAD FACTOR = 0.50

TRUSS PLATE MANUFACTURER IS NOT RESPONSIBLE FOR QUALITY CONTROL IN THE TRUSS MANUFACTURING PLANT .

NAIL VALUES

PLATE	GRIP(DRY) (PSI) MAX	MIN	SHEAR (PLI) MAX	MIN	SECTION (PLI) MAX	MIN
MT20	618	354	1667	822	2284	1656

PLATE PLACEMENT TOL. = 0.250 inches

PLATE ROTATION TOL. = 5.0 Deg.

JSI GRIP= 0.90 (11) (INPUT = 0.90)
JSI METAL= 0.52 (8) (INPUT = 1.00)

LICENSED PROFESSIONAL ENGINEER
P. M. TREVISAN
100136551
March 16th, 2017
PROVINCE OF ONTARIO

RECEIVED
TOWN OF MILTON
MAR 29, 2017
17-5337
BUILDING DIVISION

KOTT

JOB NAME	TRUSS NAME	QUANTITY	PLY	JOB DESC.	DRWG NO.
PT0317-097	**T48**	**1**	**1**	TRUSS DESC. LECCO RIDGE-BLOCK 344	

KOTT , Stouffville, ON, CGC

Version 8.100 S Feb 9 2017 MiTek Industries, Inc. Thu Mar 16 11:58:13 2017 Page 1
ID:EvTixTQDI5yR1QLotZTBr_yE?HJ-OjWI27pLAbalQ1HvILhaRlqVva2YKJt1CyQAEBzaNje

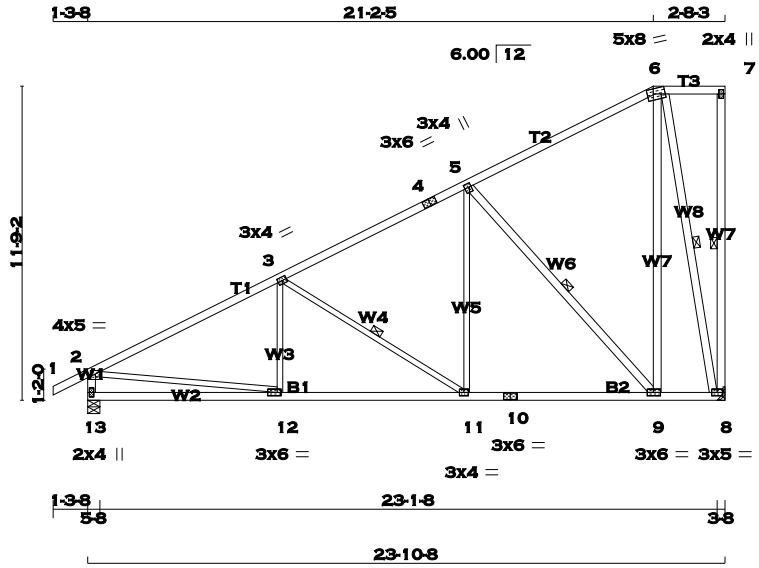

SCALE = 1:86.3

TOTAL WEIGHT = 132 lb
[M][F]

LUMBER
N. L. G. A. RULES

CHORDS	SIZE		LUMBER	DESCR.
1 - 4	2x4	DRY	No.2	SPF
4 - 6	2x4	DRY	No.2	SPF
6 - 7	2x4	DRY	No.2	SPF
8 - 7	2x4	DRY	No.2	SPF
13 - 2	2x4	DRY	No.2	SPF
13 - 10	2x4	DRY	No.2	SPF
10 - 8	2x4	DRY	No.2	SPF
ALL WEBS	2x3	DRY	No.2	SPF
EXCEPT				
5 - 9	2x4	DRY	No.2	SPF
9 - 6	2x4	DRY	No.2	SPF
6 - 8	2x4	DRY	No.2	SPF

DRY: SEASONED LUMBER.

PLATES (table is in inches)

JT	TYPE	PLATES	W	LEN	Y	X
2	TMVW-p	MT20	4.0	5.0	1.50	2.25
3	TMWW-t	MT20	3.0	4.0	1.50	1.75
4	TS-t	MT20	3.0	6.0		
5	TMWW+t	MT20	3.0	4.0	1.75	0.75
6	TTWW-m	MT20	5.0	8.0	2.25	2.75
7	TMV+p	MT20	2.0	4.0		
8	BMVW1-t	MT20	3.0	5.0		
9	BMWW-t	MT20	3.0	6.0	1.50	2.75
10	BS-t	MT20	3.0	6.0		
11	BMWW-t	MT20	3.0	4.0		
12	BMWW-t	MT20	3.0	6.0	1.50	1.75
13	BMV1+p	MT20	2.0	4.0		

A SIZE FOR SIZE SUBSTITUTION OF MITEK MII20 WITH TEE-LOK TL20 PLATES IS ALLOWED.

DIMENSIONS, SUPPORTS AND LOADINGS SPECIFIED BY FABRICATOR TO BE VERIFIED BY BUILDING DESIGNER

BEARINGS

JT	FACTORED GROSS REACTION VERT	HORZ	MAXIMUM FACTORED GROSS REACTION DOWN	HORZ	UPLIFT	INPUT BRG IN-SX	REQRD BRG IN-SX
8	1132	0	1132	0	0	HANGER BY OTHERS MIN. SEAT SIZE: 3-8	
13	1237	0	1237	0	0	5-8	5-8

UNFACTORED REACTIONS

JT	1ST LCASE COMBINED	SNOW	MAX./MIN. COMPONENT REACTIONS LIVE	PERM.LIVE	WIND	DEAD	SOIL
8	795	556 / 0	0 / 0	0 / 0	0 / 0	239 / 0	0 / 0
13	866	619 / 0	0 / 0	0 / 0	0 / 0	247 / 0	0 / 0

BEARING MATERIAL TO BE SPF NO.2 OR BETTER AT JOINT(S) 13

BRACING
TOP CHORD TO BE SHEATHED OR MAX. PURLIN SPACING = 4.69 FT.
MAX. UNBRACED BOTTOM CHORD LENGTH = 10.00 FT. OR RIGID CEILING DIRECTLY APPLIED.

ALL PITCH BREAKS AND PERIMETER CORNER JOINTS MUST BE LATERALLY RESTRAINED.

1 - 2x3 SPF No.2 LATERAL BRACE(S) AT 1/ 2 LENGTH OF 7-8, 3-11. DBS = 20-0-0 . CBF = 75 LBS.
1 - 2x3 SPF No.2 LATERAL BRACE(S) AT 1/ 2 LENGTH OF 5-9, 6-8. DBS = 14-0-0 . CBF = 92 LBS.

DBS = DIAGONAL BRACE SPACING (MAX). CBF = CUMULATIVE BRACING FORCE. FASTEN LATERAL BRACE(S) USING (0.122"X3") SPIRAL NAILS : 1 NAIL FOR 2x3 BRACE(S), 2 FOR 1x4, 2x4, 2x5, 3 FOR 2x6, 4 FOR 2x8, 5 FOR 2x10, AND 6 FOR 2x12.

END VERTICAL(S) MUST BE SHEATHED OR HAVE BRACES AS INDICATED IN THE MAX. UNBRACED LENGTH COLUMN OF THE TABLE BELOW

LOADING
TOTAL LOAD CASES: (4)

CHORDS

MEMB. FR-TO	MAX. FACTORED FORCE (LBS)	FACTORED VERT. LOAD LC1 (PLF) FROM	TO	MAX CSI (LC)	MAX. UNBRAC LENGTH
1- 2	0 / 23	-77.4	-77.4	0.10 (1)	10.00
2- 3	-1519 / 0	-77.4	-77.4	0.55 (1)	4.69
3- 4	-979 / 0	-77.4	-77.4	0.43 (1)	5.74
4- 5	-979 / 0	-77.4	-77.4	0.43 (1)	5.74
5- 6	-280 / 0	-77.4	-77.4	0.45 (1)	6.25
6- 7	0 / 0	-77.4	-77.4	0.09 (1)	10.00
8- 7	-104 / 0	0.0	0.0	0.08 (1)	6.25
13- 2	-1185 / 0	0.0	0.0	0.12 (1)	7.34
13-12	0 / 0	-17.5	-17.5	0.21 (4)	10.00
12-11	0 / 1380	-17.5	-17.5	0.33 (1)	10.00
11-10	0 / 875	-17.5	-17.5	0.24 (1)	10.00
10- 9	0 / 875	-17.5	-17.5	0.24 (1)	10.00
9- 8	0 / 240	-17.5	-17.5	0.15 (4)	10.00

WEBS

MEMB. FR-TO	MAX. FACTORED FORCE (LBS)	MAX CSI (LC)
12- 3	-29 / 107	0.04 (4)
3-11	-599 / 0	0.28 (1)
11- 5	0 / 449	0.10 (1)
5- 9	-967 / 0	0.59 (1)
9- 6	0 / 817	0.13 (1)
6- 8	-1051 / 0	0.82 (1)
2-12	0 / 1390	0.31 (1)

DESIGN CRITERIA

SPECIFIED LOADS:

TOP	CH.	LL	=	23.3	PSF
		DL	=	3.0	PSF
BOT	CH.	LL	=	0.0	PSF
		DL	=	7.0	PSF
TOTAL	LOAD		=	33.3	PSF

SPACING = 24.0 IN. C/C

LOADING IN FLAT SECTION BASED ON A SLOPE OF 6.00/12

THIS TRUSS IS DESIGNED FOR RESIDENTIAL OR SMALL BUILDING REQUIREMENTS OF PART 9, NBCC 2010

THIS DESIGN COMPLIES WITH:
- PART 9 OF OBC 2012 , BCBC 2012 , ABC 2014
- CSA 086-09
- TPIC 2011

(55 % OF 27.2 P.S.F. G.S.L. PLUS 8.4 P.S.F. RAIN LOAD) EQUALS 23.3 P.S.F. SPECIFIED ROOF LIVE LOAD

ALLOWABLE DEFL.(LL)= L/360 (0.80")
CALCULATED VERT. DEFL.(LL) = L/ 999 (0.06")
ALLOWABLE DEFL.(TL)= L/360 (0.80")
CALCULATED VERT. DEFL.(TL) = L/ 999 (0.12")

CSI: TC=0.55 (2-3:1) , BC=0.33 (11-12:1) , WB=0.82 (6-8:1) , SSI=0.23 (2-3:1)

DOL LUMBER=1.00 NAIL=1.00 LS BEND=1.10 COMP=1.10 SHEAR=1.10 TENS= 1.10

COMPANION LIVE LOAD FACTOR = 0.50

TRUSS PLATE MANUFACTURER IS NOT RESPONSIBLE FOR QUALITY CONTROL IN THE TRUSS MANUFACTURING PLANT .

NAIL VALUES

PLATE	GRIP(DRY) (PSI) MAX	MIN	SHEAR (PLI) MAX	MIN	SECTION (PLI) MAX	MIN
MT20	618	354	1667	822	2284	1656

PLATE PLACEMENT TOL. = 0.250 inches

PLATE ROTATION TOL. = 5.0 Deg.

JSI GRIP= 0.90 (12) (INPUT = 0.90)
JSI METAL= 0.40 (2) (INPUT = 1.00)

LICENSED PROFESSIONAL ENGINEER
P. M. TREVISAN
100136551
March 16th, 2017
PROVINCE OF ONTARIO

RECEIVED
TOWN OF MILTON
MAR 29, 2017
17-5337
BUILDING DIVISION

KOTT

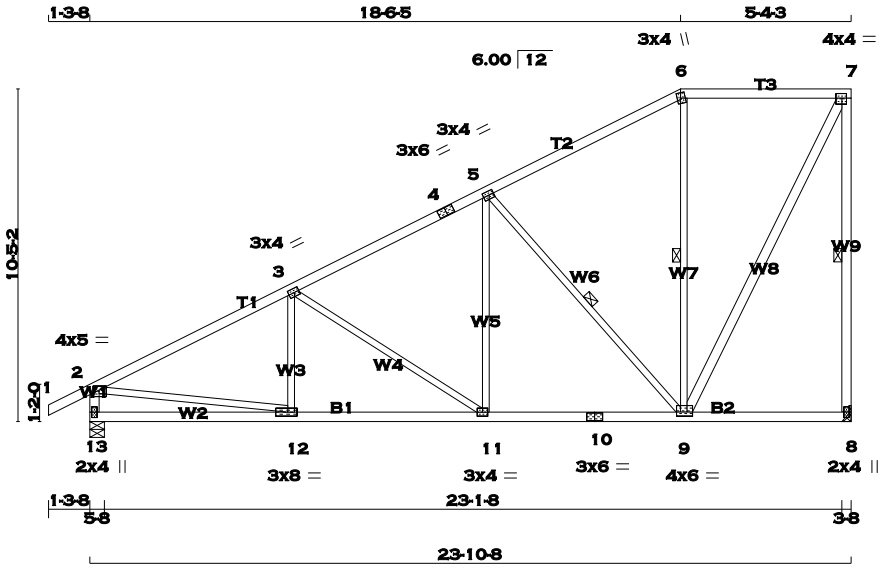

SCALE = 1:72.2

TOTAL WEIGHT = 118 lb

[M][F]

LUMBER

N. L. G. A. RULES

CHORDS	SIZE		LUMBER	DESCR.
1 - 4	2x4	DRY	No.2	SPF
4 - 6	2x4	DRY	No.2	SPF
6 - 7	2x4	DRY	No.2	SPF
8 - 7	2x4	DRY	No.2	SPF
13 - 2	2x4	DRY	No.2	SPF
13 - 10	2x4	DRY	No.2	SPF
10 - 8	2x4	DRY	No.2	SPF
ALL WEBS EXCEPT	2x3	DRY	No.2	SPF
9 - 7	2x4	DRY	No.2	SPF

DRY: SEASONED LUMBER.

PLATES (table is in inches)

JT	TYPE	PLATES	W	LEN	Y	X
2	TMVW-p	MT20	4.0	5.0	1.50	2.25
3	TMWW-t	MT20	3.0	4.0	1.50	1.75
4	TS-t	MT20	3.0	6.0		
5	TMWW-t	MT20	3.0	4.0	1.50	1.75
6	TTW+m	MT20	3.0	4.0	2.00	1.25
7	TMVW-t	MT20	4.0	4.0	1.75	1.75
8	BMV1+p	MT20	2.0	4.0		
9	BMWWW-t	MT20	4.0	6.0	1.50	1.50
10	BS-t	MT20	3.0	6.0		
11	BMWW-t	MT20	3.0	4.0		
12	BMWW-t	MT20	3.0	8.0	1.50	3.50
13	BMV1+p	MT20	2.0	4.0		

A SIZE FOR SIZE SUBSTITUTION OF MITEK MII20 WITH TEE-LOK TL20 PLATES IS ALLOWED.

DIMENSIONS, SUPPORTS AND LOADINGS SPECIFIED BY FABRICATOR TO BE VERIFIED BY BUILDING DESIGNER

BEARINGS

JT	FACTORED GROSS REACTION VERT	HORZ	MAXIMUM FACTORED GROSS REACTION DOWN	HORZ	UPLIFT	INPUT BRG IN-SX	REQRD BRG IN-SX
8	1132	0	1132	0	0	HANGER BY OTHERS MIN. SEAT SIZE: 3-8	
13	1237	0	1237	0	0	5-8	5-8

UNFACTORED REACTIONS

JT	1ST LCASE COMBINED	MAX./MIN. COMPONENT REACTIONS SNOW	LIVE	PERM.LIVE	WIND	DEAD	SOIL
8	795	556 / 0	0 / 0	0 / 0	0 / 0	239 / 0	0 / 0
13	866	619 / 0	0 / 0	0 / 0	0 / 0	247 / 0	0 / 0

BEARING MATERIAL TO BE SPF NO.2 OR BETTER AT JOINT(S) 13

BRACING

TOP CHORD TO BE SHEATHED OR MAX. PURLIN SPACING = 4.86 FT.
MAX. UNBRACED BOTTOM CHORD LENGTH = 10.00 FT. OR RIGID CEILING DIRECTLY APPLIED.

ALL PITCH BREAKS AND PERIMETER CORNER JOINTS MUST BE LATERALLY RESTRAINED.

1 - 2x3 SPF No.2 LATERAL BRACE(S) AT 1/ 2 LENGTH OF 7-8. DBS = 12-0-0 . CBF = 82 LBS.
1 - 2x3 SPF No.2 LATERAL BRACE(S) AT 1/ 2 LENGTH OF 5-9. DBS = 18-0-0 . CBF = 92 LBS.
1 - 2x3 SPF No.2 LATERAL BRACE(S) AT 1/ 2 LENGTH OF 6-9. DBS = 20-0-0 . CBF = 21 LBS.

DBS = DIAGONAL BRACE SPACING (MAX). CBF = CUMULATIVE BRACING FORCE. FASTEN LATERAL BRACE(S) USING (0.122"X3") SPIRAL NAILS : 1 NAIL FOR 2x3 BRACE(S), 2 FOR 1x4, 2x4, 2x5, 3 FOR 2x6, 4 FOR 2x8, 5 FOR 2x10, AND 6 FOR 2x12.

END VERTICAL(S) MUST BE SHEATHED OR HAVE BRACES AS INDICATED IN THE MAX. UNBRACED LENGTH COLUMN OF THE TABLE BELOW

LOADING

TOTAL LOAD CASES: (4)

CHORDS

MEMB. FR-TO	MAX. FACTORED FORCE (LBS)	FACTORED VERT. LOAD LC1 (PLF) FROM	TO	MAX CSI (LC)	MAX. UNBRAC LENGTH
1- 2	0 / 23	-77.4	-77.4	0.10 (1)	10.00
2- 3	-1540 / 0	-77.4	-77.4	0.41 (1)	4.86
3- 4	-1120 / 0	-77.4	-77.4	0.33 (1)	5.60
4- 5	-1120 / 0	-77.4	-77.4	0.33 (1)	5.60
5- 6	-539 / 0	-77.4	-77.4	0.34 (1)	6.25
6- 7	-461 / 0	-77.4	-77.4	0.29 (1)	6.25
8- 7	-1097 / 0	0.0	0.0	0.59 (1)	6.04
13- 2	-1191 / 0	0.0	0.0	0.12 (1)	7.32
13-12	0 / 0	-17.5	-17.5	0.16 (4)	10.00
12-11	0 / 1396	-17.5	-17.5	0.30 (1)	10.00
11-10	0 / 1002	-17.5	-17.5	0.24 (1)	10.00
10- 9	0 / 1002	-17.5	-17.5	0.24 (1)	10.00
9- 8	0 / 0	-17.5	-17.5	0.14 (4)	10.00

WEBS

MEMB. FR-TO	MAX. FACTORED FORCE (LBS)	MAX CSI (LC)
12- 3	-71 / 81	0.03 (4)
3-11	-471 / 0	0.49 (1)
11- 5	0 / 364	0.08 (1)
5- 9	-817 / 0	0.51 (1)
9- 6	-165 / 27	0.13 (1)
9- 7	0 / 1003	0.16 (1)
2-12	0 / 1408	0.32 (1)

DESIGN CRITERIA

SPECIFIED LOADS:

TOP CH.	LL	=	23.3	PSF
	DL	=	3.0	PSF
BOT CH.	LL	=	0.0	PSF
	DL	=	7.0	PSF
TOTAL LOAD		=	33.3	PSF

SPACING = 24.0 IN. C/C

LOADING IN FLAT SECTION BASED ON A SLOPE OF 6.00/12

THIS TRUSS IS DESIGNED FOR RESIDENTIAL OR SMALL BUILDING REQUIREMENTS OF PART 9, NBCC 2010

THIS DESIGN COMPLIES WITH:
- PART 9 OF OBC 2012 , BCBC 2012 , ABC 2014
- CSA 086-09
- TPIC 2011

(55 % OF 27.2 P.S.F. G.S.L. PLUS 8.4 P.S.F. RAIN LOAD) EQUALS 23.3 P.S.F. SPECIFIED ROOF LIVE LOAD

ALLOWABLE DEFL.(LL)= L/360 (0.80")
CALCULATED VERT. DEFL.(LL) = L/ 999 (0.06")
ALLOWABLE DEFL.(TL)= L/360 (0.80")
CALCULATED VERT. DEFL.(TL) = L/ 999 (0.11")

CSI: TC=0.59 (7-8:1) , BC=0.30 (11-12:1) , WB=0.51 (5-9:1) , SSI=0.20 (2-3:1)

DOL LUMBER=1.00 NAIL=1.00 LS BEND=1.10 COMP=1.10 SHEAR=1.10 TENS= 1.10

COMPANION LIVE LOAD FACTOR = 0.50

TRUSS PLATE MANUFACTURER IS NOT RESPONSIBLE FOR QUALITY CONTROL IN THE TRUSS MANUFACTURING PLANT .

NAIL VALUES

PLATE	GRIP(DRY) (PSI) MAX	MIN	SHEAR (PLI) MAX	MIN	SECTION (PLI) MAX	MIN
MT20	618	354	1667	822	2284	1656

PLATE PLACEMENT TOL. = 0.250 inches

PLATE ROTATION TOL. = 5.0 Deg.

JSI GRIP= 0.90 (12) (INPUT = 0.90)
JSI METAL= 0.40 (2) (INPUT = 1.00)

LICENSED PROFESSIONAL ENGINEER
P. M. TREVISAN
100136551
March 16th, 2017
PROVINCE OF ONTARIO

RECEIVED
TOWN OF MILTON
MAR 29, 2017
17-5337
BUILDING DIVISION

KOTT

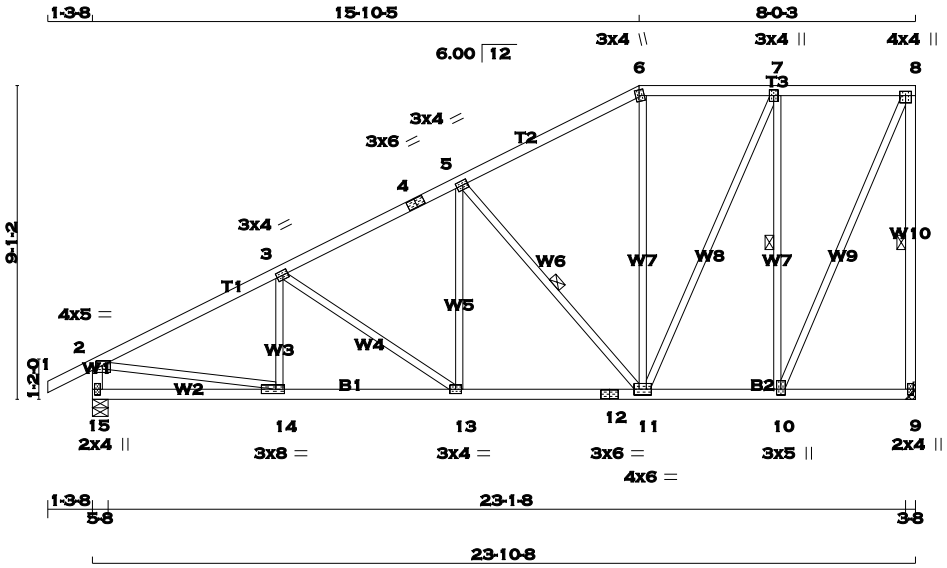

TOTAL WEIGHT = 121 lb

[M][F]

LUMBER

N. L. G. A. RULES

CHORDS	SIZE		LUMBER	DESCR.
1 - 4	2x4	DRY	No.2	SPF
4 - 6	2x4	DRY	No.2	SPF
6 - 8	2x4	DRY	No.2	SPF
9 - 8	2x4	DRY	No.2	SPF
15 - 2	2x4	DRY	No.2	SPF
15 - 12	2x4	DRY	No.2	SPF
12 - 9	2x4	DRY	No.2	SPF
ALL WEBS EXCEPT	2x3	DRY	No.2	SPF

DRY: SEASONED LUMBER.

PLATES (table is in inches)

JT	TYPE	PLATES	W	LEN	Y	X
2	TMVW-p	MT20	4.0	5.0	1.50	2.25
3	TMWW-t	MT20	3.0	4.0	1.50	1.75
4	TS-t	MT20	3.0	6.0		
5	TMWW-t	MT20	3.0	4.0	1.50	1.75
6	TTW+m	MT20	3.0	4.0	2.00	1.25
7	TMWW+t	MT20	3.0	4.0		
8	TMVW+p	MT20	4.0	4.0	1.50	2.00
9	BMV1+p	MT20	2.0	4.0		
10	BMWW+t	MT20	3.0	5.0	2.00	1.50
11	BMWWW-t	MT20	4.0	6.0		
12	BS-t	MT20	3.0	6.0		
13	BMWW-t	MT20	3.0	4.0		
14	BMWW-t	MT20	3.0	8.0	1.50	3.00
15	BMV1+p	MT20	2.0	4.0		

A SIZE FOR SIZE SUBSTITUTION OF MITEK MII20 WITH TEE-LOK TL20 PLATES IS ALLOWED.

DIMENSIONS, SUPPORTS AND LOADINGS SPECIFIED BY FABRICATOR TO BE VERIFIED BY BUILDING DESIGNER

BEARINGS

JT	FACTORED GROSS REACTION VERT	HORZ	MAXIMUM FACTORED GROSS REACTION DOWN	HORZ	UPLIFT	INPUT BRG	REQRD BRG
9	1132	0	1132	0	0	IN-SX	IN-SX
						HANGER BY OTHERS	
						MIN. SEAT SIZE: 3-8	
15	1237	0	1237	0	0	5-8	5-8

UNFACTORED REACTIONS

JT	1ST LCASE COMBINED	SNOW	MAX./MIN. COMPONENT REACTIONS LIVE	PERM.LIVE	WIND	DEAD	SOIL
9	795	556 / 0	0 / 0	0 / 0	0 / 0	239 / 0	0 / 0
15	866	619 / 0	0 / 0	0 / 0	0 / 0	247 / 0	0 / 0

BEARING MATERIAL TO BE SPF NO.2 OR BETTER AT JOINT(S) 15

BRACING

TOP CHORD TO BE SHEATHED OR MAX. PURLIN SPACING = 5.00 FT.
MAX. UNBRACED BOTTOM CHORD LENGTH = 10.00 FT. OR RIGID CEILING DIRECTLY APPLIED.

ALL PITCH BREAKS AND PERIMETER CORNER JOINTS MUST BE LATERALLY RESTRAINED.

1 - 2x3 SPF No.2 LATERAL BRACE(S) AT 1/ 2 LENGTH OF 8-9. DBS = 12-0-0 . CBF = 83 LBS.
1 - 2x3 SPF No.2 LATERAL BRACE(S) AT 1/ 2 LENGTH OF 5-11. DBS = 20-0-0 . CBF = 84 LBS.
1 - 2x3 SPF No.2 LATERAL BRACE(S) AT 1/ 2 LENGTH OF 7-10. DBS = 16-0-0 . CBF = 91 LBS.

DBS = DIAGONAL BRACE SPACING (MAX). CBF = CUMULATIVE BRACING FORCE. FASTEN LATERAL BRACE(S) USING (0.122"X3") SPIRAL NAILS : 1 NAIL FOR 2x3 BRACE(S), 2 FOR 1x4, 2x4, 2x5, 3 FOR 2x6, 4 FOR 2x8, 5 FOR 2x10, AND 6 FOR 2x12.

END VERTICAL(S) MUST BE SHEATHED OR HAVE BRACES AS INDICATED IN THE MAX. UNBRACED LENGTH COLUMN OF THE TABLE BELOW

LOADING

TOTAL LOAD CASES: (4)

CHORDS

MEMB. FR-TO	MAX. FACTORED FORCE (LBS)	FACTORED VERT. LOAD LC1 (PLF) FROM	TO	MAX CSI (LC)	MAX. UNBRAC LENGTH
1- 2	0 / 23	-77.4	-77.4	0.10 (1)	10.00
2- 3	-1545 / 0	-77.4	-77.4	0.30 (1)	5.00
3- 4	-1253 / 0	-77.4	-77.4	0.24 (1)	5.49
4- 5	-1253 / 0	-77.4	-77.4	0.24 (1)	5.49
5- 6	-781 / 0	-77.4	-77.4	0.25 (1)	6.25
6- 7	-682 / 0	-77.4	-77.4	0.15 (1)	6.25
7- 8	-448 / 0	-77.4	-77.4	0.15 (1)	6.25
9- 8	-1103 / 0	0.0	0.0	0.42 (1)	6.03
15- 2	-1196 / 0	0.0	0.0	0.12 (1)	7.31
15-14	0 / 0	-17.5	-17.5	0.11 (4)	10.00
14-13	0 / 1397	-17.5	-17.5	0.28 (1)	10.00
13-12	0 / 1120	-17.5	-17.5	0.23 (1)	10.00
12-11	0 / 1120	-17.5	-17.5	0.23 (1)	10.00
11-10	0 / 448	-17.5	-17.5	0.11 (4)	10.00
10- 9	0 / 0	-17.5	-17.5	0.06 (4)	10.00

WEBS

MEMB. FR-TO	MAX. FACTORED FORCE (LBS)	MAX CSI (LC)
14- 3	-122 / 51	0.03 (1)
3-13	-336 / 0	0.24 (1)
13- 5	0 / 285	0.06 (1)
5-11	-672 / 0	0.30 (1)
11- 6	0 / 71	0.02 (4)
11- 7	0 / 579	0.13 (1)
10- 7	-909 / 0	0.49 (1)
10- 8	0 / 1081	0.24 (1)
2-14	0 / 1415	0.32 (1)

DESIGN CRITERIA

SPECIFIED LOADS:

TOP	CH.	LL	=	23.3	PSF
		DL	=	3.0	PSF
BOT	CH.	LL	=	0.0	PSF
		DL	=	7.0	PSF
TOTAL	LOAD		=	33.3	PSF

SPACING = 24.0 IN. C/C

LOADING IN FLAT SECTION BASED ON A SLOPE OF 6.00/12

THIS TRUSS IS DESIGNED FOR RESIDENTIAL OR SMALL BUILDING REQUIREMENTS OF PART 9, NBCC 2010

THIS DESIGN COMPLIES WITH:
- PART 9 OF OBC 2012 , BCBC 2012 , ABC 2014
- CSA 086-09
- TPIC 2011

(55 % OF 27.2 P.S.F. G.S.L. PLUS 8.4 P.S.F. RAIN LOAD) EQUALS 23.3 P.S.F. SPECIFIED ROOF LIVE LOAD

ALLOWABLE DEFL.(LL)= L/360 (0.80")
CALCULATED VERT. DEFL.(LL) = L/ 999 (0.06")
ALLOWABLE DEFL.(TL)= L/360 (0.80")
CALCULATED VERT. DEFL.(TL) = L/ 999 (0.11")

CSI: TC=0.42 (8-9:1) , BC=0.28 (13-14:1) , WB=0.49 (7-10:1) , SSI=0.17 (2-3:1)

DOL LUMBER=1.00 NAIL=1.00 LS BEND=1.10 COMP=1.10 SHEAR=1.10 TENS= 1.10

COMPANION LIVE LOAD FACTOR = 0.50

TRUSS PLATE MANUFACTURER IS NOT RESPONSIBLE FOR QUALITY CONTROL IN THE TRUSS MANUFACTURING PLANT .

NAIL VALUES

PLATE	GRIP(DRY) (PSI) MAX	MIN	SHEAR (PLI) MAX	MIN	SECTION (PLI) MAX	MIN
MT20	618	354	1667	822	2284	1656

PLATE PLACEMENT TOL. = 0.250 inches

PLATE ROTATION TOL. = 5.0 Deg.

JSI GRIP= 0.89 (10) (INPUT = 0.90)
JSI METAL= 0.40 (2) (INPUT = 1.00)

LICENSED PROFESSIONAL ENGINEER
P. M. TREVISAN
100136551
March 16th, 2017
PROVINCE OF ONTARIO

RECEIVED
TOWN OF MILTON
MAR 29, 2017
17-5337
BUILDING DIVISION

KOTT

JOB NAME	TRUSS NAME	QUANTITY	PLY	JOB DESC.	DRWG NO.
PT0317-097	**T51**	**1**	**1**	TRUSS DESC. LECCO RIDGE-BLOCK 344	

KOTT , Stouffville, ON, CGC

Version 8.100 S Feb 9 2017 MiTek Industries, Inc. Thu Mar 16 11:58:15 2017 Page 1
ID:EvTixTQDI5yR1QLotZTBr_yE?HJ-K5e2SprbiCqTfLQHQmk2WAwrANj6oBXJgGvHJ3zaNjc

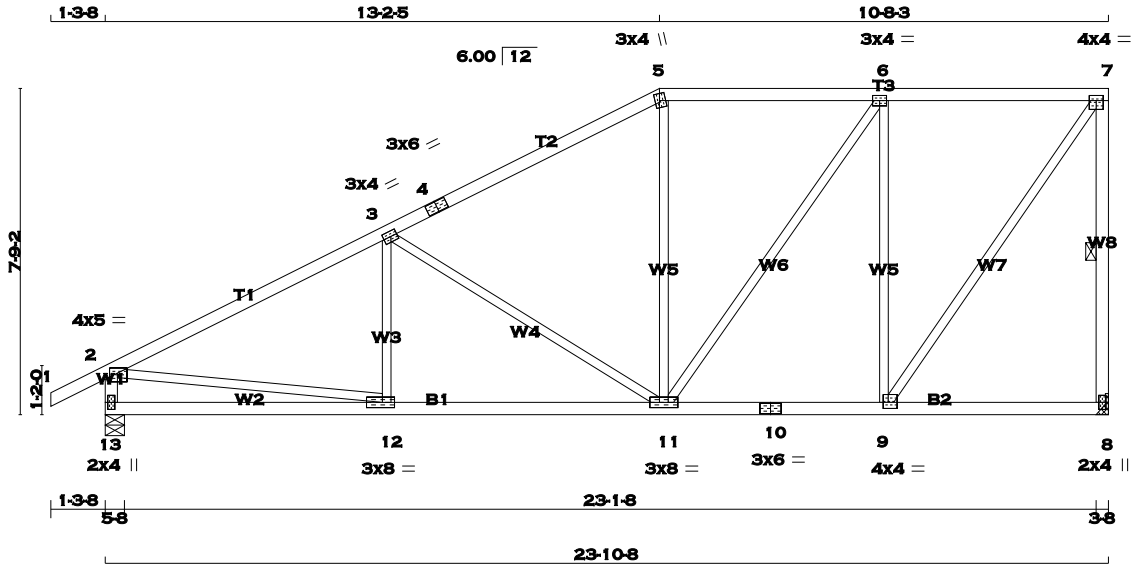

TOTAL WEIGHT = 107 lb
[M][F]

LUMBER
N. L. G. A. RULES

CHORDS	SIZE		LUMBER	DESCR.
1 - 4	2x4	DRY	No.2	SPF
4 - 5	2x4	DRY	No.2	SPF
5 - 7	2x4	DRY	No.2	SPF
8 - 7	2x4	DRY	No.2	SPF
13 - 2	2x4	DRY	No.2	SPF
13 - 10	2x4	DRY	No.2	SPF
10 - 8	2x4	DRY	No.2	SPF
ALL WEBS EXCEPT	2x3	DRY	No.2	SPF

DRY: SEASONED LUMBER.

PLATES (table is in inches)

JT	TYPE	PLATES	W	LEN	Y	X
2	TMVW-p	MT20	4.0	5.0	1.50	2.25
3	TMWW-t	MT20	3.0	4.0	1.50	1.75
4	TS-t	MT20	3.0	6.0		
5	TTW+m	MT20	3.0	4.0	2.00	1.25
6	TMWW-t	MT20	3.0	4.0		
7	TMVW-t	MT20	4.0	4.0	1.50	2.00
8	BMV1+p	MT20	2.0	4.0		
9	BMWW-t	MT20	4.0	4.0	1.75	1.50
10	BS-t	MT20	3.0	6.0		
11	BMWWW-t	MT20	3.0	8.0		
12	BMWW-t	MT20	3.0	8.0	1.50	3.50
13	BMV1+p	MT20	2.0	4.0		

A SIZE FOR SIZE SUBSTITUTION OF MITEK MII20 WITH TEE-LOK TL20 PLATES IS ALLOWED.

DIMENSIONS, SUPPORTS AND LOADINGS SPECIFIED BY FABRICATOR TO BE VERIFIED BY BUILDING DESIGNER

BEARINGS

JT	FACTORED GROSS REACTION VERT	HORZ	UPLIFT	MAXIMUM FACTORED GROSS REACTION DOWN	HORZ	UPLIFT	INPUT BRG IN-SX	REQRD BRG IN-SX
8	1132	0		1132	0	0	HANGER BY OTHERS MIN. SEAT SIZE: 3-8	
13	1237	0		1237	0	0	5-8	5-8

UNFACTORED REACTIONS

JT	1ST LCASE COMBINED	MAX./MIN. COMPONENT REACTIONS SNOW	LIVE	PERM.LIVE	WIND	DEAD	SOIL
8	795	556 / 0	0 / 0	0 / 0	0 / 0	239 / 0	0 / 0
13	866	619 / 0	0 / 0	0 / 0	0 / 0	247 / 0	0 / 0

BEARING MATERIAL TO BE SPF NO.2 OR BETTER AT JOINT(S) 13

BRACING
TOP CHORD TO BE SHEATHED OR MAX. PURLIN SPACING = 4.72 FT.
MAX. UNBRACED BOTTOM CHORD LENGTH = 10.00 FT. OR RIGID CEILING DIRECTLY APPLIED.

ALL PITCH BREAKS AND PERIMETER CORNER JOINTS MUST BE LATERALLY RESTRAINED.

1 - 2x3 SPF No.2 LATERAL BRACE(S) AT 1/ 2 LENGTH OF 7-8. DBS = 12-0-0 . CBF = 82 LBS.

DBS = DIAGONAL BRACE SPACING (MAX). CBF = CUMULATIVE BRACING FORCE. FASTEN LATERAL BRACE(S) USING (0.122"X3") SPIRAL NAILS : 1 NAIL FOR 2x3 BRACE(S), 2 FOR 1x4, 2x4, 2x5, 3 FOR 2x6, 4 FOR 2x8, 5 FOR 2x10, AND 6 FOR 2x12.

END VERTICAL(S) MUST BE SHEATHED OR HAVE BRACES AS INDICATED IN THE MAX. UNBRACED LENGTH COLUMN OF THE TABLE BELOW

LOADING
TOTAL LOAD CASES: (4)

CHORDS

MEMB. FR-TO	MAX. FACTORED FORCE (LBS)	FACTORED VERT. LOAD (PLF) FROM	TO	LC1 MAX CSI (LC)	MAX. UNBRAC LENGTH
1- 2	0 / 23	-77.4	-77.4	0.10 (1)	10.00
2- 3	-1550 / 0	-77.4	-77.4	0.50 (1)	4.72
3- 4	-1031 / 0	-77.4	-77.4	0.45 (1)	5.57
4- 5	-1031 / 0	-77.4	-77.4	0.45 (1)	5.57
5- 6	-898 / 0	-77.4	-77.4	0.29 (1)	6.13
6- 7	-670 / 0	-77.4	-77.4	0.29 (1)	6.25
8- 7	-1094 / 0	0.0	0.0	0.30 (1)	6.05
13- 2	-1189 / 0	0.0	0.0	0.12 (1)	7.32
13-12	0 / 0	-17.5	-17.5	0.19 (4)	10.00
12-11	0 / 1410	-17.5	-17.5	0.32 (1)	10.00
11-10	0 / 670	-17.5	-17.5	0.17 (1)	10.00
10- 9	0 / 670	-17.5	-17.5	0.17 (1)	10.00
9- 8	0 / 0	-17.5	-17.5	0.11 (4)	10.00

WEBS

MEMB. FR-TO	MAX. FACTORED FORCE (LBS)	MAX CSI (LC)
12- 3	-50 / 97	0.03 (4)
3-11	-609 / 0	0.77 (1)
11- 5	0 / 103	0.03 (4)
11- 6	0 / 397	0.09 (1)
9- 6	-836 / 0	0.94 (1)
9- 7	0 / 1152	0.26 (1)
2-12	0 / 1422	0.32 (1)

DESIGN CRITERIA

SPECIFIED LOADS:

TOP	CH.	LL	=	23.3	PSF
		DL	=	3.0	PSF
BOT	CH.	LL	=	0.0	PSF
		DL	=	7.0	PSF
TOTAL	LOAD		=	33.3	PSF

SPACING = 24.0 IN. C/C

LOADING IN FLAT SECTION BASED ON A SLOPE OF 6.00/12

THIS TRUSS IS DESIGNED FOR RESIDENTIAL OR SMALL BUILDING REQUIREMENTS OF PART 9, NBCC 2010

THIS DESIGN COMPLIES WITH:
- PART 9 OF OBC 2012 , BCBC 2012 , ABC 2014
- CSA 086-09
- TPIC 2011

(55 % OF 27.2 P.S.F. G.S.L. PLUS 8.4 P.S.F. RAIN LOAD) EQUALS 23.3 P.S.F. SPECIFIED ROOF LIVE LOAD

ALLOWABLE DEFL.(LL)= L/360 (0.80")
CALCULATED VERT. DEFL.(LL) = L/ 999 (0.06")
ALLOWABLE DEFL.(TL)= L/360 (0.80")
CALCULATED VERT. DEFL.(TL) = L/ 999 (0.12")

CSI: TC=0.50 (2-3:1) , BC=0.32 (11-12:1) , WB=0.94 (6-9:1) , SSI=0.22 (2-3:1)

DOL LUMBER=1.00 NAIL=1.00 LS BEND=1.10 COMP=1.10 SHEAR=1.10 TENS= 1.10

COMPANION LIVE LOAD FACTOR = 0.50

TRUSS PLATE MANUFACTURER IS NOT RESPONSIBLE FOR QUALITY CONTROL IN THE TRUSS MANUFACTURING PLANT .

NAIL VALUES

PLATE	GRIP(DRY) (PSI) MAX	MIN	SHEAR (PLI) MAX	MIN	SECTION (PLI) MAX	MIN
MT20	618	354	1667	822	2284	1656

PLATE PLACEMENT TOL. = 0.250 inches

PLATE ROTATION TOL. = 5.0 Deg.

JSI GRIP= 0.89 (7) (INPUT = 0.90)
JSI METAL= 0.40 (2) (INPUT = 1.00)

LICENSED PROFESSIONAL ENGINEER
P. M. TREVISAN
100136551
March 16th, 2017
PROVINCE OF ONTARIO

RECEIVED
TOWN OF MILTON
MAR 29, 2017
17-5337
BUILDING DIVISION

KOTT

JOB NAME	TRUSS NAME	QUANTITY	PLY	JOB DESC.	DRWG NO.
PT0317-097	T52	1	1	TRUSS DESC. LECCO RIDGE-BLOCK 344	

KOTT , Stouffville, ON, CGC

Version 8.100 S Feb 9 2017 MiTek Industries, Inc. Thu Mar 16 11:58:15 2017 Page 1
ID:EvTixTQDI5yR1QLotZTBr_yE?HJ-K5e2SprbiCqTfLQHQmk2WAwsUNkToH7JgGvHJ3zaNjc

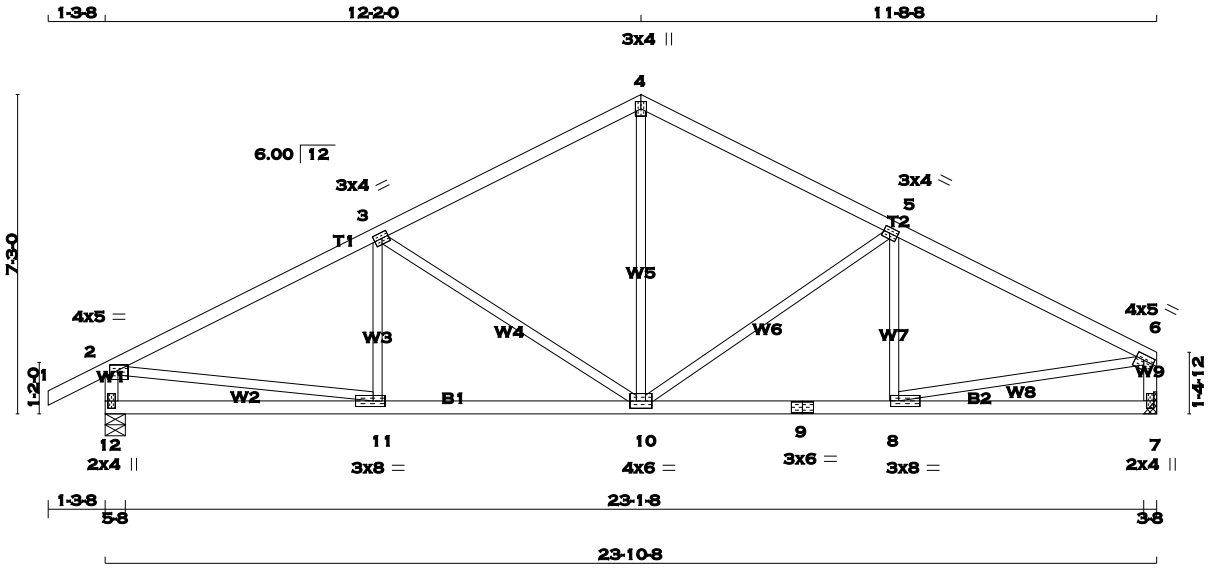

TOTAL WEIGHT = 93 lb
[M][F]

LUMBER
N. L. G. A. RULES

CHORDS	SIZE		LUMBER	DESCR.
1 - 4	2x4	DRY	No.2	SPF
4 - 6	2x4	DRY	No.2	SPF
12 - 2	2x4	DRY	No.2	SPF
7 - 6	2x4	DRY	No.2	SPF
12 - 9	2x4	DRY	No.2	SPF
9 - 7	2x4	DRY	No.2	SPF
ALL WEBS EXCEPT	2x3	DRY	No.2	SPF

DRY: SEASONED LUMBER.

PLATES (table is in inches)

JT	TYPE	PLATES	W	LEN	Y	X
2	TMVW-p	MT20	4.0	5.0	1.50	2.25
3	TMWW-t	MT20	3.0	4.0	1.50	1.75
4	TTW+p	MT20	3.0	4.0		
5	TMWW-t	MT20	3.0	4.0	1.50	1.75
6	TMVW-t	MT20	4.0	5.0	1.50	2.25
7	BMV1+p	MT20	2.0	4.0		
8	BMWW-t	MT20	3.0	8.0	1.50	2.25
9	BS-t	MT20	3.0	6.0		
10	BMWWW-t	MT20	4.0	6.0		
11	BMWW-t	MT20	3.0	8.0	1.50	3.25
12	BMV1+p	MT20	2.0	4.0		

A SIZE FOR SIZE SUBSTITUTION OF MITEK MII20 WITH TEE-LOK TL20 PLATES IS ALLOWED.

DIMENSIONS, SUPPORTS AND LOADINGS SPECIFIED BY FABRICATOR TO BE VERIFIED BY BUILDING DESIGNER

BEARINGS

JT	FACTORED GROSS REACTION VERT	HORZ	MAXIMUM FACTORED GROSS REACTION DOWN	HORZ	UPLIFT	INPUT BRG IN-SX	REQRD BRG IN-SX
12	1237	0	1237	0	0	5-8	5-8
7	1132	0	1132	0	0	HANGER BY OTHERS	
						MIN. SEAT SIZE: 3-8	

UNFACTORED REACTIONS

JT	1ST LCASE COMBINED	MAX./MIN. COMPONENT REACTIONS SNOW	LIVE	PERM.LIVE	WIND	DEAD	SOIL
12	866	619 / 0	0 / 0	0 / 0	0 / 0	247 / 0	0 / 0
7	795	556 / 0	0 / 0	0 / 0	0 / 0	239 / 0	0 / 0

BEARING MATERIAL TO BE SPF NO.2 OR BETTER AT JOINT(S) 12

BRACING
TOP CHORD TO BE SHEATHED OR MAX. PURLIN SPACING = 4.83 FT.
MAX. UNBRACED BOTTOM CHORD LENGTH = 10.00 FT. OR RIGID CEILING DIRECTLY APPLIED.

ALL PITCH BREAKS AND PERIMETER CORNER JOINTS MUST BE LATERALLY RESTRAINED.

LOADING
TOTAL LOAD CASES: (4)

CHORDS

MEMB. FR-TO	MAX. FORCE (LBS)	FACTORED VERT. LOAD (PLF) FROM	TO	MAX CSI (LC)	MAX. UNBRAC LENGTH
1- 2	0 / 23	-77.4	-77.4	0.10 (1)	10.00
2- 3	-1555 / 0	-77.4	-77.4	0.42 (1)	4.83
3- 4	-1121 / 0	-77.4	-77.4	0.38 (1)	5.51
4- 5	-1120 / 0	-77.4	-77.4	0.36 (1)	5.55
5- 6	-1469 / 0	-77.4	-77.4	0.38 (1)	4.99
12- 2	-1192 / 0	0.0	0.0	0.12 (1)	7.32
7- 6	-1088 / 0	0.0	0.0	0.11 (1)	7.57
12-11	0 / 0	-17.5	-17.5	0.15 (4)	10.00
11-10	0 / 1413	-17.5	-17.5	0.30 (1)	10.00
10- 9	0 / 1335	-17.5	-17.5	0.28 (1)	10.00
9- 8	0 / 1335	-17.5	-17.5	0.28 (1)	10.00
8- 7	0 / 0	-17.5	-17.5	0.14 (4)	10.00

WEBS

MEMB. FR-TO	MAX. FORCE (LBS)	MAX CSI (LC)
11- 3	-80 / 78	0.03 (4)
3-10	-519 / 0	0.51 (1)
10- 4	0 / 639	0.14 (1)
10- 5	-434 / 0	0.41 (1)
8- 5	-133 / 58	0.04 (1)
2-11	0 / 1427	0.32 (1)
8- 6	0 / 1357	0.31 (1)

DESIGN CRITERIA

SPECIFIED LOADS:

TOP	CH.	LL	=	23.3	PSF
		DL	=	3.0	PSF
BOT	CH.	LL	=	0.0	PSF
		DL	=	7.0	PSF
TOTAL	LOAD		=	33.3	PSF

SPACING = 24.0 IN. C/C

THIS TRUSS IS DESIGNED FOR RESIDENTIAL OR SMALL BUILDING REQUIREMENTS OF PART 9, NBCC 2010

THIS DESIGN COMPLIES WITH:
- PART 9 OF OBC 2012 , BCBC 2012 , ABC 2014
- CSA 086-09
- TPIC 2011

(55 % OF 27.2 P.S.F. G.S.L. PLUS 8.4 P.S.F. RAIN LOAD) EQUALS 23.3 P.S.F. SPECIFIED ROOF LIVE LOAD

ALLOWABLE DEFL.(LL)= L/360 (0.80")
CALCULATED VERT. DEFL.(LL) = L/ 999 (0.06")
ALLOWABLE DEFL.(TL)= L/360 (0.80")
CALCULATED VERT. DEFL.(TL) = L/ 999 (0.11")

CSI: TC=0.42 (2-3:1) , BC=0.30 (10-11:1) , WB=0.51 (3-10:1) , SSI=0.21 (2-3:1)

DOL LUMBER=1.00 NAIL=1.00 LS BEND=1.10 COMP=1.10 SHEAR=1.10 TENS= 1.10

COMPANION LIVE LOAD FACTOR = 0.50

TRUSS PLATE MANUFACTURER IS NOT RESPONSIBLE FOR QUALITY CONTROL IN THE TRUSS MANUFACTURING PLANT .

NAIL VALUES

PLATE	GRIP(DRY) (PSI) MAX	MIN	SHEAR (PLI) MAX	MIN	SECTION (PLI) MAX	MIN
MT20	618	354	1667	822	2284	1656

PLATE PLACEMENT TOL. = 0.250 inches

PLATE ROTATION TOL. = 5.0 Deg.

JSI GRIP= 0.89 (8) (INPUT = 0.90)
JSI METAL= 0.47 (6) (INPUT = 1.00)

LICENSED PROFESSIONAL ENGINEER
P. M. TREVISAN
100136551
March 16th, 2017
PROVINCE OF ONTARIO

RECEIVED
TOWN OF MILTON
MAR 29, 2017
17-5337
BUILDING DIVISION

KOTT

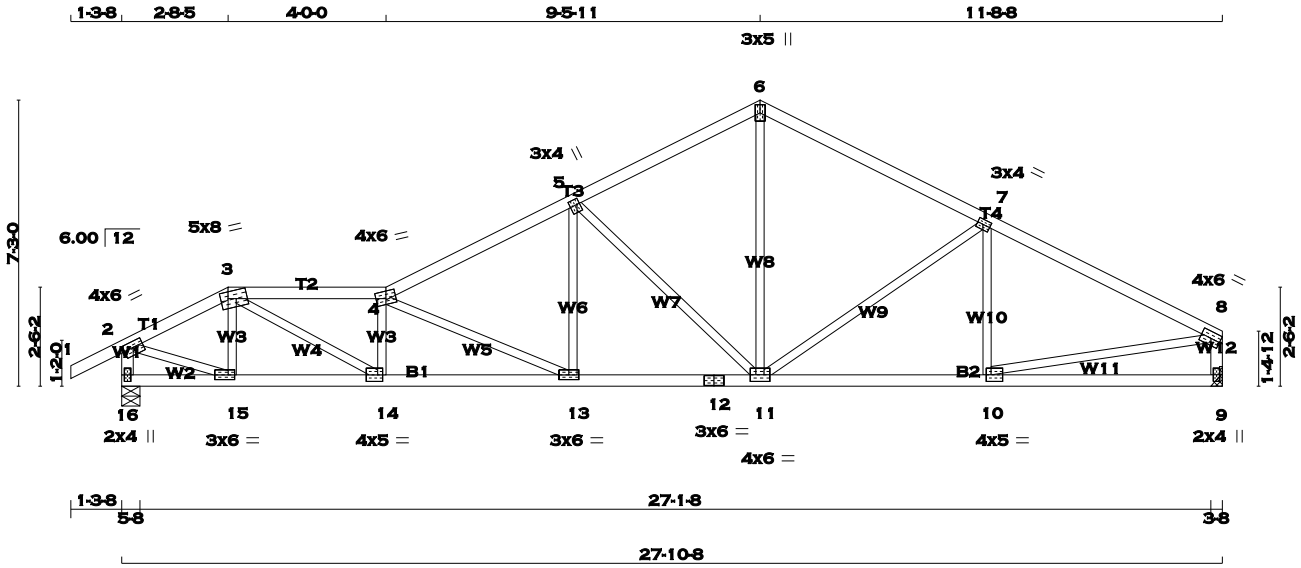

TOTAL WEIGHT = 111 lb

[M][F]

LUMBER

N. L. G. A. RULES

CHORDS	SIZE		LUMBER	DESCR.
1 - 3	2x4	DRY	No.2	SPF
3 - 4	2x4	DRY	No.2	SPF
4 - 6	2x4	DRY	No.2	SPF
6 - 8	2x4	DRY	No.2	SPF
16 - 2	2x4	DRY	No.2	SPF
9 - 8	2x4	DRY	No.2	SPF
16 - 12	2x4	DRY	No.2	SPF
12 - 9	2x4	DRY	No.2	SPF
ALL WEBS EXCEPT	2x3	DRY	No.2	SPF

DRY: SEASONED LUMBER.

PLATES (table is in inches)

JT	TYPE	PLATES	W	LEN	Y	X
2	TMVW-t	MT20	4.0	6.0	1.75	3.00
3	TTWW-m	MT20	5.0	8.0	2.00	2.25
4	TTWW-m	MT20	4.0	6.0	2.25	3.00
5	TMWW+t	MT20	3.0	4.0	1.75	0.75
6	TTW+p	MT20	3.0	5.0		
7	TMWW-t	MT20	3.0	4.0	1.50	1.75
8	TMVW-t	MT20	4.0	6.0		Edge
9	BMV1+p	MT20	2.0	4.0		
10	BMWW-t	MT20	4.0	5.0	2.00	1.50
11	BMWWW-t	MT20	4.0	6.0		
12	BS-t	MT20	3.0	6.0		
13	BMWW-t	MT20	3.0	6.0		
14	BMWW-t	MT20	4.0	5.0	2.00	1.50
15	BMWW-t	MT20	3.0	6.0	1.50	2.00
16	BMV1+p	MT20	2.0	4.0		

Edge - INDICATES REFERENCE CORNER OF PLATE TOUCHES EDGE OF CHORD.

A SIZE FOR SIZE SUBSTITUTION OF MITEK MII20 WITH TEE-LOK TL20 PLATES IS ALLOWED.

DIMENSIONS, SUPPORTS AND LOADINGS SPECIFIED BY FABRICATOR TO BE VERIFIED BY BUILDING DESIGNER

BEARINGS

JT	FACTORED GROSS REACTION VERT	HORZ	MAXIMUM FACTORED GROSS REACTION DOWN	HORZ	UPLIFT	INPUT BRG IN-SX	REQRD BRG IN-SX
16	1427	0	1427	0	0	5-8	5-8
9	1322	0	1322	0	0	HANGER BY OTHERS MIN. SEAT SIZE: 3-8	

UNFACTORED REACTIONS

JT	1ST LCASE COMBINED	SNOW	MAX./MIN. COMPONENT REACTIONS LIVE	PERM.LIVE	WIND	DEAD	SOIL
16	999	712 / 0	0 / 0	0 / 0	0 / 0	287 / 0	0 / 0
9	928	649 / 0	0 / 0	0 / 0	0 / 0	279 / 0	0 / 0

BEARING MATERIAL TO BE SPF NO.2 OR BETTER AT JOINT(S) 16

BRACING

TOP CHORD TO BE SHEATHED OR MAX. PURLIN SPACING = 3.83 FT.
MAX. UNBRACED BOTTOM CHORD LENGTH = 10.00 FT. OR RIGID CEILING DIRECTLY APPLIED.

ALL PITCH BREAKS AND PERIMETER CORNER JOINTS MUST BE LATERALLY RESTRAINED.

LOADING

TOTAL LOAD CASES: (4)

CHORDS

MEMB. FR-TO	MAX. FORCE (LBS)	FACTORED VERT. LOAD LC1 (PLF) FROM	TO	MAX CSI (LC)	MAX. UNBRAC LENGTH
1- 2	0 / 23	-77.4	-77.4	0.10 (1)	10.00
2- 3	-1662 / 0	-77.4	-77.4	0.10 (1)	5.07
3- 4	-2989 / 0	-77.4	-77.4	0.26 (1)	3.83
4- 5	-2216 / 0	-77.4	-77.4	0.29 (1)	4.34
5- 6	-1472 / 0	-77.4	-77.4	0.24 (1)	5.15
6- 7	-1477 / 0	-77.4	-77.4	0.37 (1)	4.99
7- 8	-1778 / 0	-77.4	-77.4	0.40 (1)	4.61
16- 2	-1412 / 0	0.0	0.0	0.14 (1)	6.86
9- 8	-1278 / 0	0.0	0.0	0.13 (1)	7.13
16-15	0 / 0	-17.5	-17.5	0.04 (4)	10.00
15-14	0 / 1467	-17.5	-17.5	0.28 (1)	10.00
14-13	0 / 3027	-17.5	-17.5	0.56 (1)	10.00
13-12	0 / 2001	-17.5	-17.5	0.38 (1)	10.00
12-11	0 / 2001	-17.5	-17.5	0.38 (1)	10.00
11-10	0 / 1612	-17.5	-17.5	0.32 (1)	10.00
10- 9	0 / 0	-17.5	-17.5	0.14 (4)	10.00

WEBS

MEMB. FR-TO	MAX. FORCE (LBS)	MAX CSI (LC)
15- 3	-376 / 0	0.06 (1)
3-14	0 / 1750	0.39 (1)
14- 4	-814 / 0	0.13 (1)
4-13	-1133 / 0	0.53 (1)
13- 5	0 / 572	0.13 (1)
5-11	-975 / 0	0.77 (1)
11- 6	0 / 991	0.22 (1)
11- 7	-383 / 0	0.36 (1)
10- 7	-182 / 44	0.05 (1)
2-15	0 / 1553	0.35 (1)
10- 8	0 / 1638	0.37 (1)

DESIGN CRITERIA

SPECIFIED LOADS:

TOP CH.	LL	=	23.3	PSF
	DL	=	3.0	PSF
BOT CH.	LL	=	0.0	PSF
	DL	=	7.0	PSF
TOTAL LOAD		=	33.3	PSF

SPACING = 24.0 IN. C/C

LOADING IN ALL FLAT SECTIONS BASED ON A SLOPE OF 6.00/12

THIS TRUSS IS DESIGNED FOR RESIDENTIAL OR SMALL BUILDING REQUIREMENTS OF PART 9, NBCC 2010

THIS DESIGN COMPLIES WITH:
- PART 9 OF OBC 2012 , BCBC 2012 , ABC 2014
- CSA 086-09
- TPIC 2011

(55 % OF 27.2 P.S.F. G.S.L. PLUS 8.4 P.S.F. RAIN LOAD) EQUALS 23.3 P.S.F. SPECIFIED ROOF LIVE LOAD

ALLOWABLE DEFL.(LL)= L/360 (0.93")
CALCULATED VERT. DEFL.(LL) = L/ 999 (0.14")
ALLOWABLE DEFL.(TL)= L/360 (0.93")
CALCULATED VERT. DEFL.(TL) = L/ 999 (0.26")

CSI: TC=0.40 (7-8:1) , BC=0.56 (13-14:1) , WB=0.77 (5-11:1) , SSI=0.20 (7-8:1)

DOL LUMBER=1.00 NAIL=1.00 LS BEND=1.10 COMP=1.10 SHEAR=1.10 TENS= 1.10

COMPANION LIVE LOAD FACTOR = 0.50

TRUSS PLATE MANUFACTURER IS NOT RESPONSIBLE FOR QUALITY CONTROL IN THE TRUSS MANUFACTURING PLANT .

NAIL VALUES

PLATE	GRIP(DRY) (PSI) MAX	MIN	SHEAR (PLI) MAX	MIN	SECTION (PLI) MAX	MIN
MT20	618	354	1667	822	2284	1656

PLATE PLACEMENT TOL. = 0.250 inches

PLATE ROTATION TOL. = 5.0 Deg.

JSI GRIP= 0.89 (10) (INPUT = 0.90)
JSI METAL= 0.49 (12) (INPUT = 1.00)

LICENSED PROFESSIONAL ENGINEER
P. M. TREVISAN
100136551
March 16th, 2017
PROVINCE OF ONTARIO

RECEIVED
TOWN OF MILTON
MAR 29, 2017
17-5337
BUILDING DIVISION

KOTT

JOB NAME	TRUSS NAME	QUANTITY	PLY	JOB DESC.	DRWG NO.
PT0317-097	T54	1	1	TRUSS DESC. LECCO RIDGE-BLOCK 344	

KOTT , Stouffville, ON, CGC

Version 8.100 S Feb 9 2017 MiTek Industries, Inc. Thu Mar 16 11:58:16 2017 Page 1
ID:EvTixTQDI5yR1QLotZTBr_yE?HJ-oICQg9sDSWyKHV?TzUFH3NS1Xn3QXkRTuwfqrVzaNjb

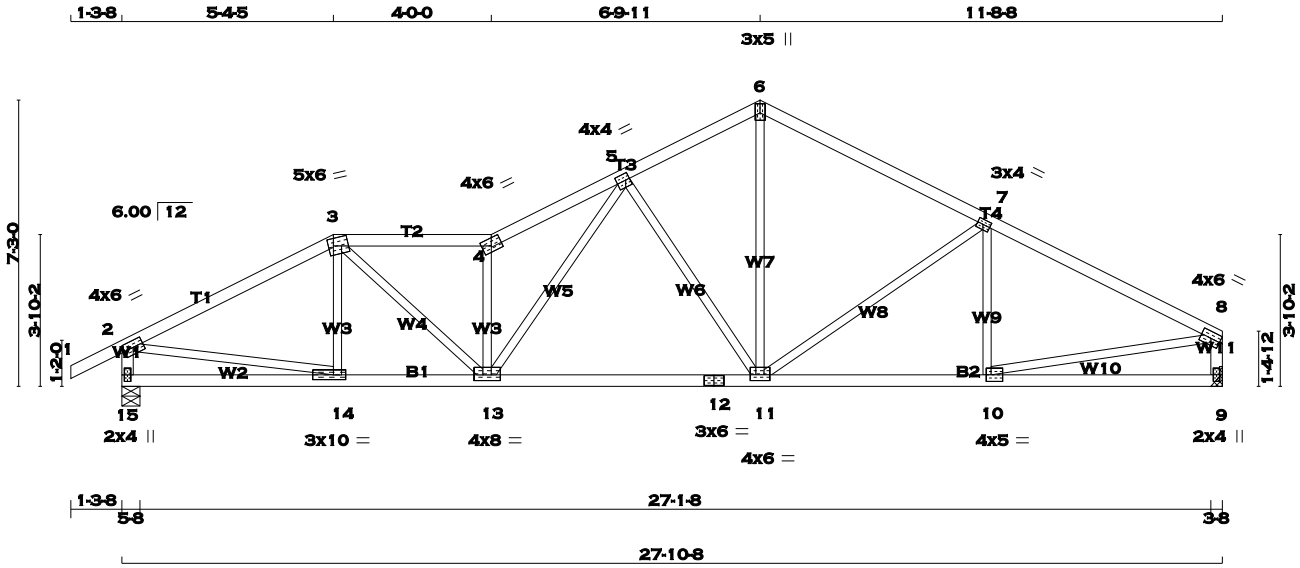

TOTAL WEIGHT = 112 lb

LUMBER
N. L. G. A. RULES

CHORDS	SIZE		LUMBER	DESCR.
1 - 3	2x4	DRY	No.2	SPF
3 - 4	2x4	DRY	No.2	SPF
4 - 6	2x4	DRY	No.2	SPF
6 - 8	2x4	DRY	No.2	SPF
15 - 2	2x4	DRY	No.2	SPF
9 - 8	2x4	DRY	No.2	SPF
15 - 12	2x4	DRY	No.2	SPF
12 - 9	2x4	DRY	No.2	SPF
ALL WEBS EXCEPT	2x3	DRY	No.2	SPF

DRY: SEASONED LUMBER.

PLATES (table is in inches)

JT	TYPE	PLATES	W	LEN	Y	X
2	TMVW-t	MT20	4.0	6.0	2.00	3.00
3	TTWW-m	MT20	5.0	6.0	2.25	1.50
4	TTW-h	MT20	4.0	6.0	2.25	3.25
5	TMWW-t	MT20	4.0	4.0	2.00	1.25
6	TTW+p	MT20	3.0	5.0	2.75	1.50
7	TMWW-t	MT20	3.0	4.0	1.50	1.75
8	TMVW-t	MT20	4.0	6.0		Edge
9	BMV1+p	MT20	2.0	4.0		
10	BMWW-t	MT20	4.0	5.0	2.00	1.50
11	BMWWW-t	MT20	4.0	6.0	1.75	3.00
12	BS-t	MT20	3.0	6.0		
13	BMWWW-t	MT20	4.0	8.0	1.75	4.00
14	BMWW-t	MT20	3.0	10.0	1.50	3.75
15	BMV1+p	MT20	2.0	4.0		

Edge - INDICATES REFERENCE CORNER OF PLATE TOUCHES EDGE OF CHORD.

A SIZE FOR SIZE SUBSTITUTION OF MITEK MII20 WITH TEE-LOK TL20 PLATES IS ALLOWED.

DIMENSIONS, SUPPORTS AND LOADINGS SPECIFIED BY FABRICATOR TO BE VERIFIED BY BUILDING DESIGNER

BEARINGS

JT	FACTORED GROSS REACTION VERT	HORZ	MAXIMUM FACTORED GROSS REACTION DOWN	HORZ	UPLIFT	INPUT BRG IN-SX	REQRD BRG IN-SX
15	1427	0	1427	0	0	5-8	5-8
9	1322	0	1322	0	0	HANGER BY OTHERS	
						MIN. SEAT SIZE: 3-8	

UNFACTORED REACTIONS

JT	1ST LCASE COMBINED	SNOW	MAX./MIN. COMPONENT REACTIONS LIVE	PERM.LIVE	WIND	DEAD	SOIL
15	999	712 / 0	0 / 0	0 / 0	0 / 0	287 / 0	0 / 0
9	928	649 / 0	0 / 0	0 / 0	0 / 0	279 / 0	0 / 0

BEARING MATERIAL TO BE SPF NO.2 OR BETTER AT JOINT(S) 15

BRACING
TOP CHORD TO BE SHEATHED OR MAX. PURLIN SPACING = 4.14 FT.
MAX. UNBRACED BOTTOM CHORD LENGTH = 10.00 FT. OR RIGID CEILING DIRECTLY APPLIED.

ALL PITCH BREAKS AND PERIMETER CORNER JOINTS MUST BE LATERALLY RESTRAINED.

LOADING
TOTAL LOAD CASES: (4)

CHORDS

MEMB. FR-TO	MAX. FORCE (LBS)	FACTORED VERT. LOAD LC1 FROM (PLF)	TO	MAX CSI (LC)	MAX. UNBRAC LENGTH
1- 2	0 / 23	-77.4	-77.4	0.10 (1)	10.00
2- 3	-1823 / 0	-77.4	-77.4	0.34 (1)	4.63
3- 4	-2306 / 0	-77.4	-77.4	0.22 (1)	4.33
4- 5	-2609 / 0	-77.4	-77.4	0.19 (1)	4.14
5- 6	-1472 / 0	-77.4	-77.4	0.14 (1)	5.27
6- 7	-1482 / 0	-77.4	-77.4	0.37 (1)	4.98
7- 8	-1776 / 0	-77.4	-77.4	0.40 (1)	4.61
15- 2	-1385 / 0	0.0	0.0	0.14 (1)	6.91
9- 8	-1277 / 0	0.0	0.0	0.13 (1)	7.13
15-14	0 / 0	-17.5	-17.5	0.11 (4)	10.00
14-13	0 / 1625	-17.5	-17.5	0.31 (1)	10.00
13-12	0 / 1755	-17.5	-17.5	0.38 (1)	10.00
12-11	0 / 1755	-17.5	-17.5	0.38 (1)	10.00
11-10	0 / 1610	-17.5	-17.5	0.36 (1)	10.00
10- 9	0 / 0	-17.5	-17.5	0.13 (4)	10.00

WEBS

MEMB. FR-TO	MAX. FORCE (LBS)	MAX CSI (LC)
14- 3	-165 / 21	0.04 (1)
3-13	0 / 922	0.21 (1)
13- 4	-1424 / 0	0.33 (1)
13- 5	0 / 1065	0.24 (1)
5-11	-829 / 0	0.57 (1)
11- 6	0 / 1036	0.23 (1)
11- 7	-375 / 0	0.35 (1)
10- 7	-190 / 37	0.05 (1)
2-14	0 / 1649	0.37 (1)
10- 8	0 / 1636	0.37 (1)

DESIGN CRITERIA

SPECIFIED LOADS:

TOP CH.	LL	=	23.3	PSF
	DL	=	3.0	PSF
BOT CH.	LL	=	0.0	PSF
	DL	=	7.0	PSF
TOTAL LOAD		=	33.3	PSF

SPACING = 24.0 IN. C/C

LOADING IN ALL FLAT SECTIONS BASED ON A SLOPE OF 6.00/12

THIS TRUSS IS DESIGNED FOR RESIDENTIAL OR SMALL BUILDING REQUIREMENTS OF PART 9, NBCC 2010

THIS DESIGN COMPLIES WITH:
- PART 9 OF OBC 2012 , BCBC 2012 , ABC 2014
- CSA 086-09
- TPIC 2011

(55 % OF 27.2 P.S.F. G.S.L. PLUS 8.4 P.S.F. RAIN LOAD) EQUALS 23.3 P.S.F. SPECIFIED ROOF LIVE LOAD

ALLOWABLE DEFL.(LL)= L/360 (0.93")
CALCULATED VERT. DEFL.(LL) = L/ 999 (0.12")
ALLOWABLE DEFL.(TL)= L/360 (0.93")
CALCULATED VERT. DEFL.(TL) = L/ 999 (0.24")

CSI: TC=0.40 (7-8:1) , BC=0.38 (11-13:1) , WB=0.57 (5-11:1) , SSI=0.20 (7-8:1)

DOL LUMBER=1.00 NAIL=1.00 LS BEND=1.10 COMP=1.10 SHEAR=1.10 TENS= 1.10

COMPANION LIVE LOAD FACTOR = 0.50

TRUSS PLATE MANUFACTURER IS NOT RESPONSIBLE FOR QUALITY CONTROL IN THE TRUSS MANUFACTURING PLANT .

NAIL VALUES

PLATE	GRIP(DRY) (PSI) MAX	MIN	SHEAR (PLI) MAX	MIN	SECTION (PLI) MAX	MIN
MT20	618	354	1667	822	2284	1656

PLATE PLACEMENT TOL. = 0.250 inches

PLATE ROTATION TOL. = 5.0 Deg.

JSI GRIP= 0.89 (10) (INPUT = 0.90)
JSI METAL= 0.52 (4) (INPUT = 1.00)

LICENSED PROFESSIONAL ENGINEER
R. M. TREVISAN
100136551
March 16th, 2017
PROVINCE OF ONTARIO

RECEIVED
TOWN OF MILTON
MAR 29, 2017
17-5337
BUILDING DIVISION

KOTT

JOB NAME	TRUSS NAME	QUANTITY	PLY	JOB DESC.	DRWG NO.
PT0317-097	T55	1	1	TRUSS DESC. LECCO RIDGE-BLOCK 344	

KOTT , Stouffville, ON, CGC

Version 8.100 S Feb 9 2017 MiTek Industries, Inc. Thu Mar 16 11:58:17 2017 Page 1
ID:EvTixTQDI5yR1QLotZTBr_yE?HJ-GUmotVsrDp4BvfagXBmWcb?CdBPUGEgc7aOONyzaNja

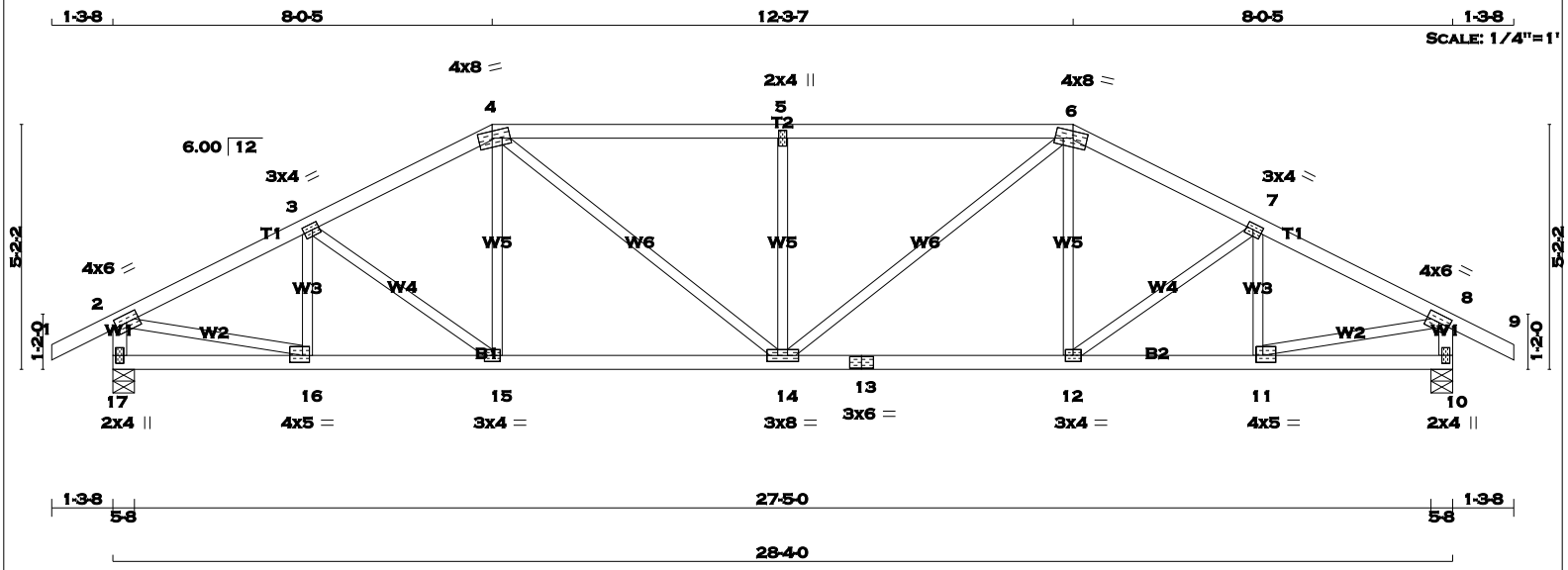

TOTAL WEIGHT = 113 lb
[M][F]

LUMBER
N. L. G. A. RULES

CHORDS	SIZE		LUMBER	DESCR.
1 - 4	2x4	DRY	No.2	SPF
4 - 6	2x4	DRY	No.2	SPF
6 - 9	2x4	DRY	No.2	SPF
17 - 2	2x4	DRY	No.2	SPF
10 - 8	2x4	DRY	No.2	SPF
17 - 13	2x4	DRY	No.2	SPF
13 - 10	2x4	DRY	No.2	SPF
ALL WEBS EXCEPT	2x3	DRY	No.2	SPF

DRY: SEASONED LUMBER.

PLATES (table is in inches)

JT	TYPE	PLATES	W	LEN	Y	X
2	TMVW-t	MT20	4.0	6.0	2.00	2.75
3	TMWW-t	MT20	3.0	4.0	1.50	1.75
4	TTWW-m	MT20	4.0	8.0	1.75	3.50
5	TMW+w	MT20	2.0	4.0		
6	TTWW-m	MT20	4.0	8.0	1.75	3.50
7	TMWW-t	MT20	3.0	4.0	1.50	1.75
8	TMVW-t	MT20	4.0	6.0	2.00	2.75
10	BMV1+p	MT20	2.0	4.0		
11	BMWW-t	MT20	4.0	5.0	1.75	1.75
12	BMWW-t	MT20	3.0	4.0		
13	BS-t	MT20	3.0	6.0		
14	BMWWW-t	MT20	3.0	8.0		
15	BMWW-t	MT20	3.0	4.0		
16	BMWW-t	MT20	4.0	5.0	1.75	1.75
17	BMV1+p	MT20	2.0	4.0		

A SIZE FOR SIZE SUBSTITUTION OF MITEK MII20 WITH TEE-LOK TL20 PLATES IS ALLOWED.

DIMENSIONS, SUPPORTS AND LOADINGS SPECIFIED BY FABRICATOR TO BE VERIFIED BY BUILDING DESIGNER

BEARINGS

JT	FACTORED GROSS REACTION VERT	HORZ	MAXIMUM FACTORED GROSS REACTION DOWN	HORZ	UPLIFT	INPUT BRG IN-SX	REQRD BRG IN-SX
17	1449	0	1449	0	0	5-8	5-8
10	1449	0	1449	0	0	5-8	5-8

UNFACTORED REACTIONS

JT	1ST LCASE COMBINED	MAX./MIN. COMPONENT REACTIONS SNOW	LIVE	PERM.LIVE	WIND	DEAD	SOIL
17	1014	723 / 0	0 / 0	0 / 0	0 / 0	291 / 0	0 / 0
10	1014	723 / 0	0 / 0	0 / 0	0 / 0	291 / 0	0 / 0

BEARING MATERIAL TO BE SPF NO.2 OR BETTER AT JOINT(S) 17, 10

BRACING
TOP CHORD TO BE SHEATHED OR MAX. PURLIN SPACING = 4.31 FT.
MAX. UNBRACED BOTTOM CHORD LENGTH = 10.00 FT. OR RIGID CEILING DIRECTLY APPLIED.

ALL PITCH BREAKS AND PERIMETER CORNER JOINTS MUST BE LATERALLY RESTRAINED.

LOADING
TOTAL LOAD CASES: (4)

CHORDS

MEMB. FR-TO	MAX. FACTORED FORCE (LBS)	FACTORED VERT. LOAD (PLF) FROM	TO	LC1 MAX CSI (LC)	MAX. UNBRAC LENGTH
1- 2	0 / 23	-77.4	-77.4	0.10 (1)	10.00
2- 3	-1850 / 0	-77.4	-77.4	0.19 (1)	4.78
3- 4	-1796 / 0	-77.4	-77.4	0.18 (1)	4.84
4- 5	-2028 / 0	-77.4	-77.4	0.44 (1)	4.31
5- 6	-2028 / 0	-77.4	-77.4	0.44 (1)	4.31
6- 7	-1796 / 0	-77.4	-77.4	0.18 (1)	4.84
7- 8	-1850 / 0	-77.4	-77.4	0.19 (1)	4.78
8- 9	0 / 23	-77.4	-77.4	0.10 (1)	10.00
17- 2	-1413 / 0	0.0	0.0	0.14 (1)	6.86
10- 8	-1413 / 0	0.0	0.0	0.14 (1)	6.86
17-16	0 / 0	-17.5	-17.5	0.07 (4)	10.00
16-15	0 / 1668	-17.5	-17.5	0.33 (1)	10.00
15-14	0 / 1594	-17.5	-17.5	0.32 (1)	10.00
14-13	0 / 1594	-17.5	-17.5	0.32 (1)	10.00
13-12	0 / 1594	-17.5	-17.5	0.32 (1)	10.00
12-11	0 / 1668	-17.5	-17.5	0.33 (1)	10.00
11-10	0 / 0	-17.5	-17.5	0.07 (4)	10.00

WEBS

MEMB. FR-TO	MAX. FACTORED FORCE (LBS)	MAX CSI (LC)
16- 3	-286 / 0	0.05 (1)
3-15	-95 / 0	0.04 (1)
15- 4	0 / 154	0.04 (4)
4-14	0 / 554	0.12 (1)
14- 5	-583 / 0	0.23 (1)
14- 6	0 / 554	0.12 (1)
12- 6	0 / 154	0.04 (4)
12- 7	-95 / 0	0.04 (1)
11- 7	-286 / 0	0.05 (1)
2-16	0 / 1704	0.38 (1)
11- 8	0 / 1704	0.38 (1)

DESIGN CRITERIA

SPECIFIED LOADS:

TOP CH.	LL	=	23.3	PSF
	DL	=	3.0	PSF
BOT CH.	LL	=	0.0	PSF
	DL	=	7.0	PSF
TOTAL LOAD		=	33.3	PSF

SPACING = 24.0 IN. C/C

LOADING IN FLAT SECTION BASED ON A SLOPE OF 6.00/12

THIS TRUSS IS DESIGNED FOR RESIDENTIAL OR SMALL BUILDING REQUIREMENTS OF PART 9, NBCC 2010

THIS DESIGN COMPLIES WITH:
- PART 9 OF OBC 2012 , BCBC 2012 , ABC 2014
- CSA 086-09
- TPIC 2011

(55 % OF 27.2 P.S.F. G.S.L. PLUS 8.4 P.S.F. RAIN LOAD) EQUALS 23.3 P.S.F. SPECIFIED ROOF LIVE LOAD

ALLOWABLE DEFL.(LL)= L/360 (0.94")
CALCULATED VERT. DEFL.(LL) = L/ 999 (0.09")
ALLOWABLE DEFL.(TL)= L/360 (0.94")
CALCULATED VERT. DEFL.(TL) = L/ 999 (0.17")

CSI: TC=0.44 (4-5:1) , BC=0.33 (15-16:1) , WB=0.38 (2-16:1) , SSI=0.23 (4-5:1)

DOL LUMBER=1.00 NAIL=1.00 LS BEND=1.10 COMP=1.10 SHEAR=1.10 TENS= 1.10

COMPANION LIVE LOAD FACTOR = 0.50

TRUSS PLATE MANUFACTURER IS NOT RESPONSIBLE FOR QUALITY CONTROL IN THE TRUSS MANUFACTURING PLANT .

NAIL VALUES

PLATE	GRIP(DRY) (PSI) MAX	MIN	SHEAR (PLI) MAX	MIN	SECTION (PLI) MAX	MIN
MT20	618	354	1667	822	2284	1656

PLATE PLACEMENT TOL. = 0.250 inches

PLATE ROTATION TOL. = 5.0 Deg.

JSI GRIP= 0.89 (2) (INPUT = 0.90)
JSI METAL= 0.50 (11) (INPUT = 1.00)

LICENSED PROFESSIONAL ENGINEER
P. M. TREVISAN
100136551
March 16th, 2017
PROVINCE OF ONTARIO

RECEIVED
TOWN OF MILTON
MAR 29, 2017
17-5337
BUILDING DIVISION

KOTT

JOB NAME	TRUSS NAME	QUANTITY	PLY	JOB DESC.	DRWG NO.
PT0317-097	T56	1	1	TRUSS DESC. LECCO RIDGE-BLOCK 344	ENG JOB: PT0317-097

KOTT , Stouffville, ON, CGC

Version 8.100 S Feb 9 2017 MiTek Industries, Inc. Thu Mar 16 11:58:18 2017 Page 1

ID:EvTixTQDI5yR1QLotZTBr_yE?HJ-kgKB5rtT_7C2Wo9s5uHl8oYO_bIl_gkmME8xvOzaNjZ

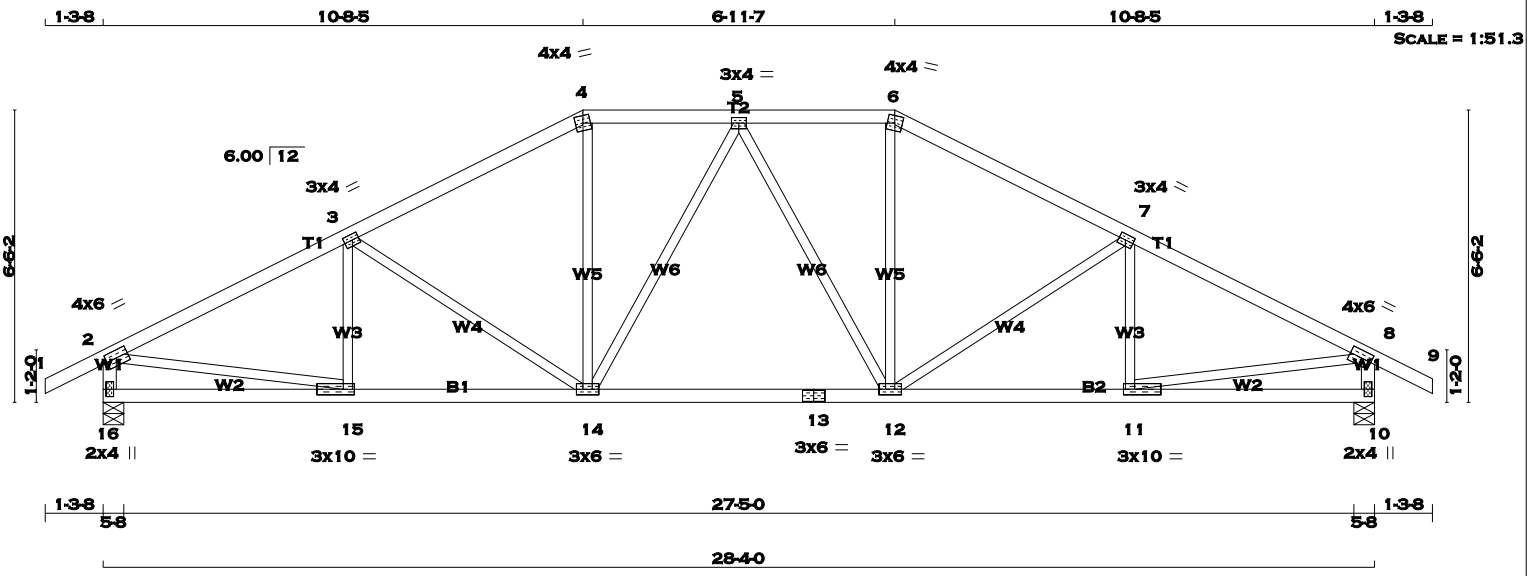

TOTAL WEIGHT = 117 lb

[M][F]

LUMBER

N. L. G. A. RULES

CHORDS	SIZE		LUMBER	DESCR.
1 - 4	2x4	DRY	No.2	SPF
4 - 6	2x4	DRY	No.2	SPF
6 - 9	2x4	DRY	No.2	SPF
16 - 2	2x4	DRY	No.2	SPF
10 - 8	2x4	DRY	No.2	SPF
16 - 13	2x4	DRY	No.2	SPF
13 - 10	2x4	DRY	No.2	SPF
ALL WEBS EXCEPT	2x3	DRY	No.2	SPF

DRY: SEASONED LUMBER.

PLATES (table is in inches)

JT	TYPE	PLATES	W	LEN	Y	X
2	TMVW-t	MT20	4.0	6.0	2.00	2.75
3	TMWW-t	MT20	3.0	4.0	1.50	1.75
4	TTW-m	MT20	4.0	4.0		
5	TMWW-t	MT20	3.0	4.0		
6	TTW-m	MT20	4.0	4.0		
7	TMWW-t	MT20	3.0	4.0	1.50	1.75
8	TMVW-t	MT20	4.0	6.0	2.00	2.75
10	BMV1+p	MT20	2.0	4.0		
11	BMWW-t	MT20	3.0	10.0	1.50	3.00
12	BMWWW-t	MT20	3.0	6.0		
13	BS-t	MT20	3.0	6.0		
14	BMWWW-t	MT20	3.0	6.0		
15	BMWW-t	MT20	3.0	10.0	1.50	3.00
16	BMV1+p	MT20	2.0	4.0		

A SIZE FOR SIZE SUBSTITUTION OF MITEK MII20 WITH TEE-LOK TL20 PLATES IS ALLOWED.

DIMENSIONS, SUPPORTS AND LOADINGS SPECIFIED BY FABRICATOR TO BE VERIFIED BY BUILDING DESIGNER

BEARINGS

JT	FACTORED GROSS REACTION VERT	HORZ	MAXIMUM FACTORED GROSS REACTION DOWN	HORZ	UPLIFT	INPUT BRG IN-SX	REQRD BRG IN-SX
16	1449	0	1449	0	0	5-8	5-8
10	1449	0	1449	0	0	5-8	5-8

UNFACTORED REACTIONS

JT	1ST LCASE COMBINED	MAX./MIN. COMPONENT REACTIONS SNOW	LIVE	PERM.LIVE	WIND	DEAD	SOIL
16	1014	723 / 0	0 / 0	0 / 0	0 / 0	291 / 0	0 / 0
10	1014	723 / 0	0 / 0	0 / 0	0 / 0	291 / 0	0 / 0

BEARING MATERIAL TO BE SPF NO.2 OR BETTER AT JOINT(S) 16, 10

BRACING

TOP CHORD TO BE SHEATHED OR MAX. PURLIN SPACING = 4.55 FT.
MAX. UNBRACED BOTTOM CHORD LENGTH = 10.00 FT. OR RIGID CEILING DIRECTLY APPLIED.

ALL PITCH BREAKS AND PERIMETER CORNER JOINTS MUST BE LATERALLY RESTRAINED.

LOADING

TOTAL LOAD CASES: (4)

CHORDS MEMB. FR-TO	MAX. FACTORED FORCE (LBS)	FACTORED VERT. LOAD (PLF) FROM	TO	LC1 MAX CSI (LC)	MAX. UNBRAC LENGTH	WEBS MEMB. FR-TO	MAX. FACTORED FORCE (LBS)	MAX CSI (LC)
1- 2	0 / 23	-77.4	-77.4	0.10 (1)	10.00	15- 3	-178 / 32	0.04 (1)
2- 3	-1914 / 0	-77.4	-77.4	0.34 (1)	4.55	3-14	-343 / 0	0.26 (1)
3- 4	-1639 / 0	-77.4	-77.4	0.31 (1)	4.86	14- 4	0 / 462	0.10 (1)
4- 5	-1453 / 0	-77.4	-77.4	0.13 (1)	5.31	14- 5	-182 / 0	0.17 (1)
5- 6	-1453 / 0	-77.4	-77.4	0.13 (1)	5.31	5-12	-182 / 0	0.17 (1)
6- 7	-1639 / 0	-77.4	-77.4	0.31 (1)	4.86	12- 6	0 / 462	0.10 (1)
7- 8	-1914 / 0	-77.4	-77.4	0.34 (1)	4.55	12- 7	-343 / 0	0.26 (1)
8- 9	0 / 23	-77.4	-77.4	0.10 (1)	10.00	11- 7	-178 / 32	0.04 (1)
16- 2	-1406 / 0	0.0	0.0	0.14 (1)	6.87	2-15	0 / 1752	0.39 (1)
10- 8	-1406 / 0	0.0	0.0	0.14 (1)	6.87	11- 8	0 / 1752	0.39 (1)
16-15	0 / 0	-17.5	-17.5	0.11 (4)	10.00			
15-14	0 / 1730	-17.5	-17.5	0.35 (1)	10.00			
14-13	0 / 1539	-17.5	-17.5	0.32 (1)	10.00			
13-12	0 / 1539	-17.5	-17.5	0.32 (1)	10.00			
12-11	0 / 1730	-17.5	-17.5	0.35 (1)	10.00			
11-10	0 / 0	-17.5	-17.5	0.11 (4)	10.00			

DESIGN CRITERIA

SPECIFIED LOADS:

TOP	CH.	LL	=	23.3	PSF
		DL	=	3.0	PSF
BOT	CH.	LL	=	0.0	PSF
		DL	=	7.0	PSF
TOTAL	LOAD		=	33.3	PSF

SPACING = 24.0 IN. C/C

LOADING IN FLAT SECTION BASED ON A SLOPE OF 6.00/12

THIS TRUSS IS DESIGNED FOR RESIDENTIAL OR SMALL BUILDING REQUIREMENTS OF PART 9, NBCC 2010

THIS DESIGN COMPLIES WITH:
- PART 9 OF OBC 2012 , BCBC 2012 , ABC 2014
- CSA 086-09
- TPIC 2011

(55 % OF 27.2 P.S.F. G.S.L. PLUS 8.4 P.S.F. RAIN LOAD) EQUALS 23.3 P.S.F. SPECIFIED ROOF LIVE LOAD

ALLOWABLE DEFL.(LL)= L/360 (0.94")
CALCULATED VERT. DEFL.(LL) = L/ 999 (0.08")
ALLOWABLE DEFL.(TL)= L/360 (0.94")
CALCULATED VERT. DEFL.(TL) = L/ 999 (0.17")

CSI: TC=0.34 (2-3:1) , BC=0.35 (14-15:1) , WB=0.39 (2-15:1) , SSI=0.18 (2-3:1)

DOL LUMBER=1.00 NAIL=1.00 LS BEND=1.10 COMP=1.10 SHEAR=1.10 TENS= 1.10

COMPANION LIVE LOAD FACTOR = 0.50

TRUSS PLATE MANUFACTURER IS NOT RESPONSIBLE FOR QUALITY CONTROL IN THE TRUSS MANUFACTURING PLANT .

NAIL VALUES

PLATE	GRIP(DRY) (PSI) MAX	MIN	SHEAR (PLI) MAX	MIN	SECTION (PLI) MAX	MIN
MT20	618	354	1667	822	2284	1656

PLATE PLACEMENT TOL. = 0.250 inches

PLATE ROTATION TOL. = 5.0 Deg.

JSI GRIP= 0.89 (11) (INPUT = 0.90)
JSI METAL= 0.51 (2) (INPUT = 1.00)

LICENSED PROFESSIONAL ENGINEER
P. M. TREVISAN
100136551
March 16th, 2017
PROVINCE OF ONTARIO

RECEIVED
TOWN OF MILTON
MAR 29, 2017
17-5337
BUILDING DIVISION

KOTT

JOB NAME	TRUSS NAME	QUANTITY	PLY	JOB DESC.	DRWG NO.
PT0317-097	T57	1	1	TRUSS DESC. LECCO RIDGE-BLOCK 344	

KOTT , Stouffville, ON, CGC

Version 8.100 S Feb 9 2017 MiTek Industries, Inc. Thu Mar 16 11:58:18 2017 Page 1
ID:EvTixTQDI5yR1QLotZTBr_yE?HJ-kgKB5rtT_7C2Wo9s5uHl8oYLfblx_b6mME8xvOzaNjZ

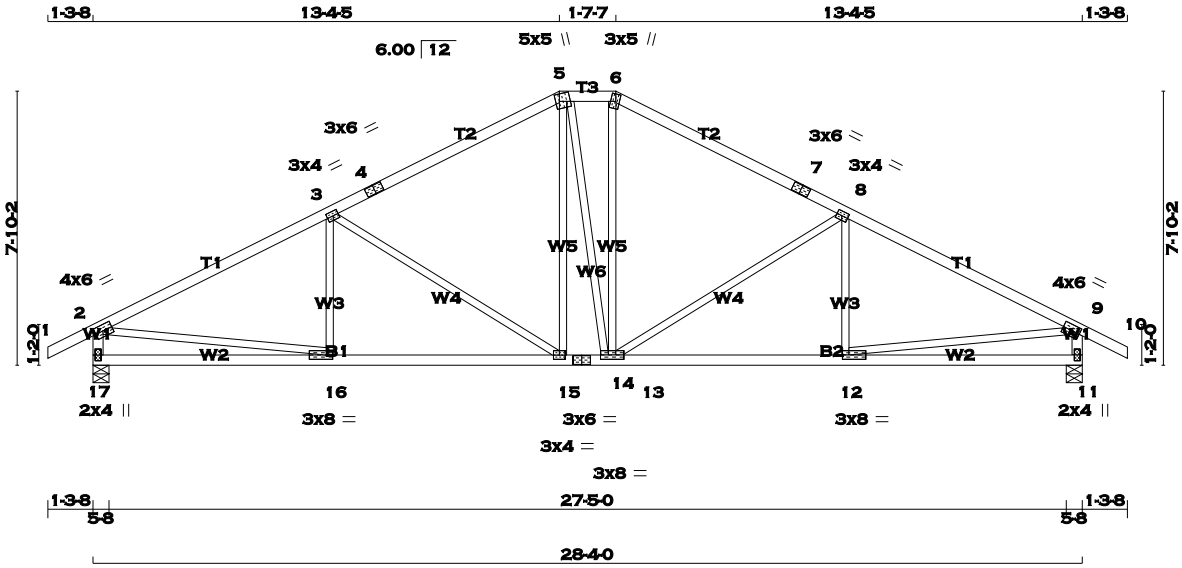

TOTAL WEIGHT = 121 lb

LUMBER
N. L. G. A. RULES

CHORDS	SIZE		LUMBER	DESCR.
1 - 4	2x4	DRY	No.2	SPF
4 - 5	2x4	DRY	No.2	SPF
5 - 6	2x4	DRY	No.2	SPF
6 - 7	2x4	DRY	No.2	SPF
7 - 10	2x4	DRY	No.2	SPF
17 - 2	2x4	DRY	No.2	SPF
11 - 9	2x4	DRY	No.2	SPF
17 - 14	2x4	DRY	No.2	SPF
14 - 11	2x4	DRY	No.2	SPF
ALL WEBS EXCEPT	2x3	DRY	No.2	SPF

DRY: SEASONED LUMBER.

PLATES (table is in inches)

JT	TYPE	PLATES	W	LEN	Y	X
2	TMVW-t	MT20	4.0	6.0	2.00	2.75
3	TMWW-t	MT20	3.0	4.0	1.50	1.75
4	TS-t	MT20	3.0	6.0		
5	TTWW+m	MT20	5.0	5.0	2.50	1.25
6	TTW+m	MT20	3.0	5.0	2.50	1.25
7	TS-t	MT20	3.0	6.0		
8	TMWW-t	MT20	3.0	4.0	1.50	1.75
9	TMVW-t	MT20	4.0	6.0	2.00	2.75
11	BMV1+p	MT20	2.0	4.0		
12	BMWW-t	MT20	3.0	8.0	1.50	2.25
13	BMWWW-t	MT20	3.0	8.0		
14	BS-t	MT20	3.0	6.0		
15	BMWW-t	MT20	3.0	4.0		
16	BMWW-t	MT20	3.0	8.0	1.50	2.25
17	BMV1+p	MT20	2.0	4.0		

A SIZE FOR SIZE SUBSTITUTION OF MITEK MII20 WITH TEE-LOK TL20 PLATES IS ALLOWED.

DIMENSIONS, SUPPORTS AND LOADINGS SPECIFIED BY FABRICATOR TO BE VERIFIED BY BUILDING DESIGNER

BEARINGS

JT	FACTORED GROSS REACTION VERT	HORZ	MAXIMUM FACTORED GROSS REACTION DOWN	HORZ	UPLIFT	INPUT BRG IN-SX	REQRD BRG IN-SX
17	1449	0	1449	0	0	5-8	5-8
11	1449	0	1449	0	0	5-8	5-8

UNFACTORED REACTIONS

JT	1ST LCASE COMBINED	MAX./MIN. COMPONENT REACTIONS SNOW	LIVE	PERM.LIVE	WIND	DEAD	SOIL
17	1014	723 / 0	0 / 0	0 / 0	0 / 0	291 / 0	0 / 0
11	1014	723 / 0	0 / 0	0 / 0	0 / 0	291 / 0	0 / 0

BEARING MATERIAL TO BE SPF NO.2 OR BETTER AT JOINT(S) 17, 11

BRACING
TOP CHORD TO BE SHEATHED OR MAX. PURLIN SPACING = 4.28 FT.
MAX. UNBRACED BOTTOM CHORD LENGTH = 10.00 FT. OR RIGID CEILING DIRECTLY APPLIED.

ALL PITCH BREAKS AND PERIMETER CORNER JOINTS MUST BE LATERALLY RESTRAINED.

LOADING
TOTAL LOAD CASES: (4)

CHORDS

MEMB. FR-TO	MAX. FACTORED FORCE (LBS)	FACTORED VERT. LOAD (PLF) FROM	TO	LC1 CSI (LC)	MAX UNBRAC LENGTH
1- 2	0 / 23	-77.4	-77.4	0.10 (1)	10.00
2- 3	-1924 / 0	-77.4	-77.4	0.55 (1)	4.28
3- 4	-1435 / 0	-77.4	-77.4	0.49 (1)	4.87
4- 5	-1435 / 0	-77.4	-77.4	0.49 (1)	4.87
5- 6	-1265 / 0	-77.4	-77.4	0.04 (1)	5.69
6- 7	-1437 / 0	-77.4	-77.4	0.49 (1)	4.87
7- 8	-1437 / 0	-77.4	-77.4	0.49 (1)	4.87
8- 9	-1923 / 0	-77.4	-77.4	0.55 (1)	4.28
9-10	0 / 23	-77.4	-77.4	0.10 (1)	10.00
17- 2	-1400 / 0	0.0	0.0	0.14 (1)	6.88
11- 9	-1399 / 0	0.0	0.0	0.14 (1)	6.88
17-16	0 / 0	-17.5	-17.5	0.20 (4)	10.00
16-15	0 / 1746	-17.5	-17.5	0.38 (1)	10.00
15-14	0 / 1262	-17.5	-17.5	0.28 (1)	10.00
14-13	0 / 1262	-17.5	-17.5	0.28 (1)	10.00
13-12	0 / 1745	-17.5	-17.5	0.37 (1)	10.00
12-11	0 / 0	-17.5	-17.5	0.19 (4)	10.00

WEBS

MEMB. FR-TO	MAX. FACTORED FORCE (LBS)	MAX CSI (LC)
16- 3	-88 / 88	0.03 (4)
3-15	-579 / 0	0.75 (1)
15- 5	0 / 364	0.08 (1)
5-13	0 / 12	0.00 (1)
13- 6	0 / 378	0.08 (1)
13- 8	-575 / 0	0.75 (1)
12- 8	-91 / 87	0.03 (4)
2-16	0 / 1760	0.40 (1)
12- 9	0 / 1759	0.40 (1)

DESIGN CRITERIA

SPECIFIED LOADS:

TOP	CH.	LL	=	23.3	PSF
		DL	=	3.0	PSF
BOT	CH.	LL	=	0.0	PSF
		DL	=	7.0	PSF
TOTAL	LOAD		=	33.3	PSF

SPACING = 24.0 IN. C/C

LOADING IN FLAT SECTION BASED ON A SLOPE OF 6.00/12

THIS TRUSS IS DESIGNED FOR RESIDENTIAL OR SMALL BUILDING REQUIREMENTS OF PART 9, NBCC 2010

THIS DESIGN COMPLIES WITH:
- PART 9 OF OBC 2012 , BCBC 2012 , ABC 2014
- CSA 086-09
- TPIC 2011

(55 % OF 27.2 P.S.F. G.S.L. PLUS 8.4 P.S.F. RAIN LOAD) EQUALS 23.3 P.S.F. SPECIFIED ROOF LIVE LOAD

ALLOWABLE DEFL.(LL)= L/360 (0.94")
CALCULATED VERT. DEFL.(LL) = L/ 999 (0.09")
ALLOWABLE DEFL.(TL)= L/360 (0.94")
CALCULATED VERT. DEFL.(TL) = L/ 999 (0.17")

CSI: TC=0.55 (2-3:1) , BC=0.38 (15-16:1) , WB=0.75 (3-15:1) , SSI=0.23 (2-3:1)

DOL LUMBER=1.00 NAIL=1.00 LS BEND=1.10 COMP=1.10 SHEAR=1.10 TENS= 1.10

COMPANION LIVE LOAD FACTOR = 0.50

TRUSS PLATE MANUFACTURER IS NOT RESPONSIBLE FOR QUALITY CONTROL IN THE TRUSS MANUFACTURING PLANT .

NAIL VALUES

PLATE	GRIP(DRY) (PSI) MAX	MIN	SHEAR (PLI) MAX	MIN	SECTION (PLI) MAX	MIN
MT20	618	354	1667	822	2284	1656

PLATE PLACEMENT TOL. = 0.250 inches

PLATE ROTATION TOL. = 5.0 Deg.

JSI GRIP= 0.89 (16) (INPUT = 0.90)
JSI METAL= 0.52 (2) (INPUT = 1.00)

LICENSED PROFESSIONAL ENGINEER
P. M. TREVISAN
100136551
March 16th, 2017
PROVINCE OF ONTARIO

RECEIVED
TOWN OF MILTON
MAR 29, 2017
17-5337
BUILDING DIVISION

KOTT

JOB NAME	TRUSS NAME	QUANTITY	PLY	JOB DESC.	DRWG NO.
PT0317-097	**T58**	**1**	**1**	TRUSS DESC. LECCO RIDGE-BLOCK 344	

KOTT , Stouffville, ON, CGC

Version 8.100 S Feb 9 2017 MiTek Industries, Inc. Thu Mar 16 11:58:19 2017 Page 1
ID:EvTixTQDI5yR1QLotZTBr_yE?HJ-CtuZIBu5lRKv8yk2fco_h04Z2_7rj39vautUSqzaNjY

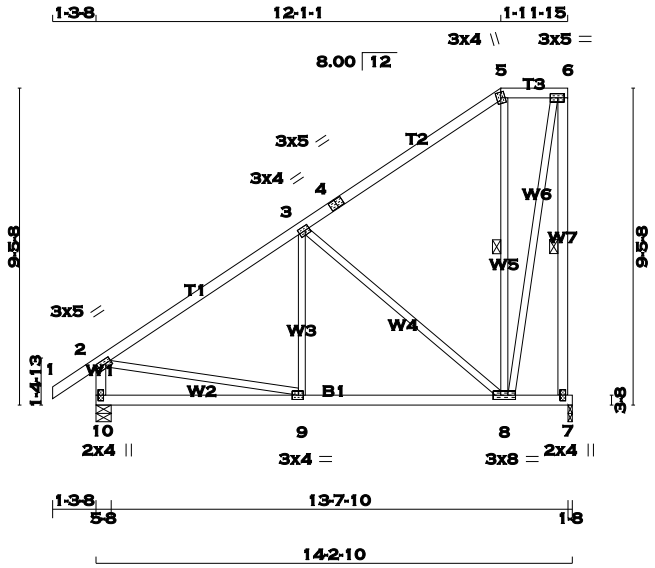

SCALE = 1:68.8

TOTAL WEIGHT = 78 lb

LUMBER
N. L. G. A. RULES

CHORDS	SIZE		LUMBER	DESCR.
1 - 4	2x4	DRY	No.2	SPF
4 - 5	2x4	DRY	No.2	SPF
5 - 6	2x4	DRY	No.2	SPF
7 - 6	2x4	DRY	No.2	SPF
10 - 2	2x4	DRY	No.2	SPF
10 - 7	2x4	DRY	No.2	SPF
ALL WEBS EXCEPT	2x3	DRY	No.2	SPF

DRY: SEASONED LUMBER.

PLATES (table is in inches)

JT	TYPE	PLATES	W	LEN	Y	X
2	TMVW-t	MT20	3.0	5.0	1.50	2.00
3	TMWW-t	MT20	3.0	4.0	1.50	1.50
4	TS-t	MT20	3.0	5.0		
5	TTW+m	MT20	3.0	4.0		
6	TMVW-t	MT20	3.0	5.0	1.50	2.25
7	BMV1+p	MT20	2.0	4.0		
8	BMWWW-t	MT20	3.0	8.0		
9	BMWW-t	MT20	3.0	4.0	1.50	1.75
10	BMV1+p	MT20	2.0	4.0		

A SIZE FOR SIZE SUBSTITUTION OF MITEK MII20 WITH TEE-LOK TL20 PLATES IS ALLOWED.

DIMENSIONS, SUPPORTS AND LOADINGS SPECIFIED BY FABRICATOR TO BE VERIFIED BY BUILDING DESIGNER

BEARINGS

JT	FACTORED GROSS REACTION VERT	HORZ	MAXIMUM FACTORED GROSS REACTION DOWN	HORZ	UPLIFT	INPUT BRG IN-SX	REQRD BRG IN-SX
7	668	0	668	0	0	1-8	1-8
10	774	0	774	0	0	5-8	5-8

UNFACTORED REACTIONS

JT	1ST LCASE COMBINED	MAX./MIN. COMPONENT REACTIONS SNOW	LIVE	PERM.LIVE	WIND	DEAD	SOIL
7	469	328 / 0	0 / 0	0 / 0	0 / 0	141 / 0	0 / 0
10	541	392 / 0	0 / 0	0 / 0	0 / 0	149 / 0	0 / 0

BEARING MATERIAL TO BE SPF NO.2 OR BETTER AT JOINT(S) 7, 10

BRACING
TOP CHORD TO BE SHEATHED OR MAX. PURLIN SPACING = 6.25 FT.
MAX. UNBRACED BOTTOM CHORD LENGTH = 10.00 FT. OR RIGID CEILING DIRECTLY APPLIED.

ALL PITCH BREAKS AND PERIMETER CORNER JOINTS MUST BE LATERALLY RESTRAINED.

1 - 2x3 SPF No.2 LATERAL BRACE(S) AT 1/ 2 LENGTH OF 6-7, 5-8. DBS = 20-0-0 . CBF = 83 LBS.

DBS = DIAGONAL BRACE SPACING (MAX). CBF = CUMULATIVE BRACING FORCE. FASTEN LATERAL BRACE(S) USING (0.122"X3") SPIRAL NAILS : 1 NAIL FOR 2x3 BRACE(S), 2 FOR 1x4, 2x4, 2x5, 3 FOR 2x6, 4 FOR 2x8, 5 FOR 2x10, AND 6 FOR 2x12.

END VERTICAL(S) MUST BE SHEATHED OR HAVE BRACES AS INDICATED IN THE MAX. UNBRACED LENGTH COLUMN OF THE TABLE BELOW

LOADING
TOTAL LOAD CASES: (4)

CHORDS

MEMB. FR-TO	MAX. FACTORED FORCE (LBS)	FACTORED VERT. LOAD (PLF) FROM	TO	LC1 MAX CSI (LC)	MAX. UNBRAC LENGTH
1- 2	0 / 29	-77.4	-77.4	0.10 (1)	10.00
2- 3	-603 / 0	-77.4	-77.4	0.38 (1)	6.25
3- 4	-180 / 0	-77.4	-77.4	0.37 (1)	6.25
4- 5	-180 / 0	-77.4	-77.4	0.37 (1)	6.25
5- 6	-121 / 0	-77.4	-77.4	0.04 (1)	6.25
7- 6	-661 / 0	0.0	0.0	0.28 (1)	6.25
10- 2	-732 / 0	0.0	0.0	0.08 (1)	7.81
10- 9	0 / 0	-17.5	-17.5	0.17 (4)	10.00
9- 8	0 / 528	-17.5	-17.5	0.21 (4)	10.00
8- 7	0 / 0	-17.5	-17.5	0.07 (4)	10.00

WEBS

MEMB. FR-TO	MAX. FACTORED FORCE (LBS)	MAX CSI (LC)
9- 3	0 / 113	0.04 (4)
3- 8	-533 / 0	0.70 (1)
8- 5	-167 / 0	0.10 (1)
8- 6	0 / 597	0.13 (1)
2- 9	0 / 536	0.12 (1)

DESIGN CRITERIA

SPECIFIED LOADS:

TOP CH.	LL =	23.3	PSF
	DL =	3.0	PSF
BOT CH.	LL =	0.0	PSF
	DL =	7.0	PSF
TOTAL LOAD	=	33.3	PSF

SPACING = 24.0 IN. C/C

LOADING IN FLAT SECTION BASED ON A SLOPE OF 6.00/12

THIS TRUSS IS DESIGNED FOR RESIDENTIAL OR SMALL BUILDING REQUIREMENTS OF PART 9, NBCC 2010

THIS DESIGN COMPLIES WITH:
- PART 9 OF OBC 2012 , BCBC 2012 , ABC 2014
- CSA 086-09
- TPIC 2011

(55 % OF 27.2 P.S.F. G.S.L. PLUS 8.4 P.S.F. RAIN LOAD) EQUALS 23.3 P.S.F. SPECIFIED ROOF LIVE LOAD

ALLOWABLE DEFL.(LL)= L/360 (0.47")
CALCULATED VERT. DEFL.(LL) = L/ 999 (0.02")
ALLOWABLE DEFL.(TL)= L/360 (0.47")
CALCULATED VERT. DEFL.(TL) = L/ 999 (0.05")

CSI: TC=0.38 (2-3:1) , BC=0.21 (8-9:4) , WB=0.70 (3-8:1) , SSI=0.19 (2-3:1)

DOL LUMBER=1.00 NAIL=1.00 LS BEND=1.10 COMP=1.10 SHEAR=1.10 TENS= 1.10

COMPANION LIVE LOAD FACTOR = 0.50

TRUSS PLATE MANUFACTURER IS NOT RESPONSIBLE FOR QUALITY CONTROL IN THE TRUSS MANUFACTURING PLANT .

NAIL VALUES

PLATE	GRIP(DRY) (PSI) MAX	MIN	SHEAR (PLI) MAX	MIN	SECTION (PLI) MAX	MIN
MT20	618	354	1667	822	2284	1656

PLATE PLACEMENT TOL. = 0.250 inches

PLATE ROTATION TOL. = 5.0 Deg.

JSI GRIP= 0.86 (6) (INPUT = 0.90)
JSI METAL= 0.24 (2) (INPUT = 1.00)

LICENSED PROFESSIONAL ENGINEER
P. M. TREVISAN
100136551
March 16th, 2017
PROVINCE OF ONTARIO

RECEIVED
TOWN OF MILTON
MAR 29, 2017
17-5337
BUILDING DIVISION

KOTT

JOB NAME	TRUSS NAME	QUANTITY	PLY	JOB DESC.	DRWG NO.
PT0317-097	T60	1	1	TRUSS DESC. LECCO RIDGE-BLOCK 344	

KOTT , Stouffville, ON, CGC

Version 8.100 S Feb 9 2017 MiTek Industries, Inc. Thu Mar 16 11:58:19 2017 Page 1
ID:EvTixTQDI5yR1QLotZTBr_yE?HJ-CtuZIBu5lRKv8yk2fco_h04W8_zLj1wvautUSqzaNjY

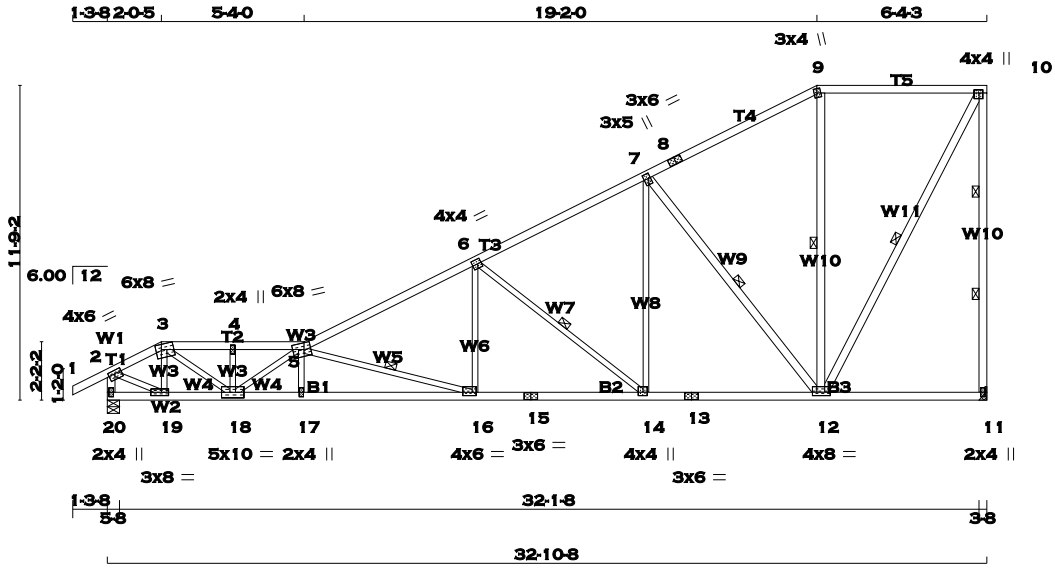

TOTAL WEIGHT = 164 lb
[M][F]

LUMBER

N. L. G. A. RULES

CHORDS	SIZE		LUMBER	DESCR.
1 - 3	2x4	DRY	No.2	SPF
3 - 5	2x4	DRY	No.2	SPF
5 - 8	2x4	DRY	No.2	SPF
8 - 9	2x4	DRY	No.2	SPF
9 - 10	2x4	DRY	No.2	SPF
11 - 10	2x4	DRY	No.2	SPF
20 - 2	2x4	DRY	No.2	SPF
20 - 15	2x4	DRY	No.2	SPF
15 - 13	2x4	DRY	No.2	SPF
13 - 11	2x4	DRY	No.2	SPF
ALL WEBS	2x3	DRY	No.2	SPF
EXCEPT				
7 - 12	2x4	DRY	No.2	SPF
12 - 9	2x4	DRY	No.2	SPF
12 - 10	2x4	DRY	No.2	SPF

DRY: SEASONED LUMBER.

PLATES (table is in inches)

JT	TYPE	PLATES	W	LEN	Y	X
2	TMVW-t	MT20	4.0	6.0	1.50	3.00
3	TTWW-m	MT20	6.0	8.0	2.25	2.50
4	TMW+w	MT20	2.0	4.0		
5	TTWWW-m	MT20	6.0	8.0	3.00	3.00
6	TMWW-t	MT20	4.0	4.0	2.00	1.50
7	TMWW+t	MT20	3.0	5.0	2.25	0.75
8	TS-t	MT20	3.0	6.0		
9	TTW+m	MT20	3.0	4.0	2.00	1.25
10	TMVW+p	MT20	4.0	4.0	1.50	1.75
11	BMV1+p	MT20	2.0	4.0		
12	BMWWW-t	MT20	4.0	8.0	1.50	2.00
13	BS-t	MT20	3.0	6.0		
14	BMWW+t	MT20	4.0	4.0	1.50	1.75
15	BS-t	MT20	3.0	6.0		
16	BMWW-t	MT20	4.0	6.0	1.50	1.75
17	BMW+w	MT20	2.0	4.0		
18	BMWWW-t	MT20	5.0	10.0		
19	BMWW-t	MT20	3.0	8.0	1.50	3.25
20	BMV1+p	MT20	2.0	4.0		

A SIZE FOR SIZE SUBSTITUTION OF MITEK MII20 WITH TEE-LOK TL20 PLATES IS ALLOWED.

DIMENSIONS, SUPPORTS AND LOADINGS SPECIFIED BY FABRICATOR TO BE VERIFIED BY BUILDING DESIGNER

BEARINGS

JT	FACTORED GROSS REACTION VERT	HORZ	MAXIMUM FACTORED GROSS REACTION DOWN	HORZ	UPLIFT	INPUT BRG IN-SX	REQRD BRG IN-SX
11	1559	0	1559	0	0	HANGER BY OTHERS MIN. SEAT SIZE: 3-8	
20	1664	0	1664	0	0	5-8	5-8

UNFACTORED REACTIONS

JT	1ST LCASE COMBINED	SNOW	LIVE	PERM.LIVE	WIND	DEAD	SOIL
		MAX./MIN. COMPONENT REACTIONS					
11	1094	766 / 0	0 / 0	0 / 0	0 / 0	329 / 0	0 / 0
20	1166	829 / 0	0 / 0	0 / 0	0 / 0	337 / 0	0 / 0

BEARING MATERIAL TO BE SPF NO.2 OR BETTER AT JOINT(S) 20

BRACING

TOP CHORD TO BE SHEATHED OR MAX. PURLIN SPACING = 3.69 FT.
MAX. UNBRACED BOTTOM CHORD LENGTH = 10.00 FT. OR RIGID CEILING DIRECTLY APPLIED.

ALL PITCH BREAKS AND PERIMETER CORNER JOINTS MUST BE LATERALLY RESTRAINED.

2 - 2x3 SPF No.2 LATERAL BRACE(S) AT 1/ 3 LENGTH OF 10-11. DBS = 8-0-0 . CBF = 76 LBS.
1 - 2x3 SPF No.2 LATERAL BRACE(S) AT 1/ 2 LENGTH OF 5-16. DBS = 6-0-0 . CBF = 85 LBS.
1 - 2x3 SPF No.2 LATERAL BRACE(S) AT 1/ 2 LENGTH OF 6-14, 7-12. DBS = 10-0-0 . CBF = 83 LBS.
1 - 2x3 SPF No.2 LATERAL BRACE(S) AT 1/ 2 LENGTH OF 9-12, 10-12. DBS = 20-0-0 . CBF = 90 LBS.

DBS = DIAGONAL BRACE SPACING (MAX). CBF = CUMULATIVE BRACING FORCE. FASTEN LATERAL BRACE(S) USING (0.122"X3") SPIRAL NAILS : 1 NAIL FOR 2x3 BRACE(S), 2 FOR 1x4, 2x4, 2x5, 3 FOR 2x6, 4 FOR 2x8, 5 FOR 2x10, AND 6 FOR 2x12.

END VERTICAL(S) MUST BE SHEATHED OR HAVE BRACES AS INDICATED IN THE MAX. UNBRACED LENGTH COLUMN OF THE TABLE BELOW

LOADING

TOTAL LOAD CASES: (4)

CHORDS

MEMB. FR-TO	MAX. FACTORED FORCE (LBS)	FROM	TO	FACTORED VERT. LOAD LC1 (PLF)	MAX CSI (LC)	MAX. UNBRAC LENGTH
1- 2	0 / 23	-77.4	-77.4	0.10 (1)	10.00	
2- 3	-1814 / 0	-77.4	-77.4	0.07 (1)	4.93	
3- 4	-3324 / 0	-77.4	-77.4	0.18 (1)	3.73	
4- 5	-3324 / 0	-77.4	-77.4	0.18 (1)	3.73	
5- 6	-2815 / 0	-77.4	-77.4	0.57 (1)	3.69	
6- 7	-1695 / 0	-77.4	-77.4	0.41 (1)	4.71	
7- 8	-793 / 0	-77.4	-77.4	0.38 (1)	6.25	
8- 9	-793 / 0	-77.4	-77.4	0.38 (1)	6.25	
9-10	-688 / 0	-77.4	-77.4	0.41 (1)	6.25	
11-10	-1516 / 0	0.0	0.0	0.48 (1)	5.33	
20- 2	-1653 / 0	0.0	0.0	0.17 (1)	6.45	
20-19	0 / 0	-17.5	-17.5	0.03 (4)	10.00	
19-18	0 / 1587	-17.5	-17.5	0.29 (1)	10.00	
18-17	0 / 4716	-17.5	-17.5	0.83 (1)	10.00	
17-16	0 / 4713	-17.5	-17.5	0.88 (1)	10.00	
16-15	0 / 2538	-17.5	-17.5	0.51 (1)	10.00	
15-14	0 / 2538	-17.5	-17.5	0.51 (1)	10.00	
14-13	0 / 1517	-17.5	-17.5	0.34 (1)	10.00	
13-12	0 / 1517	-17.5	-17.5	0.34 (1)	10.00	
12-11	0 / 0	-17.5	-17.5	0.17 (4)	10.00	

WEBS

MEMB. FR-TO	MAX. FACTORED FORCE (LBS)	MAX CSI (LC)
19- 3	-591 / 0	0.09 (1)
3-18	0 / 2125	0.48 (1)
18- 4	-203 / 0	0.03 (1)
18- 5	-1703 / 0	0.34 (1)
17- 5	0 / 92	0.03 (4)
5-16	-2268 / 0	0.72 (1)
16- 6	0 / 776	0.17 (1)
6-14	-1302 / 0	0.59 (1)
14- 7	0 / 914	0.21 (1)
7-12	-1334 / 0	0.78 (1)
12- 9	-99 / 56	0.07 (1)
12-10	0 / 1446	0.23 (1)
2-19	0 / 1746	0.39 (1)

RECEIVED
TOWN OF MILTON
MAR 29, 2017
17-5337
BUILDING DIVISION

DESIGN CRITERIA

SPECIFIED LOADS:

TOP	CH.	LL	=	23.3	PSF
		DL	=	3.0	PSF
BOT	CH.	LL	=	0.0	PSF
		DL	=	7.0	PSF
TOTAL	LOAD		=	33.3	PSF

SPACING = 24.0 IN. C/C

LOADING IN ALL FLAT SECTIONS BASED ON A SLOPE OF 6.00/12

THIS TRUSS IS DESIGNED FOR RESIDENTIAL OR SMALL BUILDING REQUIREMENTS OF PART 9, NBCC 2010

THIS DESIGN COMPLIES WITH:
- PART 9 OF OBC 2012 , BCBC 2012 , ABC 2014
- CSA 086-09
- TPIC 2011

(55 % OF 27.2 P.S.F. G.S.L. PLUS 8.4 P.S.F. RAIN LOAD) EQUALS 23.3 P.S.F. SPECIFIED ROOF LIVE LOAD

ALLOWABLE DEFL.(LL)= L/360 (1.10")
CALCULATED VERT. DEFL.(LL) = L/ 999 (0.28")
ALLOWABLE DEFL.(TL)= L/360 (1.10")
CALCULATED VERT. DEFL.(TL) = L/ 765 (0.52")

CSI: TC=0.57 (5-6:1) , BC=0.88 (16-17:1) , WB=0.78 (7-12:1) , SSI=0.21 (7-9:1)

DOL LUMBER=1.00 NAIL=1.00 LS BEND=1.10 COMP=1.10 SHEAR=1.10 TENS= 1.10

COMPANION LIVE LOAD FACTOR = 0.50

TRUSS PLATE MANUFACTURER IS NOT RESPONSIBLE FOR QUALITY CONTROL IN THE TRUSS MANUFACTURING PLANT .

NAIL VALUES

PLATE	GRIP(DRY) (PSI) MAX	MIN	SHEAR (PLI) MAX	MIN	SECTION (PLI) MAX	MIN
MT20	618	354	1667	822	2284	1656

PLATE PLACEMENT TOL. = 0.250 inches

PLATE ROTATION TOL. = 5.0 Deg.

JSI GRIP= 0.88 (19) (INPUT = 0.90)
JSI METAL= 0.78 (5) (INPUT = 1.00)

KOTT

JOB NAME	TRUSS NAME	QUANTITY	PLY	JOB DESC.	DRWG NO.
PT0317-097	T61	1	1	TRUSS DESC. LECCO RIDGE-BLOCK 344	

KOTT , Stouffville, ON, CGC

Version 8.100 S Feb 9 2017 MiTek Industries, Inc. Thu Mar 16 11:58:20 2017 Page 1
ID:EvTixTQDI5yR1QLotZTBr_yE?HJ-g3SxWXvkWkSmm6JFCJJDDDddqONySQ23pYd2_HzaNjX

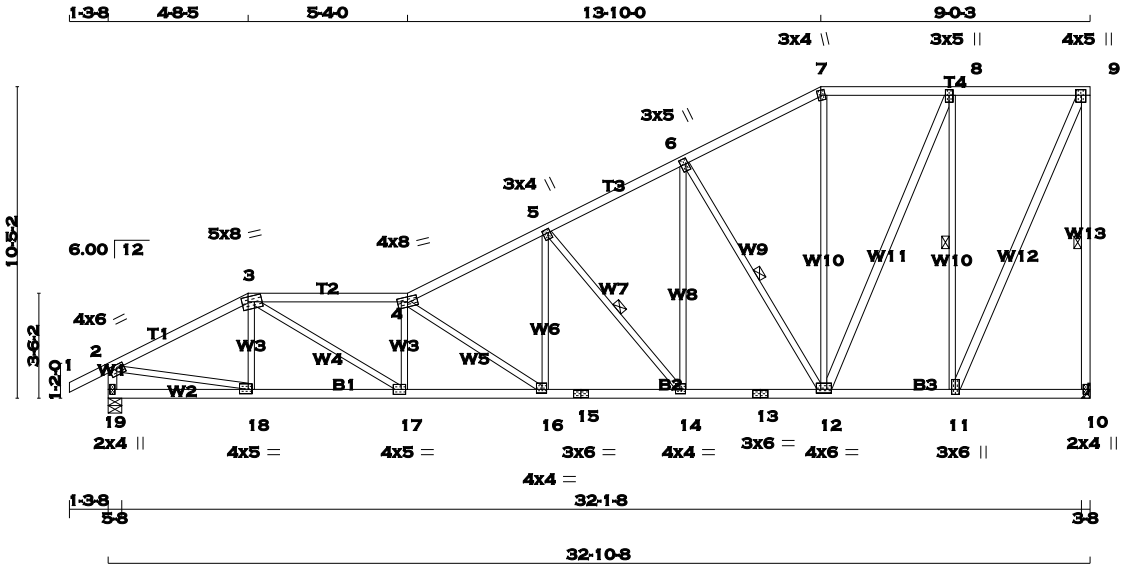

TOTAL WEIGHT = 172 lb
[M][F]

LUMBER
N. L. G. A. RULES

CHORDS	SIZE		LUMBER	DESCR.
1 - 3	2x4	DRY	No.2	SPF
3 - 4	2x4	DRY	No.2	SPF
4 - 7	2x4	DRY	No.2	SPF
7 - 9	2x4	DRY	No.2	SPF
10 - 9	2x4	DRY	No.2	SPF
19 - 2	2x4	DRY	No.2	SPF
19 - 15	2x4	DRY	No.2	SPF
15 - 13	2x4	DRY	No.2	SPF
13 - 10	2x4	DRY	No.2	SPF
ALL WEBS	2x3	DRY	No.2	SPF
EXCEPT				
12 - 8	2x4	DRY	No.2	SPF
11 - 9	2x4	DRY	No.2	SPF

DRY: SEASONED LUMBER.

PLATES (table is in inches)

JT	TYPE	PLATES	W	LEN	Y	X
2	TMVW-t	MT20	4.0	6.0	1.50	3.00
3	TTWW-m	MT20	5.0	8.0	2.00	2.50
4	TTWW-m	MT20	4.0	8.0		
5	TMWW+t	MT20	3.0	4.0	1.50	0.75
6	TMWW+t	MT20	3.0	5.0	2.25	0.75
7	TTW+m	MT20	3.0	4.0	2.00	1.25
8	TMWW+t	MT20	3.0	5.0	2.25	1.50
9	TMVW+p	MT20	4.0	5.0	2.25	1.75
10	BMV1+p	MT20	2.0	4.0		
11	BMWW+t	MT20	3.0	6.0	2.00	1.50
12	BMWWW-t	MT20	4.0	6.0	1.50	3.00
13	BS-t	MT20	3.0	6.0		
14	BMWW-t	MT20	4.0	4.0	1.75	1.75
15	BS-t	MT20	3.0	6.0		
16	BMWW-t	MT20	4.0	4.0	1.50	1.75
17	BMWW-t	MT20	4.0	5.0	2.00	1.75
18	BMWW-t	MT20	4.0	5.0	1.75	1.50
19	BMV1+p	MT20	2.0	4.0		

A SIZE FOR SIZE SUBSTITUTION OF MITEK MII20 WITH TEE-LOK TL20 PLATES IS ALLOWED.

DIMENSIONS, SUPPORTS AND LOADINGS SPECIFIED BY FABRICATOR TO BE VERIFIED BY BUILDING DESIGNER

BEARINGS

JT	FACTORED GROSS REACTION VERT	HORZ	MAXIMUM FACTORED GROSS REACTION DOWN	HORZ	UPLIFT	INPUT BRG IN-SX	REQRD BRG IN-SX
10	1559	0	1559	0	0	HANGER BY OTHERS MIN. SEAT SIZE: 3-8	
19	1664	0	1664	0	0	5-8	5-8

UNFACTORED REACTIONS

JT	1ST LCASE COMBINED	SNOW	MAX./MIN. COMPONENT REACTIONS LIVE	PERM.LIVE	WIND	DEAD	SOIL
10	1094	766 / 0	0 / 0	0 / 0	0 / 0	329 / 0	0 / 0
19	1166	829 / 0	0 / 0	0 / 0	0 / 0	337 / 0	0 / 0

BEARING MATERIAL TO BE SPF NO.2 OR BETTER AT JOINT(S) 19

BRACING
TOP CHORD TO BE SHEATHED OR MAX. PURLIN SPACING = 3.47 FT.
MAX. UNBRACED BOTTOM CHORD LENGTH = 10.00 FT. OR RIGID CEILING DIRECTLY APPLIED.

ALL PITCH BREAKS AND PERIMETER CORNER JOINTS MUST BE LATERALLY RESTRAINED.

1 - 2x3 SPF No.2 LATERAL BRACE(S) AT 1/ 2 LENGTH OF 9-10. DBS = 8-0-0 . CBF = 76 LBS.
1 - 2x3 SPF No.2 LATERAL BRACE(S) AT 1/ 2 LENGTH OF 5-14, 6-12. DBS = 12-0-0 . CBF = 90 LBS.
1 - 2x3 SPF No.2 LATERAL BRACE(S) AT 1/ 2 LENGTH OF 8-11. DBS = 10-0-0 . CBF = 81 LBS.

DBS = DIAGONAL BRACE SPACING (MAX). CBF = CUMULATIVE BRACING FORCE. FASTEN LATERAL BRACE(S) USING (0.122"X3") SPIRAL NAILS : 1 NAIL FOR 2x3 BRACE(S), 2 FOR 1x4, 2x4, 2x5, 3 FOR 2x6, 4 FOR 2x8, 5 FOR 2x10, AND 6 FOR 2x12.

END VERTICAL(S) MUST BE SHEATHED OR HAVE BRACES AS INDICATED IN THE MAX. UNBRACED LENGTH COLUMN OF THE TABLE BELOW

LOADING
TOTAL LOAD CASES: (4)

CHORDS

MEMB. FR-TO	MAX. FACTORED FORCE (LBS)	FACTORED VERT. LOAD (PLF) FROM	TO	LC1	MAX CSI (LC)	MAX. UNBRAC LENGTH
1- 2	0 / 23	-77.4	-77.4	0.10 (1)	10.00	
2- 3	-2210 / 0	-77.4	-77.4	0.29 (1)	4.34	
3- 4	-3355 / 0	-77.4	-77.4	0.45 (1)	3.47	
4- 5	-2589 / 0	-77.4	-77.4	0.28 (1)	4.08	
5- 6	-1806 / 0	-77.4	-77.4	0.22 (1)	4.79	
6- 7	-1133 / 0	-77.4	-77.4	0.20 (1)	5.75	
7- 8	-1001 / 0	-77.4	-77.4	0.20 (1)	6.01	
8- 9	-631 / 0	-77.4	-77.4	0.19 (1)	6.25	
10- 9	-1527 / 0	0.0	0.0	0.83 (1)	5.32	
19- 2	-1631 / 0	0.0	0.0	0.16 (1)	6.48	
19-18	0 / 0	-17.5	-17.5	0.10 (4)	10.00	
18-17	0 / 1967	-17.5	-17.5	0.37 (1)	10.00	
17-16	0 / 3380	-17.5	-17.5	0.60 (1)	10.00	
16-15	0 / 2330	-17.5	-17.5	0.41 (1)	10.00	
15-14	0 / 2330	-17.5	-17.5	0.41 (1)	10.00	
14-13	0 / 1616	-17.5	-17.5	0.29 (1)	10.00	
13-12	0 / 1616	-17.5	-17.5	0.29 (1)	10.00	
12-11	0 / 631	-17.5	-17.5	0.15 (1)	10.00	
11-10	0 / 0	-17.5	-17.5	0.08 (4)	10.00	

WEBS

MEMB. FR-TO	MAX. FACTORED FORCE (LBS)	MAX CSI (LC)
18- 3	-249 / 6	0.05 (1)
3-17	0 / 1629	0.37 (1)
17- 4	-781 / 0	0.16 (1)
4-16	-1280 / 0	0.70 (1)
16- 5	0 / 819	0.18 (1)
5-14	-1113 / 0	0.39 (1)
14- 6	0 / 935	0.21 (1)
6-12	-1195 / 0	0.69 (1)
12- 7	0 / 227	0.05 (1)
12- 8	0 / 947	0.15 (1)
11- 8	-1299 / 0	0.98 (1)
11- 9	0 / 1524	0.25 (1)
2-18	0 / 2007	0.45 (1)

RECEIVED
TOWN OF MILTON
MAR 29, 2017
17-5337
BUILDING DIVISION

DESIGN CRITERIA

SPECIFIED LOADS:

TOP	CH.	LL	=	23.3	PSF
		DL	=	3.0	PSF
BOT	CH.	LL	=	0.0	PSF
		DL	=	7.0	PSF
TOTAL	LOAD		=	33.3	PSF

SPACING = 24.0 IN. C/C

LOADING IN ALL FLAT SECTIONS BASED ON A SLOPE OF 6.00/12

THIS TRUSS IS DESIGNED FOR RESIDENTIAL OR SMALL BUILDING REQUIREMENTS OF PART 9, NBCC 2010

THIS DESIGN COMPLIES WITH:
- PART 9 OF OBC 2012 , BCBC 2012 , ABC 2014
- CSA 086-09
- TPIC 2011

(55 % OF 27.2 P.S.F. G.S.L. PLUS 8.4 P.S.F. RAIN LOAD) EQUALS 23.3 P.S.F. SPECIFIED ROOF LIVE LOAD

ALLOWABLE DEFL.(LL)= L/360 (1.10")
CALCULATED VERT. DEFL.(LL) = L/ 999 (0.20")
ALLOWABLE DEFL.(TL)= L/360 (1.10")
CALCULATED VERT. DEFL.(TL) = L/ 999 (0.35")

CSI: TC=0.83 (9-10:1) , BC=0.60 (16-17:1) , WB=0.98 (8-11:1) , SSI=0.17 (8-9:1)

DOL LUMBER=1.00 NAIL=1.00 LS BEND=1.10 COMP=1.10 SHEAR=1.10 TENS= 1.10

COMPANION LIVE LOAD FACTOR = 0.50

TRUSS PLATE MANUFACTURER IS NOT RESPONSIBLE FOR QUALITY CONTROL IN THE TRUSS MANUFACTURING PLANT .

NAIL VALUES

PLATE	GRIP(DRY) (PSI) MAX	MIN	SHEAR (PLI) MAX	MIN	SECTION (PLI) MAX	MIN
MT20	618	354	1667	822	2284	1656

PLATE PLACEMENT TOL. = 0.250 inches

PLATE ROTATION TOL. = 5.0 Deg.

JSI GRIP= 0.90 (2) (INPUT = 0.90)
JSI METAL= 0.60 (15) (INPUT = 1.00)

KOTT

JOB NAME	TRUSS NAME	QUANTITY	PLY	JOB DESC.	DRWG NO.
PT0317-097	T62	1	1	TRUSS DESC. LECCO RIDGE-BLOCK 344	

KOTT , Stouffville, ON, CGC

Version 8.100 S Feb 9 2017 MiTek Industries, Inc. Thu Mar 16 11:58:21 2017 Page 1
ID:EvTixTQDI5yR1QLotZTBr_yE?HJ-9F?JjtwMH2adNGuRm1qSmRArHokDBxBC2CMbWjzaNjW

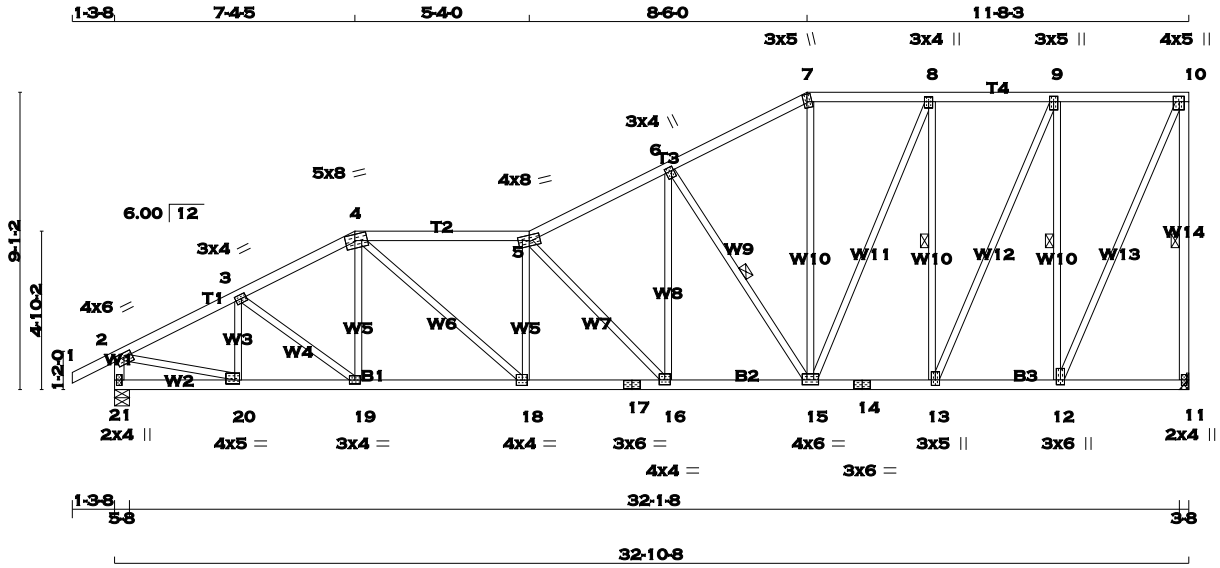

TOTAL WEIGHT = 170 lb
[M]

LUMBER
N. L. G. A. RULES

CHORDS	SIZE		LUMBER	DESCR.
1 - 4	2x4	DRY	No.2	SPF
4 - 5	2x4	DRY	No.2	SPF
5 - 7	2x4	DRY	No.2	SPF
7 - 10	2x4	DRY	No.2	SPF
11 - 10	2x4	DRY	No.2	SPF
21 - 2	2x4	DRY	No.2	SPF
21 - 17	2x4	DRY	No.2	SPF
17 - 14	2x4	DRY	No.2	SPF
14 - 11	2x4	DRY	No.2	SPF
ALL WEBS EXCEPT	2x3	DRY	No.2	SPF

DRY: SEASONED LUMBER.

PLATES (table is in inches)

JT	TYPE	PLATES	W	LEN	Y	X
2	TMVW-t	MT20	4.0	6.0	1.50	3.00
3	TMWW-t	MT20	3.0	4.0	1.50	1.75
4	TTWW-m	MT20	5.0	8.0	2.25	3.50
5	TTWW-m	MT20	4.0	8.0		
6	TMWW+t	MT20	3.0	4.0	1.50	0.75
7	TTW+m	MT20	3.0	5.0	2.75	1.25
8	TMWW+t	MT20	3.0	4.0	1.75	1.50
9	TMWW+t	MT20	3.0	5.0	2.00	1.50
10	TMVW+p	MT20	4.0	5.0	2.00	1.75
11	BMV1+p	MT20	2.0	4.0		
12	BMWW+t	MT20	3.0	6.0	1.75	1.50
13	BMWW+t	MT20	3.0	5.0	2.00	1.50
14	BS-t	MT20	3.0	6.0		
15	BMWWW-t	MT20	4.0	6.0	1.75	3.00
16	BMWW-t	MT20	4.0	4.0	1.75	2.00
17	BS-t	MT20	3.0	6.0		
18	BMWW-t	MT20	4.0	4.0	2.00	1.75
19	BMWW-t	MT20	3.0	4.0		
20	BMWW-t	MT20	4.0	5.0	1.50	1.75
21	BMV1+p	MT20	2.0	4.0		

A SIZE FOR SIZE SUBSTITUTION OF MITEK MII20 WITH TEE-LOK TL20 PLATES IS ALLOWED.

DIMENSIONS, SUPPORTS AND LOADINGS SPECIFIED BY FABRICATOR TO BE VERIFIED BY BUILDING DESIGNER

BEARINGS

JT	FACTORED GROSS REACTION VERT	HORZ	MAXIMUM FACTORED GROSS REACTION DOWN	HORZ	UPLIFT	INPUT BRG IN-SX	REQRD BRG IN-SX
11	1559	0	1559	0	0	HANGER BY OTHERS MIN. SEAT SIZE: 3-8	
21	1664	0	1664	0	0	5-8	5-8

UNFACTORED REACTIONS

JT	1ST LCASE COMBINED	SNOW	MAX./MIN. COMPONENT REACTIONS LIVE	PERM.LIVE	WIND	DEAD	SOIL
11	1094	766 / 0	0 / 0	0 / 0	0 / 0	329 / 0	0 / 0
21	1166	829 / 0	0 / 0	0 / 0	0 / 0	337 / 0	0 / 0

BEARING MATERIAL TO BE SPF NO.2 OR BETTER AT JOINT(S) 21

BRACING
TOP CHORD TO BE SHEATHED OR MAX. PURLIN SPACING = 3.70 FT.
MAX. UNBRACED BOTTOM CHORD LENGTH = 10.00 FT. OR RIGID CEILING DIRECTLY APPLIED.

ALL PITCH BREAKS AND PERIMETER CORNER JOINTS MUST BE LATERALLY RESTRAINED.

1 - 2x3 SPF No.2 LATERAL BRACE(S) AT 1/ 2 LENGTH OF 10-11. DBS = 8-0-0 . CBF = 77 LBS.
1 - 2x3 SPF No.2 LATERAL BRACE(S) AT 1/ 2 LENGTH OF 6-15. DBS = 12-0-0 . CBF = 85 LBS.
1 - 2x3 SPF No.2 LATERAL BRACE(S) AT 1/ 2 LENGTH OF 8-13. DBS = 16-0-0 . CBF = 93 LBS.
1 - 2x3 SPF No.2 LATERAL BRACE(S) AT 1/ 2 LENGTH OF 9-12. DBS = 10-0-0 . CBF = 83 LBS.

DBS = DIAGONAL BRACE SPACING (MAX). CBF = CUMULATIVE BRACING FORCE. FASTEN LATERAL BRACE(S) USING (0.122"X3") SPIRAL NAILS : 1 NAIL FOR 2x3 BRACE(S), 2 FOR 1x4, 2x4, 2x5, 3 FOR 2x6, 4 FOR 2x8, 5 FOR 2x10, AND 6 FOR 2x12.

END VERTICAL(S) MUST BE SHEATHED OR HAVE BRACES AS INDICATED IN THE MAX. UNBRACED LENGTH COLUMN OF THE TABLE BELOW

LOADING
TOTAL LOAD CASES: (4)

CHORDS MEMB. FR-TO	MAX. FACTORED FORCE (LBS)	FACTORED VERT. LOAD (PLF) FROM	TO	LC1 MAX CSI (LC)	MAX. UNBRAC LENGTH	WEBS MEMB. FR-TO	MAX. FACTORED FORCE (LBS)	MAX CSI (LC)
1- 2	0 / 23	-77.4	-77.4	0.10 (1)	10.00	20- 3	-387 / 0	0.07 (1)
2- 3	-2150 / 0	-77.4	-77.4	0.21 (1)	4.46	3-19	0 / 41	0.01 (1)
3- 4	-2214 / 0	-77.4	-77.4	0.21 (1)	4.40	19- 4	0 / 79	0.03 (4)
4- 5	-2663 / 0	-77.4	-77.4	0.54 (1)	3.70	4-18	0 / 920	0.21 (1)
5- 6	-2160 / 0	-77.4	-77.4	0.31 (1)	4.34	18- 5	-525 / 0	0.18 (1)
6- 7	-1501 / 0	-77.4	-77.4	0.27 (1)	5.06	5-16	-1064 / 0	0.73 (1)
7- 8	-1331 / 0	-77.4	-77.4	0.16 (1)	5.44	16- 6	0 / 851	0.19 (1)
8- 9	-1071 / 0	-77.4	-77.4	0.18 (1)	5.88	6-15	-1138 / 0	0.49 (1)
9-10	-643 / 0	-77.4	-77.4	0.17 (1)	6.25	15- 7	0 / 414	0.09 (1)
11-10	-1531 / 0	0.0	0.0	0.59 (1)	5.32	15- 8	0 / 669	0.15 (1)
21- 2	-1629 / 0	0.0	0.0	0.16 (1)	6.48	13- 8	-927 / 0	0.50 (1)
						13- 9	0 / 1072	0.24 (1)
21-20	0 / 0	-17.5	-17.5	0.06 (4)	10.00	12- 9	-1323 / 0	0.71 (1)
20-19	0 / 1934	-17.5	-17.5	0.36 (1)	10.00	12-10	0 / 1545	0.35 (1)
19-18	0 / 1969	-17.5	-17.5	0.37 (1)	10.00	2-20	0 / 1983	0.45 (1)
18-17	0 / 2675	-17.5	-17.5	0.47 (1)	10.00			
17-16	0 / 2675	-17.5	-17.5	0.47 (1)	10.00			
16-15	0 / 1949	-17.5	-17.5	0.35 (1)	10.00			
15-14	0 / 1071	-17.5	-17.5	0.20 (1)	10.00			
14-13	0 / 1071	-17.5	-17.5	0.20 (1)	10.00			
13-12	0 / 643	-17.5	-17.5	0.14 (1)	10.00			
12-11	0 / 0	-17.5	-17.5	0.07 (4)	10.00			

RECEIVED
TOWN OF MILTON
MAR 29, 2017
17-5337
BUILDING DIVISION

DESIGN CRITERIA

SPECIFIED LOADS:

TOP	CH.	LL	=	23.3	PSF
		DL	=	3.0	PSF
BOT	CH.	LL	=	0.0	PSF
		DL	=	7.0	PSF
TOTAL	LOAD		=	33.3	PSF

SPACING = 24.0 IN. C/C

LOADING IN ALL FLAT SECTIONS BASED ON A SLOPE OF 6.00/12

THIS TRUSS IS DESIGNED FOR RESIDENTIAL OR SMALL BUILDING REQUIREMENTS OF PART 9, NBCC 2010

THIS DESIGN COMPLIES WITH:
- PART 9 OF OBC 2012 , BCBC 2012 , ABC 2014
- CSA 086-09
- TPIC 2011

(55 % OF 27.2 P.S.F. G.S.L. PLUS 8.4 P.S.F. RAIN LOAD) EQUALS 23.3 P.S.F. SPECIFIED ROOF LIVE LOAD

ALLOWABLE DEFL.(LL)= L/360 (1.10")
CALCULATED VERT. DEFL.(LL) = L/ 999 (0.16")
ALLOWABLE DEFL.(TL)= L/360 (1.10")
CALCULATED VERT. DEFL.(TL) = L/ 999 (0.28")

CSI: TC=0.59 (10-11:1) , BC=0.47 (16-18:1) , WB=0.73 (5-16:1) , SSI=0.16 (4-5:1)

DOL LUMBER=1.00 NAIL=1.00 LS BEND=1.10 COMP=1.10 SHEAR=1.10 TENS= 1.10

COMPANION LIVE LOAD FACTOR = 0.50

TRUSS PLATE MANUFACTURER IS NOT RESPONSIBLE FOR QUALITY CONTROL IN THE TRUSS MANUFACTURING PLANT .

NAIL VALUES

PLATE	GRIP(DRY) (PSI) MAX	MIN	SHEAR (PLI) MAX	MIN	SECTION (PLI) MAX	MIN
MT20	618	354	1667	822	2284	1656

PLATE PLACEMENT TOL. = 0.250 inches

PLATE ROTATION TOL. = 5.0 Deg.

JSI GRIP= 0.89 (2) (INPUT = 0.90)
JSI METAL= 0.70 (17) (INPUT = 1.00)

KOTT

JOB NAME	TRUSS NAME	QUANTITY	PLY	JOB DESC.	DRWG NO.
PT0317-097	T63	1	1	TRUSS DESC. LECCO RIDGE-BLOCK 344	

KOTT , Stouffville, ON, CGC

Version 8.100 S Feb 9 2017 MiTek Industries, Inc. Thu Mar 16 11:58:22 2017 Page 1
ID:EvTixTQDI5yR1QLotZTBr_yE?HJ-dSZhwCw_2MiU?QTdKkMhJei5JC?ewQULHs6839zaNjV

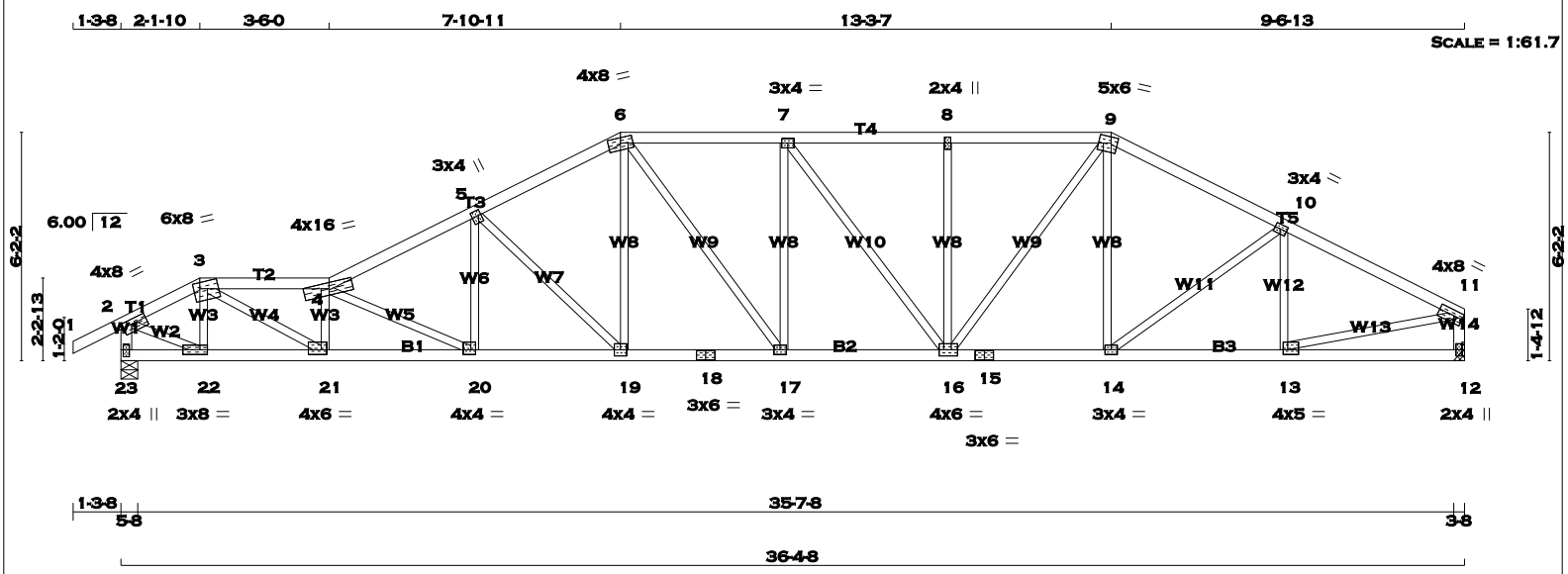

TOTAL WEIGHT = 154 lb
[M][F]

LUMBER
N. L. G. A. RULES

CHORDS	SIZE		LUMBER	DESCR.
1 - 3	2x4	DRY	No.2	SPF
3 - 4	2x4	DRY	No.2	SPF
4 - 6	2x4	DRY	No.2	SPF
6 - 9	2x4	DRY	No.2	SPF
9 - 11	2x4	DRY	No.2	SPF
23 - 2	2x4	DRY	No.2	SPF
12 - 11	2x4	DRY	No.2	SPF
23 - 18	2x4	DRY	No.2	SPF
18 - 15	2x4	DRY	No.2	SPF
15 - 12	2x4	DRY	No.2	SPF
ALL WEBS EXCEPT	2x3	DRY	No.2	SPF

DRY: SEASONED LUMBER.

PLATES (table is in inches)

JT	TYPE	PLATES	W	LEN	Y	X
2	TMVW-t	MT20	4.0	8.0	1.50	3.00
3	TTWW-m	MT20	6.0	8.0	2.00	2.00
4	TTWW-m	MT20	4.0	16.0	2.00	7.75
5	TMWW+t	MT20	3.0	4.0	1.75	0.75
6	TTWW-m	MT20	4.0	8.0	1.75	4.00
7	TMWW-t	MT20	3.0	4.0		
8	TMW+w	MT20	2.0	4.0		
9	TTWW-m	MT20	5.0	6.0	2.00	2.00
10	TMWW-t	MT20	3.0	4.0	1.50	1.75
11	TMVW-t	MT20	4.0	8.0	1.75	Edge
12	BMV1+p	MT20	2.0	4.0		
13	BMWW-t	MT20	4.0	5.0	1.50	1.50
14	BMWW-t	MT20	3.0	4.0		
15	BS-t	MT20	3.0	6.0		
16	BMWWW-t	MT20	4.0	6.0	2.00	1.50
17	BMWW-t	MT20	3.0	4.0		
18	BS-t	MT20	3.0	6.0		
19	BMWW-t	MT20	4.0	4.0		
20	BMWW-t	MT20	4.0	4.0	1.50	1.50
21	BMWW-t	MT20	4.0	6.0	1.50	1.75
22	BMWW-t	MT20	3.0	8.0	1.50	2.50
23	BMV1+p	MT20	2.0	4.0	2.25	1.00

Edge - INDICATES REFERENCE CORNER OF PLATE TOUCHES EDGE OF CHORD.

A SIZE FOR SIZE SUBSTITUTION OF MITEK MII20 WITH TEE-LOK TL20 PLATES IS ALLOWED.

DIMENSIONS, SUPPORTS AND LOADINGS SPECIFIED BY FABRICATOR TO BE VERIFIED BY BUILDING DESIGNER

BEARINGS

JT	FACTORED GROSS REACTION VERT	HORZ	MAXIMUM FACTORED GROSS REACTION DOWN	HORZ	UPLIFT	INPUT BRG IN-SX	REQRD BRG IN-SX
23	1830	0	1830	0	0	5-8	5-8
12	1725	0	1725	0	0	HANGER BY OTHERS	
						MIN. SEAT SIZE: 3-8	

UNFACTORED REACTIONS

JT	1ST LCASE COMBINED	SNOW	MAX./MIN. COMPONENT REACTIONS LIVE	PERM.LIVE	WIND	DEAD	SOIL
23	1282	910 / 0	0 / 0	0 / 0	0 / 0	372 / 0	0 / 0
12	1211	847 / 0	0 / 0	0 / 0	0 / 0	364 / 0	0 / 0

BEARING MATERIAL TO BE SPF NO.2 OR BETTER AT JOINT(S) 23

BRACING
TOP CHORD TO BE SHEATHED OR MAX. PURLIN SPACING = 3.25 FT.
MAX. UNBRACED BOTTOM CHORD LENGTH = 10.00 FT. OR RIGID CEILING DIRECTLY APPLIED.

ALL PITCH BREAKS AND PERIMETER CORNER JOINTS MUST BE LATERALLY RESTRAINED.

LOADING
TOTAL LOAD CASES: (4)

CHORDS

MEMB. FR-TO	MAX. FORCE (LBS)	FACTORED VERT. LOAD LC1 (PLF) FROM	TO	MAX CSI (LC)	MAX. UNBRAC LENGTH
1- 2	0 / 23	-77.4	-77.4	0.10 (1)	10.00
2- 3	-2070 / 0	-77.4	-77.4	0.09 (1)	4.66
3- 4	-4143 / 0	-77.4	-77.4	0.31 (1)	3.25
4- 5	-3517 / 0	-77.4	-77.4	0.29 (1)	3.55
5- 6	-2795 / 0	-77.4	-77.4	0.23 (1)	3.99
6- 7	-2693 / 0	-77.4	-77.4	0.25 (1)	4.03
7- 8	-2549 / 0	-77.4	-77.4	0.23 (1)	4.14
8- 9	-2549 / 0	-77.4	-77.4	0.24 (1)	4.13
9-10	-2339 / 0	-77.4	-77.4	0.29 (1)	4.24
10-11	-2362 / 0	-77.4	-77.4	0.30 (1)	4.22
23- 2	-1827 / 0	0.0	0.0	0.18 (1)	6.20
12-11	-1686 / 0	0.0	0.0	0.17 (1)	6.39
23-22	0 / 0	-17.5	-17.5	0.05 (1)	10.00
22-21	0 / 1815	-17.5	-17.5	0.38 (1)	10.00
21-20	0 / 4213	-17.5	-17.5	0.78 (1)	10.00
20-19	0 / 3161	-17.5	-17.5	0.54 (1)	10.00
19-18	0 / 2498	-17.5	-17.5	0.43 (1)	10.00
18-17	0 / 2498	-17.5	-17.5	0.43 (1)	10.00
17-16	0 / 2693	-17.5	-17.5	0.47 (1)	10.00
16-15	0 / 2075	-17.5	-17.5	0.38 (1)	10.00
15-14	0 / 2075	-17.5	-17.5	0.38 (1)	10.00
14-13	0 / 2129	-17.5	-17.5	0.39 (1)	10.00
13-12	0 / 0	-17.5	-17.5	0.09 (4)	10.00

WEBS

MEMB. FR-TO	MAX. FORCE (LBS)	MAX CSI (LC)
22- 3	-613 / 0	0.09 (1)
3-21	0 / 2678	0.60 (1)
21- 4	-1315 / 0	0.20 (1)
4-20	-1171 / 0	0.39 (1)
20- 5	0 / 607	0.14 (1)
5-19	-939 / 0	0.50 (1)
19- 6	0 / 725	0.16 (1)
6-17	0 / 324	0.07 (1)
17- 7	-180 / 17	0.11 (1)
7-16	-239 / 0	0.25 (1)
16- 8	-368 / 0	0.22 (1)
16- 9	0 / 787	0.18 (1)
14- 9	0 / 128	0.03 (4)
14-10	-69 / 0	0.04 (1)
13-10	-388 / 0	0.09 (1)
2-22	0 / 1979	0.45 (1)
13-11	0 / 2181	0.49 (1)

RECEIVED
TOWN OF MILTON
MAR 29, 2017
17-5337
BUILDING DIVISION

DESIGN CRITERIA

SPECIFIED LOADS:

TOP CH.	LL	=	23.3	PSF
	DL	=	3.0	PSF
BOT CH.	LL	=	0.0	PSF
	DL	=	7.0	PSF
TOTAL LOAD		=	33.3	PSF

SPACING = 24.0 IN. C/C

LOADING IN ALL FLAT SECTIONS BASED ON A SLOPE OF 6.00/12

THIS TRUSS IS DESIGNED FOR RESIDENTIAL OR SMALL BUILDING REQUIREMENTS OF PART 9, NBCC 2010

THIS DESIGN COMPLIES WITH:
- PART 9 OF OBC 2012 , BCBC 2012 , ABC 2014
- CSA 086-09
- TPIC 2011

(55 % OF 27.2 P.S.F. G.S.L. PLUS 8.4 P.S.F. RAIN LOAD) EQUALS 23.3 P.S.F. SPECIFIED ROOF LIVE LOAD

ALLOWABLE DEFL.(LL)= L/360 (1.21")
CALCULATED VERT. DEFL.(LL) = L/ 999 (0.22")
ALLOWABLE DEFL.(TL)= L/360 (1.21")
CALCULATED VERT. DEFL.(TL) = L/ 999 (0.39")

CSI: TC=0.31 (3-4:1) , BC=0.78 (20-21:1) , WB=0.60 (3-21:1) , SSI=0.16 (10-11:1)

DOL LUMBER=1.00 NAIL=1.00 LS BEND=1.10 COMP=1.10 SHEAR=1.10 TENS= 1.10

COMPANION LIVE LOAD FACTOR = 0.50

TRUSS PLATE MANUFACTURER IS NOT RESPONSIBLE FOR QUALITY CONTROL IN THE TRUSS MANUFACTURING PLANT .

NAIL VALUES

PLATE	GRIP(DRY) (PSI) MAX	MIN	SHEAR (PLI) MAX	MIN	SECTION (PLI) MAX	MIN
MT20	618	354	1667	822	2284	1656

PLATE PLACEMENT TOL. = 0.250 inches

PLATE ROTATION TOL. = 5.0 Deg.

JSI GRIP= 0.89 (4) (INPUT = 0.90)
JSI METAL= 0.66 (18) (INPUT = 1.00)

KOTT

CONTINUED ON PAGE 2

JOB NAME	TRUSS NAME	QUANTITY	PLY	JOB DESC.	DRWG NO.
PT0317-097	**T64**	**1**	**1**	TRUSS DESC. LECCO RIDGE-BLOCK 344	

ENG JOB: PT0317-097

KOTT , Stouffville, ON, CGC

Version 8.100 S Feb 9 2017 MiTek Industries, Inc. Thu Mar 16 11:58:22 2017 Page 1

ID:EvTixTQDI5yR1QLotZTBr_yE?HJ-dSZhwCw_2MiU?QTdKkMhJei4DC2PwOOLHs6839zaNjV

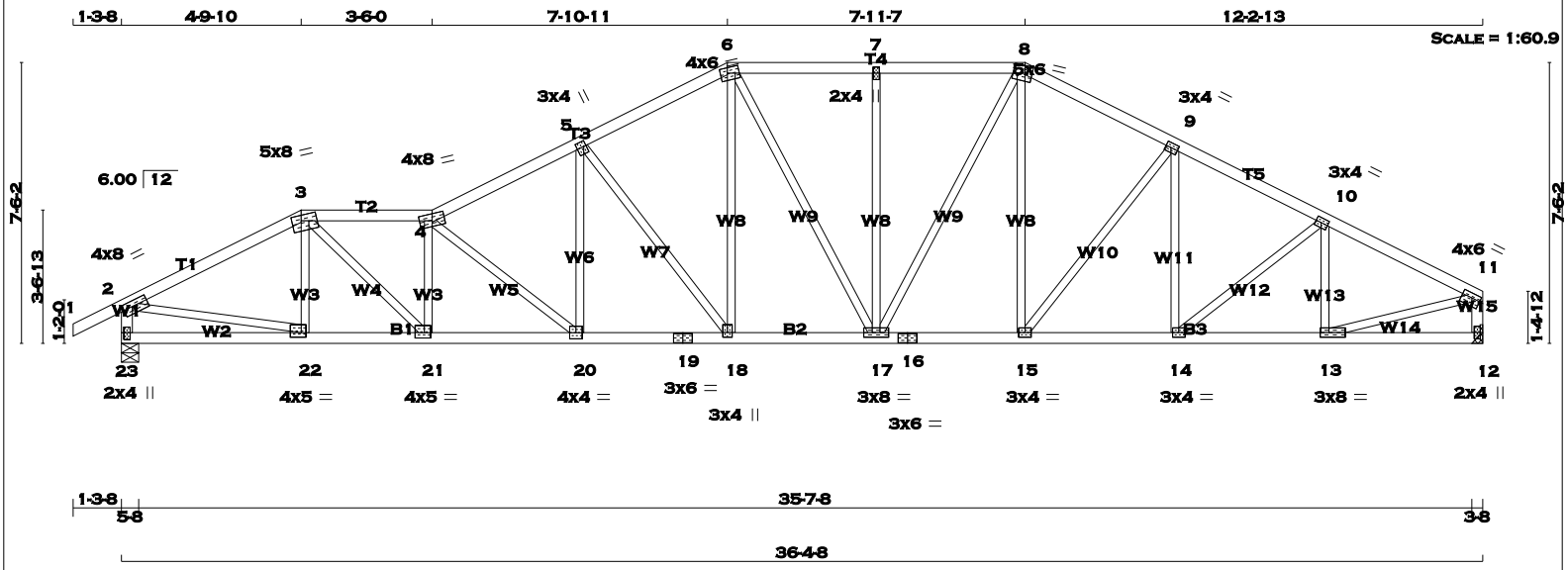

TOTAL WEIGHT = 164 lb

[M][F]

LUMBER

N. L. G. A. RULES

CHORDS	SIZE		LUMBER	DESCR.
1 - 3	2x4	DRY	No.2	SPF
3 - 4	2x4	DRY	No.2	SPF
4 - 6	2x4	DRY	No.2	SPF
6 - 8	2x4	DRY	No.2	SPF
8 - 11	2x4	DRY	No.2	SPF
23 - 2	2x4	DRY	No.2	SPF
12 - 11	2x4	DRY	No.2	SPF
23 - 19	2x4	DRY	No.2	SPF
19 - 16	2x4	DRY	No.2	SPF
16 - 12	2x4	DRY	No.2	SPF
ALL WEBS EXCEPT	2x3	DRY	No.2	SPF

DRY: SEASONED LUMBER.

PLATES (table is in inches)

JT	TYPE	PLATES	W	LEN	Y	X
2	TMVW-t	MT20	4.0	8.0	1.75	3.00
3	TTWW-m	MT20	5.0	8.0	1.75	3.00
4	TTWW-m	MT20	4.0	8.0	2.25	4.00
5	TMWW+t	MT20	3.0	4.0	1.75	0.75
6	TTWW-m	MT20	4.0	6.0	1.75	2.25
7	TMW+w	MT20	2.0	4.0		
8	TTWW-m	MT20	5.0	6.0	2.50	2.25
9	TMWW-t	MT20	3.0	4.0	1.50	1.75
10	TMWW-t	MT20	3.0	4.0	1.50	1.75
11	TMVW-t	MT20	4.0	6.0	1.50	2.75
12	BMV1+p	MT20	2.0	4.0		
13	BMWW-t	MT20	3.0	8.0	1.50	2.75
14	BMWW-t	MT20	3.0	4.0		
15	BMWW-t	MT20	3.0	4.0		
16	BS-t	MT20	3.0	6.0		
17	BMWWW-t	MT20	3.0	8.0		
18	BMWW+t	MT20	3.0	4.0	1.50	1.50
19	BS-t	MT20	3.0	6.0		
20	BMWW-t	MT20	4.0	4.0		
21	BMWW-t	MT20	4.0	5.0	1.75	2.00
22	BMWW-t	MT20	4.0	5.0	1.50	1.50
23	BMV1+p	MT20	2.0	4.0	2.25	1.00

A SIZE FOR SIZE SUBSTITUTION OF MITEK MII20 WITH TEE-LOK TL20 PLATES IS ALLOWED.

DIMENSIONS, SUPPORTS AND LOADINGS SPECIFIED BY FABRICATOR TO BE VERIFIED BY BUILDING DESIGNER

BEARINGS

JT	FACTORED GROSS REACTION VERT	HORZ	MAXIMUM FACTORED GROSS REACTION DOWN	HORZ	UPLIFT	INPUT BRG IN-SX	REQRD BRG IN-SX
23	1830	0	1830	0	0	5-8	5-8
12	1725	0	1725	0	0	HANGER BY OTHERS	
						MIN. SEAT SIZE: 3-8	

UNFACTORED REACTIONS

JT	1ST LCASE COMBINED	SNOW	MAX./MIN. COMPONENT REACTIONS LIVE	PERM.LIVE	WIND	DEAD	SOIL
23	1282	910 / 0	0 / 0	0 / 0	0 / 0	372 / 0	0 / 0
12	1211	847 / 0	0 / 0	0 / 0	0 / 0	364 / 0	0 / 0

BEARING MATERIAL TO BE SPF NO.2 OR BETTER AT JOINT(S) 23

BRACING

TOP CHORD TO BE SHEATHED OR MAX. PURLIN SPACING = 3.66 FT.
MAX. UNBRACED BOTTOM CHORD LENGTH = 10.00 FT. OR RIGID CEILING DIRECTLY APPLIED.

ALL PITCH BREAKS AND PERIMETER CORNER JOINTS MUST BE LATERALLY RESTRAINED.

LOADING

TOTAL LOAD CASES: (4)

CHORDS

MEMB. FR-TO	MAX. FACTORED FORCE (LBS)	FROM	VERT. LOAD LC1 (PLF) TO	MAX CSI (LC)	MAX. UNBRAC LENGTH
1- 2	0 / 23	-77.4	-77.4	0.10 (1)	10.00
2- 3	-2484 / 0	-77.4	-77.4	0.32 (1)	4.10
3- 4	-3343 / 0	-77.4	-77.4	0.25 (1)	3.66
4- 5	-3009 / 0	-77.4	-77.4	0.25 (1)	3.85
5- 6	-2411 / 0	-77.4	-77.4	0.21 (1)	4.26
6- 7	-2169 / 0	-77.4	-77.4	0.20 (1)	4.46
7- 8	-2169 / 0	-77.4	-77.4	0.20 (1)	4.46
8- 9	-2185 / 0	-77.4	-77.4	0.19 (1)	4.46
9-10	-2389 / 0	-77.4	-77.4	0.19 (1)	4.30
10-11	-2281 / 0	-77.4	-77.4	0.23 (1)	4.35
23- 2	-1793 / 0	0.0	0.0	0.18 (1)	6.24
12-11	-1690 / 0	0.0	0.0	0.17 (1)	6.39
23-22	0 / 0	-17.5	-17.5	0.09 (4)	10.00
22-21	0 / 2211	-17.5	-17.5	0.39 (1)	10.00
21-20	0 / 3377	-17.5	-17.5	0.60 (1)	10.00
20-19	0 / 2707	-17.5	-17.5	0.46 (1)	10.00
19-18	0 / 2707	-17.5	-17.5	0.46 (1)	10.00
18-17	0 / 2153	-17.5	-17.5	0.37 (1)	10.00
17-16	0 / 1946	-17.5	-17.5	0.34 (1)	10.00
16-15	0 / 1946	-17.5	-17.5	0.34 (1)	10.00
15-14	0 / 2137	-17.5	-17.5	0.37 (1)	10.00
14-13	0 / 2051	-17.5	-17.5	0.36 (1)	10.00
13-12	0 / 0	-17.5	-17.5	0.06 (4)	10.00

WEBS

MEMB. FR-TO	MAX. FACTORED FORCE (LBS)	MAX CSI (LC)
22- 3	-297 / 0	0.06 (1)
3-21	0 / 1572	0.35 (1)
21- 4	-1048 / 0	0.22 (1)
4-20	-869 / 0	0.38 (1)
20- 5	0 / 631	0.14 (1)
5-18	-925 / 0	0.74 (1)
18- 6	0 / 803	0.18 (1)
6-17	0 / 33	0.01 (1)
17- 7	-367 / 0	0.37 (1)
17- 8	0 / 461	0.10 (1)
15- 8	0 / 320	0.07 (1)
15- 9	-315 / 0	0.25 (1)
14- 9	0 / 58	0.02 (4)
14-10	0 / 110	0.02 (1)
13-10	-456 / 0	0.09 (1)
2-22	0 / 2254	0.51 (1)
13-11	0 / 2118	0.48 (1)

DESIGN CRITERIA

SPECIFIED LOADS:

TOP CH.	LL	=	23.3	PSF
	DL	=	3.0	PSF
BOT CH.	LL	=	0.0	PSF
	DL	=	7.0	PSF
TOTAL LOAD		=	33.3	PSF

SPACING = 24.0 IN. C/C

LOADING IN ALL FLAT SECTIONS BASED ON A SLOPE OF 6.00/12

THIS TRUSS IS DESIGNED FOR RESIDENTIAL OR SMALL BUILDING REQUIREMENTS OF PART 9, NBCC 2010

THIS DESIGN COMPLIES WITH:
- PART 9 OF OBC 2012 , BCBC 2012 , ABC 2014
- CSA 086-09
- TPIC 2011

(55 % OF 27.2 P.S.F. G.S.L. PLUS 8.4 P.S.F. RAIN LOAD) EQUALS 23.3 P.S.F. SPECIFIED ROOF LIVE LOAD

ALLOWABLE DEFL.(LL)= L/360 (1.21")
CALCULATED VERT. DEFL.(LL) = L/ 999 (0.18")
ALLOWABLE DEFL.(TL)= L/360 (1.21")
CALCULATED VERT. DEFL.(TL) = L/ 999 (0.33")

CSI: TC=0.32 (2-3:1) , BC=0.60 (20-21:1) , WB=0.74 (5-18:1) , SSI=0.15 (6-7:1)

DOL LUMBER=1.00 NAIL=1.00 LS BEND=1.10 COMP=1.10 SHEAR=1.10 TENS= 1.10

COMPANION LIVE LOAD FACTOR = 0.50

TRUSS PLATE MANUFACTURER IS NOT RESPONSIBLE FOR QUALITY CONTROL IN THE TRUSS MANUFACTURING PLANT .

NAIL VALUES

PLATE	GRIP(DRY) (PSI) MAX	MIN	SHEAR (PLI) MAX	MIN	SECTION (PLI) MAX	MIN
MT20	618	354	1667	822	2284	1656

PLATE PLACEMENT TOL. = 0.250 inches

PLATE ROTATION TOL. = 5.0 Deg.

JSI GRIP= 0.90 (21) (INPUT = 0.90)
JSI METAL= 0.70 (19) (INPUT = 1.00)

LICENSED PROFESSIONAL ENGINEER
P. M. TREVISAN
100136551
March 16th, 2017
PROVINCE OF ONTARIO

RECEIVED
TOWN OF MILTON
MAR 29, 2017
17-5337
BUILDING DIVISION

KOTT

JOB NAME	TRUSS NAME	QUANTITY	PLY	JOB DESC.	DRWG NO.
PT0317-097	T65	1	1	TRUSS DESC. LECCO RIDGE-BLOCK 344	

KOTT , Stouffville, ON, CGC

Version 8.100 S Feb 9 2017 MiTek Industries, Inc. Thu Mar 16 11:58:23 2017 Page 1
ID:EvTixTQDI5yR1QLotZTBr_yE?HJ-5e748YxcpfqKda1quStwrsFFwcQ3ftDVVWribbzaNjU

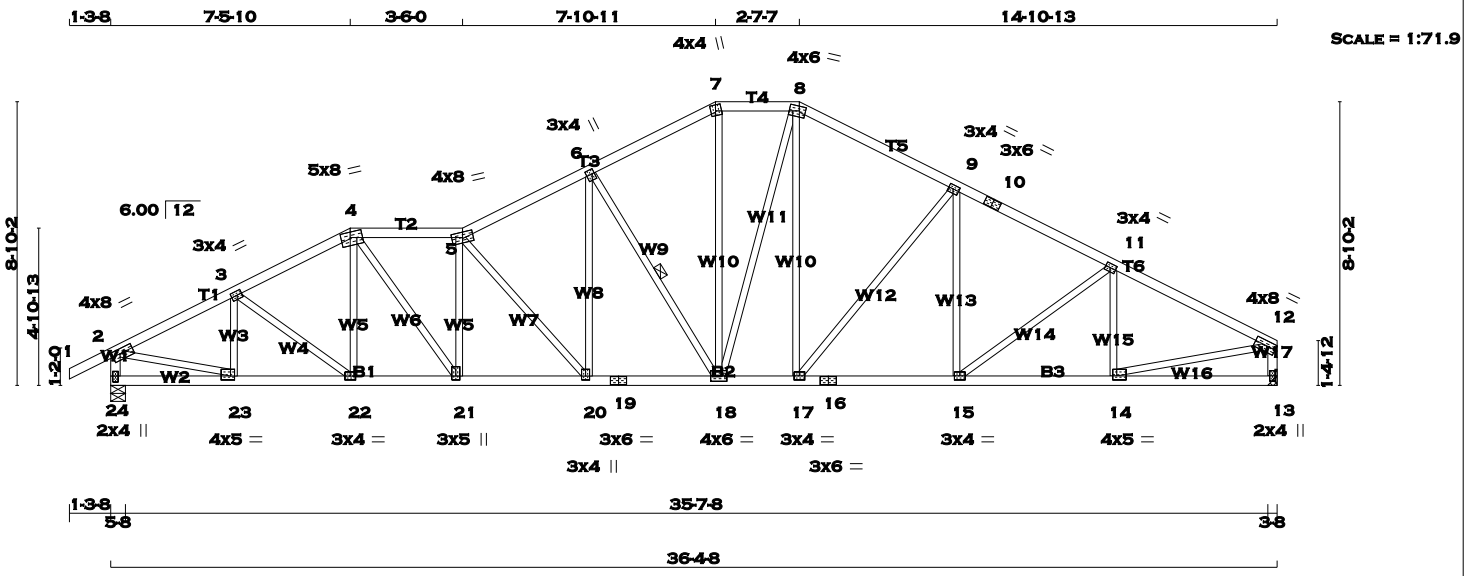

TOTAL WEIGHT = 169 lb
[M][F]

LUMBER
N. L. G. A. RULES

CHORDS	SIZE		LUMBER	DESCR.
1 - 4	2x4	DRY	No.2	SPF
4 - 5	2x4	DRY	No.2	SPF
5 - 7	2x4	DRY	No.2	SPF
7 - 8	2x4	DRY	No.2	SPF
8 - 10	2x4	DRY	No.2	SPF
10 - 12	2x4	DRY	No.2	SPF
24 - 2	2x4	DRY	No.2	SPF
13 - 12	2x4	DRY	No.2	SPF
24 - 19	2x4	DRY	No.2	SPF
19 - 16	2x4	DRY	No.2	SPF
16 - 13	2x4	DRY	No.2	SPF
ALL WEBS EXCEPT	2x3	DRY	No.2	SPF

DRY: SEASONED LUMBER.

PLATES (table is in inches)

JT	TYPE	PLATES	W	LEN	Y	X
2 3, 9, 11	TMVW-t	MT20	4.0	8.0	1.75	3.00
3	TMWW-t	MT20	3.0	4.0	1.50	1.75
4	TTWW-m	MT20	5.0	8.0	2.00	3.50
5	TTWW-m	MT20	4.0	8.0		
6	TMWW+t	MT20	3.0	4.0	1.75	0.75
7	TTW+m	MT20	4.0	4.0	2.25	1.75
8	TTWW-m	MT20	4.0	6.0	1.75	2.25
10	TS-t	MT20	3.0	6.0		
12	TMVW-t	MT20	4.0	8.0	1.75	Edge
13	BMV1+p	MT20	2.0	4.0		
14 15, 17, 22	BMWW-t	MT20	4.0	5.0	1.50	1.50
15	BMWW-t	MT20	3.0	4.0		
16	BS-t	MT20	3.0	6.0		
18	BMWWW-t	MT20	4.0	6.0		
19	BS-t	MT20	3.0	6.0		
20	BMWW+t	MT20	3.0	4.0	1.50	1.50
21	BMWW+t	MT20	3.0	5.0	1.50	1.50
23	BMWW-t	MT20	5.0	4.0	1.50	1.50
24	BMV1+p	MT20	2.0	4.0	2.25	1.00

Edge - INDICATES REFERENCE CORNER OF PLATE TOUCHES EDGE OF CHORD.

A SIZE FOR SIZE SUBSTITUTION OF MITEK MII20 WITH TEE-LOK TL20 PLATES IS ALLOWED.

DIMENSIONS, SUPPORTS AND LOADINGS SPECIFIED BY FABRICATOR TO BE VERIFIED BY BUILDING DESIGNER

BEARINGS

JT	FACTORED GROSS REACTION VERT	HORZ	MAXIMUM FACTORED GROSS REACTION DOWN	HORZ	UPLIFT	INPUT BRG IN-SX	REQRD BRG IN-SX
24	1830	0	1830	0	0	5-8	5-8
13	1725	0	1725	0	0	HANGER BY OTHERS	
						MIN. SEAT SIZE: 3-8	

UNFACTORED REACTIONS

JT	1ST LCASE COMBINED	MAX./MIN. COMPONENT REACTIONS SNOW	LIVE	PERM.LIVE	WIND	DEAD	SOIL
24	1282	910 / 0	0 / 0	0 / 0	0 / 0	372 / 0	0 / 0
13	1211	847 / 0	0 / 0	0 / 0	0 / 0	364 / 0	0 / 0

BEARING MATERIAL TO BE SPF NO.2 OR BETTER AT JOINT(S) 24

BRACING
TOP CHORD TO BE SHEATHED OR MAX. PURLIN SPACING = 3.96 FT.
MAX. UNBRACED BOTTOM CHORD LENGTH = 10.00 FT. OR RIGID CEILING DIRECTLY APPLIED.

ALL PITCH BREAKS AND PERIMETER CORNER JOINTS MUST BE LATERALLY RESTRAINED.

1 - 2x3 SPF No.2 LATERAL BRACE(S) AT 1/ 2 LENGTH OF 6-18. DBS = 14-0-0 . CBF = 85 LBS.

DBS = DIAGONAL BRACE SPACING (MAX). CBF = CUMULATIVE BRACING FORCE. FASTEN LATERAL BRACE(S) USING (0.122"X3") SPIRAL NAILS : 1 NAIL FOR 2x3 BRACE(S), 2 FOR 1x4, 2x4, 2x5, 3 FOR 2x6, 4 FOR 2x8, 5 FOR 2x10, AND 6 FOR 2x12.

END VERTICAL(S) MUST BE SHEATHED OR HAVE BRACES AS INDICATED IN THE MAX. UNBRACED LENGTH COLUMN OF THE TABLE BELOW

LOADING
TOTAL LOAD CASES: (4)

CHORDS MEMB. FR-TO	MAX. FACTORED FORCE (LBS)	FACTORED VERT. LOAD (PLF) FROM	TO	LC1	MAX CSI (LC)	MAX. UNBRAC LENGTH	WEBS MEMB. FR-TO	MAX. FACTORED FORCE (LBS)	MAX CSI (LC)
1- 2	0 / 23	-77.4	-77.4		0.10 (1)	10.00	23- 3	-428 / 0	0.08 (1)
2- 3	-2413 / 0	-77.4	-77.4		0.19 (1)	4.28	3-22	0 / 77	0.02 (1)
3- 4	-2510 / 0	-77.4	-77.4		0.19 (1)	4.22	22- 4	0 / 54	0.02 (4)
4- 5	-2854 / 0	-77.4	-77.4		0.21 (1)	3.96	4-21	0 / 1047	0.24 (1)
5- 6	-2592 / 0	-77.4	-77.4		0.23 (1)	4.12	21- 5	-789 / 0	0.28 (1)
6- 7	-2060 / 0	-77.4	-77.4		0.20 (1)	4.57	5-20	-825 / 0	0.53 (1)
7- 8	-1835 / 0	-77.4	-77.4		0.10 (1)	4.88	20- 6	0 / 694	0.16 (1)
8- 9	-2000 / 0	-77.4	-77.4		0.27 (1)	4.55	6-18	-968 / 0	0.39 (1)
9-10	-2335 / 0	-77.4	-77.4		0.27 (1)	4.27	18- 7	0 / 698	0.16 (1)
10-11	-2335 / 0	-77.4	-77.4		0.27 (1)	4.27	18- 8	0 / 200	0.05 (1)
11-12	-2372 / 0	-77.4	-77.4		0.32 (1)	4.19	17- 8	0 / 443	0.10 (1)
24- 2	-1795 / 0	0.0	0.0		0.18 (1)	6.24	17- 9	-497 / 0	0.64 (1)
13-12	-1685 / 0	0.0	0.0		0.17 (1)	6.39	15- 9	0 / 124	0.04 (4)
							15-11	-58 / 0	0.04 (1)
24-23	0 / 0	-17.5	-17.5		0.06 (4)	10.00	14-11	-364 / 0	0.09 (1)
23-22	0 / 2169	-17.5	-17.5		0.38 (1)	10.00	2-23	0 / 2223	0.50 (1)
22-21	0 / 2232	-17.5	-17.5		0.39 (1)	10.00	14-12	0 / 2183	0.49 (1)
21-20	0 / 2872	-17.5	-17.5		0.51 (1)	10.00			
20-19	0 / 2335	-17.5	-17.5		0.42 (1)	10.00			
19-18	0 / 2335	-17.5	-17.5		0.42 (1)	10.00			
18-17	0 / 1779	-17.5	-17.5		0.33 (1)	10.00			
17-16	0 / 2089	-17.5	-17.5		0.38 (1)	10.00			
16-15	0 / 2089	-17.5	-17.5		0.38 (1)	10.00			
15-14	0 / 2135	-17.5	-17.5		0.38 (1)	10.00			
14-13	0 / 0	-17.5	-17.5		0.09 (4)	10.00			

RECEIVED
TOWN OF MILTON
MAR 29, 2017
17-5337
BUILDING DIVISION

DESIGN CRITERIA

SPECIFIED LOADS:

TOP CH.	LL	=	23.3	PSF
	DL	=	3.0	PSF
BOT CH.	LL	=	0.0	PSF
	DL	=	7.0	PSF
TOTAL LOAD		=	33.3	PSF

SPACING = 24.0 IN. C/C

LOADING IN ALL FLAT SECTIONS BASED ON A SLOPE OF 6.00/12

THIS TRUSS IS DESIGNED FOR RESIDENTIAL OR SMALL BUILDING REQUIREMENTS OF PART 9, NBCC 2010

THIS DESIGN COMPLIES WITH:
- PART 9 OF OBC 2012 , BCBC 2012 , ABC 2014
- CSA 086-09
- TPIC 2011

(55 % OF 27.2 P.S.F. G.S.L. PLUS 8.4 P.S.F. RAIN LOAD) EQUALS 23.3 P.S.F. SPECIFIED ROOF LIVE LOAD

ALLOWABLE DEFL.(LL)= L/360 (1.21")
CALCULATED VERT. DEFL.(LL) = L/ 999 (0.17")
ALLOWABLE DEFL.(TL)= L/360 (1.21")
CALCULATED VERT. DEFL.(TL) = L/ 999 (0.29")

CSI: TC=0.32 (11-12:1) , BC=0.51 (20-21:1) , WB=0.64 (9-17:1) , SSI=0.16 (11-12:1)

DOL LUMBER=1.00 NAIL=1.00 LS BEND=1.10 COMP=1.10 SHEAR=1.10 TENS= 1.10

COMPANION LIVE LOAD FACTOR = 0.50

TRUSS PLATE MANUFACTURER IS NOT RESPONSIBLE FOR QUALITY CONTROL IN THE TRUSS MANUFACTURING PLANT .

NAIL VALUES

PLATE	GRIP(DRY) (PSI) MAX	MIN	SHEAR (PLI) MAX	MIN	SECTION (PLI) MAX	MIN
MT20	618	354	1667	822	2284	1656

PLATE PLACEMENT TOL. = 0.250 inches

PLATE ROTATION TOL. = 5.0 Deg.

JSI GRIP= 0.89 (21) (INPUT = 0.90)
JSI METAL= 0.65 (23) (INPUT = 1.00)

CONTINUED ON PAGE 2

JOB NAME	TRUSS NAME	QUANTITY	PLY	JOB DESC.	DRWG NO.
PT0317-097	T66	1	1	TRUSS DESC. LECCO RIDGE-BLOCK 344	

KOTT , Stouffville, ON, CGC

Version 8.100 S Feb 9 2017 MiTek Industries, Inc. Thu Mar 16 11:58:24 2017 Page 1
ID:EvTixTQDI5yR1QLotZTBr_yE?HJ-ZqhSLuyEazyBEjc0R9O9O3oQq?mvOLDekAbF72zaNjT

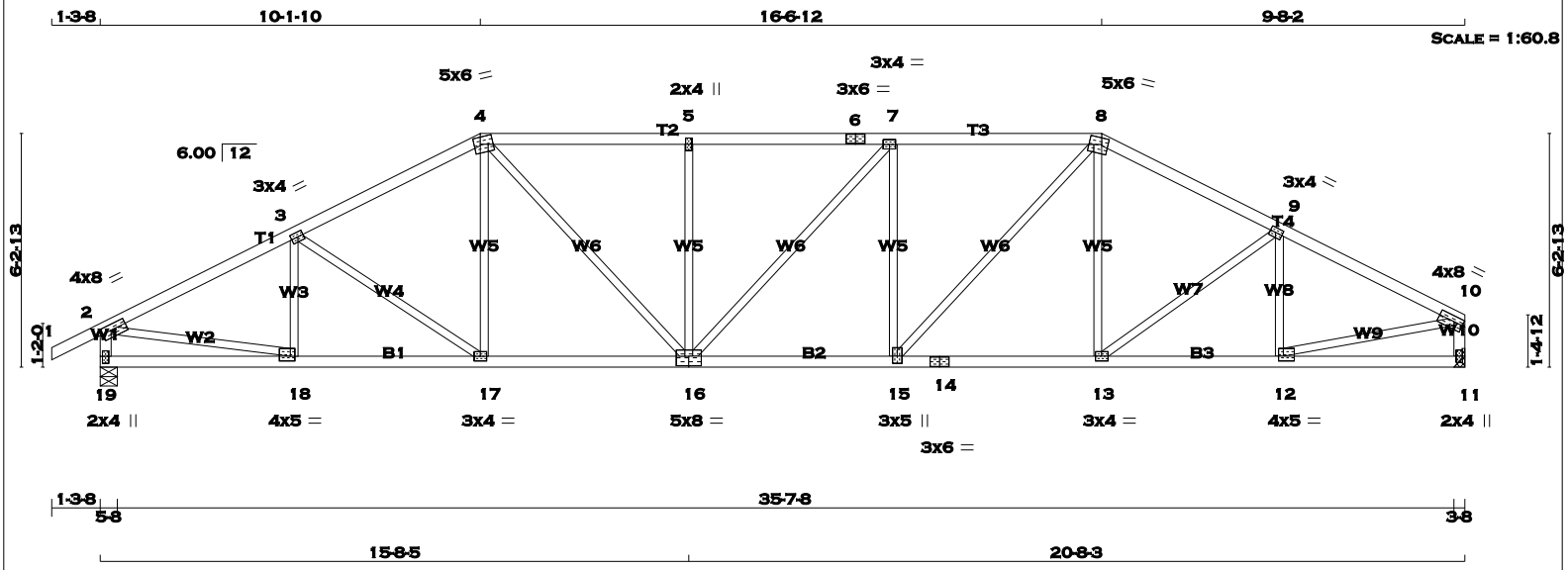

TOTAL WEIGHT = 149 lb
[M][F]

LUMBER
N. L. G. A. RULES

CHORDS	SIZE		LUMBER	DESCR.
1 - 4	2x4	DRY	No.2	SPF
4 - 6	2x4	DRY	No.2	SPF
6 - 8	2x4	DRY	No.2	SPF
8 - 10	2x4	DRY	No.2	SPF
19 - 2	2x4	DRY	No.2	SPF
11 - 10	2x4	DRY	No.2	SPF
19 - 16	2x4	DRY	No.2	SPF
16 - 14	2x4	DRY	No.2	SPF
14 - 11	2x4	DRY	No.2	SPF
ALL WEBS EXCEPT	2x3	DRY	No.2	SPF

DRY: SEASONED LUMBER.

PLATES (table is in inches)

JT	TYPE	PLATES	W	LEN	Y	X
2	TMVW-t	MT20	4.0	8.0	1.75	3.00
3	TMWW-t	MT20	3.0	4.0	1.50	1.75
4	TTWW-m	MT20	5.0	6.0	2.25	2.00
5	TMW+w	MT20	2.0	4.0		
6	TS-t	MT20	3.0	6.0		
7	TMWW-t	MT20	3.0	4.0		
8	TTWW-m	MT20	5.0	6.0	2.00	2.00
9	TMWW-t	MT20	3.0	4.0	1.50	1.75
10	TMVW-t	MT20	4.0	8.0	1.75	Edge
11	BMV1+p	MT20	2.0	4.0		
12	BMWW-t	MT20	4.0	5.0	1.50	1.50
13	BMWW-t	MT20	3.0	4.0		
14	BS-t	MT20	3.0	6.0		
15	BMWW+t	MT20	3.0	5.0	2.25	1.50
16	BSWWW-l	MT20	5.0	8.0	3.00	4.00
17	BMWW-t	MT20	3.0	4.0		
18	BMWW-t	MT20	4.0	5.0	1.50	1.50
19	BMV1+p	MT20	2.0	4.0	2.25	1.00

Edge - INDICATES REFERENCE CORNER OF PLATE TOUCHES EDGE OF CHORD.

A SIZE FOR SIZE SUBSTITUTION OF MITEK MII20 WITH TEE-LOK TL20 PLATES IS ALLOWED.

DIMENSIONS, SUPPORTS AND LOADINGS SPECIFIED BY FABRICATOR TO BE VERIFIED BY BUILDING DESIGNER

BEARINGS

JT	FACTORED GROSS REACTION VERT	HORZ	MAXIMUM FACTORED GROSS REACTION DOWN	HORZ	UPLIFT	INPUT BRG IN-SX	REQRD BRG IN-SX
19	1830	0	1830	0	0	5-8	5-8
11	1725	0	1725	0	0	HANGER BY OTHERS MIN. SEAT SIZE: 3-8	

UNFACTORED REACTIONS

JT	1ST LCASE COMBINED	SNOW	MAX./MIN. COMPONENT REACTIONS LIVE	PERM.LIVE	WIND	DEAD	SOIL
19	1282	910 / 0	0 / 0	0 / 0	0 / 0	372 / 0	0 / 0
11	1211	847 / 0	0 / 0	0 / 0	0 / 0	364 / 0	0 / 0

BEARING MATERIAL TO BE SPF NO.2 OR BETTER AT JOINT(S) 19

BRACING
TOP CHORD TO BE SHEATHED OR MAX. PURLIN SPACING = 3.95 FT.
MAX. UNBRACED BOTTOM CHORD LENGTH = 10.00 FT. OR RIGID CEILING DIRECTLY APPLIED.

ALL PITCH BREAKS AND PERIMETER CORNER JOINTS MUST BE LATERALLY RESTRAINED.

LOADING
TOTAL LOAD CASES: (4)

CHORDS

MEMB. FR-TO	MAX. FORCE (LBS)	FACTORED VERT. LOAD LC1 (PLF) FROM	TO	MAX CSI (LC)	MAX. UNBRAC LENGTH
1- 2	0 / 23	-77.4	-77.4	0.10 (1)	10.00
2- 3	-2544 / 0	-77.4	-77.4	0.34 (1)	4.05
3- 4	-2403 / 0	-77.4	-77.4	0.32 (1)	4.16
4- 5	-2633 / 0	-77.4	-77.4	0.38 (1)	3.95
5- 6	-2633 / 0	-77.4	-77.4	0.35 (1)	3.99
6- 7	-2633 / 0	-77.4	-77.4	0.35 (1)	3.99
7- 8	-2614 / 0	-77.4	-77.4	0.37 (1)	3.96
8- 9	-2335 / 0	-77.4	-77.4	0.29 (1)	4.24
9-10	-2366 / 0	-77.4	-77.4	0.30 (1)	4.21
19- 2	-1789 / 0	0.0	0.0	0.18 (1)	6.24
11-10	-1686 / 0	0.0	0.0	0.17 (1)	6.39
19-18	0 / 0	-17.5	-17.5	0.09 (4)	10.00
18-17	0 / 2293	-17.5	-17.5	0.43 (1)	10.00
17-16	0 / 2134	-17.5	-17.5	0.40 (1)	10.00
16-15	0 / 2614	-17.5	-17.5	0.47 (1)	10.00
15-14	0 / 2073	-17.5	-17.5	0.39 (1)	10.00
14-13	0 / 2073	-17.5	-17.5	0.39 (1)	10.00
13-12	0 / 2133	-17.5	-17.5	0.40 (1)	10.00
12-11	0 / 0	-17.5	-17.5	0.09 (4)	10.00

WEBS

MEMB. FR-TO	MAX. FORCE (LBS)	MAX CSI (LC)
18- 3	-292 / 0	0.07 (1)
3-17	-197 / 0	0.13 (1)
17- 4	0 / 209	0.05 (1)
4-16	0 / 730	0.16 (1)
16- 5	-461 / 0	0.28 (1)
16- 7	0 / 27	0.01 (1)
15- 7	-483 / 0	0.30 (1)
15- 8	0 / 793	0.18 (1)
13- 8	0 / 142	0.04 (4)
13- 9	-78 / 0	0.05 (1)
12- 9	-384 / 0	0.09 (1)
2-18	0 / 2324	0.52 (1)
12-10	0 / 2184	0.49 (1)

DESIGN CRITERIA

SPECIFIED LOADS:

TOP CH.	LL	=	23.3	PSF
	DL	=	3.0	PSF
BOT CH.	LL	=	0.0	PSF
	DL	=	7.0	PSF
TOTAL LOAD		=	33.3	PSF

SPACING = 24.0 IN. C/C

LOADING IN FLAT SECTION BASED ON A SLOPE OF 6.00/12

THIS TRUSS IS DESIGNED FOR RESIDENTIAL OR SMALL BUILDING REQUIREMENTS OF PART 9, NBCC 2010

THIS DESIGN COMPLIES WITH:
- PART 9 OF OBC 2012 , BCBC 2012 , ABC 2014
- CSA 086-09
- TPIC 2011

(55 % OF 27.2 P.S.F. G.S.L. PLUS 8.4 P.S.F. RAIN LOAD) EQUALS 23.3 P.S.F. SPECIFIED ROOF LIVE LOAD

ALLOWABLE DEFL.(LL)= L/360 (1.21")
CALCULATED VERT. DEFL.(LL) = L/ 999 (0.16")
ALLOWABLE DEFL.(TL)= L/360 (1.21")
CALCULATED VERT. DEFL.(TL) = L/ 999 (0.29")

CSI: TC=0.38 (4-5:1) , BC=0.47 (15-16:1) , WB=0.52 (2-18:1) , SSI=0.20 (7-8:1)

DOL LUMBER=1.00 NAIL=1.00 LS BEND=1.10 COMP=1.10 SHEAR=1.10 TENS= 1.10

COMPANION LIVE LOAD FACTOR = 0.50

TRUSS PLATE MANUFACTURER IS NOT RESPONSIBLE FOR QUALITY CONTROL IN THE TRUSS MANUFACTURING PLANT .

NAIL VALUES

PLATE	GRIP(DRY) (PSI) MAX	MIN	SHEAR (PLI) MAX	MIN	SECTION (PLI) MAX	MIN
MT20	618	354	1667	822	2284	1656

PLATE PLACEMENT TOL. = 0.250 inches

PLATE ROTATION TOL. = 5.0 Deg.

JSI GRIP= 0.88 (11) (INPUT = 0.90)
JSI METAL= 0.69 (18) (INPUT = 1.00)

LICENSED PROFESSIONAL ENGINEER
P. M. TREVISAN
100136551
March 16th, 2017
PROVINCE OF ONTARIO

RECEIVED
TOWN OF MILTON
MAR 29, 2017
17-5337
BUILDING DIVISION

KOTT

JOB NAME	TRUSS NAME	QUANTITY	PLY	JOB DESC.	DRWG NO.
PT0317-097	T67	1	1	TRUSS DESC. LECCO RIDGE-BLOCK 344	

KOTT , Stouffville, ON, CGC

Version 8.100 S Feb 9 2017 MiTek Industries, Inc. Thu Mar 16 11:58:25 2017 Page 1
ID:EvTixTQDI5yR1QLotZTBr_yE?HJ-11FqZEzsLH52stBC?tvOwHKYTP6M7o_ozqKpfUzaNjS

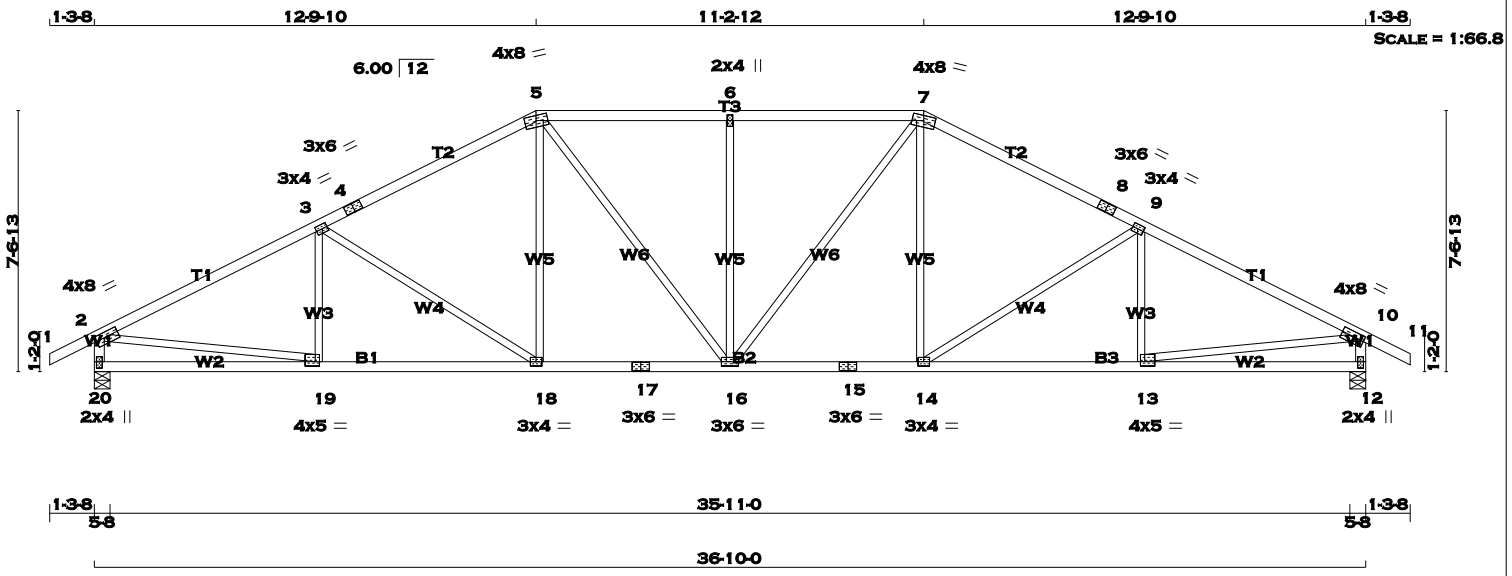

TOTAL WEIGHT = 152 lb

LUMBER
N. L. G. A. RULES

CHORDS	SIZE		LUMBER	DESCR.
1 - 4	2x4	DRY	No.2	SPF
4 - 5	2x4	DRY	No.2	SPF
5 - 7	2x4	DRY	No.2	SPF
7 - 8	2x4	DRY	No.2	SPF
8 - 11	2x4	DRY	No.2	SPF
20 - 2	2x4	DRY	No.2	SPF
12 - 10	2x4	DRY	No.2	SPF
20 - 17	2x4	DRY	No.2	SPF
17 - 15	2x4	DRY	No.2	SPF
15 - 12	2x4	DRY	No.2	SPF
ALL WEBS EXCEPT	2x3	DRY	No.2	SPF

DRY: SEASONED LUMBER.

PLATES (table is in inches)

JT	TYPE	PLATES	W	LEN	Y	X
2	TMVW-t	MT20	4.0	8.0	1.75	3.00
3	TMWW-t	MT20	3.0	4.0	1.50	1.75
4	TS-t	MT20	3.0	6.0		
5	TTWW-m	MT20	4.0	8.0	1.75	4.00
6	TMW+w	MT20	2.0	4.0		
7	TTWW-m	MT20	4.0	8.0	1.75	4.00
8	TS-t	MT20	3.0	6.0		
9	TMWW-t	MT20	3.0	4.0	1.50	1.75
10	TMVW-t	MT20	4.0	8.0	1.75	3.00
12	BMV1+p	MT20	2.0	4.0	2.25	1.00
13	BMWW-t	MT20	4.0	5.0	1.50	1.50
14	BMWW-t	MT20	3.0	4.0		
15	BS-t	MT20	3.0	6.0		
16	BMWWW-t	MT20	3.0	6.0		
17	BS-t	MT20	3.0	6.0		
18	BMWW-t	MT20	3.0	4.0		
19	BMWW-t	MT20	4.0	5.0	1.50	1.50
20	BMV1+p	MT20	2.0	4.0	2.25	1.00

A SIZE FOR SIZE SUBSTITUTION OF MITEK MII20 WITH TEE-LOK TL20 PLATES IS ALLOWED.

DIMENSIONS, SUPPORTS AND LOADINGS SPECIFIED BY FABRICATOR TO BE VERIFIED BY BUILDING DESIGNER

BEARINGS

JT	FACTORED GROSS REACTION VERT	HORZ	MAXIMUM FACTORED GROSS REACTION DOWN	HORZ	UPLIFT	INPUT BRG IN-SX	REQRD BRG IN-SX
20	1852	0	1852	0	0	5-8	5-8
12	1852	0	1852	0	0	5-8	5-8

UNFACTORED REACTIONS

JT	1ST LCASE COMBINED	MAX./MIN. COMPONENT REACTIONS SNOW	LIVE	PERM.LIVE	WIND	DEAD	SOIL
20	1297	921 / 0	0 / 0	0 / 0	0 / 0	376 / 0	0 / 0
12	1297	921 / 0	0 / 0	0 / 0	0 / 0	376 / 0	0 / 0

BEARING MATERIAL TO BE SPF NO.2 OR BETTER AT JOINT(S) 20, 12

BRACING
TOP CHORD TO BE SHEATHED OR MAX. PURLIN SPACING = 3.75 FT.
MAX. UNBRACED BOTTOM CHORD LENGTH = 10.00 FT. OR RIGID CEILING DIRECTLY APPLIED.

ALL PITCH BREAKS AND PERIMETER CORNER JOINTS MUST BE LATERALLY RESTRAINED.

LOADING
TOTAL LOAD CASES: (4)

CHORDS

MEMB. FR-TO	MAX. FACTORED FORCE (LBS)	FACTORED VERT. LOAD (PLF) FROM	TO	LC1 MAX CSI (LC)	MAX. UNBRAC LENGTH
1- 2	0 / 23	-77.4	-77.4	0.10 (1)	10.00
2- 3	-2636 / 0	-77.4	-77.4	0.58 (1)	3.75
3- 4	-2276 / 0	-77.4	-77.4	0.51 (1)	4.05
4- 5	-2276 / 0	-77.4	-77.4	0.51 (1)	4.05
5- 6	-2255 / 0	-77.4	-77.4	0.38 (1)	4.19
6- 7	-2255 / 0	-77.4	-77.4	0.38 (1)	4.19
7- 8	-2276 / 0	-77.4	-77.4	0.51 (1)	4.05
8- 9	-2276 / 0	-77.4	-77.4	0.51 (1)	4.05
9-10	-2636 / 0	-77.4	-77.4	0.58 (1)	3.75
10-11	0 / 23	-77.4	-77.4	0.10 (1)	10.00
20- 2	-1803 / 0	0.0	0.0	0.18 (1)	6.23
12-10	-1803 / 0	0.0	0.0	0.18 (1)	6.23
20-19	0 / 0	-17.5	-17.5	0.17 (4)	10.00
19-18	0 / 2380	-17.5	-17.5	0.45 (1)	10.00
18-17	0 / 2016	-17.5	-17.5	0.39 (1)	10.00
17-16	0 / 2016	-17.5	-17.5	0.39 (1)	10.00
16-15	0 / 2016	-17.5	-17.5	0.39 (1)	10.00
15-14	0 / 2016	-17.5	-17.5	0.39 (1)	10.00
14-13	0 / 2380	-17.5	-17.5	0.45 (1)	10.00
13-12	0 / 0	-17.5	-17.5	0.17 (4)	10.00

WEBS

MEMB. FR-TO	MAX. FACTORED FORCE (LBS)	MAX CSI (LC)
19- 3	-193 / 51	0.06 (1)
18- 5	0 / 345	0.08 (1)
5-16	0 / 392	0.09 (1)
16- 6	-531 / 0	0.55 (1)
16- 7	0 / 392	0.09 (1)
14- 7	0 / 345	0.08 (1)
14- 9	-439 / 0	0.51 (1)
13- 9	-193 / 51	0.06 (1)
2-19	0 / 2401	0.54 (1)
13-10	0 / 2401	0.54 (1)

DESIGN CRITERIA

SPECIFIED LOADS:

TOP	CH.	LL	=	23.3	PSF
		DL	=	3.0	PSF
BOT	CH.	LL	=	0.0	PSF
		DL	=	7.0	PSF
TOTAL	LOAD		=	33.3	PSF

SPACING = 24.0 IN. C/C

LOADING IN FLAT SECTION BASED ON A SLOPE OF 6.00/12

THIS TRUSS IS DESIGNED FOR RESIDENTIAL OR SMALL BUILDING REQUIREMENTS OF PART 9, NBCC 2010

THIS DESIGN COMPLIES WITH:
- PART 9 OF OBC 2012 , BCBC 2012 , ABC 2014
- CSA 086-09
- TPIC 2011

(55 % OF 27.2 P.S.F. G.S.L. PLUS 8.4 P.S.F. RAIN LOAD) EQUALS 23.3 P.S.F. SPECIFIED ROOF LIVE LOAD

ALLOWABLE DEFL.(LL)= L/360 (1.23")
CALCULATED VERT. DEFL.(LL) = L/ 999 (0.15")
ALLOWABLE DEFL.(TL)= L/360 (1.23")
CALCULATED VERT. DEFL.(TL) = L/ 999 (0.27")

CSI: TC=0.58 (9-10:1) , BC=0.45 (13-14:1) , WB=0.55 (6-16:1) , SSI=0.22 (9-10:1)

DOL LUMBER=1.00 NAIL=1.00 LS BEND=1.10 COMP=1.10 SHEAR=1.10 TENS= 1.10

COMPANION LIVE LOAD FACTOR = 0.50

TRUSS PLATE MANUFACTURER IS NOT RESPONSIBLE FOR QUALITY CONTROL IN THE TRUSS MANUFACTURING PLANT .

NAIL VALUES

PLATE	GRIP(DRY) (PSI) MAX	MIN	SHEAR (PLI) MAX	MIN	SECTION (PLI) MAX	MIN
MT20	618	354	1667	822	2284	1656

PLATE PLACEMENT TOL. = 0.250 inches

PLATE ROTATION TOL. = 5.0 Deg.

JSI GRIP= 0.87 (19) (INPUT = 0.90)
JSI METAL= 0.71 (19) (INPUT = 1.00)

LICENSED PROFESSIONAL ENGINEER
P. M. TREVISAN
100136551
March 16th, 2017
PROVINCE OF ONTARIO

RECEIVED
TOWN OF MILTON
MAR 29, 2017
17-5337
BUILDING DIVISION

KOTT

JOB NAME	TRUSS NAME	QUANTITY	PLY	JOB DESC.	DRWG NO.
PT0317-097	**T68**	**1**	**1**	TRUSS DESC. LECCO RIDGE-BLOCK 344	

KOTT , Stouffville, ON, CGC

Version 8.100 S Feb 9 2017 MiTek Industries, Inc. Thu Mar 16 11:58:26 2017 Page 1
ID:EvTixTQDI5yR1QLotZTBr_yE?HJ-VDpCmazU6aDvU1mOZaQdTUtIzpTCsCDxBU4MCwzaNjR

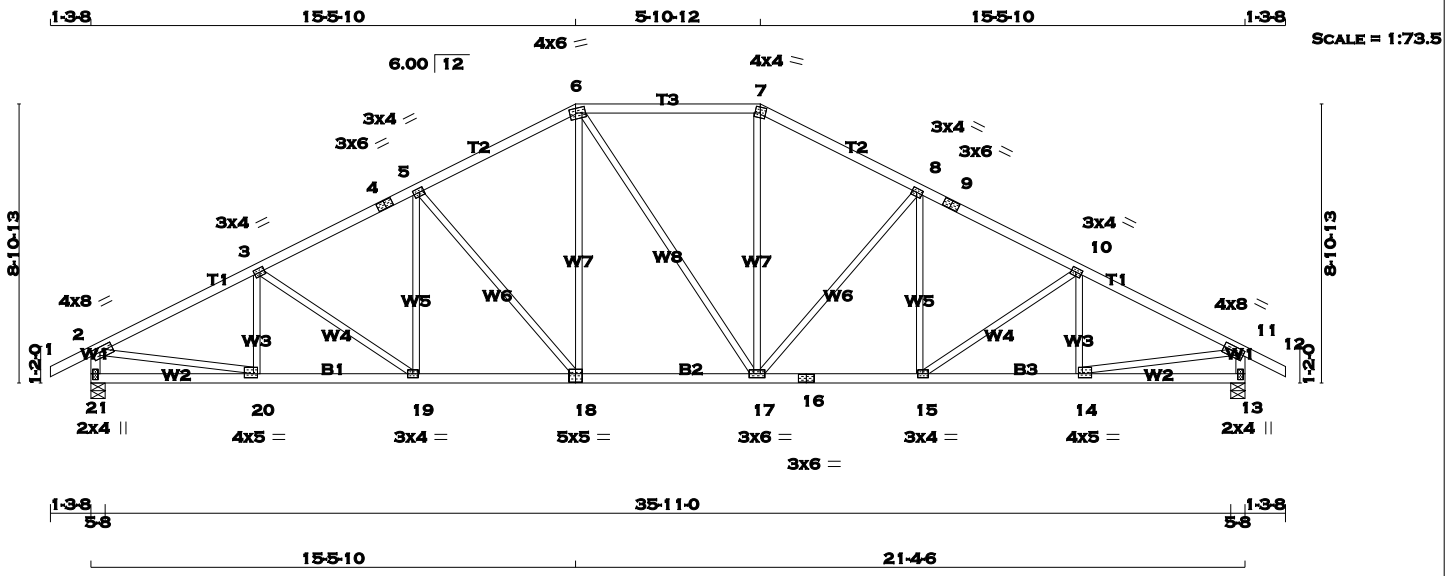

TOTAL WEIGHT = 160 lb
[M][F]

LUMBER
N. L. G. A. RULES

CHORDS	SIZE		LUMBER	DESCR.
1 - 4	2x4	DRY	No.2	SPF
4 - 6	2x4	DRY	No.2	SPF
6 - 7	2x4	DRY	No.2	SPF
7 - 9	2x4	DRY	No.2	SPF
9 - 12	2x4	DRY	No.2	SPF
21 - 2	2x4	DRY	No.2	SPF
13 - 11	2x4	DRY	No.2	SPF
21 - 18	2x4	DRY	No.2	SPF
18 - 16	2x4	DRY	No.2	SPF
16 - 13	2x4	DRY	No.2	SPF
ALL WEBS EXCEPT	2x3	DRY	No.2	SPF

DRY: SEASONED LUMBER.

PLATES (table is in inches)

JT	TYPE	PLATES	W	LEN	Y	X
2	TMVW-t	MT20	4.0	8.0	1.75	3.00
3, 5, 8, 10						
3	TMWW-t	MT20	3.0	4.0	1.50	1.75
4	TS-t	MT20	3.0	6.0		
6	TTWW-m	MT20	4.0	6.0	1.75	2.25
7	TTW-m	MT20	4.0	4.0	2.25	2.00
9	TS-t	MT20	3.0	6.0		
11	TMVW-t	MT20	4.0	8.0	1.75	3.00
13	BMV1+p	MT20	2.0	4.0	2.25	1.00
14	BMWW-t	MT20	4.0	5.0	1.50	1.50
15	BMWW-t	MT20	3.0	4.0		
16	BS-t	MT20	3.0	6.0		
17	BMWWW-t	MT20	3.0	6.0		
18	BSWW-l	MT20	5.0	5.0	3.25	2.50
19	BMWW-t	MT20	3.0	4.0		
20	BMWW-t	MT20	4.0	5.0	1.50	1.50
21	BMV1+p	MT20	2.0	4.0	2.25	1.00

A SIZE FOR SIZE SUBSTITUTION OF MITEK MII20 WITH TEE-LOK TL20 PLATES IS ALLOWED.

DIMENSIONS, SUPPORTS AND LOADINGS SPECIFIED BY FABRICATOR TO BE VERIFIED BY BUILDING DESIGNER

BEARINGS

JT	FACTORED GROSS REACTION VERT	HORZ	MAXIMUM FACTORED GROSS REACTION DOWN	HORZ	UPLIFT	INPUT BRG IN-SX	REQRD BRG IN-SX
21	1852	0	1852	0	0	5-8	5-8
13	1852	0	1852	0	0	5-8	5-8

UNFACTORED REACTIONS

JT	1ST LCASE COMBINED	MAX./MIN. COMPONENT REACTIONS SNOW	LIVE	PERM.LIVE	WIND	DEAD	SOIL
21	1297	921 / 0	0 / 0	0 / 0	0 / 0	376 / 0	0 / 0
13	1297	921 / 0	0 / 0	0 / 0	0 / 0	376 / 0	0 / 0

BEARING MATERIAL TO BE SPF NO.2 OR BETTER AT JOINT(S) 21, 13

BRACING
TOP CHORD TO BE SHEATHED OR MAX. PURLIN SPACING = 4.01 FT.
MAX. UNBRACED BOTTOM CHORD LENGTH = 10.00 FT. OR RIGID CEILING DIRECTLY APPLIED.

ALL PITCH BREAKS AND PERIMETER CORNER JOINTS MUST BE LATERALLY RESTRAINED.

LOADING
TOTAL LOAD CASES: (4)

CHORDS

MEMB. FR-TO	MAX. FACTORED FORCE (LBS)	FACTORED VERT. LOAD (PLF) FROM	TO	LC1 CSI (LC)	MAX UNBRAC LENGTH
1- 2	0 / 23	-77.4	-77.4	0.10 (1)	10.00
2- 3	-2578 / 0	-77.4	-77.4	0.37 (1)	4.01
3- 4	-2448 / 0	-77.4	-77.4	0.30 (1)	4.17
4- 5	-2448 / 0	-77.4	-77.4	0.30 (1)	4.17
5- 6	-2055 / 0	-77.4	-77.4	0.29 (1)	4.47
6- 7	-1829 / 0	-77.4	-77.4	0.40 (1)	4.54
7- 8	-2055 / 0	-77.4	-77.4	0.29 (1)	4.47
8- 9	-2447 / 0	-77.4	-77.4	0.30 (1)	4.17
9-10	-2447 / 0	-77.4	-77.4	0.30 (1)	4.17
10-11	-2578 / 0	-77.4	-77.4	0.37 (1)	4.01
11-12	0 / 23	-77.4	-77.4	0.10 (1)	10.00
21- 2	-1810 / 0	0.0	0.0	0.18 (1)	6.22
13-11	-1810 / 0	0.0	0.0	0.18 (1)	6.21
21-20	0 / 0	-17.5	-17.5	0.10 (4)	10.00
20-19	0 / 2320	-17.5	-17.5	0.41 (1)	10.00
19-18	0 / 2190	-17.5	-17.5	0.41 (1)	10.00
18-17	0 / 1828	-17.5	-17.5	0.36 (1)	10.00
17-16	0 / 2189	-17.5	-17.5	0.42 (1)	10.00
16-15	0 / 2189	-17.5	-17.5	0.42 (1)	10.00
15-14	0 / 2320	-17.5	-17.5	0.42 (1)	10.00
14-13	0 / 0	-17.5	-17.5	0.10 (4)	10.00

WEBS

MEMB. FR-TO	MAX. FACTORED FORCE (LBS)	MAX CSI (LC)
20- 3	-281 / 2	0.06 (1)
3-19	-159 / 0	0.11 (1)
19- 5	0 / 178	0.04 (4)
5-18	-565 / 0	0.75 (1)
18- 6	0 / 525	0.12 (1)
6-17	0 / 1	0.00 (1)
17- 7	0 / 527	0.12 (1)
17- 8	-564 / 0	0.74 (1)
15- 8	0 / 177	0.04 (4)
15-10	-159 / 0	0.11 (1)
14-10	-281 / 3	0.06 (1)
2-20	0 / 2351	0.53 (1)
14-11	0 / 2351	0.53 (1)

DESIGN CRITERIA

SPECIFIED LOADS:

TOP CH.	LL	=	23.3	PSF
	DL	=	3.0	PSF
BOT CH.	LL	=	0.0	PSF
	DL	=	7.0	PSF
TOTAL LOAD		=	33.3	PSF

SPACING = 24.0 IN. C/C

LOADING IN FLAT SECTION BASED ON A SLOPE OF 6.00/12

THIS TRUSS IS DESIGNED FOR RESIDENTIAL OR SMALL BUILDING REQUIREMENTS OF PART 9, NBCC 2010

THIS DESIGN COMPLIES WITH:
- PART 9 OF OBC 2012 , BCBC 2012 , ABC 2014
- CSA 086-09
- TPIC 2011

(55 % OF 27.2 P.S.F. G.S.L. PLUS 8.4 P.S.F. RAIN LOAD) EQUALS 23.3 P.S.F. SPECIFIED ROOF LIVE LOAD

ALLOWABLE DEFL.(LL)= L/360 (1.23")
CALCULATED VERT. DEFL.(LL) = L/ 999 (0.14")
ALLOWABLE DEFL.(TL)= L/360 (1.23")
CALCULATED VERT. DEFL.(TL) = L/ 999 (0.25")

CSI: TC=0.40 (6-7:1) , BC=0.42 (15-17:1) , WB=0.75 (5-18:1) , SSI=0.18 (6-7:1)

DOL LUMBER=1.00 NAIL=1.00 LS BEND=1.10 COMP=1.10 SHEAR=1.10 TENS= 1.10

COMPANION LIVE LOAD FACTOR = 0.50

TRUSS PLATE MANUFACTURER IS NOT RESPONSIBLE FOR QUALITY CONTROL IN THE TRUSS MANUFACTURING PLANT .

NAIL VALUES

PLATE	GRIP(DRY) (PSI) MAX	MIN	SHEAR (PLI) MAX	MIN	SECTION (PLI) MAX	MIN
MT20	618	354	1667	822	2284	1656

PLATE PLACEMENT TOL. = 0.250 inches

PLATE ROTATION TOL. = 5.0 Deg.

JSI GRIP= 0.88 (14) (INPUT = 0.90)
JSI METAL= 0.70 (14) (INPUT = 1.00)

LICENSED PROFESSIONAL ENGINEER
P. M. TREVISAN
100136551
March 16th, 2017
PROVINCE OF ONTARIO

RECEIVED
TOWN OF MILTON
MAR 29, 2017
17-5337
BUILDING DIVISION

KOTT

JOB NAME	TRUSS NAME	QUANTITY	PLY	JOB DESC.	DRWG NO.
PT0317-097	**T69**	**1**	**1**	TRUSS DESC. LECCO RIDGE-BLOCK 344	

KOTT , Stouffville, ON, CGC

Version 8.100 S Feb 9 2017 MiTek Industries, Inc. Thu Mar 16 11:58:27 2017 Page 1
ID:EvTixTQDI5yR1QLotZTBr_yE?HJ-zPNa_w_7tuLm5BLb7Hxs0iQv6Doxbim4Q8pvkNzaNjQ

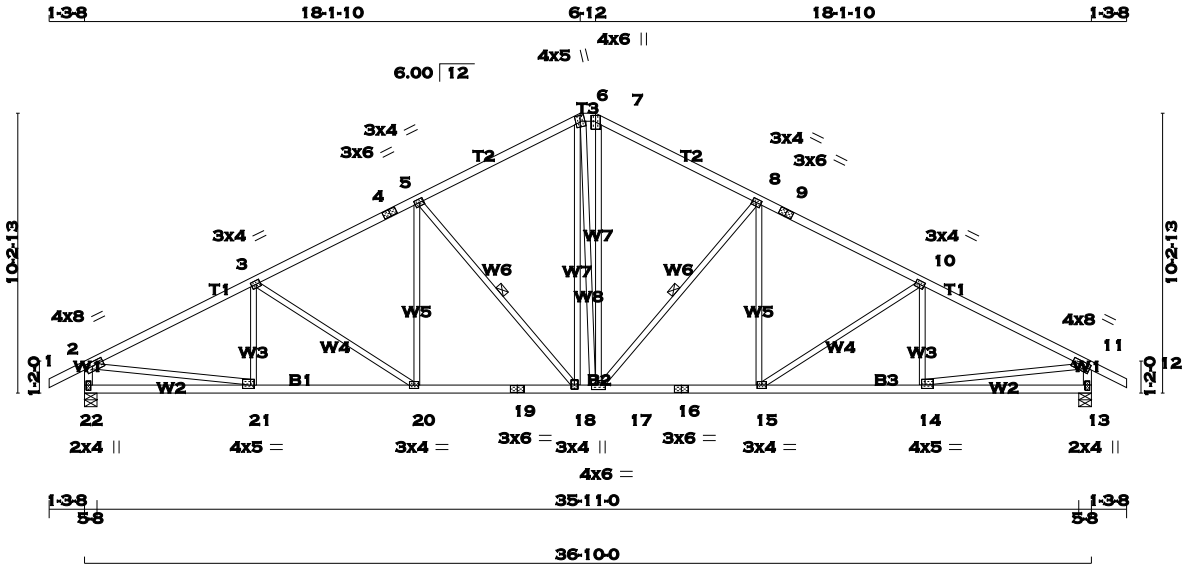

TOTAL WEIGHT = 169 lb
[M][F]

LUMBER
N. L. G. A. RULES

CHORDS	SIZE		LUMBER	DESCR.
1 - 4	2x4	DRY	No.2	SPF
4 - 6	2x4	DRY	No.2	SPF
6 - 7	2x4	DRY	No.2	SPF
7 - 9	2x4	DRY	No.2	SPF
9 - 12	2x4	DRY	No.2	SPF
22 - 2	2x4	DRY	No.2	SPF
13 - 11	2x4	DRY	No.2	SPF
22 - 19	2x4	DRY	No.2	SPF
19 - 16	2x4	DRY	No.2	SPF
16 - 13	2x4	DRY	No.2	SPF
ALL WEBS EXCEPT	2x3	DRY	No.2	SPF

DRY: SEASONED LUMBER.

PLATES (table is in inches)

JT	TYPE	PLATES	W	LEN	Y	X
2 3, 5, 8, 10	TMVW-t	MT20	4.0	8.0	1.75	3.00
3	TMWW-t	MT20	3.0	4.0	1.50	1.75
4	TS-t	MT20	3.0	6.0		
6	TTWW+m	MT20	4.0	5.0		
7	TTW+p	MT20	4.0	6.0	2.50	2.00
9	TS-t	MT20	3.0	6.0		
11	TMVW-t	MT20	4.0	8.0	1.75	3.00
13	BMV1+p	MT20	2.0	4.0	2.25	1.00
14	BMWW-t	MT20	4.0	5.0	1.50	1.50
15	BMWW-t	MT20	3.0	4.0		
16	BS-t	MT20	3.0	6.0		
17	BMWWW-t	MT20	4.0	6.0		
18	BMWW+t	MT20	3.0	4.0	1.75	1.50
19	BS-t	MT20	3.0	6.0		
20	BMWW-t	MT20	3.0	4.0		
21	BMWW-t	MT20	4.0	5.0	1.50	1.50
22	BMV1+p	MT20	2.0	4.0	2.25	1.00

A SIZE FOR SIZE SUBSTITUTION OF MITEK MII20 WITH TEE-LOK TL20 PLATES IS ALLOWED.

DIMENSIONS, SUPPORTS AND LOADINGS SPECIFIED BY FABRICATOR TO BE VERIFIED BY BUILDING DESIGNER

BEARINGS

JT	FACTORED GROSS REACTION VERT	HORZ	MAXIMUM FACTORED GROSS REACTION DOWN	HORZ	UPLIFT	INPUT BRG IN-SX	REQRD BRG IN-SX
22	1852	0	1852	0	0	5-8	5-8
13	1852	0	1852	0	0	5-8	5-8

UNFACTORED REACTIONS

JT	1ST LCASE COMBINED	MAX./MIN. COMPONENT REACTIONS SNOW	LIVE	PERM.LIVE	WIND	DEAD	SOIL
22	1297	921 / 0	0 / 0	0 / 0	0 / 0	376 / 0	0 / 0
13	1297	921 / 0	0 / 0	0 / 0	0 / 0	376 / 0	0 / 0

BEARING MATERIAL TO BE SPF NO.2 OR BETTER AT JOINT(S) 22, 13

BRACING
TOP CHORD TO BE SHEATHED OR MAX. PURLIN SPACING = 3.86 FT.
MAX. UNBRACED BOTTOM CHORD LENGTH = 10.00 FT. OR RIGID CEILING DIRECTLY APPLIED.

ALL PITCH BREAKS AND PERIMETER CORNER JOINTS MUST BE LATERALLY RESTRAINED.

1 - 2x3 SPF No.2 LATERAL BRACE(S) AT 1/ 2 LENGTH OF 5-18, 8-17. DBS = 20-0-0 . CBF = 91 LBS.

DBS = DIAGONAL BRACE SPACING (MAX). CBF = CUMULATIVE BRACING FORCE. FASTEN LATERAL BRACE(S) USING (0.122"X3") SPIRAL NAILS : 1 NAIL FOR 2x3 BRACE(S), 2 FOR 1x4, 2x4, 2x5, 3 FOR 2x6, 4 FOR 2x8, 5 FOR 2x10, AND 6 FOR 2x12.

END VERTICAL(S) MUST BE SHEATHED OR HAVE BRACES AS INDICATED IN THE MAX. UNBRACED LENGTH COLUMN OF THE TABLE BELOW

LOADING
TOTAL LOAD CASES: (4)

CHORDS MEMB. FR-TO	MAX. FACTORED FORCE (LBS)	FACTORED VERT. LOAD (PLF) FROM	TO	LC1 CSI (LC)	MAX UNBRAC LENGTH	WEBS MEMB. FR-TO	MAX. FACTORED FORCE (LBS)	MAX CSI (LC)
1- 2	0 / 23	-77.4	-77.4	0.10 (1)	10.00	21- 3	-215 / 36	0.06 (1)
2- 3	-2613 / 0	-77.4	-77.4	0.50 (1)	3.86	3-20	-309 / 0	0.31 (1)
3- 4	-2345 / 0	-77.4	-77.4	0.40 (1)	4.15	20- 5	0 / 281	0.06 (1)
4- 5	-2345 / 0	-77.4	-77.4	0.40 (1)	4.15	5-18	-728 / 0	0.42 (1)
5- 6	-1840 / 0	-77.4	-77.4	0.39 (1)	4.57	18- 6	0 / 527	0.12 (1)
6- 7	-1627 / 0	-77.4	-77.4	0.03 (1)	5.19	17- 7	0 / 611	0.14 (1)
7- 8	-1847 / 0	-77.4	-77.4	0.39 (1)	4.56	17- 8	-715 / 0	0.41 (1)
8- 9	-2342 / 0	-77.4	-77.4	0.40 (1)	4.15	15- 8	0 / 267	0.06 (1)
9-10	-2342 / 0	-77.4	-77.4	0.40 (1)	4.15	15-10	-313 / 0	0.31 (1)
10-11	-2614 / 0	-77.4	-77.4	0.50 (1)	3.86	14-10	-211 / 38	0.06 (1)
11-12	0 / 23	-77.4	-77.4	0.10 (1)	10.00	2-21	0 / 2377	0.53 (1)
22- 2	-1805 / 0	0.0	0.0	0.18 (1)	6.23	14-11	0 / 2378	0.54 (1)
13-11	-1805 / 0	0.0	0.0	0.18 (1)	6.23	6-17	0 / 81	0.02 (1)
22-21	0 / 0	-17.5	-17.5	0.14 (4)	10.00			
21-20	0 / 2355	-17.5	-17.5	0.45 (1)	10.00			
20-19	0 / 2097	-17.5	-17.5	0.41 (1)	10.00			
19-18	0 / 2097	-17.5	-17.5	0.41 (1)	10.00			
18-17	0 / 1621	-17.5	-17.5	0.36 (1)	10.00			
17-16	0 / 2095	-17.5	-17.5	0.44 (1)	10.00			
16-15	0 / 2095	-17.5	-17.5	0.44 (1)	10.00			
15-14	0 / 2356	-17.5	-17.5	0.44 (1)	10.00			
14-13	0 / 0	-17.5	-17.5	0.15 (4)	10.00			

RECEIVED
TOWN OF MILTON
MAR 29, 2017
17-5337
BUILDING DIVISION

DESIGN CRITERIA

SPECIFIED LOADS:

TOP	CH.	LL	=	23.3	PSF
		DL	=	3.0	PSF
BOT	CH.	LL	=	0.0	PSF
		DL	=	7.0	PSF
TOTAL	LOAD		=	33.3	PSF

SPACING = 24.0 IN. C/C

LOADING IN FLAT SECTION BASED ON A SLOPE OF 6.00/12

THIS TRUSS IS DESIGNED FOR RESIDENTIAL OR SMALL BUILDING REQUIREMENTS OF PART 9, NBCC 2010

THIS DESIGN COMPLIES WITH:
- PART 9 OF OBC 2012 , BCBC 2012 , ABC 2014
- CSA 086-09
- TPIC 2011

(55 % OF 27.2 P.S.F. G.S.L. PLUS 8.4 P.S.F. RAIN LOAD) EQUALS 23.3 P.S.F. SPECIFIED ROOF LIVE LOAD

ALLOWABLE DEFL.(LL)= L/360 (1.23")
CALCULATED VERT. DEFL.(LL) = L/ 999 (0.15")
ALLOWABLE DEFL.(TL)= L/360 (1.23")
CALCULATED VERT. DEFL.(TL) = L/ 999 (0.28")

CSI: TC=0.50 (10-11:1) , BC=0.45 (20-21:1) , WB=0.54 (11-14:1) , SSI=0.20 (10-11:1)

DOL LUMBER=1.00 NAIL=1.00 LS BEND=1.10 COMP=1.10 SHEAR=1.10 TENS= 1.10

COMPANION LIVE LOAD FACTOR = 0.50

TRUSS PLATE MANUFACTURER IS NOT RESPONSIBLE FOR QUALITY CONTROL IN THE TRUSS MANUFACTURING PLANT .

NAIL VALUES

PLATE	GRIP(DRY) (PSI) MAX	MIN	SHEAR (PLI) MAX	MIN	SECTION (PLI) MAX	MIN
MT20	618	354	1667	822	2284	1656

PLATE PLACEMENT TOL. = 0.250 inches

PLATE ROTATION TOL. = 5.0 Deg.

JSI GRIP= 0.87 (14) (INPUT = 0.90)
JSI METAL= 0.71 (14) (INPUT = 1.00)

KOTT

JOB NAME	TRUSS NAME	QUANTITY	PLY	JOB DESC.	DRWG NO.
PT0317-097	T70	3	1	TRUSS DESC. LECCO RIDGE-BLOCK 344	

KOTT , Stouffville, ON, CGC

Version 8.100 S Feb 9 2017 MiTek Industries, Inc. Thu Mar 16 11:58:27 2017 Page 1
ID:EvTixTQDI5yR1QLotZTBr_yE?HJ-zPNa_w_7tuLm5BLb7Hxs0iQusDo?bim4Q8pvkNzaNjQ

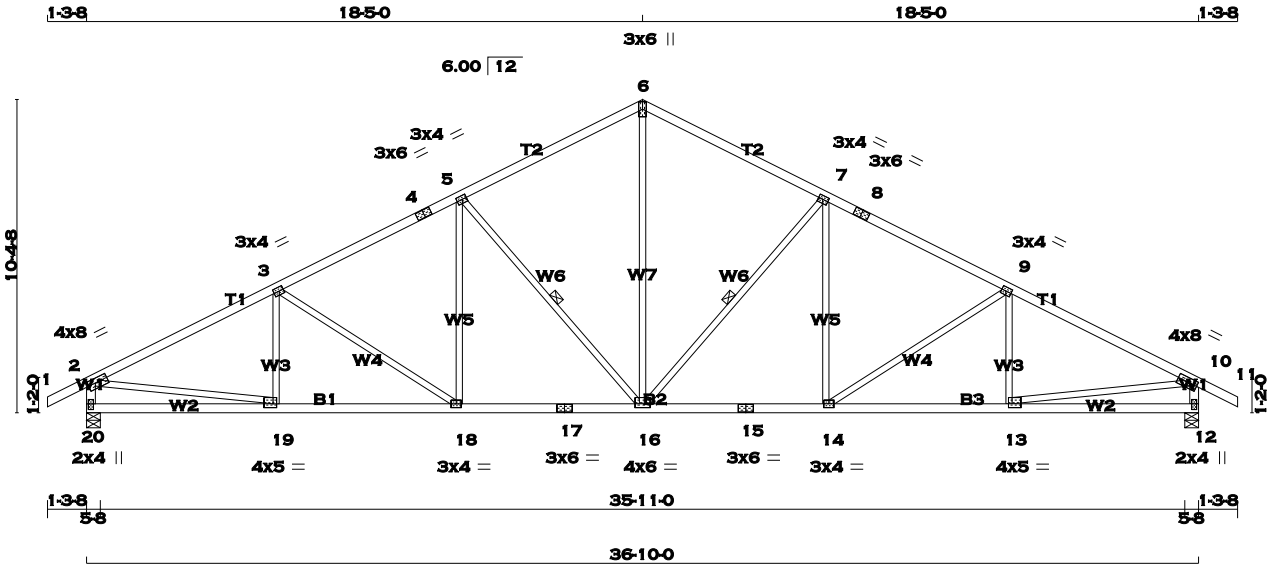

TOTAL WEIGHT = 3 X 155 = 464 lb
[M][F]

LUMBER
N. L. G. A. RULES

CHORDS	SIZE		LUMBER	DESCR.
1 - 4	2x4	DRY	No.2	SPF
4 - 6	2x4	DRY	No.2	SPF
6 - 8	2x4	DRY	No.2	SPF
8 - 11	2x4	DRY	No.2	SPF
20 - 2	2x4	DRY	No.2	SPF
12 - 10	2x4	DRY	No.2	SPF
20 - 17	2x4	DRY	No.2	SPF
17 - 15	2x4	DRY	No.2	SPF
15 - 12	2x4	DRY	No.2	SPF
ALL WEBS EXCEPT	2x3	DRY	No.2	SPF

DRY: SEASONED LUMBER.

PLATES (table is in inches)

JT	TYPE	PLATES	W	LEN	Y	X
2 3, 5, 7, 9	TMVW-t	MT20	4.0	8.0	1.75	3.00
3	TMWW-t	MT20	3.0	4.0	1.50	1.75
4	TS-t	MT20	3.0	6.0		
6	TTW+p	MT20	3.0	6.0		
8	TS-t	MT20	3.0	6.0		
10	TMVW-t	MT20	4.0	8.0	1.75	3.00
12	BMV1+p	MT20	2.0	4.0	2.25	1.00
13	BMWW-t	MT20	4.0	5.0	1.50	1.50
14	BMWW-t	MT20	3.0	4.0		
15	BS-t	MT20	3.0	6.0		
16	BMWWW-t	MT20	4.0	6.0	1.50	3.00
17	BS-t	MT20	3.0	6.0		
18	BMWW-t	MT20	3.0	4.0		
19	BMWW-t	MT20	4.0	5.0	1.50	1.50
20	BMV1+p	MT20	2.0	4.0	2.25	1.00

A SIZE FOR SIZE SUBSTITUTION OF MITEK MII20 WITH TEE-LOK TL20 PLATES IS ALLOWED.

DIMENSIONS, SUPPORTS AND LOADINGS SPECIFIED BY FABRICATOR TO BE VERIFIED BY BUILDING DESIGNER

BEARINGS

JT	FACTORED GROSS REACTION VERT	HORZ	MAXIMUM FACTORED GROSS REACTION DOWN	HORZ	UPLIFT	INPUT BRG IN-SX	REQRD BRG IN-SX
20	1852	0	1852	0	0	5-8	5-8
12	1852	0	1852	0	0	5-8	5-8

UNFACTORED REACTIONS

JT	1ST LCASE COMBINED	MAX./MIN. COMPONENT REACTIONS SNOW	LIVE	PERM.LIVE	WIND	DEAD	SOIL
20	1297	921 / 0	0 / 0	0 / 0	0 / 0	376 / 0	0 / 0
12	1297	921 / 0	0 / 0	0 / 0	0 / 0	376 / 0	0 / 0

BEARING MATERIAL TO BE SPF NO.2 OR BETTER AT JOINT(S) 20, 12

BRACING
TOP CHORD TO BE SHEATHED OR MAX. PURLIN SPACING = 3.85 FT.
MAX. UNBRACED BOTTOM CHORD LENGTH = 10.00 FT. OR RIGID CEILING DIRECTLY APPLIED.

ALL PITCH BREAKS AND PERIMETER CORNER JOINTS MUST BE LATERALLY RESTRAINED.

1 - 2x3 SPF No.2 LATERAL BRACE(S) AT 1/ 2 LENGTH OF 7-16, 5-16. DBS = 20-0-0 . CBF = 92 LBS.

DBS = DIAGONAL BRACE SPACING (MAX). CBF = CUMULATIVE BRACING FORCE. FASTEN LATERAL BRACE(S) USING (0.122"X3") SPIRAL NAILS : 1 NAIL FOR 2x3 BRACE(S), 2 FOR 1x4, 2x4, 2x5, 3 FOR 2x6, 4 FOR 2x8, 5 FOR 2x10, AND 6 FOR 2x12.

END VERTICAL(S) MUST BE SHEATHED OR HAVE BRACES AS INDICATED IN THE MAX. UNBRACED LENGTH COLUMN OF THE TABLE BELOW

LOADING
TOTAL LOAD CASES: (4)

CHORDS

MEMB. FR-TO	MAX. FACTORED FORCE (LBS)	FACTORED VERT. LOAD (PLF) FROM	TO	LC1	MAX CSI (LC)	MAX. UNBRAC LENGTH
1- 2	0 / 23	-77.4	-77.4	0.10 (1)	10.00	
2- 3	-2616 / 0	-77.4	-77.4	0.52 (1)	3.85	
3- 4	-2331 / 0	-77.4	-77.4	0.42 (1)	4.14	
4- 5	-2331 / 0	-77.4	-77.4	0.42 (1)	4.14	
5- 6	-1813 / 0	-77.4	-77.4	0.40 (1)	4.58	
6- 7	-1813 / 0	-77.4	-77.4	0.40 (1)	4.58	
7- 8	-2331 / 0	-77.4	-77.4	0.42 (1)	4.14	
8- 9	-2331 / 0	-77.4	-77.4	0.42 (1)	4.14	
9-10	-2616 / 0	-77.4	-77.4	0.52 (1)	3.85	
10-11	0 / 23	-77.4	-77.4	0.10 (1)	10.00	
20- 2	-1805 / 0	0.0	0.0	0.18 (1)	6.23	
12-10	-1805 / 0	0.0	0.0	0.18 (1)	6.23	
20-19	0 / 0	-17.5	-17.5	0.15 (4)	10.00	
19-18	0 / 2358	-17.5	-17.5	0.44 (1)	10.00	
18-17	0 / 2084	-17.5	-17.5	0.41 (1)	10.00	
17-16	0 / 2084	-17.5	-17.5	0.41 (1)	10.00	
16-15	0 / 2084	-17.5	-17.5	0.41 (1)	10.00	
15-14	0 / 2084	-17.5	-17.5	0.41 (1)	10.00	
14-13	0 / 2358	-17.5	-17.5	0.44 (1)	10.00	
13-12	0 / 0	-17.5	-17.5	0.15 (4)	10.00	

WEBS

MEMB. FR-TO	MAX. FACTORED FORCE (LBS)	MAX CSI (LC)
16- 6	0 / 1225	0.28 (1)
16- 7	-735 / 0	0.44 (1)
14- 7	0 / 283	0.06 (1)
14- 9	-327 / 0	0.34 (1)
13- 9	-206 / 41	0.06 (1)
5-16	-735 / 0	0.44 (1)
18- 5	0 / 283	0.06 (1)
3-18	-327 / 0	0.34 (1)
19- 3	-206 / 41	0.06 (1)
2-19	0 / 2380	0.54 (1)
13-10	0 / 2380	0.54 (1)

DESIGN CRITERIA

SPECIFIED LOADS:

TOP	CH.	LL	=	23.3	PSF
		DL	=	3.0	PSF
BOT	CH.	LL	=	0.0	PSF
		DL	=	7.0	PSF
TOTAL	LOAD		=	33.3	PSF

SPACING = 24.0 IN. C/C

THIS TRUSS IS DESIGNED FOR RESIDENTIAL OR SMALL BUILDING REQUIREMENTS OF PART 9, NBCC 2010

THIS DESIGN COMPLIES WITH:
- PART 9 OF OBC 2012 , BCBC 2012 , ABC 2014
- CSA 086-09
- TPIC 2011

(55 % OF 27.2 P.S.F. G.S.L. PLUS 8.4 P.S.F. RAIN LOAD) EQUALS 23.3 P.S.F. SPECIFIED ROOF LIVE LOAD

ALLOWABLE DEFL.(LL)= L/360 (1.23")
CALCULATED VERT. DEFL.(LL) = L/ 999 (0.15")
ALLOWABLE DEFL.(TL)= L/360 (1.23")
CALCULATED VERT. DEFL.(TL) = L/ 999 (0.27")

CSI: TC=0.52 (2-3:1) , BC=0.44 (13-14:1) , WB=0.54 (10-13:1) , SSI=0.20 (9-10:1)

DOL LUMBER=1.00 NAIL=1.00 LS BEND=1.10 COMP=1.10 SHEAR=1.10 TENS= 1.10

COMPANION LIVE LOAD FACTOR = 0.50

TRUSS PLATE MANUFACTURER IS NOT RESPONSIBLE FOR QUALITY CONTROL IN THE TRUSS MANUFACTURING PLANT .

NAIL VALUES

PLATE	GRIP(DRY) (PSI) MAX	MIN	SHEAR (PLI) MAX	MIN	SECTION (PLI) MAX	MIN
MT20	618	354	1667	822	2284	1656

PLATE PLACEMENT TOL. = 0.250 inches

PLATE ROTATION TOL. = 5.0 Deg.

JSI GRIP= 0.90 (6) (INPUT = 0.90)
JSI METAL= 0.71 (13) (INPUT = 1.00)

LICENSED PROFESSIONAL ENGINEER
R. M. TREVISAN
100136551
March 16th, 2017
PROVINCE OF ONTARIO

RECEIVED
TOWN OF MILTON
MAR 29, 2017
17-5337
BUILDING DIVISION

KOTT

JOB NAME	TRUSS NAME	QUANTITY	PLY	JOB DESC.	DRWG NO.
PT0317-097	T71	9	1	TRUSS DESC. LECCO RIDGE-BLOCK 344	

KOTT , Stouffville, ON, CGC

Version 8.100 S Feb 9 2017 MiTek Industries, Inc. Thu Mar 16 11:58:28 2017 Page 1
ID:EvTixTQDI5yR1QLotZTBr_yE?HJ-RcwzBG?leCTdjLwng?S5YvyAqd7nKFnEfoZTGpzaNjP

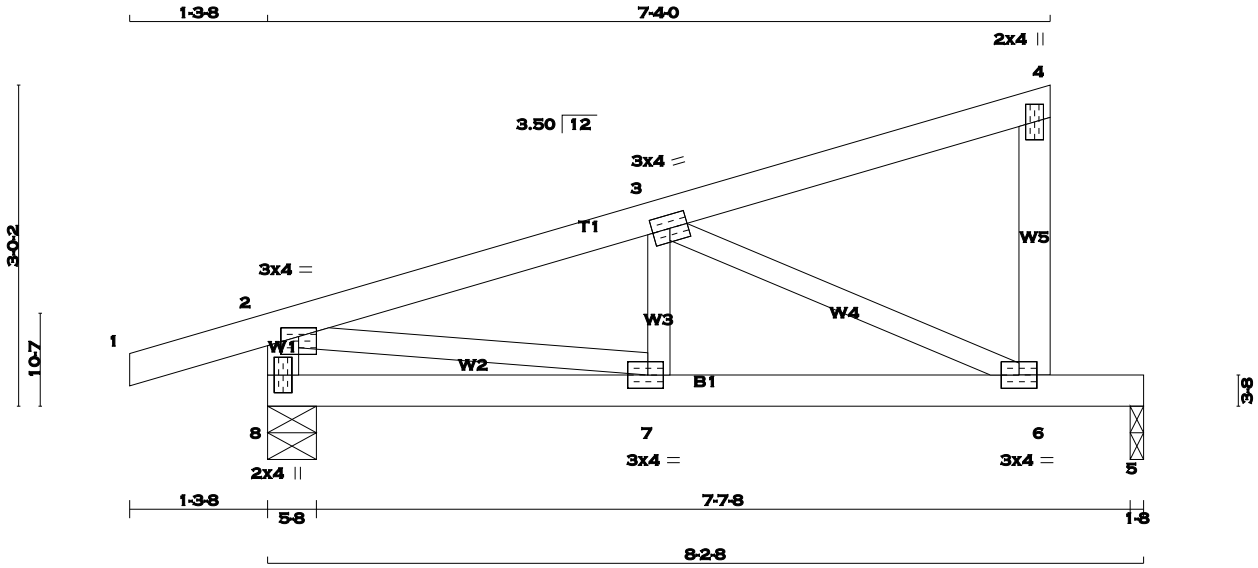

TOTAL WEIGHT = 9 X 30 = 266 lb
[M][F]

LUMBER
N. L. G. A. RULES

CHORDS	SIZE		LUMBER	DESCR.
1 - 4	2x4	DRY	No.2	SPF
6 - 4	2x4	DRY	No.2	SPF
8 - 2	2x4	DRY	No.2	SPF
8 - 5	2x4	DRY	No.2	SPF
ALL WEBS EXCEPT	2x3	DRY	No.2	SPF

DRY: SEASONED LUMBER.

PLATES (table is in inches)

JT	TYPE	PLATES	W	LEN	Y	X
2	TMVW-p	MT20	3.0	4.0	1.00	2.00
3	TMWW-t	MT20	3.0	4.0		
4	TMV+p	MT20	2.0	4.0		
6	BMVW-t	MT20	3.0	4.0		
7	BMWW-t	MT20	3.0	4.0	1.50	1.75
8	BMV1+p	MT20	2.0	4.0		

A SIZE FOR SIZE SUBSTITUTION OF MITEK MII20 WITH TEE-LOK TL20 PLATES IS ALLOWED.

DIMENSIONS, SUPPORTS AND LOADINGS SPECIFIED BY FABRICATOR TO BE VERIFIED BY BUILDING DESIGNER

BEARINGS

JT	FACTORED GROSS REACTION VERT	HORZ	MAXIMUM FACTORED GROSS REACTION DOWN	HORZ	UPLIFT	INPUT BRG IN-SX	REQRD BRG IN-SX
8	489	0	489	0	0	5-8	5-8
5	325	0	325	0	0	1-8	1-8

UNFACTORED REACTIONS

JT	1ST LCASE COMBINED	MAX./MIN. COMPONENT REACTIONS SNOW	LIVE	PERM.LIVE	WIND	DEAD	SOIL
8	341	251 / 0	0 / 0	0 / 0	0 / 0	90 / 0	0 / 0
5	230	153 / 0	0 / 0	0 / 0	0 / 0	77 / 0	0 / 0

BEARING MATERIAL TO BE SPF NO.2 OR BETTER AT JOINT(S) 8, 5

BRACING
TOP CHORD TO BE SHEATHED OR MAX. PURLIN SPACING = 6.25 FT.
MAX. UNBRACED BOTTOM CHORD LENGTH = 10.00 FT. OR RIGID CEILING DIRECTLY APPLIED.

ALL PITCH BREAKS AND PERIMETER CORNER JOINTS MUST BE LATERALLY RESTRAINED.

LOADING
TOTAL LOAD CASES: (4)

CHORDS

MEMB. FR-TO	MAX. FACTORED FORCE (LBS)	FACTORED VERT. LOAD (PLF) FROM	TO	LC1 MAX CSI (LC)	MAX. UNBRAC LENGTH
1- 2	0 / 14	-77.4	-77.4	0.10 (1)	10.00
2- 3	-604 / 0	-77.4	-77.4	0.12 (1)	6.25
3- 4	-8 / 0	-77.4	-77.4	0.12 (1)	10.00
6- 4	-112 / 0	0.0	0.0	0.02 (1)	7.81
8- 2	-478 / 0	0.0	0.0	0.05 (1)	7.81
8- 7	0 / 0	-17.5	-17.5	0.11 (1)	10.00
7- 6	0 / 588	-17.5	-17.5	0.47 (1)	10.00
6- 5	0 / 0	-17.5	-17.5	0.38 (1)	10.00

WEBS

MEMB. FR-TO	MAX. FACTORED FORCE (LBS)	MAX CSI (LC)
7- 3	0 / 94	0.03 (4)
3- 6	-644 / 0	0.17 (1)
2- 7	0 / 595	0.13 (1)

DESIGN CRITERIA

SPECIFIED LOADS:

TOP	CH.	LL	=	23.3	PSF
		DL	=	3.0	PSF
BOT	CH.	LL	=	0.0	PSF
		DL	=	7.0	PSF
TOTAL	LOAD		=	33.3	PSF

SPACING = 24.0 IN. C/C

THIS TRUSS IS DESIGNED FOR RESIDENTIAL OR SMALL BUILDING REQUIREMENTS OF PART 9, NBCC 2010

THIS DESIGN COMPLIES WITH:
- PART 9 OF OBC 2012 , BCBC 2012 , ABC 2014
- CSA 086-09
- TPIC 2011

(55 % OF 27.2 P.S.F. G.S.L. PLUS 8.4 P.S.F. RAIN LOAD) EQUALS 23.3 P.S.F. SPECIFIED ROOF LIVE LOAD

ALLOWABLE DEFL.(LL)= L/360 (0.27")
CALCULATED VERT. DEFL.(LL) = L/ 999 (0.06")
ALLOWABLE DEFL.(TL)= L/360 (0.27")
CALCULATED VERT. DEFL.(TL) = L/ 921 (0.11")

CSI: TC=0.12 (2-3:1) , BC=0.47 (6-7:1) , WB=0.17 (3-6:1) , SSI=0.25 (5-6:1)

DOL LUMBER=1.00 NAIL=1.00 LS BEND=1.10 COMP=1.10 SHEAR=1.10 TENS= 1.10

COMPANION LIVE LOAD FACTOR = 0.50

TRUSS PLATE MANUFACTURER IS NOT RESPONSIBLE FOR QUALITY CONTROL IN THE TRUSS MANUFACTURING PLANT .

NAIL VALUES

PLATE	GRIP(DRY) (PSI) MAX	MIN	SHEAR (PLI) MAX	MIN	SECTION (PLI) MAX	MIN
MT20	618	354	1667	822	2284	1656

PLATE PLACEMENT TOL. = 0.250 inches

PLATE ROTATION TOL. = 5.0 Deg.

JSI GRIP= 0.89 (6) (INPUT = 0.90)
JSI METAL= 0.22 (2) (INPUT = 1.00)

LICENSED PROFESSIONAL ENGINEER
P. M. TREVISAN
100136551
March 16th, 2017
PROVINCE OF ONTARIO

RECEIVED
TOWN OF MILTON
MAR 29, 2017
17-5337
BUILDING DIVISION

KOTT

JOB NAME	TRUSS NAME	QUANTITY	PLY	JOB DESC.	DRWG NO.
PT0317-097	T72	1	1	TRUSS DESC. LECCO RIDGE-BLOCK 344	

KOTT , Stouffville, ON, CGC

Version 8.100 S Feb 9 2017 MiTek Industries, Inc. Thu Mar 16 11:58:28 2017 Page 1
ID:EvTixTQDI5yR1QLotZTBr_yE?HJ-RcwzBG?leCTdjLwng?S5Yvy?VdA2KDIEfoZTGpzaNjP

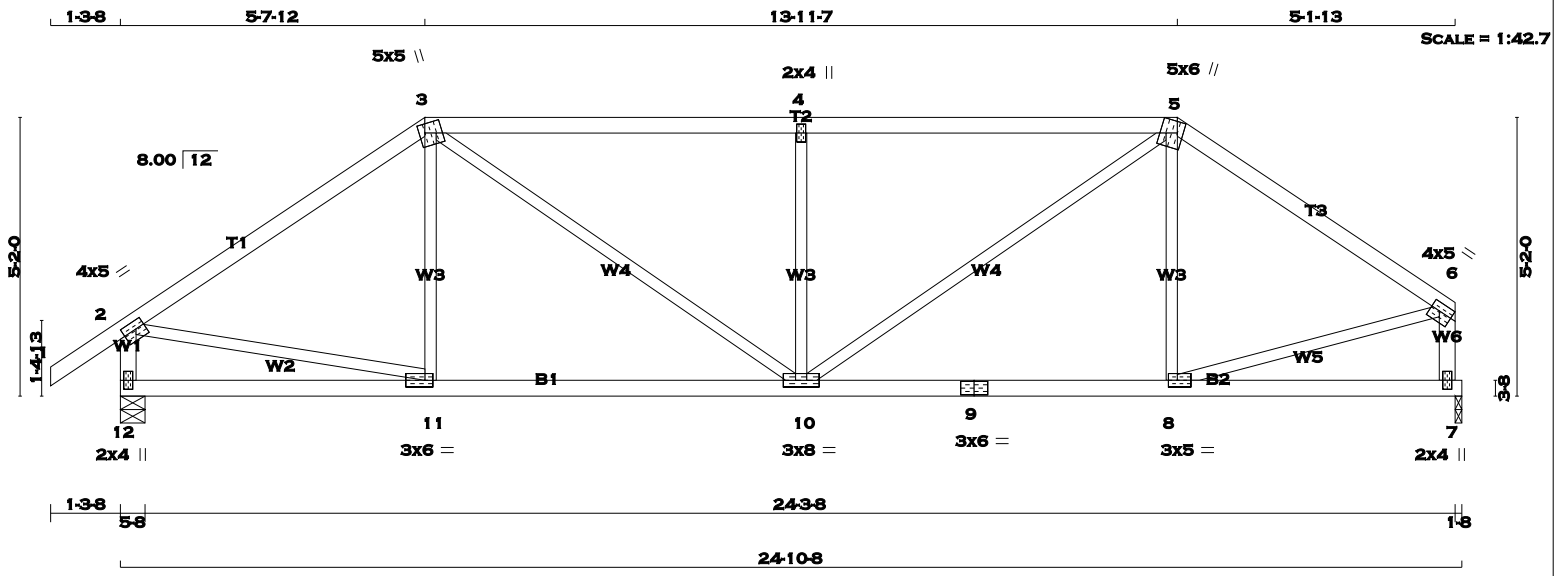

TOTAL WEIGHT = 97 lb
[M]

LUMBER
N. L. G. A. RULES

CHORDS	SIZE		LUMBER	DESCR.
1 - 3	2x4	DRY	No.2	SPF
3 - 5	2x4	DRY	No.2	SPF
5 - 6	2x4	DRY	No.2	SPF
12 - 2	2x4	DRY	No.2	SPF
7 - 6	2x4	DRY	No.2	SPF
12 - 9	2x4	DRY	No.2	SPF
9 - 7	2x4	DRY	No.2	SPF
ALL WEBS EXCEPT	2x3	DRY	No.2	SPF

DRY: SEASONED LUMBER.

PLATES (table is in inches)

JT	TYPE	PLATES	W	LEN	Y	X
2	TMVW-t	MT20	4.0	5.0	1.75	2.00
3	TTWW+m	MT20	5.0	5.0	2.00	1.25
4	TMW+w	MT20	2.0	4.0		
5	TTWW+m	MT20	5.0	6.0	Edge	3.75
6	TMVW-t	MT20	4.0	5.0	1.75	Edge
7	BMV1+p	MT20	2.0	4.0		
8	BMWW-t	MT20	3.0	5.0	1.50	2.00
9	BS-t	MT20	3.0	6.0		
10	BMWWW-t	MT20	3.0	8.0		
11	BMWW-t	MT20	3.0	6.0	1.50	1.75
12	BMV1+p	MT20	2.0	4.0		

Edge - INDICATES REFERENCE CORNER OF PLATE TOUCHES EDGE OF CHORD.

A SIZE FOR SIZE SUBSTITUTION OF MITEK MII20 WITH TEE-LOK TL20 PLATES IS ALLOWED.

DIMENSIONS, SUPPORTS AND LOADINGS SPECIFIED BY FABRICATOR TO BE VERIFIED BY BUILDING DESIGNER

BEARINGS

JT	FACTORED GROSS REACTION VERT	HORZ	MAXIMUM FACTORED GROSS REACTION DOWN	HORZ	UPLIFT	INPUT BRG IN-SX	REQRD BRG IN-SX
12	1280	0	1280	0	0	5-8	5-8
7	1174	0	1174	0	0	1-8	1-8

UNFACTORED REACTIONS

JT	1ST LCASE COMBINED	MAX./MIN. COMPONENT REACTIONS SNOW	LIVE	PERM.LIVE	WIND	DEAD	SOIL
12	896	640 / 0	0 / 0	0 / 0	0 / 0	256 / 0	0 / 0
7	824	576 / 0	0 / 0	0 / 0	0 / 0	248 / 0	0 / 0

BEARING MATERIAL TO BE SPF NO.2 OR BETTER AT JOINT(S) 12, 7

BRACING
TOP CHORD TO BE SHEATHED OR MAX. PURLIN SPACING = 4.14 FT.
MAX. UNBRACED BOTTOM CHORD LENGTH = 10.00 FT. OR RIGID CEILING DIRECTLY APPLIED.

ALL PITCH BREAKS AND PERIMETER CORNER JOINTS MUST BE LATERALLY RESTRAINED.

LOADING
TOTAL LOAD CASES: (4)

CHORDS

MEMB. FR-TO	MAX. FACTORED FORCE (LBS)	FACTORED VERT. LOAD (PLF) FROM	TO	LC1 MAX CSI (LC)	MAX. UNBRAC LENGTH
1- 2	0 / 29	-77.4	-77.4	0.10 (1)	10.00
2- 3	-1287 / 0	-77.4	-77.4	0.51 (1)	5.04
3- 4	-1594 / 0	-77.4	-77.4	0.78 (1)	4.14
4- 5	-1594 / 0	-77.4	-77.4	0.78 (1)	4.14
5- 6	-1206 / 0	-77.4	-77.4	0.41 (1)	5.31
12- 2	-1242 / 0	0.0	0.0	0.13 (1)	7.20
7- 6	-1140 / 0	0.0	0.0	0.12 (1)	7.45
12-11	0 / 0	-17.5	-17.5	0.16 (4)	10.00
11-10	0 / 1068	-17.5	-17.5	0.26 (1)	10.00
10- 9	0 / 999	-17.5	-17.5	0.25 (1)	10.00
9- 8	0 / 999	-17.5	-17.5	0.25 (1)	10.00
8- 7	0 / 0	-17.5	-17.5	0.15 (4)	10.00

WEBS

MEMB. FR-TO	MAX. FACTORED FORCE (LBS)	MAX CSI (LC)
11- 3	-77 / 76	0.03 (1)
3-10	0 / 641	0.14 (1)
10- 4	-664 / 0	0.26 (1)
10- 5	0 / 725	0.16 (1)
8- 5	-150 / 50	0.06 (1)
2-11	0 / 1089	0.24 (1)
8- 6	0 / 1038	0.23 (1)

DESIGN CRITERIA

SPECIFIED LOADS:

TOP CH.	LL	=	23.3	PSF
	DL	=	3.0	PSF
BOT CH.	LL	=	0.0	PSF
	DL	=	7.0	PSF
TOTAL LOAD		=	33.3	PSF

SPACING = 24.0 IN. C/C

LOADING IN FLAT SECTION BASED ON A SLOPE OF 6.00/12

THIS TRUSS IS DESIGNED FOR RESIDENTIAL OR SMALL BUILDING REQUIREMENTS OF PART 9, NBCC 2010

THIS DESIGN COMPLIES WITH:
- PART 9 OF OBC 2012 , BCBC 2012 , ABC 2014
- CSA 086-09
- TPIC 2011

(55 % OF 27.2 P.S.F. G.S.L. PLUS 8.4 P.S.F. RAIN LOAD) EQUALS 23.3 P.S.F. SPECIFIED ROOF LIVE LOAD

ALLOWABLE DEFL.(LL)= L/360 (0.82")
CALCULATED VERT. DEFL.(LL) = L/ 999 (0.06")
ALLOWABLE DEFL.(TL)= L/360 (0.82")
CALCULATED VERT. DEFL.(TL) = L/ 999 (0.11")

CSI: TC=0.78 (4-5:1) , BC=0.26 (10-11:1) , WB=0.26 (4-10:1) , SSI=0.26 (3-4:1)

DOL LUMBER=1.00 NAIL=1.00 LS BEND=1.10 COMP=1.10 SHEAR=1.10 TENS= 1.10

COMPANION LIVE LOAD FACTOR = 0.50

TRUSS PLATE MANUFACTURER IS NOT RESPONSIBLE FOR QUALITY CONTROL IN THE TRUSS MANUFACTURING PLANT .

NAIL VALUES

PLATE	GRIP(DRY) (PSI) MAX	MIN	SHEAR (PLI) MAX	MIN	SECTION (PLI) MAX	MIN
MT20	618	354	1667	822	2284	1656

PLATE PLACEMENT TOL. = 0.250 inches

PLATE ROTATION TOL. = 0.5 Deg.

JSI GRIP= 0.90 (11) (INPUT = 0.90)
JSI METAL= 0.44 (2) (INPUT = 1.00)

LICENSED PROFESSIONAL ENGINEER
P. M. TREVISAN
100136551
March 16th, 2017
PROVINCE OF ONTARIO

RECEIVED
TOWN OF MILTON
MAR 29, 2017
17-5337
BUILDING DIVISION

KOTT

JOB NAME	TRUSS NAME	QUANTITY	PLY	JOB DESC.	DRWG NO.
PT0317-097	T73	1	1	TRUSS DESC. LECCO RIDGE-BLOCK 344	

KOTT , Stouffville, ON, CGC

Version 8.100 S Feb 9 2017 MiTek Industries, Inc. Thu Mar 16 11:58:29 2017 Page 1
ID:EvTixTQDI5yR1QLotZTBr_yE?HJ-woULOc0NPVbULVVzEi_K57VIW0W03cgNuSI0oFzaNjO

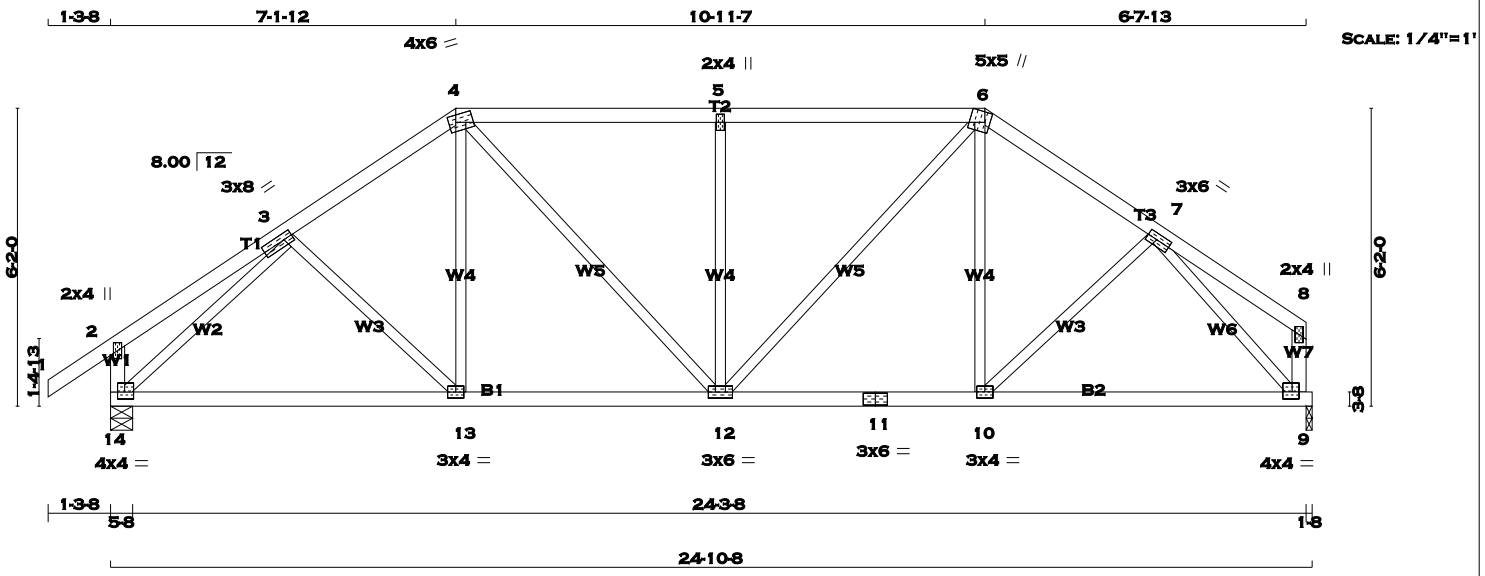

TOTAL WEIGHT = 105 lb
[M][F]

LUMBER
N. L. G. A. RULES

CHORDS	SIZE		LUMBER	DESCR.
1 - 4	2x4	DRY	No.2	SPF
4 - 6	2x4	DRY	No.2	SPF
6 - 8	2x4	DRY	No.2	SPF
14 - 2	2x4	DRY	No.2	SPF
9 - 8	2x4	DRY	No.2	SPF
14 - 11	2x4	DRY	No.2	SPF
11 - 9	2x4	DRY	No.2	SPF
ALL WEBS EXCEPT	2x3	DRY	No.2	SPF

DRY: SEASONED LUMBER.

PLATES (table is in inches)

JT	TYPE	PLATES	W	LEN	Y	X
2	TMV+p	MT20	2.0	4.0		
3	TMWW-t	MT20	3.0	8.0	1.50	2.25
4	TTWW-m	MT20	4.0	6.0	1.75	1.75
5	TMW+w	MT20	2.0	4.0		
6	TTWW+m	MT20	5.0	5.0	Edge	3.75
7	TMWW-t	MT20	3.0	6.0	1.50	2.50
8	TMV+p	MT20	2.0	4.0		
9	BMVW1-t	MT20	4.0	4.0	1.75	1.75
10	BMWW-t	MT20	3.0	4.0		
11	BS-t	MT20	3.0	6.0		
12	BMWWW-t	MT20	3.0	6.0		
13	BMWW-t	MT20	3.0	4.0		
14	BMVW1-t	MT20	4.0	4.0	1.75	1.75

Edge - INDICATES REFERENCE CORNER OF PLATE TOUCHES EDGE OF CHORD.

A SIZE FOR SIZE SUBSTITUTION OF MITEK MII20 WITH TEE-LOK TL20 PLATES IS ALLOWED.

DIMENSIONS, SUPPORTS AND LOADINGS SPECIFIED BY FABRICATOR TO BE VERIFIED BY BUILDING DESIGNER

BEARINGS

JT	FACTORED GROSS REACTION VERT	HORZ	MAXIMUM FACTORED GROSS REACTION DOWN	HORZ	UPLIFT	INPUT BRG IN-SX	REQRD BRG IN-SX
14	1280	0	1280	0	0	5-8	5-8
9	1174	0	1174	0	0	1-8	1-8

UNFACTORED REACTIONS

JT	1ST LCASE COMBINED	MAX./MIN. COMPONENT REACTIONS SNOW	LIVE	PERM.LIVE	WIND	DEAD	SOIL
14	896	640 / 0	0 / 0	0 / 0	0 / 0	256 / 0	0 / 0
9	824	576 / 0	0 / 0	0 / 0	0 / 0	248 / 0	0 / 0

BEARING MATERIAL TO BE SPF NO.2 OR BETTER AT JOINT(S) 14, 9

BRACING
TOP CHORD TO BE SHEATHED OR MAX. PURLIN SPACING = 5.33 FT.
MAX. UNBRACED BOTTOM CHORD LENGTH = 10.00 FT. OR RIGID CEILING DIRECTLY APPLIED.

ALL PITCH BREAKS AND PERIMETER CORNER JOINTS MUST BE LATERALLY RESTRAINED.

LOADING
TOTAL LOAD CASES: (4)

CHORDS

MEMB. FR-TO	MAX. FACTORED FORCE (LBS)	FACTORED VERT. LOAD (PLF) FROM	TO	LC1 MAX CSI (LC)	MAX. UNBRAC LENGTH
1- 2	0 / 29	-77.4	-77.4	0.10 (1)	10.00
2- 3	0 / 16	-77.4	-77.4	0.15 (1)	10.00
3- 4	-1258 / 0	-77.4	-77.4	0.13 (1)	5.61
4- 5	-1286 / 0	-77.4	-77.4	0.32 (1)	5.33
5- 6	-1286 / 0	-77.4	-77.4	0.32 (1)	5.33
6- 7	-1202 / 0	-77.4	-77.4	0.12 (1)	5.71
7- 8	0 / 17	-77.4	-77.4	0.13 (1)	10.00
14- 2	-215 / 0	0.0	0.0	0.02 (1)	7.81
9- 8	-89 / 0	0.0	0.0	0.01 (1)	7.81
14-13	0 / 1045	-17.5	-17.5	0.28 (1)	10.00
13-12	0 / 1033	-17.5	-17.5	0.28 (4)	10.00
12-11	0 / 988	-17.5	-17.5	0.26 (1)	10.00
11-10	0 / 988	-17.5	-17.5	0.26 (1)	10.00
10- 9	0 / 920	-17.5	-17.5	0.25 (1)	10.00

WEBS

MEMB. FR-TO	MAX. FACTORED FORCE (LBS)	MAX CSI (LC)
3-13	-20 / 43	0.01 (4)
13- 4	0 / 148	0.04 (4)
4-12	0 / 370	0.08 (1)
12- 5	-518 / 0	0.31 (1)
12- 6	0 / 437	0.10 (1)
10- 6	0 / 95	0.03 (4)
10- 7	0 / 91	0.02 (4)
14- 3	-1456 / 0	0.57 (1)
7- 9	-1386 / 0	0.47 (1)

DESIGN CRITERIA

SPECIFIED LOADS:

TOP CH.	LL	=	23.3	PSF
	DL	=	3.0	PSF
BOT CH.	LL	=	0.0	PSF
	DL	=	7.0	PSF
TOTAL LOAD		=	33.3	PSF

SPACING = 24.0 IN. C/C

LOADING IN FLAT SECTION BASED ON A SLOPE OF 6.00/12

THIS TRUSS IS DESIGNED FOR RESIDENTIAL OR SMALL BUILDING REQUIREMENTS OF PART 9, NBCC 2010

THIS DESIGN COMPLIES WITH:
- PART 9 OF OBC 2012 , BCBC 2012 , ABC 2014
- CSA 086-09
- TPIC 2011

(55 % OF 27.2 P.S.F. G.S.L. PLUS 8.4 P.S.F. RAIN LOAD) EQUALS 23.3 P.S.F. SPECIFIED ROOF LIVE LOAD

ALLOWABLE DEFL.(LL)= L/360 (0.82")
CALCULATED VERT. DEFL.(LL) = L/ 999 (0.05")
ALLOWABLE DEFL.(TL)= L/360 (0.82")
CALCULATED VERT. DEFL.(TL) = L/ 999 (0.10")

CSI: TC=0.32 (4-5:1) , BC=0.28 (12-13:4) , WB=0.57 (3-14:1) , SSI=0.20 (4-5:1)

DOL LUMBER=1.00 NAIL=1.00 LS BEND=1.10 COMP=1.10 SHEAR=1.10 TENS= 1.10

COMPANION LIVE LOAD FACTOR = 0.50

TRUSS PLATE MANUFACTURER IS NOT RESPONSIBLE FOR QUALITY CONTROL IN THE TRUSS MANUFACTURING PLANT .

NAIL VALUES

PLATE	GRIP(DRY) (PSI) MAX	MIN	SHEAR (PLI) MAX	MIN	SECTION (PLI) MAX	MIN
MT20	618	354	1667	822	2284	1656

PLATE PLACEMENT TOL. = 0.250 inches

PLATE ROTATION TOL. = 5.0 Deg.

JSI GRIP= 0.90 (14) (INPUT = 0.90)
JSI METAL= 0.39 (14) (INPUT = 1.00)

LICENSED PROFESSIONAL ENGINEER
P. M. TREVISAN
100136551
March 16th, 2017
PROVINCE OF ONTARIO

RECEIVED
TOWN OF MILTON
MAR 29, 2017
17-5337
BUILDING DIVISION

KOTT

JOB NAME	TRUSS NAME	QUANTITY	PLY	JOB DESC.	DRWG NO.
PT0317-097	T74	1	1	TRUSS DESC. LECCO RIDGE-BLOCK 344	

KOTT , Stouffville, ON, CGC

Version 8.100 S Feb 9 2017 MiTek Industries, Inc. Thu Mar 16 11:58:29 2017 Page 1
ID:EvTixTQDI5yR1QLotZTBr_yE?HJ-woULOc0NPVbULVVzEi_K57VJx0Vh3XaNuSI0oFzaNjO

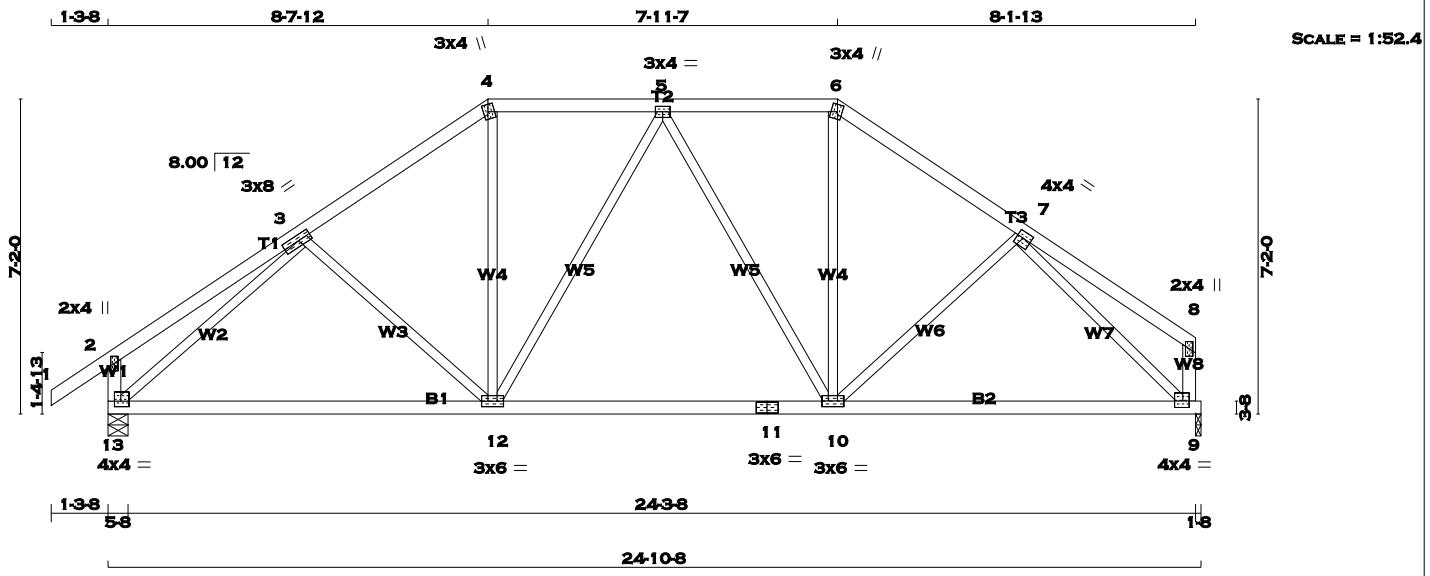

TOTAL WEIGHT = 106 lb

LUMBER
N. L. G. A. RULES

CHORDS	SIZE		LUMBER	DESCR.
1 - 4	2x4	DRY	No.2	SPF
4 - 6	2x4	DRY	No.2	SPF
6 - 8	2x4	DRY	No.2	SPF
13 - 2	2x4	DRY	No.2	SPF
9 - 8	2x4	DRY	No.2	SPF
13 - 11	2x4	DRY	No.2	SPF
11 - 9	2x4	DRY	No.2	SPF
ALL WEBS EXCEPT	2x3	DRY	No.2	SPF

DRY: SEASONED LUMBER.

PLATES (table is in inches)

JT	TYPE	PLATES	W	LEN	Y	X
2	TMV+p	MT20	2.0	4.0		
3	TMWW-t	MT20	3.0	8.0	1.50	3.50
4	TTW+m	MT20	3.0	4.0	2.00	1.25
5	TMWW-t	MT20	3.0	4.0		
6	TTW+m	MT20	3.0	4.0	2.00	1.25
7	TMWW-t	MT20	4.0	4.0	1.75	1.75
8	TMV+p	MT20	2.0	4.0		
9	BMVW1-t	MT20	4.0	4.0	1.75	1.75
10	BMWWW-t	MT20	3.0	6.0		
11	BS-t	MT20	3.0	6.0		
12	BMWWW-t	MT20	3.0	6.0		
13	BMVW1-t	MT20	4.0	4.0	1.50	1.75

A SIZE FOR SIZE SUBSTITUTION OF MITEK MII20 WITH TEE-LOK TL20 PLATES IS ALLOWED.

DIMENSIONS, SUPPORTS AND LOADINGS SPECIFIED BY FABRICATOR TO BE VERIFIED BY BUILDING DESIGNER

BEARINGS

JT	FACTORED GROSS REACTION VERT	HORZ	MAXIMUM FACTORED GROSS REACTION DOWN	HORZ	UPLIFT	INPUT BRG IN-SX	REQRD BRG IN-SX
13	1280	0	1280	0	0	5-8	5-8
9	1174	0	1174	0	0	1-8	1-8

UNFACTORED REACTIONS

JT	1ST LCASE COMBINED	MAX./MIN. COMPONENT REACTIONS SNOW	LIVE	PERM.LIVE	WIND	DEAD	SOIL
13	896	640 / 0	0 / 0	0 / 0	0 / 0	256 / 0	0 / 0
9	824	576 / 0	0 / 0	0 / 0	0 / 0	248 / 0	0 / 0

BEARING MATERIAL TO BE SPF NO.2 OR BETTER AT JOINT(S) 13, 9

BRACING
TOP CHORD TO BE SHEATHED OR MAX. PURLIN SPACING = 5.64 FT.
MAX. UNBRACED BOTTOM CHORD LENGTH = 10.00 FT. OR RIGID CEILING DIRECTLY APPLIED.

ALL PITCH BREAKS AND PERIMETER CORNER JOINTS MUST BE LATERALLY RESTRAINED.

LOADING
TOTAL LOAD CASES: (4)

CHORDS

MEMB. FR-TO	MAX. FACTORED FORCE (LBS)	FACTORED VERT. LOAD (PLF) FROM	TO	LC1 MAX CSI (LC)	MAX. UNBRAC LENGTH
1- 2	0 / 29	-77.4	-77.4	0.10 (1)	10.00
2- 3	0 / 21	-77.4	-77.4	0.23 (1)	10.00
3- 4	-1198 / 0	-77.4	-77.4	0.19 (1)	5.64
4- 5	-983 / 0	-77.4	-77.4	0.16 (1)	6.11
5- 6	-955 / 0	-77.4	-77.4	0.16 (1)	6.18
6- 7	-1161 / 0	-77.4	-77.4	0.17 (1)	5.73
7- 8	0 / 21	-77.4	-77.4	0.20 (1)	10.00
13- 2	-235 / 0	0.0	0.0	0.02 (1)	7.81
9- 8	-114 / 0	0.0	0.0	0.01 (1)	7.81
13-12	0 / 1071	-17.5	-17.5	0.36 (4)	10.00
12-11	0 / 1074	-17.5	-17.5	0.37 (4)	10.00
11-10	0 / 1074	-17.5	-17.5	0.37 (4)	10.00
10- 9	0 / 972	-17.5	-17.5	0.32 (4)	10.00

WEBS

MEMB. FR-TO	MAX. FACTORED FORCE (LBS)	MAX CSI (LC)
3-12	-125 / 23	0.08 (1)
12- 4	0 / 403	0.09 (1)
12- 5	-184 / 0	0.24 (1)
5-10	-242 / 0	0.31 (1)
10- 6	0 / 384	0.09 (1)
10- 7	-32 / 45	0.02 (1)
13- 3	-1453 / 0	0.84 (1)
7- 9	-1395 / 0	0.71 (1)

DESIGN CRITERIA

SPECIFIED LOADS:

TOP CH.	LL	=	23.3	PSF
	DL	=	3.0	PSF
BOT CH.	LL	=	0.0	PSF
	DL	=	7.0	PSF
TOTAL LOAD		=	33.3	PSF

SPACING = 24.0 IN. C/C

LOADING IN FLAT SECTION BASED ON A SLOPE OF 6.00/12

THIS TRUSS IS DESIGNED FOR RESIDENTIAL OR SMALL BUILDING REQUIREMENTS OF PART 9, NBCC 2010

THIS DESIGN COMPLIES WITH:
- PART 9 OF OBC 2012 , BCBC 2012 , ABC 2014
- CSA 086-09
- TPIC 2011

(55 % OF 27.2 P.S.F. G.S.L. PLUS 8.4 P.S.F. RAIN LOAD) EQUALS 23.3 P.S.F. SPECIFIED ROOF LIVE LOAD

ALLOWABLE DEFL.(LL)= L/360 (0.82")
CALCULATED VERT. DEFL.(LL) = L/ 999 (0.04")
ALLOWABLE DEFL.(TL)= L/360 (0.82")
CALCULATED VERT. DEFL.(TL) = L/ 999 (0.18")

CSI: TC=0.23 (2-3:1) , BC=0.37 (10-12:4) , WB=0.84 (3-13:1) , SSI=0.15 (4-5:1)

DOL LUMBER=1.00 NAIL=1.00 LS BEND=1.10 COMP=1.10 SHEAR=1.10 TENS= 1.10

COMPANION LIVE LOAD FACTOR = 0.50

TRUSS PLATE MANUFACTURER IS NOT RESPONSIBLE FOR QUALITY CONTROL IN THE TRUSS MANUFACTURING PLANT .

NAIL VALUES

PLATE	GRIP(DRY) (PSI) MAX	MIN	SHEAR (PLI) MAX	MIN	SECTION (PLI) MAX	MIN
MT20	618	354	1667	822	2284	1656

PLATE PLACEMENT TOL. = 0.250 inches

PLATE ROTATION TOL. = 0.5 Deg.

JSI GRIP= 0.89 (3) (INPUT = 0.90)
JSI METAL= 0.51 (7) (INPUT = 1.00)

LICENSED PROFESSIONAL ENGINEER
P. M. TREVISAN
100136551
March 16th, 2017
PROVINCE OF ONTARIO

RECEIVED
TOWN OF MILTON
MAR 29, 2017
17-5337
BUILDING DIVISION

KOTT

JOB NAME	TRUSS NAME	QUANTITY	PLY	JOB DESC.	DRWG NO.
PT0317-097	T75	1	1	TRUSS DESC. LECCO RIDGE-BLOCK 344	

KOTT , Stouffville, ON, CGC

Version 8.100 S Feb 9 2017 MiTek Industries, Inc. Thu Mar 16 11:58:30 2017 Page 1
ID:EvTixTQDI5yR1QLotZTBr_yE?HJ-O_2jcy1?9pjLye4AoQVZdK1SoQt?o7oX662aLhzaNjN

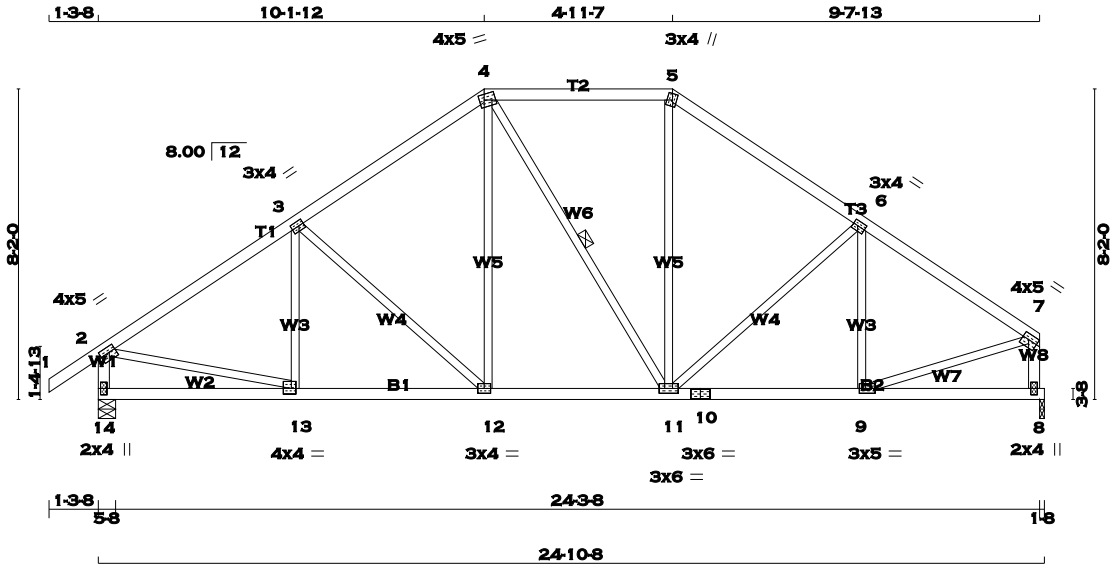

TOTAL WEIGHT = 111 lb

LUMBER
N. L. G. A. RULES

CHORDS	SIZE		LUMBER	DESCR.
1 - 4	2x4	DRY	No.2	SPF
4 - 5	2x4	DRY	No.2	SPF
5 - 7	2x4	DRY	No.2	SPF
14 - 2	2x4	DRY	No.2	SPF
8 - 7	2x4	DRY	No.2	SPF
14 - 10	2x4	DRY	No.2	SPF
10 - 8	2x4	DRY	No.2	SPF
ALL WEBS EXCEPT	2x3	DRY	No.2	SPF

DRY: SEASONED LUMBER.

PLATES (table is in inches)

JT	TYPE	PLATES	W	LEN	Y	X
2	TMVW-t	MT20	4.0	5.0	1.75	2.00
3	TMWW-t	MT20	3.0	4.0	1.50	1.50
4	TTWW-m	MT20	4.0	5.0	1.75	1.50
5	TTW+m	MT20	3.0	4.0	2.00	1.25
6	TMWW-t	MT20	3.0	4.0	1.50	1.50
7	TMVW-t	MT20	4.0	5.0	1.75	Edge
8	BMV1+p	MT20	2.0	4.0		
9	BMWW-t	MT20	3.0	5.0	1.50	2.00
10	BS-t	MT20	3.0	6.0		
11	BMWWW-t	MT20	3.0	6.0		
12	BMWW-t	MT20	3.0	4.0		
13	BMWW-t	MT20	4.0	4.0	1.75	1.50
14	BMV1+p	MT20	2.0	4.0		

Edge - INDICATES REFERENCE CORNER OF PLATE TOUCHES EDGE OF CHORD.

A SIZE FOR SIZE SUBSTITUTION OF MITEK MII20 WITH TEE-LOK TL20 PLATES IS ALLOWED.

DIMENSIONS, SUPPORTS AND LOADINGS SPECIFIED BY FABRICATOR TO BE VERIFIED BY BUILDING DESIGNER

BEARINGS

JT	FACTORED GROSS REACTION VERT	HORZ	MAXIMUM FACTORED GROSS REACTION DOWN	HORZ	UPLIFT	INPUT BRG IN-SX	REQRD BRG IN-SX
14	1280	0	1280	0	0	5-8	5-8
8	1174	0	1174	0	0	1-8	1-8

UNFACTORED REACTIONS

JT	1ST LCASE COMBINED	MAX./MIN. COMPONENT REACTIONS SNOW	LIVE	PERM.LIVE	WIND	DEAD	SOIL
14	896	640 / 0	0 / 0	0 / 0	0 / 0	256 / 0	0 / 0
8	824	576 / 0	0 / 0	0 / 0	0 / 0	248 / 0	0 / 0

BEARING MATERIAL TO BE SPF NO.2 OR BETTER AT JOINT(S) 14, 8

BRACING
TOP CHORD TO BE SHEATHED OR MAX. PURLIN SPACING = 5.33 FT.
MAX. UNBRACED BOTTOM CHORD LENGTH = 10.00 FT. OR RIGID CEILING DIRECTLY APPLIED.

ALL PITCH BREAKS AND PERIMETER CORNER JOINTS MUST BE LATERALLY RESTRAINED.

1 - 2x3 SPF No.2 LATERAL BRACE(S) AT 1/ 2 LENGTH OF 4-11. DBS = 20-0-0 . CBF = 3 LBS.

DBS = DIAGONAL BRACE SPACING (MAX). CBF = CUMULATIVE BRACING FORCE. FASTEN LATERAL BRACE(S) USING (0.122"X3") SPIRAL NAILS : 1 NAIL FOR 2x3 BRACE(S), 2 FOR 1x4, 2x4, 2x5, 3 FOR 2x6, 4 FOR 2x8, 5 FOR 2x10, AND 6 FOR 2x12.

END VERTICAL(S) MUST BE SHEATHED OR HAVE BRACES AS INDICATED IN THE MAX. UNBRACED LENGTH COLUMN OF THE TABLE BELOW

LOADING
TOTAL LOAD CASES: (4)

CHORDS

MEMB. FR-TO	MAX. FACTORED FORCE (LBS)	FACTORED VERT. LOAD (PLF) FROM	TO	LC1 MAX CSI (LC)	MAX. UNBRAC LENGTH
1- 2	0 / 29	-77.4	-77.4	0.10 (1)	10.00
2- 3	-1322 / 0	-77.4	-77.4	0.28 (1)	5.33
3- 4	-1103 / 0	-77.4	-77.4	0.27 (1)	5.71
4- 5	-885 / 0	-77.4	-77.4	0.25 (1)	6.22
5- 6	-1085 / 0	-77.4	-77.4	0.25 (1)	5.79
6- 7	-1221 / 0	-77.4	-77.4	0.25 (1)	5.53
14- 2	-1242 / 0	0.0	0.0	0.13 (1)	7.20
8- 7	-1140 / 0	0.0	0.0	0.12 (1)	7.45
14-13	0 / 0	-17.5	-17.5	0.11 (4)	10.00
13-12	0 / 1121	-17.5	-17.5	0.23 (1)	10.00
12-11	0 / 899	-17.5	-17.5	0.19 (1)	10.00
11-10	0 / 1037	-17.5	-17.5	0.21 (1)	10.00
10- 9	0 / 1037	-17.5	-17.5	0.21 (1)	10.00
9- 8	0 / 0	-17.5	-17.5	0.09 (4)	10.00

WEBS

MEMB. FR-TO	MAX. FACTORED FORCE (LBS)	MAX CSI (LC)
13- 3	-135 / 45	0.05 (1)
3-12	-304 / 0	0.26 (1)
12- 4	0 / 286	0.06 (1)
4-11	-26 / 0	0.02 (1)
11- 5	0 / 250	0.06 (1)
11- 6	-209 / 0	0.18 (1)
9- 6	-222 / 14	0.08 (1)
2-13	0 / 1145	0.26 (1)
9- 7	0 / 1083	0.24 (1)

RECEIVED
TOWN OF MILTON
MAR 29, 2017
17-5337
BUILDING DIVISION

DESIGN CRITERIA

SPECIFIED LOADS:

TOP CH.	LL	=	23.3	PSF
	DL	=	3.0	PSF
BOT CH.	LL	=	0.0	PSF
	DL	=	7.0	PSF
TOTAL LOAD		=	33.3	PSF

SPACING = 24.0 IN. C/C

LOADING IN FLAT SECTION BASED ON A SLOPE OF 6.00/12

THIS TRUSS IS DESIGNED FOR RESIDENTIAL OR SMALL BUILDING REQUIREMENTS OF PART 9, NBCC 2010

THIS DESIGN COMPLIES WITH:
- PART 9 OF OBC 2012 , BCBC 2012 , ABC 2014
- CSA 086-09
- TPIC 2011

(55 % OF 27.2 P.S.F. G.S.L. PLUS 8.4 P.S.F. RAIN LOAD) EQUALS 23.3 P.S.F. SPECIFIED ROOF LIVE LOAD

ALLOWABLE DEFL.(LL)= L/360 (0.82")
CALCULATED VERT. DEFL.(LL) = L/ 999 (0.04")
ALLOWABLE DEFL.(TL)= L/360 (0.82")
CALCULATED VERT. DEFL.(TL) = L/ 999 (0.07")

CSI: TC=0.28 (2-3:1) , BC=0.23 (12-13:1) , WB=0.26 (3-12:1) , SSI=0.16 (2-3:1)

DOL LUMBER=1.00 NAIL=1.00 LS BEND=1.10 COMP=1.10 SHEAR=1.10 TENS= 1.10

COMPANION LIVE LOAD FACTOR = 0.50

TRUSS PLATE MANUFACTURER IS NOT RESPONSIBLE FOR QUALITY CONTROL IN THE TRUSS MANUFACTURING PLANT .

NAIL VALUES

PLATE	GRIP(DRY) (PSI) MAX	MIN	SHEAR (PLI) MAX	MIN	SECTION (PLI) MAX	MIN
MT20	618	354	1667	822	2284	1656

PLATE PLACEMENT TOL. = 0.250 inches

PLATE ROTATION TOL. = 5.0 Deg.

JSI GRIP= 0.89 (9) (INPUT = 0.90)
JSI METAL= 0.45 (2) (INPUT = 1.00)

KOTT

JOB NAME	TRUSS NAME	QUANTITY	PLY	JOB DESC.	DRWG NO.
PT0317-097	T76	1	1	TRUSS DESC. LECCO RIDGE-BLOCK 344	

KOTT , Stouffville, ON, CGC

Version 8.100 S Feb 9 2017 MiTek Industries, Inc. Thu Mar 16 11:58:31 2017 Page 1
ID:EvTixTQDI5yR1QLotZTBr_yE?HJ-sAc5pH1dw7rCaofMM70oAYac0qCoXXPgLmn7t8zaNjM

SCALE = 1:65.1

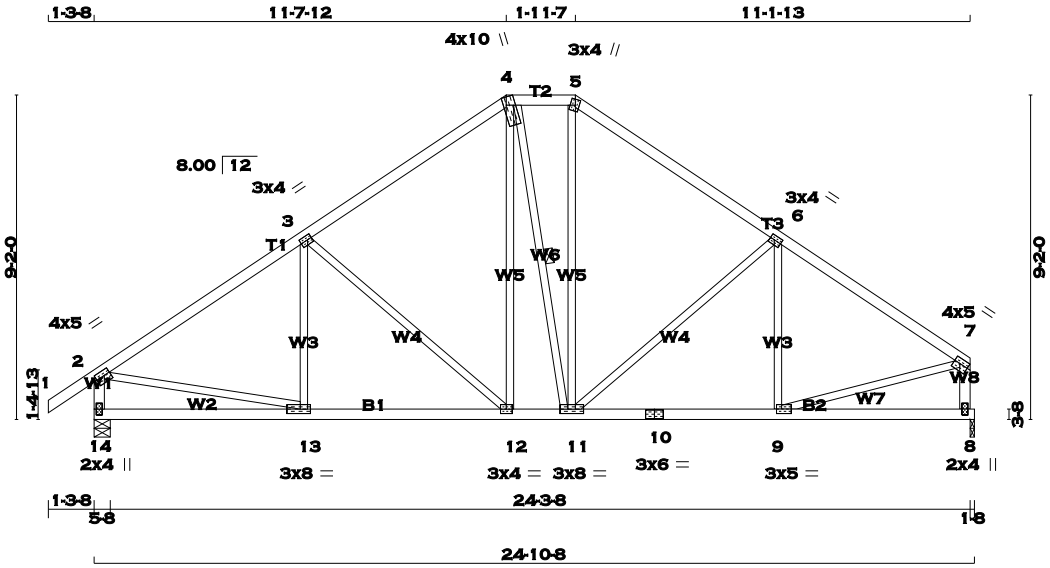

TOTAL WEIGHT = 116 lb

[M][F]

LUMBER

N. L. G. A. RULES

CHORDS	SIZE		LUMBER	DESCR.
1 - 4	2x4	DRY	No.2	SPF
4 - 5	2x4	DRY	No.2	SPF
5 - 7	2x4	DRY	No.2	SPF
14 - 2	2x4	DRY	No.2	SPF
8 - 7	2x4	DRY	No.2	SPF
14 - 10	2x4	DRY	No.2	SPF
10 - 8	2x4	DRY	No.2	SPF
ALL WEBS EXCEPT	2x3	DRY	No.2	SPF

DRY: SEASONED LUMBER.

PLATES (table is in inches)

JT	TYPE	PLATES	W	LEN	Y	X
2	TMVW-t	MT20	4.0	5.0	1.75	2.00
3	TMWW-t	MT20	3.0	4.0	1.50	1.50
4	TTWW+m	MT20	4.0	10.0	Edge	1.00
5	TTW+m	MT20	3.0	4.0	2.00	1.25
6	TMWW-t	MT20	3.0	4.0	1.50	1.50
7	TMVW-t	MT20	4.0	5.0	1.75	Edge
8	BMV1+p	MT20	2.0	4.0		
9	BMWW-t	MT20	3.0	5.0	1.50	1.75
10	BS-t	MT20	3.0	6.0		
11	BMWWW-t	MT20	3.0	8.0		
12	BMWW-t	MT20	3.0	4.0		
13	BMWW-t	MT20	3.0	8.0	1.50	3.50
14	BMV1+p	MT20	2.0	4.0		

Edge - INDICATES REFERENCE CORNER OF PLATE TOUCHES EDGE OF CHORD.

A SIZE FOR SIZE SUBSTITUTION OF MITEK MII20 WITH TEE-LOK TL20 PLATES IS ALLOWED.

DIMENSIONS, SUPPORTS AND LOADINGS SPECIFIED BY FABRICATOR TO BE VERIFIED BY BUILDING DESIGNER

BEARINGS

JT	FACTORED GROSS REACTION VERT	HORZ	MAXIMUM FACTORED GROSS REACTION DOWN	HORZ	UPLIFT	INPUT BRG IN-SX	REQRD BRG IN-SX
14	1280	0	1280	0	0	5-8	5-8
8	1174	0	1174	0	0	1-8	1-8

UNFACTORED REACTIONS

JT	1ST LCASE COMBINED	MAX./MIN. COMPONENT REACTIONS SNOW	LIVE	PERM.LIVE	WIND	DEAD	SOIL
14	896	640 / 0	0 / 0	0 / 0	0 / 0	256 / 0	0 / 0
8	824	576 / 0	0 / 0	0 / 0	0 / 0	248 / 0	0 / 0

BEARING MATERIAL TO BE SPF NO.2 OR BETTER AT JOINT(S) 14, 8

BRACING

TOP CHORD TO BE SHEATHED OR MAX. PURLIN SPACING = 5.19 FT.
MAX. UNBRACED BOTTOM CHORD LENGTH = 10.00 FT. OR RIGID CEILING DIRECTLY APPLIED.

ALL PITCH BREAKS AND PERIMETER CORNER JOINTS MUST BE LATERALLY RESTRAINED.

1 - 2x3 SPF No.2 LATERAL BRACE(S) AT 1/ 2 LENGTH OF 4-11. DBS = 20-0-0 . CBF = 2 LBS.

DBS = DIAGONAL BRACE SPACING (MAX). CBF = CUMULATIVE BRACING FORCE. FASTEN LATERAL BRACE(S) USING (0.122"X3") SPIRAL NAILS : 1 NAIL FOR 2x3 BRACE(S), 2 FOR 1x4, 2x4, 2x5, 3 FOR 2x6, 4 FOR 2x8, 5 FOR 2x10, AND 6 FOR 2x12.

END VERTICAL(S) MUST BE SHEATHED OR HAVE BRACES AS INDICATED IN THE MAX. UNBRACED LENGTH COLUMN OF THE TABLE BELOW

LOADING

TOTAL LOAD CASES: (4)

CHORDS

MEMB. FR-TO	MAX. FACTORED FORCE (LBS)	FACTORED VERT. LOAD (PLF) FROM	TO	LC1 MAX CSI (LC)	MAX. UNBRAC LENGTH
1- 2	0 / 29	-77.4	-77.4	0.10 (1)	10.00
2- 3	-1324 / 0	-77.4	-77.4	0.38 (1)	5.19
3- 4	-1013 / 0	-77.4	-77.4	0.35 (1)	5.77
4- 5	-817 / 0	-77.4	-77.4	0.04 (1)	6.25
5- 6	-1007 / 0	-77.4	-77.4	0.33 (1)	5.82
6- 7	-1239 / 0	-77.4	-77.4	0.34 (1)	5.38
14- 2	-1238 / 0	0.0	0.0	0.13 (1)	7.22
8- 7	-1135 / 0	0.0	0.0	0.12 (1)	7.45
14-13	0 / 0	-17.5	-17.5	0.15 (4)	10.00
13-12	0 / 1126	-17.5	-17.5	0.26 (1)	10.00
12-11	0 / 820	-17.5	-17.5	0.19 (1)	10.00
11-10	0 / 1056	-17.5	-17.5	0.23 (1)	10.00
10- 9	0 / 1056	-17.5	-17.5	0.23 (1)	10.00
9- 8	0 / 0	-17.5	-17.5	0.13 (4)	10.00

WEBS

MEMB. FR-TO	MAX. FACTORED FORCE (LBS)	MAX CSI (LC)
13- 3	-87 / 75	0.04 (1)
3-12	-410 / 0	0.49 (1)
12- 4	0 / 318	0.07 (1)
4-11	-13 / 0	0.01 (1)
11- 5	0 / 298	0.07 (1)
11- 6	-321 / 0	0.39 (1)
9- 6	-166 / 45	0.07 (1)
2-13	0 / 1145	0.26 (1)
9- 7	0 / 1091	0.25 (1)

DESIGN CRITERIA

SPECIFIED LOADS:

TOP CH.	LL	=	23.3	PSF
	DL	=	3.0	PSF
BOT CH.	LL	=	0.0	PSF
	DL	=	7.0	PSF
TOTAL LOAD		=	33.3	PSF

SPACING = 24.0 IN. C/C

LOADING IN FLAT SECTION BASED ON A SLOPE OF 6.00/12

THIS TRUSS IS DESIGNED FOR RESIDENTIAL OR SMALL BUILDING REQUIREMENTS OF PART 9, NBCC 2010

THIS DESIGN COMPLIES WITH:
- PART 9 OF OBC 2012 , BCBC 2012 , ABC 2014
- CSA 086-09
- TPIC 2011

(55 % OF 27.2 P.S.F. G.S.L. PLUS 8.4 P.S.F. RAIN LOAD) EQUALS 23.3 P.S.F. SPECIFIED ROOF LIVE LOAD

ALLOWABLE DEFL.(LL)= L/360 (0.82")
CALCULATED VERT. DEFL.(LL) = L/ 999 (0.04")
ALLOWABLE DEFL.(TL)= L/360 (0.82")
CALCULATED VERT. DEFL.(TL) = L/ 999 (0.08")

CSI: TC=0.38 (2-3:1) , BC=0.26 (12-13:1) , WB=0.49 (3-12:1) , SSI=0.18 (2-3:1)

DOL LUMBER=1.00 NAIL=1.00 LS BEND=1.10 COMP=1.10 SHEAR=1.10 TENS= 1.10

COMPANION LIVE LOAD FACTOR = 0.50

TRUSS PLATE MANUFACTURER IS NOT RESPONSIBLE FOR QUALITY CONTROL IN THE TRUSS MANUFACTURING PLANT .

NAIL VALUES

PLATE	GRIP(DRY) (PSI) MAX	MIN	SHEAR (PLI) MAX	MIN	SECTION (PLI) MAX	MIN
MT20	618	354	1667	822	2284	1656

PLATE PLACEMENT TOL. = 0.250 inches

PLATE ROTATION TOL. = 5.0 Deg.

JSI GRIP= 0.90 (9) (INPUT = 0.90)
JSI METAL= 0.45 (2) (INPUT = 1.00)

LICENSED PROFESSIONAL ENGINEER
P. M. TREVISAN
100136551
March 16th, 2017
PROVINCE OF ONTARIO

RECEIVED
TOWN OF MILTON
MAR 29, 2017
17-5337
BUILDING DIVISION

KOTT

JOB NAME	TRUSS NAME	QUANTITY	PLY	JOB DESC.	DRWG NO.
PT0317-097	T77	1	1	TRUSS DESC. LECCO RIDGE-BLOCK 344	

KOTT , Stouffville, ON, CGC

Version 8.100 S Feb 9 2017 MiTek Industries, Inc. Thu Mar 16 11:58:31 2017 Page 1
ID:EvTixTQDI5yR1QLotZTBr_yE?HJ-sAc5pH1dw7rCaofMM70oAYaatqChXa6gLmn7t8zaNjM

SCALE = 1:70.0

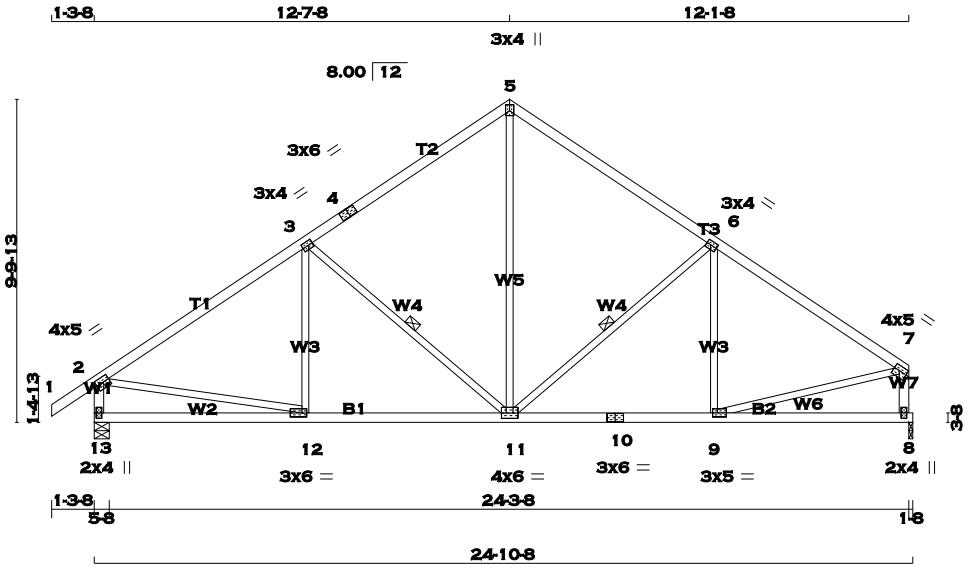

TOTAL WEIGHT = 105 lb

LUMBER

N. L. G. A. RULES

CHORDS	SIZE		LUMBER	DESCR.
1 - 4	2x4	DRY	No.2	SPF
4 - 5	2x4	DRY	No.2	SPF
5 - 7	2x4	DRY	No.2	SPF
13 - 2	2x4	DRY	No.2	SPF
8 - 7	2x4	DRY	No.2	SPF
13 - 10	2x4	DRY	No.2	SPF
10 - 8	2x4	DRY	No.2	SPF
ALL WEBS EXCEPT	2x3	DRY	No.2	SPF

DRY: SEASONED LUMBER.

PLATES (table is in inches)

JT	TYPE	PLATES	W	LEN	Y	X
2	TMVW-t	MT20	4.0	5.0	1.75	2.00
3	TMWW-t	MT20	3.0	4.0	1.50	1.50
4	TS-t	MT20	3.0	6.0		
5	TTW+p	MT20	3.0	4.0	2.25	1.50
6	TMWW-t	MT20	3.0	4.0	1.50	1.50
7	TMVW-t	MT20	4.0	5.0	1.75	Edge
8	BMV1+p	MT20	2.0	4.0		
9	BMWW-t	MT20	3.0	5.0	1.50	1.75
10	BS-t	MT20	3.0	6.0		
11	BMWWW-t	MT20	4.0	6.0		
12	BMWW-t	MT20	3.0	6.0	1.50	1.75
13	BMV1+p	MT20	2.0	4.0		

Edge - INDICATES REFERENCE CORNER OF PLATE TOUCHES EDGE OF CHORD.

A SIZE FOR SIZE SUBSTITUTION OF MITEK MII20 WITH TEE-LOK TL20 PLATES IS ALLOWED.

DIMENSIONS, SUPPORTS AND LOADINGS SPECIFIED BY FABRICATOR TO BE VERIFIED BY BUILDING DESIGNER

BEARINGS

JT	FACTORED GROSS REACTION VERT	HORZ	MAXIMUM FACTORED GROSS REACTION DOWN	HORZ	UPLIFT	INPUT BRG IN-SX	REQRD BRG IN-SX
13	1280	0	1280	0	0	5-8	5-8
8	1174	0	1174	0	0	1-8	1-8

UNFACTORED REACTIONS

JT	1ST LCASE COMBINED	MAX./MIN. COMPONENT REACTIONS SNOW	LIVE	PERM.LIVE	WIND	DEAD	SOIL
13	896	640 / 0	0 / 0	0 / 0	0 / 0	256 / 0	0 / 0
8	824	576 / 0	0 / 0	0 / 0	0 / 0	248 / 0	0 / 0

BEARING MATERIAL TO BE SPF NO.2 OR BETTER AT JOINT(S) 13, 8

BRACING

TOP CHORD TO BE SHEATHED OR MAX. PURLIN SPACING = 5.10 FT.
MAX. UNBRACED BOTTOM CHORD LENGTH = 10.00 FT. OR RIGID CEILING DIRECTLY APPLIED.

ALL PITCH BREAKS AND PERIMETER CORNER JOINTS MUST BE LATERALLY RESTRAINED.

1 - 2x3 SPF No.2 LATERAL BRACE(S) AT 1/ 2 LENGTH OF 3-11, 6-11. DBS = 20-0-0 . CBF = 58 LBS.

DBS = DIAGONAL BRACE SPACING (MAX). CBF = CUMULATIVE BRACING FORCE. FASTEN LATERAL BRACE(S) USING (0.122"X3") SPIRAL NAILS : 1 NAIL FOR 2x3 BRACE(S), 2 FOR 1x4, 2x4, 2x5, 3 FOR 2x6, 4 FOR 2x8, 5 FOR 2x10, AND 6 FOR 2x12.

END VERTICAL(S) MUST BE SHEATHED OR HAVE BRACES AS INDICATED IN THE MAX. UNBRACED LENGTH COLUMN OF THE TABLE BELOW

LOADING

TOTAL LOAD CASES: (4)

CHORDS

MEMB. FR-TO	MAX. FACTORED FORCE (LBS)	FACTORED VERT. LOAD (PLF) FROM	TO	LC1 MAX CSI (LC)	MAX. UNBRAC LENGTH
1- 2	0 / 29	-77.4	-77.4	0.10 (1)	10.00
2- 3	-1317 / 0	-77.4	-77.4	0.45 (1)	5.10
3- 4	-959 / 0	-77.4	-77.4	0.42 (1)	5.79
4- 5	-959 / 0	-77.4	-77.4	0.42 (1)	5.79
5- 6	-956 / 0	-77.4	-77.4	0.40 (1)	5.83
6- 7	-1243 / 0	-77.4	-77.4	0.40 (1)	5.29
13- 2	-1234 / 0	0.0	0.0	0.13 (1)	7.23
8- 7	-1132 / 0	0.0	0.0	0.12 (1)	7.46
13-12	0 / 0	-17.5	-17.5	0.17 (4)	10.00
12-11	0 / 1123	-17.5	-17.5	0.27 (1)	10.00
11-10	0 / 1062	-17.5	-17.5	0.25 (1)	10.00
10- 9	0 / 1062	-17.5	-17.5	0.25 (1)	10.00
9- 8	0 / 0	-17.5	-17.5	0.15 (4)	10.00

WEBS

MEMB. FR-TO	MAX. FACTORED FORCE (LBS)	MAX CSI (LC)
12- 3	-67 / 85	0.03 (1)
3-11	-466 / 0	0.21 (1)
11- 5	0 / 662	0.15 (1)
11- 6	-385 / 0	0.18 (1)
9- 6	-137 / 59	0.07 (1)
2-12	0 / 1139	0.26 (1)
9- 7	0 / 1091	0.25 (1)

DESIGN CRITERIA

SPECIFIED LOADS:

TOP	CH.	LL	=	23.3	PSF
		DL	=	3.0	PSF
BOT	CH.	LL	=	0.0	PSF
		DL	=	7.0	PSF
TOTAL	LOAD		=	33.3	PSF

SPACING = 24.0 IN. C/C

THIS TRUSS IS DESIGNED FOR RESIDENTIAL OR SMALL BUILDING REQUIREMENTS OF PART 9, NBCC 2010

THIS DESIGN COMPLIES WITH:
- PART 9 OF OBC 2012 , BCBC 2012 , ABC 2014
- CSA 086-09
- TPIC 2011

(55 % OF 27.2 P.S.F. G.S.L. PLUS 8.4 P.S.F. RAIN LOAD) EQUALS 23.3 P.S.F. SPECIFIED ROOF LIVE LOAD

ALLOWABLE DEFL.(LL)= L/360 (0.82")
CALCULATED VERT. DEFL.(LL) = L/ 999 (0.04")
ALLOWABLE DEFL.(TL)= L/360 (0.82")
CALCULATED VERT. DEFL.(TL) = L/ 999 (0.08")

CSI: TC=0.45 (2-3:1) , BC=0.27 (11-12:1) , WB=0.26 (2-12:1) , SSI=0.20 (2-3:1)

DOL LUMBER=1.00 NAIL=1.00 LS BEND=1.10 COMP=1.10 SHEAR=1.10 TENS= 1.10

COMPANION LIVE LOAD FACTOR = 0.50

TRUSS PLATE MANUFACTURER IS NOT RESPONSIBLE FOR QUALITY CONTROL IN THE TRUSS MANUFACTURING PLANT .

NAIL VALUES

PLATE	GRIP(DRY) (PSI) MAX	MIN	SHEAR (PLI) MAX	MIN	SECTION (PLI) MAX	MIN
MT20	618	354	1667	822	2284	1656

PLATE PLACEMENT TOL. = 0.250 inches

PLATE ROTATION TOL. = 5.0 Deg.

JSI GRIP= 0.90 (12) (INPUT = 0.90)
JSI METAL= 0.45 (2) (INPUT = 1.00)

LICENSED PROFESSIONAL ENGINEER
P. M. TREVISAN
100136551
March 16th, 2017
PROVINCE OF ONTARIO

RECEIVED
TOWN OF MILTON
MAR 29, 2017
17-5337
BUILDING DIVISION

KOTT

JOB NAME	TRUSS NAME	QUANTITY	PLY	JOB DESC.	DRWG NO.
PT0317-097	**T78**	**1**	**1**	TRUSS DESC. LECCO RIDGE-BLOCK 344	ENG JOB: PT0317-097

KOTT , Stouffville, ON, CGC

Version 8.100 S Feb 9 2017 MiTek Industries, Inc. Thu Mar 16 11:58:32 2017 Page 1

ID:EvTixTQDI5yR1QLotZTBr_yE?HJ-KNAT1d2FhQz3CyDYvrX1jl7mvEZMG?xqaQXgPazaNjL

SCALE = 1:60.2

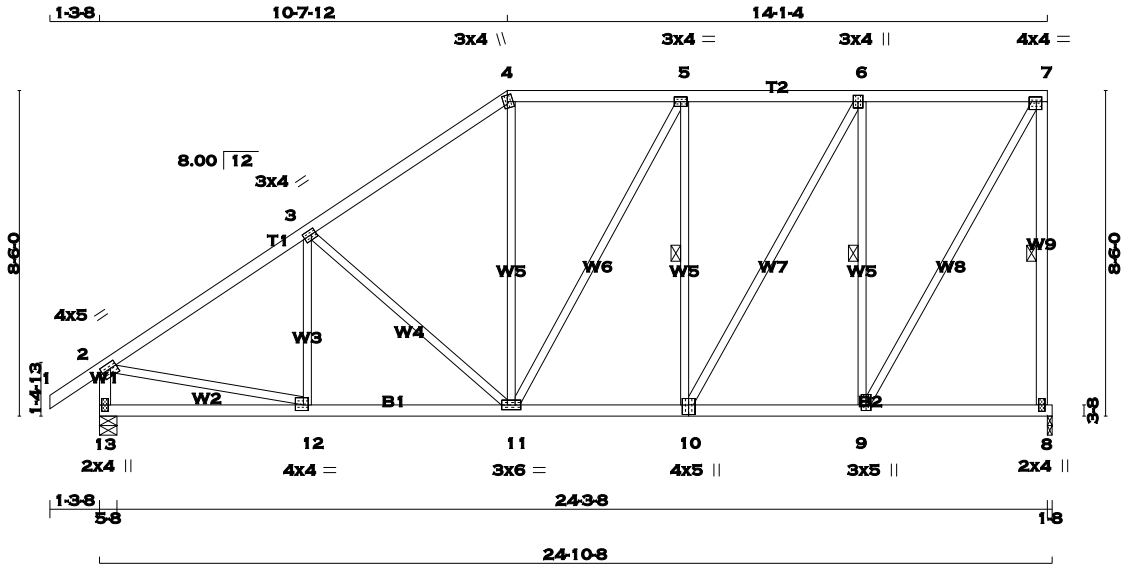

TOTAL WEIGHT = 126 lb [M]

LUMBER

N. L. G. A. RULES

CHORDS	SIZE		LUMBER	DESCR.
1 - 4	2x4	DRY	No.2	SPF
4 - 7	2x4	DRY	No.2	SPF
8 - 7	2x4	DRY	No.2	SPF
13 - 2	2x4	DRY	No.2	SPF
13 - 10	2x4	DRY	No.2	SPF
10 - 8	2x4	DRY	No.2	SPF
ALL WEBS EXCEPT	2x3	DRY	No.2	SPF

DRY: SEASONED LUMBER.

PLATES (table is in inches)

JT	TYPE	PLATES	W	LEN	Y	X
2	TMVW-t	MT20	4.0	5.0	1.75	2.00
3	TMWW-t	MT20	3.0	4.0	1.50	1.50
4	TTW+m	MT20	3.0	4.0	2.00	1.25
5	TMWW-t	MT20	3.0	4.0		
6	TMWW+t	MT20	3.0	4.0		
7	TMVW-t	MT20	4.0	4.0	1.50	1.75
8	BMV1+p	MT20	2.0	4.0		
9	BMWW+t	MT20	3.0	5.0	1.75	1.50
10	BSWW+l	MT20	4.0	5.0	3.00	2.00
11	BMWWW-t	MT20	3.0	6.0		
12	BMWW-t	MT20	4.0	4.0	1.75	1.50
13	BMV1+p	MT20	2.0	4.0		

A SIZE FOR SIZE SUBSTITUTION OF MITEK MII20 WITH TEE-LOK TL20 PLATES IS ALLOWED.

DIMENSIONS, SUPPORTS AND LOADINGS SPECIFIED BY FABRICATOR TO BE VERIFIED BY BUILDING DESIGNER

BEARINGS

JT	FACTORED GROSS REACTION VERT	HORZ	MAXIMUM FACTORED GROSS REACTION DOWN	HORZ	UPLIFT	INPUT BRG IN-SX	REQRD BRG IN-SX
8	1174	0	1174	0	0	1-8	1-8
13	1280	0	1280	0	0	5-8	5-8

UNFACTORED REACTIONS

JT	1ST LCASE COMBINED	MAX./MIN. COMPONENT REACTIONS SNOW	LIVE	PERM.LIVE	WIND	DEAD	SOIL
8	824	576 / 0	0 / 0	0 / 0	0 / 0	248 / 0	0 / 0
13	896	640 / 0	0 / 0	0 / 0	0 / 0	256 / 0	0 / 0

BEARING MATERIAL TO BE SPF NO.2 OR BETTER AT JOINT(S) 8, 13

BRACING

TOP CHORD TO BE SHEATHED OR MAX. PURLIN SPACING = 5.10 FT.
MAX. UNBRACED BOTTOM CHORD LENGTH = 10.00 FT. OR RIGID CEILING DIRECTLY APPLIED.

ALL PITCH BREAKS AND PERIMETER CORNER JOINTS MUST BE LATERALLY RESTRAINED.

1 - 2x3 SPF No.2 LATERAL BRACE(S) AT 1/ 2 LENGTH OF 7-8. DBS = 12-0-0 . CBF = 85 LBS.
1 - 2x3 SPF No.2 LATERAL BRACE(S) AT 1/ 2 LENGTH OF 5-10. DBS = 20-0-0 . CBF = 52 LBS.
1 - 2x3 SPF No.2 LATERAL BRACE(S) AT 1/ 2 LENGTH OF 6-9. DBS = 16-0-0 . CBF = 89 LBS.

DBS = DIAGONAL BRACE SPACING (MAX). CBF = CUMULATIVE BRACING FORCE. FASTEN LATERAL BRACE(S) USING (0.122"X3") SPIRAL NAILS : 1 NAIL FOR 2x3 BRACE(S), 2 FOR 1x4, 2x4, 2x5, 3 FOR 2x6, 4 FOR 2x8, 5 FOR 2x10, AND 6 FOR 2x12.

END VERTICAL(S) MUST BE SHEATHED OR HAVE BRACES AS INDICATED IN THE MAX. UNBRACED LENGTH COLUMN OF THE TABLE BELOW

LOADING

TOTAL LOAD CASES: (4)

CHORDS

MEMB. FR-TO	MAX. FACTORED FORCE (LBS)	FACTORED VERT. LOAD LC1 (PLF) FROM	TO	MAX CSI (LC)	MAX. UNBRAC LENGTH
1- 2	0 / 29	-77.4	-77.4	0.10 (1)	10.00
2- 3	-1324 / 0	-77.4	-77.4	0.43 (1)	5.10
3- 4	-1075 / 0	-77.4	-77.4	0.41 (1)	5.54
4- 5	-873 / 0	-77.4	-77.4	0.23 (1)	6.25
5- 6	-857 / 0	-77.4	-77.4	0.25 (1)	6.25
6- 7	-582 / 0	-77.4	-77.4	0.24 (1)	6.25
8- 7	-1140 / 0	0.0	0.0	0.37 (1)	5.96
13- 2	-1240 / 0	0.0	0.0	0.13 (1)	7.21
13-12	0 / 0	-17.5	-17.5	0.12 (4)	10.00
12-11	0 / 1124	-17.5	-17.5	0.24 (1)	10.00
11-10	0 / 857	-17.5	-17.5	0.18 (1)	10.00
10- 9	0 / 582	-17.5	-17.5	0.15 (1)	10.00
9- 8	0 / 0	-17.5	-17.5	0.10 (4)	10.00

WEBS

MEMB. FR-TO	MAX. FACTORED FORCE (LBS)	MAX CSI (LC)
12- 3	-120 / 54	0.04 (1)
3-11	-339 / 0	0.33 (1)
11- 4	0 / 282	0.06 (1)
11- 5	0 / 33	0.01 (1)
10- 5	-415 / 0	0.19 (1)
10- 6	0 / 559	0.13 (1)
9- 6	-892 / 0	0.41 (1)
9- 7	0 / 1147	0.26 (1)
2-12	0 / 1146	0.26 (1)

DESIGN CRITERIA

SPECIFIED LOADS:

TOP	CH.	LL	=	23.3	PSF
		DL	=	3.0	PSF
BOT	CH.	LL	=	0.0	PSF
		DL	=	7.0	PSF
TOTAL	LOAD		=	33.3	PSF

SPACING = 24.0 IN. C/C

LOADING IN FLAT SECTION BASED ON A SLOPE OF 6.00/12

THIS TRUSS IS DESIGNED FOR RESIDENTIAL OR SMALL BUILDING REQUIREMENTS OF PART 9, NBCC 2010

THIS DESIGN COMPLIES WITH:
- PART 9 OF OBC 2012 , BCBC 2012 , ABC 2014
- CSA 086-09
- TPIC 2011

(55 % OF 27.2 P.S.F. G.S.L. PLUS 8.4 P.S.F. RAIN LOAD) EQUALS 23.3 P.S.F. SPECIFIED ROOF LIVE LOAD

ALLOWABLE DEFL.(LL)= L/360 (0.82")
CALCULATED VERT. DEFL.(LL) = L/ 999 (0.05")
ALLOWABLE DEFL.(TL)= L/360 (0.82")
CALCULATED VERT. DEFL.(TL) = L/ 999 (0.08")

CSI: TC=0.43 (2-3:1) , BC=0.24 (11-12:1) , WB=0.41 (6-9:1) , SSI=0.17 (6-7:1)

DOL LUMBER=1.00 NAIL=1.00 LS BEND=1.10 COMP=1.10 SHEAR=1.10 TENS= 1.10

COMPANION LIVE LOAD FACTOR = 0.50

TRUSS PLATE MANUFACTURER IS NOT RESPONSIBLE FOR QUALITY CONTROL IN THE TRUSS MANUFACTURING PLANT .

NAIL VALUES

PLATE	GRIP(DRY) (PSI) MAX	MIN	SHEAR (PLI) MAX	MIN	SECTION (PLI) MAX	MIN
MT20	618	354	1667	822	2284	1656

PLATE PLACEMENT TOL. = 0.250 inches

PLATE ROTATION TOL. = 5.0 Deg.

JSI GRIP= 0.88 (9) (INPUT = 0.90)
JSI METAL= 0.45 (2) (INPUT = 1.00)

LICENSED PROFESSIONAL ENGINEER
P. M. TREVISAN
100136551
March 16th, 2017
PROVINCE OF ONTARIO

RECEIVED
TOWN OF MILTON
MAR 29, 2017
17-5337
BUILDING DIVISION

KOTT

JOB NAME	TRUSS NAME	QUANTITY	PLY	JOB DESC.	DRWG NO.
PT0317-097	T79	1	1	TRUSS DESC. LECCO RIDGE-BLOCK 344	

KOTT , Stouffville, ON, CGC

Version 8.100 S Feb 9 2017 MiTek Industries, Inc. Thu Mar 16 11:58:32 2017 Page 1
ID:EvTixTQDI5yR1QLotZTBr_yE?HJ-KNAT1d2FhQz3CyDYvrX1jl7jREY_GyAqaQXgPazaNjL

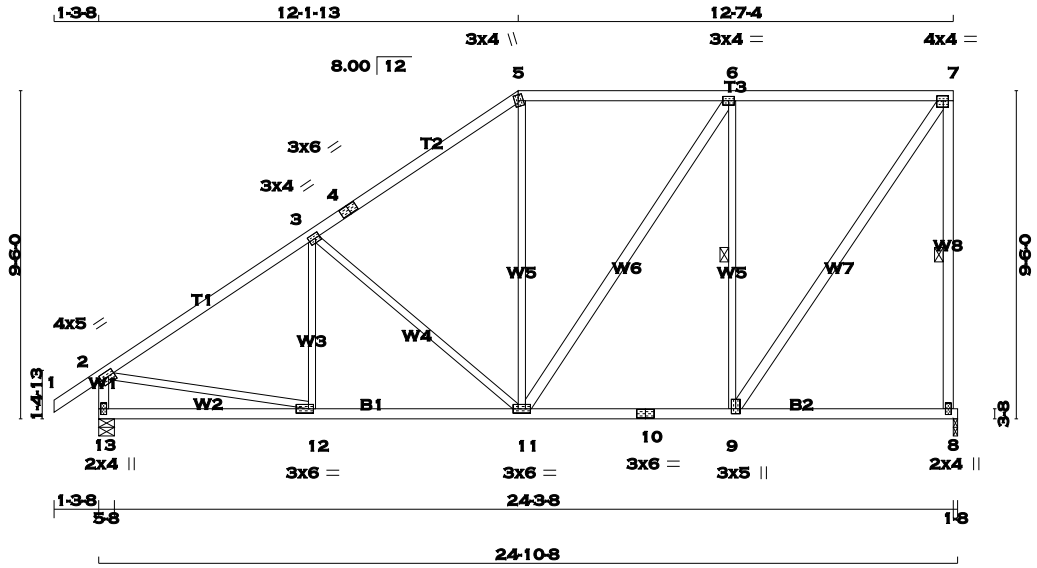

TOTAL WEIGHT = 127 lb
[M]

LUMBER
N. L. G. A. RULES

CHORDS	SIZE		LUMBER	DESCR.
1 - 4	2x4	DRY	No.2	SPF
4 - 5	2x4	DRY	No.2	SPF
5 - 7	2x4	DRY	No.2	SPF
8 - 7	2x4	DRY	No.2	SPF
13 - 2	2x4	DRY	No.2	SPF
13 - 10	2x4	DRY	No.2	SPF
10 - 8	2x4	DRY	No.2	SPF
ALL WEBS EXCEPT	2x3	DRY	No.2	SPF
11 - 6	2x4	DRY	No.2	SPF
9 - 7	2x4	DRY	No.2	SPF

DRY: SEASONED LUMBER.

PLATES (table is in inches)

JT	TYPE	PLATES	W	LEN	Y	X
2	TMVW-t	MT20	4.0	5.0	1.75	2.00
3	TMWW-t	MT20	3.0	4.0	1.50	1.50
4	TS-t	MT20	3.0	6.0		
5	TTW+m	MT20	3.0	4.0	2.00	1.25
6	TMWW-t	MT20	3.0	4.0		
7	TMVW-t	MT20	4.0	4.0	1.75	1.75
8	BMV1+p	MT20	2.0	4.0		
9	BMWW+t	MT20	3.0	5.0	1.75	1.50
10	BS-t	MT20	3.0	6.0		
11	BMWWW-t	MT20	3.0	6.0		
12	BMWW-t	MT20	3.0	6.0	1.50	1.75
13	BMV1+p	MT20	2.0	4.0		

A SIZE FOR SIZE SUBSTITUTION OF MITEK MII20 WITH TEE-LOK TL20 PLATES IS ALLOWED.

DIMENSIONS, SUPPORTS AND LOADINGS SPECIFIED BY FABRICATOR TO BE VERIFIED BY BUILDING DESIGNER

BEARINGS

JT	FACTORED GROSS REACTION VERT	HORZ	MAXIMUM FACTORED GROSS REACTION DOWN	HORZ	UPLIFT	INPUT BRG IN-SX	REQRD BRG IN-SX
8	1174	0	1174	0	0	1-8	1-8
13	1280	0	1280	0	0	5-8	5-8

UNFACTORED REACTIONS

JT	1ST LCASE COMBINED	MAX./MIN. COMPONENT REACTIONS SNOW	LIVE	PERM.LIVE	WIND	DEAD	SOIL
8	824	576 / 0	0 / 0	0 / 0	0 / 0	248 / 0	0 / 0
13	896	640 / 0	0 / 0	0 / 0	0 / 0	256 / 0	0 / 0

BEARING MATERIAL TO BE SPF NO.2 OR BETTER AT JOINT(S) 8, 13

BRACING
TOP CHORD TO BE SHEATHED OR MAX. PURLIN SPACING = 4.88 FT.
MAX. UNBRACED BOTTOM CHORD LENGTH = 10.00 FT. OR RIGID CEILING DIRECTLY APPLIED.

ALL PITCH BREAKS AND PERIMETER CORNER JOINTS MUST BE LATERALLY RESTRAINED.

1 - 2x3 SPF No.2 LATERAL BRACE(S) AT 1/ 2 LENGTH OF 7-8. DBS = 12-0-0 . CBF = 85 LBS.
1 - 2x3 SPF No.2 LATERAL BRACE(S) AT 1/ 2 LENGTH OF 6-9. DBS = 18-0-0 . CBF = 92 LBS.

DBS = DIAGONAL BRACE SPACING (MAX). CBF = CUMULATIVE BRACING FORCE. FASTEN LATERAL BRACE(S) USING (0.122"X3") SPIRAL NAILS : 1 NAIL FOR 2x3 BRACE(S), 2 FOR 1x4, 2x4, 2x5, 3 FOR 2x6, 4 FOR 2x8, 5 FOR 2x10, AND 6 FOR 2x12.

END VERTICAL(S) MUST BE SHEATHED OR HAVE BRACES AS INDICATED IN THE MAX. UNBRACED LENGTH COLUMN OF THE TABLE BELOW

LOADING
TOTAL LOAD CASES: (4)

CHORDS

MEMB. FR-TO	MAX. FACTORED FORCE (LBS)	FACTORED VERT. LOAD (PLF) FROM	TO	LC1 MAX CSI (LC)	MAX. UNBRAC LENGTH
1- 2	0 / 29	-77.4	-77.4	0.10 (1)	10.00
2- 3	-1321 / 0	-77.4	-77.4	0.59 (1)	4.88
3- 4	-983 / 0	-77.4	-77.4	0.55 (1)	5.49
4- 5	-983 / 0	-77.4	-77.4	0.55 (1)	5.49
5- 6	-792 / 0	-77.4	-77.4	0.55 (1)	5.87
6- 7	-654 / 0	-77.4	-77.4	0.55 (1)	6.25
8- 7	-1129 / 0	0.0	0.0	0.48 (1)	5.98
13- 2	-1236 / 0	0.0	0.0	0.13 (1)	7.22
13-12	0 / 0	-17.5	-17.5	0.16 (4)	10.00
12-11	0 / 1125	-17.5	-17.5	0.26 (1)	10.00
11-10	0 / 654	-17.5	-17.5	0.22 (4)	10.00
10- 9	0 / 654	-17.5	-17.5	0.22 (4)	10.00
9- 8	0 / 0	-17.5	-17.5	0.17 (4)	10.00

WEBS

MEMB. FR-TO	MAX. FACTORED FORCE (LBS)	MAX CSI (LC)
12- 3	-77 / 79	0.04 (1)
3-11	-440 / 0	0.59 (1)
11- 5	0 / 176	0.04 (4)
11- 6	0 / 252	0.04 (1)
9- 6	-815 / 0	0.49 (1)
9- 7	0 / 1145	0.18 (1)
2-12	0 / 1142	0.26 (1)

DESIGN CRITERIA

SPECIFIED LOADS:

TOP	CH.	LL	=	23.3	PSF
		DL	=	3.0	PSF
BOT	CH.	LL	=	0.0	PSF
		DL	=	7.0	PSF
TOTAL	LOAD		=	33.3	PSF

SPACING = 24.0 IN. C/C

LOADING IN FLAT SECTION BASED ON A SLOPE OF 6.00/12

THIS TRUSS IS DESIGNED FOR RESIDENTIAL OR SMALL BUILDING REQUIREMENTS OF PART 9, NBCC 2010

THIS DESIGN COMPLIES WITH:
- PART 9 OF OBC 2012 , BCBC 2012 , ABC 2014
- CSA 086-09
- TPIC 2011

(55 % OF 27.2 P.S.F. G.S.L. PLUS 8.4 P.S.F. RAIN LOAD) EQUALS 23.3 P.S.F. SPECIFIED ROOF LIVE LOAD

ALLOWABLE DEFL.(LL)= L/360 (0.82")
CALCULATED VERT. DEFL.(LL) = L/ 999 (0.04")
ALLOWABLE DEFL.(TL)= L/360 (0.82")
CALCULATED VERT. DEFL.(TL) = L/ 999 (0.08")

CSI: TC=0.59 (2-3:1) , BC=0.26 (11-12:1) , WB=0.59 (3-11:1) , SSI=0.24 (6-7:1)

DOL LUMBER=1.00 NAIL=1.00 LS BEND=1.10 COMP=1.10 SHEAR=1.10 TENS= 1.10

COMPANION LIVE LOAD FACTOR = 0.50

TRUSS PLATE MANUFACTURER IS NOT RESPONSIBLE FOR QUALITY CONTROL IN THE TRUSS MANUFACTURING PLANT .

NAIL VALUES

PLATE	GRIP(DRY) (PSI) MAX	MIN	SHEAR (PLI) MAX	MIN	SECTION (PLI) MAX	MIN
MT20	618	354	1667	822	2284	1656

PLATE PLACEMENT TOL. = 0.250 inches

PLATE ROTATION TOL. = 5.0 Deg.

JSI GRIP= 0.90 (12) (INPUT = 0.90)
JSI METAL= 0.45 (2) (INPUT = 1.00)

LICENSED PROFESSIONAL ENGINEER
P. M. TREVISAN
100136551
March 16th, 2017
PROVINCE OF ONTARIO

RECEIVED
TOWN OF MILTON
MAR 29, 2017
17-5337
BUILDING DIVISION

KOTT

JOB NAME	TRUSS NAME	QUANTITY	PLY	JOB DESC.	DRWG NO.
PT0317-097	T80	1	1	TRUSS DESC. LECCO RIDGE-BLOCK 344	

KOTT , Stouffville, ON, CGC

Version 8.100 S Feb 9 2017 MiTek Industries, Inc. Thu Mar 16 11:58:33 2017 Page 1
ID:EvTixTQDI5yR1QLotZTBr_yE?HJ-oZkrEz3tSk5wq6olTY2GFzfwXeu3?Vozo4GEx0zaNjK

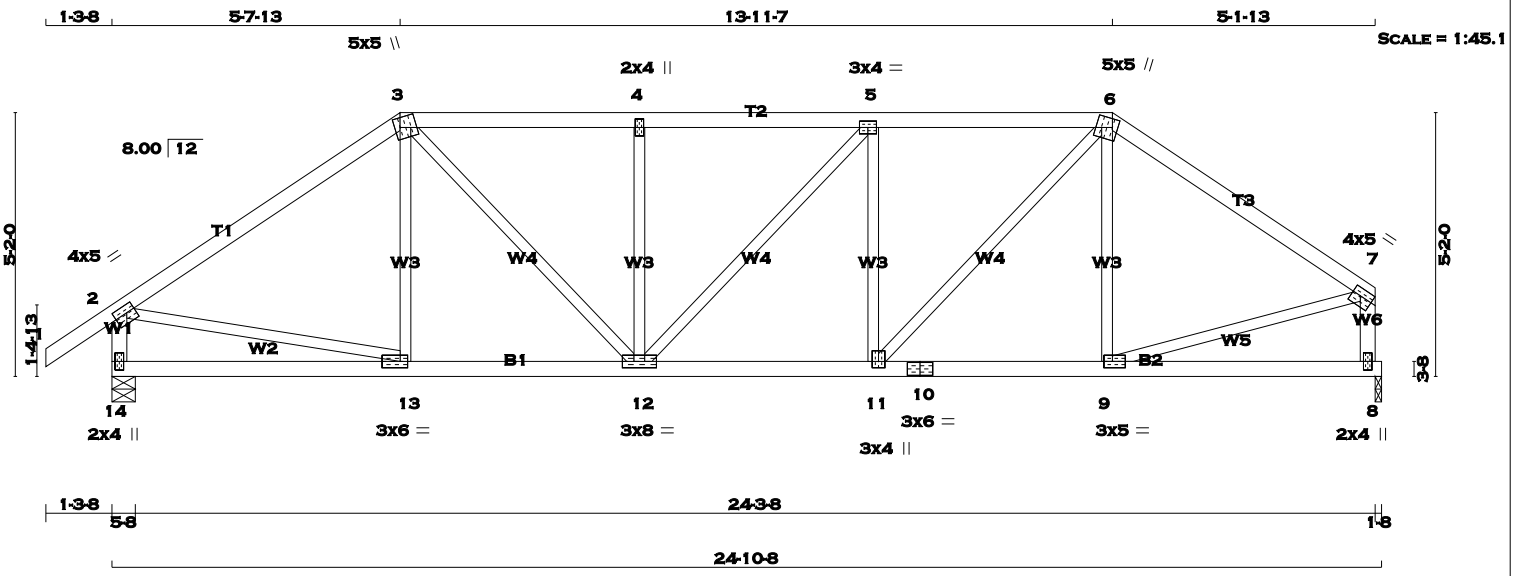

TOTAL WEIGHT = 103 lb
[M]

LUMBER
N. L. G. A. RULES

CHORDS	SIZE		LUMBER	DESCR.
1 - 3	2x4	DRY	No.2	SPF
3 - 6	2x4	DRY	No.2	SPF
6 - 7	2x4	DRY	No.2	SPF
14 - 2	2x4	DRY	No.2	SPF
8 - 7	2x4	DRY	No.2	SPF
14 - 10	2x4	DRY	No.2	SPF
10 - 8	2x4	DRY	No.2	SPF
ALL WEBS EXCEPT	2x3	DRY	No.2	SPF

DRY: SEASONED LUMBER.

PLATES (table is in inches)

JT	TYPE	PLATES	W	LEN	Y	X
2	TMVW-t	MT20	4.0	5.0	1.75	2.00
3	TTWW+m	MT20	5.0	5.0	2.25	1.25
4	TMW+w	MT20	2.0	4.0		
5	TMWW-t	MT20	3.0	4.0		
6	TTWW+m	MT20	5.0	5.0	2.00	1.25
7	TMVW-t	MT20	4.0	5.0	1.75	Edge
8	BMV1+p	MT20	2.0	4.0		
9	BMWW-t	MT20	3.0	5.0	1.50	2.00
10	BS-t	MT20	3.0	6.0		
11	BMWW+t	MT20	3.0	4.0	1.50	1.50
12	BMWWW-t	MT20	3.0	8.0		
13	BMWW-t	MT20	3.0	6.0	1.50	1.75
14	BMV1+p	MT20	2.0	4.0		

Edge - INDICATES REFERENCE CORNER OF PLATE TOUCHES EDGE OF CHORD.

A SIZE FOR SIZE SUBSTITUTION OF MITEK MII20 WITH TEE-LOK TL20 PLATES IS ALLOWED.

DIMENSIONS, SUPPORTS AND LOADINGS SPECIFIED BY FABRICATOR TO BE VERIFIED BY BUILDING DESIGNER

BEARINGS

JT	FACTORED GROSS REACTION VERT	HORZ	MAXIMUM FACTORED GROSS REACTION DOWN	HORZ	UPLIFT	INPUT BRG IN-SX	REQRD BRG IN-SX
14	1280	0	1280	0	0	5-8	5-8
8	1174	0	1174	0	0	1-8	1-8

UNFACTORED REACTIONS

JT	1ST LCASE COMBINED	MAX./MIN. COMPONENT REACTIONS SNOW	LIVE	PERM.LIVE	WIND	DEAD	SOIL
14	896	640 / 0	0 / 0	0 / 0	0 / 0	256 / 0	0 / 0
8	824	576 / 0	0 / 0	0 / 0	0 / 0	248 / 0	0 / 0

BEARING MATERIAL TO BE SPF NO.2 OR BETTER AT JOINT(S) 14, 8

BRACING
TOP CHORD TO BE SHEATHED OR MAX. PURLIN SPACING = 5.05 FT.
MAX. UNBRACED BOTTOM CHORD LENGTH = 10.00 FT. OR RIGID CEILING DIRECTLY APPLIED.

ALL PITCH BREAKS AND PERIMETER CORNER JOINTS MUST BE LATERALLY RESTRAINED.

LOADING
TOTAL LOAD CASES: (4)

CHORDS

MEMB. FR-TO	MAX. FACTORED FORCE (LBS)	FACTORED VERT. LOAD (PLF) FROM	TO	LC1 MAX CSI (LC)	MAX. UNBRAC LENGTH
1- 2	0 / 29	-77.4	-77.4	0.10 (1)	10.00
2- 3	-1283 / 0	-77.4	-77.4	0.51 (1)	5.05
3- 4	-1484 / 0	-77.4	-77.4	0.25 (1)	5.10
4- 5	-1484 / 0	-77.4	-77.4	0.26 (1)	5.10
5- 6	-1464 / 0	-77.4	-77.4	0.26 (1)	5.13
6- 7	-1202 / 0	-77.4	-77.4	0.41 (1)	5.32
14- 2	-1239 / 0	0.0	0.0	0.13 (1)	7.22
8- 7	-1136 / 0	0.0	0.0	0.12 (1)	7.45
14-13	0 / 0	-17.5	-17.5	0.12 (4)	10.00
13-12	0 / 1064	-17.5	-17.5	0.24 (1)	10.00
12-11	0 / 1464	-17.5	-17.5	0.27 (1)	10.00
11-10	0 / 995	-17.5	-17.5	0.22 (1)	10.00
10- 9	0 / 995	-17.5	-17.5	0.22 (1)	10.00
9- 8	0 / 0	-17.5	-17.5	0.11 (4)	10.00

WEBS

MEMB. FR-TO	MAX. FACTORED FORCE (LBS)	MAX CSI (LC)
13- 3	-93 / 58	0.04 (1)
3-12	0 / 605	0.14 (1)
12- 4	-386 / 0	0.15 (1)
12- 5	0 / 30	0.01 (1)
11- 5	-410 / 0	0.16 (1)
11- 6	0 / 676	0.15 (1)
9- 6	-169 / 30	0.07 (1)
2-13	0 / 1085	0.24 (1)
9- 7	0 / 1034	0.23 (1)

DESIGN CRITERIA

SPECIFIED LOADS:

TOP CH.	LL	=	23.3	PSF
	DL	=	3.0	PSF
BOT CH.	LL	=	0.0	PSF
	DL	=	7.0	PSF
TOTAL LOAD		=	33.3	PSF

SPACING = 24.0 IN. C/C

LOADING IN FLAT SECTION BASED ON A SLOPE OF 6.00/12

THIS TRUSS IS DESIGNED FOR RESIDENTIAL OR SMALL BUILDING REQUIREMENTS OF PART 9, NBCC 2010

THIS DESIGN COMPLIES WITH:
- PART 9 OF OBC 2012 , BCBC 2012 , ABC 2014
- CSA 086-09
- TPIC 2011

(55 % OF 27.2 P.S.F. G.S.L. PLUS 8.4 P.S.F. RAIN LOAD) EQUALS 23.3 P.S.F. SPECIFIED ROOF LIVE LOAD

ALLOWABLE DEFL.(LL)= L/360 (0.82")
CALCULATED VERT. DEFL.(LL) = L/ 999 (0.06")
ALLOWABLE DEFL.(TL)= L/360 (0.82")
CALCULATED VERT. DEFL.(TL) = L/ 999 (0.10")

CSI: TC=0.51 (2-3:1) , BC=0.27 (11-12:1) , WB=0.24 (2-13:1) , SSI=0.17 (5-6:1)

DOL LUMBER=1.00 NAIL=1.00 LS BEND=1.10 COMP=1.10 SHEAR=1.10 TENS= 1.10

COMPANION LIVE LOAD FACTOR = 0.50

TRUSS PLATE MANUFACTURER IS NOT RESPONSIBLE FOR QUALITY CONTROL IN THE TRUSS MANUFACTURING PLANT .

NAIL VALUES

PLATE	GRIP(DRY) (PSI) MAX	MIN	SHEAR (PLI) MAX	MIN	SECTION (PLI) MAX	MIN
MT20	618	354	1667	822	2284	1656

PLATE PLACEMENT TOL. = 0.250 inches

PLATE ROTATION TOL. = 5.0 Deg.

JSI GRIP= 0.90 (13) (INPUT = 0.90)
JSI METAL= 0.44 (2) (INPUT = 1.00)

LICENSED PROFESSIONAL ENGINEER
P. M. TREVISAN
100136551
March 16th, 2017
PROVINCE OF ONTARIO

RECEIVED
TOWN OF MILTON
MAR 29, 2017
17-5337
BUILDING DIVISION

KOTT

JOB NAME	TRUSS NAME	QUANTITY	PLY	JOB DESC.	DRWG NO.
PT0317-097	T81	1	1	TRUSS DESC. LECCO RIDGE-BLOCK 344	

KOTT , Stouffville, ON, CGC

Version 8.100 S Feb 9 2017 MiTek Industries, Inc. Thu Mar 16 11:58:33 2017 Page 1
ID:EvTixTQDI5yR1QLotZTBr_yE?HJ-oZkrEz3tSk5wq6olTY2GFzfzVeux?Qfzo4GEx0zaNjK

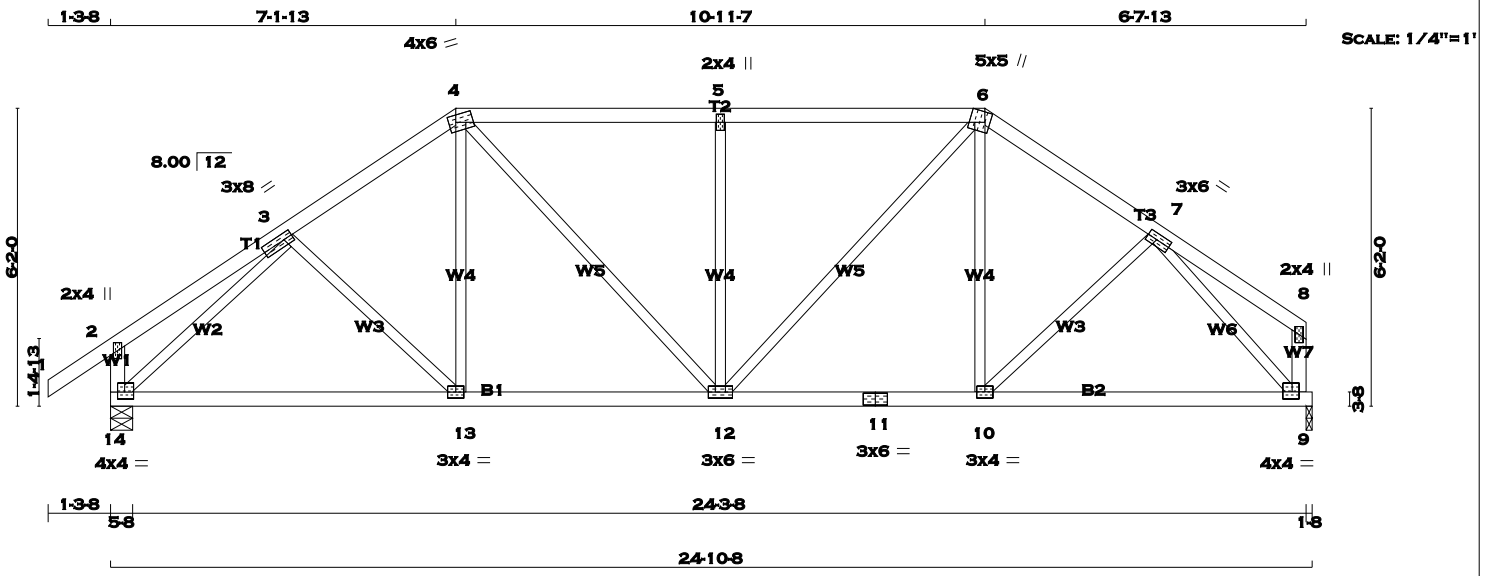

TOTAL WEIGHT = 105 lb
[M][F]

LUMBER
N. L. G. A. RULES

CHORDS	SIZE		LUMBER	DESCR.
1 - 4	2x4	DRY	No.2	SPF
4 - 6	2x4	DRY	No.2	SPF
6 - 8	2x4	DRY	No.2	SPF
14 - 2	2x4	DRY	No.2	SPF
9 - 8	2x4	DRY	No.2	SPF
14 - 11	2x4	DRY	No.2	SPF
11 - 9	2x4	DRY	No.2	SPF
ALL WEBS EXCEPT	2x3	DRY	No.2	SPF

DRY: SEASONED LUMBER.

PLATES (table is in inches)

JT	TYPE	PLATES	W	LEN	Y	X
2	TMV+p	MT20	2.0	4.0		
3	TMWW-t	MT20	3.0	8.0	1.50	2.25
4	TTWW-m	MT20	4.0	6.0	1.75	1.75
5	TMW+w	MT20	2.0	4.0		
6	TTWW+m	MT20	5.0	5.0	Edge	3.75
7	TMWW-t	MT20	3.0	6.0	1.50	2.50
8	TMV+p	MT20	2.0	4.0		
9	BMVW1-t	MT20	4.0	4.0	1.75	1.75
10	BMWW-t	MT20	3.0	4.0		
11	BS-t	MT20	3.0	6.0		
12	BMWWW-t	MT20	3.0	6.0		
13	BMWW-t	MT20	3.0	4.0		
14	BMVW1-t	MT20	4.0	4.0	1.75	1.75

Edge - INDICATES REFERENCE CORNER OF PLATE TOUCHES EDGE OF CHORD.

A SIZE FOR SIZE SUBSTITUTION OF MITEK MII20 WITH TEE-LOK TL20 PLATES IS ALLOWED.

DIMENSIONS, SUPPORTS AND LOADINGS SPECIFIED BY FABRICATOR TO BE VERIFIED BY BUILDING DESIGNER

BEARINGS

JT	FACTORED GROSS REACTION VERT	HORZ	MAXIMUM FACTORED GROSS REACTION DOWN	HORZ	UPLIFT	INPUT BRG IN-SX	REQRD BRG IN-SX
14	1280	0	1280	0	0	5-8	5-8
9	1174	0	1174	0	0	1-8	1-8

UNFACTORED REACTIONS

JT	1ST LCASE COMBINED	MAX./MIN. COMPONENT REACTIONS SNOW	LIVE	PERM.LIVE	WIND	DEAD	SOIL
14	896	640 / 0	0 / 0	0 / 0	0 / 0	256 / 0	0 / 0
9	824	576 / 0	0 / 0	0 / 0	0 / 0	248 / 0	0 / 0

BEARING MATERIAL TO BE SPF NO.2 OR BETTER AT JOINT(S) 14, 9

BRACING
TOP CHORD TO BE SHEATHED OR MAX. PURLIN SPACING = 5.33 FT.
MAX. UNBRACED BOTTOM CHORD LENGTH = 10.00 FT. OR RIGID CEILING DIRECTLY APPLIED.

ALL PITCH BREAKS AND PERIMETER CORNER JOINTS MUST BE LATERALLY RESTRAINED.

LOADING
TOTAL LOAD CASES: (4)

CHORDS MEMB. FR-TO	MAX. FACTORED FORCE (LBS)	FACTORED VERT. LOAD (PLF) FROM	TO	LC1 MAX CSI (LC)	MAX. UNBRAC LENGTH	WEBS MEMB. FR-TO	MAX. FACTORED FORCE (LBS)	MAX CSI (LC)
1- 2	0 / 29	-77.4	-77.4	0.10 (1)	10.00	3-13	-20 / 43	0.01 (4)
2- 3	0 / 16	-77.4	-77.4	0.15 (1)	10.00	13- 4	0 / 148	0.04 (4)
3- 4	-1258 / 0	-77.4	-77.4	0.13 (1)	5.61	4-12	0 / 370	0.08 (1)
4- 5	-1286 / 0	-77.4	-77.4	0.32 (1)	5.33	12- 5	-518 / 0	0.31 (1)
5- 6	-1286 / 0	-77.4	-77.4	0.32 (1)	5.33	12- 6	0 / 437	0.10 (1)
6- 7	-1202 / 0	-77.4	-77.4	0.12 (1)	5.71	10- 6	0 / 95	0.03 (4)
7- 8	0 / 17	-77.4	-77.4	0.13 (1)	10.00	10- 7	0 / 91	0.02 (4)
14- 2	-215 / 0	0.0	0.0	0.02 (1)	7.81	14- 3	-1456 / 0	0.57 (1)
9- 8	-89 / 0	0.0	0.0	0.01 (1)	7.81	7- 9	-1386 / 0	0.47 (1)
14-13	0 / 1045	-17.5	-17.5	0.28 (1)	10.00			
13-12	0 / 1033	-17.5	-17.5	0.28 (4)	10.00			
12-11	0 / 988	-17.5	-17.5	0.26 (1)	10.00			
11-10	0 / 988	-17.5	-17.5	0.26 (1)	10.00			
10- 9	0 / 920	-17.5	-17.5	0.25 (1)	10.00			

DESIGN CRITERIA

SPECIFIED LOADS:

TOP	CH.	LL	=	23.3	PSF
		DL	=	3.0	PSF
BOT	CH.	LL	=	0.0	PSF
		DL	=	7.0	PSF
TOTAL	LOAD		=	33.3	PSF

SPACING = 24.0 IN. C/C

LOADING IN FLAT SECTION BASED ON A SLOPE OF 6.00/12

THIS TRUSS IS DESIGNED FOR RESIDENTIAL OR SMALL BUILDING REQUIREMENTS OF PART 9, NBCC 2010

THIS DESIGN COMPLIES WITH:
- PART 9 OF OBC 2012 , BCBC 2012 , ABC 2014
- CSA 086-09
- TPIC 2011

(55 % OF 27.2 P.S.F. G.S.L. PLUS 8.4 P.S.F. RAIN LOAD) EQUALS 23.3 P.S.F. SPECIFIED ROOF LIVE LOAD

ALLOWABLE DEFL.(LL)= L/360 (0.82")
CALCULATED VERT. DEFL.(LL) = L/ 999 (0.05")
ALLOWABLE DEFL.(TL)= L/360 (0.82")
CALCULATED VERT. DEFL.(TL) = L/ 999 (0.10")

CSI: TC=0.32 (4-5:1) , BC=0.28 (12-13:4) , WB=0.57 (3-14:1) , SSI=0.20 (4-5:1)

DOL LUMBER=1.00 NAIL=1.00 LS BEND=1.10 COMP=1.10 SHEAR=1.10 TENS= 1.10

COMPANION LIVE LOAD FACTOR = 0.50

TRUSS PLATE MANUFACTURER IS NOT RESPONSIBLE FOR QUALITY CONTROL IN THE TRUSS MANUFACTURING PLANT .

NAIL VALUES

PLATE	GRIP(DRY) (PSI) MAX	MIN	SHEAR (PLI) MAX	MIN	SECTION (PLI) MAX	MIN
MT20	618	354	1667	822	2284	1656

PLATE PLACEMENT TOL. = 0.250 inches

PLATE ROTATION TOL. = 5.0 Deg.

JSI GRIP= 0.90 (14) (INPUT = 0.90)
JSI METAL= 0.39 (14) (INPUT = 1.00)

LICENSED PROFESSIONAL ENGINEER
P. M. TREVISAN
100136551
March 16th, 2017
PROVINCE OF ONTARIO

RECEIVED
TOWN OF MILTON
MAR 29, 2017
17-5337
BUILDING DIVISION

KOTT

JOB NAME	TRUSS NAME	QUANTITY	PLY	JOB DESC.	DRWG NO.
PT0317-097	T82	1	1	TRUSS DESC. LECCO RIDGE-BLOCK 344	

KOTT , Stouffville, ON, CGC

Version 8.100 S Feb 9 2017 MiTek Industries, Inc. Thu Mar 16 11:58:34 2017 Page 1
ID:EvTixTQDI5yR1QLotZTBr_yE?HJ-GIIESJ4WD2DnRGNx1FZVoAC921DJkx?61k0nUTzaNjJ

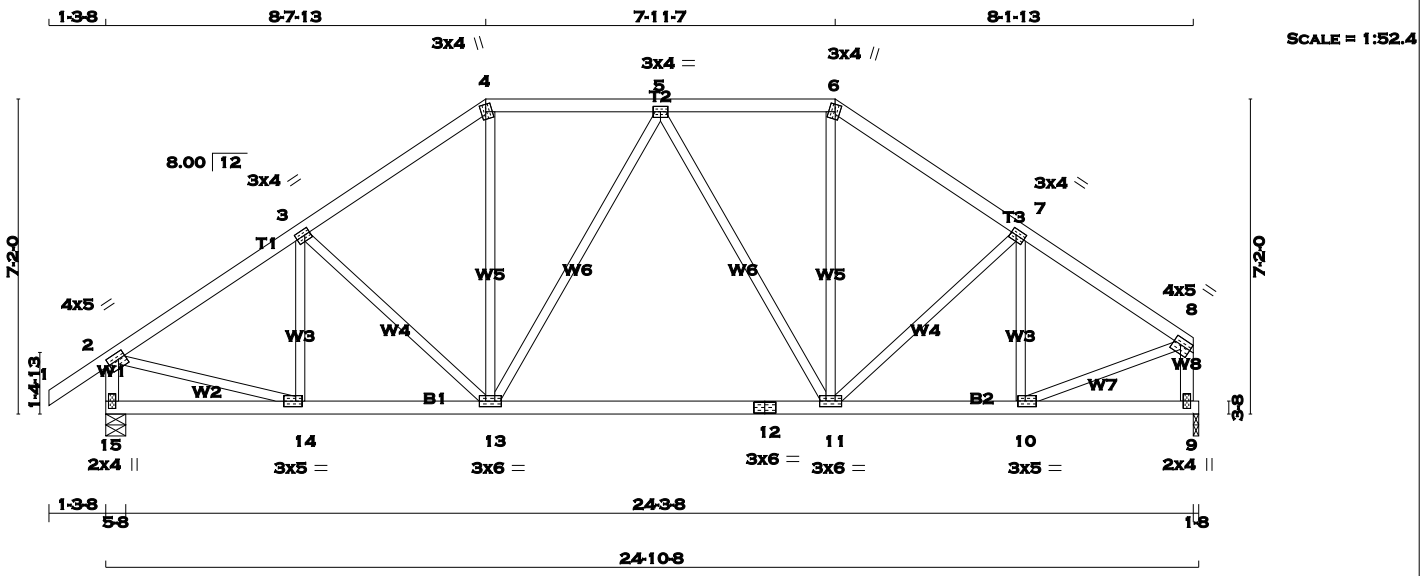

TOTAL WEIGHT = 110 lb
[M][F]

LUMBER
N. L. G. A. RULES

CHORDS	SIZE		LUMBER	DESCR.
1 - 4	2x4	DRY	No.2	SPF
4 - 6	2x4	DRY	No.2	SPF
6 - 8	2x4	DRY	No.2	SPF
15 - 2	2x4	DRY	No.2	SPF
9 - 8	2x4	DRY	No.2	SPF
15 - 12	2x4	DRY	No.2	SPF
12 - 9	2x4	DRY	No.2	SPF
ALL WEBS EXCEPT	2x3	DRY	No.2	SPF

DRY: SEASONED LUMBER.

PLATES (table is in inches)

JT	TYPE	PLATES	W	LEN	Y	X
2	TMVW-t	MT20	4.0	5.0	1.75	2.00
3	TMWW-t	MT20	3.0	4.0	1.50	1.50
4	TTW+m	MT20	3.0	4.0	2.00	1.25
5	TMWW-t	MT20	3.0	4.0		
6	TTW+m	MT20	3.0	4.0	2.00	1.25
7	TMWW-t	MT20	3.0	4.0	1.50	1.50
8	TMVW-t	MT20	4.0	5.0	1.75	Edge
9	BMV1+p	MT20	2.0	4.0		
10	BMWW-t	MT20	3.0	5.0	1.50	2.00
11	BMWWW-t	MT20	3.0	6.0		
12	BS-t	MT20	3.0	6.0		
13	BMWWW-t	MT20	3.0	6.0		
14	BMWW-t	MT20	3.0	5.0	1.50	1.75
15	BMV1+p	MT20	2.0	4.0		

Edge - INDICATES REFERENCE CORNER OF PLATE TOUCHES EDGE OF CHORD.

A SIZE FOR SIZE SUBSTITUTION OF MITEK MII20 WITH TEE-LOK TL20 PLATES IS ALLOWED.

DIMENSIONS, SUPPORTS AND LOADINGS SPECIFIED BY FABRICATOR TO BE VERIFIED BY BUILDING DESIGNER

BEARINGS

JT	FACTORED GROSS REACTION VERT	HORZ	MAXIMUM FACTORED GROSS REACTION DOWN	HORZ	UPLIFT	INPUT BRG IN-SX	REQRD BRG IN-SX
15	1280	0	1280	0	0	5-8	5-8
9	1174	0	1174	0	0	1-8	1-8

UNFACTORED REACTIONS

JT	1ST LCASE COMBINED	MAX./MIN. COMPONENT REACTIONS SNOW	LIVE	PERM.LIVE	WIND	DEAD	SOIL
15	896	640 / 0	0 / 0	0 / 0	0 / 0	256 / 0	0 / 0
9	824	576 / 0	0 / 0	0 / 0	0 / 0	248 / 0	0 / 0

BEARING MATERIAL TO BE SPF NO.2 OR BETTER AT JOINT(S) 15, 9

BRACING
TOP CHORD TO BE SHEATHED OR MAX. PURLIN SPACING = 5.45 FT.
MAX. UNBRACED BOTTOM CHORD LENGTH = 10.00 FT. OR RIGID CEILING DIRECTLY APPLIED.

ALL PITCH BREAKS AND PERIMETER CORNER JOINTS MUST BE LATERALLY RESTRAINED.

LOADING
TOTAL LOAD CASES: (4)

CHORDS

MEMB. FR-TO	MAX. FACTORED FORCE (LBS)	FACTORED VERT. LOAD (PLF) FROM	TO	LC1 MAX CSI (LC)	MAX. UNBRAC LENGTH
1- 2	0 / 29	-77.4	-77.4	0.10 (1)	10.00
2- 3	-1305 / 0	-77.4	-77.4	0.20 (1)	5.45
3- 4	-1190 / 0	-77.4	-77.4	0.20 (1)	5.65
4- 5	-976 / 0	-77.4	-77.4	0.16 (1)	6.13
5- 6	-950 / 0	-77.4	-77.4	0.16 (1)	6.19
6- 7	-1156 / 0	-77.4	-77.4	0.18 (1)	5.74
7- 8	-1182 / 0	-77.4	-77.4	0.17 (1)	5.69
15- 2	-1244 / 0	0.0	0.0	0.13 (1)	7.20
9- 8	-1142 / 0	0.0	0.0	0.12 (1)	7.44
15-14	0 / 0	-17.5	-17.5	0.08 (4)	10.00
14-13	0 / 1103	-17.5	-17.5	0.27 (1)	10.00
13-12	0 / 1068	-17.5	-17.5	0.27 (1)	10.00
12-11	0 / 1068	-17.5	-17.5	0.27 (1)	10.00
11-10	0 / 1001	-17.5	-17.5	0.26 (1)	10.00
10- 9	0 / 0	-17.5	-17.5	0.06 (4)	10.00

WEBS

MEMB. FR-TO	MAX. FACTORED FORCE (LBS)	MAX CSI (LC)
14- 3	-203 / 0	0.06 (1)
3-13	-182 / 0	0.11 (1)
13- 4	0 / 405	0.09 (1)
13- 5	-186 / 0	0.24 (1)
5-11	-240 / 0	0.31 (1)
11- 6	0 / 383	0.09 (1)
11- 7	-78 / 0	0.05 (1)
10- 7	-300 / 0	0.08 (1)
2-14	0 / 1135	0.26 (1)
10- 8	0 / 1064	0.24 (1)

DESIGN CRITERIA

SPECIFIED LOADS:

TOP CH.	LL	=	23.3	PSF
	DL	=	3.0	PSF
BOT CH.	LL	=	0.0	PSF
	DL	=	7.0	PSF
TOTAL LOAD		=	33.3	PSF

SPACING = 24.0 IN. C/C

LOADING IN FLAT SECTION BASED ON A SLOPE OF 6.00/12

THIS TRUSS IS DESIGNED FOR RESIDENTIAL OR SMALL BUILDING REQUIREMENTS OF PART 9, NBCC 2010

THIS DESIGN COMPLIES WITH:
- PART 9 OF OBC 2012 , BCBC 2012 , ABC 2014
- CSA 086-09
- TPIC 2011

(55 % OF 27.2 P.S.F. G.S.L. PLUS 8.4 P.S.F. RAIN LOAD) EQUALS 23.3 P.S.F. SPECIFIED ROOF LIVE LOAD

ALLOWABLE DEFL.(LL)= L/360 (0.82")
CALCULATED VERT. DEFL.(LL) = L/ 999 (0.04")
ALLOWABLE DEFL.(TL)= L/360 (0.82")
CALCULATED VERT. DEFL.(TL) = L/ 999 (0.12")

CSI: TC=0.20 (2-3:1) , BC=0.27 (13-14:1) , WB=0.31 (5-11:1) , SSI=0.15 (4-5:1)

DOL LUMBER=1.00 NAIL=1.00 LS BEND=1.10 COMP=1.10 SHEAR=1.10 TENS= 1.10

COMPANION LIVE LOAD FACTOR = 0.50

TRUSS PLATE MANUFACTURER IS NOT RESPONSIBLE FOR QUALITY CONTROL IN THE TRUSS MANUFACTURING PLANT .

NAIL VALUES

PLATE	GRIP(DRY) (PSI) MAX	MIN	SHEAR (PLI) MAX	MIN	SECTION (PLI) MAX	MIN
MT20	618	354	1667	822	2284	1656

PLATE PLACEMENT TOL. = 0.250 inches

PLATE ROTATION TOL. = 0.5 Deg.

JSI GRIP= 0.90 (14) (INPUT = 0.90)
JSI METAL= 0.44 (2) (INPUT = 1.00)

LICENSED PROFESSIONAL ENGINEER
P. M. TREVISAN
100136551
March 16th, 2017
PROVINCE OF ONTARIO

RECEIVED
TOWN OF MILTON
MAR 29, 2017
17-5337
BUILDING DIVISION

KOTT

JOB NAME	TRUSS NAME	QUANTITY	PLY	JOB DESC.	DRWG NO.
PT0317-097	**T83**	**1**	**1**	TRUSS DESC. LECCO RIDGE-BLOCK 344	

KOTT , Stouffville, ON, CGC

Version 8.100 S Feb 9 2017 MiTek Industries, Inc. Thu Mar 16 11:58:34 2017 Page 1
ID:EvTixTQDI5yR1QLotZTBr_yE?HJ-GIIESJ4WD2DnRGNx1FZVoAC8o1Exkxn61k0nUTzaNjJ

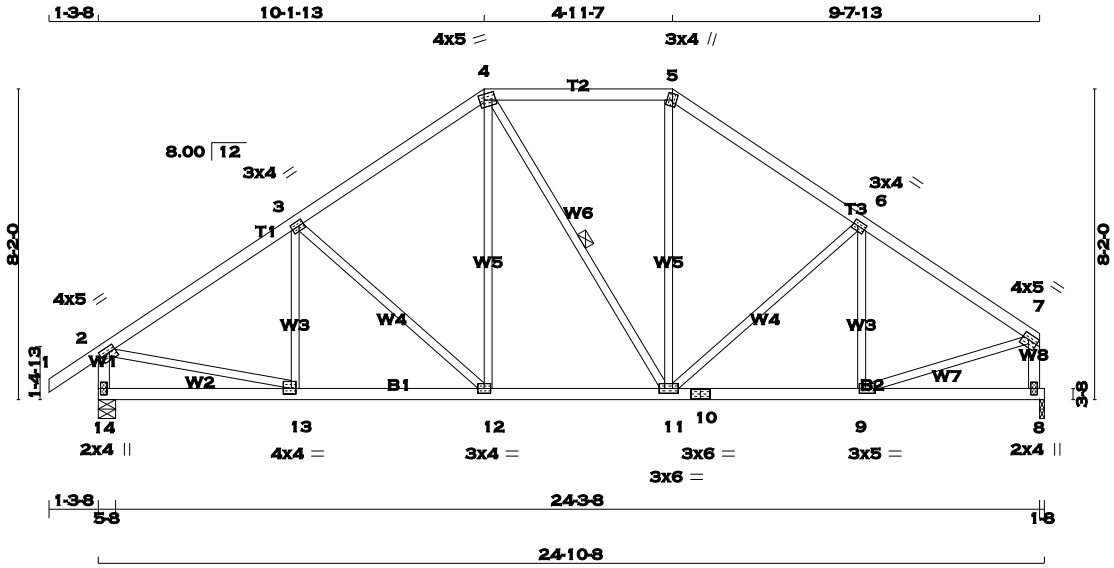

TOTAL WEIGHT = 111 lb

[M][F]

LUMBER

N. L. G. A. RULES

CHORDS	SIZE		LUMBER	DESCR.
1 - 4	2x4	DRY	No.2	SPF
4 - 5	2x4	DRY	No.2	SPF
5 - 7	2x4	DRY	No.2	SPF
14 - 2	2x4	DRY	No.2	SPF
8 - 7	2x4	DRY	No.2	SPF
14 - 10	2x4	DRY	No.2	SPF
10 - 8	2x4	DRY	No.2	SPF
ALL WEBS EXCEPT	2x3	DRY	No.2	SPF

DRY: SEASONED LUMBER.

PLATES (table is in inches)

JT	TYPE	PLATES	W	LEN	Y	X
2	TMVW-t	MT20	4.0	5.0	1.75	2.00
3	TMWW-t	MT20	3.0	4.0	1.50	1.50
4	TTWW-m	MT20	4.0	5.0	1.75	1.50
5	TTW+m	MT20	3.0	4.0	2.00	1.25
6	TMWW-t	MT20	3.0	4.0	1.50	1.50
7	TMVW-t	MT20	4.0	5.0	1.75	Edge
8	BMV1+p	MT20	2.0	4.0		
9	BMWW-t	MT20	3.0	5.0	1.50	2.00
10	BS-t	MT20	3.0	6.0		
11	BMWWW-t	MT20	3.0	6.0		
12	BMWW-t	MT20	3.0	4.0		
13	BMWW-t	MT20	4.0	4.0	1.75	1.50
14	BMV1+p	MT20	2.0	4.0		

Edge - INDICATES REFERENCE CORNER OF PLATE TOUCHES EDGE OF CHORD.

A SIZE FOR SIZE SUBSTITUTION OF MITEK MII20 WITH TEE-LOK TL20 PLATES IS ALLOWED.

DIMENSIONS, SUPPORTS AND LOADINGS SPECIFIED BY FABRICATOR TO BE VERIFIED BY BUILDING DESIGNER

BEARINGS

JT	FACTORED GROSS REACTION VERT	HORZ	MAXIMUM FACTORED GROSS REACTION DOWN	HORZ	UPLIFT	INPUT BRG IN-SX	REQRD BRG IN-SX
14	1280	0	1280	0	0	5-8	5-8
8	1174	0	1174	0	0	1-8	1-8

UNFACTORED REACTIONS

JT	1ST LCASE COMBINED	MAX./MIN. COMPONENT REACTIONS SNOW	LIVE	PERM.LIVE	WIND	DEAD	SOIL
14	896	640 / 0	0 / 0	0 / 0	0 / 0	256 / 0	0 / 0
8	824	576 / 0	0 / 0	0 / 0	0 / 0	248 / 0	0 / 0

BEARING MATERIAL TO BE SPF NO.2 OR BETTER AT JOINT(S) 14, 8

BRACING

TOP CHORD TO BE SHEATHED OR MAX. PURLIN SPACING = 5.33 FT.
MAX. UNBRACED BOTTOM CHORD LENGTH = 10.00 FT. OR RIGID CEILING DIRECTLY APPLIED.

ALL PITCH BREAKS AND PERIMETER CORNER JOINTS MUST BE LATERALLY RESTRAINED.

1 - 2x3 SPF No.2 LATERAL BRACE(S) AT 1/ 2 LENGTH OF 4-11. DBS = 20-0-0 . CBF = 3 LBS.

DBS = DIAGONAL BRACE SPACING (MAX). CBF = CUMULATIVE BRACING FORCE. FASTEN LATERAL BRACE(S) USING (0.122"X3") SPIRAL NAILS : 1 NAIL FOR 2x3 BRACE(S), 2 FOR 1x4, 2x4, 2x5, 3 FOR 2x6, 4 FOR 2x8, 5 FOR 2x10, AND 6 FOR 2x12.

END VERTICAL(S) MUST BE SHEATHED OR HAVE BRACES AS INDICATED IN THE MAX. UNBRACED LENGTH COLUMN OF THE TABLE BELOW

LOADING

TOTAL LOAD CASES: (4)

CHORDS MEMB. FR-TO	MAX. FACTORED FORCE (LBS)	FACTORED VERT. LOAD (PLF) FROM	TO	LC1 MAX CSI (LC)	MAX. UNBRAC LENGTH
1- 2	0 / 29	-77.4	-77.4	0.10 (1)	10.00
2- 3	-1322 / 0	-77.4	-77.4	0.28 (1)	5.33
3- 4	-1103 / 0	-77.4	-77.4	0.27 (1)	5.71
4- 5	-885 / 0	-77.4	-77.4	0.25 (1)	6.22
5- 6	-1085 / 0	-77.4	-77.4	0.25 (1)	5.79
6- 7	-1221 / 0	-77.4	-77.4	0.25 (1)	5.53
14- 2	-1242 / 0	0.0	0.0	0.13 (1)	7.20
8- 7	-1140 / 0	0.0	0.0	0.12 (1)	7.45
14-13	0 / 0	-17.5	-17.5	0.11 (4)	10.00
13-12	0 / 1121	-17.5	-17.5	0.23 (1)	10.00
12-11	0 / 899	-17.5	-17.5	0.19 (1)	10.00
11-10	0 / 1037	-17.5	-17.5	0.21 (1)	10.00
10- 9	0 / 1037	-17.5	-17.5	0.21 (1)	10.00
9- 8	0 / 0	-17.5	-17.5	0.09 (4)	10.00

WEBS MEMB. FR-TO	MAX. FACTORED FORCE (LBS)	MAX CSI (LC)
13- 3	-135 / 45	0.05 (1)
3-12	-304 / 0	0.26 (1)
12- 4	0 / 286	0.06 (1)
4-11	-26 / 0	0.02 (1)
11- 5	0 / 250	0.06 (1)
11- 6	-209 / 0	0.18 (1)
9- 6	-222 / 14	0.08 (1)
2-13	0 / 1145	0.26 (1)
9- 7	0 / 1083	0.24 (1)

DESIGN CRITERIA

SPECIFIED LOADS:

TOP CH.	LL	=	23.3	PSF
	DL	=	3.0	PSF
BOT CH.	LL	=	0.0	PSF
	DL	=	7.0	PSF
TOTAL LOAD		=	33.3	PSF

SPACING = 24.0 IN. C/C

LOADING IN FLAT SECTION BASED ON A SLOPE OF 6.00/12

THIS TRUSS IS DESIGNED FOR RESIDENTIAL OR SMALL BUILDING REQUIREMENTS OF PART 9, NBCC 2010

THIS DESIGN COMPLIES WITH:
- PART 9 OF OBC 2012 , BCBC 2012 , ABC 2014
- CSA 086-09
- TPIC 2011

(55 % OF 27.2 P.S.F. G.S.L. PLUS 8.4 P.S.F. RAIN LOAD) EQUALS 23.3 P.S.F. SPECIFIED ROOF LIVE LOAD

ALLOWABLE DEFL.(LL)= L/360 (0.82")
CALCULATED VERT. DEFL.(LL) = L/ 999 (0.04")
ALLOWABLE DEFL.(TL)= L/360 (0.82")
CALCULATED VERT. DEFL.(TL) = L/ 999 (0.07")

CSI: TC=0.28 (2-3:1) , BC=0.23 (12-13:1) , WB=0.26 (3-12:1) , SSI=0.16 (2-3:1)

DOL LUMBER=1.00 NAIL=1.00 LS BEND=1.10 COMP=1.10 SHEAR=1.10 TENS= 1.10

COMPANION LIVE LOAD FACTOR = 0.50

TRUSS PLATE MANUFACTURER IS NOT RESPONSIBLE FOR QUALITY CONTROL IN THE TRUSS MANUFACTURING PLANT .

NAIL VALUES

PLATE	GRIP(DRY) (PSI) MAX	MIN	SHEAR (PLI) MAX	MIN	SECTION (PLI) MAX	MIN
MT20	618	354	1667	822	2284	1656

PLATE PLACEMENT TOL. = 0.250 inches

PLATE ROTATION TOL. = 0.5 Deg.

JSI GRIP= 0.89 (9) (INPUT = 0.90)
JSI METAL= 0.45 (2) (INPUT = 1.00)

LICENSED PROFESSIONAL ENGINEER
P. M. TREVISAN
100136551
March 16th, 2017
PROVINCE OF ONTARIO

RECEIVED
TOWN OF MILTON
MAR 29, 2017
17-5337
BUILDING DIVISION

KOTT

JOB NAME	TRUSS NAME	QUANTITY	PLY	JOB DESC.	DRWG NO.
PT0317-097	T84	1	1	TRUSS DESC. LECCO RIDGE-BLOCK 344	

KOTT , Stouffville, ON, CGC

Version 8.100 S Feb 9 2017 MiTek Industries, Inc. Thu Mar 16 11:58:35 2017 Page 1
ID:EvTixTQDI5yR1QLotZTBr_yE?HJ-kyscff48_LLd3Qy7bz4kKOIl0RZkTLPGGNlK0vzaNjl

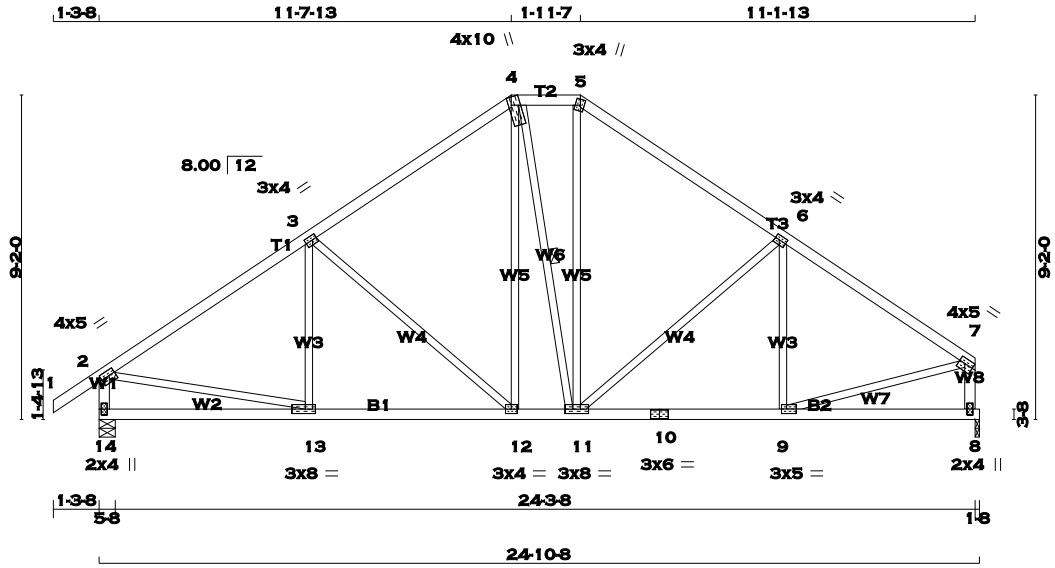

TOTAL WEIGHT = 116 lb

LUMBER
N. L. G. A. RULES

CHORDS	SIZE		LUMBER	DESCR.
1 - 4	2x4	DRY	No.2	SPF
4 - 5	2x4	DRY	No.2	SPF
5 - 7	2x4	DRY	No.2	SPF
14 - 2	2x4	DRY	No.2	SPF
8 - 7	2x4	DRY	No.2	SPF
14 - 10	2x4	DRY	No.2	SPF
10 - 8	2x4	DRY	No.2	SPF
ALL WEBS EXCEPT	2x3	DRY	No.2	SPF

DRY: SEASONED LUMBER.

PLATES (table is in inches)

JT	TYPE	PLATES	W	LEN	Y	X
2	TMVW-t	MT20	4.0	5.0	1.75	2.00
3	TMWW-t	MT20	3.0	4.0	1.50	1.50
4	TTWW+m	MT20	4.0	10.0	Edge	1.00
5	TTW+m	MT20	3.0	4.0	2.00	1.25
6	TMWW-t	MT20	3.0	4.0	1.50	1.50
7	TMVW-t	MT20	4.0	5.0	1.75	Edge
8	BMV1+p	MT20	2.0	4.0		
9	BMWW-t	MT20	3.0	5.0	1.50	1.75
10	BS-t	MT20	3.0	6.0		
11	BMWWW-t	MT20	3.0	8.0		
12	BMWW-t	MT20	3.0	4.0		
13	BMWW-t	MT20	3.0	8.0	1.50	3.50
14	BMV1+p	MT20	2.0	4.0		

Edge - INDICATES REFERENCE CORNER OF PLATE TOUCHES EDGE OF CHORD.

A SIZE FOR SIZE SUBSTITUTION OF MITEK MII20 WITH TEE-LOK TL20 PLATES IS ALLOWED.

DIMENSIONS, SUPPORTS AND LOADINGS SPECIFIED BY FABRICATOR TO BE VERIFIED BY BUILDING DESIGNER

BEARINGS

JT	FACTORED GROSS REACTION VERT	HORZ	MAXIMUM FACTORED GROSS REACTION DOWN	HORZ	UPLIFT	INPUT BRG IN-SX	REQRD BRG IN-SX
14	1280	0	1280	0	0	5-8	5-8
8	1174	0	1174	0	0	1-8	1-8

UNFACTORED REACTIONS

JT	1ST LCASE COMBINED	MAX./MIN. COMPONENT REACTIONS SNOW	LIVE	PERM.LIVE	WIND	DEAD	SOIL
14	896	640 / 0	0 / 0	0 / 0	0 / 0	256 / 0	0 / 0
8	824	576 / 0	0 / 0	0 / 0	0 / 0	248 / 0	0 / 0

BEARING MATERIAL TO BE SPF NO.2 OR BETTER AT JOINT(S) 14, 8

BRACING
TOP CHORD TO BE SHEATHED OR MAX. PURLIN SPACING = 5.19 FT.
MAX. UNBRACED BOTTOM CHORD LENGTH = 10.00 FT. OR RIGID CEILING DIRECTLY APPLIED.

ALL PITCH BREAKS AND PERIMETER CORNER JOINTS MUST BE LATERALLY RESTRAINED.

1 - 2x3 SPF No.2 LATERAL BRACE(S) AT 1/ 2 LENGTH OF 4-11. DBS = 20-0-0 . CBF = 2 LBS.

DBS = DIAGONAL BRACE SPACING (MAX). CBF = CUMULATIVE BRACING FORCE. FASTEN LATERAL BRACE(S) USING (0.122"X3") SPIRAL NAILS : 1 NAIL FOR 2x3 BRACE(S), 2 FOR 1x4, 2x4, 2x5, 3 FOR 2x6, 4 FOR 2x8, 5 FOR 2x10, AND 6 FOR 2x12.

END VERTICAL(S) MUST BE SHEATHED OR HAVE BRACES AS INDICATED IN THE MAX. UNBRACED LENGTH COLUMN OF THE TABLE BELOW

LOADING
TOTAL LOAD CASES: (4)

CHORDS

MEMB. FR-TO	MAX. FACTORED FORCE (LBS)	FACTORED VERT. LOAD (PLF) FROM	TO	LC1 MAX CSI (LC)	MAX. UNBRAC LENGTH
1- 2	0 / 29	-77.4	-77.4	0.10 (1)	10.00
2- 3	-1324 / 0	-77.4	-77.4	0.38 (1)	5.19
3- 4	-1013 / 0	-77.4	-77.4	0.35 (1)	5.77
4- 5	-817 / 0	-77.4	-77.4	0.04 (1)	6.25
5- 6	-1007 / 0	-77.4	-77.4	0.33 (1)	5.82
6- 7	-1239 / 0	-77.4	-77.4	0.34 (1)	5.38
14- 2	-1238 / 0	0.0	0.0	0.13 (1)	7.22
8- 7	-1135 / 0	0.0	0.0	0.12 (1)	7.45
14-13	0 / 0	-17.5	-17.5	0.15 (4)	10.00
13-12	0 / 1126	-17.5	-17.5	0.26 (1)	10.00
12-11	0 / 820	-17.5	-17.5	0.19 (1)	10.00
11-10	0 / 1056	-17.5	-17.5	0.23 (1)	10.00
10- 9	0 / 1056	-17.5	-17.5	0.23 (1)	10.00
9- 8	0 / 0	-17.5	-17.5	0.13 (4)	10.00

WEBS

MEMB. FR-TO	MAX. FACTORED FORCE (LBS)	MAX CSI (LC)
13- 3	-87 / 75	0.04 (1)
3-12	-410 / 0	0.49 (1)
12- 4	0 / 318	0.07 (1)
4-11	-13 / 0	0.01 (1)
11- 5	0 / 298	0.07 (1)
11- 6	-321 / 0	0.39 (1)
9- 6	-166 / 45	0.07 (1)
2-13	0 / 1145	0.26 (1)
9- 7	0 / 1091	0.25 (1)

DESIGN CRITERIA

SPECIFIED LOADS:

TOP CH.	LL	=	23.3	PSF
	DL	=	3.0	PSF
BOT CH.	LL	=	0.0	PSF
	DL	=	7.0	PSF
TOTAL LOAD		=	33.3	PSF

SPACING = 24.0 IN. C/C

LOADING IN FLAT SECTION BASED ON A SLOPE OF 6.00/12

THIS TRUSS IS DESIGNED FOR RESIDENTIAL OR SMALL BUILDING REQUIREMENTS OF PART 9, NBCC 2010

THIS DESIGN COMPLIES WITH:
- PART 9 OF OBC 2012 , BCBC 2012 , ABC 2014
- CSA 086-09
- TPIC 2011

(55 % OF 27.2 P.S.F. G.S.L. PLUS 8.4 P.S.F. RAIN LOAD) EQUALS 23.3 P.S.F. SPECIFIED ROOF LIVE LOAD

ALLOWABLE DEFL.(LL)= L/360 (0.82")
CALCULATED VERT. DEFL.(LL) = L/ 999 (0.04")
ALLOWABLE DEFL.(TL)= L/360 (0.82")
CALCULATED VERT. DEFL.(TL) = L/ 999 (0.08")

CSI: TC=0.38 (2-3:1) , BC=0.26 (12-13:1) , WB=0.49 (3-12:1) , SSI=0.18 (2-3:1)

DOL LUMBER=1.00 NAIL=1.00 LS BEND=1.10 COMP=1.10 SHEAR=1.10 TENS= 1.10

COMPANION LIVE LOAD FACTOR = 0.50

TRUSS PLATE MANUFACTURER IS NOT RESPONSIBLE FOR QUALITY CONTROL IN THE TRUSS MANUFACTURING PLANT .

NAIL VALUES

PLATE	GRIP(DRY) (PSI) MAX	MIN	SHEAR (PLI) MAX	MIN	SECTION (PLI) MAX	MIN
MT20	618	354	1667	822	2284	1656

PLATE PLACEMENT TOL. = 0.250 inches

PLATE ROTATION TOL. = 5.0 Deg.

JSI GRIP= 0.90 (9) (INPUT = 0.90)
JSI METAL= 0.45 (2) (INPUT = 1.00)

LICENSED PROFESSIONAL ENGINEER
P. M. TREVISAN
100136551
March 16th, 2017
PROVINCE OF ONTARIO

RECEIVED
TOWN OF MILTON
MAR 29, 2017
17-5337
BUILDING DIVISION

KOTT

JOB NAME	TRUSS NAME	QUANTITY	PLY	JOB DESC.	DRWG NO.
PT0317-097	T85	1	1	TRUSS DESC. LECCO RIDGE-BLOCK 344	

KOTT , Stouffville, ON, CGC

Version 8.100 S Feb 9 2017 MiTek Industries, Inc. Thu Mar 16 11:58:35 2017 Page 1
ID:EvTixTQDI5yR1QLotZTBr_yE?HJ-kyscff48_LLd3Qy7bz4kKOlGtRZdTO6GGNlK0vzaNjl

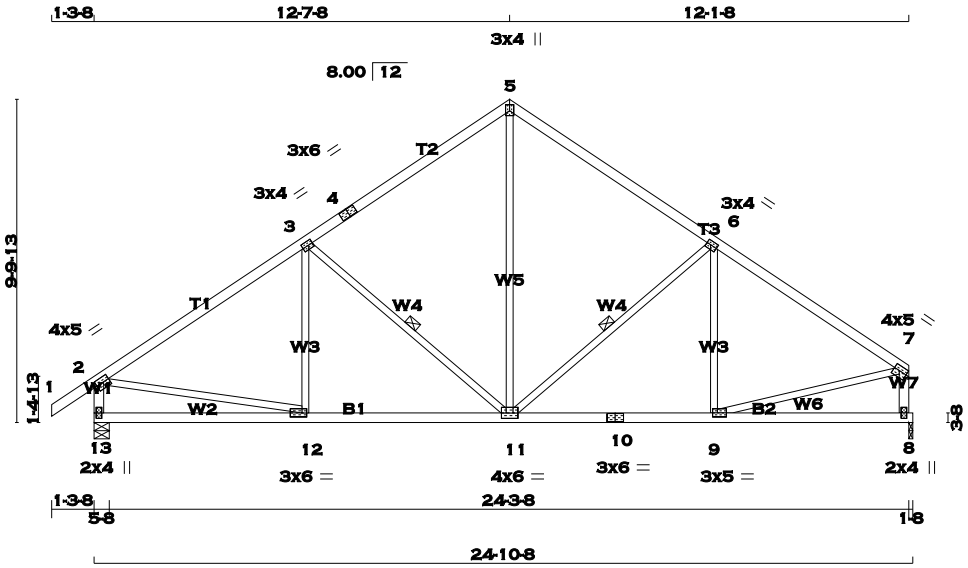

TOTAL WEIGHT = 105 lb

LUMBER

N. L. G. A. RULES

CHORDS	SIZE		LUMBER	DESCR.
1 - 4	2x4	DRY	No.2	SPF
4 - 5	2x4	DRY	No.2	SPF
5 - 7	2x4	DRY	No.2	SPF
13 - 2	2x4	DRY	No.2	SPF
8 - 7	2x4	DRY	No.2	SPF
13 - 10	2x4	DRY	No.2	SPF
10 - 8	2x4	DRY	No.2	SPF
ALL WEBS EXCEPT	2x3	DRY	No.2	SPF

DRY: SEASONED LUMBER.

PLATES (table is in inches)

JT	TYPE	PLATES	W	LEN	Y	X
2	TMVW-t	MT20	4.0	5.0	1.75	2.00
3	TMWW-t	MT20	3.0	4.0	1.50	1.50
4	TS-t	MT20	3.0	6.0		
5	TTW+p	MT20	3.0	4.0	2.25	1.50
6	TMWW-t	MT20	3.0	4.0	1.50	1.50
7	TMVW-t	MT20	4.0	5.0	1.75	Edge
8	BMV1+p	MT20	2.0	4.0		
9	BMWW-t	MT20	3.0	5.0	1.50	1.75
10	BS-t	MT20	3.0	6.0		
11	BMWWW-t	MT20	4.0	6.0		
12	BMWW-t	MT20	3.0	6.0	1.50	1.75
13	BMV1+p	MT20	2.0	4.0		

Edge - INDICATES REFERENCE CORNER OF PLATE TOUCHES EDGE OF CHORD.

A SIZE FOR SIZE SUBSTITUTION OF MITEK MII20 WITH TEE-LOK TL20 PLATES IS ALLOWED.

DIMENSIONS, SUPPORTS AND LOADINGS SPECIFIED BY FABRICATOR TO BE VERIFIED BY BUILDING DESIGNER

BEARINGS

JT	FACTORED GROSS REACTION VERT	HORZ	MAXIMUM FACTORED GROSS REACTION DOWN	HORZ	UPLIFT	INPUT BRG IN-SX	REQRD BRG IN-SX
13	1280	0	1280	0	0	5-8	5-8
8	1174	0	1174	0	0	1-8	1-8

UNFACTORED REACTIONS

JT	1ST LCASE COMBINED	MAX./MIN. COMPONENT REACTIONS SNOW	LIVE	PERM.LIVE	WIND	DEAD	SOIL
13	896	640 / 0	0 / 0	0 / 0	0 / 0	256 / 0	0 / 0
8	824	576 / 0	0 / 0	0 / 0	0 / 0	248 / 0	0 / 0

BEARING MATERIAL TO BE SPF NO.2 OR BETTER AT JOINT(S) 13, 8

BRACING

TOP CHORD TO BE SHEATHED OR MAX. PURLIN SPACING = 5.10 FT.
MAX. UNBRACED BOTTOM CHORD LENGTH = 10.00 FT. OR RIGID CEILING DIRECTLY APPLIED.

ALL PITCH BREAKS AND PERIMETER CORNER JOINTS MUST BE LATERALLY RESTRAINED.

1 - 2x3 SPF No.2 LATERAL BRACE(S) AT 1/ 2 LENGTH OF 3-11, 6-11. DBS = 20-0-0 . CBF = 58 LBS.

DBS = DIAGONAL BRACE SPACING (MAX). CBF = CUMULATIVE BRACING FORCE. FASTEN LATERAL BRACE(S) USING (0.122"X3") SPIRAL NAILS : 1 NAIL FOR 2x3 BRACE(S), 2 FOR 1x4, 2x4, 2x5, 3 FOR 2x6, 4 FOR 2x8, 5 FOR 2x10, AND 6 FOR 2x12.

END VERTICAL(S) MUST BE SHEATHED OR HAVE BRACES AS INDICATED IN THE MAX. UNBRACED LENGTH COLUMN OF THE TABLE BELOW

LOADING

TOTAL LOAD CASES: (4)

CHORDS

MEMB. FR-TO	MAX. FACTORED FORCE (LBS)	FACTORED VERT. LOAD (PLF) FROM	TO	LC1 MAX CSI (LC)	MAX. UNBRAC LENGTH
1- 2	0 / 29	-77.4	-77.4	0.10 (1)	10.00
2- 3	-1317 / 0	-77.4	-77.4	0.45 (1)	5.10
3- 4	-959 / 0	-77.4	-77.4	0.42 (1)	5.79
4- 5	-959 / 0	-77.4	-77.4	0.42 (1)	5.79
5- 6	-956 / 0	-77.4	-77.4	0.40 (1)	5.83
6- 7	-1243 / 0	-77.4	-77.4	0.40 (1)	5.29
13- 2	-1234 / 0	0.0	0.0	0.13 (1)	7.23
8- 7	-1132 / 0	0.0	0.0	0.12 (1)	7.46
13-12	0 / 0	-17.5	-17.5	0.17 (4)	10.00
12-11	0 / 1123	-17.5	-17.5	0.27 (1)	10.00
11-10	0 / 1062	-17.5	-17.5	0.25 (1)	10.00
10- 9	0 / 1062	-17.5	-17.5	0.25 (1)	10.00
9- 8	0 / 0	-17.5	-17.5	0.15 (4)	10.00

WEBS

MEMB. FR-TO	MAX. FACTORED FORCE (LBS)	MAX CSI (LC)
12- 3	-67 / 85	0.03 (1)
3-11	-466 / 0	0.21 (1)
11- 5	0 / 662	0.15 (1)
11- 6	-385 / 0	0.18 (1)
9- 6	-137 / 59	0.07 (1)
2-12	0 / 1139	0.26 (1)
9- 7	0 / 1091	0.25 (1)

DESIGN CRITERIA

SPECIFIED LOADS:

TOP	CH.	LL	=	23.3	PSF
		DL	=	3.0	PSF
BOT	CH.	LL	=	0.0	PSF
		DL	=	7.0	PSF
TOTAL	LOAD		=	33.3	PSF

SPACING = 24.0 IN. C/C

THIS TRUSS IS DESIGNED FOR RESIDENTIAL OR SMALL BUILDING REQUIREMENTS OF PART 9, NBCC 2010

THIS DESIGN COMPLIES WITH:
- PART 9 OF OBC 2012 , BCBC 2012 , ABC 2014
- CSA 086-09
- TPIC 2011

(55 % OF 27.2 P.S.F. G.S.L. PLUS 8.4 P.S.F. RAIN LOAD) EQUALS 23.3 P.S.F. SPECIFIED ROOF LIVE LOAD

ALLOWABLE DEFL.(LL)= L/360 (0.82")
CALCULATED VERT. DEFL.(LL) = L/ 999 (0.04")
ALLOWABLE DEFL.(TL)= L/360 (0.82")
CALCULATED VERT. DEFL.(TL) = L/ 999 (0.08")

CSI: TC=0.45 (2-3:1) , BC=0.27 (11-12:1) , WB=0.26 (2-12:1) , SSI=0.20 (2-3:1)

DOL LUMBER=1.00 NAIL=1.00 LS BEND=1.10 COMP=1.10 SHEAR=1.10 TENS= 1.10

COMPANION LIVE LOAD FACTOR = 0.50

TRUSS PLATE MANUFACTURER IS NOT RESPONSIBLE FOR QUALITY CONTROL IN THE TRUSS MANUFACTURING PLANT .

NAIL VALUES

PLATE	GRIP(DRY) (PSI) MAX	MIN	SHEAR (PLI) MAX	MIN	SECTION (PLI) MAX	MIN
MT20	618	354	1667	822	2284	1656

PLATE PLACEMENT TOL. = 0.250 inches

PLATE ROTATION TOL. = 0.5 Deg.

JSI GRIP= 0.90 (12) (INPUT = 0.90)
JSI METAL= 0.45 (2) (INPUT = 1.00)

LICENSED PROFESSIONAL ENGINEER
P. M. TREVISAN
100136551
March 16th, 2017
PROVINCE OF ONTARIO

RECEIVED
TOWN OF MILTON
MAR 29, 2017
17-5337
BUILDING DIVISION

KOTT

JOB NAME	TRUSS NAME	QUANTITY	PLY	JOB DESC.	DRWG NO.
PT0317-097	T86	1	1	TRUSS DESC. LECCO RIDGE-BLOCK 344	

KOTT , Stouffville, ON, CGC

Version 8.100 S Feb 9 2017 MiTek Industries, Inc. Thu Mar 16 11:58:36 2017 Page 1
ID:EvTixTQDI5yR1QLotZTBr_yE?HJ-D8P_s?5mlfTUhZXJ8gcztbHPervcCmuPV1VuYLzaNjH

SCALE = 1:71.6

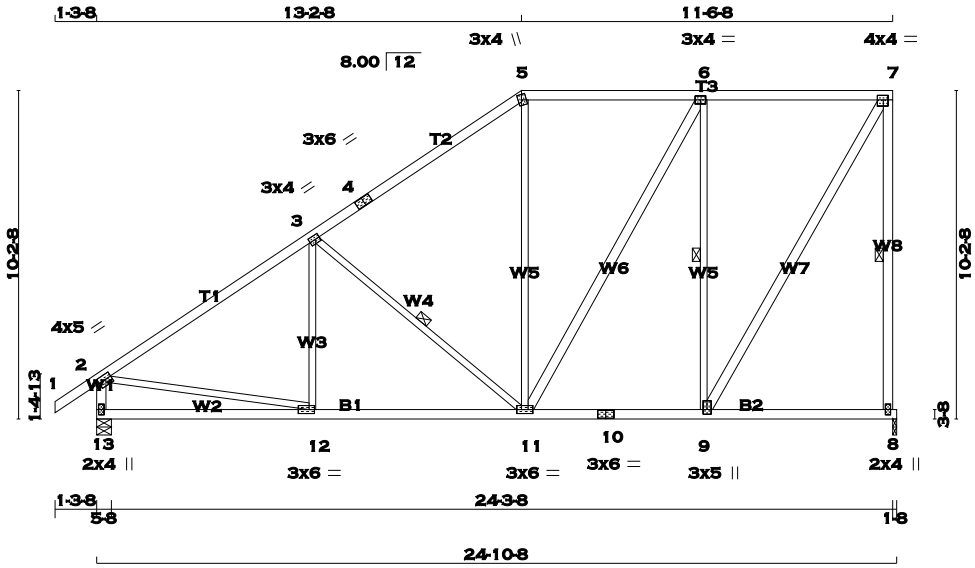

TOTAL WEIGHT = 131 lb

LUMBER
N. L. G. A. RULES

CHORDS	SIZE		LUMBER	DESCR.
1 - 4	2x4	DRY	No.2	SPF
4 - 5	2x4	DRY	No.2	SPF
5 - 7	2x4	DRY	No.2	SPF
8 - 7	2x4	DRY	No.2	SPF
13 - 2	2x4	DRY	No.2	SPF
13 - 10	2x4	DRY	No.2	SPF
10 - 8	2x4	DRY	No.2	SPF
ALL WEBS EXCEPT	2x3	DRY	No.2	SPF
11 - 6	2x4	DRY	No.2	SPF
9 - 7	2x4	DRY	No.2	SPF

DRY: SEASONED LUMBER.

PLATES (table is in inches)

JT	TYPE	PLATES	W	LEN	Y	X
2	TMVW-t	MT20	4.0	5.0	1.75	2.00
3	TMWW-t	MT20	3.0	4.0	1.50	1.50
4	TS-t	MT20	3.0	6.0		
5	TTW+m	MT20	3.0	4.0	2.00	1.25
6	TMWW-t	MT20	3.0	4.0		
7	TMVW-t	MT20	4.0	4.0	1.75	1.75
8	BMV1+p	MT20	2.0	4.0		
9	BMWW+t	MT20	3.0	5.0	1.75	1.50
10	BS-t	MT20	3.0	6.0		
11	BMWWW-t	MT20	3.0	6.0		
12	BMWW-t	MT20	3.0	6.0	1.50	2.00
13	BMV1+p	MT20	2.0	4.0		

A SIZE FOR SIZE SUBSTITUTION OF MITEK MII20 WITH TEE-LOK TL20 PLATES IS ALLOWED.

DIMENSIONS, SUPPORTS AND LOADINGS SPECIFIED BY FABRICATOR TO BE VERIFIED BY BUILDING DESIGNER

BEARINGS

JT	FACTORED GROSS REACTION VERT	HORZ	MAXIMUM FACTORED GROSS REACTION DOWN	HORZ	UPLIFT	INPUT BRG IN-SX	REQRD BRG IN-SX
8	1174	0	1174	0	0	1-8	1-8
13	1280	0	1280	0	0	5-8	5-8

UNFACTORED REACTIONS

JT	1ST LCASE COMBINED	MAX./MIN. COMPONENT REACTIONS SNOW	LIVE	PERM.LIVE	WIND	DEAD	SOIL
8	824	576 / 0	0 / 0	0 / 0	0 / 0	248 / 0	0 / 0
13	896	640 / 0	0 / 0	0 / 0	0 / 0	256 / 0	0 / 0

BEARING MATERIAL TO BE SPF NO.2 OR BETTER AT JOINT(S) 8, 13

BRACING
TOP CHORD TO BE SHEATHED OR MAX. PURLIN SPACING = 5.03 FT.
MAX. UNBRACED BOTTOM CHORD LENGTH = 10.00 FT. OR RIGID CEILING DIRECTLY APPLIED.

ALL PITCH BREAKS AND PERIMETER CORNER JOINTS MUST BE LATERALLY RESTRAINED.

1 - 2x3 SPF No.2 LATERAL BRACE(S) AT 1/ 2 LENGTH OF 7-8. DBS = 12-0-0 . CBF = 85 LBS.
1 - 2x3 SPF No.2 LATERAL BRACE(S) AT 1/ 2 LENGTH OF 3-11. DBS = 20-0-0 . CBF = 64 LBS.
1 - 2x3 SPF No.2 LATERAL BRACE(S) AT 1/ 2 LENGTH OF 6-9. DBS = 16-0-0 . CBF = 85 LBS.

DBS = DIAGONAL BRACE SPACING (MAX). CBF = CUMULATIVE BRACING FORCE. FASTEN LATERAL BRACE(S) USING (0.122"X3") SPIRAL NAILS : 1 NAIL FOR 2x3 BRACE(S), 2 FOR 1x4, 2x4, 2x5, 3 FOR 2x6, 4 FOR 2x8, 5 FOR 2x10, AND 6 FOR 2x12.

END VERTICAL(S) MUST BE SHEATHED OR HAVE BRACES AS INDICATED IN THE MAX. UNBRACED LENGTH COLUMN OF THE TABLE BELOW

LOADING
TOTAL LOAD CASES: (4)

CHORDS

MEMB. FR-TO	MAX. FACTORED FORCE (LBS)	VERT. LOAD LC1 (PLF) FROM	TO	MAX CSI (LC)	MAX. UNBRAC LENGTH
1- 2	0 / 29	-77.4	-77.4	0.10 (1)	10.00
2- 3	-1314 / 0	-77.4	-77.4	0.50 (1)	5.03
3- 4	-914 / 0	-77.4	-77.4	0.46 (1)	5.81
4- 5	-914 / 0	-77.4	-77.4	0.46 (1)	5.81
5- 6	-732 / 0	-77.4	-77.4	0.34 (1)	6.25
6- 7	-568 / 0	-77.4	-77.4	0.33 (1)	6.25
8- 7	-1132 / 0	0.0	0.0	0.58 (1)	5.97
13- 2	-1233 / 0	0.0	0.0	0.13 (1)	7.23
13-12	0 / 0	-17.5	-17.5	0.19 (4)	10.00
12-11	0 / 1122	-17.5	-17.5	0.28 (1)	10.00
11-10	0 / 568	-17.5	-17.5	0.18 (4)	10.00
10- 9	0 / 568	-17.5	-17.5	0.18 (4)	10.00
9- 8	0 / 0	-17.5	-17.5	0.14 (4)	10.00

WEBS

MEMB. FR-TO	MAX. FACTORED FORCE (LBS)	MAX CSI (LC)
12- 3	-48 / 97	0.03 (4)
3-11	-511 / 0	0.26 (1)
11- 5	0 / 135	0.04 (4)
11- 6	0 / 336	0.05 (1)
9- 6	-846 / 0	0.61 (1)
9- 7	0 / 1114	0.18 (1)
2-12	0 / 1136	0.26 (1)

DESIGN CRITERIA

SPECIFIED LOADS:

TOP	CH.	LL	=	23.3	PSF
		DL	=	3.0	PSF
BOT	CH.	LL	=	0.0	PSF
		DL	=	7.0	PSF
TOTAL	LOAD		=	33.3	PSF

SPACING = 24.0 IN. C/C

LOADING IN FLAT SECTION BASED ON A SLOPE OF 6.00/12

THIS TRUSS IS DESIGNED FOR RESIDENTIAL OR SMALL BUILDING REQUIREMENTS OF PART 9, NBCC 2010

THIS DESIGN COMPLIES WITH:
- PART 9 OF OBC 2012 , BCBC 2012 , ABC 2014
- CSA 086-09
- TPIC 2011

(55 % OF 27.2 P.S.F. G.S.L. PLUS 8.4 P.S.F. RAIN LOAD) EQUALS 23.3 P.S.F. SPECIFIED ROOF LIVE LOAD

ALLOWABLE DEFL.(LL)= L/360 (0.82")
CALCULATED VERT. DEFL.(LL) = L/ 999 (0.05")
ALLOWABLE DEFL.(TL)= L/360 (0.82")
CALCULATED VERT. DEFL.(TL) = L/ 999 (0.09")

CSI: TC=0.58 (7-8:1) , BC=0.28 (11-12:1) , WB=0.61 (6-9:1) , SSI=0.22 (6-7:1)

DOL LUMBER=1.00 NAIL=1.00 LS BEND=1.10 COMP=1.10 SHEAR=1.10 TENS= 1.10

COMPANION LIVE LOAD FACTOR = 0.50

TRUSS PLATE MANUFACTURER IS NOT RESPONSIBLE FOR QUALITY CONTROL IN THE TRUSS MANUFACTURING PLANT .

NAIL VALUES

PLATE	GRIP(DRY) (PSI) MAX	MIN	SHEAR (PLI) MAX	MIN	SECTION (PLI) MAX	MIN
MT20	618	354	1667	822	2284	1656

PLATE PLACEMENT TOL. = 0.250 inches

PLATE ROTATION TOL. = 5.0 Deg.

JSI GRIP= 0.90 (12) (INPUT = 0.90)
JSI METAL= 0.45 (2) (INPUT = 1.00)

LICENSED PROFESSIONAL ENGINEER
P. M. TREVISAN
100136551
March 16th, 2017
PROVINCE OF ONTARIO

RECEIVED
TOWN OF MILTON
MAR 29, 2017
17-5337
BUILDING DIVISION

KOTT

JOB NAME	TRUSS NAME	QUANTITY	PLY	JOB DESC.	DRWG NO.
PT0317-097	T87	1	1	TRUSS DESC. LECCO RIDGE-BLOCK 344	

KOTT , Stouffville, ON, CGC

Version 8.100 S Feb 9 2017 MiTek Industries, Inc. Thu Mar 16 11:58:36 2017 Page 1
ID:EvTixTQDI5yR1QLotZTBr_yE?HJ-D8P_s?5mlfTUhZXJ8gcztbHW4rz3Cu3PV1VuYLzaNjH

SCALE = 1:35.0

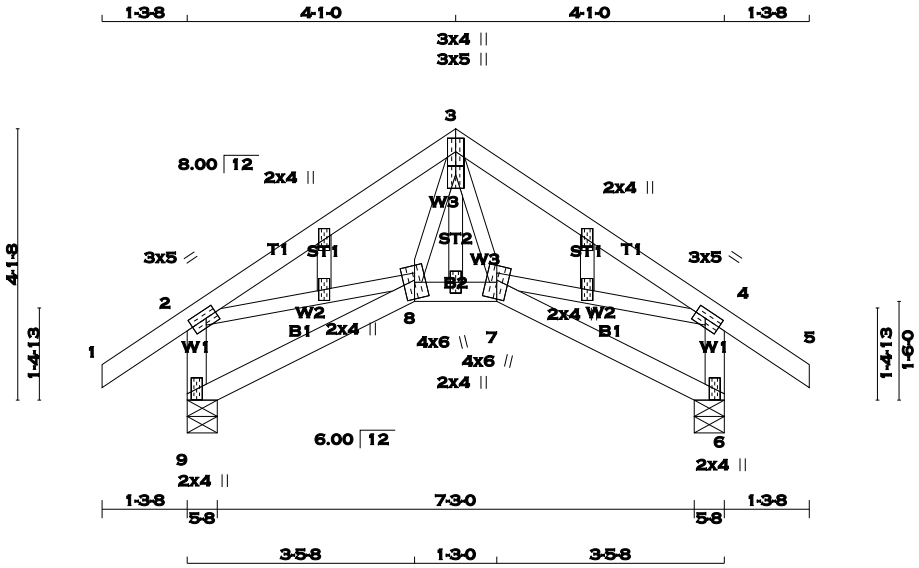

TOTAL WEIGHT = 40 lb

[M][F]

LUMBER

N. L. G. A. RULES

CHORDS	SIZE		LUMBER	DESCR.
1 - 3	2x4	DRY	No.2	SPF
3 - 5	2x4	DRY	No.2	SPF
9 - 2	2x4	DRY	No.2	SPF
6 - 4	2x4	DRY	No.2	SPF
9 - 8	2x4	DRY	No.2	SPF
8 - 7	2x4	DRY	No.2	SPF
7 - 6	2x4	DRY	No.2	SPF
ALL WEBS EXCEPT	2x3	DRY	No.2	SPF
ALL GABLE WEBS	2x3	DRY	No.2	SPF

DRY: SEASONED LUMBER.

GABLE STUDS SPACED AT 2-0-0 OC.

PLATES (table is in inches)

JT	TYPE	PLATES	W	LEN	Y	X
2	TMVW-t	MT20	3.0	5.0	1.50	2.00
3	TTWW+p	MT20	3.0	5.0		
3	NP+p	MT20	3.0	4.0	1.50	1.50
4	TMVW-t	MT20	3.0	5.0	1.50	2.00
6	BMV1+p	MT20	2.0	4.0		
7	BBWW+m	MT20	4.0	6.0		
8	BBWW+m	MT20	4.0	6.0		
9	BMV1+p	MT20	2.0	4.0		
10, 11, 12, 13, 14						
10	NP+w	MT20	2.0	4.0		

A SIZE FOR SIZE SUBSTITUTION OF MITEK MII20 WITH TEE-LOK TL20 PLATES IS ALLOWED.

DIMENSIONS, SUPPORTS AND LOADINGS SPECIFIED BY FABRICATOR TO BE VERIFIED BY BUILDING DESIGNER

BEARINGS

JT	FACTORED GROSS REACTION VERT	HORZ	MAXIMUM FACTORED GROSS REACTION DOWN	HORZ	UPLIFT	INPUT BRG IN-SX	REQRD BRG IN-SX
9	494	0	494	0	0	5-8	5-8
6	494	0	494	0	0	5-8	5-8

UNFACTORED REACTIONS

JT	1ST LCASE COMBINED	MAX./MIN. COMPONENT REACTIONS SNOW	LIVE	PERM.LIVE	WIND	DEAD	SOIL
9	344	254 / 0	0 / 0	0 / 0	0 / 0	90 / 0	0 / 0
6	344	254 / 0	0 / 0	0 / 0	0 / 0	90 / 0	0 / 0

BEARING MATERIAL TO BE SPF NO.2 OR BETTER AT JOINT(S) 9, 6

BRACING

TOP CHORD TO BE SHEATHED OR MAX. PURLIN SPACING = 6.25 FT.
MAX. UNBRACED BOTTOM CHORD LENGTH = 10.00 FT. OR RIGID CEILING DIRECTLY APPLIED.

ALL PITCH BREAKS AND PERIMETER CORNER JOINTS MUST BE LATERALLY RESTRAINED.

LOADING

TOTAL LOAD CASES: (4)

CHORDS

MEMB. FR-TO	MAX. FACTORED FORCE (LBS)	FACTORED VERT. LOAD (PLF) FROM	TO	LC1 MAX CSI (LC)	MAX. UNBRAC LENGTH
1- 2	0 / 29	-77.4	-77.4	0.10 (1)	10.00
2- 3	-441 / 0	-77.4	-77.4	0.17 (1)	6.25
3- 4	-441 / 0	-77.4	-77.4	0.17 (1)	6.25
4- 5	0 / 29	-77.4	-77.4	0.10 (1)	10.00
9- 2	-463 / 0	0.0	0.0	0.05 (1)	7.81
6- 4	-463 / 0	0.0	0.0	0.05 (1)	7.81
9- 8	0 / 0	-17.5	-17.5	0.06 (4)	10.00
8- 7	0 / 343	-17.5	-17.5	0.06 (1)	10.00
7- 6	0 / 0	-17.5	-17.5	0.06 (4)	10.00

WEBS

MEMB. FR-TO	MAX. FACTORED FORCE (LBS)	MAX CSI (LC)
3- 7	0 / 90	0.02 (4)
8- 3	0 / 90	0.02 (4)
2- 8	0 / 370	0.08 (1)
7- 4	0 / 370	0.08 (1)

DESIGN CRITERIA

SPECIFIED LOADS:

TOP CH.	LL	=	23.3	PSF
	DL	=	3.0	PSF
BOT CH.	LL	=	0.0	PSF
	DL	=	7.0	PSF
TOTAL LOAD		=	33.3	PSF

SPACING = 24.0 IN. C/C

THIS TRUSS IS DESIGNED FOR RESIDENTIAL OR SMALL BUILDING REQUIREMENTS OF PART 9, NBCC 2010

THIS DESIGN COMPLIES WITH:
- PART 9 OF OBC 2012 , BCBC 2012 , ABC 2014
- CSA 086-09
- TPIC 2011

(55 % OF 27.2 P.S.F. G.S.L. PLUS 8.4 P.S.F. RAIN LOAD) EQUALS 23.3 P.S.F. SPECIFIED ROOF LIVE LOAD

ALLOWABLE DEFL.(LL)= L/360 (0.27")
CALCULATED VERT. DEFL.(LL) = L/ 999 (0.01")
ALLOWABLE DEFL.(TL)= L/360 (0.27")
CALCULATED VERT. DEFL.(TL) = L/ 999 (0.02")

CSI: TC=0.17 (3-4:1) , BC=0.06 (6-7:4) , WB=0.08 (4-7:1) , SSI=0.10 (2-3:1)

DOL LUMBER=1.00 NAIL=1.00 LS BEND=1.10 COMP=1.10 SHEAR=1.10 TENS= 1.10

COMPANION LIVE LOAD FACTOR = 0.50

AUTOSOLVE HEELS OFF

TRUSS PLATE MANUFACTURER IS NOT RESPONSIBLE FOR QUALITY CONTROL IN THE TRUSS MANUFACTURING PLANT .

NAIL VALUES

PLATE	GRIP(DRY) (PSI) MAX	MIN	SHEAR (PLI) MAX	MIN	SECTION (PLI) MAX	MIN
MT20	618	354	1667	822	2284	1656

PLATE PLACEMENT TOL. = 0.250 inches

PLATE ROTATION TOL. = 5.0 Deg.

JSI GRIP= 0.52 (8) (INPUT = 0.90)
JSI METAL= 0.18 (2) (INPUT = 1.00)

LICENSED PROFESSIONAL ENGINEER
P. M. TREVISAN
100136551
March 16th, 2017
PROVINCE OF ONTARIO

RECEIVED
TOWN OF MILTON
MAR 29, 2017
17-5337
BUILDING DIVISION

KOTT

JOB NAME	TRUSS NAME	QUANTITY	PLY	JOB DESC.	DRWG NO.
PT0317-097	T88	1	1	TRUSS DESC. LECCO RIDGE-BLOCK 344	

KOTT , Stouffville, ON, CGC

Version 8.100 S Feb 9 2017 MiTek Industries, Inc. Thu Mar 16 11:58:37 2017 Page 1
ID:EvTixTQDI5yR1QLotZTBr_yE?HJ-hKzM4L6OWzbLIj6WiO7CPpqhqFJIxLRZjhER4ozaNjG

SCALE = 1:33.0

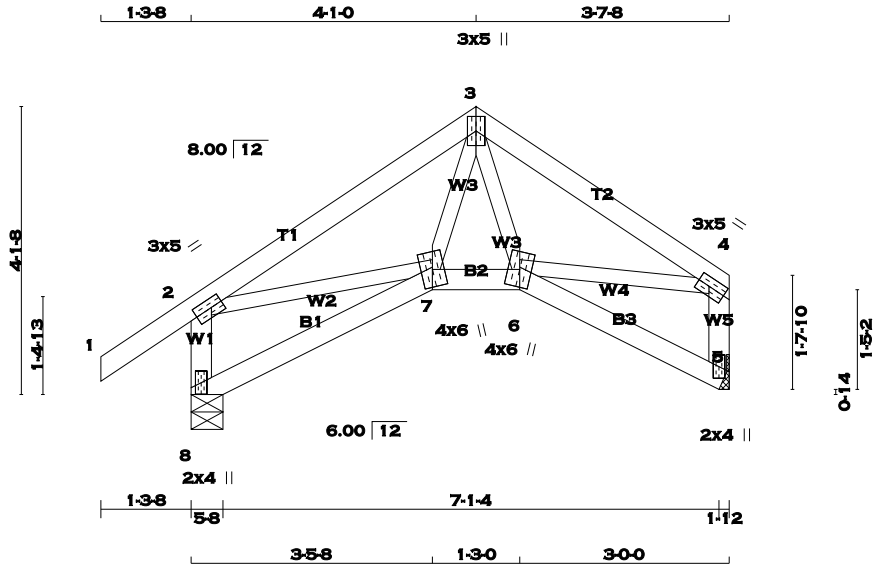

TOTAL WEIGHT = 34 lb
[M][F]

LUMBER
N. L. G. A. RULES

CHORDS	SIZE		LUMBER	DESCR.
1 - 3	2x4	DRY	No.2	SPF
3 - 4	2x4	DRY	No.2	SPF
8 - 2	2x4	DRY	No.2	SPF
5 - 4	2x4	DRY	No.2	SPF
8 - 7	2x4	DRY	No.2	SPF
7 - 6	2x4	DRY	No.2	SPF
6 - 5	2x4	DRY	No.2	SPF
ALL WEBS EXCEPT	2x3	DRY	No.2	SPF

DRY: SEASONED LUMBER.

PLATES (table is in inches)

JT	TYPE	PLATES	W	LEN	Y	X
2	TMVW-t	MT20	3.0	5.0	1.50	2.00
3	TTWW+p	MT20	3.0	5.0		
4	TMVW-t	MT20	3.0	5.0	1.50	2.00
5	BMV1+p	MT20	2.0	4.0		
6	BBWW+m	MT20	4.0	6.0		
7	BBWW+m	MT20	4.0	6.0		
8	BMV1+p	MT20	2.0	4.0		

A SIZE FOR SIZE SUBSTITUTION OF MITEK MII20 WITH TEE-LOK TL20 PLATES IS ALLOWED.

DIMENSIONS, SUPPORTS AND LOADINGS SPECIFIED BY FABRICATOR TO BE VERIFIED BY BUILDING DESIGNER

BEARINGS

JT	FACTORED GROSS REACTION VERT	HORZ	MAXIMUM FACTORED GROSS REACTION DOWN	HORZ	UPLIFT	INPUT BRG IN-SX	REQRD BRG IN-SX
8	472	0	472	0	0	5-8	5-8
5	366	0	366	0	0	HANGER BY OTHERS	
						MIN. SEAT SIZE: 1-12	

UNFACTORED REACTIONS

JT	1ST LCASE COMBINED	MAX./MIN. COMPONENT REACTIONS SNOW	LIVE	PERM.LIVE	WIND	DEAD	SOIL
8	329	243 / 0	0 / 0	0 / 0	0 / 0	85 / 0	0 / 0
5	257	180 / 0	0 / 0	0 / 0	0 / 0	77 / 0	0 / 0

BEARING MATERIAL TO BE SPF NO.2 OR BETTER AT JOINT(S) 8

BRACING
TOP CHORD TO BE SHEATHED OR MAX. PURLIN SPACING = 6.25 FT.
MAX. UNBRACED BOTTOM CHORD LENGTH = 10.00 FT. OR RIGID CEILING DIRECTLY APPLIED.

ALL PITCH BREAKS AND PERIMETER CORNER JOINTS MUST BE LATERALLY RESTRAINED.

LOADING
TOTAL LOAD CASES: (4)

CHORDS

MEMB. FR-TO	MAX. FACTORED FORCE (LBS)	VERT. LOAD (PLF) FROM	TO	LC1 MAX CSI (LC)	MAX. UNBRAC LENGTH
1- 2	0 / 29	-77.4	-77.4	0.10 (1)	10.00
2- 3	-393 / 0	-77.4	-77.4	0.17 (1)	6.25
3- 4	-383 / 0	-77.4	-77.4	0.13 (1)	6.25
8- 2	-442 / 0	0.0	0.0	0.05 (1)	7.81
5- 4	-339 / 0	0.0	0.0	0.04 (1)	7.81
8- 7	0 / 0	-17.5	-17.5	0.06 (4)	10.00
7- 6	0 / 305	-17.5	-17.5	0.05 (1)	10.00
6- 5	0 / 0	-17.5	-17.5	0.05 (4)	10.00

WEBS

MEMB. FR-TO	MAX. FACTORED FORCE (LBS)	MAX CSI (LC)
7- 3	0 / 85	0.02 (4)
3- 6	0 / 52	0.02 (4)
2- 7	0 / 329	0.07 (1)
6- 4	0 / 319	0.07 (1)

DESIGN CRITERIA

SPECIFIED LOADS:

TOP CH.	LL	=	23.3	PSF
	DL	=	3.0	PSF
BOT CH.	LL	=	0.0	PSF
	DL	=	7.0	PSF
TOTAL LOAD		=	33.3	PSF

SPACING = 24.0 IN. C/C

THIS TRUSS IS DESIGNED FOR RESIDENTIAL OR SMALL BUILDING REQUIREMENTS OF PART 9, NBCC 2010

THIS DESIGN COMPLIES WITH:
- PART 9 OF OBC 2012 , BCBC 2012 , ABC 2014
- CSA 086-09
- TPIC 2011

(55 % OF 27.2 P.S.F. G.S.L. PLUS 8.4 P.S.F. RAIN LOAD) EQUALS 23.3 P.S.F. SPECIFIED ROOF LIVE LOAD

ALLOWABLE DEFL.(LL)= L/360 (0.26")
CALCULATED VERT. DEFL.(LL) = L/ 999 (0.01")
ALLOWABLE DEFL.(TL)= L/360 (0.26")
CALCULATED VERT. DEFL.(TL) = L/ 999 (0.01")

CSI: TC=0.17 (2-3:1) , BC=0.06 (7-8:4) , WB=0.07 (2-7:1) , SSI=0.10 (2-3:1)

DOL LUMBER=1.00 NAIL=1.00 LS BEND=1.10 COMP=1.10 SHEAR=1.10 TENS= 1.10

COMPANION LIVE LOAD FACTOR = 0.50

AUTOSOLVE HEELS OFF

TRUSS PLATE MANUFACTURER IS NOT RESPONSIBLE FOR QUALITY CONTROL IN THE TRUSS MANUFACTURING PLANT .

NAIL VALUES

PLATE	GRIP(DRY) (PSI) MAX	MIN	SHEAR (PLI) MAX	MIN	SECTION (PLI) MAX	MIN
MT20	618	354	1667	822	2284	1656

PLATE PLACEMENT TOL. = 0.250 inches

PLATE ROTATION TOL. = 5.0 Deg.

JSI GRIP= 0.47 (7) (INPUT = 0.90)
JSI METAL= 0.16 (2) (INPUT = 1.00)

LICENSED PROFESSIONAL ENGINEER
P. M. TREVISAN
100136551
March 16th, 2017
PROVINCE OF ONTARIO

RECEIVED
TOWN OF MILTON
MAR 29, 2017
17-5337
BUILDING DIVISION

KOTT

JOB NAME	TRUSS NAME	QUANTITY	PLY	JOB DESC.	DRWG NO.
PT0317-097	**T89**	**2**	**1**	TRUSS DESC. LECCO RIDGE-BLOCK 344	

KOTT , Stouffville, ON, CGC

Version 8.100 S Feb 9 2017 MiTek Industries, Inc. Thu Mar 16 11:58:37 2017 Page 1
ID:EvTixTQDI5yR1QLotZTBr_yE?HJ-hKzM4L6OWzbLIj6WiO7CPpqhrFI6xMtZjhER4ozaNjG

SCALE: 3/8"=1'

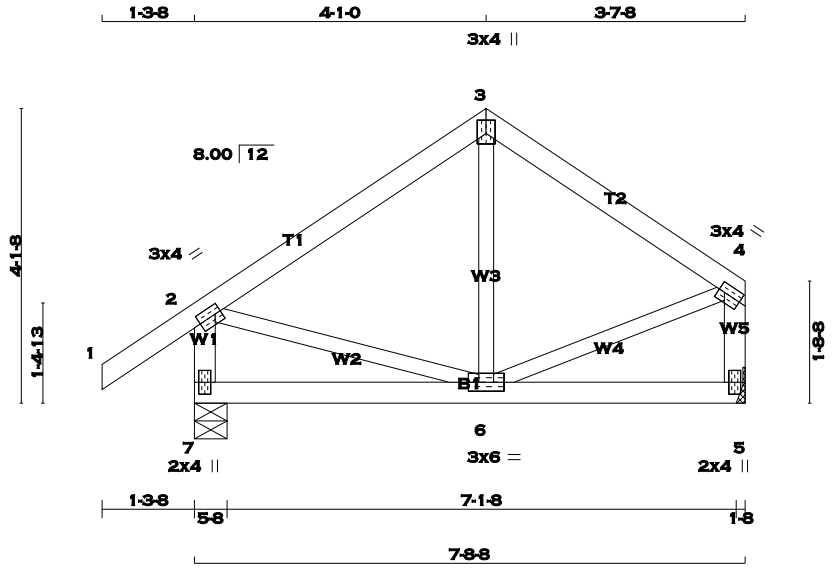

TOTAL WEIGHT = 2 X 33 = 66 lb

[M][F]

LUMBER

N. L. G. A. RULES

CHORDS	SIZE		LUMBER	DESCR.
1 - 3	2x4	DRY	No.2	SPF
3 - 4	2x4	DRY	No.2	SPF
7 - 2	2x4	DRY	No.2	SPF
5 - 4	2x4	DRY	No.2	SPF
7 - 5	2x4	DRY	No.2	SPF
ALL WEBS EXCEPT	2x3	DRY	No.2	SPF

DRY: SEASONED LUMBER.

PLATES (table is in inches)

JT	TYPE	PLATES	W	LEN	Y	X
2	TMVW-t	MT20	3.0	4.0	1.50	1.00
3	TTW+p	MT20	3.0	4.0	2.25	1.50
4	TMVW-t	MT20	3.0	4.0	1.50	1.00
5	BMV1+p	MT20	2.0	4.0		
6	BMWWW-t	MT20	3.0	6.0		
7	BMV1+p	MT20	2.0	4.0		

A SIZE FOR SIZE SUBSTITUTION OF MITEK MII20 WITH TEE-LOK TL20 PLATES IS ALLOWED.

DIMENSIONS, SUPPORTS AND LOADINGS SPECIFIED BY FABRICATOR TO BE VERIFIED BY BUILDING DESIGNER

BEARINGS

JT	FACTORED GROSS REACTION VERT	HORZ	MAXIMUM FACTORED GROSS REACTION DOWN	HORZ	UPLIFT	INPUT BRG IN-SX	REQRD BRG IN-SX
7	472	0	472	0	0	5-8	5-8
5	366	0	366	0	0	HANGER BY OTHERS MIN. SEAT SIZE: 1-8	

UNFACTORED REACTIONS

JT	1ST LCASE COMBINED	MAX./MIN. COMPONENT REACTIONS SNOW	LIVE	PERM.LIVE	WIND	DEAD	SOIL
7	329	243 / 0	0 / 0	0 / 0	0 / 0	85 / 0	0 / 0
5	257	180 / 0	0 / 0	0 / 0	0 / 0	77 / 0	0 / 0

BEARING MATERIAL TO BE SPF NO.2 OR BETTER AT JOINT(S) 7

BRACING

TOP CHORD TO BE SHEATHED OR MAX. PURLIN SPACING = 6.25 FT.
MAX. UNBRACED BOTTOM CHORD LENGTH = 10.00 FT. OR RIGID CEILING DIRECTLY APPLIED.

ALL PITCH BREAKS AND PERIMETER CORNER JOINTS MUST BE LATERALLY RESTRAINED.

LOADING

TOTAL LOAD CASES: (4)

CHORDS

MEMB. FR-TO	MAX. FACTORED FORCE (LBS)	FACTORED VERT. LOAD (PLF) FROM	TO	LC1 MAX CSI (LC)	MAX. UNBRAC LENGTH
1- 2	0 / 29	-77.4	-77.4	0.10 (1)	10.00
2- 3	-231 / 0	-77.4	-77.4	0.17 (1)	6.25
3- 4	-231 / 0	-77.4	-77.4	0.13 (1)	6.25
7- 2	-443 / 0	0.0	0.0	0.05 (1)	7.81
5- 4	-342 / 0	0.0	0.0	0.04 (1)	7.81
7- 6	0 / 0	-17.5	-17.5	0.07 (4)	10.00
6- 5	0 / 0	-17.5	-17.5	0.07 (4)	10.00

WEBS

MEMB. FR-TO	MAX. FACTORED FORCE (LBS)	MAX CSI (LC)
6- 3	-42 / 53	0.02 (4)
2- 6	0 / 199	0.04 (1)
6- 4	0 / 206	0.05 (1)

DESIGN CRITERIA

SPECIFIED LOADS:

TOP	CH.	LL	=	23.3	PSF
		DL	=	3.0	PSF
BOT	CH.	LL	=	0.0	PSF
		DL	=	7.0	PSF
TOTAL	LOAD		=	33.3	PSF

SPACING = 24.0 IN. C/C

THIS TRUSS IS DESIGNED FOR RESIDENTIAL OR SMALL BUILDING REQUIREMENTS OF PART 9, NBCC 2010

THIS DESIGN COMPLIES WITH:
- PART 9 OF OBC 2012 , BCBC 2012 , ABC 2014
- CSA 086-09
- TPIC 2011

(55 % OF 27.2 P.S.F. G.S.L. PLUS 8.4 P.S.F. RAIN LOAD) EQUALS 23.3 P.S.F. SPECIFIED ROOF LIVE LOAD

ALLOWABLE DEFL.(LL)= L/360 (0.26")
CALCULATED VERT. DEFL.(LL) = L/ 999 (0.00")
ALLOWABLE DEFL.(TL)= L/360 (0.26")
CALCULATED VERT. DEFL.(TL) = L/ 999 (0.01")

CSI: TC=0.17 (2-3:1) , BC=0.07 (6-7:4) , WB=0.05 (4-6:1) , SSI=0.10 (2-3:1)

DOL LUMBER=1.00 NAIL=1.00 LS BEND=1.10 COMP=1.10 SHEAR=1.10 TENS= 1.10

COMPANION LIVE LOAD FACTOR = 0.50

TRUSS PLATE MANUFACTURER IS NOT RESPONSIBLE FOR QUALITY CONTROL IN THE TRUSS MANUFACTURING PLANT .

NAIL VALUES

PLATE	GRIP(DRY) (PSI) MAX	MIN	SHEAR (PLI) MAX	MIN	SECTION (PLI) MAX	MIN
MT20	618	354	1667	822	2284	1656

PLATE PLACEMENT TOL. = 0.250 inches

PLATE ROTATION TOL. = 5.0 Deg.

JSI GRIP= 0.67 (4) (INPUT = 0.90)
JSI METAL= 0.14 (2) (INPUT = 1.00)

LICENSED PROFESSIONAL ENGINEER
P. M. TREVISAN
100136551
March 16th, 2017
PROVINCE OF ONTARIO

RECEIVED
TOWN OF MILTON
MAR 29, 2017
17-5337
BUILDING DIVISION

KOTT

JOB NAME	TRUSS NAME	QUANTITY	PLY	JOB DESC.	DRWG NO.
PT0317-097	**T90**	**1**	**1**	TRUSS DESC. LECCO RIDGE-BLOCK 344	

KOTT , Stouffville, ON, CGC

Version 8.100 S Feb 9 2017 MiTek Industries, Inc. Thu Mar 16 11:58:38 2017 Page 1
ID:EvTixTQDI5yR1QLotZTBr_yE?HJ-9XXkHh70HGjCwthiG5eRy0NtbfflgO3iyL_?dEzaNjF

SCALE = 1:21.4

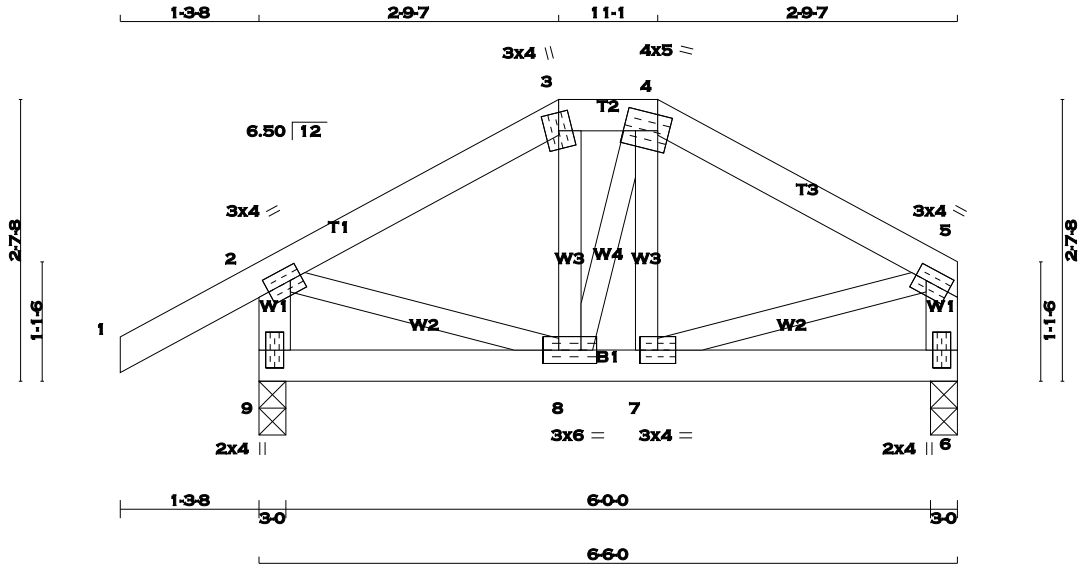

TOTAL WEIGHT = 28 lb
[M][F]

LUMBER
N. L. G. A. RULES

CHORDS	SIZE		LUMBER	DESCR.
1 - 3	2x4	DRY	No.2	SPF
3 - 4	2x4	DRY	No.2	SPF
4 - 5	2x4	DRY	No.2	SPF
9 - 2	2x4	DRY	No.2	SPF
6 - 5	2x4	DRY	No.2	SPF
9 - 6	2x4	DRY	No.2	SPF
ALL WEBS EXCEPT	2x3	DRY	No.2	SPF

DRY: SEASONED LUMBER.

PLATES (table is in inches)

JT	TYPE	PLATES	W	LEN	Y	X
2	TMVW-t	MT20	3.0	4.0	1.50	1.25
3	TTW+m	MT20	3.0	4.0		
4	TTWW-m	MT20	4.0	5.0	1.75	1.25
5	TMVW-t	MT20	3.0	4.0	1.50	1.25
6	BMV1+p	MT20	2.0	4.0		
7	BMWW-t	MT20	3.0	4.0		
8	BMWWW-t	MT20	3.0	6.0		
9	BMV1+p	MT20	2.0	4.0		

A SIZE FOR SIZE SUBSTITUTION OF MITEK MII20 WITH TEE-LOK TL20 PLATES IS ALLOWED.

DIMENSIONS, SUPPORTS AND LOADINGS SPECIFIED BY FABRICATOR TO BE VERIFIED BY BUILDING DESIGNER

BEARINGS

JT	FACTORED GROSS REACTION VERT	HORZ	MAXIMUM FACTORED GROSS REACTION DOWN	HORZ	UPLIFT	INPUT BRG IN-SX	REQRD BRG IN-SX
9	414	0	414	0	0	3-0	3-0
6	308	0	308	0	0	3-0	3-0

UNFACTORED REACTIONS

JT	1ST LCASE COMBINED	MAX./MIN. COMPONENT REACTIONS SNOW	LIVE	PERM.LIVE	WIND	DEAD	SOIL
9	288	215 / 0	0 / 0	0 / 0	0 / 0	73 / 0	0 / 0
6	216	151 / 0	0 / 0	0 / 0	0 / 0	65 / 0	0 / 0

BEARING MATERIAL TO BE SPF NO.2 OR BETTER AT JOINT(S) 9, 6

BRACING
TOP CHORD TO BE SHEATHED OR MAX. PURLIN SPACING = 6.25 FT.
MAX. UNBRACED BOTTOM CHORD LENGTH = 10.00 FT. OR RIGID CEILING DIRECTLY APPLIED.

ALL PITCH BREAKS AND PERIMETER CORNER JOINTS MUST BE LATERALLY RESTRAINED.

LOADING
TOTAL LOAD CASES: (4)

CHORDS

MEMB. FR-TO	MAX. FACTORED FORCE (LBS)	FACTORED VERT. LOAD (PLF) FROM	TO	LC1 MAX CSI (LC)	MAX. UNBRAC LENGTH
1- 2	0 / 25	-77.4	-77.4	0.10 (1)	10.00
2- 3	-246 / 0	-77.4	-77.4	0.08 (1)	6.25
3- 4	-215 / 0	-77.4	-77.4	0.01 (1)	6.25
4- 5	-247 / 0	-77.4	-77.4	0.08 (1)	6.25
9- 2	-391 / 0	0.0	0.0	0.04 (1)	7.81
6- 5	-286 / 0	0.0	0.0	0.03 (1)	7.81
9- 8	0 / 0	-17.5	-17.5	0.03 (4)	10.00
8- 7	0 / 216	-17.5	-17.5	0.05 (1)	10.00
7- 6	0 / 0	-17.5	-17.5	0.03 (4)	10.00

WEBS

MEMB. FR-TO	MAX. FACTORED FORCE (LBS)	MAX CSI (LC)
8- 3	-26 / 21	0.01 (4)
8- 4	-2 / 2	0.00 (4)
7- 4	-23 / 20	0.01 (4)
2- 8	0 / 224	0.05 (1)
7- 5	0 / 225	0.05 (1)

DESIGN CRITERIA

SPECIFIED LOADS:

TOP	CH.	LL	=	23.3	PSF
		DL	=	3.0	PSF
BOT	CH.	LL	=	0.0	PSF
		DL	=	7.0	PSF
TOTAL	LOAD		=	33.3	PSF

SPACING = 24.0 IN. C/C

LOADING IN FLAT SECTION BASED ON A SLOPE OF 6.00/12

THIS TRUSS IS DESIGNED FOR RESIDENTIAL OR SMALL BUILDING REQUIREMENTS OF PART 9, NBCC 2010

THIS DESIGN COMPLIES WITH:
- PART 9 OF OBC 2012 , BCBC 2012 , ABC 2014
- CSA 086-09
- TPIC 2011

(55 % OF 27.2 P.S.F. G.S.L. PLUS 8.4 P.S.F. RAIN LOAD) EQUALS 23.3 P.S.F. SPECIFIED ROOF LIVE LOAD

ALLOWABLE DEFL.(LL)= L/360 (0.22")
CALCULATED VERT. DEFL.(LL) = L/ 999 (0.00")
ALLOWABLE DEFL.(TL)= L/360 (0.22")
CALCULATED VERT. DEFL.(TL) = L/ 999 (0.00")

CSI: TC=0.10 (1-2:1) , BC=0.05 (7-8:1) , WB=0.05 (5-7:1) , SSI=0.07 (4-5:1)

DOL LUMBER=1.00 NAIL=1.00 LS BEND=1.10 COMP=1.10 SHEAR=1.10 TENS= 1.10

COMPANION LIVE LOAD FACTOR = 0.50

TRUSS PLATE MANUFACTURER IS NOT RESPONSIBLE FOR QUALITY CONTROL IN THE TRUSS MANUFACTURING PLANT .

NAIL VALUES

PLATE	GRIP(DRY) (PSI) MAX	MIN	SHEAR (PLI) MAX	MIN	SECTION (PLI) MAX	MIN
MT20	618	354	1667	822	2284	1656

PLATE PLACEMENT TOL. = 0.250 inches

PLATE ROTATION TOL. = 5.0 Deg.

JSI GRIP= 0.56 (5) (INPUT = 0.90)
JSI METAL= 0.13 (2) (INPUT = 1.00)

LICENSED PROFESSIONAL ENGINEER
P. M. TREVISAN
100136551
March 16th, 2017
PROVINCE OF ONTARIO

RECEIVED
TOWN OF MILTON
MAR 29, 2017
17-5337
BUILDING DIVISION

KOTT

JOB NAME	TRUSS NAME	QUANTITY	PLY	JOB DESC.	DRWG NO.
PT0317-097	**T91**	**2**	**1**	TRUSS DESC. LECCO RIDGE-BLOCK 344	

KOTT , Stouffville, ON, CGC

Version 8.100 S Feb 9 2017 MiTek Industries, Inc. Thu Mar 16 11:58:38 2017 Page 1
ID:EvTixTQDI5yR1QLotZTBr_yE?HJ-9XXkHh70HGjCwthiG5eRy0NtYffjgo7iyL_?dEzaNjF

SCALE = 1:23.4

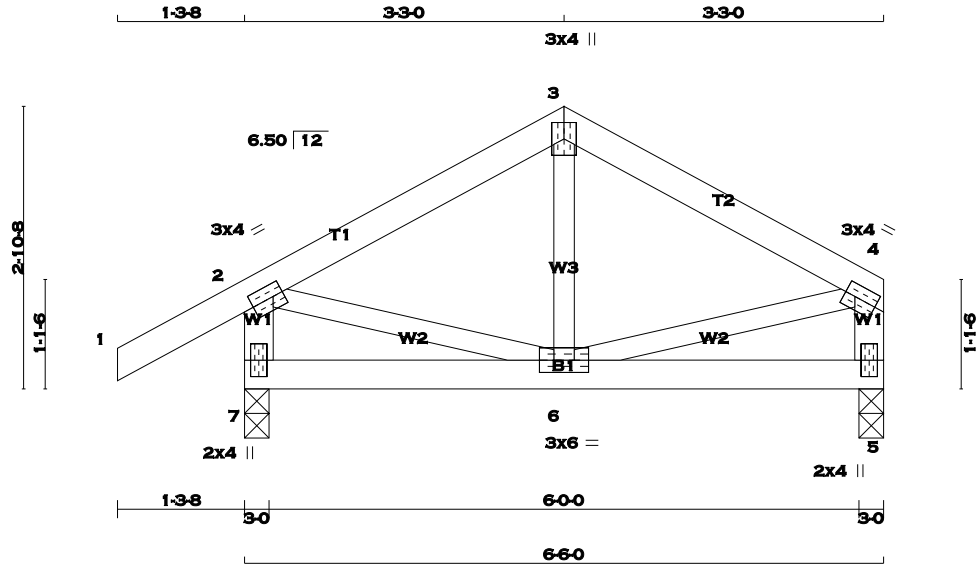

TOTAL WEIGHT = 2 X 26 = 52 lb
[M][F]

LUMBER
N. L. G. A. RULES

CHORDS	SIZE		LUMBER	DESCR.
1 - 3	2x4	DRY	No.2	SPF
3 - 4	2x4	DRY	No.2	SPF
7 - 2	2x4	DRY	No.2	SPF
5 - 4	2x4	DRY	No.2	SPF
7 - 5	2x4	DRY	No.2	SPF
ALL WEBS EXCEPT	2x3	DRY	No.2	SPF

DRY: SEASONED LUMBER.

PLATES (table is in inches)

JT	TYPE	PLATES	W	LEN	Y	X
2	TMVW-t	MT20	3.0	4.0	1.50	1.25
3	TTW+p	MT20	3.0	4.0		
4	TMVW-t	MT20	3.0	4.0	1.50	1.25
5	BMV1+p	MT20	2.0	4.0		
6	BMWWW-t	MT20	3.0	6.0		
7	BMV1+p	MT20	2.0	4.0		

A SIZE FOR SIZE SUBSTITUTION OF MITEK MII20 WITH TEE-LOK TL20 PLATES IS ALLOWED.

DIMENSIONS, SUPPORTS AND LOADINGS SPECIFIED BY FABRICATOR TO BE VERIFIED BY BUILDING DESIGNER

BEARINGS

JT	FACTORED GROSS REACTION VERT	HORZ	MAXIMUM FACTORED GROSS REACTION DOWN	HORZ	UPLIFT	INPUT BRG IN-SX	REQRD BRG IN-SX
7	414	0	414	0	0	3-0	3-0
5	308	0	308	0	0	3-0	3-0

UNFACTORED REACTIONS

JT	1ST LCASE COMBINED	MAX./MIN. COMPONENT REACTIONS SNOW	LIVE	PERM.LIVE	WIND	DEAD	SOIL
7	288	215 / 0	0 / 0	0 / 0	0 / 0	73 / 0	0 / 0
5	216	151 / 0	0 / 0	0 / 0	0 / 0	65 / 0	0 / 0

BEARING MATERIAL TO BE SPF NO.2 OR BETTER AT JOINT(S) 7, 5

BRACING
TOP CHORD TO BE SHEATHED OR MAX. PURLIN SPACING = 6.25 FT.
MAX. UNBRACED BOTTOM CHORD LENGTH = 10.00 FT. OR RIGID CEILING DIRECTLY APPLIED.

ALL PITCH BREAKS AND PERIMETER CORNER JOINTS MUST BE LATERALLY RESTRAINED.

LOADING
TOTAL LOAD CASES: (4)

CHORDS

MEMB. FR-TO	MAX. FACTORED FORCE (LBS)	FACTORED VERT. LOAD (PLF) FROM	TO	LC1 MAX CSI (LC)	MAX. UNBRAC LENGTH
1- 2	0 / 25	-77.4	-77.4	0.10 (1)	10.00
2- 3	-230 / 0	-77.4	-77.4	0.10 (1)	6.25
3- 4	-230 / 0	-77.4	-77.4	0.10 (1)	6.25
7- 2	-391 / 0	0.0	0.0	0.04 (1)	7.81
5- 4	-285 / 0	0.0	0.0	0.03 (1)	7.81
7- 6	0 / 0	-17.5	-17.5	0.05 (4)	10.00
6- 5	0 / 0	-17.5	-17.5	0.05 (4)	10.00

WEBS

MEMB. FR-TO	MAX. FACTORED FORCE (LBS)	MAX CSI (LC)
6- 3	-32 / 45	0.02 (4)
2- 6	0 / 209	0.05 (1)
6- 4	0 / 209	0.05 (1)

DESIGN CRITERIA

SPECIFIED LOADS:

TOP	CH.	LL	=	23.3	PSF
		DL	=	3.0	PSF
BOT	CH.	LL	=	0.0	PSF
		DL	=	7.0	PSF
TOTAL	LOAD		=	33.3	PSF

SPACING = 24.0 IN. C/C

THIS TRUSS IS DESIGNED FOR RESIDENTIAL OR SMALL BUILDING REQUIREMENTS OF PART 9, NBCC 2010

THIS DESIGN COMPLIES WITH:
- PART 9 OF OBC 2012 , BCBC 2012 , ABC 2014
- CSA 086-09
- TPIC 2011

(55 % OF 27.2 P.S.F. G.S.L. PLUS 8.4 P.S.F. RAIN LOAD) EQUALS 23.3 P.S.F. SPECIFIED ROOF LIVE LOAD

ALLOWABLE DEFL.(LL)= L/360 (0.22")
CALCULATED VERT. DEFL.(LL) = L/ 999 (0.00")
ALLOWABLE DEFL.(TL)= L/360 (0.22")
CALCULATED VERT. DEFL.(TL) = L/ 999 (0.00")

CSI: TC=0.10 (2-3:1) , BC=0.05 (6-7:4) , WB=0.05 (2-6:1) , SSI=0.09 (2-3:1)

DOL LUMBER=1.00 NAIL=1.00 LS BEND=1.10 COMP=1.10 SHEAR=1.10 TENS= 1.10

COMPANION LIVE LOAD FACTOR = 0.50

TRUSS PLATE MANUFACTURER IS NOT RESPONSIBLE FOR QUALITY CONTROL IN THE TRUSS MANUFACTURING PLANT .

NAIL VALUES

PLATE	GRIP(DRY) (PSI) MAX	MIN	SHEAR (PLI) MAX	MIN	SECTION (PLI) MAX	MIN
MT20	618	354	1667	822	2284	1656

PLATE PLACEMENT TOL. = 0.250 inches

PLATE ROTATION TOL. = 5.0 Deg.

JSI GRIP= 0.52 (4) (INPUT = 0.90)
JSI METAL= 0.13 (4) (INPUT = 1.00)

LICENSED PROFESSIONAL ENGINEER
P. M. TREVISAN
100136551
March 16th, 2017
PROVINCE OF ONTARIO

RECEIVED
TOWN OF MILTON
MAR 29, 2017
17-5337
BUILDING DIVISION

KOTT

JOB NAME	TRUSS NAME	QUANTITY	PLY	JOB DESC.	DRWG NO.
PT0317-097	T92	6	1	TRUSS DESC. LECCO RIDGE-BLOCK 344	

KOTT , Stouffville, ON, CGC

Version 8.100 S Feb 9 2017 MiTek Industries, Inc. Thu Mar 16 11:58:39 2017 Page 1
ID:EvTixTQDI5yR1QLotZTBr_yE?HJ-dj57V08e2ar3Y1Guqp9gVEv2H2ziPF5sB?jY9gzaNjE

SCALE = 1:14.1

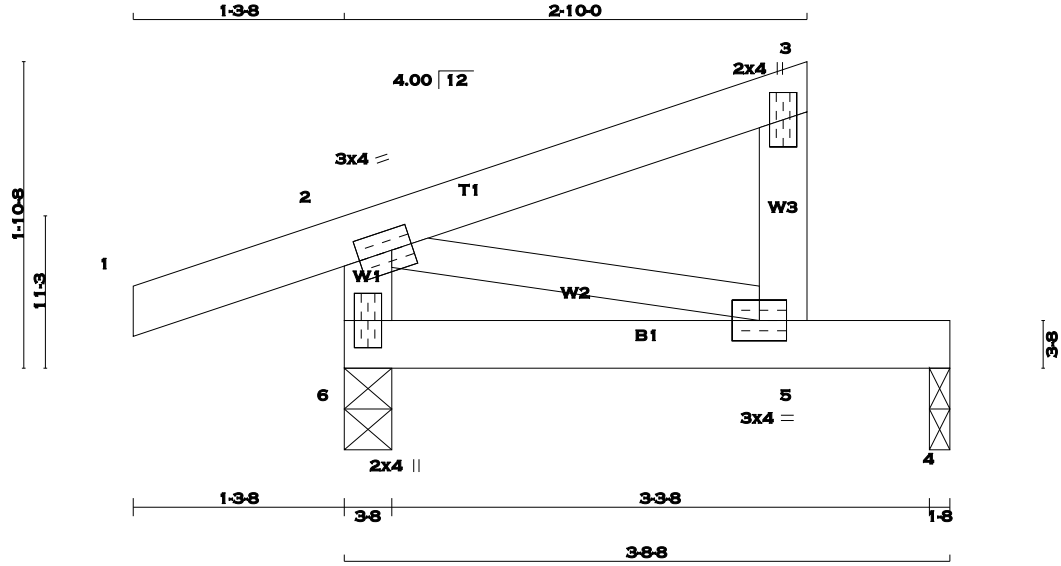

TOTAL WEIGHT = 6 X 13 = 79 lb
[M]

LUMBER
N. L. G. A. RULES

CHORDS	SIZE		LUMBER	DESCR.
1 - 3	2x4	DRY	No.2	SPF
5 - 3	2x4	DRY	No.2	SPF
6 - 2	2x4	DRY	No.2	SPF
6 - 4	2x4	DRY	No.2	SPF
ALL WEBS	2x3	DRY	No.2	SPF

DRY: SEASONED LUMBER.

PLATES (table is in inches)

JT	TYPE	PLATES	W	LEN	Y	X
2	TMVW-t	MT20	3.0	4.0	1.50	1.50
3	TMV+p	MT20	2.0	4.0		
5	BMVW-t	MT20	3.0	4.0		
6	BMV1+p	MT20	2.0	4.0		

A SIZE FOR SIZE SUBSTITUTION OF MITEK MII20 WITH TEE-LOK TL20 PLATES IS ALLOWED.

DIMENSIONS, SUPPORTS AND LOADINGS SPECIFIED BY FABRICATOR TO BE VERIFIED BY BUILDING DESIGNER

BEARINGS

JT	FACTORED GROSS REACTION VERT	HORZ	MAXIMUM FACTORED GROSS REACTION DOWN	HORZ	UPLIFT	INPUT BRG IN-SX	REQRD BRG IN-SX
6	271	0	271	0	0	3-8	3-8
4	116	0	116	0	0	1-8	1-8

UNFACTORED REACTIONS

JT	1ST LCASE COMBINED	MAX./MIN. COMPONENT REACTIONS SNOW	LIVE	PERM.LIVE	WIND	DEAD	SOIL
6	188	144 / 0	0 / 0	0 / 0	0 / 0	44 / 0	0 / 0
4	83	50 / 0	0 / 0	0 / 0	0 / 0	32 / 0	0 / 0

BEARING MATERIAL TO BE SPF NO.2 OR BETTER AT JOINT(S) 6, 4

BRACING
TOP CHORD TO BE SHEATHED OR MAX. PURLIN SPACING = 10.00 FT.
MAX. UNBRACED BOTTOM CHORD LENGTH = 10.00 FT. OR RIGID CEILING DIRECTLY APPLIED.

ALL PITCH BREAKS AND PERIMETER CORNER JOINTS MUST BE LATERALLY RESTRAINED.

LOADING
TOTAL LOAD CASES: (5)

CHORDS

MEMB. FR-TO	MAX. FACTORED FORCE (LBS)	FACTORED VERT. LOAD (PLF) FROM	TO	LC1 MAX CSI (LC)	MAX. UNBRAC LENGTH
1- 2	0 / 16	-77.4	-77.4	0.10 (1)	10.00
2- 3	0 / 0	-77.4	-77.4	0.11 (1)	10.00
5- 3	-110 / 0	0.0	0.0	0.01 (1)	7.81
6- 2	-213 / 0	0.0	0.0	0.02 (1)	7.81
6- 5	0 / 0	-17.5	-17.5	0.13 (1)	10.00
5- 4	0 / 0	-17.5	-17.5	0.13 (1)	10.00

WEBS

MEMB. FR-TO	MAX. FACTORED FORCE (LBS)	MAX CSI (LC)
2- 5	0 / 0	0.00 (1)

CANTILEVER ANALYSIS HAS BEEN CONSIDERED IN THIS DESIGN

DESIGN CRITERIA

SPECIFIED LOADS:

TOP	CH.	LL	=	23.3	PSF
		DL	=	3.0	PSF
BOT	CH.	LL	=	0.0	PSF
		DL	=	7.0	PSF
TOTAL	LOAD		=	33.3	PSF

SPACING = 24.0 IN. C/C

THIS TRUSS IS DESIGNED FOR RESIDENTIAL OR SMALL BUILDING REQUIREMENTS OF PART 9, NBCC 2010

THIS DESIGN COMPLIES WITH:
- PART 9 OF OBC 2012 , BCBC 2012 , ABC 2014
- CSA 086-09
- TPIC 2011

(55 % OF 27.2 P.S.F. G.S.L. PLUS 8.4 P.S.F. RAIN LOAD) EQUALS 23.3 P.S.F. SPECIFIED ROOF LIVE LOAD

ALLOWABLE DEFL.(LL)= L/360 (0.19")
CALCULATED VERT. DEFL.(LL) = L/ 999 (0.01")
ALLOWABLE DEFL.(TL)= L/360 (0.19")
CALCULATED VERT. DEFL.(TL) = L/ 999 (0.02")

CSI: TC=0.11 (2-3:1) , BC=0.13 (5-6:1) , WB=0.00 (2-5:1) , SSI=0.09 (4-5:1)

DOL LUMBER=1.00 NAIL=1.00 LS BEND=1.10 COMP=1.10 SHEAR=1.10 TENS= 1.10

COMPANION LIVE LOAD FACTOR = 0.50

TRUSS PLATE MANUFACTURER IS NOT RESPONSIBLE FOR QUALITY CONTROL IN THE TRUSS MANUFACTURING PLANT .

NAIL VALUES

PLATE	GRIP(DRY) (PSI) MAX	MIN	SHEAR (PLI) MAX	MIN	SECTION (PLI) MAX	MIN
MT20	618	354	1667	822	2284	1656

PLATE PLACEMENT TOL. = 0.250 inches

PLATE ROTATION TOL. = 0.5 Deg.

JSI GRIP= 0.19 (2) (INPUT = 0.90)
JSI METAL= 0.04 (6) (INPUT = 1.00)

LICENSED PROFESSIONAL ENGINEER
P. M. TREVISAN
100136551
March 16th, 2017
PROVINCE OF ONTARIO

RECEIVED
TOWN OF MILTON
MAR 29, 2017
17-5337
BUILDING DIVISION

KOTT

JOB NAME	TRUSS NAME	QUANTITY	PLY	JOB DESC.	DRWG NO.
PT0317-097	T93	1	1	TRUSS DESC. LECCO RIDGE-BLOCK 344	

KOTT , Stouffville, ON, CGC

Version 8.100 S Feb 9 2017 MiTek Industries, Inc. Thu Mar 16 11:58:39 2017 Page 1
ID:EvTixTQDI5yR1QLotZTBr_yE?HJ-dj57V08e2ar3Y1Guqp9gVEv2L2?zPFMsB?jY9gzaNjE

SCALE = 1:21.5

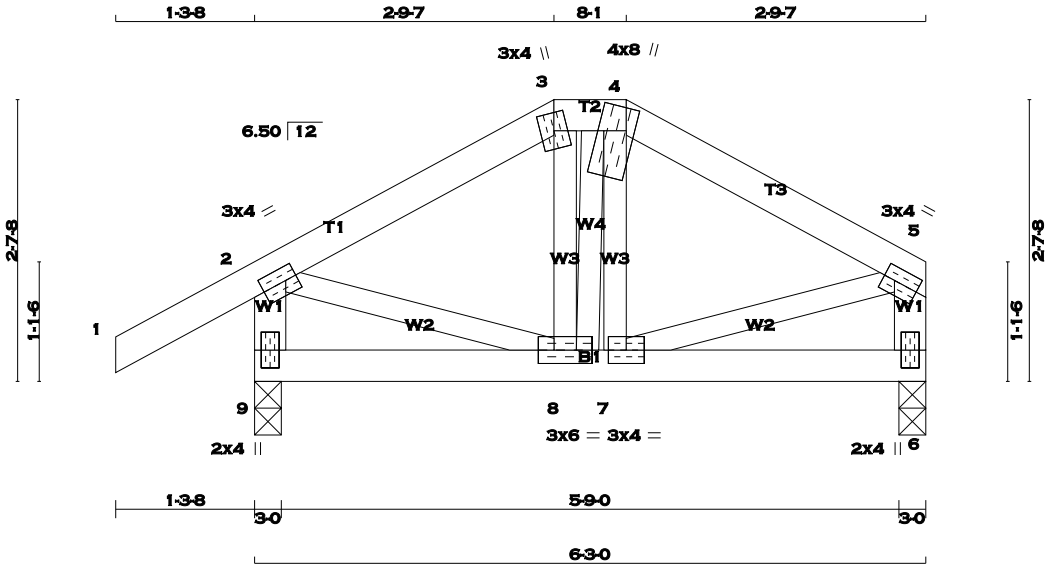

TOTAL WEIGHT = 28 lb
[M][F]

LUMBER

N. L. G. A. RULES

CHORDS	SIZE		LUMBER	DESCR.
1 - 3	2x4	DRY	No.2	SPF
3 - 4	2x4	DRY	No.2	SPF
4 - 5	2x4	DRY	No.2	SPF
9 - 2	2x4	DRY	No.2	SPF
6 - 5	2x4	DRY	No.2	SPF
9 - 6	2x4	DRY	No.2	SPF
ALL WEBS EXCEPT	2x3	DRY	No.2	SPF

DRY: SEASONED LUMBER.

PLATES (table is in inches)

JT	TYPE	PLATES	W	LEN	Y	X
2	TMVW-t	MT20	3.0	4.0	1.50	1.25
3	TTW+m	MT20	3.0	4.0		
4	TTWW+m	MT20	4.0	8.0	2.50	1.00
5	TMVW-t	MT20	3.0	4.0	1.50	1.25
6	BMV1+p	MT20	2.0	4.0		
7	BMWW-t	MT20	3.0	4.0		
8	BMWWW-t	MT20	3.0	6.0		
9	BMV1+p	MT20	2.0	4.0		

A SIZE FOR SIZE SUBSTITUTION OF MITEK MII20 WITH TEE-LOK TL20 PLATES IS ALLOWED.

DIMENSIONS, SUPPORTS AND LOADINGS SPECIFIED BY FABRICATOR TO BE VERIFIED BY BUILDING DESIGNER

BEARINGS

JT	FACTORED GROSS REACTION VERT	HORZ	MAXIMUM FACTORED GROSS REACTION DOWN	HORZ	UPLIFT	INPUT BRG IN-SX	REQRD BRG IN-SX
9	402	0	402	0	0	3-0	3-0
6	296	0	296	0	0	3-0	3-0

UNFACTORED REACTIONS

JT	1ST LCASE COMBINED	MAX./MIN. COMPONENT REACTIONS SNOW	LIVE	PERM.LIVE	WIND	DEAD	SOIL
9	280	209 / 0	0 / 0	0 / 0	0 / 0	71 / 0	0 / 0
6	208	146 / 0	0 / 0	0 / 0	0 / 0	62 / 0	0 / 0

BEARING MATERIAL TO BE SPF NO.2 OR BETTER AT JOINT(S) 9, 6

BRACING

TOP CHORD TO BE SHEATHED OR MAX. PURLIN SPACING = 6.25 FT.
MAX. UNBRACED BOTTOM CHORD LENGTH = 10.00 FT. OR RIGID CEILING DIRECTLY APPLIED.

ALL PITCH BREAKS AND PERIMETER CORNER JOINTS MUST BE LATERALLY RESTRAINED.

LOADING

TOTAL LOAD CASES: (4)

CHORDS

MEMB. FR-TO	MAX. FACTORED FORCE (LBS)	FACTORED VERT. LOAD (PLF) FROM	TO	LC1 MAX CSI (LC)	MAX. UNBRAC LENGTH
1- 2	0 / 25	-77.4	-77.4	0.10 (1)	10.00
2- 3	-230 / 0	-77.4	-77.4	0.08 (1)	6.25
3- 4	-201 / 0	-77.4	-77.4	0.00 (1)	6.25
4- 5	-231 / 0	-77.4	-77.4	0.08 (1)	6.25
9- 2	-379 / 0	0.0	0.0	0.04 (1)	7.81
6- 5	-275 / 0	0.0	0.0	0.03 (1)	7.81
9- 8	0 / 0	-17.5	-17.5	0.03 (4)	10.00
8- 7	0 / 202	-17.5	-17.5	0.05 (4)	10.00
7- 6	0 / 0	-17.5	-17.5	0.03 (4)	10.00

WEBS

MEMB. FR-TO	MAX. FACTORED FORCE (LBS)	MAX CSI (LC)
8- 3	-24 / 21	0.01 (4)
8- 4	-4 / 3	0.00 (4)
7- 4	-20 / 17	0.01 (4)
2- 8	0 / 210	0.05 (1)
7- 5	0 / 211	0.05 (1)

DESIGN CRITERIA

SPECIFIED LOADS:

TOP CH.	LL	=	23.3	PSF
	DL	=	3.0	PSF
BOT CH.	LL	=	0.0	PSF
	DL	=	7.0	PSF
TOTAL LOAD		=	33.3	PSF

SPACING = 24.0 IN. C/C

LOADING IN FLAT SECTION BASED ON A SLOPE OF 6.00/12

THIS TRUSS IS DESIGNED FOR RESIDENTIAL OR SMALL BUILDING REQUIREMENTS OF PART 9, NBCC 2010

THIS DESIGN COMPLIES WITH:
- PART 9 OF OBC 2012 , BCBC 2012 , ABC 2014
- CSA 086-09
- TPIC 2011

(55 % OF 27.2 P.S.F. G.S.L. PLUS 8.4 P.S.F. RAIN LOAD) EQUALS 23.3 P.S.F. SPECIFIED ROOF LIVE LOAD

ALLOWABLE DEFL.(LL)= L/360 (0.21")
CALCULATED VERT. DEFL.(LL) = L/ 999 (0.00")
ALLOWABLE DEFL.(TL)= L/360 (0.21")
CALCULATED VERT. DEFL.(TL) = L/ 999 (0.00")

CSI: TC=0.10 (1-2:1) , BC=0.05 (7-8:4) , WB=0.05 (5-7:1) , SSI=0.07 (2-3:1)

DOL LUMBER=1.00 NAIL=1.00 LS BEND=1.10 COMP=1.10 SHEAR=1.10 TENS= 1.10

COMPANION LIVE LOAD FACTOR = 0.50

TRUSS PLATE MANUFACTURER IS NOT RESPONSIBLE FOR QUALITY CONTROL IN THE TRUSS MANUFACTURING PLANT .

NAIL VALUES

PLATE	GRIP(DRY) (PSI) MAX	MIN	SHEAR (PLI) MAX	MIN	SECTION (PLI) MAX	MIN
MT20	618	354	1667	822	2284	1656

PLATE PLACEMENT TOL. = 0.250 inches

PLATE ROTATION TOL. = 5.0 Deg.

JSI GRIP= 0.52 (5) (INPUT = 0.90)
JSI METAL= 0.12 (2) (INPUT = 1.00)

LICENSED PROFESSIONAL ENGINEER
P. M. TREVISAN
100136551
March 16th, 2017
PROVINCE OF ONTARIO

RECEIVED
TOWN OF MILTON
MAR 29, 2017
17-5337
BUILDING DIVISION

KOTT

JOB NAME	TRUSS NAME	QUANTITY	PLY	JOB DESC.	DRWG NO.
PT0317-097	**T94**	**1**	**1**	TRUSS DESC. LECCO RIDGE-BLOCK 344	

KOTT , Stouffville, ON, CGC

Version 8.100 S Feb 9 2017 MiTek Industries, Inc. Thu Mar 16 11:58:40 2017 Page 1
ID:EvTixTQDI5yR1QLotZTBr_yE?HJ-5vfViM8Gpuzw9Br5NWgv1RSD5SKF8if?QfT5h6zaNjD

SCALE = 1:23.0

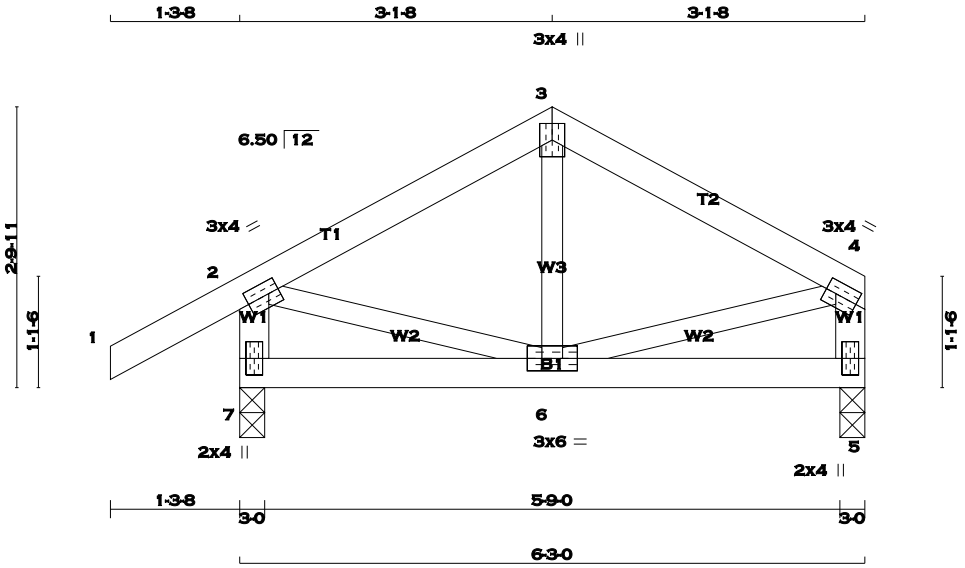

TOTAL WEIGHT = 25 lb
[M][F]

LUMBER
N. L. G. A. RULES

CHORDS	SIZE		LUMBER	DESCR.
1 - 3	2x4	DRY	No.2	SPF
3 - 4	2x4	DRY	No.2	SPF
7 - 2	2x4	DRY	No.2	SPF
5 - 4	2x4	DRY	No.2	SPF
7 - 5	2x4	DRY	No.2	SPF
ALL WEBS EXCEPT	2x3	DRY	No.2	SPF

DRY: SEASONED LUMBER.

PLATES (table is in inches)

JT	TYPE	PLATES	W	LEN	Y	X
2	TMVW-t	MT20	3.0	4.0	1.50	1.25
3	TTW+p	MT20	3.0	4.0		
4	TMVW-t	MT20	3.0	4.0	1.50	1.25
5	BMV1+p	MT20	2.0	4.0		
6	BMWWW-t	MT20	3.0	6.0		
7	BMV1+p	MT20	2.0	4.0		

A SIZE FOR SIZE SUBSTITUTION OF MITEK MII20 WITH TEE-LOK TL20 PLATES IS ALLOWED.

DIMENSIONS, SUPPORTS AND LOADINGS SPECIFIED BY FABRICATOR TO BE VERIFIED BY BUILDING DESIGNER

BEARINGS

JT	FACTORED GROSS REACTION VERT	HORZ	MAXIMUM FACTORED GROSS REACTION DOWN	HORZ	UPLIFT	INPUT BRG IN-SX	REQRD BRG IN-SX
7	402	0	402	0	0	3-0	3-0
5	296	0	296	0	0	3-0	3-0

UNFACTORED REACTIONS

JT	1ST LCASE COMBINED	MAX./MIN. COMPONENT REACTIONS SNOW	LIVE	PERM.LIVE	WIND	DEAD	SOIL
7	280	209 / 0	0 / 0	0 / 0	0 / 0	71 / 0	0 / 0
5	208	146 / 0	0 / 0	0 / 0	0 / 0	62 / 0	0 / 0

BEARING MATERIAL TO BE SPF NO.2 OR BETTER AT JOINT(S) 7, 5

BRACING
TOP CHORD TO BE SHEATHED OR MAX. PURLIN SPACING = 6.25 FT.
MAX. UNBRACED BOTTOM CHORD LENGTH = 10.00 FT. OR RIGID CEILING DIRECTLY APPLIED.

ALL PITCH BREAKS AND PERIMETER CORNER JOINTS MUST BE LATERALLY RESTRAINED.

LOADING
TOTAL LOAD CASES: (4)

CHORDS

MEMB. FR-TO	MAX. FACTORED FORCE (LBS)	FACTORED VERT. LOAD (PLF) FROM	TO	LC1 MAX CSI (LC)	MAX. UNBRAC LENGTH
1- 2	0 / 25	-77.4	-77.4	0.10 (1)	10.00
2- 3	-219 / 0	-77.4	-77.4	0.10 (1)	6.25
3- 4	-219 / 0	-77.4	-77.4	0.10 (1)	6.25
7- 2	-380 / 0	0.0	0.0	0.04 (1)	7.81
5- 4	-274 / 0	0.0	0.0	0.03 (1)	7.81
7- 6	0 / 0	-17.5	-17.5	0.05 (4)	10.00
6- 5	0 / 0	-17.5	-17.5	0.05 (4)	10.00

WEBS

MEMB. FR-TO	MAX. FACTORED FORCE (LBS)	MAX CSI (LC)
6- 3	-34 / 43	0.01 (4)
2- 6	0 / 198	0.04 (1)
6- 4	0 / 198	0.04 (1)

DESIGN CRITERIA

SPECIFIED LOADS:

TOP	CH.	LL	=	23.3	PSF
		DL	=	3.0	PSF
BOT	CH.	LL	=	0.0	PSF
		DL	=	7.0	PSF
TOTAL	LOAD		=	33.3	PSF

SPACING = 24.0 IN. C/C

THIS TRUSS IS DESIGNED FOR RESIDENTIAL OR SMALL BUILDING REQUIREMENTS OF PART 9, NBCC 2010

THIS DESIGN COMPLIES WITH:
- PART 9 OF OBC 2012 , BCBC 2012 , ABC 2014
- CSA 086-09
- TPIC 2011

(55 % OF 27.2 P.S.F. G.S.L. PLUS 8.4 P.S.F. RAIN LOAD) EQUALS 23.3 P.S.F. SPECIFIED ROOF LIVE LOAD

ALLOWABLE DEFL.(LL)= L/360 (0.21")
CALCULATED VERT. DEFL.(LL) = L/ 999 (0.00")
ALLOWABLE DEFL.(TL)= L/360 (0.21")
CALCULATED VERT. DEFL.(TL) = L/ 999 (0.00")

CSI: TC=0.10 (1-2:1) , BC=0.05 (6-7:4) , WB=0.04 (4-6:1) , SSI=0.08 (3-4:1)

DOL LUMBER=1.00 NAIL=1.00 LS BEND=1.10 COMP=1.10 SHEAR=1.10 TENS= 1.10

COMPANION LIVE LOAD FACTOR = 0.50

TRUSS PLATE MANUFACTURER IS NOT RESPONSIBLE FOR QUALITY CONTROL IN THE TRUSS MANUFACTURING PLANT .

NAIL VALUES

PLATE	GRIP(DRY) (PSI) MAX	MIN	SHEAR (PLI) MAX	MIN	SECTION (PLI) MAX	MIN
MT20	618	354	1667	822	2284	1656

PLATE PLACEMENT TOL. = 0.250 inches

PLATE ROTATION TOL. = 5.0 Deg.

JSI GRIP= 0.49 (2) (INPUT = 0.90)
JSI METAL= 0.12 (4) (INPUT = 1.00)

LICENSED PROFESSIONAL ENGINEER
P. M. TREVISAN
100136551
March 16th, 2017
PROVINCE OF ONTARIO

RECEIVED
TOWN OF MILTON
MAR 29, 2017
17-5337
BUILDING DIVISION

KOTT

JOB NAME	TRUSS NAME	QUANTITY	PLY	JOB DESC.	DRWG NO.
PT0317-097	T95	2	1	TRUSS DESC. LECCO RIDGE-BLOCK 344	

KOTT , Stouffville, ON, CGC

Version 8.100 S Feb 9 2017 MiTek Industries, Inc. Thu Mar 16 11:58:40 2017 Page 1
ID:EvTixTQDI5yR1QLotZTBr_yE?HJ-5vfViM8Gpuzw9Br5NWgv1RSB6SFL8hE?QfT5h6zaNjD

SCALE = 1:17.8

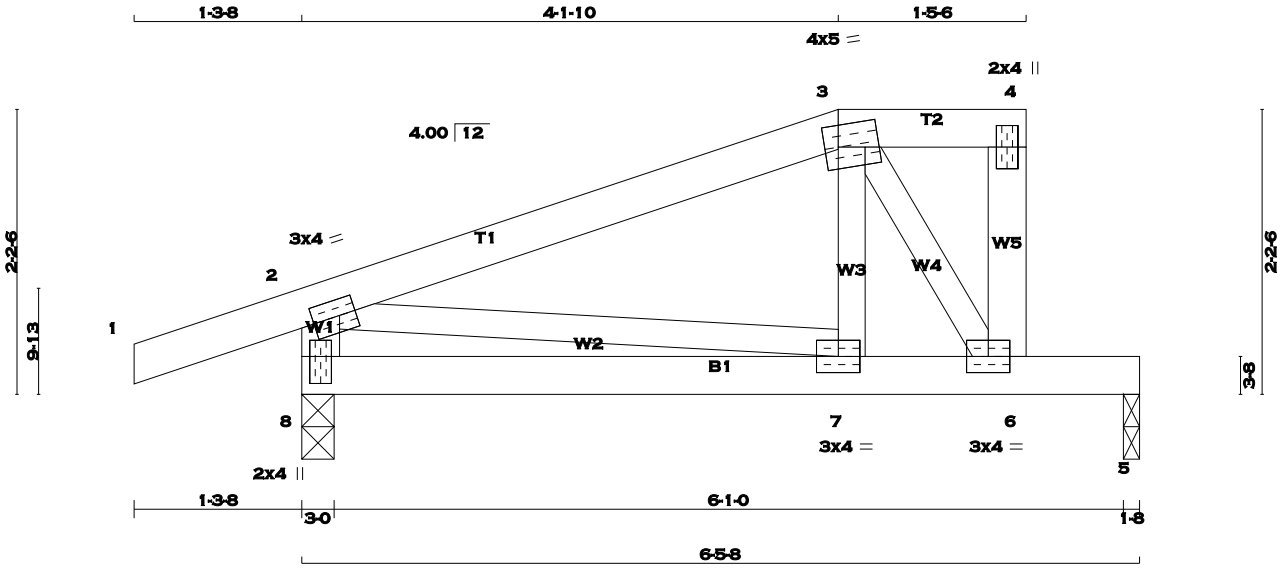

TOTAL WEIGHT = 2 X 24 = 48 lb
[M]

LUMBER
N. L. G. A. RULES

CHORDS	SIZE		LUMBER	DESCR.
1 - 3	2x4	DRY	No.2	SPF
3 - 4	2x4	DRY	No.2	SPF
6 - 4	2x4	DRY	No.2	SPF
8 - 2	2x4	DRY	No.2	SPF
8 - 5	2x4	DRY	No.2	SPF
ALL WEBS EXCEPT	2x3	DRY	No.2	SPF

DRY: SEASONED LUMBER.

PLATES (table is in inches)

JT	TYPE	PLATES	W	LEN	Y	X
2	TMVW-t	MT20	3.0	4.0	1.50	1.50
3	TTWW-m	MT20	4.0	5.0	2.00	1.25
4	TMV+p	MT20	2.0	4.0		
6	BMVW-t	MT20	3.0	4.0		
7	BMWW-t	MT20	3.0	4.0		
8	BMV1+p	MT20	2.0	4.0	2.50	1.00

A SIZE FOR SIZE SUBSTITUTION OF MITEK MII20 WITH TEE-LOK TL20 PLATES IS ALLOWED.

DIMENSIONS, SUPPORTS AND LOADINGS SPECIFIED BY FABRICATOR TO BE VERIFIED BY BUILDING DESIGNER

BEARINGS

JT	FACTORED GROSS REACTION VERT	HORZ	MAXIMUM FACTORED GROSS REACTION DOWN	HORZ	UPLIFT	INPUT BRG IN-SX	REQRD BRG IN-SX
8	410	0	410	0	0	3-0	3-0
5	306	0	306	0	0	1-8	1-8

UNFACTORED REACTIONS

JT	1ST LCASE COMBINED	MAX./MIN. COMPONENT REACTIONS SNOW	LIVE	PERM.LIVE	WIND	DEAD	SOIL
8	285	213 / 0	0 / 0	0 / 0	0 / 0	73 / 0	0 / 0
5	215	150 / 0	0 / 0	0 / 0	0 / 0	65 / 0	0 / 0

BEARING MATERIAL TO BE SPF NO.2 OR BETTER AT JOINT(S) 8, 5

BRACING
TOP CHORD TO BE SHEATHED OR MAX. PURLIN SPACING = 6.25 FT.
MAX. UNBRACED BOTTOM CHORD LENGTH = 10.00 FT. OR RIGID CEILING DIRECTLY APPLIED.

ALL PITCH BREAKS AND PERIMETER CORNER JOINTS MUST BE LATERALLY RESTRAINED.

LOADING
TOTAL LOAD CASES: (4)

CHORDS

MEMB. FR-TO	MAX. FACTORED FORCE (LBS)	FACTORED VERT. LOAD (PLF) FROM	TO	LC1 MAX CSI (LC)	MAX. UNBRAC LENGTH
1- 2	0 / 16	-77.4	-77.4	0.10 (1)	10.00
2- 3	-277 / 0	-77.4	-77.4	0.23 (1)	6.25
3- 4	0 / 0	-77.4	-77.4	0.03 (1)	10.00
6- 4	-56 / 0	0.0	0.0	0.01 (1)	7.81
8- 2	-383 / 0	0.0	0.0	0.04 (1)	7.81
8- 7	0 / 0	-17.5	-17.5	0.08 (4)	10.00
7- 6	0 / 275	-17.5	-17.5	0.36 (1)	10.00
6- 5	0 / 0	-94.9	-94.9	0.32 (1)	10.00

WEBS

MEMB. FR-TO	MAX. FACTORED FORCE (LBS)	MAX CSI (LC)
7- 3	0 / 233	0.05 (1)
3- 6	-454 / 0	0.07 (1)
2- 7	0 / 264	0.06 (1)

DESIGN CRITERIA

SPECIFIED LOADS:

TOP CH.	LL	=	23.3	PSF
	DL	=	3.0	PSF
BOT CH.	LL	=	0.0	PSF
	DL	=	7.0	PSF
TOTAL LOAD		=	33.3	PSF

SPACING = 24.0 IN. C/C

LOADING IN FLAT SECTION BASED ON A SLOPE OF 6.00/12

THIS TRUSS IS DESIGNED FOR RESIDENTIAL OR SMALL BUILDING REQUIREMENTS OF PART 9, NBCC 2010

THIS DESIGN COMPLIES WITH:
- PART 9 OF OBC 2012 , BCBC 2012 , ABC 2014
- CSA 086-09
- TPIC 2011

(55 % OF 27.2 P.S.F. G.S.L. PLUS 8.4 P.S.F. RAIN LOAD) EQUALS 23.3 P.S.F. SPECIFIED ROOF LIVE LOAD

ALLOWABLE DEFL.(LL)= L/360 (0.22")
CALCULATED VERT. DEFL.(LL) = L/ 999 (0.02")
ALLOWABLE DEFL.(TL)= L/360 (0.22")
CALCULATED VERT. DEFL.(TL) = L/ 999 (0.03")

CSI: TC=0.23 (2-3:1) , BC=0.36 (6-7:1) , WB=0.07 (3-6:1) , SSI=0.24 (5-6:1)

DOL LUMBER=1.00 NAIL=1.00 LS BEND=1.10 COMP=1.10 SHEAR=1.10 TENS= 1.10

COMPANION LIVE LOAD FACTOR = 0.50

TRUSS PLATE MANUFACTURER IS NOT RESPONSIBLE FOR QUALITY CONTROL IN THE TRUSS MANUFACTURING PLANT .

NAIL VALUES

PLATE	GRIP(DRY) (PSI) MAX	MIN	SHEAR (PLI) MAX	MIN	SECTION (PLI) MAX	MIN
MT20	618	354	1667	822	2284	1656

PLATE PLACEMENT TOL. = 0.250 inches

PLATE ROTATION TOL. = 5.0 Deg.

JSI GRIP= 0.64 (3) (INPUT = 0.90)
JSI METAL= 0.16 (3) (INPUT = 1.00)

LICENSED PROFESSIONAL ENGINEER
P. M. TREVISAN
100136551
March 16th, 2017
PROVINCE OF ONTARIO

RECEIVED
TOWN OF MILTON
MAR 29, 2017
17-5337
BUILDING DIVISION

KOTT

JOB NAME	TRUSS NAME	QUANTITY	PLY	JOB DESC.	DRWG NO.
PT0317-097	**T96**	**1**	**1**	TRUSS DESC. LECCO RIDGE-BLOCK 344	

KOTT , Stouffville, ON, CGC

Version 8.100 S Feb 9 2017 MiTek Industries, Inc. Thu Mar 16 11:58:40 2017 Page 1
ID:EvTixTQDI5yR1QLotZTBr_yE?HJ-5vfViM8Gpuzw9Br5NWgv1RSCISGl8e2?QfT5h6zaNjD

SCALE = 1:44.0

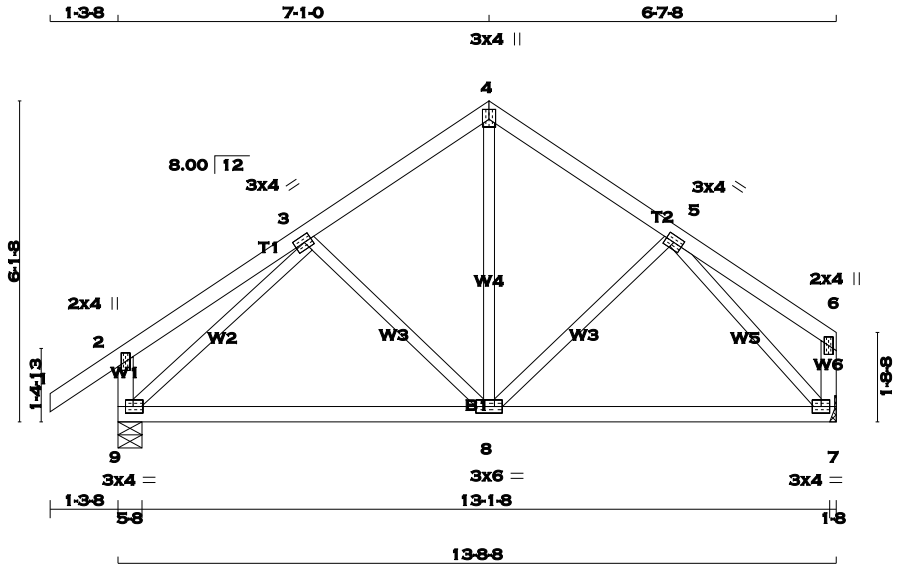

TOTAL WEIGHT = 58 lb

[M][F]

LUMBER

N. L. G. A. RULES

CHORDS	SIZE		LUMBER	DESCR.
1 - 4	2x4	DRY	No.2	SPF
4 - 6	2x4	DRY	No.2	SPF
9 - 2	2x4	DRY	No.2	SPF
7 - 6	2x4	DRY	No.2	SPF
9 - 7	2x4	DRY	No.2	SPF
ALL WEBS EXCEPT	2x3	DRY	No.2	SPF

DRY: SEASONED LUMBER.

PLATES (table is in inches)

JT	TYPE	PLATES	W	LEN	Y	X
2	TMV+p	MT20	2.0	4.0		
3	TMWW-t	MT20	3.0	4.0	1.50	1.75
4	TTW+p	MT20	3.0	4.0	2.25	1.50
5	TMWW-t	MT20	3.0	4.0		
6	TMV+p	MT20	2.0	4.0		
7	BMVW1-t	MT20	3.0	4.0		
8	BMWWW-t	MT20	3.0	6.0		
9	BMVW1-t	MT20	3.0	4.0	1.50	1.75

A SIZE FOR SIZE SUBSTITUTION OF MITEK MII20 WITH TEE-LOK TL20 PLATES IS ALLOWED.

DIMENSIONS, SUPPORTS AND LOADINGS SPECIFIED BY FABRICATOR TO BE VERIFIED BY BUILDING DESIGNER

BEARINGS

JT	FACTORED GROSS REACTION VERT	HORZ	MAXIMUM FACTORED GROSS REACTION DOWN	HORZ	UPLIFT	INPUT BRG IN-SX	REQRD BRG IN-SX
9	756	0	756	0	0	5-8	5-8
7	650	0	650	0	0	HANGER BY OTHERS MIN. SEAT SIZE: 1-8	

UNFACTORED REACTIONS

JT	1ST LCASE COMBINED	MAX./MIN. COMPONENT REACTIONS SNOW	LIVE	PERM.LIVE	WIND	DEAD	SOIL
9	528	383 / 0	0 / 0	0 / 0	0 / 0	145 / 0	0 / 0
7	456	319 / 0	0 / 0	0 / 0	0 / 0	137 / 0	0 / 0

BEARING MATERIAL TO BE SPF NO.2 OR BETTER AT JOINT(S) 9

BRACING

TOP CHORD TO BE SHEATHED OR MAX. PURLIN SPACING = 6.25 FT.
MAX. UNBRACED BOTTOM CHORD LENGTH = 10.00 FT. OR RIGID CEILING DIRECTLY APPLIED.

ALL PITCH BREAKS AND PERIMETER CORNER JOINTS MUST BE LATERALLY RESTRAINED.

LOADING

TOTAL LOAD CASES: (4)

CHORDS

MEMB. FR-TO	MAX. FACTORED FORCE (LBS)	FACTORED VERT. LOAD (PLF) FROM	TO	LC1 MAX CSI (LC)	MAX. UNBRAC LENGTH
1- 2	0 / 29	-77.4	-77.4	0.10 (1)	10.00
2- 3	0 / 17	-77.4	-77.4	0.15 (1)	10.00
3- 4	-498 / 0	-77.4	-77.4	0.12 (1)	6.25
4- 5	-496 / 0	-77.4	-77.4	0.11 (1)	6.25
5- 6	0 / 17	-77.4	-77.4	0.13 (1)	10.00
9- 2	-212 / 0	0.0	0.0	0.02 (1)	7.81
7- 6	-88 / 0	0.0	0.0	0.01 (1)	7.81
9- 8	0 / 510	-17.5	-17.5	0.27 (4)	10.00
8- 7	0 / 465	-17.5	-17.5	0.27 (4)	10.00

WEBS

MEMB. FR-TO	MAX. FACTORED FORCE (LBS)	MAX CSI (LC)
3- 8	-153 / 4	0.06 (1)
8- 4	0 / 317	0.07 (1)
8- 5	-90 / 18	0.04 (1)
9- 3	-712 / 0	0.28 (1)
5- 7	-697 / 0	0.23 (1)

DESIGN CRITERIA

SPECIFIED LOADS:

TOP	CH.	LL	=	23.3	PSF
		DL	=	3.0	PSF
BOT	CH.	LL	=	0.0	PSF
		DL	=	7.0	PSF
TOTAL	LOAD		=	33.3	PSF

SPACING = 24.0 IN. C/C

THIS TRUSS IS DESIGNED FOR RESIDENTIAL OR SMALL BUILDING REQUIREMENTS OF PART 9, NBCC 2010

THIS DESIGN COMPLIES WITH:
- PART 9 OF OBC 2012 , BCBC 2012 , ABC 2014
- CSA 086-09
- TPIC 2011

(55 % OF 27.2 P.S.F. G.S.L. PLUS 8.4 P.S.F. RAIN LOAD) EQUALS 23.3 P.S.F. SPECIFIED ROOF LIVE LOAD

ALLOWABLE DEFL.(LL)= L/360 (0.46")
CALCULATED VERT. DEFL.(LL) = L/ 999 (0.01")
ALLOWABLE DEFL.(TL)= L/360 (0.46")
CALCULATED VERT. DEFL.(TL) = L/ 999 (0.06")

CSI: TC=0.15 (2-3:1) , BC=0.27 (8-9:4) , WB=0.28 (3-9:1) , SSI=0.11 (3-4:1)

DOL LUMBER=1.00 NAIL=1.00 LS BEND=1.10 COMP=1.10 SHEAR=1.10 TENS= 1.10

COMPANION LIVE LOAD FACTOR = 0.50

TRUSS PLATE MANUFACTURER IS NOT RESPONSIBLE FOR QUALITY CONTROL IN THE TRUSS MANUFACTURING PLANT .

NAIL VALUES

PLATE	GRIP(DRY) (PSI) MAX	MIN	SHEAR (PLI) MAX	MIN	SECTION (PLI) MAX	MIN
MT20	618	354	1667	822	2284	1656

PLATE PLACEMENT TOL. = 0.250 inches

PLATE ROTATION TOL. = 5.0 Deg.

JSI GRIP= 0.88 (3) (INPUT = 0.90)
JSI METAL= 0.25 (3) (INPUT = 1.00)

LICENSED PROFESSIONAL ENGINEER
P. M. TREVISAN
100136551
March 16th, 2017
PROVINCE OF ONTARIO

RECEIVED
TOWN OF MILTON
MAR 29, 2017
17-5337
BUILDING DIVISION

KOTT

JOB NAME	TRUSS NAME	QUANTITY	PLY	JOB DESC.	DRWG NO.
PT0317-097	**T97**	**2**	**1**	TRUSS DESC. LECCO RIDGE-BLOCK 344	

KOTT , Stouffville, ON, CGC

Version 8.100 S Feb 9 2017 MiTek Industries, Inc. Thu Mar 16 11:58:41 2017 Page 1
ID:EvTixTQDI5yR1QLotZTBr_yE?HJ-Z6Dtwi9vaB6nnLQHxEB8af?MHse7t5?8eJCfDZzaNjC

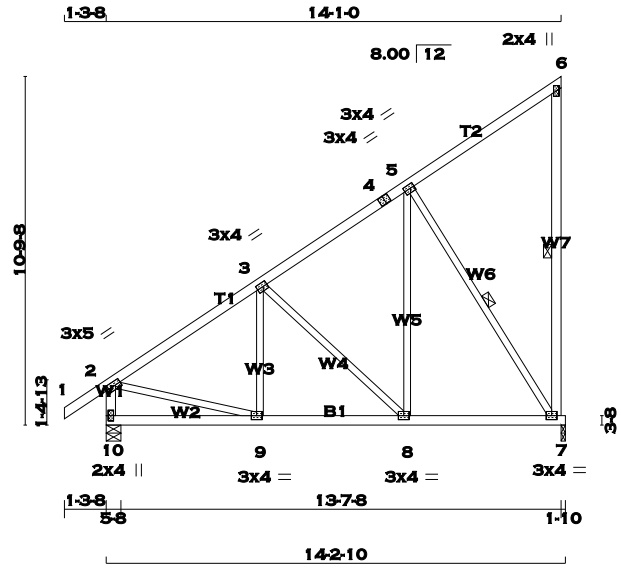

SCALE = 1:71.3

TOTAL WEIGHT = 2 X 74 = 149 lb
[M][F]

LUMBER
N. L. G. A. RULES

CHORDS	SIZE		LUMBER	DESCR.
1 - 4	2x4	DRY	No.2	SPF
4 - 6	2x4	DRY	No.2	SPF
7 - 6	2x4	DRY	No.2	SPF
10 - 2	2x4	DRY	No.2	SPF
10 - 7	2x4	DRY	No.2	SPF
ALL WEBS EXCEPT	2x3	DRY	No.2	SPF

DRY: SEASONED LUMBER.

PLATES (table is in inches)

JT	TYPE	PLATES	W	LEN	Y	X
2	TMVW-t	MT20	3.0	5.0	1.50	2.00
3	TMWW-t	MT20	3.0	4.0	1.50	1.50
4	TS-t	MT20	3.0	4.0		
5	TMWW-t	MT20	3.0	4.0	1.50	1.50
6	TMV+p	MT20	2.0	4.0		
7	BMVW1-t	MT20	3.0	4.0		
8	BMWW-t	MT20	3.0	4.0		
9	BMWW-t	MT20	3.0	4.0		
10	BMV1+p	MT20	2.0	4.0		

A SIZE FOR SIZE SUBSTITUTION OF MITEK MII20 WITH TEE-LOK TL20 PLATES IS ALLOWED.

DIMENSIONS, SUPPORTS AND LOADINGS SPECIFIED BY FABRICATOR TO BE VERIFIED BY BUILDING DESIGNER

BEARINGS

JT	FACTORED GROSS REACTION VERT	HORZ	MAXIMUM FACTORED GROSS REACTION DOWN	HORZ	UPLIFT	INPUT BRG IN-SX	REQRD BRG IN-SX
7	668	0	668	0	0	1-10	1-10
10	774	0	774	0	0	5-8	5-8

UNFACTORED REACTIONS

JT	1ST LCASE COMBINED	MAX./MIN. COMPONENT REACTIONS SNOW	LIVE	PERM.LIVE	WIND	DEAD	SOIL
7	469	328 / 0	0 / 0	0 / 0	0 / 0	141 / 0	0 / 0
10	541	392 / 0	0 / 0	0 / 0	0 / 0	149 / 0	0 / 0

BEARING MATERIAL TO BE SPF NO.2 OR BETTER AT JOINT(S) 7, 10

BRACING
TOP CHORD TO BE SHEATHED OR MAX. PURLIN SPACING = 6.25 FT.
MAX. UNBRACED BOTTOM CHORD LENGTH = 10.00 FT. OR RIGID CEILING DIRECTLY APPLIED.

ALL PITCH BREAKS AND PERIMETER CORNER JOINTS MUST BE LATERALLY RESTRAINED.

1 - 2x3 SPF No.2 LATERAL BRACE(S) AT 1/ 2 LENGTH OF 6-7, 5-7. DBS = 20-0-0 . CBF = 72 LBS.

DBS = DIAGONAL BRACE SPACING (MAX). CBF = CUMULATIVE BRACING FORCE. FASTEN LATERAL BRACE(S) USING (0.122"X3") SPIRAL NAILS : 1 NAIL FOR 2x3 BRACE(S), 2 FOR 1x4, 2x4, 2x5, 3 FOR 2x6, 4 FOR 2x8, 5 FOR 2x10, AND 6 FOR 2x12.

END VERTICAL(S) MUST BE SHEATHED OR HAVE BRACES AS INDICATED IN THE MAX. UNBRACED LENGTH COLUMN OF THE TABLE BELOW

LOADING
TOTAL LOAD CASES: (4)

CHORDS

MEMB. FR-TO	MAX. FACTORED FORCE (LBS)	FACTORED VERT. LOAD LC1 (PLF) FROM	TO	MAX CSI (LC)	MAX. UNBRAC LENGTH
1- 2	0 / 29	-77.4	-77.4	0.10 (1)	10.00
2- 3	-630 / 0	-77.4	-77.4	0.20 (1)	6.25
3- 4	-380 / 0	-77.4	-77.4	0.18 (1)	6.25
4- 5	-380 / 0	-77.4	-77.4	0.18 (1)	6.25
5- 6	-20 / 0	-77.4	-77.4	0.19 (1)	6.25
7- 6	-149 / 0	0.0	0.0	0.09 (1)	6.25
10- 2	-739 / 0	0.0	0.0	0.08 (1)	7.81
10- 9	0 / 0	-17.5	-17.5	0.08 (4)	10.00
9- 8	0 / 540	-17.5	-17.5	0.13 (1)	10.00
8- 7	0 / 317	-17.5	-17.5	0.11 (4)	10.00

WEBS

MEMB. FR-TO	MAX. FACTORED FORCE (LBS)	MAX CSI (LC)
9- 3	-35 / 64	0.02 (4)
3- 8	-306 / 0	0.21 (1)
8- 5	0 / 298	0.07 (1)
5- 7	-579 / 0	0.29 (1)
2- 9	0 / 554	0.12 (1)

DESIGN CRITERIA

SPECIFIED LOADS:

TOP CH.	LL	=	23.3	PSF
	DL	=	3.0	PSF
BOT CH.	LL	=	0.0	PSF
	DL	=	7.0	PSF
TOTAL LOAD		=	33.3	PSF

SPACING = 24.0 IN. C/C

THIS TRUSS IS DESIGNED FOR RESIDENTIAL OR SMALL BUILDING REQUIREMENTS OF PART 9, NBCC 2010

THIS DESIGN COMPLIES WITH:
- PART 9 OF OBC 2012 , BCBC 2012 , ABC 2014
- CSA 086-09
- TPIC 2011

(55 % OF 27.2 P.S.F. G.S.L. PLUS 8.4 P.S.F. RAIN LOAD) EQUALS 23.3 P.S.F. SPECIFIED ROOF LIVE LOAD

ALLOWABLE DEFL.(LL)= L/360 (0.47")
CALCULATED VERT. DEFL.(LL) = L/ 999 (0.01")
ALLOWABLE DEFL.(TL)= L/360 (0.47")
CALCULATED VERT. DEFL.(TL) = L/ 999 (0.03")

CSI: TC=0.20 (2-3:1) , BC=0.13 (8-9:1) , WB=0.29 (5-7:1) , SSI=0.14 (5-6:1)

DOL LUMBER=1.00 NAIL=1.00 LS BEND=1.10 COMP=1.10 SHEAR=1.10 TENS= 1.10

COMPANION LIVE LOAD FACTOR = 0.50

TRUSS PLATE MANUFACTURER IS NOT RESPONSIBLE FOR QUALITY CONTROL IN THE TRUSS MANUFACTURING PLANT .

NAIL VALUES

PLATE	GRIP(DRY) (PSI) MAX	MIN	SHEAR (PLI) MAX	MIN	SECTION (PLI) MAX	MIN
MT20	618	354	1667	822	2284	1656

PLATE PLACEMENT TOL. = 0.250 inches

PLATE ROTATION TOL. = 0.5 Deg.

JSI GRIP= 0.83 (9) (INPUT = 0.90)
JSI METAL= 0.24 (2) (INPUT = 1.00)

LICENSED PROFESSIONAL ENGINEER
P. M. TREVISAN
100136551
March 16th, 2017
PROVINCE OF ONTARIO

RECEIVED
TOWN OF MILTON
MAR 29, 2017
17-5337
BUILDING DIVISION

KOTT

BEARING ANCHORAGE BY TOE-NAILS FOR LATERAL CAPACITY B37579H1

NAIL TYPE	LENGTH (IN)	DIAMETER (IN)	NAIL LATERAL CAPACITY (LB)	
			S-P-F	D. FIR
COMMON WIRE	3.00	0.144	132	147
	3.25	0.144	132	147
	3.50	0.160	159	177
COMMON SPIRAL	3.00	0.122	97	108
	3.25	0.122	97	108
	3.50	0.152	145	162

NOTES:

1. Rafter and ceiling members may be anchored to top and bottom chords of girder truss by toe-nailing rafter and ceiling members to girder chords provided the reaction does not exceed the lateral capacities in the table. Hangers (specified by others) are required for reactions higher than the maximum toe-nail capacity. Reactions are based on factored loads.

2. Toe nail capacities shown in the table are for **one** toe-nail. For additional toe-nails multiply values in table by the number of toe-nails used. Toe-nail capacities take into account toe-nailing factor J_A in CSA O86-09, section 10.9.4.1.

3. For 9- 3/4 gauge 3.25" common wire gun nails (diameter = 0.120") use 3" common spiral nail values.

4. Maximum number of toe-nails allowed depends on the lumber size & species to be toe-nailed to supporting member and nail diameter, as shown in tables below.

5. Nail values in table are based on the following relative lumber densities: G = 0.42 (SPF), G = 0.49 (D. Fir).

6. Toe-nails shall be driven at approximately 1/3 the nail length from the edge of the joist/truss chord and driven at an angle of 30º to the grain of the member (See next page for nailing on bearing plate).

7. For loads due to **wind** the nail lateral capacity in this table may be multiplied by 1.15 (K_D factor).

8. Lumber must be dry (< 19% moisture content) at the time of nail installation.

9. Nail values in this table comply with CSA O86-09, section 10.9.4

10. This design is not valid after April 30, 2017.

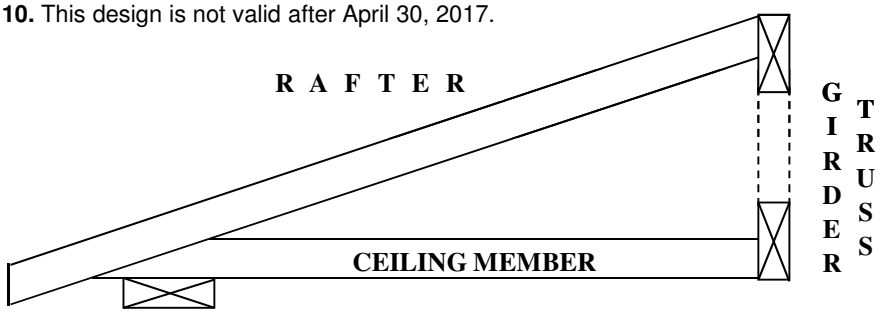

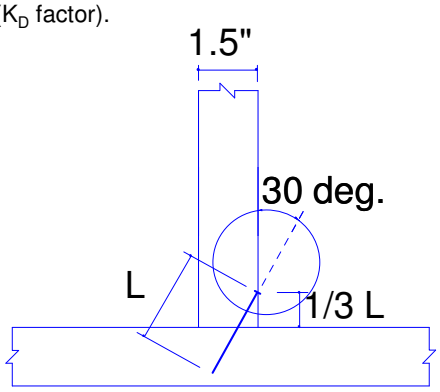

TOE-NAIL INSTALLATION

Nail type	Common wire	Common spiral	Common wire	Common spiral
Nail dia. (in)	0.160	0.152	0.144	0.122
	(3.5" nail)		**(3" and 3.25" nail)**	
LUMBER SIZE	**MAXIMUM NUMBER OF TOE-NAILS**			
2X4 SPF	2	2	3	3
2X4 D. Fir	2	2	2	2
2X6 SPF	4	4	4	5
2X6 D. Fir	3	3	3	4

MiTek Canada Inc
100 Industrial Rd.
Bradford, Ontario L3Z 3G7

RECEIVED
TOWN OF MILTON
MAR 29, 2017
17-5337
BUILDING DIVISION

PEO
Certificate No. 10889485

LICENSED PROFESSIONAL ENGINEER
C. Cordogiannis
90553736
PROVINCE OF ONTARIO

April 24, 2015

BEARING ANCHORAGE BY TOE-NAILS FOR WIND LOADING B37579H2

NAIL TYPE	LENGTH (IN)	DIAMETER (IN)	NAIL WITHDRAWAL CAPACITY (LB)	
			S-P-F	D. FIR
COMMON WIRE	3.00	0.144	30	42
	3.25	0.144	32	45
	3.50	0.160	38	52
COMMON SPIRAL	3.00	0.122	26	36
	3.25	0.122	28	40
	3.50	0.152	36	50

Note: If using truss with D. Fir lumber and S-P-F bearing plate, use values in table for S-P-F.

NOTES:

1. Truss chord, rafter, or ceiling members may be anchored to bearing plate by toe-nails, provided that the actual factored uplift force due to **wind** or **earthquake** load does not exceed the withdrawal capacities in the table. Hangers (specified by others) are required for uplift forces that are higher than the maximum toe-nail withdrawal capacity.
2. Toe nail capacities shown in the table are for **one** toe-nail. For additional toe-nails multiply values in table by the number of toe-nails used. Toe-nail capacities take into account toe-nailing factor J_A in CSA O86-09, section 10.9.5.2.
3. For 9- 3/4 gauge 3.25" common wire gun nails (diameter = 0.120") use 3" common spiral nail values.
4. Maximum number of toe-nails allowed depends on the lumber size & species to be toe-nailed to supporting member and nail diameter, as shown in table above.
5. Nail values in table are based on the following relative lumber densities: G = 0.42(SPF), G = 0.49(D. Fir).
6. Toe-nails shall be driven at approximately 1/3 the nail length from the edge of the joist/truss chord and driven at an angle of 30° to the grain of the member (See drawing on detail B37579H1).
7. Lumber must be dry (< 19% moisture content) at the time of nail installation.
8. Nail values in this table comply with CSA O86-09, section 10.9.5
9. This design is not valid after April 30, 2017

Toe-nailing on 2x6 Bearing Plate

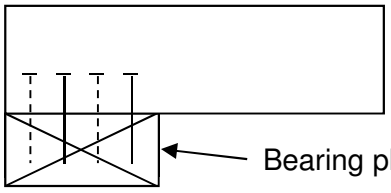

Elevation view

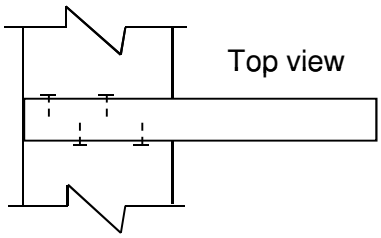

Top view

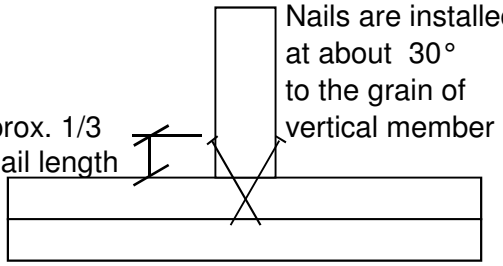

Toe-nailing viewed from end of joist or truss

Toe-nailing on 2x4 Bearing Plate

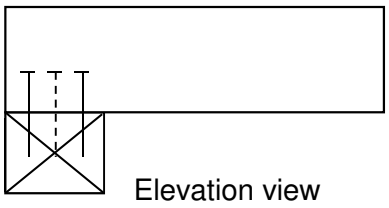

Elevation view

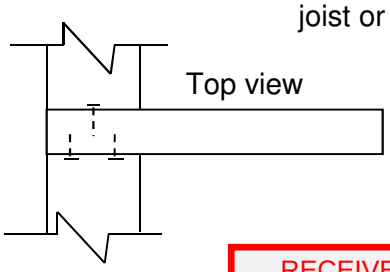

Top view

MiTek Canada Inc
100 Industrial Rd.
Bradford, Ontario L3Z 3G7

RECEIVED
TOWN OF MILTON
MAR 29, 2017
17-5337
BUILDING DIVISION

PEO
Certificate No. 10889485

LICENSED PROFESSIONAL ENGINEER
C. Cordogiannis
90553736
PROVINCE OF ONTARIO

April 24, 2015

JOB NAME	JOB DESC.	DRAWING NO.
DETAILS	HIP END FRAMING — LEGACY RIDGE-BLOCK 344	B37579J — EMC JOB: P10317-097

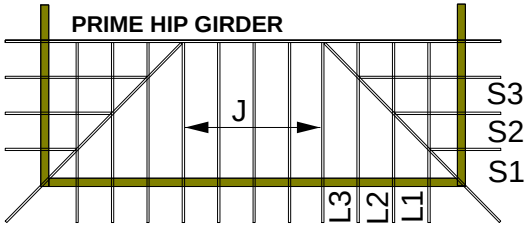

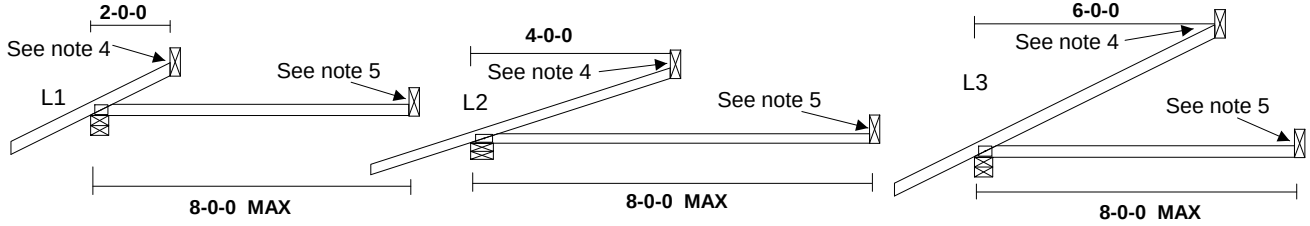

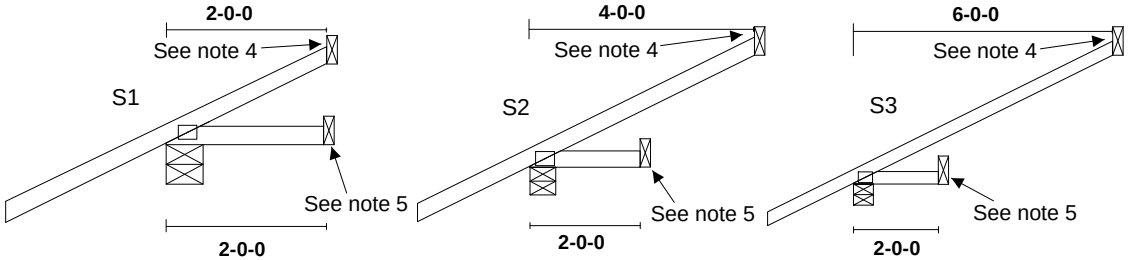

DETAIL "A"

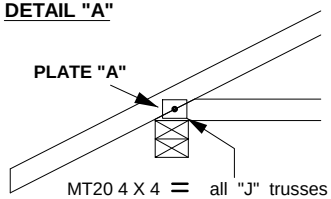

DETAIL "B"

RAISED HEEL

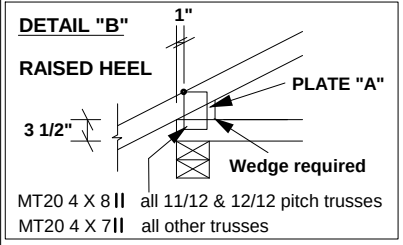

DETAIL "C"

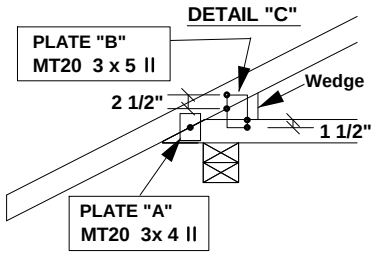

CANTILEVER DETAIL "C"

SLOPE	MAX CANTILEVER	PLATE "B"	WEDGE SIZE
3/12	17"	3 X 5	2 X 3
4/12	14"	3 X 5	2 X 3
5/12	12"	3 X 5	2 X 4
6/12	10"	3 X 5	2 X 4
7/12	9"	3 X 5	2 X 6
8/12	8.5"	3 X 5	2 X 6
9/12	8"	3 X 5	2 X 6
10/12	7.5"	3 X 5	2 X 6

"J"

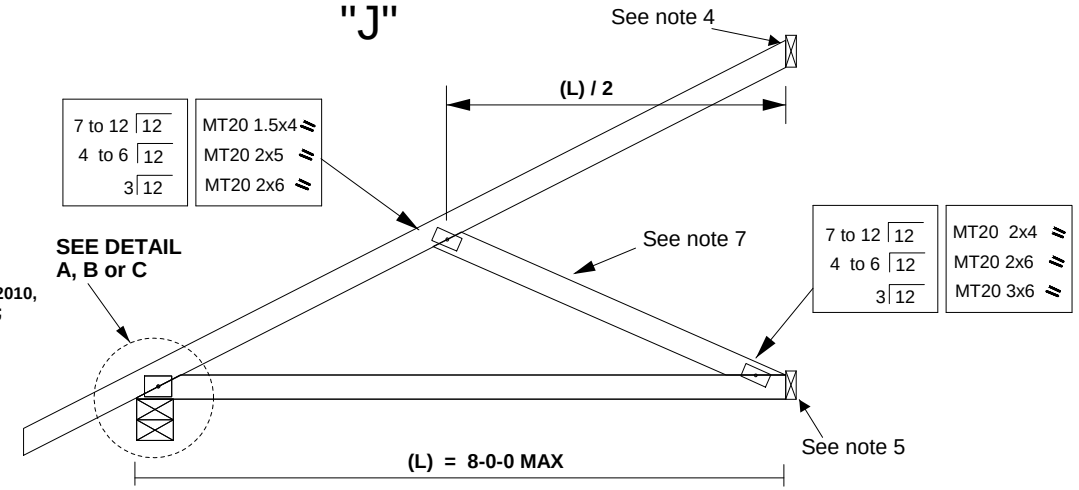

NOTES:

1. ALL LUMBER SHALL BE 2x4 SPF OR D. Fir No. 2 DRY OR BETTER.
2. THIS TRUSS IS DESIGNED FOR HOUSING AND SMALL BUILDING REQUIREMENTS OF PART 9 NBCC 2010, WHERE GROUND SNOW LOAD IS 60.0 PSF OR LESS AND RAIN LOAD DOES NOT EXCEED 12.53 PSF; TOP CHORD DEAD LOAD IS 6 PSF OR LESS; BC LIVE LOAD IS 0 PSF AND BC DEAD LOAD IS 7 PSF.
3. HIP RAFTER DESIGN SHALL CONFORM TO SECTION 9.23.14.6 OF NBCC 2010.
4. FASTEN HIGH END OF RAFTERS USING MITEK CANADA INC. "BEARING ANCHORAGE BY TOE-NAILS FOR LATERAL CAPACITY" STANDARD DETAIL B37579H1.
5. FASTEN RIGHT END OF CEILING USING MITEK CANADA INC. "BEARING ANCHORAGE BY TOE-NAILS FOR LATERAL CAPACITY" STANDARD DETAIL B37579H1.
6. OVERHANG LENGTH SHALL NOT EXCEED 2 FT.
7. WHEN SETBACK IS 6 FT OR LESS, DIAGONAL WEB MAY BE OMITTED AND HIGH END OF TOP CHORD SHALL BE CONNECTED AS PER NOTE 4.
8. ALL PLATES SPECIFIED ARE PRESSED INTO BOTH FACES OF THE TRUSS.
9. MITEK REFERENCE PAGE MII-7473C FORMS AN INTEGRAL PART OF THIS DETAIL.
10. THIS DETAIL IS NOT VALID AFTER APRIL 30, 2017

MiTek Canada, Inc.
100 Industrial Rd.
Bradford, Ontario, L3Z 3G7

PEO
Certificate No. 10889485

LICENSED PROFESSIONAL ENGINEER
C. Cordogiannis
90553736
PROVINCE OF ONTARIO

RECEIVED
TOWN OF MILTON
MAR 29, 2017
17-5337
BUILDING DIVISION

April 24, 2015

STANDARD GABLE END DETAIL

LECCO RIDGE-BLOCK 344

DRAWING NO.: ENG 103 - P70317-097 **B37579K**

MINIMUM ROOF PITCH: 2/12

MAXIMUM ROOF PITCH: 12/12

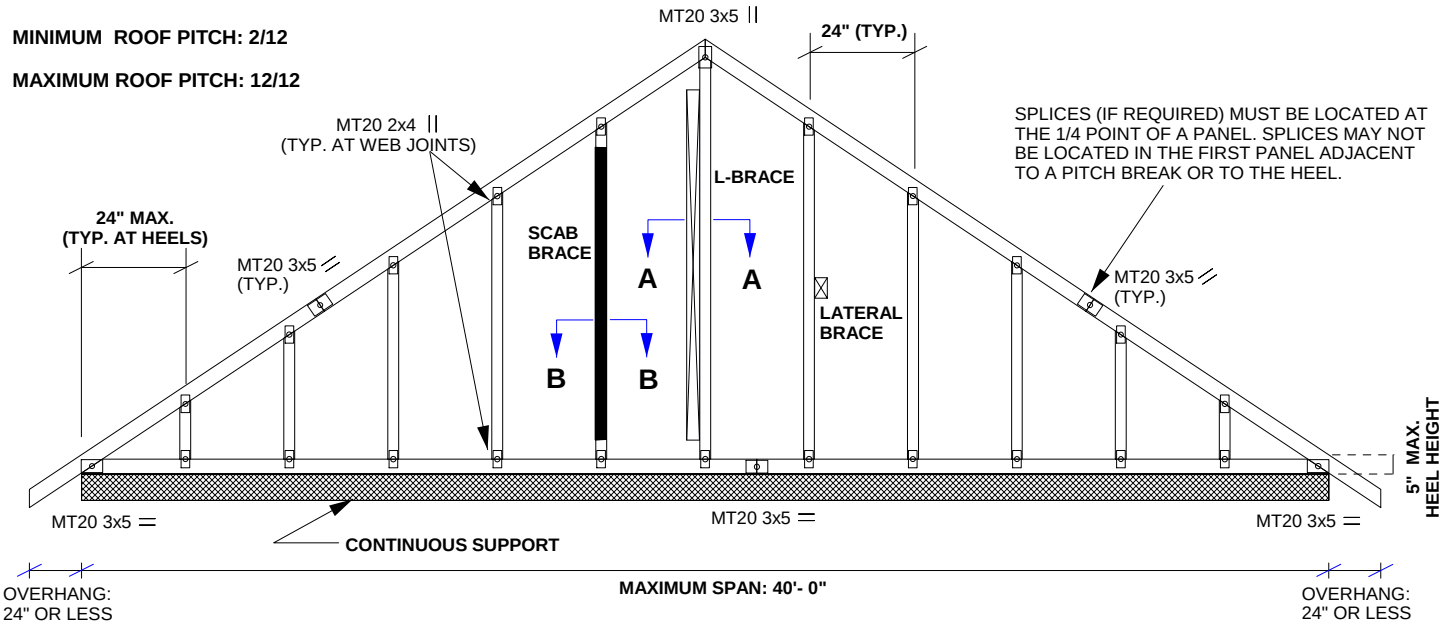

LUMBER

TOP CHORD:	**2 X 4 No. 2 DRY SPF or D- Fir**
BOTTOM CHORD:	**2 X 3 or 2 X 4 No. 2 DRY SPF or D- Fir**
GABLE WEB:	**2 X 3 or 2 X 4 No. 2 DRY SPF or D- Fir**

PLATES

JOINT	PLATES
HEELS	MT20 3 X 5
PEAK	MT20 3 X 5
TC SPLICES	MT20 3 X 5
BC SPLICES	MT20 3 X 5
WEB JOINTS	MT20 2 X 4

DESIGN CRITERIA

TOP CHORD LL = 60.0 PSF OR LESS
TOP CHORD DL = 6.0 PSF OR LESS
BOTTOM CHORD LL = 0 PSF
BOTTOM CHORD DL = 7.0 PSF

TOTAL LOAD = 73.0 PSF OR LESS

BRACING

TOP CHORD TO BE SHEATHED OR MAX. PURLIN SPACING = 2 FT.
MAX. UNBRACED BOTTOM CHORD LENGTH = 10 FT. OR RIGID CEILING DIRECTLY APPLIED.
WEBS MUST BE LATERALLY BRACED, SCAB BRACED OR L-BRACED AS INDICATED IN TABLE BELOW:

WEB LENGTH (L)	SCAB BRACE	L-BRACE	LATERAL BRACE
L < 6 FT.	NOT REQUIRED	NOT REQUIRED	NOT REQUIRED
6 FT. < L < 12 FT.	REQUIRED	2x4 L-BRACE	1 LATERAL AT 1/2 LENGTH OF WEB

SCAB BRACE DETAIL

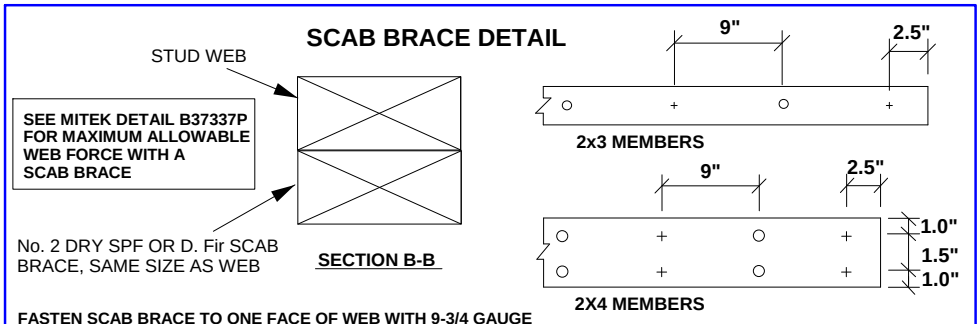

FASTEN SCAB BRACE TO ONE FACE OF WEB WITH 9-3/4 GAUGE 0.122" X 3" COMMON SPIRAL NAILS SPACED @ 9" C/C (MAX) WITH 2.5" MINIMUM END DISTANCE. SCAB BRACE MUST COVER 90% OF WEB LENGTH. DRIVE NAILS ALTERNATELY FROM FRONT AND BACK FACES.

+ NAIL FROM FRONT FACE
o NAIL FROM BACK FACE

CANTILEVER DETAIL

Note: Gable end may be cantilevered up to 6 inches past end wall as shown. Gable end to be continuously supported by 2x4 SPF No.2 (DRY) members at 12" o.c. along the bottom chord. Roof design loads shall not exceed the loading shown above.

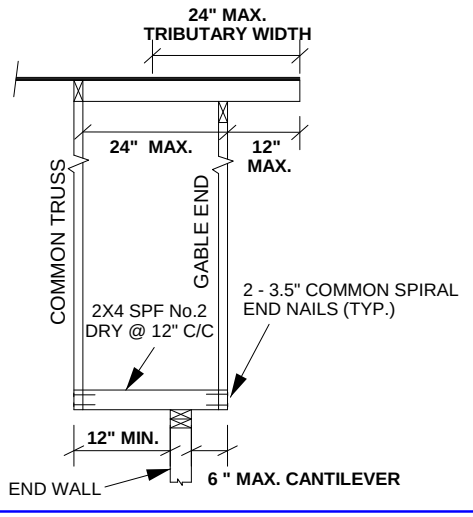

L-BRACE DETAIL

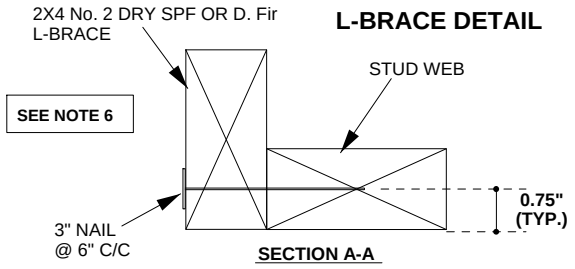

FASTEN L-BRACE TO NARROW EDGE OF WEB WITH ONE ROW OF 9-3/4 GAUGE 0.122" X 3" COMMON SPIRAL NAILS SPACED AT 6" C/C WITH 3" MINIMUM END DISTANCE. BRACE MUST COVER 90% OF WEB LENGTH.

PEO
Certificate No. 10889485

LICENSED PROFESSIONAL ENGINEER
C. Cordogiannis
90553736
PROVINCE OF ONTARIO

NOTES:

1. **Gable studs are spaced at 24" C/C (max.) with a max. length of 12 ft.**
2. **All plates specified are MiTek MT20, centered at each joint, and pressed into both faces of truss.**
3. **Truss spacing is 24" C/C, maximum.**
4. **Gable truss is designed for continuous support. Bearing material must be of the same species as chord member and of grade No. 2 or better.**
5. **This truss requires rigid sheathing attached to exposed face.**
6. **2x3 or 2x4 T-braces shown for gable webs in the MiTek engineering drawings may be replaced by a 2x4 L-brace as shown above.**
7. **This truss is designed for residential or small building requirements, conforming to Part 9, NBCC 2010.**
8. **This detail is not valid after April 30, 2017.**

RECEIVED
TOWN OF MILTON
MAR 29, 2017
17-5337
BUILDING DIVISION

April 24, 2015

MiTek Canada, Inc.
100 Industrial Rd.
Bradford, Ontario, L3Z 3G7