TOWN OF MILTON
PLANNING AND DEVELOPMENT
BUILDING PERMIT: 17-5327
BUILDING: REVIEWED
SCOTT SHERRIFFS APR 25, 2017
PLANS EXAMINER DATE
Neither the issuance of a permit nor carrying out of inspections by the Town of Milton relives the owner from full responsibility for compliance with the provisions of the Ontario Building Code Act and the Ontario Building Code, both as amended, as well as other applicable statutes and regulations of the Province on Ontario, By-laws of the Region of Halton and Town of Milton

RECEIVED
TOWN OF MILTON
MAR 29, 2017
17-5327
BUILDING DIVISION

KOTT

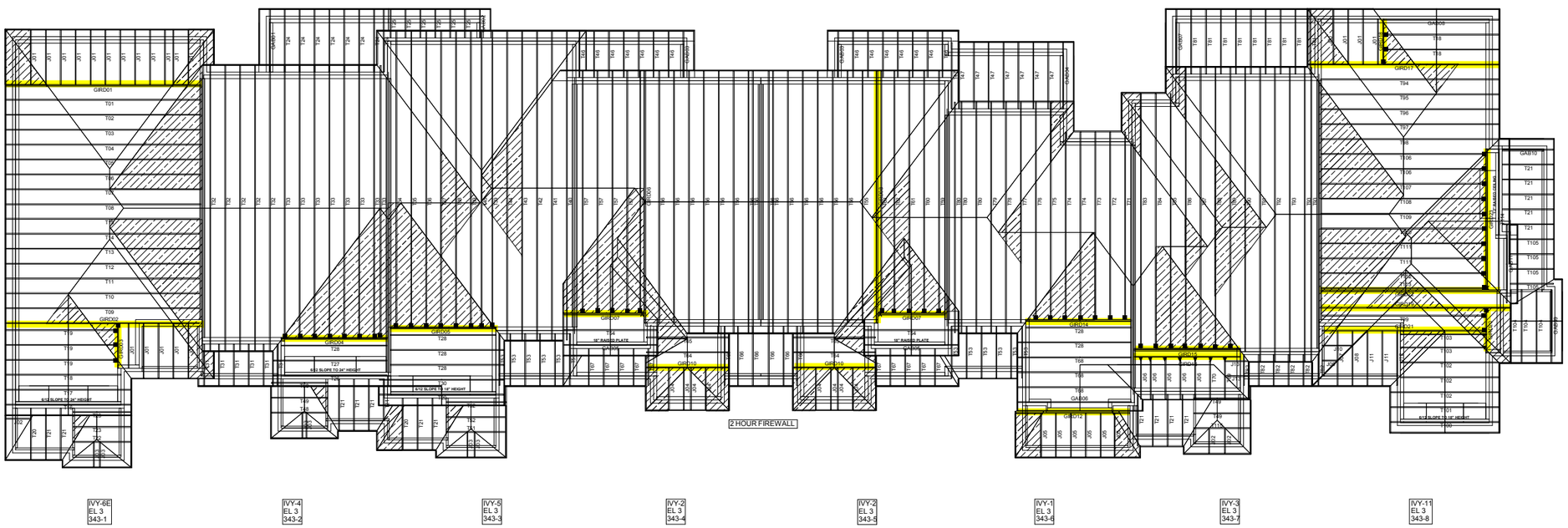

TOP OF ALL PORCH BEAMS
AT 8' 7 1/4 A.F.F.

UNDERSIDE OF SOFFIT
FOR PORCHES AT
8' 6" A.F.F.

GARAGE WALL PLATES
AT 9' 1 2/16" A.F.F.

PARTY WALLS TO BE
FRAMED ON SITE A.P.P.

HANGER LEGEND:

▼ LUS24 ■ LJS26DS
● HGUS26 ╳ HGUS26-2

CONVENTIONAL
FRAMING BY OTHERS

SIZE AND LOCATION OF CONVENTIONAL FRAMING IS APPROXIMATE. ALL AREAS MAY NOT BE SHOWN. REFER TO ARCHITECTURAL PLANS FOR DETAILS.

ALL CONVENTIONAL FRAMING TO CONFORM WITH PART 9 OF THE O.B.C
ROOF RAFTERS THAT CROSS MEET OVER TRUSSES TO BE 2x4 S.P.F. @ 24"O/C WITH A 2x4 VERTICAL POST TO THE TRUSS UNDERNEATH EACH CROSS POINT. VERTICAL POST LONGER THAN 6' TO HAVE LATERAL BRACING SO THAT THE DISTANCE BETWEEN END POINT AND BETWEEN ROWS OF BRACING DOES NOT EXCEED 6'.

Model: **BLOCK 343**
Customer: GREENPARK
Project: LECCO RIDGE
Location: MILTON
Date: 3/15/2017 Drawn by: BB

ENGINEERING NOTE PAGE (ENP-1)
PLEASE READ PRIOR TO INSTALLATION

RESPONSIBILITIES

THIS DESIGN IS FOR AN INDIVIDUAL BUILDING COMPONENT AND HAS BEEN BASED ON INFORMATION PROVIDED BY THE DESIGN OFFICE OF KOTT LUMBER. THE UNDERSIGNED ENGINEER DISCLAIMS ANY RESPONSIBILITY FOR DAMAGES AS A RESULT OF FAULTY OR INCORRECT INFORMATION, SPECIFICATION AND/OR DESIGNS FURNISHED TO THE ENGINEER. THE UNDERSIGNED ENGINEER IS ONLY RESPONSIBLE FOR THE STRUCTURAL INTEGRITY OF THIS BUILDING COMPONENT FOR THE CONDITIONS AND LOADS SHOWN ON THIS DRAWING. THE STRUCTURAL INTEGRITY OF THE BUILDING AND THE VERIFICATION OF THE DIMENSIONS AND THE DESIGN LOADS USED ARE THE RESPONSIBILITY OF THE BUILDING DESIGNER.

TRUSSES ARE DESIGNED IN CONFORMANCE WITH THE RELEVANT SECTIONS OF THE NATIONAL BUILDING CODE OF CANADA OR THE CANADIAN CODE FOR FARM BUILDINGS, WHICHEVER APPLIES TO THE BUILDING TYPE INDICATED ON THE DRAWING

IT IS THE RESPONSIBILITY OF KOTT LUMBER TO ENSURE THAT TRUSSES ARE MANUFACTURED IN CONFORMANCE WITH THESE DESIGNS AND WITH THE SPECIFICATIONS OUTLINED BELOW. THE UNDERSIGNED ENGINEER IS NOT RESPONSIBLE FOR QUALITY CONTROL IN THE TRUSS MANUFACTURING PLANT.

USE AND OCCUPANCY

- The building is of the type indicated on the drawing

LOADING

- The truss loading intensity and distribution as well as load transfer mechanism is that indicated on the drawing
- No buildings, trees, parapets or other projections higher than the roof for which the trusses are used are located within a distance less than ten (10) times the difference in height, or five metres (16 ft) whichever is greater, unless the drawing indicates that the snow drifting has been taken into account

HANDLING, INSTALLATION AND BRACING

- The trusses must be handled and installed by a qualified professional as per the supplied document titled *Information for Truss Installers* and the BCSI-B1 and BCSI-B3 Summary Sheets
- The compression chords are laterally braced by continuous rigid diaphragm sheathing or as specified on the drawing
- Temporary and permanent bracing must be installed as indicated on the truss drawing and according to the BCSI-B1 and BCSI-B3 Summary Sheets. Bracing for the lateral stability of the truss is to be provided by the building designer
- **It is recommended that a Professional Engineer's advice be obtained for the bracing of trusses spanning more than 12.37m (40'-7")**

SUPPORTS

- The trusses are to be supported at the bearing points indicated and anchored to the supports where considered necessary by the designer of the overall structure
- Bearing sizes shown are the minimum required to prevent crushing of the truss members and do not necessarily take into account stability of the overall building structure
- Elevation of bearings must be carefully checked and shimmed to alignment for solid bearings
- Adequate wood truss bearing is the responsibility of the building designer.

DIMENSIONS

- Geometry of the truss and dimensions indicated on the drawing are identical to those of the installed truss.

WHERE CONTINUOUS LATERAL BRACING IS REQUIRED FOR WEBS BUT CAN NOT BE PROVIDED SUBSTITUTE EACH WITH ONE SPF #2 2" X 4" T-BRACE COVERING 90% OF WEB LENGTH AND FASTENED TO EDGE OF WEB USING 3 1/4" SPIRAL NAILS @ 6" C/C

RECEIVED
TOWN OF MILTON
MAR 29, 2017
17-5327
BUILDING DIVISION

01/29/2013

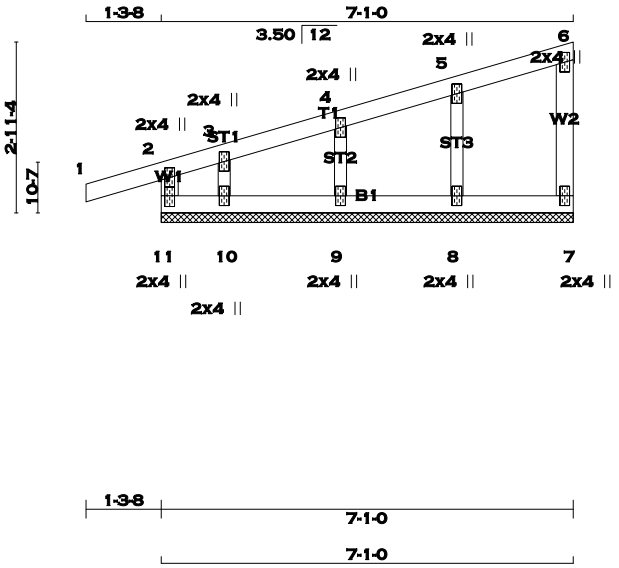

SCALE = 1:39.6

TOTAL WEIGHT = 24 lb [M]

LUMBER

N. L. G. A. RULES

CHORDS	SIZE		LUMBER	DESCR.
11 - 2	2x4	DRY	No.2	SPF
1 - 6	2x4	DRY	No.2	SPF
7 - 6	2x4	DRY	No.2	SPF
11 - 7	2x4	DRY	No.2	SPF
ALL WEBS	2x3	DRY	No.2	SPF
ALL GABLE WEBS	2x3	DRY	No.2	SPF

DRY: SEASONED LUMBER.

GABLE STUDS SPACED AT 2-0-0 OC.

PLATES (table is in inches)

JT	TYPE	PLATES	W	LEN	Y	X
2	TMV+p	MT20	2.0	4.0		
3, 4, 5						
3	TMW+w	MT20	2.0	4.0		
6	TMV+p	MT20	2.0	4.0		
7	BMV1+p	MT20	2.0	4.0		
8, 9, 10						
8	BMW1+w	MT20	2.0	4.0		
11	BMV1+p	MT20	2.0	4.0	2.25	1.00

A SIZE FOR SIZE SUBSTITUTION OF MITEK MII20 WITH TEE-LOK TL20 PLATES IS ALLOWED.

DIMENSIONS, SUPPORTS AND LOADINGS SPECIFIED BY FABRICATOR TO BE VERIFIED BY BUILDING DESIGNER

BEARINGS

THIS TRUSS DESIGNED FOR CONTINUOUS BEARINGS.

THIS TRUSS REQUIRES RIGID SHEATHING ON EXPOSED FACE.

BEARING MATERIAL TO BE SPF NO.2 OR BETTER AT JOINT(S)

BRACING

TOP CHORD TO BE SHEATHED OR MAX. PURLIN SPACING = 6.25 FT.
MAX. UNBRACED BOTTOM CHORD LENGTH = 10.00 FT. OR RIGID CEILING DIRECTLY APPLIED.

ALL PITCH BREAKS AND PERIMETER CORNER JOINTS MUST BE LATERALLY RESTRAINED.

LOADING

TOTAL LOAD CASES: (4)

CHORDS

MEMB. FR-TO	MAX. FACTORED FORCE (LBS)	FACTORED VERT. LOAD (PLF) FROM	TO	LC1 CSI (LC)	MAX UNBRAC LENGTH
11- 2	-191 / 0	0.0	0.0	0.03 (1)	7.81
1- 2	0 / 14	-77.4	-77.4	0.10 (1)	10.00
2- 3	-29 / 0	-77.4	-77.4	0.07 (1)	6.25
3- 4	-12 / 0	-77.4	-77.4	0.04 (1)	6.25
4- 5	-9 / 0	-77.4	-77.4	0.04 (1)	10.00
5- 6	-8 / 0	-77.4	-77.4	0.04 (1)	10.00
7- 6	-69 / 0	0.0	0.0	0.02 (1)	7.81
11-10	0 / 16	-17.5	-17.5	0.03 (1)	10.00
10- 9	0 / 13	-17.5	-17.5	0.01 (4)	10.00
9- 8	0 / 9	-17.5	-17.5	0.02 (4)	10.00
8- 7	0 / 6	-17.5	-17.5	0.02 (4)	10.00

WEBS

MEMB. FR-TO	MAX. FACTORED FORCE (LBS)	MAX CSI (LC)
8- 5	-164 / 0	0.03 (1)
9- 4	-162 / 0	0.02 (1)
10- 3	-66 / 0	0.01 (1)

DESIGN CRITERIA

SPECIFIED LOADS:

TOP	CH.	LL	=	23.3	PSF
		DL	=	3.0	PSF
BOT	CH.	LL	=	0.0	PSF
		DL	=	7.0	PSF
TOTAL	LOAD		=	33.3	PSF

SPACING = 24.0 IN. C/C

THIS TRUSS IS DESIGNED FOR RESIDENTIAL OR SMALL BUILDING REQUIREMENTS OF PART 9, NBCC 2010

THIS DESIGN COMPLIES WITH:
- PART 9 OF OBC 2012 , BCBC 2012 , ABC 2014
- CSA 086-09
- TPIC 2011

DESIGN ASSUMPTIONS
-OVERHANG NOT TO BE ALTERED OR CUT OFF.

(55 % OF 27.2 P.S.F. G.S.L. PLUS 8.4 P.S.F. RAIN LOAD) EQUALS 23.3 P.S.F. SPECIFIED ROOF LIVE LOAD

CSI: TC=0.10 (1-2:1) , BC=0.03 (10-11:1) , WB=0.03 (5-8:1) , SSI=0.08 (1-2:1)

DOL LUMBER=1.00 NAIL=1.00 LS BEND=1.10 COMP=1.10 SHEAR=1.10 TENS= 1.10

COMPANION LIVE LOAD FACTOR = 0.50

TRUSS PLATE MANUFACTURER IS NOT RESPONSIBLE FOR QUALITY CONTROL IN THE TRUSS MANUFACTURING PLANT .

NAIL VALUES

PLATE	GRIP(DRY) (PSI) MAX	MIN	SHEAR (PLI) MAX	MIN	SECTION (PLI) MAX	MIN
MT20	618	354	1667	822	2284	1656

PLATE PLACEMENT TOL. = 0.250 inches

PLATE ROTATION TOL. = 5.0 Deg.

JSI GRIP= 0.10 (2) (INPUT = 0.90)
JSI METAL= 0.04 (2) (INPUT = 1.00)

LICENSED PROFESSIONAL ENGINEER
P.M. TREVISAN
100136551
March 16th, 2017
PROVINCE OF ONTARIO

RECEIVED
TOWN OF MILTON
MAR 29, 2017
17-5327
BUILDING DIVISION

KOTT

JOB NAME	TRUSS NAME	QUANTITY	PLY	JOB DESC.	DRWG NO.
PT0317-093	GAB02	1	1	TRUSS DESC. LECCO RIDGE-BLOCK 343	ENG JOB: PT0317-093

KOTT , Stouffville, ON, CGC

Version 8.100 S Feb 9 2017 MiTek Industries, Inc. Thu Mar 16 07:54:28 2017 Page 1

ID:EvTixTQDI5yR1QLotZTBr_yE?HJ-56KRaLqbN3_tLUj52KpyCdcIk8dj93kMB5BnRNzaRI9

SCALE = 1:17.3

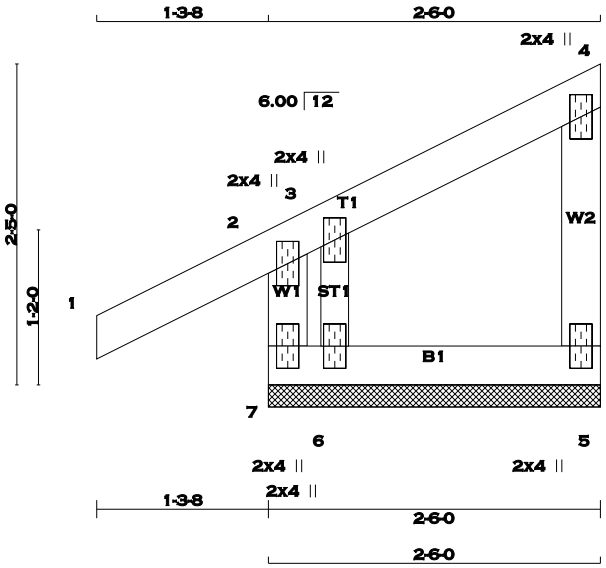

TOTAL WEIGHT = 11 lb [M]

LUMBER

N. L. G. A. RULES

CHORDS	SIZE		LUMBER	DESCR.
7 - 2	2x4	DRY	No.2	SPF
1 - 4	2x4	DRY	No.2	SPF
5 - 4	2x4	DRY	No.2	SPF
7 - 5	2x4	DRY	No.2	SPF
ALL WEBS	2x3	DRY	No.2	SPF
ALL GABLE WEBS	2x3	DRY	No.2	SPF

DRY: SEASONED LUMBER.

GABLE STUDS SPACED AT 2-0-0 OC.

PLATES (table is in inches)

JT	TYPE	PLATES	W	LEN	Y	X
2	TMV+p	MT20	2.0	4.0		
3	TMW+w	MT20	2.0	4.0		
4	TMV+p	MT20	2.0	4.0		
5	BMV1+p	MT20	2.0	4.0		
6	BMW1+w	MT20	2.0	4.0		
7	BMV1+p	MT20	2.0	4.0		

A SIZE FOR SIZE SUBSTITUTION OF MITEK MII20 WITH TEE-LOK TL20 PLATES IS ALLOWED.

DIMENSIONS, SUPPORTS AND LOADINGS SPECIFIED BY FABRICATOR TO BE VERIFIED BY BUILDING DESIGNER

BEARINGS

THIS TRUSS DESIGNED FOR CONTINUOUS BEARINGS.

THIS TRUSS REQUIRES RIGID SHEATHING ON EXPOSED FACE.

PROVIDE ANCHORAGE AT BEARING JOINT 6 FOR 150 LBS FACTORED UPLIFT
BEARING MATERIAL TO BE SPF NO.2 OR BETTER AT JOINT(S)

BRACING

TOP CHORD TO BE SHEATHED OR MAX. PURLIN SPACING = 6.25 FT.
MAX. UNBRACED BOTTOM CHORD LENGTH = 10.00 FT. OR RIGID CEILING DIRECTLY APPLIED.

ALL PITCH BREAKS AND PERIMETER CORNER JOINTS MUST BE LATERALLY RESTRAINED.

LOADING

TOTAL LOAD CASES: (5)

CHORDS MEMB. FR-TO	MAX. FACTORED FORCE (LBS)	FACTORED VERT. LOAD (PLF) FROM	TO	LC1 MAX CSI (LC)	MAX. UNBRAC LENGTH	WEBS MEMB. FR-TO	MAX. FACTORED FORCE (LBS)	MAX CSI (LC)
7- 2	-219 / 0	0.0	0.0	0.02 (5)	7.81	6- 3	-16 / 103	0.02 (5)
1- 2	0 / 23	-77.4	-77.4	0.10 (1)	10.00			
2- 3	-48 / 0	-77.4	-77.4	0.09 (1)	6.25			
3- 4	-12 / 0	-77.4	-77.4	0.03 (1)	6.25			
5- 4	-70 / 0	0.0	0.0	0.02 (1)	7.81			
7- 6	-7 / 9	-17.5	-17.5	0.02 (1)	10.00			
6- 5	-1 / 8	-17.5	-17.5	0.01 (4)	10.00			

CANTILEVER ANALYSIS HAS BEEN CONSIDERED IN THIS DESIGN

DESIGN CRITERIA

SPECIFIED LOADS:

TOP CH.	LL	=	23.3	PSF
	DL	=	3.0	PSF
BOT CH.	LL	=	0.0	PSF
	DL	=	7.0	PSF
TOTAL LOAD		=	33.3	PSF

SPACING = 24.0 IN. C/C

THIS TRUSS IS DESIGNED FOR RESIDENTIAL OR SMALL BUILDING REQUIREMENTS OF PART 9, NBCC 2010

THIS DESIGN COMPLIES WITH:
- PART 9 OF OBC 2012 , BCBC 2012 , ABC 2014
- CSA 086-09
- TPIC 2011

DESIGN ASSUMPTIONS
-OVERHANG NOT TO BE ALTERED OR CUT OFF.

(55 % OF 27.2 P.S.F. G.S.L. PLUS 8.4 P.S.F. RAIN LOAD) EQUALS 23.3 P.S.F. SPECIFIED ROOF LIVE LOAD

CSI: TC=0.10 (1-2:1) , BC=0.02 (6-7:1) , WB=0.02 (3-6:5) , SSI=0.08 (2-3:5)

DOL LUMBER=1.00 NAIL=1.00 LS BEND=1.10 COMP=1.10 SHEAR=1.10 TENS= 1.10

COMPANION LIVE LOAD FACTOR = 0.50

TRUSS PLATE MANUFACTURER IS NOT RESPONSIBLE FOR QUALITY CONTROL IN THE TRUSS MANUFACTURING PLANT .

NAIL VALUES

PLATE	GRIP(DRY) (PSI) MAX	MIN	SHEAR (PLI) MAX	MIN	SECTION (PLI) MAX	MIN
MT20	618	354	1667	822	2284	1656

PLATE PLACEMENT TOL. = 0.250 inches

PLATE ROTATION TOL. = 5.0 Deg.

JSI GRIP= 0.13 (2) (INPUT = 0.90)
JSI METAL= 0.05 (2) (INPUT = 1.00)

LICENSED PROFESSIONAL ENGINEER
P.M. TREVISAN
100136551
March 16th, 2017
PROVINCE OF ONTARIO

RECEIVED
TOWN OF MILTON
MAR 29, 2017
17-5327
BUILDING DIVISION

KOTT

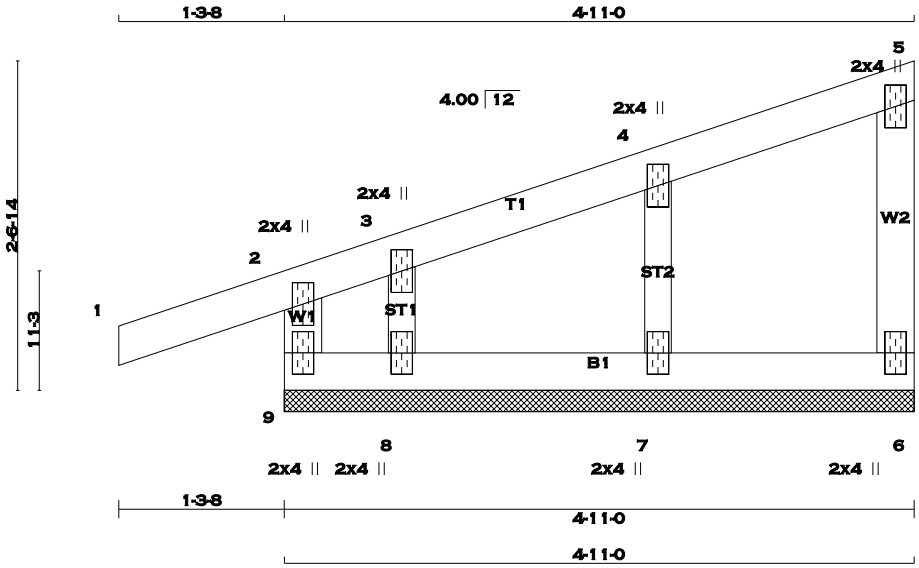

TOTAL WEIGHT = 2 X 18 = 35 lb [M]

LUMBER

N. L. G. A. RULES

CHORDS	SIZE		LUMBER	DESCR.
9 - 2	2x4	DRY	No.2	SPF
1 - 5	2x4	DRY	No.2	SPF
6 - 5	2x4	DRY	No.2	SPF
9 - 6	2x4	DRY	No.2	SPF
ALL WEBS	2x3	DRY	No.2	SPF
ALL GABLE WEBS	2x3	DRY	No.2	SPF

DRY: SEASONED LUMBER.

GABLE STUDS SPACED AT 2-0-0 OC.

PLATES (table is in inches)

JT	TYPE	PLATES	W	LEN	Y	X
2	TMV+p	MT20	2.0	4.0		
3	TMW+w	MT20	2.0	4.0		
4	TMW+w	MT20	2.0	4.0		
5	TMV+p	MT20	2.0	4.0		
6	BMV1+p	MT20	2.0	4.0		
7	BMW1+w	MT20	2.0	4.0		
8	BMW1+w	MT20	2.0	4.0		
9	BMV1+p	MT20	2.0	4.0		

A SIZE FOR SIZE SUBSTITUTION OF MITEK MII20 WITH TEE-LOK TL20 PLATES IS ALLOWED.

DIMENSIONS, SUPPORTS AND LOADINGS SPECIFIED BY FABRICATOR TO BE VERIFIED BY BUILDING DESIGNER

BEARINGS

THIS TRUSS DESIGNED FOR CONTINUOUS BEARINGS.

THIS TRUSS REQUIRES RIGID SHEATHING ON EXPOSED FACE.

BEARING MATERIAL TO BE SPF NO.2 OR BETTER AT JOINT(S)

BRACING

TOP CHORD TO BE SHEATHED OR MAX. PURLIN SPACING = 6.25 FT.
MAX. UNBRACED BOTTOM CHORD LENGTH = 10.00 FT. OR RIGID CEILING DIRECTLY APPLIED.

ALL PITCH BREAKS AND PERIMETER CORNER JOINTS MUST BE LATERALLY RESTRAINED.

LOADING

TOTAL LOAD CASES: (4)

CHORDS

MEMB. FR-TO	MAX. FACTORED FORCE (LBS)	FACTORED VERT. LOAD (PLF) FROM	TO	LC1	MAX CSI (LC)	MAX. UNBRAC LENGTH
9- 2	-194 / 0	0.0	0.0	0.03 (1)		7.81
1- 2	0 / 16	-77.4	-77.4	0.10 (1)		10.00
2- 3	-31 / 0	-77.4	-77.4	0.08 (1)		6.25
3- 4	-8 / 0	-77.4	-77.4	0.04 (1)		10.00
4- 5	-10 / 0	-77.4	-77.4	0.04 (1)		10.00
6- 5	-66 / 0	0.0	0.0	0.01 (1)		7.81
9- 8	0 / 13	-17.5	-17.5	0.03 (1)		10.00
8- 7	0 / 11	-17.5	-17.5	0.02 (4)		10.00
7- 6	0 / 6	-17.5	-17.5	0.02 (4)		10.00

WEBS

MEMB. FR-TO	MAX. FACTORED FORCE (LBS)	MAX CSI (LC)
7- 4	-177 / 0	0.03 (1)
8- 3	-46 / 0	0.01 (1)

DESIGN CRITERIA

SPECIFIED LOADS:

TOP	CH.	LL	=	23.3	PSF
		DL	=	3.0	PSF
BOT	CH.	LL	=	0.0	PSF
		DL	=	7.0	PSF
TOTAL	LOAD		=	33.3	PSF

SPACING = 24.0 IN. C/C

THIS TRUSS IS DESIGNED FOR RESIDENTIAL OR SMALL BUILDING REQUIREMENTS OF PART 9, NBCC 2010

THIS DESIGN COMPLIES WITH:
- PART 9 OF OBC 2012 , BCBC 2012 , ABC 2014
- CSA 086-09
- TPIC 2011

DESIGN ASSUMPTIONS
-OVERHANG NOT TO BE ALTERED OR CUT OFF.

(55 % OF 27.2 P.S.F. G.S.L. PLUS 8.4 P.S.F. RAIN LOAD) EQUALS 23.3 P.S.F. SPECIFIED ROOF LIVE LOAD

CSI: TC=0.10 (1-2:1) , BC=0.03 (8-9:1) , WB=0.03 (4-7:1) , SSI=0.08 (1-2:1)

DOL LUMBER=1.00 NAIL=1.00 LS BEND=1.10 COMP=1.10 SHEAR=1.10 TENS= 1.10

COMPANION LIVE LOAD FACTOR = 0.50

TRUSS PLATE MANUFACTURER IS NOT RESPONSIBLE FOR QUALITY CONTROL IN THE TRUSS MANUFACTURING PLANT .

NAIL VALUES

PLATE	GRIP(DRY) (PSI) MAX	MIN	SHEAR (PLI) MAX	MIN	SECTION (PLI) MAX	MIN
MT20	618	354	1667	822	2284	1656

PLATE PLACEMENT TOL. = 0.250 inches

PLATE ROTATION TOL. = 5.0 Deg.

JSI GRIP= 0.11 (2) (INPUT = 0.90)
JSI METAL= 0.04 (2) (INPUT = 1.00)

LICENSED PROFESSIONAL ENGINEER
P.M. TREVISAN
100136551
March 16th, 2017
PROVINCE OF ONTARIO

RECEIVED
TOWN OF MILTON
MAR 29, 2017
17-5327
BUILDING DIVISION

KOTT

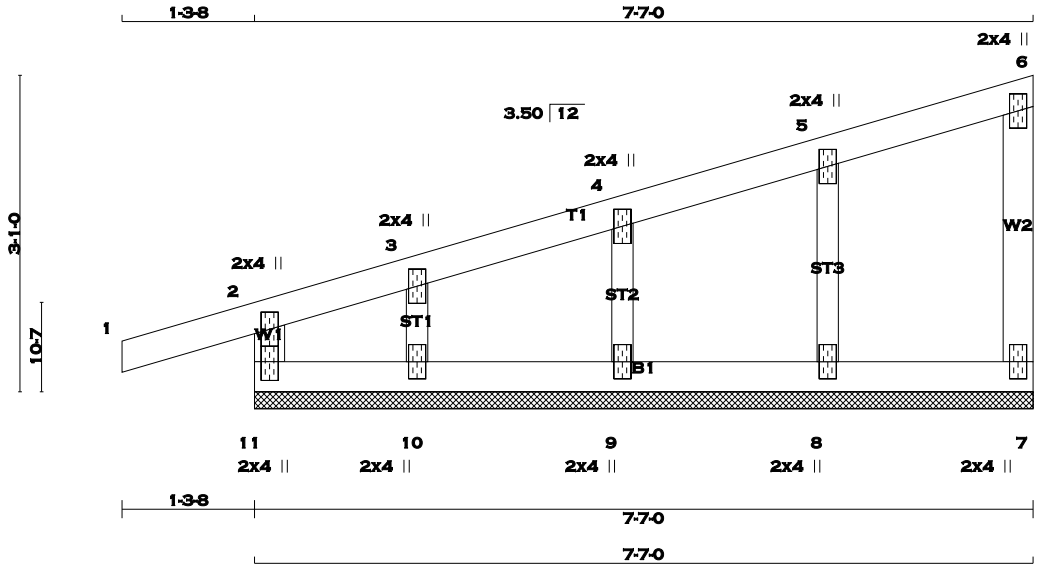

TOTAL WEIGHT = 26 lb [M]

LUMBER

N. L. G. A. RULES

CHORDS	SIZE		LUMBER	DESCR.
11 - 2	2x4	DRY	No.2	SPF
1 - 6	2x4	DRY	No.2	SPF
7 - 6	2x4	DRY	No.2	SPF
11 - 7	2x4	DRY	No.2	SPF
ALL WEBS	2x3	DRY	No.2	SPF
ALL GABLE WEBS	2x3	DRY	No.2	SPF

DRY: SEASONED LUMBER.

GABLE STUDS SPACED AT 2-0-0 OC.

PLATES (table is in inches)

JT	TYPE	PLATES	W	LEN	Y	X
2	TMV+p	MT20	2.0	4.0		
3, 4, 5						
3	TMW+w	MT20	2.0	4.0		
6	TMV+p	MT20	2.0	4.0		
7	BMV1+p	MT20	2.0	4.0		
8, 9, 10						
8	BMW1+w	MT20	2.0	4.0		
11	BMV1+p	MT20	2.0	4.0	2.25	1.00

A SIZE FOR SIZE SUBSTITUTION OF MITEK MII20 WITH TEE-LOK TL20 PLATES IS ALLOWED.

DIMENSIONS, SUPPORTS AND LOADINGS SPECIFIED BY FABRICATOR TO BE VERIFIED BY BUILDING DESIGNER

BEARINGS

THIS TRUSS DESIGNED FOR CONTINUOUS BEARINGS.

THIS TRUSS REQUIRES RIGID SHEATHING ON EXPOSED FACE.

BEARING MATERIAL TO BE SPF NO.2 OR BETTER AT JOINT(S)

BRACING

TOP CHORD TO BE SHEATHED OR MAX. PURLIN SPACING = 6.25 FT.
MAX. UNBRACED BOTTOM CHORD LENGTH = 10.00 FT. OR RIGID CEILING DIRECTLY APPLIED.

ALL PITCH BREAKS AND PERIMETER CORNER JOINTS MUST BE LATERALLY RESTRAINED.

LOADING

TOTAL LOAD CASES: (4)

CHORDS

MEMB. FR-TO	MAX. FACTORED FORCE (LBS)	FACTORED VERT. LOAD (PLF) FROM	TO	LC1 MAX CSI (LC)	MAX. UNBRAC LENGTH
11- 2	-195 / 0	0.0	0.0	0.03 (1)	7.81
1- 2	0 / 14	-77.4	-77.4	0.10 (1)	10.00
2- 3	-25 / 0	-77.4	-77.4	0.07 (1)	6.25
3- 4	-10 / 0	-77.4	-77.4	0.04 (1)	6.25
4- 5	-8 / 0	-77.4	-77.4	0.04 (1)	10.00
5- 6	-8 / 0	-77.4	-77.4	0.04 (1)	10.00
7- 6	-69 / 0	0.0	0.0	0.01 (1)	7.81
11-10	0 / 16	-17.5	-17.5	0.03 (1)	10.00
10- 9	0 / 12	-17.5	-17.5	0.01 (4)	10.00
9- 8	0 / 8	-17.5	-17.5	0.02 (4)	10.00
8- 7	0 / 5	-17.5	-17.5	0.02 (4)	10.00

WEBS

MEMB. FR-TO	MAX. FACTORED FORCE (LBS)	MAX CSI (LC)
8- 5	-164 / 0	0.03 (1)
9- 4	-161 / 0	0.02 (1)
10- 3	-100 / 0	0.01 (1)

DESIGN CRITERIA

SPECIFIED LOADS:

TOP	CH.	LL	=	23.3	PSF
		DL	=	3.0	PSF
BOT	CH.	LL	=	0.0	PSF
		DL	=	7.0	PSF
TOTAL	LOAD		=	33.3	PSF

SPACING = 24.0 IN. C/C

THIS TRUSS IS DESIGNED FOR RESIDENTIAL OR SMALL BUILDING REQUIREMENTS OF PART 9, NBCC 2010

THIS DESIGN COMPLIES WITH:
- PART 9 OF OBC 2012 , BCBC 2012 , ABC 2014
- CSA 086-09
- TPIC 2011

DESIGN ASSUMPTIONS
-OVERHANG NOT TO BE ALTERED OR CUT OFF.

(55 % OF 27.2 P.S.F. G.S.L. PLUS 8.4 P.S.F. RAIN LOAD) EQUALS 23.3 P.S.F. SPECIFIED ROOF LIVE LOAD

CSI: TC=0.10 (1-2:1) , BC=0.03 (10-11:1) , WB=0.03 (5-8:1) , SSI=0.08 (1-2:1)

DOL LUMBER=1.00 NAIL=1.00 LS BEND=1.10 COMP=1.10 SHEAR=1.10 TENS= 1.10

COMPANION LIVE LOAD FACTOR = 0.50

TRUSS PLATE MANUFACTURER IS NOT RESPONSIBLE FOR QUALITY CONTROL IN THE TRUSS MANUFACTURING PLANT .

NAIL VALUES

PLATE	GRIP(DRY) (PSI) MAX	MIN	SHEAR (PLI) MAX	MIN	SECTION (PLI) MAX	MIN
MT20	618	354	1667	822	2284	1656

PLATE PLACEMENT TOL. = 0.250 inches

PLATE ROTATION TOL. = 5.0 Deg.

JSI GRIP= 0.11 (2) (INPUT = 0.90)
JSI METAL= 0.04 (2) (INPUT = 1.00)

LICENSED PROFESSIONAL ENGINEER
P.M. TREVISAN
100136551
March 16th, 2017
PROVINCE OF ONTARIO

RECEIVED
TOWN OF MILTON
MAR 29, 2017
17-5327
BUILDING DIVISION

KOTT

Version 8.100 S Feb 9 2017 MiTek Industries, Inc. Thu Mar 16 07:54:29 2017 Page 1
ID:EvTixTQDI5yR1QLotZTBr_yE?HJ-ZIupnhrD8M6kzeIHc2KBkr9TRYz5uWNVQlxLzpzaRI8

SCALE = 1:34.1

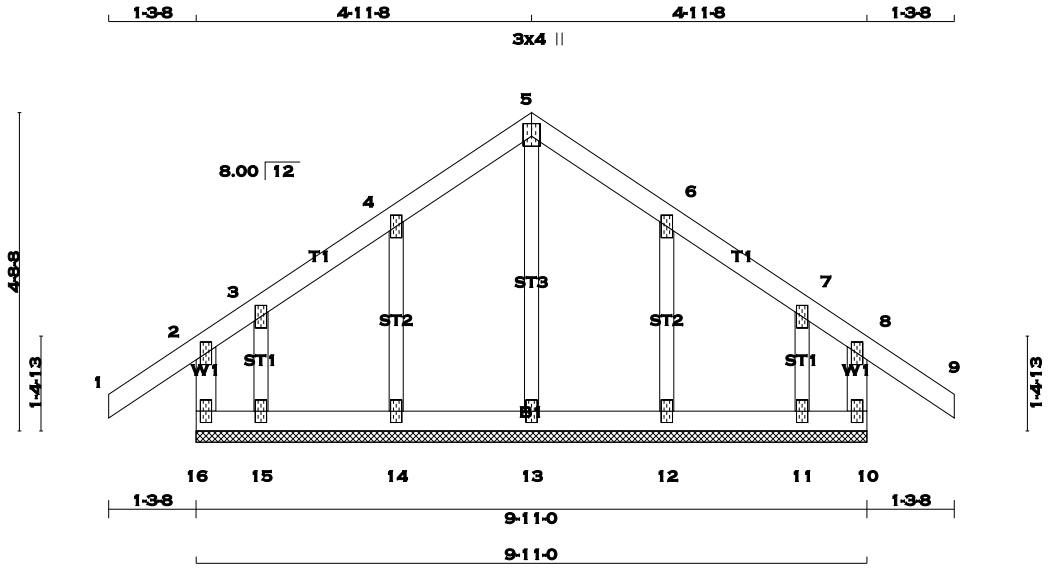

TOTAL WEIGHT = 2 X 41 = 83 lb [M]

LUMBER
N. L. G. A. RULES

CHORDS	SIZE		LUMBER	DESCR.
16 - 2	2x4	DRY	No.2	SPF
1 - 5	2x4	DRY	No.2	SPF
5 - 9	2x4	DRY	No.2	SPF
10 - 8	2x4	DRY	No.2	SPF
16 - 10	2x4	DRY	No.2	SPF
ALL WEBS	2x3	DRY	No.2	SPF
ALL GABLE WEBS	2x3	DRY	No.2	SPF

DRY: SEASONED LUMBER.

GABLE STUDS SPACED AT 2-0-0 OC.

PLATES (table is in inches)

JT	TYPE	PLATES	W	LEN	Y	X
2	TMV+p	MT20	2.0	4.0		
3, 4, 6, 7						
3	TMW+w	MT20	2.0	4.0		
5	TTW+p	MT20	3.0	4.0	2.25	1.50
8	TMV+p	MT20	2.0	4.0		
10	BMV1+p	MT20	2.0	4.0		
11, 12, 13, 14, 15						
11	BMW1+w	MT20	2.0	4.0		
16	BMV1+p	MT20	2.0	4.0		

A SIZE FOR SIZE SUBSTITUTION OF MITEK MII20 WITH TEE-LOK TL20 PLATES IS ALLOWED.

DIMENSIONS, SUPPORTS AND LOADINGS SPECIFIED BY FABRICATOR TO BE VERIFIED BY BUILDING DESIGNER

BEARINGS

THIS TRUSS DESIGNED FOR CONTINUOUS BEARINGS.

THIS TRUSS REQUIRES RIGID SHEATHING ON EXPOSED FACE.

BEARING MATERIAL TO BE SPF NO.2 OR BETTER AT JOINT(S)

BRACING
TOP CHORD TO BE SHEATHED OR MAX. PURLIN SPACING = 10.00 FT.
MAX. UNBRACED BOTTOM CHORD LENGTH = 6.25 FT. OR RIGID CEILING DIRECTLY APPLIED.

ALL PITCH BREAKS AND PERIMETER CORNER JOINTS MUST BE LATERALLY RESTRAINED.

LOADING
TOTAL LOAD CASES: (4)

CHORDS

MEMB. FR-TO	MAX. FACTORED FORCE (LBS)	FACTORED VERT. LOAD (PLF) FROM	TO	LC1 MAX CSI (LC)	MAX. UNBRAC LENGTH
16- 2	-165 / 0	0.0	0.0	0.03 (1)	7.81
1- 2	0 / 29	-77.4	-77.4	0.10 (1)	10.00
2- 3	0 / 3	-77.4	-77.4	0.07 (1)	10.00
3- 4	0 / 34	-77.4	-77.4	0.05 (1)	10.00
4- 5	0 / 32	-77.4	-77.4	0.05 (1)	10.00
5- 6	0 / 32	-77.4	-77.4	0.05 (1)	10.00
6- 7	0 / 34	-77.4	-77.4	0.05 (1)	10.00
7- 8	0 / 3	-77.4	-77.4	0.07 (1)	10.00
8- 9	0 / 29	-77.4	-77.4	0.10 (1)	10.00
10- 8	-165 / 0	0.0	0.0	0.03 (1)	7.81
16-15	-21 / 0	-17.5	-17.5	0.01 (4)	6.25
15-14	-24 / 0	-17.5	-17.5	0.01 (4)	6.25
14-13	-28 / 0	-17.5	-17.5	0.01 (4)	6.25
13-12	-28 / 0	-17.5	-17.5	0.01 (4)	6.25
12-11	-24 / 0	-17.5	-17.5	0.01 (4)	6.25
11-10	-21 / 0	-17.5	-17.5	0.01 (4)	6.25

WEBS

MEMB. FR-TO	MAX. FACTORED FORCE (LBS)	MAX CSI (LC)
13- 5	-193 / 0	0.06 (1)
14- 4	-167 / 0	0.03 (1)
15- 3	-61 / 0	0.01 (1)
12- 6	-167 / 0	0.03 (1)
11- 7	-61 / 0	0.01 (1)

DESIGN CRITERIA

SPECIFIED LOADS:

TOP	CH.	LL	=	23.3	PSF
		DL	=	3.0	PSF
BOT	CH.	LL	=	0.0	PSF
		DL	=	7.0	PSF
TOTAL	LOAD		=	33.3	PSF

SPACING = 24.0 IN. C/C

THIS TRUSS IS DESIGNED FOR RESIDENTIAL OR SMALL BUILDING REQUIREMENTS OF PART 9, NBCC 2010

THIS DESIGN COMPLIES WITH:
- PART 9 OF OBC 2012 , BCBC 2012 , ABC 2014
- CSA 086-09
- TPIC 2011

DESIGN ASSUMPTIONS
-OVERHANG NOT TO BE ALTERED OR CUT OFF.

(55 % OF 27.2 P.S.F. G.S.L. PLUS 8.4 P.S.F. RAIN LOAD) EQUALS 23.3 P.S.F. SPECIFIED ROOF LIVE LOAD

CSI: TC=0.10 (1-2:1) , BC=0.01 (12-13:4) , WB=0.06 (5-13:1) , SSI=0.07 (8-9:1)

DOL LUMBER=1.00 NAIL=1.00 LS BEND=1.10 COMP=1.10 SHEAR=1.10 TENS= 1.10

COMPANION LIVE LOAD FACTOR = 0.50

TRUSS PLATE MANUFACTURER IS NOT RESPONSIBLE FOR QUALITY CONTROL IN THE TRUSS MANUFACTURING PLANT .

NAIL VALUES

PLATE	GRIP(DRY) (PSI) MAX	MIN	SHEAR (PLI) MAX	MIN	SECTION (PLI) MAX	MIN
MT20	618	354	1667	822	2284	1656

PLATE PLACEMENT TOL. = 0.250 inches

PLATE ROTATION TOL. = 0.5 Deg.

JSI GRIP= 0.13 (5) (INPUT = 0.90)
JSI METAL= 0.06 (5) (INPUT = 1.00)

LICENSED PROFESSIONAL ENGINEER
P.M. TREVISAN
100136551
March 16th, 2017
PROVINCE OF ONTARIO

RECEIVED
TOWN OF MILTON
MAR 29, 2017
17-5327
BUILDING DIVISION

KOTT

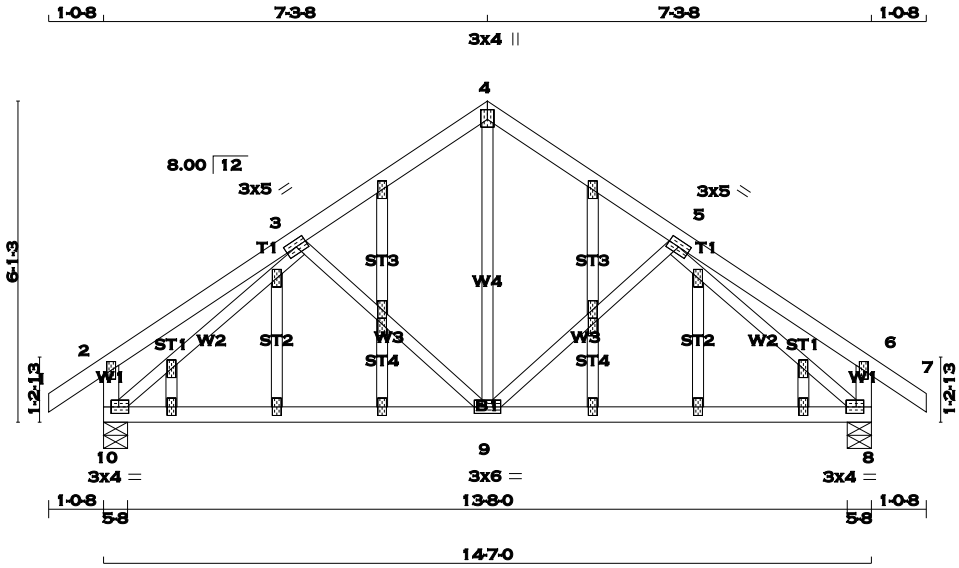

TOTAL WEIGHT = 73 lb

[M][F]

LUMBER

N. L. G. A. RULES

CHORDS	SIZE		LUMBER	DESCR.
1 - 4	2x4	DRY	No.2	SPF
4 - 7	2x4	DRY	No.2	SPF
10 - 2	2x4	DRY	No.2	SPF
8 - 6	2x4	DRY	No.2	SPF
10 - 8	2x4	DRY	No.2	SPF
ALL WEBS	2x3	DRY	No.2	SPF

EXCEPT

ALL GABLE WEBS

2x3 DRY No.2 SPF

DRY: SEASONED LUMBER.

GABLE STUDS SPACED AT 2-0-0 OC.

PLATES (table is in inches)

JT	TYPE	PLATES	W	LEN	Y	X
2	TMV+p	MT20	2.0	4.0		
3	TMWW-t	MT20	3.0	5.0		
4	TTW+p	MT20	3.0	4.0	2.25	1.50
5	TMWW-t	MT20	3.0	5.0		
6	TMV+p	MT20	2.0	4.0		
8	BMVW1-t	MT20	3.0	4.0	1.50	1.75
9	BMWWW-t	MT20	3.0	6.0		
10	BMVW1-t	MT20	3.0	4.0	1.50	1.75
11	NP+w	MT20	2.0	4.0	1.50	1.00
11, 12, 13, 14, 15, 16, 17, 18, 19, 20, 21, 22, 23, 24						
11	NP+w	MT20	2.0	4.0		
20	NP+w	MT20	2.0	4.0	1.50	1.00

A SIZE FOR SIZE SUBSTITUTION OF MITEK MII20 WITH TEE-LOK TL20 PLATES IS ALLOWED.

DIMENSIONS, SUPPORTS AND LOADINGS SPECIFIED BY FABRICATOR TO BE VERIFIED BY BUILDING DESIGNER

BEARINGS

JT	FACTORED GROSS REACTION VERT	HORZ	MAXIMUM FACTORED GROSS REACTION DOWN	HORZ	UPLIFT	INPUT BRG IN-SX	REQRD BRG IN-SX
10	779	0	779	0	0	5-8	5-8
8	779	0	779	0	0	5-8	5-8

UNFACTORED REACTIONS

JT	1ST LCASE COMBINED	MAX./MIN. COMPONENT REACTIONS SNOW	LIVE	PERM.LIVE	WIND	DEAD	SOIL
10	544	392 / 0	0 / 0	0 / 0	0 / 0	153 / 0	0 / 0
8	544	392 / 0	0 / 0	0 / 0	0 / 0	153 / 0	0 / 0

BEARING MATERIAL TO BE SPF NO.2 OR BETTER AT JOINT(S) 10, 8

BRACING

TOP CHORD TO BE SHEATHED OR MAX. PURLIN SPACING = 6.25 FT.
MAX. UNBRACED BOTTOM CHORD LENGTH = 10.00 FT. OR RIGID CEILING DIRECTLY APPLIED.

ALL PITCH BREAKS AND PERIMETER CORNER JOINTS MUST BE LATERALLY RESTRAINED.

LOADING

TOTAL LOAD CASES: (4)

CHORDS MEMB. FR-TO	MAX. FACTORED FORCE (LBS)	FACTORED VERT. LOAD (PLF) FROM	TO	LC1 CSI (LC)	MAX UNBRAC LENGTH	WEBS MEMB. FR-TO	MAX. FACTORED FORCE (LBS)	MAX CSI (LC)
1- 2	0 / 24	-77.4	-77.4	0.07 (1)	10.00	9- 4	0 / 388	0.09 (1)
2- 3	0 / 18	-77.4	-77.4	0.16 (1)	10.00	9- 5	-171 / 1	0.07 (1)
3- 4	-565 / 0	-77.4	-77.4	0.13 (1)	6.25	3- 9	-171 / 1	0.07 (1)
4- 5	-565 / 0	-77.4	-77.4	0.13 (1)	6.25	10- 3	-790 / 0	0.31 (1)
5- 6	0 / 18	-77.4	-77.4	0.16 (1)	10.00	5- 8	-790 / 0	0.31 (1)
6- 7	0 / 24	-77.4	-77.4	0.07 (1)	10.00			
10- 2	-196 / 0	0.0	0.0	0.02 (1)	7.81			
8- 6	-196 / 0	0.0	0.0	0.02 (1)	7.81			
10- 9	0 / 582	-17.5	-17.5	0.31 (4)	10.00			
9- 8	0 / 582	-17.5	-17.5	0.31 (4)	10.00			

DESIGN CRITERIA

SPECIFIED LOADS:

TOP	CH.	LL	=	23.3	PSF
		DL	=	3.0	PSF
BOT	CH.	LL	=	0.0	PSF
		DL	=	7.0	PSF
TOTAL	LOAD		=	33.3	PSF

SPACING = 24.0 IN. C/C

THIS TRUSS IS DESIGNED FOR RESIDENTIAL OR SMALL BUILDING REQUIREMENTS OF PART 9, NBCC 2010

THIS DESIGN COMPLIES WITH:
- PART 9 OF OBC 2012 , BCBC 2012 , ABC 2014
- CSA 086-09
- TPIC 2011

(55 % OF 27.2 P.S.F. G.S.L. PLUS 8.4 P.S.F. RAIN LOAD) EQUALS 23.3 P.S.F. SPECIFIED ROOF LIVE LOAD

ALLOWABLE DEFL.(LL)= L/360 (0.49")
CALCULATED VERT. DEFL.(LL) = L/ 999 (0.02")
ALLOWABLE DEFL.(TL)= L/360 (0.49")
CALCULATED VERT. DEFL.(TL) = L/ 999 (0.07")

CSI: TC=0.16 (5-6:1) , BC=0.31 (9-10:4) , WB=0.31 (3-10:1) , SSI=0.11 (4-5:1)

DOL LUMBER=1.00 NAIL=1.00 LS BEND=1.10 COMP=1.10 SHEAR=1.10 TENS= 1.10

COMPANION LIVE LOAD FACTOR = 0.50

TRUSS PLATE MANUFACTURER IS NOT RESPONSIBLE FOR QUALITY CONTROL IN THE TRUSS MANUFACTURING PLANT .

NAIL VALUES

PLATE	GRIP(DRY) (PSI) MAX	MIN	SHEAR (PLI) MAX	MIN	SECTION (PLI) MAX	MIN
MT20	618	354	1667	822	2284	1656

PLATE PLACEMENT TOL. = 0.250 inches

PLATE ROTATION TOL. = 5.0 Deg.

JSI GRIP= 0.87 (10) (INPUT = 0.90)
JSI METAL= 0.22 (3) (INPUT = 1.00)

LICENSED PROFESSIONAL ENGINEER
P.M. TREVISAN
100136551
March 16th, 2017
PROVINCE OF ONTARIO

RECEIVED
TOWN OF MILTON
MAR 29, 2017
17-5327
BUILDING DIVISION

KOTT

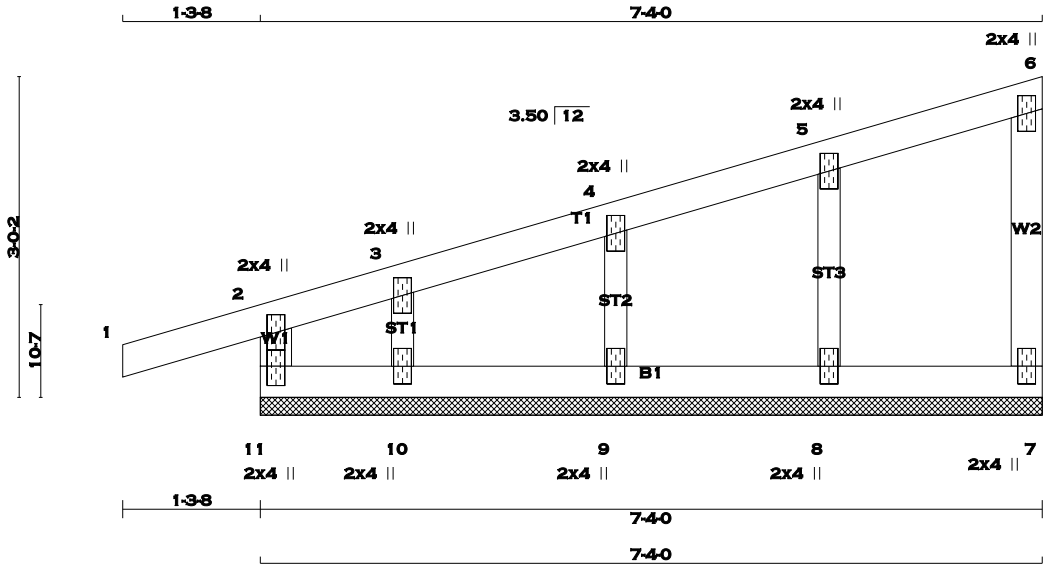

TOTAL WEIGHT = 25 lb [M]

LUMBER

N. L. G. A. RULES

CHORDS	SIZE		LUMBER	DESCR.
11 - 2	2x4	DRY	No.2	SPF
1 - 6	2x4	DRY	No.2	SPF
7 - 6	2x4	DRY	No.2	SPF
11 - 7	2x4	DRY	No.2	SPF
ALL WEBS	2x3	DRY	No.2	SPF
ALL GABLE WEBS	2x3	DRY	No.2	SPF

DRY: SEASONED LUMBER.

GABLE STUDS SPACED AT 2-0-0 OC.

PLATES (table is in inches)

JT	TYPE	PLATES	W	LEN	Y	X
2	TMV+p	MT20	2.0	4.0		
3, 4, 5						
3	TMW+w	MT20	2.0	4.0		
6	TMV+p	MT20	2.0	4.0		
7	BMV1+p	MT20	2.0	4.0		
8, 9, 10						
8	BMW1+w	MT20	2.0	4.0		
11	BMV1+p	MT20	2.0	4.0	2.25	1.00

A SIZE FOR SIZE SUBSTITUTION OF MITEK MII20 WITH TEE-LOK TL20 PLATES IS ALLOWED.

DIMENSIONS, SUPPORTS AND LOADINGS SPECIFIED BY FABRICATOR TO BE VERIFIED BY BUILDING DESIGNER

BEARINGS

THIS TRUSS DESIGNED FOR CONTINUOUS BEARINGS.

THIS TRUSS REQUIRES RIGID SHEATHING ON EXPOSED FACE.

BEARING MATERIAL TO BE SPF NO.2 OR BETTER AT JOINT(S)

BRACING

TOP CHORD TO BE SHEATHED OR MAX. PURLIN SPACING = 6.25 FT.
MAX. UNBRACED BOTTOM CHORD LENGTH = 10.00 FT. OR RIGID CEILING DIRECTLY APPLIED.

ALL PITCH BREAKS AND PERIMETER CORNER JOINTS MUST BE LATERALLY RESTRAINED.

LOADING

TOTAL LOAD CASES: (4)

CHORDS

MEMB. FR-TO	MAX. FACTORED FORCE (LBS)	FACTORED VERT. LOAD (PLF) FROM	TO	LC1 MAX CSI (LC)	MAX. UNBRAC LENGTH
11- 2	-192 / 0	0.0	0.0	0.03 (1)	7.81
1- 2	0 / 14	-77.4	-77.4	0.10 (1)	10.00
2- 3	-27 / 0	-77.4	-77.4	0.07 (1)	6.25
3- 4	-11 / 0	-77.4	-77.4	0.04 (1)	6.25
4- 5	-9 / 0	-77.4	-77.4	0.04 (1)	10.00
5- 6	-8 / 0	-77.4	-77.4	0.04 (1)	10.00
7- 6	-69 / 0	0.0	0.0	0.02 (1)	7.81
11-10	0 / 16	-17.5	-17.5	0.03 (1)	10.00
10- 9	0 / 13	-17.5	-17.5	0.01 (4)	10.00
9- 8	0 / 8	-17.5	-17.5	0.02 (4)	10.00
8- 7	0 / 5	-17.5	-17.5	0.02 (4)	10.00

WEBS

MEMB. FR-TO	MAX. FACTORED FORCE (LBS)	MAX CSI (LC)
8- 5	-164 / 0	0.03 (1)
9- 4	-162 / 0	0.02 (1)
10- 3	-84 / 0	0.01 (1)

DESIGN CRITERIA

SPECIFIED LOADS:

TOP	CH.	LL	=	23.3	PSF
		DL	=	3.0	PSF
BOT	CH.	LL	=	0.0	PSF
		DL	=	7.0	PSF
TOTAL	LOAD		=	33.3	PSF

SPACING = 24.0 IN. C/C

THIS TRUSS IS DESIGNED FOR RESIDENTIAL OR SMALL BUILDING REQUIREMENTS OF PART 9, NBCC 2010

THIS DESIGN COMPLIES WITH:
- PART 9 OF OBC 2012 , BCBC 2012 , ABC 2014
- CSA 086-09
- TPIC 2011

DESIGN ASSUMPTIONS
-OVERHANG NOT TO BE ALTERED OR CUT OFF.

(55 % OF 27.2 P.S.F. G.S.L. PLUS 8.4 P.S.F. RAIN LOAD) EQUALS 23.3 P.S.F. SPECIFIED ROOF LIVE LOAD

CSI: TC=0.10 (1-2:1) , BC=0.03 (10-11:1) , WB=0.03 (5-8:1) , SSI=0.08 (1-2:1)

DOL LUMBER=1.00 NAIL=1.00 LS BEND=1.10 COMP=1.10 SHEAR=1.10 TENS= 1.10

COMPANION LIVE LOAD FACTOR = 0.50

TRUSS PLATE MANUFACTURER IS NOT RESPONSIBLE FOR QUALITY CONTROL IN THE TRUSS MANUFACTURING PLANT .

NAIL VALUES

PLATE	GRIP(DRY) (PSI) MAX	MIN	SHEAR (PLI) MAX	MIN	SECTION (PLI) MAX	MIN
MT20	618	354	1667	822	2284	1656

PLATE PLACEMENT TOL. = 0.250 inches

PLATE ROTATION TOL. = 5.0 Deg.

JSI GRIP= 0.10 (2) (INPUT = 0.90)
JSI METAL= 0.04 (2) (INPUT = 1.00)

LICENSED PROFESSIONAL ENGINEER
P.M. TREVISAN
100136551
March 16th, 2017
PROVINCE OF ONTARIO

RECEIVED
TOWN OF MILTON
MAR 29, 2017
17-5327
BUILDING DIVISION

KOTT

JOB NAME	TRUSS NAME	QUANTITY	PLY	JOB DESC.	DRWG NO.
PT0317-093	GAB08	1	1	TRUSS DESC. LECCO RIDGE-BLOCK 343	ENG JOB: PT0317-093

KOTT , Stouffville, ON, CGC

Version 8.100 S Feb 9 2017 MiTek Industries, Inc. Thu Mar 16 07:54:31 2017 Page 1

ID:EvTixTQDI5yR1QLotZTBr_yE?HJ-Wh?aCMsTg_MRCySgjTMfqGEpxMfSMPGot3QS1hzaRI6

SCALE = 1:40.1

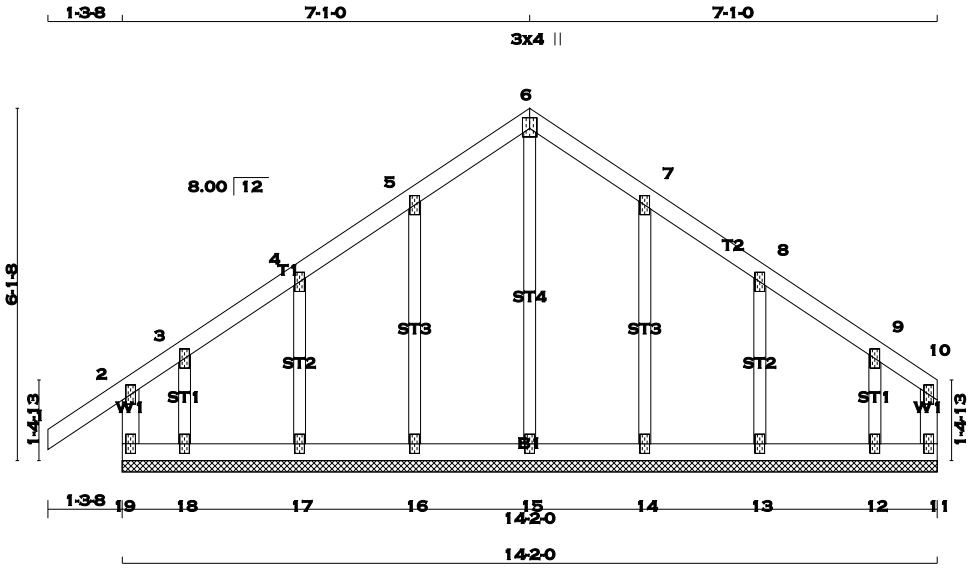

TOTAL WEIGHT = 59 lb [M]

LUMBER

N. L. G. A. RULES

CHORDS	SIZE		LUMBER	DESCR.
19 - 2	2x4	DRY	No.2	SPF
1 - 6	2x4	DRY	No.2	SPF
6 - 10	2x4	DRY	No.2	SPF
11 - 10	2x4	DRY	No.2	SPF
19 - 11	2x4	DRY	No.2	SPF
ALL WEBS	2x3	DRY	No.2	SPF
ALL GABLE WEBS	2x3	DRY	No.2	SPF

DRY: SEASONED LUMBER.

GABLE STUDS SPACED AT 2-0-0 OC.

PLATES (table is in inches)

JT	TYPE	PLATES	W	LEN	Y	X
2	TMV+p	MT20	2.0	4.0		
3, 4, 5, 7, 8, 9						
3	TMW+w	MT20	2.0	4.0		
6	TTW+p	MT20	3.0	4.0	2.25	1.50
10	TMV+p	MT20	2.0	4.0		
11	BMV1+p	MT20	2.0	4.0		
12, 13, 14, 15, 16, 17, 18						
12	BMW1+w	MT20	2.0	4.0		
19	BMV1+p	MT20	2.0	4.0		

A SIZE FOR SIZE SUBSTITUTION OF MITEK MII20 WITH TEE-LOK TL20 PLATES IS ALLOWED.

DIMENSIONS, SUPPORTS AND LOADINGS SPECIFIED BY FABRICATOR TO BE VERIFIED BY BUILDING DESIGNER

BEARINGS

THIS TRUSS DESIGNED FOR CONTINUOUS BEARINGS.

THIS TRUSS REQUIRES RIGID SHEATHING ON EXPOSED FACE.

BEARING MATERIAL TO BE SPF NO.2 OR BETTER AT JOINT(S)

BRACING

TOP CHORD TO BE SHEATHED OR MAX. PURLIN SPACING = 6.25 FT.
MAX. UNBRACED BOTTOM CHORD LENGTH = 6.25 FT. OR RIGID CEILING DIRECTLY APPLIED.

ALL PITCH BREAKS AND PERIMETER CORNER JOINTS MUST BE LATERALLY RESTRAINED.

LOADING

TOTAL LOAD CASES: (4)

CHORDS

MEMB. FR-TO	MAX. FACTORED FORCE (LBS)	FACTORED VERT. LOAD (PLF) FROM	TO	LC1 MAX CSI (LC)	MAX. UNBRAC LENGTH
19- 2	-191 / 0	0.0	0.0	0.02 (1)	7.81
1- 2	0 / 29	-77.4	-77.4	0.10 (1)	10.00
2- 3	-25 / 0	-77.4	-77.4	0.08 (1)	6.25
3- 4	0 / 8	-77.4	-77.4	0.04 (1)	10.00
4- 5	0 / 8	-77.4	-77.4	0.04 (1)	10.00
5- 6	0 / 12	-77.4	-77.4	0.04 (1)	10.00
6- 7	0 / 12	-77.4	-77.4	0.04 (1)	10.00
7- 8	0 / 9	-77.4	-77.4	0.04 (1)	10.00
8- 9	0 / 6	-77.4	-77.4	0.04 (1)	10.00
9-10	0 / 6	-77.4	-77.4	0.03 (1)	10.00
11-10	-24 / 0	0.0	0.0	0.00 (1)	7.81
19-18	0 / 0	-17.5	-17.5	0.02 (1)	10.00
18-17	-3 / 0	-17.5	-17.5	0.01 (4)	10.00
17-16	-7 / 0	-17.5	-17.5	0.01 (4)	10.00
16-15	-10 / 0	-17.5	-17.5	0.01 (4)	6.25
15-14	-10 / 0	-17.5	-17.5	0.01 (4)	6.25
14-13	-7 / 0	-17.5	-17.5	0.01 (4)	10.00
13-12	-3 / 0	-17.5	-17.5	0.01 (4)	10.00
12-11	0 / 3	-17.5	-17.5	0.01 (4)	10.00

WEBS

MEMB. FR-TO	MAX. FACTORED FORCE (LBS)	MAX CSI (LC)
15- 6	-174 / 0	0.10 (1)
16- 5	-155 / 0	0.05 (1)
17- 4	-161 / 0	0.03 (1)
18- 3	-60 / 0	0.01 (1)
14- 7	-157 / 0	0.05 (1)
13- 8	-156 / 0	0.03 (1)
12- 9	-125 / 0	0.02 (1)

DESIGN CRITERIA

SPECIFIED LOADS:

TOP	CH.	LL	=	23.3	PSF
		DL	=	3.0	PSF
BOT	CH.	LL	=	0.0	PSF
		DL	=	7.0	PSF
TOTAL	LOAD		=	33.3	PSF

SPACING = 24.0 IN. C/C

THIS TRUSS IS DESIGNED FOR RESIDENTIAL OR SMALL BUILDING REQUIREMENTS OF PART 9, NBCC 2010

THIS DESIGN COMPLIES WITH:
- PART 9 OF OBC 2012 , BCBC 2012 , ABC 2014
- CSA 086-09
- TPIC 2011

DESIGN ASSUMPTIONS
-OVERHANG NOT TO BE ALTERED OR CUT OFF.

(55 % OF 27.2 P.S.F. G.S.L. PLUS 8.4 P.S.F. RAIN LOAD) EQUALS 23.3 P.S.F. SPECIFIED ROOF LIVE LOAD

CSI: TC=0.10 (1-2:1) , BC=0.02 (18-19:1) , WB=0.10 (6-15:1) , SSI=0.07 (1-2:1)

DOL LUMBER=1.00 NAIL=1.00 LS BEND=1.10 COMP=1.10 SHEAR=1.10 TENS= 1.10

COMPANION LIVE LOAD FACTOR = 0.50

TRUSS PLATE MANUFACTURER IS NOT RESPONSIBLE FOR QUALITY CONTROL IN THE TRUSS MANUFACTURING PLANT .

NAIL VALUES

PLATE	GRIP(DRY) (PSI) MAX	MIN	SHEAR (PLI) MAX	MIN	SECTION (PLI) MAX	MIN
MT20	618	354	1667	822	2284	1656

PLATE PLACEMENT TOL. = 0.250 inches

PLATE ROTATION TOL. = 5.0 Deg.

JSI GRIP= 0.12 (2) (INPUT = 0.90)
JSI METAL= 0.06 (6) (INPUT = 1.00)

LICENSED PROFESSIONAL ENGINEER
P.M. TREVISAN
100136551
March 16th, 2017
PROVINCE OF ONTARIO

RECEIVED
TOWN OF MILTON
MAR 29, 2017
17-5327
BUILDING DIVISION

KOTT

JOB NAME	TRUSS NAME	QUANTITY	PLY	JOB DESC.	DRWG NO.
PT0317-093	GAB09	1	1	TRUSS DESC. LECCO RIDGE-BLOCK 343	

KOTT , Stouffville, ON, CGC

Version 8.100 S Feb 9 2017 MiTek Industries, Inc. Thu Mar 16 07:54:32 2017 Page 1
ID:EvTixTQDI5yR1QLotZTBr_yE?HJ-_tZyPit5RHUIq51sHAtuMTn_jm?i5tgx6j9?a8zaRI5

SCALE = 1:27.2

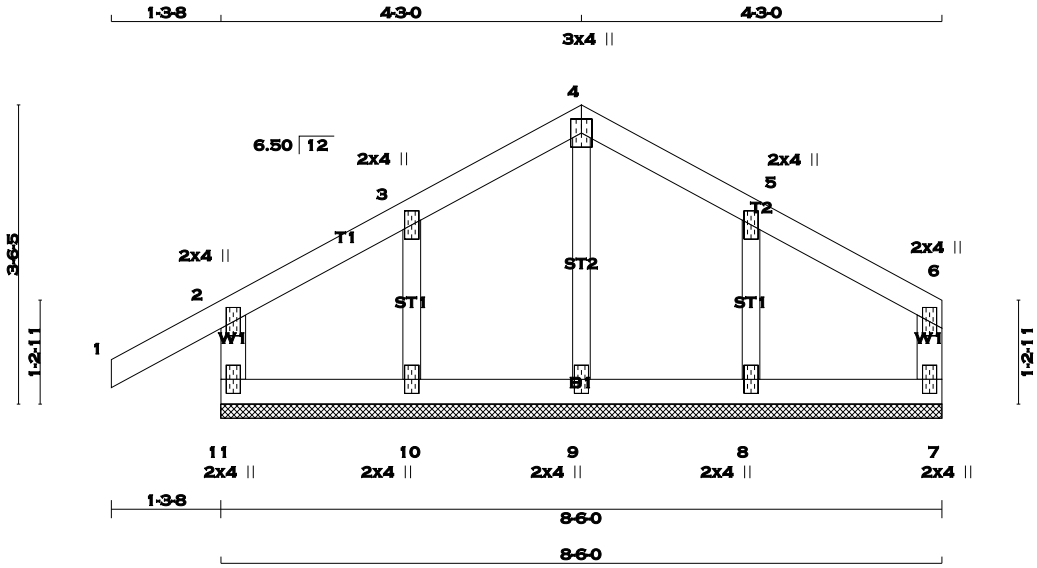

TOTAL WEIGHT = 30 lb
[M]

LUMBER
N. L. G. A. RULES

CHORDS	SIZE		LUMBER	DESCR.
11 - 2	2x4	DRY	No.2	SPF
1 - 4	2x4	DRY	No.2	SPF
4 - 6	2x4	DRY	No.2	SPF
7 - 6	2x4	DRY	No.2	SPF
11 - 7	2x4	DRY	No.2	SPF
ALL WEBS	2x3	DRY	No.2	SPF
ALL GABLE WEBS	2x3	DRY	No.2	SPF

DRY: SEASONED LUMBER.

GABLE STUDS SPACED AT 2-0-0 OC.

PLATES (table is in inches)

JT	TYPE	PLATES	W	LEN	Y	X
2	TMV+p	MT20	2.0	4.0		
3	TMW+w	MT20	2.0	4.0		
4	TTW+p	MT20	3.0	4.0		
5	TMW+w	MT20	2.0	4.0		
6	TMV+p	MT20	2.0	4.0		
7	BMV1+p	MT20	2.0	4.0		
8, 9, 10						
8	BMW1+w	MT20	2.0	4.0		
11	BMV1+p	MT20	2.0	4.0		

A SIZE FOR SIZE SUBSTITUTION OF MITEK MII20 WITH TEE-LOK TL20 PLATES IS ALLOWED.

DIMENSIONS, SUPPORTS AND LOADINGS SPECIFIED BY FABRICATOR TO BE VERIFIED BY BUILDING DESIGNER

BEARINGS

THIS TRUSS DESIGNED FOR CONTINUOUS BEARINGS.

THIS TRUSS REQUIRES RIGID SHEATHING ON EXPOSED FACE.

BEARING MATERIAL TO BE SPF NO.2 OR BETTER AT JOINT(S)

BRACING
TOP CHORD TO BE SHEATHED OR MAX. PURLIN SPACING = 6.25 FT.
MAX. UNBRACED BOTTOM CHORD LENGTH = 10.00 FT. OR RIGID CEILING DIRECTLY APPLIED.

ALL PITCH BREAKS AND PERIMETER CORNER JOINTS MUST BE LATERALLY RESTRAINED.

LOADING
TOTAL LOAD CASES: (4)

CHORDS

MEMB. FR-TO	MAX. FACTORED FORCE (LBS)	FACTORED VERT. LOAD (PLF) FROM	TO	LC1 MAX CSI (LC)	MAX. UNBRAC LENGTH
11- 2	-207 / 0	0.0	0.0	0.02 (1)	7.81
1- 2	0 / 25	-77.4	-77.4	0.10 (1)	10.00
2- 3	-33 / 0	-77.4	-77.4	0.04 (1)	6.25
3- 4	-27 / 0	-77.4	-77.4	0.04 (1)	6.25
4- 5	-27 / 0	-77.4	-77.4	0.04 (1)	6.25
5- 6	-30 / 0	-77.4	-77.4	0.04 (1)	6.25
7- 6	-95 / 0	0.0	0.0	0.03 (1)	7.81
11-10	0 / 28	-17.5	-17.5	0.02 (4)	10.00
10- 9	0 / 23	-17.5	-17.5	0.02 (4)	10.00
9- 8	0 / 23	-17.5	-17.5	0.02 (4)	10.00
8- 7	0 / 28	-17.5	-17.5	0.02 (4)	10.00

WEBS

MEMB. FR-TO	MAX. FACTORED FORCE (LBS)	MAX CSI (LC)
9- 4	-131 / 0	0.03 (1)
10- 3	-161 / 0	0.03 (1)
8- 5	-169 / 0	0.03 (1)

DESIGN CRITERIA

SPECIFIED LOADS:

TOP	CH.	LL	=	23.3	PSF
		DL	=	3.0	PSF
BOT	CH.	LL	=	0.0	PSF
		DL	=	7.0	PSF
TOTAL	LOAD		=	33.3	PSF

SPACING = 24.0 IN. C/C

THIS TRUSS IS DESIGNED FOR RESIDENTIAL OR SMALL BUILDING REQUIREMENTS OF PART 9, NBCC 2010

THIS DESIGN COMPLIES WITH:
- PART 9 OF OBC 2012 , BCBC 2012 , ABC 2014
- CSA 086-09
- TPIC 2011

DESIGN ASSUMPTIONS
-OVERHANG NOT TO BE ALTERED OR CUT OFF.

(55 % OF 27.2 P.S.F. G.S.L. PLUS 8.4 P.S.F. RAIN LOAD) EQUALS 23.3 P.S.F. SPECIFIED ROOF LIVE LOAD

CSI: TC=0.10 (1-2:1) , BC=0.02 (7-8:4) , WB=0.03 (4-9:1) , SSI=0.07 (1-2:1)

DOL LUMBER=1.00 NAIL=1.00 LS BEND=1.10 COMP=1.10 SHEAR=1.10 TENS= 1.10

COMPANION LIVE LOAD FACTOR = 0.50

TRUSS PLATE MANUFACTURER IS NOT RESPONSIBLE FOR QUALITY CONTROL IN THE TRUSS MANUFACTURING PLANT .

NAIL VALUES

PLATE	GRIP(DRY) (PSI) MAX	MIN	SHEAR (PLI) MAX	MIN	SECTION (PLI) MAX	MIN
MT20	618	354	1667	822	2284	1656

PLATE PLACEMENT TOL. = 0.250 inches

PLATE ROTATION TOL. = 5.0 Deg.

JSI GRIP= 0.14 (2) (INPUT = 0.90)
JSI METAL= 0.06 (6) (INPUT = 1.00)

LICENSED PROFESSIONAL ENGINEER
P.M. TREVISAN
100136551
March 16th, 2017
PROVINCE OF ONTARIO

RECEIVED
TOWN OF MILTON
MAR 29, 2017
17-5327
BUILDING DIVISION

KOTT

JOB NAME	TRUSS NAME	QUANTITY	PLY	JOB DESC.	DRWG NO.
PT0317-093	GAB10	1	1	TRUSS DESC. LECCO RIDGE-BLOCK 343	ENG JOB: PT0317-093

KOTT , Stouffville, ON, CGC

Version 8.100 S Feb 9 2017 MiTek Industries, Inc. Thu Mar 16 07:54:33 2017 Page 1

ID:EvTixTQDI5yR1QLotZTBr_yE?HJ-S37Kd2ujCbc9RFc2ruP7vhJ8Y9KkqKw5LNvY6azaRI4

SCALE = 1:20.4

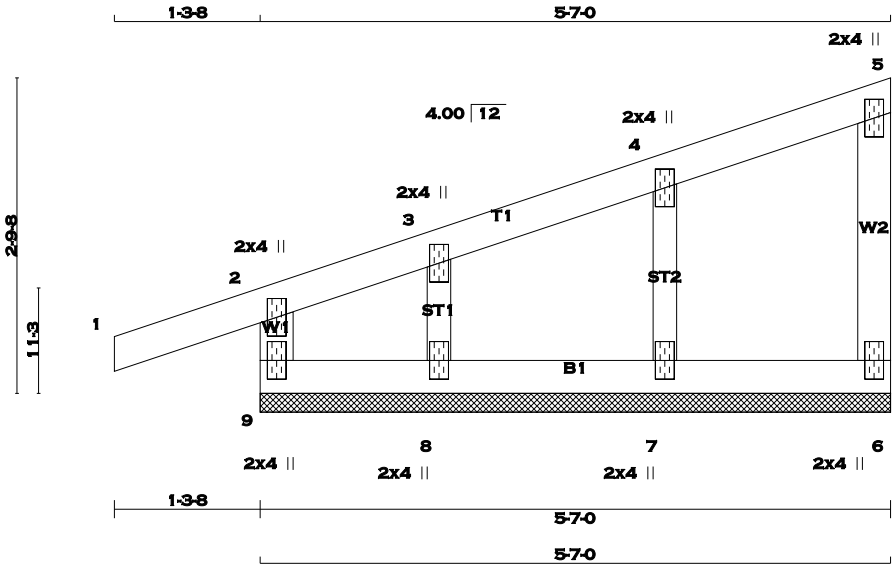

TOTAL WEIGHT = 20 lb [M]

LUMBER

N. L. G. A. RULES

CHORDS	SIZE		LUMBER	DESCR.
9 - 2	2x4	DRY	No.2	SPF
1 - 5	2x4	DRY	No.2	SPF
6 - 5	2x4	DRY	No.2	SPF
9 - 6	2x4	DRY	No.2	SPF
ALL WEBS	2x3	DRY	No.2	SPF
ALL GABLE WEBS	2x3	DRY	No.2	SPF

DRY: SEASONED LUMBER.

GABLE STUDS SPACED AT 2-0-0 OC.

PLATES (table is in inches)

JT	TYPE	PLATES	W	LEN	Y	X
2	TMV+p	MT20	2.0	4.0		
3	TMW+w	MT20	2.0	4.0		
4	TMW+w	MT20	2.0	4.0		
5	TMV+p	MT20	2.0	4.0		
6	BMV1+p	MT20	2.0	4.0		
7	BMW1+w	MT20	2.0	4.0		
8	BMW1+w	MT20	2.0	4.0		
9	BMV1+p	MT20	2.0	4.0		

A SIZE FOR SIZE SUBSTITUTION OF MITEK MII20 WITH TEE-LOK TL20 PLATES IS ALLOWED.

DIMENSIONS, SUPPORTS AND LOADINGS SPECIFIED BY FABRICATOR TO BE VERIFIED BY BUILDING DESIGNER

BEARINGS

THIS TRUSS DESIGNED FOR CONTINUOUS BEARINGS.

THIS TRUSS REQUIRES RIGID SHEATHING ON EXPOSED FACE.

BEARING MATERIAL TO BE SPF NO.2 OR BETTER AT JOINT(S)

BRACING

TOP CHORD TO BE SHEATHED OR MAX. PURLIN SPACING = 6.25 FT.
MAX. UNBRACED BOTTOM CHORD LENGTH = 10.00 FT. OR RIGID CEILING DIRECTLY APPLIED.

ALL PITCH BREAKS AND PERIMETER CORNER JOINTS MUST BE LATERALLY RESTRAINED.

LOADING

TOTAL LOAD CASES: (4)

CHORDS

MEMB. FR-TO	MAX. FACTORED FORCE (LBS)	FACTORED VERT. LOAD (PLF) FROM	TO	LC1	MAX CSI (LC)	MAX. UNBRAC LENGTH
9- 2	-196 / 0	0.0	0.0	0.03	(1)	7.81
1- 2	0 / 16	-77.4	-77.4	0.10	(1)	10.00
2- 3	-23 / 0	-77.4	-77.4	0.08	(1)	6.25
3- 4	-6 / 0	-77.4	-77.4	0.04	(1)	10.00
4- 5	-9 / 0	-77.4	-77.4	0.04	(1)	10.00
6- 5	-66 / 0	0.0	0.0	0.01	(1)	7.81
9- 8	0 / 13	-17.5	-17.5	0.03	(1)	10.00
8- 7	0 / 9	-17.5	-17.5	0.02	(4)	10.00
7- 6	0 / 5	-17.5	-17.5	0.02	(4)	10.00

WEBS

MEMB. FR-TO	MAX. FACTORED FORCE (LBS)	MAX CSI (LC)
7- 4	-177 / 0	0.03 (1)
8- 3	-96 / 0	0.01 (1)

DESIGN CRITERIA

SPECIFIED LOADS:

TOP	CH.	LL	=	23.3	PSF
		DL	=	3.0	PSF
BOT	CH.	LL	=	0.0	PSF
		DL	=	7.0	PSF
TOTAL	LOAD		=	33.3	PSF

SPACING = 24.0 IN. C/C

THIS TRUSS IS DESIGNED FOR RESIDENTIAL OR SMALL BUILDING REQUIREMENTS OF PART 9, NBCC 2010

THIS DESIGN COMPLIES WITH:
- PART 9 OF OBC 2012 , BCBC 2012 , ABC 2014
- CSA 086-09
- TPIC 2011

DESIGN ASSUMPTIONS
-OVERHANG NOT TO BE ALTERED OR CUT OFF.

(55 % OF 27.2 P.S.F. G.S.L. PLUS 8.4 P.S.F. RAIN LOAD) EQUALS 23.3 P.S.F. SPECIFIED ROOF LIVE LOAD

CSI: TC=0.10 (1-2:1) , BC=0.03 (8-9:1) , WB=0.03 (4-7:1) , SSI=0.08 (1-2:1)

DOL LUMBER=1.00 NAIL=1.00 LS BEND=1.10 COMP=1.10 SHEAR=1.10 TENS= 1.10

COMPANION LIVE LOAD FACTOR = 0.50

TRUSS PLATE MANUFACTURER IS NOT RESPONSIBLE FOR QUALITY CONTROL IN THE TRUSS MANUFACTURING PLANT .

NAIL VALUES

PLATE	GRIP(DRY) (PSI) MAX	MIN	SHEAR (PLI) MAX	MIN	SECTION (PLI) MAX	MIN
MT20	618	354	1667	822	2284	1656

PLATE PLACEMENT TOL. = 0.250 inches

PLATE ROTATION TOL. = 0.5 Deg.

JSI GRIP= 0.11 (2) (INPUT = 0.90)
JSI METAL= 0.04 (2) (INPUT = 1.00)

LICENSED PROFESSIONAL ENGINEER
P.M. TREVISAN
100136551
March 16th, 2017
PROVINCE OF ONTARIO

RECEIVED
TOWN OF MILTON
MAR 29, 2017
17-5327
BUILDING DIVISION

KOTT

SCALE = 1:30.9

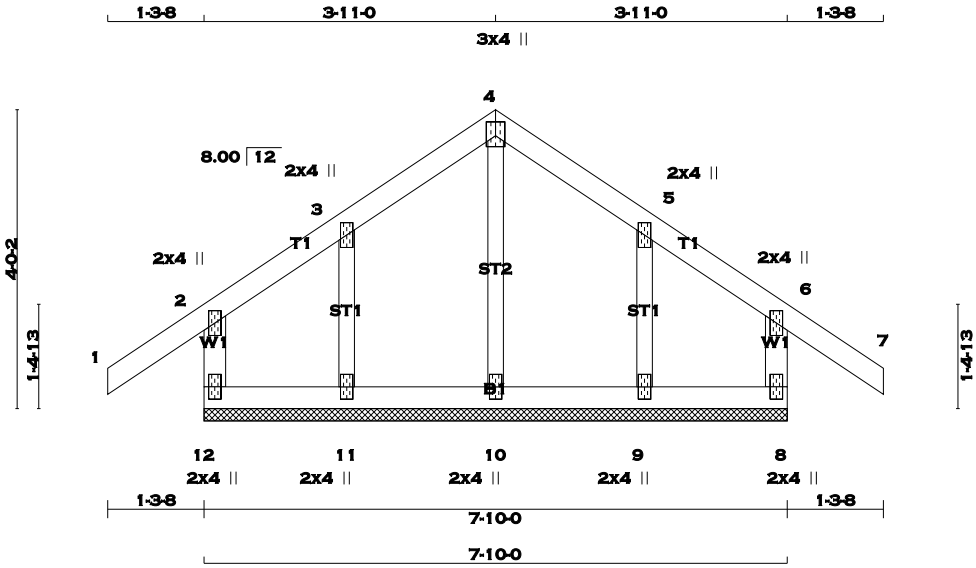

TOTAL WEIGHT = 32 lb [M]

LUMBER

N. L. G. A. RULES

CHORDS	SIZE		LUMBER	DESCR.
12 - 2	2x4	DRY	No.2	SPF
1 - 4	2x4	DRY	No.2	SPF
4 - 7	2x4	DRY	No.2	SPF
8 - 6	2x4	DRY	No.2	SPF
12 - 8	2x4	DRY	No.2	SPF
ALL WEBS	2x3	DRY	No.2	SPF
ALL GABLE WEBS	2x3	DRY	No.2	SPF

DRY: SEASONED LUMBER.

GABLE STUDS SPACED AT 2-0-0 OC.

PLATES (table is in inches)

JT	TYPE	PLATES	W	LEN	Y	X
2	TMV+p	MT20	2.0	4.0		
3	TMW+w	MT20	2.0	4.0		
4	TTW+p	MT20	3.0	4.0	2.25	1.50
5	TMW+w	MT20	2.0	4.0		
6	TMV+p	MT20	2.0	4.0		
8	BMV1+p	MT20	2.0	4.0		
9, 10, 11						
9	BMW1+w	MT20	2.0	4.0		
12	BMV1+p	MT20	2.0	4.0		

A SIZE FOR SIZE SUBSTITUTION OF MITEK MII20 WITH TEE-LOK TL20 PLATES IS ALLOWED.

DIMENSIONS, SUPPORTS AND LOADINGS SPECIFIED BY FABRICATOR TO BE VERIFIED BY BUILDING DESIGNER

BEARINGS

THIS TRUSS DESIGNED FOR CONTINUOUS BEARINGS.

THIS TRUSS REQUIRES RIGID SHEATHING ON EXPOSED FACE.

BEARING MATERIAL TO BE SPF NO.2 OR BETTER AT JOINT(S)

BRACING

TOP CHORD TO BE SHEATHED OR MAX. PURLIN SPACING = 10.00 FT.
MAX. UNBRACED BOTTOM CHORD LENGTH = 6.25 FT. OR RIGID CEILING DIRECTLY APPLIED.

ALL PITCH BREAKS AND PERIMETER CORNER JOINTS MUST BE LATERALLY RESTRAINED.

LOADING

TOTAL LOAD CASES: (4)

CHORDS

MEMB. FR-TO	MAX. FACTORED FORCE (LBS)	FACTORED VERT. LOAD (PLF) FROM	TO	LC1 MAX CSI (LC)	MAX. UNBRAC LENGTH
12- 2	-177 / 0	0.0	0.0	0.04 (1)	7.81
1- 2	0 / 29	-77.4	-77.4	0.10 (1)	10.00
2- 3	-2 / 18	-77.4	-77.4	0.07 (1)	10.00
3- 4	0 / 34	-77.4	-77.4	0.05 (1)	10.00
4- 5	0 / 34	-77.4	-77.4	0.05 (1)	10.00
5- 6	-2 / 18	-77.4	-77.4	0.07 (1)	10.00
6- 7	0 / 29	-77.4	-77.4	0.10 (1)	10.00
8- 6	-177 / 0	0.0	0.0	0.04 (1)	7.81
12-11	-22 / 0	-17.5	-17.5	0.01 (4)	6.25
11-10	-26 / 0	-17.5	-17.5	0.01 (4)	6.25
10- 9	-26 / 0	-17.5	-17.5	0.01 (4)	6.25
9- 8	-22 / 0	-17.5	-17.5	0.01 (4)	6.25

WEBS

MEMB. FR-TO	MAX. FACTORED FORCE (LBS)	MAX CSI (LC)
10- 4	-205 / 0	0.05 (1)
11- 3	-130 / 0	0.02 (1)
9- 5	-130 / 0	0.02 (1)

DESIGN CRITERIA

SPECIFIED LOADS:

TOP	CH.	LL	=	23.3	PSF
		DL	=	3.0	PSF
BOT	CH.	LL	=	0.0	PSF
		DL	=	7.0	PSF
TOTAL	LOAD		=	33.3	PSF

SPACING = 24.0 IN. C/C

THIS TRUSS IS DESIGNED FOR RESIDENTIAL OR SMALL BUILDING REQUIREMENTS OF PART 9, NBCC 2010

THIS DESIGN COMPLIES WITH:
- PART 9 OF OBC 2012 , BCBC 2012 , ABC 2014
- CSA 086-09
- TPIC 2011

DESIGN ASSUMPTIONS
-OVERHANG NOT TO BE ALTERED OR CUT OFF.

(55 % OF 27.2 P.S.F. G.S.L. PLUS 8.4 P.S.F. RAIN LOAD) EQUALS 23.3 P.S.F. SPECIFIED ROOF LIVE LOAD

CSI: TC=0.10 (1-2:1) , BC=0.01 (10-11:4) , WB=0.05 (4-10:1) , SSI=0.07 (1-2:1)

DOL LUMBER=1.00 NAIL=1.00 LS BEND=1.10 COMP=1.10 SHEAR=1.10 TENS= 1.10

COMPANION LIVE LOAD FACTOR = 0.50

TRUSS PLATE MANUFACTURER IS NOT RESPONSIBLE FOR QUALITY CONTROL IN THE TRUSS MANUFACTURING PLANT .

NAIL VALUES

PLATE	GRIP(DRY) (PSI) MAX	MIN	SHEAR (PLI) MAX	MIN	SECTION (PLI) MAX	MIN
MT20	618	354	1667	822	2284	1656

PLATE PLACEMENT TOL. = 0.250 inches

PLATE ROTATION TOL. = 5.0 Deg.

JSI GRIP= 0.14 (4) (INPUT = 0.90)
JSI METAL= 0.07 (4) (INPUT = 1.00)

LICENSED PROFESSIONAL ENGINEER
P.M. TREVISAN
100136551
March 16th, 2017
PROVINCE OF ONTARIO

RECEIVED
TOWN OF MILTON
MAR 29, 2017
17-5327
BUILDING DIVISION

KOTT

JOB NAME	TRUSS NAME	QUANTITY	PLY	JOB DESC.	DRWG NO.
PT0317-093	GIRD01	1	2	TRUSS DESC. LECCO RIDGE-BLOCK 343	

KOTT , Stouffville, ON, CGC

Version 8.100 S Feb 9 2017 MiTek Industries, Inc. Thu Mar 16 07:54:34 2017 Page 1
ID:EvTixTQDI5yR1QLotZTBr_yE?HJ-wGhiqOvLzvk03PBFPbwMRusGmZbIZjNEa1e6e0zaRI3

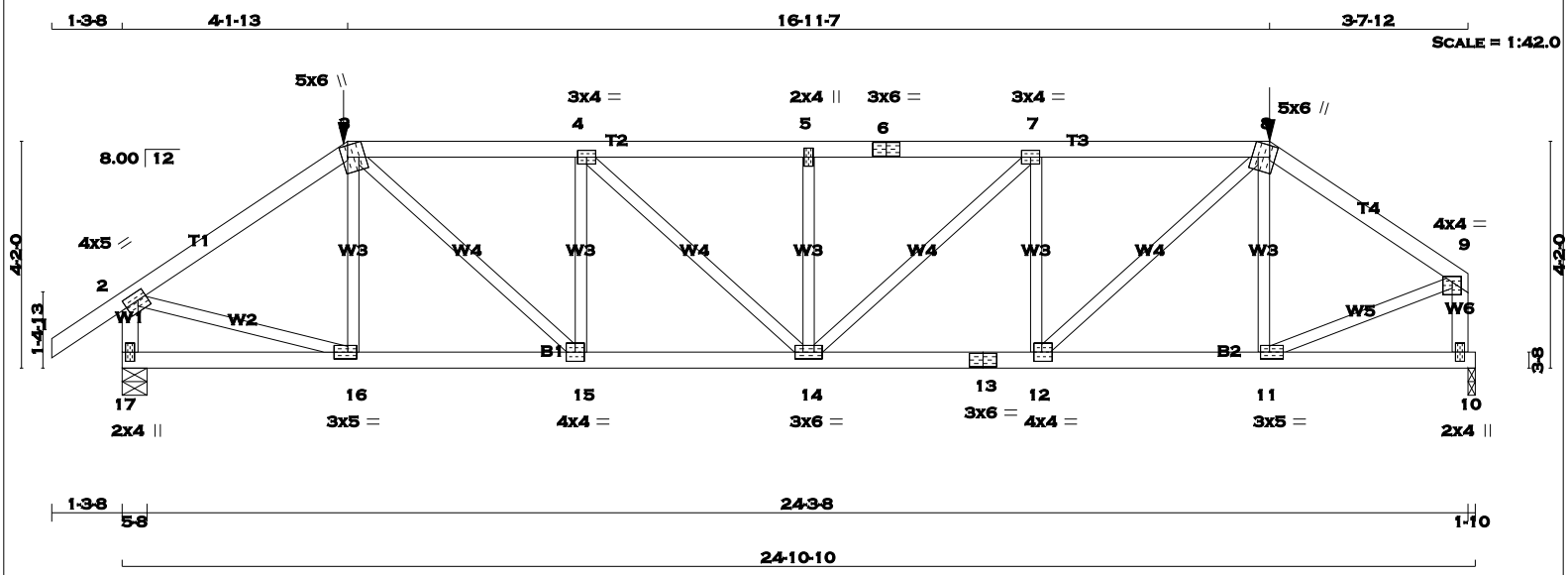

TOTAL WEIGHT = 2 X 101 = 203 lb [M]

LUMBER
N. L. G. A. RULES

CHORDS	SIZE		LUMBER	DESCR.
1 - 3	2x4	DRY	No.2	SPF
3 - 6	2x4	DRY	No.2	SPF
6 - 8	2x4	DRY	No.2	SPF
8 - 9	2x4	DRY	No.2	SPF
17 - 2	2x4	DRY	No.2	SPF
10 - 9	2x4	DRY	No.2	SPF
17 - 13	2x4	DRY	No.2	SPF
13 - 10	2x4	DRY	No.2	SPF
ALL WEBS EXCEPT	2x3	DRY	No.2	SPF

DRY: SEASONED LUMBER.

DESIGN CONSISTS OF 2 TRUSSES BUILT SEPARATELY THEN FASTENED TOGETHER AS FOLLOWS:

CHORDS #ROWS	SURFACE SPACING (IN)		LOAD(PLF)
TOP CHORDS : (0.122"X3") SPIRAL NAILS			
1- 3	1	12	SIDE(0.0)
3- 6	1	12	SIDE(34.2)
6- 8	1	12	SIDE(34.2)
8- 9	1	12	SIDE(0.0)
17- 2	1	12	TOP
10- 9	1	12	TOP
BOTTOM CHORDS : (0.122"X3") SPIRAL NAILS			
17- 13	1	12	SIDE(8.7)
13- 10	1	12	SIDE(8.7)
WEBS : (0.122"X3") SPIRAL NAILS			
2x3	1	6	

NAILS TO BE DRIVEN FROM ONE SIDE ONLY.

GIRDER NAILING ASSUMES NAILED HANGERS ARE FASTENED WITH MIN. 3-0 INCH NAILS.

TOP - COMPONENTS ARE LOADED FROM THE TOP AND MUST BE PLACED ON TOP EDGE OF ALL PLIES FOR THE LOAD TO BE TRANSFERRED TO EACH PLY.

SIDE - PLF SHOWN IS THE EQUIVALENT UDL APPLIED TO ONE SIDE THAT THE CORRESPONDING NAILING PATTERN SHALL BE CAPABLE OF TRANSFERING. REMAINING PLF MUST BE APPLIED ON THE OPPOSITE SIDE OR ON THE TOP.

PLATES (table is in inches)

JT	TYPE	PLATES	W	LEN	Y	X
2	TMVW-t	MT20	4.0	5.0	1.75	2.00

DIMENSIONS, SUPPORTS AND LOADINGS SPECIFIED BY FABRICATOR TO BE VERIFIED BY BUILDING DESIGNER

BEARINGS

JT	FACTORED GROSS REACTION VERT	HORZ	MAXIMUM FACTORED GROSS REACTION DOWN	HORZ	UPLIFT	INPUT BRG IN-SX	REQRD BRG IN-SX
17	2274	0	2274	0	0	5-8	5-8
10	2185	0	2185	0	0	1-10	1-10

UNFACTORED REACTIONS

JT	1ST LCASE COMBINED	MAX./MIN. COMPONENT REACTIONS SNOW	LIVE	PERM.LIVE	WIND	DEAD	SOIL
17	1594	1123 / 0	0 / 0	0 / 0	0 / 0	471 / 0	0 / 0
10	1534	1070 / 0	0 / 0	0 / 0	0 / 0	464 / 0	0 / 0

BEARING MATERIAL TO BE SPF NO.2 OR BETTER AT JOINT(S) 17, 10

BRACING
TOP CHORD TO BE SHEATHED OR MAX. PURLIN SPACING = 4.66 FT.
MAX. UNBRACED BOTTOM CHORD LENGTH = 10.00 FT. OR RIGID CEILING DIRECTLY APPLIED.

ALL PITCH BREAKS AND PERIMETER CORNER JOINTS MUST BE LATERALLY RESTRAINED.

LOADING
TOTAL LOAD CASES: (4)

CHORDS

MEMB. FR-TO	MAX. FACTORED FORCE (LBS)	FACTORED VERT. LOAD (PLF) FROM	TO	LC1 MAX CSI (LC)	MAX. UNBRAC LENGTH
1- 2	0 / 29	-77.4	-77.4	0.06 (1)	10.00
2- 3	-2540 / 0	-77.4	-77.4	0.16 (1)	5.52
3- 4	-3350 / 0	-145.9	-145.9	0.25 (1)	4.84
4- 5	-3677 / 0	-145.9	-145.9	0.26 (1)	4.66
5- 6	-3677 / 0	-145.9	-145.9	0.26 (1)	4.66
6- 7	-3677 / 0	-145.9	-145.9	0.26 (1)	4.66
7- 8	-3249 / 0	-145.9	-145.9	0.25 (1)	4.91
8- 9	-2295 / 0	-77.4	-77.4	0.12 (1)	5.79
17- 2	-2216 / 0	0.0	0.0	0.13 (1)	7.49
10- 9	-2137 / 0	0.0	0.0	0.13 (1)	7.60
17-16	0 / 0	-33.0	-33.0	0.08 (4)	10.00
16-15	0 / 2100	-33.0	-33.0	0.23 (1)	10.00
15-14	0 / 3351	-33.0	-33.0	0.33 (1)	10.00
14-13	0 / 3249	-33.0	-33.0	0.32 (1)	10.00
13-12	0 / 3249	-33.0	-33.0	0.32 (1)	10.00
12-11	0 / 1891	-33.0	-33.0	0.21 (1)	10.00
11-10	0 / 0	-33.0	-33.0	0.07 (4)	10.00

WEBS

MEMB. FR-TO	MAX. FACTORED FORCE (LBS)	MAX CSI (LC)
16- 3	-377 / 21	0.05 (1)
3-15	0 / 1683	0.21 (1)
15- 4	-994 / 0	0.14 (1)
4-14	0 / 445	0.06 (1)
14- 5	-562 / 0	0.08 (1)
14- 7	0 / 583	0.07 (1)
12- 7	-1089 / 0	0.15 (1)
12- 8	0 / 1827	0.23 (1)
11- 8	-568 / 0	0.08 (1)
2-16	0 / 2177	0.27 (1)
11- 9	0 / 2037	0.25 (1)

FACTORED CONCENTRATED LOADS (LBS)

JT	LOC.	LC1	MAX-	MAX+	FACE	DIR.	TYPE
3	4-1-13	-241	-241	---	FRONT	VERT	TOTAL
8	21-1-4	-219	-219	---	FRONT	VERT	TOTAL

RECEIVED
TOWN OF MILTON
MAR 29, 2017
17-5327
BUILDING DIVISION

DESIGN CRITERIA

SPECIFIED LOADS:

TOP	CH.	LL	=	23.3	PSF
		DL	=	3.0	PSF
BOT	CH.	LL	=	0.0	PSF
		DL	=	7.0	PSF
TOTAL	LOAD		=	33.3	PSF

SPACING = 24.0 IN. C/C

LOADING IN FLAT SECTION BASED ON A SLOPE OF 6.00/12

GIRDER TYPE: CPrimeHip
LEFT SETBACK = 4-1-13
RIGHT SETBACK = 3-9-6
END SETBACK = 6-0-0
END WALL WIDTH = 5-8
CORNER FRAMING TYPE: CONVENTIONAL
END JACK TYPE: CONVENTIONAL
APPLIED TO FRONT SIDE
- ADDT'L LOADS BASED ON 55 % OF GSL.

THIS TRUSS IS DESIGNED FOR RESIDENTIAL OR SMALL BUILDING REQUIREMENTS OF PART 9, NBCC 2010

THIS DESIGN COMPLIES WITH:
- PART 9 OF OBC 2012 , BCBC 2012 , ABC 2014
- CSA 086-09
- TPIC 2011

(55 % OF 27.2 P.S.F. G.S.L. PLUS 8.4 P.S.F. RAIN LOAD) EQUALS 23.3 P.S.F. SPECIFIED ROOF LIVE LOAD

ALLOWABLE DEFL.(LL)= L/360 (0.82")
CALCULATED VERT. DEFL.(LL) = L/ 999 (0.07")
ALLOWABLE DEFL.(TL)= L/360 (0.82")
CALCULATED VERT. DEFL.(TL) = L/ 999 (0.13")

CSI: TC=0.26 (5-7:1) , BC=0.33 (14-15:1) , WB=0.27 (2-16:1) , SSI=0.16 (7-8:1)

DOL LUMBER=1.00 NAIL=1.00 LS BEND=1.00 COMP=1.00 SHEAR=1.00 TENS= 1.00

COMPANION LIVE LOAD FACTOR = 0.50

TRUSS PLATE MANUFACTURER IS NOT RESPONSIBLE FOR QUALITY CONTROL IN THE TRUSS MANUFACTURING PLANT .

NAIL VALUES

PLATE	GRIP(DRY) (PSI) MAX	MIN	SHEAR (PLI) MAX	MIN	SECTION (PLI) MAX	MIN
MT20	618	354	1667	822	2284	1656

PLATE PLACEMENT TOL. = 0.250 inches

PLATE ROTATION TOL. = 5.0 Deg.

JSI GRIP= 0.90 (16) (INPUT = 0.90)
JSI METAL= 0.43 (13) (INPUT = 1.00)

KOTT

CONTINUED ON PAGE 2

JOB NAME	TRUSS NAME	QUANTITY	PLY	JOB DESC.	DRWG NO.
PT0317-093	GIRD02	1	1	TRUSS DESC. LECCO RIDGE-BLOCK 343	

KOTT , Stouffville, ON, CGC

Version 8.100 S Feb 9 2017 MiTek Industries, Inc. Thu Mar 16 07:54:34 2017 Page 1
ID:EvTixTQDI5yR1QLotZTBr_yE?HJ-wGhiqOvLzvk03PBFPbwMRusCGZdbZdPEa1e6e0zaRI3

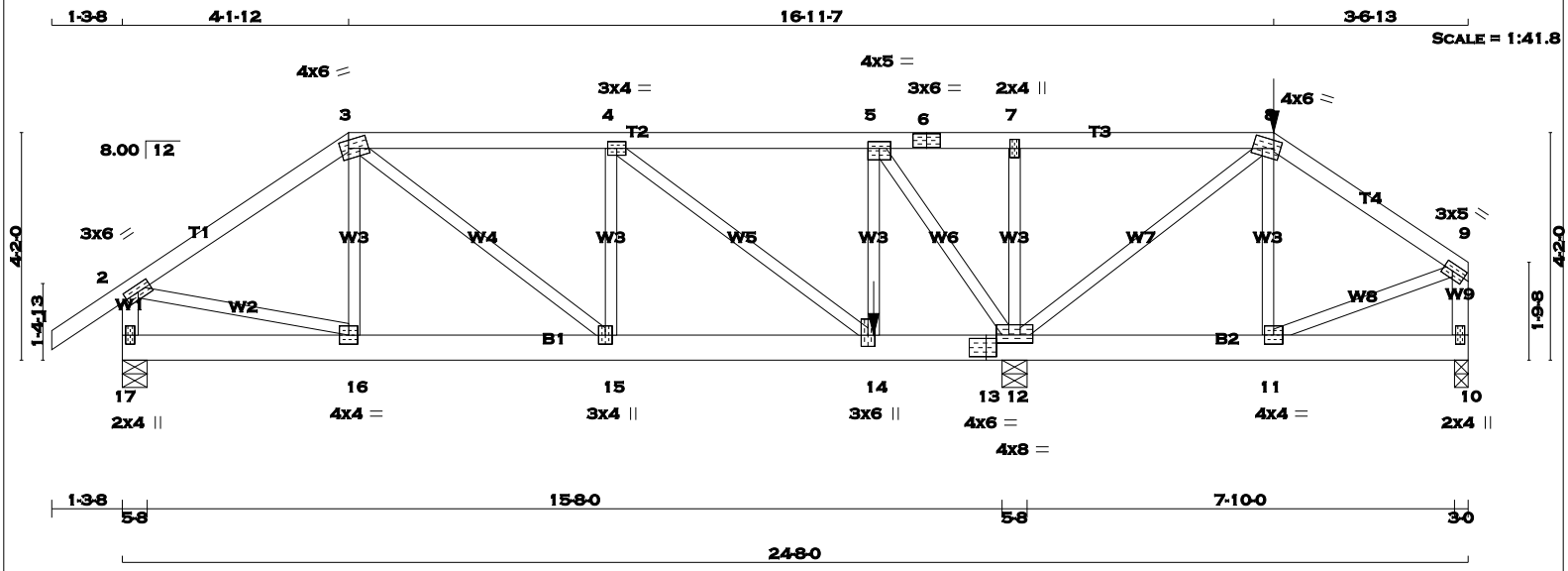

TOTAL WEIGHT = 116 lb
[M]

LUMBER
N. L. G. A. RULES

CHORDS	SIZE		LUMBER	DESCR.
1 - 3	2x4	DRY	No.2	SPF
3 - 6	2x4	DRY	No.2	SPF
6 - 8	2x4	DRY	No.2	SPF
8 - 9	2x4	DRY	No.2	SPF
17 - 2	2x4	DRY	No.2	SPF
10 - 9	2x4	DRY	No.2	SPF
17 - 13	2x6	DRY	No.2	SPF
13 - 10	2x6	DRY	No.2	SPF
ALL WEBS EXCEPT	2x3	DRY	No.2	SPF

DRY: SEASONED LUMBER.

PLATES (table is in inches)

JT	TYPE	PLATES	W	LEN	Y	X
2	TMVW-t	MT20	3.0	6.0		
3	TTWW-m	MT20	4.0	6.0	1.75	1.75
4	TMWW-t	MT20	3.0	4.0		
5	TMWW-t	MT20	4.0	5.0	1.50	2.50
6	TS-t	MT20	3.0	6.0		
7	TMW+w	MT20	2.0	4.0		
8	TTWW-m	MT20	4.0	6.0	1.75	1.50
9	TMVW-t	MT20	3.0	5.0	1.50	2.00
10	BMV1+p	MT20	2.0	4.0		
11	BMWW-t	MT20	4.0	4.0		
12	BMWWW1-t	MT20	4.0	8.0	1.75	4.00
13	BS-t	MT20	4.0	6.0	2.00	2.25
14	BMWW+t	MT20	3.0	6.0	2.50	1.50
15	BMWW+t	MT20	3.0	4.0		
16	BMWW-t	MT20	4.0	4.0		
17	BMV1+p	MT20	2.0	4.0		

A SIZE FOR SIZE SUBSTITUTION OF MITEK MII20 WITH TEE-LOK TL20 PLATES IS ALLOWED.

HANGERS NOTES

1) SPECIAL HANGER(S) OR CONNECTION(S) REQUIRED TO SUPPORT CONCENTRATED LOAD(S) 207.0 lbs FACTORED DOWN AT 21-1-3 ON TOP CHORD, AND 1084.3 lbs FACTORED DOWN AT 13-9-4 ON BOTTOM CHORD. DESIGN FOR UNSPECIFIED CONNECTION(S) IS DELEGATED TO THE BUILDING DESIGNER.

DIMENSIONS, SUPPORTS AND LOADINGS SPECIFIED BY FABRICATOR TO BE VERIFIED BY BUILDING DESIGNER

BEARINGS

JT	FACTORED GROSS REACTION VERT	HORZ	MAXIMUM FACTORED GROSS REACTION DOWN	HORZ	UPLIFT	INPUT BRG IN-SX	REQRD BRG IN-SX
17	943	0	943	0	0	5-8	5-8
12	3046	0	3046	0	0	5-8	5-8
10	419	0	419	0	0	3-0	3-0

UNFACTORED REACTIONS

JT	1ST LCASE COMBINED	SNOW	MAX./MIN. COMPONENT REACTIONS LIVE	PERM.LIVE	WIND	DEAD	SOIL
17	660	473 / 0	0 / 0	0 / 0	0 / 0	187 / 0	0 / 0
12	2136	1506 / 0	0 / 0	0 / 0	0 / 0	630 / 0	0 / 0
10	297	193 / 0	0 / 0	0 / 0	0 / 0	103 / 0	0 / 0

BEARING MATERIAL TO BE SPF NO.2 OR BETTER AT JOINT(S) 17, 12, 10

BRACING

TOP CHORD TO BE SHEATHED OR MAX. PURLIN SPACING = 5.72 FT.
MAX. UNBRACED BOTTOM CHORD LENGTH = 10.00 FT. OR RIGID CEILING DIRECTLY APPLIED.

ALL PITCH BREAKS AND PERIMETER CORNER JOINTS MUST BE LATERALLY RESTRAINED.

LOADING

TOTAL LOAD CASES: (4)

CHORDS

MEMB. FR-TO	MAX. FACTORED FORCE (LBS)	FACTORED VERT. LOAD (PLF) FROM	TO	LC1 MAX CSI (LC)	MAX. UNBRAC LENGTH
1- 2	0 / 29	-77.4	-77.4	0.11 (1)	10.00
2- 3	-856 / 0	-77.4	-77.4	0.27 (1)	6.22
3- 4	-1032 / 0	-77.4	-77.4	0.32 (1)	5.72
4- 5	-658 / 0	-77.4	-77.4	0.31 (1)	6.25
5- 6	0 / 407	-145.9	-145.9	0.55 (1)	10.00
6- 7	0 / 407	-145.9	-145.9	0.55 (1)	10.00
7- 8	0 / 407	-145.9	-145.9	0.55 (1)	10.00
8- 9	-247 / 0	-77.4	-77.4	0.19 (1)	6.25
17- 2	-910 / 0	0.0	0.0	0.10 (1)	7.81
10- 9	-353 / 0	0.0	0.0	0.04 (1)	7.81
17-16	0 / 0	-17.5	-17.5	0.04 (4)	10.00
16-15	0 / 709	-17.5	-17.5	0.11 (1)	10.00
15-14	0 / 1032	-17.5	-17.5	0.21 (1)	10.00
14-13	0 / 658	-33.0	-33.0	0.25 (1)	10.00
13-12	0 / 658	-33.0	-33.0	0.25 (1)	10.00
12-11	0 / 205	-33.0	-33.0	0.19 (1)	10.00
11-10	0 / 0	-33.0	-33.0	0.05 (4)	10.00

WEBS

MEMB. FR-TO	MAX. FACTORED FORCE (LBS)	MAX CSI (LC)
16- 3	-86 / 42	0.02 (1)
3-15	0 / 411	0.10 (1)
15- 4	-142 / 35	0.04 (1)
4-14	-477 / 0	0.31 (1)
14- 5	0 / 1314	0.33 (1)
5-12	-1890 / 0	0.65 (1)
12- 7	-701 / 0	0.18 (1)
12- 8	-782 / 0	0.48 (1)
11- 8	0 / 125	0.05 (4)
2-16	0 / 731	0.18 (1)
11- 9	0 / 220	0.05 (1)

FACTORED CONCENTRATED LOADS (LBS)

JT	LOC.	LC1	MAX-	MAX+	FACE	DIR.	TYPE
8	21-1-3	-207	-207	---	FRONT	VERT	TOTAL
14	13-9-4	-1084	-1084	---	FRONT	VERT	TOTAL

RECEIVED
TOWN OF MILTON
MAR 29, 2017
17-5327
BUILDING DIVISION

DESIGN CRITERIA

*** SPECIAL LOADS ANALYSIS ***
GEOMETRY AND/OR BASIC LOADS CHANGED BY USER.
LOADS WERE DERIVED FROM USER INPUT
NO FURTHER MODIFICATIONS WERE MADE

SPECIFIED LOADS:

TOP	CH.	LL	=	23.3	PSF
		DL	=	3.0	PSF
BOT	CH.	LL	=	0.0	PSF
		DL	=	7.0	PSF
TOTAL	LOAD		=	33.3	PSF

SPACING = 24.0 IN. C/C

LOADING IN FLAT SECTION BASED ON A SLOPE OF 6.00/12

GIRDER TYPE: CPrimeHip
LEFT SETBACK = 4-1-12
RIGHT SETBACK = 3-6-13
END SETBACK = 6-0-0
END WALL WIDTH = 5-8
CORNER FRAMING TYPE: CONVENTIONAL
END JACK TYPE: CONVENTIONAL
APPLIED TO FRONT SIDE
- ADDT'L LOADS BASED ON 55 % OF GSL.
LOADS APPLIED TO FIRST 10-10-12 OF SPAN MEASURED FROM THE RIGHT.

*** NON STANDARD GIRDER ***
ADDT'L USER-DEFINED LOADS APPLIED TO ALL LOAD CASES.

THIS TRUSS IS DESIGNED FOR RESIDENTIAL OR SMALL BUILDING REQUIREMENTS OF PART 9, NBCC 2010

THIS DESIGN COMPLIES WITH:
- PART 9 OF OBC 2012 , BCBC 2012 , ABC 2014
- CSA 086-09
- TPIC 2011

(55 % OF 27.2 P.S.F. G.S.L. PLUS 8.4 P.S.F. RAIN LOAD) EQUALS 23.3 P.S.F. SPECIFIED ROOF LIVE LOAD

ALLOWABLE DEFL.(LL)= L/360 (0.55")
CALCULATED VERT. DEFL.(LL) = L/ 999 (0.03")
ALLOWABLE DEFL.(TL)= L/360 (0.55")
CALCULATED VERT. DEFL.(TL) = L/ 999 (0.05")

CSI: TC=0.55 (7-8:1) , BC=0.25 (12-14:1) , WB=0.65 (5-12:1) , SSI=0.35 (7-8:1)

DOL LUMBER=1.00 NAIL=1.00 LS BEND=1.00 COMP=1.00 SHEAR=1.00 TENS= 1.00

COMPANION LIVE LOAD FACTOR = 0.50

TRUSS PLATE MANUFACTURER IS NOT RESPONSIBLE FOR QUALITY CONTROL IN THE TRUSS MANUFACTURING PLANT .

NAIL VALUES

PLATE	GRIP(DRY) (PSI) MAX	MIN	SHEAR (PLI) MAX	MIN	SECTION (PLI) MAX	MIN
MT20	618	354	1667	822	2284	1656

PLATE PLACEMENT TOL. = 0.250 inches

PLATE ROTATION TOL. = De

CONTINUED ON PAGE 2

SCALE = 1:30.2

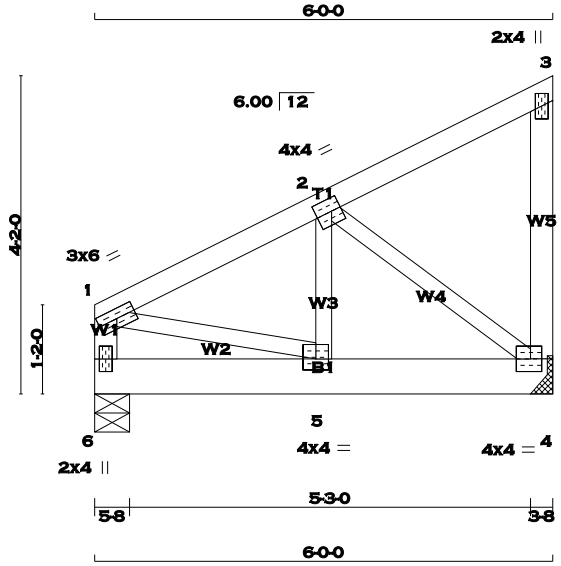

TOTAL WEIGHT = 29 lb [M]

LUMBER

N. L. G. A. RULES

CHORDS	SIZE		LUMBER	DESCR.
1 - 3	2x4	DRY	No.2	SPF
4 - 3	2x4	DRY	No.2	SPF
6 - 1	2x4	DRY	No.2	SPF
6 - 4	2x6	DRY	No.2	SPF
ALL WEBS EXCEPT	2x3	DRY	No.2	SPF

DRY: SEASONED LUMBER.

PLATES (table is in inches)

JT	TYPE	PLATES	W	LEN	Y	X
1	TMVW-t	MT20	3.0	6.0		
2	TMWW-t	MT20	4.0	4.0	2.00	1.50
3	TMV+p	MT20	2.0	4.0		
4	BMVW1-t	MT20	4.0	4.0	2.00	1.75
5	BMWW-t	MT20	4.0	4.0	1.75	2.00
6	BMV1+p	MT20	2.0	4.0		

A SIZE FOR SIZE SUBSTITUTION OF MITEK MII20 WITH TEE-LOK TL20 PLATES IS ALLOWED.

DIMENSIONS, SUPPORTS AND LOADINGS SPECIFIED BY FABRICATOR TO BE VERIFIED BY BUILDING DESIGNER

BEARINGS

JT	FACTORED GROSS REACTION VERT	HORZ	MAXIMUM FACTORED GROSS REACTION DOWN	HORZ	UPLIFT	INPUT BRG IN-SX	REQRD BRG IN-SX
4	1085	0	1085	0	0	HANGER BY OTHERS MIN. SEAT SIZE: 3-8	
6	1085	0	1085	0	0	5-8	5-8

UNFACTORED REACTIONS

JT	1ST LCASE COMBINED	SNOW	LIVE	PERM.LIVE	WIND	DEAD	SOIL
		MAX./MIN. COMPONENT REACTIONS					
4	761	533 / 0	0 / 0	0 / 0	0 / 0	229 / 0	0 / 0
6	761	533 / 0	0 / 0	0 / 0	0 / 0	229 / 0	0 / 0

BEARING MATERIAL TO BE SPF NO.2 OR BETTER AT JOINT(S) 6

BRACING

TOP CHORD TO BE SHEATHED OR MAX. PURLIN SPACING = 6.25 FT.
MAX. UNBRACED BOTTOM CHORD LENGTH = 10.00 FT. OR RIGID CEILING DIRECTLY APPLIED.

ALL PITCH BREAKS AND PERIMETER CORNER JOINTS MUST BE LATERALLY RESTRAINED.

LOADING

TOTAL LOAD CASES: (4)

CHORDS

MEMB. FR-TO	MAX. FACTORED FORCE (LBS)	VERT. LOAD LC1 (PLF) FROM	TO	MAX CSI (LC)	MAX. UNBRAC LENGTH
1- 2	-923 / 0	-77.4	-77.4	0.11 (1)	6.25
2- 3	-10 / 0	-77.4	-77.4	0.10 (1)	6.25
4- 3	-93 / 0	0.0	0.0	0.02 (1)	7.81
6- 1	-726 / 0	0.0	0.0	0.08 (1)	7.81
6- 5	0 / 0	-284.3	-284.3	0.17 (1)	10.00
5- 4	0 / 834	-284.3	-284.3	0.28 (1)	10.00

WEBS

MEMB. FR-TO	MAX. FACTORED FORCE (LBS)	MAX CSI (LC)
5- 2	0 / 773	0.19 (1)
2- 4	-1047 / 0	0.26 (1)
1- 5	0 / 862	0.21 (1)

DESIGN CRITERIA

SPECIFIED LOADS:

TOP CH.	LL	=	23.3	PSF
	DL	=	3.0	PSF
BOT CH.	LL	=	0.0	PSF
	DL	=	7.0	PSF
TOTAL LOAD		=	33.3	PSF

SPACING = 24.0 IN. C/C

GIRDER TYPE: CStdGirder
START DISTANCE = 0-0
START SPAN CARRIED = 13-8-8
END DISTANCE = 6-0-0
END SPAN CARRIED = 13-8-8
END WALL WIDTH = 5-8
APPLIED TO FRONT SIDE OF BOTTOM CHORD.
- ADDT'L LOADS BASED ON 55 % OF GSL.

THIS TRUSS IS DESIGNED FOR RESIDENTIAL OR SMALL BUILDING REQUIREMENTS OF PART 9, NBCC 2010

THIS DESIGN COMPLIES WITH:
- PART 9 OF OBC 2012 , BCBC 2012 , ABC 2014
- CSA 086-09
- TPIC 2011

(55 % OF 27.2 P.S.F. G.S.L. PLUS 8.4 P.S.F. RAIN LOAD) EQUALS 23.3 P.S.F. SPECIFIED ROOF LIVE LOAD

ALLOWABLE DEFL.(LL)= L/360 (0.20")
CALCULATED VERT. DEFL.(LL) = L/ 999 (0.01")
ALLOWABLE DEFL.(TL)= L/360 (0.20")
CALCULATED VERT. DEFL.(TL) = L/ 999 (0.02")

CSI: TC=0.11 (1-2:1) , BC=0.28 (4-5:1) , WB=0.26 (2-4:1) , SSI=0.33 (5-6:1)

DOL LUMBER=1.00 NAIL=1.00 LS BEND=1.00 COMP=1.00 SHEAR=1.00 TENS= 1.00

COMPANION LIVE LOAD FACTOR = 0.50

TRUSS PLATE MANUFACTURER IS NOT RESPONSIBLE FOR QUALITY CONTROL IN THE TRUSS MANUFACTURING PLANT .

NAIL VALUES

PLATE	GRIP(DRY) (PSI) MAX	MIN	SHEAR (PLI) MAX	MIN	SECTION (PLI) MAX	MIN
MT20	618	354	1667	822	2284	1656

PLATE PLACEMENT TOL. = 0.250 inches

PLATE ROTATION TOL. = 0.5 Deg.

JSI GRIP= 0.87 (2) (INPUT = 0.90)
JSI METAL= 0.31 (5) (INPUT = 1.00)

LICENSED PROFESSIONAL ENGINEER
P.M. TREVISAN
100136551
March 16th, 2017
PROVINCE OF ONTARIO

RECEIVED
TOWN OF MILTON
MAR 29, 2017
17-5327
BUILDING DIVISION

KOTT

SCALE = 1:70.2

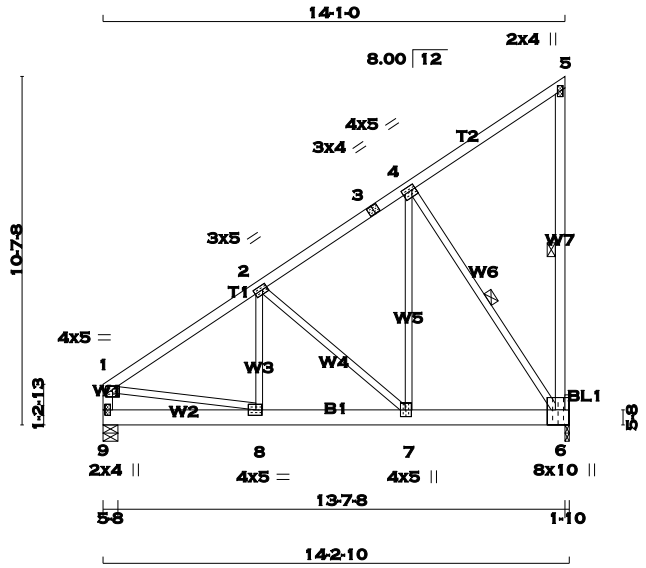

TOTAL WEIGHT = 4 X 80 = 321 lb [M]

LUMBER

N. L. G. A. RULES

CHORDS	SIZE		LUMBER	DESCR.
1 - 3	2x4	DRY	No.2	SPF
3 - 5	2x4	DRY	No.2	SPF
6 - 5	2x4	DRY	No.2	SPF
9 - 1	2x4	DRY	No.2	SPF
9 - 6	2x6	DRY	No.2	SPF

BEARING BLOCKS

BL1	2x6	DRY	No.2	SPF
ALL WEBS EXCEPT	2x3	DRY	No.2	SPF

DRY: SEASONED LUMBER.

DESIGN CONSISTS OF 4 TRUSSES BUILT SEPARATELY THEN FASTENED TOGETHER AS FOLLOWS:

CHORDS #ROWS	SURFACE SPACING (IN)	LOAD(PLF)
TOP CHORDS : (0.122"X3") SPIRAL NAILS		
1- 3 1	12	TOP
3- 5 1	12	TOP
5- 6 1	12	TOP
9- 1 1	12	TOP
BOTTOM CHORDS : (0.122"X3") SPIRAL NAILS		
9- 6 2	4	SIDE(582.5)
WEBS : (0.122"X3") SPIRAL NAILS		
2x3 1	6	

STAGGER NAILS BY HALF THE SURFACE SPACING IN ADJACENT PLIES.

IN ADDITION, PRE-DRILL ONE 0.56" DIAM. HOLE IN EACH CHORD PANEL AND INSTALL 0.50" DIAM. ASTM A307 BOLTS WITH WASHERS, BOTH SIDES. FOR OTHER BOLT TYPES SEE CSAO86 3.3.2.

TOP - COMPONENTS ARE LOADED FROM THE TOP AND MUST BE PLACED ON TOP EDGE OF ALL PLIES FOR THE LOAD TO BE TRANSFERRED TO EACH PLY.

SIDE - PLF SHOWN IS THE EQUIVALENT UDL APPLIED TO ONE SIDE THAT THE CORRESPONDING NAILING PATTERN SHALL BE CAPABLE OF TRANSFERING. REMAINING PLF MUST BE APPLIED ON THE OPPOSITE SIDE OR ON THE TOP.

PLATES (table is in inches)

JT	TYPE	PLATES	W	LEN	Y	X
1	TMVW-p	MT20	4.0	5.0	1.25	2.50

DIMENSIONS, SUPPORTS AND LOADINGS SPECIFIED BY FABRICATOR TO BE VERIFIED BY BUILDING DESIGNER

BEARINGS

JT	FACTORED GROSS REACTION VERT	HORZ	MAXIMUM FACTORED GROSS REACTION DOWN	HORZ	UPLIFT	INPUT BRG IN-SX	REQRD BRG IN-SX
6	6085	0	6085	0	0	1-10	1-10
9	6073	0	6073	0	0	5-8	5-8

UNFACTORED REACTIONS

JT	1ST LCASE COMBINED	MAX./MIN. COMPONENT REACTIONS SNOW	LIVE	PERM.LIVE	WIND	DEAD	SOIL
6	4270	2989 / 0	0 / 0	0 / 0	0 / 0	1281 / 0	0 / 0
9	4262	2982 / 0	0 / 0	0 / 0	0 / 0	1281 / 0	0 / 0

BEARING MATERIAL TO BE SPF NO.2 OR BETTER AT JOINT(S) 6, 9

BRACING

TOP CHORD TO BE SHEATHED OR MAX. PURLIN SPACING = 4.83 FT.
MAX. UNBRACED BOTTOM CHORD LENGTH = 10.00 FT. OR RIGID CEILING DIRECTLY APPLIED.

ALL PITCH BREAKS AND PERIMETER CORNER JOINTS MUST BE LATERALLY RESTRAINED.

1 - 2x3 SPF No.2 LATERAL BRACE(S) AT 1/ 2 LENGTH OF 5-6. DBS = 20-0-0 . CBF = 19 LBS.
1 - 2x4 SPF No.2 LATERAL BRACE(S) AT 1/ 2 LENGTH OF 4-6. DBS = 4-0-0 . CBF = 132 LBS.

DBS = DIAGONAL BRACE SPACING (MAX). CBF = CUMULATIVE BRACING FORCE. FASTEN LATERAL BRACE(S) TO EACH PLY USING (0.122"X3") SPIRAL NAILS : 1 NAIL FOR 2x3 BRACE(S), 2 FOR 1x4, 2x4, 2x5, 3 FOR 2x6, 4 FOR 2x8, 5 FOR 2x10, AND 6 FOR 2x12.

END VERTICAL(S) MUST BE SHEATHED OR HAVE BRACES AS INDICATED IN THE MAX. UNBRACED LENGTH COLUMN OF THE TABLE BELOW

LOADING

TOTAL LOAD CASES: (4)

CHORDS

MEMB. FR-TO	MAX. FACTORED FORCE (LBS)	FACTORED VERT. LOAD (PLF) FROM	TO	LC1 MAX CSI (LC)	MAX. UNBRAC LENGTH
1- 2	-6166 / 0	-77.4	-77.4	0.18 (1)	4.83
2- 3	-3468 / 0	-77.4	-77.4	0.12 (1)	6.05
3- 4	-3468 / 0	-77.4	-77.4	0.12 (1)	6.05
4- 5	-18 / 0	-77.4	-77.4	0.09 (1)	6.25
6- 5	-148 / 0	0.0	0.0	0.02 (1)	6.25
9- 1	-4487 / 0	0.0	0.0	0.13 (1)	7.00
9- 8	0 / 0	-794.2	-794.2	0.33 (1)	10.00
8- 7	0 / 5139	-794.2	-794.2	0.47 (1)	10.00
7- 6	0 / 2895	-794.2	-794.2	0.40 (1)	10.00

WEBS

MEMB. FR-TO	MAX. FACTORED FORCE (LBS)	MAX CSI (LC)
8- 2	0 / 3111	0.18 (1)
2- 7	-2988 / 0	0.47 (1)
7- 4	0 / 5932	0.33 (1)
4- 6	-5283 / 0	0.62 (1)
1- 8	0 / 5216	0.29 (1)

RECEIVED
TOWN OF MILTON
MAR 29, 2017
17-5327
BUILDING DIVISION

DESIGN CRITERIA

SPECIFIED LOADS:

TOP CH.	LL	=	23.3	PSF
	DL	=	3.0	PSF
BOT CH.	LL	=	0.0	PSF
	DL	=	7.0	PSF
TOTAL LOAD		=	33.3	PSF

SPACING = 24.0 IN. C/C

GIRDER TYPE: CStdGirder
START DISTANCE = 0-0
START SPAN CARRIED = 35-2-8
END DISTANCE = 14-2-10
END SPAN CARRIED = 35-2-8
END WALL WIDTH = 5-8
APPLIED TO FRONT SIDE OF BOTTOM CHORD.
- ADDT'L LOADS BASED ON 55 % OF GSL.

THIS TRUSS IS DESIGNED FOR RESIDENTIAL OR SMALL BUILDING REQUIREMENTS OF PART 9, NBCC 2010

THIS DESIGN COMPLIES WITH:
- PART 9 OF OBC 2012 , BCBC 2012 , ABC 2014
- CSA 086-09
- TPIC 2011

(55 % OF 27.2 P.S.F. G.S.L. PLUS 8.4 P.S.F. RAIN LOAD) EQUALS 23.3 P.S.F. SPECIFIED ROOF LIVE LOAD

ALLOWABLE DEFL.(LL)= L/360 (0.46")
CALCULATED VERT. DEFL.(LL) = L/ 999 (0.04")
ALLOWABLE DEFL.(TL)= L/360 (0.46")
CALCULATED VERT. DEFL.(TL) = L/ 999 (0.08")

CSI: TC=0.18 (1-2:1) , BC=0.47 (7-8:1) , WB=0.62 (4-6:1) , SSI=0.37 (8-9:1)

DOL LUMBER=1.00 NAIL=1.00 LS BEND=1.10 COMP=1.10 SHEAR=1.10 TENS= 1.10

COMPANION LIVE LOAD FACTOR = 0.50

TRUSS PLATE MANUFACTURER IS NOT RESPONSIBLE FOR QUALITY CONTROL IN THE TRUSS MANUFACTURING PLANT .

NAIL VALUES

PLATE	GRIP(DRY) (PSI) MAX	MIN	SHEAR (PLI) MAX	MIN	SECTION (PLI) MAX	MIN
MT20	618	354	1667	822	2284	1656

PLATE PLACEMENT TOL. = 0.250 inches

PLATE ROTATION TOL. = 5.0 Deg.

JSI GRIP= 0.90 (8) (INPUT = 0.90)
JSI METAL= 0.39 (8) (INPUT = 1.00)

CONTINUED ON PAGE 2

JOB NAME	TRUSS NAME	QUANTITY	PLY	JOB DESC.	DRWG NO.
PT0317-093	GIRD05	1	4	TRUSS DESC. LECCO RIDGE-BLOCK 343	

KOTT , Stouffville, ON, CGC

Version 8.100 S Feb 9 2017 MiTek Industries, Inc. Thu Mar 16 07:54:36 2017 Page 1
ID:EvTixTQDI5yR1QLotZTBr_yE?HJ-sepTF4wcUW_kJjLdW0yqXJxeINJ51XXX1L7CjvzaRI1

SCALE = 1:70.2

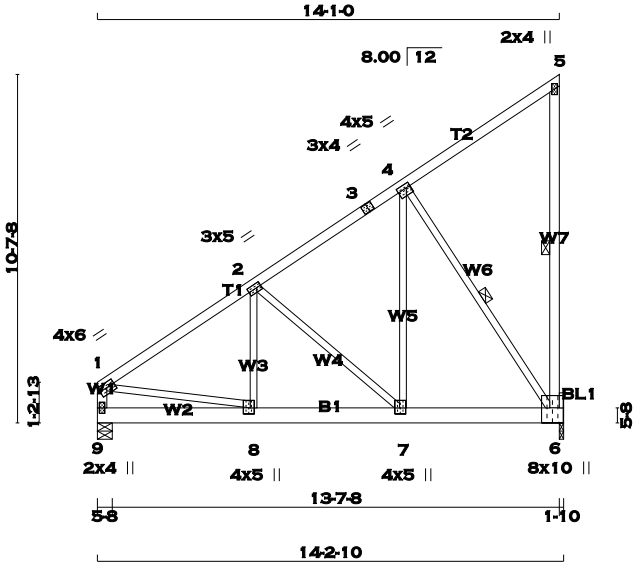

TOTAL WEIGHT = 4 X 80 = 321 lb

LUMBER
N. L. G. A. RULES

CHORDS	SIZE		LUMBER	DESCR.
1 - 3	2x4	DRY	No.2	SPF
3 - 5	2x4	DRY	No.2	SPF
6 - 5	2x4	DRY	No.2	SPF
9 - 1	2x4	DRY	No.2	SPF
9 - 6	2x6	DRY	2100F 1.8E	SPF

BEARING BLOCKS

BL1	2x6	DRY	No.2	SPF
ALL WEBS EXCEPT	2x3	DRY	No.2	SPF

DRY: SEASONED LUMBER.

DESIGN CONSISTS OF 4 TRUSSES BUILT SEPARATELY THEN FASTENED TOGETHER AS FOLLOWS:

CHORDS #ROWS	SURFACE SPACING (IN)		LOAD(PLF)
TOP CHORDS : (0.122"X3") SPIRAL NAILS			
1- 3	1	12	TOP
3- 5	1	12	TOP
5- 6	1	12	TOP
9- 1	1	12	TOP
BOTTOM CHORDS : (0.122"X3") SPIRAL NAILS			
9- 6	2	4	SIDE(638.8)
WEBS : (0.122"X3") SPIRAL NAILS			
2x3	1	6	

STAGGER NAILS BY HALF THE SURFACE SPACING IN ADJACENT PLIES.

IN ADDITION, PRE-DRILL ONE 0.56" DIAM. HOLE IN EACH CHORD PANEL AND INSTALL 0.50" DIAM. ASTM A307 BOLTS WITH WASHERS, BOTH SIDES. FOR OTHER BOLT TYPES SEE CSAO86 3.3.2.

TOP - COMPONENTS ARE LOADED FROM THE TOP AND MUST BE PLACED ON TOP EDGE OF ALL PLIES FOR THE LOAD TO BE TRANSFERRED TO EACH PLY.

SIDE - PLF SHOWN IS THE EQUIVALENT UDL APPLIED TO ONE SIDE THAT THE CORRESPONDING NAILING PATTERN SHALL BE CAPABLE OF TRANSFERING. REMAINING PLF MUST BE APPLIED ON THE OPPOSITE SIDE OR ON THE TOP.

DIMENSIONS, SUPPORTS AND LOADINGS SPECIFIED BY FABRICATOR TO BE VERIFIED BY BUILDING DESIGNER

BEARINGS

JT	FACTORED GROSS REACTION VERT	HORZ	MAXIMUM FACTORED GROSS REACTION DOWN	HORZ	UPLIFT	INPUT BRG IN-SX	REQRD BRG IN-SX
6	6608	0	6608	0	0	1-10	1-10 + FLUSH PLATE
9	6597	0	6597	0	0	5-8	5-8

UNFACTORED REACTIONS

JT	1ST LCASE COMBINED	MAX./MIN. COMPONENT REACTIONS SNOW	LIVE	PERM.LIVE	WIND	DEAD	SOIL
6	4637	3246 / 0	0 / 0	0 / 0	0 / 0	1392 / 0	0 / 0
9	4630	3239 / 0	0 / 0	0 / 0	0 / 0	1391 / 0	0 / 0

BEARING MATERIAL TO BE SPF NO.2 OR BETTER AT JOINT(S) 6, 9

BRACING

TOP CHORD TO BE SHEATHED OR MAX. PURLIN SPACING = 4.68 FT.
MAX. UNBRACED BOTTOM CHORD LENGTH = 10.00 FT. OR RIGID CEILING DIRECTLY APPLIED.

ALL PITCH BREAKS AND PERIMETER CORNER JOINTS MUST BE LATERALLY RESTRAINED.

1 - 2x3 SPF No.2 LATERAL BRACE(S) AT 1/ 2 LENGTH OF 5-6. DBS = 20-0-0 . CBF = 19 LBS.
1 - 2x4 SPF No.2 LATERAL BRACE(S) AT 1/ 2 LENGTH OF 4-6. DBS = 4-0-0 . CBF = 143 LBS.

DBS = DIAGONAL BRACE SPACING (MAX). CBF = CUMULATIVE BRACING FORCE. FASTEN LATERAL BRACE(S) TO EACH PLY USING (0.122"X3") SPIRAL NAILS : 1 NAIL FOR 2x3 BRACE(S), 2 FOR 1x4, 2x4, 2x5, 3 FOR 2x6, 4 FOR 2x8, 5 FOR 2x10, AND 6 FOR 2x12.

END VERTICAL(S) MUST BE SHEATHED OR HAVE BRACES AS INDICATED IN THE MAX. UNBRACED LENGTH COLUMN OF THE TABLE BELOW

LOADING

TOTAL LOAD CASES: (4)

CHORDS

MEMB. FR-TO	MAX. FACTORED FORCE (LBS)	FACTORED VERT. LOAD LC1 (PLF) FROM	TO	MAX CSI (LC)	MAX. UNBRAC LENGTH
1- 2	-6673 / 0	-77.4	-77.4	0.19 (1)	4.68
2- 3	-3756 / 0	-77.4	-77.4	0.12 (1)	5.88
3- 4	-3756 / 0	-77.4	-77.4	0.12 (1)	5.88
4- 5	-18 / 0	-77.4	-77.4	0.09 (1)	6.25
6- 5	-148 / 0	0.0	0.0	0.02 (1)	6.25
9- 1	-4843 / 0	0.0	0.0	0.15 (1)	6.81
9- 8	0 / 0	-869.3	-869.3	0.20 (1)	10.00
8- 7	0 / 5561	-869.3	-869.3	0.25 (1)	10.00
7- 6	0 / 3135	-869.3	-869.3	0.22 (1)	10.00

WEBS

MEMB. FR-TO	MAX. FACTORED FORCE (LBS)	MAX CSI (LC)
8- 2	0 / 3394	0.19 (1)
2- 7	-3230 / 0	0.51 (1)
7- 4	0 / 6456	0.36 (1)
4- 6	-5721 / 0	0.67 (1)
1- 8	0 / 5644	0.32 (1)

[M]

DESIGN CRITERIA

SPECIFIED LOADS:

TOP CH.	LL	=	23.3	PSF
	DL	=	3.0	PSF
BOT CH.	LL	=	0.0	PSF
	DL	=	7.0	PSF
TOTAL LOAD		=	33.3	PSF

SPACING = 24.0 IN. C/C

GIRDER TYPE: CStdGirder
START DISTANCE = 0-0
START SPAN CARRIED = 38-4-8
END DISTANCE = 14-2-10
END SPAN CARRIED = 38-4-8
END WALL WIDTH = 5-8
APPLIED TO FRONT SIDE OF BOTTOM CHORD.
- ADDT'L LOADS BASED ON 55 % OF GSL.

THIS TRUSS IS DESIGNED FOR RESIDENTIAL OR SMALL BUILDING REQUIREMENTS OF PART 9, NBCC 2010

THIS DESIGN COMPLIES WITH:
- PART 9 OF OBC 2012 , BCBC 2012 , ABC 2014
- CSA 086-09
- TPIC 2011

(55 % OF 27.2 P.S.F. G.S.L. PLUS 8.4 P.S.F. RAIN LOAD) EQUALS 23.3 P.S.F. SPECIFIED ROOF LIVE LOAD

ALLOWABLE DEFL.(LL)= L/360 (0.46")
CALCULATED VERT. DEFL.(LL) = L/ 999 (0.04")
ALLOWABLE DEFL.(TL)= L/360 (0.46")
CALCULATED VERT. DEFL.(TL) = L/ 999 (0.07")

CSI: TC=0.19 (1-2:1) , BC=0.25 (7-8:1) , WB=0.67 (4-6:1) , SSI=0.40 (8-9:1)

DOL LUMBER=1.00 NAIL=1.00 LS BEND=1.10 COMP=1.10 SHEAR=1.10 TENS= 1.10

COMPANION LIVE LOAD FACTOR = 0.50

TRUSS PLATE MANUFACTURER IS NOT RESPONSIBLE FOR QUALITY CONTROL IN THE TRUSS MANUFACTURING PLANT .

NAIL VALUES

PLATE	GRIP(DRY) (PSI) MAX	MIN	SHEAR (PLI) MAX	MIN	SECTION (PLI) MAX	MIN
MT20	618	354	1667	822	2284	1656

PLATE PLACEMENT TOL. = 0.250 inches

PLATE ROTATION TOL. = 5.0 Deg.

JSI GRIP= 0.90 (2) (INPUT = 0.90)
JSI METAL= 0.45 (8) (INPUT = 1.00)

LICENSED PROFESSIONAL ENGINEER
P.M. TREVISAN
100136551
March 16th, 2017
PROVINCE OF ONTARIO

RECEIVED
TOWN OF MILTON
MAR 29, 2017
17-5327
BUILDING DIVISION

KOTT

CONTINUED ON PAGE 2

JOB NAME	TRUSS NAME	QUANTITY	PLY	JOB DESC.	DRWG NO.
PT0317-093	GIRD06	1	2	TRUSS DESC. LECCO RIDGE-BLOCK 343	

KOTT , Stouffville, ON, CGC

Version 8.100 S Feb 9 2017 MiTek Industries, Inc. Thu Mar 16 07:54:37 2017 Page 1
ID:EvTixTQDI5yR1QLotZTBr_yE?HJ-KrMrTQxEFq6bwtvq4jT33XUoAnctm_AgG?tmFLzaRI0

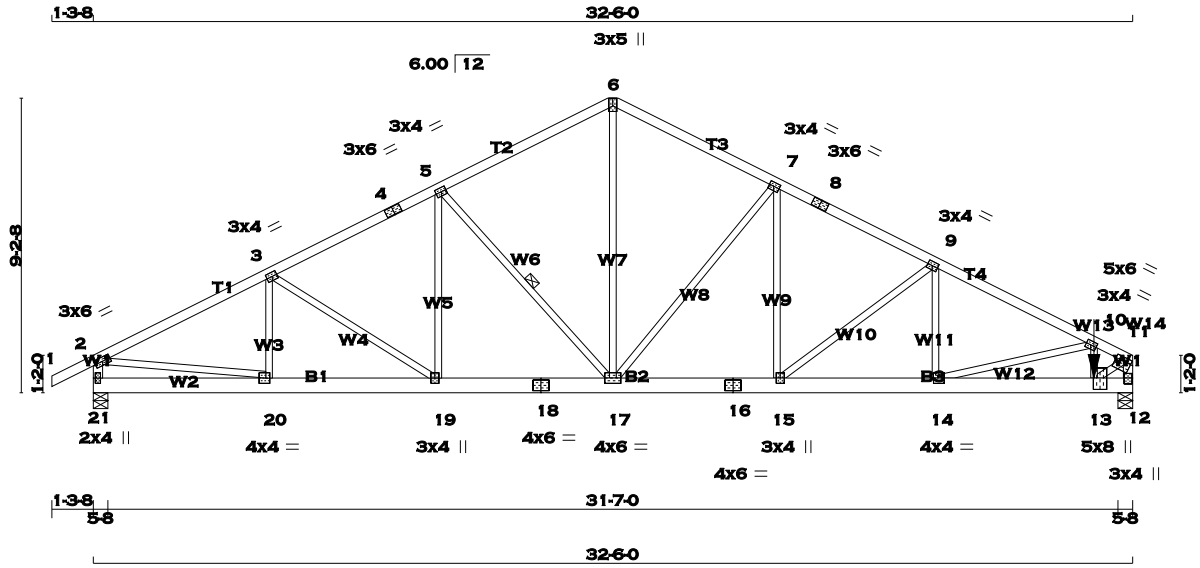

TOTAL WEIGHT = 2 X 157 = 314 lb [M]

LUMBER

N. L. G. A. RULES

CHORDS	SIZE		LUMBER	DESCR.
1 - 4	2x4	DRY	No.2	SPF
4 - 6	2x4	DRY	No.2	SPF
6 - 8	2x4	DRY	No.2	SPF
8 - 11	2x4	DRY	No.2	SPF
21 - 2	2x4	DRY	No.2	SPF
12 - 11	2x4	DRY	No.2	SPF
21 - 18	2x6	DRY	No.2	SPF
18 - 16	2x6	DRY	No.2	SPF
16 - 12	2x6	DRY	No.2	SPF
ALL WEBS EXCEPT	2x3	DRY	No.2	SPF

DRY: SEASONED LUMBER.

DESIGN CONSISTS OF 2 TRUSSES BUILT SEPARATELY THEN FASTENED TOGETHER AS FOLLOWS:

CHORDS	#ROWS	SURFACE SPACING (IN)	LOAD(PLF)
TOP CHORDS : (0.122"X3") SPIRAL NAILS			
1- 4	1	12	TOP
4- 6	1	12	TOP
6- 8	1	12	TOP
8- 11	1	12	TOP
21- 2	1	12	TOP
12- 11	1	12	TOP
BOTTOM CHORDS : (0.122"X3") SPIRAL NAILS			
21- 18	2	12	TOP
18- 16	2	12	TOP
16- 12	2	12	SIDE(0.0)
WEBS : (0.122"X3") SPIRAL NAILS			
2x3	1	6	

NAILS TO BE DRIVEN FROM ONE SIDE ONLY.

GIRDER NAILING ASSUMES NAILED HANGERS ARE FASTENED WITH MIN. 3-0 INCH NAILS.

TOP - COMPONENTS ARE LOADED FROM THE TOP AND MUST BE PLACED ON TOP EDGE OF ALL PLIES FOR THE LOAD TO BE TRANSFERRED TO EACH PLY.

SIDE - PLF SHOWN IS THE EQUIVALENT UDL APPLIED TO ONE SIDE THAT THE CORRESPONDING NAILING PATTERN SHALL BE CAPABLE OF TRANSFERING. REMAINING PLF MUST BE APPLIED ON THE OPPOSITE SIDE OR ON THE TOP.

LICENSED PROFESSIONAL ENGINEER
P.M. TREVISAN
100136551
March 16th, 2017
PROVINCE OF ONTARIO

DIMENSIONS, SUPPORTS AND LOADINGS SPECIFIED BY FABRICATOR TO BE VERIFIED BY BUILDING DESIGNER

BEARINGS

JT	FACTORED GROSS REACTION VERT	HORZ	MAXIMUM FACTORED GROSS REACTION DOWN	HORZ	UPLIFT	INPUT BRG IN-SX	REQRD BRG IN-SX
21	1773	0	1773	0	0	5-8	5-8
12	4830	0	4830	0	0	5-8	5-8

UNFACTORED REACTIONS

JT	1ST LCASE COMBINED	MAX./MIN. COMPONENT REACTIONS SNOW	LIVE	PERM.LIVE	WIND	DEAD	SOIL
21	1242	882 / 0	0 / 0	0 / 0	0 / 0	360 / 0	0 / 0
12	3390	2371 / 0	0 / 0	0 / 0	0 / 0	1018 / 0	0 / 0

BEARING MATERIAL TO BE SPF NO.2 OR BETTER AT JOINT(S) 21, 12

BRACING

TOP CHORD TO BE SHEATHED OR MAX. PURLIN SPACING = 4.52 FT.
MAX. UNBRACED BOTTOM CHORD LENGTH = 10.00 FT. OR RIGID CEILING DIRECTLY APPLIED.

ALL PITCH BREAKS AND PERIMETER CORNER JOINTS MUST BE LATERALLY RESTRAINED.

1 - 2x3 SPF No.2 LATERAL BRACE(S) AT 1/ 2 LENGTH OF 5-17. DBS = 20-0-0 . CBF = 78 LBS.

DBS = DIAGONAL BRACE SPACING (MAX). CBF = CUMULATIVE BRACING FORCE. FASTEN LATERAL BRACE(S) TO EACH PLY USING (0.122"X3") SPIRAL NAILS : 1 NAIL FOR 2x3 BRACE(S), 2 FOR 1x4, 2x4, 2x5, 3 FOR 2x6, 4 FOR 2x8, 5 FOR 2x10, AND 6 FOR 2x12.

END VERTICAL(S) MUST BE SHEATHED OR HAVE BRACES AS INDICATED IN THE MAX. UNBRACED LENGTH COLUMN OF THE TABLE BELOW

LOADING

TOTAL LOAD CASES: (4)

CHORDS

MEMB. FR-TO	MAX. FACTORED FORCE (LBS)	FACTORED VERT. LOAD (PLF) FROM	TO	LC1 MAX CSI (LC)	MAX. UNBRAC LENGTH
1- 2	0 / 23	-77.4	-77.4	0.06 (1)	10.00
2- 3	-2493 / 0	-77.4	-77.4	0.20 (1)	5.52
3- 4	-2302 / 0	-77.4	-77.4	0.20 (1)	5.69
4- 5	-2302 / 0	-77.4	-77.4	0.20 (1)	5.69
5- 6	-1859 / 0	-77.4	-77.4	0.19 (1)	6.17
6- 7	-1857 / 0	-77.4	-77.4	0.17 (1)	6.20
7- 8	-2495 / 0	-77.4	-77.4	0.19 (1)	5.54
8- 9	-2495 / 0	-77.4	-77.4	0.19 (1)	5.54
9-10	-3263 / 0	-77.4	-77.4	0.18 (1)	5.00
10-11	-4369 / 0	-77.4	-77.4	0.10 (1)	4.52
21- 2	-1719 / 0	0.0	0.0	0.09 (1)	7.81
12-11	-4484 / 0	0.0	0.0	0.25 (1)	5.63
21-20	0 / 0	-17.5	-17.5	0.03 (4)	10.00
20-19	0 / 2245	-17.5	-17.5	0.17 (1)	10.00
19-18	0 / 2060	-17.5	-17.5	0.16 (1)	10.00
18-17	0 / 2060	-17.5	-17.5	0.16 (1)	10.00
17-16	0 / 2235	-17.5	-17.5	0.17 (1)	10.00
16-15	0 / 2235	-17.5	-17.5	0.17 (1)	10.00
15-14	0 / 2928	-17.5	-17.5	0.22 (1)	10.00
14-13	0 / 3923	-17.5	-17.5	0.40 (1)	10.00
13-12	0 / 0	-17.5	-17.5	0.15 (1)	10.00

WEBS

MEMB. FR-TO	MAX. FACTORED FORCE (LBS)	MAX CSI (LC)
20- 3	-237 / 18	0.03 (1)
3-19	-222 / 0	0.08 (1)
19- 5	0 / 217	0.03 (1)
5-17	-624 / 0	0.15 (1)
17- 7	-935 / 0	0.65 (1)
15- 7	0 / 586	0.07 (1)
15- 9	-879 / 0	0.31 (1)
14- 9	0 / 486	0.06 (1)
14-10	-1032 / 0	0.24 (1)
13-10	0 / 521	0.06 (1)
2-20	0 / 2267	0.28 (1)
13-11	0 / 4659	0.58 (1)
17- 6	0 / 1314	0.16 (1)

FACTORED CONCENTRATED LOADS (LBS)

JT	LOC.	LC1	MAX-	MAX+	FACE	DIR.	TYPE
13	31-3-8	-3415	-3415	---	FRONT	VERT	TOTAL

RECEIVED
TOWN OF MILTON
MAR 29, 2017
17-5327
BUILDING DIVISION

DESIGN CRITERIA

*** SPECIAL LOADS ANALYSIS ***
GEOMETRY AND/OR BASIC LOADS CHANGED BY USER.
LOADS WERE DERIVED FROM USER INPUT
NO FURTHER MODIFICATIONS WERE MADE

SPECIFIED LOADS:

TOP	CH.	LL	=	23.3	PSF
		DL	=	3.0	PSF
BOT	CH.	LL	=	0.0	PSF
		DL	=	7.0	PSF
TOTAL	LOAD		=	33.3	PSF

SPACING = 24.0 IN. C/C

*** NON STANDARD GIRDER ***
ADDT'L USER-DEFINED LOADS APPLIED TO ALL LOAD CASES.

THIS TRUSS IS DESIGNED FOR RESIDENTIAL OR SMALL BUILDING REQUIREMENTS OF PART 9, NBCC 2010

THIS DESIGN COMPLIES WITH:
- PART 9 OF OBC 2012 , BCBC 2012 , ABC 2014
- CSA 086-09
- TPIC 2011

(55 % OF 27.2 P.S.F. G.S.L. PLUS 8.4 P.S.F. RAIN LOAD) EQUALS 23.3 P.S.F. SPECIFIED ROOF LIVE LOAD

ALLOWABLE DEFL.(LL)= L/360 (1.08")
CALCULATED VERT. DEFL.(LL) = L/ 999 (0.06")
ALLOWABLE DEFL.(TL)= L/360 (1.08")
CALCULATED VERT. DEFL.(TL) = L/ 999 (0.11")

CSI: TC=0.25 (11-12:1) , BC=0.40 (13-14:1) , WB=0.65 (7-17:1) , SSI=0.11 (12-13:1)

DOL LUMBER=1.00 NAIL=1.00 LS BEND=1.00 COMP=1.00 SHEAR=1.00 TENS= 1.00

COMPANION LIVE LOAD FACTOR = 0.50

TRUSS PLATE MANUFACTURER IS NOT RESPONSIBLE FOR QUALITY CONTROL IN THE TRUSS MANUFACTURING PLANT .

NAIL VALUES

PLATE	GRIP(DRY) (PSI) MAX	MIN	SHEAR (PLI) MAX	MIN	SECTION (PLI) MAX	MIN
MT20	618	354	1667	822	2284	1656

PLATE PLACEMENT TOL. = 0.250 inches

PLATE ROTATION TOL. = 5.0 Deg.

JSI GRIP= 0.88 (2) (INPUT = 0.90)
JSI METAL= 0.55 (11) (INPUT = 1.00)

KOTT

CONTINUED ON PAGE 2

JOB NAME	TRUSS NAME	QUANTITY	PLY	JOB DESC.	DRWG NO.
PT0317-093	GIRD07	2	2	TRUSS DESC. LECCO RIDGE-BLOCK 343	

KOTT , Stouffville, ON, CGC

Version 8.100 S Feb 9 2017 MiTek Industries, Inc. Thu Mar 16 07:54:38 2017 Page 1
ID:EvTixTQDI5yR1QLotZTBr_yE?HJ-p1wDglys07ESY0U0eR_Ick1zSA_kVYkqUfcJnnzaRI?

SCALE = 1:46.3

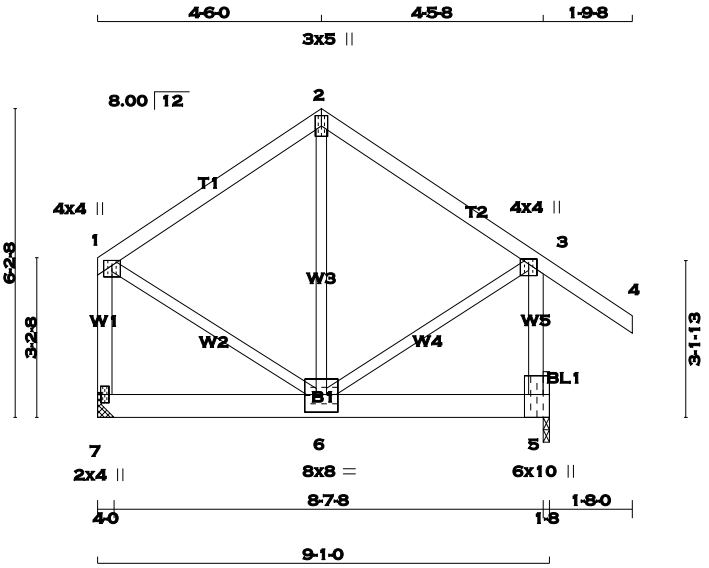

TOTAL WEIGHT = 4 X 50 = 200 lb

LUMBER
N. L. G. A. RULES

CHORDS	SIZE		LUMBER	DESCR.
1 - 2	2x4	DRY	No.2	SPF
2 - 4	2x4	DRY	No.2	SPF
7 - 1	2x4	DRY	No.2	SPF
5 - 3	2x4	DRY	No.2	SPF
7 - 5	2x6	DRY	2100F 1.8E	SPF
BEARING BLOCKS				
BL1	2x6	DRY	No.2	SPF
ALL WEBS EXCEPT	2x3	DRY	No.2	SPF

DRY: SEASONED LUMBER.

DESIGN CONSISTS OF 2 TRUSSES BUILT SEPARATELY THEN FASTENED TOGETHER AS FOLLOWS:

CHORDS #ROWS		SURFACE SPACING (IN)	LOAD(PLF)
TOP CHORDS : (0.122"X3") SPIRAL NAILS			
1- 2	1	12	TOP
2- 4	1	12	TOP
7- 1	1	12	TOP
5- 3	1	12	TOP
BOTTOM CHORDS : (0.122"X3") SPIRAL NAILS			
7- 5	2	8	SIDE(340.4)
WEBS : (0.122"X3") SPIRAL NAILS			
2x3	1	6	

NAILS TO BE DRIVEN FROM ONE SIDE ONLY.

TOP - COMPONENTS ARE LOADED FROM THE TOP AND MUST BE PLACED ON TOP EDGE OF ALL PLIES FOR THE LOAD TO BE TRANSFERRED TO EACH PLY.

SIDE - PLF SHOWN IS THE EQUIVALENT UDL APPLIED TO ONE SIDE THAT THE CORRESPONDING NAILING PATTERN SHALL BE CAPABLE OF TRANSFERING. REMAINING PLF MUST BE APPLIED ON THE OPPOSITE SIDE OR ON THE TOP.

PLATES (table is in inches)

JT	TYPE	PLATES	W	LEN	Y	X
1	TMVW+p	MT20	4.0	4.0	1.25	2.00
2	TTW+p	MT20	3.0	5.0		
3	TMVW+p	MT20	4.0	4.0	1.25	2.00
5	BMVK1+p	MT20	6.0	10.0	5.50	Edge
6	BMWWW-t	MT20	8.0	8.0	4.25	4.00

DIMENSIONS, SUPPORTS AND LOADINGS SPECIFIED BY FABRICATOR TO BE VERIFIED BY BUILDING DESIGNER

BEARINGS

JT	FACTORED GROSS REACTION VERT	HORZ	MAXIMUM FACTORED GROSS REACTION DOWN	HORZ	UPLIFT	INPUT BRG IN-SX	REQRD BRG IN-SX
7	3415	0	3415	0	0	HANGER BY OTHERS MIN. SEAT SIZE: 4-0	
5	3577	0	3577	0	0	1-8	1-8 + FLUSH PLATE

UNFACTORED REACTIONS

JT	1ST LCASE COMBINED	SNOW	LIVE	PERM.LIVE	WIND	DEAD	SOIL
		MAX./MIN. COMPONENT REACTIONS					
7	2397	1677 / 0	0 / 0	0 / 0	0 / 0	720 / 0	0 / 0
5	2506	1774 / 0	0 / 0	0 / 0	0 / 0	733 / 0	0 / 0

BEARING MATERIAL TO BE SPF NO.2 OR BETTER AT JOINT(S) 5

BRACING
TOP CHORD TO BE SHEATHED OR MAX. PURLIN SPACING = 6.18 FT.
MAX. UNBRACED BOTTOM CHORD LENGTH = 6.25 FT. OR RIGID CEILING DIRECTLY APPLIED.

ALL PITCH BREAKS AND PERIMETER CORNER JOINTS MUST BE LATERALLY RESTRAINED.

LOADING
TOTAL LOAD CASES: (4)

CHORDS

MEMB. FR-TO	MAX. FACTORED FORCE (LBS)	FACTORED VERT. LOAD (PLF) FROM	TO	LC1 MAX CSI (LC)	MAX. UNBRAC LENGTH
1- 2	-1867 / 0	-77.4	-77.4	0.17 (1)	6.18
2- 3	-1867 / 0	-77.4	-77.4	0.17 (1)	6.19
3- 4	0 / 40	-77.4	-77.4	0.11 (1)	10.00
7- 1	-2177 / 0	0.0	0.0	0.19 (1)	7.54
5- 3	-2421 / 0	0.0	0.0	0.21 (1)	7.25
7- 6	0 / 0	-698.3	-698.3	0.30 (1)	10.00
6- 5	-125 / 0	-698.3	-698.3	0.30 (1)	6.25

WEBS

MEMB. FR-TO	MAX. FACTORED FORCE (LBS)	MAX CSI (LC)
6- 2	0 / 1725	0.21 (1)
1- 6	0 / 1830	0.23 (1)
6- 3	0 / 1988	0.25 (1)

RECEIVED
TOWN OF MILTON
MAR 29, 2017
17-5327
BUILDING DIVISION

[M]

DESIGN CRITERIA

SPECIFIED LOADS:

TOP	CH.	LL	=	23.3	PSF
		DL	=	3.0	PSF
BOT	CH.	LL	=	0.0	PSF
		DL	=	7.0	PSF
TOTAL	LOAD		=	33.3	PSF

SPACING = 24.0 IN. C/C

GIRDER TYPE: CStdGirder
START DISTANCE = 0-0
START SPAN CARRIED = 31-2-0
END DISTANCE = 9-1-0
END SPAN CARRIED = 31-2-0
END WALL WIDTH = 5-8
APPLIED TO FRONT SIDE OF BOTTOM CHORD.
- ADDT'L LOADS BASED ON 55 % OF GSL.

THIS TRUSS IS DESIGNED FOR RESIDENTIAL OR SMALL BUILDING REQUIREMENTS OF PART 9, NBCC 2010

THIS DESIGN COMPLIES WITH:
- PART 9 OF OBC 2012 , BCBC 2012 , ABC 2014
- CSA 086-09
- TPIC 2011

(55 % OF 27.2 P.S.F. G.S.L. PLUS 8.4 P.S.F. RAIN LOAD) EQUALS 23.3 P.S.F. SPECIFIED ROOF LIVE LOAD

ALLOWABLE DEFL.(LL)= L/360 (0.29")
CALCULATED VERT. DEFL.(LL) = L/ 999 (0.03")
ALLOWABLE DEFL.(TL)= L/360 (0.29")
CALCULATED VERT. DEFL.(TL) = L/ 999 (0.05")

CSI: TC=0.21 (3-5:1) , BC=0.30 (5-6:1) , WB=0.25 (3-6:1) , SSI=0.63 (6-7:1)

DOL LUMBER=1.00 NAIL=1.00 LS BEND=1.00 COMP=1.00 SHEAR=1.00 TENS= 1.00

COMPANION LIVE LOAD FACTOR = 0.50

TRUSS PLATE MANUFACTURER IS NOT RESPONSIBLE FOR QUALITY CONTROL IN THE TRUSS MANUFACTURING PLANT .

NAIL VALUES

PLATE	GRIP(DRY) (PSI) MAX	MIN	SHEAR (PLI) MAX	MIN	SECTION (PLI) MAX	MIN
MT20	618	354	1667	822	2284	1656

PLATE PLACEMENT TOL. = 0.250 inches

PLATE ROTATION TOL. = 5.0 Deg.

JSI GRIP= 0.84 (3) (INPUT = 0.90)
JSI METAL= 0.24 (3) (INPUT = 1.00)

KOTT

CONTINUED ON PAGE 2

JOB NAME	TRUSS NAME	QUANTITY	PLY	JOB DESC.	DRWG NO.
PT0317-093	GIRD08	1	2	TRUSS DESC. LECCO RIDGE-BLOCK 343	

KOTT , Stouffville, ON, CGC

Version 8.100 S Feb 9 2017 MiTek Industries, Inc. Thu Mar 16 07:54:39 2017 Page 1
ID:EvTixTQDI5yR1QLotZTBr_yE?HJ-HDUbt5yUnRMJAA3CB8VX8yZ8haHGEwxzjJMtKEzaRI

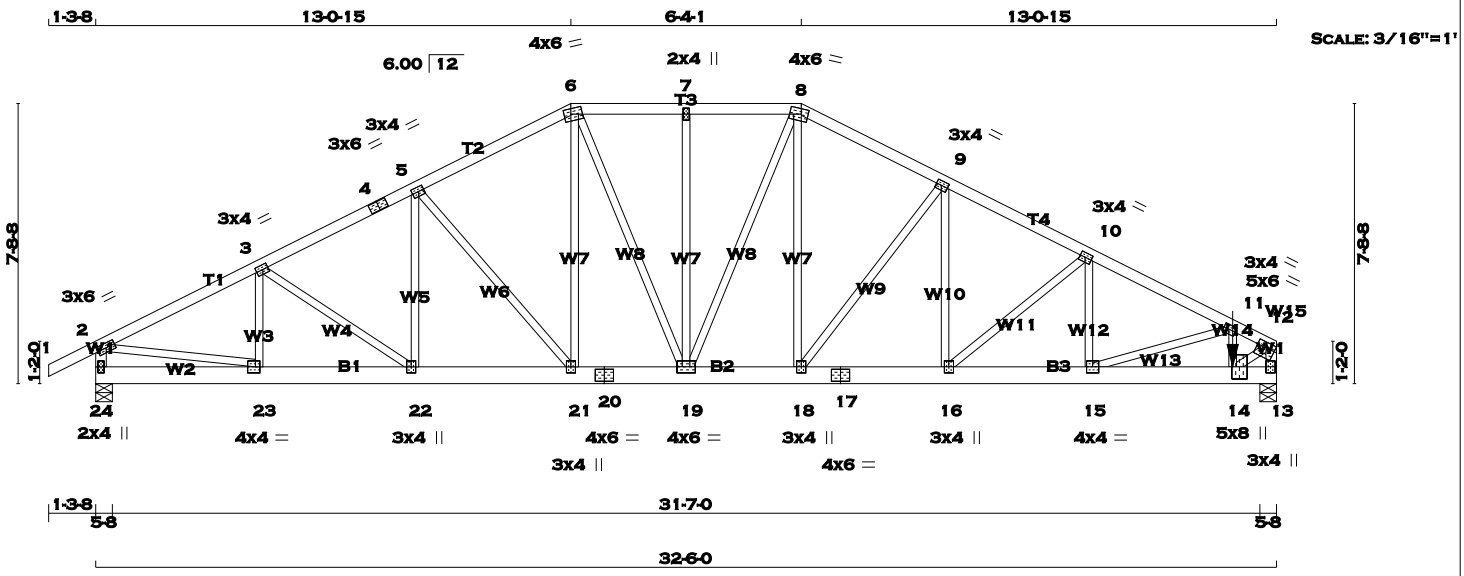

TOTAL WEIGHT = 2 X 170 = 341 lb [M]

LUMBER
N. L. G. A. RULES

CHORDS	SIZE		LUMBER	DESCR.
1 - 4	2x4	DRY	No.2	SPF
4 - 6	2x4	DRY	No.2	SPF
6 - 8	2x4	DRY	No.2	SPF
8 - 12	2x4	DRY	No.2	SPF
24 - 2	2x4	DRY	No.2	SPF
13 - 12	2x4	DRY	No.2	SPF
24 - 20	2x6	DRY	No.2	SPF
20 - 17	2x6	DRY	No.2	SPF
17 - 13	2x6	DRY	No.2	SPF
ALL WEBS EXCEPT	2x3	DRY	No.2	SPF

DRY: SEASONED LUMBER.

DESIGN CONSISTS OF 2 TRUSSES BUILT SEPARATELY THEN FASTENED TOGETHER AS FOLLOWS:

CHORDS	#ROWS	SURFACE SPACING (IN)	LOAD(PLF)
TOP CHORDS : (0.122"X3") SPIRAL NAILS			
1- 4	1	12	TOP
4- 6	1	12	TOP
6- 8	1	12	TOP
8- 12	1	12	TOP
24- 2	1	12	TOP
13- 12	1	12	TOP
BOTTOM CHORDS : (0.122"X3") SPIRAL NAILS			
24- 20	2	12	TOP
20- 17	2	12	TOP
17- 13	2	12	SIDE(0.0)
WEBS : (0.122"X3") SPIRAL NAILS			
2x3	1	6	

NAILS TO BE DRIVEN FROM ONE SIDE ONLY.

GIRDER NAILING ASSUMES NAILED HANGERS ARE FASTENED WITH MIN. 3-0 INCH NAILS.

TOP - COMPONENTS ARE LOADED FROM THE TOP AND MUST BE PLACED ON TOP EDGE OF ALL PLIES FOR THE LOAD TO BE TRANSFERRED TO EACH PLY.

SIDE - PLF SHOWN IS THE EQUIVALENT UDL APPLIED TO ONE SIDE THAT THE CORRESPONDING NAILING PATTERN SHALL BE CAPABLE OF TRANSFERING. REMAINING PLF MUST BE APPLIED ON THE OPPOSITE SIDE OR ON THE TOP.

LICENSED PROFESSIONAL ENGINEER
P.M. TREVISAN
100136551
March 16th, 2017
PROVINCE OF ONTARIO

DIMENSIONS, SUPPORTS AND LOADINGS SPECIFIED BY FABRICATOR TO BE VERIFIED BY BUILDING DESIGNER

BEARINGS

JT	FACTORED GROSS REACTION VERT	HORZ	MAXIMUM FACTORED GROSS REACTION DOWN	HORZ	UPLIFT	INPUT BRG IN-SX	REQRD BRG IN-SX
24	1773	0	1773	0	0	5-8	5-8
13	4830	0	4830	0	0	5-8	5-8

UNFACTORED REACTIONS

JT	1ST LCASE COMBINED	MAX./MIN. COMPONENT REACTIONS SNOW	LIVE	PERM.LIVE	WIND	DEAD	SOIL
24	1242	882 / 0	0 / 0	0 / 0	0 / 0	360 / 0	0 / 0
13	3390	2371 / 0	0 / 0	0 / 0	0 / 0	1018 / 0	0 / 0

BEARING MATERIAL TO BE SPF NO.2 OR BETTER AT JOINT(S) 24, 13

BRACING
TOP CHORD TO BE SHEATHED OR MAX. PURLIN SPACING = 4.56 FT.
MAX. UNBRACED BOTTOM CHORD LENGTH = 10.00 FT. OR RIGID CEILING DIRECTLY APPLIED.

ALL PITCH BREAKS AND PERIMETER CORNER JOINTS MUST BE LATERALLY RESTRAINED.

LOADING
TOTAL LOAD CASES: (4)

CHORDS

MEMB. FR-TO	MAX. FACTORED FORCE (LBS)	FACTORED VERT. LOAD (PLF) FROM	TO	LC1 MAX CSI (LC)	MAX. UNBRAC LENGTH
1- 2	0 / 23	-77.4	-77.4	0.06 (1)	10.00
2- 3	-2432 / 0	-77.4	-77.4	0.13 (1)	5.65
3- 4	-2408 / 0	-77.4	-77.4	0.13 (1)	5.68
4- 5	-2408 / 0	-77.4	-77.4	0.13 (1)	5.68
5- 6	-2105 / 0	-77.4	-77.4	0.12 (1)	5.98
6- 7	-2004 / 0	-77.4	-77.4	0.07 (1)	6.15
7- 8	-2004 / 0	-77.4	-77.4	0.07 (1)	6.15
8- 9	-2221 / 0	-77.4	-77.4	0.11 (1)	5.88
9-10	-2756 / 0	-77.4	-77.4	0.12 (1)	5.40
10-11	-3428 / 0	-77.4	-77.4	0.13 (1)	4.95
11-12	-4328 / 0	-77.4	-77.4	0.07 (1)	4.56
24- 2	-1720 / 0	0.0	0.0	0.09 (1)	7.81
13-12	-4466 / 0	0.0	0.0	0.25 (1)	5.64
24-23	0 / 0	-17.5	-17.5	0.03 (1)	10.00
23-22	0 / 2187	-17.5	-17.5	0.17 (1)	10.00
22-21	0 / 2154	-17.5	-17.5	0.15 (1)	10.00
21-20	0 / 1874	-17.5	-17.5	0.13 (1)	10.00
20-19	0 / 1874	-17.5	-17.5	0.13 (1)	10.00
19-18	0 / 1984	-17.5	-17.5	0.14 (1)	10.00
18-17	0 / 2466	-17.5	-17.5	0.18 (1)	10.00
17-16	0 / 2466	-17.5	-17.5	0.18 (1)	10.00
16-15	0 / 3078	-17.5	-17.5	0.22 (1)	10.00
15-14	0 / 3869	-17.5	-17.5	0.41 (1)	10.00
14-13	0 / 0	-17.5	-17.5	0.16 (1)	10.00

WEBS

MEMB. FR-TO	MAX. FACTORED FORCE (LBS)	MAX CSI (LC)
23- 3	-328 / 0	0.03 (1)
3-22	-40 / 0	0.01 (1)
22- 5	0 / 111	0.02 (4)
5-21	-441 / 0	0.19 (1)
21- 6	0 / 402	0.05 (1)
6-19	0 / 326	0.04 (1)
19- 7	-285 / 0	0.15 (1)
19- 8	0 / 49	0.01 (1)
18- 8	0 / 718	0.09 (1)
18- 9	-812 / 0	0.33 (1)
16- 9	0 / 552	0.07 (1)
16-10	-802 / 0	0.18 (1)
15-10	0 / 493	0.06 (1)
15-11	-838 / 0	0.13 (1)
14-11	0 / 505	0.06 (1)
2-23	0 / 2219	0.27 (1)
14-12	0 / 4595	0.57 (1)

FACTORED CONCENTRATED LOADS (LBS)

JT	LOC.	LC1	MAX-	MAX+	FACE	DIR.	TYPE
14	31-3-8	-3415	-3415	---	FRONT	VERT	TOTAL

RECEIVED
TOWN OF MILTON
MAR 29, 2017
17-5327
BUILDING DIVISION

DESIGN CRITERIA

*** SPECIAL LOADS ANALYSIS ***
GEOMETRY AND/OR BASIC LOADS CHANGED BY USER.
LOADS WERE DERIVED FROM USER INPUT
NO FURTHER MODIFICATIONS WERE MADE

SPECIFIED LOADS:

TOP	CH.	LL	=	23.3	PSF
		DL	=	3.0	PSF
BOT	CH.	LL	=	0.0	PSF
		DL	=	7.0	PSF
TOTAL	LOAD		=	33.3	PSF

SPACING = 24.0 IN. C/C

LOADING IN FLAT SECTION BASED ON A SLOPE OF 6.00/12

*** NON STANDARD GIRDER ***
ADDT'L USER-DEFINED LOADS APPLIED TO ALL LOAD CASES.

THIS TRUSS IS DESIGNED FOR RESIDENTIAL OR SMALL BUILDING REQUIREMENTS OF PART 9, NBCC 2010

THIS DESIGN COMPLIES WITH:
- PART 9 OF OBC 2012 , BCBC 2012 , ABC 2014
- CSA 086-09
- TPIC 2011

(55 % OF 27.2 P.S.F. G.S.L. PLUS 8.4 P.S.F. RAIN LOAD) EQUALS 23.3 P.S.F. SPECIFIED ROOF LIVE LOAD

ALLOWABLE DEFL.(LL)= L/360 (1.08")
CALCULATED VERT. DEFL.(LL) = L/ 999 (0.06")
ALLOWABLE DEFL.(TL)= L/360 (1.08")
CALCULATED VERT. DEFL.(TL) = L/ 999 (0.10")

CSI: TC=0.25 (12-13:1) , BC=0.41 (14-15:1) , WB=0.57 (12-14:1) , SSI=0.12 (13-14:1)

DOL LUMBER=1.00 NAIL=1.00 LS BEND=1.00 COMP=1.00 SHEAR=1.00 TENS= 1.00

COMPANION LIVE LOAD FACTOR = 0.50

TRUSS PLATE MANUFACTURER IS NOT RESPONSIBLE FOR QUALITY CONTROL IN THE TRUSS MANUFACTURING PLANT .

NAIL VALUES

PLATE	GRIP(DRY) (PSI) MAX	MIN	SHEAR (PLI) MAX	MIN	SECTION (PLI) MAX	MIN
MT20	618	354	1667	822	2284	1656

PLATE PLACEMENT TOL. = 0.250 inches

PLATE ROTATION TOL. = 5.0 Deg.

JSI GRIP= 0.89 (12) (INPUT = 0.90)
JSI METAL= 0.54 (12) (INPUT = 1.00)

KOTT

CONTINUED ON PAGE 2

JOB NAME	TRUSS NAME	QUANTITY	PLY	JOB DESC.	DRWG NO.
PT0317-093	GIRD10	2	1	TRUSS DESC. LECCO RIDGE-BLOCK 343	

KOTT , Stouffville, ON, CGC

Version 8.100 S Feb 9 2017 MiTek Industries, Inc. Thu Mar 16 07:54:39 2017 Page 1
ID:EvTixTQDI5yR1QLotZTBr_yE?HJ-HDUbt5yUnRMJAA3CB8VX8yZ7eaL_E10zjJMtKEzaRI_

SCALE = 1:34.6

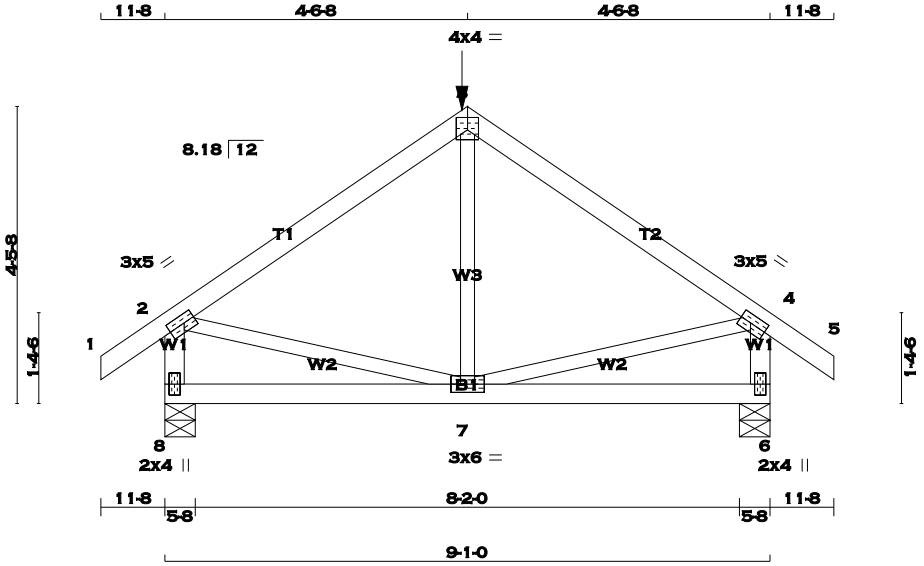

TOTAL WEIGHT = 2 X 38 = 76 lb [M]

LUMBER

N. L. G. A. RULES

CHORDS	SIZE		LUMBER	DESCR.
1 - 3	2x4	DRY	No.2	SPF
3 - 5	2x4	DRY	No.2	SPF
8 - 2	2x4	DRY	No.2	SPF
6 - 4	2x4	DRY	No.2	SPF
8 - 6	2x4	DRY	No.2	SPF
ALL WEBS EXCEPT	2x3	DRY	No.2	SPF

DRY: SEASONED LUMBER.

PLATES (table is in inches)

JT	TYPE	PLATES	W	LEN	Y	X
2	TMVW-t	MT20	3.0	5.0	1.50	2.00
3	TTW-p	MT20	4.0	4.0	2.25	2.00
4	TMVW-t	MT20	3.0	5.0	1.50	2.00
6	BMV1+p	MT20	2.0	4.0		
7	BMWWW-t	MT20	3.0	6.0		
8	BMV1+p	MT20	2.0	4.0		

A SIZE FOR SIZE SUBSTITUTION OF MITEK MII20 WITH TEE-LOK TL20 PLATES IS ALLOWED.

HANGERS NOTES

1) SPECIAL HANGER(S) OR CONNECTION(S) REQUIRED TO SUPPORT CONCENTRATED LOAD(S) 331.8 lbs FACTORED DOWN AT 4-6-8 ON TOP CHORD. DESIGN FOR UNSPECIFIED CONNECTION(S) IS DELEGATED TO THE BUILDING DESIGNER.

DIMENSIONS, SUPPORTS AND LOADINGS SPECIFIED BY FABRICATOR TO BE VERIFIED BY BUILDING DESIGNER

BEARINGS

JT	FACTORED GROSS REACTION VERT	HORZ	MAXIMUM FACTORED GROSS REACTION DOWN	HORZ	UPLIFT	INPUT BRG IN-SX	REQRD BRG IN-SX
8	719	0	719	0	0	5-8	5-8
6	719	0	719	0	0	5-8	5-8

UNFACTORED REACTIONS

JT	1ST LCASE COMBINED	MAX./MIN. COMPONENT REACTIONS SNOW	LIVE	PERM.LIVE	WIND	DEAD	SOIL
8	503	360 / 0	0 / 0	0 / 0	0 / 0	143 / 0	0 / 0
6	503	360 / 0	0 / 0	0 / 0	0 / 0	143 / 0	0 / 0

BEARING MATERIAL TO BE SPF NO.2 OR BETTER AT JOINT(S) 8, 6

BRACING

TOP CHORD TO BE SHEATHED OR MAX. PURLIN SPACING = 6.25 FT.
MAX. UNBRACED BOTTOM CHORD LENGTH = 10.00 FT. OR RIGID CEILING DIRECTLY APPLIED.

ALL PITCH BREAKS AND PERIMETER CORNER JOINTS MUST BE LATERALLY RESTRAINED.

LOADING

TOTAL LOAD CASES: (4)

CHORDS

MEMB. FR-TO	MAX. FACTORED FORCE (LBS)	FACTORED VERT. LOAD (PLF) FROM	TO	LC1 MAX CSI (LC)	MAX. UNBRAC LENGTH
1- 2	0 / 23	-77.4	-77.4	0.07 (1)	10.00
2- 3	-552 / 0	-77.4	-77.4	0.31 (1)	6.25
3- 4	-552 / 0	-77.4	-77.4	0.31 (1)	6.25
4- 5	0 / 23	-77.4	-77.4	0.07 (1)	10.00
8- 2	-671 / 0	0.0	0.0	0.08 (1)	7.81
6- 4	-672 / 0	0.0	0.0	0.08 (1)	7.81
8- 7	0 / 0	-26.6	-26.6	0.17 (4)	10.00
7- 6	0 / 0	-26.6	-26.6	0.17 (4)	10.00

WEBS

MEMB. FR-TO	MAX. FACTORED FORCE (LBS)	MAX CSI (LC)
7- 3	-62 / 107	0.04 (4)
7- 2	0 / 468	0.12 (1)
7- 4	0 / 468	0.12 (1)

FACTORED CONCENTRATED LOADS (LBS)

JT	LOC.	LC1	MAX-	MAX+	FACE	DIR.	TYPE
3	4-6-8	-332	-332	---	FRONT	VERT	TOTAL

DESIGN CRITERIA

SPECIFIED LOADS:

TOP	CH.	LL	=	23.3	PSF
		DL	=	3.0	PSF
BOT	CH.	LL	=	0.0	PSF
		DL	=	7.0	PSF
TOTAL	LOAD		=	33.3	PSF

SPACING = 24.0 IN. C/C

GIRDER TYPE: CPrimeHip
SIDE SETBACK = 4-6-8
END SETBACK = 4-4-0
END WALL WIDTH = 3-0
CORNER FRAMING TYPE: CONVENTIONAL
END JACK TYPE: CONVENTIONAL
APPLIED TO FRONT SIDE
- ADDT'L LOADS BASED ON 55 % OF GSL.

THIS TRUSS IS DESIGNED FOR RESIDENTIAL OR SMALL BUILDING REQUIREMENTS OF PART 9, NBCC 2010

THIS DESIGN COMPLIES WITH:
- PART 9 OF OBC 2012 , BCBC 2012 , ABC 2014
- CSA 086-09
- TPIC 2011

(55 % OF 27.2 P.S.F. G.S.L. PLUS 8.4 P.S.F. RAIN LOAD) EQUALS 23.3 P.S.F. SPECIFIED ROOF LIVE LOAD

ALLOWABLE DEFL.(LL)= L/360 (0.30")
CALCULATED VERT. DEFL.(LL) = L/ 999 (0.01")
ALLOWABLE DEFL.(TL)= L/360 (0.30")
CALCULATED VERT. DEFL.(TL) = L/ 999 (0.02")

CSI: TC=0.31 (2-3:1) , BC=0.17 (6-7:4) , WB=0.12 (4-7:1) , SSI=0.12 (2-3:1)

DOL LUMBER=1.00 NAIL=1.00 LS BEND=1.00 COMP=1.00 SHEAR=1.00 TENS= 1.00

COMPANION LIVE LOAD FACTOR = 0.50

TRUSS PLATE MANUFACTURER IS NOT RESPONSIBLE FOR QUALITY CONTROL IN THE TRUSS MANUFACTURING PLANT .

NAIL VALUES

PLATE	GRIP(DRY) (PSI) MAX	MIN	SHEAR (PLI) MAX	MIN	SECTION (PLI) MAX	MIN
MT20	618	354	1667	822	2284	1656

PLATE PLACEMENT TOL. = 0.250 inches

PLATE ROTATION TOL. = 5.0 Deg.

JSI GRIP= 0.86 (7) (INPUT = 0.90)
JSI METAL= 0.21 (2) (INPUT = 1.00)

LICENSED PROFESSIONAL ENGINEER
P.M. TREVISAN
100136551
March 16th, 2017
PROVINCE OF ONTARIO

RECEIVED
TOWN OF MILTON
MAR 29, 2017
17-5327
BUILDING DIVISION

KOTT

JOB NAME	TRUSS NAME	QUANTITY	PLY	JOB DESC.	DRWG NO.
PT0317-093	GIRD12	1	1	TRUSS DESC. LECCO RIDGE-BLOCK 343	ENG JOB: PT0317-093

KOTT , Stouffville, ON, CGC

Version 8.100 S Feb 9 2017 MiTek Industries, Inc. Thu Mar 16 07:54:40 2017 Page 1

ID:EvTixTQDI5yR1QLotZTBr_yE?HJ-lQ2z5Rz6YlUAnKeOls1mh96Ew_g1zRu7yz5QrgzaRHz

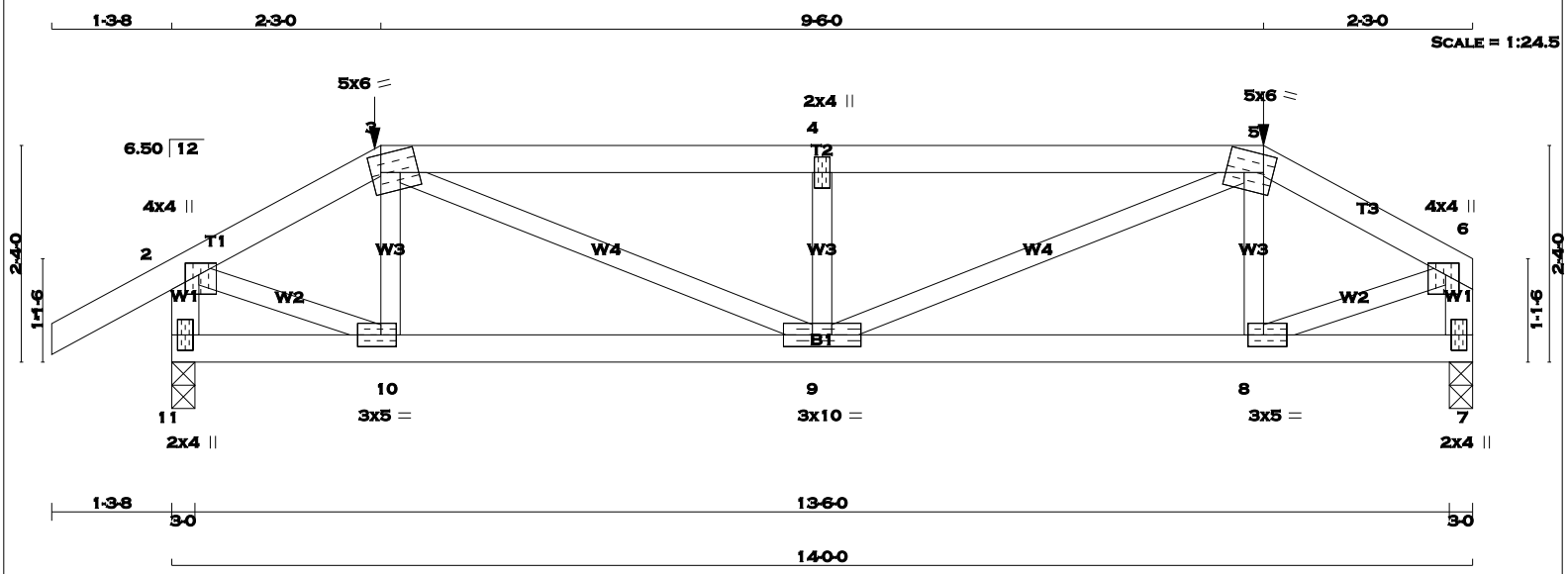

TOTAL WEIGHT = 52 lb

LUMBER

N. L. G. A. RULES

CHORDS	SIZE		LUMBER	DESCR.
1 - 3	2x4	DRY	No.2	SPF
3 - 5	2x4	DRY	No.2	SPF
5 - 6	2x4	DRY	No.2	SPF
11 - 2	2x4	DRY	No.2	SPF
7 - 6	2x4	DRY	No.2	SPF
11 - 7	2x4	DRY	No.2	SPF
ALL WEBS EXCEPT	2x3	DRY	No.2	SPF

DRY: SEASONED LUMBER.

PLATES (table is in inches)

JT	TYPE	PLATES	W	LEN	Y	X
2	TMVW+p	MT20	4.0	4.0	1.50	1.75
3	TTWW-m	MT20	5.0	6.0	2.25	1.25
4	TMW+w	MT20	2.0	4.0		
5	TTWW-m	MT20	5.0	6.0	2.25	1.25
6	TMVW+p	MT20	4.0	4.0	1.50	1.75
7	BMV1+p	MT20	2.0	4.0		
8	BMWW-t	MT20	3.0	5.0	1.50	2.00
9	BMWWW-t	MT20	3.0	10.0		
10	BMWW-t	MT20	3.0	5.0	1.50	2.00
11	BMV1+p	MT20	2.0	4.0		

A SIZE FOR SIZE SUBSTITUTION OF MITEK MII20 WITH TEE-LOK TL20 PLATES IS ALLOWED.

HANGERS NOTES

1) SPECIAL HANGER(S) OR CONNECTION(S) REQUIRED TO SUPPORT CONCENTRATED LOAD(S) 88.2 lbs FACTORED DOWN AT 11-9-0, AND 88.2 lbs FACTORED DOWN AT 2-3-0 ON TOP CHORD. DESIGN FOR UNSPECIFIED CONNECTION(S) IS DELEGATED TO THE BUILDING DESIGNER.

DIMENSIONS, SUPPORTS AND LOADINGS SPECIFIED BY FABRICATOR TO BE VERIFIED BY BUILDING DESIGNER

BEARINGS

JT	FACTORED GROSS REACTION VERT	HORZ	MAXIMUM FACTORED GROSS REACTION DOWN	HORZ	UPLIFT	INPUT BRG IN-SX	REQRD BRG IN-SX
11	1113	0	1113	0	0	3-0	3-0
7	1007	0	1007	0	0	3-0	3-0

UNFACTORED REACTIONS

JT	1ST LCASE COMBINED	MAX./MIN. COMPONENT REACTIONS SNOW	LIVE	PERM.LIVE	WIND	DEAD	SOIL
11	779	558 / 0	0 / 0	0 / 0	0 / 0	221 / 0	0 / 0
7	707	494 / 0	0 / 0	0 / 0	0 / 0	213 / 0	0 / 0

BEARING MATERIAL TO BE SPF NO.2 OR BETTER AT JOINT(S) 11, 7

BRACING

TOP CHORD TO BE SHEATHED OR MAX. PURLIN SPACING = 4.16 FT.
MAX. UNBRACED BOTTOM CHORD LENGTH = 10.00 FT. OR RIGID CEILING DIRECTLY APPLIED.

ALL PITCH BREAKS AND PERIMETER CORNER JOINTS MUST BE LATERALLY RESTRAINED.

LOADING

TOTAL LOAD CASES: (4)

CHORDS

MEMB. FR-TO	MAX. FACTORED FORCE (LBS)	FACTORED VERT. LOAD (PLF) FROM	TO	LC1 MAX CSI (LC)	MAX. UNBRAC LENGTH
1- 2	0 / 25	-77.4	-77.4	0.11 (1)	10.00
2- 3	-1167 / 0	-77.4	-77.4	0.09 (1)	5.78
3- 4	-1929 / 0	-117.7	-117.7	0.54 (1)	4.16
4- 5	-1929 / 0	-117.7	-117.7	0.54 (1)	4.16
5- 6	-1167 / 0	-77.4	-77.4	0.09 (1)	5.78
11- 2	-1100 / 0	0.0	0.0	0.12 (1)	7.51
7- 6	-995 / 0	0.0	0.0	0.11 (1)	7.80
11-10	0 / 0	-26.6	-26.6	0.10 (4)	10.00
10- 9	0 / 1012	-26.6	-26.6	0.25 (1)	10.00
9- 8	0 / 1012	-26.6	-26.6	0.25 (1)	10.00
8- 7	0 / 0	-26.6	-26.6	0.10 (4)	10.00

WEBS

MEMB. FR-TO	MAX. FACTORED FORCE (LBS)	MAX CSI (LC)
10- 3	-230 / 16	0.04 (1)
3- 9	0 / 997	0.25 (1)
9- 4	-674 / 0	0.11 (1)
9- 5	0 / 997	0.25 (1)
8- 5	-230 / 16	0.04 (1)
2-10	0 / 1082	0.27 (1)
8- 6	0 / 1082	0.27 (1)

FACTORED CONCENTRATED LOADS (LBS)

JT	LOC.	LC1	MAX-	MAX+	FACE	DIR.	TYPE
3	2-3-0	-88	-88	---	FRONT	VERT	TOTAL
5	11-9-0	-88	-88	---	FRONT	VERT	TOTAL

DESIGN CRITERIA

SPECIFIED LOADS:

TOP CH.	LL	=	23.3	PSF
	DL	=	3.0	PSF
BOT CH.	LL	=	0.0	PSF
	DL	=	7.0	PSF
TOTAL LOAD		=	33.3	PSF

SPACING = 24.0 IN. C/C

LOADING IN FLAT SECTION BASED ON A SLOPE OF 6.00/12

GIRDER TYPE: CPrimeHip
SIDE SETBACK = 2-3-0
END SETBACK = 4-6-8
END WALL WIDTH = 5-8
CORNER FRAMING TYPE: CONVENTIONAL
END JACK TYPE: CONVENTIONAL
APPLIED TO FRONT SIDE
- ADDT'L LOADS BASED ON 55 % OF GSL.

THIS TRUSS IS DESIGNED FOR RESIDENTIAL OR SMALL BUILDING REQUIREMENTS OF PART 9, NBCC 2010

THIS DESIGN COMPLIES WITH:
- PART 9 OF OBC 2012 , BCBC 2012 , ABC 2014
- CSA 086-09
- TPIC 2011

(55 % OF 27.2 P.S.F. G.S.L. PLUS 8.4 P.S.F. RAIN LOAD) EQUALS 23.3 P.S.F. SPECIFIED ROOF LIVE LOAD

ALLOWABLE DEFL.(LL)= L/360 (0.47")
CALCULATED VERT. DEFL.(LL) = L/ 999 (0.05")
ALLOWABLE DEFL.(TL)= L/360 (0.47")
CALCULATED VERT. DEFL.(TL) = L/ 999 (0.09")

CSI: TC=0.54 (4-5:1) , BC=0.25 (9-10:1) , WB=0.27 (6-8:1) , SSI=0.29 (3-4:1)

DOL LUMBER=1.00 NAIL=1.00 LS BEND=1.00 COMP=1.00 SHEAR=1.00 TENS= 1.00

COMPANION LIVE LOAD FACTOR = 0.50

TRUSS PLATE MANUFACTURER IS NOT RESPONSIBLE FOR QUALITY CONTROL IN THE TRUSS MANUFACTURING PLANT .

NAIL VALUES

PLATE	GRIP(DRY) (PSI) MAX	MIN	SHEAR (PLI) MAX	MIN	SECTION (PLI) MAX	MIN
MT20	618	354	1667	822	2284	1656

PLATE PLACEMENT TOL. = 0.250 inches

PLATE ROTATION TOL. = 0.5 Deg.

JSI GRIP= 0.90 (6) (INPUT = 0.90)
JSI METAL= 0.30 (2) (INPUT = 1.00)

LICENSED PROFESSIONAL ENGINEER
P.M. TREVISAN
100136551
March 16th, 2017
PROVINCE OF ONTARIO

RECEIVED
TOWN OF MILTON
MAR 29, 2017
17-5327
BUILDING DIVISION

KOTT

JOB NAME	TRUSS NAME	QUANTITY	PLY	JOB DESC.	DRWG NO.
PT0317-093	GIRD14	1	3	TRUSS DESC. LECCO RIDGE-BLOCK 343	

KOTT , Stouffville, ON, CGC

Version 8.100 S Feb 9 2017 MiTek Industries, Inc. Thu Mar 16 07:54:40 2017 Page 1
ID:EvTixTQDI5yR1QLotZTBr_yE?HJ-lQ2z5Rz6YlUAnKeOls1mh96LP_fUzRN7yz5QrgzaRHz

SCALE = 1:43.7

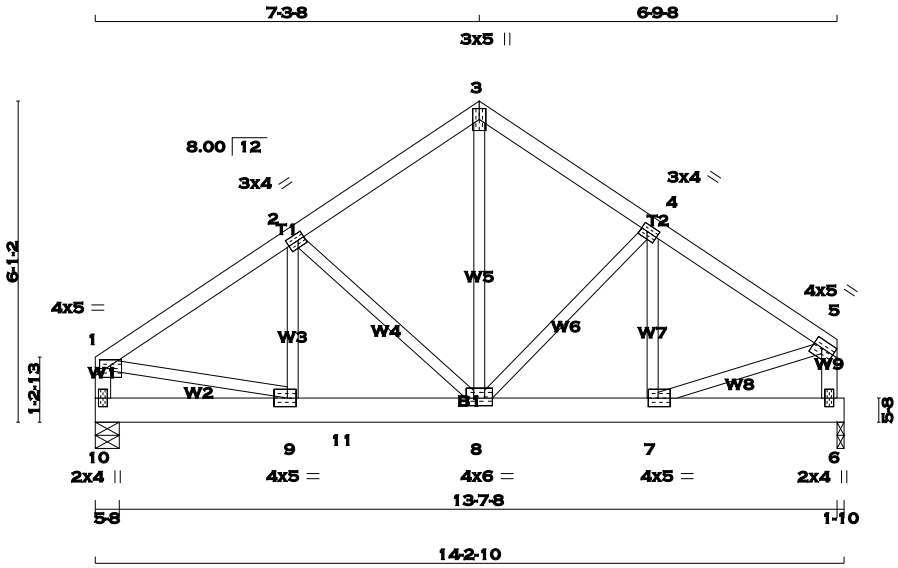

TOTAL WEIGHT = 3 X 69 = 207 lb [M]

LUMBER

N. L. G. A. RULES

CHORDS	SIZE		LUMBER	DESCR.
1 - 3	2x4	DRY	No.2	SPF
3 - 5	2x4	DRY	No.2	SPF
10 - 1	2x4	DRY	No.2	SPF
6 - 5	2x4	DRY	No.2	SPF
10 - 6	2x6	DRY	No.2	SPF
ALL WEBS EXCEPT	2x3	DRY	No.2	SPF

DRY: SEASONED LUMBER.

DESIGN CONSISTS OF 3 TRUSSES BUILT SEPARATELY THEN FASTENED TOGETHER AS FOLLOWS:

CHORDS #ROWS	SURFACE SPACING (IN)		LOAD(PLF)
TOP CHORDS : (0.122"X3") SPIRAL NAILS			
1- 3	1	12	TOP
3- 5	1	12	TOP
10- 1	1	12	TOP
6- 5	1	12	TOP
BOTTOM CHORDS : (0.122"X3") SPIRAL NAILS			
10- 6	2	6	SIDE(401.8)
WEBS : (0.122"X3") SPIRAL NAILS			
2x3	1	6	

STAGGER NAILS BY HALF THE SURFACE SPACING IN ADJACENT PLIES.

TOP - COMPONENTS ARE LOADED FROM THE TOP AND MUST BE PLACED ON TOP EDGE OF ALL PLIES FOR THE LOAD TO BE TRANSFERRED TO EACH PLY.

SIDE - PLF SHOWN IS THE EQUIVALENT UDL APPLIED TO ONE SIDE THAT THE CORRESPONDING NAILING PATTERN SHALL BE CAPABLE OF TRANSFERING. REMAINING PLF MUST BE APPLIED ON THE OPPOSITE SIDE OR ON THE TOP.

PLATES (table is in inches)

JT	TYPE	PLATES	W	LEN	Y	X
1	TMVW-p	MT20	4.0	5.0	1.25	2.50
2	TMWW-t	MT20	3.0	4.0	1.50	1.50
3	TTW+p	MT20	3.0	5.0		
4	TMWW-t	MT20	3.0	4.0	1.50	1.50
5	TMVW-t	MT20	4.0	5.0	1.75	Edge
6	BMV1+p	MT20	2.0	4.0		
7	BMWW-t	MT20	4.0	5.0	2.00	2.25
8	BMWWW-t	MT20	4.0	6.0	1.75	3.00
9	BMWW-t	MT20	4.0	5.0	2.00	2.00

DIMENSIONS, SUPPORTS AND LOADINGS SPECIFIED BY FABRICATOR TO BE VERIFIED BY BUILDING DESIGNER

BEARINGS

JT	FACTORED GROSS REACTION VERT	HORZ	MAXIMUM FACTORED GROSS REACTION DOWN	HORZ	UPLIFT	INPUT BRG IN-SX	REQRD BRG IN-SX
10	4611	0	4611	0	0	5-8	5-8
6	4317	0	4317	0	0	1-10	1-10

UNFACTORED REACTIONS

JT	1ST LCASE COMBINED	MAX./MIN. COMPONENT REACTIONS SNOW	LIVE	PERM.LIVE	WIND	DEAD	SOIL
10	3236	2264 / 0	0 / 0	0 / 0	0 / 0	972 / 0	0 / 0
6	3029	2119 / 0	0 / 0	0 / 0	0 / 0	910 / 0	0 / 0

BEARING MATERIAL TO BE SPF NO.2 OR BETTER AT JOINT(S) 10, 6

BRACING

TOP CHORD TO BE SHEATHED OR MAX. PURLIN SPACING = 5.21 FT.
MAX. UNBRACED BOTTOM CHORD LENGTH = 10.00 FT. OR RIGID CEILING DIRECTLY APPLIED.

ALL PITCH BREAKS AND PERIMETER CORNER JOINTS MUST BE LATERALLY RESTRAINED.

LOADING

TOTAL LOAD CASES: (4)

CHORDS

MEMB. FR-TO	MAX. FACTORED FORCE (LBS)	FACTORED VERT. LOAD (PLF) FROM	TO	LC1 MAX CSI (LC)	MAX. UNBRAC LENGTH
1- 2	-4691 / 0	-77.4	-77.4	0.08 (1)	5.21
2- 3	-3364 / 0	-77.4	-77.4	0.06 (1)	5.94
3- 4	-3362 / 0	-77.4	-77.4	0.05 (1)	5.94
4- 5	-4076 / 0	-77.4	-77.4	0.07 (1)	5.52
10- 1	-3601 / 0	0.0	0.0	0.12 (1)	7.30
6- 5	-3516 / 0	0.0	0.0	0.12 (1)	7.37
10- 9	0 / 0	-620.3	-620.3	0.18 (1)	10.00
9-11	0 / 3911	-620.3	-620.3	0.28 (1)	10.00
11- 8	0 / 3911	-525.4	-525.4	0.28 (1)	10.00
8- 7	0 / 3398	-525.4	-525.4	0.24 (1)	10.00
7- 6	0 / 0	-525.4	-525.4	0.14 (1)	10.00

WEBS

MEMB. FR-TO	MAX. FACTORED FORCE (LBS)	MAX CSI (LC)
9- 2	0 / 1484	0.11 (1)
2- 8	-1537 / 0	0.19 (1)
8- 3	0 / 3489	0.26 (1)
8- 4	-886 / 0	0.11 (1)
7- 4	0 / 758	0.06 (1)
1- 9	0 / 4005	0.30 (1)
7- 5	0 / 3581	0.27 (1)

DESIGN CRITERIA

SPECIFIED LOADS:

TOP CH.	LL =	23.3	PSF
	DL =	3.0	PSF
BOT CH.	LL =	0.0	PSF
	DL =	7.0	PSF
TOTAL LOAD	=	33.3	PSF

SPACING = 24.0 IN. C/C

GIRDER TYPE: CStdGirder
START DISTANCE = 0-0
START SPAN CARRIED = 27-10-8
END DISTANCE = 4-7-8
END SPAN CARRIED = 27-10-8
END WALL WIDTH = 5-8
APPLIED TO FRONT SIDE OF BOTTOM CHORD.
- ADDT'L LOADS BASED ON 55 % OF GSL.

GIRDER TYPE: CStdGirder
START DISTANCE = 4-7-8
START SPAN CARRIED = 23-10-8
END DISTANCE = 14-2-10
END SPAN CARRIED = 23-10-8
END WALL WIDTH = 5-8
APPLIED TO FRONT SIDE OF BOTTOM CHORD.
- ADDT'L LOADS BASED ON 55 % OF GSL.

THIS TRUSS IS DESIGNED FOR RESIDENTIAL OR SMALL BUILDING REQUIREMENTS OF PART 9, NBCC 2010

THIS DESIGN COMPLIES WITH:
- PART 9 OF OBC 2012 , BCBC 2012 , ABC 2014
- CSA 086-09
- TPIC 2011

(55 % OF 27.2 P.S.F. G.S.L. PLUS 8.4 P.S.F. RAIN LOAD) EQUALS 23.3 P.S.F. SPECIFIED ROOF LIVE LOAD

ALLOWABLE DEFL.(LL)= L/360 (0.47")
CALCULATED VERT. DEFL.(LL) = L/ 999 (0.03")
ALLOWABLE DEFL.(TL)= L/360 (0.47")
CALCULATED VERT. DEFL.(TL) = L/ 999 (0.05")

CSI: TC=0.12 (1-10:1) , BC=0.28 (8-9:1) , WB=0.30 (1-9:1) , SSI=0.26 (9-10:1)

DOL LUMBER=1.00 NAIL=1.00 LS BEND=1.10 COMP=1.10 SHEAR=1.10 TENS= 1.10

COMPANION LIVE LOAD FACTOR = 0.50

TRUSS PLATE MANUFACTURER IS NOT RESPONSIBLE FOR QUALITY CONTROL IN THE TRUSS MANUFACTURING PLANT .

NAIL VALUES

PLATE	GRIP(DRY) (PSI) MAX	MIN	SHEAR (PLI) MAX	MIN	SECTION (PLI) MAX	MIN
MT20	618	354	1667	822	2284	1656

PLATE PLACEMENT TOL. = 0.250 inches

PLATE ROTATION TOL. = 0.5 Deg.

JSI GRIP= 0.88 (7) (INPUT = 0.90)
JSI METAL= 0.41 (5) (INPUT = 1.00)

LICENSED PROFESSIONAL ENGINEER
P.M. TREVISAN
100136551
March 16th, 2017
PROVINCE OF ONTARIO

RECEIVED
TOWN OF MILTON
MAR 29, 2017
17-5327
BUILDING DIVISION

KOTT

CONTINUED ON PAGE 2

JOB NAME	TRUSS NAME	QUANTITY	PLY	JOB DESC.	DRWG NO.
PT0317-093	GIRD15	1	3	TRUSS DESC. LECCO RIDGE-BLOCK 343	

KOTT , Stouffville, ON, CGC

Version 8.100 S Feb 9 2017 MiTek Industries, Inc. Thu Mar 16 07:54:41 2017 Page 1
ID:EvTixTQDI5yR1QLotZTBr_yE?HJ-DccMIn_kJ2c1PUDbJZY?ENfVTO?5imbGBdrzN6zaRHy

SCALE = 1:70.3

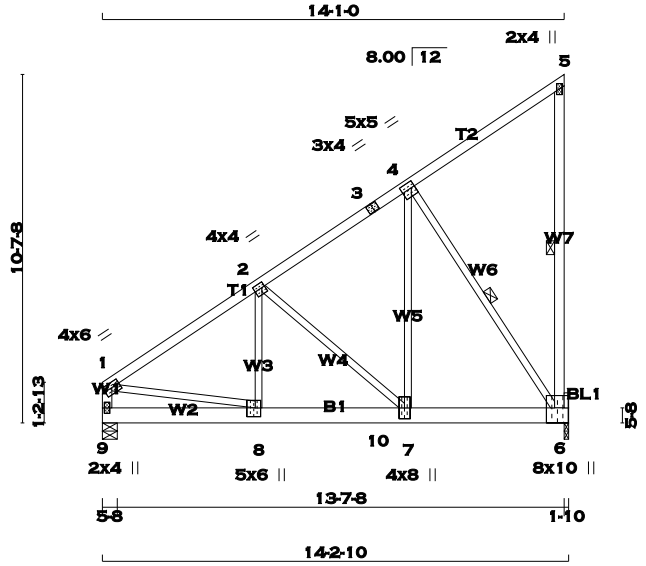

TOTAL WEIGHT = 3 X 80 = 241 lb

LUMBER
N. L. G. A. RULES

CHORDS	SIZE		LUMBER	DESCR.
1 - 3	2x4	DRY	No.2	SPF
3 - 5	2x4	DRY	No.2	SPF
6 - 5	2x4	DRY	No.2	SPF
9 - 1	2x4	DRY	No.2	SPF
9 - 6	2x6	DRY	2100F 1.8E	SPF
BEARING BLOCKS				
BL1	2x6	DRY	No.2	SPF
ALL WEBS EXCEPT	2x3	DRY	No.2	SPF

DRY: SEASONED LUMBER.

DESIGN CONSISTS OF 3 TRUSSES BUILT SEPARATELY THEN FASTENED TOGETHER AS FOLLOWS:

CHORDS	#ROWS	SURFACE SPACING (IN)	LOAD(PLF)
TOP CHORDS : (0.122"X3") SPIRAL NAILS			
1- 3	1	12	TOP
3- 5	1	12	TOP
5- 6	1	12	TOP
9- 1	1	12	TOP
BOTTOM CHORDS : (0.122"X3") SPIRAL NAILS			
9- 6	2	5	SIDE(536.2)
WEBS : (0.122"X3") SPIRAL NAILS			
2x3	1	6	

STAGGER NAILS BY HALF THE SURFACE SPACING IN ADJACENT PLIES.

TOP - COMPONENTS ARE LOADED FROM THE TOP AND MUST BE PLACED ON TOP EDGE OF ALL PLIES FOR THE LOAD TO BE TRANSFERRED TO EACH PLY.

SIDE - PLF SHOWN IS THE EQUIVALENT UDL APPLIED TO ONE SIDE THAT THE CORRESPONDING NAILING PATTERN SHALL BE CAPABLE OF TRANSFERING. REMAINING PLF MUST BE APPLIED ON THE OPPOSITE SIDE OR ON THE TOP.

PLATES (table is in inches)

JT	TYPE	PLATES	W	LEN	Y	X
1	TMVW-t	MT20	4.0	6.0	1.75	Edge
2	TMWW-t	MT20	4.0	4.0	1.75	1.00
3	TS-t	MT20	3.0	4.0		
4	TMWW-t	MT20	5.0	5.0	2.25	1.25

LICENSED PROFESSIONAL ENGINEER
P.M. TREVISAN
100136551
March 16th, 2017
PROVINCE OF ONTARIO

DIMENSIONS, SUPPORTS AND LOADINGS SPECIFIED BY FABRICATOR TO BE VERIFIED BY BUILDING DESIGNER

BEARINGS

JT	FACTORED GROSS REACTION VERT	HORZ	MAXIMUM FACTORED GROSS REACTION DOWN	HORZ	UPLIFT	INPUT BRG IN-SX	REQRD BRG IN-SX
6	5900	0	5900	0	0	1-10	1-10 + FLUSH PLATE
9	6169	0	6169	0	0	5-8	5-8

UNFACTORED REACTIONS

JT	1ST LCASE COMBINED	MAX./MIN. COMPONENT REACTIONS SNOW	LIVE	PERM.LIVE	WIND	DEAD	SOIL
6	4140	2898 / 0	0 / 0	0 / 0	0 / 0	1242 / 0	0 / 0
9	4329	3029 / 0	0 / 0	0 / 0	0 / 0	1301 / 0	0 / 0

BEARING MATERIAL TO BE SPF NO.2 OR BETTER AT JOINT(S) 6, 9

BRACING
TOP CHORD TO BE SHEATHED OR MAX. PURLIN SPACING = 4.61 FT.
MAX. UNBRACED BOTTOM CHORD LENGTH = 10.00 FT. OR RIGID CEILING DIRECTLY APPLIED.

ALL PITCH BREAKS AND PERIMETER CORNER JOINTS MUST BE LATERALLY RESTRAINED.

1 - 2x3 SPF No.2 LATERAL BRACE(S) AT 1/ 2 LENGTH OF 5-6. DBS = 20-0-0 . CBF = 19 LBS.
1 - 2x4 SPF No.2 LATERAL BRACE(S) AT 1/ 2 LENGTH OF 4-6. DBS = 4-0-0 . CBF = 130 LBS.

DBS = DIAGONAL BRACE SPACING (MAX). CBF = CUMULATIVE BRACING FORCE. FASTEN LATERAL BRACE(S) TO EACH PLY USING (0.122"X3") SPIRAL NAILS : 1 NAIL FOR 2x3 BRACE(S), 2 FOR 1x4, 2x4, 2x5, 3 FOR 2x6, 4 FOR 2x8, 5 FOR 2x10, AND 6 FOR 2x12.

END VERTICAL(S) MUST BE SHEATHED OR HAVE BRACES AS INDICATED IN THE MAX. UNBRACED LENGTH COLUMN OF THE TABLE BELOW

LOADING
TOTAL LOAD CASES: (4)

CHORDS MEMB. FR-TO	MAX. FACTORED FORCE (LBS)	FACTORED VERT. LOAD (PLF) FROM	TO	LC1 MAX CSI (LC)	MAX. UNBRAC LENGTH	WEBS MEMB. FR-TO	MAX. FACTORED FORCE (LBS)	MAX CSI (LC)
1- 2	-6202 / 0	-77.4	-77.4	0.16 (1)	4.61	8- 2	0 / 3243	0.24 (1)
2- 3	-3402 / 0	-77.4	-77.4	0.11 (1)	5.86	2- 7	-3102 / 0	0.65 (1)
3- 4	-3402 / 0	-77.4	-77.4	0.11 (1)	5.86	7- 4	0 / 5811	0.44 (1)
4- 5	-18 / 0	-77.4	-77.4	0.08 (1)	6.25	4- 6	-5183 / 0	0.81 (1)
6- 5	-148 / 0	0.0	0.0	0.03 (1)	6.25	1- 8	0 / 5247	0.39 (1)
9- 1	-4514 / 0	0.0	0.0	0.15 (1)	6.69			
9- 8	0 / 0	-821.8	-821.8	0.20 (1)	10.00			
8-10	0 / 5169	-821.8	-821.8	0.26 (1)	10.00			
10- 7	0 / 5169	-738.8	-738.8	0.26 (1)	10.00			
7- 6	0 / 2840	-738.8	-738.8	0.21 (1)	10.00			

RECEIVED
TOWN OF MILTON
MAR 29, 2017
17-5327
BUILDING DIVISION

[M]

DESIGN CRITERIA

SPECIFIED LOADS:

TOP CH.	LL	=	23.3	PSF
	DL	=	3.0	PSF
BOT CH.	LL	=	0.0	PSF
	DL	=	7.0	PSF
TOTAL LOAD		=	33.3	PSF

SPACING = 24.0 IN. C/C

GIRDER TYPE: CStdGirder
START DISTANCE = 0-0
START SPAN CARRIED = 36-4-8
END DISTANCE = 8-2-8
END SPAN CARRIED = 36-4-8
END WALL WIDTH = 5-8
APPLIED TO FRONT SIDE OF BOTTOM CHORD.
- ADDT'L LOADS BASED ON 55 % OF GSL.

GIRDER TYPE: CStdGirder
START DISTANCE = 8-2-8
START SPAN CARRIED = 32-10-8
END DISTANCE = 14-2-10
END SPAN CARRIED = 32-10-8
END WALL WIDTH = 5-8
APPLIED TO FRONT SIDE OF BOTTOM CHORD.
- ADDT'L LOADS BASED ON 55 % OF GSL.

THIS TRUSS IS DESIGNED FOR RESIDENTIAL OR SMALL BUILDING REQUIREMENTS OF PART 9, NBCC 2010

THIS DESIGN COMPLIES WITH:
- PART 9 OF OBC 2012 , BCBC 2012 , ABC 2014
- CSA 086-09
- TPIC 2011

(55 % OF 27.2 P.S.F. G.S.L. PLUS 8.4 P.S.F. RAIN LOAD) EQUALS 23.3 P.S.F. SPECIFIED ROOF LIVE LOAD

ALLOWABLE DEFL.(LL)= L/360 (0.46")
CALCULATED VERT. DEFL.(LL) = L/ 999 (0.05")
ALLOWABLE DEFL.(TL)= L/360 (0.46")
CALCULATED VERT. DEFL.(TL) = L/ 999 (0.09")

CSI: TC=0.16 (1-2:1) , BC=0.26 (7-8:1) , WB=0.81 (4-6:1) , SSI=0.45 (8-9:1)

DOL LUMBER=1.00 NAIL=1.00 LS BEND=1.10 COMP=1.10 SHEAR=1.10 TENS= 1.10

COMPANION LIVE LOAD FACTOR = 0.50

TRUSS PLATE MANUFACTURER IS NOT RESPONSIBLE FOR QUALITY CONTROL IN THE TRUSS MANUFACTURING PLANT .

NAIL VALUES

PLATE	GRIP(DRY) (PSI) MAX	MIN	SHEAR (PLI) MAX	MIN	SECTION (PLI) MAX	MIN
MT20	618	354	1667	822	2284	1656

PLATE PLACEMENT TOL. = 0.250 inches

PLATE ROTATION TOL. = 5.0 Deg.

JSI GRIP= 0.89 (4) (INPUT = 0.90)
JSI METAL= 0.52 (1) (INPUT = 1.00)

KOTT

CONTINUED ON PAGE 2

JOB NAME	TRUSS NAME	QUANTITY	PLY	JOB DESC.	DRWG NO.
PT0317-093	GIRD16	1	1	TRUSS DESC. LECCO RIDGE-BLOCK 343	

KOTT , Stouffville, ON, CGC

Version 8.100 S Feb 9 2017 MiTek Industries, Inc. Thu Mar 16 07:54:41 2017 Page 1
ID:EvTixTQDI5yR1QLotZTBr_yE?HJ-DccMIn_kJ2c1PUDbJZY?ENfTqO_SirIGBdrzN6zaRHy

SCALE = 1:70.3

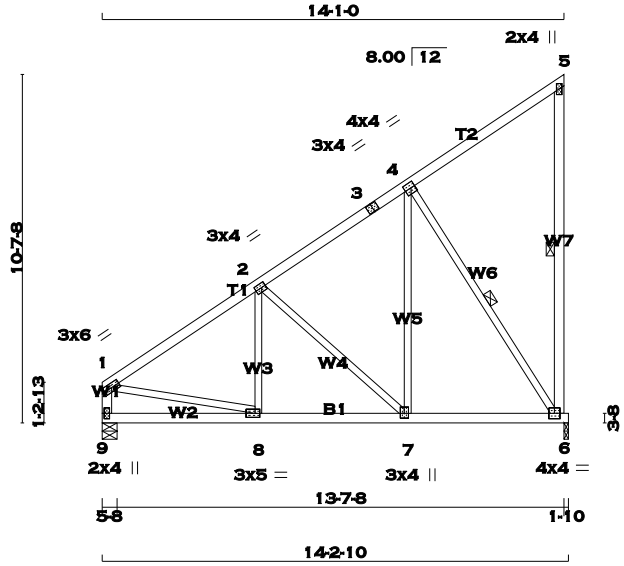

TOTAL WEIGHT = 72 lb
[M]

LUMBER
N. L. G. A. RULES

CHORDS	SIZE		LUMBER	DESCR.
1 - 3	2x4	DRY	No.2	SPF
3 - 5	2x4	DRY	No.2	SPF
6 - 5	2x4	DRY	No.2	SPF
9 - 1	2x4	DRY	No.2	SPF
9 - 6	2x4	DRY	No.2	SPF
ALL WEBS EXCEPT	2x3	DRY	No.2	SPF

DRY: SEASONED LUMBER.

PLATES (table is in inches)

JT	TYPE	PLATES	W	LEN	Y	X
1	TMVW-t	MT20	3.0	6.0		
2	TMWW-t	MT20	3.0	4.0	1.50	1.50
3	TS-t	MT20	3.0	4.0		
4	TMWW-t	MT20	4.0	4.0	2.00	1.50
5	TMV+p	MT20	2.0	4.0		
6	BMVW1-t	MT20	4.0	4.0		
7	BMWW+t	MT20	3.0	4.0	1.75	1.50
8	BMWW-t	MT20	3.0	5.0	1.50	1.75
9	BMV1+p	MT20	2.0	4.0		

A SIZE FOR SIZE SUBSTITUTION OF MITEK MII20 WITH TEE-LOK TL20 PLATES IS ALLOWED.

DIMENSIONS, SUPPORTS AND LOADINGS SPECIFIED BY FABRICATOR TO BE VERIFIED BY BUILDING DESIGNER

BEARINGS

JT	FACTORED GROSS REACTION VERT	HORZ	MAXIMUM FACTORED GROSS REACTION DOWN	HORZ	UPLIFT	INPUT BRG IN-SX	REQRD BRG IN-SX
6	1023	0	1023	0	0	1-10	1-10
9	1023	0	1023	0	0	5-8	5-8

UNFACTORED REACTIONS

JT	1ST LCASE COMBINED	MAX./MIN. COMPONENT REACTIONS SNOW	LIVE	PERM.LIVE	WIND	DEAD	SOIL
6	718	502 / 0	0 / 0	0 / 0	0 / 0	216 / 0	0 / 0
9	718	502 / 0	0 / 0	0 / 0	0 / 0	216 / 0	0 / 0

BEARING MATERIAL TO BE SPF NO.2 OR BETTER AT JOINT(S) 6, 9

BRACING
TOP CHORD TO BE SHEATHED OR MAX. PURLIN SPACING = 5.85 FT.
MAX. UNBRACED BOTTOM CHORD LENGTH = 10.00 FT. OR RIGID CEILING DIRECTLY APPLIED.

ALL PITCH BREAKS AND PERIMETER CORNER JOINTS MUST BE LATERALLY RESTRAINED.

1 - 2x3 SPF No.2 LATERAL BRACE(S) AT 1/ 2 LENGTH OF 5-6. DBS = 20-0-0 . CBF = 19 LBS.
1 - 2x3 SPF No.2 LATERAL BRACE(S) AT 1/ 2 LENGTH OF 4-6. DBS = 16-0-0 . CBF = 89 LBS.

DBS = DIAGONAL BRACE SPACING (MAX). CBF = CUMULATIVE BRACING FORCE. FASTEN LATERAL BRACE(S) USING (0.122"X3") SPIRAL NAILS : 1 NAIL FOR 2x3 BRACE(S), 2 FOR 1x4, 2x4, 2x5, 3 FOR 2x6, 4 FOR 2x8, 5 FOR 2x10, AND 6 FOR 2x12.

END VERTICAL(S) MUST BE SHEATHED OR HAVE BRACES AS INDICATED IN THE MAX. UNBRACED LENGTH COLUMN OF THE TABLE BELOW

LOADING
TOTAL LOAD CASES: (4)

CHORDS

MEMB. FR-TO	MAX. FACTORED FORCE (LBS)	FACTORED VERT. LOAD (PLF) FROM	TO	LC1 MAX CSI (LC)	MAX. UNBRAC LENGTH
1- 2	-1015 / 0	-77.4	-77.4	0.27 (1)	5.85
2- 3	-594 / 0	-77.4	-77.4	0.27 (1)	6.25
3- 4	-594 / 0	-77.4	-77.4	0.27 (1)	6.25
4- 5	-20 / 0	-77.4	-77.4	0.25 (1)	6.25
6- 5	-149 / 0	0.0	0.0	0.08 (1)	6.25
9- 1	-890 / 0	0.0	0.0	0.10 (1)	7.81
9- 8	0 / 0	-67.9	-67.9	0.20 (1)	10.00
8- 7	0 / 860	-67.9	-67.9	0.36 (1)	10.00
7- 6	0 / 496	-67.9	-67.9	0.30 (1)	10.00

WEBS

MEMB. FR-TO	MAX. FACTORED FORCE (LBS)	MAX CSI (LC)
8- 2	0 / 179	0.05 (4)
2- 7	-489 / 0	0.33 (1)
7- 4	0 / 674	0.17 (1)
4- 6	-892 / 0	0.45 (1)
1- 8	0 / 875	0.22 (1)

DESIGN CRITERIA

SPECIFIED LOADS:

TOP CH.	LL	=	23.3	PSF
	DL	=	3.0	PSF
BOT CH.	LL	=	0.0	PSF
	DL	=	7.0	PSF
TOTAL LOAD		=	33.3	PSF

SPACING = 24.0 IN. C/C

GIRDER TYPE: CStdGirder
START DISTANCE = 0-0
START SPAN CARRIED = 4-7-0
END DISTANCE = 14-2-10
END SPAN CARRIED = 4-7-0
END WALL WIDTH = 5-8
APPLIED TO FRONT SIDE OF BOTTOM CHORD.
- ADDT'L LOADS BASED ON 55 % OF GSL.

THIS TRUSS IS DESIGNED FOR RESIDENTIAL OR SMALL BUILDING REQUIREMENTS OF PART 9, NBCC 2010

THIS DESIGN COMPLIES WITH:
- PART 9 OF OBC 2012 , BCBC 2012 , ABC 2014
- CSA 086-09
- TPIC 2011

(55 % OF 27.2 P.S.F. G.S.L. PLUS 8.4 P.S.F. RAIN LOAD) EQUALS 23.3 P.S.F. SPECIFIED ROOF LIVE LOAD

ALLOWABLE DEFL.(LL)= L/360 (0.47")
CALCULATED VERT. DEFL.(LL) = L/ 999 (0.03")
ALLOWABLE DEFL.(TL)= L/360 (0.47")
CALCULATED VERT. DEFL.(TL) = L/ 999 (0.07")

CSI: TC=0.27 (1-2:1) , BC=0.36 (7-8:1) , WB=0.45 (4-6:1) , SSI=0.16 (6-7:1)

DOL LUMBER=1.00 NAIL=1.00 LS BEND=1.00
COMP=1.00 SHEAR=1.00 TENS= 1.00

COMPANION LIVE LOAD FACTOR = 0.50

TRUSS PLATE MANUFACTURER IS NOT RESPONSIBLE FOR QUALITY CONTROL IN THE TRUSS MANUFACTURING PLANT .

NAIL VALUES

PLATE	GRIP(DRY) (PSI) MAX	MIN	SHEAR (PLI) MAX	MIN	SECTION (PLI) MAX	MIN
MT20	618	354	1667	822	2284	1656

PLATE PLACEMENT TOL. = 0.250 inches

PLATE ROTATION TOL. = 0.5 Deg.

JSI GRIP= 0.89 (8) (INPUT = 0.90)
JSI METAL= 0.28 (1) (INPUT = 1.00)

LICENSED PROFESSIONAL ENGINEER
P.M. TREVISAN
100136551
March 16th, 2017
PROVINCE OF ONTARIO

RECEIVED
TOWN OF MILTON
MAR 29, 2017
17-5327
BUILDING DIVISION

KOTT

JOB NAME	TRUSS NAME	QUANTITY	PLY	JOB DESC.	DRWG NO.
PT0317-093	GIRD17	1	1	TRUSS DESC. LECCO RIDGE-BLOCK 343	

KOTT , Stouffville, ON, CGC

Version 8.100 S Feb 9 2017 MiTek Industries, Inc. Thu Mar 16 07:54:42 2017 Page 1
ID:EvTixTQDI5yR1QLotZTBr_yE?HJ-hoAkW7?N4Mku1eontH3EmaBXYoHMRFBPPHaXvZzaRHx

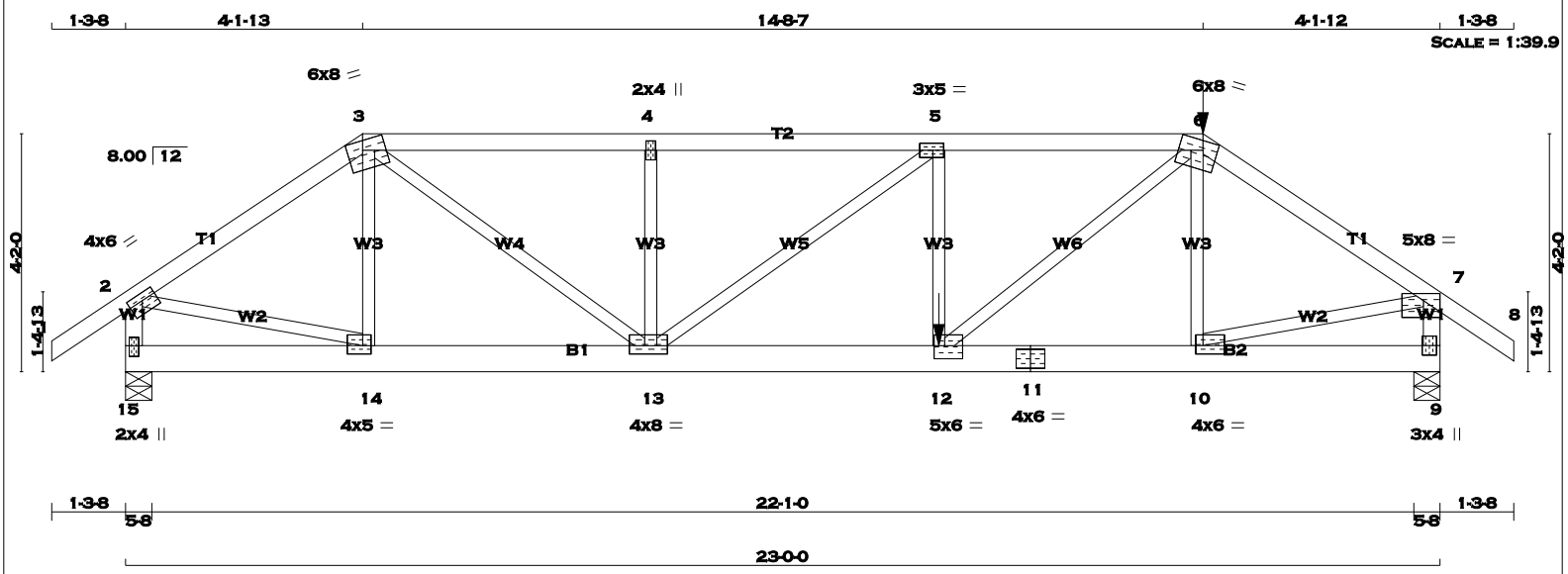

TOTAL WEIGHT = 107 lb

LUMBER
N. L. G. A. RULES

CHORDS	SIZE		LUMBER	DESCR.
1 - 3	2x4	DRY	No.2	SPF
3 - 6	2x4	DRY	No.2	SPF
6 - 8	2x4	DRY	No.2	SPF
15 - 2	2x4	DRY	No.2	SPF
9 - 7	2x4	DRY	No.2	SPF
15 - 11	2x6	DRY	No.2	SPF
11 - 9	2x6	DRY	No.2	SPF
ALL WEBS EXCEPT	2x3	DRY	No.2	SPF

DRY: SEASONED LUMBER.

PLATES (table is in inches)

JT	TYPE	PLATES	W	LEN	Y	X
2	TMVW-t	MT20	4.0	6.0	1.50	3.00
3	TTWW-m	MT20	6.0	8.0	2.00	3.25
4	TMW+w	MT20	2.0	4.0		
5	TMWW-t	MT20	3.0	5.0	1.50	2.25
6	TTWW-m	MT20	6.0	8.0	2.00	3.00
7	TMVW-p	MT20	5.0	8.0	1.50	3.50
9	BMV1+p	MT20	3.0	4.0	2.00	0.25
10	BMWW-t	MT20	4.0	6.0	1.75	1.50
11	BS-t	MT20	4.0	6.0		
12	BMWW-t	MT20	5.0	6.0	2.75	2.25
13	BMWWW-t	MT20	4.0	8.0	1.75	3.25
14	BMWW-t	MT20	4.0	5.0	1.75	1.75
15	BMV1+p	MT20	2.0	4.0	2.25	1.00

A SIZE FOR SIZE SUBSTITUTION OF MITEK MII20 WITH TEE-LOK TL20 PLATES IS ALLOWED.

HANGERS NOTES

1) SPECIAL HANGER(S) OR CONNECTION(S) REQUIRED TO SUPPORT CONCENTRATED LOAD(S) 240.5 lbs FACTORED DOWN AT 18-10-3 ON TOP CHORD, AND 1117.1 lbs FACTORED DOWN AT 14-2-12 ON BOTTOM CHORD. DESIGN FOR UNSPECIFIED CONNECTION(S) IS DELEGATED TO THE BUILDING DESIGNER.

DIMENSIONS, SUPPORTS AND LOADINGS SPECIFIED BY FABRICATOR TO BE VERIFIED BY BUILDING DESIGNER

BEARINGS

JT	FACTORED GROSS REACTION VERT	HORZ	MAXIMUM FACTORED GROSS REACTION DOWN	HORZ	UPLIFT	INPUT BRG IN-SX	REQRD BRG IN-SX
15	1781	0	1781	0	0	5-8	5-8
9	2423	0	2423	0	0	5-8	5-8

UNFACTORED REACTIONS

JT	1ST LCASE COMBINED	MAX./MIN. COMPONENT REACTIONS SNOW	LIVE	PERM.LIVE	WIND	DEAD	SOIL
15	1247	888 / 0	0 / 0	0 / 0	0 / 0	359 / 0	0 / 0
9	1700	1195 / 0	0 / 0	0 / 0	0 / 0	505 / 0	0 / 0

BEARING MATERIAL TO BE SPF NO.2 OR BETTER AT JOINT(S) 15, 9

BRACING

TOP CHORD TO BE SHEATHED OR MAX. PURLIN SPACING = 2.84 FT.
MAX. UNBRACED BOTTOM CHORD LENGTH = 10.00 FT. OR RIGID CEILING DIRECTLY APPLIED.

ALL PITCH BREAKS AND PERIMETER CORNER JOINTS MUST BE LATERALLY RESTRAINED.

LOADING

TOTAL LOAD CASES: (4)

CHORDS

MEMB. FR-TO	MAX. FACTORED FORCE (LBS)	FACTORED VERT. LOAD (PLF) FROM	TO	LC1 CSI (LC)	MAX UNBRAC LENGTH
1- 2	0 / 29	-77.4	-77.4	0.11 (1)	10.00
2- 3	-1978 / 0	-77.4	-77.4	0.34 (1)	4.43
3- 4	-3040 / 0	-77.4	-77.4	0.45 (1)	3.58
4- 5	-3040 / 0	-77.4	-77.4	0.57 (1)	3.42
5- 6	-3795 / 0	-145.9	-145.9	0.72 (1)	2.84
6- 7	-2795 / 0	-77.4	-77.4	0.41 (1)	3.75
7- 8	0 / 29	-77.4	-77.4	0.11 (1)	10.00
15- 2	-1753 / 0	0.0	0.0	0.20 (1)	6.26
9- 7	-2367 / 0	0.0	0.0	0.26 (1)	5.49
15-14	0 / 0	-17.5	-17.5	0.04 (4)	10.00
14-13	0 / 1635	-17.5	-17.5	0.25 (1)	10.00
13-12	0 / 3795	-17.5	-17.5	0.58 (1)	10.00
12-11	0 / 2312	-33.0	-33.0	0.38 (1)	10.00
11-10	0 / 2312	-33.0	-33.0	0.38 (1)	10.00
10- 9	0 / 0	-33.0	-33.0	0.08 (4)	10.00

WEBS

MEMB. FR-TO	MAX. FACTORED FORCE (LBS)	MAX CSI (LC)
14- 3	-284 / 0	0.07 (1)
3-13	0 / 1756	0.43 (1)
13- 4	-398 / 0	0.10 (1)
13- 5	-945 / 0	0.66 (1)
12- 5	-19 / 103	0.04 (4)
12- 6	0 / 1915	0.47 (1)
10- 6	-354 / 32	0.09 (1)
2-14	0 / 1687	0.42 (1)
10- 7	0 / 2385	0.59 (1)

FACTORED CONCENTRATED LOADS (LBS)

JT	LOC.	LC1	MAX-	MAX+	FACE	DIR.	TYPE
6	18-10-3	-241	-241	---	FRONT	VERT	TOTAL
12	14-2-12	-1117	-1117	---	FRONT	VERT	TOTAL

DESIGN CRITERIA

*** SPECIAL LOADS ANALYSIS ***
GEOMETRY AND/OR BASIC LOADS CHANGED BY USER.
LOADS WERE DERIVED FROM USER INPUT
NO FURTHER MODIFICATIONS WERE MADE

SPECIFIED LOADS:

TOP	CH.	LL	=	23.3	PSF
		DL	=	3.0	PSF
BOT	CH.	LL	=	0.0	PSF
		DL	=	7.0	PSF
TOTAL	LOAD		=	33.3	PSF

SPACING = 24.0 IN. C/C

LOADING IN FLAT SECTION BASED ON A SLOPE OF 6.00/12

GIRDER TYPE: CPrimeHip
LEFT SETBACK = 4-1-13
RIGHT SETBACK = 4-1-12
END SETBACK = 6-0-0
END WALL WIDTH = 5-8
CORNER FRAMING TYPE: CONVENTIONAL
END JACK TYPE: CONVENTIONAL
APPLIED TO FRONT SIDE
- ADDT'L LOADS BASED ON 55 % OF GSL.
LOADS APPLIED TO FIRST 8-9-4 OF SPAN MEASURED FROM THE RIGHT.

*** NON STANDARD GIRDER ***
ADDT'L USER-DEFINED LOADS APPLIED TO ALL LOAD CASES.

THIS TRUSS IS DESIGNED FOR RESIDENTIAL OR SMALL BUILDING REQUIREMENTS OF PART 9, NBCC 2010

THIS DESIGN COMPLIES WITH:
- PART 9 OF OBC 2012 , BCBC 2012 , ABC 2014
- CSA 086-09
- TPIC 2011

(55 % OF 27.2 P.S.F. G.S.L. PLUS 8.4 P.S.F. RAIN LOAD) EQUALS 23.3 P.S.F. SPECIFIED ROOF LIVE LOAD

ALLOWABLE DEFL.(LL)= L/360 (0.77")
CALCULATED VERT. DEFL.(LL) = L/ 999 (0.12")
ALLOWABLE DEFL.(TL)= L/360 (0.77")
CALCULATED VERT. DEFL.(TL) = L/ 999 (0.21")

CSI: TC=0.72 (5-6:1) , BC=0.58 (12-13:1) , WB=0.66 (5-13:1) , SSI=0.33 (5-6:1)

DOL LUMBER=1.00 NAIL=1.00 LS BEND=1.00 COMP=1.00 SHEAR=1.00 TENS= 1.00

COMPANION LIVE LOAD FACTOR = 0.50

TRUSS PLATE MANUFACTURER IS NOT RESPONSIBLE FOR QUALITY CONTROL IN THE TRUSS MANUFACTURING PLANT .

NAIL VALUES

PLATE	GRIP(DRY) (PSI) MAX	MIN	SHEAR (PLI) MAX	MIN	SECTION (PLI) MAX	MIN
MT20	618	354	1667	822	2284	1656

PLATE PLACEMENT TOL. = 0.250 inches

PLATE ROTATION TOL. = De

CONTINUED ON PAGE 2

LICENSED PROFESSIONAL ENGINEER
P.M. TREVISAN
100136551
March 16th, 2017
PROVINCE OF ONTARIO

RECEIVED
TOWN OF MILTON
MAR 29, 2017
17-5327
BUILDING DIVISION

KOTT

SCALE = 1:30.2

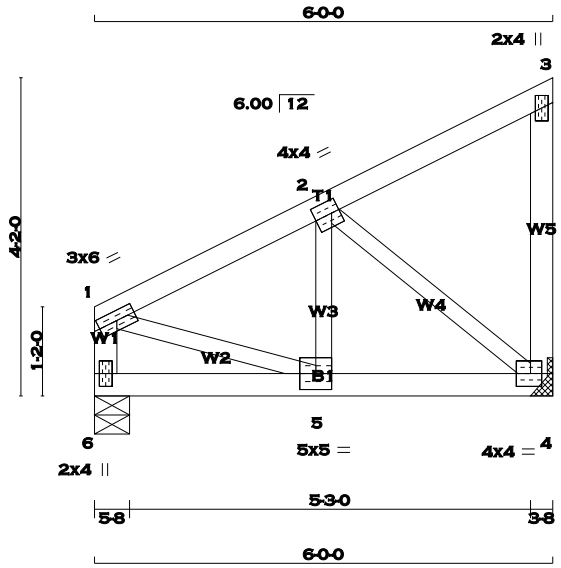

TOTAL WEIGHT = 26 lb [M]

LUMBER

N. L. G. A. RULES

CHORDS	SIZE		LUMBER	DESCR.
1 - 3	2x4	DRY	No.2	SPF
4 - 3	2x4	DRY	No.2	SPF
6 - 1	2x4	DRY	No.2	SPF
6 - 4	2x4	DRY	No.2	SPF
ALL WEBS EXCEPT	2x3	DRY	No.2	SPF

DRY: SEASONED LUMBER.

PLATES (table is in inches)

JT	TYPE	PLATES	W	LEN	Y	X
1	TMVW-t	MT20	3.0	6.0		
2	TMWW-t	MT20	4.0	4.0	2.00	1.25
3	TMV+p	MT20	2.0	4.0		
4	BMVW1-t	MT20	4.0	4.0	2.00	1.75
5	BMWW-t	MT20	5.0	5.0		
6	BMV1+p	MT20	2.0	4.0		

A SIZE FOR SIZE SUBSTITUTION OF MITEK MII20 WITH TEE-LOK TL20 PLATES IS ALLOWED.

DIMENSIONS, SUPPORTS AND LOADINGS SPECIFIED BY FABRICATOR TO BE VERIFIED BY BUILDING DESIGNER

BEARINGS

JT	FACTORED GROSS REACTION VERT	HORZ	MAXIMUM FACTORED GROSS REACTION DOWN	HORZ	UPLIFT	INPUT BRG IN-SX	REQRD BRG IN-SX
4	1118	0	1118	0	0	HANGER BY OTHERS MIN. SEAT SIZE: 3-8	
6	1118	0	1118	0	0	5-8	5-8

UNFACTORED REACTIONS

JT	1ST LCASE COMBINED	SNOW	MAX./MIN. COMPONENT REACTIONS LIVE	PERM.LIVE	WIND	DEAD	SOIL
4	784	549 / 0	0 / 0	0 / 0	0 / 0	236 / 0	0 / 0
6	784	549 / 0	0 / 0	0 / 0	0 / 0	236 / 0	0 / 0

BEARING MATERIAL TO BE SPF NO.2 OR BETTER AT JOINT(S) 6

BRACING

TOP CHORD TO BE SHEATHED OR MAX. PURLIN SPACING = 6.20 FT.
MAX. UNBRACED BOTTOM CHORD LENGTH = 10.00 FT. OR RIGID CEILING DIRECTLY APPLIED.

ALL PITCH BREAKS AND PERIMETER CORNER JOINTS MUST BE LATERALLY RESTRAINED.

LOADING

TOTAL LOAD CASES: (4)

CHORDS

MEMB. FR-TO	MAX. FACTORED FORCE (LBS)	VERT. LOAD (PLF) FROM	TO	MAX CSI (LC)	MAX. UNBRAC LENGTH
1- 2	-958 / 0	-77.4	-77.4	0.11 (1)	6.20
2- 3	-10 / 0	-77.4	-77.4	0.10 (1)	10.00
4- 3	-94 / 0	0.0	0.0	0.03 (1)	7.81
6- 1	-775 / 0	0.0	0.0	0.09 (1)	7.81
6- 5	0 / 0	-295.2	-295.2	0.45 (1)	10.00
5- 4	0 / 866	-295.2	-295.2	0.60 (1)	10.00

WEBS

MEMB. FR-TO	MAX. FACTORED FORCE (LBS)	MAX CSI (LC)
5- 2	0 / 837	0.21 (1)
2- 4	-1101 / 0	0.28 (1)
1- 5	0 / 901	0.22 (1)

DESIGN CRITERIA

SPECIFIED LOADS:

TOP CH.	LL =	23.3	PSF
	DL =	3.0	PSF
BOT CH.	LL =	0.0	PSF
	DL =	7.0	PSF
TOTAL LOAD	=	33.3	PSF

SPACING = 24.0 IN. C/C

GIRDER TYPE: CStdGirder
START DISTANCE = 0-0
START SPAN CARRIED = 14-2-0
END DISTANCE = 6-0-0
END SPAN CARRIED = 14-2-0
END WALL WIDTH = 5-8
APPLIED TO FRONT SIDE OF BOTTOM CHORD.
- ADDT'L LOADS BASED ON 55 % OF GSL.

THIS TRUSS IS DESIGNED FOR RESIDENTIAL OR SMALL BUILDING REQUIREMENTS OF PART 9, NBCC 2010

THIS DESIGN COMPLIES WITH:
- PART 9 OF OBC 2012 , BCBC 2012 , ABC 2014
- CSA 086-09
- TPIC 2011

(55 % OF 27.2 P.S.F. G.S.L. PLUS 8.4 P.S.F. RAIN LOAD) EQUALS 23.3 P.S.F. SPECIFIED ROOF LIVE LOAD

ALLOWABLE DEFL.(LL)= L/360 (0.20")
CALCULATED VERT. DEFL.(LL) = L/ 999 (0.02")
ALLOWABLE DEFL.(TL)= L/360 (0.20")
CALCULATED VERT. DEFL.(TL) = L/ 999 (0.04")

CSI: TC=0.11 (1-2:1) , BC=0.60 (4-5:1) , WB=0.28 (2-4:1) , SSI=0.47 (5-6:1)

DOL LUMBER=1.00 NAIL=1.00 LS BEND=1.00 COMP=1.00 SHEAR=1.00 TENS= 1.00

COMPANION LIVE LOAD FACTOR = 0.50

TRUSS PLATE MANUFACTURER IS NOT RESPONSIBLE FOR QUALITY CONTROL IN THE TRUSS MANUFACTURING PLANT .

NAIL VALUES

PLATE	GRIP(DRY) (PSI) MAX	MIN	SHEAR (PLI) MAX	MIN	SECTION (PLI) MAX	MIN
MT20	618	354	1667	822	2284	1656

PLATE PLACEMENT TOL. = 0.250 inches

PLATE ROTATION TOL. = 5.0 Deg.

JSI GRIP= 0.87 (2) (INPUT = 0.90)
JSI METAL= 0.32 (4) (INPUT = 1.00)

LICENSED PROFESSIONAL ENGINEER
P.M. TREVISAN
100136551
March 16th, 2017
PROVINCE OF ONTARIO

RECEIVED
TOWN OF MILTON
MAR 29, 2017
17-5327
BUILDING DIVISION

KOTT

JOB NAME	TRUSS NAME	QUANTITY	PLY	JOB DESC.	DRWG NO.
PT0317-093	GIRD19	1	1	TRUSS DESC. LECCO RIDGE-BLOCK 343	ENG JOB: PT0317-093

KOTT , Stouffville, ON, CGC

Version 8.100 S Feb 9 2017 MiTek Industries, Inc. Thu Mar 16 07:54:43 2017 Page 1
ID:EvTixTQDI5yR1QLotZTBr_yE?HJ-9_k6jT0?rgtleoNzQ_aTJokpRBfCAjRZexK4S?zaRHw

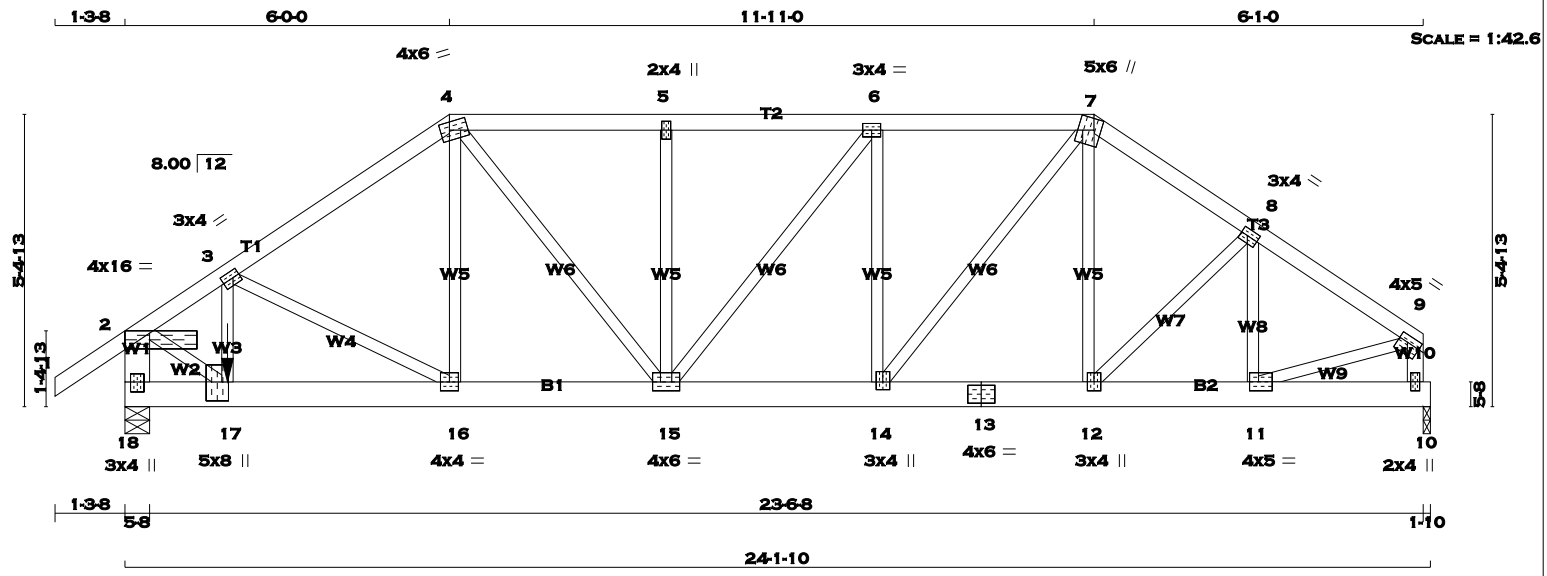

TOTAL WEIGHT = 122 lb [M]

LUMBER
N. L. G. A. RULES

CHORDS	SIZE		LUMBER	DESCR.
1 - 4	2x4	DRY	No.2	SPF
4 - 7	2x4	DRY	No.2	SPF
7 - 9	2x4	DRY	No.2	SPF
18 - 2	2x6	DRY	No.2	SPF
10 - 9	2x4	DRY	No.2	SPF
18 - 13	2x6	DRY	No.2	SPF
13 - 10	2x6	DRY	No.2	SPF
ALL WEBS EXCEPT	2x3	DRY	No.2	SPF

DRY: SEASONED LUMBER.

PLATES (table is in inches)

JT	TYPE	PLATES	W	LEN	Y	X
2	TMVW-p	MT20	4.0	16.0	Edge	5.50
3	TMWW-t	MT20	3.0	4.0	1.50	1.50
4	TTWW-m	MT20	4.0	6.0	1.75	2.00
5	TMW+w	MT20	2.0	4.0		
6	TMWW-t	MT20	3.0	4.0		
7	TTWW+m	MT20	5.0	6.0	2.50	1.50
8	TMWW-t	MT20	3.0	4.0	1.50	1.50
9	TMVW-t	MT20	4.0	5.0	1.50	2.00
10	BMV1+p	MT20	2.0	4.0		
11	BMWW-t	MT20	4.0	5.0	2.00	2.00
12	BMWW+t	MT20	3.0	4.0		
13	BS-t	MT20	4.0	6.0		
14	BMWW+t	MT20	3.0	4.0	1.75	1.50
15	BMWWW-t	MT20	4.0	6.0		
16	BMWW-t	MT20	4.0	4.0		
17	BMWW+t	MT20	5.0	8.0	4.25	1.50
18	BMV1+p	MT20	3.0	4.0	2.25	1.50

Edge - INDICATES REFERENCE CORNER OF PLATE TOUCHES EDGE OF CHORD.

A SIZE FOR SIZE SUBSTITUTION OF MITEK MII20 WITH TEE-LOK TL20 PLATES IS ALLOWED.

HANGERS NOTES

1) SPECIAL HANGER(S) OR CONNECTION(S) REQUIRED TO SUPPORT CONCENTRATED LOAD(S) 1734.1 lbs FACTORED DOWN AT 1-10-12 ON BOTTOM CHORD. DESIGN FOR UNSPECIFIED CONNECTION(S) IS DELEGATED TO THE BUILDING DESIGNER.

DIMENSIONS, SUPPORTS AND LOADINGS SPECIFIED BY FABRICATOR TO BE VERIFIED BY BUILDING DESIGNER

BEARINGS

JT	FACTORED GROSS REACTION VERT	HORZ	MAXIMUM FACTORED GROSS REACTION DOWN	HORZ	UPLIFT	INPUT BRG IN-SX	REQRD BRG IN-SX
18	2845	0	2845	0	0	5-8	5-8
10	1272	0	1272	0	0	1-10	1-10

UNFACTORED REACTIONS

JT	1ST LCASE COMBINED	MAX./MIN. COMPONENT REACTIONS SNOW	LIVE	PERM.LIVE	WIND	DEAD	SOIL
18	1994	1409 / 0	0 / 0	0 / 0	0 / 0	585 / 0	0 / 0
10	893	624 / 0	0 / 0	0 / 0	0 / 0	269 / 0	0 / 0

BEARING MATERIAL TO BE SPF NO.2 OR BETTER AT JOINT(S) 18, 10

BRACING

TOP CHORD TO BE SHEATHED OR MAX. PURLIN SPACING = 4.10 FT.
MAX. UNBRACED BOTTOM CHORD LENGTH = 10.00 FT. OR RIGID CEILING DIRECTLY APPLIED.

ALL PITCH BREAKS AND PERIMETER CORNER JOINTS MUST BE LATERALLY RESTRAINED.

LOADING

TOTAL LOAD CASES: (4)

CHORDS

MEMB. FR-TO	MAX. FACTORED FORCE (LBS)	FACTORED VERT. LOAD (PLF) FROM	TO	LC1 CSI (LC)	MAX UNBRAC LENGTH
1- 2	0 / 29	-77.4	-77.4	0.11 (1)	10.00
2- 3	-2576 / 0	-77.4	-77.4	0.20 (1)	4.10
3- 4	-1826 / 0	-77.4	-77.4	0.26 (1)	4.68
4- 5	-1711 / 0	-77.4	-77.4	0.21 (1)	4.85
5- 6	-1711 / 0	-77.4	-77.4	0.22 (1)	4.83
6- 7	-1617 / 0	-77.4	-77.4	0.22 (1)	4.95
7- 8	-1459 / 0	-77.4	-77.4	0.15 (1)	5.24
8- 9	-1397 / 0	-77.4	-77.4	0.14 (1)	5.33
18- 2	-2735 / 0	0.0	0.0	0.20 (1)	6.27
10- 9	-1231 / 0	0.0	0.0	0.14 (1)	7.19
18-17	0 / 0	-17.5	-17.5	0.13 (1)	10.00
17-16	0 / 2145	-17.5	-17.5	0.41 (1)	10.00
16-15	0 / 1518	-17.5	-17.5	0.25 (1)	10.00
15-14	0 / 1617	-17.5	-17.5	0.24 (1)	10.00
14-13	0 / 1201	-17.5	-17.5	0.18 (1)	10.00
13-12	0 / 1201	-17.5	-17.5	0.18 (1)	10.00
12-11	0 / 1174	-17.5	-17.5	0.18 (1)	10.00
11-10	0 / 0	-17.5	-17.5	0.04 (1)	10.00

WEBS

MEMB. FR-TO	MAX. FACTORED FORCE (LBS)	MAX CSI (LC)
17- 3	0 / 508	0.13 (1)
3-16	-723 / 0	0.28 (1)
16- 4	0 / 496	0.12 (1)
4-15	0 / 308	0.08 (1)
15- 5	-326 / 0	0.14 (1)
15- 6	0 / 153	0.04 (1)
14- 6	-450 / 0	0.19 (1)
14- 7	0 / 667	0.17 (1)
12- 7	0 / 65	0.02 (4)
12- 8	0 / 37	0.01 (1)
11- 8	-334 / 0	0.07 (1)
2-17	0 / 2423	0.60 (1)
11- 9	0 / 1225	0.30 (1)

FACTORED CONCENTRATED LOADS (LBS)

JT	LOC.	LC1	MAX-	MAX+	FACE	DIR.	TYPE
17	1-10-12	-1734	-1734	---	FRONT	VERT	TOTAL

RECEIVED
TOWN OF MILTON
MAR 29, 2017
17-5327
BUILDING DIVISION

DESIGN CRITERIA

*** SPECIAL LOADS ANALYSIS ***
GEOMETRY AND/OR BASIC LOADS CHANGED BY USER.
LOADS WERE DERIVED FROM USER INPUT
NO FURTHER MODIFICATIONS WERE MADE

SPECIFIED LOADS:

TOP	CH.	LL	=	23.3	PSF
		DL	=	3.0	PSF
BOT	CH.	LL	=	0.0	PSF
		DL	=	7.0	PSF
TOTAL	LOAD		=	33.3	PSF

SPACING = 24.0 IN. C/C

LOADING IN FLAT SECTION BASED ON A SLOPE OF 6.00/12

*** NON STANDARD GIRDER ***
ADDT'L USER-DEFINED LOADS APPLIED TO ALL LOAD CASES.

THIS TRUSS IS DESIGNED FOR RESIDENTIAL OR SMALL BUILDING REQUIREMENTS OF PART 9, NBCC 2010

THIS DESIGN COMPLIES WITH:
- PART 9 OF OBC 2012 , BCBC 2012 , ABC 2014
- CSA 086-09
- TPIC 2011

DESIGN ASSUMPTIONS
-OVERHANG NOT TO BE ALTERED OR CUT OFF.

(55 % OF 27.2 P.S.F. G.S.L. PLUS 8.4 P.S.F. RAIN LOAD) EQUALS 23.3 P.S.F. SPECIFIED ROOF LIVE LOAD

ALLOWABLE DEFL.(LL)= L/360 (0.80")
CALCULATED VERT. DEFL.(LL) = L/ 999 (0.05")
ALLOWABLE DEFL.(TL)= L/360 (0.80")
CALCULATED VERT. DEFL.(TL) = L/ 999 (0.09")

CSI: TC=0.26 (3-4:1) , BC=0.41 (16-17:1) , WB=0.60 (2-17:1) , SSI=0.16 (6-7:1)

DOL LUMBER=1.00 NAIL=1.00 LS BEND=1.00 COMP=1.00 SHEAR=1.00 TENS= 1.00

COMPANION LIVE LOAD FACTOR = 0.50

TRUSS PLATE MANUFACTURER IS NOT RESPONSIBLE FOR QUALITY CONTROL IN THE TRUSS MANUFACTURING PLANT .

NAIL VALUES

PLATE	GRIP(DRY) (PSI) MAX	MIN	SHEAR (PLI) MAX	MIN	SECTION (PLI) MAX	MIN
MT20	618	354	1667	822	2284	1656

PLATE PLACEMENT TOL. = 0.250 inches

PLATE ROTATION TOL. = 5.0 Deg.

JSI GRIP= 0.90 (3) (INPUT = 0.90)
JSI METAL= 0.56 (17) (INPUT = 1.00)

KOTT

SCALE = 1:20.6

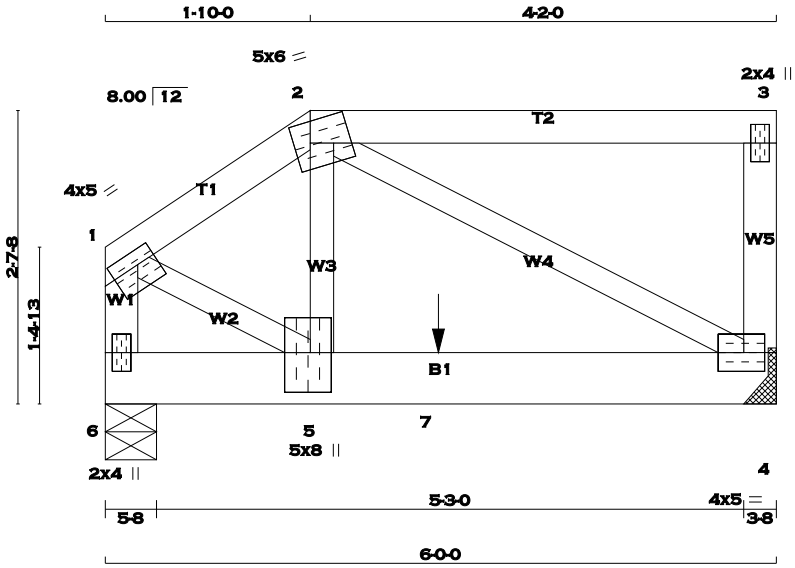

TOTAL WEIGHT = 28 lb [M]

LUMBER

N. L. G. A. RULES

CHORDS	SIZE		LUMBER	DESCR.
1 - 2	2x4	DRY	No.2	SPF
2 - 3	2x4	DRY	No.2	SPF
4 - 3	2x4	DRY	No.2	SPF
6 - 1	2x4	DRY	No.2	SPF
6 - 4	2x6	DRY	No.2	SPF
ALL WEBS EXCEPT	2x3	DRY	No.2	SPF

DRY: SEASONED LUMBER.

PLATES (table is in inches)

JT	TYPE	PLATES	W	LEN	Y	X
1	TMVW-t	MT20	4.0	5.0	1.50	2.00
2	TTWW-m	MT20	5.0	6.0	2.25	1.75
3	TMV+p	MT20	2.0	4.0		
4	BMVW1-t	MT20	4.0	5.0	2.00	2.25
5	BMWW+t	MT20	5.0	8.0	4.25	2.25
6	BMV1+p	MT20	2.0	4.0		

A SIZE FOR SIZE SUBSTITUTION OF MITEK MII20 WITH TEE-LOK TL20 PLATES IS ALLOWED.

HANGERS NOTES

1) SPECIAL HANGER(S) OR CONNECTION(S) REQUIRED TO SUPPORT CONCENTRATED LOAD(S) 460.2 lbs FACTORED DOWN AT 2-11-12 ON BOTTOM CHORD. DESIGN FOR UNSPECIFIED CONNECTION(S) IS DELEGATED TO THE BUILDING DESIGNER.

DIMENSIONS, SUPPORTS AND LOADINGS SPECIFIED BY FABRICATOR TO BE VERIFIED BY BUILDING DESIGNER

BEARINGS

JT	FACTORED GROSS REACTION VERT	HORZ	MAXIMUM GROSS REACTION DOWN	HORZ	UPLIFT	INPUT BRG IN-SX	REQRD BRG IN-SX
4	1734	0	1734	0	0	HANGER BY OTHERS MIN. SEAT SIZE: 3-8	
6	1352	0	1352	0	0	5-8	5-8

UNFACTORED REACTIONS

JT	1ST LCASE COMBINED	SNOW	MAX./MIN. COMPONENT REACTIONS LIVE	PERM.LIVE	WIND	DEAD	SOIL
4	1217	851 / 0	0 / 0	0 / 0	0 / 0	366 / 0	0 / 0
6	949	664 / 0	0 / 0	0 / 0	0 / 0	285 / 0	0 / 0

BEARING MATERIAL TO BE SPF NO.2 OR BETTER AT JOINT(S) 6

BRACING

TOP CHORD TO BE SHEATHED OR MAX. PURLIN SPACING = 5.37 FT.
MAX. UNBRACED BOTTOM CHORD LENGTH = 10.00 FT. OR RIGID CEILING DIRECTLY APPLIED.

ALL PITCH BREAKS AND PERIMETER CORNER JOINTS MUST BE LATERALLY RESTRAINED.

LOADING

TOTAL LOAD CASES: (4)

CHORDS

MEMB. FR-TO	MAX. FORCE (LBS)	FACTORED VERT. LOAD LC1 (PLF) FROM	TO	MAX CSI (LC)	MAX. UNBRAC LENGTH
1- 2	-1428 / 0	-77.4	-77.4	0.07 (1)	5.37
2- 3	0 / 0	-77.4	-77.4	0.25 (1)	10.00
4- 3	-161 / 0	0.0	0.0	0.02 (1)	7.81
6- 1	-1479 / 0	0.0	0.0	0.17 (1)	6.70
6- 5	0 / 0	-230.9	-230.9	0.50 (1)	10.00
5- 7	0 / 1241	-230.9	-230.9	0.78 (1)	10.00
7- 4	0 / 1241	-487.9	-487.9	0.78 (1)	10.00

WEBS

MEMB. FR-TO	MAX. FORCE (LBS)	MAX CSI (LC)
5- 2	0 / 1234	0.31 (1)
2- 4	-1409 / 0	0.48 (1)
1- 5	0 / 1331	0.33 (1)

FACTORED CONCENTRATED LOADS (LBS)

JT	LOC.	LC1	MAX-	MAX+	FACE	DIR.	TYPE
7	2-11-12	-460	-460	---	FRONT	VERT	TOTAL

RECEIVED
TOWN OF MILTON
MAR 29, 2017
17-5327
BUILDING DIVISION

DESIGN CRITERIA

*** SPECIAL LOADS ANALYSIS ***
GEOMETRY AND/OR BASIC LOADS CHANGED BY USER.
LOADS WERE DERIVED FROM USER INPUT
NO FURTHER MODIFICATIONS WERE MADE

SPECIFIED LOADS:

TOP	CH.	LL	=	23.3	PSF
		DL	=	3.0	PSF
BOT	CH.	LL	=	0.0	PSF
		DL	=	7.0	PSF
TOTAL	LOAD		=	33.3	PSF

SPACING = 24.0 IN. C/C

LOADING IN FLAT SECTION BASED ON A SLOPE OF 6.00/12

GIRDER TYPE: CStdGirder
START DISTANCE = 0-0
START SPAN CARRIED = 11-5-8
END DISTANCE = 2-11-12
END SPAN CARRIED = 11-5-8
END WALL WIDTH = 5-8
APPLIED TO FRONT SIDE OF BOTTOM CHORD.
- ADDT'L LOADS BASED ON 55 % OF GSL.

GIRDER TYPE: CStdGirder
START DISTANCE = 2-11-12
START SPAN CARRIED = 21-11-8
END DISTANCE = 6-0-0
END SPAN CARRIED = 21-11-8
END WALL WIDTH = 1-8
APPLIED TO FRONT SIDE OF BOTTOM CHORD.
- ADDT'L LOADS BASED ON 55 % OF GSL.

*** NON STANDARD GIRDER ***
ADDT'L USER-DEFINED LOADS APPLIED TO ALL LOAD CASES.

THIS TRUSS IS DESIGNED FOR RESIDENTIAL OR SMALL BUILDING REQUIREMENTS OF PART 9, NBCC 2010

THIS DESIGN COMPLIES WITH:
- PART 9 OF OBC 2012 , BCBC 2012 , ABC 2014
- CSA 086-09
- TPIC 2011

(55 % OF 27.2 P.S.F. G.S.L. PLUS 8.4 P.S.F. RAIN LOAD) EQUALS 23.3 P.S.F. SPECIFIED ROOF LIVE LOAD

ALLOWABLE DEFL.(LL)= L/360 (0.20")
CALCULATED VERT. DEFL.(LL) = L/ 999 (0.05")
ALLOWABLE DEFL.(TL)= L/360 (0.20")
CALCULATED VERT. DEFL.(TL) = L/ 877 (0.08")

CSI: TC=0.25 (2-3:1) , BC=0.78 (4-5:1) , WB=0.48 (2-4:1) , SSI=0.84 (4-5:1)

DOL LUMBER=1.00 NAIL=1.00 LS BEND=1.00 COMP=1.00 SHEAR=1.00 TENS= 1.00

COMPANION LIVE LOAD FACTOR = 0.50

TRUSS PLATE MANUFACTURER IS NOT RESPONSIBLE FOR QUALITY CONTROL IN THE TRUSS MANUFACTURING PLANT .

KOTT

CONTINUED ON PAGE 2

JOB NAME	TRUSS NAME	QUANTITY	PLY	JOB DESC.	DRWG NO.
PT0317-093	GIRD21	1	1	TRUSS DESC. LECCO RIDGE-BLOCK 343	ENG JOB: PT0317-093

KOTT , Stouffville, ON, CGC

Version 8.100 S Feb 9 2017 MiTek Industries, Inc. Thu Mar 16 07:54:44 2017 Page 1
ID:EvTixTQDI5yR1QLotZTBr_yE?HJ-dBIUxp0dcz?bGxyA_i5ir?HxAb3tv6_itb3e_RzaRHv

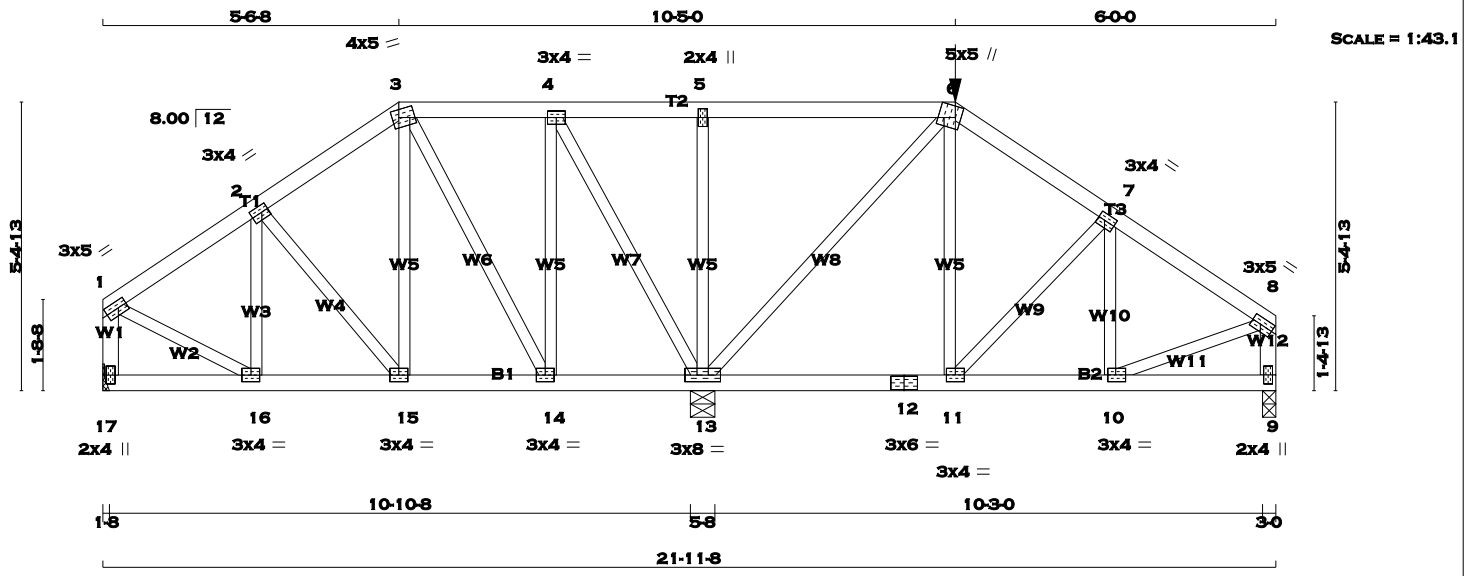

TOTAL WEIGHT = 102 lb [M]

LUMBER

N. L. G. A. RULES

CHORDS	SIZE		LUMBER	DESCR.
1 - 3	2x4	DRY	No.2	SPF
3 - 6	2x4	DRY	No.2	SPF
6 - 8	2x4	DRY	No.2	SPF
17 - 1	2x4	DRY	No.2	SPF
9 - 8	2x4	DRY	No.2	SPF
17 - 12	2x4	DRY	No.2	SPF
12 - 9	2x4	DRY	No.2	SPF
ALL WEBS EXCEPT	2x3	DRY	No.2	SPF

DRY: SEASONED LUMBER.

PLATES (table is in inches)

JT	TYPE	PLATES	W	LEN	Y	X
1	TMVW-t	MT20	3.0	5.0	1.50	2.00
2	TMWW-t	MT20	3.0	4.0	1.50	1.50
3	TTWW-m	MT20	4.0	5.0	1.75	1.50
4	TMWW-t	MT20	3.0	4.0		
5	TMW+w	MT20	2.0	4.0		
6	TTWW+m	MT20	5.0	5.0	Edge	3.75
7	TMWW-t	MT20	3.0	4.0	1.50	1.50
8	TMVW-t	MT20	3.0	5.0	1.50	2.00
9	BMV1+p	MT20	2.0	4.0		
10	BMWW-t	MT20	3.0	4.0	1.50	1.75
11, 14, 15, 16						
11	BMWW-t	MT20	3.0	4.0		
12	BS-t	MT20	3.0	6.0		
13	BMWWW1-t	MT20	3.0	8.0		
17	BMV1+p	MT20	2.0	4.0		

Edge - INDICATES REFERENCE CORNER OF PLATE TOUCHES EDGE OF CHORD.

A SIZE FOR SIZE SUBSTITUTION OF MITEK MII20 WITH TEE-LOK TL20 PLATES IS ALLOWED.

HANGERS NOTES

1) SPECIAL HANGER(S) OR CONNECTION(S) REQUIRED TO SUPPORT CONCENTRATED LOAD(S) 348.1 lbs FACTORED DOWN AT 15-11-8 ON TOP CHORD. DESIGN FOR UNSPECIFIED CONNECTION(S) IS DELEGATED TO THE BUILDING DESIGNER.

DIMENSIONS, SUPPORTS AND LOADINGS SPECIFIED BY FABRICATOR TO BE VERIFIED BY BUILDING DESIGNER

BEARINGS

JT	FACTORED GROSS REACTION VERT	HORZ	MAXIMUM FACTORED GROSS REACTION DOWN	HORZ	UPLIFT	INPUT BRG	REQRD BRG
17	459	0	459	0	0	HANGER BY OTHERS MIN. SEAT SIZE: 1-8	
13	1743	0	1743	0	0	5-8	5-8
9	749	0	749	0	0	3-0	3-0

UNFACTORED REACTIONS

JT	1ST LCASE COMBINED	MAX./MIN. COMPONENT REACTIONS SNOW	LIVE	PERM.LIVE	WIND	DEAD	SOIL
17	323	222 / 0	0 / 0	0 / 0	0 / 0	100 / 0	0 / 0
13	1220	870 / 0	0 / 0	0 / 0	0 / 0	350 / 0	0 / 0
9	530	347 / 0	0 / 0	0 / 0	0 / 0	183 / 0	0 / 0

BEARING MATERIAL TO BE SPF NO.2 OR BETTER AT JOINT(S) 9

BRACING

TOP CHORD TO BE SHEATHED OR MAX. PURLIN SPACING = 6.25 FT.
MAX. UNBRACED BOTTOM CHORD LENGTH = 10.00 FT. OR RIGID CEILING DIRECTLY APPLIED.

ALL PITCH BREAKS AND PERIMETER CORNER JOINTS MUST BE LATERALLY RESTRAINED.

LOADING

TOTAL LOAD CASES: (4)

CHORDS

MEMB. FR-TO	MAX. FACTORED FORCE (LBS)	FACTORED VERT. LOAD (PLF) FROM	TO	LC1 MAX CSI (LC)	MAX. UNBRAC LENGTH
1- 2	-352 / 0	-77.4	-77.4	0.10 (1)	6.25
2- 3	-270 / 0	-77.4	-77.4	0.10 (1)	6.25
3- 4	-101 / 0	-77.4	-77.4	0.11 (1)	6.25
4- 5	0 / 92	-77.4	-77.4	0.45 (1)	10.00
5- 6	0 / 92	-149.9	-149.9	0.45 (1)	10.00
6- 7	-608 / 0	-77.4	-77.4	0.12 (1)	6.25
7- 8	-706 / 0	-77.4	-77.4	0.12 (1)	6.25
17- 1	-437 / 0	0.0	0.0	0.05 (1)	7.81
9- 8	-703 / 0	0.0	0.0	0.08 (1)	7.81
17-16	0 / 0	-17.5	-17.5	0.03 (4)	10.00
16-15	0 / 304	-17.5	-17.5	0.07 (1)	10.00
15-14	0 / 216	-17.5	-17.5	0.06 (1)	10.00
14-13	0 / 101	-17.5	-17.5	0.15 (4)	10.00
13-12	0 / 497	-33.9	-33.9	0.19 (1)	10.00
12-11	0 / 497	-33.9	-33.9	0.19 (1)	10.00
11-10	0 / 599	-33.9	-33.9	0.17 (4)	10.00
10- 9	0 / 0	-33.9	-33.9	0.08 (4)	10.00

WEBS

MEMB. FR-TO	MAX. FACTORED FORCE (LBS)	MAX CSI (LC)
16- 2	-94 / 16	0.02 (1)
2-15	-143 / 0	0.05 (1)
15- 3	0 / 163	0.04 (1)
3-14	-235 / 0	0.14 (1)
14- 4	0 / 223	0.06 (1)
4-13	-397 / 0	0.24 (1)
13- 5	-626 / 0	0.28 (1)
13- 6	-865 / 0	0.77 (1)
11- 6	0 / 239	0.08 (4)
11- 7	-155 / 0	0.05 (1)
10- 7	-103 / 50	0.02 (1)
1-16	0 / 338	0.08 (1)
10- 8	0 / 634	0.16 (1)

FACTORED CONCENTRATED LOADS (LBS)

JT	LOC.	LC1	MAX-	MAX+	FACE	DIR.	TYPE
6	15-11-8	-348	-348	---	FRONT	VERT	TOTAL

DESIGN CRITERIA

SPECIFIED LOADS:

TOP	CH.	LL	=	23.3	PSF
		DL	=	3.0	PSF
BOT	CH.	LL	=	0.0	PSF
		DL	=	7.0	PSF
TOTAL	LOAD		=	33.3	PSF

SPACING = 24.0 IN. C/C

LOADING IN FLAT SECTION BASED ON A SLOPE OF 6.00/12

GIRDER TYPE: CPrimeHip
LEFT SETBACK = 5-6-8
RIGHT SETBACK = 6-0-0
END SETBACK = 6-0-0
END WALL WIDTH = 3-0
CORNER FRAMING TYPE: CONVENTIONAL
END JACK TYPE: CONVENTIONAL
APPLIED TO FRONT SIDE
- ADDT'L LOADS BASED ON 55 % OF GSL.
LOADS APPLIED TO FIRST 10-6-0 OF SPAN MEASURED FROM THE RIGHT.

THIS TRUSS IS DESIGNED FOR RESIDENTIAL OR SMALL BUILDING REQUIREMENTS OF PART 9, NBCC 2010

THIS DESIGN COMPLIES WITH:
- PART 9 OF OBC 2012 , BCBC 2012 , ABC 2014
- CSA 086-09
- TPIC 2011

(55 % OF 27.2 P.S.F. G.S.L. PLUS 8.4 P.S.F. RAIN LOAD) EQUALS 23.3 P.S.F. SPECIFIED ROOF LIVE LOAD

ALLOWABLE DEFL.(LL)= L/360 (0.36")
CALCULATED VERT. DEFL.(LL) = L/ 999 (0.01")
ALLOWABLE DEFL.(TL)= L/360 (0.36")
CALCULATED VERT. DEFL.(TL) = L/ 999 (0.02")

CSI: TC=0.45 (5-6:1) , BC=0.19 (11-13:1) , WB=0.77 (6-13:1) , SSI=0.36 (5-6:1)

DOL LUMBER=1.00 NAIL=1.00 LS BEND=1.00 COMP=1.00 SHEAR=1.00 TENS= 1.00

COMPANION LIVE LOAD FACTOR = 0.50

TRUSS PLATE MANUFACTURER IS NOT RESPONSIBLE FOR QUALITY CONTROL IN THE TRUSS MANUFACTURING PLANT .

NAIL VALUES

PLATE	GRIP(DRY) (PSI) MAX	MIN	SHEAR (PLI) MAX	MIN	SECTION (PLI) MAX	MIN
MT20	618	354	1667	822	2284	1656

PLATE PLACEMENT TOL. = 0.250 inches

PLATE ROTATION TOL. = 5.0 Deg.

JSI GRIP= 0.90 (10) (INPUT = 0.90)
JSI METAL= 0.23 (8) (INPUT = 1.00)

LICENSED PROFESSIONAL ENGINEER
P.M. TREVISAN
100136551
March 16th, 2017
PROVINCE OF ONTARIO

RECEIVED
TOWN OF MILTON
MAR 29, 2017
17-5327
BUILDING DIVISION

KOTT

JOB NAME	TRUSS NAME	QUANTITY	PLY	JOB DESC.	DRWG NO.
PT0317-093	GIRD22	1	2	TRUSS DESC. LECCO RIDGE-BLOCK 343	ENG JOB: PT0317-093

KOTT , Stouffville, ON, CGC

Version 8.100 S Feb 9 2017 MiTek Industries, Inc. Thu Mar 16 07:54:45 2017 Page 1

ID:EvTixTQDI5yR1QLotZTBr_yE?HJ-6Nrs891FNH7Su5XMYPcxODpAb?K3eaIs5FpBWtzaRHu

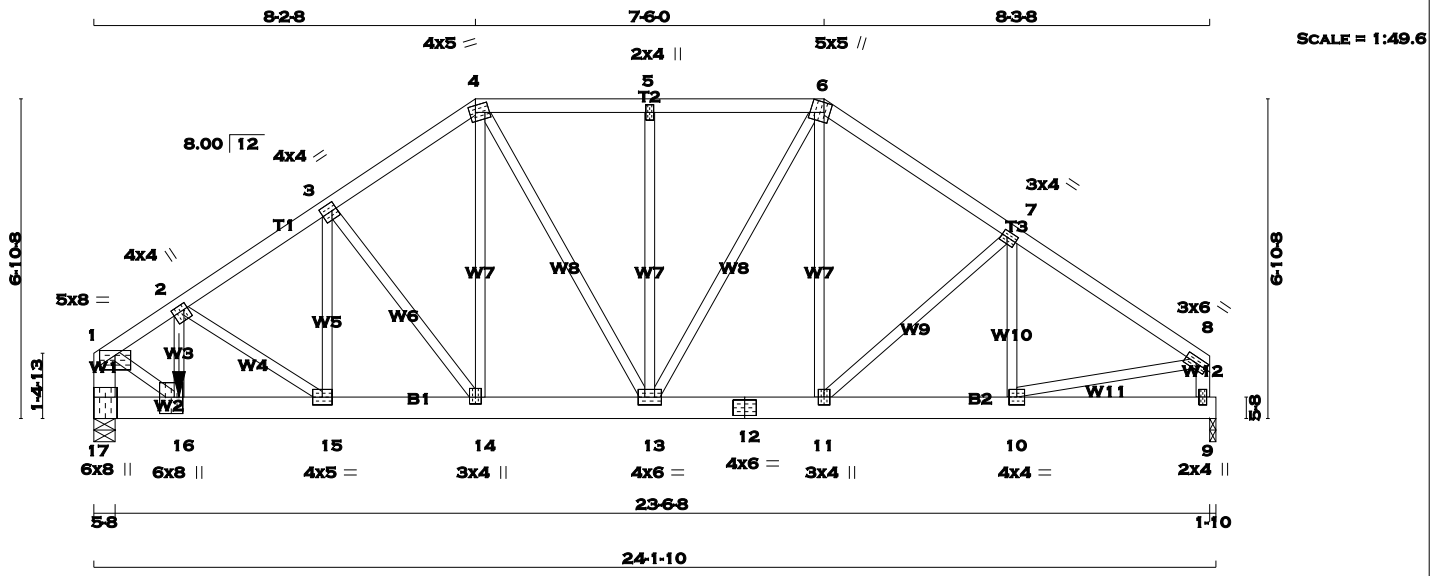

TOTAL WEIGHT = 2 X 127 = 254 lb [M]

LUMBER

N. L. G. A. RULES

CHORDS	SIZE		LUMBER	DESCR.
1 - 4	2x4	DRY	No.2	SPF
4 - 6	2x4	DRY	No.2	SPF
6 - 8	2x4	DRY	No.2	SPF
17 - 1	2x6	DRY	No.2	SPF
9 - 8	2x4	DRY	No.2	SPF
17 - 12	2x6	DRY	No.2	SPF
12 - 9	2x6	DRY	No.2	SPF
ALL WEBS EXCEPT	2x3	DRY	No.2	SPF

DRY: SEASONED LUMBER.

DESIGN CONSISTS OF 2 TRUSSES BUILT SEPARATELY THEN FASTENED TOGETHER AS FOLLOWS:

CHORDS	#ROWS	SURFACE SPACING (IN)	LOAD(PLF)
TOP CHORDS : (0.122"X3") SPIRAL NAILS			
1- 4	1	12	TOP
4- 6	1	12	TOP
6- 8	1	12	TOP
9- 8	1	12	TOP
17- 1	2	12	TOP
BOTTOM CHORDS : (0.122"X3") SPIRAL NAILS			
17- 12	2	12	SIDE(194.7)
12- 9	2	12	TOP
WEBS : (0.122"X3") SPIRAL NAILS			
2x3	1	6	

NAILS TO BE DRIVEN FROM ONE SIDE ONLY.

GIRDER NAILING ASSUMES NAILED HANGERS ARE FASTENED WITH MIN. 3-0 INCH NAILS.

TOP - COMPONENTS ARE LOADED FROM THE TOP AND MUST BE PLACED ON TOP EDGE OF ALL PLIES FOR THE LOAD TO BE TRANSFERRED TO EACH PLY.

SIDE - PLF SHOWN IS THE EQUIVALENT UDL APPLIED TO ONE SIDE THAT THE CORRESPONDING NAILING PATTERN SHALL BE CAPABLE OF TRANSFERING. REMAINING PLF MUST BE APPLIED ON THE OPPOSITE SIDE OR ON THE TOP.

PLATES (table is in inches)

JT	TYPE	PLATES	W	LEN	Y	X
1	TMVW-p	MT20	5.0	8.0	1.25	4.00
2	TMWW+t	MT20	4.0	4.0	1.50	1.00
3	TMWW-t	MT20	4.0	4.0	2.00	1.25

DIMENSIONS, SUPPORTS AND LOADINGS SPECIFIED BY FABRICATOR TO BE VERIFIED BY BUILDING DESIGNER

BEARINGS

JT	FACTORED GROSS REACTION VERT	HORZ	MAXIMUM FACTORED GROSS REACTION DOWN	HORZ	UPLIFT	INPUT BRG IN-SX	REQRD BRG IN-SX
17	6797	0	6797	0	0	5-8	5-8
9	1577	0	1577	0	0	1-10	1-10

UNFACTORED REACTIONS

JT	1ST LCASE COMBINED	MAX./MIN. COMPONENT REACTIONS SNOW	LIVE	PERM.LIVE	WIND	DEAD	SOIL
17	4770	3337 / 0	0 / 0	0 / 0	0 / 0	1433 / 0	0 / 0
9	1107	774 / 0	0 / 0	0 / 0	0 / 0	332 / 0	0 / 0

BEARING MATERIAL TO BE SPF NO.2 OR BETTER AT JOINT(S) 17, 9

BRACING

TOP CHORD TO BE SHEATHED OR MAX. PURLIN SPACING = 3.87 FT.
MAX. UNBRACED BOTTOM CHORD LENGTH = 10.00 FT. OR RIGID CEILING DIRECTLY APPLIED.

ALL PITCH BREAKS AND PERIMETER CORNER JOINTS MUST BE LATERALLY RESTRAINED.

LOADING

TOTAL LOAD CASES: (4)

CHORDS MEMB. FR-TO	MAX. FACTORED FORCE (LBS)	FACTORED VERT. LOAD (PLF) FROM	TO	LC1 CSI (LC)	MAX UNBRAC LENGTH	WEBS MEMB. FR-TO	MAX. FACTORED FORCE (LBS)	MAX CSI (LC)
1- 2	-6022 / 0	-77.4	-77.4	0.16 (1)	3.87	16- 2	0 / 2616	0.32 (1)
2- 3	-3566 / 0	-77.4	-77.4	0.12 (1)	4.88	2-15	-2450 / 0	0.33 (1)
3- 4	-2416 / 0	-77.4	-77.4	0.09 (1)	5.71	15- 3	0 / 1647	0.20 (1)
4- 5	-1886 / 0	-77.4	-77.4	0.11 (1)	6.24	3-14	-1645 / 0	0.41 (1)
5- 6	-1886 / 0	-77.4	-77.4	0.11 (1)	6.24	14- 4	0 / 1346	0.17 (1)
6- 7	-1847 / 0	-77.4	-77.4	0.13 (1)	6.25	4-13	-258 / 0	0.14 (1)
7- 8	-1878 / 0	-77.4	-77.4	0.13 (1)	6.22	13- 5	-340 / 0	0.13 (1)
17- 1	-6147 / 0	0.0	0.0	0.22 (1)	5.97	13- 6	0 / 732	0.09 (1)
9- 8	-1531 / 0	0.0	0.0	0.09 (1)	7.81	11- 6	0 / 143	0.02 (1)
						11- 7	-84 / 0	0.02 (1)
17-16	0 / 0	-406.8	-406.8	0.19 (1)	10.00	10- 7	-301 / 0	0.04 (1)
16-15	0 / 4998	-17.5	-17.5	0.51 (1)	10.00	1-16	0 / 5689	0.70 (1)
15-14	0 / 2987	-17.5	-17.5	0.21 (1)	10.00	10- 8	0 / 1617	0.20 (1)
14-13	0 / 2015	-17.5	-17.5	0.14 (1)	10.00			
13-12	0 / 1519	-17.5	-17.5	0.11 (1)	10.00			
12-11	0 / 1519	-17.5	-17.5	0.11 (1)	10.00			
11-10	0 / 1579	-17.5	-17.5	0.12 (1)	10.00			
10- 9	0 / 0	-17.5	-17.5	0.02 (1)	10.00			

FACTORED CONCENTRATED LOADS (LBS)

JT	LOC.	LC1	MAX-	MAX+	FACE	DIR.	TYPE
16	1-10-0	-5383	-5383	---	FRONT	VERT	TOTAL

DESIGN CRITERIA

*** SPECIAL LOADS ANALYSIS ***
GEOMETRY AND/OR BASIC LOADS CHANGED BY USER.
LOADS WERE DERIVED FROM USER INPUT
NO FURTHER MODIFICATIONS WERE MADE

SPECIFIED LOADS:

TOP	CH.	LL	=	23.3	PSF
		DL	=	3.0	PSF
BOT	CH.	LL	=	0.0	PSF
		DL	=	7.0	PSF
TOTAL	LOAD		=	33.3	PSF

SPACING = 24.0 IN. C/C

LOADING IN FLAT SECTION BASED ON A SLOPE OF 6.00/12

GIRDER TYPE: CStdGirder
START DISTANCE = 0-0
START SPAN CARRIED = 18-10-8
END DISTANCE = 1-10-0
END SPAN CARRIED = 18-10-8
END WALL WIDTH = 5-8
APPLIED TO FRONT SIDE OF BOTTOM CHORD.
- ADDT'L LOADS BASED ON 55 % OF GSL.

*** NON STANDARD GIRDER ***
ADDT'L USER-DEFINED LOADS APPLIED TO ALL LOAD CASES.

THIS TRUSS IS DESIGNED FOR RESIDENTIAL OR SMALL BUILDING REQUIREMENTS OF PART 9, NBCC 2010

THIS DESIGN COMPLIES WITH:
- PART 9 OF OBC 2012 , BCBC 2012 , ABC 2014
- CSA 086-09
- TPIC 2011

(55 % OF 27.2 P.S.F. G.S.L. PLUS 8.4 P.S.F. RAIN LOAD) EQUALS 23.3 P.S.F. SPECIFIED ROOF LIVE LOAD

ALLOWABLE DEFL.(LL)= L/360 (0.80")
CALCULATED VERT. DEFL.(LL) = L/ 999 (0.04")
ALLOWABLE DEFL.(TL)= L/360 (0.80")
CALCULATED VERT. DEFL.(TL) = L/ 999 (0.07")

CSI: TC=0.22 (1-17:1) , BC=0.51 (15-16:1) , WB=0.70 (1-16:1) , SSI=0.22 (16-17:1)

DOL LUMBER=1.00 NAIL=1.00 LS BEND=1.00 COMP=1.00 SHEAR=1.00 TENS= 1.00

COMPANION LIVE LOAD FACTOR = 0.50

TRUSS PLATE MANUFACTURER IS NOT RESPONSIBLE FOR QUALITY CONTROL IN THE TRUSS MANUFACTURING PLANT .

NAIL VALUES

PLATE	GRIP(DRY) (PSI) MAX	MIN	SHEAR (PLI) MAX	MIN	SECTION (PLI) MAX	MIN
MT20	618	354	1667	822	2284	1656

PLATE PLACEMENT TOL. = 0.250 inches

PLATE ROTATION TOL. = 5.0 Deg.

JSI GRIP= 0.9[illegible] NP[illegible]
JSI METAL= 0.54 (IN[illegible]

LICENSED PROFESSIONAL ENGINEER
P.M. TREVISAN
100136551
March 16th, 2017
PROVINCE OF ONTARIO

RECEIVED
TOWN OF MILTON
MAR 29, 2017
17-5327
BUILDING DIVISION

KOTT

CONTINUED ON PAGE 2

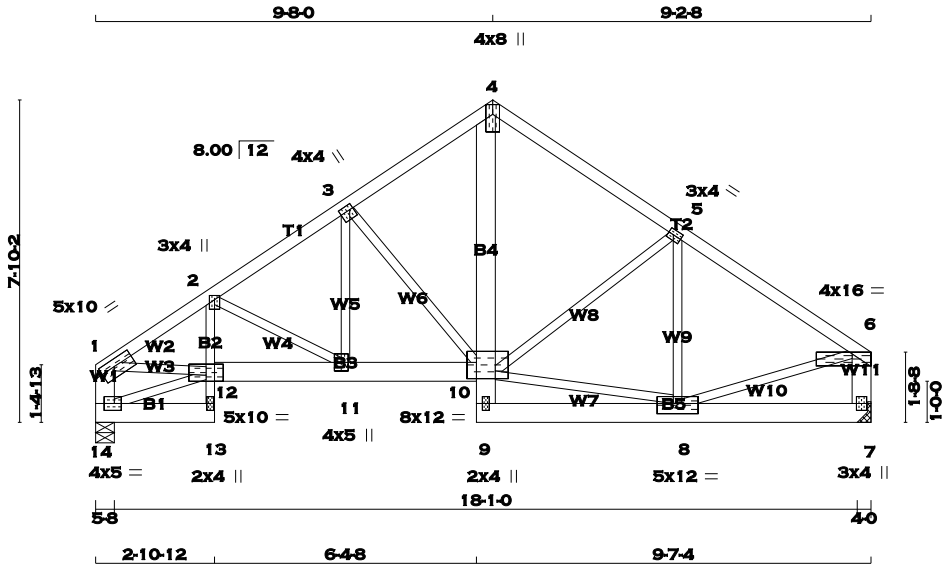

TOTAL WEIGHT = 2 X 107 = 214 lb [M]

LUMBER

N. L. G. A. RULES

CHORDS	SIZE		LUMBER	DESCR.
1 - 4	2x4	DRY	No.2	SPF
4 - 6	2x4	DRY	No.2	SPF
14 - 1	2x6	DRY	No.2	SPF
7 - 6	2x6	DRY	No.2	SPF
14 - 13	2x6	DRY	No.2	SPF
13 - 2	2x3	DRY	No.2	SPF
12 - 10	2x6	DRY	No.2	SPF
9 - 4	2x6	DRY	No.2	SPF
9 - 7	2x6	DRY	No.2	SPF
ALL WEBS EXCEPT	2x3	DRY	No.2	SPF

DRY: SEASONED LUMBER.

DESIGN CONSISTS OF 2 TRUSSES BUILT SEPARATELY THEN FASTENED TOGETHER AS FOLLOWS:

CHORDS	#ROWS	SURFACE SPACING (IN)	LOAD(PLF)
TOP CHORDS : (0.122"X3") SPIRAL NAILS			
1- 4	1	12	TOP
4- 6	1	12	TOP
14- 1	2	12	TOP
7- 6	2	12	TOP
BOTTOM CHORDS : (0.122"X3") SPIRAL NAILS			
14- 13	2	9	SIDE(237.8)
12- 10	2	9	SIDE(237.8)
4- 9	2	12	TOP
9- 7	2	9	SIDE(237.8)
13- 2	1	12	TOP
WEBS : (0.122"X3") SPIRAL NAILS			
2x3	1	6	

NAILS TO BE DRIVEN FROM ONE SIDE ONLY.

TOP - COMPONENTS ARE LOADED FROM THE TOP AND MUST BE PLACED ON TOP EDGE OF ALL PLIES FOR THE LOAD TO BE TRANSFERRED TO EACH PLY.

SIDE - PLF SHOWN IS THE EQUIVALENT UDL APPLIED TO ONE SIDE THAT THE CORRESPONDING NAILING PATTERN SHALL BE CAPABLE OF TRANSFERING. REMAINING PLF MUST BE APPLIED ON THE OPPOSITE SIDE OR ON THE TOP.

PLATES (table is in inches)

JT	TYPE	PLATES	W	LEN	Y	X
1	TMVW-t	MT20	5.0	10.0	2.00	4.25
2	TMVW+p	MT20	3.0	4.0	1.25	1.50

DIMENSIONS, SUPPORTS AND LOADINGS SPECIFIED BY FABRICATOR TO BE VERIFIED BY BUILDING DESIGNER

BEARINGS

JT	FACTORED GROSS REACTION VERT	HORZ	MAXIMUM GROSS REACTION DOWN	HORZ	FACTORED UPLIFT	INPUT BRG IN-SX	REQRD BRG IN-SX
7	5383	0	5383	0	0	HANGER BY OTHERS MIN. SEAT SIZE: 4-0	
14	5383	0	5383	0	0	5-8	5-8

UNFACTORED REACTIONS

JT	1ST LCASE COMBINED	SNOW	MAX./MIN. COMPONENT REACTIONS LIVE	PERM.LIVE	WIND	DEAD	SOIL
7	3778	2643 / 0	0 / 0	0 / 0	0 / 0	1135 / 0	0 / 0
14	3778	2643 / 0	0 / 0	0 / 0	0 / 0	1135 / 0	0 / 0

BEARING MATERIAL TO BE SPF NO.2 OR BETTER AT JOINT(S) 14

BRACING

TOP CHORD TO BE SHEATHED OR MAX. PURLIN SPACING = 3.20 FT.
MAX. UNBRACED BOTTOM CHORD LENGTH = 10.00 FT. OR RIGID CEILING DIRECTLY APPLIED.

ALL PITCH BREAKS AND PERIMETER CORNER JOINTS MUST BE LATERALLY RESTRAINED.

LOADING

TOTAL LOAD CASES: (4)

CHORDS

MEMB. FR-TO	MAX. FORCE (LBS)	FACTORED VERT. LOAD LC1 (PLF) FROM	TO	MAX CSI (LC)	MAX. UNBRAC LENGTH
1- 2	-8261 / 0	-77.4	-77.4	0.32 (1)	3.20
2- 3	-6709 / 0	-77.4	-77.4	0.25 (1)	3.61
3- 4	-4833 / 0	-77.4	-77.4	0.16 (1)	4.28
4- 5	-4614 / 0	-77.4	-77.4	0.22 (1)	4.31
5- 6	-5480 / 0	-77.4	-77.4	0.28 (1)	3.97
14- 1	-4662 / 0	0.0	0.0	0.17 (1)	6.69
7- 6	-4517 / 0	0.0	0.0	0.17 (1)	6.77
14-13	0 / 92	-493.0	-493.0	0.18 (1)	10.00
13-12	0 / 688	0.0	0.0	0.22 (1)	10.00
12- 2	0 / 1416	0.0	0.0	0.31 (1)	10.00
12-11	0 / 6912	-493.0	-493.0	0.62 (1)	10.00
11-10	0 / 5605	-493.0	-493.0	0.56 (1)	10.00
9-10	0 / 965	0.0	0.0	0.20 (1)	10.00
10- 4	0 / 4970	0.0	0.0	0.46 (1)	10.00
9- 8	0 / 374	-493.0	-493.0	0.44 (1)	10.00
8- 7	0 / 0	-493.0	-493.0	0.41 (1)	10.00

WEBS

MEMB. FR-TO	FORCE (LBS)	MAX CSI (LC)
2-11	-1501 / 0	0.20 (1)
11- 3	0 / 2616	0.32 (1)
3-10	-2474 / 0	0.56 (1)
8- 5	0 / 614	0.08 (1)
8- 6	0 / 4761	0.59 (1)
14-12	-98 / 0	0.01 (1)
10- 5	-902 / 0	0.26 (1)
10- 8	0 / 4262	0.53 (1)
1-12	0 / 6862	0.85 (1)

RECEIVED
TOWN OF MILTON
MAR 29, 2017
17-5327
BUILDING DIVISION

DESIGN CRITERIA

SPECIFIED LOADS:

TOP	CH.	LL	=	23.3	PSF
		DL	=	3.0	PSF
BOT	CH.	LL	=	0.0	PSF
		DL	=	7.0	PSF
TOTAL	LOAD		=	33.3	PSF

SPACING = 24.0 IN. C/C

GIRDER TYPE: CStdGirder
START DISTANCE = 0-0
START SPAN CARRIED = 22-2-2
END DISTANCE = 18-10-8
END SPAN CARRIED = 22-2-2
END WALL WIDTH = 1-8
APPLIED TO FRONT SIDE OF BOTTOM CHORD.
- ADDT'L LOADS BASED ON 55 % OF GSL.

THIS TRUSS IS DESIGNED FOR RESIDENTIAL OR SMALL BUILDING REQUIREMENTS OF PART 9, NBCC 2010

THIS DESIGN COMPLIES WITH:
- PART 9 OF OBC 2012 , BCBC 2012 , ABC 2014
- CSA 086-09
- TPIC 2011

(55 % OF 27.2 P.S.F. G.S.L. PLUS 8.4 P.S.F. RAIN LOAD) EQUALS 23.3 P.S.F. SPECIFIED ROOF LIVE LOAD

ALLOWABLE DEFL.(LL)= L/360 (0.63")
CALCULATED VERT. DEFL.(LL) = L/ 999 (0.10")
ALLOWABLE DEFL.(TL)= L/360 (0.63")
CALCULATED VERT. DEFL.(TL) = L/ 999 (0.18")

CSI: TC=0.32 (1-2:1) , BC=0.62 (11-12:1) , WB=0.85 (1-12:1) , SSI=0.47 (8-9:1)

DOL LUMBER=1.00 NAIL=1.00 LS BEND=1.00 COMP=1.00 SHEAR=1.00 TENS= 1.00

COMPANION LIVE LOAD FACTOR = 0.50

AUTOSOLVE HEELS OFF

TRUSS PLATE MANUFACTURER IS NOT RESPONSIBLE FOR QUALITY CONTROL IN THE TRUSS MANUFACTURING PLANT .

NAIL VALUES

PLATE	GRIP(DRY) (PSI) MAX	MIN	SHEAR (PLI) MAX	MIN	SECTION (PLI) MAX	MIN
MT20	618	354	1667	822	2284	1656

PLATE PLACEMENT TOL. = 0.250 inches

PLATE ROTATION TOL. = 5.0 Deg.

JSI GRIP= 0.90 (1) (INPUT = 0.90)
JSI METAL= 0.66 (1) (INPUT = 1.00)

KOTT

CONTINUED ON PAGE 2

SCALE = 1:28.8

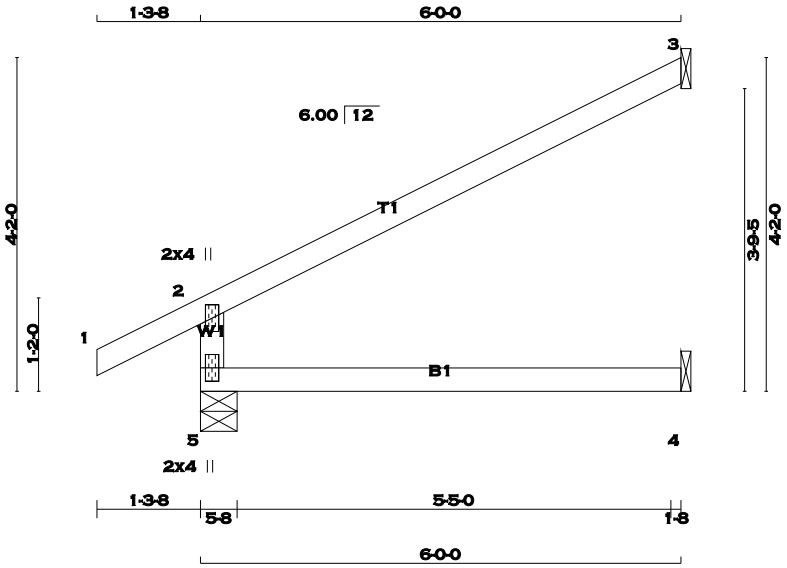

TOTAL WEIGHT = 21 X 17 = 359 lb [M]

LUMBER

N. L. G. A. RULES

CHORDS	SIZE		LUMBER	DESCR.
5 - 2	2x4	DRY	No.2	SPF
1 - 3	2x4	DRY	No.2	SPF
5 - 4	2x4	DRY	No.2	SPF

DRY: SEASONED LUMBER.

PLATES (table is in inches)

JT	TYPE	PLATES	W	LEN	Y	X
2	TMV+p	MT20	2.0	4.0		
5	BMV1+p	MT20	2.0	4.0		

A SIZE FOR SIZE SUBSTITUTION OF MITEK MII20 WITH TEE-LOK TL20 PLATES IS ALLOWED.

DIMENSIONS, SUPPORTS AND LOADINGS SPECIFIED BY FABRICATOR TO BE VERIFIED BY BUILDING DESIGNER

BEARINGS

JT	FACTORED GROSS REACTION VERT	HORZ	MAXIMUM FACTORED GROSS REACTION DOWN	HORZ	UPLIFT	INPUT BRG IN-SX	REQRD BRG IN-SX
5	457	0	457	0	0	5-8	5-8
3	174	0	174	0	0	1-8	1-8
4	43	0	49	0	0	1-8	1-8

SEE MITEK STANDARD DETAIL B37579H FOR CONNECTION TO JOINT(S) 3 , 4

UNFACTORED REACTIONS

JT	1ST LCASE COMBINED	MAX./MIN. COMPONENT REACTIONS SNOW	LIVE	PERM.LIVE	WIND	DEAD	SOIL
5	318	238 / 0	0 / 0	0 / 0	0 / 0	80 / 0	0 / 0
3	118	105 / 0	0 / 0	0 / 0	0 / 0	14 / 0	0 / 0
4	35	0 / 0	0 / 0	0 / 0	0 / 0	35 / 0	0 / 0

BEARING MATERIAL TO BE SPF NO.2 OR BETTER AT JOINT(S) 5

BRACING

TOP CHORD TO BE SHEATHED OR MAX. PURLIN SPACING = 6.25 FT.
MAX. UNBRACED BOTTOM CHORD LENGTH = 10.00 FT. OR RIGID CEILING DIRECTLY APPLIED.

ALL PITCH BREAKS AND PERIMETER CORNER JOINTS MUST BE LATERALLY RESTRAINED.

LOADING

TOTAL LOAD CASES: (4)

CHORDS MEMB. FR-TO	MAX. FACTORED FORCE (LBS)	FACTORED VERT. LOAD (PLF) FROM	TO	LC1 MAX CSI (LC)	MAX. UNBRAC LENGTH	WEBS MEMB. FR-TO	MAX. FACTORED FORCE (LBS)	MAX CSI (LC)
5- 2	-395 / 0	0.0	0.0	0.13 (4)	7.81			
1- 2	0 / 23	-77.4	-77.4	0.10 (1)	10.00			
2- 3	-26 / 0	-77.4	-77.4	0.47 (1)	6.25			
5- 4	0 / 0	-17.5	-17.5	0.13 (4)	10.00			

DESIGN CRITERIA

SPECIFIED LOADS:

TOP CH.	LL	=	23.3	PSF
	DL	=	3.0	PSF
BOT CH.	LL	=	0.0	PSF
	DL	=	7.0	PSF
TOTAL LOAD		=	33.3	PSF

SPACING = 24.0 IN. C/C

THIS TRUSS IS DESIGNED FOR RESIDENTIAL OR SMALL BUILDING REQUIREMENTS OF PART 9, NBCC 2010

THIS DESIGN COMPLIES WITH:
- PART 9 OF OBC 2012 , BCBC 2012 , ABC 2014
- CSA 086-09
- TPIC 2011

DESIGN ASSUMPTIONS
-OVERHANG NOT TO BE ALTERED OR CUT OFF.

(55 % OF 27.2 P.S.F. G.S.L. PLUS 8.4 P.S.F. RAIN LOAD) EQUALS 23.3 P.S.F. SPECIFIED ROOF LIVE LOAD

ALLOWABLE DEFL.(LL)= L/360 (0.20")
CALCULATED VERT. DEFL.(LL) = L/ 999 (0.00")
ALLOWABLE DEFL.(TL)= L/360 (0.20")
CALCULATED VERT. DEFL.(TL) = L/ 999 (0.03")

CSI: TC=0.47 (2-3:1) , BC=0.13 (4-5:4) , WB=0.00 (n/a:0) , SSI=0.20 (2-3:1)

DOL LUMBER=1.00 NAIL=1.00 LS BEND=1.10 COMP=1.10 SHEAR=1.10 TENS= 1.10

COMPANION LIVE LOAD FACTOR = 0.50

TRUSS PLATE MANUFACTURER IS NOT RESPONSIBLE FOR QUALITY CONTROL IN THE TRUSS MANUFACTURING PLANT .

NAIL VALUES

PLATE	GRIP(DRY) (PSI) MAX	MIN	SHEAR (PLI) MAX	MIN	SECTION (PLI) MAX	MIN
MT20	618	354	1667	822	2284	1656

PLATE PLACEMENT TOL. = 0.250 inches

PLATE ROTATION TOL. = 0.5 Deg.

JSI GRIP= 0.23 (2) (INPUT = 0.90)
JSI METAL= 0.09 (2) (INPUT = 1.00)

LICENSED PROFESSIONAL ENGINEER
P.M. TREVISAN
100136551
March 16th, 2017
PROVINCE OF ONTARIO

RECEIVED
TOWN OF MILTON
MAR 29, 2017
17-5327
BUILDING DIVISION

KOTT

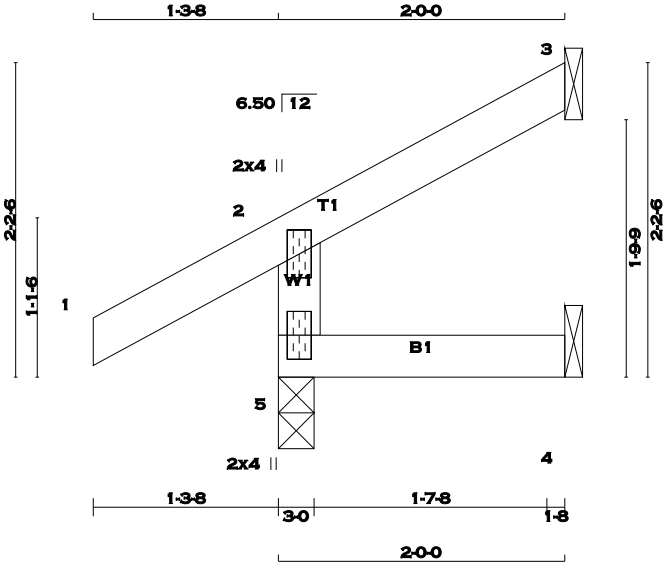

TOTAL WEIGHT = 3 X 7 = 22 lb [M]

LUMBER

N. L. G. A. RULES

CHORDS	SIZE		LUMBER	DESCR.
5 - 2	2x4	DRY	No.2	SPF
1 - 3	2x4	DRY	No.2	SPF
5 - 4	2x4	DRY	No.2	SPF

DRY: SEASONED LUMBER.

PLATES (table is in inches)

JT	TYPE	PLATES	W	LEN	Y	X
2	TMV+p	MT20	2.0	4.0		
5	BMV1+p	MT20	2.0	4.0		

A SIZE FOR SIZE SUBSTITUTION OF MITEK MII20 WITH TEE-LOK TL20 PLATES IS ALLOWED.

DIMENSIONS, SUPPORTS AND LOADINGS SPECIFIED BY FABRICATOR TO BE VERIFIED BY BUILDING DESIGNER

BEARINGS

JT	FACTORED GROSS REACTION VERT	HORZ	MAXIMUM FACTORED GROSS REACTION DOWN	HORZ	UPLIFT	INPUT BRG IN-SX	REQRD BRG IN-SX
5	221	0	221	0	0	3-0	3-0
3	58	0	58	0	0	1-8	1-8
4	16	0	17	0	0	1-8	1-8

SEE MITEK STANDARD DETAIL B37579H FOR CONNECTION TO JOINT(S) 3 , 4

UNFACTORED REACTIONS

JT	1ST LCASE COMBINED	MAX./MIN. COMPONENT REACTIONS SNOW	LIVE	PERM.LIVE	WIND	DEAD	SOIL
5	153	121 / 0	0 / 0	0 / 0	0 / 0	31 / 0	0 / 0
3	40	35 / 0	0 / 0	0 / 0	0 / 0	5 / 0	0 / 0
4	12	0 / 0	0 / 0	0 / 0	0 / 0	12 / 0	0 / 0

BEARING MATERIAL TO BE SPF NO.2 OR BETTER AT JOINT(S) 5

BRACING

TOP CHORD TO BE SHEATHED OR MAX. PURLIN SPACING = 10.00 FT.
MAX. UNBRACED BOTTOM CHORD LENGTH = 10.00 FT. OR RIGID CEILING DIRECTLY APPLIED.

ALL PITCH BREAKS AND PERIMETER CORNER JOINTS MUST BE LATERALLY RESTRAINED.

LOADING

TOTAL LOAD CASES: (5)

CHORDS MEMB. FR-TO	MAX. FACTORED FORCE (LBS)	FACTORED VERT. LOAD (PLF) FROM	TO	LC1 MAX CSI (LC)	MAX. UNBRAC LENGTH	WEBS MEMB. FR-TO	MAX. FACTORED FORCE (LBS)	MAX CSI (LC)
5- 2	-202 / 0	0.0	0.0	0.01 (4)	7.81			
1- 2	0 / 25	-77.4	-77.4	0.10 (1)	10.00			
2- 3	-9 / 0	-77.4	-77.4	0.05 (1)	10.00			
5- 4	0 / 0	-17.5	-17.5	0.02 (4)	10.00			

CANTILEVER ANALYSIS HAS BEEN CONSIDERED IN THIS DESIGN

DESIGN CRITERIA

SPECIFIED LOADS:

TOP CH.	LL	=	23.3	PSF
	DL	=	3.0	PSF
BOT CH.	LL	=	0.0	PSF
	DL	=	7.0	PSF
TOTAL LOAD		=	33.3	PSF

SPACING = 24.0 IN. C/C

THIS TRUSS IS DESIGNED FOR RESIDENTIAL OR SMALL BUILDING REQUIREMENTS OF PART 9, NBCC 2010

THIS DESIGN COMPLIES WITH:
- PART 9 OF OBC 2012 , BCBC 2012 , ABC 2014
- CSA 086-09
- TPIC 2011

DESIGN ASSUMPTIONS
-OVERHANG NOT TO BE ALTERED OR CUT OFF.

(55 % OF 27.2 P.S.F. G.S.L. PLUS 8.4 P.S.F. RAIN LOAD) EQUALS 23.3 P.S.F. SPECIFIED ROOF LIVE LOAD

ALLOWABLE DEFL.(LL)= L/360 (0.19")
CALCULATED VERT. DEFL.(LL) = L/ 999 (0.00")
ALLOWABLE DEFL.(TL)= L/360 (0.19")
CALCULATED VERT. DEFL.(TL) = L/ 999 (0.00")

CSI: TC=0.10 (1-2:1) , BC=0.02 (4-5:4) , WB=0.00 (n/a:0) , SSI=0.07 (1-2:1)

DOL LUMBER=1.00 NAIL=1.00 LS BEND=1.10 COMP=1.10 SHEAR=1.10 TENS= 1.10

COMPANION LIVE LOAD FACTOR = 0.50

TRUSS PLATE MANUFACTURER IS NOT RESPONSIBLE FOR QUALITY CONTROL IN THE TRUSS MANUFACTURING PLANT .

NAIL VALUES

PLATE	GRIP(DRY) (PSI) MAX	MIN	SHEAR (PLI) MAX	MIN	SECTION (PLI) MAX	MIN
MT20	618	354	1667	822	2284	1656

PLATE PLACEMENT TOL. = 0.250 inches

PLATE ROTATION TOL. = 0.5 Deg.

JSI GRIP= 0.12 (2) (INPUT = 0.90)
JSI METAL= 0.05 (2) (INPUT = 1.00)

LICENSED PROFESSIONAL ENGINEER
P.M. TREVISAN
100136551
March 16th, 2017
PROVINCE OF ONTARIO

RECEIVED
TOWN OF MILTON
MAR 29, 2017
17-5327
BUILDING DIVISION

KOTT

SCALE = 1:18.6

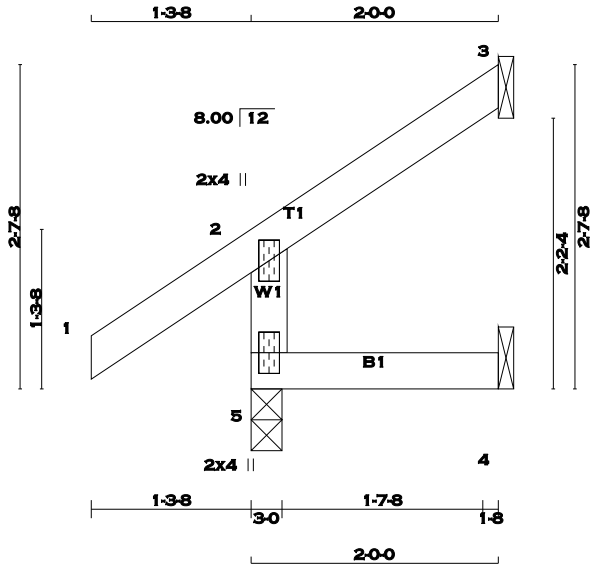

TOTAL WEIGHT = 6 X 8 = 48 lb [M]

LUMBER

N. L. G. A. RULES

CHORDS	SIZE		LUMBER	DESCR.
5 - 2	2x4	DRY	No.2	SPF
1 - 3	2x4	DRY	No.2	SPF
5 - 4	2x4	DRY	No.2	SPF

DRY: SEASONED LUMBER.

PLATES (table is in inches)

JT	TYPE	PLATES	W	LEN	Y	X
2	TMV+p	MT20	2.0	4.0		
5	BMV1+p	MT20	2.0	4.0		

A SIZE FOR SIZE SUBSTITUTION OF MITEK MII20 WITH TEE-LOK TL20 PLATES IS ALLOWED.

DIMENSIONS, SUPPORTS AND LOADINGS SPECIFIED BY FABRICATOR TO BE VERIFIED BY BUILDING DESIGNER

BEARINGS

JT	FACTORED GROSS REACTION VERT	HORZ	MAXIMUM FACTORED GROSS REACTION DOWN	HORZ	UPLIFT	INPUT BRG IN-SX	REQRD BRG IN-SX
5	222	0	222	0	0	3-0	3-0
3	58	0	58	0	0	1-8	1-8
4	16	0	18	0	0	1-8	1-8

SEE MITEK STANDARD DETAIL B37579H FOR CONNECTION TO JOINT(S) 3 , 4

UNFACTORED REACTIONS

JT	1ST LCASE COMBINED	MAX./MIN. COMPONENT REACTIONS SNOW	LIVE	PERM.LIVE	WIND	DEAD	SOIL
5	153	122 / 0	0 / 0	0 / 0	0 / 0	31 / 0	0 / 0
3	40	35 / 0	0 / 0	0 / 0	0 / 0	5 / 0	0 / 0
4	13	0 / 0	0 / 0	0 / 0	0 / 0	13 / 0	0 / 0

BEARING MATERIAL TO BE SPF NO.2 OR BETTER AT JOINT(S) 5

BRACING

TOP CHORD TO BE SHEATHED OR MAX. PURLIN SPACING = 6.25 FT.
MAX. UNBRACED BOTTOM CHORD LENGTH = 10.00 FT. OR RIGID CEILING DIRECTLY APPLIED.

ALL PITCH BREAKS AND PERIMETER CORNER JOINTS MUST BE LATERALLY RESTRAINED.

LOADING

TOTAL LOAD CASES: (5)

CHORDS MEMB. FR-TO	MAX. FACTORED FORCE (LBS)	FACTORED VERT. LOAD (PLF) FROM	TO	LC1 MAX CSI (LC)	MAX. UNBRAC LENGTH
5- 2	-202 / 0	0.0	0.0	0.01 (4)	7.81
1- 2	0 / 29	-77.4	-77.4	0.10 (1)	10.00
2- 3	-10 / 0	-77.4	-77.4	0.05 (1)	6.25
5- 4	0 / 0	-17.5	-17.5	0.02 (4)	10.00

WEBS MEMB. FR-TO	MAX. FACTORED FORCE (LBS)	MAX CSI (LC)

CANTILEVER ANALYSIS HAS BEEN CONSIDERED IN THIS DESIGN

DESIGN CRITERIA

SPECIFIED LOADS:

TOP CH.	LL	=	23.3	PSF
	DL	=	3.0	PSF
BOT CH.	LL	=	0.0	PSF
	DL	=	7.0	PSF
TOTAL LOAD		=	33.3	PSF

SPACING = 24.0 IN. C/C

THIS TRUSS IS DESIGNED FOR RESIDENTIAL OR SMALL BUILDING REQUIREMENTS OF PART 9, NBCC 2010

THIS DESIGN COMPLIES WITH:
- PART 9 OF OBC 2012 , BCBC 2012 , ABC 2014
- CSA 086-09
- TPIC 2011

DESIGN ASSUMPTIONS
-OVERHANG NOT TO BE ALTERED OR CUT OFF.

(55 % OF 27.2 P.S.F. G.S.L. PLUS 8.4 P.S.F. RAIN LOAD) EQUALS 23.3 P.S.F. SPECIFIED ROOF LIVE LOAD

ALLOWABLE DEFL.(LL)= L/360 (0.19")
CALCULATED VERT. DEFL.(LL) = L/ 999 (0.00")
ALLOWABLE DEFL.(TL)= L/360 (0.19")
CALCULATED VERT. DEFL.(TL) = L/ 999 (0.00")

CSI: TC=0.10 (1-2:1) , BC=0.02 (4-5:4) , WB=0.00 (n/a:0) , SSI=0.07 (1-2:1)

DOL LUMBER=1.00 NAIL=1.00 LS BEND=1.10 COMP=1.10 SHEAR=1.10 TENS= 1.10

COMPANION LIVE LOAD FACTOR = 0.50

TRUSS PLATE MANUFACTURER IS NOT RESPONSIBLE FOR QUALITY CONTROL IN THE TRUSS MANUFACTURING PLANT .

NAIL VALUES

PLATE	GRIP(DRY) (PSI) MAX	MIN	SHEAR (PLI) MAX	MIN	SECTION (PLI) MAX	MIN
MT20	618	354	1667	822	2284	1656

PLATE PLACEMENT TOL. = 0.250 inches

PLATE ROTATION TOL. = 0.5 Deg.

JSI GRIP= 0.13 (2) (INPUT = 0.90)
JSI METAL= 0.05 (2) (INPUT = 1.00)

LICENSED PROFESSIONAL ENGINEER
P.M. TREVISAN
100136551
March 16th, 2017
PROVINCE OF ONTARIO

RECEIVED
TOWN OF MILTON
MAR 29, 2017
17-5327
BUILDING DIVISION

KOTT

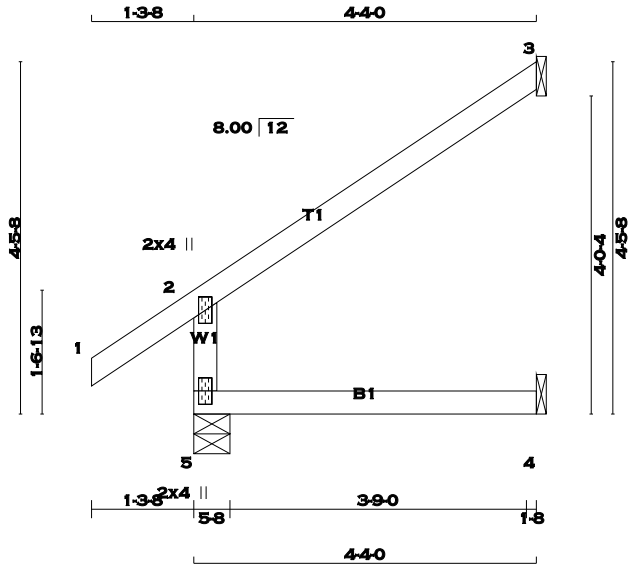

SCALE = 1:29.1

TOTAL WEIGHT = 8 X 14 = 113 lb [M]

LUMBER

N. L. G. A. RULES

CHORDS	SIZE		LUMBER	DESCR.
5 - 2	2x4	DRY	No.2	SPF
1 - 3	2x4	DRY	No.2	SPF
5 - 4	2x4	DRY	No.2	SPF

DRY: SEASONED LUMBER.

PLATES (table is in inches)

JT	TYPE	PLATES	W	LEN	Y	X
2	TMV+p	MT20	2.0	4.0		
5	BMV1+p	MT20	2.0	4.0		

A SIZE FOR SIZE SUBSTITUTION OF MITEK MII20 WITH TEE-LOK TL20 PLATES IS ALLOWED.

DIMENSIONS, SUPPORTS AND LOADINGS SPECIFIED BY FABRICATOR TO BE VERIFIED BY BUILDING DESIGNER

BEARINGS

JT	FACTORED GROSS REACTION VERT	HORZ	MAXIMUM FACTORED GROSS REACTION DOWN	HORZ	UPLIFT	INPUT BRG IN-SX	REQRD BRG IN-SX
5	359	0	359	0	0	5-8	5-8
3	126	0	126	0	0	1-8	1-8
4	33	0	37	0	0	1-8	1-8

SEE MITEK STANDARD DETAIL B37579H FOR CONNECTION TO JOINT(S) 3 , 4

UNFACTORED REACTIONS

JT	1ST LCASE COMBINED	MAX./MIN. COMPONENT REACTIONS SNOW	LIVE	PERM.LIVE	WIND	DEAD	SOIL
5	249	190 / 0	0 / 0	0 / 0	0 / 0	59 / 0	0 / 0
3	86	76 / 0	0 / 0	0 / 0	0 / 0	10 / 0	0 / 0
4	26	0 / 0	0 / 0	0 / 0	0 / 0	26 / 0	0 / 0

BEARING MATERIAL TO BE SPF NO.2 OR BETTER AT JOINT(S) 5

BRACING

TOP CHORD TO BE SHEATHED OR MAX. PURLIN SPACING = 6.25 FT.
MAX. UNBRACED BOTTOM CHORD LENGTH = 10.00 FT. OR RIGID CEILING DIRECTLY APPLIED.

ALL PITCH BREAKS AND PERIMETER CORNER JOINTS MUST BE LATERALLY RESTRAINED.

LOADING

TOTAL LOAD CASES: (4)

CHORDS MEMB. FR-TO	MAX. FACTORED FORCE (LBS)	FACTORED VERT. LOAD (PLF) FROM	TO	LC1 MAX CSI (LC)	WEBS MAX. UNBRAC LENGTH	MEMB. FR-TO	MAX. FACTORED FORCE (LBS)	MAX CSI (LC)
5- 2	-316 / 0	0.0	0.0	0.05 (4)	7.81			
1- 2	0 / 29	-77.4	-77.4	0.10 (1)	10.00			
2- 3	-23 / 0	-77.4	-77.4	0.25 (1)	6.25			
5- 4	0 / 0	-17.5	-17.5	0.07 (4)	10.00			

DESIGN CRITERIA

SPECIFIED LOADS:

TOP CH.	LL	=	23.3	PSF
	DL	=	3.0	PSF
BOT CH.	LL	=	0.0	PSF
	DL	=	7.0	PSF
TOTAL LOAD		=	33.3	PSF

SPACING = 24.0 IN. C/C

THIS TRUSS IS DESIGNED FOR RESIDENTIAL OR SMALL BUILDING REQUIREMENTS OF PART 9, NBCC 2010

THIS DESIGN COMPLIES WITH:
- PART 9 OF OBC 2012 , BCBC 2012 , ABC 2014
- CSA 086-09
- TPIC 2011

DESIGN ASSUMPTIONS
-OVERHANG NOT TO BE ALTERED OR CUT OFF.

(55 % OF 27.2 P.S.F. G.S.L. PLUS 8.4 P.S.F. RAIN LOAD) EQUALS 23.3 P.S.F. SPECIFIED ROOF LIVE LOAD

ALLOWABLE DEFL.(LL)= L/360 (0.19")
CALCULATED VERT. DEFL.(LL) = L/ 999 (0.00")
ALLOWABLE DEFL.(TL)= L/360 (0.19")
CALCULATED VERT. DEFL.(TL) = L/ 999 (0.01")

CSI: TC=0.25 (2-3:1) , BC=0.07 (4-5:4) , WB=0.00 (n/a:0) , SSI=0.14 (2-3:1)

DOL LUMBER=1.00 NAIL=1.00 LS BEND=1.10 COMP=1.10 SHEAR=1.10 TENS= 1.10

COMPANION LIVE LOAD FACTOR = 0.50

TRUSS PLATE MANUFACTURER IS NOT RESPONSIBLE FOR QUALITY CONTROL IN THE TRUSS MANUFACTURING PLANT .

NAIL VALUES

PLATE	GRIP(DRY) (PSI) MAX	MIN	SHEAR (PLI) MAX	MIN	SECTION (PLI) MAX	MIN
MT20	618	354	1667	822	2284	1656

PLATE PLACEMENT TOL. = 0.250 inches

PLATE ROTATION TOL. = 0.5 Deg.

JSI GRIP= 0.20 (2) (INPUT = 0.90)
JSI METAL= 0.08 (2) (INPUT = 1.00)

LICENSED PROFESSIONAL ENGINEER
P.M. TREVISAN
100136551
March 16th, 2017
PROVINCE OF ONTARIO

RECEIVED
TOWN OF MILTON
MAR 29, 2017
17-5327
BUILDING DIVISION

KOTT

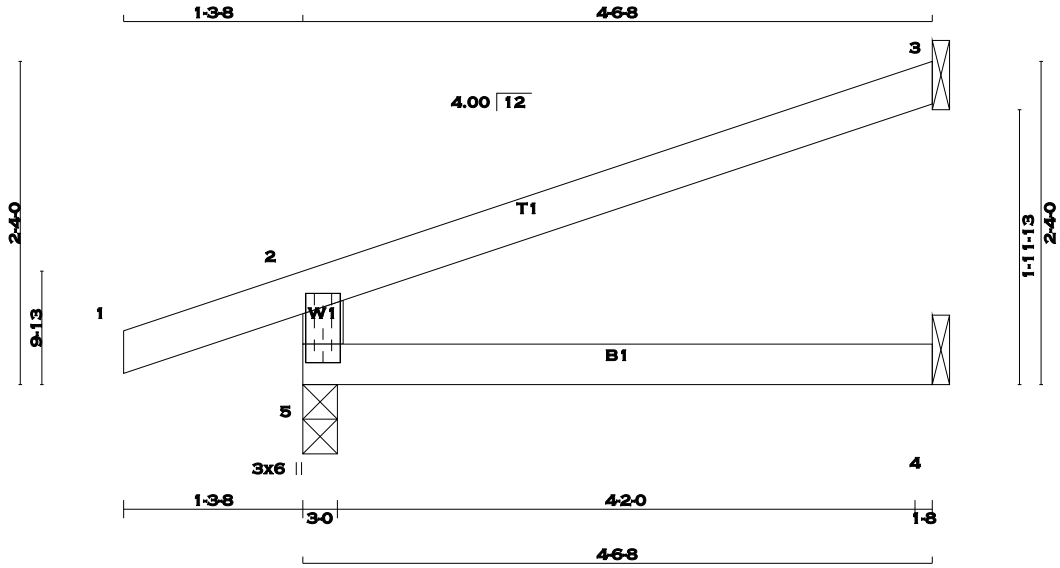

TOTAL WEIGHT = 6 X 13 = 76 lb [M]

LUMBER

N. L. G. A. RULES

CHORDS	SIZE		LUMBER	DESCR.
5 - 2	2x4	DRY	No.2	SPF
1 - 3	2x4	DRY	No.2	SPF
5 - 4	2x4	DRY	No.2	SPF

DRY: SEASONED LUMBER.

PLATES (table is in inches)

JT	TYPE	PLATES	W	LEN	Y	X
2						
5						
5	TMBMV1+p	MT20	3.0	6.0	3.50	1.50

A SIZE FOR SIZE SUBSTITUTION OF MITEK MII20 WITH TEE-LOK TL20 PLATES IS ALLOWED.

DIMENSIONS, SUPPORTS AND LOADINGS SPECIFIED BY FABRICATOR TO BE VERIFIED BY BUILDING DESIGNER

BEARINGS

JT	FACTORED GROSS REACTION VERT	HORZ	MAXIMUM FACTORED GROSS REACTION DOWN	HORZ	UPLIFT	INPUT BRG IN-SX	REQRD BRG IN-SX
5	370	0	370	0	0	3-0	3-0
3	132	0	132	0	0	1-8	1-8
4	32	0	36	0	0	1-8	1-8

SEE MITEK STANDARD DETAIL B37579H FOR CONNECTION TO JOINT(S) 3 , 4

UNFACTORED REACTIONS

JT	1ST LCASE COMBINED	MAX./MIN. COMPONENT REACTIONS SNOW	LIVE	PERM.LIVE	WIND	DEAD	SOIL
5	257	194 / 0	0 / 0	0 / 0	0 / 0	63 / 0	0 / 0
3	90	79 / 0	0 / 0	0 / 0	0 / 0	10 / 0	0 / 0
4	26	0 / 0	0 / 0	0 / 0	0 / 0	26 / 0	0 / 0

BEARING MATERIAL TO BE SPF NO.2 OR BETTER AT JOINT(S) 5

BRACING

TOP CHORD TO BE SHEATHED OR MAX. PURLIN SPACING = 6.25 FT.
MAX. UNBRACED BOTTOM CHORD LENGTH = 10.00 FT. OR RIGID CEILING DIRECTLY APPLIED.

ALL PITCH BREAKS AND PERIMETER CORNER JOINTS MUST BE LATERALLY RESTRAINED.

LOADING

TOTAL LOAD CASES: (4)

CHORDS MEMB. FR-TO	MAX. FACTORED FORCE (LBS)	FACTORED VERT. LOAD (PLF) FROM	TO	LC1 MAX CSI (LC)	MAX. UNBRAC LENGTH
5- 2	-323 / 0	0.0	0.0	0.08 (4)	7.81
1- 2	0 / 16	-77.4	-77.4	0.10 (1)	10.00
2- 3	-14 / 0	-77.4	-77.4	0.27 (1)	6.25
5- 4	0 / 0	-17.5	-17.5	0.08 (4)	10.00

WEBS MEMB. FR-TO	MAX. FACTORED FORCE (LBS)	MAX CSI (LC)

DESIGN CRITERIA

SPECIFIED LOADS:

TOP CH.	LL	=	23.3	PSF
	DL	=	3.0	PSF
BOT CH.	LL	=	0.0	PSF
	DL	=	7.0	PSF
TOTAL LOAD		=	33.3	PSF

SPACING = 24.0 IN. C/C

THIS TRUSS IS DESIGNED FOR RESIDENTIAL OR SMALL BUILDING REQUIREMENTS OF PART 9, NBCC 2010

THIS DESIGN COMPLIES WITH:
- PART 9 OF OBC 2012 , BCBC 2012 , ABC 2014
- CSA 086-09
- TPIC 2011

DESIGN ASSUMPTIONS
-OVERHANG NOT TO BE ALTERED OR CUT OFF.

(55 % OF 27.2 P.S.F. G.S.L. PLUS 8.4 P.S.F. RAIN LOAD) EQUALS 23.3 P.S.F. SPECIFIED ROOF LIVE LOAD

ALLOWABLE DEFL.(LL)= L/360 (0.19")
CALCULATED VERT. DEFL.(LL) = L/ 999 (0.00")
ALLOWABLE DEFL.(TL)= L/360 (0.19")
CALCULATED VERT. DEFL.(TL) = L/ 999 (0.01")

CSI: TC=0.27 (2-3:1) , BC=0.08 (4-5:4) , WB=0.00 (n/a:0) , SSI=0.16 (2-3:1)

DOL LUMBER=1.00 NAIL=1.00 LS BEND=1.10 COMP=1.10 SHEAR=1.10 TENS= 1.10

COMPANION LIVE LOAD FACTOR = 0.50

TRUSS PLATE MANUFACTURER IS NOT RESPONSIBLE FOR QUALITY CONTROL IN THE TRUSS MANUFACTURING PLANT .

NAIL VALUES

PLATE	GRIP(DRY) (PSI) MAX	MIN	SHEAR (PLI) MAX	MIN	SECTION (PLI) MAX	MIN
MT20	618	354	1667	822	2284	1656

PLATE PLACEMENT TOL. = 0.250 inches

PLATE ROTATION TOL. = 5.0 Deg.

JSI GRIP= 0.28 (5) (INPUT = 0.90)
JSI METAL= 0.04 (5) (INPUT = 1.00)

LICENSED PROFESSIONAL ENGINEER
P.M. TREVISAN
100136551
March 16th, 2017
PROVINCE OF ONTARIO

RECEIVED
TOWN OF MILTON
MAR 29, 2017
17-5327
BUILDING DIVISION

KOTT

SCALE = 1:28.1

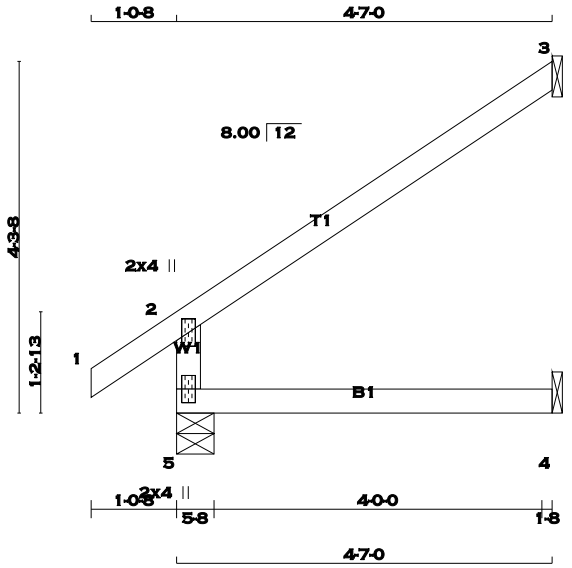

TOTAL WEIGHT = 5 X 14 = 70 lb [M]

LUMBER

N. L. G. A. RULES

CHORDS	SIZE		LUMBER	DESCR.
5 - 2	2x4	DRY	No.2	SPF
1 - 3	2x4	DRY	No.2	SPF
5 - 4	2x4	DRY	No.2	SPF

DRY: SEASONED LUMBER.

PLATES (table is in inches)

JT	TYPE	PLATES	W	LEN	Y	X
2	TMV+p	MT20	2.0	4.0		
5	BMV1+p	MT20	2.0	4.0		

A SIZE FOR SIZE SUBSTITUTION OF MITEK MII20 WITH TEE-LOK TL20 PLATES IS ALLOWED.

DIMENSIONS, SUPPORTS AND LOADINGS SPECIFIED BY FABRICATOR TO BE VERIFIED BY BUILDING DESIGNER

BEARINGS

JT	FACTORED GROSS REACTION VERT	HORZ	MAXIMUM FACTORED GROSS REACTION DOWN	HORZ	UPLIFT	INPUT BRG IN-SX	REQRD BRG IN-SX
5	355	0	355	0	0	5-8	5-8
3	133	0	133	0	0	1-8	1-8
4	34	0	38	0	0	1-8	1-8

SEE MITEK STANDARD DETAIL B37579H FOR CONNECTION TO JOINT(S) 3 , 4

UNFACTORED REACTIONS

JT	1ST LCASE COMBINED	MAX./MIN. COMPONENT REACTIONS SNOW	LIVE	PERM.LIVE	WIND	DEAD	SOIL
5	247	186 / 0	0 / 0	0 / 0	0 / 0	61 / 0	0 / 0
3	90	80 / 0	0 / 0	0 / 0	0 / 0	10 / 0	0 / 0
4	27	0 / 0	0 / 0	0 / 0	0 / 0	27 / 0	0 / 0

BEARING MATERIAL TO BE SPF NO.2 OR BETTER AT JOINT(S) 5, 3

BRACING

TOP CHORD TO BE SHEATHED OR MAX. PURLIN SPACING = 6.25 FT.
MAX. UNBRACED BOTTOM CHORD LENGTH = 10.00 FT. OR RIGID CEILING DIRECTLY APPLIED.

ALL PITCH BREAKS AND PERIMETER CORNER JOINTS MUST BE LATERALLY RESTRAINED.

LOADING

TOTAL LOAD CASES: (4)

CHORDS MEMB. FR-TO	MAX. FACTORED FORCE (LBS)	FACTORED VERT. LOAD (PLF) FROM	TO	LC1 MAX CSI (LC)	MAX. UNBRAC LENGTH
5- 2	-308 / 0	0.0	0.0	0.07 (4)	7.81
1- 2	0 / 24	-77.4	-77.4	0.07 (1)	10.00
2- 3	-25 / 0	-77.4	-77.4	0.28 (1)	6.25
5- 4	0 / 0	-17.5	-17.5	0.08 (4)	10.00

WEBS MEMB. FR-TO	MAX. FACTORED FORCE (LBS)	MAX CSI (LC)

DESIGN CRITERIA

SPECIFIED LOADS:

TOP CH.	LL	=	23.3	PSF
	DL	=	3.0	PSF
BOT CH.	LL	=	0.0	PSF
	DL	=	7.0	PSF
TOTAL LOAD		=	33.3	PSF

SPACING = 24.0 IN. C/C

THIS TRUSS IS DESIGNED FOR RESIDENTIAL OR SMALL BUILDING REQUIREMENTS OF PART 9, NBCC 2010

THIS DESIGN COMPLIES WITH:
- PART 9 OF OBC 2012 , BCBC 2012 , ABC 2014
- CSA 086-09
- TPIC 2011

DESIGN ASSUMPTIONS
-OVERHANG NOT TO BE ALTERED OR CUT OFF.

(55 % OF 27.2 P.S.F. G.S.L. PLUS 8.4 P.S.F. RAIN LOAD) EQUALS 23.3 P.S.F. SPECIFIED ROOF LIVE LOAD

ALLOWABLE DEFL.(LL)= L/360 (0.19")
CALCULATED VERT. DEFL.(LL) = L/ 999 (0.00")
ALLOWABLE DEFL.(TL)= L/360 (0.19")
CALCULATED VERT. DEFL.(TL) = L/ 999 (0.01")

CSI: TC=0.28 (2-3:1) , BC=0.08 (4-5:4) , WB=0.00 (n/a:0) , SSI=0.14 (2-3:1)

DOL LUMBER=1.00 NAIL=1.00 LS BEND=1.10 COMP=1.10 SHEAR=1.10 TENS= 1.10

COMPANION LIVE LOAD FACTOR = 0.50

TRUSS PLATE MANUFACTURER IS NOT RESPONSIBLE FOR QUALITY CONTROL IN THE TRUSS MANUFACTURING PLANT .

NAIL VALUES

PLATE	GRIP(DRY) (PSI) MAX	MIN	SHEAR (PLI) MAX	MIN	SECTION (PLI) MAX	MIN
MT20	618	354	1667	822	2284	1656

PLATE PLACEMENT TOL. = 0.250 inches

PLATE ROTATION TOL. = 5.0 Deg.

JSI GRIP= 0.20 (2) (INPUT = 0.90)
JSI METAL= 0.08 (2) (INPUT = 1.00)

LICENSED PROFESSIONAL ENGINEER
P.M. TREVISAN
100136551
March 16th, 2017
PROVINCE OF ONTARIO

RECEIVED
TOWN OF MILTON
MAR 29, 2017
17-5327
BUILDING DIVISION

KOTT

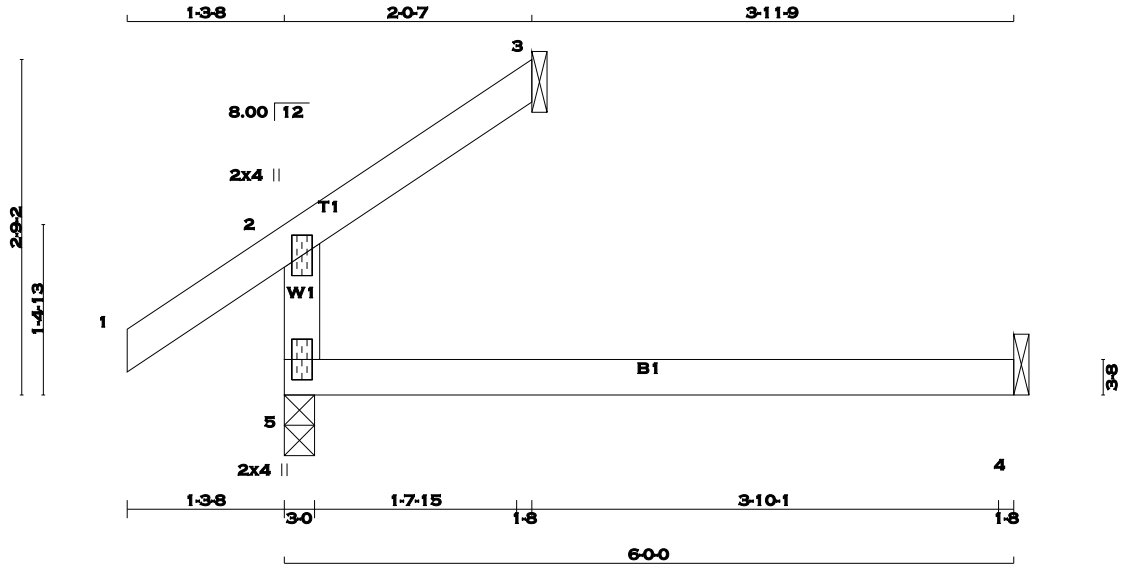

TOTAL WEIGHT = 13 lb

[M][F]

LUMBER

N. L. G. A. RULES

CHORDS	SIZE		LUMBER	DESCR.
5 - 2	2x4	DRY	No.2	SPF
1 - 3	2x4	DRY	No.2	SPF
5 - 4	2x4	DRY	No.2	SPF

DRY: SEASONED LUMBER.

PLATES (table is in inches)

JT	TYPE	PLATES	W	LEN	Y	X
2	TMV+p	MT20	2.0	4.0		
5	BMV1+p	MT20	2.0	4.0		

A SIZE FOR SIZE SUBSTITUTION OF MITEK MII20 WITH TEE-LOK TL20 PLATES IS ALLOWED.

DIMENSIONS, SUPPORTS AND LOADINGS SPECIFIED BY FABRICATOR TO BE VERIFIED BY BUILDING DESIGNER

BEARINGS

JT	FACTORED GROSS REACTION VERT	HORZ	MAXIMUM FACTORED GROSS REACTION DOWN	HORZ	UPLIFT	INPUT BRG IN-SX	REQRD BRG IN-SX
5	265	0	265	0	0	3-0	3-0
3	60	0	60	0	0	1-8	1-8
4	44	0	49	0	0	1-8	1-8

SEE MITEK STANDARD DETAIL B37579H FOR CONNECTION TO JOINT(S) 3 , 4

UNFACTORED REACTIONS

JT	1ST LCASE COMBINED	MAX./MIN. COMPONENT REACTIONS SNOW	LIVE	PERM.LIVE	WIND	DEAD	SOIL
5	188	123 / 0	0 / 0	0 / 0	0 / 0	65 / 0	0 / 0
3	40	36 / 0	0 / 0	0 / 0	0 / 0	5 / 0	0 / 0
4	35	0 / 0	0 / 0	0 / 0	0 / 0	35 / 0	0 / 0

BEARING MATERIAL TO BE SPF NO.2 OR BETTER AT JOINT(S) 5, 3

BRACING

TOP CHORD TO BE SHEATHED OR MAX. PURLIN SPACING = 6.25 FT.
MAX. UNBRACED BOTTOM CHORD LENGTH = 10.00 FT. OR RIGID CEILING DIRECTLY APPLIED.

ALL PITCH BREAKS AND PERIMETER CORNER JOINTS MUST BE LATERALLY RESTRAINED.

LOADING

TOTAL LOAD CASES: (4)

CHORDS MEMB. FR-TO	MAX. FACTORED FORCE (LBS)	FACTORED VERT. LOAD (PLF) FROM	TO	LC1 MAX CSI (LC)	MAX. UNBRAC LENGTH	WEBS MEMB. FR-TO	MAX. FACTORED FORCE (LBS)	MAX CSI (LC)
5- 2	-204 / 0	0.0	0.0	0.10 (4)	7.81			
1- 2	0 / 29	-77.4	-77.4	0.10 (1)	10.00			
2- 3	-11 / 0	-77.4	-77.4	0.04 (1)	6.25			
5- 4	0 / 0	-17.5	-17.5	0.13 (4)	10.00			

DESIGN CRITERIA

SPECIFIED LOADS:

TOP CH.	LL	=	23.3	PSF
	DL	=	3.0	PSF
BOT CH.	LL	=	0.0	PSF
	DL	=	7.0	PSF
TOTAL LOAD		=	33.3	PSF

SPACING = 24.0 IN. C/C

THIS TRUSS IS DESIGNED FOR RESIDENTIAL OR SMALL BUILDING REQUIREMENTS OF PART 9, NBCC 2010

THIS DESIGN COMPLIES WITH:
- PART 9 OF OBC 2012 , BCBC 2012 , ABC 2014
- CSA 086-09
- TPIC 2011

DESIGN ASSUMPTIONS
-OVERHANG NOT TO BE ALTERED OR CUT OFF.

(55 % OF 27.2 P.S.F. G.S.L. PLUS 8.4 P.S.F. RAIN LOAD) EQUALS 23.3 P.S.F. SPECIFIED ROOF LIVE LOAD

ALLOWABLE DEFL.(LL)= L/360 (0.20")
CALCULATED VERT. DEFL.(LL) = L/ 999 (0.00")
ALLOWABLE DEFL.(TL)= L/360 (0.20")
CALCULATED VERT. DEFL.(TL) = L/ 999 (0.03")

CSI: TC=0.10 (2-5:4) , BC=0.13 (4-5:4) , WB=0.00 (n/a:0) , SSI=0.08 (4-5:4)

DOL LUMBER=1.00 NAIL=1.00 LS BEND=1.10 COMP=1.10 SHEAR=1.10 TENS= 1.10

COMPANION LIVE LOAD FACTOR = 0.50

TRUSS PLATE MANUFACTURER IS NOT RESPONSIBLE FOR QUALITY CONTROL IN THE TRUSS MANUFACTURING PLANT .

NAIL VALUES

PLATE	GRIP(DRY) (PSI) MAX	MIN	SHEAR (PLI) MAX	MIN	SECTION (PLI) MAX	MIN
MT20	618	354	1667	822	2284	1656

PLATE PLACEMENT TOL. = 0.250 inches

PLATE ROTATION TOL. = 0.5 Deg.

JSI GRIP= 0.13 (2) (INPUT = 0.90)
JSI METAL= 0.05 (2) (INPUT = 1.00)

LICENSED PROFESSIONAL ENGINEER
P.M. TREVISAN
100136551
March 16th, 2017
PROVINCE OF ONTARIO

RECEIVED
TOWN OF MILTON
MAR 29, 2017
17-5327
BUILDING DIVISION

KOTT

JOB NAME	TRUSS NAME	QUANTITY	PLY	JOB DESC.	DRWG NO.
PT0317-093	J08	1	1	TRUSS DESC. LECCO RIDGE-BLOCK 343	ENG JOB: PT0317-093

KOTT , Stouffville, ON, CGC

Version 8.100 S Feb 9 2017 MiTek Industries, Inc. Thu Mar 16 07:54:49 2017 Page 1

ID:EvTixTQDI5yR1QLotZTBr_yE?HJ-_85N_W4mQWduMjq7nFhtY3_sRcmzaZHR0snPffzaRHq

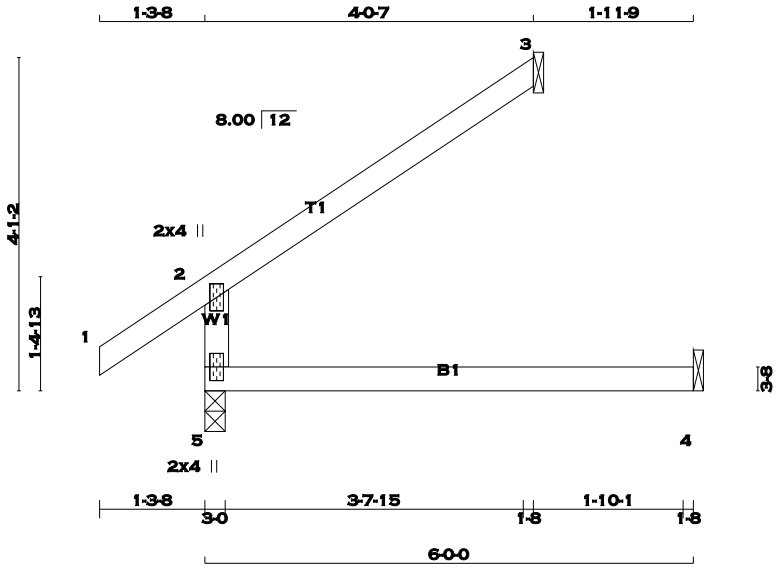

TOTAL WEIGHT = 15 lb

[M][F]

LUMBER

N. L. G. A. RULES

CHORDS	SIZE		LUMBER	DESCR.
5 - 2	2x4	DRY	No.2	SPF
1 - 3	2x4	DRY	No.2	SPF
5 - 4	2x4	DRY	No.2	SPF

DRY: SEASONED LUMBER.

PLATES (table is in inches)

JT	TYPE	PLATES	W	LEN	Y	X
2	TMV+p	MT20	2.0	4.0		
5	BMV1+p	MT20	2.0	4.0		

A SIZE FOR SIZE SUBSTITUTION OF MITEK MII20 WITH TEE-LOK TL20 PLATES IS ALLOWED.

DIMENSIONS, SUPPORTS AND LOADINGS SPECIFIED BY FABRICATOR TO BE VERIFIED BY BUILDING DESIGNER

BEARINGS

JT	FACTORED GROSS REACTION VERT	HORZ	MAXIMUM FACTORED GROSS REACTION DOWN	HORZ	UPLIFT	INPUT BRG IN-SX	REQRD BRG IN-SX
5	362	0	362	0	0	3-0	3-0
3	117	0	117	0	0	1-8	1-8
4	44	0	49	0	0	1-8	1-8

SEE MITEK STANDARD DETAIL B37579H FOR CONNECTION TO JOINT(S) 3 , 4

UNFACTORED REACTIONS

JT	1ST LCASE COMBINED	MAX./MIN. COMPONENT REACTIONS SNOW	LIVE	PERM.LIVE	WIND	DEAD	SOIL
5	254	181 / 0	0 / 0	0 / 0	0 / 0	72 / 0	0 / 0
3	80	71 / 0	0 / 0	0 / 0	0 / 0	9 / 0	0 / 0
4	35	0 / 0	0 / 0	0 / 0	0 / 0	35 / 0	0 / 0

BEARING MATERIAL TO BE SPF NO.2 OR BETTER AT JOINT(S) 5, 3

BRACING

TOP CHORD TO BE SHEATHED OR MAX. PURLIN SPACING = 6.25 FT.
MAX. UNBRACED BOTTOM CHORD LENGTH = 10.00 FT. OR RIGID CEILING DIRECTLY APPLIED.

ALL PITCH BREAKS AND PERIMETER CORNER JOINTS MUST BE LATERALLY RESTRAINED.

LOADING

TOTAL LOAD CASES: (4)

CHORDS MEMB. FR-TO	MAX. FACTORED FORCE (LBS)	FACTORED VERT. LOAD (PLF) FROM	TO	LC1 MAX CSI (LC)	MAX. UNBRAC LENGTH	WEBS MEMB. FR-TO	MAX. FACTORED FORCE (LBS)	MAX CSI (LC)
5- 2	-301 / 0	0.0	0.0	0.10 (4)	7.81			
1- 2	0 / 29	-77.4	-77.4	0.10 (1)	10.00			
2- 3	-22 / 0	-77.4	-77.4	0.16 (1)	6.25			
5- 4	0 / 0	-17.5	-17.5	0.13 (4)	10.00			

DESIGN CRITERIA

SPECIFIED LOADS:

TOP CH.	LL	=	23.3	PSF
	DL	=	3.0	PSF
BOT CH.	LL	=	0.0	PSF
	DL	=	7.0	PSF
TOTAL LOAD		=	33.3	PSF

SPACING = 24.0 IN. C/C

THIS TRUSS IS DESIGNED FOR RESIDENTIAL OR SMALL BUILDING REQUIREMENTS OF PART 9, NBCC 2010

THIS DESIGN COMPLIES WITH:
- PART 9 OF OBC 2012 , BCBC 2012 , ABC 2014
- CSA 086-09
- TPIC 2011

DESIGN ASSUMPTIONS
-OVERHANG NOT TO BE ALTERED OR CUT OFF.

(55 % OF 27.2 P.S.F. G.S.L. PLUS 8.4 P.S.F. RAIN LOAD) EQUALS 23.3 P.S.F. SPECIFIED ROOF LIVE LOAD

ALLOWABLE DEFL.(LL)= L/360 (0.20")
CALCULATED VERT. DEFL.(LL) = L/ 999 (0.00")
ALLOWABLE DEFL.(TL)= L/360 (0.20")
CALCULATED VERT. DEFL.(TL) = L/ 999 (0.03")

CSI: TC=0.16 (2-3:1) , BC=0.13 (4-5:4) , WB=0.00 (n/a:0) , SSI=0.13 (2-3:1)

DOL LUMBER=1.00 NAIL=1.00 LS BEND=1.10 COMP=1.10 SHEAR=1.10 TENS= 1.10

COMPANION LIVE LOAD FACTOR = 0.50

TRUSS PLATE MANUFACTURER IS NOT RESPONSIBLE FOR QUALITY CONTROL IN THE TRUSS MANUFACTURING PLANT .

NAIL VALUES

PLATE	GRIP(DRY) (PSI) MAX	MIN	SHEAR (PLI) MAX	MIN	SECTION (PLI) MAX	MIN
MT20	618	354	1667	822	2284	1656

PLATE PLACEMENT TOL. = 0.250 inches

PLATE ROTATION TOL. = 5.0 Deg.

JSI GRIP= 0.19 (2) (INPUT = 0.90)
JSI METAL= 0.07 (2) (INPUT = 1.00)

LICENSED PROFESSIONAL ENGINEER
P.M. TREVISAN
100136551
March 16th, 2017
PROVINCE OF ONTARIO

RECEIVED
TOWN OF MILTON
MAR 29, 2017
17-5327
BUILDING DIVISION

KOTT

JOB NAME	TRUSS NAME	QUANTITY	PLY	JOB DESC.	DRWG NO.
PT0317-093	**J09**	**1**	**1**	TRUSS DESC. LECCO RIDGE-BLOCK 343	ENG JOB: PT0317-093

KOTT , Stouffville, ON, CGC

Version 8.100 S Feb 9 2017 MiTek Industries, Inc. Thu Mar 16 07:54:49 2017 Page 1

ID:EvTixTQDI5yR1QLotZTBr_yE?HJ-_85N_W4mQWduMjq7nFhtY3_uNcogaZHR0snPffzaRHq

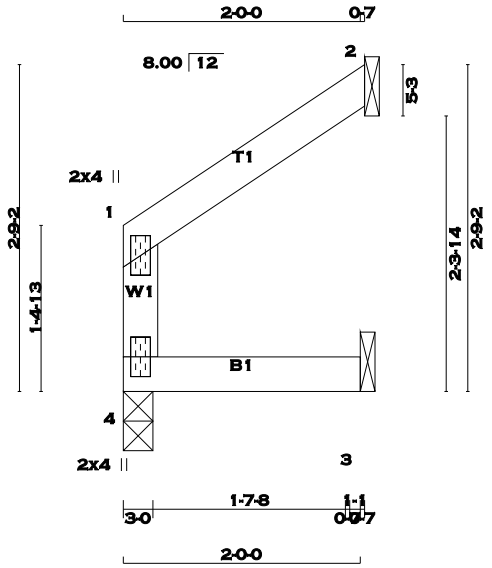

SCALE = 1:19.4

TOTAL WEIGHT = 6 lb

[M][F]

LUMBER

N. L. G. A. RULES

CHORDS	SIZE		LUMBER	DESCR.
4 - 1	2x4	DRY	No.2	SPF
1 - 2	2x4	DRY	No.2	SPF
4 - 3	2x4	DRY	No.2	SPF

DRY: SEASONED LUMBER.

PLATES (table is in inches)

JT	TYPE	PLATES	W	LEN	Y	X
1	TMV+p	MT20	2.0	4.0		
4	BMV1+p	MT20	2.0	4.0		

A SIZE FOR SIZE SUBSTITUTION OF MITEK MII20 WITH TEE-LOK TL20 PLATES IS ALLOWED.

DIMENSIONS, SUPPORTS AND LOADINGS SPECIFIED BY FABRICATOR TO BE VERIFIED BY BUILDING DESIGNER

BEARINGS

JT	FACTORED GROSS REACTION VERT	HORZ	MAXIMUM FACTORED GROSS REACTION DOWN	HORZ	UPLIFT	INPUT BRG IN-SX	REQRD BRG IN-SX
4	96	0	96	0	0	3-0	3-0
2	74	0	74	0	0	1-8	1-8
3	23	0	23	0	0	1-8	1-8

SEE MITEK STANDARD DETAIL B37579H FOR CONNECTION TO JOINT(S) 2 , 3

UNFACTORED REACTIONS

JT	1ST LCASE COMBINED	MAX./MIN. COMPONENT REACTIONS SNOW	LIVE	PERM.LIVE	WIND	DEAD	SOIL
4	67	47 / 0	0 / 0	0 / 0	0 / 0	20 / 0	0 / 0
2	50	44 / 0	0 / 0	0 / 0	0 / 0	7 / 0	0 / 0
3	17	4 / 0	0 / 0	0 / 0	0 / 0	14 / 0	0 / 0

BEARING MATERIAL TO BE SPF NO.2 OR BETTER AT JOINT(S) 4

BRACING

TOP CHORD TO BE SHEATHED OR MAX. PURLIN SPACING = 10.00 FT.
MAX. UNBRACED BOTTOM CHORD LENGTH = 10.00 FT. OR RIGID CEILING DIRECTLY APPLIED.

ALL PITCH BREAKS AND PERIMETER CORNER JOINTS MUST BE LATERALLY RESTRAINED.

LOADING

TOTAL LOAD CASES: (4)

CHORDS MEMB. FR-TO	MAX. FACTORED FORCE (LBS)	FACTORED VERT. LOAD (PLF) FROM	TO	LC1 MAX CSI (LC)	WEBS MAX. UNBRAC LENGTH	MEMB. FR-TO	MAX. FACTORED FORCE (LBS)	MAX CSI (LC)
4- 1	-84 / 0	0.0	0.0	0.01 (1)	7.81			
1- 2	-3 / 0	-77.4	-77.4	0.04 (1)	10.00			
4- 3	0 / 0	-17.5	-17.5	0.02 (1)	10.00			

DESIGN CRITERIA

SPECIFIED LOADS:

TOP	CH.	LL	=	23.3	PSF
		DL	=	3.0	PSF
BOT	CH.	LL	=	0.0	PSF
		DL	=	7.0	PSF
TOTAL	LOAD		=	33.3	PSF

SPACING = 24.0 IN. C/C

THIS TRUSS IS DESIGNED FOR RESIDENTIAL OR SMALL BUILDING REQUIREMENTS OF PART 9, NBCC 2010

THIS DESIGN COMPLIES WITH:
- PART 9 OF OBC 2012 , BCBC 2012 , ABC 2014
- CSA 086-09
- TPIC 2011

(55 % OF 27.2 P.S.F. G.S.L. PLUS 8.4 P.S.F. RAIN LOAD) EQUALS 23.3 P.S.F. SPECIFIED ROOF LIVE LOAD

ALLOWABLE DEFL.(LL)= L/360 (0.19")
CALCULATED VERT. DEFL.(LL) = L/ 999 (0.00")
ALLOWABLE DEFL.(TL)= L/360 (0.19")
CALCULATED VERT. DEFL.(TL) = L/ 999 (0.00")

CSI: TC=0.04 (1-2:1) , BC=0.02 (3-4:1) , WB=0.00 (n/a:0) , SSI=0.05 (1-2:1)

DOL LUMBER=1.00 NAIL=1.00 LS BEND=1.10 COMP=1.10 SHEAR=1.10 TENS= 1.10

COMPANION LIVE LOAD FACTOR = 0.50

TRUSS PLATE MANUFACTURER IS NOT RESPONSIBLE FOR QUALITY CONTROL IN THE TRUSS MANUFACTURING PLANT .

NAIL VALUES

PLATE	GRIP(DRY) (PSI) MAX	MIN	SHEAR (PLI) MAX	MIN	SECTION (PLI) MAX	MIN
MT20	618	354	1667	822	2284	1656

PLATE PLACEMENT TOL. = 0.250 inches

PLATE ROTATION TOL. = 5.0 Deg.

JSI GRIP= 0.05 (1) (INPUT = 0.90)
JSI METAL= 0.02 (1) (INPUT = 1.00)

LICENSED PROFESSIONAL ENGINEER
P.M. TREVISAN
100136551
March 16th, 2017
PROVINCE OF ONTARIO

RECEIVED
TOWN OF MILTON
MAR 29, 2017
17-5327
BUILDING DIVISION

KOTT

JOB NAME	TRUSS NAME	QUANTITY	PLY	JOB DESC.	DRWG NO.
PT0317-093	**J10**	**1**	**1**	TRUSS DESC. LECCO RIDGE-BLOCK 343	ENG JOB: PT0317-093

KOTT , Stouffville, ON, CGC

Version 8.100 S Feb 9 2017 MiTek Industries, Inc. Thu Mar 16 07:54:49 2017 Page 1

ID:EvTixTQDI5yR1QLotZTBr_yE?HJ-_85N_W4mQWduMjq7nFhtY3_sWcnQaZHR0snPffzaRHq

SCALE = 1:27.4

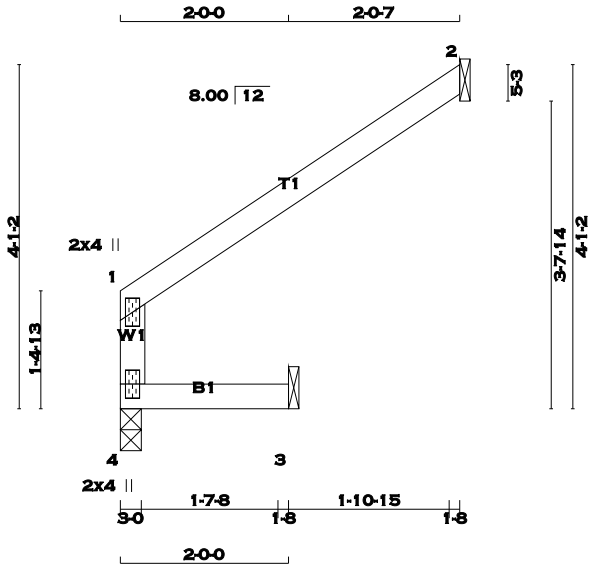

TOTAL WEIGHT = 9 lb

[M][F]

LUMBER

N. L. G. A. RULES

CHORDS	SIZE		LUMBER	DESCR.
4 - 1	2x4	DRY	No.2	SPF
1 - 2	2x4	DRY	No.2	SPF
4 - 3	2x4	DRY	No.2	SPF

DRY: SEASONED LUMBER.

PLATES (table is in inches)

JT	TYPE	PLATES	W	LEN	Y	X
1	TMV+p	MT20	2.0	4.0		
4	BMV1+p	MT20	2.0	4.0		

A SIZE FOR SIZE SUBSTITUTION OF MITEK MII20 WITH TEE-LOK TL20 PLATES IS ALLOWED.

DIMENSIONS, SUPPORTS AND LOADINGS SPECIFIED BY FABRICATOR TO BE VERIFIED BY BUILDING DESIGNER

BEARINGS

JT	FACTORED GROSS REACTION VERT	HORZ	MAXIMUM FACTORED GROSS REACTION DOWN	HORZ	UPLIFT	INPUT BRG IN-SX	REQRD BRG IN-SX
4	155	0	155	0	0	3-0	3-0
2	138	0	138	0	0	1-8	1-8
3	54	0	54	0	0	1-8	1-8

SEE MITEK STANDARD DETAIL B37579H FOR CONNECTION TO JOINT(S) 2 , 3

UNFACTORED REACTIONS

JT	1ST LCASE COMBINED	MAX./MIN. COMPONENT REACTIONS SNOW	LIVE	PERM.LIVE	WIND	DEAD	SOIL
4	107	83 / 0	0 / 0	0 / 0	0 / 0	25 / 0	0 / 0
2	94	83 / 0	0 / 0	0 / 0	0 / 0	11 / 0	0 / 0
3	39	23 / 0	0 / 0	0 / 0	0 / 0	16 / 0	0 / 0

BEARING MATERIAL TO BE SPF NO.2 OR BETTER AT JOINT(S) 4

BRACING

TOP CHORD TO BE SHEATHED OR MAX. PURLIN SPACING = 6.25 FT.
MAX. UNBRACED BOTTOM CHORD LENGTH = 10.00 FT. OR RIGID CEILING DIRECTLY APPLIED.

ALL PITCH BREAKS AND PERIMETER CORNER JOINTS MUST BE LATERALLY RESTRAINED.

LOADING

TOTAL LOAD CASES: (4)

CHORDS MEMB. FR-TO	MAX. FACTORED FORCE (LBS)	FACTORED VERT. LOAD (PLF) FROM	TO	LC1 MAX CSI (LC)	MAX. UNBRAC LENGTH
4- 1	-174 / 0	0.0	0.0	0.09 (1)	7.81
1- 2	-10 / 0	-77.4	-77.4	0.16 (1)	6.25
4- 3	0 / 0	-17.5	-17.5	0.10 (1)	10.00

WEBS

MEMB. FR-TO	MAX. FACTORED FORCE (LBS)	MAX CSI (LC)

DESIGN CRITERIA

SPECIFIED LOADS:

TOP CH.	LL	=	23.3	PSF
	DL	=	3.0	PSF
BOT CH.	LL	=	0.0	PSF
	DL	=	7.0	PSF
TOTAL LOAD		=	33.3	PSF

SPACING = 24.0 IN. C/C

THIS TRUSS IS DESIGNED FOR RESIDENTIAL OR SMALL BUILDING REQUIREMENTS OF PART 9, NBCC 2010

THIS DESIGN COMPLIES WITH:
- PART 9 OF OBC 2012 , BCBC 2012 , ABC 2014
- CSA 086-09
- TPIC 2011

(55 % OF 27.2 P.S.F. G.S.L. PLUS 8.4 P.S.F. RAIN LOAD) EQUALS 23.3 P.S.F. SPECIFIED ROOF LIVE LOAD

ALLOWABLE DEFL.(LL)= L/360 (0.19")
CALCULATED VERT. DEFL.(LL) = L/ 999 (0.00")
ALLOWABLE DEFL.(TL)= L/360 (0.19")
CALCULATED VERT. DEFL.(TL) = L/ 999 (0.00")

CSI: TC=0.16 (1-2:1) , BC=0.10 (3-4:1) , WB=0.00 (n/a:0) , SSI=0.11 (1-2:1)

DOL LUMBER=1.00 NAIL=1.00 LS BEND=1.10 COMP=1.10 SHEAR=1.10 TENS= 1.10

COMPANION LIVE LOAD FACTOR = 0.50

TRUSS PLATE MANUFACTURER IS NOT RESPONSIBLE FOR QUALITY CONTROL IN THE TRUSS MANUFACTURING PLANT .

NAIL VALUES

PLATE	GRIP(DRY) (PSI) MAX	MIN	SHEAR (PLI) MAX	MIN	SECTION (PLI) MAX	MIN
MT20	618	354	1667	822	2284	1656

PLATE PLACEMENT TOL. = 0.250 inches

PLATE ROTATION TOL. = 5.0 Deg.

JSI GRIP= 0.11 (1) (INPUT = 0.90)
JSI METAL= 0.04 (1) (INPUT = 1.00)

LICENSED PROFESSIONAL ENGINEER
P.M. TREVISAN
100136551
March 16th, 2017
PROVINCE OF ONTARIO

RECEIVED
TOWN OF MILTON
MAR 29, 2017
17-5327
BUILDING DIVISION

KOTT

SCALE = 1:35.9

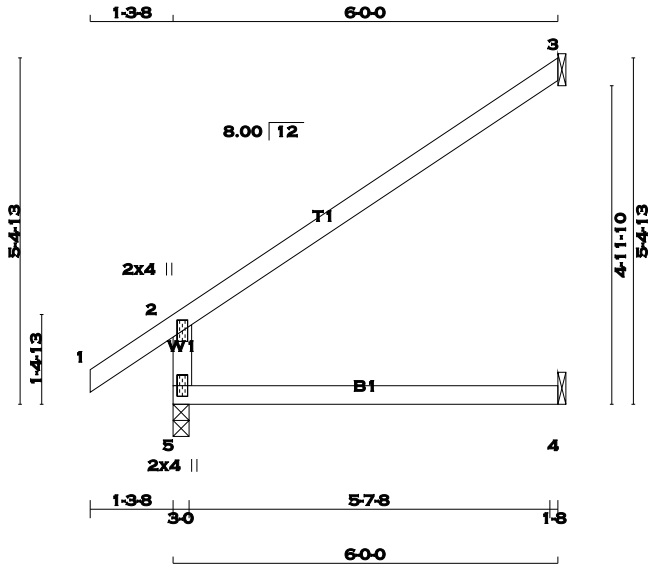

TOTAL WEIGHT = 3 X 18 = 54 lb

LUMBER

N. L. G. A. RULES

CHORDS	SIZE		LUMBER	DESCR.
5 - 2	2x4	DRY	No.2	SPF
1 - 3	2x4	DRY	No.2	SPF
5 - 4	2x4	DRY	No.2	SPF

DRY: SEASONED LUMBER.

PLATES (table is in inches)

JT	TYPE	PLATES	W	LEN	Y	X
2	TMV+p	MT20	2.0	4.0		
5	BMV1+p	MT20	2.0	4.0		

A SIZE FOR SIZE SUBSTITUTION OF MITEK MII20 WITH TEE-LOK TL20 PLATES IS ALLOWED.

DIMENSIONS, SUPPORTS AND LOADINGS SPECIFIED BY FABRICATOR TO BE VERIFIED BY BUILDING DESIGNER

BEARINGS

JT	FACTORED GROSS REACTION VERT	HORZ	MAXIMUM FACTORED GROSS REACTION DOWN	HORZ	UPLIFT	INPUT BRG IN-SX	REQRD BRG IN-SX
5	457	0	457	0	0	3-0	3-0
3	174	0	174	0	0	1-8	1-8
4	44	0	49	0	0	1-8	1-8

SEE MITEK STANDARD DETAIL B37579H FOR CONNECTION TO JOINT(S) 3 , 4

UNFACTORED REACTIONS

JT	1ST LCASE COMBINED	MAX./MIN. COMPONENT REACTIONS SNOW	LIVE	PERM.LIVE	WIND	DEAD	SOIL
5	318	239 / 0	0 / 0	0 / 0	0 / 0	80 / 0	0 / 0
3	118	105 / 0	0 / 0	0 / 0	0 / 0	14 / 0	0 / 0
4	35	0 / 0	0 / 0	0 / 0	0 / 0	35 / 0	0 / 0

BEARING MATERIAL TO BE SPF NO.2 OR BETTER AT JOINT(S) 5

BRACING

TOP CHORD TO BE SHEATHED OR MAX. PURLIN SPACING = 6.25 FT.
MAX. UNBRACED BOTTOM CHORD LENGTH = 10.00 FT. OR RIGID CEILING DIRECTLY APPLIED.

ALL PITCH BREAKS AND PERIMETER CORNER JOINTS MUST BE LATERALLY RESTRAINED.

LOADING

TOTAL LOAD CASES: (4)

CHORDS MEMB. FR-TO	MAX. FACTORED FORCE (LBS)	FACTORED VERT. LOAD (PLF) FROM	TO	LC1 MAX CSI (LC)	MAX. UNBRAC LENGTH	WEBS MEMB. FR-TO	MAX. FACTORED FORCE (LBS)	MAX CSI (LC)
5- 2	-396 / 0	0.0	0.0	0.10 (4)	7.81			
1- 2	0 / 29	-77.4	-77.4	0.10 (1)	10.00			
2- 3	-32 / 0	-77.4	-77.4	0.36 (1)	6.25			
5- 4	0 / 0	-17.5	-17.5	0.13 (4)	10.00			

[M][F]

DESIGN CRITERIA

SPECIFIED LOADS:

TOP CH.	LL	=	23.3	PSF
	DL	=	3.0	PSF
BOT CH.	LL	=	0.0	PSF
	DL	=	7.0	PSF
TOTAL LOAD		=	33.3	PSF

SPACING = 24.0 IN. C/C

THIS TRUSS IS DESIGNED FOR RESIDENTIAL OR SMALL BUILDING REQUIREMENTS OF PART 9, NBCC 2010

THIS DESIGN COMPLIES WITH:
- PART 9 OF OBC 2012 , BCBC 2012 , ABC 2014
- CSA 086-09
- TPIC 2011

DESIGN ASSUMPTIONS
-OVERHANG NOT TO BE ALTERED OR CUT OFF.

(55 % OF 27.2 P.S.F. G.S.L. PLUS 8.4 P.S.F. RAIN LOAD) EQUALS 23.3 P.S.F. SPECIFIED ROOF LIVE LOAD

ALLOWABLE DEFL.(LL)= L/360 (0.20")
CALCULATED VERT. DEFL.(LL) = L/ 999 (0.00")
ALLOWABLE DEFL.(TL)= L/360 (0.20")
CALCULATED VERT. DEFL.(TL) = L/ 999 (0.03")

CSI: TC=0.36 (2-3:1) , BC=0.13 (4-5:4) , WB=0.00 (n/a:0) , SSI=0.19 (2-3:1)

DOL LUMBER=1.00 NAIL=1.00 LS BEND=1.10 COMP=1.10 SHEAR=1.10 TENS= 1.10

COMPANION LIVE LOAD FACTOR = 0.50

TRUSS PLATE MANUFACTURER IS NOT RESPONSIBLE FOR QUALITY CONTROL IN THE TRUSS MANUFACTURING PLANT .

NAIL VALUES

PLATE	GRIP(DRY) (PSI) MAX	MIN	SHEAR (PLI) MAX	MIN	SECTION (PLI) MAX	MIN
MT20	618	354	1667	822	2284	1656

PLATE PLACEMENT TOL. = 0.250 inches

PLATE ROTATION TOL. = 5.0 Deg.

JSI GRIP= 0.25 (2) (INPUT = 0.90)
JSI METAL= 0.10 (2) (INPUT = 1.00)

LICENSED PROFESSIONAL ENGINEER
P.M. TREVISAN
100136551
March 16th, 2017
PROVINCE OF ONTARIO

RECEIVED
TOWN OF MILTON
MAR 29, 2017
17-5327
BUILDING DIVISION

KOTT

SCALE = 1:18.3

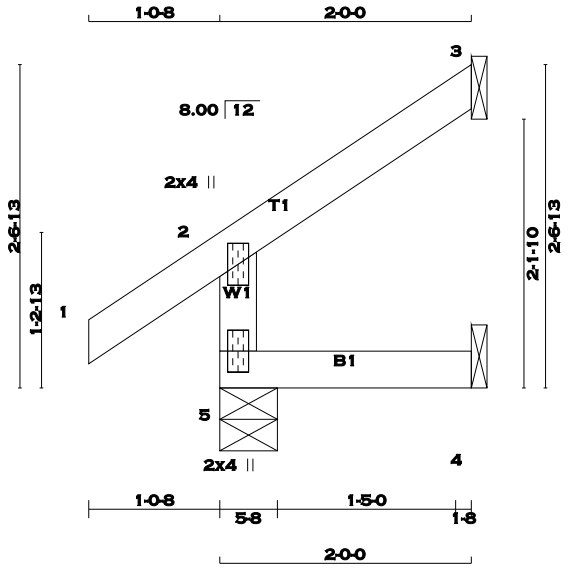

TOTAL WEIGHT = 2 X 8 = 15 lb [M]

LUMBER

N. L. G. A. RULES

CHORDS	SIZE		LUMBER	DESCR.
5 - 2	2x4	DRY	No.2	SPF
1 - 3	2x4	DRY	No.2	SPF
5 - 4	2x4	DRY	No.2	SPF

DRY: SEASONED LUMBER.

PLATES (table is in inches)

JT	TYPE	PLATES	W	LEN	Y	X
2	TMV+p	MT20	2.0	4.0		
5	BMV1+p	MT20	2.0	4.0		

A SIZE FOR SIZE SUBSTITUTION OF MITEK MII20 WITH TEE-LOK TL20 PLATES IS ALLOWED.

DIMENSIONS, SUPPORTS AND LOADINGS SPECIFIED BY FABRICATOR TO BE VERIFIED BY BUILDING DESIGNER

BEARINGS

JT	FACTORED GROSS REACTION VERT	HORZ	MAXIMUM FACTORED GROSS REACTION DOWN	HORZ	UPLIFT	INPUT BRG IN-SX	REQRD BRG IN-SX
5	202	0	202	0	0	5-8	5-8
3	58	0	58	0	0	1-8	1-8
4	16	0	18	0	0	1-8	1-8

SEE MITEK STANDARD DETAIL B37579H FOR CONNECTION TO JOINT(S) 3 , 4

UNFACTORED REACTIONS

JT	1ST LCASE COMBINED	MAX./MIN. COMPONENT REACTIONS SNOW	LIVE	PERM.LIVE	WIND	DEAD	SOIL
5	140	110 / 0	0 / 0	0 / 0	0 / 0	30 / 0	0 / 0
3	40	35 / 0	0 / 0	0 / 0	0 / 0	5 / 0	0 / 0
4	13	0 / 0	0 / 0	0 / 0	0 / 0	13 / 0	0 / 0

BEARING MATERIAL TO BE SPF NO.2 OR BETTER AT JOINT(S) 5

BRACING

TOP CHORD TO BE SHEATHED OR MAX. PURLIN SPACING = 6.25 FT.
MAX. UNBRACED BOTTOM CHORD LENGTH = 10.00 FT. OR RIGID CEILING DIRECTLY APPLIED.

ALL PITCH BREAKS AND PERIMETER CORNER JOINTS MUST BE LATERALLY RESTRAINED.

LOADING

TOTAL LOAD CASES: (5)

CHORDS MEMB. FR-TO	MAX. FACTORED FORCE (LBS)	FACTORED VERT. LOAD (PLF) FROM	TO	LC1 MAX CSI (LC)	MAX. UNBRAC LENGTH
5- 2	-183 / 0	0.0	0.0	0.01 (4)	7.81
1- 2	0 / 24	-77.4	-77.4	0.07 (1)	10.00
2- 3	-11 / 0	-77.4	-77.4	0.05 (1)	6.25
5- 4	0 / 0	-17.5	-17.5	0.02 (4)	10.00

WEBS MEMB. FR-TO	MAX. FACTORED FORCE (LBS)	MAX CSI (LC)

CANTILEVER ANALYSIS HAS BEEN CONSIDERED IN THIS DESIGN

DESIGN CRITERIA

SPECIFIED LOADS:

TOP CH.	LL	=	23.3	PSF
	DL	=	3.0	PSF
BOT CH.	LL	=	0.0	PSF
	DL	=	7.0	PSF
TOTAL LOAD		=	33.3	PSF

SPACING = 24.0 IN. C/C

THIS TRUSS IS DESIGNED FOR RESIDENTIAL OR SMALL BUILDING REQUIREMENTS OF PART 9, NBCC 2010

THIS DESIGN COMPLIES WITH:
- PART 9 OF OBC 2012 , BCBC 2012 , ABC 2014
- CSA 086-09
- TPIC 2011

DESIGN ASSUMPTIONS
-OVERHANG NOT TO BE ALTERED OR CUT OFF.

(55 % OF 27.2 P.S.F. G.S.L. PLUS 8.4 P.S.F. RAIN LOAD) EQUALS 23.3 P.S.F. SPECIFIED ROOF LIVE LOAD

ALLOWABLE DEFL.(LL)= L/360 (0.19")
CALCULATED VERT. DEFL.(LL) = L/ 999 (0.00")
ALLOWABLE DEFL.(TL)= L/360 (0.19")
CALCULATED VERT. DEFL.(TL) = L/ 999 (0.00")

CSI: TC=0.07 (1-2:1) , BC=0.02 (4-5:4) , WB=0.00 (n/a:0) , SSI=0.06 (2-3:1)

DOL LUMBER=1.00 NAIL=1.00 LS BEND=1.10 COMP=1.10 SHEAR=1.10 TENS= 1.10

COMPANION LIVE LOAD FACTOR = 0.50

TRUSS PLATE MANUFACTURER IS NOT RESPONSIBLE FOR QUALITY CONTROL IN THE TRUSS MANUFACTURING PLANT .

NAIL VALUES

PLATE	GRIP(DRY) (PSI) MAX	MIN	SHEAR (PLI) MAX	MIN	SECTION (PLI) MAX	MIN
MT20	618	354	1667	822	2284	1656

PLATE PLACEMENT TOL. = 0.250 inches

PLATE ROTATION TOL. = 0.5 Deg.

JSI GRIP= 0.12 (2) (INPUT = 0.90)
JSI METAL= 0.04 (2) (INPUT = 1.00)

LICENSED PROFESSIONAL ENGINEER
P.M. TREVISAN
100136551
March 16th, 2017
PROVINCE OF ONTARIO

RECEIVED
TOWN OF MILTON
MAR 29, 2017
17-5327
BUILDING DIVISION

KOTT

JOB NAME	TRUSS NAME	QUANTITY	PLY	JOB DESC.	DRWG NO.
PT0317-093	T01	1	1	TRUSS DESC. LECCO RIDGE-BLOCK 343	ENG JOB: PT0317-093

KOTT , Stouffville, ON, CGC

Version 8.100 S Feb 9 2017 MiTek Industries, Inc. Thu Mar 16 07:54:51 2017 Page 1

ID:EvTixTQDI5yR1QLotZTBr_yE?HJ-wXD7PC60y7tcc0_WugjLdU32IQQL2PikUAGVkXzaRHo

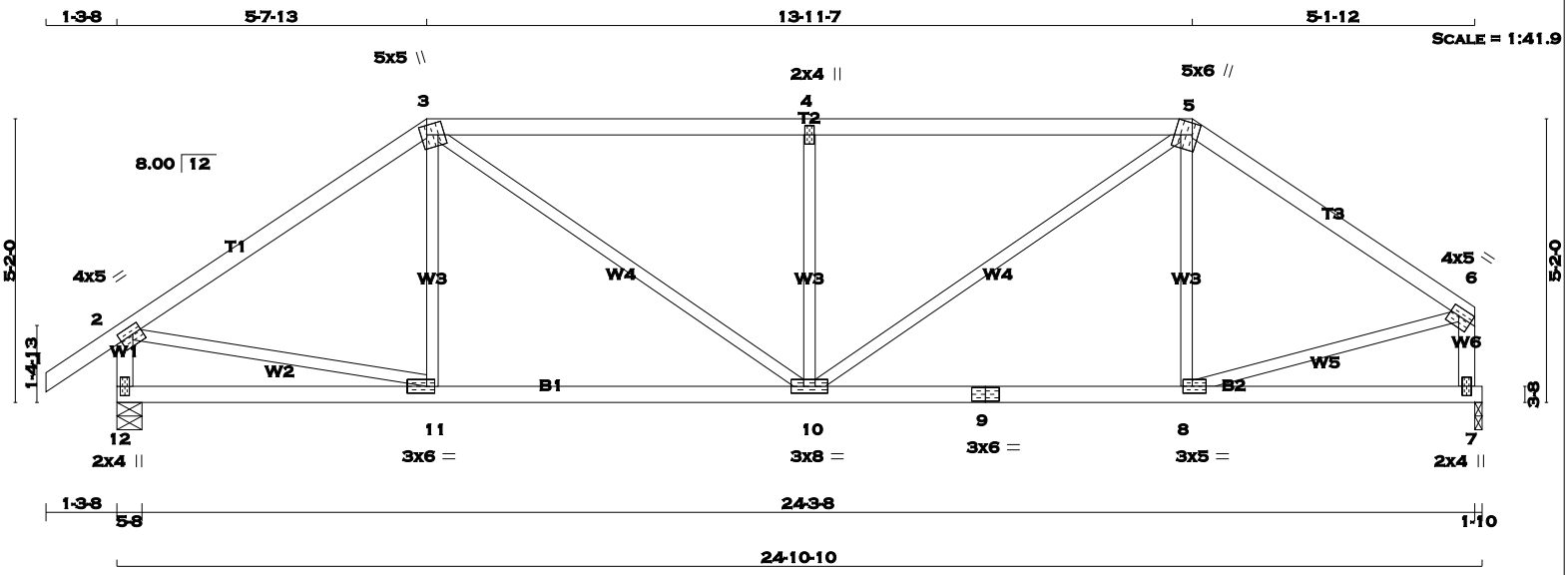

TOTAL WEIGHT = 97 lb [M]

LUMBER

N. L. G. A. RULES

CHORDS	SIZE		LUMBER	DESCR.
1 - 3	2x4	DRY	No.2	SPF
3 - 5	2x4	DRY	No.2	SPF
5 - 6	2x4	DRY	No.2	SPF
12 - 2	2x4	DRY	No.2	SPF
7 - 6	2x4	DRY	No.2	SPF
12 - 9	2x4	DRY	No.2	SPF
9 - 7	2x4	DRY	No.2	SPF
ALL WEBS EXCEPT	2x3	DRY	No.2	SPF

DRY: SEASONED LUMBER.

PLATES (table is in inches)

JT	TYPE	PLATES	W	LEN	Y	X
2	TMVW-t	MT20	4.0	5.0	1.75	2.00
3	TTWW+m	MT20	5.0	5.0	2.00	1.25
4	TMW+w	MT20	2.0	4.0		
5	TTWW+m	MT20	5.0	6.0	Edge	3.75
6	TMVW-t	MT20	4.0	5.0	1.75	Edge
7	BMV1+p	MT20	2.0	4.0		
8	BMWW-t	MT20	3.0	5.0	1.50	2.00
9	BS-t	MT20	3.0	6.0		
10	BMWWW-t	MT20	3.0	8.0		
11	BMWW-t	MT20	3.0	6.0	1.50	1.75
12	BMV1+p	MT20	2.0	4.0		

Edge - INDICATES REFERENCE CORNER OF PLATE TOUCHES EDGE OF CHORD.

A SIZE FOR SIZE SUBSTITUTION OF MITEK MII20 WITH TEE-LOK TL20 PLATES IS ALLOWED.

DIMENSIONS, SUPPORTS AND LOADINGS SPECIFIED BY FABRICATOR TO BE VERIFIED BY BUILDING DESIGNER

BEARINGS

JT	FACTORED GROSS REACTION VERT	HORZ	MAXIMUM FACTORED GROSS REACTION DOWN	HORZ	UPLIFT	INPUT BRG IN-SX	REQRD BRG IN-SX
12	1280	0	1280	0	0	5-8	5-8
7	1174	0	1174	0	0	1-10	1-10

UNFACTORED REACTIONS

JT	1ST LCASE COMBINED	MAX./MIN. COMPONENT REACTIONS SNOW	LIVE	PERM.LIVE	WIND	DEAD	SOIL
12	896	640 / 0	0 / 0	0 / 0	0 / 0	256 / 0	0 / 0
7	824	576 / 0	0 / 0	0 / 0	0 / 0	248 / 0	0 / 0

BEARING MATERIAL TO BE SPF NO.2 OR BETTER AT JOINT(S) 12, 7

BRACING

TOP CHORD TO BE SHEATHED OR MAX. PURLIN SPACING = 4.14 FT.
MAX. UNBRACED BOTTOM CHORD LENGTH = 10.00 FT. OR RIGID CEILING DIRECTLY APPLIED.

ALL PITCH BREAKS AND PERIMETER CORNER JOINTS MUST BE LATERALLY RESTRAINED.

LOADING

TOTAL LOAD CASES: (4)

CHORDS MEMB. FR-TO	MAX. FACTORED FORCE (LBS)	FACTORED VERT. LOAD (PLF) FROM	TO	LC1 MAX CSI (LC)	MAX. UNBRAC LENGTH	WEBS MEMB. FR-TO	MAX. FACTORED FORCE (LBS)	MAX CSI (LC)
1- 2	0 / 29	-77.4	-77.4	0.10 (1)	10.00	11- 3	-77 / 76	0.03 (1)
2- 3	-1287 / 0	-77.4	-77.4	0.51 (1)	5.04	3-10	0 / 641	0.14 (1)
3- 4	-1594 / 0	-77.4	-77.4	0.78 (1)	4.14	10- 4	-664 / 0	0.26 (1)
4- 5	-1594 / 0	-77.4	-77.4	0.78 (1)	4.14	10- 5	0 / 725	0.16 (1)
5- 6	-1206 / 0	-77.4	-77.4	0.41 (1)	5.31	8- 5	-150 / 50	0.06 (1)
12- 2	-1242 / 0	0.0	0.0	0.13 (1)	7.20	2-11	0 / 1089	0.24 (1)
7- 6	-1140 / 0	0.0	0.0	0.12 (1)	7.45	8- 6	0 / 1038	0.23 (1)
12-11	0 / 0	-17.5	-17.5	0.16 (4)	10.00			
11-10	0 / 1068	-17.5	-17.5	0.26 (1)	10.00			
10- 9	0 / 999	-17.5	-17.5	0.25 (1)	10.00			
9- 8	0 / 999	-17.5	-17.5	0.25 (1)	10.00			
8- 7	0 / 0	-17.5	-17.5	0.15 (4)	10.00			

DESIGN CRITERIA

SPECIFIED LOADS:

TOP	CH.	LL	=	23.3	PSF
		DL	=	3.0	PSF
BOT	CH.	LL	=	0.0	PSF
		DL	=	7.0	PSF
TOTAL	LOAD		=	33.3	PSF

SPACING = 24.0 IN. C/C

LOADING IN FLAT SECTION BASED ON A SLOPE OF 6.00/12

THIS TRUSS IS DESIGNED FOR RESIDENTIAL OR SMALL BUILDING REQUIREMENTS OF PART 9, NBCC 2010

THIS DESIGN COMPLIES WITH:
- PART 9 OF OBC 2012 , BCBC 2012 , ABC 2014
- CSA 086-09
- TPIC 2011

(55 % OF 27.2 P.S.F. G.S.L. PLUS 8.4 P.S.F. RAIN LOAD) EQUALS 23.3 P.S.F. SPECIFIED ROOF LIVE LOAD

ALLOWABLE DEFL.(LL)= L/360 (0.82")
CALCULATED VERT. DEFL.(LL) = L/ 999 (0.06")
ALLOWABLE DEFL.(TL)= L/360 (0.82")
CALCULATED VERT. DEFL.(TL) = L/ 999 (0.11")

CSI: TC=0.78 (3-4:1) , BC=0.26 (10-11:1) , WB=0.26 (4-10:1) , SSI=0.26 (4-5:1)

DOL LUMBER=1.00 NAIL=1.00 LS BEND=1.10 COMP=1.10 SHEAR=1.10 TENS= 1.10

COMPANION LIVE LOAD FACTOR = 0.50

TRUSS PLATE MANUFACTURER IS NOT RESPONSIBLE FOR QUALITY CONTROL IN THE TRUSS MANUFACTURING PLANT .

NAIL VALUES

PLATE	GRIP(DRY) (PSI) MAX	MIN	SHEAR (PLI) MAX	MIN	SECTION (PLI) MAX	MIN
MT20	618	354	1667	822	2284	1656

PLATE PLACEMENT TOL. = 0.250 inches

PLATE ROTATION TOL. = 0.5 Deg.

JSI GRIP= 0.90 (11) (INPUT = 0.90)
JSI METAL= 0.44 (2) (INPUT = 1.00)

LICENSED PROFESSIONAL ENGINEER
P.M. TREVISAN
100136551
March 16th, 2017
PROVINCE OF ONTARIO

RECEIVED
TOWN OF MILTON
MAR 29, 2017
17-5327
BUILDING DIVISION

KOTT

JOB NAME	TRUSS NAME	QUANTITY	PLY	JOB DESC.	DRWG NO.
PT0317-093	T02	1	1	TRUSS DESC. LECCO RIDGE-BLOCK 343	ENG JOB: PT0317-093

KOTT , Stouffville, ON, CGC

Version 8.100 S Feb 9 2017 MiTek Industries, Inc. Thu Mar 16 07:54:51 2017 Page 1

ID:EvTixTQDI5yR1QLotZTBr_yE?HJ-wXD7PC60y7tcc0_WugjLdU3AZQQ42LqkUAGVkXzaRHo

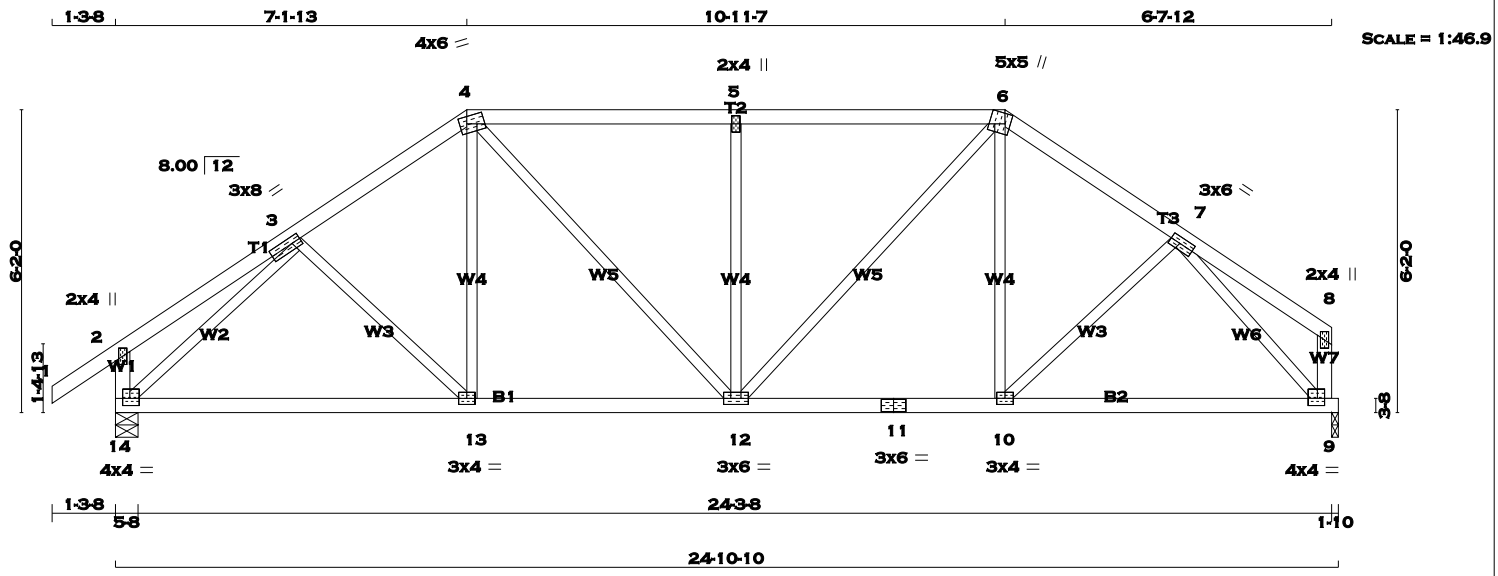

TOTAL WEIGHT = 105 lb

[M][F]

LUMBER

N. L. G. A. RULES

CHORDS	SIZE		LUMBER	DESCR.
1 - 4	2x4	DRY	No.2	SPF
4 - 6	2x4	DRY	No.2	SPF
6 - 8	2x4	DRY	No.2	SPF
14 - 2	2x4	DRY	No.2	SPF
9 - 8	2x4	DRY	No.2	SPF
14 - 11	2x4	DRY	No.2	SPF
11 - 9	2x4	DRY	No.2	SPF
ALL WEBS EXCEPT	2x3	DRY	No.2	SPF

DRY: SEASONED LUMBER.

PLATES (table is in inches)

JT	TYPE	PLATES	W	LEN	Y	X
2	TMV+p	MT20	2.0	4.0		
3	TMWW-t	MT20	3.0	8.0	1.50	2.25
4	TTWW-m	MT20	4.0	6.0	1.75	1.75
5	TMW+w	MT20	2.0	4.0		
6	TTWW+m	MT20	5.0	5.0	Edge	3.75
7	TMWW-t	MT20	3.0	6.0	1.50	2.50
8	TMV+p	MT20	2.0	4.0		
9	BMVW1-t	MT20	4.0	4.0	1.75	1.75
10	BMWW-t	MT20	3.0	4.0		
11	BS-t	MT20	3.0	6.0		
12	BMWWW-t	MT20	3.0	6.0		
13	BMWW-t	MT20	3.0	4.0		
14	BMVW1-t	MT20	4.0	4.0	1.75	1.75

Edge - INDICATES REFERENCE CORNER OF PLATE TOUCHES EDGE OF CHORD.

A SIZE FOR SIZE SUBSTITUTION OF MITEK MII20 WITH TEE-LOK TL20 PLATES IS ALLOWED.

DIMENSIONS, SUPPORTS AND LOADINGS SPECIFIED BY FABRICATOR TO BE VERIFIED BY BUILDING DESIGNER

BEARINGS

JT	FACTORED GROSS REACTION VERT	HORZ	MAXIMUM FACTORED GROSS REACTION DOWN	HORZ	UPLIFT	INPUT BRG IN-SX	REQRD BRG IN-SX
14	1280	0	1280	0	0	5-8	5-8
9	1174	0	1174	0	0	1-10	1-10

UNFACTORED REACTIONS

JT	1ST LCASE COMBINED	MAX./MIN. COMPONENT REACTIONS SNOW	LIVE	PERM.LIVE	WIND	DEAD	SOIL
14	896	640 / 0	0 / 0	0 / 0	0 / 0	256 / 0	0 / 0
9	824	576 / 0	0 / 0	0 / 0	0 / 0	248 / 0	0 / 0

BEARING MATERIAL TO BE SPF NO.2 OR BETTER AT JOINT(S) 14, 9

BRACING

TOP CHORD TO BE SHEATHED OR MAX. PURLIN SPACING = 5.33 FT.
MAX. UNBRACED BOTTOM CHORD LENGTH = 10.00 FT. OR RIGID CEILING DIRECTLY APPLIED.

ALL PITCH BREAKS AND PERIMETER CORNER JOINTS MUST BE LATERALLY RESTRAINED.

LOADING

TOTAL LOAD CASES: (4)

CHORDS

MEMB. FR-TO	MAX. FACTORED FORCE (LBS)	FACTORED VERT. LOAD (PLF) FROM	TO	LC1 MAX CSI (LC)	MAX. UNBRAC LENGTH
1- 2	0 / 29	-77.4	-77.4	0.10 (1)	10.00
2- 3	0 / 16	-77.4	-77.4	0.15 (1)	10.00
3- 4	-1258 / 0	-77.4	-77.4	0.13 (1)	5.61
4- 5	-1286 / 0	-77.4	-77.4	0.32 (1)	5.33
5- 6	-1286 / 0	-77.4	-77.4	0.32 (1)	5.33
6- 7	-1202 / 0	-77.4	-77.4	0.12 (1)	5.71
7- 8	0 / 17	-77.4	-77.4	0.13 (1)	10.00
14- 2	-215 / 0	0.0	0.0	0.02 (1)	7.81
9- 8	-89 / 0	0.0	0.0	0.01 (1)	7.81
14-13	0 / 1045	-17.5	-17.5	0.28 (1)	10.00
13-12	0 / 1033	-17.5	-17.5	0.28 (4)	10.00
12-11	0 / 988	-17.5	-17.5	0.26 (1)	10.00
11-10	0 / 988	-17.5	-17.5	0.26 (1)	10.00
10- 9	0 / 920	-17.5	-17.5	0.25 (1)	10.00

WEBS

MEMB. FR-TO	MAX. FACTORED FORCE (LBS)	MAX CSI (LC)
3-13	-20 / 43	0.01 (4)
13- 4	0 / 148	0.04 (4)
4-12	0 / 370	0.08 (1)
12- 5	-518 / 0	0.31 (1)
12- 6	0 / 437	0.10 (1)
10- 6	0 / 95	0.03 (4)
10- 7	0 / 91	0.02 (4)
14- 3	-1456 / 0	0.57 (1)
7- 9	-1386 / 0	0.47 (1)

DESIGN CRITERIA

SPECIFIED LOADS:

TOP CH.	LL	=	23.3	PSF
	DL	=	3.0	PSF
BOT CH.	LL	=	0.0	PSF
	DL	=	7.0	PSF
TOTAL LOAD		=	33.3	PSF

SPACING = 24.0 IN. C/C

LOADING IN FLAT SECTION BASED ON A SLOPE OF 6.00/12

THIS TRUSS IS DESIGNED FOR RESIDENTIAL OR SMALL BUILDING REQUIREMENTS OF PART 9, NBCC 2010

THIS DESIGN COMPLIES WITH:
- PART 9 OF OBC 2012 , BCBC 2012 , ABC 2014
- CSA 086-09
- TPIC 2011

(55 % OF 27.2 P.S.F. G.S.L. PLUS 8.4 P.S.F. RAIN LOAD) EQUALS 23.3 P.S.F. SPECIFIED ROOF LIVE LOAD

ALLOWABLE DEFL.(LL)= L/360 (0.82")
CALCULATED VERT. DEFL.(LL) = L/ 999 (0.05")
ALLOWABLE DEFL.(TL)= L/360 (0.82")
CALCULATED VERT. DEFL.(TL) = L/ 999 (0.10")

CSI: TC=0.32 (4-5:1) , BC=0.28 (12-13:4) , WB=0.57 (3-14:1) , SSI=0.20 (4-5:1)

DOL LUMBER=1.00 NAIL=1.00 LS BEND=1.10 COMP=1.10 SHEAR=1.10 TENS= 1.10

COMPANION LIVE LOAD FACTOR = 0.50

TRUSS PLATE MANUFACTURER IS NOT RESPONSIBLE FOR QUALITY CONTROL IN THE TRUSS MANUFACTURING PLANT .

NAIL VALUES

PLATE	GRIP(DRY) (PSI) MAX	MIN	SHEAR (PLI) MAX	MIN	SECTION (PLI) MAX	MIN
MT20	618	354	1667	822	2284	1656

PLATE PLACEMENT TOL. = 0.250 inches

PLATE ROTATION TOL. = 5.0 Deg.

JSI GRIP= 0.90 (14) (INPUT = 0.90)
JSI METAL= 0.39 (14) (INPUT = 1.00)

LICENSED PROFESSIONAL ENGINEER
P.M. TREVISAN
100136551
March 16th, 2017
PROVINCE OF ONTARIO

RECEIVED
TOWN OF MILTON
MAR 29, 2017
17-5327
BUILDING DIVISION

KOTT

JOB NAME	TRUSS NAME	QUANTITY	PLY	JOB DESC.	DRWG NO.
PT0317-093	T03	1	1	TRUSS DESC. LECCO RIDGE-BLOCK 343	ENG JOB: PT0317-093

KOTT , Stouffville, ON, CGC

Version 8.100 S Feb 9 2017 MiTek Industries, Inc. Thu Mar 16 07:54:52 2017 Page 1

ID:EvTixTQDI5yR1QLotZTBr_yE?HJ-OjmWcY7ejR?TDAZiSNEaAhcM6qlSnsAuiq?3GzzaRHn

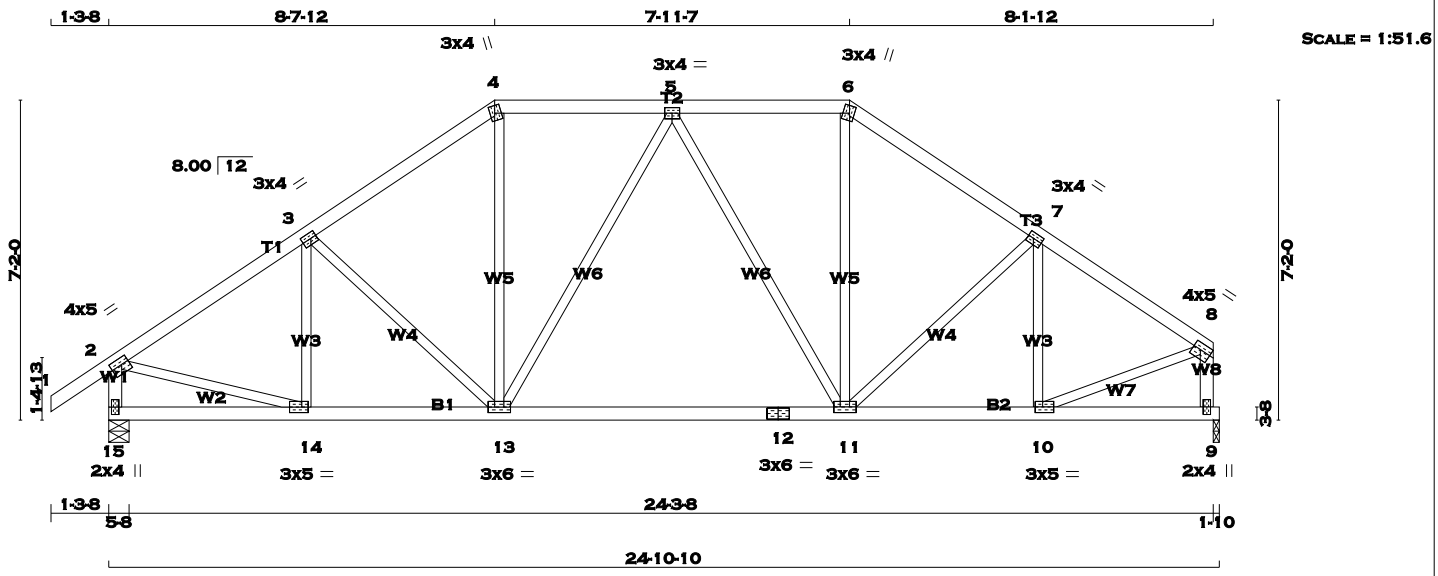

TOTAL WEIGHT = 110 lb

[M][F]

LUMBER

N. L. G. A. RULES

CHORDS	SIZE		LUMBER	DESCR.
1 - 4	2x4	DRY	No.2	SPF
4 - 6	2x4	DRY	No.2	SPF
6 - 8	2x4	DRY	No.2	SPF
15 - 2	2x4	DRY	No.2	SPF
9 - 8	2x4	DRY	No.2	SPF
15 - 12	2x4	DRY	No.2	SPF
12 - 9	2x4	DRY	No.2	SPF
ALL WEBS EXCEPT	2x3	DRY	No.2	SPF

DRY: SEASONED LUMBER.

PLATES (table is in inches)

JT	TYPE	PLATES	W	LEN	Y	X
2	TMVW-t	MT20	4.0	5.0	1.75	2.00
3	TMWW-t	MT20	3.0	4.0	1.50	1.50
4	TTW+m	MT20	3.0	4.0	2.00	1.25
5	TMWW-t	MT20	3.0	4.0		
6	TTW+m	MT20	3.0	4.0	2.00	1.25
7	TMWW-t	MT20	3.0	4.0	1.50	1.50
8	TMVW-t	MT20	4.0	5.0	1.75	Edge
9	BMV1+p	MT20	2.0	4.0		
10	BMWW-t	MT20	3.0	5.0	1.50	2.00
11	BMWWW-t	MT20	3.0	6.0		
12	BS-t	MT20	3.0	6.0		
13	BMWWW-t	MT20	3.0	6.0		
14	BMWW-t	MT20	3.0	5.0	1.50	1.75
15	BMV1+p	MT20	2.0	4.0		

Edge - INDICATES REFERENCE CORNER OF PLATE TOUCHES EDGE OF CHORD.

A SIZE FOR SIZE SUBSTITUTION OF MITEK MII20 WITH TEE-LOK TL20 PLATES IS ALLOWED.

DIMENSIONS, SUPPORTS AND LOADINGS SPECIFIED BY FABRICATOR TO BE VERIFIED BY BUILDING DESIGNER

BEARINGS

JT	FACTORED GROSS REACTION VERT	HORZ	MAXIMUM FACTORED GROSS REACTION DOWN	HORZ	UPLIFT	INPUT BRG IN-SX	REQRD BRG IN-SX
15	1280	0	1280	0	0	5-8	5-8
9	1174	0	1174	0	0	1-10	1-10

UNFACTORED REACTIONS

JT	1ST LCASE COMBINED	MAX./MIN. COMPONENT REACTIONS SNOW	LIVE	PERM.LIVE	WIND	DEAD	SOIL
15	896	640 / 0	0 / 0	0 / 0	0 / 0	256 / 0	0 / 0
9	824	576 / 0	0 / 0	0 / 0	0 / 0	248 / 0	0 / 0

BEARING MATERIAL TO BE SPF NO.2 OR BETTER AT JOINT(S) 15, 9

BRACING

TOP CHORD TO BE SHEATHED OR MAX. PURLIN SPACING = 5.45 FT.
MAX. UNBRACED BOTTOM CHORD LENGTH = 10.00 FT. OR RIGID CEILING DIRECTLY APPLIED.

ALL PITCH BREAKS AND PERIMETER CORNER JOINTS MUST BE LATERALLY RESTRAINED.

LOADING

TOTAL LOAD CASES: (4)

CHORDS

MEMB. FR-TO	MAX. FACTORED FORCE (LBS)	FACTORED VERT. LOAD (PLF) FROM	TO	LC1 MAX CSI (LC)	MAX. UNBRAC LENGTH
1- 2	0 / 29	-77.4	-77.4	0.10 (1)	10.00
2- 3	-1305 / 0	-77.4	-77.4	0.20 (1)	5.45
3- 4	-1190 / 0	-77.4	-77.4	0.20 (1)	5.65
4- 5	-976 / 0	-77.4	-77.4	0.16 (1)	6.13
5- 6	-950 / 0	-77.4	-77.4	0.16 (1)	6.19
6- 7	-1156 / 0	-77.4	-77.4	0.18 (1)	5.74
7- 8	-1182 / 0	-77.4	-77.4	0.17 (1)	5.69
15- 2	-1244 / 0	0.0	0.0	0.13 (1)	7.20
9- 8	-1142 / 0	0.0	0.0	0.12 (1)	7.44
15-14	0 / 0	-17.5	-17.5	0.08 (4)	10.00
14-13	0 / 1103	-17.5	-17.5	0.27 (1)	10.00
13-12	0 / 1068	-17.5	-17.5	0.27 (1)	10.00
12-11	0 / 1068	-17.5	-17.5	0.27 (1)	10.00
11-10	0 / 1001	-17.5	-17.5	0.26 (1)	10.00
10- 9	0 / 0	-17.5	-17.5	0.06 (4)	10.00

WEBS

MEMB. FR-TO	MAX. FACTORED FORCE (LBS)	MAX CSI (LC)
14- 3	-203 / 0	0.06 (1)
3-13	-182 / 0	0.11 (1)
13- 4	0 / 405	0.09 (1)
13- 5	-186 / 0	0.24 (1)
5-11	-240 / 0	0.31 (1)
11- 6	0 / 383	0.09 (1)
11- 7	-78 / 0	0.05 (1)
10- 7	-300 / 0	0.08 (1)
2-14	0 / 1135	0.26 (1)
10- 8	0 / 1064	0.24 (1)

DESIGN CRITERIA

SPECIFIED LOADS:

TOP CH.	LL	=	23.3	PSF
	DL	=	3.0	PSF
BOT CH.	LL	=	0.0	PSF
	DL	=	7.0	PSF
TOTAL LOAD		=	33.3	PSF

SPACING = 24.0 IN. C/C

LOADING IN FLAT SECTION BASED ON A SLOPE OF 6.00/12

THIS TRUSS IS DESIGNED FOR RESIDENTIAL OR SMALL BUILDING REQUIREMENTS OF PART 9, NBCC 2010

THIS DESIGN COMPLIES WITH:
- PART 9 OF OBC 2012 , BCBC 2012 , ABC 2014
- CSA 086-09
- TPIC 2011

(55 % OF 27.2 P.S.F. G.S.L. PLUS 8.4 P.S.F. RAIN LOAD) EQUALS 23.3 P.S.F. SPECIFIED ROOF LIVE LOAD

ALLOWABLE DEFL.(LL)= L/360 (0.82")
CALCULATED VERT. DEFL.(LL) = L/ 999 (0.04")
ALLOWABLE DEFL.(TL)= L/360 (0.82")
CALCULATED VERT. DEFL.(TL) = L/ 999 (0.12")

CSI: TC=0.20 (2-3:1) , BC=0.27 (13-14:1) , WB=0.31 (5-11:1) , SSI=0.15 (5-6:1)

DOL LUMBER=1.00 NAIL=1.00 LS BEND=1.10 COMP=1.10 SHEAR=1.10 TENS= 1.10

COMPANION LIVE LOAD FACTOR = 0.50

TRUSS PLATE MANUFACTURER IS NOT RESPONSIBLE FOR QUALITY CONTROL IN THE TRUSS MANUFACTURING PLANT .

NAIL VALUES

PLATE	GRIP(DRY) (PSI) MAX	MIN	SHEAR (PLI) MAX	MIN	SECTION (PLI) MAX	MIN
MT20	618	354	1667	822	2284	1656

PLATE PLACEMENT TOL. = 0.250 inches

PLATE ROTATION TOL. = 5.0 Deg.

JSI GRIP= 0.90 (14) (INPUT = 0.90)
JSI METAL= 0.44 (2) (INPUT = 1.00)

LICENSED PROFESSIONAL ENGINEER
P.M. TREVISAN
100136551
March 16th, 2017
PROVINCE OF ONTARIO

RECEIVED
TOWN OF MILTON
MAR 29, 2017
17-5327
BUILDING DIVISION

KOTT

JOB NAME	TRUSS NAME	QUANTITY	PLY	JOB DESC.	DRWG NO.
PT0317-093	T04	1	1	TRUSS DESC. LECCO RIDGE-BLOCK 343	

KOTT , Stouffville, ON, CGC

Version 8.100 S Feb 9 2017 MiTek Industries, Inc. Thu Mar 16 07:54:52 2017 Page 1
ID:EvTixTQDI5yR1QLotZTBr_yE?HJ-OjmWcY7ejR?TDAZiSNEaAhcLsqm4nsyuiq?3GzzaRHn

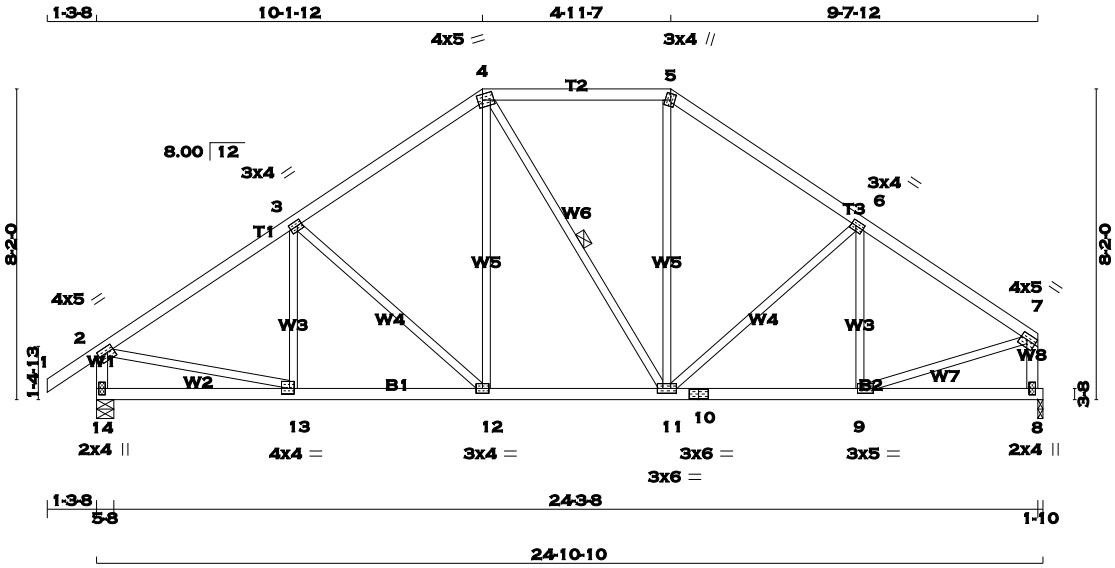

TOTAL WEIGHT = 111 lb

LUMBER
N. L. G. A. RULES

CHORDS	SIZE		LUMBER	DESCR.
1 - 4	2x4	DRY	No.2	SPF
4 - 5	2x4	DRY	No.2	SPF
5 - 7	2x4	DRY	No.2	SPF
14 - 2	2x4	DRY	No.2	SPF
8 - 7	2x4	DRY	No.2	SPF
14 - 10	2x4	DRY	No.2	SPF
10 - 8	2x4	DRY	No.2	SPF
ALL WEBS EXCEPT	2x3	DRY	No.2	SPF

DRY: SEASONED LUMBER.

PLATES (table is in inches)

JT	TYPE	PLATES	W	LEN	Y	X
2	TMVW-t	MT20	4.0	5.0	1.75	2.00
3	TMWW-t	MT20	3.0	4.0	1.50	1.50
4	TTWW-m	MT20	4.0	5.0	1.75	1.50
5	TTW+m	MT20	3.0	4.0	2.00	1.25
6	TMWW-t	MT20	3.0	4.0	1.50	1.50
7	TMVW-t	MT20	4.0	5.0	1.75	Edge
8	BMV1+p	MT20	2.0	4.0		
9	BMWW-t	MT20	3.0	5.0	1.50	2.00
10	BS-t	MT20	3.0	6.0		
11	BMWWW-t	MT20	3.0	6.0		
12	BMWW-t	MT20	3.0	4.0		
13	BMWW-t	MT20	4.0	4.0	1.75	1.50
14	BMV1+p	MT20	2.0	4.0		

Edge - INDICATES REFERENCE CORNER OF PLATE TOUCHES EDGE OF CHORD.

A SIZE FOR SIZE SUBSTITUTION OF MITEK MII20 WITH TEE-LOK TL20 PLATES IS ALLOWED.

DIMENSIONS, SUPPORTS AND LOADINGS SPECIFIED BY FABRICATOR TO BE VERIFIED BY BUILDING DESIGNER

BEARINGS

JT	FACTORED GROSS REACTION VERT	HORZ	MAXIMUM FACTORED GROSS REACTION DOWN	HORZ	UPLIFT	INPUT BRG IN-SX	REQRD BRG IN-SX
14	1280	0	1280	0	0	5-8	5-8
8	1174	0	1174	0	0	1-10	1-10

UNFACTORED REACTIONS

JT	1ST LCASE COMBINED	MAX./MIN. COMPONENT REACTIONS SNOW	LIVE	PERM.LIVE	WIND	DEAD	SOIL
14	896	640 / 0	0 / 0	0 / 0	0 / 0	256 / 0	0 / 0
8	824	576 / 0	0 / 0	0 / 0	0 / 0	248 / 0	0 / 0

BEARING MATERIAL TO BE SPF NO.2 OR BETTER AT JOINT(S) 14, 8

BRACING
TOP CHORD TO BE SHEATHED OR MAX. PURLIN SPACING = 5.33 FT.
MAX. UNBRACED BOTTOM CHORD LENGTH = 10.00 FT. OR RIGID CEILING DIRECTLY APPLIED.

ALL PITCH BREAKS AND PERIMETER CORNER JOINTS MUST BE LATERALLY RESTRAINED.

1 - 2x3 SPF No.2 LATERAL BRACE(S) AT 1/ 2 LENGTH OF 4-11. DBS = 20-0-0 . CBF = 3 LBS.

DBS = DIAGONAL BRACE SPACING (MAX). CBF = CUMULATIVE BRACING FORCE. FASTEN LATERAL BRACE(S) USING (0.122"X3") SPIRAL NAILS : 1 NAIL FOR 2x3 BRACE(S), 2 FOR 1x4, 2x4, 2x5, 3 FOR 2x6, 4 FOR 2x8, 5 FOR 2x10, AND 6 FOR 2x12.

END VERTICAL(S) MUST BE SHEATHED OR HAVE BRACES AS INDICATED IN THE MAX. UNBRACED LENGTH COLUMN OF THE TABLE BELOW

LOADING
TOTAL LOAD CASES: (4)

CHORDS

MEMB. FR-TO	MAX. FACTORED FORCE (LBS)	FACTORED VERT. LOAD (PLF) FROM	TO	LC1 MAX CSI (LC)	MAX. UNBRAC LENGTH
1- 2	0 / 29	-77.4	-77.4	0.10 (1)	10.00
2- 3	-1322 / 0	-77.4	-77.4	0.28 (1)	5.33
3- 4	-1103 / 0	-77.4	-77.4	0.27 (1)	5.71
4- 5	-885 / 0	-77.4	-77.4	0.25 (1)	6.22
5- 6	-1085 / 0	-77.4	-77.4	0.25 (1)	5.79
6- 7	-1221 / 0	-77.4	-77.4	0.25 (1)	5.53
14- 2	-1242 / 0	0.0	0.0	0.13 (1)	7.20
8- 7	-1140 / 0	0.0	0.0	0.12 (1)	7.45
14-13	0 / 0	-17.5	-17.5	0.11 (4)	10.00
13-12	0 / 1121	-17.5	-17.5	0.23 (1)	10.00
12-11	0 / 899	-17.5	-17.5	0.19 (1)	10.00
11-10	0 / 1037	-17.5	-17.5	0.21 (1)	10.00
10- 9	0 / 1037	-17.5	-17.5	0.21 (1)	10.00
9- 8	0 / 0	-17.5	-17.5	0.09 (4)	10.00

WEBS

MEMB. FR-TO	MAX. FACTORED FORCE (LBS)	MAX CSI (LC)
13- 3	-135 / 45	0.05 (1)
3-12	-304 / 0	0.26 (1)
12- 4	0 / 286	0.06 (1)
4-11	-26 / 0	0.02 (1)
11- 5	0 / 250	0.06 (1)
11- 6	-209 / 0	0.18 (1)
9- 6	-222 / 14	0.08 (1)
2-13	0 / 1145	0.26 (1)
9- 7	0 / 1083	0.24 (1)

DESIGN CRITERIA

SPECIFIED LOADS:

TOP CH.	LL	=	23.3	PSF
	DL	=	3.0	PSF
BOT CH.	LL	=	0.0	PSF
	DL	=	7.0	PSF
TOTAL LOAD		=	33.3	PSF

SPACING = 24.0 IN. C/C

LOADING IN FLAT SECTION BASED ON A SLOPE OF 6.00/12

THIS TRUSS IS DESIGNED FOR RESIDENTIAL OR SMALL BUILDING REQUIREMENTS OF PART 9, NBCC 2010

THIS DESIGN COMPLIES WITH:
- PART 9 OF OBC 2012 , BCBC 2012 , ABC 2014
- CSA 086-09
- TPIC 2011

(55 % OF 27.2 P.S.F. G.S.L. PLUS 8.4 P.S.F. RAIN LOAD) EQUALS 23.3 P.S.F. SPECIFIED ROOF LIVE LOAD

ALLOWABLE DEFL.(LL)= L/360 (0.82")
CALCULATED VERT. DEFL.(LL) = L/ 999 (0.04")
ALLOWABLE DEFL.(TL)= L/360 (0.82")
CALCULATED VERT. DEFL.(TL) = L/ 999 (0.07")

CSI: TC=0.28 (2-3:1) , BC=0.23 (12-13:1) , WB=0.26 (3-12:1) , SSI=0.16 (2-3:1)

DOL LUMBER=1.00 NAIL=1.00 LS BEND=1.10 COMP=1.10 SHEAR=1.10 TENS= 1.10

COMPANION LIVE LOAD FACTOR = 0.50

TRUSS PLATE MANUFACTURER IS NOT RESPONSIBLE FOR QUALITY CONTROL IN THE TRUSS MANUFACTURING PLANT .

NAIL VALUES

PLATE	GRIP(DRY) (PSI) MAX	MIN	SHEAR (PLI) MAX	MIN	SECTION (PLI) MAX	MIN
MT20	618	354	1667	822	2284	1656

PLATE PLACEMENT TOL. = 0.250 inches

PLATE ROTATION TOL. = 5.0 Deg.

JSI GRIP= 0.89 (9) (INPUT = 0.90)
JSI METAL= 0.45 (2) (INPUT = 1.00)

LICENSED PROFESSIONAL ENGINEER
P.M. TREVISAN
100136551
March 16th, 2017
PROVINCE OF ONTARIO

RECEIVED
TOWN OF MILTON
MAR 29, 2017
17-5327
BUILDING DIVISION

KOTT

JOB NAME	TRUSS NAME	QUANTITY	PLY	JOB DESC.	DRWG NO.
PT0317-093	T05	1	1	TRUSS DESC. LECCO RIDGE-BLOCK 343	

KOTT , Stouffville, ON, CGC

Version 8.100 S Feb 9 2017 MiTek Industries, Inc. Thu Mar 16 07:54:53 2017 Page 1
ID:EvTixTQDI5yR1QLotZTBr_yE?HJ-twKupu7GUk7KrK8u05lpjv8V4D5tWGa1xUlcoQzaRHm

SCALE = 1:65.1

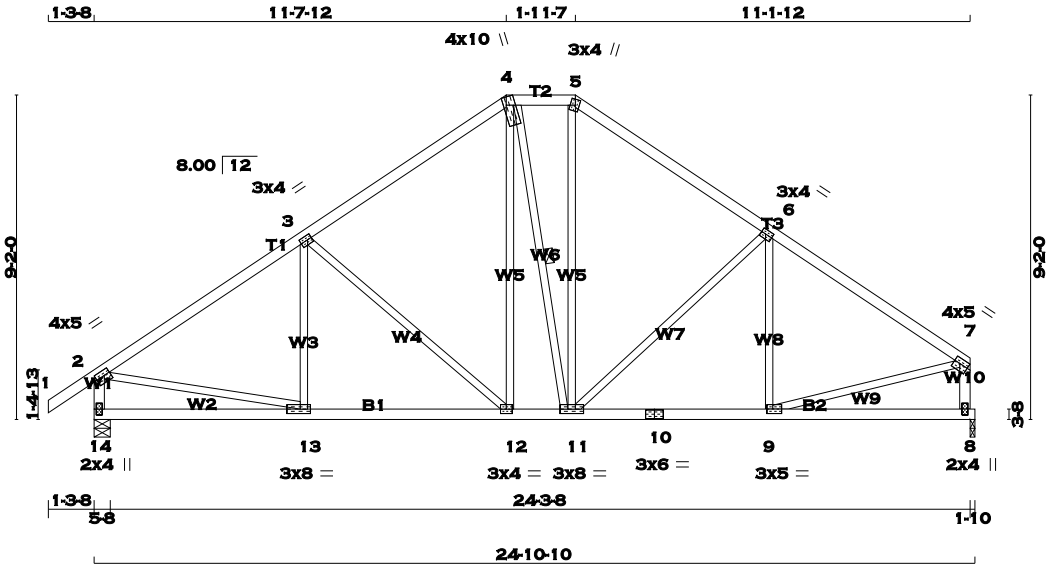

TOTAL WEIGHT = 117 lb

LUMBER
N. L. G. A. RULES

CHORDS	SIZE		LUMBER	DESCR.
1 - 4	2x4	DRY	No.2	SPF
4 - 5	2x4	DRY	No.2	SPF
5 - 7	2x4	DRY	No.2	SPF
14 - 2	2x4	DRY	No.2	SPF
8 - 7	2x4	DRY	No.2	SPF
14 - 10	2x4	DRY	No.2	SPF
10 - 8	2x4	DRY	No.2	SPF
ALL WEBS EXCEPT	2x3	DRY	No.2	SPF

DRY: SEASONED LUMBER.

PLATES (table is in inches)

JT	TYPE	PLATES	W	LEN	Y	X
2	TMVW-t	MT20	4.0	5.0	1.75	2.00
3	TMWW-t	MT20	3.0	4.0	1.50	1.50
4	TTWW+m	MT20	4.0	10.0	Edge	1.00
5	TTW+m	MT20	3.0	4.0	2.00	1.25
6	TMWW-t	MT20	3.0	4.0	1.50	1.50
7	TMVW-t	MT20	4.0	5.0	1.75	Edge
8	BMV1+p	MT20	2.0	4.0		
9	BMWW-t	MT20	3.0	5.0	1.50	2.00
10	BS-t	MT20	3.0	6.0		
11	BMWWW-t	MT20	3.0	8.0		
12	BMWW-t	MT20	3.0	4.0		
13	BMWW-t	MT20	3.0	8.0	1.50	3.50
14	BMV1+p	MT20	2.0	4.0		

Edge - INDICATES REFERENCE CORNER OF PLATE TOUCHES EDGE OF CHORD.

A SIZE FOR SIZE SUBSTITUTION OF MITEK MII20 WITH TEE-LOK TL20 PLATES IS ALLOWED.

DIMENSIONS, SUPPORTS AND LOADINGS SPECIFIED BY FABRICATOR TO BE VERIFIED BY BUILDING DESIGNER

BEARINGS

JT	FACTORED GROSS REACTION VERT	HORZ	MAXIMUM FACTORED GROSS REACTION DOWN	HORZ	UPLIFT	INPUT BRG IN-SX	REQRD BRG IN-SX
14	1280	0	1280	0	0	5-8	5-8
8	1174	0	1174	0	0	1-10	1-10

UNFACTORED REACTIONS

JT	1ST LCASE COMBINED	MAX./MIN. COMPONENT REACTIONS SNOW	LIVE	PERM.LIVE	WIND	DEAD	SOIL
14	896	640 / 0	0 / 0	0 / 0	0 / 0	256 / 0	0 / 0
8	824	576 / 0	0 / 0	0 / 0	0 / 0	248 / 0	0 / 0

BEARING MATERIAL TO BE SPF NO.2 OR BETTER AT JOINT(S) 14, 8

BRACING
TOP CHORD TO BE SHEATHED OR MAX. PURLIN SPACING = 5.19 FT.
MAX. UNBRACED BOTTOM CHORD LENGTH = 10.00 FT. OR RIGID CEILING DIRECTLY APPLIED.

ALL PITCH BREAKS AND PERIMETER CORNER JOINTS MUST BE LATERALLY RESTRAINED.

1 - 2x3 SPF No.2 LATERAL BRACE(S) AT 1/ 2 LENGTH OF 4-11. DBS = 20-0-0 . CBF = 2 LBS.

DBS = DIAGONAL BRACE SPACING (MAX). CBF = CUMULATIVE BRACING FORCE. FASTEN LATERAL BRACE(S) USING (0.122"X3") SPIRAL NAILS : 1 NAIL FOR 2x3 BRACE(S), 2 FOR 1x4, 2x4, 2x5, 3 FOR 2x6, 4 FOR 2x8, 5 FOR 2x10, AND 6 FOR 2x12.

END VERTICAL(S) MUST BE SHEATHED OR HAVE BRACES AS INDICATED IN THE MAX. UNBRACED LENGTH COLUMN OF THE TABLE BELOW

LOADING
TOTAL LOAD CASES: (4)

CHORDS

MEMB. FR-TO	MAX. FACTORED FORCE (LBS)	FACTORED VERT. LOAD (PLF) FROM	TO	LC1 MAX CSI (LC)	MAX. UNBRAC LENGTH
1- 2	0 / 29	-77.4	-77.4	0.10 (1)	10.00
2- 3	-1324 / 0	-77.4	-77.4	0.38 (1)	5.19
3- 4	-1013 / 0	-77.4	-77.4	0.35 (1)	5.77
4- 5	-816 / 0	-77.4	-77.4	0.04 (1)	6.25
5- 6	-1007 / 0	-77.4	-77.4	0.32 (1)	5.83
6- 7	-1238 / 0	-77.4	-77.4	0.34 (1)	5.38
14- 2	-1238 / 0	0.0	0.0	0.13 (1)	7.22
8- 7	-1133 / 0	0.0	0.0	0.12 (1)	7.46
14-13	0 / 0	-17.5	-17.5	0.15 (4)	10.00
13-12	0 / 1126	-17.5	-17.5	0.26 (1)	10.00
12-11	0 / 820	-17.5	-17.5	0.18 (1)	10.00
11-10	0 / 1053	-17.5	-17.5	0.24 (1)	10.00
10- 9	0 / 1053	-17.5	-17.5	0.24 (1)	10.00
9- 8	0 / 0	-17.5	-17.5	0.14 (4)	10.00

WEBS

MEMB. FR-TO	MAX. FACTORED FORCE (LBS)	MAX CSI (LC)
13- 3	-87 / 75	0.04 (1)
3-12	-410 / 0	0.49 (1)
12- 4	0 / 321	0.07 (1)
4-11	-17 / 0	0.01 (1)
11- 5	0 / 310	0.07 (1)
11- 6	-329 / 0	0.39 (1)
9- 6	-153 / 50	0.07 (1)
2-13	0 / 1145	0.26 (1)
9- 7	0 / 1086	0.24 (1)

DESIGN CRITERIA

SPECIFIED LOADS:

TOP CH.	LL	=	23.3	PSF
	DL	=	3.0	PSF
BOT CH.	LL	=	0.0	PSF
	DL	=	7.0	PSF
TOTAL LOAD		=	33.3	PSF

SPACING = 24.0 IN. C/C

LOADING IN FLAT SECTION BASED ON A SLOPE OF 6.00/12

THIS TRUSS IS DESIGNED FOR RESIDENTIAL OR SMALL BUILDING REQUIREMENTS OF PART 9, NBCC 2010

THIS DESIGN COMPLIES WITH:
- PART 9 OF OBC 2012 , BCBC 2012 , ABC 2014
- CSA 086-09
- TPIC 2011

(55 % OF 27.2 P.S.F. G.S.L. PLUS 8.4 P.S.F. RAIN LOAD) EQUALS 23.3 P.S.F. SPECIFIED ROOF LIVE LOAD

ALLOWABLE DEFL.(LL)= L/360 (0.82")
CALCULATED VERT. DEFL.(LL) = L/ 999 (0.04")
ALLOWABLE DEFL.(TL)= L/360 (0.82")
CALCULATED VERT. DEFL.(TL) = L/ 999 (0.09")

CSI: TC=0.38 (2-3:1) , BC=0.26 (12-13:1) , WB=0.49 (3-12:1) , SSI=0.18 (2-3:1)

DOL LUMBER=1.00 NAIL=1.00 LS BEND=1.10 COMP=1.10 SHEAR=1.10 TENS= 1.10

COMPANION LIVE LOAD FACTOR = 0.50

TRUSS PLATE MANUFACTURER IS NOT RESPONSIBLE FOR QUALITY CONTROL IN THE TRUSS MANUFACTURING PLANT .

NAIL VALUES

PLATE	GRIP(DRY) (PSI) MAX	MIN	SHEAR (PLI) MAX	MIN	SECTION (PLI) MAX	MIN
MT20	618	354	1667	822	2284	1656

PLATE PLACEMENT TOL. = 0.250 inches

PLATE ROTATION TOL. = 5.0 Deg.

JSI GRIP= 0.90 (9) (INPUT = 0.90)
JSI METAL= 0.45 (2) (INPUT = 1.00)

LICENSED PROFESSIONAL ENGINEER
P.M. TREVISAN
100136551
March 16th, 2017
PROVINCE OF ONTARIO

RECEIVED
TOWN OF MILTON
MAR 29, 2017
17-5327
BUILDING DIVISION

KOTT

JOB NAME	TRUSS NAME	QUANTITY	PLY	JOB DESC.	DRWG NO.
PT0317-093	T06	1	1	TRUSS DESC. LECCO RIDGE-BLOCK 343	ENG JOB: PT0317-093

KOTT , Stouffville, ON, CGC

Version 8.100 S Feb 9 2017 MiTek Industries, Inc. Thu Mar 16 07:54:53 2017 Page 1

ID:EvTixTQDI5yR1QLotZTBr_yE?HJ-twKupu7GUk7KrK8u05lpjv8TxD5mWJH1xUlcoQzaRHm

SCALE = 1:69.9

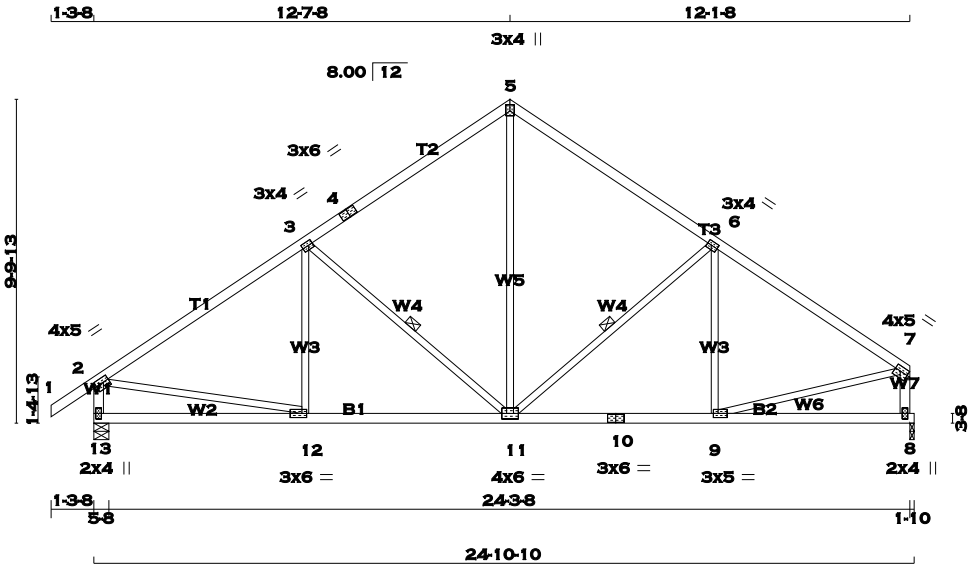

TOTAL WEIGHT = 105 lb

[M][F]

LUMBER

N. L. G. A. RULES

CHORDS	SIZE		LUMBER	DESCR.
1 - 4	2x4	DRY	No.2	SPF
4 - 5	2x4	DRY	No.2	SPF
5 - 7	2x4	DRY	No.2	SPF
13 - 2	2x4	DRY	No.2	SPF
8 - 7	2x4	DRY	No.2	SPF
13 - 10	2x4	DRY	No.2	SPF
10 - 8	2x4	DRY	No.2	SPF
ALL WEBS EXCEPT	2x3	DRY	No.2	SPF

DRY: SEASONED LUMBER.

PLATES (table is in inches)

JT	TYPE	PLATES	W	LEN	Y	X
2	TMVW-t	MT20	4.0	5.0	1.75	2.00
3	TMWW-t	MT20	3.0	4.0	1.50	1.50
4	TS-t	MT20	3.0	6.0		
5	TTW+p	MT20	3.0	4.0	2.25	1.50
6	TMWW-t	MT20	3.0	4.0	1.50	1.50
7	TMVW-t	MT20	4.0	5.0	1.75	Edge
8	BMV1+p	MT20	2.0	4.0		
9	BMWW-t	MT20	3.0	5.0	1.50	1.75
10	BS-t	MT20	3.0	6.0		
11	BMWWW-t	MT20	4.0	6.0		
12	BMWW-t	MT20	3.0	6.0	1.50	1.75
13	BMV1+p	MT20	2.0	4.0		

Edge - INDICATES REFERENCE CORNER OF PLATE TOUCHES EDGE OF CHORD.

A SIZE FOR SIZE SUBSTITUTION OF MITEK MII20 WITH TEE-LOK TL20 PLATES IS ALLOWED.

DIMENSIONS, SUPPORTS AND LOADINGS SPECIFIED BY FABRICATOR TO BE VERIFIED BY BUILDING DESIGNER

BEARINGS

JT	FACTORED GROSS REACTION VERT	HORZ	MAXIMUM FACTORED GROSS REACTION DOWN	HORZ	UPLIFT	INPUT BRG IN-SX	REQRD BRG IN-SX
13	1280	0	1280	0	0	5-8	5-8
8	1174	0	1174	0	0	1-10	1-10

UNFACTORED REACTIONS

JT	1ST LCASE COMBINED	MAX./MIN. COMPONENT REACTIONS SNOW	LIVE	PERM.LIVE	WIND	DEAD	SOIL
13	896	640 / 0	0 / 0	0 / 0	0 / 0	256 / 0	0 / 0
8	824	576 / 0	0 / 0	0 / 0	0 / 0	248 / 0	0 / 0

BEARING MATERIAL TO BE SPF NO.2 OR BETTER AT JOINT(S) 13, 8

BRACING

TOP CHORD TO BE SHEATHED OR MAX. PURLIN SPACING = 5.10 FT.
MAX. UNBRACED BOTTOM CHORD LENGTH = 10.00 FT. OR RIGID CEILING DIRECTLY APPLIED.

ALL PITCH BREAKS AND PERIMETER CORNER JOINTS MUST BE LATERALLY RESTRAINED.

1 - 2x3 SPF No.2 LATERAL BRACE(S) AT 1/ 2 LENGTH OF 3-11, 6-11. DBS = 20-0-0 . CBF = 58 LBS.

DBS = DIAGONAL BRACE SPACING (MAX). CBF = CUMULATIVE BRACING FORCE. FASTEN LATERAL BRACE(S) USING (0.122"X3") SPIRAL NAILS : 1 NAIL FOR 2x3 BRACE(S), 2 FOR 1x4, 2x4, 2x5, 3 FOR 2x6, 4 FOR 2x8, 5 FOR 2x10, AND 6 FOR 2x12.

END VERTICAL(S) MUST BE SHEATHED OR HAVE BRACES AS INDICATED IN THE MAX. UNBRACED LENGTH COLUMN OF THE TABLE BELOW

LOADING

TOTAL LOAD CASES: (4)

CHORDS

MEMB. FR-TO	MAX. FACTORED FORCE (LBS)	FACTORED VERT. LOAD (PLF) FROM	TO	LC1	MAX CSI (LC)	MAX. UNBRAC LENGTH
1- 2	0 / 29	-77.4	-77.4		0.10 (1)	10.00
2- 3	-1317 / 0	-77.4	-77.4		0.45 (1)	5.10
3- 4	-959 / 0	-77.4	-77.4		0.42 (1)	5.79
4- 5	-959 / 0	-77.4	-77.4		0.42 (1)	5.79
5- 6	-956 / 0	-77.4	-77.4		0.40 (1)	5.83
6- 7	-1243 / 0	-77.4	-77.4		0.40 (1)	5.29
13- 2	-1234 / 0	0.0	0.0		0.13 (1)	7.23
8- 7	-1132 / 0	0.0	0.0		0.12 (1)	7.46
13-12	0 / 0	-17.5	-17.5		0.17 (4)	10.00
12-11	0 / 1123	-17.5	-17.5		0.27 (1)	10.00
11-10	0 / 1062	-17.5	-17.5		0.25 (1)	10.00
10- 9	0 / 1062	-17.5	-17.5		0.25 (1)	10.00
9- 8	0 / 0	-17.5	-17.5		0.15 (4)	10.00

WEBS

MEMB. FR-TO	MAX. FACTORED FORCE (LBS)	MAX CSI (LC)
12- 3	-67 / 85	0.03 (1)
3-11	-466 / 0	0.21 (1)
11- 5	0 / 662	0.15 (1)
11- 6	-385 / 0	0.18 (1)
9- 6	-137 / 59	0.07 (1)
2-12	0 / 1139	0.26 (1)
9- 7	0 / 1091	0.25 (1)

DESIGN CRITERIA

SPECIFIED LOADS:

TOP	CH.	LL	=	23.3	PSF
		DL	=	3.0	PSF
BOT	CH.	LL	=	0.0	PSF
		DL	=	7.0	PSF
TOTAL	LOAD		=	33.3	PSF

SPACING = 24.0 IN. C/C

THIS TRUSS IS DESIGNED FOR RESIDENTIAL OR SMALL BUILDING REQUIREMENTS OF PART 9, NBCC 2010

THIS DESIGN COMPLIES WITH:
- PART 9 OF OBC 2012 , BCBC 2012 , ABC 2014
- CSA 086-09
- TPIC 2011

(55 % OF 27.2 P.S.F. G.S.L. PLUS 8.4 P.S.F. RAIN LOAD) EQUALS 23.3 P.S.F. SPECIFIED ROOF LIVE LOAD

ALLOWABLE DEFL.(LL)= L/360 (0.82")
CALCULATED VERT. DEFL.(LL) = L/ 999 (0.04")
ALLOWABLE DEFL.(TL)= L/360 (0.82")
CALCULATED VERT. DEFL.(TL) = L/ 999 (0.08")

CSI: TC=0.45 (2-3:1) , BC=0.27 (11-12:1) , WB=0.26 (2-12:1) , SSI=0.20 (2-3:1)

DOL LUMBER=1.00 NAIL=1.00 LS BEND=1.10 COMP=1.10 SHEAR=1.10 TENS= 1.10

COMPANION LIVE LOAD FACTOR = 0.50

TRUSS PLATE MANUFACTURER IS NOT RESPONSIBLE FOR QUALITY CONTROL IN THE TRUSS MANUFACTURING PLANT .

NAIL VALUES

PLATE	GRIP(DRY) (PSI) MAX	MIN	SHEAR (PLI) MAX	MIN	SECTION (PLI) MAX	MIN
MT20	618	354	1667	822	2284	1656

PLATE PLACEMENT TOL. = 0.250 inches

PLATE ROTATION TOL. = 5.0 Deg.

JSI GRIP= 0.90 (12) (INPUT = 0.90)
JSI METAL= 0.45 (2) (INPUT = 1.00)

LICENSED PROFESSIONAL ENGINEER
P.M. TREVISAN
100136551
March 16th, 2017
PROVINCE OF ONTARIO

RECEIVED
TOWN OF MILTON
MAR 29, 2017
17-5327
BUILDING DIVISION

KOTT

JOB NAME	TRUSS NAME	QUANTITY	PLY	JOB DESC.	DRWG NO.
PT0317-093	T07	1	1	TRUSS DESC. LECCO RIDGE-BLOCK 343	ENG JOB: PT0317-093

KOTT , Stouffville, ON, CGC

Version 8.100 S Feb 9 2017 MiTek Industries, Inc. Thu Mar 16 07:54:54 2017 Page 1
ID:EvTixTQDI5yR1QLotZTBr_yE?HJ-L6uG1E8uF2FBTUj5aoH3F6hdddRxFiCBA8U9KszaRHI

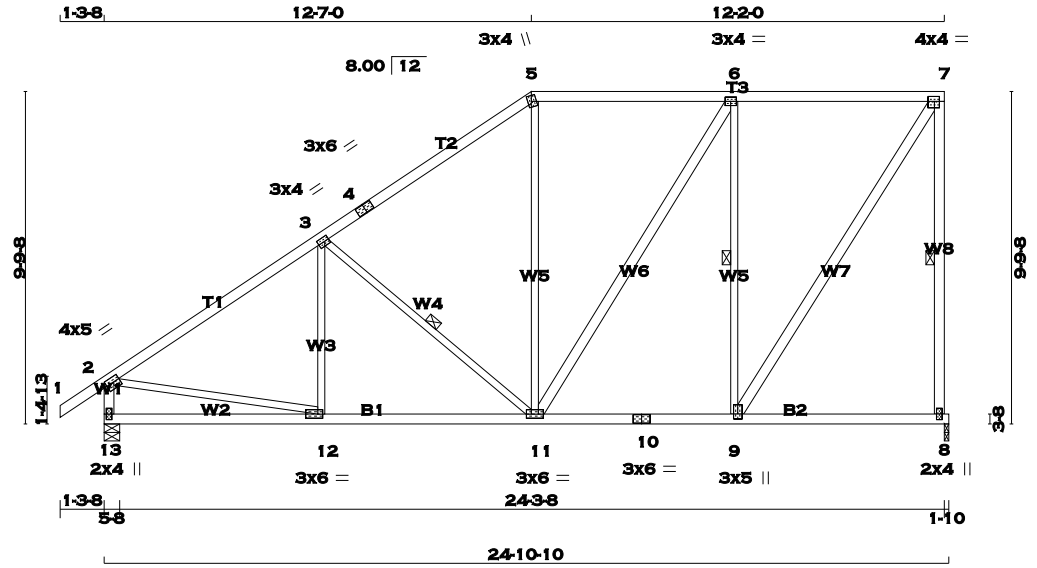

SCALE = 1:67.9

TOTAL WEIGHT = 128 lb

[M][F]

LUMBER

N. L. G. A. RULES

CHORDS	SIZE		LUMBER	DESCR.
1 - 4	2x4	DRY	No.2	SPF
4 - 5	2x4	DRY	No.2	SPF
5 - 7	2x4	DRY	No.2	SPF
8 - 7	2x4	DRY	No.2	SPF
13 - 2	2x4	DRY	No.2	SPF
13 - 10	2x4	DRY	No.2	SPF
10 - 8	2x4	DRY	No.2	SPF
ALL WEBS EXCEPT	2x3	DRY	No.2	SPF
11 - 6	2x4	DRY	No.2	SPF
9 - 7	2x4	DRY	No.2	SPF

DRY: SEASONED LUMBER.

PLATES (table is in inches)

JT	TYPE	PLATES	W	LEN	Y	X
2	TMVW-t	MT20	4.0	5.0	1.75	2.00
3	TMWW-t	MT20	3.0	4.0	1.50	1.50
4	TS-t	MT20	3.0	6.0		
5	TTW+m	MT20	3.0	4.0	2.00	1.25
6	TMWW-t	MT20	3.0	4.0		
7	TMVW-t	MT20	4.0	4.0	1.75	1.75
8	BMV1+p	MT20	2.0	4.0		
9	BMWW+t	MT20	3.0	5.0	1.75	1.50
10	BS-t	MT20	3.0	6.0		
11	BMWWW-t	MT20	3.0	6.0		
12	BMWW-t	MT20	3.0	6.0	1.50	1.75
13	BMV1+p	MT20	2.0	4.0		

A SIZE FOR SIZE SUBSTITUTION OF MITEK MII20 WITH TEE-LOK TL20 PLATES IS ALLOWED.

DIMENSIONS, SUPPORTS AND LOADINGS SPECIFIED BY FABRICATOR TO BE VERIFIED BY BUILDING DESIGNER

BEARINGS

JT	FACTORED GROSS REACTION VERT	HORZ	MAXIMUM FACTORED GROSS REACTION DOWN	HORZ	UPLIFT	INPUT BRG IN-SX	REQRD BRG IN-SX
8	1174	0	1174	0	0	1-10	1-10
13	1280	0	1280	0	0	5-8	5-8

UNFACTORED REACTIONS

JT	1ST LCASE COMBINED	MAX./MIN. COMPONENT REACTIONS SNOW	LIVE	PERM.LIVE	WIND	DEAD	SOIL
8	824	576 / 0	0 / 0	0 / 0	0 / 0	248 / 0	0 / 0
13	896	640 / 0	0 / 0	0 / 0	0 / 0	256 / 0	0 / 0

BEARING MATERIAL TO BE SPF NO.2 OR BETTER AT JOINT(S) 8, 13

BRACING

TOP CHORD TO BE SHEATHED OR MAX. PURLIN SPACING = 5.10 FT.
MAX. UNBRACED BOTTOM CHORD LENGTH = 10.00 FT. OR RIGID CEILING DIRECTLY APPLIED.

ALL PITCH BREAKS AND PERIMETER CORNER JOINTS MUST BE LATERALLY RESTRAINED.

1 - 2x3 SPF No.2 LATERAL BRACE(S) AT 1/ 2 LENGTH OF 7-8. DBS = 12-0-0 . CBF = 85 LBS.
1 - 2x3 SPF No.2 LATERAL BRACE(S) AT 1/ 2 LENGTH OF 3-11. DBS = 20-0-0 . CBF = 59 LBS.
1 - 2x3 SPF No.2 LATERAL BRACE(S) AT 1/ 2 LENGTH OF 6-9. DBS = 18-0-0 . CBF = 93 LBS.

DBS = DIAGONAL BRACE SPACING (MAX). CBF = CUMULATIVE BRACING FORCE. FASTEN LATERAL BRACE(S) USING (0.122"X3") SPIRAL NAILS : 1 NAIL FOR 2x3 BRACE(S), 2 FOR 1x4, 2x4, 2x5, 3 FOR 2x6, 4 FOR 2x8, 5 FOR 2x10, AND 6 FOR 2x12.

END VERTICAL(S) MUST BE SHEATHED OR HAVE BRACES AS INDICATED IN THE MAX. UNBRACED LENGTH COLUMN OF THE TABLE BELOW

LOADING

TOTAL LOAD CASES: (4)

CHORDS

MEMB. FR-TO	MAX. FACTORED FORCE (LBS)	FACTORED VERT. LOAD LC1 (PLF) FROM	TO	MAX CSI (LC)	MAX. UNBRAC LENGTH
1- 2	0 / 29	-77.4	-77.4	0.10 (1)	10.00
2- 3	-1319 / 0	-77.4	-77.4	0.45 (1)	5.10
3- 4	-955 / 0	-77.4	-77.4	0.42 (1)	5.80
4- 5	-955 / 0	-77.4	-77.4	0.42 (1)	5.80
5- 6	-768 / 0	-77.4	-77.4	0.38 (1)	6.25
6- 7	-617 / 0	-77.4	-77.4	0.37 (1)	6.25
8- 7	-1130 / 0	0.0	0.0	0.52 (1)	5.97
13- 2	-1234 / 0	0.0	0.0	0.13 (1)	7.22
13-12	0 / 0	-17.5	-17.5	0.17 (4)	10.00
12-11	0 / 1124	-17.5	-17.5	0.27 (1)	10.00
11-10	0 / 617	-17.5	-17.5	0.20 (4)	10.00
10- 9	0 / 617	-17.5	-17.5	0.20 (4)	10.00
9- 8	0 / 0	-17.5	-17.5	0.16 (4)	10.00

WEBS

MEMB. FR-TO	MAX. FACTORED FORCE (LBS)	MAX CSI (LC)
12- 3	-65 / 87	0.03 (1)
3-11	-470 / 0	0.22 (1)
11- 5	0 / 159	0.04 (4)
11- 6	0 / 287	0.05 (1)
9- 6	-828 / 0	0.53 (1)
9- 7	0 / 1131	0.18 (1)
2-12	0 / 1140	0.26 (1)

DESIGN CRITERIA

SPECIFIED LOADS:

TOP	CH.	LL	=	23.3	PSF
		DL	=	3.0	PSF
BOT	CH.	LL	=	0.0	PSF
		DL	=	7.0	PSF
TOTAL	LOAD		=	33.3	PSF

SPACING = 24.0 IN. C/C

LOADING IN FLAT SECTION BASED ON A SLOPE OF 6.00/12

THIS TRUSS IS DESIGNED FOR RESIDENTIAL OR SMALL BUILDING REQUIREMENTS OF PART 9, NBCC 2010

THIS DESIGN COMPLIES WITH:
- PART 9 OF OBC 2012 , BCBC 2012 , ABC 2014
- CSA 086-09
- TPIC 2011

(55 % OF 27.2 P.S.F. G.S.L. PLUS 8.4 P.S.F. RAIN LOAD) EQUALS 23.3 P.S.F. SPECIFIED ROOF LIVE LOAD

ALLOWABLE DEFL.(LL)= L/360 (0.82")
CALCULATED VERT. DEFL.(LL) = L/ 999 (0.04")
ALLOWABLE DEFL.(TL)= L/360 (0.82")
CALCULATED VERT. DEFL.(TL) = L/ 999 (0.09")

CSI: TC=0.52 (7-8:1) , BC=0.27 (11-12:1) , WB=0.53 (6-9:1) , SSI=0.23 (6-7:1)

DOL LUMBER=1.00 NAIL=1.00 LS BEND=1.10 COMP=1.10 SHEAR=1.10 TENS= 1.10

COMPANION LIVE LOAD FACTOR = 0.50

TRUSS PLATE MANUFACTURER IS NOT RESPONSIBLE FOR QUALITY CONTROL IN THE TRUSS MANUFACTURING PLANT .

NAIL VALUES

PLATE	GRIP(DRY) (PSI) MAX	MIN	SHEAR (PLI) MAX	MIN	SECTION (PLI) MAX	MIN
MT20	618	354	1667	822	2284	1656

PLATE PLACEMENT TOL. = 0.250 inches

PLATE ROTATION TOL. = 5.0 Deg.

JSI GRIP= 0.90 (12) (INPUT = 0.90)
JSI METAL= 0.45 (2) (INPUT = 1.00)

LICENSED PROFESSIONAL ENGINEER
P.M. TREVISAN
100136551
March 16th, 2017
PROVINCE OF ONTARIO

RECEIVED
TOWN OF MILTON
MAR 29, 2017
17-5327
BUILDING DIVISION

KOTT

JOB NAME	TRUSS NAME	QUANTITY	PLY	JOB DESC.	DRWG NO.
PT0317-093	**T08**	**1**	**1**	TRUSS DESC. LECCO RIDGE-BLOCK 343	

ENG JOB: PT0317-093

KOTT , Stouffville, ON, CGC

Version 8.100 S Feb 9 2017 MiTek Industries, Inc. Thu Mar 16 07:54:54 2017 Page 1
ID:EvTixTQDI5yR1QLotZTBr_yE?HJ-L6uG1E8uF2FBTUj5aoH3F6hbHdRPFiTBA8U9KszaRHI

SCALE = 1:78.4

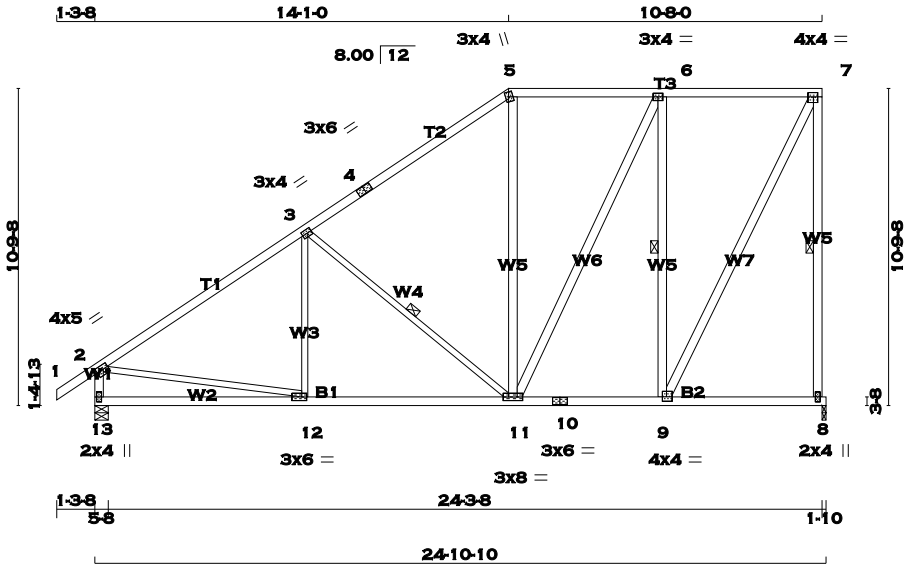

TOTAL WEIGHT = 141 lb

LUMBER
N. L. G. A. RULES

CHORDS	SIZE		LUMBER	DESCR.
1 - 4	2x4	DRY	No.2	SPF
4 - 5	2x4	DRY	No.2	SPF
5 - 7	2x4	DRY	No.2	SPF
8 - 7	2x4	DRY	No.2	SPF
13 - 2	2x4	DRY	No.2	SPF
13 - 10	2x4	DRY	No.2	SPF
10 - 8	2x4	DRY	No.2	SPF
ALL WEBS EXCEPT	2x4	DRY	No.2	SPF
12 - 3	2x3	DRY	No.2	SPF
3 - 11	2x3	DRY	No.2	SPF
2 - 12	2x3	DRY	No.2	SPF

DRY: SEASONED LUMBER.

PLATES (table is in inches)

JT	TYPE	PLATES	W	LEN	Y	X
2	TMVW-t	MT20	4.0	5.0	1.75	2.00
3	TMWW-t	MT20	3.0	4.0	1.50	1.50
4	TS-t	MT20	3.0	6.0		
5	TTW+m	MT20	3.0	4.0	2.00	1.25
6	TMWW-t	MT20	3.0	4.0		
7	TMVW-t	MT20	4.0	4.0	1.75	1.75
8	BMV1+p	MT20	2.0	4.0		
9	BMWW-t	MT20	4.0	4.0	1.75	1.75
10	BS-t	MT20	3.0	6.0		
11	BMWWW-t	MT20	3.0	8.0		
12	BMWW-t	MT20	3.0	6.0	1.50	2.00
13	BMV1+p	MT20	2.0	4.0		

A SIZE FOR SIZE SUBSTITUTION OF MITEK MII20 WITH TEE-LOK TL20 PLATES IS ALLOWED.

DIMENSIONS, SUPPORTS AND LOADINGS SPECIFIED BY FABRICATOR TO BE VERIFIED BY BUILDING DESIGNER

BEARINGS

JT	FACTORED GROSS REACTION VERT	HORZ	MAXIMUM FACTORED GROSS REACTION DOWN	HORZ	UPLIFT	INPUT BRG IN-SX	REQRD BRG IN-SX
8	1174	0	1174	0	0	1-10	1-10
13	1280	0	1280	0	0	5-8	5-8

UNFACTORED REACTIONS

JT	1ST LCASE COMBINED	MAX./MIN. COMPONENT REACTIONS SNOW	LIVE	PERM.LIVE	WIND	DEAD	SOIL
8	824	576 / 0	0 / 0	0 / 0	0 / 0	248 / 0	0 / 0
13	896	640 / 0	0 / 0	0 / 0	0 / 0	256 / 0	0 / 0

BEARING MATERIAL TO BE SPF NO.2 OR BETTER AT JOINT(S) 8, 13

BRACING
TOP CHORD TO BE SHEATHED OR MAX. PURLIN SPACING = 4.91 FT.
MAX. UNBRACED BOTTOM CHORD LENGTH = 10.00 FT. OR RIGID CEILING DIRECTLY APPLIED.

ALL PITCH BREAKS AND PERIMETER CORNER JOINTS MUST BE LATERALLY RESTRAINED.

1 - 2x3 SPF No.2 LATERAL BRACE(S) AT 1/ 2 LENGTH OF 7-8. DBS = 12-0-0 . CBF = 85 LBS.
1 - 2x3 SPF No.2 LATERAL BRACE(S) AT 1/ 2 LENGTH OF 3-11. DBS = 20-0-0 . CBF = 71 LBS.
1 - 2x3 SPF No.2 LATERAL BRACE(S) AT 1/ 2 LENGTH OF 6-9. DBS = 16-0-0 . CBF = 87 LBS.

DBS = DIAGONAL BRACE SPACING (MAX). CBF = CUMULATIVE BRACING FORCE. FASTEN LATERAL BRACE(S) USING (0.122"X3") SPIRAL NAILS : 1 NAIL FOR 2x3 BRACE(S), 2 FOR 1x4, 2x4, 2x5, 3 FOR 2x6, 4 FOR 2x8, 5 FOR 2x10, AND 6 FOR 2x12.

END VERTICAL(S) MUST BE SHEATHED OR HAVE BRACES AS INDICATED IN THE MAX. UNBRACED LENGTH COLUMN OF THE TABLE BELOW

LOADING
TOTAL LOAD CASES: (4)

CHORDS

MEMB. FR-TO	MAX. FACTORED FORCE (LBS)	VERT. LOAD (PLF) FROM	TO	MAX CSI (LC)	MAX. UNBRAC LENGTH
1- 2	0 / 29	-77.4	-77.4	0.10 (1)	10.00
2- 3	-1306 / 0	-77.4	-77.4	0.58 (1)	4.91
3- 4	-853 / 0	-77.4	-77.4	0.53 (1)	5.82
4- 5	-853 / 0	-77.4	-77.4	0.53 (1)	5.82
5- 6	-679 / 0	-77.4	-77.4	0.29 (1)	6.25
6- 7	-504 / 0	-77.4	-77.4	0.28 (1)	6.25
8- 7	-1134 / 0	0.0	0.0	0.67 (1)	5.97
13- 2	-1230 / 0	0.0	0.0	0.13 (1)	7.23
13-12	0 / 0	-17.5	-17.5	0.22 (4)	10.00
12-11	0 / 1117	-17.5	-17.5	0.30 (4)	10.00
11-10	0 / 504	-17.5	-17.5	0.15 (4)	10.00
10- 9	0 / 504	-17.5	-17.5	0.15 (4)	10.00
9- 8	0 / 0	-17.5	-17.5	0.11 (4)	10.00

WEBS

MEMB. FR-TO	MAX. FACTORED FORCE (LBS)	MAX CSI (LC)
12- 3	-26 / 112	0.04 (4)
3-11	-569 / 0	0.33 (1)
11- 5	0 / 100	0.02 (4)
11- 6	0 / 403	0.06 (1)
9- 6	-874 / 0	0.52 (1)
9- 7	0 / 1096	0.18 (1)
2-12	0 / 1130	0.25 (1)

DESIGN CRITERIA

SPECIFIED LOADS:

TOP CH.	LL	=	23.3	PSF
	DL	=	3.0	PSF
BOT CH.	LL	=	0.0	PSF
	DL	=	7.0	PSF
TOTAL LOAD		=	33.3	PSF

SPACING = 24.0 IN. C/C

LOADING IN FLAT SECTION BASED ON A SLOPE OF 6.00/12

THIS TRUSS IS DESIGNED FOR RESIDENTIAL OR SMALL BUILDING REQUIREMENTS OF PART 9, NBCC 2010

THIS DESIGN COMPLIES WITH:
- PART 9 OF OBC 2012 , BCBC 2012 , ABC 2014
- CSA 086-09
- TPIC 2011

(55 % OF 27.2 P.S.F. G.S.L. PLUS 8.4 P.S.F. RAIN LOAD) EQUALS 23.3 P.S.F. SPECIFIED ROOF LIVE LOAD

ALLOWABLE DEFL.(LL)= L/360 (0.82")
CALCULATED VERT. DEFL.(LL) = L/ 999 (0.05")
ALLOWABLE DEFL.(TL)= L/360 (0.82")
CALCULATED VERT. DEFL.(TL) = L/ 999 (0.10")

CSI: TC=0.67 (7-8:1) , BC=0.30 (11-12:4) , WB=0.52 (6-9:1) , SSI=0.22 (2-3:1)

DOL LUMBER=1.00 NAIL=1.00 LS BEND=1.10 COMP=1.10 SHEAR=1.10 TENS= 1.10

COMPANION LIVE LOAD FACTOR = 0.50

TRUSS PLATE MANUFACTURER IS NOT RESPONSIBLE FOR QUALITY CONTROL IN THE TRUSS MANUFACTURING PLANT .

NAIL VALUES

PLATE	GRIP(DRY) (PSI) MAX	MIN	SHEAR (PLI) MAX	MIN	SECTION (PLI) MAX	MIN
MT20	618	354	1667	822	2284	1656

PLATE PLACEMENT TOL. = 0.250 inches

PLATE ROTATION TOL. = 5.0 Deg.

JSI GRIP= 0.87 (5) (INPUT = 0.90)
JSI METAL= 0.46 (2) (INPUT = 1.00)

LICENSED PROFESSIONAL ENGINEER
P.M. TREVISAN
100136551
March 16th, 2017
PROVINCE OF ONTARIO

RECEIVED
TOWN OF MILTON
MAR 29, 2017
17-5327
BUILDING DIVISION

KOTT

JOB NAME	TRUSS NAME	QUANTITY	PLY	JOB DESC.	DRWG NO.
PT0317-093	**T09**	**1**	**1**	TRUSS DESC. LECCO RIDGE-BLOCK 343	

ENG JOB: PT0317-093

KOTT , Stouffville, ON, CGC

Version 8.100 S Feb 9 2017 MiTek Industries, Inc. Thu Mar 16 07:54:55 2017 Page 1

ID:EvTixTQDI5yR1QLotZTBr_yE?HJ-pISeEZ9W0MN24eHH7VoIoKEkH1nH_DhKPoEjtIzaRHk

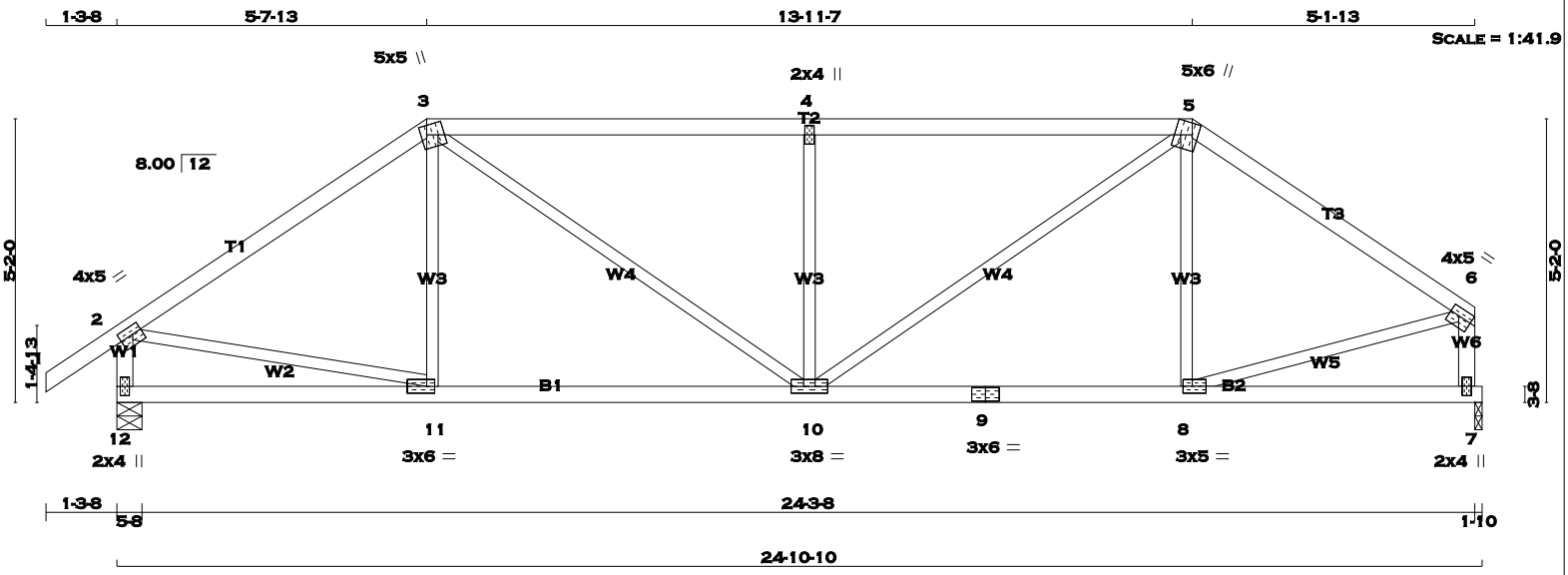

TOTAL WEIGHT = 97 lb [M]

LUMBER

N. L. G. A. RULES

CHORDS	SIZE		LUMBER	DESCR.
1 - 3	2x4	DRY	No.2	SPF
3 - 5	2x4	DRY	No.2	SPF
5 - 6	2x4	DRY	No.2	SPF
12 - 2	2x4	DRY	No.2	SPF
7 - 6	2x4	DRY	No.2	SPF
12 - 9	2x4	DRY	No.2	SPF
9 - 7	2x4	DRY	No.2	SPF
ALL WEBS EXCEPT	2x3	DRY	No.2	SPF

DRY: SEASONED LUMBER.

PLATES (table is in inches)

JT	TYPE	PLATES	W	LEN	Y	X
2	TMVW-t	MT20	4.0	5.0	1.75	2.00
3	TTWW+m	MT20	5.0	5.0	2.00	1.25
4	TMW+w	MT20	2.0	4.0		
5	TTWW+m	MT20	5.0	6.0	Edge	3.75
6	TMVW-t	MT20	4.0	5.0	1.75	Edge
7	BMV1+p	MT20	2.0	4.0		
8	BMWW-t	MT20	3.0	5.0	1.50	2.00
9	BS-t	MT20	3.0	6.0		
10	BMWWW-t	MT20	3.0	8.0		
11	BMWW-t	MT20	3.0	6.0	1.50	1.75
12	BMV1+p	MT20	2.0	4.0		

Edge - INDICATES REFERENCE CORNER OF PLATE TOUCHES EDGE OF CHORD.

A SIZE FOR SIZE SUBSTITUTION OF MITEK MII20 WITH TEE-LOK TL20 PLATES IS ALLOWED.

DIMENSIONS, SUPPORTS AND LOADINGS SPECIFIED BY FABRICATOR TO BE VERIFIED BY BUILDING DESIGNER

BEARINGS

JT	FACTORED GROSS REACTION VERT	HORZ	MAXIMUM FACTORED GROSS REACTION DOWN	HORZ	UPLIFT	INPUT BRG IN-SX	REQRD BRG IN-SX
12	1280	0	1280	0	0	5-8	5-8
7	1174	0	1174	0	0	1-10	1-10

UNFACTORED REACTIONS

JT	1ST LCASE COMBINED	MAX./MIN. COMPONENT REACTIONS SNOW	LIVE	PERM.LIVE	WIND	DEAD	SOIL
12	896	640 / 0	0 / 0	0 / 0	0 / 0	256 / 0	0 / 0
7	824	576 / 0	0 / 0	0 / 0	0 / 0	248 / 0	0 / 0

BEARING MATERIAL TO BE SPF NO.2 OR BETTER AT JOINT(S) 12, 7

BRACING

TOP CHORD TO BE SHEATHED OR MAX. PURLIN SPACING = 4.14 FT.
MAX. UNBRACED BOTTOM CHORD LENGTH = 10.00 FT. OR RIGID CEILING DIRECTLY APPLIED.

ALL PITCH BREAKS AND PERIMETER CORNER JOINTS MUST BE LATERALLY RESTRAINED.

LOADING

TOTAL LOAD CASES: (4)

CHORDS MEMB. FR-TO	MAX. FACTORED FORCE (LBS)	FACTORED VERT. LOAD (PLF) FROM	TO	LC1 MAX CSI (LC)	MAX. UNBRAC LENGTH	WEBS MEMB. FR-TO	MAX. FACTORED FORCE (LBS)	MAX CSI (LC)
1- 2	0 / 29	-77.4	-77.4	0.10 (1)	10.00	11- 3	-77 / 76	0.03 (1)
2- 3	-1287 / 0	-77.4	-77.4	0.51 (1)	5.04	3-10	0 / 641	0.14 (1)
3- 4	-1594 / 0	-77.4	-77.4	0.78 (1)	4.14	10- 4	-664 / 0	0.26 (1)
4- 5	-1594 / 0	-77.4	-77.4	0.78 (1)	4.14	10- 5	0 / 725	0.16 (1)
5- 6	-1206 / 0	-77.4	-77.4	0.41 (1)	5.31	8- 5	-150 / 50	0.06 (1)
12- 2	-1242 / 0	0.0	0.0	0.13 (1)	7.20	2-11	0 / 1089	0.24 (1)
7- 6	-1140 / 0	0.0	0.0	0.12 (1)	7.45	8- 6	0 / 1038	0.23 (1)
12-11	0 / 0	-17.5	-17.5	0.16 (4)	10.00			
11-10	0 / 1068	-17.5	-17.5	0.26 (1)	10.00			
10- 9	0 / 999	-17.5	-17.5	0.25 (1)	10.00			
9- 8	0 / 999	-17.5	-17.5	0.25 (1)	10.00			
8- 7	0 / 0	-17.5	-17.5	0.15 (4)	10.00			

DESIGN CRITERIA

SPECIFIED LOADS:

TOP CH.	LL	=	23.3	PSF
	DL	=	3.0	PSF
BOT CH.	LL	=	0.0	PSF
	DL	=	7.0	PSF
TOTAL LOAD		=	33.3	PSF

SPACING = 24.0 IN. C/C

LOADING IN FLAT SECTION BASED ON A SLOPE OF 6.00/12

THIS TRUSS IS DESIGNED FOR RESIDENTIAL OR SMALL BUILDING REQUIREMENTS OF PART 9, NBCC 2010

THIS DESIGN COMPLIES WITH:
- PART 9 OF OBC 2012 , BCBC 2012 , ABC 2014
- CSA 086-09
- TPIC 2011

(55 % OF 27.2 P.S.F. G.S.L. PLUS 8.4 P.S.F. RAIN LOAD) EQUALS 23.3 P.S.F. SPECIFIED ROOF LIVE LOAD

ALLOWABLE DEFL.(LL)= L/360 (0.82")
CALCULATED VERT. DEFL.(LL) = L/ 999 (0.06")
ALLOWABLE DEFL.(TL)= L/360 (0.82")
CALCULATED VERT. DEFL.(TL) = L/ 999 (0.11")

CSI: TC=0.78 (4-5:1) , BC=0.26 (10-11:1) , WB=0.26 (4-10:1) , SSI=0.26 (4-5:1)

DOL LUMBER=1.00 NAIL=1.00 LS BEND=1.10 COMP=1.10 SHEAR=1.10 TENS= 1.10

COMPANION LIVE LOAD FACTOR = 0.50

TRUSS PLATE MANUFACTURER IS NOT RESPONSIBLE FOR QUALITY CONTROL IN THE TRUSS MANUFACTURING PLANT .

NAIL VALUES

PLATE	GRIP(DRY) (PSI) MAX	MIN	SHEAR (PLI) MAX	MIN	SECTION (PLI) MAX	MIN
MT20	618	354	1667	822	2284	1656

PLATE PLACEMENT TOL. = 0.250 inches

PLATE ROTATION TOL. = 0.5 Deg.

JSI GRIP= 0.90 (11) (INPUT = 0.90)
JSI METAL= 0.44 (2) (INPUT = 1.00)

LICENSED PROFESSIONAL ENGINEER
P.M. TREVISAN
100136551
March 16th, 2017
PROVINCE OF ONTARIO

RECEIVED
TOWN OF MILTON
MAR 29, 2017
17-5327
BUILDING DIVISION

KOTT

JOB NAME	TRUSS NAME	QUANTITY	PLY	JOB DESC.	DRWG NO.
PT0317-093	T10	1	1	TRUSS DESC. LECCO RIDGE-BLOCK 343	ENG JOB: PT0317-093

KOTT , Stouffville, ON, CGC

Version 8.100 S Feb 9 2017 MiTek Industries, Inc. Thu Mar 16 07:54:55 2017 Page 1

ID:EvTixTQDI5yR1QLotZTBr_yE?HJ-pISeEZ9W0MN24eHH7VoIoKEsY1n0_9pKPoEjtIzaRHk

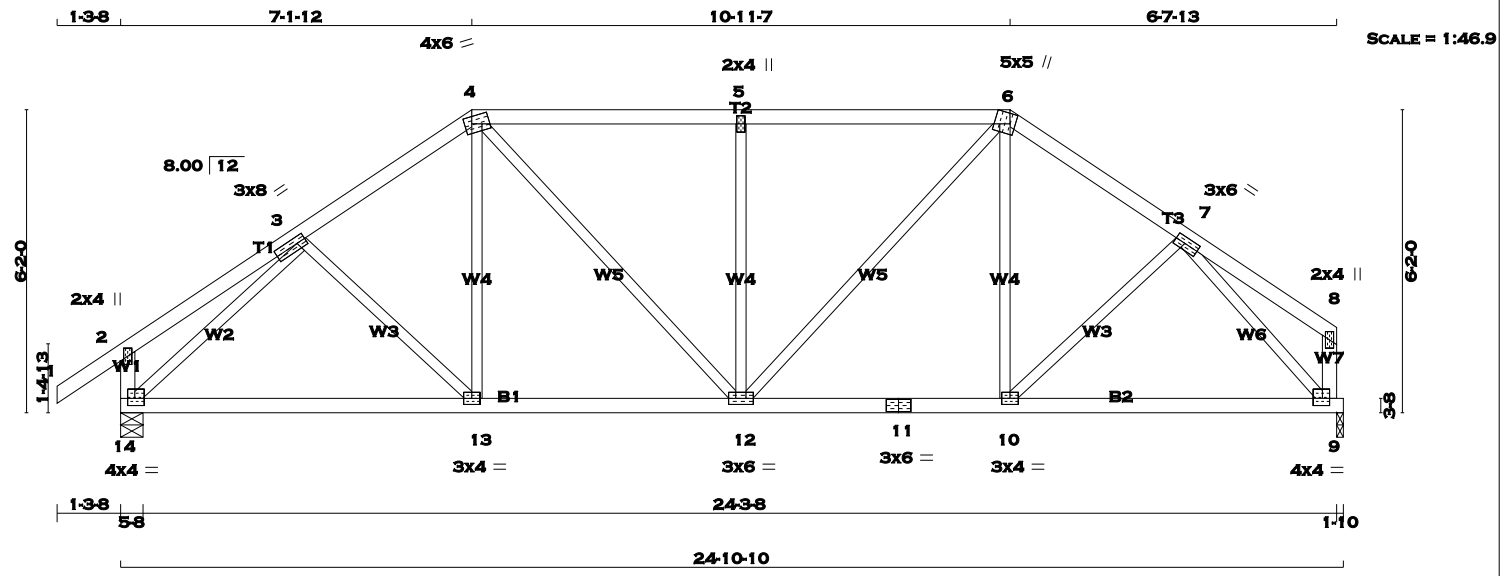

TOTAL WEIGHT = 105 lb

[M][F]

LUMBER

N. L. G. A. RULES

CHORDS	SIZE		LUMBER	DESCR.
1 - 4	2x4	DRY	No.2	SPF
4 - 6	2x4	DRY	No.2	SPF
6 - 8	2x4	DRY	No.2	SPF
14 - 2	2x4	DRY	No.2	SPF
9 - 8	2x4	DRY	No.2	SPF
14 - 11	2x4	DRY	No.2	SPF
11 - 9	2x4	DRY	No.2	SPF
ALL WEBS EXCEPT	2x3	DRY	No.2	SPF

DRY: SEASONED LUMBER.

PLATES (table is in inches)

JT	TYPE	PLATES	W	LEN	Y	X
2	TMV+p	MT20	2.0	4.0		
3	TMWW-t	MT20	3.0	8.0	1.50	2.25
4	TTWW-m	MT20	4.0	6.0	1.75	1.75
5	TMW+w	MT20	2.0	4.0		
6	TTWW+m	MT20	5.0	5.0	Edge	3.75
7	TMWW-t	MT20	3.0	6.0	1.50	2.50
8	TMV+p	MT20	2.0	4.0		
9	BMVW1-t	MT20	4.0	4.0	1.75	1.75
10	BMWW-t	MT20	3.0	4.0		
11	BS-t	MT20	3.0	6.0		
12	BMWWW-t	MT20	3.0	6.0		
13	BMWW-t	MT20	3.0	4.0		
14	BMVW1-t	MT20	4.0	4.0	1.75	1.75

Edge - INDICATES REFERENCE CORNER OF PLATE TOUCHES EDGE OF CHORD.

A SIZE FOR SIZE SUBSTITUTION OF MITEK MII20 WITH TEE-LOK TL20 PLATES IS ALLOWED.

DIMENSIONS, SUPPORTS AND LOADINGS SPECIFIED BY FABRICATOR TO BE VERIFIED BY BUILDING DESIGNER

BEARINGS

JT	FACTORED GROSS REACTION VERT	HORZ	MAXIMUM FACTORED GROSS REACTION DOWN	HORZ	UPLIFT	INPUT BRG IN-SX	REQRD BRG IN-SX
14	1280	0	1280	0	0	5-8	5-8
9	1174	0	1174	0	0	1-10	1-10

UNFACTORED REACTIONS

JT	1ST LCASE COMBINED	MAX./MIN. COMPONENT REACTIONS SNOW	LIVE	PERM.LIVE	WIND	DEAD	SOIL
14	896	640 / 0	0 / 0	0 / 0	0 / 0	256 / 0	0 / 0
9	824	576 / 0	0 / 0	0 / 0	0 / 0	248 / 0	0 / 0

BEARING MATERIAL TO BE SPF NO.2 OR BETTER AT JOINT(S) 14, 9

BRACING

TOP CHORD TO BE SHEATHED OR MAX. PURLIN SPACING = 5.33 FT.
MAX. UNBRACED BOTTOM CHORD LENGTH = 10.00 FT. OR RIGID CEILING DIRECTLY APPLIED.

ALL PITCH BREAKS AND PERIMETER CORNER JOINTS MUST BE LATERALLY RESTRAINED.

LOADING

TOTAL LOAD CASES: (4)

CHORDS MEMB. FR-TO	MAX. FACTORED FORCE (LBS)	FACTORED VERT. LOAD (PLF) FROM	TO	LC1 MAX CSI (LC)	MAX. UNBRAC LENGTH	WEBS MEMB. FR-TO	MAX. FACTORED FORCE (LBS)	MAX CSI (LC)
1- 2	0 / 29	-77.4	-77.4	0.10 (1)	10.00	3-13	-20 / 43	0.01 (4)
2- 3	0 / 16	-77.4	-77.4	0.15 (1)	10.00	13- 4	0 / 148	0.04 (4)
3- 4	-1258 / 0	-77.4	-77.4	0.13 (1)	5.61	4-12	0 / 370	0.08 (1)
4- 5	-1286 / 0	-77.4	-77.4	0.32 (1)	5.33	12- 5	-518 / 0	0.31 (1)
5- 6	-1286 / 0	-77.4	-77.4	0.32 (1)	5.33	12- 6	0 / 437	0.10 (1)
6- 7	-1202 / 0	-77.4	-77.4	0.12 (1)	5.71	10- 6	0 / 95	0.03 (4)
7- 8	0 / 17	-77.4	-77.4	0.13 (1)	10.00	10- 7	0 / 91	0.02 (4)
14- 2	-215 / 0	0.0	0.0	0.02 (1)	7.81	14- 3	-1456 / 0	0.57 (1)
9- 8	-89 / 0	0.0	0.0	0.01 (1)	7.81	7- 9	-1386 / 0	0.47 (1)
14-13	0 / 1045	-17.5	-17.5	0.28 (1)	10.00			
13-12	0 / 1033	-17.5	-17.5	0.28 (4)	10.00			
12-11	0 / 988	-17.5	-17.5	0.26 (1)	10.00			
11-10	0 / 988	-17.5	-17.5	0.26 (1)	10.00			
10- 9	0 / 920	-17.5	-17.5	0.25 (1)	10.00			

DESIGN CRITERIA

SPECIFIED LOADS:

TOP	CH.	LL	=	23.3	PSF
		DL	=	3.0	PSF
BOT	CH.	LL	=	0.0	PSF
		DL	=	7.0	PSF
TOTAL	LOAD		=	33.3	PSF

SPACING = 24.0 IN. C/C

LOADING IN FLAT SECTION BASED ON A SLOPE OF 6.00/12

THIS TRUSS IS DESIGNED FOR RESIDENTIAL OR SMALL BUILDING REQUIREMENTS OF PART 9, NBCC 2010

THIS DESIGN COMPLIES WITH:
- PART 9 OF OBC 2012 , BCBC 2012 , ABC 2014
- CSA 086-09
- TPIC 2011

(55 % OF 27.2 P.S.F. G.S.L. PLUS 8.4 P.S.F. RAIN LOAD) EQUALS 23.3 P.S.F. SPECIFIED ROOF LIVE LOAD

ALLOWABLE DEFL.(LL)= L/360 (0.82")
CALCULATED VERT. DEFL.(LL) = L/ 999 (0.05")
ALLOWABLE DEFL.(TL)= L/360 (0.82")
CALCULATED VERT. DEFL.(TL) = L/ 999 (0.10")

CSI: TC=0.32 (4-5:1) , BC=0.28 (12-13:4) , WB=0.57 (3-14:1) , SSI=0.20 (4-5:1)

DOL LUMBER=1.00 NAIL=1.00 LS BEND=1.10 COMP=1.10 SHEAR=1.10 TENS= 1.10

COMPANION LIVE LOAD FACTOR = 0.50

TRUSS PLATE MANUFACTURER IS NOT RESPONSIBLE FOR QUALITY CONTROL IN THE TRUSS MANUFACTURING PLANT .

NAIL VALUES

PLATE	GRIP(DRY) (PSI) MAX	MIN	SHEAR (PLI) MAX	MIN	SECTION (PLI) MAX	MIN
MT20	618	354	1667	822	2284	1656

PLATE PLACEMENT TOL. = 0.250 inches

PLATE ROTATION TOL. = 5.0 Deg.

JSI GRIP= 0.90 (14) (INPUT = 0.90)
JSI METAL= 0.39 (14) (INPUT = 1.00)

LICENSED PROFESSIONAL ENGINEER
P.M. TREVISAN
100136551
March 16th, 2017
PROVINCE OF ONTARIO

RECEIVED
TOWN OF MILTON
MAR 29, 2017
17-5327
BUILDING DIVISION

KOTT

JOB NAME	TRUSS NAME	QUANTITY	PLY	JOB DESC.	DRWG NO.
PT0317-093	T11	1	1	TRUSS DESC. LECCO RIDGE-BLOCK 343	

KOTT , Stouffville, ON, CGC

Version 8.100 S Feb 9 2017 MiTek Industries, Inc. Thu Mar 16 07:54:56 2017 Page 1
ID:EvTixTQDI5yR1QLotZTBr_yE?HJ-HV00SvA9nfVuinsThDJXKXm25R7Ojg9TdSzGPlzaRHj

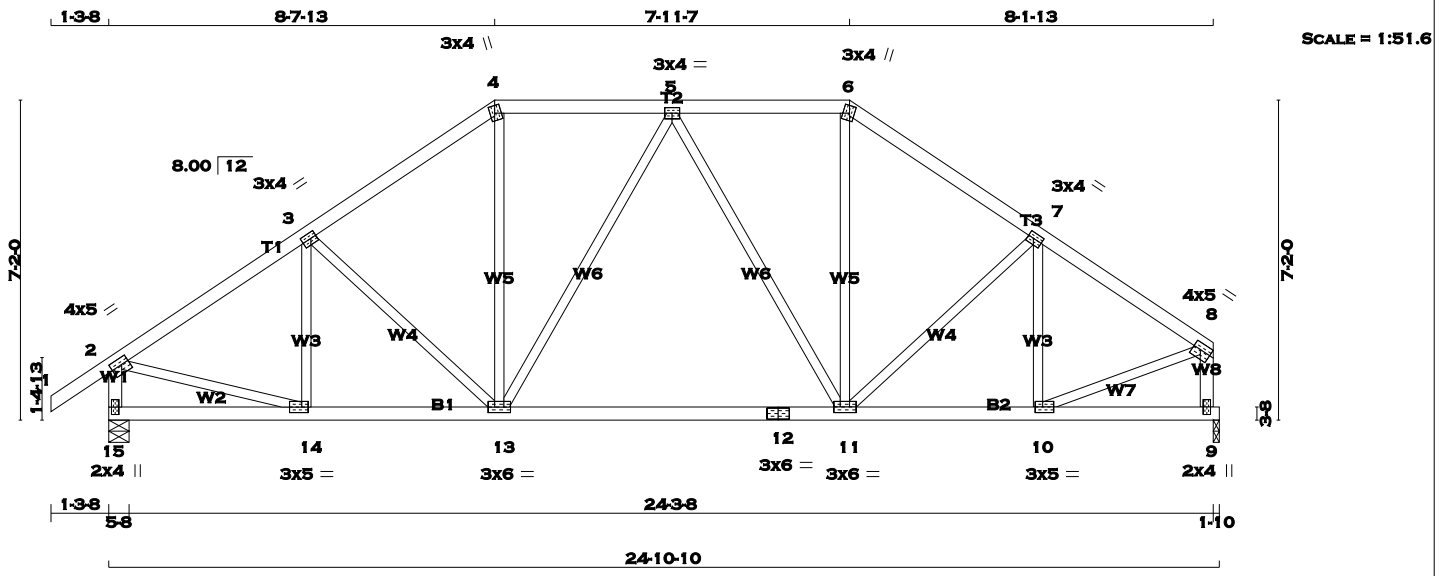

TOTAL WEIGHT = 110 lb

LUMBER
N. L. G. A. RULES

CHORDS	SIZE		LUMBER	DESCR.
1 - 4	2x4	DRY	No.2	SPF
4 - 6	2x4	DRY	No.2	SPF
6 - 8	2x4	DRY	No.2	SPF
15 - 2	2x4	DRY	No.2	SPF
9 - 8	2x4	DRY	No.2	SPF
15 - 12	2x4	DRY	No.2	SPF
12 - 9	2x4	DRY	No.2	SPF
ALL WEBS EXCEPT	2x3	DRY	No.2	SPF

DRY: SEASONED LUMBER.

PLATES (table is in inches)

JT	TYPE	PLATES	W	LEN	Y	X
2	TMVW-t	MT20	4.0	5.0	1.75	2.00
3	TMWW-t	MT20	3.0	4.0	1.50	1.50
4	TTW+m	MT20	3.0	4.0	2.00	1.25
5	TMWW-t	MT20	3.0	4.0		
6	TTW+m	MT20	3.0	4.0	2.00	1.25
7	TMWW-t	MT20	3.0	4.0	1.50	1.50
8	TMVW-t	MT20	4.0	5.0	1.75	Edge
9	BMV1+p	MT20	2.0	4.0		
10	BMWW-t	MT20	3.0	5.0	1.50	2.00
11	BMWWW-t	MT20	3.0	6.0		
12	BS-t	MT20	3.0	6.0		
13	BMWWW-t	MT20	3.0	6.0		
14	BMWW-t	MT20	3.0	5.0	1.50	1.75
15	BMV1+p	MT20	2.0	4.0		

Edge - INDICATES REFERENCE CORNER OF PLATE TOUCHES EDGE OF CHORD.

A SIZE FOR SIZE SUBSTITUTION OF MITEK MII20 WITH TEE-LOK TL20 PLATES IS ALLOWED.

DIMENSIONS, SUPPORTS AND LOADINGS SPECIFIED BY FABRICATOR TO BE VERIFIED BY BUILDING DESIGNER

BEARINGS

JT	FACTORED GROSS REACTION VERT	HORZ	MAXIMUM FACTORED GROSS REACTION DOWN	HORZ	UPLIFT	INPUT BRG IN-SX	REQRD BRG IN-SX
15	1280	0	1280	0	0	5-8	5-8
9	1174	0	1174	0	0	1-10	1-10

UNFACTORED REACTIONS

JT	1ST LCASE COMBINED	MAX./MIN. COMPONENT REACTIONS SNOW	LIVE	PERM.LIVE	WIND	DEAD	SOIL
15	896	640 / 0	0 / 0	0 / 0	0 / 0	256 / 0	0 / 0
9	824	576 / 0	0 / 0	0 / 0	0 / 0	248 / 0	0 / 0

BEARING MATERIAL TO BE SPF NO.2 OR BETTER AT JOINT(S) 15, 9

BRACING
TOP CHORD TO BE SHEATHED OR MAX. PURLIN SPACING = 5.45 FT.
MAX. UNBRACED BOTTOM CHORD LENGTH = 10.00 FT. OR RIGID CEILING DIRECTLY APPLIED.

ALL PITCH BREAKS AND PERIMETER CORNER JOINTS MUST BE LATERALLY RESTRAINED.

LOADING
TOTAL LOAD CASES: (4)

CHORDS

MEMB. FR-TO	MAX. FACTORED FORCE (LBS)	FACTORED VERT. LOAD (PLF) FROM	TO	LC1 CSI (LC)	MAX UNBRAC LENGTH
1- 2	0 / 29	-77.4	-77.4	0.10 (1)	10.00
2- 3	-1305 / 0	-77.4	-77.4	0.20 (1)	5.45
3- 4	-1190 / 0	-77.4	-77.4	0.20 (1)	5.65
4- 5	-976 / 0	-77.4	-77.4	0.16 (1)	6.13
5- 6	-950 / 0	-77.4	-77.4	0.16 (1)	6.19
6- 7	-1156 / 0	-77.4	-77.4	0.18 (1)	5.74
7- 8	-1182 / 0	-77.4	-77.4	0.17 (1)	5.69
15- 2	-1244 / 0	0.0	0.0	0.13 (1)	7.20
9- 8	-1142 / 0	0.0	0.0	0.12 (1)	7.44
15-14	0 / 0	-17.5	-17.5	0.08 (4)	10.00
14-13	0 / 1103	-17.5	-17.5	0.27 (1)	10.00
13-12	0 / 1068	-17.5	-17.5	0.27 (1)	10.00
12-11	0 / 1068	-17.5	-17.5	0.27 (1)	10.00
11-10	0 / 1001	-17.5	-17.5	0.26 (1)	10.00
10- 9	0 / 0	-17.5	-17.5	0.06 (4)	10.00

WEBS

MEMB. FR-TO	MAX. FACTORED FORCE (LBS)	MAX CSI (LC)
14- 3	-203 / 0	0.06 (1)
3-13	-182 / 0	0.11 (1)
13- 4	0 / 405	0.09 (1)
13- 5	-186 / 0	0.24 (1)
5-11	-240 / 0	0.31 (1)
11- 6	0 / 383	0.09 (1)
11- 7	-78 / 0	0.05 (1)
10- 7	-300 / 0	0.08 (1)
2-14	0 / 1135	0.26 (1)
10- 8	0 / 1064	0.24 (1)

[M][F]

DESIGN CRITERIA

SPECIFIED LOADS:

TOP CH.	LL	=	23.3	PSF
	DL	=	3.0	PSF
BOT CH.	LL	=	0.0	PSF
	DL	=	7.0	PSF
TOTAL LOAD		=	33.3	PSF

SPACING = 24.0 IN. C/C

LOADING IN FLAT SECTION BASED ON A SLOPE OF 6.00/12

THIS TRUSS IS DESIGNED FOR RESIDENTIAL OR SMALL BUILDING REQUIREMENTS OF PART 9, NBCC 2010

THIS DESIGN COMPLIES WITH:
- PART 9 OF OBC 2012 , BCBC 2012 , ABC 2014
- CSA 086-09
- TPIC 2011

(55 % OF 27.2 P.S.F. G.S.L. PLUS 8.4 P.S.F. RAIN LOAD) EQUALS 23.3 P.S.F. SPECIFIED ROOF LIVE LOAD

ALLOWABLE DEFL.(LL)= L/360 (0.82")
CALCULATED VERT. DEFL.(LL) = L/ 999 (0.04")
ALLOWABLE DEFL.(TL)= L/360 (0.82")
CALCULATED VERT. DEFL.(TL) = L/ 999 (0.12")

CSI: TC=0.20 (2-3:1) , BC=0.27 (13-14:1) , WB=0.31 (5-11:1) , SSI=0.15 (4-5:1)

DOL LUMBER=1.00 NAIL=1.00 LS BEND=1.10 COMP=1.10 SHEAR=1.10 TENS= 1.10

COMPANION LIVE LOAD FACTOR = 0.50

TRUSS PLATE MANUFACTURER IS NOT RESPONSIBLE FOR QUALITY CONTROL IN THE TRUSS MANUFACTURING PLANT .

NAIL VALUES

PLATE	GRIP(DRY) (PSI) MAX	MIN	SHEAR (PLI) MAX	MIN	SECTION (PLI) MAX	MIN
MT20	618	354	1667	822	2284	1656

PLATE PLACEMENT TOL. = 0.250 inches

PLATE ROTATION TOL. = 5.0 Deg.

JSI GRIP= 0.90 (14) (INPUT = 0.90)
JSI METAL= 0.44 (2) (INPUT = 1.00)

LICENSED PROFESSIONAL ENGINEER
P.M. TREVISAN
100136551
March 16th, 2017
PROVINCE OF ONTARIO

RECEIVED
TOWN OF MILTON
MAR 29, 2017
17-5327
BUILDING DIVISION

KOTT

JOB NAME	TRUSS NAME	QUANTITY	PLY	JOB DESC.	DRWG NO.
PT0317-093	T12	1	1	TRUSS DESC. LECCO RIDGE-BLOCK 343	

KOTT , Stouffville, ON, CGC

Version 8.100 S Feb 9 2017 MiTek Industries, Inc. Thu Mar 16 07:54:56 2017 Page 1
ID:EvTixTQDI5yR1QLotZTBr_yE?HJ-HV00SvA9nfVuinsThDJXKXm1rR80jgxTdSzGPlzaRHj

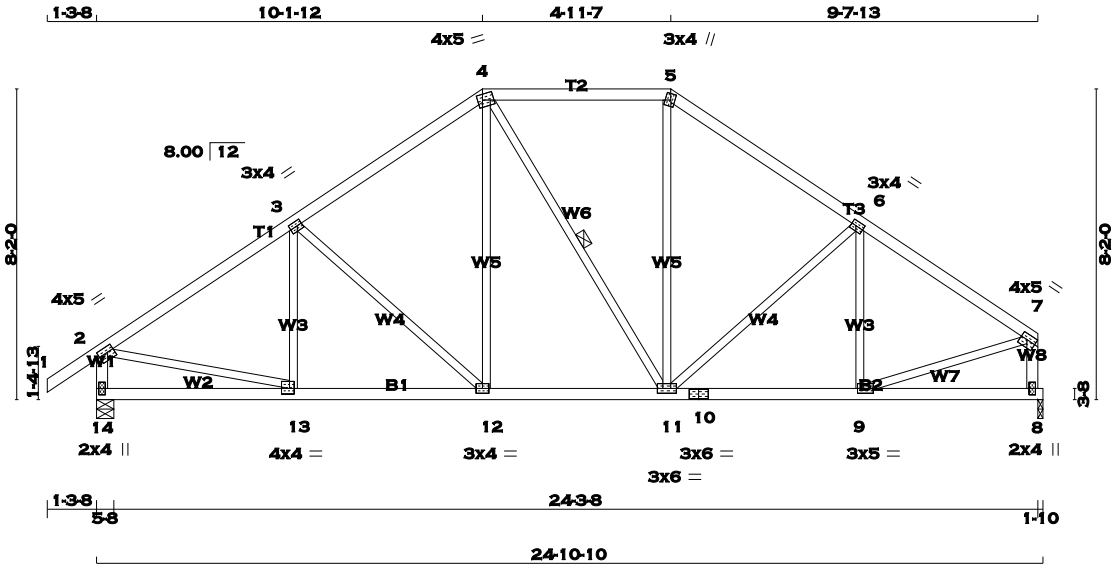

TOTAL WEIGHT = 111 lb

LUMBER
N. L. G. A. RULES

CHORDS	SIZE		LUMBER	DESCR.
1 - 4	2x4	DRY	No.2	SPF
4 - 5	2x4	DRY	No.2	SPF
5 - 7	2x4	DRY	No.2	SPF
14 - 2	2x4	DRY	No.2	SPF
8 - 7	2x4	DRY	No.2	SPF
14 - 10	2x4	DRY	No.2	SPF
10 - 8	2x4	DRY	No.2	SPF
ALL WEBS EXCEPT	2x3	DRY	No.2	SPF

DRY: SEASONED LUMBER.

PLATES (table is in inches)

JT	TYPE	PLATES	W	LEN	Y	X
2	TMVW-t	MT20	4.0	5.0	1.75	2.00
3	TMWW-t	MT20	3.0	4.0	1.50	1.50
4	TTWW-m	MT20	4.0	5.0	1.75	1.50
5	TTW+m	MT20	3.0	4.0	2.00	1.25
6	TMWW-t	MT20	3.0	4.0	1.50	1.50
7	TMVW-t	MT20	4.0	5.0	1.75	Edge
8	BMV1+p	MT20	2.0	4.0		
9	BMWW-t	MT20	3.0	5.0	1.50	2.00
10	BS-t	MT20	3.0	6.0		
11	BMWWW-t	MT20	3.0	6.0		
12	BMWW-t	MT20	3.0	4.0		
13	BMWW-t	MT20	4.0	4.0	1.75	1.50
14	BMV1+p	MT20	2.0	4.0		

Edge - INDICATES REFERENCE CORNER OF PLATE TOUCHES EDGE OF CHORD.

A SIZE FOR SIZE SUBSTITUTION OF MITEK MII20 WITH TEE-LOK TL20 PLATES IS ALLOWED.

DIMENSIONS, SUPPORTS AND LOADINGS SPECIFIED BY FABRICATOR TO BE VERIFIED BY BUILDING DESIGNER

BEARINGS

JT	FACTORED GROSS REACTION VERT	HORZ	MAXIMUM FACTORED GROSS REACTION DOWN	HORZ	UPLIFT	INPUT BRG IN-SX	REQRD BRG IN-SX
14	1280	0	1280	0	0	5-8	5-8
8	1174	0	1174	0	0	1-10	1-10

UNFACTORED REACTIONS

JT	1ST LCASE COMBINED	MAX./MIN. COMPONENT REACTIONS SNOW	LIVE	PERM.LIVE	WIND	DEAD	SOIL
14	896	640 / 0	0 / 0	0 / 0	0 / 0	256 / 0	0 / 0
8	824	576 / 0	0 / 0	0 / 0	0 / 0	248 / 0	0 / 0

BEARING MATERIAL TO BE SPF NO.2 OR BETTER AT JOINT(S) 14, 8

BRACING
TOP CHORD TO BE SHEATHED OR MAX. PURLIN SPACING = 5.33 FT.
MAX. UNBRACED BOTTOM CHORD LENGTH = 10.00 FT. OR RIGID CEILING DIRECTLY APPLIED.

ALL PITCH BREAKS AND PERIMETER CORNER JOINTS MUST BE LATERALLY RESTRAINED.

1 - 2x3 SPF No.2 LATERAL BRACE(S) AT 1/ 2 LENGTH OF 4-11. DBS = 20-0-0 . CBF = 3 LBS.

DBS = DIAGONAL BRACE SPACING (MAX). CBF = CUMULATIVE BRACING FORCE. FASTEN LATERAL BRACE(S) USING (0.122"X3") SPIRAL NAILS : 1 NAIL FOR 2x3 BRACE(S), 2 FOR 1x4, 2x4, 2x5, 3 FOR 2x6, 4 FOR 2x8, 5 FOR 2x10, AND 6 FOR 2x12.

END VERTICAL(S) MUST BE SHEATHED OR HAVE BRACES AS INDICATED IN THE MAX. UNBRACED LENGTH COLUMN OF THE TABLE BELOW

LOADING
TOTAL LOAD CASES: (4)

CHORDS

MEMB. FR-TO	MAX. FACTORED FORCE (LBS)	FACTORED VERT. LOAD (PLF) FROM	TO	LC1 MAX CSI (LC)	MAX. UNBRAC LENGTH
1- 2	0 / 29	-77.4	-77.4	0.10 (1)	10.00
2- 3	-1322 / 0	-77.4	-77.4	0.28 (1)	5.33
3- 4	-1103 / 0	-77.4	-77.4	0.27 (1)	5.71
4- 5	-885 / 0	-77.4	-77.4	0.25 (1)	6.22
5- 6	-1085 / 0	-77.4	-77.4	0.25 (1)	5.79
6- 7	-1221 / 0	-77.4	-77.4	0.25 (1)	5.53
14- 2	-1242 / 0	0.0	0.0	0.13 (1)	7.20
8- 7	-1140 / 0	0.0	0.0	0.12 (1)	7.45
14-13	0 / 0	-17.5	-17.5	0.11 (4)	10.00
13-12	0 / 1121	-17.5	-17.5	0.23 (1)	10.00
12-11	0 / 899	-17.5	-17.5	0.19 (1)	10.00
11-10	0 / 1037	-17.5	-17.5	0.21 (1)	10.00
10- 9	0 / 1037	-17.5	-17.5	0.21 (1)	10.00
9- 8	0 / 0	-17.5	-17.5	0.09 (4)	10.00

WEBS

MEMB. FR-TO	MAX. FACTORED FORCE (LBS)	MAX CSI (LC)
13- 3	-135 / 45	0.05 (1)
3-12	-304 / 0	0.26 (1)
12- 4	0 / 286	0.06 (1)
4-11	-26 / 0	0.02 (1)
11- 5	0 / 250	0.06 (1)
11- 6	-209 / 0	0.18 (1)
9- 6	-222 / 14	0.08 (1)
2-13	0 / 1145	0.26 (1)
9- 7	0 / 1083	0.24 (1)

DESIGN CRITERIA

SPECIFIED LOADS:

TOP CH.	LL	=	23.3	PSF
	DL	=	3.0	PSF
BOT CH.	LL	=	0.0	PSF
	DL	=	7.0	PSF
TOTAL LOAD		=	33.3	PSF

SPACING = 24.0 IN. C/C

LOADING IN FLAT SECTION BASED ON A SLOPE OF 6.00/12

THIS TRUSS IS DESIGNED FOR RESIDENTIAL OR SMALL BUILDING REQUIREMENTS OF PART 9, NBCC 2010

THIS DESIGN COMPLIES WITH:
- PART 9 OF OBC 2012 , BCBC 2012 , ABC 2014
- CSA 086-09
- TPIC 2011

(55 % OF 27.2 P.S.F. G.S.L. PLUS 8.4 P.S.F. RAIN LOAD) EQUALS 23.3 P.S.F. SPECIFIED ROOF LIVE LOAD

ALLOWABLE DEFL.(LL)= L/360 (0.82")
CALCULATED VERT. DEFL.(LL) = L/ 999 (0.04")
ALLOWABLE DEFL.(TL)= L/360 (0.82")
CALCULATED VERT. DEFL.(TL) = L/ 999 (0.07")

CSI: TC=0.28 (2-3:1) , BC=0.23 (12-13:1) , WB=0.26 (3-12:1) , SSI=0.16 (2-3:1)

DOL LUMBER=1.00 NAIL=1.00 LS BEND=1.10 COMP=1.10 SHEAR=1.10 TENS= 1.10

COMPANION LIVE LOAD FACTOR = 0.50

TRUSS PLATE MANUFACTURER IS NOT RESPONSIBLE FOR QUALITY CONTROL IN THE TRUSS MANUFACTURING PLANT .

NAIL VALUES

PLATE	GRIP(DRY) (PSI) MAX	MIN	SHEAR (PLI) MAX	MIN	SECTION (PLI) MAX	MIN
MT20	618	354	1667	822	2284	1656

PLATE PLACEMENT TOL. = 0.250 inches

PLATE ROTATION TOL. = 5.0 Deg.

JSI GRIP= 0.89 (9) (INPUT = 0.90)
JSI METAL= 0.45 (2) (INPUT = 1.00)

LICENSED PROFESSIONAL ENGINEER
P.M. TREVISAN
100136551
March 16th, 2017
PROVINCE OF ONTARIO

RECEIVED
TOWN OF MILTON
MAR 29, 2017
17-5327
BUILDING DIVISION

KOTT

JOB NAME	TRUSS NAME	QUANTITY	PLY	JOB DESC.	DRWG NO.
PT0317-093	T13	1	1	TRUSS DESC. LECCO RIDGE-BLOCK 343	

KOTT , Stouffville, ON, CGC

Version 8.100 S Feb 9 2017 MiTek Industries, Inc. Thu Mar 16 07:54:57 2017 Page 1
ID:EvTixTQDI5yR1QLotZTBr_yE?HJ-lhaPfFAnYzdlKxRgFwqmtlJB3rTpS4Zds6jqxBzaRHi

SCALE = 1:65.1

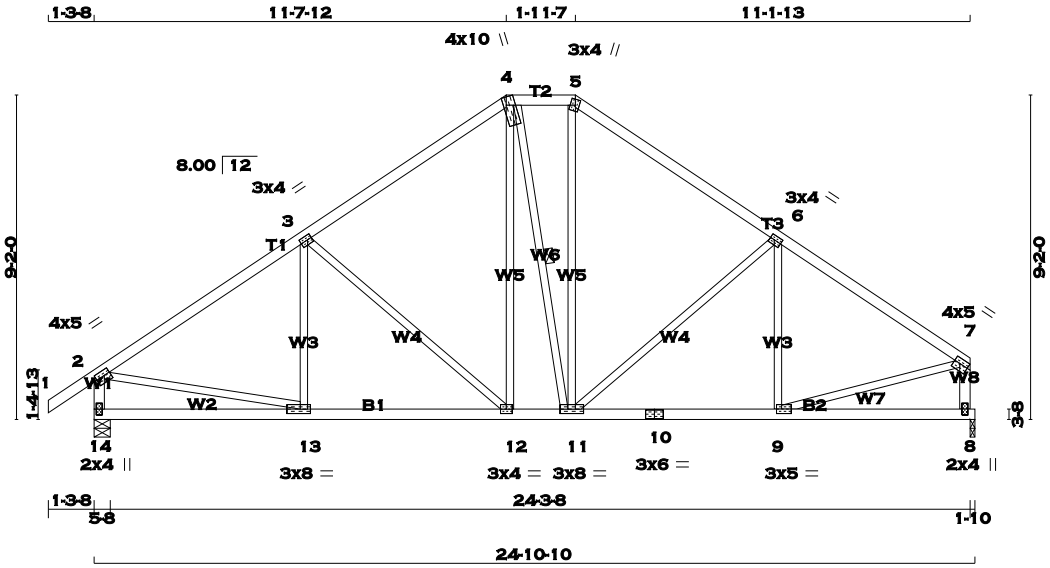

TOTAL WEIGHT = 116 lb

LUMBER
N. L. G. A. RULES

CHORDS	SIZE		LUMBER	DESCR.
1 - 4	2x4	DRY	No.2	SPF
4 - 5	2x4	DRY	No.2	SPF
5 - 7	2x4	DRY	No.2	SPF
14 - 2	2x4	DRY	No.2	SPF
8 - 7	2x4	DRY	No.2	SPF
14 - 10	2x4	DRY	No.2	SPF
10 - 8	2x4	DRY	No.2	SPF
ALL WEBS EXCEPT	2x3	DRY	No.2	SPF

DRY: SEASONED LUMBER.

PLATES (table is in inches)

JT	TYPE	PLATES	W	LEN	Y	X
2	TMVW-t	MT20	4.0	5.0	1.75	2.00
3	TMWW-t	MT20	3.0	4.0	1.50	1.50
4	TTWW+m	MT20	4.0	10.0	Edge	1.00
5	TTW+m	MT20	3.0	4.0	2.00	1.25
6	TMWW-t	MT20	3.0	4.0	1.50	1.50
7	TMVW-t	MT20	4.0	5.0	1.75	Edge
8	BMV1+p	MT20	2.0	4.0		
9	BMWW-t	MT20	3.0	5.0	1.50	1.75
10	BS-t	MT20	3.0	6.0		
11	BMWWW-t	MT20	3.0	8.0		
12	BMWW-t	MT20	3.0	4.0		
13	BMWW-t	MT20	3.0	8.0	1.50	3.50
14	BMV1+p	MT20	2.0	4.0		

Edge - INDICATES REFERENCE CORNER OF PLATE TOUCHES EDGE OF CHORD.

A SIZE FOR SIZE SUBSTITUTION OF MITEK MII20 WITH TEE-LOK TL20 PLATES IS ALLOWED.

DIMENSIONS, SUPPORTS AND LOADINGS SPECIFIED BY FABRICATOR TO BE VERIFIED BY BUILDING DESIGNER

BEARINGS

JT	FACTORED GROSS REACTION VERT	HORZ	MAXIMUM FACTORED GROSS REACTION DOWN	HORZ	UPLIFT	INPUT BRG IN-SX	REQRD BRG IN-SX
14	1280	0	1280	0	0	5-8	5-8
8	1174	0	1174	0	0	1-10	1-10

UNFACTORED REACTIONS

JT	1ST LCASE COMBINED	MAX./MIN. COMPONENT REACTIONS SNOW	LIVE	PERM.LIVE	WIND	DEAD	SOIL
14	896	640 / 0	0 / 0	0 / 0	0 / 0	256 / 0	0 / 0
8	824	576 / 0	0 / 0	0 / 0	0 / 0	248 / 0	0 / 0

BEARING MATERIAL TO BE SPF NO.2 OR BETTER AT JOINT(S) 14, 8

BRACING
TOP CHORD TO BE SHEATHED OR MAX. PURLIN SPACING = 5.19 FT.
MAX. UNBRACED BOTTOM CHORD LENGTH = 10.00 FT. OR RIGID CEILING DIRECTLY APPLIED.

ALL PITCH BREAKS AND PERIMETER CORNER JOINTS MUST BE LATERALLY RESTRAINED.

1 - 2x3 SPF No.2 LATERAL BRACE(S) AT 1/ 2 LENGTH OF 4-11. DBS = 20-0-0 . CBF = 2 LBS.

DBS = DIAGONAL BRACE SPACING (MAX). CBF = CUMULATIVE BRACING FORCE. FASTEN LATERAL BRACE(S) USING (0.122"X3") SPIRAL NAILS : 1 NAIL FOR 2x3 BRACE(S), 2 FOR 1x4, 2x4, 2x5, 3 FOR 2x6, 4 FOR 2x8, 5 FOR 2x10, AND 6 FOR 2x12.

END VERTICAL(S) MUST BE SHEATHED OR HAVE BRACES AS INDICATED IN THE MAX. UNBRACED LENGTH COLUMN OF THE TABLE BELOW

LOADING
TOTAL LOAD CASES: (4)

CHORDS

MEMB. FR-TO	MAX. FACTORED FORCE (LBS)	FACTORED VERT. LOAD (PLF) FROM	TO	LC1 MAX CSI (LC)	MAX. UNBRAC LENGTH
1- 2	0 / 29	-77.4	-77.4	0.10 (1)	10.00
2- 3	-1324 / 0	-77.4	-77.4	0.38 (1)	5.19
3- 4	-1013 / 0	-77.4	-77.4	0.35 (1)	5.77
4- 5	-817 / 0	-77.4	-77.4	0.04 (1)	6.25
5- 6	-1007 / 0	-77.4	-77.4	0.33 (1)	5.82
6- 7	-1239 / 0	-77.4	-77.4	0.34 (1)	5.38
14- 2	-1238 / 0	0.0	0.0	0.13 (1)	7.22
8- 7	-1135 / 0	0.0	0.0	0.12 (1)	7.45
14-13	0 / 0	-17.5	-17.5	0.15 (4)	10.00
13-12	0 / 1126	-17.5	-17.5	0.26 (1)	10.00
12-11	0 / 820	-17.5	-17.5	0.19 (1)	10.00
11-10	0 / 1056	-17.5	-17.5	0.23 (1)	10.00
10- 9	0 / 1056	-17.5	-17.5	0.23 (1)	10.00
9- 8	0 / 0	-17.5	-17.5	0.13 (4)	10.00

WEBS

MEMB. FR-TO	MAX. FACTORED FORCE (LBS)	MAX CSI (LC)
13- 3	-87 / 75	0.04 (1)
3-12	-410 / 0	0.49 (1)
12- 4	0 / 318	0.07 (1)
4-11	-13 / 0	0.01 (1)
11- 5	0 / 298	0.07 (1)
11- 6	-321 / 0	0.39 (1)
9- 6	-166 / 45	0.07 (1)
2-13	0 / 1145	0.26 (1)
9- 7	0 / 1091	0.25 (1)

DESIGN CRITERIA

SPECIFIED LOADS:

TOP CH.	LL	=	23.3	PSF
	DL	=	3.0	PSF
BOT CH.	LL	=	0.0	PSF
	DL	=	7.0	PSF
TOTAL LOAD		=	33.3	PSF

SPACING = 24.0 IN. C/C

LOADING IN FLAT SECTION BASED ON A SLOPE OF 6.00/12

THIS TRUSS IS DESIGNED FOR RESIDENTIAL OR SMALL BUILDING REQUIREMENTS OF PART 9, NBCC 2010

THIS DESIGN COMPLIES WITH:
- PART 9 OF OBC 2012 , BCBC 2012 , ABC 2014
- CSA 086-09
- TPIC 2011

(55 % OF 27.2 P.S.F. G.S.L. PLUS 8.4 P.S.F. RAIN LOAD) EQUALS 23.3 P.S.F. SPECIFIED ROOF LIVE LOAD

ALLOWABLE DEFL.(LL)= L/360 (0.82")
CALCULATED VERT. DEFL.(LL) = L/ 999 (0.04")
ALLOWABLE DEFL.(TL)= L/360 (0.82")
CALCULATED VERT. DEFL.(TL) = L/ 999 (0.08")

CSI: TC=0.38 (2-3:1) , BC=0.26 (12-13:1) , WB=0.49 (3-12:1) , SSI=0.18 (2-3:1)

DOL LUMBER=1.00 NAIL=1.00 LS BEND=1.10 COMP=1.10 SHEAR=1.10 TENS= 1.10

COMPANION LIVE LOAD FACTOR = 0.50

TRUSS PLATE MANUFACTURER IS NOT RESPONSIBLE FOR QUALITY CONTROL IN THE TRUSS MANUFACTURING PLANT .

NAIL VALUES

PLATE	GRIP(DRY) (PSI) MAX	MIN	SHEAR (PLI) MAX	MIN	SECTION (PLI) MAX	MIN
MT20	618	354	1667	822	2284	1656

PLATE PLACEMENT TOL. = 0.250 inches

PLATE ROTATION TOL. = 5.0 Deg.

JSI GRIP= 0.90 (9) (INPUT = 0.90)
JSI METAL= 0.45 (2) (INPUT = 1.00)

LICENSED PROFESSIONAL ENGINEER
P.M. TREVISAN
100136551
March 16th, 2017
PROVINCE OF ONTARIO

RECEIVED
TOWN OF MILTON
MAR 29, 2017
17-5327
BUILDING DIVISION

KOTT

JOB NAME	TRUSS NAME	QUANTITY	PLY	JOB DESC.	DRWG NO.
PT0317-093	T14	1	1	TRUSS DESC. LECCO RIDGE-BLOCK 343	ENG JOB: PT0317-093

KOTT , Stouffville, ON, CGC

Version 8.100 S Feb 9 2017 MiTek Industries, Inc. Thu Mar 16 07:54:57 2017 Page 1

ID:EvTixTQDI5yR1QLotZTBr_yE?HJ-lhaPfFAnYzdlKxRgFwqmtlJ9wrTiS7Gds6jqxBzaRHi

SCALE = 1:69.9

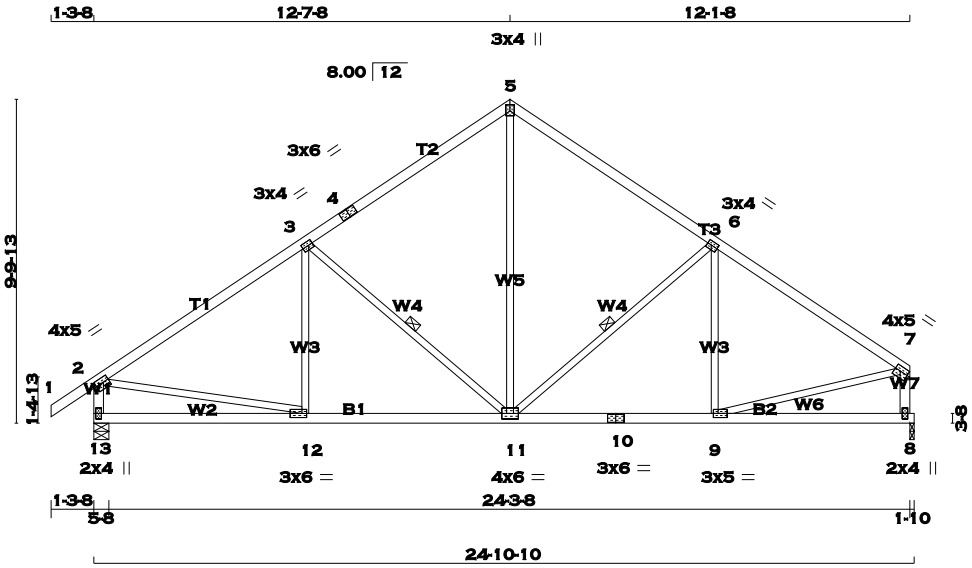

TOTAL WEIGHT = 105 lb

[M][F]

LUMBER

N. L. G. A. RULES

CHORDS	SIZE		LUMBER	DESCR.
1 - 4	2x4	DRY	No.2	SPF
4 - 5	2x4	DRY	No.2	SPF
5 - 7	2x4	DRY	No.2	SPF
13 - 2	2x4	DRY	No.2	SPF
8 - 7	2x4	DRY	No.2	SPF
13 - 10	2x4	DRY	No.2	SPF
10 - 8	2x4	DRY	No.2	SPF
ALL WEBS EXCEPT	2x3	DRY	No.2	SPF

DRY: SEASONED LUMBER.

PLATES (table is in inches)

JT	TYPE	PLATES	W	LEN	Y	X
2	TMVW-t	MT20	4.0	5.0	1.75	2.00
3	TMWW-t	MT20	3.0	4.0	1.50	1.50
4	TS-t	MT20	3.0	6.0		
5	TTW+p	MT20	3.0	4.0	2.25	1.50
6	TMWW-t	MT20	3.0	4.0	1.50	1.50
7	TMVW-t	MT20	4.0	5.0	1.75	Edge
8	BMV1+p	MT20	2.0	4.0		
9	BMWW-t	MT20	3.0	5.0	1.50	1.75
10	BS-t	MT20	3.0	6.0		
11	BMWWW-t	MT20	4.0	6.0		
12	BMWW-t	MT20	3.0	6.0	1.50	1.75
13	BMV1+p	MT20	2.0	4.0		

Edge - INDICATES REFERENCE CORNER OF PLATE TOUCHES EDGE OF CHORD.

A SIZE FOR SIZE SUBSTITUTION OF MITEK MII20 WITH TEE-LOK TL20 PLATES IS ALLOWED.

DIMENSIONS, SUPPORTS AND LOADINGS SPECIFIED BY FABRICATOR TO BE VERIFIED BY BUILDING DESIGNER

BEARINGS

JT	FACTORED GROSS REACTION VERT	HORZ	MAXIMUM FACTORED GROSS REACTION DOWN	HORZ	UPLIFT	INPUT BRG IN-SX	REQRD BRG IN-SX
13	1280	0	1280	0	0	5-8	5-8
8	1174	0	1174	0	0	1-10	1-10

UNFACTORED REACTIONS

JT	1ST LCASE COMBINED	MAX./MIN. COMPONENT REACTIONS SNOW	LIVE	PERM.LIVE	WIND	DEAD	SOIL
13	896	640 / 0	0 / 0	0 / 0	0 / 0	256 / 0	0 / 0
8	824	576 / 0	0 / 0	0 / 0	0 / 0	248 / 0	0 / 0

BEARING MATERIAL TO BE SPF NO.2 OR BETTER AT JOINT(S) 13, 8

BRACING

TOP CHORD TO BE SHEATHED OR MAX. PURLIN SPACING = 5.10 FT.
MAX. UNBRACED BOTTOM CHORD LENGTH = 10.00 FT. OR RIGID CEILING DIRECTLY APPLIED.

ALL PITCH BREAKS AND PERIMETER CORNER JOINTS MUST BE LATERALLY RESTRAINED.

1 - 2x3 SPF No.2 LATERAL BRACE(S) AT 1/ 2 LENGTH OF 3-11, 6-11. DBS = 20-0-0 . CBF = 58 LBS.

DBS = DIAGONAL BRACE SPACING (MAX). CBF = CUMULATIVE BRACING FORCE. FASTEN LATERAL BRACE(S) USING (0.122"X3") SPIRAL NAILS : 1 NAIL FOR 2x3 BRACE(S), 2 FOR 1x4, 2x4, 2x5, 3 FOR 2x6, 4 FOR 2x8, 5 FOR 2x10, AND 6 FOR 2x12.

END VERTICAL(S) MUST BE SHEATHED OR HAVE BRACES AS INDICATED IN THE MAX. UNBRACED LENGTH COLUMN OF THE TABLE BELOW

LOADING

TOTAL LOAD CASES: (4)

CHORDS

MEMB. FR-TO	MAX. FACTORED FORCE (LBS)	FACTORED VERT. LOAD (PLF) FROM	TO	LC1 MAX CSI (LC)	MAX. UNBRAC LENGTH
1- 2	0 / 29	-77.4	-77.4	0.10 (1)	10.00
2- 3	-1317 / 0	-77.4	-77.4	0.45 (1)	5.10
3- 4	-959 / 0	-77.4	-77.4	0.42 (1)	5.79
4- 5	-959 / 0	-77.4	-77.4	0.42 (1)	5.79
5- 6	-956 / 0	-77.4	-77.4	0.40 (1)	5.83
6- 7	-1243 / 0	-77.4	-77.4	0.40 (1)	5.29
13- 2	-1234 / 0	0.0	0.0	0.13 (1)	7.23
8- 7	-1132 / 0	0.0	0.0	0.12 (1)	7.46
13-12	0 / 0	-17.5	-17.5	0.17 (4)	10.00
12-11	0 / 1123	-17.5	-17.5	0.27 (1)	10.00
11-10	0 / 1062	-17.5	-17.5	0.25 (1)	10.00
10- 9	0 / 1062	-17.5	-17.5	0.25 (1)	10.00
9- 8	0 / 0	-17.5	-17.5	0.15 (4)	10.00

WEBS

MEMB. FR-TO	MAX. FACTORED FORCE (LBS)	MAX CSI (LC)
12- 3	-67 / 85	0.03 (1)
3-11	-466 / 0	0.21 (1)
11- 5	0 / 662	0.15 (1)
11- 6	-385 / 0	0.18 (1)
9- 6	-137 / 59	0.07 (1)
2-12	0 / 1139	0.26 (1)
9- 7	0 / 1091	0.25 (1)

DESIGN CRITERIA

SPECIFIED LOADS:

TOP	CH.	LL	=	23.3	PSF
		DL	=	3.0	PSF
BOT	CH.	LL	=	0.0	PSF
		DL	=	7.0	PSF
TOTAL	LOAD		=	33.3	PSF

SPACING = 24.0 IN. C/C

THIS TRUSS IS DESIGNED FOR RESIDENTIAL OR SMALL BUILDING REQUIREMENTS OF PART 9, NBCC 2010

THIS DESIGN COMPLIES WITH:
- PART 9 OF OBC 2012 , BCBC 2012 , ABC 2014
- CSA 086-09
- TPIC 2011

(55 % OF 27.2 P.S.F. G.S.L. PLUS 8.4 P.S.F. RAIN LOAD) EQUALS 23.3 P.S.F. SPECIFIED ROOF LIVE LOAD

ALLOWABLE DEFL.(LL)= L/360 (0.82")
CALCULATED VERT. DEFL.(LL) = L/ 999 (0.04")
ALLOWABLE DEFL.(TL)= L/360 (0.82")
CALCULATED VERT. DEFL.(TL) = L/ 999 (0.08")

CSI: TC=0.45 (2-3:1) , BC=0.27 (11-12:1) , WB=0.26 (2-12:1) , SSI=0.20 (2-3:1)

DOL LUMBER=1.00 NAIL=1.00 LS BEND=1.10 COMP=1.10 SHEAR=1.10 TENS= 1.10

COMPANION LIVE LOAD FACTOR = 0.50

TRUSS PLATE MANUFACTURER IS NOT RESPONSIBLE FOR QUALITY CONTROL IN THE TRUSS MANUFACTURING PLANT .

NAIL VALUES

PLATE	GRIP(DRY) (PSI) MAX	MIN	SHEAR (PLI) MAX	MIN	SECTION (PLI) MAX	MIN
MT20	618	354	1667	822	2284	1656

PLATE PLACEMENT TOL. = 0.250 inches

PLATE ROTATION TOL. = 5.0 Deg.

JSI GRIP= 0.90 (12) (INPUT = 0.90)
JSI METAL= 0.45 (2) (INPUT = 1.00)

LICENSED PROFESSIONAL ENGINEER
P.M. TREVISAN
100136551
March 16th, 2017
PROVINCE OF ONTARIO

RECEIVED
TOWN OF MILTON
MAR 29, 2017
17-5327
BUILDING DIVISION

KOTT

JOB NAME	TRUSS NAME	QUANTITY	PLY	JOB DESC.	DRWG NO.
PT0317-093	T15	1	1	TRUSS DESC. LECCO RIDGE-BLOCK 343	

KOTT , Stouffville, ON, CGC

Version 8.100 S Feb 9 2017 MiTek Industries, Inc. Thu Mar 16 07:54:58 2017 Page 1
ID:EvTixTQDI5yR1QLotZTBr_yE?HJ-Dt8ntbBPJHmcx50speL?QysIOEoeBVcm5mSNUdzaRHh

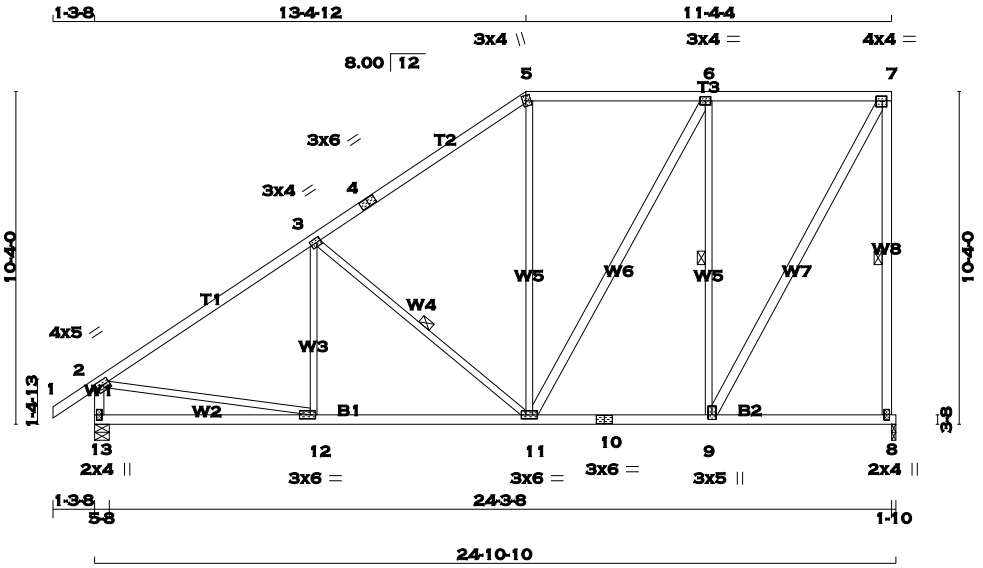

SCALE = 1:71.6

TOTAL WEIGHT = 132 lb

[M][F]

LUMBER

N. L. G. A. RULES

CHORDS	SIZE		LUMBER	DESCR.
1 - 4	2x4	DRY	No.2	SPF
4 - 5	2x4	DRY	No.2	SPF
5 - 7	2x4	DRY	No.2	SPF
8 - 7	2x4	DRY	No.2	SPF
13 - 2	2x4	DRY	No.2	SPF
13 - 10	2x4	DRY	No.2	SPF
10 - 8	2x4	DRY	No.2	SPF
ALL WEBS EXCEPT	2x3	DRY	No.2	SPF
11 - 6	2x4	DRY	No.2	SPF
9 - 7	2x4	DRY	No.2	SPF

DRY: SEASONED LUMBER.

PLATES (table is in inches)

JT	TYPE	PLATES	W	LEN	Y	X
2	TMVW-t	MT20	4.0	5.0	1.75	2.00
3	TMWW-t	MT20	3.0	4.0	1.50	1.50
4	TS-t	MT20	3.0	6.0		
5	TTW+m	MT20	3.0	4.0	2.00	1.25
6	TMWW-t	MT20	3.0	4.0		
7	TMVW-t	MT20	4.0	4.0	1.75	1.75
8	BMV1+p	MT20	2.0	4.0		
9	BMWW+t	MT20	3.0	5.0	1.75	1.50
10	BS-t	MT20	3.0	6.0		
11	BMWWW-t	MT20	3.0	6.0		
12	BMWW-t	MT20	3.0	6.0	1.50	2.00
13	BMV1+p	MT20	2.0	4.0		

A SIZE FOR SIZE SUBSTITUTION OF MITEK MII20 WITH TEE-LOK TL20 PLATES IS ALLOWED.

DIMENSIONS, SUPPORTS AND LOADINGS SPECIFIED BY FABRICATOR TO BE VERIFIED BY BUILDING DESIGNER

BEARINGS

JT	FACTORED GROSS REACTION VERT	HORZ	MAXIMUM FACTORED GROSS REACTION DOWN	HORZ	UPLIFT	INPUT BRG IN-SX	REQRD BRG IN-SX
8	1174	0	1174	0	0	1-10	1-10
13	1280	0	1280	0	0	5-8	5-8

UNFACTORED REACTIONS

JT	1ST LCASE COMBINED	MAX./MIN. COMPONENT REACTIONS SNOW	LIVE	PERM.LIVE	WIND	DEAD	SOIL
8	824	576 / 0	0 / 0	0 / 0	0 / 0	248 / 0	0 / 0
13	896	640 / 0	0 / 0	0 / 0	0 / 0	256 / 0	0 / 0

BEARING MATERIAL TO BE SPF NO.2 OR BETTER AT JOINT(S) 8, 13

BRACING

TOP CHORD TO BE SHEATHED OR MAX. PURLIN SPACING = 5.00 FT.
MAX. UNBRACED BOTTOM CHORD LENGTH = 10.00 FT. OR RIGID CEILING DIRECTLY APPLIED.

ALL PITCH BREAKS AND PERIMETER CORNER JOINTS MUST BE LATERALLY RESTRAINED.

1 - 2x3 SPF No.2 LATERAL BRACE(S) AT 1/ 2 LENGTH OF 7-8. DBS = 12-0-0 . CBF = 85 LBS.
1 - 2x3 SPF No.2 LATERAL BRACE(S) AT 1/ 2 LENGTH OF 3-11. DBS = 20-0-0 . CBF = 65 LBS.
1 - 2x3 SPF No.2 LATERAL BRACE(S) AT 1/ 2 LENGTH OF 6-9. DBS = 16-0-0 . CBF = 86 LBS.

DBS = DIAGONAL BRACE SPACING (MAX). CBF = CUMULATIVE BRACING FORCE. FASTEN LATERAL BRACE(S) USING (0.122"X3") SPIRAL NAILS : 1 NAIL FOR 2x3 BRACE(S), 2 FOR 1x4, 2x4, 2x5, 3 FOR 2x6, 4 FOR 2x8, 5 FOR 2x10, AND 6 FOR 2x12.

END VERTICAL(S) MUST BE SHEATHED OR HAVE BRACES AS INDICATED IN THE MAX. UNBRACED LENGTH COLUMN OF THE TABLE BELOW

LOADING

TOTAL LOAD CASES: (4)

CHORDS

MEMB. FR-TO	MAX. FACTORED FORCE (LBS)	FACTORED VERT. LOAD LC1 (PLF) FROM	TO	MAX CSI (LC)	MAX. UNBRAC LENGTH
1- 2	0 / 29	-77.4	-77.4	0.10 (1)	10.00
2- 3	-1312 / 0	-77.4	-77.4	0.52 (1)	5.00
3- 4	-902 / 0	-77.4	-77.4	0.48 (1)	5.82
4- 5	-902 / 0	-77.4	-77.4	0.48 (1)	5.82
5- 6	-721 / 0	-77.4	-77.4	0.32 (1)	6.25
6- 7	-547 / 0	-77.4	-77.4	0.32 (1)	6.25
8- 7	-1134 / 0	0.0	0.0	0.60 (1)	5.97
13- 2	-1232 / 0	0.0	0.0	0.13 (1)	7.23
13-12	0 / 0	-17.5	-17.5	0.20 (4)	10.00
12-11	0 / 1121	-17.5	-17.5	0.29 (1)	10.00
11-10	0 / 547	-17.5	-17.5	0.17 (4)	10.00
10- 9	0 / 547	-17.5	-17.5	0.17 (4)	10.00
9- 8	0 / 0	-17.5	-17.5	0.13 (4)	10.00

WEBS

MEMB. FR-TO	MAX. FACTORED FORCE (LBS)	MAX CSI (LC)
12- 3	-44 / 100	0.03 (4)
3-11	-523 / 0	0.28 (1)
11- 5	0 / 123	0.04 (4)
11- 6	0 / 359	0.06 (1)
9- 6	-858 / 0	0.63 (1)
9- 7	0 / 1111	0.18 (1)
2-12	0 / 1135	0.26 (1)

DESIGN CRITERIA

SPECIFIED LOADS:

TOP	CH.	LL	=	23.3	PSF
		DL	=	3.0	PSF
BOT	CH.	LL	=	0.0	PSF
		DL	=	7.0	PSF
TOTAL	LOAD		=	33.3	PSF

SPACING = 24.0 IN. C/C

LOADING IN FLAT SECTION BASED ON A SLOPE OF 6.00/12

THIS TRUSS IS DESIGNED FOR RESIDENTIAL OR SMALL BUILDING REQUIREMENTS OF PART 9, NBCC 2010

THIS DESIGN COMPLIES WITH:
- PART 9 OF OBC 2012 , BCBC 2012 , ABC 2014
- CSA 086-09
- TPIC 2011

(55 % OF 27.2 P.S.F. G.S.L. PLUS 8.4 P.S.F. RAIN LOAD) EQUALS 23.3 P.S.F. SPECIFIED ROOF LIVE LOAD

ALLOWABLE DEFL.(LL)= L/360 (0.82")
CALCULATED VERT. DEFL.(LL) = L/ 999 (0.05")
ALLOWABLE DEFL.(TL)= L/360 (0.82")
CALCULATED VERT. DEFL.(TL) = L/ 999 (0.10")

CSI: TC=0.60 (7-8:1) , BC=0.29 (11-12:1) , WB=0.63 (6-9:1) , SSI=0.21 (6-7:1)

DOL LUMBER=1.00 NAIL=1.00 LS BEND=1.10 COMP=1.10 SHEAR=1.10 TENS= 1.10

COMPANION LIVE LOAD FACTOR = 0.50

TRUSS PLATE MANUFACTURER IS NOT RESPONSIBLE FOR QUALITY CONTROL IN THE TRUSS MANUFACTURING PLANT .

NAIL VALUES

PLATE	GRIP(DRY) (PSI) MAX	MIN	SHEAR (PLI) MAX	MIN	SECTION (PLI) MAX	MIN
MT20	618	354	1667	822	2284	1656

PLATE PLACEMENT TOL. = 0.250 inches

PLATE ROTATION TOL. = 5.0 Deg.

JSI GRIP= 0.89 (12) (INPUT = 0.90)
JSI METAL= 0.45 (2) (INPUT = 1.00)

LICENSED PROFESSIONAL ENGINEER
P.M. TREVISAN
100136551
March 16th, 2017
PROVINCE OF ONTARIO

RECEIVED
TOWN OF MILTON
MAR 29, 2017
17-5327
BUILDING DIVISION

KOTT

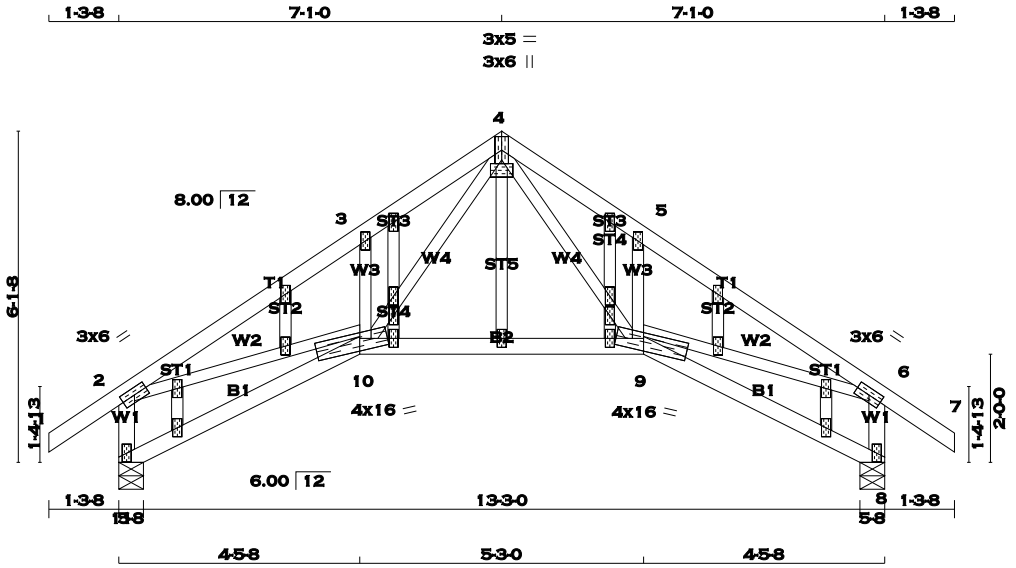

TOTAL WEIGHT = 70 lb

[M][F]

LUMBER

N. L. G. A. RULES

CHORDS	SIZE		LUMBER	DESCR.
1 - 4	2x4	DRY	No.2	SPF
4 - 7	2x4	DRY	No.2	SPF
11 - 2	2x4	DRY	No.2	SPF
8 - 6	2x4	DRY	No.2	SPF
11 - 10	2x4	DRY	No.2	SPF
10 - 9	2x4	DRY	No.2	SPF
9 - 8	2x4	DRY	No.2	SPF
ALL WEBS EXCEPT	2x3	DRY	No.2	SPF
ALL GABLE WEBS	2x3	DRY	No.2	SPF

DRY: SEASONED LUMBER.

GABLE STUDS SPACED AT 2-0-0 OC.

PLATES (table is in inches)

JT	TYPE	PLATES	W	LEN	Y	X
2	TMVW-t	MT20	3.0	6.0		
3	TMW+w	MT20	2.0	4.0		
4	TTWW+p	MT20	3.0	6.0		
4	NP-p	MT20	3.0	5.0	0.75	2.50
5	TMW+w	MT20	2.0	4.0		
6	TMVW-t	MT20	3.0	6.0		
8	BMV1+p	MT20	2.0	4.0		
9	BBWWW-m	MT20	4.0	16.0	2.75	6.00
10	BBWWW-m	MT20	4.0	16.0	2.75	6.00
11	BMV1+p	MT20	2.0	4.0		
12, 13, 13, 14, 15, 16, 17, 18, 19, 20, 21, 22, 22, 23, 24, 25, 26						
12	NP+w	MT20	2.0	4.0		

A SIZE FOR SIZE SUBSTITUTION OF MITEK MII20 WITH TEE-LOK TL20 PLATES IS ALLOWED.

DIMENSIONS, SUPPORTS AND LOADINGS SPECIFIED BY FABRICATOR TO BE VERIFIED BY BUILDING DESIGNER

BEARINGS

JT	FACTORED GROSS REACTION VERT	HORZ	MAXIMUM FACTORED GROSS REACTION DOWN	HORZ	UPLIFT	INPUT BRG IN-SX	REQRD BRG IN-SX
11	778	0	778	0	0	5-8	5-8
8	778	0	778	0	0	5-8	5-8

UNFACTORED REACTIONS

JT	1ST LCASE COMBINED	MAX./MIN. COMPONENT REACTIONS SNOW	LIVE	PERM.LIVE	WIND	DEAD	SOIL
11	544	394 / 0	0 / 0	0 / 0	0 / 0	150 / 0	0 / 0
8	544	394 / 0	0 / 0	0 / 0	0 / 0	150 / 0	0 / 0

BEARING MATERIAL TO BE SPF NO.2 OR BETTER AT JOINT(S) 11, 8

BRACING

TOP CHORD TO BE SHEATHED OR MAX. PURLIN SPACING = 5.52 FT.
MAX. UNBRACED BOTTOM CHORD LENGTH = 10.00 FT. OR RIGID CEILING DIRECTLY APPLIED.

ALL PITCH BREAKS AND PERIMETER CORNER JOINTS MUST BE LATERALLY RESTRAINED.

LOADING

TOTAL LOAD CASES: (4)

CHORDS

MEMB. FR-TO	MAX. FACTORED FORCE (LBS)	FACTORED VERT. LOAD (PLF) FROM	TO	LC1 MAX CSI (LC)	MAX. UNBRAC LENGTH
1- 2	0 / 29	-77.4	-77.4	0.10 (1)	10.00
2- 3	-1256 / 0	-77.4	-77.4	0.21 (1)	5.52
3- 4	-1297 / 0	-77.4	-77.4	0.13 (1)	5.54
4- 5	-1297 / 0	-77.4	-77.4	0.13 (1)	5.54
5- 6	-1256 / 0	-77.4	-77.4	0.21 (1)	5.52
6- 7	0 / 29	-77.4	-77.4	0.10 (1)	10.00
11- 2	-739 / 0	0.0	0.0	0.08 (1)	7.81
8- 6	-739 / 0	0.0	0.0	0.08 (1)	7.81
11-10	0 / 0	-17.5	-17.5	0.10 (4)	10.00
10- 9	0 / 611	-17.5	-17.5	0.18 (4)	10.00
9- 8	0 / 0	-17.5	-17.5	0.10 (4)	10.00

WEBS

MEMB. FR-TO	MAX. FACTORED FORCE (LBS)	MAX CSI (LC)
4- 9	0 / 788	0.18 (1)
9- 5	-343 / 0	0.05 (1)
10- 4	0 / 788	0.18 (1)
10- 3	-343 / 0	0.05 (1)
2-10	0 / 1079	0.24 (1)
9- 6	0 / 1079	0.24 (1)

DESIGN CRITERIA

SPECIFIED LOADS:

TOP CH.	LL	=	23.3	PSF
	DL	=	3.0	PSF
BOT CH.	LL	=	0.0	PSF
	DL	=	7.0	PSF
TOTAL LOAD		=	33.3	PSF

SPACING = 24.0 IN. C/C

THIS TRUSS IS DESIGNED FOR RESIDENTIAL OR SMALL BUILDING REQUIREMENTS OF PART 9, NBCC 2010

THIS DESIGN COMPLIES WITH:
- PART 9 OF OBC 2012 , BCBC 2012 , ABC 2014
- CSA 086-09
- TPIC 2011

(55 % OF 27.2 P.S.F. G.S.L. PLUS 8.4 P.S.F. RAIN LOAD) EQUALS 23.3 P.S.F. SPECIFIED ROOF LIVE LOAD

ALLOWABLE DEFL.(LL)= L/360 (0.47")
CALCULATED VERT. DEFL.(LL) = L/ 999 (0.05")
ALLOWABLE DEFL.(TL)= L/360 (0.47")
CALCULATED VERT. DEFL.(TL) = L/ 999 (0.11")

CSI: TC=0.21 (2-3:1) , BC=0.18 (9-10:4) , WB=0.24 (6-9:1) , SSI=0.13 (2-3:1)

DOL LUMBER=1.00 NAIL=1.00 LS BEND=1.10 COMP=1.10 SHEAR=1.10 TENS= 1.10

COMPANION LIVE LOAD FACTOR = 0.50

AUTOSOLVE HEELS OFF

TRUSS PLATE MANUFACTURER IS NOT RESPONSIBLE FOR QUALITY CONTROL IN THE TRUSS MANUFACTURING PLANT .

NAIL VALUES

PLATE	GRIP(DRY) (PSI) MAX	MIN	SHEAR (PLI) MAX	MIN	SECTION (PLI) MAX	MIN
MT20	618	354	1667	822	2284	1656

PLATE PLACEMENT TOL. = 0.250 inches

PLATE ROTATION TOL. = 0.5 Deg.

JSI GRIP= 0.88 (4) (INPUT = 0.90)
JSI METAL= 0.35 (6) (INPUT = 1.00)

LICENSED PROFESSIONAL ENGINEER
P.M. TREVISAN
100136551
March 16th, 2017
PROVINCE OF ONTARIO

RECEIVED
TOWN OF MILTON
MAR 29, 2017
17-5327
BUILDING DIVISION

KOTT

JOB NAME	TRUSS NAME	QUANTITY	PLY	JOB DESC.	DRWG NO.
PT0317-093	**T17**	**1**	**1**	TRUSS DESC. LECCO RIDGE-BLOCK 343	ENG JOB: PT0317-093

KOTT , Stouffville, ON, CGC

Version 8.100 S Feb 9 2017 MiTek Industries, Inc. Thu Mar 16 07:54:59 2017 Page 1

ID:EvTixTQDI5yR1QLotZTBr_yE?HJ-h4i94xC14auTZFb2MLsEyAOZ9eAUw2_wKQCw04zaRHg

SCALE = 1:45.8

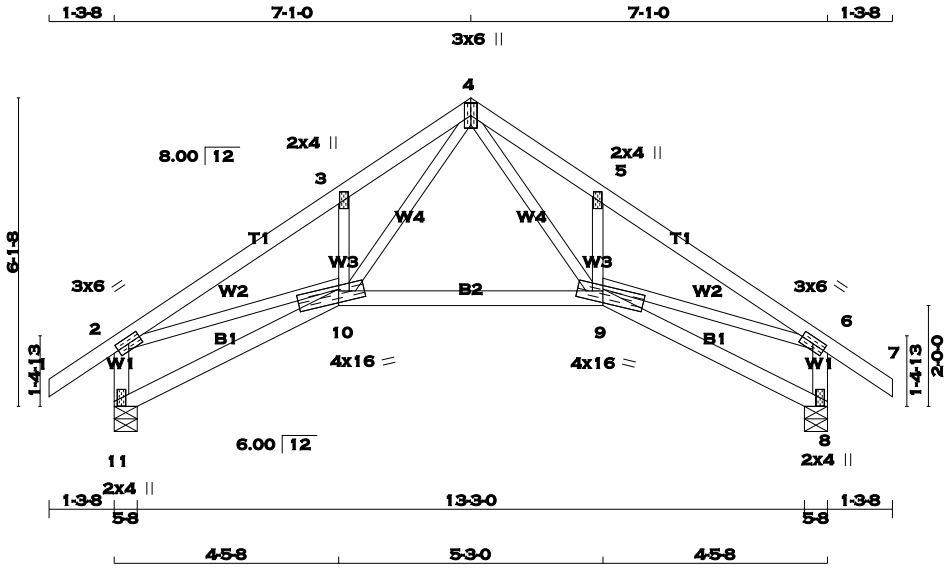

TOTAL WEIGHT = 61 lb

[M][F]

LUMBER

N. L. G. A. RULES

CHORDS	SIZE		LUMBER	DESCR.
1 - 4	2x4	DRY	No.2	SPF
4 - 7	2x4	DRY	No.2	SPF
11 - 2	2x4	DRY	No.2	SPF
8 - 6	2x4	DRY	No.2	SPF
11 - 10	2x4	DRY	No.2	SPF
10 - 9	2x4	DRY	No.2	SPF
9 - 8	2x4	DRY	No.2	SPF
ALL WEBS EXCEPT	2x3	DRY	No.2	SPF

DRY: SEASONED LUMBER.

PLATES (table is in inches)

JT	TYPE	PLATES	W	LEN	Y	X
2	TMVW-t	MT20	3.0	6.0		
3	TMW+w	MT20	2.0	4.0		
4	TTWW+p	MT20	3.0	6.0		
5	TMW+w	MT20	2.0	4.0		
6	TMVW-t	MT20	3.0	6.0		
8	BMV1+p	MT20	2.0	4.0		
9	BBWWW-m	MT20	4.0	16.0	2.75	6.00
10	BBWWW-m	MT20	4.0	16.0	2.75	6.00
11	BMV1+p	MT20	2.0	4.0		

A SIZE FOR SIZE SUBSTITUTION OF MITEK MII20 WITH TEE-LOK TL20 PLATES IS ALLOWED.

DIMENSIONS, SUPPORTS AND LOADINGS SPECIFIED BY FABRICATOR TO BE VERIFIED BY BUILDING DESIGNER

BEARINGS

JT	FACTORED GROSS REACTION VERT	HORZ	MAXIMUM FACTORED GROSS REACTION DOWN	HORZ	UPLIFT	INPUT BRG IN-SX	REQRD BRG IN-SX
11	778	0	778	0	0	5-8	5-8
8	778	0	778	0	0	5-8	5-8

UNFACTORED REACTIONS

JT	1ST LCASE COMBINED	MAX./MIN. COMPONENT REACTIONS SNOW	LIVE	PERM.LIVE	WIND	DEAD	SOIL
11	544	394 / 0	0 / 0	0 / 0	0 / 0	150 / 0	0 / 0
8	544	394 / 0	0 / 0	0 / 0	0 / 0	150 / 0	0 / 0

BEARING MATERIAL TO BE SPF NO.2 OR BETTER AT JOINT(S) 11, 8

BRACING

TOP CHORD TO BE SHEATHED OR MAX. PURLIN SPACING = 5.52 FT.
MAX. UNBRACED BOTTOM CHORD LENGTH = 10.00 FT. OR RIGID CEILING DIRECTLY APPLIED.

ALL PITCH BREAKS AND PERIMETER CORNER JOINTS MUST BE LATERALLY RESTRAINED.

LOADING

TOTAL LOAD CASES: (4)

CHORDS

MEMB. FR-TO	MAX. FACTORED FORCE (LBS)	FACTORED VERT. LOAD (PLF) FROM	TO	LC1 CSI (LC)	MAX UNBRAC LENGTH
1- 2	0 / 29	-77.4	-77.4	0.10 (1)	10.00
2- 3	-1256 / 0	-77.4	-77.4	0.21 (1)	5.52
3- 4	-1297 / 0	-77.4	-77.4	0.13 (1)	5.54
4- 5	-1297 / 0	-77.4	-77.4	0.13 (1)	5.54
5- 6	-1256 / 0	-77.4	-77.4	0.21 (1)	5.52
6- 7	0 / 29	-77.4	-77.4	0.10 (1)	10.00
11- 2	-739 / 0	0.0	0.0	0.08 (1)	7.81
8- 6	-739 / 0	0.0	0.0	0.08 (1)	7.81
11-10	0 / 0	-17.5	-17.5	0.10 (4)	10.00
10- 9	0 / 611	-17.5	-17.5	0.18 (4)	10.00
9- 8	0 / 0	-17.5	-17.5	0.10 (4)	10.00

WEBS

MEMB. FR-TO	MAX. FACTORED FORCE (LBS)	MAX CSI (LC)
4- 9	0 / 788	0.18 (1)
9- 5	-343 / 0	0.05 (1)
10- 4	0 / 788	0.18 (1)
10- 3	-343 / 0	0.05 (1)
2-10	0 / 1079	0.24 (1)
9- 6	0 / 1079	0.24 (1)

DESIGN CRITERIA

SPECIFIED LOADS:

TOP CH.	LL	=	23.3	PSF
	DL	=	3.0	PSF
BOT CH.	LL	=	0.0	PSF
	DL	=	7.0	PSF
TOTAL LOAD		=	33.3	PSF

SPACING = 24.0 IN. C/C

THIS TRUSS IS DESIGNED FOR RESIDENTIAL OR SMALL BUILDING REQUIREMENTS OF PART 9, NBCC 2010

THIS DESIGN COMPLIES WITH:
- PART 9 OF OBC 2012 , BCBC 2012 , ABC 2014
- CSA 086-09
- TPIC 2011

(55 % OF 27.2 P.S.F. G.S.L. PLUS 8.4 P.S.F. RAIN LOAD) EQUALS 23.3 P.S.F. SPECIFIED ROOF LIVE LOAD

ALLOWABLE DEFL.(LL)= L/360 (0.47")
CALCULATED VERT. DEFL.(LL) = L/ 999 (0.05")
ALLOWABLE DEFL.(TL)= L/360 (0.47")
CALCULATED VERT. DEFL.(TL) = L/ 999 (0.11")

CSI: TC=0.21 (2-3:1) , BC=0.18 (9-10:4) , WB=0.24 (6-9:1) , SSI=0.13 (2-3:1)

DOL LUMBER=1.00 NAIL=1.00 LS BEND=1.10 COMP=1.10 SHEAR=1.10 TENS= 1.10

COMPANION LIVE LOAD FACTOR = 0.50

AUTOSOLVE HEELS OFF

TRUSS PLATE MANUFACTURER IS NOT RESPONSIBLE FOR QUALITY CONTROL IN THE TRUSS MANUFACTURING PLANT .

NAIL VALUES

PLATE	GRIP(DRY) (PSI) MAX	MIN	SHEAR (PLI) MAX	MIN	SECTION (PLI) MAX	MIN
MT20	618	354	1667	822	2284	1656

PLATE PLACEMENT TOL. = 0.250 inches

PLATE ROTATION TOL. = 5.0 Deg.

JSI GRIP= 0.88 (4) (INPUT = 0.90)
JSI METAL= 0.35 (6) (INPUT = 1.00)

LICENSED PROFESSIONAL ENGINEER
P.M. TREVISAN
100136551
March 16th, 2017
PROVINCE OF ONTARIO

RECEIVED
TOWN OF MILTON
MAR 29, 2017
17-5327
BUILDING DIVISION

KOTT

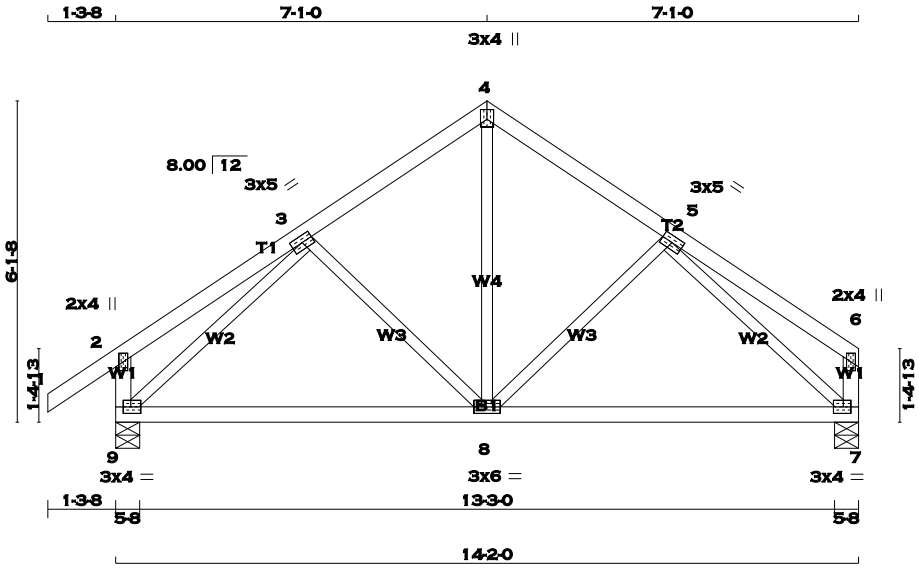

TOTAL WEIGHT = 3 X 59 = 178 lb

[M][F]

LUMBER

N. L. G. A. RULES

CHORDS	SIZE		LUMBER	DESCR.
1 - 4	2x4	DRY	No.2	SPF
4 - 6	2x4	DRY	No.2	SPF
9 - 2	2x4	DRY	No.2	SPF
7 - 6	2x4	DRY	No.2	SPF
9 - 7	2x4	DRY	No.2	SPF
ALL WEBS EXCEPT	2x3	DRY	No.2	SPF

DRY: SEASONED LUMBER.

PLATES (table is in inches)

JT	TYPE	PLATES	W	LEN	Y	X
2	TMV+p	MT20	2.0	4.0		
3	TMWW-t	MT20	3.0	5.0		
4	TTW+p	MT20	3.0	4.0	2.25	1.50
5	TMWW-t	MT20	3.0	5.0		
6	TMV+p	MT20	2.0	4.0		
7	BMVW1-t	MT20	3.0	4.0	1.50	1.75
8	BMWWW-t	MT20	3.0	6.0		
9	BMVW1-t	MT20	3.0	4.0	1.50	1.75

A SIZE FOR SIZE SUBSTITUTION OF MITEK MII20 WITH TEE-LOK TL20 PLATES IS ALLOWED.

DIMENSIONS, SUPPORTS AND LOADINGS SPECIFIED BY FABRICATOR TO BE VERIFIED BY BUILDING DESIGNER

BEARINGS

JT	FACTORED GROSS REACTION VERT	HORZ	MAXIMUM FACTORED GROSS REACTION DOWN	HORZ	UPLIFT	INPUT BRG IN-SX	REQRD BRG IN-SX
9	778	0	778	0	0	5-8	5-8
7	672	0	672	0	0	5-8	5-8

UNFACTORED REACTIONS

JT	1ST LCASE COMBINED	MAX./MIN. COMPONENT REACTIONS SNOW	LIVE	PERM.LIVE	WIND	DEAD	SOIL
9	544	394 / 0	0 / 0	0 / 0	0 / 0	150 / 0	0 / 0
7	472	330 / 0	0 / 0	0 / 0	0 / 0	142 / 0	0 / 0

BEARING MATERIAL TO BE SPF NO.2 OR BETTER AT JOINT(S) 9, 7

BRACING

TOP CHORD TO BE SHEATHED OR MAX. PURLIN SPACING = 6.25 FT.
MAX. UNBRACED BOTTOM CHORD LENGTH = 10.00 FT. OR RIGID CEILING DIRECTLY APPLIED.

ALL PITCH BREAKS AND PERIMETER CORNER JOINTS MUST BE LATERALLY RESTRAINED.

LOADING

TOTAL LOAD CASES: (4)

CHORDS

MEMB. FR-TO	MAX. FACTORED FORCE (LBS)	FACTORED VERT. LOAD (PLF) FROM	TO	LC1 MAX CSI (LC)	MAX. UNBRAC LENGTH
1- 2	0 / 29	-77.4	-77.4	0.10 (1)	10.00
2- 3	0 / 17	-77.4	-77.4	0.15 (1)	10.00
3- 4	-531 / 0	-77.4	-77.4	0.12 (1)	6.25
4- 5	-531 / 0	-77.4	-77.4	0.12 (1)	6.25
5- 6	0 / 17	-77.4	-77.4	0.15 (1)	10.00
9- 2	-212 / 0	0.0	0.0	0.02 (1)	7.81
7- 6	-106 / 0	0.0	0.0	0.01 (1)	7.81
9- 8	0 / 534	-17.5	-17.5	0.29 (4)	10.00
8- 7	0 / 534	-17.5	-17.5	0.29 (4)	10.00

WEBS

MEMB. FR-TO	MAX. FACTORED FORCE (LBS)	MAX CSI (LC)
8- 4	0 / 357	0.08 (1)
8- 5	-147 / 6	0.06 (1)
3- 8	-147 / 6	0.06 (1)
9- 3	-744 / 0	0.29 (1)
5- 7	-744 / 0	0.29 (1)

DESIGN CRITERIA

SPECIFIED LOADS:

TOP	CH.	LL	=	23.3	PSF
		DL	=	3.0	PSF
BOT	CH.	LL	=	0.0	PSF
		DL	=	7.0	PSF
TOTAL	LOAD		=	33.3	PSF

SPACING = 24.0 IN. C/C

THIS TRUSS IS DESIGNED FOR RESIDENTIAL OR SMALL BUILDING REQUIREMENTS OF PART 9, NBCC 2010

THIS DESIGN COMPLIES WITH:
- PART 9 OF OBC 2012 , BCBC 2012 , ABC 2014
- CSA 086-09
- TPIC 2011

(55 % OF 27.2 P.S.F. G.S.L. PLUS 8.4 P.S.F. RAIN LOAD) EQUALS 23.3 P.S.F. SPECIFIED ROOF LIVE LOAD

ALLOWABLE DEFL.(LL)= L/360 (0.47")
CALCULATED VERT. DEFL.(LL) = L/ 999 (0.01")
ALLOWABLE DEFL.(TL)= L/360 (0.47")
CALCULATED VERT. DEFL.(TL) = L/ 999 (0.06")

CSI: TC=0.15 (2-3:1) , BC=0.29 (8-9:4) , WB=0.29 (3-9:1) , SSI=0.11 (3-4:1)

DOL LUMBER=1.00 NAIL=1.00 LS BEND=1.10 COMP=1.10 SHEAR=1.10 TENS= 1.10

COMPANION LIVE LOAD FACTOR = 0.50

TRUSS PLATE MANUFACTURER IS NOT RESPONSIBLE FOR QUALITY CONTROL IN THE TRUSS MANUFACTURING PLANT .

NAIL VALUES

PLATE	GRIP(DRY) (PSI) MAX	MIN	SHEAR (PLI) MAX	MIN	SECTION (PLI) MAX	MIN
MT20	618	354	1667	822	2284	1656

PLATE PLACEMENT TOL. = 0.250 inches

PLATE ROTATION TOL. = 5.0 Deg.

JSI GRIP= 0.82 (5) (INPUT = 0.90)
JSI METAL= 0.21 (3) (INPUT = 1.00)

LICENSED PROFESSIONAL ENGINEER
P.M. TREVISAN
100136551
March 16th, 2017
PROVINCE OF ONTARIO

RECEIVED
TOWN OF MILTON
MAR 29, 2017
17-5327
BUILDING DIVISION

KOTT

JOB NAME	TRUSS NAME	QUANTITY	PLY	JOB DESC.	DRWG NO.
PT0317-093	**T19**	**3**	**1**	TRUSS DESC. LECCO RIDGE-BLOCK 343	ENG JOB: PT0317-093

KOTT , Stouffville, ON, CGC

Version 8.100 S Feb 9 2017 MiTek Industries, Inc. Thu Mar 16 07:55:00 2017 Page 1

ID:EvTixTQDI5yR1QLotZTBr_yE?HJ-9GFXHHDfru0KBPAEw3OTVNxls2UMfUj3Y4xUYWzaRHf

SCALE = 1:43.9

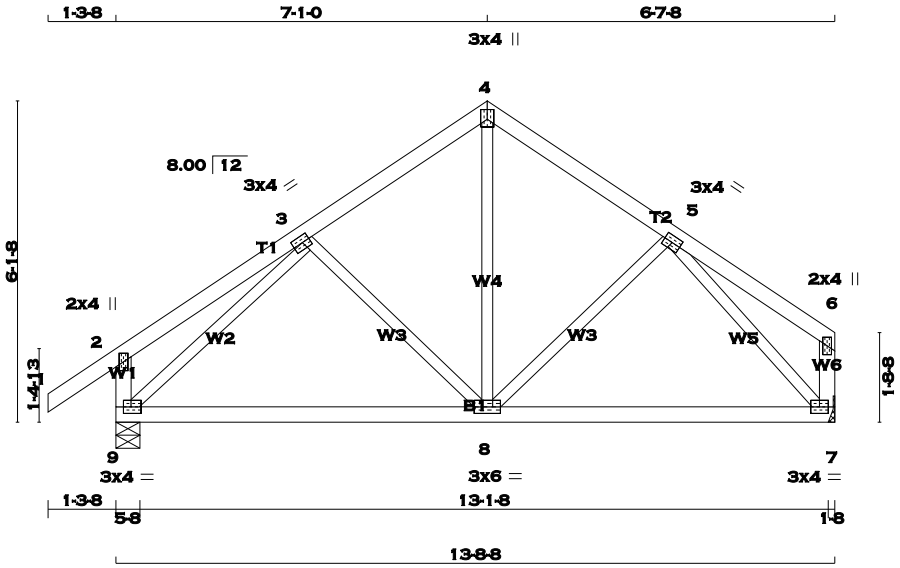

TOTAL WEIGHT = 3 X 58 = 175 lb

[M][F]

LUMBER

N. L. G. A. RULES

CHORDS	SIZE		LUMBER	DESCR.
1 - 4	2x4	DRY	No.2	SPF
4 - 6	2x4	DRY	No.2	SPF
9 - 2	2x4	DRY	No.2	SPF
7 - 6	2x4	DRY	No.2	SPF
9 - 7	2x4	DRY	No.2	SPF
ALL WEBS EXCEPT	2x3	DRY	No.2	SPF

DRY: SEASONED LUMBER.

PLATES (table is in inches)

JT	TYPE	PLATES	W	LEN	Y	X
2	TMV+p	MT20	2.0	4.0		
3	TMWW-t	MT20	3.0	4.0	1.50	1.75
4	TTW+p	MT20	3.0	4.0	2.25	1.50
5	TMWW-t	MT20	3.0	4.0		
6	TMV+p	MT20	2.0	4.0		
7	BMVW1-t	MT20	3.0	4.0		
8	BMWWW-t	MT20	3.0	6.0		
9	BMVW1-t	MT20	3.0	4.0	1.50	1.75

A SIZE FOR SIZE SUBSTITUTION OF MITEK MII20 WITH TEE-LOK TL20 PLATES IS ALLOWED.

DIMENSIONS, SUPPORTS AND LOADINGS SPECIFIED BY FABRICATOR TO BE VERIFIED BY BUILDING DESIGNER

BEARINGS

JT	FACTORED GROSS REACTION VERT	HORZ	MAXIMUM FACTORED GROSS REACTION DOWN	HORZ	UPLIFT	INPUT BRG IN-SX	REQRD BRG IN-SX
9	756	0	756	0	0	5-8	5-8
7	650	0	650	0	0	HANGER BY OTHERS MIN. SEAT SIZE: 1-8	

UNFACTORED REACTIONS

JT	1ST LCASE COMBINED	MAX./MIN. COMPONENT REACTIONS SNOW	LIVE	PERM.LIVE	WIND	DEAD	SOIL
9	528	383 / 0	0 / 0	0 / 0	0 / 0	145 / 0	0 / 0
7	456	319 / 0	0 / 0	0 / 0	0 / 0	137 / 0	0 / 0

BEARING MATERIAL TO BE SPF NO.2 OR BETTER AT JOINT(S) 9

BRACING

TOP CHORD TO BE SHEATHED OR MAX. PURLIN SPACING = 6.25 FT.
MAX. UNBRACED BOTTOM CHORD LENGTH = 10.00 FT. OR RIGID CEILING DIRECTLY APPLIED.

ALL PITCH BREAKS AND PERIMETER CORNER JOINTS MUST BE LATERALLY RESTRAINED.

LOADING

TOTAL LOAD CASES: (4)

CHORDS

MEMB. FR-TO	MAX. FACTORED FORCE (LBS)	VERT. LOAD (PLF) FROM	TO	LC1 MAX CSI (LC)	MAX. UNBRAC LENGTH
1- 2	0 / 29	-77.4	-77.4	0.10 (1)	10.00
2- 3	0 / 17	-77.4	-77.4	0.15 (1)	10.00
3- 4	-498 / 0	-77.4	-77.4	0.12 (1)	6.25
4- 5	-496 / 0	-77.4	-77.4	0.11 (1)	6.25
5- 6	0 / 17	-77.4	-77.4	0.13 (1)	10.00
9- 2	-212 / 0	0.0	0.0	0.02 (1)	7.81
7- 6	-88 / 0	0.0	0.0	0.01 (1)	7.81
9- 8	0 / 510	-17.5	-17.5	0.27 (4)	10.00
8- 7	0 / 465	-17.5	-17.5	0.27 (4)	10.00

WEBS

MEMB. FR-TO	MAX. FACTORED FORCE (LBS)	MAX CSI (LC)
3- 8	-153 / 4	0.06 (1)
8- 4	0 / 317	0.07 (1)
8- 5	-90 / 18	0.04 (1)
9- 3	-712 / 0	0.28 (1)
5- 7	-697 / 0	0.23 (1)

DESIGN CRITERIA

SPECIFIED LOADS:

TOP	CH.	LL	=	23.3	PSF
		DL	=	3.0	PSF
BOT	CH.	LL	=	0.0	PSF
		DL	=	7.0	PSF
TOTAL	LOAD		=	33.3	PSF

SPACING = 24.0 IN. C/C

THIS TRUSS IS DESIGNED FOR RESIDENTIAL OR SMALL BUILDING REQUIREMENTS OF PART 9, NBCC 2010

THIS DESIGN COMPLIES WITH:
- PART 9 OF OBC 2012 , BCBC 2012 , ABC 2014
- CSA 086-09
- TPIC 2011

(55 % OF 27.2 P.S.F. G.S.L. PLUS 8.4 P.S.F. RAIN LOAD) EQUALS 23.3 P.S.F. SPECIFIED ROOF LIVE LOAD

ALLOWABLE DEFL.(LL)= L/360 (0.46")
CALCULATED VERT. DEFL.(LL) = L/ 999 (0.01")
ALLOWABLE DEFL.(TL)= L/360 (0.46")
CALCULATED VERT. DEFL.(TL) = L/ 999 (0.06")

CSI: TC=0.15 (2-3:1) , BC=0.27 (8-9:4) , WB=0.28 (3-9:1) , SSI=0.11 (3-4:1)

DOL LUMBER=1.00 NAIL=1.00 LS BEND=1.10 COMP=1.10 SHEAR=1.10 TENS= 1.10

COMPANION LIVE LOAD FACTOR = 0.50

TRUSS PLATE MANUFACTURER IS NOT RESPONSIBLE FOR QUALITY CONTROL IN THE TRUSS MANUFACTURING PLANT .

NAIL VALUES

PLATE	GRIP(DRY) (PSI) MAX	MIN	SHEAR (PLI) MAX	MIN	SECTION (PLI) MAX	MIN
MT20	618	354	1667	822	2284	1656

PLATE PLACEMENT TOL. = 0.250 inches

PLATE ROTATION TOL. = 5.0 Deg.

JSI GRIP= 0.88 (3) (INPUT = 0.90)
JSI METAL= 0.25 (3) (INPUT = 1.00)

LICENSED PROFESSIONAL ENGINEER
P.M. TREVISAN
100136551
March 16th, 2017
PROVINCE OF ONTARIO

RECEIVED
TOWN OF MILTON
MAR 29, 2017
17-5327
BUILDING DIVISION

KOTT

JOB NAME	TRUSS NAME	QUANTITY	PLY	JOB DESC.	DRWG NO.
PT0317-093	T20	2	1	TRUSS DESC. LECCO RIDGE-BLOCK 343	ENG JOB: PT0317-093

KOTT , Stouffville, ON, CGC

Version 8.100 S Feb 9 2017 MiTek Industries, Inc. Thu Mar 16 07:55:00 2017 Page 1

ID:EvTixTQDI5yR1QLotZTBr_yE?HJ-9GFXHHDfru0KBPAEw3OTVNxkg2SHfXp3Y4xUYWzaRHf

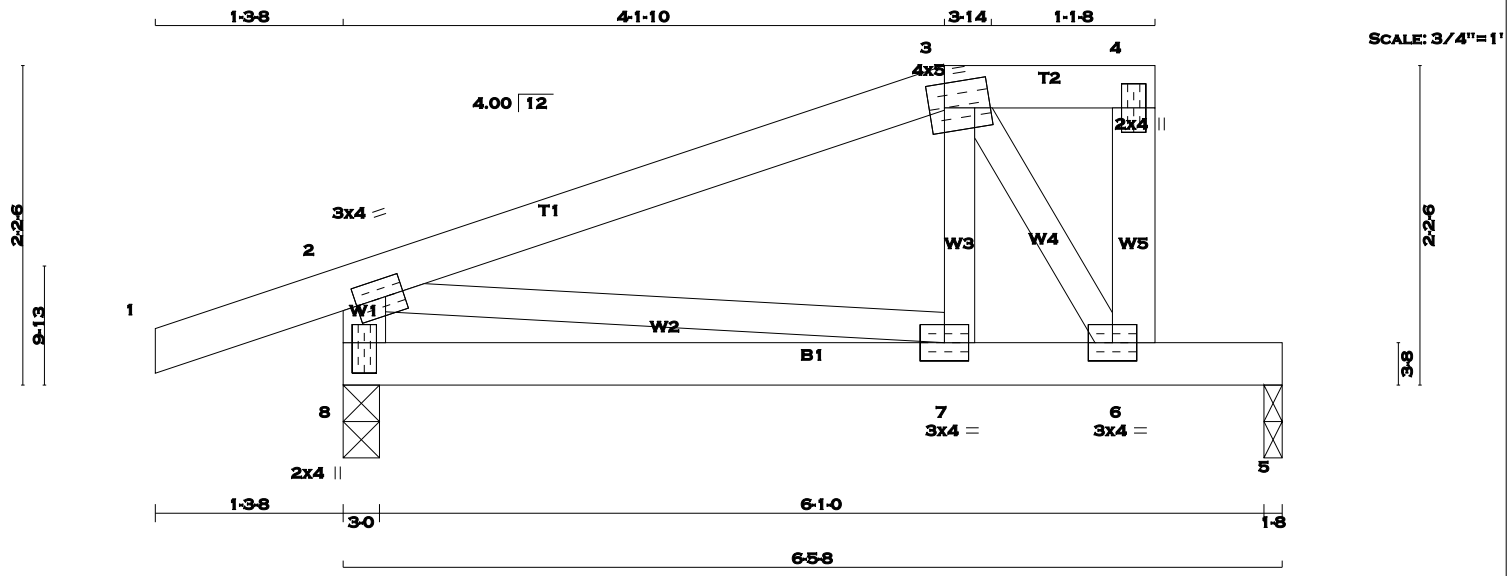

TOTAL WEIGHT = 2 X 24 = 48 lb [M]

LUMBER

N. L. G. A. RULES

CHORDS	SIZE		LUMBER	DESCR.
1 - 3	2x4	DRY	No.2	SPF
3 - 4	2x4	DRY	No.2	SPF
8 - 2	2x4	DRY	No.2	SPF
8 - 5	2x4	DRY	No.2	SPF
ALL WEBS EXCEPT	2x3	DRY	No.2	SPF
6 - 4	2x4	DRY	No.2	SPF

DRY: SEASONED LUMBER.

PLATES (table is in inches)

JT	TYPE	PLATES	W	LEN	Y	X
2	TMVW-t	MT20	3.0	4.0	1.50	1.50
3	TTWW-m	MT20	4.0	5.0	2.00	1.25
4	TMW+w	MT20	2.0	4.0		
6	BMWW-t	MT20	3.0	4.0		
7	BMWW-t	MT20	3.0	4.0		
8	BMV1+p	MT20	2.0	4.0	2.50	1.00

A SIZE FOR SIZE SUBSTITUTION OF MITEK MII20 WITH TEE-LOK TL20 PLATES IS ALLOWED.

DIMENSIONS, SUPPORTS AND LOADINGS SPECIFIED BY FABRICATOR TO BE VERIFIED BY BUILDING DESIGNER

BEARINGS

JT	FACTORED GROSS REACTION VERT	HORZ	MAXIMUM FACTORED GROSS REACTION DOWN	HORZ	UPLIFT	INPUT BRG IN-SX	REQRD BRG IN-SX
8	410	0	410	0	0	3-0	3-0
5	306	0	306	0	0	1-8	1-8

UNFACTORED REACTIONS

JT	1ST LCASE COMBINED	MAX./MIN. COMPONENT REACTIONS SNOW	LIVE	PERM.LIVE	WIND	DEAD	SOIL
8	285	213 / 0	0 / 0	0 / 0	0 / 0	73 / 0	0 / 0
5	215	150 / 0	0 / 0	0 / 0	0 / 0	65 / 0	0 / 0

BEARING MATERIAL TO BE SPF NO.2 OR BETTER AT JOINT(S) 8, 5

BRACING

TOP CHORD TO BE SHEATHED OR MAX. PURLIN SPACING = 6.25 FT.
MAX. UNBRACED BOTTOM CHORD LENGTH = 10.00 FT. OR RIGID CEILING DIRECTLY APPLIED.

ALL PITCH BREAKS AND PERIMETER CORNER JOINTS MUST BE LATERALLY RESTRAINED.

LOADING

TOTAL LOAD CASES: (4)

CHORDS

MEMB. FR-TO	MAX. FACTORED FORCE (LBS)	FACTORED VERT. LOAD LC1 (PLF) FROM	TO	MAX CSI (LC)	MAX. UNBRAC LENGTH
1- 2	0 / 16	-77.4	-77.4	0.10 (1)	10.00
2- 3	-276 / 0	-77.4	-77.4	0.23 (1)	6.25
3- 4	0 / 0	-77.4	-77.4	0.02 (1)	10.00
8- 2	-383 / 0	0.0	0.0	0.04 (1)	7.81
8- 7	0 / 0	-17.5	-17.5	0.08 (4)	10.00
7- 6	0 / 278	-17.5	-17.5	0.40 (1)	10.00
6- 5	0 / 0	-94.9	-94.9	0.36 (1)	10.00

WEBS

MEMB. FR-TO	MAX. FACTORED FORCE (LBS)	MAX CSI (LC)
2- 7	0 / 264	0.06 (1)
6- 4	-50 / 0	0.01 (1)
7- 3	0 / 283	0.06 (1)
3- 6	-491 / 0	0.08 (1)

DESIGN CRITERIA

SPECIFIED LOADS:

TOP CH.	LL	=	23.3	PSF
	DL	=	3.0	PSF
BOT CH.	LL	=	0.0	PSF
	DL	=	7.0	PSF
TOTAL LOAD		=	33.3	PSF

SPACING = 24.0 IN. C/C

LOADING IN FLAT SECTION BASED ON A SLOPE OF 6.00/12

THIS TRUSS IS DESIGNED FOR RESIDENTIAL OR SMALL BUILDING REQUIREMENTS OF PART 9, NBCC 2010

THIS DESIGN COMPLIES WITH:
- PART 9 OF OBC 2012 , BCBC 2012 , ABC 2014
- CSA 086-09
- TPIC 2011

(55 % OF 27.2 P.S.F. G.S.L. PLUS 8.4 P.S.F. RAIN LOAD) EQUALS 23.3 P.S.F. SPECIFIED ROOF LIVE LOAD

ALLOWABLE DEFL.(LL)= L/360 (0.22")
CALCULATED VERT. DEFL.(LL) = L/ 999 (0.02")
ALLOWABLE DEFL.(TL)= L/360 (0.22")
CALCULATED VERT. DEFL.(TL) = L/ 999 (0.04")

CSI: TC=0.23 (2-3:1) , BC=0.40 (6-7:1) , WB=0.08 (3-6:1) , SSI=0.24 (5-6:1)

DOL LUMBER=1.00 NAIL=1.00 LS BEND=1.10 COMP=1.10 SHEAR=1.10 TENS= 1.10

COMPANION LIVE LOAD FACTOR = 0.50

TRUSS PLATE MANUFACTURER IS NOT RESPONSIBLE FOR QUALITY CONTROL IN THE TRUSS MANUFACTURING PLANT .

NAIL VALUES

PLATE	GRIP(DRY) (PSI) MAX	MIN	SHEAR (PLI) MAX	MIN	SECTION (PLI) MAX	MIN
MT20	618	354	1667	822	2284	1656

PLATE PLACEMENT TOL. = 0.250 inches

PLATE ROTATION TOL. = 0.5 Deg.

JSI GRIP= 0.69 (3) (INPUT = 0.90)
JSI METAL= 0.18 (3) (INPUT = 1.00)

LICENSED PROFESSIONAL ENGINEER
P.M. TREVISAN
100136551
March 16th, 2017
PROVINCE OF ONTARIO

RECEIVED
TOWN OF MILTON
MAR 29, 2017
17-5327
BUILDING DIVISION

KOTT

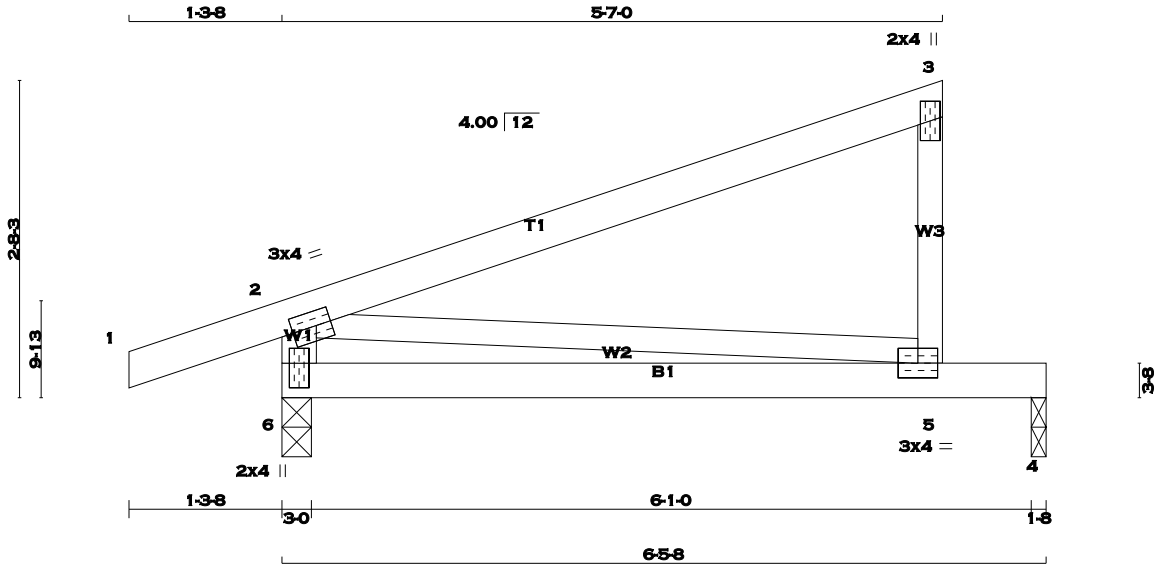

SCALE = 1:19.5

TOTAL WEIGHT = 17 X 22 = 373 lb

[M][F]

LUMBER

N. L. G. A. RULES

CHORDS	SIZE		LUMBER	DESCR.
1 - 3	2x4	DRY	No.2	SPF
5 - 3	2x3	DRY	No.2	SPF
6 - 2	2x4	DRY	No.2	SPF
6 - 4	2x4	DRY	No.2	SPF
ALL WEBS	2x3	DRY	No.2	SPF

DRY: SEASONED LUMBER.

PLATES (table is in inches)

JT	TYPE	PLATES	W	LEN	Y	X
2	TMVW-t	MT20	3.0	4.0	1.50	1.50
3	TMV+p	MT20	2.0	4.0		
5	BMVW-t	MT20	3.0	4.0		
6	BMV1+p	MT20	2.0	4.0	2.50	1.00

A SIZE FOR SIZE SUBSTITUTION OF MITEK MII20 WITH TEE-LOK TL20 PLATES IS ALLOWED.

DIMENSIONS, SUPPORTS AND LOADINGS SPECIFIED BY FABRICATOR TO BE VERIFIED BY BUILDING DESIGNER

BEARINGS

JT	FACTORED GROSS REACTION VERT	HORZ	MAXIMUM FACTORED GROSS REACTION DOWN	HORZ	UPLIFT	INPUT BRG IN-SX	REQRD BRG IN-SX
6	405	0	405	0	0	3-0	3-0
4	243	0	243	0	0	1-8	1-8

UNFACTORED REACTIONS

JT	1ST LCASE COMBINED	MAX./MIN. COMPONENT REACTIONS SNOW	LIVE	PERM.LIVE	WIND	DEAD	SOIL
6	282	210 / 0	0 / 0	0 / 0	0 / 0	72 / 0	0 / 0
4	172	112 / 0	0 / 0	0 / 0	0 / 0	60 / 0	0 / 0

BEARING MATERIAL TO BE SPF NO.2 OR BETTER AT JOINT(S) 6, 4

BRACING

TOP CHORD TO BE SHEATHED OR MAX. PURLIN SPACING = 10.00 FT.
MAX. UNBRACED BOTTOM CHORD LENGTH = 10.00 FT. OR RIGID CEILING DIRECTLY APPLIED.

ALL PITCH BREAKS AND PERIMETER CORNER JOINTS MUST BE LATERALLY RESTRAINED.

LOADING

TOTAL LOAD CASES: (4)

CHORDS

MEMB. FR-TO	MAX. FACTORED FORCE (LBS)	FACTORED VERT. LOAD (PLF) FROM	TO	LC1 MAX CSI (LC)	MAX. UNBRAC LENGTH
1- 2	0 / 16	-77.4	-77.4	0.10 (1)	10.00
2- 3	0 / 0	-77.4	-77.4	0.41 (1)	10.00
5- 3	-216 / 0	0.0	0.0	0.04 (1)	7.81
6- 2	-319 / 0	0.0	0.0	0.03 (1)	7.81
6- 5	0 / 0	-17.5	-17.5	0.29 (1)	10.00
5- 4	0 / 0	-17.5	-17.5	0.28 (1)	10.00

WEBS

MEMB. FR-TO	MAX. FACTORED FORCE (LBS)	MAX CSI (LC)
2- 5	0 / 0	0.00 (1)

DESIGN CRITERIA

SPECIFIED LOADS:

TOP	CH.	LL	=	23.3	PSF
		DL	=	3.0	PSF
BOT	CH.	LL	=	0.0	PSF
		DL	=	7.0	PSF
TOTAL	LOAD		=	33.3	PSF

SPACING = 24.0 IN. C/C

THIS TRUSS IS DESIGNED FOR RESIDENTIAL OR SMALL BUILDING REQUIREMENTS OF PART 9, NBCC 2010

THIS DESIGN COMPLIES WITH:
- PART 9 OF OBC 2012 , BCBC 2012 , ABC 2014
- CSA 086-09
- TPIC 2011

(55 % OF 27.2 P.S.F. G.S.L. PLUS 8.4 P.S.F. RAIN LOAD) EQUALS 23.3 P.S.F. SPECIFIED ROOF LIVE LOAD

ALLOWABLE DEFL.(LL)= L/360 (0.22")
CALCULATED VERT. DEFL.(LL) = L/ 999 (0.07")
ALLOWABLE DEFL.(TL)= L/360 (0.22")
CALCULATED VERT. DEFL.(TL) = L/ 444 (0.17")

CSI: TC=0.41 (2-3:1) , BC=0.29 (5-6:1) , WB=0.00 (2-5:1) , SSI=0.19 (4-5:1)

DOL LUMBER=1.00 NAIL=1.00 LS BEND=1.10 COMP=1.10 SHEAR=1.10 TENS= 1.10

COMPANION LIVE LOAD FACTOR = 0.50

TRUSS PLATE MANUFACTURER IS NOT RESPONSIBLE FOR QUALITY CONTROL IN THE TRUSS MANUFACTURING PLANT .

NAIL VALUES

PLATE	GRIP(DRY) (PSI) MAX	MIN	SHEAR (PLI) MAX	MIN	SECTION (PLI) MAX	MIN
MT20	618	354	1667	822	2284	1656

PLATE PLACEMENT TOL. = 0.250 inches

PLATE ROTATION TOL. = 5.0 Deg.

JSI GRIP= 0.29 (2) (INPUT = 0.90)
JSI METAL= 0.06 (6) (INPUT = 1.00)

LICENSED PROFESSIONAL ENGINEER
P.M. TREVISAN
100136551
March 16th, 2017
PROVINCE OF ONTARIO

RECEIVED
TOWN OF MILTON
MAR 29, 2017
17-5327
BUILDING DIVISION

KOTT

JOB NAME	TRUSS NAME	QUANTITY	PLY	JOB DESC.	DRWG NO.
PT0317-093	T22	1	1	TRUSS DESC. LECCO RIDGE-BLOCK 343	ENG JOB: PT0317-093

KOTT , Stouffville, ON, CGC

Version 8.100 S Feb 9 2017 MiTek Industries, Inc. Thu Mar 16 07:55:01 2017 Page 1

ID:EvTixTQDI5yR1QLotZTBr_yE?HJ-eSpvVdDHcC8BoZlRUmvi1bUxOSu3O?TCnkh14yzaRHe

SCALE = 1:21.5

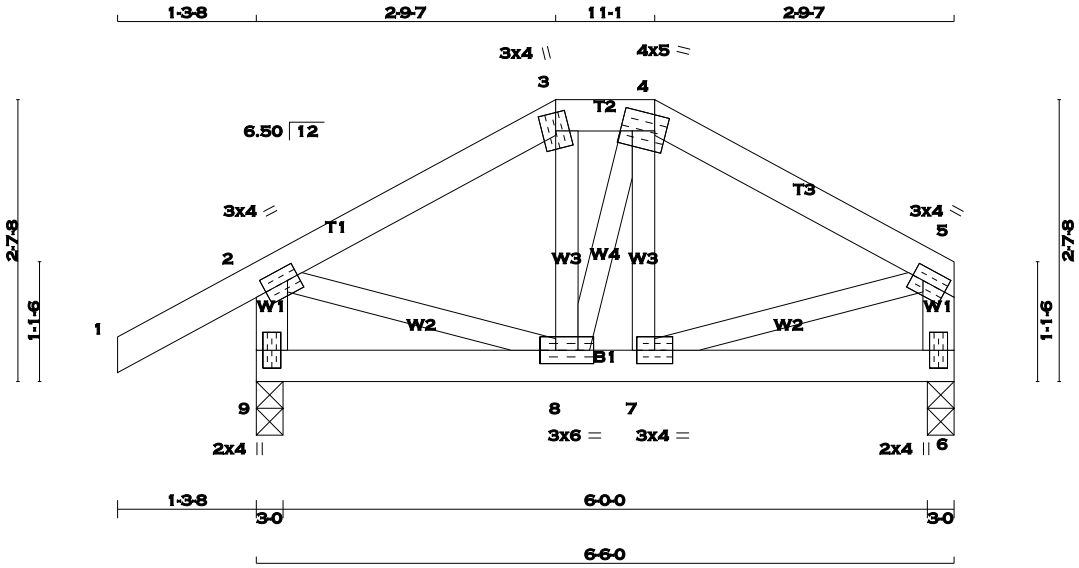

TOTAL WEIGHT = 28 lb

[M][F]

LUMBER

N. L. G. A. RULES

CHORDS	SIZE		LUMBER	DESCR.
1 - 3	2x4	DRY	No.2	SPF
3 - 4	2x4	DRY	No.2	SPF
4 - 5	2x4	DRY	No.2	SPF
9 - 2	2x4	DRY	No.2	SPF
6 - 5	2x4	DRY	No.2	SPF
9 - 6	2x4	DRY	No.2	SPF
ALL WEBS EXCEPT	2x3	DRY	No.2	SPF

DRY: SEASONED LUMBER.

PLATES (table is in inches)

JT	TYPE	PLATES	W	LEN	Y	X
2	TMVW-t	MT20	3.0	4.0	1.50	1.25
3	TTW+m	MT20	3.0	4.0		
4	TTWW-m	MT20	4.0	5.0	1.75	1.25
5	TMVW-t	MT20	3.0	4.0	1.50	1.25
6	BMV1+p	MT20	2.0	4.0		
7	BMWW-t	MT20	3.0	4.0		
8	BMWWW-t	MT20	3.0	6.0		
9	BMV1+p	MT20	2.0	4.0		

A SIZE FOR SIZE SUBSTITUTION OF MITEK MII20 WITH TEE-LOK TL20 PLATES IS ALLOWED.

DIMENSIONS, SUPPORTS AND LOADINGS SPECIFIED BY FABRICATOR TO BE VERIFIED BY BUILDING DESIGNER

BEARINGS

JT	FACTORED GROSS REACTION VERT	HORZ	MAXIMUM FACTORED GROSS REACTION DOWN	HORZ	UPLIFT	INPUT BRG IN-SX	REQRD BRG IN-SX
9	414	0	414	0	0	3-0	3-0
6	308	0	308	0	0	3-0	3-0

UNFACTORED REACTIONS

JT	1ST LCASE COMBINED	MAX./MIN. COMPONENT REACTIONS SNOW	LIVE	PERM.LIVE	WIND	DEAD	SOIL
9	288	215 / 0	0 / 0	0 / 0	0 / 0	73 / 0	0 / 0
6	216	151 / 0	0 / 0	0 / 0	0 / 0	65 / 0	0 / 0

BEARING MATERIAL TO BE SPF NO.2 OR BETTER AT JOINT(S) 9, 6

BRACING

TOP CHORD TO BE SHEATHED OR MAX. PURLIN SPACING = 6.25 FT.
MAX. UNBRACED BOTTOM CHORD LENGTH = 10.00 FT. OR RIGID CEILING DIRECTLY APPLIED.

ALL PITCH BREAKS AND PERIMETER CORNER JOINTS MUST BE LATERALLY RESTRAINED.

LOADING

TOTAL LOAD CASES: (4)

CHORDS

MEMB. FR-TO	MAX. FACTORED FORCE (LBS)	FACTORED VERT. LOAD (PLF) FROM	TO	LC1 MAX CSI (LC)	MAX. UNBRAC LENGTH
1- 2	0 / 25	-77.4	-77.4	0.10 (1)	10.00
2- 3	-246 / 0	-77.4	-77.4	0.08 (1)	6.25
3- 4	-215 / 0	-77.4	-77.4	0.01 (1)	6.25
4- 5	-247 / 0	-77.4	-77.4	0.08 (1)	6.25
9- 2	-391 / 0	0.0	0.0	0.04 (1)	7.81
6- 5	-286 / 0	0.0	0.0	0.03 (1)	7.81
9- 8	0 / 0	-17.5	-17.5	0.03 (4)	10.00
8- 7	0 / 216	-17.5	-17.5	0.05 (1)	10.00
7- 6	0 / 0	-17.5	-17.5	0.03 (4)	10.00

WEBS

MEMB. FR-TO	MAX. FACTORED FORCE (LBS)	MAX CSI (LC)
8- 3	-26 / 21	0.01 (4)
8- 4	-2 / 2	0.00 (4)
7- 4	-23 / 20	0.01 (4)
2- 8	0 / 224	0.05 (1)
7- 5	0 / 225	0.05 (1)

DESIGN CRITERIA

SPECIFIED LOADS:

TOP	CH.	LL	=	23.3	PSF
		DL	=	3.0	PSF
BOT	CH.	LL	=	0.0	PSF
		DL	=	7.0	PSF
TOTAL	LOAD		=	33.3	PSF

SPACING = 24.0 IN. C/C

LOADING IN FLAT SECTION BASED ON A SLOPE OF 6.00/12

THIS TRUSS IS DESIGNED FOR RESIDENTIAL OR SMALL BUILDING REQUIREMENTS OF PART 9, NBCC 2010

THIS DESIGN COMPLIES WITH:
- PART 9 OF OBC 2012 , BCBC 2012 , ABC 2014
- CSA 086-09
- TPIC 2011

(55 % OF 27.2 P.S.F. G.S.L. PLUS 8.4 P.S.F. RAIN LOAD) EQUALS 23.3 P.S.F. SPECIFIED ROOF LIVE LOAD

ALLOWABLE DEFL.(LL)= L/360 (0.22")
CALCULATED VERT. DEFL.(LL) = L/ 999 (0.00")
ALLOWABLE DEFL.(TL)= L/360 (0.22")
CALCULATED VERT. DEFL.(TL) = L/ 999 (0.00")

CSI: TC=0.10 (1-2:1) , BC=0.05 (7-8:1) , WB=0.05 (5-7:1) , SSI=0.07 (2-3:1)

DOL LUMBER=1.00 NAIL=1.00 LS BEND=1.10 COMP=1.10 SHEAR=1.10 TENS= 1.10

COMPANION LIVE LOAD FACTOR = 0.50

TRUSS PLATE MANUFACTURER IS NOT RESPONSIBLE FOR QUALITY CONTROL IN THE TRUSS MANUFACTURING PLANT .

NAIL VALUES

PLATE	GRIP(DRY) (PSI) MAX	MIN	SHEAR (PLI) MAX	MIN	SECTION (PLI) MAX	MIN
MT20	618	354	1667	822	2284	1656

PLATE PLACEMENT TOL. = 0.250 inches

PLATE ROTATION TOL. = 5.0 Deg.

JSI GRIP= 0.56 (5) (INPUT = 0.90)
JSI METAL= 0.13 (2) (INPUT = 1.00)

LICENSED PROFESSIONAL ENGINEER
P.M. TREVISAN
100136551
March 16th, 2017
PROVINCE OF ONTARIO

RECEIVED
TOWN OF MILTON
MAR 29, 2017
17-5327
BUILDING DIVISION

KOTT

JOB NAME	TRUSS NAME	QUANTITY	PLY	JOB DESC.	DRWG NO.
PT0317-093	**T23**	**2**	**1**	TRUSS DESC. LECCO RIDGE-BLOCK 343	ENG JOB: PT0317-093

KOTT , Stouffville, ON, CGC

Version 8.100 S Feb 9 2017 MiTek Industries, Inc. Thu Mar 16 07:55:02 2017 Page 1

ID:EvTixTQDI5yR1QLotZTBr_yE?HJ-6eNIizEvNVG2QiKd2TQxao065sEG7RnM0OQbdOzaRHd

SCALE = 1:23.4

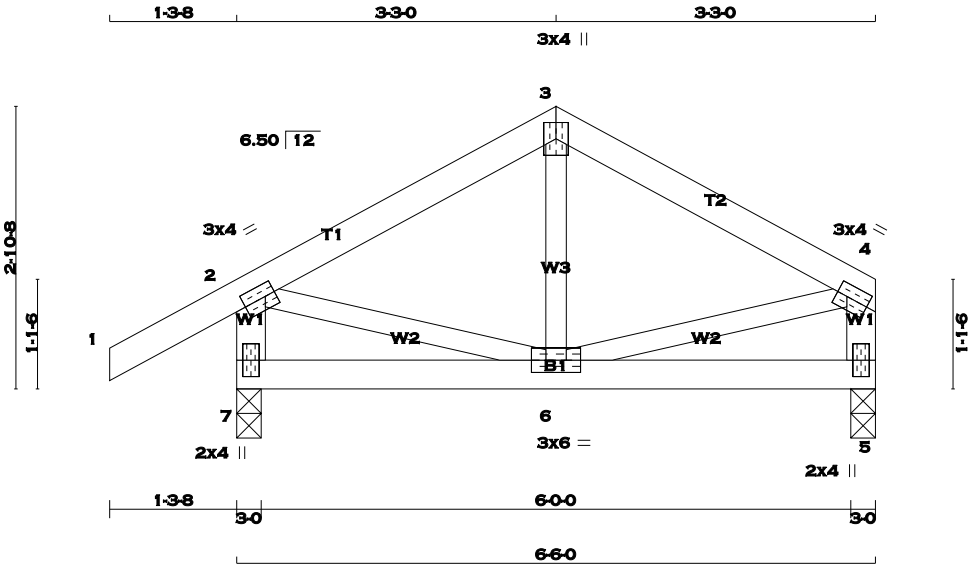

TOTAL WEIGHT = 2 X 26 = 52 lb

[M][F]

LUMBER

N. L. G. A. RULES

CHORDS	SIZE		LUMBER	DESCR.
1 - 3	2x4	DRY	No.2	SPF
3 - 4	2x4	DRY	No.2	SPF
7 - 2	2x4	DRY	No.2	SPF
5 - 4	2x4	DRY	No.2	SPF
7 - 5	2x4	DRY	No.2	SPF
ALL WEBS	2x3	DRY	No.2	SPF
EXCEPT				

DRY: SEASONED LUMBER.

PLATES (table is in inches)

JT	TYPE	PLATES	W	LEN	Y	X
2	TMVW-t	MT20	3.0	4.0	1.50	1.25
3	TTW+p	MT20	3.0	4.0		
4	TMVW-t	MT20	3.0	4.0	1.50	1.25
5	BMV1+p	MT20	2.0	4.0		
6	BMWWW-t	MT20	3.0	6.0		
7	BMV1+p	MT20	2.0	4.0		

A SIZE FOR SIZE SUBSTITUTION OF MITEK MII20 WITH TEE-LOK TL20 PLATES IS ALLOWED.

DIMENSIONS, SUPPORTS AND LOADINGS SPECIFIED BY FABRICATOR TO BE VERIFIED BY BUILDING DESIGNER

BEARINGS

JT	FACTORED GROSS REACTION VERT	HORZ	MAXIMUM FACTORED GROSS REACTION DOWN	HORZ	UPLIFT	INPUT BRG IN-SX	REQRD BRG IN-SX
7	414	0	414	0	0	3-0	3-0
5	308	0	308	0	0	3-0	3-0

UNFACTORED REACTIONS

JT	1ST LCASE COMBINED	MAX./MIN. COMPONENT REACTIONS SNOW	LIVE	PERM.LIVE	WIND	DEAD	SOIL
7	288	215 / 0	0 / 0	0 / 0	0 / 0	73 / 0	0 / 0
5	216	151 / 0	0 / 0	0 / 0	0 / 0	65 / 0	0 / 0

BEARING MATERIAL TO BE SPF NO.2 OR BETTER AT JOINT(S) 7, 5

BRACING

TOP CHORD TO BE SHEATHED OR MAX. PURLIN SPACING = 6.25 FT.
MAX. UNBRACED BOTTOM CHORD LENGTH = 10.00 FT. OR RIGID CEILING DIRECTLY APPLIED.

ALL PITCH BREAKS AND PERIMETER CORNER JOINTS MUST BE LATERALLY RESTRAINED.

LOADING

TOTAL LOAD CASES: (4)

CHORDS

MEMB. FR-TO	MAX. FACTORED FORCE (LBS)	FACTORED VERT. LOAD (PLF) FROM	TO	LC1 MAX CSI (LC)	MAX. UNBRAC LENGTH
1- 2	0 / 25	-77.4	-77.4	0.10 (1)	10.00
2- 3	-230 / 0	-77.4	-77.4	0.10 (1)	6.25
3- 4	-230 / 0	-77.4	-77.4	0.10 (1)	6.25
7- 2	-391 / 0	0.0	0.0	0.04 (1)	7.81
5- 4	-285 / 0	0.0	0.0	0.03 (1)	7.81
7- 6	0 / 0	-17.5	-17.5	0.05 (4)	10.00
6- 5	0 / 0	-17.5	-17.5	0.05 (4)	10.00

WEBS

MEMB. FR-TO	MAX. FACTORED FORCE (LBS)	MAX CSI (LC)
6- 3	-32 / 45	0.02 (4)
2- 6	0 / 208	0.05 (1)
6- 4	0 / 208	0.05 (1)

DESIGN CRITERIA

SPECIFIED LOADS:

TOP	CH.	LL	=	23.3	PSF
		DL	=	3.0	PSF
BOT	CH.	LL	=	0.0	PSF
		DL	=	7.0	PSF
TOTAL	LOAD		=	33.3	PSF

SPACING = 24.0 IN. C/C

THIS TRUSS IS DESIGNED FOR RESIDENTIAL OR SMALL BUILDING REQUIREMENTS OF PART 9, NBCC 2010

THIS DESIGN COMPLIES WITH:
- PART 9 OF OBC 2012 , BCBC 2012 , ABC 2014
- CSA 086-09
- TPIC 2011

(55 % OF 27.2 P.S.F. G.S.L. PLUS 8.4 P.S.F. RAIN LOAD) EQUALS 23.3 P.S.F. SPECIFIED ROOF LIVE LOAD

ALLOWABLE DEFL.(LL)= L/360 (0.22")
CALCULATED VERT. DEFL.(LL) = L/ 999 (0.00")
ALLOWABLE DEFL.(TL)= L/360 (0.22")
CALCULATED VERT. DEFL.(TL) = L/ 999 (0.00")

CSI: TC=0.10 (3-4:1) , BC=0.05 (6-7:4) , WB=0.05 (2-6:1) , SSI=0.09 (3-4:1)

DOL LUMBER=1.00 NAIL=1.00 LS BEND=1.10 COMP=1.10 SHEAR=1.10 TENS= 1.10

COMPANION LIVE LOAD FACTOR = 0.50

TRUSS PLATE MANUFACTURER IS NOT RESPONSIBLE FOR QUALITY CONTROL IN THE TRUSS MANUFACTURING PLANT .

NAIL VALUES

PLATE	GRIP(DRY) (PSI) MAX	MIN	SHEAR (PLI) MAX	MIN	SECTION (PLI) MAX	MIN
MT20	618	354	1667	822	2284	1656

PLATE PLACEMENT TOL. = 0.250 inches

PLATE ROTATION TOL. = 5.0 Deg.

JSI GRIP= 0.52 (2) (INPUT = 0.90)
JSI METAL= 0.13 (4) (INPUT = 1.00)

LICENSED PROFESSIONAL ENGINEER
P.M. TREVISAN
100136551
March 16th, 2017
PROVINCE OF ONTARIO

RECEIVED
TOWN OF MILTON
MAR 29, 2017
17-5327
BUILDING DIVISION

KOTT

JOB NAME	TRUSS NAME	QUANTITY	PLY	JOB DESC.	DRWG NO.
PT0317-093	T24	8	1	TRUSS DESC. LECCO RIDGE-BLOCK 343	ENG JOB: PT0317-093

KOTT , Stouffville, ON, CGC

Version 8.100 S Feb 9 2017 MiTek Industries, Inc. Thu Mar 16 07:55:02 2017 Page 1

ID:EvTixTQDI5yR1QLotZTBr_yE?HJ-6eNlizEvNVG2QiKd2TQxao06_s7x7P8M0OQbdOzaRHd

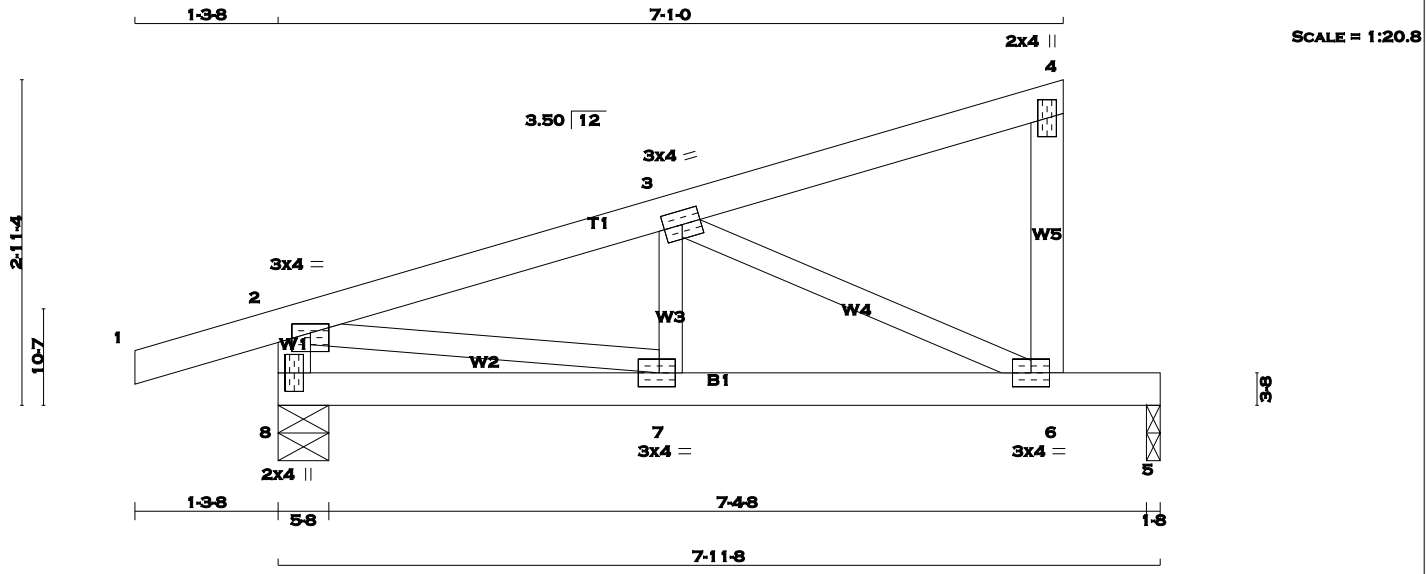

TOTAL WEIGHT = 8 X 29 = 229 lb

[M][F]

LUMBER

N. L. G. A. RULES

CHORDS	SIZE		LUMBER	DESCR.
1 - 4	2x4	DRY	No.2	SPF
6 - 4	2x4	DRY	No.2	SPF
8 - 2	2x4	DRY	No.2	SPF
8 - 5	2x4	DRY	No.2	SPF
ALL WEBS EXCEPT	2x3	DRY	No.2	SPF

DRY: SEASONED LUMBER.

PLATES (table is in inches)

JT	TYPE	PLATES	W	LEN	Y	X
2	TMVW-p	MT20	3.0	4.0	1.00	2.00
3	TMWW-t	MT20	3.0	4.0		
4	TMV+p	MT20	2.0	4.0		
6	BMVW-t	MT20	3.0	4.0		
7	BMWW-t	MT20	3.0	4.0	1.50	1.75
8	BMV1+p	MT20	2.0	4.0		

A SIZE FOR SIZE SUBSTITUTION OF MITEK MII20 WITH TEE-LOK TL20 PLATES IS ALLOWED.

DIMENSIONS, SUPPORTS AND LOADINGS SPECIFIED BY FABRICATOR TO BE VERIFIED BY BUILDING DESIGNER

BEARINGS

JT	FACTORED GROSS REACTION VERT	HORZ	MAXIMUM FACTORED GROSS REACTION DOWN	HORZ	UPLIFT	INPUT BRG IN-SX	REQRD BRG IN-SX
8	477	0	477	0	0	5-8	5-8
5	313	0	313	0	0	1-8	1-8

UNFACTORED REACTIONS

JT	1ST LCASE COMBINED	MAX./MIN. COMPONENT REACTIONS SNOW	LIVE	PERM.LIVE	WIND	DEAD	SOIL
8	332	245 / 0	0 / 0	0 / 0	0 / 0	87 / 0	0 / 0
5	221	147 / 0	0 / 0	0 / 0	0 / 0	75 / 0	0 / 0

BEARING MATERIAL TO BE SPF NO.2 OR BETTER AT JOINT(S) 8, 5

BRACING

TOP CHORD TO BE SHEATHED OR MAX. PURLIN SPACING = 6.25 FT.
MAX. UNBRACED BOTTOM CHORD LENGTH = 10.00 FT. OR RIGID CEILING DIRECTLY APPLIED.

ALL PITCH BREAKS AND PERIMETER CORNER JOINTS MUST BE LATERALLY RESTRAINED.

LOADING

TOTAL LOAD CASES: (4)

CHORDS

MEMB. FR-TO	MAX. FACTORED FORCE (LBS)	FACTORED VERT. LOAD (PLF) FROM	TO	LC1 MAX CSI (LC)	MAX. UNBRAC LENGTH
1- 2	0 / 14	-77.4	-77.4	0.10 (1)	10.00
2- 3	-579 / 0	-77.4	-77.4	0.11 (1)	6.25
3- 4	-8 / 0	-77.4	-77.4	0.11 (1)	10.00
6- 4	-108 / 0	0.0	0.0	0.02 (1)	7.81
8- 2	-467 / 0	0.0	0.0	0.05 (1)	7.81
8- 7	0 / 0	-17.5	-17.5	0.10 (1)	10.00
7- 6	0 / 564	-17.5	-17.5	0.45 (1)	10.00
6- 5	0 / 0	-17.5	-17.5	0.36 (1)	10.00

WEBS

MEMB. FR-TO	MAX. FACTORED FORCE (LBS)	MAX CSI (LC)
7- 3	0 / 91	0.03 (4)
3- 6	-619 / 0	0.15 (1)
2- 7	0 / 571	0.13 (1)

DESIGN CRITERIA

SPECIFIED LOADS:

TOP	CH.	LL	=	23.3	PSF
		DL	=	3.0	PSF
BOT	CH.	LL	=	0.0	PSF
		DL	=	7.0	PSF
TOTAL	LOAD		=	33.3	PSF

SPACING = 24.0 IN. C/C

THIS TRUSS IS DESIGNED FOR RESIDENTIAL OR SMALL BUILDING REQUIREMENTS OF PART 9, NBCC 2010

THIS DESIGN COMPLIES WITH:
- PART 9 OF OBC 2012 , BCBC 2012 , ABC 2014
- CSA 086-09
- TPIC 2011

(55 % OF 27.2 P.S.F. G.S.L. PLUS 8.4 P.S.F. RAIN LOAD) EQUALS 23.3 P.S.F. SPECIFIED ROOF LIVE LOAD

ALLOWABLE DEFL.(LL)= L/360 (0.27")
CALCULATED VERT. DEFL.(LL) = L/ 999 (0.05")
ALLOWABLE DEFL.(TL)= L/360 (0.27")
CALCULATED VERT. DEFL.(TL) = L/ 973 (0.10")

CSI: TC=0.11 (2-3:1) , BC=0.45 (6-7:1) , WB=0.15 (3-6:1) , SSI=0.24 (5-6:1)

DOL LUMBER=1.00 NAIL=1.00 LS BEND=1.10 COMP=1.10 SHEAR=1.10 TENS= 1.10

COMPANION LIVE LOAD FACTOR = 0.50

TRUSS PLATE MANUFACTURER IS NOT RESPONSIBLE FOR QUALITY CONTROL IN THE TRUSS MANUFACTURING PLANT .

NAIL VALUES

PLATE	GRIP(DRY) (PSI) MAX	MIN	SHEAR (PLI) MAX	MIN	SECTION (PLI) MAX	MIN
MT20	618	354	1667	822	2284	1656

PLATE PLACEMENT TOL. = 0.250 inches

PLATE ROTATION TOL. = 5.0 Deg.

JSI GRIP= 0.85 (6) (INPUT = 0.90)
JSI METAL= 0.21 (2) (INPUT = 1.00)

LICENSED PROFESSIONAL ENGINEER
P.M. TREVISAN
100136551
March 16th, 2017
PROVINCE OF ONTARIO

RECEIVED
TOWN OF MILTON
MAR 29, 2017
17-5327
BUILDING DIVISION

KOTT

JOB NAME	TRUSS NAME	QUANTITY	PLY	JOB DESC.	DRWG NO.
PT0317-093	T25	6	1	TRUSS DESC. LECCO RIDGE-BLOCK 343	

KOTT , Stouffville, ON, CGC

Version 8.100 S Feb 9 2017 MiTek Industries, Inc. Thu Mar 16 07:55:03 2017 Page 1
ID:EvTixTQDI5yR1QLotZTBr_yE?HJ-arxgwJFY7pOv2svpbBxA70ZHvFZXsulVE2A89rzaRHc

SCALE = 1:17.3

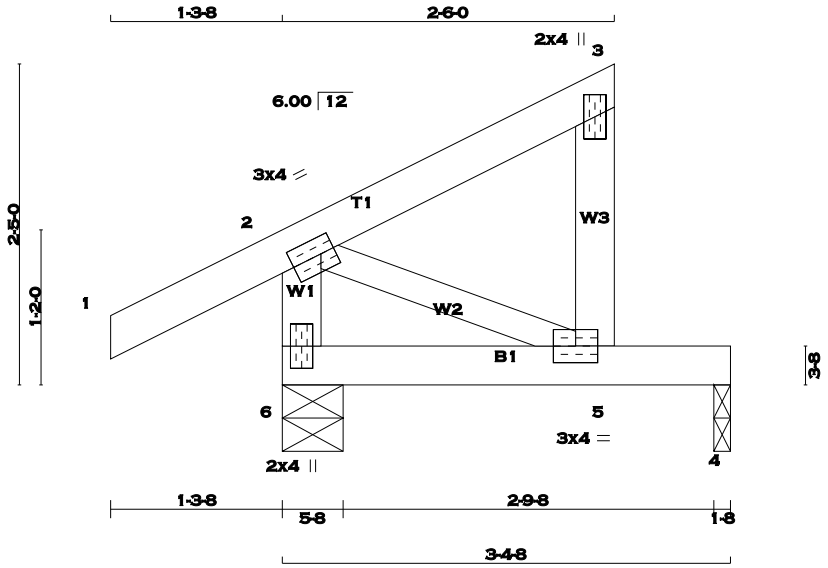

TOTAL WEIGHT = 6 X 13 = 80 lb
[M]

LUMBER
N. L. G. A. RULES

CHORDS	SIZE		LUMBER	DESCR.
1 - 3	2x4	DRY	No.2	SPF
5 - 3	2x4	DRY	No.2	SPF
6 - 2	2x4	DRY	No.2	SPF
6 - 4	2x4	DRY	No.2	SPF
ALL WEBS	2x3	DRY	No.2	SPF

DRY: SEASONED LUMBER.

PLATES (table is in inches)

JT	TYPE	PLATES	W	LEN	Y	X
2	TMVW-t	MT20	3.0	4.0	1.50	1.25
3	TMV+p	MT20	2.0	4.0		
5	BMVW-t	MT20	3.0	4.0		
6	BMV1+p	MT20	2.0	4.0		

A SIZE FOR SIZE SUBSTITUTION OF MITEK MII20 WITH TEE-LOK TL20 PLATES IS ALLOWED.

DIMENSIONS, SUPPORTS AND LOADINGS SPECIFIED BY FABRICATOR TO BE VERIFIED BY BUILDING DESIGNER

BEARINGS

JT	FACTORED GROSS REACTION VERT	HORZ	MAXIMUM FACTORED GROSS REACTION DOWN	HORZ	UPLIFT	INPUT BRG IN-SX	REQRD BRG IN-SX
6	256	0	256	0	0	5-8	5-8
4	101	0	101	0	0	1-8	1-8

UNFACTORED REACTIONS

JT	1ST LCASE COMBINED	MAX./MIN. COMPONENT REACTIONS SNOW	LIVE	PERM.LIVE	WIND	DEAD	SOIL
6	178	137 / 0	0 / 0	0 / 0	0 / 0	41 / 0	0 / 0
4	72	43 / 0	0 / 0	0 / 0	0 / 0	29 / 0	0 / 0

BEARING MATERIAL TO BE SPF NO.2 OR BETTER AT JOINT(S) 6, 4

BRACING
TOP CHORD TO BE SHEATHED OR MAX. PURLIN SPACING = 10.00 FT.
MAX. UNBRACED BOTTOM CHORD LENGTH = 10.00 FT. OR RIGID CEILING DIRECTLY APPLIED.

ALL PITCH BREAKS AND PERIMETER CORNER JOINTS MUST BE LATERALLY RESTRAINED.

LOADING
TOTAL LOAD CASES: (5)

CHORDS

MEMB. FR-TO	MAX. FACTORED FORCE (LBS)	FACTORED VERT. LOAD (PLF) FROM	TO	LC1 MAX CSI (LC)	MAX. UNBRAC LENGTH
1- 2	0 / 23	-77.4	-77.4	0.10 (1)	10.00
2- 3	0 / 0	-77.4	-77.4	0.08 (1)	10.00
5- 3	-97 / 0	0.0	0.0	0.01 (1)	7.81
6- 2	-202 / 0	0.0	0.0	0.02 (1)	7.81
6- 5	0 / 0	-17.5	-17.5	0.11 (1)	10.00
5- 4	0 / 0	-17.5	-17.5	0.11 (1)	10.00

WEBS

MEMB. FR-TO	MAX. FACTORED FORCE (LBS)	MAX CSI (LC)
2- 5	0 / 0	0.00 (1)

CANTILEVER ANALYSIS HAS BEEN CONSIDERED IN THIS DESIGN

DESIGN CRITERIA

SPECIFIED LOADS:

TOP CH.	LL	=	23.3	PSF
	DL	=	3.0	PSF
BOT CH.	LL	=	0.0	PSF
	DL	=	7.0	PSF
TOTAL LOAD		=	33.3	PSF

SPACING = 24.0 IN. C/C

THIS TRUSS IS DESIGNED FOR RESIDENTIAL OR SMALL BUILDING REQUIREMENTS OF PART 9, NBCC 2010

THIS DESIGN COMPLIES WITH:
- PART 9 OF OBC 2012 , BCBC 2012 , ABC 2014
- CSA 086-09
- TPIC 2011

(55 % OF 27.2 P.S.F. G.S.L. PLUS 8.4 P.S.F. RAIN LOAD) EQUALS 23.3 P.S.F. SPECIFIED ROOF LIVE LOAD

ALLOWABLE DEFL.(LL)= L/360 (0.19")
CALCULATED VERT. DEFL.(LL) = L/ 999 (0.01")
ALLOWABLE DEFL.(TL)= L/360 (0.19")
CALCULATED VERT. DEFL.(TL) = L/ 999 (0.02")

CSI: TC=0.10 (1-2:1) , BC=0.11 (5-6:1) , WB=0.00 (2-5:1) , SSI=0.08 (4-5:1)

DOL LUMBER=1.00 NAIL=1.00 LS BEND=1.10 COMP=1.10 SHEAR=1.10 TENS= 1.10

COMPANION LIVE LOAD FACTOR = 0.50

TRUSS PLATE MANUFACTURER IS NOT RESPONSIBLE FOR QUALITY CONTROL IN THE TRUSS MANUFACTURING PLANT .

NAIL VALUES

PLATE	GRIP(DRY) (PSI) MAX	MIN	SHEAR (PLI) MAX	MIN	SECTION (PLI) MAX	MIN
MT20	618	354	1667	822	2284	1656

PLATE PLACEMENT TOL. = 0.250 inches

PLATE ROTATION TOL. = 5.0 Deg.

JSI GRIP= 0.18 (2) (INPUT = 0.90)
JSI METAL= 0.04 (6) (INPUT = 1.00)

LICENSED PROFESSIONAL ENGINEER
P.M. TREVISAN
100136551
March 16th, 2017
PROVINCE OF ONTARIO

RECEIVED
TOWN OF MILTON
MAR 29, 2017
17-5327
BUILDING DIVISION

KOTT

JOB NAME	TRUSS NAME	QUANTITY	PLY	JOB DESC.	DRWG NO.
PT0317-093	T26	1	1	TRUSS DESC. LECCO RIDGE-BLOCK 343	

KOTT , Stouffville, ON, CGC

Version 8.100 S Feb 9 2017 MiTek Industries, Inc. Thu Mar 16 07:55:03 2017 Page 1
ID:EvTixTQDI5yR1QLotZTBr_yE?HJ-arxgwJFY7pOv2svpbBxA70ZFAFWxsnRVE2A89rzaRHc

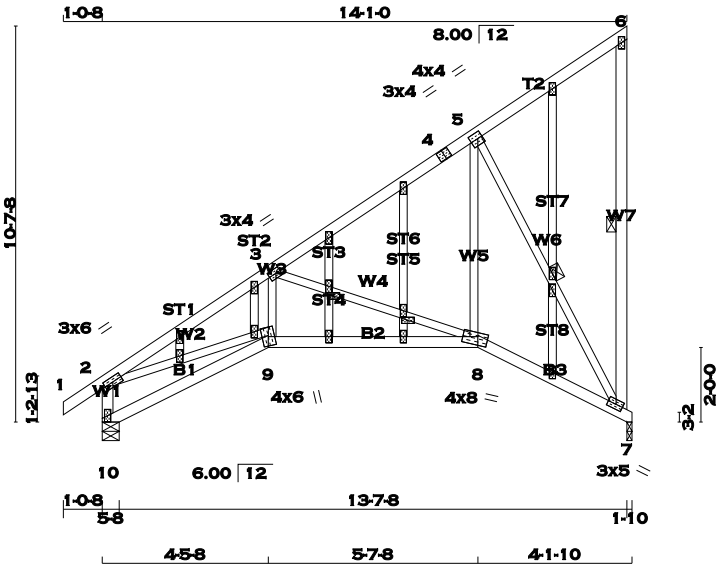

SCALE = 1:61.8

TOTAL WEIGHT = 84 lb

[M][F]

LUMBER

N. L. G. A. RULES

CHORDS	SIZE		LUMBER	DESCR.
1 - 4	2x4	DRY	No.2	SPF
4 - 6	2x4	DRY	No.2	SPF
7 - 6	2x4	DRY	No.2	SPF
10 - 2	2x4	DRY	No.2	SPF
10 - 9	2x4	DRY	No.2	SPF
9 - 8	2x4	DRY	No.2	SPF
8 - 7	2x4	DRY	No.2	SPF
ALL WEBS	2x3	DRY	No.2	SPF

EXCEPT

ALL GABLE WEBS
2x3 DRY No.2 SPF

DRY: SEASONED LUMBER.

GABLE STUDS SPACED AT 2-0-0 OC.

PLATES (table is in inches)

JT	TYPE	PLATES	W	LEN	Y	X
2	TMVW-t	MT20	3.0	6.0		
3	TMWW-t	MT20	3.0	4.0	1.50	1.50
4	TS-t	MT20	3.0	4.0		
5	TMWW-t	MT20	4.0	4.0	2.00	1.50
6	TMV+p	MT20	2.0	4.0		
7	BMVW1-t	MT20	3.0	5.0	1.50	2.25
8	BBWW-m	MT20	4.0	8.0	2.75	3.25
9	BBWW+m	MT20	4.0	6.0		
10	BMV1+p	MT20	2.0	4.0		
11, 12, 13, 13, 14, 15, 16, 17, 18, 19, 20, 21, 22, 23						
11	NP+w	MT20	2.0	4.0		
16	NP-p	MT20	2.0	4.0	1.00	1.75
17	NP-p	MT20	2.0	4.0	1.00	1.75

A SIZE FOR SIZE SUBSTITUTION OF MITEK MII20 WITH TEE-LOK TL20 PLATES IS ALLOWED.

DIMENSIONS, SUPPORTS AND LOADINGS SPECIFIED BY FABRICATOR TO BE VERIFIED BY BUILDING DESIGNER

BEARINGS

JT	FACTORED GROSS REACTION VERT	HORZ	MAXIMUM FACTORED GROSS REACTION DOWN	HORZ	UPLIFT	INPUT BRG IN-SX	REQRD BRG IN-SX
7	668	0	668	0	0	1-10	1-10
10	755	0	755	0	0	5-8	5-8

UNFACTORED REACTIONS

JT	1ST LCASE COMBINED	MAX./MIN. COMPONENT REACTIONS SNOW	LIVE	PERM.LIVE	WIND	DEAD	SOIL
7	469	328 / 0	0 / 0	0 / 0	0 / 0	141 / 0	0 / 0
10	528	380 / 0	0 / 0	0 / 0	0 / 0	148 / 0	0 / 0

BEARING MATERIAL TO BE SPF NO.2 OR BETTER AT JOINT(S) 7, 10

BRACING

TOP CHORD TO BE SHEATHED OR MAX. PURLIN SPACING = 5.33 FT.
MAX. UNBRACED BOTTOM CHORD LENGTH = 10.00 FT. OR RIGID CEILING DIRECTLY APPLIED.

ALL PITCH BREAKS AND PERIMETER CORNER JOINTS MUST BE LATERALLY RESTRAINED.

1 - 2x3 SPF No.2 LATERAL BRACE(S) AT 1/ 2 LENGTH OF 6-7. DBS = 20-0-0 . CBF = 14 LBS.
1 - 2x3 SPF No.2 LATERAL BRACE(S) AT 1/ 2 LENGTH OF 5-7. DBS = 18-0-0 . CBF = 91 LBS.

DBS = DIAGONAL BRACE SPACING (MAX). CBF = CUMULATIVE BRACING FORCE. FASTEN LATERAL BRACE(S) USING (0.122"X3") SPIRAL NAILS : 1 NAIL FOR 2x3 BRACE(S), 2 FOR 1x4, 2x4, 2x5, 3 FOR 2x6, 4 FOR 2x8, 5 FOR 2x10, AND 6 FOR 2x12.

END VERTICAL(S) MUST BE SHEATHED OR HAVE BRACES AS INDICATED IN THE MAX. UNBRACED LENGTH COLUMN OF THE TABLE BELOW

LOADING

TOTAL LOAD CASES: (4)

CHORDS

MEMB. FR-TO	MAX. FACTORED FORCE (LBS)	FACTORED VERT. LOAD (PLF) FROM	TO	LC1 MAX CSI (LC)	MAX. UNBRAC LENGTH
1- 2	0 / 24	-77.4	-77.4	0.07 (1)	10.00
2- 3	-1377 / 0	-77.4	-77.4	0.21 (1)	5.33
3- 4	-451 / 0	-77.4	-77.4	0.19 (1)	6.25
4- 5	-451 / 0	-77.4	-77.4	0.19 (1)	6.25
5- 6	-24 / 0	-77.4	-77.4	0.19 (1)	6.25
7- 6	-115 / 0	0.0	0.0	0.06 (1)	6.25
10- 2	-716 / 0	0.0	0.0	0.07 (1)	7.81
10- 9	0 / 0	-17.5	-17.5	0.10 (4)	10.00
9- 8	0 / 1143	-17.5	-17.5	0.28 (1)	10.00
8- 7	0 / 431	-17.5	-17.5	0.12 (1)	10.00

WEBS

MEMB. FR-TO	MAX. FACTORED FORCE (LBS)	MAX CSI (LC)
9- 3	0 / 374	0.08 (1)
3- 8	-814 / 0	0.47 (1)
8- 5	0 / 547	0.12 (1)
5- 7	-808 / 0	0.39 (1)
2- 9	0 / 1198	0.27 (1)

DESIGN CRITERIA

SPECIFIED LOADS:

TOP	CH.	LL	=	23.3	PSF
		DL	=	3.0	PSF
BOT	CH.	LL	=	0.0	PSF
		DL	=	7.0	PSF
TOTAL	LOAD		=	33.3	PSF

SPACING = 24.0 IN. C/C

THIS TRUSS IS DESIGNED FOR RESIDENTIAL OR SMALL BUILDING REQUIREMENTS OF PART 9, NBCC 2010

THIS DESIGN COMPLIES WITH:
- PART 9 OF OBC 2012 , BCBC 2012 , ABC 2014
- CSA 086-09
- TPIC 2011

(55 % OF 27.2 P.S.F. G.S.L. PLUS 8.4 P.S.F. RAIN LOAD) EQUALS 23.3 P.S.F. SPECIFIED ROOF LIVE LOAD

ALLOWABLE DEFL.(LL)= L/360 (0.47")
CALCULATED VERT. DEFL.(LL) = L/ 999 (0.05")
ALLOWABLE DEFL.(TL)= L/360 (0.47")
CALCULATED VERT. DEFL.(TL) = L/ 999 (0.11")

CSI: TC=0.21 (2-3:1) , BC=0.28 (8-9:1) , WB=0.47 (3-8:1) , SSI=0.14 (2-3:1)

DOL LUMBER=1.00 NAIL=1.00 LS BEND=1.10 COMP=1.10 SHEAR=1.10 TENS= 1.10

COMPANION LIVE LOAD FACTOR = 0.50

AUTOSOLVE RIGHT HEEL ONLY

TRUSS PLATE MANUFACTURER IS NOT RESPONSIBLE FOR QUALITY CONTROL IN THE TRUSS MANUFACTURING PLANT .

NAIL VALUES

PLATE	GRIP(DRY) (PSI) MAX	MIN	SHEAR (PLI) MAX	MIN	SECTION (PLI) MAX	MIN
MT20	618	354	1667	822	2284	1656

PLATE PLACEMENT TOL. = 0.250 inches

PLATE ROTATION TOL. = 5.0 Deg.

JSI GRIP= 0.88 (3) (INPUT = 0.90)
JSI METAL= 0.41 (9) (INPUT = 1.00)

LICENSED PROFESSIONAL ENGINEER
P.M. TREVISAN
100136551
March 16th, 2017
PROVINCE OF ONTARIO

RECEIVED
TOWN OF MILTON
MAR 29, 2017
17-5327
BUILDING DIVISION

KOTT

JOB NAME	TRUSS NAME	QUANTITY	PLY	JOB DESC.	DRWG NO.
PT0317-093	T27	1	1	TRUSS DESC. LECCO RIDGE-BLOCK 343	ENG JOB: PT0317-093

KOTT , Stouffville, ON, CGC

Version 8.100 S Feb 9 2017 MiTek Industries, Inc. Thu Mar 16 07:55:04 2017 Page 1

ID:EvTixTQDI5yR1QLotZTBr_yE?HJ-21V27eGAu7Wmg0U09uSPfD6QwfsAbEhfTivhhHzaRHb

SCALE = 1:72.6

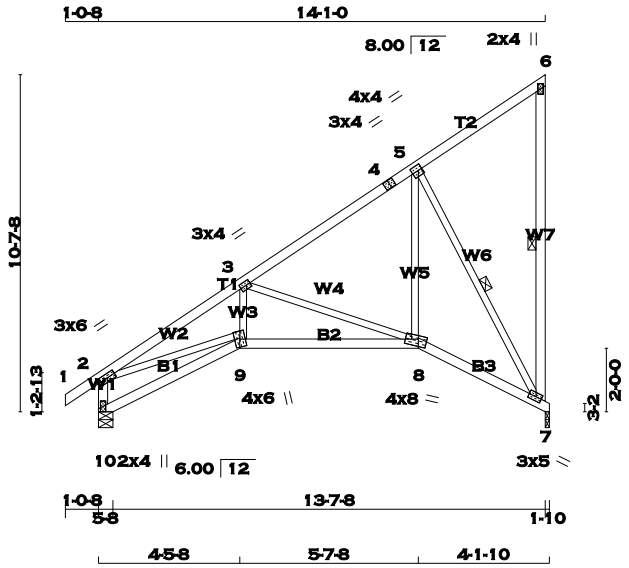

TOTAL WEIGHT = 71 lb

[M][F]

LUMBER

N. L. G. A. RULES

CHORDS	SIZE		LUMBER	DESCR.
1 - 4	2x4	DRY	No.2	SPF
4 - 6	2x4	DRY	No.2	SPF
7 - 6	2x4	DRY	No.2	SPF
10 - 2	2x4	DRY	No.2	SPF
10 - 9	2x4	DRY	No.2	SPF
9 - 8	2x4	DRY	No.2	SPF
8 - 7	2x4	DRY	No.2	SPF
ALL WEBS EXCEPT	2x3	DRY	No.2	SPF

DRY: SEASONED LUMBER.

PLATES (table is in inches)

JT	TYPE	PLATES	W	LEN	Y	X
2	TMVW-t	MT20	3.0	6.0		
3	TMWW-t	MT20	3.0	4.0	1.50	1.50
4	TS-t	MT20	3.0	4.0		
5	TMWW-t	MT20	4.0	4.0	2.00	1.50
6	TMV+p	MT20	2.0	4.0		
7	BMVW1-t	MT20	3.0	5.0	1.50	2.25
8	BBWW-m	MT20	4.0	8.0	2.75	3.25
9	BBWW+m	MT20	4.0	6.0		
10	BMV1+p	MT20	2.0	4.0		

A SIZE FOR SIZE SUBSTITUTION OF MITEK MII20 WITH TEE-LOK TL20 PLATES IS ALLOWED.

DIMENSIONS, SUPPORTS AND LOADINGS SPECIFIED BY FABRICATOR TO BE VERIFIED BY BUILDING DESIGNER

BEARINGS

JT	FACTORED GROSS REACTION VERT	HORZ	MAXIMUM FACTORED GROSS REACTION DOWN	HORZ	UPLIFT	INPUT BRG IN-SX	REQRD BRG IN-SX
7	668	0	668	0	0	1-10	1-10
10	755	0	755	0	0	5-8	5-8

UNFACTORED REACTIONS

JT	1ST LCASE COMBINED	MAX./MIN. COMPONENT REACTIONS SNOW	LIVE	PERM.LIVE	WIND	DEAD	SOIL
7	469	328 / 0	0 / 0	0 / 0	0 / 0	141 / 0	0 / 0
10	528	380 / 0	0 / 0	0 / 0	0 / 0	148 / 0	0 / 0

BEARING MATERIAL TO BE SPF NO.2 OR BETTER AT JOINT(S) 7, 10

BRACING

TOP CHORD TO BE SHEATHED OR MAX. PURLIN SPACING = 5.33 FT.
MAX. UNBRACED BOTTOM CHORD LENGTH = 10.00 FT. OR RIGID CEILING DIRECTLY APPLIED.

ALL PITCH BREAKS AND PERIMETER CORNER JOINTS MUST BE LATERALLY RESTRAINED.

1 - 2x3 SPF No.2 LATERAL BRACE(S) AT 1/ 2 LENGTH OF 6-7. DBS = 20-0-0 . CBF = 14 LBS.
1 - 2x3 SPF No.2 LATERAL BRACE(S) AT 1/ 2 LENGTH OF 5-7. DBS = 18-0-0 . CBF = 91 LBS.

DBS = DIAGONAL BRACE SPACING (MAX). CBF = CUMULATIVE BRACING FORCE. FASTEN LATERAL BRACE(S) USING (0.122"X3") SPIRAL NAILS : 1 NAIL FOR 2x3 BRACE(S), 2 FOR 1x4, 2x4, 2x5, 3 FOR 2x6, 4 FOR 2x8, 5 FOR 2x10, AND 6 FOR 2x12.

END VERTICAL(S) MUST BE SHEATHED OR HAVE BRACES AS INDICATED IN THE MAX. UNBRACED LENGTH COLUMN OF THE TABLE BELOW

LOADING

TOTAL LOAD CASES: (4)

CHORDS

MEMB. FR-TO	MAX. FACTORED FORCE (LBS)	FACTORED VERT. LOAD (PLF) FROM	TO	LC1 MAX CSI (LC)	MAX. UNBRAC LENGTH
1- 2	0 / 24	-77.4	-77.4	0.07 (1)	10.00
2- 3	-1377 / 0	-77.4	-77.4	0.21 (1)	5.33
3- 4	-451 / 0	-77.4	-77.4	0.19 (1)	6.25
4- 5	-451 / 0	-77.4	-77.4	0.19 (1)	6.25
5- 6	-24 / 0	-77.4	-77.4	0.19 (1)	6.25
7- 6	-115 / 0	0.0	0.0	0.06 (1)	6.25
10- 2	-716 / 0	0.0	0.0	0.07 (1)	7.81
10- 9	0 / 0	-17.5	-17.5	0.10 (4)	10.00
9- 8	0 / 1143	-17.5	-17.5	0.28 (1)	10.00
8- 7	0 / 431	-17.5	-17.5	0.12 (1)	10.00

WEBS

MEMB. FR-TO	MAX. FACTORED FORCE (LBS)	MAX CSI (LC)
9- 3	0 / 374	0.08 (1)
3- 8	-814 / 0	0.47 (1)
8- 5	0 / 547	0.12 (1)
5- 7	-808 / 0	0.39 (1)
2- 9	0 / 1198	0.27 (1)

DESIGN CRITERIA

SPECIFIED LOADS:

TOP CH.	LL	=	23.3	PSF
	DL	=	3.0	PSF
BOT CH.	LL	=	0.0	PSF
	DL	=	7.0	PSF
TOTAL LOAD		=	33.3	PSF

SPACING = 24.0 IN. C/C

THIS TRUSS IS DESIGNED FOR RESIDENTIAL OR SMALL BUILDING REQUIREMENTS OF PART 9, NBCC 2010

THIS DESIGN COMPLIES WITH:
- PART 9 OF OBC 2012 , BCBC 2012 , ABC 2014
- CSA 086-09
- TPIC 2011

(55 % OF 27.2 P.S.F. G.S.L. PLUS 8.4 P.S.F. RAIN LOAD) EQUALS 23.3 P.S.F. SPECIFIED ROOF LIVE LOAD

ALLOWABLE DEFL.(LL)= L/360 (0.47")
CALCULATED VERT. DEFL.(LL) = L/ 999 (0.05")
ALLOWABLE DEFL.(TL)= L/360 (0.47")
CALCULATED VERT. DEFL.(TL) = L/ 999 (0.11")

CSI: TC=0.21 (2-3:1) , BC=0.28 (8-9:1) , WB=0.47 (3-8:1) , SSI=0.14 (2-3:1)

DOL LUMBER=1.00 NAIL=1.00 LS BEND=1.10 COMP=1.10 SHEAR=1.10 TENS= 1.10

COMPANION LIVE LOAD FACTOR = 0.50

AUTOSOLVE RIGHT HEEL ONLY

TRUSS PLATE MANUFACTURER IS NOT RESPONSIBLE FOR QUALITY CONTROL IN THE TRUSS MANUFACTURING PLANT .

NAIL VALUES

PLATE	GRIP(DRY) (PSI) MAX	MIN	SHEAR (PLI) MAX	MIN	SECTION (PLI) MAX	MIN
MT20	618	354	1667	822	2284	1656

PLATE PLACEMENT TOL. = 0.250 inches

PLATE ROTATION TOL. = 5.0 Deg.

JSI GRIP= 0.88 (3) (INPUT = 0.90)
JSI METAL= 0.41 (9) (INPUT = 1.00)

LICENSED PROFESSIONAL ENGINEER
P.M. TREVISAN
100136551
March 16th, 2017
PROVINCE OF ONTARIO

RECEIVED
TOWN OF MILTON
MAR 29, 2017
17-5327
BUILDING DIVISION

KOTT

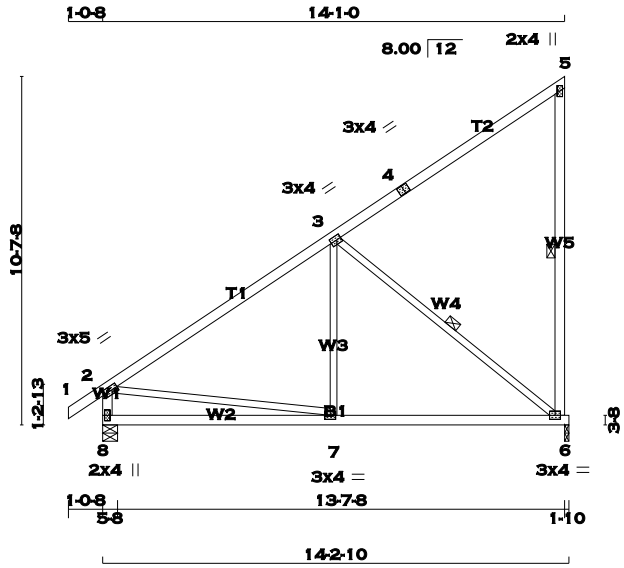

SCALE = 1:70.2

TOTAL WEIGHT = 6 X 66 = 397 lb

[M][F]

LUMBER

N. L. G. A. RULES

CHORDS	SIZE		LUMBER	DESCR.
1 - 4	2x4	DRY	No.2	SPF
4 - 5	2x4	DRY	No.2	SPF
6 - 5	2x4	DRY	No.2	SPF
8 - 2	2x4	DRY	No.2	SPF
8 - 6	2x4	DRY	No.2	SPF
ALL WEBS EXCEPT	2x3	DRY	No.2	SPF

DRY: SEASONED LUMBER.

PLATES (table is in inches)

JT	TYPE	PLATES	W	LEN	Y	X
2	TMVW-t	MT20	3.0	5.0	1.50	2.00
3	TMWW-t	MT20	3.0	4.0	1.50	1.50
4	TS-t	MT20	3.0	4.0		
5	TMV+p	MT20	2.0	4.0		
6	BMVW1-t	MT20	3.0	4.0		
7	BMWW-t	MT20	3.0	4.0		
8	BMV1+p	MT20	2.0	4.0		

A SIZE FOR SIZE SUBSTITUTION OF MITEK MII20 WITH TEE-LOK TL20 PLATES IS ALLOWED.

DIMENSIONS, SUPPORTS AND LOADINGS SPECIFIED BY FABRICATOR TO BE VERIFIED BY BUILDING DESIGNER

BEARINGS

JT	FACTORED GROSS REACTION VERT	HORZ	MAXIMUM FACTORED GROSS REACTION DOWN	HORZ	UPLIFT	INPUT BRG IN-SX	REQRD BRG IN-SX
6	668	0	668	0	0	1-10	1-10
8	755	0	755	0	0	5-8	5-8

UNFACTORED REACTIONS

JT	1ST LCASE COMBINED	MAX./MIN. COMPONENT REACTIONS SNOW	LIVE	PERM.LIVE	WIND	DEAD	SOIL
6	469	328 / 0	0 / 0	0 / 0	0 / 0	141 / 0	0 / 0
8	528	380 / 0	0 / 0	0 / 0	0 / 0	148 / 0	0 / 0

BEARING MATERIAL TO BE SPF NO.2 OR BETTER AT JOINT(S) 6, 8

BRACING

TOP CHORD TO BE SHEATHED OR MAX. PURLIN SPACING = 6.25 FT.
MAX. UNBRACED BOTTOM CHORD LENGTH = 10.00 FT. OR RIGID CEILING DIRECTLY APPLIED.

ALL PITCH BREAKS AND PERIMETER CORNER JOINTS MUST BE LATERALLY RESTRAINED.

1 - 2x3 SPF No.2 LATERAL BRACE(S) AT 1/ 2 LENGTH OF 5-6, 3-6. DBS = 20-0-0 . CBF = 83 LBS.

DBS = DIAGONAL BRACE SPACING (MAX). CBF = CUMULATIVE BRACING FORCE. FASTEN LATERAL BRACE(S) USING (0.122"X3") SPIRAL NAILS : 1 NAIL FOR 2x3 BRACE(S), 2 FOR 1x4, 2x4, 2x5, 3 FOR 2x6, 4 FOR 2x8, 5 FOR 2x10, AND 6 FOR 2x12.

END VERTICAL(S) MUST BE SHEATHED OR HAVE BRACES AS INDICATED IN THE MAX. UNBRACED LENGTH COLUMN OF THE TABLE BELOW

LOADING

TOTAL LOAD CASES: (4)

CHORDS

MEMB. FR-TO	MAX. FACTORED FORCE (LBS)	FACTORED VERT. LOAD LC1 (PLF) FROM	TO	MAX CSI (LC)	MAX. UNBRAC LENGTH
1- 2	0 / 24	-77.4	-77.4	0.07 (1)	10.00
2- 3	-590 / 0	-77.4	-77.4	0.52 (1)	6.25
3- 4	-37 / 0	-77.4	-77.4	0.51 (1)	6.25
4- 5	-37 / 0	-77.4	-77.4	0.51 (1)	6.25
6- 5	-205 / 0	0.0	0.0	0.11 (1)	6.25
8- 2	-708 / 0	0.0	0.0	0.07 (1)	7.81
8- 7	0 / 0	-17.5	-17.5	0.25 (4)	10.00
7- 6	0 / 522	-17.5	-17.5	0.29 (4)	10.00

WEBS

MEMB. FR-TO	MAX. FACTORED FORCE (LBS)	MAX CSI (LC)
7- 3	0 / 152	0.05 (4)
3- 6	-667 / 0	0.36 (1)
2- 7	0 / 526	0.12 (1)

DESIGN CRITERIA

SPECIFIED LOADS:

TOP	CH.	LL	=	23.3	PSF
		DL	=	3.0	PSF
BOT	CH.	LL	=	0.0	PSF
		DL	=	7.0	PSF
TOTAL	LOAD		=	33.3	PSF

SPACING = 24.0 IN. C/C

THIS TRUSS IS DESIGNED FOR RESIDENTIAL OR SMALL BUILDING REQUIREMENTS OF PART 9, NBCC 2010

THIS DESIGN COMPLIES WITH:
- PART 9 OF OBC 2012 , BCBC 2012 , ABC 2014
- CSA 086-09
- TPIC 2011

(55 % OF 27.2 P.S.F. G.S.L. PLUS 8.4 P.S.F. RAIN LOAD) EQUALS 23.3 P.S.F. SPECIFIED ROOF LIVE LOAD

ALLOWABLE DEFL.(LL)= L/360 (0.47")
CALCULATED VERT. DEFL.(LL) = L/ 999 (0.01")
ALLOWABLE DEFL.(TL)= L/360 (0.47")
CALCULATED VERT. DEFL.(TL) = L/ 999 (0.06")

CSI: TC=0.52 (2-3:1) , BC=0.29 (6-7:4) , WB=0.36 (3-6:1) , SSI=0.22 (2-3:1)

DOL LUMBER=1.00 NAIL=1.00 LS BEND=1.10 COMP=1.10 SHEAR=1.10 TENS= 1.10

COMPANION LIVE LOAD FACTOR = 0.50

TRUSS PLATE MANUFACTURER IS NOT RESPONSIBLE FOR QUALITY CONTROL IN THE TRUSS MANUFACTURING PLANT .

NAIL VALUES

PLATE	GRIP(DRY) (PSI) MAX	MIN	SHEAR (PLI) MAX	MIN	SECTION (PLI) MAX	MIN
MT20	618	354	1667	822	2284	1656

PLATE PLACEMENT TOL. = 0.250 inches

PLATE ROTATION TOL. = 5.0 Deg.

JSI GRIP= 0.87 (6) (INPUT = 0.90)
JSI METAL= 0.24 (2) (INPUT = 1.00)

LICENSED PROFESSIONAL ENGINEER
P.M. TREVISAN
100136551
March 16th, 2017
PROVINCE OF ONTARIO

RECEIVED
TOWN OF MILTON
MAR 29, 2017
17-5327
BUILDING DIVISION

KOTT

JOB NAME	TRUSS NAME	QUANTITY	PLY	JOB DESC.	DRWG NO.
PT0317-093	T29	1	1	TRUSS DESC. LECCO RIDGE-BLOCK 343	

KOTT , Stouffville, ON, CGC

Version 8.100 S Feb 9 2017 MiTek Industries, Inc. Thu Mar 16 07:55:05 2017 Page 1
ID:EvTixTQDI5yR1QLotZTBr_yE?HJ-WD3QL_HofQedHA2CjczeCReba3AUKlHoiMfFDjzaRHa

SCALE = 1:42.4

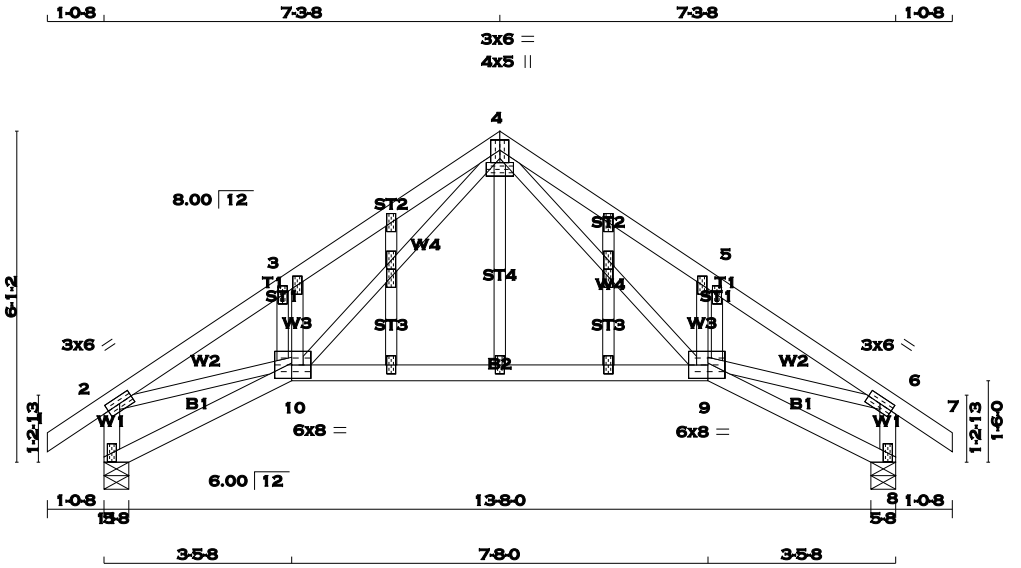

TOTAL WEIGHT = 69 lb
[M][F]

LUMBER
N. L. G. A. RULES

CHORDS	SIZE		LUMBER	DESCR.
1 - 4	2x4	DRY	No.2	SPF
4 - 7	2x4	DRY	No.2	SPF
11 - 2	2x4	DRY	No.2	SPF
8 - 6	2x4	DRY	No.2	SPF
11 - 10	2x4	DRY	No.2	SPF
10 - 9	2x4	DRY	No.2	SPF
9 - 8	2x4	DRY	No.2	SPF
ALL WEBS EXCEPT	2x3	DRY	No.2	SPF
ALL GABLE WEBS	2x3	DRY	No.2	SPF

DRY: SEASONED LUMBER.

GABLE STUDS SPACED AT 2-0-0 OC.

PLATES (table is in inches)

JT	TYPE	PLATES	W	LEN	Y	X
2	TMVW-t	MT20	3.0	6.0		
3	TMW+w	MT20	2.0	4.0		
4	TTWW+p	MT20	4.0	5.0	2.25	2.00
4	NP-p	MT20	3.0	6.0	1.00	3.00
5	TMW+w	MT20	2.0	4.0		
6	TMVW-t	MT20	3.0	6.0		
8	BMV1+p	MT20	2.0	4.0		
9, 9, 10, 10						
9						
9	BBWWWW*-l	MT20	6.0	8.0	3.00	4.25
10	BBWWWW*-l	MT20	6.0	8.0	3.00	4.25
11	BMV1+p	MT20	2.0	4.0		
12, 13, 14, 15, 16, 17, 18, 19, 20						
12	NP+w	MT20	2.0	4.0		
13	NP+w	MT20	2.0	4.0	1.75	1.00
19	NP+w	MT20	2.0	4.0	1.75	1.00

A SIZE FOR SIZE SUBSTITUTION OF MITEK MII20 WITH TEE-LOK TL20 PLATES IS ALLOWED.

DIMENSIONS, SUPPORTS AND LOADINGS SPECIFIED BY FABRICATOR TO BE VERIFIED BY BUILDING DESIGNER

BEARINGS

JT	FACTORED GROSS REACTION VERT	HORZ	MAXIMUM FACTORED GROSS REACTION DOWN	HORZ	UPLIFT	INPUT BRG IN-SX	REQRD BRG IN-SX
11	779	0	779	0	0	5-8	5-8
8	779	0	779	0	0	5-8	5-8

UNFACTORED REACTIONS

JT	1ST LCASE COMBINED	MAX./MIN. COMPONENT REACTIONS SNOW	LIVE	PERM.LIVE	WIND	DEAD	SOIL
11	544	392 / 0	0 / 0	0 / 0	0 / 0	153 / 0	0 / 0
8	544	392 / 0	0 / 0	0 / 0	0 / 0	153 / 0	0 / 0

BEARING MATERIAL TO BE SPF NO.2 OR BETTER AT JOINT(S) 11, 8

BRACING
TOP CHORD TO BE SHEATHED OR MAX. PURLIN SPACING = 5.43 FT.
MAX. UNBRACED BOTTOM CHORD LENGTH = 10.00 FT. OR RIGID CEILING DIRECTLY APPLIED.

ALL PITCH BREAKS AND PERIMETER CORNER JOINTS MUST BE LATERALLY RESTRAINED.

LOADING
TOTAL LOAD CASES: (4)

CHORDS

MEMB. FR-TO	MAX. FACTORED FORCE (LBS)	FACTORED VERT. LOAD (PLF) FROM	TO	LC1 MAX CSI (LC)	MAX. UNBRAC LENGTH
1- 2	0 / 24	-77.4	-77.4	0.07 (1)	10.00
2- 3	-1326 / 0	-77.4	-77.4	0.12 (1)	5.51
3- 4	-1358 / 0	-77.4	-77.4	0.15 (1)	5.43
4- 5	-1358 / 0	-77.4	-77.4	0.15 (1)	5.43
5- 6	-1326 / 0	-77.4	-77.4	0.12 (1)	5.51
6- 7	0 / 24	-77.4	-77.4	0.07 (1)	10.00
11- 2	-748 / 0	0.0	0.0	0.08 (1)	7.81
8- 6	-748 / 0	0.0	0.0	0.08 (1)	7.81
11-10	0 / 0	-17.5	-17.5	0.06 (4)	10.00
10- 9	0 / 561	-17.5	-17.5	0.34 (4)	10.00
9- 8	0 / 0	-17.5	-17.5	0.06 (4)	10.00

WEBS

MEMB. FR-TO	MAX. FACTORED FORCE (LBS)	MAX CSI (LC)
4- 9	0 / 836	0.19 (1)
9- 5	-332 / 0	0.05 (1)
10- 4	0 / 836	0.19 (1)
10- 3	-332 / 0	0.05 (1)
2-10	0 / 1131	0.25 (1)
9- 6	0 / 1131	0.25 (1)

DESIGN CRITERIA

SPECIFIED LOADS:

TOP CH.	LL	=	23.3	PSF
	DL	=	3.0	PSF
BOT CH.	LL	=	0.0	PSF
	DL	=	7.0	PSF
TOTAL LOAD		=	33.3	PSF

SPACING = 24.0 IN. C/C

THIS TRUSS IS DESIGNED FOR RESIDENTIAL OR SMALL BUILDING REQUIREMENTS OF PART 9, NBCC 2010

THIS DESIGN COMPLIES WITH:
- PART 9 OF OBC 2012 , BCBC 2012 , ABC 2014
- CSA 086-09
- TPIC 2011

(55 % OF 27.2 P.S.F. G.S.L. PLUS 8.4 P.S.F. RAIN LOAD) EQUALS 23.3 P.S.F. SPECIFIED ROOF LIVE LOAD

ALLOWABLE DEFL.(LL)= L/360 (0.49")
CALCULATED VERT. DEFL.(LL) = L/ 999 (0.04")
ALLOWABLE DEFL.(TL)= L/360 (0.49")
CALCULATED VERT. DEFL.(TL) = L/ 774 (0.23")

CSI: TC=0.15 (4-5:1) , BC=0.34 (9-10:4) , WB=0.25 (6-9:1) , SSI=0.11 (4-5:1)

DOL LUMBER=1.00 NAIL=1.00 LS BEND=1.10 COMP=1.10 SHEAR=1.10 TENS= 1.10

COMPANION LIVE LOAD FACTOR = 0.50

AUTOSOLVE HEELS OFF

TRUSS PLATE MANUFACTURER IS NOT RESPONSIBLE FOR QUALITY CONTROL IN THE TRUSS MANUFACTURING PLANT .

NAIL VALUES

PLATE	GRIP(DRY) (PSI) MAX	MIN	SHEAR (PLI) MAX	MIN	SECTION (PLI) MAX	MIN
MT20	618	354	1667	822	2284	1656

PLATE PLACEMENT TOL. = 0.250 inches

PLATE ROTATION TOL. = 5.0 Deg.

JSI GRIP= 0.86 (4) (INPUT = 0.90)
JSI METAL= 0.36 (6) (INPUT = 1.00)

LICENSED PROFESSIONAL ENGINEER
P.M. TREVISAN
100136551
March 16th, 2017
PROVINCE OF ONTARIO

RECEIVED
TOWN OF MILTON
MAR 29, 2017
17-5327
BUILDING DIVISION

KOTT

JOB NAME	TRUSS NAME	QUANTITY	PLY	JOB DESC.	DRWG NO.
PT0317-093	T30	1	1	TRUSS DESC. LECCO RIDGE-BLOCK 343	ENG JOB: PT0317-093

KOTT , Stouffville, ON, CGC

Version 8.100 S Feb 9 2017 MiTek Industries, Inc. Thu Mar 16 07:55:05 2017 Page 1

ID:EvTixTQDI5yR1QLotZTBr_yE?HJ-WD3QL_HofQedHA2CjczeCReba3AUKlHoiMfFDjzaRHa

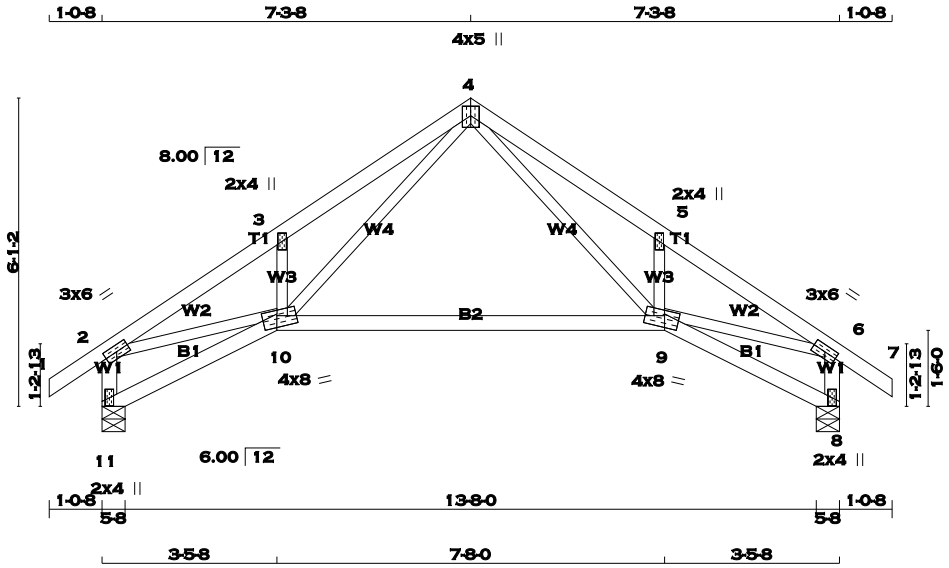

TOTAL WEIGHT = 60 lb

[M][F]

LUMBER

N. L. G. A. RULES

CHORDS	SIZE		LUMBER	DESCR.
1 - 4	2x4	DRY	No.2	SPF
4 - 7	2x4	DRY	No.2	SPF
11 - 2	2x4	DRY	No.2	SPF
8 - 6	2x4	DRY	No.2	SPF
11 - 10	2x4	DRY	No.2	SPF
10 - 9	2x4	DRY	No.2	SPF
9 - 8	2x4	DRY	No.2	SPF
ALL WEBS EXCEPT	2x3	DRY	No.2	SPF

DRY: SEASONED LUMBER.

PLATES (table is in inches)

JT	TYPE	PLATES	W	LEN	Y	X
2	TMVW-t	MT20	3.0	6.0		
3	TMW+w	MT20	2.0	4.0		
4	TTWW+p	MT20	4.0	5.0	2.25	2.00
5	TMW+w	MT20	2.0	4.0		
6	TMVW-t	MT20	3.0	6.0		
8	BMV1+p	MT20	2.0	4.0		
9	BBWWW-m	MT20	4.0	8.0	2.75	3.50
10	BBWWW-m	MT20	4.0	8.0	2.75	3.50
11	BMV1+p	MT20	2.0	4.0		

A SIZE FOR SIZE SUBSTITUTION OF MITEK MII20 WITH TEE-LOK TL20 PLATES IS ALLOWED.

DIMENSIONS, SUPPORTS AND LOADINGS SPECIFIED BY FABRICATOR TO BE VERIFIED BY BUILDING DESIGNER

BEARINGS

JT	FACTORED GROSS REACTION VERT	HORZ	MAXIMUM FACTORED GROSS REACTION DOWN	HORZ	UPLIFT	INPUT BRG IN-SX	REQRD BRG IN-SX
11	779	0	779	0	0	5-8	5-8
8	779	0	779	0	0	5-8	5-8

UNFACTORED REACTIONS

JT	1ST LCASE COMBINED	MAX./MIN. COMPONENT REACTIONS SNOW	LIVE	PERM.LIVE	WIND	DEAD	SOIL
11	544	392 / 0	0 / 0	0 / 0	0 / 0	153 / 0	0 / 0
8	544	392 / 0	0 / 0	0 / 0	0 / 0	153 / 0	0 / 0

BEARING MATERIAL TO BE SPF NO.2 OR BETTER AT JOINT(S) 11, 8

BRACING

TOP CHORD TO BE SHEATHED OR MAX. PURLIN SPACING = 5.43 FT.
MAX. UNBRACED BOTTOM CHORD LENGTH = 10.00 FT. OR RIGID CEILING DIRECTLY APPLIED.

ALL PITCH BREAKS AND PERIMETER CORNER JOINTS MUST BE LATERALLY RESTRAINED.

LOADING

TOTAL LOAD CASES: (4)

CHORDS

MEMB. FR-TO	MAX. FACTORED FORCE (LBS)	FACTORED VERT. LOAD (PLF) FROM	TO	LC1 MAX CSI (LC)	MAX. UNBRAC LENGTH
1- 2	0 / 24	-77.4	-77.4	0.07 (1)	10.00
2- 3	-1326 / 0	-77.4	-77.4	0.12 (1)	5.51
3- 4	-1358 / 0	-77.4	-77.4	0.15 (1)	5.43
4- 5	-1358 / 0	-77.4	-77.4	0.15 (1)	5.43
5- 6	-1326 / 0	-77.4	-77.4	0.12 (1)	5.51
6- 7	0 / 24	-77.4	-77.4	0.07 (1)	10.00
11- 2	-748 / 0	0.0	0.0	0.08 (1)	7.81
8- 6	-748 / 0	0.0	0.0	0.08 (1)	7.81
11-10	0 / 0	-17.5	-17.5	0.06 (4)	10.00
10- 9	0 / 561	-17.5	-17.5	0.34 (4)	10.00
9- 8	0 / 0	-17.5	-17.5	0.06 (4)	10.00

WEBS

MEMB. FR-TO	MAX. FACTORED FORCE (LBS)	MAX CSI (LC)
4- 9	0 / 836	0.19 (1)
9- 5	-332 / 0	0.05 (1)
10- 4	0 / 836	0.19 (1)
10- 3	-332 / 0	0.05 (1)
2-10	0 / 1131	0.25 (1)
9- 6	0 / 1131	0.25 (1)

DESIGN CRITERIA

SPECIFIED LOADS:

TOP CH.	LL	=	23.3	PSF
	DL	=	3.0	PSF
BOT CH.	LL	=	0.0	PSF
	DL	=	7.0	PSF
TOTAL LOAD		=	33.3	PSF

SPACING = 24.0 IN. C/C

THIS TRUSS IS DESIGNED FOR RESIDENTIAL OR SMALL BUILDING REQUIREMENTS OF PART 9, NBCC 2010

THIS DESIGN COMPLIES WITH:
- PART 9 OF OBC 2012 , BCBC 2012 , ABC 2014
- CSA 086-09
- TPIC 2011

(55 % OF 27.2 P.S.F. G.S.L. PLUS 8.4 P.S.F. RAIN LOAD) EQUALS 23.3 P.S.F. SPECIFIED ROOF LIVE LOAD

ALLOWABLE DEFL.(LL)= L/360 (0.49")
CALCULATED VERT. DEFL.(LL) = L/ 999 (0.04")
ALLOWABLE DEFL.(TL)= L/360 (0.49")
CALCULATED VERT. DEFL.(TL) = L/ 774 (0.23")

CSI: TC=0.15 (4-5:1) , BC=0.34 (9-10:4) , WB=0.25 (6-9:1) , SSI=0.11 (4-5:1)

DOL LUMBER=1.00 NAIL=1.00 LS BEND=1.10 COMP=1.10 SHEAR=1.10 TENS= 1.10

COMPANION LIVE LOAD FACTOR = 0.50

AUTOSOLVE HEELS OFF

TRUSS PLATE MANUFACTURER IS NOT RESPONSIBLE FOR QUALITY CONTROL IN THE TRUSS MANUFACTURING PLANT .

NAIL VALUES

PLATE	GRIP(DRY) (PSI) MAX	MIN	SHEAR (PLI) MAX	MIN	SECTION (PLI) MAX	MIN
MT20	618	354	1667	822	2284	1656

PLATE PLACEMENT TOL. = 0.250 inches

PLATE ROTATION TOL. = 5.0 Deg.

JSI GRIP= 0.88 (9) (INPUT = 0.90)
JSI METAL= 0.36 (6) (INPUT = 1.00)

LICENSED PROFESSIONAL ENGINEER
P.M. TREVISAN
100136551
March 16th, 2017
PROVINCE OF ONTARIO

RECEIVED
TOWN OF MILTON
MAR 29, 2017
17-5327
BUILDING DIVISION

KOTT

JOB NAME	TRUSS NAME	QUANTITY	PLY	JOB DESC.	DRWG NO.
PT0317-093	T31	6	1	TRUSS DESC. LECCO RIDGE-BLOCK 343	ENG JOB: PT0317-093

KOTT , Stouffville, ON, CGC

Version 8.100 S Feb 9 2017 MiTek Industries, Inc. Thu Mar 16 07:55:06 2017 Page 1

ID:EvTixTQDI5yR1QLotZTBr_yE?HJ-_QdoYKHQQkmUvKdOHJUtkeBlSTYg3FVyx0OomAzaRHZ

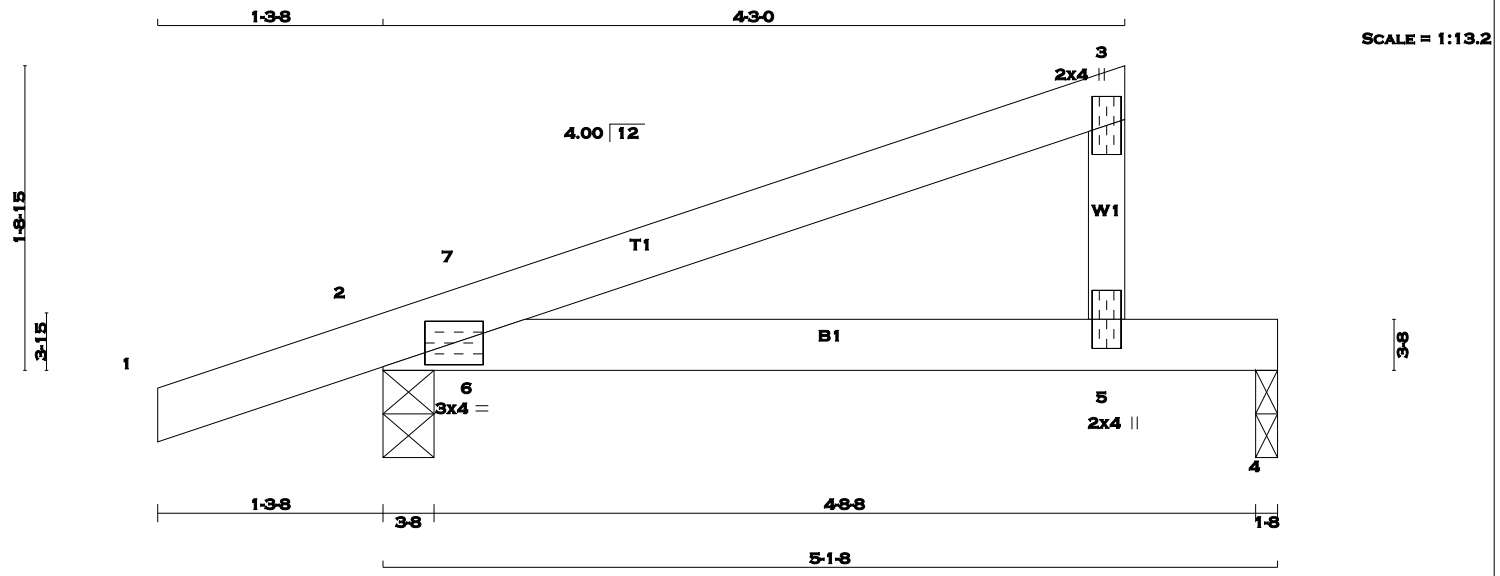

TOTAL WEIGHT = 6 X 14 = 81 lb [M]

LUMBER

N. L. G. A. RULES

CHORDS	SIZE		LUMBER	DESCR.
1 - 3	2x4	DRY	No.2	SPF
5 - 3	2x3	DRY	No.2	SPF
2 - 4	2x4	DRY	No.2	SPF

DRY: SEASONED LUMBER.

PLATES (table is in inches)

JT	TYPE	PLATES	W	LEN	Y	X
2	TMB1-I	MT20	3.0	4.0		
3	TMV+p	MT20	2.0	4.0		
5	BMV+p	MT20	2.0	4.0		

A SIZE FOR SIZE SUBSTITUTION OF MITEK MII20 WITH TEE-LOK TL20 PLATES IS ALLOWED.

DIMENSIONS, SUPPORTS AND LOADINGS SPECIFIED BY FABRICATOR TO BE VERIFIED BY BUILDING DESIGNER

BEARINGS

JT	FACTORED GROSS REACTION VERT	HORZ	MAXIMUM FACTORED GROSS REACTION DOWN	HORZ	UPLIFT	INPUT BRG IN-SX	REQRD BRG IN-SX
2	341	0	341	0	0	3-8	3-8
4	181	0	181	0	0	1-8	1-8

UNFACTORED REACTIONS

JT	1ST LCASE COMBINED	MAX./MIN. COMPONENT REACTIONS SNOW	LIVE	PERM.LIVE	WIND	DEAD	SOIL
2	237	178 / 0	0 / 0	0 / 0	0 / 0	59 / 0	0 / 0
4	129	82 / 0	0 / 0	0 / 0	0 / 0	46 / 0	0 / 0

BEARING MATERIAL TO BE SPF NO.2 OR BETTER AT JOINT(S) 2, 4

BRACING

TOP CHORD TO BE SHEATHED OR MAX. PURLIN SPACING = 6.25 FT.
MAX. UNBRACED BOTTOM CHORD LENGTH = 10.00 FT. OR RIGID CEILING DIRECTLY APPLIED.

ALL PITCH BREAKS AND PERIMETER CORNER JOINTS MUST BE LATERALLY RESTRAINED.

LOADING

TOTAL LOAD CASES: (4)

CHORDS

MEMB. FR-TO	MAX. FACTORED FORCE (LBS)	FACTORED VERT. LOAD (PLF) FROM	TO	LC1 MAX CSI (LC)	MAX. UNBRAC LENGTH
1- 2	0 / 15	-77.4	-77.4	0.10 (1)	10.00
2- 7	-28 / 0	-77.4	-77.4	0.08 (4)	6.25
7- 3	0 / 4	-77.4	-77.4	0.21 (1)	10.00
5- 3	-154 / 0	0.0	0.0	0.02 (1)	7.81
2- 6	0 / 0	-17.5	-17.5	0.11 (1)	10.00
6- 5	0 / 0	-17.5	-17.5	0.21 (1)	10.00
5- 4	0 / 0	-17.5	-17.5	0.21 (1)	10.00

WEBS

MEMB. FR-TO	MAX. FACTORED FORCE (LBS)	MAX CSI (LC)
6- 7	-71 / 51	0.00 (1)

DESIGN CRITERIA

SPECIFIED LOADS:

TOP	CH.	LL	=	23.3	PSF
		DL	=	3.0	PSF
BOT	CH.	LL	=	0.0	PSF
		DL	=	7.0	PSF
TOTAL	LOAD		=	33.3	PSF

SPACING = 24.0 IN. C/C

THIS TRUSS IS DESIGNED FOR RESIDENTIAL OR SMALL BUILDING REQUIREMENTS OF PART 9, NBCC 2010

THIS DESIGN COMPLIES WITH:
- PART 9 OF OBC 2012 , BCBC 2012 , ABC 2014
- CSA 086-09
- TPIC 2011

(55 % OF 27.2 P.S.F. G.S.L. PLUS 8.4 P.S.F. RAIN LOAD) EQUALS 23.3 P.S.F. SPECIFIED ROOF LIVE LOAD

ALLOWABLE DEFL.(LL)= L/360 (0.19")
CALCULATED VERT. DEFL.(LL) = L/ 999 (0.05")
ALLOWABLE DEFL.(TL)= L/360 (0.19")
CALCULATED VERT. DEFL.(TL) = L/ 694 (0.09")

CSI: TC=0.21 (3-7:1) , BC=0.21 (5-6:1) , WB=0.00 (6-7:1) , SSI=0.14 (4-5:1)

DOL LUMBER=1.00 NAIL=1.00 LS BEND=1.10 COMP=1.10 SHEAR=1.10 TENS= 1.10

COMPANION LIVE LOAD FACTOR = 0.50

TRUSS PLATE MANUFACTURER IS NOT RESPONSIBLE FOR QUALITY CONTROL IN THE TRUSS MANUFACTURING PLANT .

NAIL VALUES

PLATE	GRIP(DRY) (PSI) MAX	MIN	SHEAR (PLI) MAX	MIN	SECTION (PLI) MAX	MIN
MT20	618	354	1667	822	2284	1656

PLATE PLACEMENT TOL. = 0.250 inches

PLATE ROTATION TOL. = 5.0 Deg.

JSI GRIP= 0.17 (2) (INPUT = 0.90)
JSI METAL= 0.05 (2) (INPUT = 1.00)

LICENSED PROFESSIONAL ENGINEER
P.M. TREVISAN
100136551
March 16th, 2017
PROVINCE OF ONTARIO

RECEIVED
TOWN OF MILTON
MAR 29, 2017
17-5327
BUILDING DIVISION

KOTT

JOB NAME	TRUSS NAME	QUANTITY	PLY	JOB DESC.	DRWG NO.
PT0317-093	T32	5	1	TRUSS DESC. LECCO RIDGE-BLOCK 343	ENG JOB: PT0317-093

KOTT , Stouffville, ON, CGC

Version 8.100 S Feb 9 2017 MiTek Industries, Inc. Thu Mar 16 07:55:06 2017 Page 1

ID:EvTixTQDI5yR1QLotZTBr_yE?HJ-_QdoYKHQQkmUvKdOHJUtkeBhKTVM37Syx0OomAzaRHZ

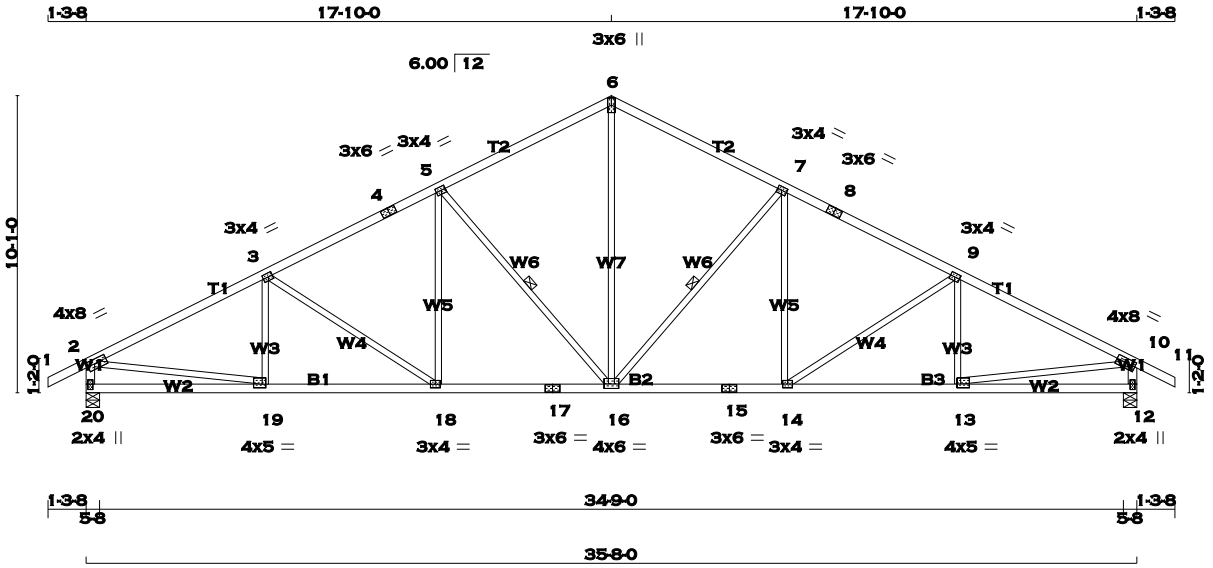

TOTAL WEIGHT = 5 X 150 = 751 lb

[M][F]

LUMBER

N. L. G. A. RULES

CHORDS	SIZE		LUMBER	DESCR.
1 - 4	2x4	DRY	No.2	SPF
4 - 6	2x4	DRY	No.2	SPF
6 - 8	2x4	DRY	No.2	SPF
8 - 11	2x4	DRY	No.2	SPF
20 - 2	2x4	DRY	No.2	SPF
12 - 10	2x4	DRY	No.2	SPF
20 - 17	2x4	DRY	No.2	SPF
17 - 15	2x4	DRY	No.2	SPF
15 - 12	2x4	DRY	No.2	SPF
ALL WEBS EXCEPT	2x3	DRY	No.2	SPF

DRY: SEASONED LUMBER.

PLATES (table is in inches)

JT	TYPE	PLATES	W	LEN	Y	X
2 3, 5, 7, 9	TMVW-t	MT20	4.0	8.0	1.75	3.00
3	TMWW-t	MT20	3.0	4.0	1.50	1.75
4	TS-t	MT20	3.0	6.0		
6	TTW+p	MT20	3.0	6.0		
8	TS-t	MT20	3.0	6.0		
10	TMVW-t	MT20	4.0	8.0	1.75	3.00
12	BMV1+p	MT20	2.0	4.0	2.25	1.00
13	BMWW-t	MT20	4.0	5.0	1.50	1.50
14	BMWW-t	MT20	3.0	4.0		
15	BS-t	MT20	3.0	6.0		
16	BMWWW-t	MT20	4.0	6.0	1.75	3.00
17	BS-t	MT20	3.0	6.0		
18	BMWW-t	MT20	3.0	4.0		
19	BMWW-t	MT20	4.0	5.0	1.50	1.50
20	BMV1+p	MT20	2.0	4.0	2.25	1.00

A SIZE FOR SIZE SUBSTITUTION OF MITEK MII20 WITH TEE-LOK TL20 PLATES IS ALLOWED.

DIMENSIONS, SUPPORTS AND LOADINGS SPECIFIED BY FABRICATOR TO BE VERIFIED BY BUILDING DESIGNER

BEARINGS

JT	FACTORED GROSS REACTION VERT	HORZ	MAXIMUM FACTORED GROSS REACTION DOWN	HORZ	UPLIFT	INPUT BRG IN-SX	REQRD BRG IN-SX
20	1797	0	1797	0	0	5-8	5-8
12	1797	0	1797	0	0	5-8	5-8

UNFACTORED REACTIONS

JT	1ST LCASE COMBINED	MAX./MIN. COMPONENT REACTIONS SNOW	LIVE	PERM.LIVE	WIND	DEAD	SOIL
20	1259	894 / 0	0 / 0	0 / 0	0 / 0	365 / 0	0 / 0
12	1259	894 / 0	0 / 0	0 / 0	0 / 0	365 / 0	0 / 0

BEARING MATERIAL TO BE SPF NO.2 OR BETTER AT JOINT(S) 20, 12

BRACING

TOP CHORD TO BE SHEATHED OR MAX. PURLIN SPACING = 3.95 FT.
MAX. UNBRACED BOTTOM CHORD LENGTH = 10.00 FT. OR RIGID CEILING DIRECTLY APPLIED.

ALL PITCH BREAKS AND PERIMETER CORNER JOINTS MUST BE LATERALLY RESTRAINED.

1 - 2x3 SPF No.2 LATERAL BRACE(S) AT 1/ 2 LENGTH OF 7-16, 5-16. DBS = 20-0-0 . CBF = 88 LBS.

DBS = DIAGONAL BRACE SPACING (MAX). CBF = CUMULATIVE BRACING FORCE. FASTEN LATERAL BRACE(S) USING (0.122"X3") SPIRAL NAILS : 1 NAIL FOR 2x3 BRACE(S), 2 FOR 1x4, 2x4, 2x5, 3 FOR 2x6, 4 FOR 2x8, 5 FOR 2x10, AND 6 FOR 2x12.

END VERTICAL(S) MUST BE SHEATHED OR HAVE BRACES AS INDICATED IN THE MAX. UNBRACED LENGTH COLUMN OF THE TABLE BELOW

LOADING

TOTAL LOAD CASES: (4)

CHORDS

MEMB. FR-TO	MAX. FACTORED FORCE (LBS)	FACTORED VERT. LOAD LC1 (PLF) FROM	TO	MAX CSI (LC)	MAX. UNBRAC LENGTH
1- 2	0 / 23	-77.4	-77.4	0.10 (1)	10.00
2- 3	-2515 / 0	-77.4	-77.4	0.47 (1)	3.95
3- 4	-2248 / 0	-77.4	-77.4	0.38 (1)	4.24
4- 5	-2248 / 0	-77.4	-77.4	0.38 (1)	4.24
5- 6	-1751 / 0	-77.4	-77.4	0.37 (1)	4.68
6- 7	-1751 / 0	-77.4	-77.4	0.37 (1)	4.68
7- 8	-2248 / 0	-77.4	-77.4	0.38 (1)	4.24
8- 9	-2248 / 0	-77.4	-77.4	0.38 (1)	4.24
9-10	-2515 / 0	-77.4	-77.4	0.47 (1)	3.95
10-11	0 / 23	-77.4	-77.4	0.10 (1)	10.00
20- 2	-1751 / 0	0.0	0.0	0.18 (1)	6.30
12-10	-1751 / 0	0.0	0.0	0.18 (1)	6.30
20-19	0 / 0	-17.5	-17.5	0.14 (4)	10.00
19-18	0 / 2267	-17.5	-17.5	0.42 (1)	10.00
18-17	0 / 2010	-17.5	-17.5	0.40 (1)	10.00
17-16	0 / 2010	-17.5	-17.5	0.40 (1)	10.00
16-15	0 / 2010	-17.5	-17.5	0.40 (1)	10.00
15-14	0 / 2010	-17.5	-17.5	0.40 (1)	10.00
14-13	0 / 2267	-17.5	-17.5	0.42 (1)	10.00
13-12	0 / 0	-17.5	-17.5	0.14 (4)	10.00

WEBS

MEMB. FR-TO	MAX. FACTORED FORCE (LBS)	MAX CSI (LC)
16- 6	0 / 1182	0.27 (1)
16- 7	-708 / 0	0.40 (1)
14- 7	0 / 270	0.06 (1)
14- 9	-308 / 0	0.29 (1)
13- 9	-207 / 37	0.06 (1)
5-16	-708 / 0	0.40 (1)
18- 5	0 / 270	0.06 (1)
3-18	-308 / 0	0.29 (1)
19- 3	-207 / 37	0.06 (1)
2-19	0 / 2289	0.52 (1)
13-10	0 / 2289	0.52 (1)

DESIGN CRITERIA

SPECIFIED LOADS:

TOP	CH.	LL	=	23.3	PSF
		DL	=	3.0	PSF
BOT	CH.	LL	=	0.0	PSF
		DL	=	7.0	PSF
TOTAL	LOAD		=	33.3	PSF

SPACING = 24.0 IN. C/C

THIS TRUSS IS DESIGNED FOR RESIDENTIAL OR SMALL BUILDING REQUIREMENTS OF PART 9, NBCC 2010

THIS DESIGN COMPLIES WITH:
- PART 9 OF OBC 2012 , BCBC 2012 , ABC 2014
- CSA 086-09
- TPIC 2011

(55 % OF 27.2 P.S.F. G.S.L. PLUS 8.4 P.S.F. RAIN LOAD) EQUALS 23.3 P.S.F. SPECIFIED ROOF LIVE LOAD

ALLOWABLE DEFL.(LL)= L/360 (1.19")
CALCULATED VERT. DEFL.(LL) = L/ 999 (0.14")
ALLOWABLE DEFL.(TL)= L/360 (1.19")
CALCULATED VERT. DEFL.(TL) = L/ 999 (0.25")

CSI: TC=0.47 (9-10:1) , BC=0.42 (13-14:1) , WB=0.52 (10-13:1) , SSI=0.19 (9-10:1)

DOL LUMBER=1.00 NAIL=1.00 LS BEND=1.10 COMP=1.10 SHEAR=1.10 TENS= 1.10

COMPANION LIVE LOAD FACTOR = 0.50

TRUSS PLATE MANUFACTURER IS NOT RESPONSIBLE FOR QUALITY CONTROL IN THE TRUSS MANUFACTURING PLANT .

NAIL VALUES

PLATE	GRIP(DRY) (PSI) MAX	MIN	SHEAR (PLI) MAX	MIN	SECTION (PLI) MAX	MIN
MT20	618	354	1667	822	2284	1656

PLATE PLACEMENT TOL. = 0.250 inches

PLATE ROTATION TOL. = 5.0 Deg.

JSI GRIP= 0.88 (16) (INPUT = 0.90)
JSI METAL= 0.68 (13) (INPUT = 1.00)

LICENSED PROFESSIONAL ENGINEER
P.M. TREVISAN
100136551
March 16th, 2017
PROVINCE OF ONTARIO

RECEIVED
TOWN OF MILTON
MAR 29, 2017
17-5327
BUILDING DIVISION

KOTT

JOB NAME	TRUSS NAME	QUANTITY	PLY	JOB DESC.	DRWG NO.
PT0317-093	T33	8	1	TRUSS DESC. LECCO RIDGE-BLOCK 343	

KOTT , Stouffville, ON, CGC

Version 8.100 S Feb 9 2017 MiTek Industries, Inc. Thu Mar 16 07:55:07 2017 Page 1
ID:EvTixTQDI5yR1QLotZTBr_yE?HJ-ScABlgI2B2uLXUCbq106Hsks9trfobq59g8LIczaRHY

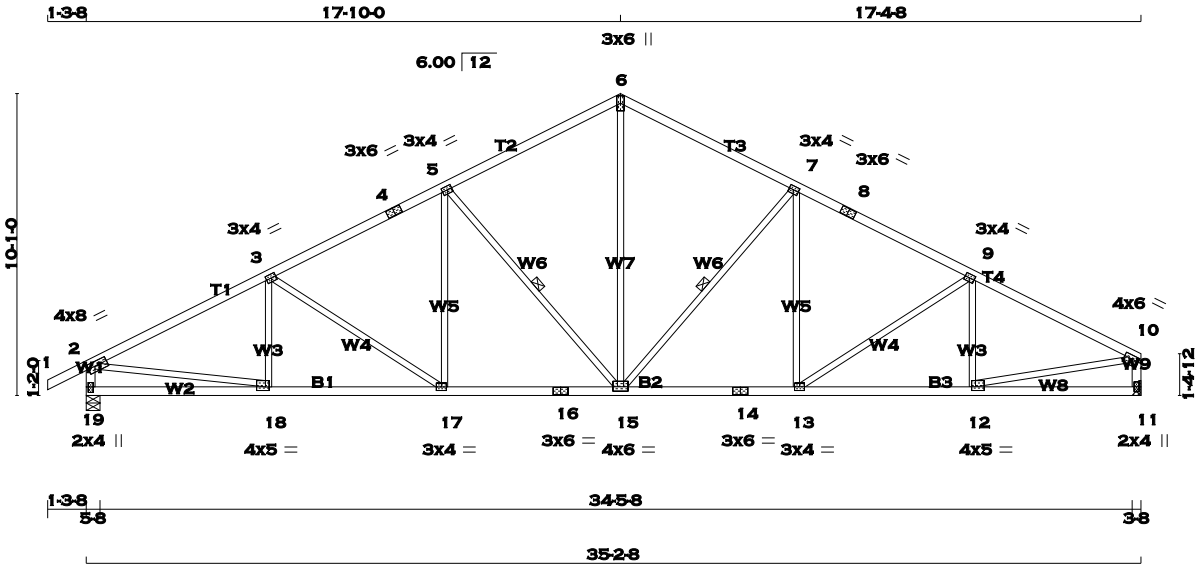

TOTAL WEIGHT = 8 X 147 = 1179 lb
[M][F]

LUMBER
N. L. G. A. RULES

CHORDS	SIZE		LUMBER	DESCR.
1 - 4	2x4	DRY	No.2	SPF
4 - 6	2x4	DRY	No.2	SPF
6 - 8	2x4	DRY	No.2	SPF
8 - 10	2x4	DRY	No.2	SPF
19 - 2	2x4	DRY	No.2	SPF
11 - 10	2x4	DRY	No.2	SPF
19 - 16	2x4	DRY	No.2	SPF
16 - 14	2x4	DRY	No.2	SPF
14 - 11	2x4	DRY	No.2	SPF
ALL WEBS EXCEPT	2x3	DRY	No.2	SPF

DRY: SEASONED LUMBER.

PLATES (table is in inches)

JT	TYPE	PLATES	W	LEN	Y	X
2 3, 5, 7, 9	TMVW-t	MT20	4.0	8.0	1.75	3.00
3	TMWW-t	MT20	3.0	4.0	1.50	1.75
4	TS-t	MT20	3.0	6.0		
6	TTW+p	MT20	3.0	6.0		
8	TS-t	MT20	3.0	6.0		
10	TMVW-t	MT20	4.0	6.0	1.50	2.75
11	BMV1+p	MT20	2.0	4.0		
12	BMWW-t	MT20	4.0	5.0	1.50	1.50
13	BMWW-t	MT20	3.0	4.0		
14	BS-t	MT20	3.0	6.0		
15	BMWWW-t	MT20	4.0	6.0	1.75	3.00
16	BS-t	MT20	3.0	6.0		
17	BMWW-t	MT20	3.0	4.0		
18	BMWW-t	MT20	4.0	5.0	1.50	1.50
19	BMV1+p	MT20	2.0	4.0	2.25	1.00

A SIZE FOR SIZE SUBSTITUTION OF MITEK MII20 WITH TEE-LOK TL20 PLATES IS ALLOWED.

DIMENSIONS, SUPPORTS AND LOADINGS SPECIFIED BY FABRICATOR TO BE VERIFIED BY BUILDING DESIGNER

BEARINGS

JT	FACTORED GROSS REACTION VERT	HORZ	MAXIMUM FACTORED GROSS REACTION DOWN	HORZ	UPLIFT	INPUT BRG IN-SX	REQRD BRG IN-SX
19	1775	0	1775	0	0	5-8	5-8
11	1670	0	1670	0	0	HANGER BY OTHERS MIN. SEAT SIZE: 3-8	

UNFACTORED REACTIONS

JT	1ST LCASE COMBINED	SNOW	MAX./MIN. COMPONENT REACTIONS LIVE	PERM.LIVE	WIND	DEAD	SOIL
19	1243	883 / 0	0 / 0	0 / 0	0 / 0	360 / 0	0 / 0
11	1172	820 / 0	0 / 0	0 / 0	0 / 0	352 / 0	0 / 0

BEARING MATERIAL TO BE SPF NO.2 OR BETTER AT JOINT(S) 19

BRACING
TOP CHORD TO BE SHEATHED OR MAX. PURLIN SPACING = 3.98 FT.
MAX. UNBRACED BOTTOM CHORD LENGTH = 10.00 FT. OR RIGID CEILING DIRECTLY APPLIED.

ALL PITCH BREAKS AND PERIMETER CORNER JOINTS MUST BE LATERALLY RESTRAINED.

1 - 2x3 SPF No.2 LATERAL BRACE(S) AT 1/ 2 LENGTH OF 5-15, 7-15. DBS = 20-0-0 . CBF = 89 LBS.

DBS = DIAGONAL BRACE SPACING (MAX). CBF = CUMULATIVE BRACING FORCE. FASTEN LATERAL BRACE(S) USING (0.122"X3") SPIRAL NAILS : 1 NAIL FOR 2x3 BRACE(S), 2 FOR 1x4, 2x4, 2x5, 3 FOR 2x6, 4 FOR 2x8, 5 FOR 2x10, AND 6 FOR 2x12.

END VERTICAL(S) MUST BE SHEATHED OR HAVE BRACES AS INDICATED IN THE MAX. UNBRACED LENGTH COLUMN OF THE TABLE BELOW

LOADING
TOTAL LOAD CASES: (4)

CHORDS

MEMB. FR-TO	MAX. FACTORED FORCE (LBS)	FACTORED VERT. LOAD LC1 (PLF) FROM	TO	MAX CSI (LC)	MAX. UNBRAC LENGTH
1- 2	0 / 23	-77.4	-77.4	0.10 (1)	10.00
2- 3	-2477 / 0	-77.4	-77.4	0.47 (1)	3.98
3- 4	-2205 / 0	-77.4	-77.4	0.38 (1)	4.28
4- 5	-2205 / 0	-77.4	-77.4	0.38 (1)	4.28
5- 6	-1707 / 0	-77.4	-77.4	0.37 (1)	4.74
6- 7	-1707 / 0	-77.4	-77.4	0.37 (1)	4.73
7- 8	-2162 / 0	-77.4	-77.4	0.38 (1)	4.31
8- 9	-2162 / 0	-77.4	-77.4	0.38 (1)	4.31
9-10	-2322 / 0	-77.4	-77.4	0.38 (1)	4.17
19- 2	-1729 / 0	0.0	0.0	0.17 (1)	6.33
11-10	-1628 / 0	0.0	0.0	0.17 (1)	6.48
19-18	0 / 0	-17.5	-17.5	0.14 (4)	10.00
18-17	0 / 2233	-17.5	-17.5	0.42 (1)	10.00
17-16	0 / 1972	-17.5	-17.5	0.39 (1)	10.00
16-15	0 / 1972	-17.5	-17.5	0.39 (1)	10.00
15-14	0 / 1936	-17.5	-17.5	0.38 (1)	10.00
14-13	0 / 1936	-17.5	-17.5	0.38 (1)	10.00
13-12	0 / 2094	-17.5	-17.5	0.39 (1)	10.00
12-11	0 / 0	-17.5	-17.5	0.13 (4)	10.00

WEBS

MEMB. FR-TO	MAX. FACTORED FORCE (LBS)	MAX CSI (LC)
18- 3	-202 / 39	0.05 (1)
3-17	-313 / 0	0.30 (1)
17- 5	0 / 273	0.06 (1)
5-15	-710 / 0	0.40 (1)
15- 6	0 / 1143	0.26 (1)
15- 7	-655 / 0	0.37 (1)
13- 7	0 / 206	0.05 (4)
13- 9	-190 / 0	0.18 (1)
12- 9	-297 / 6	0.08 (1)
2-18	0 / 2255	0.51 (1)
12-10	0 / 2132	0.48 (1)

DESIGN CRITERIA

SPECIFIED LOADS:

TOP CH.	LL	=	23.3	PSF
	DL	=	3.0	PSF
BOT CH.	LL	=	0.0	PSF
	DL	=	7.0	PSF
TOTAL LOAD		=	33.3	PSF

SPACING = 24.0 IN. C/C

THIS TRUSS IS DESIGNED FOR RESIDENTIAL OR SMALL BUILDING REQUIREMENTS OF PART 9, NBCC 2010

THIS DESIGN COMPLIES WITH:
- PART 9 OF OBC 2012 , BCBC 2012 , ABC 2014
- CSA 086-09
- TPIC 2011

(55 % OF 27.2 P.S.F. G.S.L. PLUS 8.4 P.S.F. RAIN LOAD) EQUALS 23.3 P.S.F. SPECIFIED ROOF LIVE LOAD

ALLOWABLE DEFL.(LL)= L/360 (1.17")
CALCULATED VERT. DEFL.(LL) = L/ 999 (0.13")
ALLOWABLE DEFL.(TL)= L/360 (1.17")
CALCULATED VERT. DEFL.(TL) = L/ 999 (0.24")

CSI: TC=0.47 (2-3:1) , BC=0.42 (17-18:1) , WB=0.51 (2-18:1) , SSI=0.19 (2-3:1)

DOL LUMBER=1.00 NAIL=1.00 LS BEND=1.10 COMP=1.10 SHEAR=1.10 TENS= 1.10

COMPANION LIVE LOAD FACTOR = 0.50

TRUSS PLATE MANUFACTURER IS NOT RESPONSIBLE FOR QUALITY CONTROL IN THE TRUSS MANUFACTURING PLANT .

NAIL VALUES

PLATE	GRIP(DRY) (PSI) MAX	MIN	SHEAR (PLI) MAX	MIN	SECTION (PLI) MAX	MIN
MT20	618	354	1667	822	2284	1656

PLATE PLACEMENT TOL. = 0.250 inches

PLATE ROTATION TOL. = 0.5 Deg.

JSI GRIP= 0.88 (10) (INPUT = 0.90)
JSI METAL= 0.67 (18) (INPUT = 1.00)

LICENSED PROFESSIONAL ENGINEER
P.M. TREVISAN
100136551
March 16th, 2017
PROVINCE OF ONTARIO

RECEIVED
TOWN OF MILTON
MAR 29, 2017
17-5327
BUILDING DIVISION

KOTT

JOB NAME	TRUSS NAME	QUANTITY	PLY	JOB DESC.	DRWG NO.
PT0317-093	T34	1	1	TRUSS DESC. LECCO RIDGE-BLOCK 343	ENG JOB: PT0317-093

KOTT , Stouffville, ON, CGC

Version 8.100 S Feb 9 2017 MiTek Industries, Inc. Thu Mar 16 07:55:08 2017 Page 1

ID:EvTixTQDI5yR1QLotZTBr_yE?HJ-wokZz0JgyL0B8dnnOkXLq3G0WG29XwWEOKtvq2zaRHX

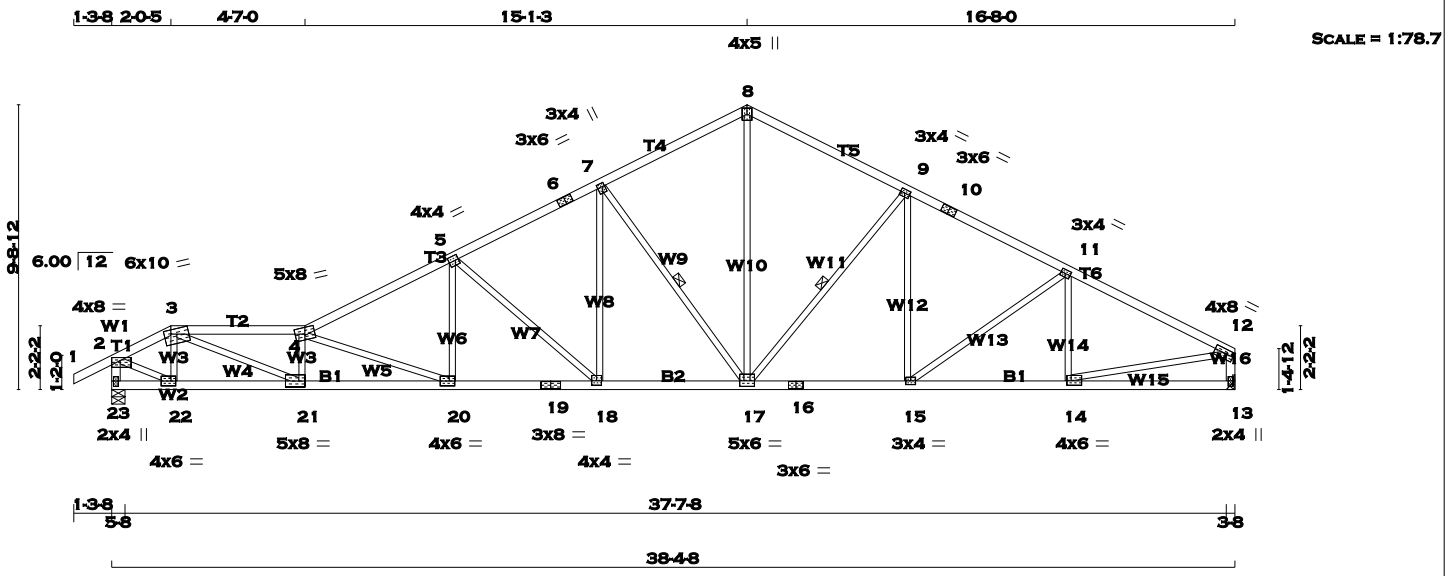

TOTAL WEIGHT = 161 lb

[M][F]

LUMBER

N. L. G. A. RULES

CHORDS	SIZE		LUMBER	DESCR.
1 - 3	2x4	DRY	No.2	SPF
3 - 4	2x4	DRY	No.2	SPF
4 - 6	2x4	DRY	No.2	SPF
6 - 8	2x4	DRY	No.2	SPF
8 - 10	2x4	DRY	No.2	SPF
10 - 12	2x4	DRY	No.2	SPF
23 - 2	2x4	DRY	No.2	SPF
13 - 12	2x4	DRY	No.2	SPF
23 - 19	2x4	DRY	No.2	SPF
19 - 16	2x4	DRY	No.2	SPF
16 - 13	2x4	DRY	No.2	SPF
ALL WEBS EXCEPT	2x3	DRY	No.2	SPF

DRY: SEASONED LUMBER.

PLATES (table is in inches)

JT	TYPE	PLATES	W	LEN	Y	X
2	TMVW-p	MT20	4.0	8.0	1.25	3.50
3	TTWW-m	MT20	6.0	10.0	1.75	2.75
4	TTWW-m	MT20	5.0	8.0	2.75	4.00
5	TMWW-t	MT20	4.0	4.0	2.00	1.25
6	TS-t	MT20	3.0	6.0		
7	TMWW+t	MT20	3.0	4.0	1.50	0.75
8	TTW+p	MT20	4.0	5.0		
9	TMWW-t	MT20	3.0	4.0	1.50	1.75
10	TS-t	MT20	3.0	6.0		
11	TMWW-t	MT20	3.0	4.0	1.50	1.75
12	TMVW-t	MT20	4.0	8.0	1.75	Edge
13	BMV1+p	MT20	2.0	4.0	2.25	1.00
14	BMWW-t	MT20	4.0	6.0	1.75	1.75
15	BMWW-t	MT20	3.0	4.0		
16	BS-t	MT20	3.0	6.0		
17	BMWWW-t	MT20	5.0	6.0	2.25	3.00
18	BMWW-t	MT20	4.0	4.0	1.75	2.00
19	BS-t	MT20	3.0	8.0		
20	BMWW-t	MT20	4.0	6.0	2.00	2.25
21	BMWW-t	MT20	5.0	8.0	2.50	2.50
22	BMWW-t	MT20	4.0	6.0	2.00	2.00
23	BMV1+p	MT20	2.0	4.0	2.25	1.00

Edge - INDICATES REFERENCE CORNER OF PLATE TOUCHES EDGE OF CHORD.

A SIZE FOR SIZE SUBSTITUTION OF MITEK MII20 WITH TEE-LOK TL20 PLATES IS ALLOWED.

DIMENSIONS, SUPPORTS AND LOADINGS SPECIFIED BY FABRICATOR TO BE VERIFIED BY BUILDING DESIGNER

BEARINGS

JT	FACTORED GROSS REACTION VERT	HORZ	MAXIMUM FACTORED GROSS REACTION DOWN	HORZ	UPLIFT	INPUT BRG IN-SX	REQRD BRG IN-SX
23	1925	0	1925	0	0	5-8	5-8
13	1820	0	1820	0	0	HANGER BY OTHERS	
						MIN. SEAT SIZE: 3-8	

UNFACTORED REACTIONS

JT	1ST LCASE COMBINED	SNOW	MAX./MIN. COMPONENT REACTIONS LIVE	PERM.LIVE	WIND	DEAD	SOIL
23	1349	957 / 0	0 / 0	0 / 0	0 / 0	392 / 0	0 / 0
13	1277	894 / 0	0 / 0	0 / 0	0 / 0	384 / 0	0 / 0

BEARING MATERIAL TO BE SPF NO.2 OR BETTER AT JOINT(S) 23

BRACING

TOP CHORD TO BE SHEATHED OR MAX. PURLIN SPACING = 2.70 FT.
MAX. UNBRACED BOTTOM CHORD LENGTH = 10.00 FT. OR RIGID CEILING DIRECTLY APPLIED.

ALL PITCH BREAKS AND PERIMETER CORNER JOINTS MUST BE LATERALLY RESTRAINED.

1 - 2x3 SPF No.2 LATERAL BRACE(S) AT 1/ 2 LENGTH OF 7-17. DBS = 12-0-0 . CBF = 88 LBS.
1 - 2x3 SPF No.2 LATERAL BRACE(S) AT 1/ 2 LENGTH OF 9-17. DBS = 20-0-0 . CBF = 73 LBS.

DBS = DIAGONAL BRACE SPACING (MAX). CBF = CUMULATIVE BRACING FORCE. FASTEN LATERAL BRACE(S) USING (0.122"X3") SPIRAL NAILS : 1 NAIL FOR 2x3 BRACE(S), 2 FOR 1x4, 2x4, 2x5, 3 FOR 2x6, 4 FOR 2x8, 5 FOR 2x10, AND 6 FOR 2x12.

END VERTICAL(S) MUST BE SHEATHED OR HAVE BRACES AS INDICATED IN THE MAX. UNBRACED LENGTH COLUMN OF THE TABLE BELOW

LOADING

TOTAL LOAD CASES: (4)

CHORDS

MEMB. FR-TO	MAX. FACTORED FORCE (LBS)	FROM	FACTORED VERT. LOAD LC1 (PLF) TO	MAX CSI (LC)	MAX. UNBRAC LENGTH
1- 2	0 / 23	-77.4	-77.4	0.10 (1)	10.00
2- 3	-2169 / 0	-77.4	-77.4	0.09 (1)	4.57
3- 4	-5177 / 0	-77.4	-77.4	0.56 (1)	2.70
4- 5	-3802 / 0	-77.4	-77.4	0.46 (1)	3.31
5- 6	-2812 / 0	-77.4	-77.4	0.32 (1)	3.91
6- 7	-2812 / 0	-77.4	-77.4	0.32 (1)	3.91
7- 8	-2059 / 0	-77.4	-77.4	0.29 (1)	4.48
8- 9	-2061 / 0	-77.4	-77.4	0.34 (1)	4.42
9-10	-2457 / 0	-77.4	-77.4	0.35 (1)	4.11
10-11	-2457 / 0	-77.4	-77.4	0.35 (1)	4.11
11-12	-2565 / 0	-77.4	-77.4	0.42 (1)	3.97
23- 2	-1940 / 0	0.0	0.0	0.20 (1)	6.04
13-12	-1777 / 0	0.0	0.0	0.18 (1)	6.26
23-22	0 / 0	-17.5	-17.5	0.10 (1)	10.00
22-21	0 / 1900	-17.5	-17.5	0.43 (1)	10.00
21-20	0 / 5252	-17.5	-17.5	0.98 (1)	10.00
20-19	0 / 3417	-17.5	-17.5	0.62 (1)	10.00
19-18	0 / 3417	-17.5	-17.5	0.62 (1)	10.00
18-17	0 / 2515	-17.5	-17.5	0.47 (1)	10.00
17-16	0 / 2197	-17.5	-17.5	0.42 (1)	10.00
16-15	0 / 2197	-17.5	-17.5	0.42 (1)	10.00
15-14	0 / 2310	-17.5	-17.5	0.42 (1)	10.00
14-13	0 / 0	-17.5	-17.5	0.12 (4)	10.00

WEBS

MEMB. FR-TO	MAX. FACTORED FORCE (LBS)	MAX CSI (LC)
22- 3	-654 / 0	0.10 (1)
3-21	0 / 3553	0.80 (1)
21- 4	-1357 / 0	0.20 (1)
4-20	-1958 / 0	0.99 (1)
20- 5	0 / 807	0.18 (1)
5-18	-1197 / 0	0.98 (1)
18- 7	0 / 861	0.19 (1)
7-17	-1168 / 0	0.58 (1)
17- 8	0 / 1497	0.34 (1)
17- 9	-583 / 0	0.30 (1)
15- 9	0 / 173	0.04 (4)
15-11	-139 / 0	0.12 (1)
14-11	-336 / 0	0.09 (1)
2-22	0 / 2088	0.47 (1)
14-12	0 / 2352	0.53 (1)

RECEIVED
TOWN OF MILTON
MAR 29, 2017
17-5327
BUILDING DIVISION

DESIGN CRITERIA

SPECIFIED LOADS:

TOP	CH.	LL	=	23.3	PSF
		DL	=	3.0	PSF
BOT	CH.	LL	=	0.0	PSF
		DL	=	7.0	PSF
TOTAL	LOAD		=	33.3	PSF

SPACING = 24.0 IN. C/C

LOADING IN ALL FLAT SECTIONS BASED ON A SLOPE OF 6.00/12

THIS TRUSS IS DESIGNED FOR RESIDENTIAL OR SMALL BUILDING REQUIREMENTS OF PART 9, NBCC 2010

THIS DESIGN COMPLIES WITH:
- PART 9 OF OBC 2012 , BCBC 2012 , ABC 2014
- CSA 086-09
- TPIC 2011

(55 % OF 27.2 P.S.F. G.S.L. PLUS 8.4 P.S.F. RAIN LOAD) EQUALS 23.3 P.S.F. SPECIFIED ROOF LIVE LOAD

ALLOWABLE DEFL.(LL)= L/360 (1.28")
CALCULATED VERT. DEFL.(LL) = L/ 999 (0.33")
ALLOWABLE DEFL.(TL)= L/360 (1.28")
CALCULATED VERT. DEFL.(TL) = L/ 780 (0.59")

CSI: TC=0.56 (3-4:1) , BC=0.98 (20-21:1) , WB=0.99 (4-20:1) , SSI=0.18 (11-12:1)

DOL LUMBER=1.00 NAIL=1.00 LS BEND=1.10 COMP=1.10 SHEAR=1.10 TENS= 1.10

COMPANION LIVE LOAD FACTOR = 0.50

TRUSS PLATE MANUFACTURER IS NOT RESPONSIBLE FOR QUALITY CONTROL IN THE TRUSS MANUFACTURING PLANT .

NAIL VALUES

PLATE	GRIP(DRY) (PSI) MAX	MIN	SHEAR (PLI) MAX	MIN	SECTION (PLI) MAX	MIN
MT20	618	354	1667	822	2284	1656

PLATE PLACEMENT TOL. = 0.250 inches

PLATE ROTATION TOL. = 5.0 Deg.

JSI GRIP= 0.90 (8) (INPUT = 0.90)
JSI METAL= 0.89 (19) (INPUT = 1.00)

KOTT

CONTINUED ON PAGE 2

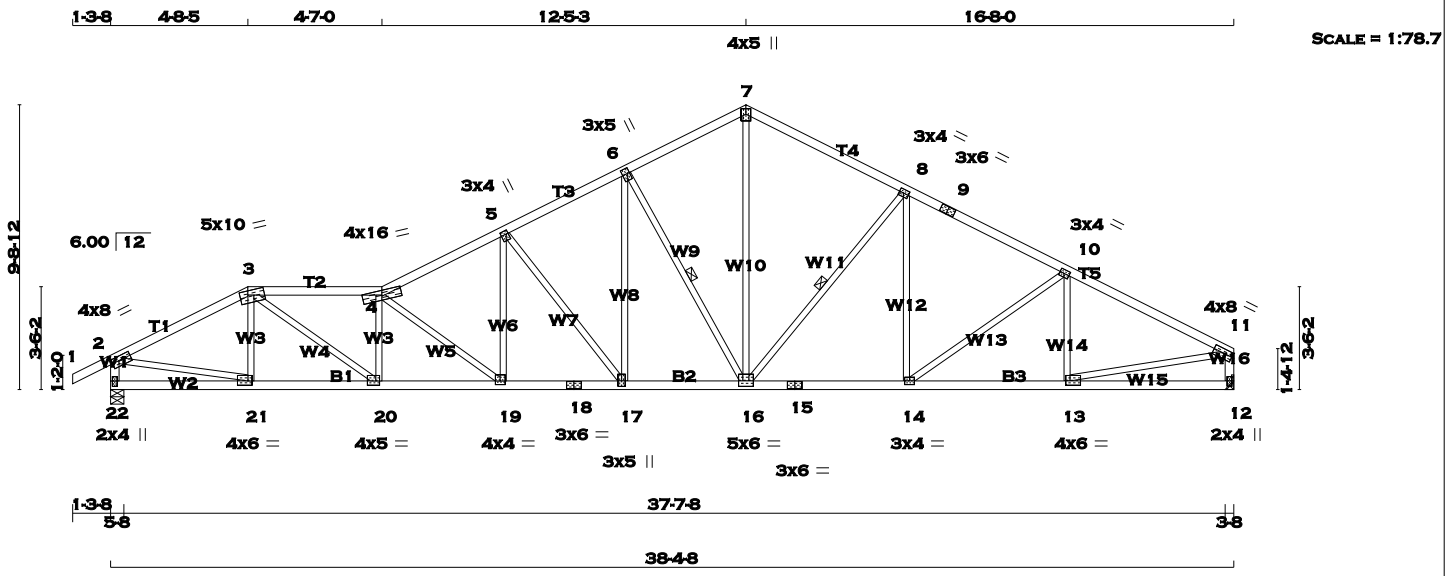

TOTAL WEIGHT = 166 lb

[M][F]

LUMBER

N. L. G. A. RULES

CHORDS	SIZE		LUMBER	DESCR.
1 - 3	2x4	DRY	No.2	SPF
3 - 4	2x4	DRY	No.2	SPF
4 - 7	2x4	DRY	No.2	SPF
7 - 9	2x4	DRY	No.2	SPF
9 - 11	2x4	DRY	No.2	SPF
22 - 2	2x4	DRY	No.2	SPF
12 - 11	2x4	DRY	No.2	SPF
22 - 18	2x4	DRY	No.2	SPF
18 - 15	2x4	DRY	No.2	SPF
15 - 12	2x4	DRY	No.2	SPF
ALL WEBS EXCEPT	2x3	DRY	No.2	SPF

DRY: SEASONED LUMBER.

PLATES (table is in inches)

JT	TYPE	PLATES	W	LEN	Y	X
2	TMVW-t	MT20	4.0	8.0	1.75	3.00
3	TTWW-m	MT20	5.0	10.0	1.75	3.25
4	TTWW-m	MT20	4.0	16.0		
5	TMWW+t	MT20	3.0	4.0	1.50	0.75
6	TMWW+t	MT20	3.0	5.0	2.25	0.75
7	TTW+p	MT20	4.0	5.0	2.25	2.00
8	TMWW-t	MT20	3.0	4.0	1.50	1.75
9	TS-t	MT20	3.0	6.0		
10	TMWW-t	MT20	3.0	4.0	1.50	1.75
11	TMVW-t	MT20	4.0	8.0	1.75	Edge
12	BMV1+p	MT20	2.0	4.0	2.25	1.00
13	BMWW-t	MT20	4.0	6.0	1.75	1.75
14	BMWW-t	MT20	3.0	4.0		
15	BS-t	MT20	3.0	6.0		
16	BMWWW-t	MT20	5.0	6.0	2.25	3.00
17	BMWW+t	MT20	3.0	5.0	2.25	1.50
18	BS-t	MT20	3.0	6.0		
19	BMWW-t	MT20	4.0	4.0	1.50	2.00
20	BMWW-t	MT20	4.0	5.0	1.75	1.50
21	BMWW-t	MT20	4.0	6.0	1.75	1.75
22	BMV1+p	MT20	2.0	4.0	2.25	1.00

Edge - INDICATES REFERENCE CORNER OF PLATE TOUCHES EDGE OF CHORD.

A SIZE FOR SIZE SUBSTITUTION OF MITEK MII20 WITH TEE-LOK TL20 PLATES IS ALLOWED.

DIMENSIONS, SUPPORTS AND LOADINGS SPECIFIED BY FABRICATOR TO BE VERIFIED BY BUILDING DESIGNER

BEARINGS

JT	FACTORED GROSS REACTION VERT	HORZ	MAXIMUM FACTORED GROSS REACTION DOWN	HORZ	UPLIFT	INPUT BRG IN-SX	REQRD BRG IN-SX
22	1925	0	1925	0	0	5-8	5-8
12	1820	0	1820	0	0	HANGER BY OTHERS MIN. SEAT SIZE: 3-8	

UNFACTORED REACTIONS

JT	1ST LCASE COMBINED	SNOW	LIVE	PERM.LIVE	WIND	DEAD	SOIL
		MAX./MIN. COMPONENT REACTIONS					
22	1349	957 / 0	0 / 0	0 / 0	0 / 0	392 / 0	0 / 0
12	1277	894 / 0	0 / 0	0 / 0	0 / 0	384 / 0	0 / 0

BEARING MATERIAL TO BE SPF NO.2 OR BETTER AT JOINT(S) 22

BRACING

TOP CHORD TO BE SHEATHED OR MAX. PURLIN SPACING = 3.25 FT.
MAX. UNBRACED BOTTOM CHORD LENGTH = 10.00 FT. OR RIGID CEILING DIRECTLY APPLIED.

ALL PITCH BREAKS AND PERIMETER CORNER JOINTS MUST BE LATERALLY RESTRAINED.

1 - 2x3 SPF No.2 LATERAL BRACE(S) AT 1/ 2 LENGTH OF 6-16. DBS = 12-0-0 . CBF = 84 LBS.
1 - 2x3 SPF No.2 LATERAL BRACE(S) AT 1/ 2 LENGTH OF 8-16. DBS = 20-0-0 . CBF = 73 LBS.

DBS = DIAGONAL BRACE SPACING (MAX). CBF = CUMULATIVE BRACING FORCE. FASTEN LATERAL BRACE(S) USING (0.122"X3") SPIRAL NAILS : 1 NAIL FOR 2x3 BRACE(S), 2 FOR 1x4, 2x4, 2x5, 3 FOR 2x6, 4 FOR 2x8, 5 FOR 2x10, AND 6 FOR 2x12.

END VERTICAL(S) MUST BE SHEATHED OR HAVE BRACES AS INDICATED IN THE MAX. UNBRACED LENGTH COLUMN OF THE TABLE BELOW

LOADING

TOTAL LOAD CASES: (4)

CHORDS

MEMB. FR-TO	MAX. FORCE (LBS)	FACTORED VERT. LOAD LC1 (PLF) FROM	TO	MAX CSI (LC)	MAX. UNBRAC LENGTH
1- 2	0 / 23	-77.4	-77.4	0.10 (1)	10.00
2- 3	-2636 / 0	-77.4	-77.4	0.32 (1)	4.00
3- 4	-3943 / 0	-77.4	-77.4	0.41 (1)	3.25
4- 5	-3379 / 0	-77.4	-77.4	0.29 (1)	3.62
5- 6	-2657 / 0	-77.4	-77.4	0.22 (1)	4.10
6- 7	-2055 / 0	-77.4	-77.4	0.20 (1)	4.57
7- 8	-2060 / 0	-77.4	-77.4	0.34 (1)	4.42
8- 9	-2457 / 0	-77.4	-77.4	0.35 (1)	4.11
9-10	-2457 / 0	-77.4	-77.4	0.35 (1)	4.11
10-11	-2565 / 0	-77.4	-77.4	0.42 (1)	3.97
22- 2	-1890 / 0	0.0	0.0	0.19 (1)	6.10
12-11	-1777 / 0	0.0	0.0	0.18 (1)	6.26
22-21	0 / 0	-17.5	-17.5	0.09 (4)	10.00
21-20	0 / 2346	-17.5	-17.5	0.43 (1)	10.00
20-19	0 / 3979	-17.5	-17.5	0.70 (1)	10.00
19-18	0 / 3036	-17.5	-17.5	0.52 (1)	10.00
18-17	0 / 3036	-17.5	-17.5	0.52 (1)	10.00
17-16	0 / 2376	-17.5	-17.5	0.45 (1)	10.00
16-15	0 / 2197	-17.5	-17.5	0.42 (1)	10.00
15-14	0 / 2197	-17.5	-17.5	0.42 (1)	10.00
14-13	0 / 2310	-17.5	-17.5	0.42 (1)	10.00
13-12	0 / 0	-17.5	-17.5	0.12 (4)	10.00

WEBS

MEMB. FR-TO	MAX. FORCE (LBS)	MAX CSI (LC)
21- 3	-322 / 0	0.07 (1)
3-20	0 / 1965	0.44 (1)
20- 4	-1091 / 0	0.23 (1)
4-19	-1192 / 0	0.55 (1)
19- 5	0 / 814	0.18 (1)
5-17	-1068 / 0	0.88 (1)
17- 6	0 / 900	0.20 (1)
6-16	-1119 / 0	0.54 (1)
16- 7	0 / 1523	0.34 (1)
16- 8	-584 / 0	0.30 (1)
14- 8	0 / 174	0.04 (4)
14-10	-139 / 0	0.12 (1)
13-10	-336 / 0	0.09 (1)
2-21	0 / 2394	0.54 (1)
13-11	0 / 2352	0.53 (1)

RECEIVED
TOWN OF MILTON
MAR 29, 2017
17-5327
BUILDING DIVISION

DESIGN CRITERIA

SPECIFIED LOADS:

TOP	CH.	LL	=	23.3	PSF
		DL	=	3.0	PSF
BOT	CH.	LL	=	0.0	PSF
		DL	=	7.0	PSF
TOTAL	LOAD		=	33.3	PSF

SPACING = 24.0 IN. C/C

LOADING IN ALL FLAT SECTIONS BASED ON A SLOPE OF 6.00/12

THIS TRUSS IS DESIGNED FOR RESIDENTIAL OR SMALL BUILDING REQUIREMENTS OF PART 9, NBCC 2010

THIS DESIGN COMPLIES WITH:
- PART 9 OF OBC 2012 , BCBC 2012 , ABC 2014
- CSA 086-09
- TPIC 2011

(55 % OF 27.2 P.S.F. G.S.L. PLUS 8.4 P.S.F. RAIN LOAD) EQUALS 23.3 P.S.F. SPECIFIED ROOF LIVE LOAD

ALLOWABLE DEFL.(LL)= L/360 (1.28")
CALCULATED VERT. DEFL.(LL) = L/ 999 (0.25")
ALLOWABLE DEFL.(TL)= L/360 (1.28")
CALCULATED VERT. DEFL.(TL) = L/ 999 (0.44")

CSI: TC=0.42 (10-11:1) , BC=0.70 (19-20:1) , WB=0.88 (5-17:1) , SSI=0.18 (10-11:1)

DOL LUMBER=1.00 NAIL=1.00 LS BEND=1.10 COMP=1.10 SHEAR=1.10 TENS= 1.10

COMPANION LIVE LOAD FACTOR = 0.50

TRUSS PLATE MANUFACTURER IS NOT RESPONSIBLE FOR QUALITY CONTROL IN THE TRUSS MANUFACTURING PLANT .

NAIL VALUES

PLATE	GRIP(DRY) (PSI) MAX	MIN	SHEAR (PLI) MAX	MIN	SECTION (PLI) MAX	MIN
MT20	618	354	1667	822	2284	1656

PLATE PLACEMENT TOL. = 0.250 inches

PLATE ROTATION TOL. = 5.0 Deg.

JSI GRIP= 0.90 (20) (INPUT = 0.90)
JSI METAL= 0.81 (18) (INPUT = 1.00)

KOTT

CONTINUED ON PAGE 2

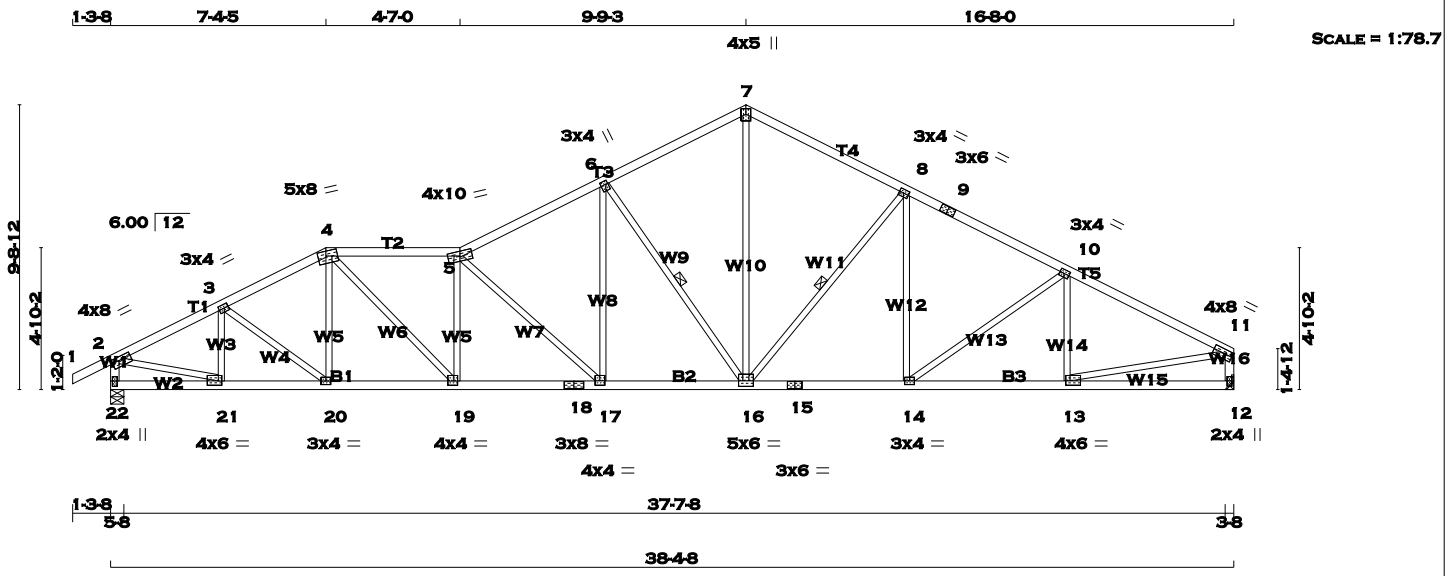

TOTAL WEIGHT = 166 lb

[M][F]

LUMBER

N. L. G. A. RULES

CHORDS	SIZE		LUMBER	DESCR.
1 - 4	2x4	DRY	No.2	SPF
4 - 5	2x4	DRY	No.2	SPF
5 - 7	2x4	DRY	No.2	SPF
7 - 9	2x4	DRY	No.2	SPF
9 - 11	2x4	DRY	No.2	SPF
22 - 2	2x4	DRY	No.2	SPF
12 - 11	2x4	DRY	No.2	SPF
22 - 18	2x4	DRY	No.2	SPF
18 - 15	2x4	DRY	No.2	SPF
15 - 12	2x4	DRY	No.2	SPF
ALL WEBS EXCEPT	2x3	DRY	No.2	SPF

DRY: SEASONED LUMBER.

PLATES (table is in inches)

JT	TYPE	PLATES	W	LEN	Y	X
2 3, 8, 10	TMVW-t	MT20	4.0	8.0	1.50	3.00
3	TMWW-t	MT20	3.0	4.0	1.50	1.75
4	TTWW-m	MT20	5.0	8.0	2.00	3.25
5	TTWW-m	MT20	4.0	10.0		
6	TMWW+t	MT20	3.0	4.0	1.50	0.75
7	TTW+p	MT20	4.0	5.0	2.25	2.00
9	TS-t	MT20	3.0	6.0		
11	TMVW-t	MT20	4.0	8.0	1.75	Edge
12	BMV1+p	MT20	2.0	4.0	2.25	1.00
13	BMWW-t	MT20	4.0	6.0	1.75	1.75
14	BMWW-t	MT20	3.0	4.0		
15	BS-t	MT20	3.0	6.0		
16	BMWWW-t	MT20	5.0	6.0	2.25	3.00
17	BMWW-t	MT20	4.0	4.0	1.75	2.00
18	BS-t	MT20	3.0	8.0		
19	BMWW-t	MT20	4.0	4.0	1.75	1.50
20	BMWW-t	MT20	3.0	4.0		
21	BMWW-t	MT20	4.0	6.0	1.75	1.50
22	BMV1+p	MT20	2.0	4.0	2.25	1.00

Edge - INDICATES REFERENCE CORNER OF PLATE TOUCHES EDGE OF CHORD.

A SIZE FOR SIZE SUBSTITUTION OF MITEK MII20 WITH TEE-LOK TL20 PLATES IS ALLOWED.

DIMENSIONS, SUPPORTS AND LOADINGS SPECIFIED BY FABRICATOR TO BE VERIFIED BY BUILDING DESIGNER

BEARINGS

JT	FACTORED GROSS REACTION VERT	HORZ	MAXIMUM FACTORED GROSS REACTION DOWN	HORZ	UPLIFT	INPUT BRG IN-SX	REQRD BRG IN-SX
22	1925	0	1925	0	0	5-8	5-8
12	1820	0	1820	0	0	HANGER BY OTHERS MIN. SEAT SIZE: 3-8	

UNFACTORED REACTIONS

JT	1ST LCASE COMBINED	SNOW	MAX./MIN. COMPONENT REACTIONS LIVE	PERM.LIVE	WIND	DEAD	SOIL
22	1349	957 / 0	0 / 0	0 / 0	0 / 0	392 / 0	0 / 0
12	1277	894 / 0	0 / 0	0 / 0	0 / 0	384 / 0	0 / 0

BEARING MATERIAL TO BE SPF NO.2 OR BETTER AT JOINT(S) 22

BRACING

TOP CHORD TO BE SHEATHED OR MAX. PURLIN SPACING = 3.61 FT.
MAX. UNBRACED BOTTOM CHORD LENGTH = 10.00 FT. OR RIGID CEILING DIRECTLY APPLIED.

ALL PITCH BREAKS AND PERIMETER CORNER JOINTS MUST BE LATERALLY RESTRAINED.

1 - 2x3 SPF No.2 LATERAL BRACE(S) AT 1/ 2 LENGTH OF 6-16. DBS = 12-0-0 . CBF = 88 LBS.
1 - 2x3 SPF No.2 LATERAL BRACE(S) AT 1/ 2 LENGTH OF 8-16. DBS = 20-0-0 . CBF = 73 LBS.

DBS = DIAGONAL BRACE SPACING (MAX). CBF = CUMULATIVE BRACING FORCE. FASTEN LATERAL BRACE(S) USING (0.122"X3") SPIRAL NAILS : 1 NAIL FOR 2x3 BRACE(S), 2 FOR 1x4, 2x4, 2x5, 3 FOR 2x6, 4 FOR 2x8, 5 FOR 2x10, AND 6 FOR 2x12.

END VERTICAL(S) MUST BE SHEATHED OR HAVE BRACES AS INDICATED IN THE MAX. UNBRACED LENGTH COLUMN OF THE TABLE BELOW

LOADING

TOTAL LOAD CASES: (4)

CHORDS

MEMB. FR-TO	MAX. FORCE (LBS)	FACTORED VERT. LOAD (PLF) FROM	TO	MAX CSI (LC)	MAX. UNBRAC LENGTH
1- 2	0 / 23	-77.4	-77.4	0.10 (1)	10.00
2- 3	-2549 / 0	-77.4	-77.4	0.20 (1)	4.18
3- 4	-2686 / 0	-77.4	-77.4	0.19 (1)	4.10
4- 5	-3276 / 0	-77.4	-77.4	0.35 (1)	3.61
5- 6	-2771 / 0	-77.4	-77.4	0.34 (1)	3.90
6- 7	-2062 / 0	-77.4	-77.4	0.29 (1)	4.47
7- 8	-2060 / 0	-77.4	-77.4	0.34 (1)	4.42
8- 9	-2457 / 0	-77.4	-77.4	0.35 (1)	4.11
9-10	-2457 / 0	-77.4	-77.4	0.35 (1)	4.11
10-11	-2565 / 0	-77.4	-77.4	0.42 (1)	3.97
22- 2	-1889 / 0	0.0	0.0	0.19 (1)	6.10
12-11	-1777 / 0	0.0	0.0	0.18 (1)	6.26
22-21	0 / 0	-17.5	-17.5	0.06 (4)	10.00
21-20	0 / 2290	-17.5	-17.5	0.41 (1)	10.00
20-19	0 / 2389	-17.5	-17.5	0.43 (1)	10.00
19-18	0 / 3295	-17.5	-17.5	0.58 (1)	10.00
18-17	0 / 3295	-17.5	-17.5	0.58 (1)	10.00
17-16	0 / 2498	-17.5	-17.5	0.47 (1)	10.00
16-15	0 / 2197	-17.5	-17.5	0.42 (1)	10.00
15-14	0 / 2197	-17.5	-17.5	0.42 (1)	10.00
14-13	0 / 2310	-17.5	-17.5	0.42 (1)	10.00
13-12	0 / 0	-17.5	-17.5	0.12 (4)	10.00

WEBS

MEMB. FR-TO	MAX. FORCE (LBS)	MAX CSI (LC)
21- 3	-468 / 0	0.08 (1)
3-20	0 / 123	0.03 (1)
20- 4	0 / 55	0.02 (4)
4-19	0 / 1263	0.28 (1)
19- 5	-825 / 0	0.28 (1)
5-17	-1089 / 0	0.90 (1)
17- 6	0 / 825	0.19 (1)
6-16	-1171 / 0	0.58 (1)
16- 7	0 / 1509	0.34 (1)
16- 8	-584 / 0	0.30 (1)
14- 8	0 / 173	0.04 (4)
14-10	-139 / 0	0.12 (1)
13-10	-336 / 0	0.09 (1)
2-21	0 / 2349	0.53 (1)
13-11	0 / 2352	0.53 (1)

RECEIVED
TOWN OF MILTON
MAR 29, 2017
17-5327
BUILDING DIVISION

DESIGN CRITERIA

SPECIFIED LOADS:

TOP CH.	LL	=	23.3	PSF
	DL	=	3.0	PSF
BOT CH.	LL	=	0.0	PSF
	DL	=	7.0	PSF
TOTAL LOAD		=	33.3	PSF

SPACING = 24.0 IN. C/C

LOADING IN ALL FLAT SECTIONS BASED ON A SLOPE OF 6.00/12

THIS TRUSS IS DESIGNED FOR RESIDENTIAL OR SMALL BUILDING REQUIREMENTS OF PART 9, NBCC 2010

THIS DESIGN COMPLIES WITH:
- PART 9 OF OBC 2012 , BCBC 2012 , ABC 2014
- CSA 086-09
- TPIC 2011

(55 % OF 27.2 P.S.F. G.S.L. PLUS 8.4 P.S.F. RAIN LOAD) EQUALS 23.3 P.S.F. SPECIFIED ROOF LIVE LOAD

ALLOWABLE DEFL.(LL)= L/360 (1.28")
CALCULATED VERT. DEFL.(LL) = L/ 999 (0.21")
ALLOWABLE DEFL.(TL)= L/360 (1.28")
CALCULATED VERT. DEFL.(TL) = L/ 999 (0.38")

CSI: TC=0.42 (10-11:1) , BC=0.58 (17-19:1) , WB=0.90 (5-17:1) , SSI=0.18 (10-11:1)

DOL LUMBER=1.00 NAIL=1.00 LS BEND=1.10 COMP=1.10 SHEAR=1.10 TENS= 1.10

COMPANION LIVE LOAD FACTOR = 0.50

TRUSS PLATE MANUFACTURER IS NOT RESPONSIBLE FOR QUALITY CONTROL IN THE TRUSS MANUFACTURING PLANT .

NAIL VALUES

PLATE	GRIP(DRY) (PSI) MAX	MIN	SHEAR (PLI) MAX	MIN	SECTION (PLI) MAX	MIN
MT20	618	354	1667	822	2284	1656

PLATE PLACEMENT TOL. = 0.250 inches

PLATE ROTATION TOL. = 5.0 Deg.

JSI GRIP= 0.89 (11) (INPUT = 0.90)
JSI METAL= 0.85 (18) (INPUT = 1.00)

KOTT

JOB NAME	TRUSS NAME	QUANTITY	PLY	JOB DESC.	DRWG NO.
PT0317-093	T37	1	1	TRUSS DESC. LECCO RIDGE-BLOCK 343	ENG JOB: PT0317-093

KOTT , Stouffville, ON, CGC

Version 8.100 S Feb 9 2017 MiTek Industries, Inc. Thu Mar 16 07:55:10 2017 Page 1

ID:EvTixTQDI5yR1QLotZTBr_yE?HJ-tBsJOiKxUzGvOxx9W9ZpvULMb4rX?xqXreM0vxzaRHV

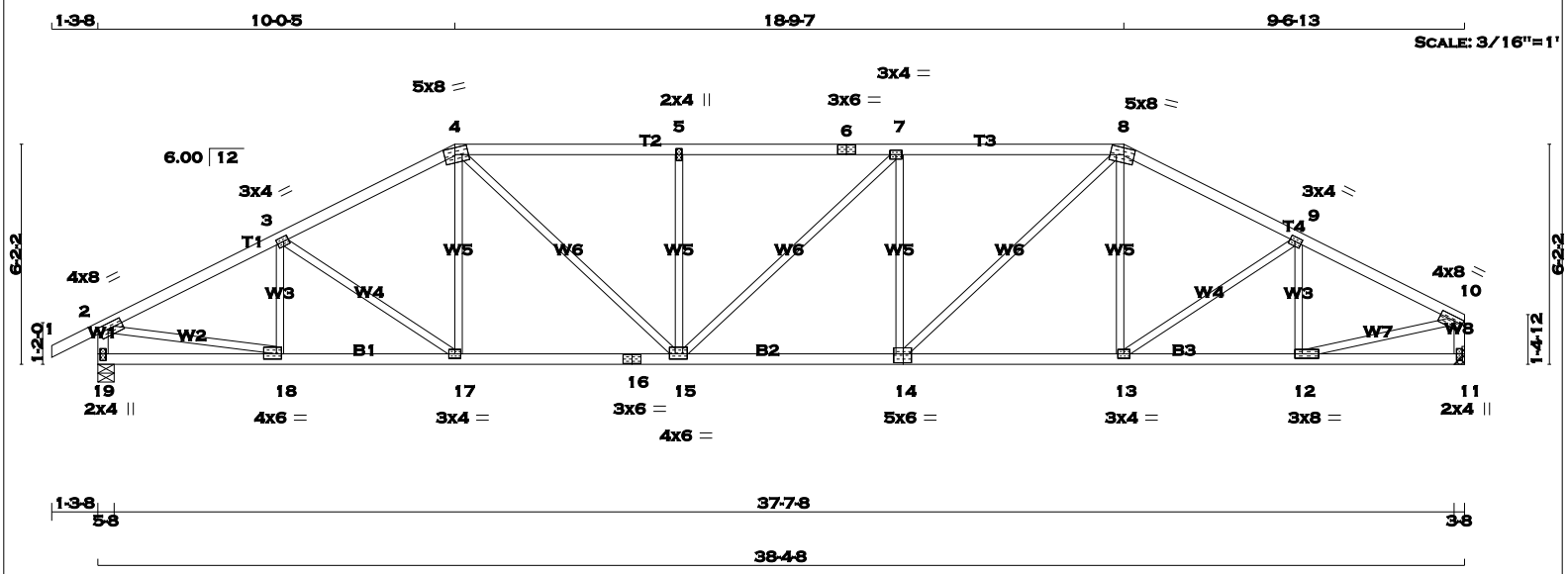

TOTAL WEIGHT = 154 lb

[M][F]

LUMBER

N. L. G. A. RULES

CHORDS	SIZE		LUMBER	DESCR.
1 - 4	2x4	DRY	No.2	SPF
4 - 6	2x4	DRY	No.2	SPF
6 - 8	2x4	DRY	No.2	SPF
8 - 10	2x4	DRY	No.2	SPF
19 - 2	2x4	DRY	No.2	SPF
11 - 10	2x4	DRY	No.2	SPF
19 - 16	2x4	DRY	No.2	SPF
16 - 14	2x4	DRY	No.2	SPF
14 - 11	2x4	DRY	No.2	SPF
ALL WEBS EXCEPT	2x3	DRY	No.2	SPF

DRY: SEASONED LUMBER.

PLATES (table is in inches)

JT	TYPE	PLATES	W	LEN	Y	X
2	TMVW-t	MT20	4.0	8.0	1.75	3.00
3	TMWW-t	MT20	3.0	4.0	1.50	1.75
4	TTWW-m	MT20	5.0	8.0	2.25	3.50
5	TMW+w	MT20	2.0	4.0		
6	TS-t	MT20	3.0	6.0		
7	TMWW-t	MT20	3.0	4.0		
8	TTWW-m	MT20	5.0	8.0	2.25	3.50
9	TMWW-t	MT20	3.0	4.0	1.50	1.75
10	TMVW-t	MT20	4.0	8.0	1.50	3.00
11	BMV1+p	MT20	2.0	4.0	2.25	1.00
12	BMWW-t	MT20	3.0	8.0	1.50	2.50
13	BMWW-t	MT20	3.0	4.0		
14	BSWW-l	MT20	5.0	6.0	3.00	2.75
15	BMWWW-t	MT20	4.0	6.0	1.75	2.00
16	BS-t	MT20	3.0	6.0		
17	BMWW-t	MT20	3.0	4.0		
18	BMWW-t	MT20	4.0	6.0	1.75	1.75
19	BMV1+p	MT20	2.0	4.0	2.25	1.00

A SIZE FOR SIZE SUBSTITUTION OF MITEK MII20 WITH TEE-LOK TL20 PLATES IS ALLOWED.

DIMENSIONS, SUPPORTS AND LOADINGS SPECIFIED BY FABRICATOR TO BE VERIFIED BY BUILDING DESIGNER

BEARINGS

JT	FACTORED GROSS REACTION VERT	HORZ	MAXIMUM FACTORED GROSS REACTION DOWN	HORZ	UPLIFT	INPUT BRG IN-SX	REQRD BRG IN-SX
19	1925	0	1925	0	0	5-8	5-8
11	1820	0	1820	0	0	HANGER BY OTHERS MIN. SEAT SIZE: 3-8	

UNFACTORED REACTIONS

JT	1ST LCASE COMBINED	SNOW	MAX./MIN. COMPONENT REACTIONS LIVE	PERM.LIVE	WIND	DEAD	SOIL
19	1349	957 / 0	0 / 0	0 / 0	0 / 0	392 / 0	0 / 0
11	1277	894 / 0	0 / 0	0 / 0	0 / 0	384 / 0	0 / 0

BEARING MATERIAL TO BE SPF NO.2 OR BETTER AT JOINT(S) 19

BRACING

TOP CHORD TO BE SHEATHED OR MAX. PURLIN SPACING = 3.62 FT.
MAX. UNBRACED BOTTOM CHORD LENGTH = 10.00 FT. OR RIGID CEILING DIRECTLY APPLIED.

ALL PITCH BREAKS AND PERIMETER CORNER JOINTS MUST BE LATERALLY RESTRAINED.

LOADING

TOTAL LOAD CASES: (4)

CHORDS

MEMB. FR-TO	MAX. FORCE (LBS)	FACTORED VERT. LOAD (PLF) FROM	TO	MAX CSI (LC)	MAX. UNBRAC LENGTH
1- 2	0 / 23	-77.4	-77.4	0.10 (1)	10.00
2- 3	-2698 / 0	-77.4	-77.4	0.35 (1)	3.94
3- 4	-2592 / 0	-77.4	-77.4	0.33 (1)	4.03
4- 5	-2956 / 0	-77.4	-77.4	0.52 (1)	3.62
5- 6	-2956 / 0	-77.4	-77.4	0.47 (1)	3.67
6- 7	-2956 / 0	-77.4	-77.4	0.47 (1)	3.67
7- 8	-2934 / 0	-77.4	-77.4	0.52 (1)	3.63
8- 9	-2514 / 0	-77.4	-77.4	0.31 (1)	4.10
9-10	-2488 / 0	-77.4	-77.4	0.30 (1)	4.13
19- 2	-1883 / 0	0.0	0.0	0.19 (1)	6.12
11-10	-1782 / 0	0.0	0.0	0.18 (1)	6.26
19-18	0 / 0	-17.5	-17.5	0.09 (4)	10.00
18-17	0 / 2430	-17.5	-17.5	0.46 (1)	10.00
17-16	0 / 2303	-17.5	-17.5	0.44 (1)	10.00
16-15	0 / 2303	-17.5	-17.5	0.44 (1)	10.00
15-14	0 / 2934	-17.5	-17.5	0.54 (1)	10.00
14-13	0 / 2233	-17.5	-17.5	0.43 (1)	10.00
13-12	0 / 2242	-17.5	-17.5	0.43 (1)	10.00
12-11	0 / 0	-17.5	-17.5	0.08 (4)	10.00

WEBS

MEMB. FR-TO	MAX. FORCE (LBS)	MAX CSI (LC)
18- 3	-323 / 0	0.07 (1)
3-17	-158 / 0	0.10 (1)
17- 4	0 / 195	0.05 (4)
4-15	0 / 894	0.20 (1)
15- 5	-524 / 0	0.32 (1)
15- 7	0 / 30	0.01 (1)
14- 7	-546 / 0	0.33 (1)
14- 8	0 / 960	0.22 (1)
13- 8	0 / 113	0.04 (4)
13- 9	-13 / 6	0.01 (1)
12- 9	-443 / 0	0.10 (1)
2-18	0 / 2464	0.55 (1)
12-10	0 / 2302	0.52 (1)

DESIGN CRITERIA

SPECIFIED LOADS:

TOP CH.	LL	=	23.3	PSF
	DL	=	3.0	PSF
BOT CH.	LL	=	0.0	PSF
	DL	=	7.0	PSF
TOTAL LOAD		=	33.3	PSF

SPACING = 24.0 IN. C/C

LOADING IN FLAT SECTION BASED ON A SLOPE OF 6.00/12

THIS TRUSS IS DESIGNED FOR RESIDENTIAL OR SMALL BUILDING REQUIREMENTS OF PART 9, NBCC 2010

THIS DESIGN COMPLIES WITH:
- PART 9 OF OBC 2012 , BCBC 2012 , ABC 2014
- CSA 086-09
- TPIC 2011

(55 % OF 27.2 P.S.F. G.S.L. PLUS 8.4 P.S.F. RAIN LOAD) EQUALS 23.3 P.S.F. SPECIFIED ROOF LIVE LOAD

ALLOWABLE DEFL.(LL)= L/360 (1.28")
CALCULATED VERT. DEFL.(LL) = L/ 999 (0.20")
ALLOWABLE DEFL.(TL)= L/360 (1.28")
CALCULATED VERT. DEFL.(TL) = L/ 999 (0.36")

CSI: TC=0.52 (4-5:1) , BC=0.54 (14-15:1) , WB=0.55 (2-18:1) , SSI=0.23 (7-8:1)

DOL LUMBER=1.00 NAIL=1.00 LS BEND=1.10 COMP=1.10 SHEAR=1.10 TENS= 1.10

COMPANION LIVE LOAD FACTOR = 0.50

TRUSS PLATE MANUFACTURER IS NOT RESPONSIBLE FOR QUALITY CONTROL IN THE TRUSS MANUFACTURING PLANT .

NAIL VALUES

PLATE	GRIP(DRY) (PSI) MAX	MIN	SHEAR (PLI) MAX	MIN	SECTION (PLI) MAX	MIN
MT20	618	354	1667	822	2284	1656

PLATE PLACEMENT TOL. = 0.250 inches

PLATE ROTATION TOL. = 5.0 Deg.

JSI GRIP= 0.90 (12) (INPUT = 0.90)
JSI METAL= 0.61 (18) (INPUT = 1.00)

LICENSED PROFESSIONAL ENGINEER
P.M. TREVISAN
100136551
March 16th, 2017
PROVINCE OF ONTARIO

RECEIVED
TOWN OF MILTON
MAR 29, 2017
17-5327
BUILDING DIVISION

KOTT

JOB NAME	TRUSS NAME	QUANTITY	PLY	JOB DESC.	DRWG NO.
PT0317-093	**T38**	**1**	**1**	TRUSS DESC. LECCO RIDGE-BLOCK 343	Page 82 of 160 ENG JOB: PT0317-093

KOTT , Stouffville, ON, CGC

Version 8.100 S Feb 9 2017 MiTek Industries, Inc. Thu Mar 16 07:55:11 2017 Page 1

ID:EvTixTQDI5yR1QLotZTBr_yE?HJ-LNQhb2LZFGOm?5WM3s42RiuWPUBakMYh4H6ZRNzaRHU

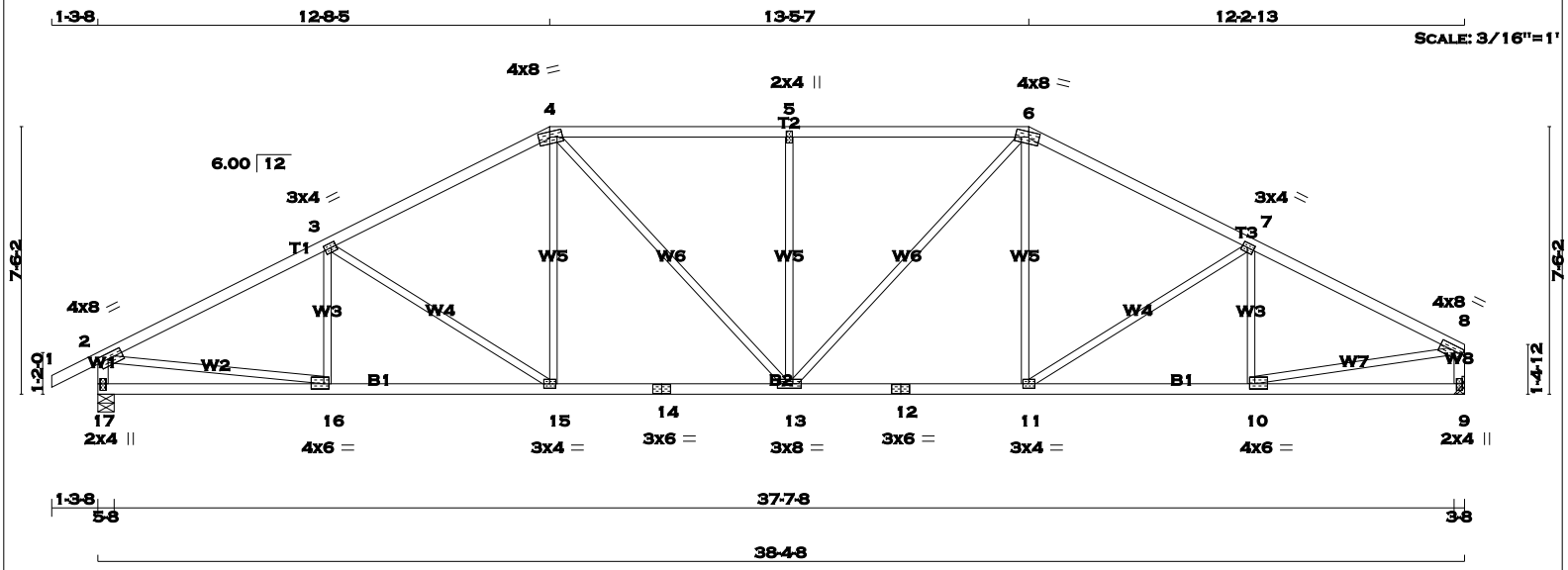

TOTAL WEIGHT = 155 lb

[M][F]

LUMBER

N. L. G. A. RULES

CHORDS	SIZE		LUMBER	DESCR.
1 - 4	2x4	DRY	No.2	SPF
4 - 6	2x4	DRY	No.2	SPF
6 - 8	2x4	DRY	No.2	SPF
17 - 2	2x4	DRY	No.2	SPF
9 - 8	2x4	DRY	No.2	SPF
17 - 14	2x4	DRY	No.2	SPF
14 - 12	2x4	DRY	No.2	SPF
12 - 9	2x4	DRY	No.2	SPF
ALL WEBS EXCEPT	2x3	DRY	No.2	SPF

DRY: SEASONED LUMBER.

PLATES (table is in inches)

JT	TYPE	PLATES	W	LEN	Y	X
2	TMVW-t	MT20	4.0	8.0	1.75	3.00
3	TMWW-t	MT20	3.0	4.0	1.50	1.75
4	TTWW-m	MT20	4.0	8.0	1.75	3.75
5	TMW+w	MT20	2.0	4.0		
6	TTWW-m	MT20	4.0	8.0	1.75	3.50
7	TMWW-t	MT20	3.0	4.0	1.50	1.75
8	TMVW-t	MT20	4.0	8.0	1.75	Edge
9	BMV1+p	MT20	2.0	4.0	2.25	1.00
10	BMWW-t	MT20	4.0	6.0	1.75	1.75
11	BMWW-t	MT20	3.0	4.0		
12	BS-t	MT20	3.0	6.0		
13	BMWWW-t	MT20	3.0	8.0		
14	BS-t	MT20	3.0	6.0		
15	BMWW-t	MT20	3.0	4.0		
16	BMWW-t	MT20	4.0	6.0	1.75	1.75
17	BMV1+p	MT20	2.0	4.0	2.25	1.00

Edge - INDICATES REFERENCE CORNER OF PLATE TOUCHES EDGE OF CHORD.

A SIZE FOR SIZE SUBSTITUTION OF MITEK MII20 WITH TEE-LOK TL20 PLATES IS ALLOWED.

DIMENSIONS, SUPPORTS AND LOADINGS SPECIFIED BY FABRICATOR TO BE VERIFIED BY BUILDING DESIGNER

BEARINGS

JT	FACTORED GROSS REACTION VERT	HORZ	MAXIMUM FACTORED GROSS REACTION DOWN	HORZ	UPLIFT	INPUT BRG IN-SX	REQRD BRG IN-SX
17	1925	0	1925	0	0	5-8	5-8
9	1820	0	1820	0	0	HANGER BY OTHERS MIN. SEAT SIZE: 3-8	

UNFACTORED REACTIONS

JT	1ST LCASE COMBINED	SNOW	MAX./MIN. COMPONENT REACTIONS LIVE	PERM.LIVE	WIND	DEAD	SOIL
17	1349	957 / 0	0 / 0	0 / 0	0 / 0	392 / 0	0 / 0
9	1277	894 / 0	0 / 0	0 / 0	0 / 0	384 / 0	0 / 0

BEARING MATERIAL TO BE SPF NO.2 OR BETTER AT JOINT(S) 17

BRACING

TOP CHORD TO BE SHEATHED OR MAX. PURLIN SPACING = 3.68 FT.
MAX. UNBRACED BOTTOM CHORD LENGTH = 10.00 FT. OR RIGID CEILING DIRECTLY APPLIED.

ALL PITCH BREAKS AND PERIMETER CORNER JOINTS MUST BE LATERALLY RESTRAINED.

LOADING

TOTAL LOAD CASES: (4)

CHORDS

MEMB. FR-TO	MAX. FACTORED FORCE (LBS)	VERT. LOAD LC1 (PLF) FROM	TO	MAX CSI (LC)	MAX. UNBRAC LENGTH
1- 2	0 / 23	-77.4	-77.4	0.10 (1)	10.00
2- 3	-2762 / 0	-77.4	-77.4	0.58 (1)	3.68
3- 4	-2429 / 0	-77.4	-77.4	0.52 (1)	3.94
4- 5	-2484 / 0	-77.4	-77.4	0.57 (1)	3.80
5- 6	-2484 / 0	-77.4	-77.4	0.57 (1)	3.80
6- 7	-2383 / 0	-77.4	-77.4	0.49 (1)	4.00
7- 8	-2600 / 0	-77.4	-77.4	0.50 (1)	3.85
17- 2	-1876 / 0	0.0	0.0	0.19 (1)	6.13
9- 8	-1775 / 0	0.0	0.0	0.18 (1)	6.26
17-16	0 / 0	-17.5	-17.5	0.16 (4)	10.00
16-15	0 / 2493	-17.5	-17.5	0.48 (1)	10.00
15-14	0 / 2153	-17.5	-17.5	0.43 (1)	10.00
14-13	0 / 2153	-17.5	-17.5	0.43 (1)	10.00
13-12	0 / 2113	-17.5	-17.5	0.42 (1)	10.00
12-11	0 / 2113	-17.5	-17.5	0.42 (1)	10.00
11-10	0 / 2348	-17.5	-17.5	0.46 (1)	10.00
10- 9	0 / 0	-17.5	-17.5	0.14 (4)	10.00

WEBS

MEMB. FR-TO	MAX. FACTORED FORCE (LBS)	MAX CSI (LC)
16- 3	-214 / 42	0.06 (1)
3-15	-410 / 0	0.47 (1)
15- 4	0 / 339	0.08 (1)
4-13	0 / 486	0.11 (1)
13- 5	-640 / 0	0.65 (1)
13- 6	0 / 545	0.12 (1)
11- 6	0 / 271	0.06 (1)
11- 7	-284 / 0	0.32 (1)
10- 7	-314 / 8	0.09 (1)
2-16	0 / 2515	0.57 (1)
10- 8	0 / 2386	0.54 (1)

DESIGN CRITERIA

SPECIFIED LOADS:

TOP CH.	LL	=	23.3	PSF
	DL	=	3.0	PSF
BOT CH.	LL	=	0.0	PSF
	DL	=	7.0	PSF
TOTAL LOAD		=	33.3	PSF

SPACING = 24.0 IN. C/C

LOADING IN FLAT SECTION BASED ON A SLOPE OF 6.00/12

THIS TRUSS IS DESIGNED FOR RESIDENTIAL OR SMALL BUILDING REQUIREMENTS OF PART 9, NBCC 2010

THIS DESIGN COMPLIES WITH:
- PART 9 OF OBC 2012 , BCBC 2012 , ABC 2014
- CSA 086-09
- TPIC 2011

(55 % OF 27.2 P.S.F. G.S.L. PLUS 8.4 P.S.F. RAIN LOAD) EQUALS 23.3 P.S.F. SPECIFIED ROOF LIVE LOAD

ALLOWABLE DEFL.(LL)= L/360 (1.28")
CALCULATED VERT. DEFL.(LL) = L/ 999 (0.16")
ALLOWABLE DEFL.(TL)= L/360 (1.28")
CALCULATED VERT. DEFL.(TL) = L/ 999 (0.30")

CSI: TC=0.58 (2-3:1) , BC=0.48 (15-16:1) , WB=0.65 (5-13:1) , SSI=0.25 (4-5:1)

DOL LUMBER=1.00 NAIL=1.00 LS BEND=1.10 COMP=1.10 SHEAR=1.10 TENS= 1.10

COMPANION LIVE LOAD FACTOR = 0.50

TRUSS PLATE MANUFACTURER IS NOT RESPONSIBLE FOR QUALITY CONTROL IN THE TRUSS MANUFACTURING PLANT .

NAIL VALUES

PLATE	GRIP(DRY) (PSI) MAX	MIN	SHEAR (PLI) MAX	MIN	SECTION (PLI) MAX	MIN
MT20	618	354	1667	822	2284	1656

PLATE PLACEMENT TOL. = 0.250 inches

PLATE ROTATION TOL. = 5.0 Deg.

JSI GRIP= 0.89 (8) (INPUT = 0.90)
JSI METAL= 0.62 (16) (INPUT = 1.00)

LICENSED PROFESSIONAL ENGINEER
P.M. TREVISAN
100136551
March 16th, 2017
PROVINCE OF ONTARIO

RECEIVED
TOWN OF MILTON
MAR 29, 2017
17-5327
BUILDING DIVISION

KOTT

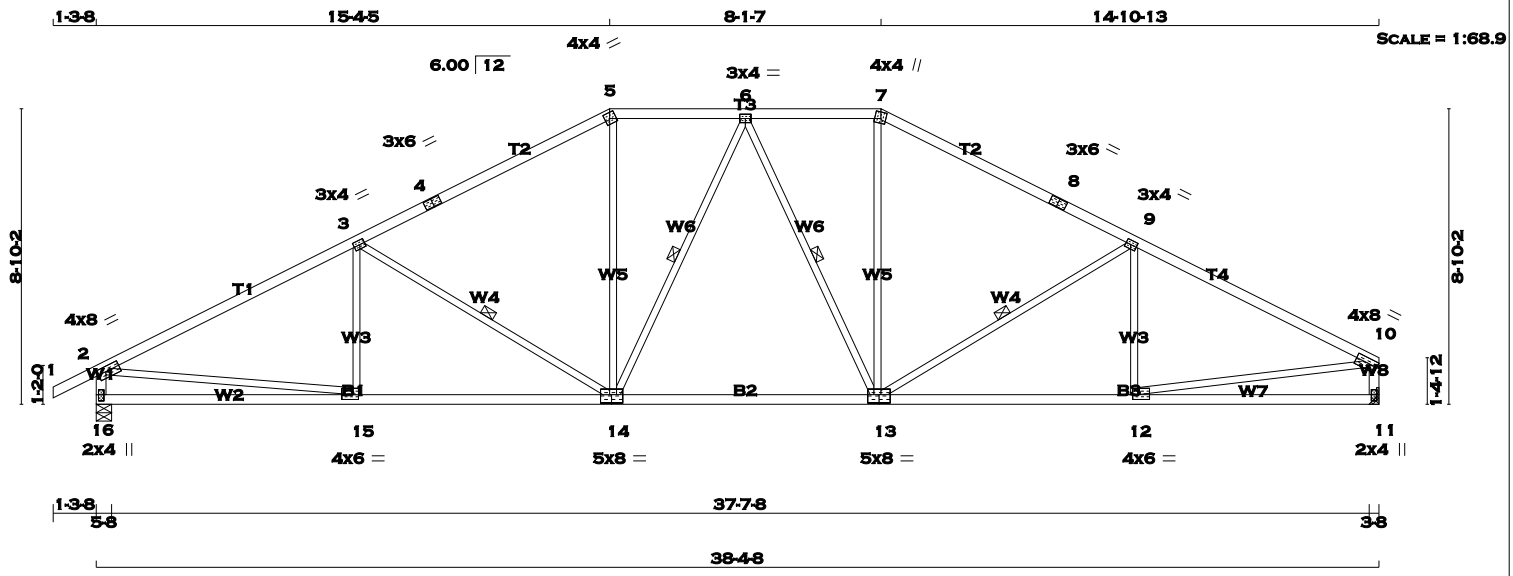

TOTAL WEIGHT = 2 X 157 = 314 lb

[M][F]

LUMBER

N. L. G. A. RULES

CHORDS	SIZE		LUMBER	DESCR.
1 - 4	2x4	DRY	No.2	SPF
4 - 5	2x4	DRY	No.2	SPF
5 - 7	2x4	DRY	No.2	SPF
7 - 8	2x4	DRY	No.2	SPF
8 - 10	2x4	DRY	No.2	SPF
16 - 2	2x4	DRY	No.2	SPF
11 - 10	2x4	DRY	No.2	SPF
16 - 14	2x4	DRY	No.2	SPF
14 - 13	2x4	DRY	No.2	SPF
13 - 11	2x4	DRY	No.2	SPF
ALL WEBS EXCEPT	2x3	DRY	No.2	SPF

DRY: SEASONED LUMBER.

PLATES (table is in inches)

JT	TYPE	PLATES	W	LEN	Y	X
2	TMVW-t	MT20	4.0	8.0	1.75	3.00
3	TMWW-t	MT20	3.0	4.0	1.50	1.75
4	TS-t	MT20	3.0	6.0		
5	TTW-h	MT20	4.0	4.0	2.00	1.75
6	TMWW-t	MT20	3.0	4.0		
7	TTW+m	MT20	4.0	4.0	2.25	1.75
8	TS-t	MT20	3.0	6.0		
9	TMWW-t	MT20	3.0	4.0	1.50	1.75
10	TMVW-t	MT20	4.0	8.0	1.75	Edge
11	BMV1+p	MT20	2.0	4.0	2.25	1.00
12	BMWW-t	MT20	4.0	6.0	1.75	1.75
13	BSWWW-l	MT20	5.0	8.0	3.00	4.00
14	BSWWW-l	MT20	5.0	8.0	3.00	4.00
15	BMWW-t	MT20	4.0	6.0	1.75	2.00
16	BMV1+p	MT20	2.0	4.0	2.25	1.00

Edge - INDICATES REFERENCE CORNER OF PLATE TOUCHES EDGE OF CHORD.

A SIZE FOR SIZE SUBSTITUTION OF MITEK MII20 WITH TEE-LOK TL20 PLATES IS ALLOWED.

DIMENSIONS, SUPPORTS AND LOADINGS SPECIFIED BY FABRICATOR TO BE VERIFIED BY BUILDING DESIGNER

BEARINGS

JT	FACTORED GROSS REACTION VERT	HORZ	MAXIMUM FACTORED GROSS REACTION DOWN	HORZ	UPLIFT	INPUT BRG IN-SX	REQRD BRG IN-SX
16	1925	0	1925	0	0	5-8	5-8
11	1820	0	1820	0	0	HANGER BY OTHERS MIN. SEAT SIZE: 3-8	

UNFACTORED REACTIONS

JT	1ST LCASE COMBINED	MAX./MIN. COMPONENT REACTIONS SNOW	LIVE	PERM.LIVE	WIND	DEAD	SOIL
16	1349	957 / 0	0 / 0	0 / 0	0 / 0	392 / 0	0 / 0
11	1277	894 / 0	0 / 0	0 / 0	0 / 0	384 / 0	0 / 0

BEARING MATERIAL TO BE SPF NO.2 OR BETTER AT JOINT(S) 16

BRACING

TOP CHORD TO BE SHEATHED OR MAX. PURLIN SPACING = 3.27 FT.
MAX. UNBRACED BOTTOM CHORD LENGTH = 10.00 FT. OR RIGID CEILING DIRECTLY APPLIED.

ALL PITCH BREAKS AND PERIMETER CORNER JOINTS MUST BE LATERALLY RESTRAINED.

1 - 2x3 SPF No.2 LATERAL BRACE(S) AT 1/ 2 LENGTH OF 3-14, 6-14, 6-13, 9-13. DBS = 20-0-0 . CBF = 80 LBS.

DBS = DIAGONAL BRACE SPACING (MAX). CBF = CUMULATIVE BRACING FORCE. FASTEN LATERAL BRACE(S) USING (0.122"X3") SPIRAL NAILS : 1 NAIL FOR 2x3 BRACE(S), 2 FOR 1x4, 2x4, 2x5, 3 FOR 2x6, 4 FOR 2x8, 5 FOR 2x10, AND 6 FOR 2x12.

END VERTICAL(S) MUST BE SHEATHED OR HAVE BRACES AS INDICATED IN THE MAX. UNBRACED LENGTH COLUMN OF THE TABLE BELOW

LOADING

TOTAL LOAD CASES: (4)

CHORDS

MEMB. FR-TO	MAX. FACTORED FORCE (LBS)	FACTORED VERT. LOAD (PLF) FROM	TO	LC1 MAX CSI (LC)	MAX. UNBRAC LENGTH
1- 2	0 / 23	-77.4	-77.4	0.10 (1)	10.00
2- 3	-2776 / 0	-77.4	-77.4	0.92 (1)	3.27
3- 4	-2235 / 0	-77.4	-77.4	0.78 (1)	3.71
4- 5	-2235 / 0	-77.4	-77.4	0.78 (1)	3.71
5- 6	-1974 / 0	-77.4	-77.4	0.19 (1)	4.64
6- 7	-1954 / 0	-77.4	-77.4	0.19 (1)	4.66
7- 8	-2211 / 0	-77.4	-77.4	0.75 (1)	3.78
8- 9	-2211 / 0	-77.4	-77.4	0.75 (1)	3.78
9-10	-2648 / 0	-77.4	-77.4	0.79 (1)	3.47
16- 2	-1868 / 0	0.0	0.0	0.19 (1)	6.13
11-10	-1767 / 0	0.0	0.0	0.18 (1)	6.28
16-15	0 / 0	-17.5	-17.5	0.24 (4)	10.00
15-14	0 / 2511	-17.5	-17.5	0.52 (1)	10.00
14-13	0 / 2051	-17.5	-17.5	0.45 (1)	10.00
13-12	0 / 2397	-17.5	-17.5	0.50 (1)	10.00
12-11	0 / 0	-17.5	-17.5	0.22 (4)	10.00

WEBS

MEMB. FR-TO	MAX. FACTORED FORCE (LBS)	MAX CSI (LC)
15- 3	-131 / 87	0.05 (1)
3-14	-639 / 0	0.36 (1)
14- 5	0 / 640	0.14 (1)
14- 6	-183 / 0	0.12 (1)
6-13	-231 / 0	0.15 (1)
13- 7	0 / 626	0.14 (1)
13- 9	-527 / 0	0.30 (1)
12- 9	-215 / 57	0.08 (1)
2-15	0 / 2527	0.57 (1)
12-10	0 / 2423	0.55 (1)

DESIGN CRITERIA

SPECIFIED LOADS:

TOP	CH.	LL	=	23.3	PSF
		DL	=	3.0	PSF
BOT	CH.	LL	=	0.0	PSF
		DL	=	7.0	PSF
TOTAL	LOAD		=	33.3	PSF

SPACING = 24.0 IN. C/C

LOADING IN FLAT SECTION BASED ON A SLOPE OF 6.00/12

THIS TRUSS IS DESIGNED FOR RESIDENTIAL OR SMALL BUILDING REQUIREMENTS OF PART 9, NBCC 2010

THIS DESIGN COMPLIES WITH:
- PART 9 OF OBC 2012 , BCBC 2012 , ABC 2014
- CSA 086-09
- TPIC 2011

(55 % OF 27.2 P.S.F. G.S.L. PLUS 8.4 P.S.F. RAIN LOAD) EQUALS 23.3 P.S.F. SPECIFIED ROOF LIVE LOAD

ALLOWABLE DEFL.(LL)= L/360 (1.28")
CALCULATED VERT. DEFL.(LL) = L/ 999 (0.15")
ALLOWABLE DEFL.(TL)= L/360 (1.28")
CALCULATED VERT. DEFL.(TL) = L/ 999 (0.31")

CSI: TC=0.92 (2-3:1) , BC=0.52 (14-15:1) , WB=0.57 (2-15:1) , SSI=0.26 (2-3:1)

DOL LUMBER=1.00 NAIL=1.00 LS BEND=1.10 COMP=1.10 SHEAR=1.10 TENS= 1.10

COMPANION LIVE LOAD FACTOR = 0.50

TRUSS PLATE MANUFACTURER IS NOT RESPONSIBLE FOR QUALITY CONTROL IN THE TRUSS MANUFACTURING PLANT .

NAIL VALUES

PLATE	GRIP(DRY) (PSI) MAX	MIN	SHEAR (PLI) MAX	MIN	SECTION (PLI) MAX	MIN
MT20	618	354	1667	822	2284	1656

PLATE PLACEMENT TOL. = 0.250 inches

PLATE ROTATION TOL. = 5.0 Deg.

JSI GRIP= 0.90 (7) (INPUT = 0.90)
JSI METAL= 0.63 (15) (INPUT = 1.00)

LICENSED PROFESSIONAL ENGINEER
P.M. TREVISAN
100136551
March 16th, 2017
PROVINCE OF ONTARIO

RECEIVED
TOWN OF MILTON
MAR 29, 2017
17-5327
BUILDING DIVISION

KOTT

JOB NAME	TRUSS NAME	QUANTITY	PLY	JOB DESC.	DRWG NO.
PT0317-093	T40	1	1	TRUSS DESC. LECCO RIDGE-BLOCK 343	ENG JOB: PT0317-093

KOTT , Stouffville, ON, CGC

Version 8.100 S Feb 9 2017 MiTek Industries, Inc. Thu Mar 16 07:55:12 2017 Page 1

ID:EvTixTQDI5yR1QLotZTBr_yE?HJ-pa_4pOMB0aWddF5YdabH_vRh5uXcTr4qJxr6zpzaRHT

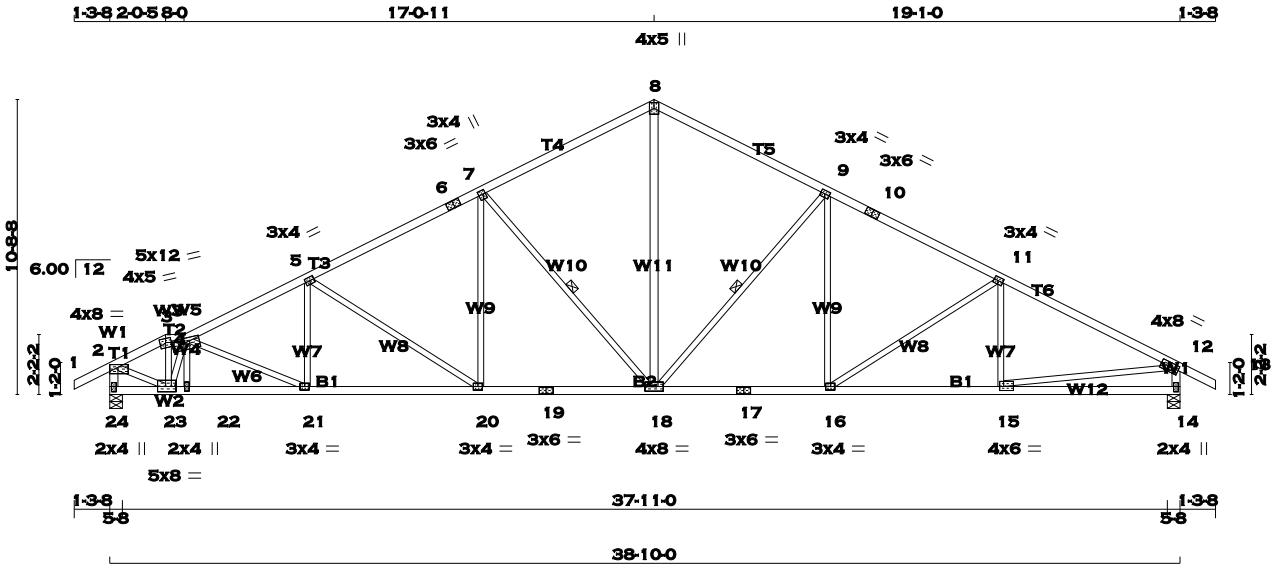

TOTAL WEIGHT = 169 lb

[M][F]

LUMBER

N. L. G. A. RULES

CHORDS	SIZE		LUMBER	DESCR.
1 - 3	2x4	DRY	No.2	SPF
3 - 4	2x4	DRY	No.2	SPF
4 - 6	2x4	DRY	No.2	SPF
6 - 8	2x4	DRY	No.2	SPF
8 - 10	2x4	DRY	No.2	SPF
10 - 13	2x4	DRY	No.2	SPF
24 - 2	2x4	DRY	No.2	SPF
14 - 12	2x4	DRY	No.2	SPF
24 - 19	2x4	DRY	No.2	SPF
19 - 17	2x4	DRY	No.2	SPF
17 - 14	2x4	DRY	No.2	SPF
ALL WEBS EXCEPT	2x3	DRY	No.2	SPF
18 - 8	2x4	DRY	No.2	SPF

DRY: SEASONED LUMBER.

PLATES (table is in inches)

JT	TYPE	PLATES	W	LEN	Y	X
2	TMVW-p	MT20	4.0	8.0	1.25	3.50
3	TTW-m	MT20	4.0	5.0	1.75	2.50
4	TTWWW-m	MT20	5.0	12.0	1.75	5.25
5, 9, 11						
5	TMWW-t	MT20	3.0	4.0	1.50	1.75
6	TS-t	MT20	3.0	6.0		
7	TMWW+t	MT20	3.0	4.0	1.75	0.75
8	TTW+p	MT20	4.0	5.0		
10	TS-t	MT20	3.0	6.0		
12	TMVW-t	MT20	4.0	8.0	1.75	3.00
14	BMV1+p	MT20	2.0	4.0	2.25	1.00
15	BMWW-t	MT20	4.0	6.0	1.75	1.75
16, 20, 21						
16	BMWW-t	MT20	3.0	4.0		
17	BS-t	MT20	3.0	6.0		
18	BMWWW-t	MT20	4.0	8.0		
19	BS-t	MT20	3.0	6.0		
22	BMW+w	MT20	2.0	4.0		
23	BMWWW-t	MT20	5.0	8.0	2.25	3.50
24	BMV1+p	MT20	2.0	4.0	2.25	1.00

A SIZE FOR SIZE SUBSTITUTION OF MITEK MII20 WITH TEE-LOK TL20 PLATES IS ALLOWED.

DIMENSIONS, SUPPORTS AND LOADINGS SPECIFIED BY FABRICATOR TO BE VERIFIED BY BUILDING DESIGNER

BEARINGS

JT	FACTORED GROSS REACTION VERT	HORZ	MAXIMUM FACTORED GROSS REACTION DOWN	HORZ	UPLIFT	INPUT BRG IN-SX	REQRD BRG IN-SX
24	1947	0	1947	0	0	5-8	5-8
14	1947	0	1947	0	0	5-8	5-8

UNFACTORED REACTIONS

JT	1ST LCASE COMBINED	MAX./MIN. COMPONENT REACTIONS SNOW	LIVE	PERM.LIVE	WIND	DEAD	SOIL
24	1364	968 / 0	0 / 0	0 / 0	0 / 0	396 / 0	0 / 0
14	1364	968 / 0	0 / 0	0 / 0	0 / 0	396 / 0	0 / 0

BEARING MATERIAL TO BE SPF NO.2 OR BETTER AT JOINT(S) 24, 14

BRACING

TOP CHORD TO BE SHEATHED OR MAX. PURLIN SPACING = 3.68 FT.
MAX. UNBRACED BOTTOM CHORD LENGTH = 10.00 FT. OR RIGID CEILING DIRECTLY APPLIED.

ALL PITCH BREAKS AND PERIMETER CORNER JOINTS MUST BE LATERALLY RESTRAINED.

1 - 2x3 SPF No.2 LATERAL BRACE(S) AT 1/ 2 LENGTH OF 7-18. DBS = 16-0-0 . CBF = 85 LBS.
1 - 2x3 SPF No.2 LATERAL BRACE(S) AT 1/ 2 LENGTH OF 9-18. DBS = 18-0-0 . CBF = 86 LBS.

DBS = DIAGONAL BRACE SPACING (MAX). CBF = CUMULATIVE BRACING FORCE. FASTEN LATERAL BRACE(S) USING (0.122"X3") SPIRAL NAILS : 1 NAIL FOR 2x3 BRACE(S), 2 FOR 1x4, 2x4, 2x5, 3 FOR 2x6, 4 FOR 2x8, 5 FOR 2x10, AND 6 FOR 2x12.

END VERTICAL(S) MUST BE SHEATHED OR HAVE BRACES AS INDICATED IN THE MAX. UNBRACED LENGTH COLUMN OF THE TABLE BELOW

LOADING

TOTAL LOAD CASES: (4)

CHORDS

MEMB. FR-TO	MAX. FACTORED FORCE (LBS)	FACTORED VERT. LOAD (PLF) FROM	TO	LC1	MAX CSI (LC)	MAX. UNBRAC LENGTH
1- 2	0 / 23	-77.4	-77.4	0.10	(1)	10.00
2- 3	-2153 / 0	-77.4	-77.4	0.09	(1)	4.59
3- 4	-1970 / 0	-77.4	-77.4	0.04	(1)	4.80
4- 5	-2972 / 0	-77.4	-77.4	0.33	(1)	3.80
5- 6	-2544 / 0	-77.4	-77.4	0.50	(1)	3.91
6- 7	-2544 / 0	-77.4	-77.4	0.50	(1)	3.91
7- 8	-1952 / 0	-77.4	-77.4	0.45	(1)	4.39
8- 9	-1950 / 0	-77.4	-77.4	0.45	(1)	4.40
9-10	-2488 / 0	-77.4	-77.4	0.47	(1)	3.99
10-11	-2488 / 0	-77.4	-77.4	0.47	(1)	3.99
11-12	-2788 / 0	-77.4	-77.4	0.58	(1)	3.68
12-13	0 / 23	-77.4	-77.4	0.10	(1)	10.00
24- 2	-1927 / 0	0.0	0.0	0.19	(1)	6.06
14-12	-1898 / 0	0.0	0.0	0.19	(1)	6.10
24-23	0 / 0	-17.5	-17.5	0.02	(4)	10.00
23-22	0 / 2440	-17.5	-17.5	0.44	(1)	10.00
22-21	0 / 2439	-17.5	-17.5	0.46	(1)	10.00
21-20	0 / 2677	-17.5	-17.5	0.50	(1)	10.00
20-19	0 / 2284	-17.5	-17.5	0.45	(1)	10.00
19-18	0 / 2284	-17.5	-17.5	0.45	(1)	10.00
18-17	0 / 2225	-17.5	-17.5	0.44	(1)	10.00
17-16	0 / 2225	-17.5	-17.5	0.44	(1)	10.00
16-15	0 / 2512	-17.5	-17.5	0.47	(1)	10.00
15-14	0 / 0	-17.5	-17.5	0.16	(4)	10.00

WEBS

MEMB. FR-TO	MAX. FACTORED FORCE (LBS)	MAX CSI (LC)
23- 3	0 / 867	0.20 (1)
23- 4	-1637 / 0	0.25 (1)
22- 4	-21 / 32	0.01 (4)
4-21	0 / 258	0.06 (1)
21- 5	0 / 88	0.03 (4)
5-20	-469 / 0	0.53 (1)
20- 7	0 / 366	0.08 (1)
7-18	-853 / 0	0.56 (1)
18- 8	0 / 1337	0.21 (1)
18- 9	-764 / 0	0.50 (1)
16- 9	0 / 294	0.07 (1)
16-11	-342 / 0	0.39 (1)
15-11	-211 / 43	0.06 (1)
2-23	0 / 2073	0.47 (1)
15-12	0 / 2534	0.57 (1)

RECEIVED
TOWN OF MILTON
MAR 29, 2017
17-5327
BUILDING DIVISION

DESIGN CRITERIA

SPECIFIED LOADS:

TOP CH.	LL	=	23.3	PSF
	DL	=	3.0	PSF
BOT CH.	LL	=	0.0	PSF
	DL	=	7.0	PSF
TOTAL LOAD		=	33.3	PSF

SPACING = 24.0 IN. C/C

LOADING IN ALL FLAT SECTIONS BASED ON A SLOPE OF 6.00/12

THIS TRUSS IS DESIGNED FOR RESIDENTIAL OR SMALL BUILDING REQUIREMENTS OF PART 9, NBCC 2010

THIS DESIGN COMPLIES WITH:
- PART 9 OF OBC 2012 , BCBC 2012 , ABC 2014
- CSA 086-09
- TPIC 2011

(55 % OF 27.2 P.S.F. G.S.L. PLUS 8.4 P.S.F. RAIN LOAD) EQUALS 23.3 P.S.F. SPECIFIED ROOF LIVE LOAD

ALLOWABLE DEFL.(LL)= L/360 (1.29")
CALCULATED VERT. DEFL.(LL) = L/ 999 (0.17")
ALLOWABLE DEFL.(TL)= L/360 (1.29")
CALCULATED VERT. DEFL.(TL) = L/ 999 (0.31")

CSI: TC=0.58 (11-12:1) , BC=0.50 (20-21:1) , WB=0.57 (12-15:1) , SSI=0.21 (11-12:1)

DOL LUMBER=1.00 NAIL=1.00 LS BEND=1.10 COMP=1.10 SHEAR=1.10 TENS= 1.10

COMPANION LIVE LOAD FACTOR = 0.50

TRUSS PLATE MANUFACTURER IS NOT RESPONSIBLE FOR QUALITY CONTROL IN THE TRUSS MANUFACTURING PLANT .

NAIL VALUES

PLATE	GRIP(DRY) (PSI) MAX	MIN	SHEAR (PLI) MAX	MIN	SECTION (PLI) MAX	MIN
MT20	618	354	1667	822	2284	1656

PLATE PLACEMENT TOL. = 0.250 inches

PLATE ROTATION TOL. = 5.0 Deg.

JSI GRIP= 0.90 (4) (INPUT = 0.90)
JSI METAL= 0.63 (15) (INPUT = 1.00)

KOTT

JOB NAME	TRUSS NAME	QUANTITY	PLY	JOB DESC.	DRWG NO.
PT0317-093	**T41**	**1**	**1**	TRUSS DESC. LECCO RIDGE-BLOCK 343	

ENG JOB: PT0317-093

KOTT , Stouffville, ON, CGC

Version 8.100 S Feb 9 2017 MiTek Industries, Inc. Thu Mar 16 07:55:13 2017 Page 1

ID:EvTixTQDI5yR1QLotZTBr_yE?HJ-HmYS0jNpnueUFPgkBH6WX7zsrHtsCHy_YbbgVGzaRHS

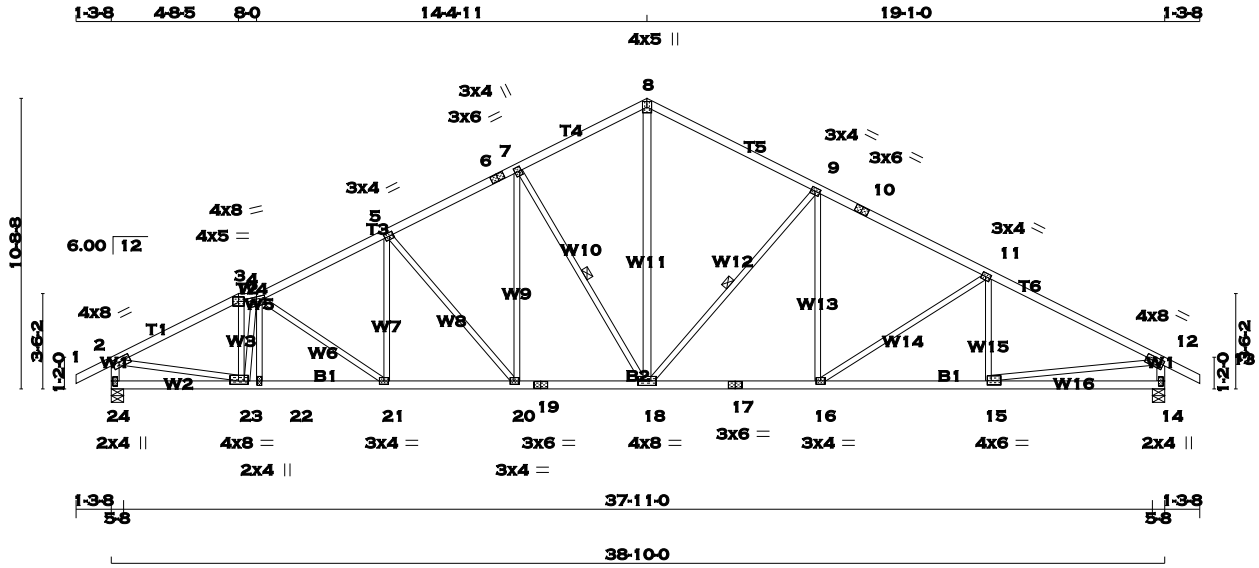

TOTAL WEIGHT = 177 lb

[M][F]

LUMBER

N. L. G. A. RULES

CHORDS	SIZE		LUMBER	DESCR.
1 - 3	2x4	DRY	No.2	SPF
3 - 4	2x4	DRY	No.2	SPF
4 - 6	2x4	DRY	No.2	SPF
6 - 8	2x4	DRY	No.2	SPF
8 - 10	2x4	DRY	No.2	SPF
10 - 13	2x4	DRY	No.2	SPF
24 - 2	2x4	DRY	No.2	SPF
14 - 12	2x4	DRY	No.2	SPF
24 - 19	2x4	DRY	No.2	SPF
19 - 17	2x4	DRY	No.2	SPF
17 - 14	2x4	DRY	No.2	SPF
ALL WEBS EXCEPT	2x3	DRY	No.2	SPF
18 - 8	2x4	DRY	No.2	SPF

DRY: SEASONED LUMBER.

PLATES (table is in inches)

JT	TYPE	PLATES	W	LEN	Y	X
2	TMVW-t	MT20	4.0	8.0	1.75	3.00
3	TTW-l	MT20	4.0	5.0		
4	TTWWW-m	MT20	4.0	8.0		
5, 9, 11						
5	TMWW-t	MT20	3.0	4.0	1.50	1.75
6	TS-t	MT20	3.0	6.0		
7	TMWW+t	MT20	3.0	4.0	2.00	0.75
8	TTW+p	MT20	4.0	5.0		
10	TS-t	MT20	3.0	6.0		
12	TMVW-t	MT20	4.0	8.0	1.75	3.00
14	BMV1+p	MT20	2.0	4.0	2.25	1.00
15	BMWW-t	MT20	4.0	6.0	1.75	1.75
16	BMWW-t	MT20	3.0	4.0		
17	BS-t	MT20	3.0	6.0		
18	BMWWW-t	MT20	4.0	8.0		
19	BS-t	MT20	3.0	6.0		
20	BMWW-t	MT20	3.0	4.0	1.50	1.75
21	BMWW-t	MT20	3.0	4.0		
22	BMW+w	MT20	2.0	4.0		
23	BMWWW-t	MT20	4.0	8.0	1.50	3.75
24	BMV1+p	MT20	2.0	4.0	2.25	1.00

A SIZE FOR SIZE SUBSTITUTION OF MITEK MII20 WITH TEE-LOK TL20 PLATES IS ALLOWED.

DIMENSIONS, SUPPORTS AND LOADINGS SPECIFIED BY FABRICATOR TO BE VERIFIED BY BUILDING DESIGNER

BEARINGS

JT	FACTORED GROSS REACTION VERT	HORZ	MAXIMUM FACTORED GROSS REACTION DOWN	HORZ	UPLIFT	INPUT BRG IN-SX	REQRD BRG IN-SX
24	1947	0	1947	0	0	5-8	5-8
14	1947	0	1947	0	0	5-8	5-8

UNFACTORED REACTIONS

JT	1ST LCASE COMBINED	MAX./MIN. COMPONENT REACTIONS SNOW	LIVE	PERM.LIVE	WIND	DEAD	SOIL
24	1364	968 / 0	0 / 0	0 / 0	0 / 0	396 / 0	0 / 0
14	1364	968 / 0	0 / 0	0 / 0	0 / 0	396 / 0	0 / 0

BEARING MATERIAL TO BE SPF NO.2 OR BETTER AT JOINT(S) 24, 14

BRACING

TOP CHORD TO BE SHEATHED OR MAX. PURLIN SPACING = 3.68 FT.
MAX. UNBRACED BOTTOM CHORD LENGTH = 10.00 FT. OR RIGID CEILING DIRECTLY APPLIED.

ALL PITCH BREAKS AND PERIMETER CORNER JOINTS MUST BE LATERALLY RESTRAINED.

1 - 2x3 SPF No.2 LATERAL BRACE(S) AT 1/ 2 LENGTH OF 7-18, 9-18. DBS = 18-0-0 . CBF = 91 LBS.

DBS = DIAGONAL BRACE SPACING (MAX). CBF = CUMULATIVE BRACING FORCE. FASTEN LATERAL BRACE(S) USING (0.122"X3") SPIRAL NAILS : 1 NAIL FOR 2x3 BRACE(S), 2 FOR 1x4, 2x4, 2x5, 3 FOR 2x6, 4 FOR 2x8, 5 FOR 2x10, AND 6 FOR 2x12.

END VERTICAL(S) MUST BE SHEATHED OR HAVE BRACES AS INDICATED IN THE MAX. UNBRACED LENGTH COLUMN OF THE TABLE BELOW

LOADING

TOTAL LOAD CASES: (4)

CHORDS

MEMB. FR-TO	MAX. FACTORED FORCE (LBS)	FACTORED VERT. LOAD (PLF) FROM	TO	LC1	MAX CSI (LC)	MAX. UNBRAC LENGTH
1- 2	0 / 23	-77.4	-77.4	0.10 (1)	10.00	
2- 3	-2687 / 0	-77.4	-77.4	0.32 (1)	3.97	
3- 4	-2467 / 0	-77.4	-77.4	0.07 (1)	4.36	
4- 5	-2780 / 0	-77.4	-77.4	0.32 (1)	3.93	
5- 6	-2392 / 0	-77.4	-77.4	0.27 (1)	4.24	
6- 7	-2392 / 0	-77.4	-77.4	0.27 (1)	4.24	
7- 8	-1944 / 0	-77.4	-77.4	0.25 (1)	4.61	
8- 9	-1949 / 0	-77.4	-77.4	0.45 (1)	4.41	
9-10	-2488 / 0	-77.4	-77.4	0.47 (1)	3.99	
10-11	-2488 / 0	-77.4	-77.4	0.47 (1)	3.99	
11-12	-2788 / 0	-77.4	-77.4	0.58 (1)	3.68	
12-13	0 / 23	-77.4	-77.4	0.10 (1)	10.00	
24- 2	-1912 / 0	0.0	0.0	0.19 (1)	6.07	
14-12	-1898 / 0	0.0	0.0	0.19 (1)	6.10	
24-23	0 / 0	-17.5	-17.5	0.10 (4)	10.00	
23-22	0 / 2642	-17.5	-17.5	0.48 (1)	10.00	
22-21	0 / 2639	-17.5	-17.5	0.50 (1)	10.00	
21-20	0 / 2502	-17.5	-17.5	0.45 (1)	10.00	
20-19	0 / 2140	-17.5	-17.5	0.42 (1)	10.00	
19-18	0 / 2140	-17.5	-17.5	0.42 (1)	10.00	
18-17	0 / 2226	-17.5	-17.5	0.43 (1)	10.00	
17-16	0 / 2226	-17.5	-17.5	0.43 (1)	10.00	
16-15	0 / 2512	-17.5	-17.5	0.47 (1)	10.00	
15-14	0 / 0	-17.5	-17.5	0.16 (4)	10.00	

WEBS

MEMB. FR-TO	MAX. FACTORED FORCE (LBS)	MAX CSI (LC)
23- 3	0 / 1000	0.23 (1)
23- 4	-1244 / 0	0.26 (1)
22- 4	-100 / 0	0.02 (1)
4-21	-164 / 0	0.09 (1)
21- 5	0 / 195	0.05 (4)
5-20	-558 / 0	0.59 (1)
20- 7	0 / 493	0.11 (1)
7-18	-807 / 0	0.49 (1)
18- 8	0 / 1378	0.22 (1)
18- 9	-765 / 0	0.50 (1)
16- 9	0 / 295	0.07 (1)
16-11	-342 / 0	0.39 (1)
15-11	-211 / 42	0.06 (1)
2-23	0 / 2438	0.55 (1)
15-12	0 / 2534	0.57 (1)

RECEIVED
TOWN OF MILTON
MAR 29, 2017
17-5327
BUILDING DIVISION

DESIGN CRITERIA

SPECIFIED LOADS:

TOP CH.	LL	=	23.3	PSF
	DL	=	3.0	PSF
BOT CH.	LL	=	0.0	PSF
	DL	=	7.0	PSF
TOTAL LOAD		=	33.3	PSF

SPACING = 24.0 IN. C/C

LOADING IN ALL FLAT SECTIONS BASED ON A SLOPE OF 6.00/12

THIS TRUSS IS DESIGNED FOR RESIDENTIAL OR SMALL BUILDING REQUIREMENTS OF PART 9, NBCC 2010

THIS DESIGN COMPLIES WITH:
- PART 9 OF OBC 2012 , BCBC 2012 , ABC 2014
- CSA 086-09
- TPIC 2011

(55 % OF 27.2 P.S.F. G.S.L. PLUS 8.4 P.S.F. RAIN LOAD) EQUALS 23.3 P.S.F. SPECIFIED ROOF LIVE LOAD

ALLOWABLE DEFL.(LL)= L/360 (1.29")
CALCULATED VERT. DEFL.(LL) = L/ 999 (0.18")
ALLOWABLE DEFL.(TL)= L/360 (1.29")
CALCULATED VERT. DEFL.(TL) = L/ 999 (0.31")

CSI: TC=0.58 (11-12:1) , BC=0.50 (21-22:1) , WB=0.59 (5-20:1) , SSI=0.21 (11-12:1)

DOL LUMBER=1.00 NAIL=1.00 LS BEND=1.10 COMP=1.10 SHEAR=1.10 TENS= 1.10

COMPANION LIVE LOAD FACTOR = 0.50

TRUSS PLATE MANUFACTURER IS NOT RESPONSIBLE FOR QUALITY CONTROL IN THE TRUSS MANUFACTURING PLANT .

NAIL VALUES

PLATE	GRIP(DRY) (PSI) MAX	MIN	SHEAR (PLI) MAX	MIN	SECTION (PLI) MAX	MIN
MT20	618	354	1667	822	2284	1656

PLATE PLACEMENT TOL. = 0.250 inches

PLATE ROTATION TOL. = 5.0 Deg.

JSI GRIP= 0.90 (3) (INPUT = 0.90)
JSI METAL= 0.63 (17) (INPUT = 1.00)

KOTT

JOB NAME	TRUSS NAME	QUANTITY	PLY	JOB DESC.	DRWG NO.
PT0317-093	T42	1	1	TRUSS DESC. LECCO RIDGE-BLOCK 343	ENG JOB: PT0317-093

KOTT , Stouffville, ON, CGC

Version 8.100 S Feb 9 2017 MiTek Industries, Inc. Thu Mar 16 07:55:13 2017 Page 1

ID:EvTixTQDI5yR1QLotZTBr_yE?HJ-HmYS0jNpnueUFPgkBH6WX7zsrHtwCIK_YbbgVGzaRHS

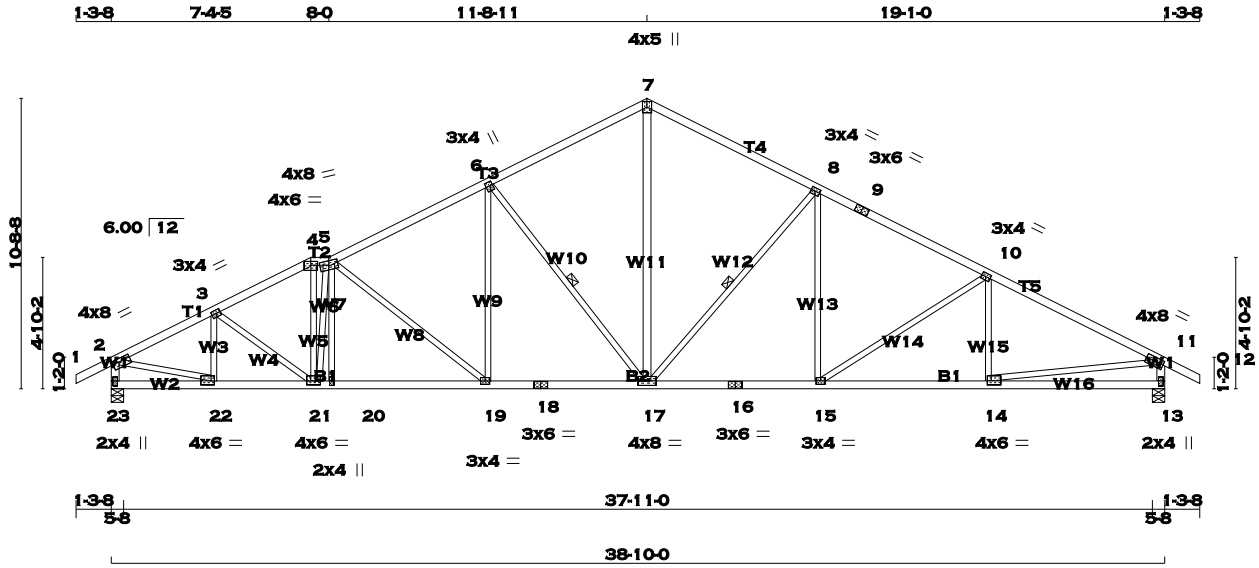

TOTAL WEIGHT = 176 lb

[M][F]

LUMBER

N. L. G. A. RULES

CHORDS	SIZE		LUMBER	DESCR.
1 - 4	2x4	DRY	No.2	SPF
4 - 5	2x4	DRY	No.2	SPF
5 - 7	2x4	DRY	No.2	SPF
7 - 9	2x4	DRY	No.2	SPF
9 - 12	2x4	DRY	No.2	SPF
23 - 2	2x4	DRY	No.2	SPF
13 - 11	2x4	DRY	No.2	SPF
23 - 18	2x4	DRY	No.2	SPF
18 - 16	2x4	DRY	No.2	SPF
16 - 13	2x4	DRY	No.2	SPF
ALL WEBS EXCEPT	2x3	DRY	No.2	SPF
17 - 7	2x4	DRY	No.2	SPF

DRY: SEASONED LUMBER.

PLATES (table is in inches)

JT	TYPE	PLATES	W	LEN	Y	X
2 3, 8, 10	TMVW-t	MT20	4.0	8.0	1.50	3.00
3	TMWW-t	MT20	3.0	4.0	1.50	1.75
4	TTW-l	MT20	4.0	6.0	1.75	3.00
5	TTWWW-m	MT20	4.0	8.0		
6	TMWW+t	MT20	3.0	4.0	1.75	0.75
7	TTW+p	MT20	4.0	5.0		
9	TS-t	MT20	3.0	6.0		
11	TMVW-t	MT20	4.0	8.0	1.75	3.00
13	BMV1+p	MT20	2.0	4.0	2.25	1.00
14	BMWW-t	MT20	4.0	6.0	1.75	1.75
15	BMWW-t	MT20	3.0	4.0		
16	BS-t	MT20	3.0	6.0		
17	BMWWW-t	MT20	4.0	8.0		
18	BS-t	MT20	3.0	6.0		
19	BMWW-t	MT20	3.0	4.0		
20	BMW+w	MT20	2.0	4.0		
21	BMWWW-t	MT20	4.0	6.0	1.75	3.00
22	BMWW-t	MT20	4.0	6.0	1.75	1.50
23	BMV1+p	MT20	2.0	4.0	2.25	1.00

A SIZE FOR SIZE SUBSTITUTION OF MITEK MII20 WITH TEE-LOK TL20 PLATES IS ALLOWED.

DIMENSIONS, SUPPORTS AND LOADINGS SPECIFIED BY FABRICATOR TO BE VERIFIED BY BUILDING DESIGNER

BEARINGS

JT	FACTORED GROSS REACTION VERT	HORZ	MAXIMUM FACTORED GROSS REACTION DOWN	HORZ	UPLIFT	INPUT BRG IN-SX	REQRD BRG IN-SX
23	1947	0	1947	0	0	5-8	5-8
13	1947	0	1947	0	0	5-8	5-8

UNFACTORED REACTIONS

JT	1ST LCASE COMBINED	MAX./MIN. COMPONENT REACTIONS SNOW	LIVE	PERM.LIVE	WIND	DEAD	SOIL
23	1364	968 / 0	0 / 0	0 / 0	0 / 0	396 / 0	0 / 0
13	1364	968 / 0	0 / 0	0 / 0	0 / 0	396 / 0	0 / 0

BEARING MATERIAL TO BE SPF NO.2 OR BETTER AT JOINT(S) 23, 13

BRACING

TOP CHORD TO BE SHEATHED OR MAX. PURLIN SPACING = 3.68 FT.
MAX. UNBRACED BOTTOM CHORD LENGTH = 10.00 FT. OR RIGID CEILING DIRECTLY APPLIED.

ALL PITCH BREAKS AND PERIMETER CORNER JOINTS MUST BE LATERALLY RESTRAINED.

1 - 2x3 SPF No.2 LATERAL BRACE(S) AT 1/ 2 LENGTH OF 6-17. DBS = 16-0-0 . CBF = 85 LBS.
1 - 2x3 SPF No.2 LATERAL BRACE(S) AT 1/ 2 LENGTH OF 8-17. DBS = 18-0-0 . CBF = 86 LBS.

DBS = DIAGONAL BRACE SPACING (MAX). CBF = CUMULATIVE BRACING FORCE. FASTEN LATERAL BRACE(S) USING (0.122"X3") SPIRAL NAILS : 1 NAIL FOR 2x3 BRACE(S), 2 FOR 1x4, 2x4, 2x5, 3 FOR 2x6, 4 FOR 2x8, 5 FOR 2x10, AND 6 FOR 2x12.

END VERTICAL(S) MUST BE SHEATHED OR HAVE BRACES AS INDICATED IN THE MAX. UNBRACED LENGTH COLUMN OF THE TABLE BELOW

LOADING

TOTAL LOAD CASES: (4)

CHORDS MEMB. FR-TO	MAX. FACTORED FORCE (LBS)	FACTORED VERT. LOAD LC1 (PLF) FROM	TO	MAX CSI (LC)	MAX. UNBRAC LENGTH	WEBS MEMB. FR-TO	MAX. FACTORED FORCE (LBS)	MAX CSI (LC)
1- 2	0 / 23	-77.4	-77.4	0.10 (1)	10.00	22- 3	-484 / 0	0.09 (1)
2- 3	-2578 / 0	-77.4	-77.4	0.20 (1)	4.16	3-21	0 / 142	0.03 (1)
3- 4	-2731 / 0	-77.4	-77.4	0.19 (1)	4.06	21- 4	0 / 1084	0.24 (1)
4- 5	-2455 / 0	-77.4	-77.4	0.06 (1)	4.37	21- 5	-1023 / 0	0.36 (1)
5- 6	-2489 / 0	-77.4	-77.4	0.46 (1)	3.96	20- 5	-48 / 56	0.02 (4)
6- 7	-1952 / 0	-77.4	-77.4	0.41 (1)	4.43	5-19	-417 / 0	0.44 (1)
7- 8	-1949 / 0	-77.4	-77.4	0.45 (1)	4.41	19- 6	0 / 365	0.08 (1)
8- 9	-2488 / 0	-77.4	-77.4	0.47 (1)	3.99	6-17	-850 / 0	0.54 (1)
9-10	-2488 / 0	-77.4	-77.4	0.47 (1)	3.99	17- 7	0 / 1356	0.22 (1)
10-11	-2788 / 0	-77.4	-77.4	0.58 (1)	3.68	17- 8	-765 / 0	0.50 (1)
11-12	0 / 23	-77.4	-77.4	0.10 (1)	10.00	15- 8	0 / 295	0.07 (1)
23- 2	-1909 / 0	0.0	0.0	0.19 (1)	6.08	15-10	-342 / 0	0.39 (1)
13-11	-1898 / 0	0.0	0.0	0.19 (1)	6.10	14-10	-211 / 43	0.06 (1)
						2-22	0 / 2375	0.53 (1)
23-22	0 / 0	-17.5	-17.5	0.06 (4)	10.00	14-11	0 / 2534	0.57 (1)
22-21	0 / 2316	-17.5	-17.5	0.45 (1)	10.00			
21-20	0 / 2580	-17.5	-17.5	0.49 (1)	10.00			
20-19	0 / 2579	-17.5	-17.5	0.49 (1)	10.00			
19-18	0 / 2250	-17.5	-17.5	0.44 (1)	10.00			
18-17	0 / 2250	-17.5	-17.5	0.44 (1)	10.00			
17-16	0 / 2226	-17.5	-17.5	0.44 (1)	10.00			
16-15	0 / 2226	-17.5	-17.5	0.44 (1)	10.00			
15-14	0 / 2512	-17.5	-17.5	0.47 (1)	10.00			
14-13	0 / 0	-17.5	-17.5	0.16 (4)	10.00			

RECEIVED
TOWN OF MILTON
MAR 29, 2017
17-5327
BUILDING DIVISION

DESIGN CRITERIA

SPECIFIED LOADS:

TOP CH.	LL	=	23.3	PSF
	DL	=	3.0	PSF
BOT CH.	LL	=	0.0	PSF
	DL	=	7.0	PSF
TOTAL LOAD		=	33.3	PSF

SPACING = 24.0 IN. C/C

LOADING IN ALL FLAT SECTIONS BASED ON A SLOPE OF 6.00/12

THIS TRUSS IS DESIGNED FOR RESIDENTIAL OR SMALL BUILDING REQUIREMENTS OF PART 9, NBCC 2010

THIS DESIGN COMPLIES WITH:
- PART 9 OF OBC 2012 , BCBC 2012 , ABC 2014
- CSA 086-09
- TPIC 2011

(55 % OF 27.2 P.S.F. G.S.L. PLUS 8.4 P.S.F. RAIN LOAD) EQUALS 23.3 P.S.F. SPECIFIED ROOF LIVE LOAD

ALLOWABLE DEFL.(LL)= L/360 (1.29")
CALCULATED VERT. DEFL.(LL) = L/ 999 (0.17")
ALLOWABLE DEFL.(TL)= L/360 (1.29")
CALCULATED VERT. DEFL.(TL) = L/ 999 (0.31")

CSI: TC=0.58 (10-11:1) , BC=0.49 (20-21:1) , WB=0.57 (11-14:1) , SSI=0.21 (10-11:1)

DOL LUMBER=1.00 NAIL=1.00 LS BEND=1.10 COMP=1.10 SHEAR=1.10 TENS= 1.10

COMPANION LIVE LOAD FACTOR = 0.50

TRUSS PLATE MANUFACTURER IS NOT RESPONSIBLE FOR QUALITY CONTROL IN THE TRUSS MANUFACTURING PLANT .

NAIL VALUES

PLATE	GRIP(DRY) (PSI) MAX	MIN	SHEAR (PLI) MAX	MIN	SECTION (PLI) MAX	MIN
MT20	618	354	1667	822	2284	1656

PLATE PLACEMENT TOL. = 0.250 inches

PLATE ROTATION TOL. = 5.0 Deg.

JSI GRIP= 0.87 (22) (INPUT = 0.90)
JSI METAL= 0.63 (16) (INPUT = 1.00)

KOTT

JOB NAME	TRUSS NAME	QUANTITY	PLY	JOB DESC.	DRWG NO.
PT0317-093	T43	1	1	TRUSS DESC. LECCO RIDGE-BLOCK 343	ENG JOB: PT0317-093

KOTT , Stouffville, ON, CGC

Version 8.100 S Feb 9 2017 MiTek Industries, Inc. Thu Mar 16 07:55:14 2017 Page 1

ID:EvTixTQDI5yR1QLotZTBr_yE?HJ-ly6qE3ORYBnLsYExl?el3KW2UhCGxli7mFKD2izaRHR

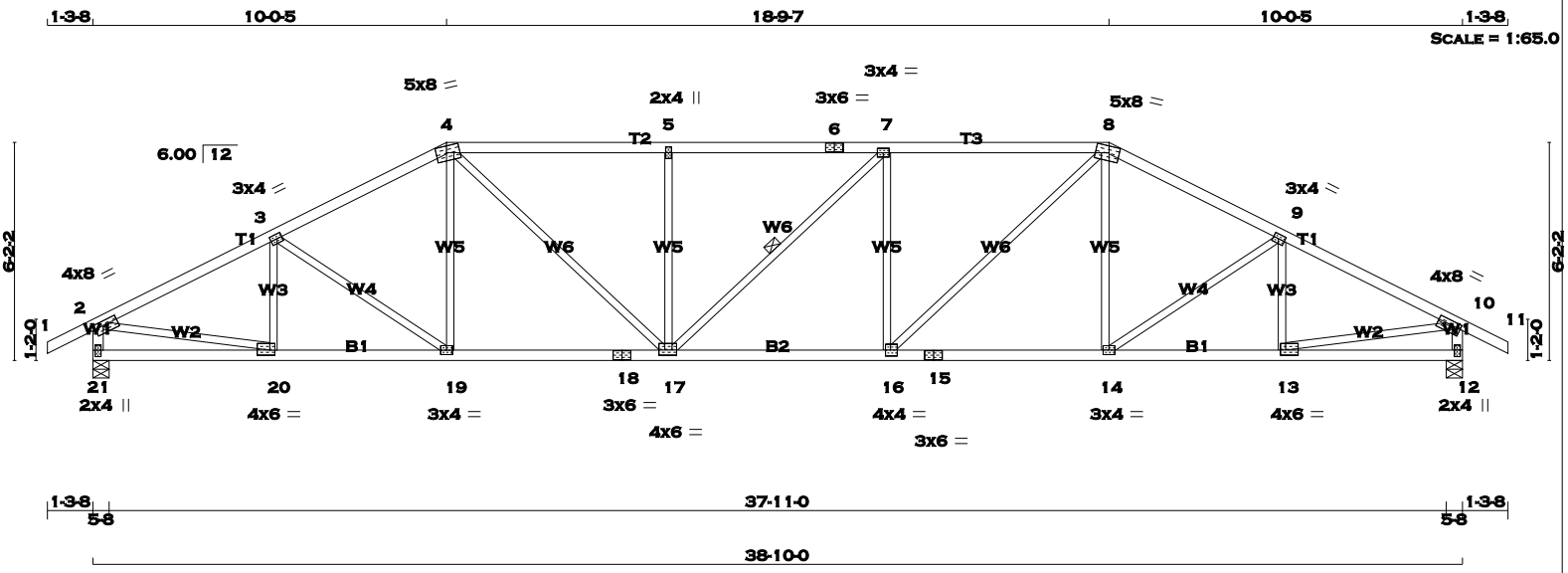

TOTAL WEIGHT = 157 lb

[M][F]

LUMBER

N. L. G. A. RULES

CHORDS	SIZE		LUMBER	DESCR.
1 - 4	2x4	DRY	No.2	SPF
4 - 6	2x4	DRY	No.2	SPF
6 - 8	2x4	DRY	No.2	SPF
8 - 11	2x4	DRY	No.2	SPF
21 - 2	2x4	DRY	No.2	SPF
12 - 10	2x4	DRY	No.2	SPF
21 - 18	2x4	DRY	No.2	SPF
18 - 15	2x4	DRY	No.2	SPF
15 - 12	2x4	DRY	No.2	SPF
ALL WEBS EXCEPT	2x3	DRY	No.2	SPF

DRY: SEASONED LUMBER.

PLATES (table is in inches)

JT	TYPE	PLATES	W	LEN	Y	X
2	TMVW-t	MT20	4.0	8.0	1.50	3.00
3	TMWW-t	MT20	3.0	4.0	1.50	1.75
4	TTWW-m	MT20	5.0	8.0	2.25	3.50
5	TMW+w	MT20	2.0	4.0		
6	TS-t	MT20	3.0	6.0		
7	TMWW-t	MT20	3.0	4.0		
8	TTWW-m	MT20	5.0	8.0	2.25	3.50
9	TMWW-t	MT20	3.0	4.0	1.50	1.75
10	TMVW-t	MT20	4.0	8.0	1.50	3.00
12	BMV1+p	MT20	2.0	4.0	2.25	1.00
13	BMWW-t	MT20	4.0	6.0	1.75	1.75
14	BMWW-t	MT20	3.0	4.0		
15	BS-t	MT20	3.0	6.0		
16	BMWW-t	MT20	4.0	4.0	2.00	1.75
17	BMWWW-t	MT20	4.0	6.0	1.75	2.00
18	BS-t	MT20	3.0	6.0		
19	BMWW-t	MT20	3.0	4.0		
20	BMWW-t	MT20	4.0	6.0	1.75	1.75
21	BMV1+p	MT20	2.0	4.0	2.25	1.00

A SIZE FOR SIZE SUBSTITUTION OF MITEK MII20 WITH TEE-LOK TL20 PLATES IS ALLOWED.

DIMENSIONS, SUPPORTS AND LOADINGS SPECIFIED BY FABRICATOR TO BE VERIFIED BY BUILDING DESIGNER

BEARINGS

JT	FACTORED GROSS REACTION VERT	HORZ	MAXIMUM FACTORED GROSS REACTION DOWN	HORZ	UPLIFT	INPUT BRG IN-SX	REQRD BRG IN-SX
21	1947	0	1947	0	0	5-8	5-8
12	1947	0	1947	0	0	5-8	5-8

UNFACTORED REACTIONS

JT	1ST LCASE COMBINED	MAX./MIN. COMPONENT REACTIONS SNOW	LIVE	PERM.LIVE	WIND	DEAD	SOIL
21	1364	968 / 0	0 / 0	0 / 0	0 / 0	396 / 0	0 / 0
12	1364	968 / 0	0 / 0	0 / 0	0 / 0	396 / 0	0 / 0

BEARING MATERIAL TO BE SPF NO.2 OR BETTER AT JOINT(S) 21, 12

BRACING

TOP CHORD TO BE SHEATHED OR MAX. PURLIN SPACING = 3.58 FT.
MAX. UNBRACED BOTTOM CHORD LENGTH = 10.00 FT. OR RIGID CEILING DIRECTLY APPLIED.

ALL PITCH BREAKS AND PERIMETER CORNER JOINTS MUST BE LATERALLY RESTRAINED.

1 - 2x3 SPF No.2 LATERAL BRACE(S) AT 1/ 2 LENGTH OF 7-17. DBS = 20-0-0 . CBF = 0 LBS.

DBS = DIAGONAL BRACE SPACING (MAX). CBF = CUMULATIVE BRACING FORCE. FASTEN LATERAL BRACE(S) USING (0.122"X3") SPIRAL NAILS : 1 NAIL FOR 2x3 BRACE(S), 2 FOR 1x4, 2x4, 2x5, 3 FOR 2x6, 4 FOR 2x8, 5 FOR 2x10, AND 6 FOR 2x12.

END VERTICAL(S) MUST BE SHEATHED OR HAVE BRACES AS INDICATED IN THE MAX. UNBRACED LENGTH COLUMN OF THE TABLE BELOW

LOADING

TOTAL LOAD CASES: (4)

CHORDS MEMB. FR-TO	MAX. FACTORED FORCE (LBS)	FACTORED VERT. LOAD (PLF) FROM	TO	LC1 MAX CSI (LC)	MAX. UNBRAC LENGTH
1- 2	0 / 23	-77.4	-77.4	0.10 (1)	10.00
2- 3	-2734 / 0	-77.4	-77.4	0.35 (1)	3.92
3- 4	-2633 / 0	-77.4	-77.4	0.33 (1)	4.00
4- 5	-3016 / 0	-77.4	-77.4	0.53 (1)	3.58
5- 6	-3016 / 0	-77.4	-77.4	0.48 (1)	3.64
6- 7	-3016 / 0	-77.4	-77.4	0.48 (1)	3.64
7- 8	-3017 / 0	-77.4	-77.4	0.53 (1)	3.58
8- 9	-2633 / 0	-77.4	-77.4	0.33 (1)	4.00
9-10	-2734 / 0	-77.4	-77.4	0.35 (1)	3.92
10-11	0 / 23	-77.4	-77.4	0.10 (1)	10.00
21- 2	-1905 / 0	0.0	0.0	0.19 (1)	6.09
12-10	-1905 / 0	0.0	0.0	0.19 (1)	6.09
21-20	0 / 0	-17.5	-17.5	0.09 (4)	10.00
20-19	0 / 2462	-17.5	-17.5	0.46 (1)	10.00
19-18	0 / 2340	-17.5	-17.5	0.44 (1)	10.00
18-17	0 / 2340	-17.5	-17.5	0.44 (1)	10.00
17-16	0 / 3018	-17.5	-17.5	0.55 (1)	10.00
16-15	0 / 2339	-17.5	-17.5	0.44 (1)	10.00
15-14	0 / 2339	-17.5	-17.5	0.44 (1)	10.00
14-13	0 / 2462	-17.5	-17.5	0.46 (1)	10.00
13-12	0 / 0	-17.5	-17.5	0.09 (4)	10.00

WEBS MEMB. FR-TO	MAX. FACTORED FORCE (LBS)	MAX CSI (LC)
20- 3	-329 / 0	0.07 (1)
3-19	-152 / 0	0.10 (1)
19- 4	0 / 192	0.05 (4)
4-17	0 / 926	0.21 (1)
17- 5	-524 / 0	0.32 (1)
17- 7	-2 / 0	0.00 (1)
16- 7	-525 / 0	0.32 (1)
16- 8	0 / 928	0.21 (1)
14- 8	0 / 192	0.04 (4)
14- 9	-153 / 0	0.10 (1)
13- 9	-329 / 0	0.07 (1)
2-20	0 / 2497	0.56 (1)
13-10	0 / 2497	0.56 (1)

DESIGN CRITERIA

SPECIFIED LOADS:

TOP CH.	LL	=	23.3	PSF
	DL	=	3.0	PSF
BOT CH.	LL	=	0.0	PSF
	DL	=	7.0	PSF
TOTAL LOAD		=	33.3	PSF

SPACING = 24.0 IN. C/C

LOADING IN FLAT SECTION BASED ON A SLOPE OF 6.00/12

THIS TRUSS IS DESIGNED FOR RESIDENTIAL OR SMALL BUILDING REQUIREMENTS OF PART 9, NBCC 2010

THIS DESIGN COMPLIES WITH:
- PART 9 OF OBC 2012 , BCBC 2012 , ABC 2014
- CSA 086-09
- TPIC 2011

(55 % OF 27.2 P.S.F. G.S.L. PLUS 8.4 P.S.F. RAIN LOAD) EQUALS 23.3 P.S.F. SPECIFIED ROOF LIVE LOAD

ALLOWABLE DEFL.(LL)= L/360 (1.29")
CALCULATED VERT. DEFL.(LL) = L/ 999 (0.21")
ALLOWABLE DEFL.(TL)= L/360 (1.29")
CALCULATED VERT. DEFL.(TL) = L/ 999 (0.38")

CSI: TC=0.53 (7-8:1) , BC=0.55 (16-17:1) , WB=0.56 (10-13:1) , SSI=0.23 (7-8:1)

DOL LUMBER=1.00 NAIL=1.00 LS BEND=1.10 COMP=1.10 SHEAR=1.10 TENS= 1.10

COMPANION LIVE LOAD FACTOR = 0.50

TRUSS PLATE MANUFACTURER IS NOT RESPONSIBLE FOR QUALITY CONTROL IN THE TRUSS MANUFACTURING PLANT .

NAIL VALUES

PLATE	GRIP(DRY) (PSI) MAX	MIN	SHEAR (PLI) MAX	MIN	SECTION (PLI) MAX	MIN
MT20	618	354	1667	822	2284	1656

PLATE PLACEMENT TOL. = 0.250 inches

PLATE ROTATION TOL. = 5.0 Deg.

JSI GRIP= 0.89 (13) (INPUT = 0.90)
JSI METAL= 0.62 (13) (INPUT = 1.00)

LICENSED PROFESSIONAL ENGINEER
P.M. TREVISAN
100136551
March 16th, 2017
PROVINCE OF ONTARIO

RECEIVED
TOWN OF MILTON
MAR 29, 2017
17-5327
BUILDING DIVISION

KOTT

JOB NAME	TRUSS NAME	QUANTITY	PLY	JOB DESC.	DRWG NO.
PT0317-093	T44	1	1	TRUSS DESC. LECCO RIDGE-BLOCK 343	ENG JOB: PT0317-093

KOTT , Stouffville, ON, CGC

Version 8.100 S Feb 9 2017 MiTek Industries, Inc. Thu Mar 16 07:55:15 2017 Page 1

ID:EvTixTQDI5yR1QLotZTBr_yE?HJ-D9fCRPO3JVvCUip7Ii9_cY3CJ5ZRgAXG?v4na8zaRHQ

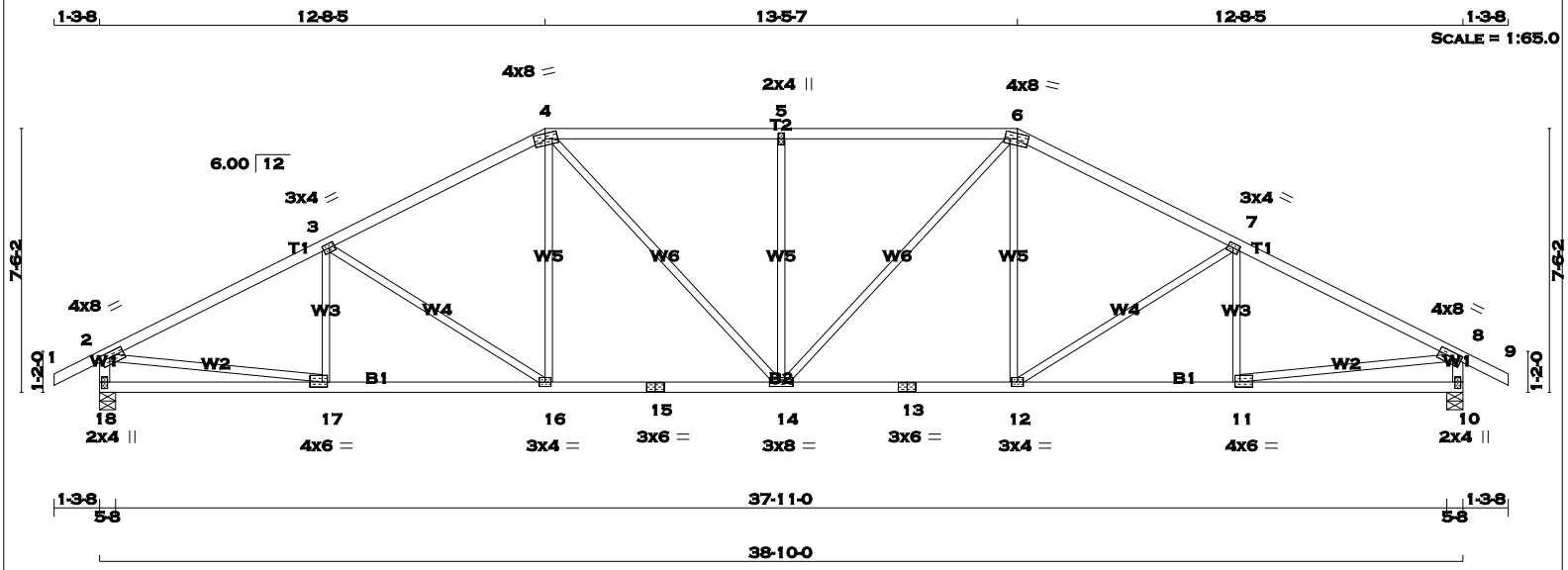

TOTAL WEIGHT = 157 lb

[M][F]

LUMBER

N. L. G. A. RULES

CHORDS	SIZE		LUMBER	DESCR.
1 - 4	2x4	DRY	No.2	SPF
4 - 6	2x4	DRY	No.2	SPF
6 - 9	2x4	DRY	No.2	SPF
18 - 2	2x4	DRY	No.2	SPF
10 - 8	2x4	DRY	No.2	SPF
18 - 15	2x4	DRY	No.2	SPF
15 - 13	2x4	DRY	No.2	SPF
13 - 10	2x4	DRY	No.2	SPF
ALL WEBS EXCEPT	2x3	DRY	No.2	SPF

DRY: SEASONED LUMBER.

PLATES (table is in inches)

JT	TYPE	PLATES	W	LEN	Y	X
2	TMVW-t	MT20	4.0	8.0	1.75	3.00
3	TMWW-t	MT20	3.0	4.0	1.50	1.75
4	TTWW-m	MT20	4.0	8.0	1.75	3.75
5	TMW+w	MT20	2.0	4.0		
6	TTWW-m	MT20	4.0	8.0	1.75	3.75
7	TMWW-t	MT20	3.0	4.0	1.50	1.75
8	TMVW-t	MT20	4.0	8.0	1.75	3.00
10	BMV1+p	MT20	2.0	4.0	2.25	1.00
11	BMWW-t	MT20	4.0	6.0	1.75	1.75
12	BMWW-t	MT20	3.0	4.0		
13	BS-t	MT20	3.0	6.0		
14	BMWWW-t	MT20	3.0	8.0		
15	BS-t	MT20	3.0	6.0		
16	BMWW-t	MT20	3.0	4.0		
17	BMWW-t	MT20	4.0	6.0	1.75	1.75
18	BMV1+p	MT20	2.0	4.0	2.25	1.00

A SIZE FOR SIZE SUBSTITUTION OF MITEK MII20 WITH TEE-LOK TL20 PLATES IS ALLOWED.

DIMENSIONS, SUPPORTS AND LOADINGS SPECIFIED BY FABRICATOR TO BE VERIFIED BY BUILDING DESIGNER

BEARINGS

JT	FACTORED GROSS REACTION VERT	HORZ	MAXIMUM FACTORED GROSS REACTION DOWN	HORZ	UPLIFT	INPUT BRG IN-SX	REQRD BRG IN-SX
18	1947	0	1947	0	0	5-8	5-8
10	1947	0	1947	0	0	5-8	5-8

UNFACTORED REACTIONS

JT	1ST LCASE COMBINED	MAX./MIN. COMPONENT REACTIONS SNOW	LIVE	PERM.LIVE	WIND	DEAD	SOIL
18	1364	968 / 0	0 / 0	0 / 0	0 / 0	396 / 0	0 / 0
10	1364	968 / 0	0 / 0	0 / 0	0 / 0	396 / 0	0 / 0

BEARING MATERIAL TO BE SPF NO.2 OR BETTER AT JOINT(S) 18, 10

BRACING

TOP CHORD TO BE SHEATHED OR MAX. PURLIN SPACING = 3.65 FT.
MAX. UNBRACED BOTTOM CHORD LENGTH = 10.00 FT. OR RIGID CEILING DIRECTLY APPLIED.

ALL PITCH BREAKS AND PERIMETER CORNER JOINTS MUST BE LATERALLY RESTRAINED.

LOADING

TOTAL LOAD CASES: (4)

CHORDS

MEMB. FR-TO	MAX. FACTORED FORCE (LBS)	FACTORED VERT. LOAD (PLF) FROM	TO	LC1 CSI (LC)	MAX UNBRAC LENGTH
1- 2	0 / 23	-77.4	-77.4	0.10 (1)	10.00
2- 3	-2800 / 0	-77.4	-77.4	0.58 (1)	3.65
3- 4	-2472 / 0	-77.4	-77.4	0.52 (1)	3.91
4- 5	-2543 / 0	-77.4	-77.4	0.58 (1)	3.75
5- 6	-2543 / 0	-77.4	-77.4	0.58 (1)	3.75
6- 7	-2472 / 0	-77.4	-77.4	0.52 (1)	3.91
7- 8	-2800 / 0	-77.4	-77.4	0.58 (1)	3.65
8- 9	0 / 23	-77.4	-77.4	0.10 (1)	10.00
18- 2	-1898 / 0	0.0	0.0	0.19 (1)	6.10
10- 8	-1898 / 0	0.0	0.0	0.19 (1)	6.10
18-17	0 / 0	-17.5	-17.5	0.16 (4)	10.00
17-16	0 / 2527	-17.5	-17.5	0.49 (1)	10.00
16-15	0 / 2191	-17.5	-17.5	0.43 (1)	10.00
15-14	0 / 2191	-17.5	-17.5	0.43 (1)	10.00
14-13	0 / 2191	-17.5	-17.5	0.43 (1)	10.00
13-12	0 / 2191	-17.5	-17.5	0.43 (1)	10.00
12-11	0 / 2527	-17.5	-17.5	0.49 (1)	10.00
11-10	0 / 0	-17.5	-17.5	0.16 (4)	10.00

WEBS

MEMB. FR-TO	MAX. FACTORED FORCE (LBS)	MAX CSI (LC)
17- 3	-219 / 40	0.06 (1)
3-16	-405 / 0	0.46 (1)
16- 4	0 / 336	0.08 (1)
4-14	0 / 515	0.12 (1)
14- 5	-639 / 0	0.65 (1)
14- 6	0 / 515	0.12 (1)
12- 6	0 / 336	0.08 (1)
12- 7	-405 / 0	0.46 (1)
11- 7	-219 / 40	0.06 (1)
2-17	0 / 2550	0.57 (1)
11- 8	0 / 2550	0.57 (1)

DESIGN CRITERIA

SPECIFIED LOADS:

TOP CH.	LL	=	23.3	PSF
	DL	=	3.0	PSF
BOT CH.	LL	=	0.0	PSF
	DL	=	7.0	PSF
TOTAL LOAD		=	33.3	PSF

SPACING = 24.0 IN. C/C

LOADING IN FLAT SECTION BASED ON A SLOPE OF 6.00/12

THIS TRUSS IS DESIGNED FOR RESIDENTIAL OR SMALL BUILDING REQUIREMENTS OF PART 9, NBCC 2010

THIS DESIGN COMPLIES WITH:
- PART 9 OF OBC 2012 , BCBC 2012 , ABC 2014
- CSA 086-09
- TPIC 2011

(55 % OF 27.2 P.S.F. G.S.L. PLUS 8.4 P.S.F. RAIN LOAD) EQUALS 23.3 P.S.F. SPECIFIED ROOF LIVE LOAD

ALLOWABLE DEFL.(LL)= L/360 (1.29")
CALCULATED VERT. DEFL.(LL) = L/ 999 (0.17")
ALLOWABLE DEFL.(TL)= L/360 (1.29")
CALCULATED VERT. DEFL.(TL) = L/ 999 (0.32")

CSI: TC=0.58 (7-8:1) , BC=0.49 (16-17:1) , WB=0.65 (5-14:1) , SSI=0.25 (4-5:1)

DOL LUMBER=1.00 NAIL=1.00 LS BEND=1.10 COMP=1.10 SHEAR=1.10 TENS= 1.10

COMPANION LIVE LOAD FACTOR = 0.50

TRUSS PLATE MANUFACTURER IS NOT RESPONSIBLE FOR QUALITY CONTROL IN THE TRUSS MANUFACTURING PLANT .

NAIL VALUES

PLATE	GRIP(DRY) (PSI) MAX	MIN	SHEAR (PLI) MAX	MIN	SECTION (PLI) MAX	MIN
MT20	618	354	1667	822	2284	1656

PLATE PLACEMENT TOL. = 0.250 inches

PLATE ROTATION TOL. = 5.0 Deg.

JSI GRIP= 0.88 (4) (INPUT = 0.90)
JSI METAL= 0.63 (17) (INPUT = 1.00)

LICENSED PROFESSIONAL ENGINEER
P.M. TREVISAN
100136551
March 16th, 2017
PROVINCE OF ONTARIO

RECEIVED
TOWN OF MILTON
MAR 29, 2017
17-5327
BUILDING DIVISION

KOTT

JOB NAME	TRUSS NAME	QUANTITY	PLY	JOB DESC.	DRWG NO.
PT0317-093	T45	1	1	TRUSS DESC. LECCO RIDGE-BLOCK 343	ENG JOB: PT0317-093

KOTT , Stouffville, ON, CGC

Version 8.100 S Feb 9 2017 MiTek Industries, Inc. Thu Mar 16 07:55:16 2017 Page 1

ID:EvTixTQDI5yR1QLotZTBr_yE?HJ-hLDaelPi4p136sOJsQgD8lbPsVvDPfEQEZpK6azaRHP

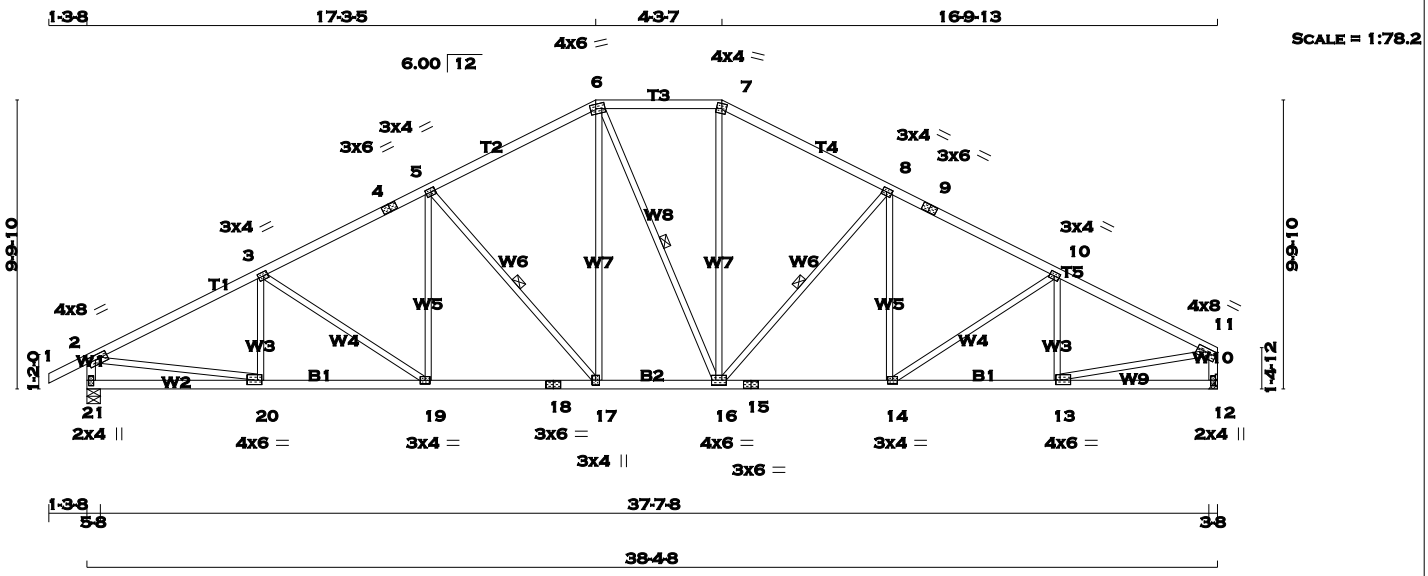

TOTAL WEIGHT = 168 lb

[M][F]

LUMBER

N. L. G. A. RULES

CHORDS	SIZE		LUMBER	DESCR.
1 - 4	2x4	DRY	No.2	SPF
4 - 6	2x4	DRY	No.2	SPF
6 - 7	2x4	DRY	No.2	SPF
7 - 9	2x4	DRY	No.2	SPF
9 - 11	2x4	DRY	No.2	SPF
21 - 2	2x4	DRY	No.2	SPF
12 - 11	2x4	DRY	No.2	SPF
21 - 18	2x4	DRY	No.2	SPF
18 - 15	2x4	DRY	No.2	SPF
15 - 12	2x4	DRY	No.2	SPF
ALL WEBS EXCEPT	2x3	DRY	No.2	SPF

DRY: SEASONED LUMBER.

PLATES (table is in inches)

JT	TYPE	PLATES	W	LEN	Y	X
2	TMVW-t	MT20	4.0	8.0	1.75	3.00
3, 5, 8, 10						
3	TMWW-t	MT20	3.0	4.0	1.50	1.75
4	TS-t	MT20	3.0	6.0		
6	TTWW-m	MT20	4.0	6.0	1.75	2.25
7	TTW-m	MT20	4.0	4.0	2.00	1.75
9	TS-t	MT20	3.0	6.0		
11	TMVW-t	MT20	4.0	8.0	1.50	3.00
12	BMV1+p	MT20	2.0	4.0	2.25	1.00
13	BMWW-t	MT20	4.0	6.0	1.75	1.75
14	BMWW-t	MT20	3.0	4.0		
15	BS-t	MT20	3.0	6.0		
16	BMWWW-t	MT20	4.0	6.0		
17	BMWW+t	MT20	3.0	4.0		
18	BS-t	MT20	3.0	6.0		
19	BMWW-t	MT20	3.0	4.0		
20	BMWW-t	MT20	4.0	6.0	1.75	1.75
21	BMV1+p	MT20	2.0	4.0	2.25	1.00

A SIZE FOR SIZE SUBSTITUTION OF MITEK MII20 WITH TEE-LOK TL20 PLATES IS ALLOWED.

DIMENSIONS, SUPPORTS AND LOADINGS SPECIFIED BY FABRICATOR TO BE VERIFIED BY BUILDING DESIGNER

BEARINGS

JT	FACTORED GROSS REACTION VERT	HORZ	MAXIMUM FACTORED GROSS REACTION DOWN	HORZ	UPLIFT	INPUT BRG IN-SX	REQRD BRG IN-SX
21	1925	0	1925	0	0	5-8	5-8
12	1820	0	1820	0	0	HANGER BY OTHERS	
						MIN. SEAT SIZE: 3-8	

UNFACTORED REACTIONS

JT	1ST LCASE COMBINED	MAX./MIN. COMPONENT REACTIONS SNOW	LIVE	PERM.LIVE	WIND	DEAD	SOIL
21	1349	957 / 0	0 / 0	0 / 0	0 / 0	392 / 0	0 / 0
12	1277	894 / 0	0 / 0	0 / 0	0 / 0	384 / 0	0 / 0

BEARING MATERIAL TO BE SPF NO.2 OR BETTER AT JOINT(S) 21

BRACING

TOP CHORD TO BE SHEATHED OR MAX. PURLIN SPACING = 3.82 FT.
MAX. UNBRACED BOTTOM CHORD LENGTH = 10.00 FT. OR RIGID CEILING DIRECTLY APPLIED.

ALL PITCH BREAKS AND PERIMETER CORNER JOINTS MUST BE LATERALLY RESTRAINED.

1 - 2x3 SPF No.2 LATERAL BRACE(S) AT 1/ 2 LENGTH OF 5-17, 6-16, 8-16. DBS = 20-0-0 . CBF = 84 LBS.

DBS = DIAGONAL BRACE SPACING (MAX). CBF = CUMULATIVE BRACING FORCE. FASTEN LATERAL BRACE(S) USING (0.122"X3") SPIRAL NAILS : 1 NAIL FOR 2x3 BRACE(S), 2 FOR 1x4, 2x4, 2x5, 3 FOR 2x6, 4 FOR 2x8, 5 FOR 2x10, AND 6 FOR 2x12.

END VERTICAL(S) MUST BE SHEATHED OR HAVE BRACES AS INDICATED IN THE MAX. UNBRACED LENGTH COLUMN OF THE TABLE BELOW

LOADING

TOTAL LOAD CASES: (4)

CHORDS

MEMB. FR-TO	MAX. FACTORED FORCE (LBS)	VERT. LOAD (PLF) FROM	TO	LC1 MAX CSI (LC)	MAX. UNBRAC LENGTH
1- 2	0 / 23	-77.4	-77.4	0.10 (1)	10.00
2- 3	-2731 / 0	-77.4	-77.4	0.47 (1)	3.82
3- 4	-2522 / 0	-77.4	-77.4	0.38 (1)	4.05
4- 5	-2522 / 0	-77.4	-77.4	0.38 (1)	4.05
5- 6	-2051 / 0	-77.4	-77.4	0.37 (1)	4.40
6- 7	-1814 / 0	-77.4	-77.4	0.22 (1)	4.77
7- 8	-2042 / 0	-77.4	-77.4	0.37 (1)	4.41
8- 9	-2463 / 0	-77.4	-77.4	0.38 (1)	4.08
9-10	-2463 / 0	-77.4	-77.4	0.38 (1)	4.08
10-11	-2551 / 0	-77.4	-77.4	0.38 (1)	4.02
21- 2	-1880 / 0	0.0	0.0	0.19 (1)	6.12
12-11	-1779 / 0	0.0	0.0	0.18 (1)	6.26
21-20	0 / 0	-17.5	-17.5	0.13 (4)	10.00
20-19	0 / 2459	-17.5	-17.5	0.45 (1)	10.00
19-18	0 / 2256	-17.5	-17.5	0.42 (1)	10.00
18-17	0 / 2256	-17.5	-17.5	0.42 (1)	10.00
17-16	0 / 1823	-17.5	-17.5	0.35 (1)	10.00
16-15	0 / 2206	-17.5	-17.5	0.41 (1)	10.00
15-14	0 / 2206	-17.5	-17.5	0.41 (1)	10.00
14-13	0 / 2297	-17.5	-17.5	0.42 (1)	10.00
13-12	0 / 0	-17.5	-17.5	0.12 (4)	10.00

WEBS

MEMB. FR-TO	MAX. FACTORED FORCE (LBS)	MAX CSI (LC)
20- 3	-252 / 20	0.06 (1)
3-19	-244 / 0	0.21 (1)
19- 5	0 / 240	0.05 (1)
5-17	-670 / 0	0.36 (1)
17- 6	0 / 587	0.13 (1)
6-16	-21 / 0	0.02 (1)
16- 7	0 / 565	0.13 (1)
16- 8	-605 / 0	0.32 (1)
8-14	0 / 163	0.05 (4)
14-10	-110 / 0	0.10 (1)
13-10	-357 / 0	0.09 (1)
2-20	0 / 2485	0.56 (1)
13-11	0 / 2342	0.53 (1)

DESIGN CRITERIA

SPECIFIED LOADS:

TOP CH.	LL	=	23.3	PSF
	DL	=	3.0	PSF
BOT CH.	LL	=	0.0	PSF
	DL	=	7.0	PSF
TOTAL LOAD		=	33.3	PSF

SPACING = 24.0 IN. C/C

LOADING IN FLAT SECTION BASED ON A SLOPE OF 6.00/12

THIS TRUSS IS DESIGNED FOR RESIDENTIAL OR SMALL BUILDING REQUIREMENTS OF PART 9, NBCC 2010

THIS DESIGN COMPLIES WITH:
- PART 9 OF OBC 2012 , BCBC 2012 , ABC 2014
- CSA 086-09
- TPIC 2011

(55 % OF 27.2 P.S.F. G.S.L. PLUS 8.4 P.S.F. RAIN LOAD) EQUALS 23.3 P.S.F. SPECIFIED ROOF LIVE LOAD

ALLOWABLE DEFL.(LL)= L/360 (1.28")
CALCULATED VERT. DEFL.(LL) = L/ 999 (0.15")
ALLOWABLE DEFL.(TL)= L/360 (1.28")
CALCULATED VERT. DEFL.(TL) = L/ 999 (0.28")

CSI: TC=0.47 (2-3:1) , BC=0.45 (19-20:1) , WB=0.56 (2-20:1) , SSI=0.19 (2-3:1)

DOL LUMBER=1.00 NAIL=1.00 LS BEND=1.10 COMP=1.10 SHEAR=1.10 TENS= 1.10

COMPANION LIVE LOAD FACTOR = 0.50

TRUSS PLATE MANUFACTURER IS NOT RESPONSIBLE FOR QUALITY CONTROL IN THE TRUSS MANUFACTURING PLANT .

NAIL VALUES

PLATE	GRIP(DRY) (PSI) MAX	MIN	SHEAR (PLI) MAX	MIN	SECTION (PLI) MAX	MIN
MT20	618	354	1667	822	2284	1656

PLATE PLACEMENT TOL. = 0.250 inches

PLATE ROTATION TOL. = 5.0 Deg.

JSI GRIP= 0.89 (7) (INPUT = 0.90)
JSI METAL= 0.61 (20) (INPUT = 1.00)

LICENSED PROFESSIONAL ENGINEER
P.M. TREVISAN
100136551
March 16th, 2017
PROVINCE OF ONTARIO

RECEIVED
TOWN OF MILTON
MAR 29, 2017
17-5327
BUILDING DIVISION

KOTT

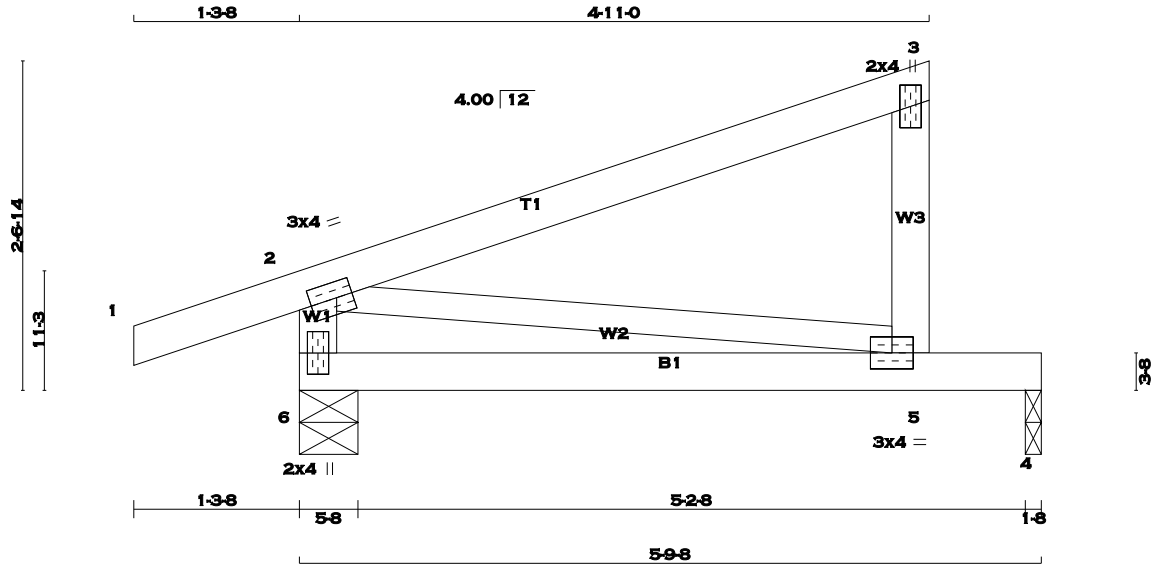

TOTAL WEIGHT = 14 X 20 = 286 lb [M]

LUMBER

N. L. G. A. RULES

CHORDS	SIZE		LUMBER	DESCR.
1 - 3	2x4	DRY	No.2	SPF
5 - 3	2x4	DRY	No.2	SPF
6 - 2	2x4	DRY	No.2	SPF
6 - 4	2x4	DRY	No.2	SPF
ALL WEBS	2x3	DRY	No.2	SPF

DRY: SEASONED LUMBER.

PLATES (table is in inches)

JT	TYPE	PLATES	W	LEN	Y	X
2	TMVW-t	MT20	3.0	4.0	1.50	1.50
3	TMV+p	MT20	2.0	4.0		
5	BMVW-t	MT20	3.0	4.0		
6	BMV1+p	MT20	2.0	4.0		

A SIZE FOR SIZE SUBSTITUTION OF MITEK MII20 WITH TEE-LOK TL20 PLATES IS ALLOWED.

DIMENSIONS, SUPPORTS AND LOADINGS SPECIFIED BY FABRICATOR TO BE VERIFIED BY BUILDING DESIGNER

BEARINGS

JT	FACTORED GROSS REACTION VERT	HORZ	MAXIMUM FACTORED GROSS REACTION DOWN	HORZ	UPLIFT	INPUT BRG IN-SX	REQRD BRG IN-SX
6	373	0	373	0	0	5-8	5-8
4	212	0	212	0	0	1-8	1-8

UNFACTORED REACTIONS

JT	1ST LCASE COMBINED	MAX./MIN. COMPONENT REACTIONS SNOW	LIVE	PERM.LIVE	WIND	DEAD	SOIL
6	260	194 / 0	0 / 0	0 / 0	0 / 0	66 / 0	0 / 0
4	150	97 / 0	0 / 0	0 / 0	0 / 0	53 / 0	0 / 0

BEARING MATERIAL TO BE SPF NO.2 OR BETTER AT JOINT(S) 6, 4

BRACING

TOP CHORD TO BE SHEATHED OR MAX. PURLIN SPACING = 10.00 FT.
MAX. UNBRACED BOTTOM CHORD LENGTH = 10.00 FT. OR RIGID CEILING DIRECTLY APPLIED.

ALL PITCH BREAKS AND PERIMETER CORNER JOINTS MUST BE LATERALLY RESTRAINED.

LOADING

TOTAL LOAD CASES: (4)

CHORDS

MEMB. FR-TO	MAX. FACTORED FORCE (LBS)	FACTORED VERT. LOAD (PLF) FROM	TO	LC1 MAX CSI (LC)	MAX. UNBRAC LENGTH
1- 2	0 / 16	-77.4	-77.4	0.10 (1)	10.00
2- 3	0 / 0	-77.4	-77.4	0.32 (1)	10.00
5- 3	-190 / 0	0.0	0.0	0.02 (1)	7.81
6- 2	-294 / 0	0.0	0.0	0.03 (1)	7.81
6- 5	0 / 0	-17.5	-17.5	0.25 (1)	10.00
5- 4	0 / 0	-17.5	-17.5	0.24 (1)	10.00

WEBS

MEMB. FR-TO	MAX. FACTORED FORCE (LBS)	MAX CSI (LC)
2- 5	0 / 0	0.00 (1)

DESIGN CRITERIA

SPECIFIED LOADS:

TOP CH.	LL =	23.3	PSF
	DL =	3.0	PSF
BOT CH.	LL =	0.0	PSF
	DL =	7.0	PSF
TOTAL LOAD	=	33.3	PSF

SPACING = 24.0 IN. C/C

THIS TRUSS IS DESIGNED FOR RESIDENTIAL OR SMALL BUILDING REQUIREMENTS OF PART 9, NBCC 2010

THIS DESIGN COMPLIES WITH:
- PART 9 OF OBC 2012 , BCBC 2012 , ABC 2014
- CSA 086-09
- TPIC 2011

(55 % OF 27.2 P.S.F. G.S.L. PLUS 8.4 P.S.F. RAIN LOAD) EQUALS 23.3 P.S.F. SPECIFIED ROOF LIVE LOAD

ALLOWABLE DEFL.(LL)= L/360 (0.19")
CALCULATED VERT. DEFL.(LL) = L/ 999 (0.05")
ALLOWABLE DEFL.(TL)= L/360 (0.19")
CALCULATED VERT. DEFL.(TL) = L/ 586 (0.12")

CSI: TC=0.32 (2-3:1) , BC=0.25 (5-6:1) , WB=0.00 (2-5:1) , SSI=0.17 (4-5:1)

DOL LUMBER=1.00 NAIL=1.00 LS BEND=1.10 COMP=1.10 SHEAR=1.10 TENS= 1.10

COMPANION LIVE LOAD FACTOR = 0.50

TRUSS PLATE MANUFACTURER IS NOT RESPONSIBLE FOR QUALITY CONTROL IN THE TRUSS MANUFACTURING PLANT .

NAIL VALUES

PLATE	GRIP(DRY) (PSI) MAX	MIN	SHEAR (PLI) MAX	MIN	SECTION (PLI) MAX	MIN
MT20	618	354	1667	822	2284	1656

PLATE PLACEMENT TOL. = 0.250 inches

PLATE ROTATION TOL. = 5.0 Deg.

JSI GRIP= 0.27 (2) (INPUT = 0.90)
JSI METAL= 0.05 (6) (INPUT = 1.00)

LICENSED PROFESSIONAL ENGINEER
P.M. TREVISAN
100136551
March 16th, 2017
PROVINCE OF ONTARIO

RECEIVED
TOWN OF MILTON
MAR 29, 2017
17-5327
BUILDING DIVISION

KOTT

JOB NAME	TRUSS NAME	QUANTITY	PLY	JOB DESC.	DRWG NO.
PT0317-093	T47	8	1	TRUSS DESC. LECCO RIDGE-BLOCK 343	ENG JOB: PT0317-093

KOTT , Stouffville, ON, CGC

Version 8.100 S Feb 9 2017 MiTek Industries, Inc. Thu Mar 16 07:55:16 2017 Page 1

ID:EvTixTQDI5yR1QLotZTBr_yE?HJ-hLDaelPi4p136sOJsQgD8lbUAVvePl8QEZpK6azaRHP

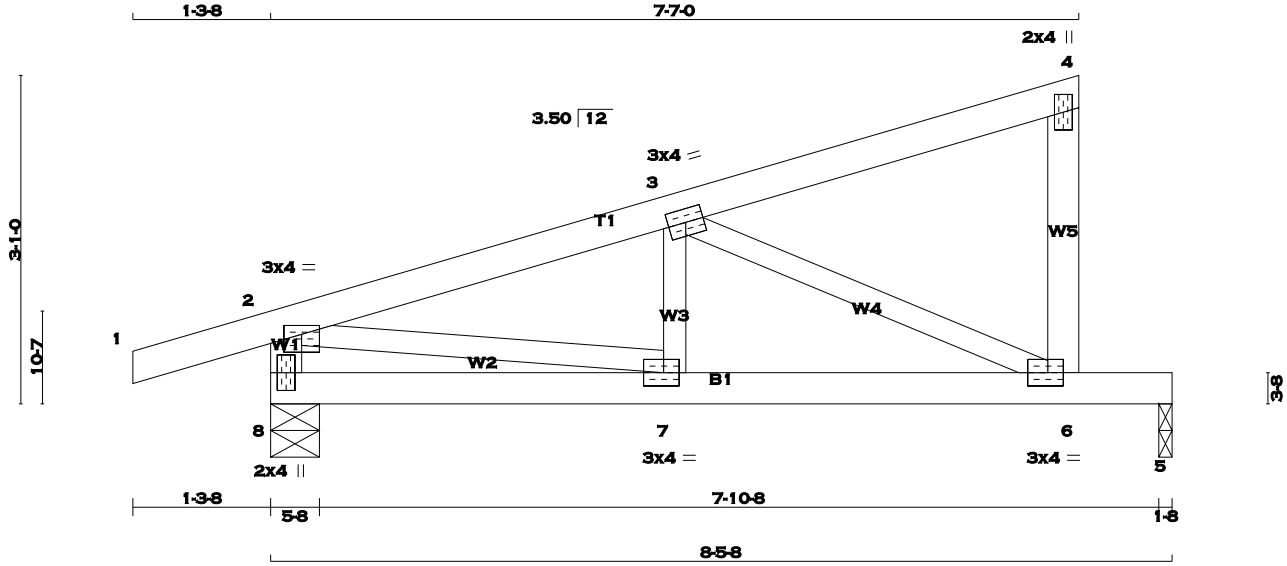

TOTAL WEIGHT = 8 X 30 = 244 lb

[M][F]

LUMBER

N. L. G. A. RULES

CHORDS	SIZE		LUMBER	DESCR.
1 - 4	2x4	DRY	No.2	SPF
6 - 4	2x4	DRY	No.2	SPF
8 - 2	2x4	DRY	No.2	SPF
8 - 5	2x4	DRY	No.2	SPF
ALL WEBS EXCEPT	2x3	DRY	No.2	SPF

DRY: SEASONED LUMBER.

PLATES (table is in inches)

JT	TYPE	PLATES	W	LEN	Y	X
2	TMVW-p	MT20	3.0	4.0	1.00	2.00
3	TMWW-t	MT20	3.0	4.0		
4	TMV+p	MT20	2.0	4.0		
6	BMVW-t	MT20	3.0	4.0	1.50	1.75
7	BMWW-t	MT20	3.0	4.0	1.50	1.75
8	BMV1+p	MT20	2.0	4.0		

A SIZE FOR SIZE SUBSTITUTION OF MITEK MII20 WITH TEE-LOK TL20 PLATES IS ALLOWED.

DIMENSIONS, SUPPORTS AND LOADINGS SPECIFIED BY FABRICATOR TO BE VERIFIED BY BUILDING DESIGNER

BEARINGS

JT	FACTORED GROSS REACTION VERT	HORZ	MAXIMUM FACTORED GROSS REACTION DOWN	HORZ	UPLIFT	INPUT BRG IN-SX	REQRD BRG IN-SX
8	501	0	501	0	0	5-8	5-8
5	337	0	337	0	0	1-8	1-8

UNFACTORED REACTIONS

JT	1ST LCASE COMBINED	MAX./MIN. COMPONENT REACTIONS SNOW	LIVE	PERM.LIVE	WIND	DEAD	SOIL
8	349	257 / 0	0 / 0	0 / 0	0 / 0	92 / 0	0 / 0
5	238	158 / 0	0 / 0	0 / 0	0 / 0	80 / 0	0 / 0

BEARING MATERIAL TO BE SPF NO.2 OR BETTER AT JOINT(S) 8, 5

BRACING

TOP CHORD TO BE SHEATHED OR MAX. PURLIN SPACING = 6.25 FT.
MAX. UNBRACED BOTTOM CHORD LENGTH = 10.00 FT. OR RIGID CEILING DIRECTLY APPLIED.

ALL PITCH BREAKS AND PERIMETER CORNER JOINTS MUST BE LATERALLY RESTRAINED.

LOADING

TOTAL LOAD CASES: (4)

CHORDS

MEMB. FR-TO	MAX. FACTORED FORCE (LBS)	FACTORED VERT. LOAD (PLF) FROM	TO	LC1 MAX CSI (LC)	MAX. UNBRAC LENGTH
1- 2	0 / 14	-77.4	-77.4	0.10 (1)	10.00
2- 3	-629 / 0	-77.4	-77.4	0.13 (1)	6.25
3- 4	-9 / 0	-77.4	-77.4	0.13 (1)	10.00
6- 4	-115 / 0	0.0	0.0	0.02 (1)	7.81
8- 2	-489 / 0	0.0	0.0	0.05 (1)	7.81
8- 7	0 / 0	-17.5	-17.5	0.11 (1)	10.00
7- 6	0 / 613	-17.5	-17.5	0.49 (1)	10.00
6- 5	0 / 0	-17.5	-17.5	0.39 (1)	10.00

WEBS

MEMB. FR-TO	MAX. FACTORED FORCE (LBS)	MAX CSI (LC)
7- 3	0 / 97	0.03 (4)
3- 6	-670 / 0	0.18 (1)
2- 7	0 / 619	0.14 (1)

DESIGN CRITERIA

SPECIFIED LOADS:

TOP	CH.	LL	=	23.3	PSF
		DL	=	3.0	PSF
BOT	CH.	LL	=	0.0	PSF
		DL	=	7.0	PSF
TOTAL	LOAD		=	33.3	PSF

SPACING = 24.0 IN. C/C

THIS TRUSS IS DESIGNED FOR RESIDENTIAL OR SMALL BUILDING REQUIREMENTS OF PART 9, NBCC 2010

THIS DESIGN COMPLIES WITH:
- PART 9 OF OBC 2012 , BCBC 2012 , ABC 2014
- CSA 086-09
- TPIC 2011

(55 % OF 27.2 P.S.F. G.S.L. PLUS 8.4 P.S.F. RAIN LOAD) EQUALS 23.3 P.S.F. SPECIFIED ROOF LIVE LOAD

ALLOWABLE DEFL.(LL)= L/360 (0.28")
CALCULATED VERT. DEFL.(LL) = L/ 999 (0.06")
ALLOWABLE DEFL.(TL)= L/360 (0.28")
CALCULATED VERT. DEFL.(TL) = L/ 873 (0.12")

CSI: TC=0.13 (2-3:1) , BC=0.49 (6-7:1) , WB=0.18 (3-6:1) , SSI=0.26 (5-6:1)

DOL LUMBER=1.00 NAIL=1.00 LS BEND=1.10 COMP=1.10 SHEAR=1.10 TENS= 1.10

COMPANION LIVE LOAD FACTOR = 0.50

TRUSS PLATE MANUFACTURER IS NOT RESPONSIBLE FOR QUALITY CONTROL IN THE TRUSS MANUFACTURING PLANT .

NAIL VALUES

PLATE	GRIP(DRY) (PSI) MAX	MIN	SHEAR (PLI) MAX	MIN	SECTION (PLI) MAX	MIN
MT20	618	354	1667	822	2284	1656

PLATE PLACEMENT TOL. = 0.250 inches

PLATE ROTATION TOL. = 5.0 Deg.

JSI GRIP= 0.83 (7) (INPUT = 0.90)
JSI METAL= 0.23 (7) (INPUT = 1.00)

LICENSED PROFESSIONAL ENGINEER
P.M. TREVISAN
100136551
March 16th, 2017
PROVINCE OF ONTARIO

RECEIVED
TOWN OF MILTON
MAR 29, 2017
17-5327
BUILDING DIVISION

KOTT

JOB NAME	TRUSS NAME	QUANTITY	PLY	JOB DESC.	DRWG NO.
PT0317-093	T48	1	1	TRUSS DESC. LECCO RIDGE-BLOCK 343	

KOTT , Stouffville, ON, CGC

Version 8.100 S Feb 9 2017 MiTek Industries, Inc. Thu Mar 16 07:55:17 2017 Page 1
ID:EvTixTQDI5yR1QLotZTBr_yE?HJ-AXnzs5QKq69wj0zWQ7BShz8gMvMn8EUZSDZtf1zaRHO

SCALE = 1:21.5

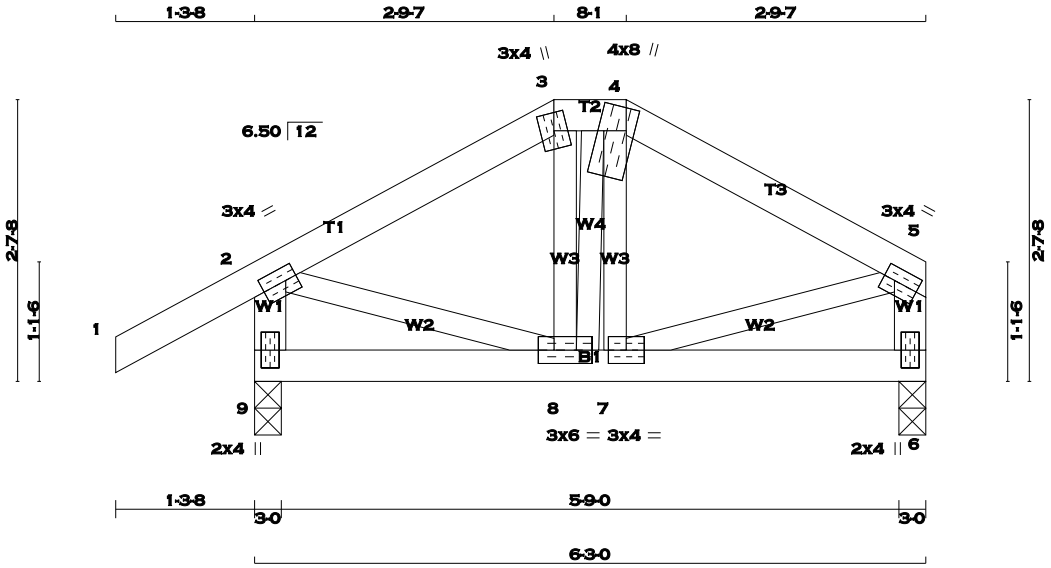

TOTAL WEIGHT = 28 lb
[M][F]

LUMBER
N. L. G. A. RULES

CHORDS	SIZE		LUMBER	DESCR.
1 - 3	2x4	DRY	No.2	SPF
3 - 4	2x4	DRY	No.2	SPF
4 - 5	2x4	DRY	No.2	SPF
9 - 2	2x4	DRY	No.2	SPF
6 - 5	2x4	DRY	No.2	SPF
9 - 6	2x4	DRY	No.2	SPF
ALL WEBS EXCEPT	2x3	DRY	No.2	SPF

DRY: SEASONED LUMBER.

PLATES (table is in inches)

JT	TYPE	PLATES	W	LEN	Y	X
2	TMVW-t	MT20	3.0	4.0	1.50	1.25
3	TTW+m	MT20	3.0	4.0		
4	TTWW+m	MT20	4.0	8.0	2.50	1.00
5	TMVW-t	MT20	3.0	4.0	1.50	1.25
6	BMV1+p	MT20	2.0	4.0		
7	BMWW-t	MT20	3.0	4.0		
8	BMWWW-t	MT20	3.0	6.0		
9	BMV1+p	MT20	2.0	4.0		

A SIZE FOR SIZE SUBSTITUTION OF MITEK MII20 WITH TEE-LOK TL20 PLATES IS ALLOWED.

DIMENSIONS, SUPPORTS AND LOADINGS SPECIFIED BY FABRICATOR TO BE VERIFIED BY BUILDING DESIGNER

BEARINGS

JT	FACTORED GROSS REACTION VERT	HORZ	MAXIMUM FACTORED GROSS REACTION DOWN	HORZ	UPLIFT	INPUT BRG IN-SX	REQRD BRG IN-SX
9	402	0	402	0	0	3-0	3-0
6	296	0	296	0	0	3-0	3-0

UNFACTORED REACTIONS

JT	1ST LCASE COMBINED	MAX./MIN. COMPONENT REACTIONS SNOW	LIVE	PERM.LIVE	WIND	DEAD	SOIL
9	280	209 / 0	0 / 0	0 / 0	0 / 0	71 / 0	0 / 0
6	208	146 / 0	0 / 0	0 / 0	0 / 0	62 / 0	0 / 0

BEARING MATERIAL TO BE SPF NO.2 OR BETTER AT JOINT(S) 9, 6

BRACING
TOP CHORD TO BE SHEATHED OR MAX. PURLIN SPACING = 6.25 FT.
MAX. UNBRACED BOTTOM CHORD LENGTH = 10.00 FT. OR RIGID CEILING DIRECTLY APPLIED.

ALL PITCH BREAKS AND PERIMETER CORNER JOINTS MUST BE LATERALLY RESTRAINED.

LOADING
TOTAL LOAD CASES: (4)

CHORDS

MEMB. FR-TO	MAX. FACTORED FORCE (LBS)	FACTORED VERT. LOAD (PLF) FROM	TO	LC1 MAX CSI (LC)	MAX. UNBRAC LENGTH
1- 2	0 / 25	-77.4	-77.4	0.10 (1)	10.00
2- 3	-230 / 0	-77.4	-77.4	0.08 (1)	6.25
3- 4	-201 / 0	-77.4	-77.4	0.00 (1)	6.25
4- 5	-231 / 0	-77.4	-77.4	0.08 (1)	6.25
9- 2	-379 / 0	0.0	0.0	0.04 (1)	7.81
6- 5	-275 / 0	0.0	0.0	0.03 (1)	7.81
9- 8	0 / 0	-17.5	-17.5	0.03 (4)	10.00
8- 7	0 / 202	-17.5	-17.5	0.05 (4)	10.00
7- 6	0 / 0	-17.5	-17.5	0.03 (4)	10.00

WEBS

MEMB. FR-TO	MAX. FACTORED FORCE (LBS)	MAX CSI (LC)
8- 3	-24 / 21	0.01 (4)
8- 4	-4 / 3	0.00 (4)
7- 4	-20 / 17	0.01 (4)
2- 8	0 / 210	0.05 (1)
7- 5	0 / 211	0.05 (1)

DESIGN CRITERIA

SPECIFIED LOADS:

TOP	CH.	LL	=	23.3	PSF
		DL	=	3.0	PSF
BOT	CH.	LL	=	0.0	PSF
		DL	=	7.0	PSF
TOTAL	LOAD		=	33.3	PSF

SPACING = 24.0 IN. C/C

LOADING IN FLAT SECTION BASED ON A SLOPE OF 6.00/12

THIS TRUSS IS DESIGNED FOR RESIDENTIAL OR SMALL BUILDING REQUIREMENTS OF PART 9, NBCC 2010

THIS DESIGN COMPLIES WITH:
- PART 9 OF OBC 2012 , BCBC 2012 , ABC 2014
- CSA 086-09
- TPIC 2011

(55 % OF 27.2 P.S.F. G.S.L. PLUS 8.4 P.S.F. RAIN LOAD) EQUALS 23.3 P.S.F. SPECIFIED ROOF LIVE LOAD

ALLOWABLE DEFL.(LL)= L/360 (0.21")
CALCULATED VERT. DEFL.(LL) = L/ 999 (0.00")
ALLOWABLE DEFL.(TL)= L/360 (0.21")
CALCULATED VERT. DEFL.(TL) = L/ 999 (0.00")

CSI: TC=0.10 (1-2:1) , BC=0.05 (7-8:4) , WB=0.05 (5-7:1) , SSI=0.07 (4-5:1)

DOL LUMBER=1.00 NAIL=1.00 LS BEND=1.10 COMP=1.10 SHEAR=1.10 TENS= 1.10

COMPANION LIVE LOAD FACTOR = 0.50

TRUSS PLATE MANUFACTURER IS NOT RESPONSIBLE FOR QUALITY CONTROL IN THE TRUSS MANUFACTURING PLANT .

NAIL VALUES

PLATE	GRIP(DRY) (PSI) MAX	MIN	SHEAR (PLI) MAX	MIN	SECTION (PLI) MAX	MIN
MT20	618	354	1667	822	2284	1656

PLATE PLACEMENT TOL. = 0.250 inches

PLATE ROTATION TOL. = 5.0 Deg.

JSI GRIP= 0.52 (5) (INPUT = 0.90)
JSI METAL= 0.12 (2) (INPUT = 1.00)

LICENSED PROFESSIONAL ENGINEER
P.M. TREVISAN
100136551
March 16th, 2017
PROVINCE OF ONTARIO

RECEIVED
TOWN OF MILTON
MAR 29, 2017
17-5327
BUILDING DIVISION

KOTT

JOB NAME	TRUSS NAME	QUANTITY	PLY	JOB DESC.	DRWG NO.
PT0317-093	**T49**	**4**	**1**	TRUSS DESC. LECCO RIDGE-BLOCK 343	

KOTT , Stouffville, ON, CGC

Version 8.100 S Feb 9 2017 MiTek Industries, Inc. Thu Mar 16 07:55:17 2017 Page 1
ID:EvTixTQDI5yR1QLotZTBr_yE?HJ-AXnzs5QKq69wj0zWQ7BShz8gMvMq8EXZSDZtf1zaRHO

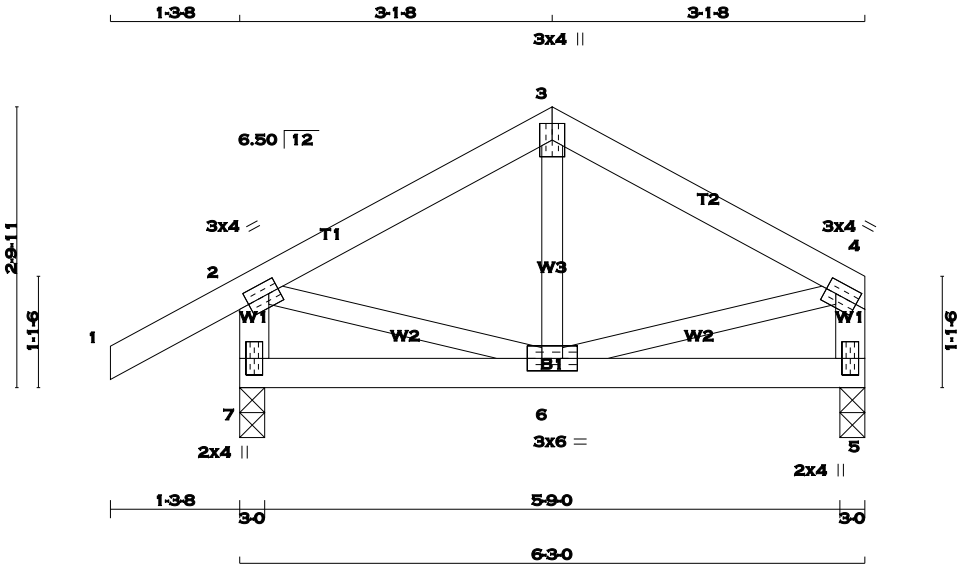

TOTAL WEIGHT = 4 X 25 = 100 lb

LUMBER
N. L. G. A. RULES

CHORDS	SIZE		LUMBER	DESCR.
1 - 3	2x4	DRY	No.2	SPF
3 - 4	2x4	DRY	No.2	SPF
7 - 2	2x4	DRY	No.2	SPF
5 - 4	2x4	DRY	No.2	SPF
7 - 5	2x4	DRY	No.2	SPF
ALL WEBS EXCEPT	2x3	DRY	No.2	SPF

DRY: SEASONED LUMBER.

PLATES (table is in inches)

JT	TYPE	PLATES	W	LEN	Y	X
2	TMVW-t	MT20	3.0	4.0	1.50	1.25
3	TTW+p	MT20	3.0	4.0		
4	TMVW-t	MT20	3.0	4.0	1.50	1.25
5	BMV1+p	MT20	2.0	4.0		
6	BMWWW-t	MT20	3.0	6.0		
7	BMV1+p	MT20	2.0	4.0		

A SIZE FOR SIZE SUBSTITUTION OF MITEK MII20 WITH TEE-LOK TL20 PLATES IS ALLOWED.

DIMENSIONS, SUPPORTS AND LOADINGS SPECIFIED BY FABRICATOR TO BE VERIFIED BY BUILDING DESIGNER

BEARINGS

JT	FACTORED GROSS REACTION VERT	HORZ	MAXIMUM FACTORED GROSS REACTION DOWN	HORZ	UPLIFT	INPUT BRG IN-SX	REQRD BRG IN-SX
7	402	0	402	0	0	3-0	3-0
5	296	0	296	0	0	3-0	3-0

UNFACTORED REACTIONS

JT	1ST LCASE COMBINED	MAX./MIN. COMPONENT REACTIONS SNOW	LIVE	PERM.LIVE	WIND	DEAD	SOIL
7	280	209 / 0	0 / 0	0 / 0	0 / 0	71 / 0	0 / 0
5	208	146 / 0	0 / 0	0 / 0	0 / 0	63 / 0	0 / 0

BEARING MATERIAL TO BE SPF NO.2 OR BETTER AT JOINT(S) 7, 5

BRACING
TOP CHORD TO BE SHEATHED OR MAX. PURLIN SPACING = 6.25 FT.
MAX. UNBRACED BOTTOM CHORD LENGTH = 10.00 FT. OR RIGID CEILING DIRECTLY APPLIED.

ALL PITCH BREAKS AND PERIMETER CORNER JOINTS MUST BE LATERALLY RESTRAINED.

LOADING
TOTAL LOAD CASES: (4)

CHORDS

MEMB. FR-TO	MAX. FACTORED FORCE (LBS)	FACTORED VERT. LOAD (PLF) FROM	TO	LC1 MAX CSI (LC)	MAX. UNBRAC LENGTH
1- 2	0 / 25	-77.4	-77.4	0.10 (1)	10.00
2- 3	-219 / 0	-77.4	-77.4	0.10 (1)	6.25
3- 4	-219 / 0	-77.4	-77.4	0.10 (1)	6.25
7- 2	-380 / 0	0.0	0.0	0.04 (1)	7.81
5- 4	-274 / 0	0.0	0.0	0.03 (1)	7.81
7- 6	0 / 0	-17.5	-17.5	0.05 (4)	10.00
6- 5	0 / 0	-17.5	-17.5	0.05 (4)	10.00

WEBS

MEMB. FR-TO	MAX. FACTORED FORCE (LBS)	MAX CSI (LC)
6- 3	-34 / 43	0.01 (4)
2- 6	0 / 198	0.04 (1)
6- 4	0 / 198	0.04 (1)

DESIGN CRITERIA

SPECIFIED LOADS:

TOP	CH.	LL	=	23.3	PSF
		DL	=	3.0	PSF
BOT	CH.	LL	=	0.0	PSF
		DL	=	7.0	PSF
TOTAL	LOAD		=	33.3	PSF

SPACING = 24.0 IN. C/C

THIS TRUSS IS DESIGNED FOR RESIDENTIAL OR SMALL BUILDING REQUIREMENTS OF PART 9, NBCC 2010

THIS DESIGN COMPLIES WITH:
- PART 9 OF OBC 2012 , BCBC 2012 , ABC 2014
- CSA 086-09
- TPIC 2011

(55 % OF 27.2 P.S.F. G.S.L. PLUS 8.4 P.S.F. RAIN LOAD) EQUALS 23.3 P.S.F. SPECIFIED ROOF LIVE LOAD

ALLOWABLE DEFL.(LL)= L/360 (0.21")
CALCULATED VERT. DEFL.(LL) = L/ 999 (0.00")
ALLOWABLE DEFL.(TL)= L/360 (0.21")
CALCULATED VERT. DEFL.(TL) = L/ 999 (0.00")

CSI: TC=0.10 (1-2:1) , BC=0.05 (6-7:4) , WB=0.04 (2-6:1) , SSI=0.08 (3-4:1)

DOL LUMBER=1.00 NAIL=1.00 LS BEND=1.10 COMP=1.10 SHEAR=1.10 TENS= 1.10

COMPANION LIVE LOAD FACTOR = 0.50

TRUSS PLATE MANUFACTURER IS NOT RESPONSIBLE FOR QUALITY CONTROL IN THE TRUSS MANUFACTURING PLANT .

NAIL VALUES

PLATE	GRIP(DRY) (PSI) MAX	MIN	SHEAR (PLI) MAX	MIN	SECTION (PLI) MAX	MIN
MT20	618	354	1667	822	2284	1656

PLATE PLACEMENT TOL. = 0.250 inches

PLATE ROTATION TOL. = 5.0 Deg.

JSI GRIP= 0.49 (2) (INPUT = 0.90)
JSI METAL= 0.12 (2) (INPUT = 1.00)

LICENSED PROFESSIONAL ENGINEER
P.M. TREVISAN
100136551
March 16th, 2017
PROVINCE OF ONTARIO

RECEIVED
TOWN OF MILTON
MAR 29, 2017
17-5327
BUILDING DIVISION

KOTT

JOB NAME	TRUSS NAME	QUANTITY	PLY	JOB DESC.	DRWG NO.
PT0317-093	T51	1	1	TRUSS DESC. LECCO RIDGE-BLOCK 343	

KOTT , Stouffville, ON, CGC

Version 8.100 S Feb 9 2017 MiTek Industries, Inc. Thu Mar 16 07:55:18 2017 Page 1
ID:EvTixTQDI5yR1QLotZTBr_yE?HJ-ejLL3RRybQHnLAYi_rihDAhr6Ih1thfjhtIRBTzaRHN

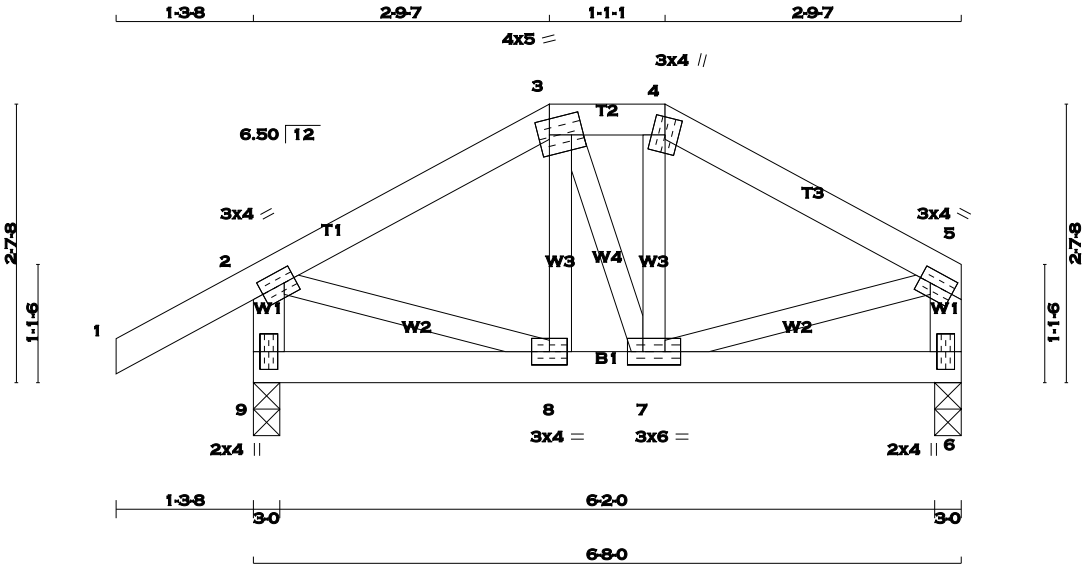

TOTAL WEIGHT = 29 lb
[M][F]

LUMBER

N. L. G. A. RULES

CHORDS	SIZE		LUMBER	DESCR.
1 - 3	2x4	DRY	No.2	SPF
3 - 4	2x4	DRY	No.2	SPF
4 - 5	2x4	DRY	No.2	SPF
9 - 2	2x4	DRY	No.2	SPF
6 - 5	2x4	DRY	No.2	SPF
9 - 6	2x4	DRY	No.2	SPF
ALL WEBS EXCEPT	2x3	DRY	No.2	SPF

DRY: SEASONED LUMBER.

PLATES (table is in inches)

JT	TYPE	PLATES	W	LEN	Y	X
2	TMVW-t	MT20	3.0	4.0	1.50	1.25
3	TTWW-m	MT20	4.0	5.0	1.75	1.25
4	TTW+m	MT20	3.0	4.0		
5	TMVW-t	MT20	3.0	4.0	1.50	1.25
6	BMV1+p	MT20	2.0	4.0		
7	BMWWW-t	MT20	3.0	6.0		
8	BMWW-t	MT20	3.0	4.0		
9	BMV1+p	MT20	2.0	4.0		

A SIZE FOR SIZE SUBSTITUTION OF MITEK MII20 WITH TEE-LOK TL20 PLATES IS ALLOWED.

DIMENSIONS, SUPPORTS AND LOADINGS SPECIFIED BY FABRICATOR TO BE VERIFIED BY BUILDING DESIGNER

BEARINGS

JT	FACTORED GROSS REACTION VERT	HORZ	MAXIMUM FACTORED GROSS REACTION DOWN	HORZ	UPLIFT	INPUT BRG IN-SX	REQRD BRG IN-SX
9	422	0	422	0	0	3-0	3-0
6	316	0	316	0	0	3-0	3-0

UNFACTORED REACTIONS

JT	1ST LCASE COMBINED	MAX./MIN. COMPONENT REACTIONS SNOW	LIVE	PERM.LIVE	WIND	DEAD	SOIL
9	293	219 / 0	0 / 0	0 / 0	0 / 0	75 / 0	0 / 0
6	222	155 / 0	0 / 0	0 / 0	0 / 0	67 / 0	0 / 0

BEARING MATERIAL TO BE SPF NO.2 OR BETTER AT JOINT(S) 9, 6

BRACING

TOP CHORD TO BE SHEATHED OR MAX. PURLIN SPACING = 6.25 FT.
MAX. UNBRACED BOTTOM CHORD LENGTH = 10.00 FT. OR RIGID CEILING DIRECTLY APPLIED.

ALL PITCH BREAKS AND PERIMETER CORNER JOINTS MUST BE LATERALLY RESTRAINED.

LOADING

TOTAL LOAD CASES: (4)

CHORDS

MEMB. FR-TO	MAX. FACTORED FORCE (LBS)	FACTORED VERT. LOAD (PLF) FROM	TO	LC1 MAX CSI (LC)	MAX. UNBRAC LENGTH
1- 2	0 / 25	-77.4	-77.4	0.10 (1)	10.00
2- 3	-258 / 0	-77.4	-77.4	0.08 (1)	6.25
3- 4	-225 / 0	-77.4	-77.4	0.01 (1)	6.25
4- 5	-257 / 0	-77.4	-77.4	0.08 (1)	6.25
9- 2	-399 / 0	0.0	0.0	0.04 (1)	7.81
6- 5	-293 / 0	0.0	0.0	0.03 (1)	7.81
9- 8	0 / 0	-17.5	-17.5	0.03 (4)	10.00
8- 7	0 / 225	-17.5	-17.5	0.05 (1)	10.00
7- 6	0 / 0	-17.5	-17.5	0.03 (4)	10.00

WEBS

MEMB. FR-TO	MAX. FACTORED FORCE (LBS)	MAX CSI (LC)
8- 3	-26 / 21	0.01 (4)
3- 7	-1 / 1	0.00 (4)
7- 4	-27 / 22	0.01 (4)
2- 8	0 / 235	0.05 (1)
7- 5	0 / 234	0.05 (1)

DESIGN CRITERIA

SPECIFIED LOADS:

TOP	CH.	LL	=	23.3	PSF
		DL	=	3.0	PSF
BOT	CH.	LL	=	0.0	PSF
		DL	=	7.0	PSF
TOTAL	LOAD		=	33.3	PSF

SPACING = 24.0 IN. C/C

LOADING IN FLAT SECTION BASED ON A SLOPE OF 6.00/12

THIS TRUSS IS DESIGNED FOR RESIDENTIAL OR SMALL BUILDING REQUIREMENTS OF PART 9, NBCC 2010

THIS DESIGN COMPLIES WITH:
- PART 9 OF OBC 2012 , BCBC 2012 , ABC 2014
- CSA 086-09
- TPIC 2011

(55 % OF 27.2 P.S.F. G.S.L. PLUS 8.4 P.S.F. RAIN LOAD) EQUALS 23.3 P.S.F. SPECIFIED ROOF LIVE LOAD

ALLOWABLE DEFL.(LL)= L/360 (0.22")
CALCULATED VERT. DEFL.(LL) = L/ 999 (0.00")
ALLOWABLE DEFL.(TL)= L/360 (0.22")
CALCULATED VERT. DEFL.(TL) = L/ 999 (0.00")

CSI: TC=0.10 (1-2:1) , BC=0.05 (7-8:1) , WB=0.05 (2-8:1) , SSI=0.07 (2-3:1)

DOL LUMBER=1.00 NAIL=1.00 LS BEND=1.10 COMP=1.10 SHEAR=1.10 TENS= 1.10

COMPANION LIVE LOAD FACTOR = 0.50

TRUSS PLATE MANUFACTURER IS NOT RESPONSIBLE FOR QUALITY CONTROL IN THE TRUSS MANUFACTURING PLANT .

NAIL VALUES

PLATE	GRIP(DRY) (PSI) MAX	MIN	SHEAR (PLI) MAX	MIN	SECTION (PLI) MAX	MIN
MT20	618	354	1667	822	2284	1656

PLATE PLACEMENT TOL. = 0.250 inches

PLATE ROTATION TOL. = 5.0 Deg.

JSI GRIP= 0.58 (2) (INPUT = 0.90)
JSI METAL= 0.13 (2) (INPUT = 1.00)

LICENSED PROFESSIONAL ENGINEER
P.M. TREVISAN
100136551
March 16th, 2017
PROVINCE OF ONTARIO

RECEIVED
TOWN OF MILTON
MAR 29, 2017
17-5327
BUILDING DIVISION

KOTT

JOB NAME	TRUSS NAME	QUANTITY	PLY	JOB DESC.	DRWG NO.
PT0317-093	**T52**	**2**	**1**	TRUSS DESC. LECCO RIDGE-BLOCK 343	

KOTT , Stouffville, ON, CGC

Version 8.100 S Feb 9 2017 MiTek Industries, Inc. Thu Mar 16 07:55:18 2017 Page 1
ID:EvTixTQDI5yR1QLotZTBr_yE?HJ-ejLL3RRybQHnLAYi_rihDAhrplhythjjhtIRBTzaRHN

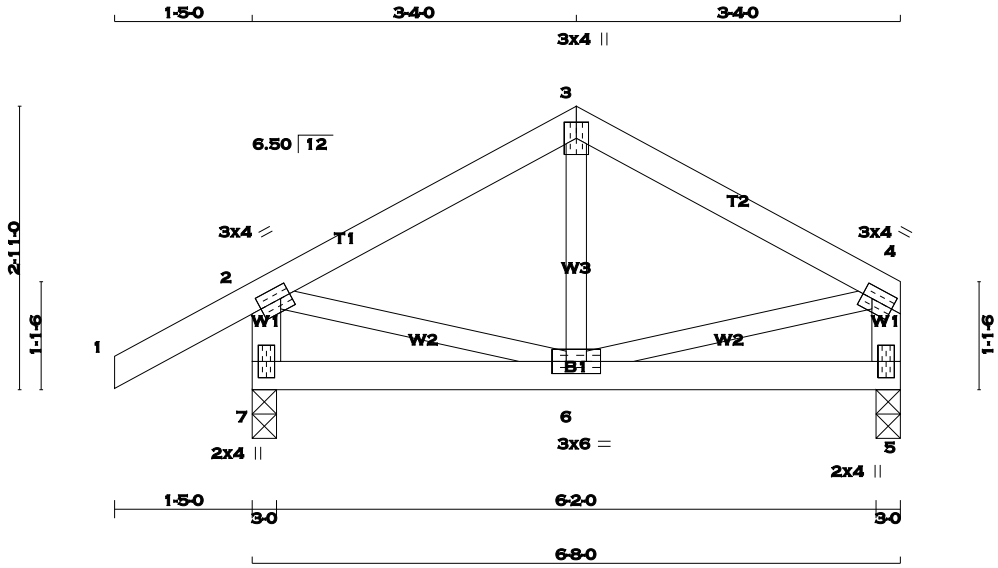

TOTAL WEIGHT = 2 X 27 = 53 lb
[M][F]

LUMBER
N. L. G. A. RULES

CHORDS	SIZE		LUMBER	DESCR.
1 - 3	2x4	DRY	No.2	SPF
3 - 4	2x4	DRY	No.2	SPF
7 - 2	2x4	DRY	No.2	SPF
5 - 4	2x4	DRY	No.2	SPF
7 - 5	2x4	DRY	No.2	SPF
ALL WEBS EXCEPT	2x3	DRY	No.2	SPF

DRY: SEASONED LUMBER.

PLATES (table is in inches)

JT	TYPE	PLATES	W	LEN	Y	X
2	TMVW-t	MT20	3.0	4.0	1.50	1.25
3	TTW+p	MT20	3.0	4.0		
4	TMVW-t	MT20	3.0	4.0	1.50	1.25
5	BMV1+p	MT20	2.0	4.0		
6	BMWWW-t	MT20	3.0	6.0		
7	BMV1+p	MT20	2.0	4.0		

A SIZE FOR SIZE SUBSTITUTION OF MITEK MII20 WITH TEE-LOK TL20 PLATES IS ALLOWED.

DIMENSIONS, SUPPORTS AND LOADINGS SPECIFIED BY FABRICATOR TO BE VERIFIED BY BUILDING DESIGNER

BEARINGS

JT	FACTORED GROSS REACTION VERT	HORZ	MAXIMUM FACTORED GROSS REACTION DOWN	HORZ	UPLIFT	INPUT BRG IN-SX	REQRD BRG IN-SX
7	431	0	431	0	0	3-0	3-0
5	316	0	316	0	0	3-0	3-0

UNFACTORED REACTIONS

JT	1ST LCASE COMBINED	MAX./MIN. COMPONENT REACTIONS SNOW	LIVE	PERM.LIVE	WIND	DEAD	SOIL
7	300	224 / 0	0 / 0	0 / 0	0 / 0	76 / 0	0 / 0
5	222	155 / 0	0 / 0	0 / 0	0 / 0	67 / 0	0 / 0

BEARING MATERIAL TO BE SPF NO.2 OR BETTER AT JOINT(S) 7, 5

BRACING
TOP CHORD TO BE SHEATHED OR MAX. PURLIN SPACING = 6.25 FT.
MAX. UNBRACED BOTTOM CHORD LENGTH = 10.00 FT. OR RIGID CEILING DIRECTLY APPLIED.

ALL PITCH BREAKS AND PERIMETER CORNER JOINTS MUST BE LATERALLY RESTRAINED.

LOADING
TOTAL LOAD CASES: (4)

CHORDS

MEMB. FR-TO	MAX. FACTORED FORCE (LBS)	FACTORED VERT. LOAD (PLF) FROM	TO	LC1 MAX CSI (LC)	MAX. UNBRAC LENGTH
1- 2	0 / 27	-77.4	-77.4	0.12 (1)	10.00
2- 3	-238 / 0	-77.4	-77.4	0.11 (1)	6.25
3- 4	-238 / 0	-77.4	-77.4	0.11 (1)	6.25
7- 2	-408 / 0	0.0	0.0	0.04 (1)	7.81
5- 4	-293 / 0	0.0	0.0	0.03 (1)	7.81
7- 6	0 / 0	-17.5	-17.5	0.05 (4)	10.00
6- 5	0 / 0	-17.5	-17.5	0.05 (4)	10.00

WEBS

MEMB. FR-TO	MAX. FACTORED FORCE (LBS)	MAX CSI (LC)
6- 3	-31 / 47	0.02 (4)
2- 6	0 / 215	0.05 (1)
6- 4	0 / 215	0.05 (1)

DESIGN CRITERIA

SPECIFIED LOADS:

TOP	CH.	LL	=	23.3	PSF
		DL	=	3.0	PSF
BOT	CH.	LL	=	0.0	PSF
		DL	=	7.0	PSF
TOTAL	LOAD		=	33.3	PSF

SPACING = 24.0 IN. C/C

THIS TRUSS IS DESIGNED FOR RESIDENTIAL OR SMALL BUILDING REQUIREMENTS OF PART 9, NBCC 2010

THIS DESIGN COMPLIES WITH:
- PART 9 OF OBC 2012 , BCBC 2012 , ABC 2014
- CSA 086-09
- TPIC 2011

(55 % OF 27.2 P.S.F. G.S.L. PLUS 8.4 P.S.F. RAIN LOAD) EQUALS 23.3 P.S.F. SPECIFIED ROOF LIVE LOAD

ALLOWABLE DEFL.(LL)= L/360 (0.22")
CALCULATED VERT. DEFL.(LL) = L/ 999 (0.00")
ALLOWABLE DEFL.(TL)= L/360 (0.22")
CALCULATED VERT. DEFL.(TL) = L/ 999 (0.01")

CSI: TC=0.12 (1-2:1) , BC=0.05 (6-7:4) , WB=0.05 (4-6:1) , SSI=0.09 (3-4:1)

DOL LUMBER=1.00 NAIL=1.00 LS BEND=1.10 COMP=1.10 SHEAR=1.10 TENS= 1.10

COMPANION LIVE LOAD FACTOR = 0.50

TRUSS PLATE MANUFACTURER IS NOT RESPONSIBLE FOR QUALITY CONTROL IN THE TRUSS MANUFACTURING PLANT .

NAIL VALUES

PLATE	GRIP(DRY) (PSI) MAX	MIN	SHEAR (PLI) MAX	MIN	SECTION (PLI) MAX	MIN
MT20	618	354	1667	822	2284	1656

PLATE PLACEMENT TOL. = 0.250 inches

PLATE ROTATION TOL. = 5.0 Deg.

JSI GRIP= 0.54 (2) (INPUT = 0.90)
JSI METAL= 0.13 (2) (INPUT = 1.00)

LICENSED PROFESSIONAL ENGINEER
P.M. TREVISAN
100136551
March 16th, 2017
PROVINCE OF ONTARIO

RECEIVED
TOWN OF MILTON
MAR 29, 2017
17-5327
BUILDING DIVISION

KOTT

JOB NAME	TRUSS NAME	QUANTITY	PLY	JOB DESC.	DRWG NO.
PT0317-093	T53	12	1	TRUSS DESC. LECCO RIDGE-BLOCK 343	

KOTT , Stouffville, ON, CGC

Version 8.100 S Feb 9 2017 MiTek Industries, Inc. Thu Mar 16 07:55:18 2017 Page 1
ID:EvTixTQDI5yR1QLotZTBr_yE?HJ-ejLL3RRybQHnLAYi_rihDAhrBIcytgujhtIRBTzaRHN

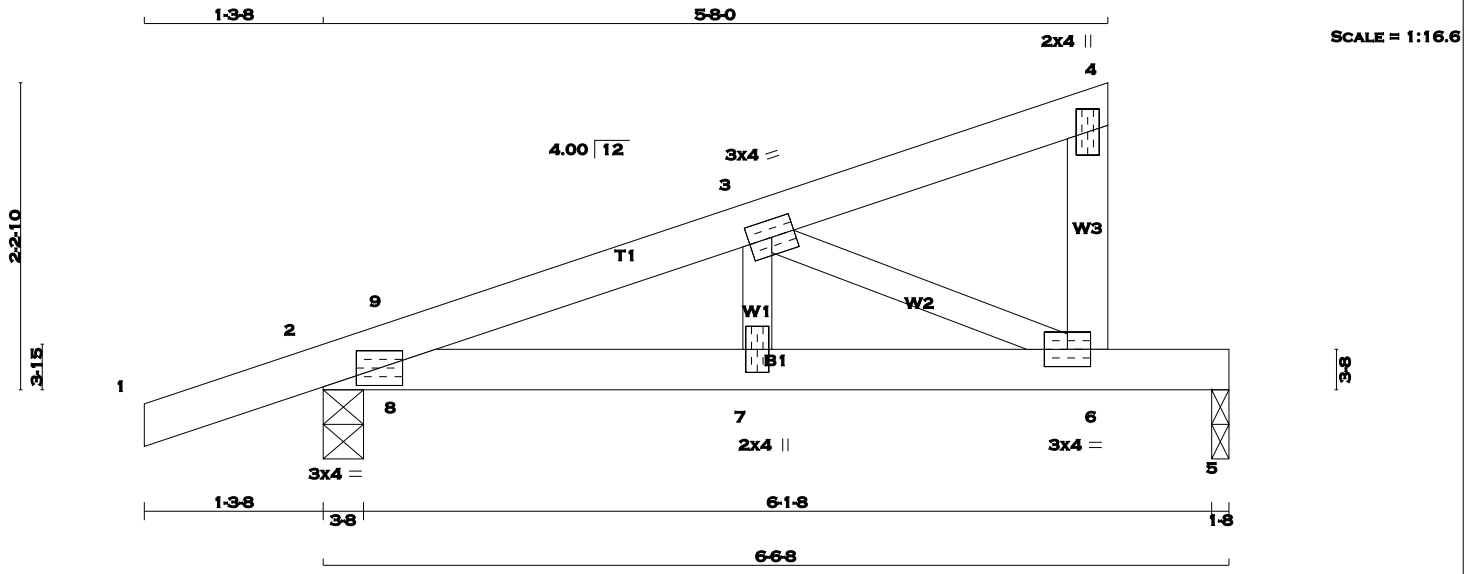

TOTAL WEIGHT = 12 X 20 = 244 lb
[M][F]

LUMBER
N. L. G. A. RULES

CHORDS	SIZE		LUMBER	DESCR.
1 - 4	2x4	DRY	No.2	SPF
6 - 4	2x4	DRY	No.2	SPF
2 - 5	2x4	DRY	No.2	SPF
ALL WEBS	2x3	DRY	No.2	SPF

DRY: SEASONED LUMBER.

PLATES (table is in inches)

JT	TYPE	PLATES	W	LEN	Y	X
2	TMB1-I	MT20	3.0	4.0		
3	TMWW-t	MT20	3.0	4.0		
4	TMV+p	MT20	2.0	4.0		
6	BMVW-t	MT20	3.0	4.0		
7	BMW+w	MT20	2.0	4.0		

A SIZE FOR SIZE SUBSTITUTION OF MITEK MII20 WITH TEE-LOK TL20 PLATES IS ALLOWED.

DIMENSIONS, SUPPORTS AND LOADINGS SPECIFIED BY FABRICATOR TO BE VERIFIED BY BUILDING DESIGNER

BEARINGS

JT	FACTORED GROSS REACTION VERT	HORZ	MAXIMUM FACTORED GROSS REACTION DOWN	HORZ	UPLIFT	INPUT BRG IN-SX	REQRD BRG IN-SX
2	409	0	409	0	0	3-8	3-8
5	247	0	247	0	0	1-8	1-8

UNFACTORED REACTIONS

JT	1ST LCASE COMBINED	MAX./MIN. COMPONENT REACTIONS SNOW	LIVE	PERM.LIVE	WIND	DEAD	SOIL
2	285	212 / 0	0 / 0	0 / 0	0 / 0	73 / 0	0 / 0
5	175	114 / 0	0 / 0	0 / 0	0 / 0	61 / 0	0 / 0

BEARING MATERIAL TO BE SPF NO.2 OR BETTER AT JOINT(S) 2, 5

BRACING
TOP CHORD TO BE SHEATHED OR MAX. PURLIN SPACING = 6.25 FT.
MAX. UNBRACED BOTTOM CHORD LENGTH = 10.00 FT. OR RIGID CEILING DIRECTLY APPLIED.

ALL PITCH BREAKS AND PERIMETER CORNER JOINTS MUST BE LATERALLY RESTRAINED.

LOADING
TOTAL LOAD CASES: (4)

CHORDS

MEMB. FR-TO	MAX. FACTORED FORCE (LBS)	FACTORED VERT. LOAD (PLF) FROM	TO	LC1 MAX CSI (LC)	MAX. UNBRAC LENGTH
1- 2	0 / 15	-77.4	-77.4	0.10 (1)	10.00
2- 9	-580 / 0	-77.4	-77.4	0.01 (4)	6.25
9- 3	-568 / 0	-77.4	-77.4	0.05 (1)	6.25
3- 4	-5 / 0	-77.4	-77.4	0.05 (1)	10.00
6- 4	-82 / 0	0.0	0.0	0.01 (1)	7.81
2- 8	0 / 543	-17.5	-17.5	0.15 (1)	10.00
8- 7	0 / 543	-17.5	-17.5	0.16 (1)	10.00
7- 6	0 / 543	-17.5	-17.5	0.37 (1)	10.00
6- 5	0 / 0	-17.5	-17.5	0.29 (1)	10.00

WEBS

MEMB. FR-TO	MAX. FACTORED FORCE (LBS)	MAX CSI (LC)
7- 3	0 / 185	0.04 (1)
3- 6	-590 / 0	0.10 (1)
8- 9	-83 / 4	0.00 (1)

DESIGN CRITERIA

SPECIFIED LOADS:

TOP	CH.	LL	=	23.3	PSF
		DL	=	3.0	PSF
BOT	CH.	LL	=	0.0	PSF
		DL	=	7.0	PSF
TOTAL	LOAD		=	33.3	PSF

SPACING = 24.0 IN. C/C

THIS TRUSS IS DESIGNED FOR RESIDENTIAL OR SMALL BUILDING REQUIREMENTS OF PART 9, NBCC 2010

THIS DESIGN COMPLIES WITH:
- PART 9 OF OBC 2012 , BCBC 2012 , ABC 2014
- CSA 086-09
- TPIC 2011

(55 % OF 27.2 P.S.F. G.S.L. PLUS 8.4 P.S.F. RAIN LOAD) EQUALS 23.3 P.S.F. SPECIFIED ROOF LIVE LOAD

ALLOWABLE DEFL.(LL)= L/360 (0.22")
CALCULATED VERT. DEFL.(LL) = L/ 999 (0.03")
ALLOWABLE DEFL.(TL)= L/360 (0.22")
CALCULATED VERT. DEFL.(TL) = L/ 999 (0.05")

CSI: TC=0.10 (1-2:1) , BC=0.37 (6-7:1) , WB=0.10 (3-6:1) , SSI=0.19 (5-6:1)

DOL LUMBER=1.00 NAIL=1.00 LS BEND=1.10 COMP=1.10 SHEAR=1.10 TENS= 1.10

COMPANION LIVE LOAD FACTOR = 0.50

TRUSS PLATE MANUFACTURER IS NOT RESPONSIBLE FOR QUALITY CONTROL IN THE TRUSS MANUFACTURING PLANT .

NAIL VALUES

PLATE	GRIP(DRY) (PSI) MAX	MIN	SHEAR (PLI) MAX	MIN	SECTION (PLI) MAX	MIN
MT20	618	354	1667	822	2284	1656

PLATE PLACEMENT TOL. = 0.250 inches

PLATE ROTATION TOL. = 5.0 Deg.

JSI GRIP= 0.83 (6) (INPUT = 0.90)
JSI METAL= 0.20 (6) (INPUT = 1.00)

LICENSED PROFESSIONAL ENGINEER
P.M. TREVISAN
100136551
March 16th, 2017
PROVINCE OF ONTARIO

RECEIVED
TOWN OF MILTON
MAR 29, 2017
17-5327
BUILDING DIVISION

KOTT

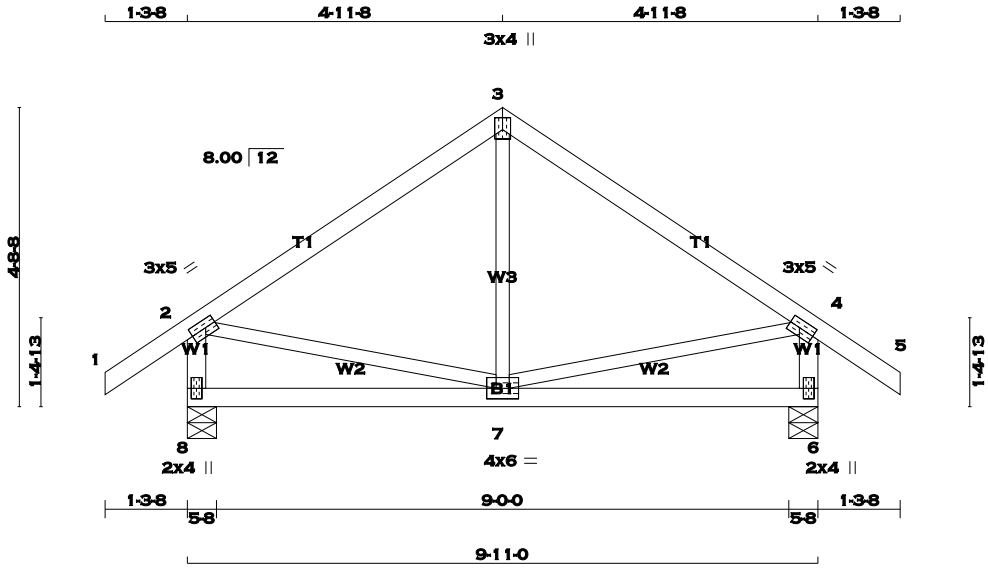

TOTAL WEIGHT = 2 X 42 = 84 lb

[M][F]

LUMBER

N. L. G. A. RULES

CHORDS	SIZE		LUMBER	DESCR.
1 - 3	2x4	DRY	No.2	SPF
3 - 5	2x4	DRY	No.2	SPF
8 - 2	2x4	DRY	No.2	SPF
6 - 4	2x4	DRY	No.2	SPF
8 - 6	2x4	DRY	No.2	SPF
ALL WEBS EXCEPT	2x3	DRY	No.2	SPF

DRY: SEASONED LUMBER.

PLATES (table is in inches)

JT	TYPE	PLATES	W	LEN	Y	X
2	TMVW-t	MT20	3.0	5.0	1.50	2.00
3	TTW+p	MT20	3.0	4.0	2.25	1.50
4	TMVW-t	MT20	3.0	5.0	1.50	2.00
6	BMV1+p	MT20	2.0	4.0		
7	BMWWW-t	MT20	4.0	6.0		
8	BMV1+p	MT20	2.0	4.0		

A SIZE FOR SIZE SUBSTITUTION OF MITEK MII20 WITH TEE-LOK TL20 PLATES IS ALLOWED.

DIMENSIONS, SUPPORTS AND LOADINGS SPECIFIED BY FABRICATOR TO BE VERIFIED BY BUILDING DESIGNER

BEARINGS

JT	FACTORED GROSS REACTION VERT	HORZ	MAXIMUM FACTORED GROSS REACTION DOWN	HORZ	UPLIFT	INPUT BRG IN-SX	REQRD BRG IN-SX
8	577	0	577	0	0	5-8	5-8
6	577	0	577	0	0	5-8	5-8

UNFACTORED REACTIONS

JT	1ST LCASE COMBINED	MAX./MIN. COMPONENT REACTIONS SNOW	LIVE	PERM.LIVE	WIND	DEAD	SOIL
8	402	295 / 0	0 / 0	0 / 0	0 / 0	107 / 0	0 / 0
6	402	295 / 0	0 / 0	0 / 0	0 / 0	107 / 0	0 / 0

BEARING MATERIAL TO BE SPF NO.2 OR BETTER AT JOINT(S) 8, 6

BRACING

TOP CHORD TO BE SHEATHED OR MAX. PURLIN SPACING = 6.25 FT.
MAX. UNBRACED BOTTOM CHORD LENGTH = 10.00 FT. OR RIGID CEILING DIRECTLY APPLIED.

ALL PITCH BREAKS AND PERIMETER CORNER JOINTS MUST BE LATERALLY RESTRAINED.

LOADING

TOTAL LOAD CASES: (4)

CHORDS

MEMB. FR-TO	MAX. FACTORED FORCE (LBS)	FACTORED VERT. LOAD (PLF) FROM	TO	LC1 MAX CSI (LC)	MAX. UNBRAC LENGTH
1- 2	0 / 29	-77.4	-77.4	0.10 (1)	10.00
2- 3	-333 / 0	-77.4	-77.4	0.24 (1)	6.25
3- 4	-333 / 0	-77.4	-77.4	0.24 (1)	6.25
4- 5	0 / 29	-77.4	-77.4	0.10 (1)	10.00
8- 2	-543 / 0	0.0	0.0	0.06 (1)	7.81
6- 4	-543 / 0	0.0	0.0	0.06 (1)	7.81
8- 7	0 / 0	-17.5	-17.5	0.12 (4)	10.00
7- 6	0 / 0	-17.5	-17.5	0.12 (4)	10.00

WEBS

MEMB. FR-TO	MAX. FACTORED FORCE (LBS)	MAX CSI (LC)
7- 3	-14 / 81	0.03 (4)
2- 7	0 / 284	0.06 (1)
7- 4	0 / 284	0.06 (1)

DESIGN CRITERIA

SPECIFIED LOADS:

TOP	CH.	LL	=	23.3	PSF
		DL	=	3.0	PSF
BOT	CH.	LL	=	0.0	PSF
		DL	=	7.0	PSF
TOTAL	LOAD		=	33.3	PSF

SPACING = 24.0 IN. C/C

THIS TRUSS IS DESIGNED FOR RESIDENTIAL OR SMALL BUILDING REQUIREMENTS OF PART 9, NBCC 2010

THIS DESIGN COMPLIES WITH:
- PART 9 OF OBC 2012 , BCBC 2012 , ABC 2014
- CSA 086-09
- TPIC 2011

(55 % OF 27.2 P.S.F. G.S.L. PLUS 8.4 P.S.F. RAIN LOAD) EQUALS 23.3 P.S.F. SPECIFIED ROOF LIVE LOAD

ALLOWABLE DEFL.(LL)= L/360 (0.33")
CALCULATED VERT. DEFL.(LL) = L/ 999 (0.00")
ALLOWABLE DEFL.(TL)= L/360 (0.33")
CALCULATED VERT. DEFL.(TL) = L/ 999 (0.02")

CSI: TC=0.24 (3-4:1) , BC=0.12 (7-8:4) , WB=0.06 (2-7:1) , SSI=0.12 (3-4:1)

DOL LUMBER=1.00 NAIL=1.00 LS BEND=1.10 COMP=1.10 SHEAR=1.10 TENS= 1.10

COMPANION LIVE LOAD FACTOR = 0.50

TRUSS PLATE MANUFACTURER IS NOT RESPONSIBLE FOR QUALITY CONTROL IN THE TRUSS MANUFACTURING PLANT .

NAIL VALUES

PLATE	GRIP(DRY) (PSI) MAX	MIN	SHEAR (PLI) MAX	MIN	SECTION (PLI) MAX	MIN
MT20	618	354	1667	822	2284	1656

PLATE PLACEMENT TOL. = 0.250 inches

PLATE ROTATION TOL. = 0.5 Deg.

JSI GRIP= 0.49 (4) (INPUT = 0.90)
JSI METAL= 0.15 (2) (INPUT = 1.00)

LICENSED PROFESSIONAL ENGINEER
P.M. TREVISAN
100136551
March 16th, 2017
PROVINCE OF ONTARIO

RECEIVED
TOWN OF MILTON
MAR 29, 2017
17-5327
BUILDING DIVISION

KOTT

JOB NAME	TRUSS NAME	QUANTITY	PLY	JOB DESC.	DRWG NO.
PT0317-093	T55	1	1	TRUSS DESC. LECCO RIDGE-BLOCK 343	

KOTT , Stouffville, ON, CGC

Version 8.100 S Feb 9 2017 MiTek Industries, Inc. Thu Mar 16 07:55:19 2017 Page 1
ID:EvTixTQDI5yR1QLotZTBr_yE?HJ-6wvjHnRaMkPezK7uXYDwmODqxiwgc1SswX2_jvzaRHM

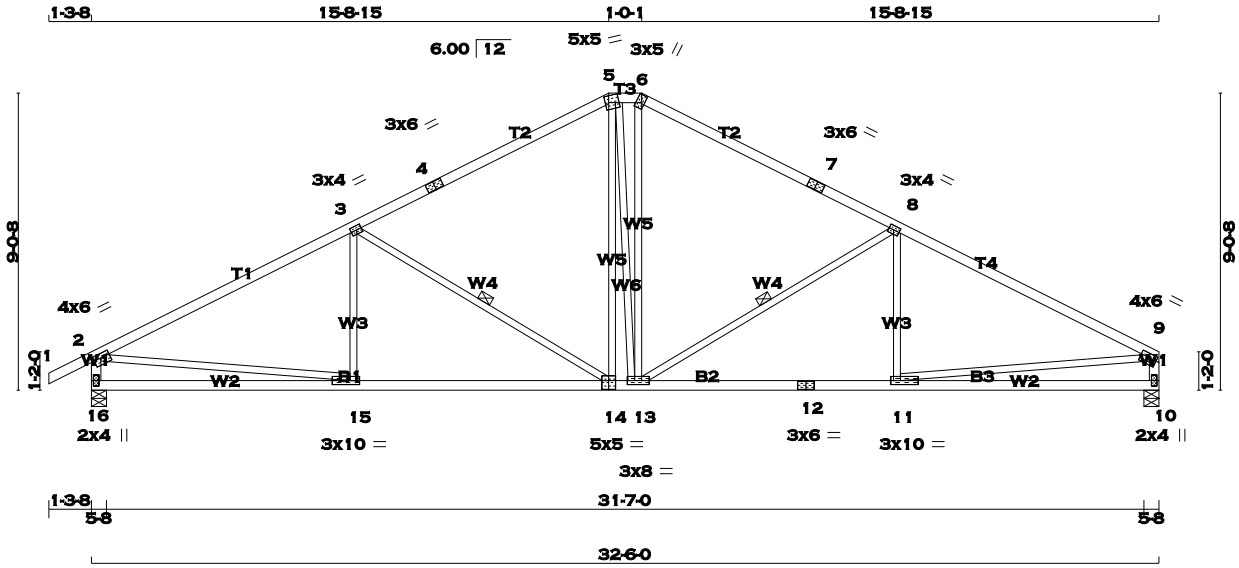

TOTAL WEIGHT = 137 lb

LUMBER
N. L. G. A. RULES

CHORDS	SIZE		LUMBER	DESCR.
1 - 4	2x4	DRY	No.2	SPF
4 - 5	2x4	DRY	No.2	SPF
5 - 6	2x4	DRY	No.2	SPF
6 - 7	2x4	DRY	No.2	SPF
7 - 9	2x4	DRY	No.2	SPF
16 - 2	2x4	DRY	No.2	SPF
10 - 9	2x4	DRY	No.2	SPF
16 - 14	2x4	DRY	No.2	SPF
14 - 12	2x4	DRY	No.2	SPF
12 - 10	2x4	DRY	No.2	SPF
ALL WEBS EXCEPT	2x3	DRY	No.2	SPF

DRY: SEASONED LUMBER.

PLATES (table is in inches)

JT	TYPE	PLATES	W	LEN	Y	X
2	TMVW-t	MT20	4.0	6.0	1.50	2.75
3	TMWW-t	MT20	3.0	4.0	1.50	1.75
4	TS-t	MT20	3.0	6.0		
5	TTWW-m	MT20	5.0	5.0	2.50	1.25
6	TTW+h	MT20	3.0	5.0	2.75	1.00
7	TS-t	MT20	3.0	6.0		
8	TMWW-t	MT20	3.0	4.0	1.50	1.75
9	TMVW-t	MT20	4.0	6.0	1.50	2.75
10	BMV1+p	MT20	2.0	4.0		
11	BMWW-t	MT20	3.0	10.0	1.50	3.50
12	BS-t	MT20	3.0	6.0		
13	BMWWW-t	MT20	3.0	8.0		
14	BSWW-l	MT20	5.0	5.0	3.25	2.50
15	BMWW-t	MT20	3.0	10.0	1.50	3.50
16	BMV1+p	MT20	2.0	4.0		

A SIZE FOR SIZE SUBSTITUTION OF MITEK MII20 WITH TEE-LOK TL20 PLATES IS ALLOWED.

DIMENSIONS, SUPPORTS AND LOADINGS SPECIFIED BY FABRICATOR TO BE VERIFIED BY BUILDING DESIGNER

BEARINGS

JT	FACTORED GROSS REACTION VERT	HORZ	MAXIMUM FACTORED GROSS REACTION DOWN	HORZ	UPLIFT	INPUT BRG IN-SX	REQRD BRG IN-SX
16	1646	0	1646	0	0	5-8	5-8
10	1541	0	1541	0	0	5-8	5-8

UNFACTORED REACTIONS

JT	1ST LCASE COMBINED	MAX./MIN. COMPONENT REACTIONS SNOW	LIVE	PERM.LIVE	WIND	DEAD	SOIL
16	1153	820 / 0	0 / 0	0 / 0	0 / 0	333 / 0	0 / 0
10	1082	757 / 0	0 / 0	0 / 0	0 / 0	325 / 0	0 / 0

BEARING MATERIAL TO BE SPF NO.2 OR BETTER AT JOINT(S) 16, 10

BRACING
TOP CHORD TO BE SHEATHED OR MAX. PURLIN SPACING = 3.56 FT.
MAX. UNBRACED BOTTOM CHORD LENGTH = 10.00 FT. OR RIGID CEILING DIRECTLY APPLIED.

ALL PITCH BREAKS AND PERIMETER CORNER JOINTS MUST BE LATERALLY RESTRAINED.

1 - 2x3 SPF No.2 LATERAL BRACE(S) AT 1/ 2 LENGTH OF 3-14, 8-13. DBS = 20-0-0 . CBF = 91 LBS.

DBS = DIAGONAL BRACE SPACING (MAX). CBF = CUMULATIVE BRACING FORCE. FASTEN LATERAL BRACE(S) USING (0.122"X3") SPIRAL NAILS : 1 NAIL FOR 2x3 BRACE(S), 2 FOR 1x4, 2x4, 2x5, 3 FOR 2x6, 4 FOR 2x8, 5 FOR 2x10, AND 6 FOR 2x12.

END VERTICAL(S) MUST BE SHEATHED OR HAVE BRACES AS INDICATED IN THE MAX. UNBRACED LENGTH COLUMN OF THE TABLE BELOW

LOADING
TOTAL LOAD CASES: (4)

CHORDS

MEMB. FR-TO	MAX. FACTORED FORCE (LBS)	FACTORED VERT. LOAD LC1 (PLF) FROM	TO	MAX CSI (LC)	MAX. UNBRAC LENGTH
1- 2	0 / 23	-77.4	-77.4	0.10 (1)	10.00
2- 3	-2266 / 0	-77.4	-77.4	0.86 (1)	3.56
3- 4	-1641 / 0	-77.4	-77.4	0.74 (1)	4.21
4- 5	-1641 / 0	-77.4	-77.4	0.74 (1)	4.21
5- 6	-1442 / 0	-77.4	-77.4	0.03 (1)	5.43
6- 7	-1640 / 0	-77.4	-77.4	0.74 (1)	4.21
7- 8	-1640 / 0	-77.4	-77.4	0.74 (1)	4.21
8- 9	-2264 / 0	-77.4	-77.4	0.86 (1)	3.56
16- 2	-1589 / 0	0.0	0.0	0.16 (1)	6.55
10- 9	-1484 / 0	0.0	0.0	0.15 (1)	6.73
16-15	0 / 0	-17.5	-17.5	0.27 (4)	10.00
15-14	0 / 2056	-17.5	-17.5	0.47 (1)	10.00
14-13	0 / 1438	-17.5	-17.5	0.35 (1)	10.00
13-12	0 / 2055	-17.5	-17.5	0.46 (1)	10.00
12-11	0 / 2055	-17.5	-17.5	0.46 (1)	10.00
11-10	0 / 0	-17.5	-17.5	0.27 (4)	10.00

WEBS

MEMB. FR-TO	MAX. FACTORED FORCE (LBS)	MAX CSI (LC)
15- 3	-64 / 114	0.04 (4)
3-14	-729 / 0	0.44 (1)
14- 5	0 / 418	0.09 (1)
5-13	0 / 38	0.01 (1)
13- 6	0 / 455	0.10 (1)
13- 8	-726 / 0	0.44 (1)
11- 8	-69 / 112	0.04 (4)
2-15	0 / 2068	0.47 (1)
11- 9	0 / 2066	0.46 (1)

RECEIVED
TOWN OF MILTON
MAR 29, 2017
17-5327
BUILDING DIVISION

DESIGN CRITERIA

SPECIFIED LOADS:

TOP CH.	LL	=	23.3	PSF
	DL	=	3.0	PSF
BOT CH.	LL	=	0.0	PSF
	DL	=	7.0	PSF
TOTAL LOAD		=	33.3	PSF

SPACING = 24.0 IN. C/C

LOADING IN FLAT SECTION BASED ON A SLOPE OF 6.00/12

THIS TRUSS IS DESIGNED FOR RESIDENTIAL OR SMALL BUILDING REQUIREMENTS OF PART 9, NBCC 2010

THIS DESIGN COMPLIES WITH:
- PART 9 OF OBC 2012 , BCBC 2012 , ABC 2014
- CSA 086-09
- TPIC 2011

(55 % OF 27.2 P.S.F. G.S.L. PLUS 8.4 P.S.F. RAIN LOAD) EQUALS 23.3 P.S.F. SPECIFIED ROOF LIVE LOAD

ALLOWABLE DEFL.(LL)= L/360 (1.08")
CALCULATED VERT. DEFL.(LL) = L/ 999 (0.12")
ALLOWABLE DEFL.(TL)= L/360 (1.08")
CALCULATED VERT. DEFL.(TL) = L/ 999 (0.24")

CSI: TC=0.86 (2-3:1) , BC=0.47 (14-15:1) , WB=0.47 (2-15:1) , SSI=0.27 (2-3:1)

DOL LUMBER=1.00 NAIL=1.00 LS BEND=1.10 COMP=1.10 SHEAR=1.10 TENS= 1.10

COMPANION LIVE LOAD FACTOR = 0.50

TRUSS PLATE MANUFACTURER IS NOT RESPONSIBLE FOR QUALITY CONTROL IN THE TRUSS MANUFACTURING PLANT .

NAIL VALUES

PLATE	GRIP(DRY) (PSI) MAX	MIN	SHEAR (PLI) MAX	MIN	SECTION (PLI) MAX	MIN
MT20	618	354	1667	822	2284	1656

PLATE PLACEMENT TOL. = 0.250 inches

PLATE ROTATION TOL. = 5.0 Deg.

JSI GRIP= 0.89 (14) (INPUT = 0.90)
JSI METAL= 0.61 (2) (INPUT = 1.00)

KOTT

JOB NAME	TRUSS NAME	QUANTITY	PLY	JOB DESC.	DRWG NO.
PT0317-093	T56	15	1	TRUSS DESC. LECCO RIDGE-BLOCK 343	ENG JOB: PT0317-093

KOTT , Stouffville, ON, CGC

Version 8.100 S Feb 9 2017 MiTek Industries, Inc. Thu Mar 16 07:55:20 2017 Page 1

ID:EvTixTQDI5yR1QLotZTBr_yE?HJ-a6T5U7SC71XVaTi45Fk9Jbm6S6ITLTn?9BnXFMzaRHL

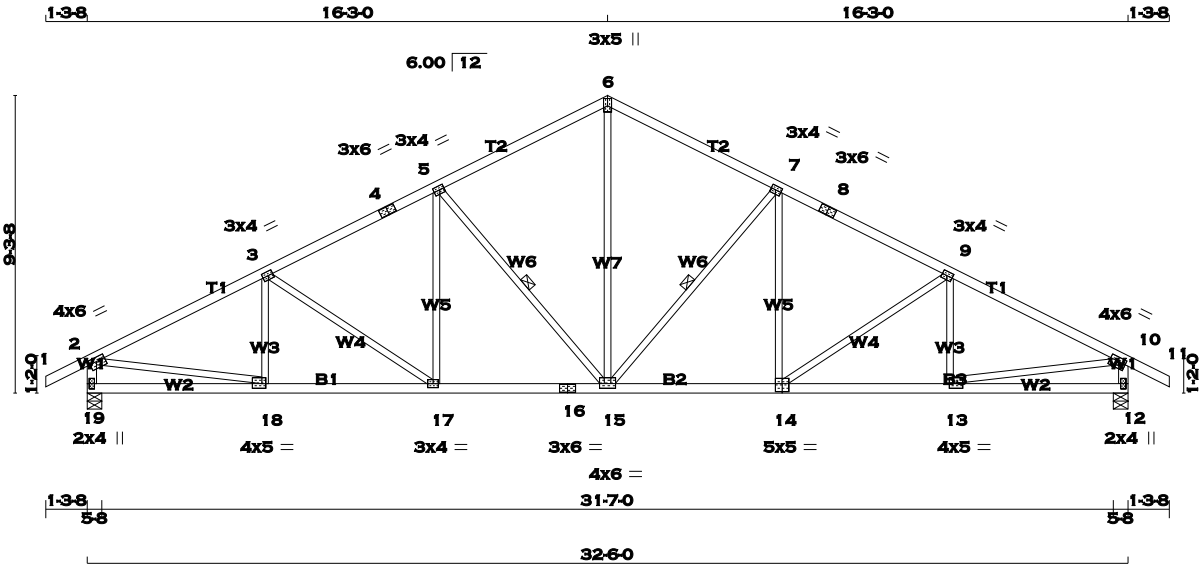

TOTAL WEIGHT = 15 X 138 = 2063 lb

[M][F]

LUMBER

N. L. G. A. RULES

CHORDS	SIZE		LUMBER	DESCR.
1 - 4	2x4	DRY	No.2	SPF
4 - 6	2x4	DRY	No.2	SPF
6 - 8	2x4	DRY	No.2	SPF
8 - 11	2x4	DRY	No.2	SPF
19 - 2	2x4	DRY	No.2	SPF
12 - 10	2x4	DRY	No.2	SPF
19 - 16	2x4	DRY	No.2	SPF
16 - 14	2x4	DRY	No.2	SPF
14 - 12	2x4	DRY	No.2	SPF
ALL WEBS EXCEPT	2x3	DRY	No.2	SPF

DRY: SEASONED LUMBER.

PLATES (table is in inches)

JT	TYPE	PLATES	W	LEN	Y	X
2 3, 5, 7, 9	TMVW-t	MT20	4.0	6.0	1.50	2.75
3	TMWW-t	MT20	3.0	4.0	1.50	1.75
4	TS-t	MT20	3.0	6.0		
6	TTW+p	MT20	3.0	5.0	2.75	1.50
8	TS-t	MT20	3.0	6.0		
10	TMVW-t	MT20	4.0	6.0	1.50	2.75
12	BMV1+p	MT20	2.0	4.0		
13	BMWW-t	MT20	4.0	5.0	1.75	1.50
14	BSWW-l	MT20	5.0	5.0	3.00	2.50
15	BMWWW-t	MT20	4.0	6.0	1.75	3.00
16	BS-t	MT20	3.0	6.0		
17	BMWW-t	MT20	3.0	4.0		
18	BMWW-t	MT20	4.0	5.0	1.75	1.50
19	BMV1+p	MT20	2.0	4.0		

A SIZE FOR SIZE SUBSTITUTION OF MITEK MII20 WITH TEE-LOK TL20 PLATES IS ALLOWED.

DIMENSIONS, SUPPORTS AND LOADINGS SPECIFIED BY FABRICATOR TO BE VERIFIED BY BUILDING DESIGNER

BEARINGS

JT	FACTORED GROSS REACTION VERT	HORZ	MAXIMUM FACTORED GROSS REACTION DOWN	HORZ	UPLIFT	INPUT BRG IN-SX	REQRD BRG IN-SX
19	1646	0	1646	0	0	5-8	5-8
12	1646	0	1646	0	0	5-8	5-8

UNFACTORED REACTIONS

JT	1ST LCASE COMBINED	MAX./MIN. COMPONENT REACTIONS SNOW	LIVE	PERM.LIVE	WIND	DEAD	SOIL
19	1153	820 / 0	0 / 0	0 / 0	0 / 0	333 / 0	0 / 0
12	1153	820 / 0	0 / 0	0 / 0	0 / 0	333 / 0	0 / 0

BEARING MATERIAL TO BE SPF NO.2 OR BETTER AT JOINT(S) 19, 12

BRACING

TOP CHORD TO BE SHEATHED OR MAX. PURLIN SPACING = 4.25 FT.
MAX. UNBRACED BOTTOM CHORD LENGTH = 10.00 FT. OR RIGID CEILING DIRECTLY APPLIED.

ALL PITCH BREAKS AND PERIMETER CORNER JOINTS MUST BE LATERALLY RESTRAINED.

1 - 2x3 SPF No.2 LATERAL BRACE(S) AT 1/ 2 LENGTH OF 7-15, 5-15. DBS = 20-0-0 . CBF = 79 LBS.

DBS = DIAGONAL BRACE SPACING (MAX). CBF = CUMULATIVE BRACING FORCE. FASTEN LATERAL BRACE(S) USING (0.122"X3") SPIRAL NAILS : 1 NAIL FOR 2x3 BRACE(S), 2 FOR 1x4, 2x4, 2x5, 3 FOR 2x6, 4 FOR 2x8, 5 FOR 2x10, AND 6 FOR 2x12.

END VERTICAL(S) MUST BE SHEATHED OR HAVE BRACES AS INDICATED IN THE MAX. UNBRACED LENGTH COLUMN OF THE TABLE BELOW

LOADING

TOTAL LOAD CASES: (4)

CHORDS

MEMB. FR-TO	MAX. FACTORED FORCE (LBS)	FACTORED VERT. LOAD LC1 (PLF) FROM	TO	MAX CSI (LC)	MAX. UNBRAC LENGTH
1- 2	0 / 23	-77.4	-77.4	0.10 (1)	10.00
2- 3	-2242 / 0	-77.4	-77.4	0.37 (1)	4.25
3- 4	-2022 / 0	-77.4	-77.4	0.30 (1)	4.50
4- 5	-2022 / 0	-77.4	-77.4	0.30 (1)	4.50
5- 6	-1582 / 0	-77.4	-77.4	0.29 (1)	4.96
6- 7	-1582 / 0	-77.4	-77.4	0.29 (1)	4.96
7- 8	-2022 / 0	-77.4	-77.4	0.30 (1)	4.50
8- 9	-2022 / 0	-77.4	-77.4	0.30 (1)	4.50
9-10	-2242 / 0	-77.4	-77.4	0.37 (1)	4.25
10-11	0 / 23	-77.4	-77.4	0.10 (1)	10.00
19- 2	-1604 / 0	0.0	0.0	0.16 (1)	6.52
12-10	-1604 / 0	0.0	0.0	0.16 (1)	6.52
19-18	0 / 0	-17.5	-17.5	0.12 (4)	10.00
18-17	0 / 2021	-17.5	-17.5	0.37 (1)	10.00
17-16	0 / 1809	-17.5	-17.5	0.35 (1)	10.00
16-15	0 / 1809	-17.5	-17.5	0.35 (1)	10.00
15-14	0 / 1809	-17.5	-17.5	0.35 (1)	10.00
14-13	0 / 2021	-17.5	-17.5	0.37 (1)	10.00
13-12	0 / 0	-17.5	-17.5	0.12 (4)	10.00

WEBS

MEMB. FR-TO	MAX. FACTORED FORCE (LBS)	MAX CSI (LC)
15- 6	0 / 1064	0.24 (1)
15- 7	-633 / 0	0.29 (1)
14- 7	0 / 235	0.05 (1)
14- 9	-257 / 0	0.19 (1)
13- 9	-210 / 28	0.05 (1)
5-15	-633 / 0	0.29 (1)
17- 5	0 / 235	0.05 (1)
3-17	-257 / 0	0.19 (1)
18- 3	-210 / 28	0.05 (1)
2-18	0 / 2045	0.46 (1)
13-10	0 / 2045	0.46 (1)

DESIGN CRITERIA

SPECIFIED LOADS:

TOP	CH.	LL	=	23.3	PSF
		DL	=	3.0	PSF
BOT	CH.	LL	=	0.0	PSF
		DL	=	7.0	PSF
TOTAL	LOAD		=	33.3	PSF

SPACING = 24.0 IN. C/C

THIS TRUSS IS DESIGNED FOR RESIDENTIAL OR SMALL BUILDING REQUIREMENTS OF PART 9, NBCC 2010

THIS DESIGN COMPLIES WITH:
- PART 9 OF OBC 2012 , BCBC 2012 , ABC 2014
- CSA 086-09
- TPIC 2011

(55 % OF 27.2 P.S.F. G.S.L. PLUS 8.4 P.S.F. RAIN LOAD) EQUALS 23.3 P.S.F. SPECIFIED ROOF LIVE LOAD

ALLOWABLE DEFL.(LL)= L/360 (1.08")
CALCULATED VERT. DEFL.(LL) = L/ 999 (0.11")
ALLOWABLE DEFL.(TL)= L/360 (1.08")
CALCULATED VERT. DEFL.(TL) = L/ 999 (0.20")

CSI: TC=0.37 (9-10:1) , BC=0.37 (17-18:1) , WB=0.46 (2-18:1) , SSI=0.18 (9-10:1)

DOL LUMBER=1.00 NAIL=1.00 LS BEND=1.10 COMP=1.10 SHEAR=1.10 TENS= 1.10

COMPANION LIVE LOAD FACTOR = 0.50

TRUSS PLATE MANUFACTURER IS NOT RESPONSIBLE FOR QUALITY CONTROL IN THE TRUSS MANUFACTURING PLANT .

NAIL VALUES

PLATE	GRIP(DRY) (PSI) MAX	MIN	SHEAR (PLI) MAX	MIN	SECTION (PLI) MAX	MIN
MT20	618	354	1667	822	2284	1656

PLATE PLACEMENT TOL. = 0.250 inches

PLATE ROTATION TOL. = 5.0 Deg.

JSI GRIP= 0.88 (13) (INPUT = 0.90)
JSI METAL= 0.61 (18) (INPUT = 1.00)

LICENSED PROFESSIONAL ENGINEER
P.M. TREVISAN
100136551
March 16th, 2017
PROVINCE OF ONTARIO

RECEIVED
TOWN OF MILTON
MAR 29, 2017
17-5327
BUILDING DIVISION

KOTT

JOB NAME	TRUSS NAME	QUANTITY	PLY	JOB DESC.	DRWG NO.
PT0317-093	T57	5	1	TRUSS DESC. LECCO RIDGE-BLOCK 343	

KOTT , Stouffville, ON, CGC

Version 8.100 S Feb 9 2017 MiTek Industries, Inc. Thu Mar 16 07:55:21 2017 Page 1
ID:EvTixTQDI5yR1QLotZTBr_yE?HJ-2I1TiSTquLfLCdHHfzGOrpJIBWcT4qE9NrX5oozaRHK

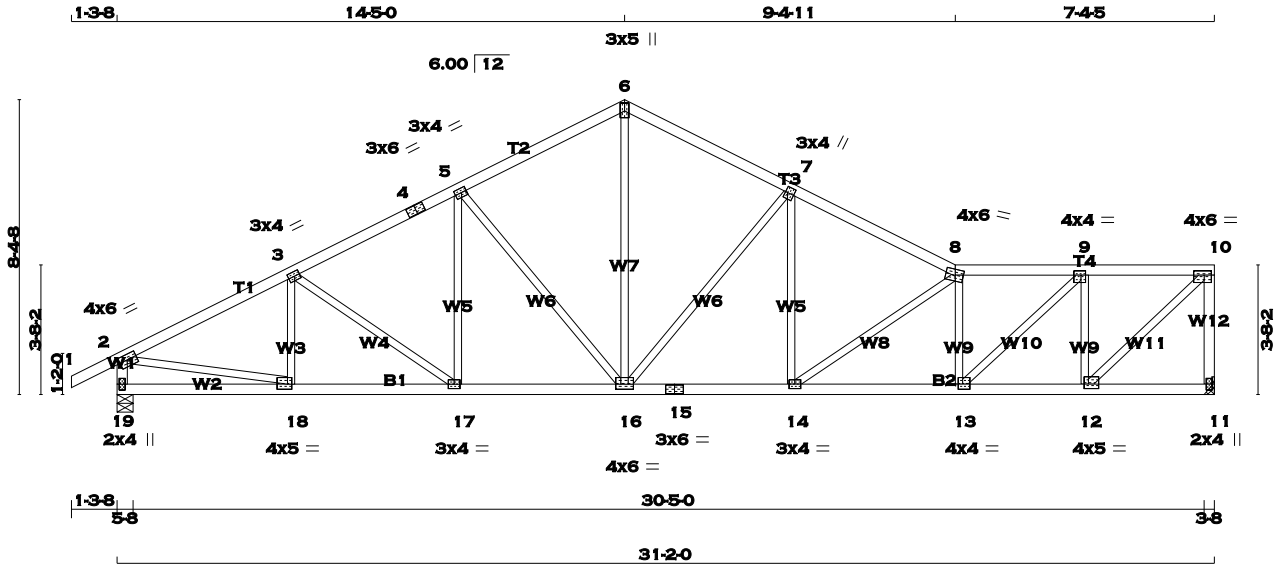

TOTAL WEIGHT = 5 X 135 = 675 lb
[M][F]

LUMBER
N. L. G. A. RULES

CHORDS	SIZE		LUMBER	DESCR.
1 - 4	2x4	DRY	No.2	SPF
4 - 6	2x4	DRY	No.2	SPF
6 - 8	2x4	DRY	No.2	SPF
8 - 10	2x4	DRY	No.2	SPF
11 - 10	2x4	DRY	No.2	SPF
19 - 2	2x4	DRY	No.2	SPF
19 - 15	2x4	DRY	No.2	SPF
15 - 11	2x4	DRY	No.2	SPF
ALL WEBS EXCEPT	2x3	DRY	No.2	SPF

DRY: SEASONED LUMBER.

PLATES (table is in inches)

JT	TYPE	PLATES	W	LEN	Y	X
2	TMVW-t	MT20	4.0	6.0	1.75	2.75
3	TMWW-t	MT20	3.0	4.0	1.50	1.75
4	TS-t	MT20	3.0	6.0		
5	TMWW-t	MT20	3.0	4.0	1.50	1.75
6	TTW+p	MT20	3.0	5.0	2.75	1.50
7	TMWW+t	MT20	3.0	4.0	2.00	0.75
8	TTWW-m	MT20	4.0	6.0	2.00	2.75
9	TMWW-t	MT20	4.0	4.0	1.50	1.50
10	TMVW-t	MT20	4.0	6.0	1.50	2.50
11	BMV1+p	MT20	2.0	4.0		
12	BMWW-t	MT20	4.0	5.0	1.50	1.50
13	BMWW-t	MT20	4.0	4.0	1.75	1.50
14	BMWW-t	MT20	3.0	4.0		
15	BS-t	MT20	3.0	6.0		
16	BMWWW-t	MT20	4.0	6.0	1.75	3.00
17	BMWW-t	MT20	3.0	4.0		
18	BMWW-t	MT20	4.0	5.0	1.75	1.50
19	BMV1+p	MT20	2.0	4.0		

A SIZE FOR SIZE SUBSTITUTION OF MITEK MII20 WITH TEE-LOK TL20 PLATES IS ALLOWED.

DIMENSIONS, SUPPORTS AND LOADINGS SPECIFIED BY FABRICATOR TO BE VERIFIED BY BUILDING DESIGNER

BEARINGS

JT	FACTORED GROSS REACTION VERT	HORZ	MAXIMUM FACTORED GROSS REACTION DOWN	HORZ	UPLIFT	INPUT BRG IN-SX	REQRD BRG IN-SX
11	1478	0	1478	0	0	HANGER BY OTHERS MIN. SEAT SIZE: 3-8	
19	1583	0	1583	0	0	5-8	5-8

UNFACTORED REACTIONS

JT	1ST LCASE COMBINED	SNOW	MAX./MIN. COMPONENT REACTIONS LIVE	PERM.LIVE	WIND	DEAD	SOIL
11	1037	726 / 0	0 / 0	0 / 0	0 / 0	312 / 0	0 / 0
19	1109	789 / 0	0 / 0	0 / 0	0 / 0	320 / 0	0 / 0

BEARING MATERIAL TO BE SPF NO.2 OR BETTER AT JOINT(S) 19

BRACING
TOP CHORD TO BE SHEATHED OR MAX. PURLIN SPACING = 4.27 FT.
MAX. UNBRACED BOTTOM CHORD LENGTH = 10.00 FT. OR RIGID CEILING DIRECTLY APPLIED.

ALL PITCH BREAKS AND PERIMETER CORNER JOINTS MUST BE LATERALLY RESTRAINED.

LOADING
TOTAL LOAD CASES: (4)

CHORDS

MEMB. FR-TO	MAX. FACTORED FORCE (LBS)	VERT. LOAD LC1 (PLF) FROM	TO	MAX CSI (LC)	MAX. UNBRAC LENGTH
1- 2	0 / 23	-77.4	-77.4	0.10 (1)	10.00
2- 3	-2112 / 0	-77.4	-77.4	0.28 (1)	4.43
3- 4	-1972 / 0	-77.4	-77.4	0.23 (1)	4.61
4- 5	-1972 / 0	-77.4	-77.4	0.23 (1)	4.61
5- 6	-1608 / 0	-77.4	-77.4	0.23 (1)	5.00
6- 7	-1611 / 0	-77.4	-77.4	0.25 (1)	4.97
7- 8	-2164 / 0	-77.4	-77.4	0.28 (1)	4.39
8- 9	-2431 / 0	-77.4	-77.4	0.19 (1)	4.27
9-10	-1455 / 0	-77.4	-77.4	0.14 (1)	5.29
11-10	-1450 / 0	0.0	0.0	0.30 (1)	6.79
19- 2	-1544 / 0	0.0	0.0	0.16 (1)	6.62
19-18	0 / 0	-17.5	-17.5	0.09 (4)	10.00
18-17	0 / 1903	-17.5	-17.5	0.34 (1)	10.00
17-16	0 / 1764	-17.5	-17.5	0.33 (1)	10.00
16-15	0 / 1954	-17.5	-17.5	0.36 (1)	10.00
15-14	0 / 1954	-17.5	-17.5	0.36 (1)	10.00
14-13	0 / 2458	-17.5	-17.5	0.45 (1)	10.00
13-12	0 / 1455	-17.5	-17.5	0.26 (1)	10.00
12-11	0 / 0	-17.5	-17.5	0.05 (4)	10.00

WEBS

MEMB. FR-TO	MAX. FACTORED FORCE (LBS)	MAX CSI (LC)
18- 3	-241 / 8	0.05 (1)
3-17	-170 / 0	0.10 (1)
17- 5	0 / 178	0.04 (4)
5-16	-531 / 0	0.57 (1)
16- 6	0 / 1134	0.26 (1)
16- 7	-829 / 0	0.89 (1)
14- 7	0 / 451	0.10 (1)
14- 8	-622 / 0	0.36 (1)
13- 8	-863 / 0	0.19 (1)
13- 9	0 / 1345	0.30 (1)
12- 9	-1267 / 0	0.28 (1)
12-10	0 / 1977	0.44 (1)
2-18	0 / 1931	0.43 (1)

DESIGN CRITERIA

SPECIFIED LOADS:

TOP	CH.	LL	=	23.3	PSF
		DL	=	3.0	PSF
BOT	CH.	LL	=	0.0	PSF
		DL	=	7.0	PSF
TOTAL	LOAD		=	33.3	PSF

SPACING = 24.0 IN. C/C

LOADING IN ALL FLAT SECTIONS BASED ON A SLOPE OF 6.00/12

THIS TRUSS IS DESIGNED FOR RESIDENTIAL OR SMALL BUILDING REQUIREMENTS OF PART 9, NBCC 2010

THIS DESIGN COMPLIES WITH:
- PART 9 OF OBC 2012 , BCBC 2012 , ABC 2014
- CSA 086-09
- TPIC 2011

(55 % OF 27.2 P.S.F. G.S.L. PLUS 8.4 P.S.F. RAIN LOAD) EQUALS 23.3 P.S.F. SPECIFIED ROOF LIVE LOAD

ALLOWABLE DEFL.(LL)= L/360 (1.04")
CALCULATED VERT. DEFL.(LL) = L/ 999 (0.13")
ALLOWABLE DEFL.(TL)= L/360 (1.04")
CALCULATED VERT. DEFL.(TL) = L/ 999 (0.23")

CSI: TC=0.30 (10-11:1) , BC=0.45 (13-14:1) , WB=0.89 (7-16:1) , SSI=0.16 (6-7:1)

DOL LUMBER=1.00 NAIL=1.00 LS BEND=1.10 COMP=1.10 SHEAR=1.10 TENS= 1.10

COMPANION LIVE LOAD FACTOR = 0.50

TRUSS PLATE MANUFACTURER IS NOT RESPONSIBLE FOR QUALITY CONTROL IN THE TRUSS MANUFACTURING PLANT .

NAIL VALUES

PLATE	GRIP(DRY) (PSI) MAX	MIN	SHEAR (PLI) MAX	MIN	SECTION (PLI) MAX	MIN
MT20	618	354	1667	822	2284	1656

PLATE PLACEMENT TOL. = 0.250 inches

PLATE ROTATION TOL. = 5.0 Deg.

JSI GRIP= 0.90 (14) (INPUT = 0.90)
JSI METAL= 0.57 (18) (INPUT = 1.00)

LICENSED PROFESSIONAL ENGINEER
P.M. TREVISAN
100136551
March 16th, 2017
PROVINCE OF ONTARIO

RECEIVED
TOWN OF MILTON
MAR 29, 2017
17-5327
BUILDING DIVISION

KOTT

JOB NAME	TRUSS NAME	QUANTITY	PLY	JOB DESC.	DRWG NO.
PT0317-093	T59	1	1	TRUSS DESC. LECCO RIDGE-BLOCK 343	

KOTT , Stouffville, ON, CGC

Version 8.100 S Feb 9 2017 MiTek Industries, Inc. Thu Mar 16 07:55:21 2017 Page 1
ID:EvTixTQDI5yR1QLotZTBr_yE?HJ-2I1TiSTquLfLCdHHfzGOrpJHTWYH4pL9NrX5oozaRHK

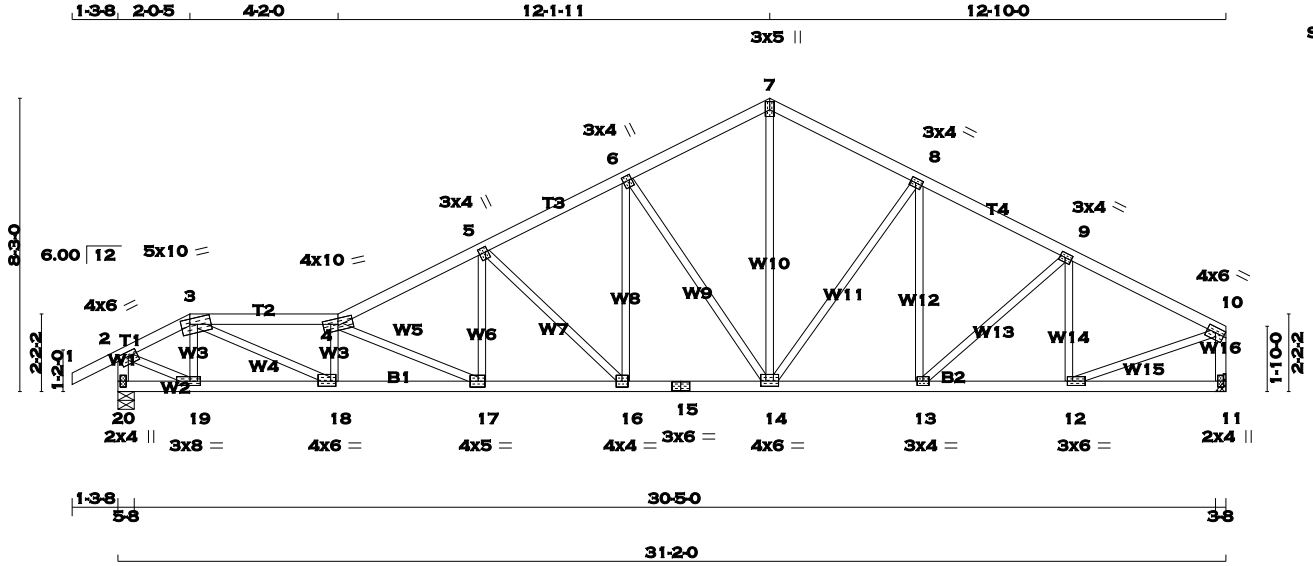

TOTAL WEIGHT = 135 lb

LUMBER
N. L. G. A. RULES

CHORDS	SIZE		LUMBER	DESCR.
1 - 3	2x4	DRY	No.2	SPF
3 - 4	2x4	DRY	No.2	SPF
4 - 7	2x4	DRY	No.2	SPF
7 - 10	2x4	DRY	No.2	SPF
20 - 2	2x4	DRY	No.2	SPF
11 - 10	2x4	DRY	No.2	SPF
20 - 15	2x4	DRY	No.2	SPF
15 - 11	2x4	DRY	No.2	SPF
ALL WEBS EXCEPT	2x3	DRY	No.2	SPF

DRY: SEASONED LUMBER.

PLATES (table is in inches)

JT	TYPE	PLATES	W	LEN	Y	X
2	TMVW-t	MT20	4.0	6.0	1.50	3.00
3	TTWW-m	MT20	5.0	10.0	1.75	3.00
4	TTWW-m	MT20	4.0	10.0		
5	TMWW+t	MT20	3.0	4.0	1.75	0.75
6	TMWW+t	MT20	3.0	4.0	1.75	0.75
7	TTW+p	MT20	3.0	5.0	2.75	1.50
8	TMWW-t	MT20	3.0	4.0	1.50	1.75
9	TMWW-t	MT20	3.0	4.0	1.50	1.75
10	TMVW-t	MT20	4.0	6.0	1.75	Edge
11	BMV1+p	MT20	2.0	4.0		
12	BMWW-t	MT20	3.0	6.0	1.50	1.75
13	BMWW-t	MT20	3.0	4.0		
14	BMWWW-t	MT20	4.0	6.0	1.75	3.00
15	BS-t	MT20	3.0	6.0		
16	BMWW-t	MT20	4.0	4.0		
17	BMWW-t	MT20	4.0	5.0	2.00	2.25
18	BMWW-t	MT20	4.0	6.0	1.75	1.75
19	BMWW-t	MT20	3.0	8.0	1.50	3.50
20	BMV1+p	MT20	2.0	4.0		

Edge - INDICATES REFERENCE CORNER OF PLATE TOUCHES EDGE OF CHORD.

A SIZE FOR SIZE SUBSTITUTION OF MITEK MII20 WITH TEE-LOK TL20 PLATES IS ALLOWED.

DIMENSIONS, SUPPORTS AND LOADINGS SPECIFIED BY FABRICATOR TO BE VERIFIED BY BUILDING DESIGNER

BEARINGS

JT	FACTORED GROSS REACTION VERT	HORZ	MAXIMUM FACTORED GROSS REACTION DOWN	HORZ	UPLIFT	INPUT BRG IN-SX	REQRD BRG IN-SX
20	1583	0	1583	0	0	5-8	5-8
11	1478	0	1478	0	0	HANGER BY OTHERS	
						MIN. SEAT SIZE: 3-8	

UNFACTORED REACTIONS

JT	1ST LCASE COMBINED	MAX./MIN. COMPONENT REACTIONS SNOW	LIVE	PERM.LIVE	WIND	DEAD	SOIL
20	1109	789 / 0	0 / 0	0 / 0	0 / 0	320 / 0	0 / 0
11	1037	726 / 0	0 / 0	0 / 0	0 / 0	312 / 0	0 / 0

BEARING MATERIAL TO BE SPF NO.2 OR BETTER AT JOINT(S) 20

BRACING
TOP CHORD TO BE SHEATHED OR MAX. PURLIN SPACING = 3.36 FT.
MAX. UNBRACED BOTTOM CHORD LENGTH = 10.00 FT. OR RIGID CEILING DIRECTLY APPLIED.

ALL PITCH BREAKS AND PERIMETER CORNER JOINTS MUST BE LATERALLY RESTRAINED.

LOADING
TOTAL LOAD CASES: (4)

CHORDS

MEMB. FR-TO	MAX. FORCE (LBS)	FACTORED VERT. LOAD LC1 (PLF) FROM	TO	MAX CSI (LC)	MAX. UNBRAC LENGTH
1- 2	0 / 23	-77.4	-77.4	0.10 (1)	10.00
2- 3	-1734 / 0	-77.4	-77.4	0.07 (1)	5.02
3- 4	-3812 / 0	-77.4	-77.4	0.35 (1)	3.36
4- 5	-2943 / 0	-77.4	-77.4	0.25 (1)	3.89
5- 6	-2184 / 0	-77.4	-77.4	0.18 (1)	4.47
6- 7	-1589 / 0	-77.4	-77.4	0.17 (1)	5.09
7- 8	-1589 / 0	-77.4	-77.4	0.18 (1)	5.08
8- 9	-1794 / 0	-77.4	-77.4	0.18 (1)	4.84
9-10	-1711 / 0	-77.4	-77.4	0.21 (1)	4.91
20- 2	-1588 / 0	0.0	0.0	0.16 (1)	6.55
11-10	-1444 / 0	0.0	0.0	0.16 (1)	6.80
20-19	0 / 0	-17.5	-17.5	0.07 (1)	10.00
19-18	0 / 1520	-17.5	-17.5	0.33 (1)	10.00
18-17	0 / 3869	-17.5	-17.5	0.72 (1)	10.00
17-16	0 / 2646	-17.5	-17.5	0.46 (1)	10.00
16-15	0 / 1954	-17.5	-17.5	0.36 (1)	10.00
15-14	0 / 1954	-17.5	-17.5	0.36 (1)	10.00
14-13	0 / 1603	-17.5	-17.5	0.30 (1)	10.00
13-12	0 / 1543	-17.5	-17.5	0.28 (1)	10.00
12-11	0 / 0	-17.5	-17.5	0.07 (4)	10.00

WEBS

MEMB. FR-TO	MAX. FORCE (LBS)	MAX CSI (LC)
19- 3	-519 / 0	0.08 (1)
3-18	0 / 2525	0.57 (1)
18- 4	-1041 / 0	0.16 (1)
4-17	-1349 / 0	0.46 (1)
17- 5	0 / 667	0.15 (1)
5-16	-961 / 0	0.51 (1)
16- 6	0 / 725	0.16 (1)
6-14	-964 / 0	0.95 (1)
14- 7	0 / 1148	0.26 (1)
14- 8	-331 / 0	0.33 (1)
13- 8	0 / 63	0.02 (4)
13- 9	0 / 81	0.02 (1)
12- 9	-451 / 0	0.11 (1)
2-19	0 / 1669	0.38 (1)
12-10	0 / 1632	0.37 (1)

DESIGN CRITERIA

SPECIFIED LOADS:

TOP	CH.	LL	=	23.3	PSF
		DL	=	3.0	PSF
BOT	CH.	LL	=	0.0	PSF
		DL	=	7.0	PSF
TOTAL	LOAD		=	33.3	PSF

SPACING = 24.0 IN. C/C

LOADING IN ALL FLAT SECTIONS BASED ON A SLOPE OF 6.00/12

THIS TRUSS IS DESIGNED FOR RESIDENTIAL OR SMALL BUILDING REQUIREMENTS OF PART 9, NBCC 2010

THIS DESIGN COMPLIES WITH:
- PART 9 OF OBC 2012 , BCBC 2012 , ABC 2014
- CSA 086-09
- TPIC 2011

(55 % OF 27.2 P.S.F. G.S.L. PLUS 8.4 P.S.F. RAIN LOAD) EQUALS 23.3 P.S.F. SPECIFIED ROOF LIVE LOAD

ALLOWABLE DEFL.(LL)= L/360 (1.04")
CALCULATED VERT. DEFL.(LL) = L/ 999 (0.19")
ALLOWABLE DEFL.(TL)= L/360 (1.04")
CALCULATED VERT. DEFL.(TL) = L/ 999 (0.35")

CSI: TC=0.35 (3-4:1) , BC=0.72 (17-18:1) , WB=0.95 (6-14:1) , SSI=0.14 (9-10:1)

DOL LUMBER=1.00 NAIL=1.00 LS BEND=1.10 COMP=1.10 SHEAR=1.10 TENS= 1.10

COMPANION LIVE LOAD FACTOR = 0.50

TRUSS PLATE MANUFACTURER IS NOT RESPONSIBLE FOR QUALITY CONTROL IN THE TRUSS MANUFACTURING PLANT .

NAIL VALUES

PLATE	GRIP(DRY) (PSI) MAX	MIN	SHEAR (PLI) MAX	MIN	SECTION (PLI) MAX	MIN
MT20	618	354	1667	822	2284	1656

PLATE PLACEMENT TOL. = 0.250 inches

PLATE ROTATION TOL. = 5.0 Deg.

JSI GRIP= 0.90 (3) (INPUT = 0.90)
JSI METAL= 0.59 (18) (INPUT = 1.00)

LICENSED PROFESSIONAL ENGINEER
P.M. TREVISAN
100136551
March 16th, 2017
PROVINCE OF ONTARIO

RECEIVED
TOWN OF MILTON
MAR 29, 2017
17-5327
BUILDING DIVISION

KOTT

JOB NAME	TRUSS NAME	QUANTITY	PLY	JOB DESC.	DRWG NO.
PT0317-093	T60	1	1	TRUSS DESC. LECCO RIDGE-BLOCK 343	

KOTT , Stouffville, ON, CGC

Version 8.100 S Feb 9 2017 MiTek Industries, Inc. Thu Mar 16 07:55:22 2017 Page 1
ID:EvTixTQDI5yR1QLotZTBr_yE?HJ-WVarvoUSffnCqnsTDgndO0rT8wxVpLOIcVGeKEzaRHJ

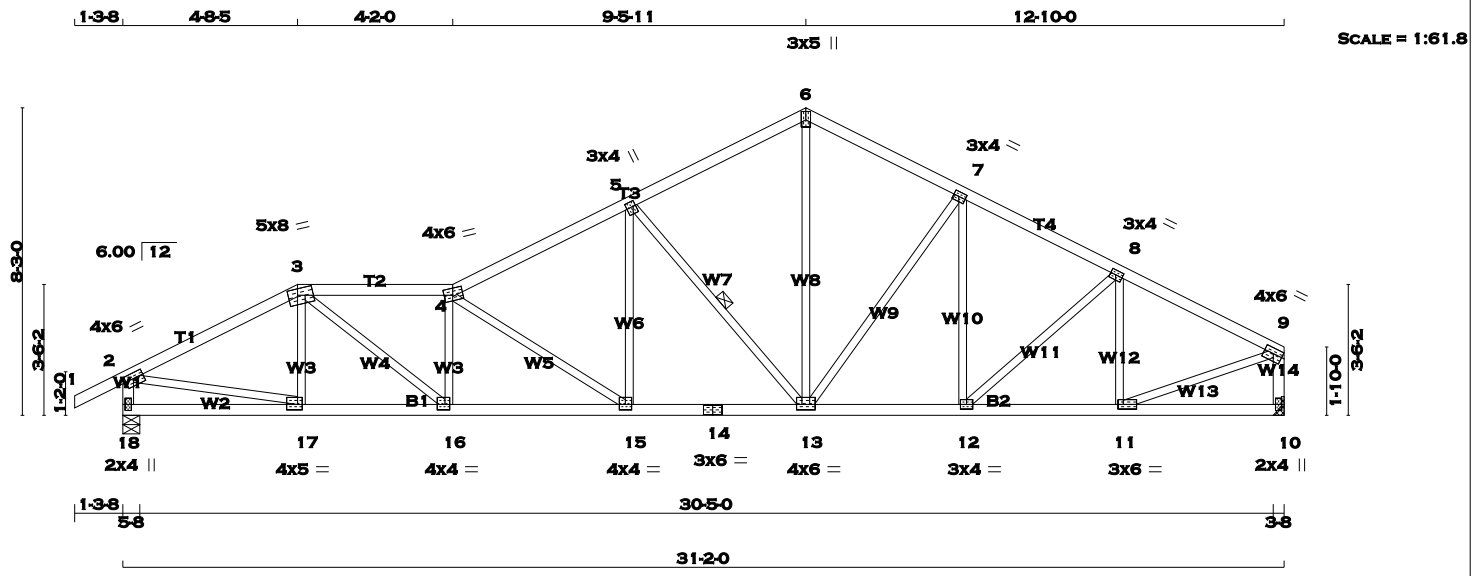

TOTAL WEIGHT = 133 lb

[M][F]

LUMBER

N. L. G. A. RULES

CHORDS	SIZE		LUMBER	DESCR.
1 - 3	2x4	DRY	No.2	SPF
3 - 4	2x4	DRY	No.2	SPF
4 - 6	2x4	DRY	No.2	SPF
6 - 9	2x4	DRY	No.2	SPF
18 - 2	2x4	DRY	No.2	SPF
10 - 9	2x4	DRY	No.2	SPF
18 - 14	2x4	DRY	No.2	SPF
14 - 10	2x4	DRY	No.2	SPF
ALL WEBS EXCEPT	2x3	DRY	No.2	SPF

DRY: SEASONED LUMBER.

PLATES (table is in inches)

JT	TYPE	PLATES	W	LEN	Y	X
2	TMVW-t	MT20	4.0	6.0	1.75	2.75
3	TTWW-m	MT20	5.0	8.0	2.00	3.00
4	TTWW-m	MT20	4.0	6.0	2.25	2.75
5	TMWW+t	MT20	3.0	4.0	1.75	0.75
6	TTW+p	MT20	3.0	5.0	2.75	1.50
7	TMWW-t	MT20	3.0	4.0	1.50	1.75
8	TMWW-t	MT20	3.0	4.0	1.50	1.75
9	TMVW-t	MT20	4.0	6.0	1.75	Edge
10	BMV1+p	MT20	2.0	4.0		
11	BMWW-t	MT20	3.0	6.0	1.50	1.75
12	BMWW-t	MT20	3.0	4.0		
13	BMWWW-t	MT20	4.0	6.0	1.75	3.00
14	BS-t	MT20	3.0	6.0		
15	BMWW-t	MT20	4.0	4.0	1.75	2.00
16	BMWW-t	MT20	4.0	4.0	1.75	1.50
17	BMWW-t	MT20	4.0	5.0	1.75	1.50
18	BMV1+p	MT20	2.0	4.0		

Edge - INDICATES REFERENCE CORNER OF PLATE TOUCHES EDGE OF CHORD.

A SIZE FOR SIZE SUBSTITUTION OF MITEK MII20 WITH TEE-LOK TL20 PLATES IS ALLOWED.

DIMENSIONS, SUPPORTS AND LOADINGS SPECIFIED BY FABRICATOR TO BE VERIFIED BY BUILDING DESIGNER

BEARINGS

JT	FACTORED GROSS REACTION VERT	HORZ	MAXIMUM FACTORED GROSS REACTION DOWN	HORZ	UPLIFT	INPUT BRG IN-SX	REQRD BRG IN-SX
18	1583	0	1583	0	0	5-8	5-8
10	1478	0	1478	0	0	HANGER BY OTHERS	
						MIN. SEAT SIZE: 3-8	

UNFACTORED REACTIONS

JT	1ST LCASE COMBINED	MAX./MIN. COMPONENT REACTIONS SNOW	LIVE	PERM.LIVE	WIND	DEAD	SOIL
18	1109	789 / 0	0 / 0	0 / 0	0 / 0	320 / 0	0 / 0
10	1037	726 / 0	0 / 0	0 / 0	0 / 0	312 / 0	0 / 0

BEARING MATERIAL TO BE SPF NO.2 OR BETTER AT JOINT(S) 18

BRACING

TOP CHORD TO BE SHEATHED OR MAX. PURLIN SPACING = 3.88 FT.
MAX. UNBRACED BOTTOM CHORD LENGTH = 10.00 FT. OR RIGID CEILING DIRECTLY APPLIED.

ALL PITCH BREAKS AND PERIMETER CORNER JOINTS MUST BE LATERALLY RESTRAINED.

1 - 2x3 SPF No.2 LATERAL BRACE(S) AT 1/ 2 LENGTH OF 5-13. DBS = 14-0-0 . CBF = 90 LBS.

DBS = DIAGONAL BRACE SPACING (MAX). CBF = CUMULATIVE BRACING FORCE. FASTEN LATERAL BRACE(S) USING (0.122"X3") SPIRAL NAILS : 1 NAIL FOR 2x3 BRACE(S), 2 FOR 1x4, 2x4, 2x5, 3 FOR 2x6, 4 FOR 2x8, 5 FOR 2x10, AND 6 FOR 2x12.

END VERTICAL(S) MUST BE SHEATHED OR HAVE BRACES AS INDICATED IN THE MAX. UNBRACED LENGTH COLUMN OF THE TABLE BELOW

LOADING

TOTAL LOAD CASES: (4)

CHORDS

MEMB. FR-TO	MAX. FACTORED FORCE (LBS)	FACTORED VERT. LOAD (PLF) FROM	TO	LC1	MAX CSI (LC)	MAX. UNBRAC LENGTH
1- 2	0 / 23	-77.4	-77.4	0.10 (1)	10.00	
2- 3	-2073 / 0	-77.4	-77.4	0.28 (1)	4.46	
3- 4	-2891 / 0	-77.4	-77.4	0.27 (1)	3.88	
4- 5	-2299 / 0	-77.4	-77.4	0.29 (1)	4.27	
5- 6	-1595 / 0	-77.4	-77.4	0.25 (1)	4.99	
6- 7	-1589 / 0	-77.4	-77.4	0.18 (1)	5.08	
7- 8	-1794 / 0	-77.4	-77.4	0.18 (1)	4.84	
8- 9	-1711 / 0	-77.4	-77.4	0.21 (1)	4.91	
18- 2	-1547 / 0	0.0	0.0	0.16 (1)	6.62	
10- 9	-1444 / 0	0.0	0.0	0.16 (1)	6.80	
18-17	0 / 0	-17.5	-17.5	0.08 (4)	10.00	
17-16	0 / 1845	-17.5	-17.5	0.34 (1)	10.00	
16-15	0 / 2915	-17.5	-17.5	0.53 (1)	10.00	
15-14	0 / 2074	-17.5	-17.5	0.38 (1)	10.00	
14-13	0 / 2074	-17.5	-17.5	0.38 (1)	10.00	
13-12	0 / 1603	-17.5	-17.5	0.30 (1)	10.00	
12-11	0 / 1543	-17.5	-17.5	0.28 (1)	10.00	
11-10	0 / 0	-17.5	-17.5	0.07 (4)	10.00	

WEBS

MEMB. FR-TO	MAX. FACTORED FORCE (LBS)	MAX CSI (LC)
17- 3	-240 / 0	0.05 (1)
3-16	0 / 1333	0.30 (1)
16- 4	-765 / 0	0.16 (1)
4-15	-1016 / 0	0.58 (1)
15- 5	0 / 658	0.15 (1)
5-13	-1026 / 0	0.37 (1)
13- 6	0 / 1135	0.26 (1)
13- 7	-331 / 0	0.33 (1)
12- 7	0 / 62	0.02 (4)
12- 8	0 / 81	0.02 (1)
11- 8	-451 / 0	0.11 (1)
2-17	0 / 1882	0.42 (1)
11- 9	0 / 1632	0.37 (1)

RECEIVED
TOWN OF MILTON
MAR 29, 2017
17-5327
BUILDING DIVISION

DESIGN CRITERIA

SPECIFIED LOADS:

TOP CH.	LL	=	23.3	PSF
	DL	=	3.0	PSF
BOT CH.	LL	=	0.0	PSF
	DL	=	7.0	PSF
TOTAL LOAD		=	33.3	PSF

SPACING = 24.0 IN. C/C

LOADING IN ALL FLAT SECTIONS BASED ON A SLOPE OF 6.00/12

THIS TRUSS IS DESIGNED FOR RESIDENTIAL OR SMALL BUILDING REQUIREMENTS OF PART 9, NBCC 2010

THIS DESIGN COMPLIES WITH:
- PART 9 OF OBC 2012 , BCBC 2012 , ABC 2014
- CSA 086-09
- TPIC 2011

(55 % OF 27.2 P.S.F. G.S.L. PLUS 8.4 P.S.F. RAIN LOAD) EQUALS 23.3 P.S.F. SPECIFIED ROOF LIVE LOAD

ALLOWABLE DEFL.(LL)= L/360 (1.04")
CALCULATED VERT. DEFL.(LL) = L/ 999 (0.15")
ALLOWABLE DEFL.(TL)= L/360 (1.04")
CALCULATED VERT. DEFL.(TL) = L/ 999 (0.27")

CSI: TC=0.29 (4-5:1) , BC=0.53 (15-16:1) , WB=0.58 (4-15:1) , SSI=0.16 (4-5:1)

DOL LUMBER=1.00 NAIL=1.00 LS BEND=1.10 COMP=1.10 SHEAR=1.10 TENS= 1.10

COMPANION LIVE LOAD FACTOR = 0.50

TRUSS PLATE MANUFACTURER IS NOT RESPONSIBLE FOR QUALITY CONTROL IN THE TRUSS MANUFACTURING PLANT .

NAIL VALUES

PLATE	GRIP(DRY) (PSI) MAX	MIN	SHEAR (PLI) MAX	MIN	SECTION (PLI) MAX	MIN
MT20	618	354	1667	822	2284	1656

PLATE PLACEMENT TOL. = 0.250 inches

PLATE ROTATION TOL. = 5.0 Deg.

JSI GRIP= 0.90 (11) (INPUT = 0.90)
JSI METAL= 0.56 (14) (INPUT = 1.00)

KOTT

JOB NAME	TRUSS NAME	QUANTITY	PLY	JOB DESC.	DRWG NO.
PT0317-093	**T61**	**1**	**1**	TRUSS DESC. LECCO RIDGE-BLOCK 343	

ENG JOB: PT0317-093

KOTT , Stouffville, ON, CGC

Version 8.100 S Feb 9 2017 MiTek Industries, Inc. Thu Mar 16 07:55:22 2017 Page 1

ID:EvTixTQDI5yR1QLotZTBr_yE?HJ-WVarvoUSffnCqnsTDgndO0rOrwyQpJjIcVGeKEzaRHJ

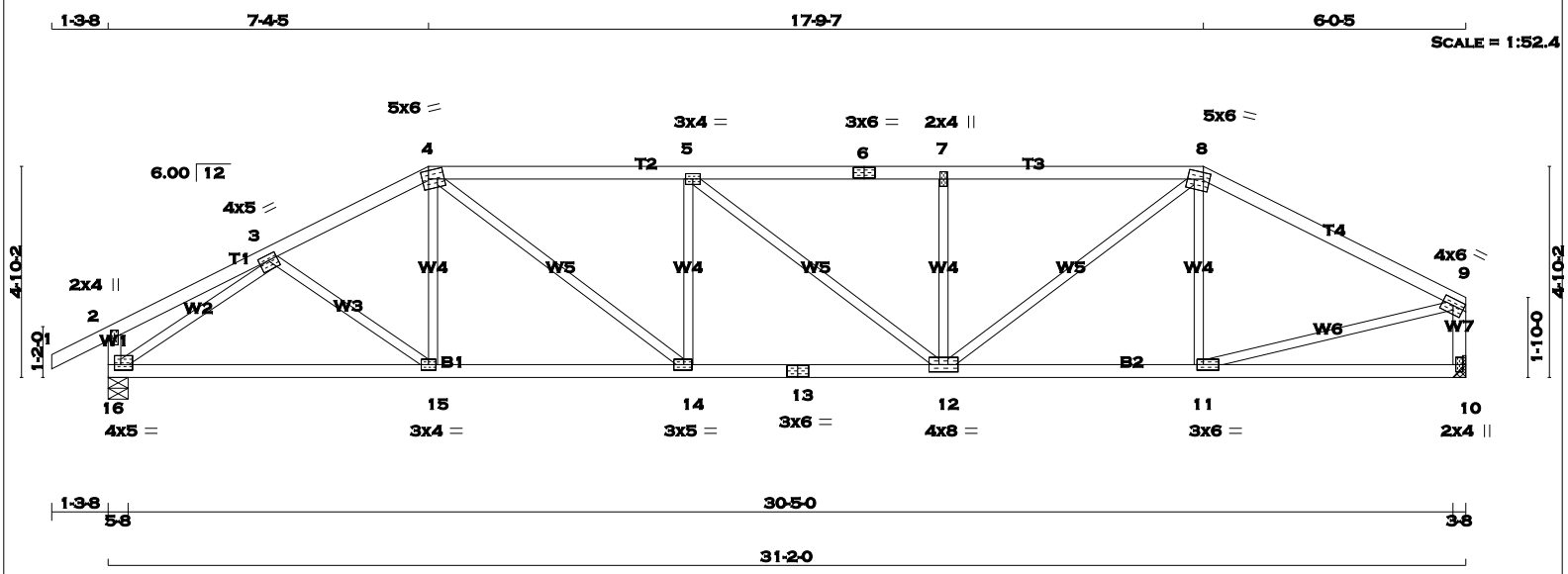

TOTAL WEIGHT = 120 lb [M]

LUMBER

N. L. G. A. RULES

CHORDS	SIZE		LUMBER	DESCR.
1 - 4	2x4	DRY	No.2	SPF
4 - 6	2x4	DRY	No.2	SPF
6 - 8	2x4	DRY	No.2	SPF
8 - 9	2x4	DRY	No.2	SPF
16 - 2	2x4	DRY	No.2	SPF
10 - 9	2x4	DRY	No.2	SPF
16 - 13	2x4	DRY	No.2	SPF
13 - 10	2x4	DRY	No.2	SPF
ALL WEBS EXCEPT	2x3	DRY	No.2	SPF

DRY: SEASONED LUMBER.

PLATES (table is in inches)

JT	TYPE	PLATES	W	LEN	Y	X
2	TMV+p	MT20	2.0	4.0		
3	TMWW-t	MT20	4.0	5.0	1.50	2.50
4	TTWW-m	MT20	5.0	6.0	2.25	1.75
5	TMWW-t	MT20	3.0	4.0		
6	TS-t	MT20	3.0	6.0		
7	TMW+w	MT20	2.0	4.0		
8	TTWW-m	MT20	5.0	6.0	1.75	1.75
9	TMVW-t	MT20	4.0	6.0	1.75	Edge
10	BMV1+p	MT20	2.0	4.0		
11	BMWW-t	MT20	3.0	6.0	1.50	1.75
12	BMWWW-t	MT20	4.0	8.0		
13	BS-t	MT20	3.0	6.0		
14	BMWW-t	MT20	3.0	5.0	1.50	2.25
15	BMWW-t	MT20	3.0	4.0		
16	BMVW1-t	MT20	4.0	5.0	1.50	1.75

Edge - INDICATES REFERENCE CORNER OF PLATE TOUCHES EDGE OF CHORD.

A SIZE FOR SIZE SUBSTITUTION OF MITEK MII20 WITH TEE-LOK TL20 PLATES IS ALLOWED.

DIMENSIONS, SUPPORTS AND LOADINGS SPECIFIED BY FABRICATOR TO BE VERIFIED BY BUILDING DESIGNER

BEARINGS

JT	FACTORED GROSS REACTION VERT	HORZ	MAXIMUM FACTORED GROSS REACTION DOWN	HORZ	UPLIFT	INPUT BRG IN-SX	REQRD BRG IN-SX
16	1583	0	1583	0	0	5-8	5-8
10	1478	0	1478	0	0	HANGER BY OTHERS	
						MIN. SEAT SIZE: 3-8	

UNFACTORED REACTIONS

JT	1ST LCASE COMBINED	SNOW	MAX./MIN. COMPONENT REACTIONS LIVE	PERM.LIVE	WIND	DEAD	SOIL
16	1109	789 / 0	0 / 0	0 / 0	0 / 0	320 / 0	0 / 0
10	1037	726 / 0	0 / 0	0 / 0	0 / 0	312 / 0	0 / 0

BEARING MATERIAL TO BE SPF NO.2 OR BETTER AT JOINT(S) 16

BRACING

TOP CHORD TO BE SHEATHED OR MAX. PURLIN SPACING = 3.84 FT.
MAX. UNBRACED BOTTOM CHORD LENGTH = 10.00 FT. OR RIGID CEILING DIRECTLY APPLIED.

ALL PITCH BREAKS AND PERIMETER CORNER JOINTS MUST BE LATERALLY RESTRAINED.

LOADING

TOTAL LOAD CASES: (4)

CHORDS MEMB. FR-TO	MAX. FORCE (LBS)	FACTORED VERT. LOAD (PLF) FROM	TO	LC1	MAX CSI (LC)	MAX. UNBRAC LENGTH	WEBS MEMB. FR-TO	MAX. FORCE (LBS)	MAX CSI (LC)
1- 2	0 / 23	-77.4	-77.4		0.10 (1)	10.00	3-15	0 / 81	0.03 (4)
2- 3	0 / 12	-77.4	-77.4		0.14 (1)	10.00	15- 4	0 / 107	0.04 (4)
3- 4	-2077 / 0	-77.4	-77.4		0.20 (1)	4.53	4-14	0 / 870	0.20 (1)
4- 5	-2539 / 0	-77.4	-77.4		0.54 (1)	3.84	14- 5	-434 / 0	0.15 (1)
5- 6	-2458 / 0	-77.4	-77.4		0.52 (1)	3.90	5-12	-103 / 0	0.11 (1)
6- 7	-2458 / 0	-77.4	-77.4		0.52 (1)	3.90	12- 7	-496 / 0	0.17 (1)
7- 8	-2458 / 0	-77.4	-77.4		0.52 (1)	3.91	12- 8	0 / 1085	0.24 (1)
8- 9	-1792 / 0	-77.4	-77.4		0.63 (1)	4.27	11- 8	-279 / 13	0.10 (1)
16- 2	-221 / 0	0.0	0.0		0.02 (1)	7.81	16- 3	-2214 / 0	0.75 (1)
10- 9	-1435 / 0	0.0	0.0		0.16 (1)	6.82	11- 9	0 / 1651	0.37 (1)
16-15	0 / 1786	-17.5	-17.5		0.40 (1)	10.00			
15-14	0 / 1848	-17.5	-17.5		0.41 (1)	10.00			
14-13	0 / 2539	-17.5	-17.5		0.47 (1)	10.00			
13-12	0 / 2539	-17.5	-17.5		0.47 (1)	10.00			
12-11	0 / 1595	-17.5	-17.5		0.34 (1)	10.00			
11-10	0 / 0	-17.5	-17.5		0.15 (4)	10.00			

DESIGN CRITERIA

SPECIFIED LOADS:

TOP	CH.	LL	=	23.3	PSF
		DL	=	3.0	PSF
BOT	CH.	LL	=	0.0	PSF
		DL	=	7.0	PSF
TOTAL	LOAD		=	33.3	PSF

SPACING = 24.0 IN. C/C

LOADING IN FLAT SECTION BASED ON A SLOPE OF 6.00/12

THIS TRUSS IS DESIGNED FOR RESIDENTIAL OR SMALL BUILDING REQUIREMENTS OF PART 9, NBCC 2010

THIS DESIGN COMPLIES WITH:
- PART 9 OF OBC 2012 , BCBC 2012 , ABC 2014
- CSA 086-09
- TPIC 2011

(55 % OF 27.2 P.S.F. G.S.L. PLUS 8.4 P.S.F. RAIN LOAD) EQUALS 23.3 P.S.F. SPECIFIED ROOF LIVE LOAD

ALLOWABLE DEFL.(LL)= L/360 (1.04")
CALCULATED VERT. DEFL.(LL) = L/ 999 (0.14")
ALLOWABLE DEFL.(TL)= L/360 (1.04")
CALCULATED VERT. DEFL.(TL) = L/ 999 (0.26")

CSI: TC=0.63 (8-9:1) , BC=0.47 (12-14:1) , WB=0.75 (3-16:1) , SSI=0.21 (4-5:1)

DOL LUMBER=1.00 NAIL=1.00 LS BEND=1.10 COMP=1.10 SHEAR=1.10 TENS= 1.10

COMPANION LIVE LOAD FACTOR = 0.50

TRUSS PLATE MANUFACTURER IS NOT RESPONSIBLE FOR QUALITY CONTROL IN THE TRUSS MANUFACTURING PLANT .

NAIL VALUES

PLATE	GRIP(DRY) (PSI) MAX	MIN	SHEAR (PLI) MAX	MIN	SECTION (PLI) MAX	MIN
MT20	618	354	1667	822	2284	1656

PLATE PLACEMENT TOL. = 0.250 inches

PLATE ROTATION TOL. = 5.0 Deg.

JSI GRIP= 0.90 (11) (INPUT = 0.90)
JSI METAL= 0.72 (13) (INPUT = 1.00)

LICENSED PROFESSIONAL ENGINEER
P.M. TREVISAN
100136551
March 16th, 2017
PROVINCE OF ONTARIO

RECEIVED
TOWN OF MILTON
MAR 29, 2017
17-5327
BUILDING DIVISION

KOTT

JOB NAME	TRUSS NAME	QUANTITY	PLY	JOB DESC.	DRWG NO.
PT0317-093	**T62**	**1**	**1**	TRUSS DESC. LECCO RIDGE-BLOCK 343	

KOTT , Stouffville, ON, CGC

Version 8.100 S Feb 9 2017 MiTek Industries, Inc. Thu Mar 16 07:55:23 2017 Page 1
ID:EvTixTQDI5yR1QLotZTBr_yE?HJ-_h8E68V5Qyv3RxQfmOIswEObMJK7YrsSr90CshzaRHI

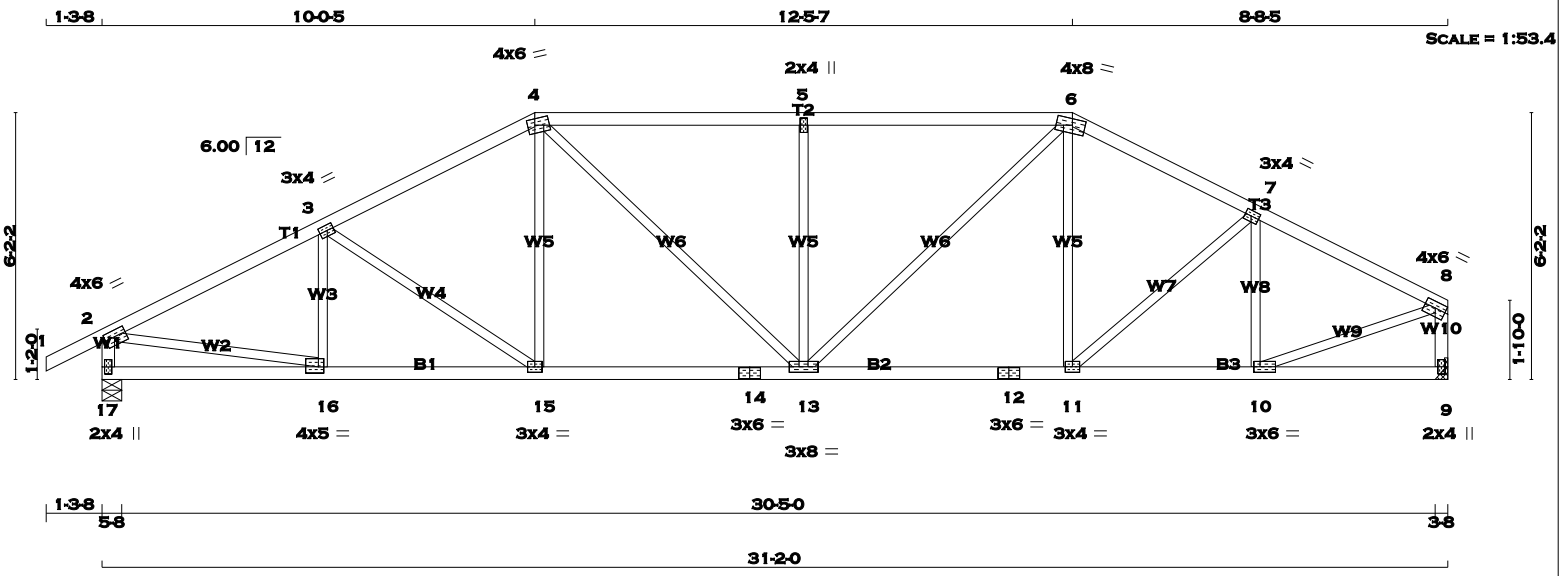

TOTAL WEIGHT = 127 lb
[M][F]

LUMBER
N. L. G. A. RULES

CHORDS	SIZE		LUMBER	DESCR.
1 - 4	2x4	DRY	No.2	SPF
4 - 6	2x4	DRY	No.2	SPF
6 - 8	2x4	DRY	No.2	SPF
17 - 2	2x4	DRY	No.2	SPF
9 - 8	2x4	DRY	No.2	SPF
17 - 14	2x4	DRY	No.2	SPF
14 - 12	2x4	DRY	No.2	SPF
12 - 9	2x4	DRY	No.2	SPF
ALL WEBS EXCEPT	2x3	DRY	No.2	SPF

DRY: SEASONED LUMBER.

PLATES (table is in inches)

JT	TYPE	PLATES	W	LEN	Y	X
2	TMVW-t	MT20	4.0	6.0	1.75	2.75
3	TMWW-t	MT20	3.0	4.0	1.50	1.75
4	TTWW-m	MT20	4.0	6.0	1.75	2.00
5	TMW+w	MT20	2.0	4.0		
6	TTWW-m	MT20	4.0	8.0	1.75	3.50
7	TMWW-t	MT20	3.0	4.0	1.50	1.75
8	TMVW-t	MT20	4.0	6.0	1.75	Edge
9	BMV1+p	MT20	2.0	4.0		
10	BMWW-t	MT20	3.0	6.0	1.50	1.75
11	BMWW-t	MT20	3.0	4.0		
12	BS-t	MT20	3.0	6.0		
13	BMWWW-t	MT20	3.0	8.0		
14	BS-t	MT20	3.0	6.0		
15	BMWW-t	MT20	3.0	4.0		
16	BMWW-t	MT20	4.0	5.0	1.75	1.50
17	BMV1+p	MT20	2.0	4.0		

Edge - INDICATES REFERENCE CORNER OF PLATE TOUCHES EDGE OF CHORD.

A SIZE FOR SIZE SUBSTITUTION OF MITEK MII20 WITH TEE-LOK TL20 PLATES IS ALLOWED.

DIMENSIONS, SUPPORTS AND LOADINGS SPECIFIED BY FABRICATOR TO BE VERIFIED BY BUILDING DESIGNER

BEARINGS

JT	FACTORED GROSS REACTION VERT	HORZ	MAXIMUM FACTORED GROSS REACTION DOWN	HORZ	UPLIFT	INPUT BRG IN-SX	REQRD BRG IN-SX
17	1583	0	1583	0	0	5-8	5-8
9	1478	0	1478	0	0	HANGER BY OTHERS	
						MIN. SEAT SIZE: 3-8	

UNFACTORED REACTIONS

JT	1ST LCASE COMBINED	SNOW	MAX./MIN. COMPONENT REACTIONS LIVE	PERM.LIVE	WIND	DEAD	SOIL
17	1109	789 / 0	0 / 0	0 / 0	0 / 0	320 / 0	0 / 0
9	1037	726 / 0	0 / 0	0 / 0	0 / 0	312 / 0	0 / 0

BEARING MATERIAL TO BE SPF NO.2 OR BETTER AT JOINT(S) 17

BRACING
TOP CHORD TO BE SHEATHED OR MAX. PURLIN SPACING = 4.30 FT.
MAX. UNBRACED BOTTOM CHORD LENGTH = 10.00 FT. OR RIGID CEILING DIRECTLY APPLIED.

ALL PITCH BREAKS AND PERIMETER CORNER JOINTS MUST BE LATERALLY RESTRAINED.

LOADING
TOTAL LOAD CASES: (4)

CHORDS

MEMB. FR-TO	MAX. FACTORED FORCE (LBS)	VERT. LOAD LC1 (PLF) FROM	TO	MAX CSI (LC)	MAX. UNBRAC LENGTH
1- 2	0 / 23	-77.4	-77.4	0.10 (1)	10.00
2- 3	-2129 / 0	-77.4	-77.4	0.31 (1)	4.39
3- 4	-1938 / 0	-77.4	-77.4	0.29 (1)	4.58
4- 5	-2022 / 0	-77.4	-77.4	0.45 (1)	4.30
5- 6	-2022 / 0	-77.4	-77.4	0.45 (1)	4.30
6- 7	-1789 / 0	-77.4	-77.4	0.22 (1)	4.80
7- 8	-1719 / 0	-77.4	-77.4	0.22 (1)	4.89
17- 2	-1542 / 0	0.0	0.0	0.16 (1)	6.62
9- 8	-1443 / 0	0.0	0.0	0.16 (1)	6.81
17-16	0 / 0	-17.5	-17.5	0.09 (4)	10.00
16-15	0 / 1921	-17.5	-17.5	0.37 (1)	10.00
15-14	0 / 1719	-17.5	-17.5	0.34 (1)	10.00
14-13	0 / 1719	-17.5	-17.5	0.34 (1)	10.00
13-12	0 / 1584	-17.5	-17.5	0.32 (1)	10.00
12-11	0 / 1584	-17.5	-17.5	0.32 (1)	10.00
11-10	0 / 1552	-17.5	-17.5	0.31 (1)	10.00
10- 9	0 / 0	-17.5	-17.5	0.07 (4)	10.00

WEBS

MEMB. FR-TO	MAX. FACTORED FORCE (LBS)	MAX CSI (LC)
16- 3	-235 / 12	0.05 (1)
3-15	-250 / 0	0.16 (1)
15- 4	0 / 243	0.05 (1)
4-13	0 / 417	0.09 (1)
13- 5	-592 / 0	0.36 (1)
13- 6	0 / 602	0.14 (1)
11- 6	0 / 89	0.03 (4)
11- 7	0 / 41	0.01 (1)
10- 7	-458 / 0	0.12 (1)
2-16	0 / 1948	0.44 (1)
10- 8	0 / 1641	0.37 (1)

DESIGN CRITERIA

SPECIFIED LOADS:

TOP CH.	LL	=	23.3	PSF
	DL	=	3.0	PSF
BOT CH.	LL	=	0.0	PSF
	DL	=	7.0	PSF
TOTAL LOAD		=	33.3	PSF

SPACING = 24.0 IN. C/C

LOADING IN FLAT SECTION BASED ON A SLOPE OF 6.00/12

THIS TRUSS IS DESIGNED FOR RESIDENTIAL OR SMALL BUILDING REQUIREMENTS OF PART 9, NBCC 2010

THIS DESIGN COMPLIES WITH:
- PART 9 OF OBC 2012 , BCBC 2012 , ABC 2014
- CSA 086-09
- TPIC 2011

(55 % OF 27.2 P.S.F. G.S.L. PLUS 8.4 P.S.F. RAIN LOAD) EQUALS 23.3 P.S.F. SPECIFIED ROOF LIVE LOAD

ALLOWABLE DEFL.(LL)= L/360 (1.04")
CALCULATED VERT. DEFL.(LL) = L/ 999 (0.10")
ALLOWABLE DEFL.(TL)= L/360 (1.04")
CALCULATED VERT. DEFL.(TL) = L/ 999 (0.19")

CSI: TC=0.45 (4-5:1) , BC=0.37 (15-16:1) , WB=0.44 (2-16:1) , SSI=0.23 (4-5:1)

DOL LUMBER=1.00 NAIL=1.00 LS BEND=1.10 COMP=1.10 SHEAR=1.10 TENS= 1.10

COMPANION LIVE LOAD FACTOR = 0.50

TRUSS PLATE MANUFACTURER IS NOT RESPONSIBLE FOR QUALITY CONTROL IN THE TRUSS MANUFACTURING PLANT .

NAIL VALUES

PLATE	GRIP(DRY) (PSI) MAX	MIN	SHEAR (PLI) MAX	MIN	SECTION (PLI) MAX	MIN
MT20	618	354	1667	822	2284	1656

PLATE PLACEMENT TOL. = 0.250 inches

PLATE ROTATION TOL. = 5.0 Deg.

JSI GRIP= 0.90 (10) (INPUT = 0.90)
JSI METAL= 0.58 (16) (INPUT = 1.00)

LICENSED PROFESSIONAL ENGINEER
P.M. TREVISAN
100136551
March 16th, 2017
PROVINCE OF ONTARIO

RECEIVED
TOWN OF MILTON
MAR 29, 2017
17-5327
BUILDING DIVISION

KOTT

JOB NAME	TRUSS NAME	QUANTITY	PLY	JOB DESC.	DRWG NO.
PT0317-093	T63	1	1	TRUSS DESC. LECCO RIDGE-BLOCK 343	

KOTT , Stouffville, ON, CGC

Version 8.100 S Feb 9 2017 MiTek Industries, Inc. Thu Mar 16 07:55:24 2017 Page 1
ID:EvTixTQDI5yR1QLotZTBr_yE?HJ-StickKUVjBG1w35?sK5p5TRxmgjenHHNb3pllO7zaRHH

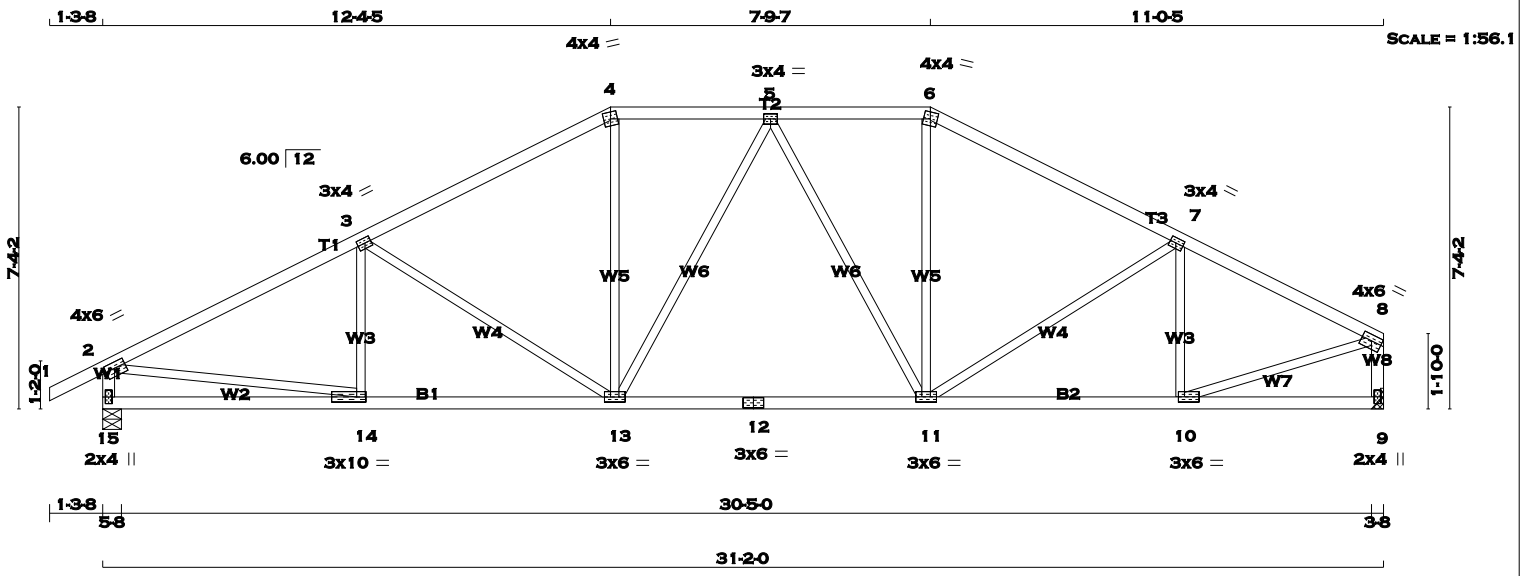

TOTAL WEIGHT = 128 lb
[M][F]

LUMBER
N. L. G. A. RULES

CHORDS	SIZE		LUMBER	DESCR.
1 - 4	2x4	DRY	No.2	SPF
4 - 6	2x4	DRY	No.2	SPF
6 - 8	2x4	DRY	No.2	SPF
15 - 2	2x4	DRY	No.2	SPF
9 - 8	2x4	DRY	No.2	SPF
15 - 12	2x4	DRY	No.2	SPF
12 - 9	2x4	DRY	No.2	SPF
ALL WEBS EXCEPT	2x3	DRY	No.2	SPF

DRY: SEASONED LUMBER.

PLATES (table is in inches)

JT	TYPE	PLATES	W	LEN	Y	X
2	TMVW-t	MT20	4.0	6.0	1.75	2.75
3	TMWW-t	MT20	3.0	4.0	1.50	1.75
4	TTW-m	MT20	4.0	4.0		
5	TMWW-t	MT20	3.0	4.0		
6	TTW-m	MT20	4.0	4.0		
7	TMWW-t	MT20	3.0	4.0	1.50	1.75
8	TMVW-t	MT20	4.0	6.0	1.75	Edge
9	BMV1+p	MT20	2.0	4.0		
10	BMWW-t	MT20	3.0	6.0	1.50	1.75
11	BMWWW-t	MT20	3.0	6.0		
12	BS-t	MT20	3.0	6.0		
13	BMWWW-t	MT20	3.0	6.0		
14	BMWW-t	MT20	3.0	10.0	1.50	2.75
15	BMV1+p	MT20	2.0	4.0		

Edge - INDICATES REFERENCE CORNER OF PLATE TOUCHES EDGE OF CHORD.

A SIZE FOR SIZE SUBSTITUTION OF MITEK MII20 WITH TEE-LOK TL20 PLATES IS ALLOWED.

DIMENSIONS, SUPPORTS AND LOADINGS SPECIFIED BY FABRICATOR TO BE VERIFIED BY BUILDING DESIGNER

BEARINGS

JT	FACTORED GROSS REACTION VERT	HORZ	MAXIMUM FACTORED GROSS REACTION DOWN	HORZ	UPLIFT	INPUT BRG IN-SX	REQRD BRG IN-SX
15	1583	0	1583	0	0	5-8	5-8
9	1478	0	1478	0	0	HANGER BY OTHERS	
						MIN. SEAT SIZE: 3-8	

UNFACTORED REACTIONS

JT	1ST LCASE COMBINED	SNOW	MAX./MIN. COMPONENT REACTIONS LIVE	PERM.LIVE	WIND	DEAD	SOIL
15	1109	789 / 0	0 / 0	0 / 0	0 / 0	320 / 0	0 / 0
9	1037	726 / 0	0 / 0	0 / 0	0 / 0	312 / 0	0 / 0

BEARING MATERIAL TO BE SPF NO.2 OR BETTER AT JOINT(S) 15

BRACING
TOP CHORD TO BE SHEATHED OR MAX. PURLIN SPACING = 4.17 FT.
MAX. UNBRACED BOTTOM CHORD LENGTH = 10.00 FT. OR RIGID CEILING DIRECTLY APPLIED.

ALL PITCH BREAKS AND PERIMETER CORNER JOINTS MUST BE LATERALLY RESTRAINED.

LOADING
TOTAL LOAD CASES: (4)

CHORDS

MEMB. FR-TO	MAX. FORCE (LBS)	FACTORED VERT. LOAD LC1 (PLF) FROM	TO	MAX CSI (LC)	MAX. UNBRAC LENGTH
1- 2	0 / 23	-77.4	-77.4	0.10 (1)	10.00
2- 3	-2158 / 0	-77.4	-77.4	0.48 (1)	4.17
3- 4	-1782 / 0	-77.4	-77.4	0.43 (1)	4.56
4- 5	-1578 / 0	-77.4	-77.4	0.17 (1)	5.10
5- 6	-1510 / 0	-77.4	-77.4	0.16 (1)	5.19
6- 7	-1703 / 0	-77.4	-77.4	0.39 (1)	4.70
7- 8	-1784 / 0	-77.4	-77.4	0.35 (1)	4.65
15- 2	-1535 / 0	0.0	0.0	0.16 (1)	6.64
9- 8	-1442 / 0	0.0	0.0	0.16 (1)	6.81
15-14	0 / 0	-17.5	-17.5	0.14 (4)	10.00
14-13	0 / 1953	-17.5	-17.5	0.41 (1)	10.00
13-12	0 / 1641	-17.5	-17.5	0.36 (1)	10.00
12-11	0 / 1641	-17.5	-17.5	0.36 (1)	10.00
11-10	0 / 1619	-17.5	-17.5	0.36 (1)	10.00
10- 9	0 / 0	-17.5	-17.5	0.10 (4)	10.00

WEBS

MEMB. FR-TO	MAX. FORCE (LBS)	MAX CSI (LC)
14- 3	-154 / 53	0.04 (1)
3-13	-455 / 0	0.49 (1)
13- 4	0 / 490	0.11 (1)
13- 5	-134 / 0	0.18 (1)
5-11	-277 / 0	0.37 (1)
11- 6	0 / 446	0.10 (1)
11- 7	-137 / 0	0.15 (1)
10- 7	-401 / 0	0.11 (1)
2-14	0 / 1971	0.44 (1)
10- 8	0 / 1694	0.38 (1)

DESIGN CRITERIA

SPECIFIED LOADS:

TOP CH.	LL	=	23.3	PSF
	DL	=	3.0	PSF
BOT CH.	LL	=	0.0	PSF
	DL	=	7.0	PSF
TOTAL LOAD		=	33.3	PSF

SPACING = 24.0 IN. C/C

LOADING IN FLAT SECTION BASED ON A SLOPE OF 6.00/12

THIS TRUSS IS DESIGNED FOR RESIDENTIAL OR SMALL BUILDING REQUIREMENTS OF PART 9, NBCC 2010

THIS DESIGN COMPLIES WITH:
- PART 9 OF OBC 2012 , BCBC 2012 , ABC 2014
- CSA 086-09
- TPIC 2011

(55 % OF 27.2 P.S.F. G.S.L. PLUS 8.4 P.S.F. RAIN LOAD) EQUALS 23.3 P.S.F. SPECIFIED ROOF LIVE LOAD

ALLOWABLE DEFL.(LL)= L/360 (1.04")
CALCULATED VERT. DEFL.(LL) = L/ 999 (0.09")
ALLOWABLE DEFL.(TL)= L/360 (1.04")
CALCULATED VERT. DEFL.(TL) = L/ 999 (0.19")

CSI: TC=0.48 (2-3:1) , BC=0.41 (13-14:1) , WB=0.49 (3-13:1) , SSI=0.21 (2-3:1)

DOL LUMBER=1.00 NAIL=1.00 LS BEND=1.10 COMP=1.10 SHEAR=1.10 TENS= 1.10

COMPANION LIVE LOAD FACTOR = 0.50

TRUSS PLATE MANUFACTURER IS NOT RESPONSIBLE FOR QUALITY CONTROL IN THE TRUSS MANUFACTURING PLANT .

NAIL VALUES

PLATE	GRIP(DRY) (PSI) MAX	MIN	SHEAR (PLI) MAX	MIN	SECTION (PLI) MAX	MIN
MT20	618	354	1667	822	2284	1656

PLATE PLACEMENT TOL. = 0.250 inches

PLATE ROTATION TOL. = 5.0 Deg.

JSI GRIP= 0.90 (10) (INPUT = 0.90)
JSI METAL= 0.58 (2) (INPUT = 1.00)

LICENSED PROFESSIONAL ENGINEER
P.M. TREVISAN
100136551
March 16th, 2017
PROVINCE OF ONTARIO

RECEIVED
TOWN OF MILTON
MAR 29, 2017
17-5327
BUILDING DIVISION

KOTT

JOB NAME	TRUSS NAME	QUANTITY	PLY	JOB DESC.	DRWG NO.
PT0317-093	**T64**	**4**	**1**	TRUSS DESC. LECCO RIDGE-BLOCK 343	

KOTT , Stouffville, ON, CGC

Version 8.100 S Feb 9 2017 MiTek Industries, Inc. Thu Mar 16 07:55:24 2017 Page 1
ID:EvTixTQDI5yR1QLotZTBr_yE?HJ-StcKUVjBG1w35?sK5p5TRxq_jjbHO4b3pllO7zaRHH

SCALE = 1:34.6

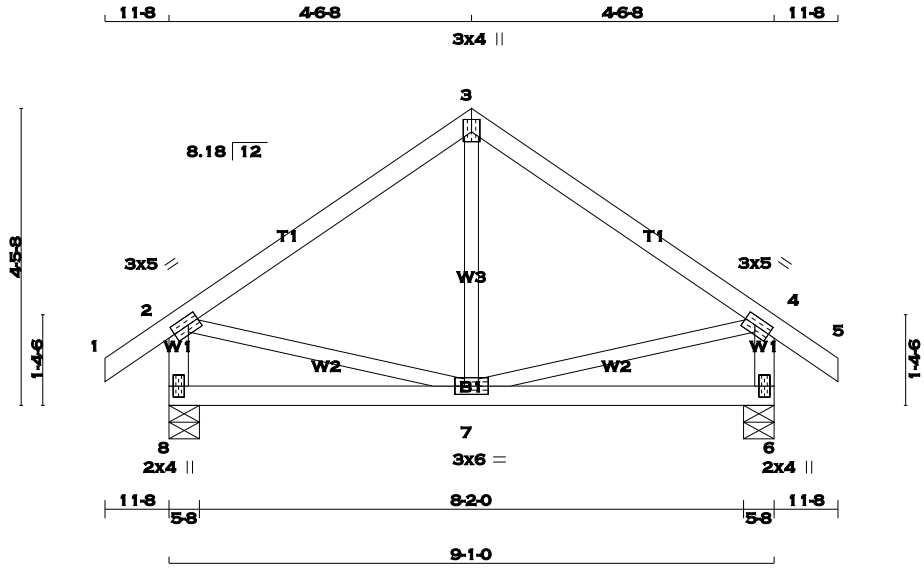

TOTAL WEIGHT = 4 X 38 = 152 lb

LUMBER
N. L. G. A. RULES

CHORDS	SIZE		LUMBER	DESCR.
1 - 3	2x4	DRY	No.2	SPF
3 - 5	2x4	DRY	No.2	SPF
8 - 2	2x4	DRY	No.2	SPF
6 - 4	2x4	DRY	No.2	SPF
8 - 6	2x4	DRY	No.2	SPF
ALL WEBS EXCEPT	2x3	DRY	No.2	SPF

DRY: SEASONED LUMBER.

PLATES (table is in inches)

JT	TYPE	PLATES	W	LEN	Y	X
2	TMVW-t	MT20	3.0	5.0	1.50	2.00
3	TTW+p	MT20	3.0	4.0	2.25	1.50
4	TMVW-t	MT20	3.0	5.0	1.50	2.00
6	BMV1+p	MT20	2.0	4.0		
7	BMWWW-t	MT20	3.0	6.0		
8	BMV1+p	MT20	2.0	4.0		

A SIZE FOR SIZE SUBSTITUTION OF MITEK MII20 WITH TEE-LOK TL20 PLATES IS ALLOWED.

DIMENSIONS, SUPPORTS AND LOADINGS SPECIFIED BY FABRICATOR TO BE VERIFIED BY BUILDING DESIGNER

BEARINGS

JT	FACTORED GROSS REACTION VERT	HORZ	MAXIMUM FACTORED GROSS REACTION DOWN	HORZ	UPLIFT	INPUT BRG IN-SX	REQRD BRG IN-SX
8	511	0	511	0	0	5-8	5-8
6	511	0	511	0	0	5-8	5-8

UNFACTORED REACTIONS

JT	1ST LCASE COMBINED	MAX./MIN. COMPONENT REACTIONS SNOW	LIVE	PERM.LIVE	WIND	DEAD	SOIL
8	357	260 / 0	0 / 0	0 / 0	0 / 0	97 / 0	0 / 0
6	357	260 / 0	0 / 0	0 / 0	0 / 0	97 / 0	0 / 0

BEARING MATERIAL TO BE SPF NO.2 OR BETTER AT JOINT(S) 8, 6

BRACING
TOP CHORD TO BE SHEATHED OR MAX. PURLIN SPACING = 6.25 FT.
MAX. UNBRACED BOTTOM CHORD LENGTH = 10.00 FT. OR RIGID CEILING DIRECTLY APPLIED.

ALL PITCH BREAKS AND PERIMETER CORNER JOINTS MUST BE LATERALLY RESTRAINED.

LOADING
TOTAL LOAD CASES: (4)

CHORDS

MEMB. FR-TO	MAX. FACTORED FORCE (LBS)	FACTORED VERT. LOAD (PLF) FROM	TO	LC1 MAX CSI (LC)	MAX. UNBRAC LENGTH
1- 2	0 / 23	-77.4	-77.4	0.06 (1)	10.00
2- 3	-298 / 0	-77.4	-77.4	0.20 (1)	6.25
3- 4	-298 / 0	-77.4	-77.4	0.20 (1)	6.25
4- 5	0 / 23	-77.4	-77.4	0.06 (1)	10.00
8- 2	-481 / 0	0.0	0.0	0.05 (1)	7.81
6- 4	-480 / 0	0.0	0.0	0.05 (1)	7.81
8- 7	0 / 0	-17.5	-17.5	0.10 (4)	10.00
7- 6	0 / 0	-17.5	-17.5	0.10 (4)	10.00

WEBS

MEMB. FR-TO	MAX. FACTORED FORCE (LBS)	MAX CSI (LC)
7- 3	-16 / 73	0.03 (4)
2- 7	0 / 253	0.06 (1)
7- 4	0 / 253	0.06 (1)

DESIGN CRITERIA

SPECIFIED LOADS:

TOP	CH.	LL	=	23.3	PSF
		DL	=	3.0	PSF
BOT	CH.	LL	=	0.0	PSF
		DL	=	7.0	PSF
TOTAL	LOAD		=	33.3	PSF

SPACING = 24.0 IN. C/C

THIS TRUSS IS DESIGNED FOR RESIDENTIAL OR SMALL BUILDING REQUIREMENTS OF PART 9, NBCC 2010

THIS DESIGN COMPLIES WITH:
- PART 9 OF OBC 2012 , BCBC 2012 , ABC 2014
- CSA 086-09
- TPIC 2011

(55 % OF 27.2 P.S.F. G.S.L. PLUS 8.4 P.S.F. RAIN LOAD) EQUALS 23.3 P.S.F. SPECIFIED ROOF LIVE LOAD

ALLOWABLE DEFL.(LL)= L/360 (0.30")
CALCULATED VERT. DEFL.(LL) = L/ 999 (0.00")
ALLOWABLE DEFL.(TL)= L/360 (0.30")
CALCULATED VERT. DEFL.(TL) = L/ 999 (0.01")

CSI: TC=0.20 (3-4:1) , BC=0.10 (6-7:4) , WB=0.06 (2-7:1) , SSI=0.11 (3-4:1)

DOL LUMBER=1.00 NAIL=1.00 LS BEND=1.10 COMP=1.10 SHEAR=1.10 TENS= 1.10

COMPANION LIVE LOAD FACTOR = 0.50

TRUSS PLATE MANUFACTURER IS NOT RESPONSIBLE FOR QUALITY CONTROL IN THE TRUSS MANUFACTURING PLANT .

NAIL VALUES

PLATE	GRIP(DRY) (PSI) MAX	MIN	SHEAR (PLI) MAX	MIN	SECTION (PLI) MAX	MIN
MT20	618	354	1667	822	2284	1656

PLATE PLACEMENT TOL. = 0.250 inches

PLATE ROTATION TOL. = 5.0 Deg.

JSI GRIP= 0.46 (7) (INPUT = 0.90)
JSI METAL= 0.13 (4) (INPUT = 1.00)

LICENSED PROFESSIONAL ENGINEER
P.M. TREVISAN
100136551
March 16th, 2017
PROVINCE OF ONTARIO

RECEIVED
TOWN OF MILTON
MAR 29, 2017
17-5327
BUILDING DIVISION

KOTT

JOB NAME	TRUSS NAME	QUANTITY	PLY	JOB DESC.	DRWG NO.
PT0317-093	T66	6	1	TRUSS DESC. LECCO RIDGE-BLOCK 343	

KOTT , Stouffville, ON, CGC

Version 8.100 S Feb 9 2017 MiTek Industries, Inc. Thu Mar 16 07:55:24 2017 Page 1
ID:EvTixTQDI5yR1QLotZTBr_yE?HJ-SticKUVjBG1w35?sK5p5TRxsgjeFHMpb3pllO7zaRHH

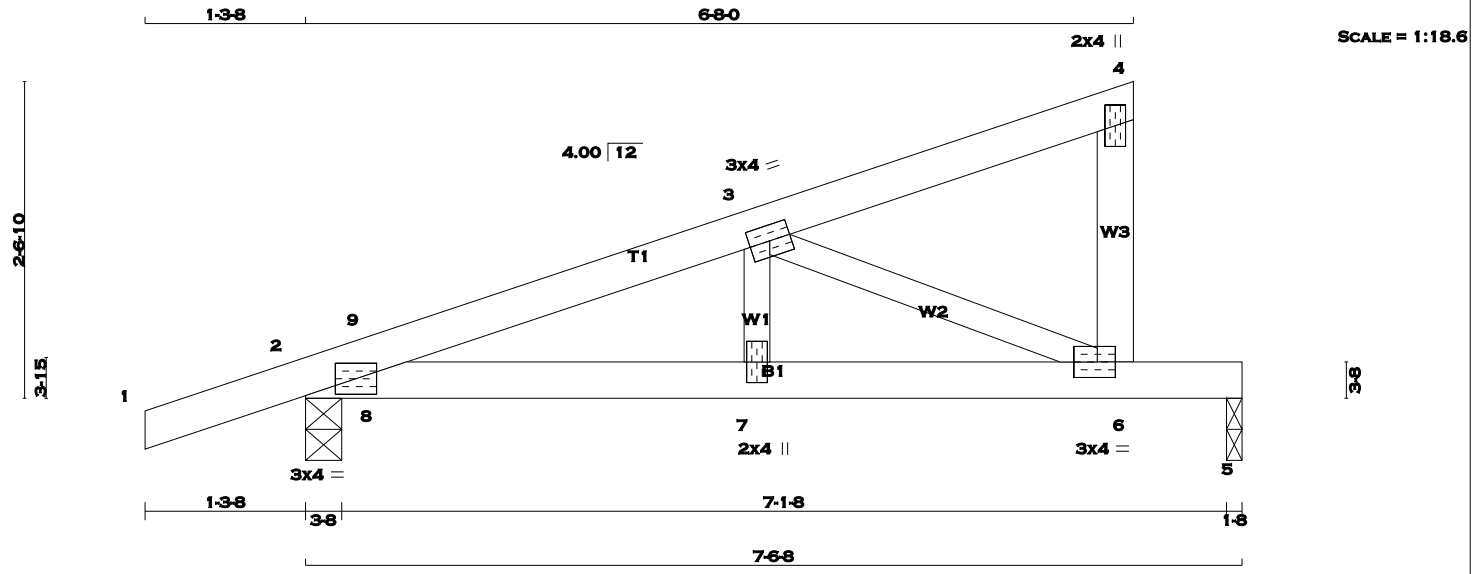

TOTAL WEIGHT = 6 X 24 = 142 lb
[M][F]

LUMBER
N. L. G. A. RULES

CHORDS	SIZE		LUMBER	DESCR.
1 - 4	2x4	DRY	No.2	SPF
6 - 4	2x4	DRY	No.2	SPF
2 - 5	2x4	DRY	No.2	SPF
ALL WEBS	2x3	DRY	No.2	SPF

DRY: SEASONED LUMBER.

PLATES (table is in inches)

JT	TYPE	PLATES	W	LEN	Y	X
2	TMB1-I	MT20	3.0	4.0		
3	TMWW-t	MT20	3.0	4.0		
4	TMV+p	MT20	2.0	4.0		
6	BMVW-t	MT20	3.0	4.0	1.50	1.75
7	BMW+w	MT20	2.0	4.0		

A SIZE FOR SIZE SUBSTITUTION OF MITEK MII20 WITH TEE-LOK TL20 PLATES IS ALLOWED.

DIMENSIONS, SUPPORTS AND LOADINGS SPECIFIED BY FABRICATOR TO BE VERIFIED BY BUILDING DESIGNER

BEARINGS

JT	FACTORED GROSS REACTION VERT	HORZ	MAXIMUM FACTORED GROSS REACTION DOWN	HORZ	UPLIFT	INPUT BRG IN-SX	REQRD BRG IN-SX
2	457	0	457	0	0	3-8	3-8
5	294	0	294	0	0	1-8	1-8

UNFACTORED REACTIONS

JT	1ST LCASE COMBINED	MAX./MIN. COMPONENT REACTIONS SNOW	LIVE	PERM.LIVE	WIND	DEAD	SOIL
2	319	236 / 0	0 / 0	0 / 0	0 / 0	83 / 0	0 / 0
5	208	137 / 0	0 / 0	0 / 0	0 / 0	70 / 0	0 / 0

BEARING MATERIAL TO BE SPF NO.2 OR BETTER AT JOINT(S) 2, 5

BRACING
TOP CHORD TO BE SHEATHED OR MAX. PURLIN SPACING = 6.25 FT.
MAX. UNBRACED BOTTOM CHORD LENGTH = 10.00 FT. OR RIGID CEILING DIRECTLY APPLIED.

ALL PITCH BREAKS AND PERIMETER CORNER JOINTS MUST BE LATERALLY RESTRAINED.

LOADING
TOTAL LOAD CASES: (4)

CHORDS

MEMB. FR-TO	MAX. FACTORED FORCE (LBS)	FACTORED VERT. LOAD (PLF) FROM	TO	LC1 MAX CSI (LC)	MAX. UNBRAC LENGTH
1- 2	0 / 15	-77.4	-77.4	0.10 (1)	10.00
2- 9	-682 / 0	-77.4	-77.4	0.01 (1)	6.25
9- 3	-670 / 0	-77.4	-77.4	0.07 (1)	6.25
3- 4	-7 / 0	-77.4	-77.4	0.07 (1)	10.00
6- 4	-96 / 0	0.0	0.0	0.01 (1)	7.81
2- 8	0 / 641	-17.5	-17.5	0.18 (1)	10.00
8- 7	0 / 641	-17.5	-17.5	0.20 (1)	10.00
7- 6	0 / 641	-17.5	-17.5	0.44 (1)	10.00
6- 5	0 / 0	-17.5	-17.5	0.34 (1)	10.00

WEBS

MEMB. FR-TO	MAX. FACTORED FORCE (LBS)	MAX CSI (LC)
7- 3	0 / 201	0.05 (1)
3- 6	-693 / 0	0.14 (1)
8- 9	-101 / 6	0.00 (1)

DESIGN CRITERIA

SPECIFIED LOADS:

TOP	CH.	LL	=	23.3	PSF
		DL	=	3.0	PSF
BOT	CH.	LL	=	0.0	PSF
		DL	=	7.0	PSF
TOTAL	LOAD		=	33.3	PSF

SPACING = 24.0 IN. C/C

THIS TRUSS IS DESIGNED FOR RESIDENTIAL OR SMALL BUILDING REQUIREMENTS OF PART 9, NBCC 2010

THIS DESIGN COMPLIES WITH:
- PART 9 OF OBC 2012 , BCBC 2012 , ABC 2014
- CSA 086-09
- TPIC 2011

(55 % OF 27.2 P.S.F. G.S.L. PLUS 8.4 P.S.F. RAIN LOAD) EQUALS 23.3 P.S.F. SPECIFIED ROOF LIVE LOAD

ALLOWABLE DEFL.(LL)= L/360 (0.25")
CALCULATED VERT. DEFL.(LL) = L/ 999 (0.04")
ALLOWABLE DEFL.(TL)= L/360 (0.25")
CALCULATED VERT. DEFL.(TL) = L/ 999 (0.08")

CSI: TC=0.10 (1-2:1) , BC=0.44 (6-7:1) , WB=0.14 (3-6:1) , SSI=0.23 (5-6:1)

DOL LUMBER=1.00 NAIL=1.00 LS BEND=1.10 COMP=1.10 SHEAR=1.10 TENS= 1.10

COMPANION LIVE LOAD FACTOR = 0.50

TRUSS PLATE MANUFACTURER IS NOT RESPONSIBLE FOR QUALITY CONTROL IN THE TRUSS MANUFACTURING PLANT .

NAIL VALUES

PLATE	GRIP(DRY) (PSI) MAX	MIN	SHEAR (PLI) MAX	MIN	SECTION (PLI) MAX	MIN
MT20	618	354	1667	822	2284	1656

PLATE PLACEMENT TOL. = 0.250 inches

PLATE ROTATION TOL. = 5.0 Deg.

JSI GRIP= 0.82 (6) (INPUT = 0.90)
JSI METAL= 0.24 (6) (INPUT = 1.00)

LICENSED PROFESSIONAL ENGINEER
P.M. TREVISAN
100136551
March 16th, 2017
PROVINCE OF ONTARIO

RECEIVED
TOWN OF MILTON
MAR 29, 2017
17-5327
BUILDING DIVISION

KOTT

JOB NAME	TRUSS NAME	QUANTITY	PLY	JOB DESC.	DRWG NO.
PT0317-093	T67	10	1	TRUSS DESC. LECCO RIDGE-BLOCK 343	

KOTT , Stouffville, ON, CGC

Version 8.100 S Feb 9 2017 MiTek Industries, Inc. Thu Mar 16 07:55:25 2017 Page 1
ID:EvTixTQDI5yR1QLotZTBr_yE?HJ-x4G_XqWLya9nhFa2upKK0fT0R72g0rCIlTVIxZzaRHG

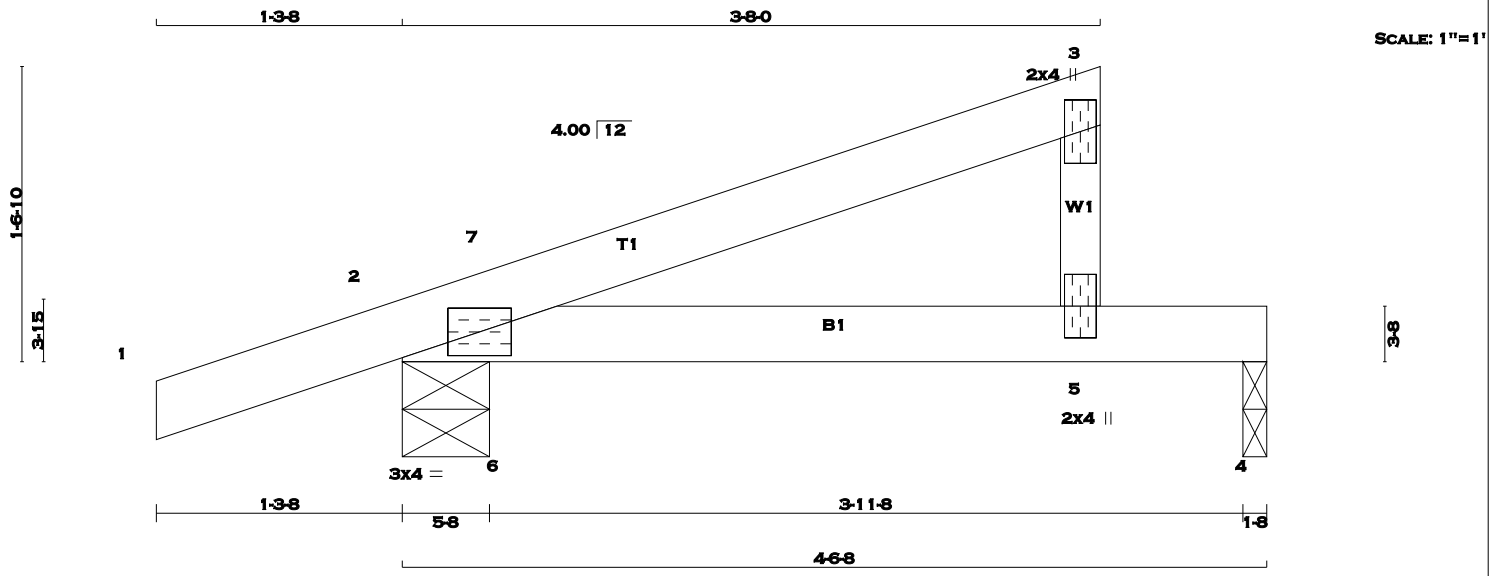

TOTAL WEIGHT = 10 X 12 = 120 lb [M]

LUMBER
N. L. G. A. RULES

CHORDS	SIZE		LUMBER	DESCR.
1 - 3	2x4	DRY	No.2	SPF
5 - 3	2x3	DRY	No.2	SPF
2 - 4	2x4	DRY	No.2	SPF

DRY: SEASONED LUMBER.

PLATES (table is in inches)

JT	TYPE	PLATES	W	LEN	Y	X
2	TMB1-I	MT20	3.0	4.0		
3	TMV+p	MT20	2.0	4.0		
5	BMV+p	MT20	2.0	4.0		

A SIZE FOR SIZE SUBSTITUTION OF MITEK MII20 WITH TEE-LOK TL20 PLATES IS ALLOWED.

DIMENSIONS, SUPPORTS AND LOADINGS SPECIFIED BY FABRICATOR TO BE VERIFIED BY BUILDING DESIGNER

BEARINGS

JT	FACTORED GROSS REACTION VERT	HORZ	MAXIMUM FACTORED GROSS REACTION DOWN	HORZ	UPLIFT	INPUT BRG IN-SX	REQRD BRG IN-SX
2	312	0	312	0	0	5-8	5-8
4	154	0	154	0	0	1-8	1-8

UNFACTORED REACTIONS

JT	1ST LCASE COMBINED	MAX./MIN. COMPONENT REACTIONS SNOW	LIVE	PERM.LIVE	WIND	DEAD	SOIL
2	217	164 / 0	0 / 0	0 / 0	0 / 0	53 / 0	0 / 0
4	110	69 / 0	0 / 0	0 / 0	0 / 0	41 / 0	0 / 0

BEARING MATERIAL TO BE SPF NO.2 OR BETTER AT JOINT(S) 2, 4

BRACING
TOP CHORD TO BE SHEATHED OR MAX. PURLIN SPACING = 6.25 FT.
MAX. UNBRACED BOTTOM CHORD LENGTH = 10.00 FT. OR RIGID CEILING DIRECTLY APPLIED.

ALL PITCH BREAKS AND PERIMETER CORNER JOINTS MUST BE LATERALLY RESTRAINED.

LOADING
TOTAL LOAD CASES: (4)

CHORDS

MEMB. FR-TO	MAX. FACTORED FORCE (LBS)	FACTORED VERT. LOAD (PLF) FROM	TO	LC1 MAX CSI (LC)	MAX. UNBRAC LENGTH
1- 2	0 / 15	-77.4	-77.4	0.10 (1)	10.00
2- 7	-28 / 0	-77.4	-77.4	0.07 (1)	6.25
7- 3	0 / 5	-77.4	-77.4	0.16 (1)	10.00
5- 3	-134 / 0	0.0	0.0	0.02 (1)	7.81
2- 6	0 / 0	-17.5	-17.5	0.08 (1)	10.00
6- 5	0 / 0	-17.5	-17.5	0.18 (1)	10.00
5- 4	0 / 0	-17.5	-17.5	0.17 (1)	10.00

WEBS

MEMB. FR-TO	MAX. FACTORED FORCE (LBS)	MAX CSI (LC)
6- 7	-46 / 43	0.00 (1)

DESIGN CRITERIA

SPECIFIED LOADS:

TOP CH.	LL =	23.3	PSF
	DL =	3.0	PSF
BOT CH.	LL =	0.0	PSF
	DL =	7.0	PSF
TOTAL LOAD	=	33.3	PSF

SPACING = 24.0 IN. C/C

THIS TRUSS IS DESIGNED FOR RESIDENTIAL OR SMALL BUILDING REQUIREMENTS OF PART 9, NBCC 2010

THIS DESIGN COMPLIES WITH:
- PART 9 OF OBC 2012 , BCBC 2012 , ABC 2014
- CSA 086-09
- TPIC 2011

(55 % OF 27.2 P.S.F. G.S.L. PLUS 8.4 P.S.F. RAIN LOAD) EQUALS 23.3 P.S.F. SPECIFIED ROOF LIVE LOAD

ALLOWABLE DEFL.(LL)= L/360 (0.19")
CALCULATED VERT. DEFL.(LL) = L/ 999 (0.03")
ALLOWABLE DEFL.(TL)= L/360 (0.19")
CALCULATED VERT. DEFL.(TL) = L/ 977 (0.06")

CSI: TC=0.16 (3-7:1) , BC=0.18 (5-6:1) , WB=0.00 (6-7:1) , SSI=0.12 (4-5:1)

DOL LUMBER=1.00 NAIL=1.00 LS BEND=1.10 COMP=1.10 SHEAR=1.10 TENS= 1.10

COMPANION LIVE LOAD FACTOR = 0.50

TRUSS PLATE MANUFACTURER IS NOT RESPONSIBLE FOR QUALITY CONTROL IN THE TRUSS MANUFACTURING PLANT .

NAIL VALUES

PLATE	GRIP(DRY) (PSI) MAX	MIN	SHEAR (PLI) MAX	MIN	SECTION (PLI) MAX	MIN
MT20	618	354	1667	822	2284	1656

PLATE PLACEMENT TOL. = 0.250 inches

PLATE ROTATION TOL. = 0.5 Deg.

JSI GRIP= 0.15 (2) (INPUT = 0.90)
JSI METAL= 0.05 (2) (INPUT = 1.00)

LICENSED PROFESSIONAL ENGINEER
P.M. TREVISAN
100136551
March 16th, 2017
PROVINCE OF ONTARIO

RECEIVED
TOWN OF MILTON
MAR 29, 2017
17-5327
BUILDING DIVISION

KOTT

JOB NAME	TRUSS NAME	QUANTITY	PLY	JOB DESC.	DRWG NO.
PT0317-093	T68	3	1	TRUSS DESC. LECCO RIDGE-BLOCK 343	

KOTT , Stouffville, ON, CGC

Version 8.100 S Feb 9 2017 MiTek Industries, Inc. Thu Mar 16 07:55:25 2017 Page 1
ID:EvTixTQDI5yR1QLotZTBr_yE?HJ-x4G_XqWLya9nhFa2upKK0fT0P70y0ncIITVIxZzaRHG

SCALE = 1:43.8

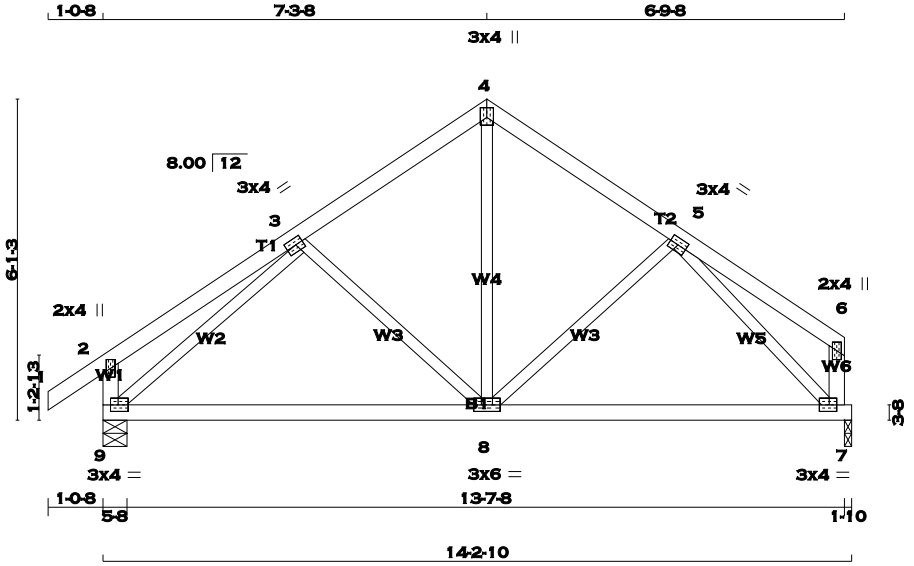

TOTAL WEIGHT = 3 X 59 = 176 lb
[M][F]

LUMBER
N. L. G. A. RULES

CHORDS	SIZE		LUMBER	DESCR.
1 - 4	2x4	DRY	No.2	SPF
4 - 6	2x4	DRY	No.2	SPF
9 - 2	2x4	DRY	No.2	SPF
7 - 6	2x4	DRY	No.2	SPF
9 - 7	2x4	DRY	No.2	SPF
ALL WEBS EXCEPT	2x3	DRY	No.2	SPF

DRY: SEASONED LUMBER.

PLATES (table is in inches)

JT	TYPE	PLATES	W	LEN	Y	X
2	TMV+p	MT20	2.0	4.0		
3	TMWW-t	MT20	3.0	4.0	1.50	1.75
4	TTW+p	MT20	3.0	4.0	2.25	1.50
5	TMWW-t	MT20	3.0	4.0		
6	TMV+p	MT20	2.0	4.0		
7	BMVW1-t	MT20	3.0	4.0	1.50	1.75
8	BMWWW-t	MT20	3.0	6.0		
9	BMVW1-t	MT20	3.0	4.0	1.50	1.75

A SIZE FOR SIZE SUBSTITUTION OF MITEK MII20 WITH TEE-LOK TL20 PLATES IS ALLOWED.

DIMENSIONS, SUPPORTS AND LOADINGS SPECIFIED BY FABRICATOR TO BE VERIFIED BY BUILDING DESIGNER

BEARINGS

JT	FACTORED GROSS REACTION VERT	HORZ	MAXIMUM FACTORED GROSS REACTION DOWN	HORZ	UPLIFT	INPUT BRG IN-SX	REQRD BRG IN-SX
9	755	0	755	0	0	5-8	5-8
7	668	0	668	0	0	1-10	1-10

UNFACTORED REACTIONS

JT	1ST LCASE COMBINED	MAX./MIN. COMPONENT REACTIONS SNOW	LIVE	PERM.LIVE	WIND	DEAD	SOIL
9	528	380 / 0	0 / 0	0 / 0	0 / 0	148 / 0	0 / 0
7	469	328 / 0	0 / 0	0 / 0	0 / 0	141 / 0	0 / 0

BEARING MATERIAL TO BE SPF NO.2 OR BETTER AT JOINT(S) 9, 7

BRACING
TOP CHORD TO BE SHEATHED OR MAX. PURLIN SPACING = 6.25 FT.
MAX. UNBRACED BOTTOM CHORD LENGTH = 10.00 FT. OR RIGID CEILING DIRECTLY APPLIED.

ALL PITCH BREAKS AND PERIMETER CORNER JOINTS MUST BE LATERALLY RESTRAINED.

LOADING
TOTAL LOAD CASES: (4)

CHORDS

MEMB. FR-TO	MAX. FACTORED FORCE (LBS)	FACTORED VERT. LOAD (PLF) FROM	TO	LC1 MAX CSI (LC)	MAX. UNBRAC LENGTH
1- 2	0 / 24	-77.4	-77.4	0.07 (1)	10.00
2- 3	0 / 18	-77.4	-77.4	0.16 (1)	10.00
3- 4	-528 / 0	-77.4	-77.4	0.13 (1)	6.25
4- 5	-525 / 0	-77.4	-77.4	0.11 (1)	6.25
5- 6	0 / 18	-77.4	-77.4	0.14 (1)	10.00
9- 2	-195 / 0	0.0	0.0	0.02 (1)	7.81
7- 6	-89 / 0	0.0	0.0	0.01 (1)	7.81
9- 8	0 / 555	-17.5	-17.5	0.29 (4)	10.00
8- 7	0 / 502	-17.5	-17.5	0.28 (4)	10.00

WEBS

MEMB. FR-TO	MAX. FACTORED FORCE (LBS)	MAX CSI (LC)
3- 8	-177 / 0	0.07 (1)
8- 4	0 / 343	0.08 (1)
8- 5	-106 / 15	0.04 (1)
9- 3	-753 / 0	0.29 (1)
5- 7	-734 / 0	0.24 (1)

DESIGN CRITERIA

SPECIFIED LOADS:

TOP	CH.	LL	=	23.3	PSF
		DL	=	3.0	PSF
BOT	CH.	LL	=	0.0	PSF
		DL	=	7.0	PSF
TOTAL	LOAD		=	33.3	PSF

SPACING = 24.0 IN. C/C

THIS TRUSS IS DESIGNED FOR RESIDENTIAL OR SMALL BUILDING REQUIREMENTS OF PART 9, NBCC 2010

THIS DESIGN COMPLIES WITH:
- PART 9 OF OBC 2012 , BCBC 2012 , ABC 2014
- CSA 086-09
- TPIC 2011

(55 % OF 27.2 P.S.F. G.S.L. PLUS 8.4 P.S.F. RAIN LOAD) EQUALS 23.3 P.S.F. SPECIFIED ROOF LIVE LOAD

ALLOWABLE DEFL.(LL)= L/360 (0.47")
CALCULATED VERT. DEFL.(LL) = L/ 999 (0.01")
ALLOWABLE DEFL.(TL)= L/360 (0.47")
CALCULATED VERT. DEFL.(TL) = L/ 999 (0.07")

CSI: TC=0.16 (2-3:1) , BC=0.29 (8-9:4) , WB=0.29 (3-9:1) , SSI=0.11 (3-4:1)

DOL LUMBER=1.00 NAIL=1.00 LS BEND=1.10 COMP=1.10 SHEAR=1.10 TENS= 1.10

COMPANION LIVE LOAD FACTOR = 0.50

TRUSS PLATE MANUFACTURER IS NOT RESPONSIBLE FOR QUALITY CONTROL IN THE TRUSS MANUFACTURING PLANT .

NAIL VALUES

PLATE	GRIP(DRY) (PSI) MAX	MIN	SHEAR (PLI) MAX	MIN	SECTION (PLI) MAX	MIN
MT20	618	354	1667	822	2284	1656

PLATE PLACEMENT TOL. = 0.250 inches

PLATE ROTATION TOL. = 5.0 Deg.

JSI GRIP= 0.89 (5) (INPUT = 0.90)
JSI METAL= 0.26 (3) (INPUT = 1.00)

LICENSED PROFESSIONAL ENGINEER
P.M. TREVISAN
100136551
March 16th, 2017
PROVINCE OF ONTARIO

RECEIVED
TOWN OF MILTON
MAR 29, 2017
17-5327
BUILDING DIVISION

KOTT

JOB NAME	TRUSS NAME	QUANTITY	PLY	JOB DESC.	DRWG NO.
PT0317-093	T69	1	1	TRUSS DESC. LECCO RIDGE-BLOCK 343	

KOTT , Stouffville, ON, CGC

Version 8.100 S Feb 9 2017 MiTek Industries, Inc. Thu Mar 16 07:55:25 2017 Page 1
ID:EvTixTQDI5yR1QLotZTBr_yE?HJ-x4G_XqWLya9nhFa2upKK0fT1Z74v0rkIITVIxZzaRHG

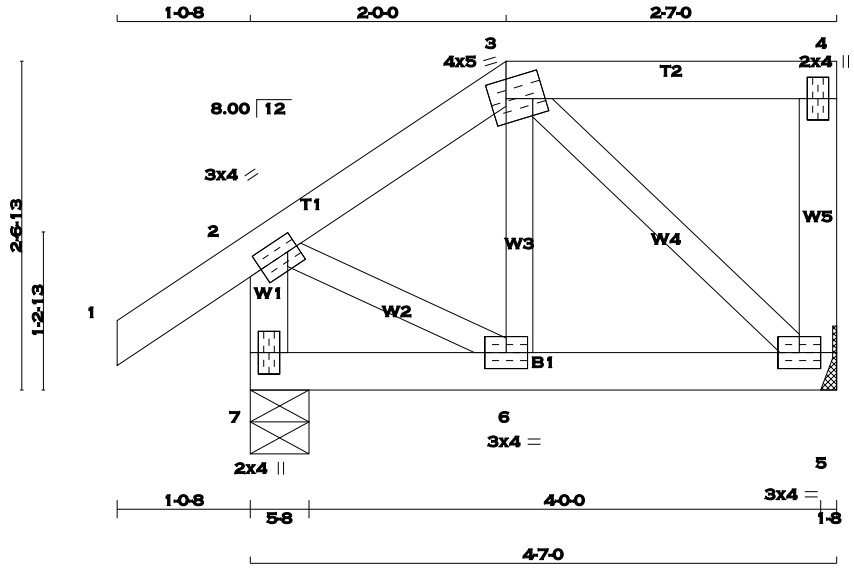

TOTAL WEIGHT = 21 lb [M]

LUMBER
N. L. G. A. RULES

CHORDS	SIZE		LUMBER	DESCR.
1 - 3	2x4	DRY	No.2	SPF
3 - 4	2x4	DRY	No.2	SPF
5 - 4	2x4	DRY	No.2	SPF
7 - 2	2x4	DRY	No.2	SPF
7 - 5	2x4	DRY	No.2	SPF
ALL WEBS EXCEPT	2x3	DRY	No.2	SPF

DRY: SEASONED LUMBER.

PLATES (table is in inches)

JT	TYPE	PLATES	W	LEN	Y	X
2	TMVW-t	MT20	3.0	4.0	1.50	1.00
3	TTWW-m	MT20	4.0	5.0	1.75	1.50
4	TMV+p	MT20	2.0	4.0		
5	BMVW1-t	MT20	3.0	4.0		
6	BMWW-t	MT20	3.0	4.0		
7	BMV1+p	MT20	2.0	4.0		

A SIZE FOR SIZE SUBSTITUTION OF MITEK MII20 WITH TEE-LOK TL20 PLATES IS ALLOWED.

DIMENSIONS, SUPPORTS AND LOADINGS SPECIFIED BY FABRICATOR TO BE VERIFIED BY BUILDING DESIGNER

BEARINGS

JT	FACTORED GROSS REACTION VERT	HORZ	MAXIMUM FACTORED GROSS REACTION DOWN	HORZ	UPLIFT	INPUT BRG IN-SX	REQRD BRG IN-SX
5	217	0	217	0	0	HANGER BY OTHERS MIN. SEAT SIZE: 1-8	
7	304	0	304	0	0	5-8	5-8

UNFACTORED REACTIONS

JT	1ST LCASE COMBINED	SNOW	LIVE	PERM.LIVE	WIND	DEAD	SOIL
		MAX./MIN. COMPONENT REACTIONS					
5	153	107 / 0	0 / 0	0 / 0	0 / 0	46 / 0	0 / 0
7	212	159 / 0	0 / 0	0 / 0	0 / 0	53 / 0	0 / 0

BEARING MATERIAL TO BE SPF NO.2 OR BETTER AT JOINT(S) 7

BRACING
TOP CHORD TO BE SHEATHED OR MAX. PURLIN SPACING = 6.25 FT.
MAX. UNBRACED BOTTOM CHORD LENGTH = 10.00 FT. OR RIGID CEILING DIRECTLY APPLIED.

ALL PITCH BREAKS AND PERIMETER CORNER JOINTS MUST BE LATERALLY RESTRAINED.

LOADING
TOTAL LOAD CASES: (4)

CHORDS

MEMB. FR-TO	MAX. FORCE (LBS)	FACTORED VERT. LOAD (PLF) FROM	TO	MAX CSI (LC)	MAX. UNBRAC LENGTH
1- 2	0 / 24	-77.4	-77.4	0.07 (1)	10.00
2- 3	-136 / 0	-77.4	-77.4	0.05 (1)	6.25
3- 4	0 / 0	-77.4	-77.4	0.09 (1)	10.00
5- 4	-100 / 0	0.0	0.0	0.01 (1)	7.81
7- 2	-289 / 0	0.0	0.0	0.03 (1)	7.81
7- 6	0 / 0	-17.5	-17.5	0.02 (4)	10.00
6- 5	0 / 112	-17.5	-17.5	0.03 (4)	10.00

WEBS

MEMB. FR-TO	MAX. FORCE (LBS)	MAX CSI (LC)
6- 3	-3 / 39	0.01 (4)
3- 5	-150 / 0	0.03 (1)
2- 6	0 / 123	0.03 (1)

DESIGN CRITERIA

SPECIFIED LOADS:

TOP	CH.	LL	=	23.3	PSF
		DL	=	3.0	PSF
BOT	CH.	LL	=	0.0	PSF
		DL	=	7.0	PSF
TOTAL	LOAD		=	33.3	PSF

SPACING = 24.0 IN. C/C

LOADING IN FLAT SECTION BASED ON A SLOPE OF 6.00/12

THIS TRUSS IS DESIGNED FOR RESIDENTIAL OR SMALL BUILDING REQUIREMENTS OF PART 9, NBCC 2010

THIS DESIGN COMPLIES WITH:
- PART 9 OF OBC 2012 , BCBC 2012 , ABC 2014
- CSA 086-09
- TPIC 2011

(55 % OF 27.2 P.S.F. G.S.L. PLUS 8.4 P.S.F. RAIN LOAD) EQUALS 23.3 P.S.F. SPECIFIED ROOF LIVE LOAD

ALLOWABLE DEFL.(LL)= L/360 (0.19")
CALCULATED VERT. DEFL.(LL) = L/ 999 (0.00")
ALLOWABLE DEFL.(TL)= L/360 (0.19")
CALCULATED VERT. DEFL.(TL) = L/ 999 (0.00")

CSI: TC=0.09 (3-4:1) , BC=0.03 (5-6:4) , WB=0.03 (3-5:1) , SSI=0.08 (3-4:1)

DOL LUMBER=1.00 NAIL=1.00 LS BEND=1.10 COMP=1.10 SHEAR=1.10 TENS= 1.10

COMPANION LIVE LOAD FACTOR = 0.50

TRUSS PLATE MANUFACTURER IS NOT RESPONSIBLE FOR QUALITY CONTROL IN THE TRUSS MANUFACTURING PLANT .

NAIL VALUES

PLATE	GRIP(DRY) (PSI) MAX	MIN	SHEAR (PLI) MAX	MIN	SECTION (PLI) MAX	MIN
MT20	618	354	1667	822	2284	1656

PLATE PLACEMENT TOL. = 0.250 inches

PLATE ROTATION TOL. = 5.0 Deg.

JSI GRIP= 0.40 (2) (INPUT = 0.90)
JSI METAL= 0.09 (2) (INPUT = 1.00)

LICENSED PROFESSIONAL ENGINEER
P.M. TREVISAN
100136551
March 16th, 2017
PROVINCE OF ONTARIO

RECEIVED
TOWN OF MILTON
MAR 29, 2017
17-5327
BUILDING DIVISION

KOTT

JOB NAME	TRUSS NAME	QUANTITY	PLY	JOB DESC.	DRWG NO.
PT0317-093	**T70**	**1**	**1**	TRUSS DESC. LECCO RIDGE-BLOCK 343	ENG JOB: PT0317-093

KOTT , Stouffville, ON, CGC

Version 8.100 S Feb 9 2017 MiTek Industries, Inc. Thu Mar 16 07:55:26 2017 Page 1

ID:EvTixTQDI5yR1QLotZTBr_yE?HJ-PGqMlAXzjtHeIO9ESWrZYs0CaXQ9lItuX7FsT?zaRHF

SCALE = 1:25.8

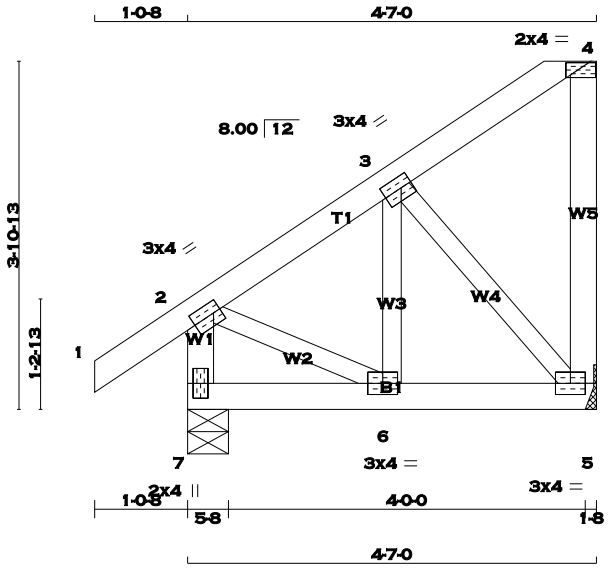

TOTAL WEIGHT = 24 lb [M]

LUMBER

N. L. G. A. RULES

CHORDS	SIZE		LUMBER	DESCR.
1 - 4	2x4	DRY	No.2	SPF
5 - 4	2x4	DRY	No.2	SPF
7 - 2	2x4	DRY	No.2	SPF
7 - 5	2x4	DRY	No.2	SPF
ALL WEBS EXCEPT	2x3	DRY	No.2	SPF

DRY: SEASONED LUMBER.

PLATES (table is in inches)

JT	TYPE	PLATES	W	LEN	Y	X
2	TMVW-t	MT20	3.0	4.0	1.50	1.00
3	TMWW-t	MT20	3.0	4.0	1.50	1.50
4	TMV-p	MT20	2.0	4.0	0.75	2.00
5	BMVW1-t	MT20	3.0	4.0		
6	BMWW-t	MT20	3.0	4.0		
7	BMV1+p	MT20	2.0	4.0		

A SIZE FOR SIZE SUBSTITUTION OF MITEK MII20 WITH TEE-LOK TL20 PLATES IS ALLOWED.

DIMENSIONS, SUPPORTS AND LOADINGS SPECIFIED BY FABRICATOR TO BE VERIFIED BY BUILDING DESIGNER

BEARINGS

JT	FACTORED GROSS REACTION VERT	HORZ	MAXIMUM FACTORED GROSS REACTION DOWN	HORZ	UPLIFT	INPUT BRG IN-SX	REQRD BRG IN-SX
5	217	0	217	0	0	HANGER BY OTHERS MIN. SEAT SIZE: 1-8	
7	304	0	304	0	0	5-8	5-8

UNFACTORED REACTIONS

JT	1ST LCASE COMBINED	MAX./MIN. COMPONENT REACTIONS SNOW	LIVE	PERM.LIVE	WIND	DEAD	SOIL
5	153	107 / 0	0 / 0	0 / 0	0 / 0	46 / 0	0 / 0
7	212	159 / 0	0 / 0	0 / 0	0 / 0	53 / 0	0 / 0

BEARING MATERIAL TO BE SPF NO.2 OR BETTER AT JOINT(S) 7

BRACING

TOP CHORD TO BE SHEATHED OR MAX. PURLIN SPACING = 6.25 FT.
MAX. UNBRACED BOTTOM CHORD LENGTH = 10.00 FT. OR RIGID CEILING DIRECTLY APPLIED.

ALL PITCH BREAKS AND PERIMETER CORNER JOINTS MUST BE LATERALLY RESTRAINED.

LOADING

TOTAL LOAD CASES: (4)

CHORDS

MEMB. FR-TO	MAX. FACTORED FORCE (LBS)	VERT. LOAD (PLF) FROM	TO	LC1 MAX CSI (LC)	MAX. UNBRAC LENGTH
1- 2	0 / 24	-77.4	-77.4	0.07 (1)	10.00
2- 3	-138 / 0	-77.4	-77.4	0.07 (1)	6.25
3- 4	-12 / 0	-77.4	-77.4	0.06 (1)	6.25
5- 4	-68 / 0	0.0	0.0	0.02 (1)	7.81
7- 2	-287 / 0	0.0	0.0	0.03 (1)	7.81
7- 6	0 / 0	-17.5	-17.5	0.02 (4)	10.00
6- 5	0 / 124	-17.5	-17.5	0.03 (4)	10.00

WEBS

MEMB. FR-TO	MAX. FACTORED FORCE (LBS)	MAX CSI (LC)
6- 3	-4 / 40	0.01 (4)
3- 5	-181 / 0	0.04 (1)
2- 6	0 / 134	0.03 (1)

DESIGN CRITERIA

SPECIFIED LOADS:

TOP	CH.	LL	=	23.3	PSF
		DL	=	3.0	PSF
BOT	CH.	LL	=	0.0	PSF
		DL	=	7.0	PSF
TOTAL	LOAD		=	33.3	PSF

SPACING = 24.0 IN. C/C

THIS TRUSS IS DESIGNED FOR RESIDENTIAL OR SMALL BUILDING REQUIREMENTS OF PART 9, NBCC 2010

THIS DESIGN COMPLIES WITH:
- PART 9 OF OBC 2012 , BCBC 2012 , ABC 2014
- CSA 086-09
- TPIC 2011

(55 % OF 27.2 P.S.F. G.S.L. PLUS 8.4 P.S.F. RAIN LOAD) EQUALS 23.3 P.S.F. SPECIFIED ROOF LIVE LOAD

ALLOWABLE DEFL.(LL)= L/360 (0.19")
CALCULATED VERT. DEFL.(LL) = L/ 999 (0.00")
ALLOWABLE DEFL.(TL)= L/360 (0.19")
CALCULATED VERT. DEFL.(TL) = L/ 999 (0.00")

CSI: TC=0.07 (1-2:1) , BC=0.03 (5-6:4) , WB=0.04 (3-5:1) , SSI=0.07 (3-4:1)

DOL LUMBER=1.00 NAIL=1.00 LS BEND=1.10 COMP=1.10 SHEAR=1.10 TENS= 1.10

COMPANION LIVE LOAD FACTOR = 0.50

TRUSS PLATE MANUFACTURER IS NOT RESPONSIBLE FOR QUALITY CONTROL IN THE TRUSS MANUFACTURING PLANT .

NAIL VALUES

PLATE	GRIP(DRY) (PSI) MAX	MIN	SHEAR (PLI) MAX	MIN	SECTION (PLI) MAX	MIN
MT20	618	354	1667	822	2284	1656

PLATE PLACEMENT TOL. = 0.250 inches

PLATE ROTATION TOL. = 5.0 Deg.

JSI GRIP= 0.44 (2) (INPUT = 0.90)
JSI METAL= 0.09 (2) (INPUT = 1.00)

LICENSED PROFESSIONAL ENGINEER
P.M. TREVISAN
100136551
March 16th, 2017
PROVINCE OF ONTARIO

RECEIVED
TOWN OF MILTON
MAR 29, 2017
17-5327
BUILDING DIVISION

KOTT

JOB NAME	TRUSS NAME	QUANTITY	PLY	JOB DESC.	DRWG NO.
PT0317-093	T71	1	1	TRUSS DESC. LECCO RIDGE-BLOCK 343	

KOTT , Stouffville, ON, CGC

Version 8.100 S Feb 9 2017 MiTek Industries, Inc. Thu Mar 16 07:55:26 2017 Page 1
ID:EvTixTQDI5yR1QLotZTBr_yE?HJ-PGqMlAXzjtHeIO9ESWrZYs05CXM2lCTuX7FsT?zaRHF

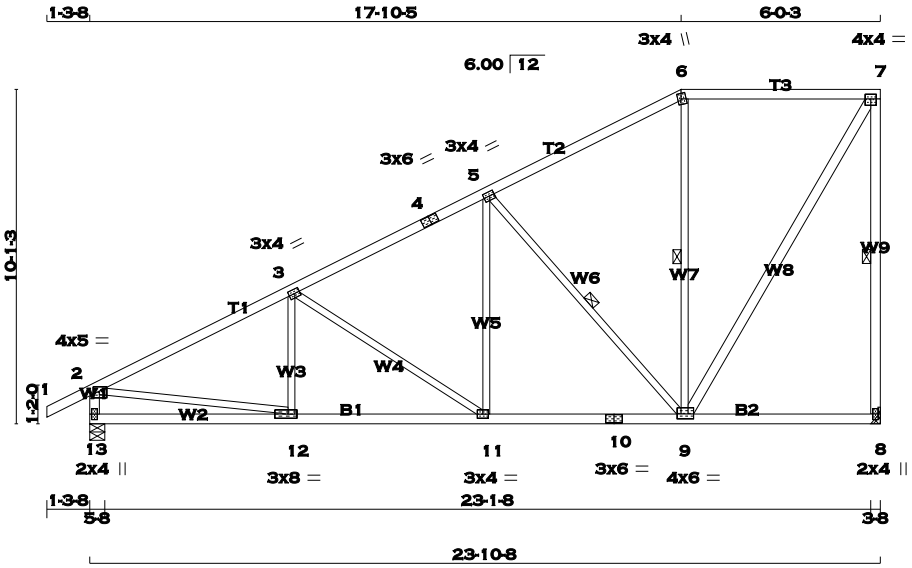

SCALE = 1:69.6

TOTAL WEIGHT = 116 lb

[M][F]

LUMBER

N. L. G. A. RULES

CHORDS	SIZE		LUMBER	DESCR.
1 - 4	2x4	DRY	No.2	SPF
4 - 6	2x4	DRY	No.2	SPF
6 - 7	2x4	DRY	No.2	SPF
8 - 7	2x4	DRY	No.2	SPF
13 - 2	2x4	DRY	No.2	SPF
13 - 10	2x4	DRY	No.2	SPF
10 - 8	2x4	DRY	No.2	SPF
ALL WEBS	2x3	DRY	No.2	SPF
EXCEPT				
9 - 7	2x4	DRY	No.2	SPF

DRY: SEASONED LUMBER.

PLATES (table is in inches)

JT	TYPE	PLATES	W	LEN	Y	X
2	TMVW-p	MT20	4.0	5.0	1.50	2.25
3	TMWW-t	MT20	3.0	4.0	1.50	1.75
4	TS-t	MT20	3.0	6.0		
5	TMWW-t	MT20	3.0	4.0	1.50	1.75
6	TTW+m	MT20	3.0	4.0	2.00	1.25
7	TMVW-t	MT20	4.0	4.0	1.75	2.00
8	BMV1+p	MT20	2.0	4.0		
9	BMWWW-t	MT20	4.0	6.0	1.75	1.50
10	BS-t	MT20	3.0	6.0		
11	BMWW-t	MT20	3.0	4.0		
12	BMWW-t	MT20	3.0	8.0	1.50	3.25
13	BMV1+p	MT20	2.0	4.0		

A SIZE FOR SIZE SUBSTITUTION OF MITEK MII20 WITH TEE-LOK TL20 PLATES IS ALLOWED.

DIMENSIONS, SUPPORTS AND LOADINGS SPECIFIED BY FABRICATOR TO BE VERIFIED BY BUILDING DESIGNER

BEARINGS

JT	FACTORED GROSS REACTION VERT	HORZ	MAXIMUM FACTORED GROSS REACTION DOWN	HORZ	UPLIFT	INPUT BRG IN-SX	REQRD BRG IN-SX
8	1132	0	1132	0	0	HANGER BY OTHERS MIN. SEAT SIZE: 3-8	
13	1237	0	1237	0	0	5-8	5-8

UNFACTORED REACTIONS

JT	1ST LCASE COMBINED	SNOW	MAX./MIN. COMPONENT REACTIONS LIVE	PERM.LIVE	WIND	DEAD	SOIL
8	795	556 / 0	0 / 0	0 / 0	0 / 0	239 / 0	0 / 0
13	866	619 / 0	0 / 0	0 / 0	0 / 0	247 / 0	0 / 0

BEARING MATERIAL TO BE SPF NO.2 OR BETTER AT JOINT(S) 13

BRACING

TOP CHORD TO BE SHEATHED OR MAX. PURLIN SPACING = 4.90 FT.
MAX. UNBRACED BOTTOM CHORD LENGTH = 10.00 FT. OR RIGID CEILING DIRECTLY APPLIED.

ALL PITCH BREAKS AND PERIMETER CORNER JOINTS MUST BE LATERALLY RESTRAINED.

1 - 2x3 SPF No.2 LATERAL BRACE(S) AT 1/ 2 LENGTH OF 7-8. DBS = 12-0-0 . CBF = 82 LBS.
1 - 2x3 SPF No.2 LATERAL BRACE(S) AT 1/ 2 LENGTH OF 5-9. DBS = 18-0-0 . CBF = 88 LBS.
1 - 2x3 SPF No.2 LATERAL BRACE(S) AT 1/ 2 LENGTH OF 6-9. DBS = 20-0-0 . CBF = 19 LBS.

DBS = DIAGONAL BRACE SPACING (MAX). CBF = CUMULATIVE BRACING FORCE. FASTEN LATERAL BRACE(S) USING (0.122"X3") SPIRAL NAILS : 1 NAIL FOR 2x3 BRACE(S), 2 FOR 1x4, 2x4, 2x5, 3 FOR 2x6, 4 FOR 2x8, 5 FOR 2x10, AND 6 FOR 2x12.

END VERTICAL(S) MUST BE SHEATHED OR HAVE BRACES AS INDICATED IN THE MAX. UNBRACED LENGTH COLUMN OF THE TABLE BELOW

LOADING

TOTAL LOAD CASES: (4)

CHORDS

MEMB. FR-TO	MAX. FACTORED FORCE (LBS)	FACTORED VERT. LOAD LC1 (PLF) FROM	TO	MAX CSI (LC)	MAX. UNBRAC LENGTH
1- 2	0 / 23	-77.4	-77.4	0.10 (1)	10.00
2- 3	-1543 / 0	-77.4	-77.4	0.38 (1)	4.90
3- 4	-1154 / 0	-77.4	-77.4	0.31 (1)	5.57
4- 5	-1154 / 0	-77.4	-77.4	0.31 (1)	5.57
5- 6	-601 / 0	-77.4	-77.4	0.31 (1)	6.25
6- 7	-518 / 0	-77.4	-77.4	0.36 (1)	6.25
8- 7	-1091 / 0	0.0	0.0	0.54 (1)	6.05
13- 2	-1193 / 0	0.0	0.0	0.12 (1)	7.32
13-12	0 / 0	-17.5	-17.5	0.15 (4)	10.00
12-11	0 / 1398	-17.5	-17.5	0.29 (1)	10.00
11-10	0 / 1032	-17.5	-17.5	0.25 (1)	10.00
10- 9	0 / 1032	-17.5	-17.5	0.25 (1)	10.00
9- 8	0 / 0	-17.5	-17.5	0.15 (4)	10.00

WEBS

MEMB. FR-TO	MAX. FACTORED FORCE (LBS)	MAX CSI (LC)
12- 3	-82 / 75	0.03 (4)
3-11	-439 / 0	0.42 (1)
11- 5	0 / 341	0.08 (1)
5- 9	-778 / 0	0.45 (1)
9- 6	-156 / 34	0.11 (1)
9- 7	0 / 1003	0.16 (1)
2-12	0 / 1411	0.32 (1)

DESIGN CRITERIA

SPECIFIED LOADS:

TOP CH.	LL	=	23.3	PSF
	DL	=	3.0	PSF
BOT CH.	LL	=	0.0	PSF
	DL	=	7.0	PSF
TOTAL LOAD		=	33.3	PSF

SPACING = 24.0 IN. C/C

LOADING IN FLAT SECTION BASED ON A SLOPE OF 6.00/12

THIS TRUSS IS DESIGNED FOR RESIDENTIAL OR SMALL BUILDING REQUIREMENTS OF PART 9, NBCC 2010

THIS DESIGN COMPLIES WITH:
- PART 9 OF OBC 2012 , BCBC 2012 , ABC 2014
- CSA 086-09
- TPIC 2011

(55 % OF 27.2 P.S.F. G.S.L. PLUS 8.4 P.S.F. RAIN LOAD) EQUALS 23.3 P.S.F. SPECIFIED ROOF LIVE LOAD

ALLOWABLE DEFL.(LL)= L/360 (0.80")
CALCULATED VERT. DEFL.(LL) = L/ 999 (0.05")
ALLOWABLE DEFL.(TL)= L/360 (0.80")
CALCULATED VERT. DEFL.(TL) = L/ 999 (0.10")

CSI: TC=0.54 (7-8:1) , BC=0.29 (11-12:1) , WB=0.45 (5-9:1) , SSI=0.19 (2-3:1)

DOL LUMBER=1.00 NAIL=1.00 LS BEND=1.10 COMP=1.10 SHEAR=1.10 TENS= 1.10

COMPANION LIVE LOAD FACTOR = 0.50

TRUSS PLATE MANUFACTURER IS NOT RESPONSIBLE FOR QUALITY CONTROL IN THE TRUSS MANUFACTURING PLANT .

NAIL VALUES

PLATE	GRIP(DRY) (PSI) MAX	MIN	SHEAR (PLI) MAX	MIN	SECTION (PLI) MAX	MIN
MT20	618	354	1667	822	2284	1656

PLATE PLACEMENT TOL. = 0.250 inches

PLATE ROTATION TOL. = 0.5 Deg.

JSI GRIP= 0.88 (7) (INPUT = 0.90)
JSI METAL= 0.40 (2) (INPUT = 1.00)

LICENSED PROFESSIONAL ENGINEER
P.M. TREVISAN
100136551
March 16th, 2017
PROVINCE OF ONTARIO

RECEIVED
TOWN OF MILTON
MAR 29, 2017
17-5327
BUILDING DIVISION

KOTT

JOB NAME	TRUSS NAME	QUANTITY	PLY	JOB DESC.	DRWG NO.
PT0317-093	T72	1	1	TRUSS DESC. LECCO RIDGE-BLOCK 343	

KOTT , Stouffville, ON, CGC

Version 8.100 S Feb 9 2017 MiTek Industries, Inc. Thu Mar 16 07:55:27 2017 Page 1
ID:EvTixTQDI5yR1QLotZTBr_yE?HJ-tSOkyWYbUBPVwYkR?ENo54ZEixhHUfn1mn_P?SzaRHE

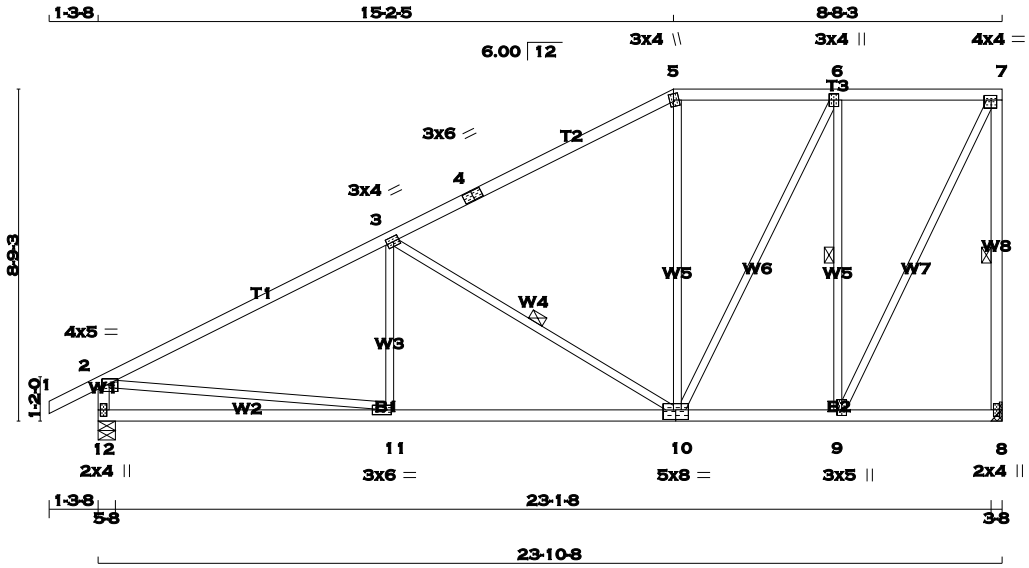

TOTAL WEIGHT = 113 lb

LUMBER
N. L. G. A. RULES

CHORDS	SIZE		LUMBER	DESCR.
1 - 4	2x4	DRY	No.2	SPF
4 - 5	2x4	DRY	No.2	SPF
5 - 7	2x4	DRY	No.2	SPF
8 - 7	2x4	DRY	No.2	SPF
12 - 2	2x4	DRY	No.2	SPF
12 - 10	2x4	DRY	No.2	SPF
10 - 8	2x4	DRY	No.2	SPF
ALL WEBS EXCEPT	2x3	DRY	No.2	SPF

DRY: SEASONED LUMBER.

PLATES (table is in inches)

JT	TYPE	PLATES	W	LEN	Y	X
2	TMVW-p	MT20	4.0	5.0	1.50	2.25
3	TMWW-t	MT20	3.0	4.0	1.50	1.75
4	TS-t	MT20	3.0	6.0		
5	TTW+m	MT20	3.0	4.0	2.00	1.25
6	TMWW+t	MT20	3.0	4.0		
7	TMVW-t	MT20	4.0	4.0	1.50	1.75
8	BMV1+p	MT20	2.0	4.0		
9	BMWW+t	MT20	3.0	5.0	1.75	1.50
10	BSWWW-l	MT20	5.0	8.0	3.00	4.00
11	BMWW-t	MT20	3.0	6.0	1.50	1.75
12	BMV1+p	MT20	2.0	4.0		

A SIZE FOR SIZE SUBSTITUTION OF MITEK MII20 WITH TEE-LOK TL20 PLATES IS ALLOWED.

DIMENSIONS, SUPPORTS AND LOADINGS SPECIFIED BY FABRICATOR TO BE VERIFIED BY BUILDING DESIGNER

BEARINGS

JT	FACTORED GROSS REACTION VERT	HORZ	MAXIMUM FACTORED GROSS REACTION DOWN	HORZ	UPLIFT	INPUT BRG IN-SX	REQRD BRG IN-SX
8	1132	0	1132	0	0	HANGER BY OTHERS MIN. SEAT SIZE: 3-8	
12	1237	0	1237	0	0	5-8	5-8

UNFACTORED REACTIONS

JT	1ST LCASE COMBINED	MAX./MIN. COMPONENT REACTIONS SNOW	LIVE	PERM.LIVE	WIND	DEAD	SOIL
8	795	556 / 0	0 / 0	0 / 0	0 / 0	239 / 0	0 / 0
12	866	619 / 0	0 / 0	0 / 0	0 / 0	247 / 0	0 / 0

BEARING MATERIAL TO BE SPF NO.2 OR BETTER AT JOINT(S) 12

BRACING
TOP CHORD TO BE SHEATHED OR MAX. PURLIN SPACING = 4.43 FT.
MAX. UNBRACED BOTTOM CHORD LENGTH = 10.00 FT. OR RIGID CEILING DIRECTLY APPLIED.

ALL PITCH BREAKS AND PERIMETER CORNER JOINTS MUST BE LATERALLY RESTRAINED.

1 - 2x3 SPF No.2 LATERAL BRACE(S) AT 1/ 2 LENGTH OF 7-8. DBS = 12-0-0 . CBF = 82 LBS.
1 - 2x3 SPF No.2 LATERAL BRACE(S) AT 1/ 2 LENGTH OF 3-10. DBS = 18-0-0 . CBF = 86 LBS.
1 - 2x3 SPF No.2 LATERAL BRACE(S) AT 1/ 2 LENGTH OF 6-9. DBS = 16-0-0 . CBF = 90 LBS.

DBS = DIAGONAL BRACE SPACING (MAX). CBF = CUMULATIVE BRACING FORCE. FASTEN LATERAL BRACE(S) USING (0.122"X3") SPIRAL NAILS : 1 NAIL FOR 2x3 BRACE(S), 2 FOR 1x4, 2x4, 2x5, 3 FOR 2x6, 4 FOR 2x8, 5 FOR 2x10, AND 6 FOR 2x12.

END VERTICAL(S) MUST BE SHEATHED OR HAVE BRACES AS INDICATED IN THE MAX. UNBRACED LENGTH COLUMN OF THE TABLE BELOW

LOADING
TOTAL LOAD CASES: (4)

CHORDS

MEMB. FR-TO	MAX. FACTORED FORCE (LBS)	FACTORED VERT. LOAD LC1 FROM	TO	MAX CSI (LC)	MAX. UNBRAC LENGTH
1- 2	0 / 23	-77.4	-77.4	0.10 (1)	10.00
2- 3	-1524 / 0	-77.4	-77.4	0.69 (1)	4.43
3- 4	-862 / 0	-77.4	-77.4	0.61 (1)	5.62
4- 5	-862 / 0	-77.4	-77.4	0.61 (1)	5.62
5- 6	-742 / 0	-77.4	-77.4	0.18 (1)	6.25
6- 7	-497 / 0	-77.4	-77.4	0.18 (1)	6.25
8- 7	-1100 / 0	0.0	0.0	0.39 (1)	6.04
12- 2	-1183 / 0	0.0	0.0	0.12 (1)	7.34
12-11	0 / 0	-17.5	-17.5	0.26 (4)	10.00
11-10	0 / 1392	-17.5	-17.5	0.36 (4)	10.00
10- 9	0 / 497	-17.5	-17.5	0.16 (4)	10.00
9- 8	0 / 0	-17.5	-17.5	0.07 (4)	10.00

WEBS

MEMB. FR-TO	MAX. FACTORED FORCE (LBS)	MAX CSI (LC)
11- 3	-2 / 129	0.04 (4)
3-10	-766 / 0	0.42 (1)
10- 5	0 / 73	0.03 (4)
10- 6	0 / 542	0.12 (1)
9- 6	-897 / 0	0.44 (1)
9- 7	0 / 1091	0.25 (1)
2-11	0 / 1400	0.32 (1)

DESIGN CRITERIA

SPECIFIED LOADS:

TOP	CH.	LL	=	23.3	PSF
		DL	=	3.0	PSF
BOT	CH.	LL	=	0.0	PSF
		DL	=	7.0	PSF
TOTAL	LOAD		=	33.3	PSF

SPACING = 24.0 IN. C/C

LOADING IN FLAT SECTION BASED ON A SLOPE OF 6.00/12

THIS TRUSS IS DESIGNED FOR RESIDENTIAL OR SMALL BUILDING REQUIREMENTS OF PART 9, NBCC 2010

THIS DESIGN COMPLIES WITH:
- PART 9 OF OBC 2012 , BCBC 2012 , ABC 2014
- CSA 086-09
- TPIC 2011

(55 % OF 27.2 P.S.F. G.S.L. PLUS 8.4 P.S.F. RAIN LOAD) EQUALS 23.3 P.S.F. SPECIFIED ROOF LIVE LOAD

ALLOWABLE DEFL.(LL)= L/360 (0.80")
CALCULATED VERT. DEFL.(LL) = L/ 999 (0.06")
ALLOWABLE DEFL.(TL)= L/360 (0.80")
CALCULATED VERT. DEFL.(TL) = L/ 999 (0.14")

CSI: TC=0.69 (2-3:1) , BC=0.36 (10-11:4) , WB=0.44 (6-9:1) , SSI=0.26 (2-3:1)

DOL LUMBER=1.00 NAIL=1.00 LS BEND=1.10 COMP=1.10 SHEAR=1.10 TENS= 1.10

COMPANION LIVE LOAD FACTOR = 0.50

TRUSS PLATE MANUFACTURER IS NOT RESPONSIBLE FOR QUALITY CONTROL IN THE TRUSS MANUFACTURING PLANT .

NAIL VALUES

PLATE	GRIP(DRY) (PSI) MAX	MIN	SHEAR (PLI) MAX	MIN	SECTION (PLI) MAX	MIN
MT20	618	354	1667	822	2284	1656

PLATE PLACEMENT TOL. = 0.250 inches

PLATE ROTATION TOL. = 5.0 Deg.

JSI GRIP= 0.90 (11) (INPUT = 0.90)
JSI METAL= 0.40 (2) (INPUT = 1.00)

LICENSED PROFESSIONAL ENGINEER
P.M. TREVISAN
100136551
March 16th, 2017
PROVINCE OF ONTARIO

RECEIVED
TOWN OF MILTON
MAR 29, 2017
17-5327
BUILDING DIVISION

KOTT

JOB NAME	TRUSS NAME	QUANTITY	PLY	JOB DESC.	DRWG NO.
PT0317-093	T73	1	1	TRUSS DESC. LECCO RIDGE-BLOCK 343	

KOTT , Stouffville, ON, CGC

Version 8.100 S Feb 9 2017 MiTek Industries, Inc. Thu Mar 16 07:55:27 2017 Page 1
ID:EvTixTQDI5yR1QLotZTBr_yE?HJ-tSOkyWYbUBPVwYkR?ENo54ZITxi4UZ31mn_P?SzaRHE

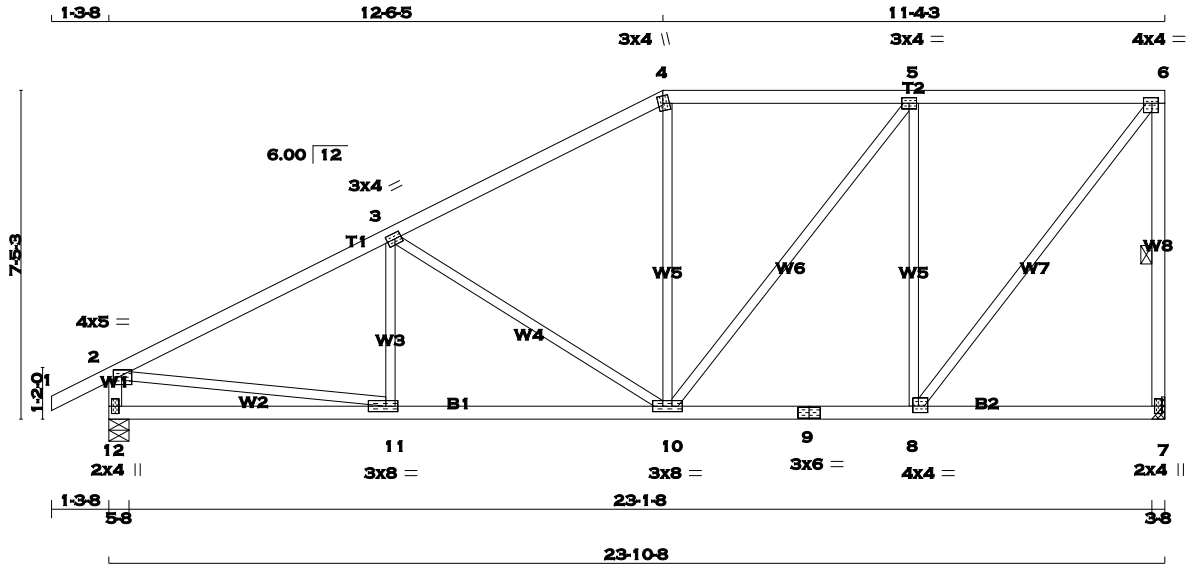

TOTAL WEIGHT = 106 lb

[M][F]

LUMBER

N. L. G. A. RULES

CHORDS	SIZE		LUMBER	DESCR.
1 - 4	2x4	DRY	No.2	SPF
4 - 6	2x4	DRY	No.2	SPF
7 - 6	2x4	DRY	No.2	SPF
12 - 2	2x4	DRY	No.2	SPF
12 - 9	2x4	DRY	No.2	SPF
9 - 7	2x4	DRY	No.2	SPF
ALL WEBS EXCEPT	2x3	DRY	No.2	SPF

DRY: SEASONED LUMBER.

PLATES (table is in inches)

JT	TYPE	PLATES	W	LEN	Y	X
2	TMVW-p	MT20	4.0	5.0	1.50	2.25
3	TMWW-t	MT20	3.0	4.0	1.50	1.75
4	TTW+m	MT20	3.0	4.0	2.00	1.25
5	TMWW-t	MT20	3.0	4.0		
6	TMVW-t	MT20	4.0	4.0	1.50	1.75
7	BMV1+p	MT20	2.0	4.0		
8	BMWW-t	MT20	4.0	4.0	1.75	1.50
9	BS-t	MT20	3.0	6.0		
10	BMWWW-t	MT20	3.0	8.0		
11	BMWW-t	MT20	3.0	8.0	1.50	3.25
12	BMV1+p	MT20	2.0	4.0		

A SIZE FOR SIZE SUBSTITUTION OF MITEK MII20 WITH TEE-LOK TL20 PLATES IS ALLOWED.

DIMENSIONS, SUPPORTS AND LOADINGS SPECIFIED BY FABRICATOR TO BE VERIFIED BY BUILDING DESIGNER

BEARINGS

JT	FACTORED GROSS REACTION VERT	HORZ	MAXIMUM FACTORED GROSS REACTION DOWN	HORZ	UPLIFT	INPUT BRG	REQRD BRG
7	1132	0	1132	0	0	IN-SX HANGER BY OTHERS MIN. SEAT SIZE: 3-8	IN-SX
12	1237	0	1237	0	0	5-8	5-8

UNFACTORED REACTIONS

JT	1ST LCASE COMBINED	SNOW	LIVE	PERM.LIVE	WIND	DEAD	SOIL
		MAX./MIN. COMPONENT REACTIONS					
7	795	556 / 0	0 / 0	0 / 0	0 / 0	239 / 0	0 / 0
12	866	619 / 0	0 / 0	0 / 0	0 / 0	247 / 0	0 / 0

BEARING MATERIAL TO BE SPF NO.2 OR BETTER AT JOINT(S) 12

BRACING

TOP CHORD TO BE SHEATHED OR MAX. PURLIN SPACING = 4.79 FT.
MAX. UNBRACED BOTTOM CHORD LENGTH = 10.00 FT. OR RIGID CEILING DIRECTLY APPLIED.

ALL PITCH BREAKS AND PERIMETER CORNER JOINTS MUST BE LATERALLY RESTRAINED.

1 - 2x3 SPF No.2 LATERAL BRACE(S) AT 1/ 2 LENGTH OF 6-7. DBS = 12-0-0 . CBF = 82 LBS.

DBS = DIAGONAL BRACE SPACING (MAX). CBF = CUMULATIVE BRACING FORCE. FASTEN LATERAL BRACE(S) USING (0.122"X3") SPIRAL NAILS : 1 NAIL FOR 2x3 BRACE(S), 2 FOR 1x4, 2x4, 2x5, 3 FOR 2x6, 4 FOR 2x8, 5 FOR 2x10, AND 6 FOR 2x12.

END VERTICAL(S) MUST BE SHEATHED OR HAVE BRACES AS INDICATED IN THE MAX. UNBRACED LENGTH COLUMN OF THE TABLE BELOW

LOADING

TOTAL LOAD CASES: (4)

CHORDS MEMB. FR-TO	MAX. FACTORED FORCE (LBS)	FACTORED VERT. LOAD (PLF) FROM	TO	LC1 MAX CSI (LC)	MAX. UNBRAC LENGTH	WEBS MEMB. FR-TO	MAX. FACTORED FORCE (LBS)	MAX CSI (LC)
1- 2	0 / 23	-77.4	-77.4	0.10 (1)	10.00	11- 3	-68 / 86	0.03 (4)
2- 3	-1554 / 0	-77.4	-77.4	0.45 (1)	4.79	3-10	-555 / 0	0.61 (1)
3- 4	-1085 / 0	-77.4	-77.4	0.41 (1)	5.54	10- 4	0 / 128	0.04 (4)
4- 5	-948 / 0	-77.4	-77.4	0.33 (1)	5.94	10- 5	0 / 346	0.08 (1)
5- 6	-736 / 0	-77.4	-77.4	0.32 (1)	6.25	8- 5	-816 / 0	0.81 (1)
7- 6	-1092 / 0	0.0	0.0	0.27 (1)	6.05	8- 6	0 / 1182	0.27 (1)
12- 2	-1191 / 0	0.0	0.0	0.12 (1)	7.32	2-11	0 / 1426	0.32 (1)
12-11	0 / 0	-17.5	-17.5	0.17 (4)	10.00			
11-10	0 / 1413	-17.5	-17.5	0.31 (1)	10.00			
10- 9	0 / 736	-17.5	-17.5	0.19 (1)	10.00			
9- 8	0 / 736	-17.5	-17.5	0.19 (1)	10.00			
8- 7	0 / 0	-17.5	-17.5	0.13 (4)	10.00			

DESIGN CRITERIA

SPECIFIED LOADS:

TOP	CH.	LL	=	23.3	PSF
		DL	=	3.0	PSF
BOT	CH.	LL	=	0.0	PSF
		DL	=	7.0	PSF
TOTAL	LOAD		=	33.3	PSF

SPACING = 24.0 IN. C/C

LOADING IN FLAT SECTION BASED ON A SLOPE OF 6.00/12

THIS TRUSS IS DESIGNED FOR RESIDENTIAL OR SMALL BUILDING REQUIREMENTS OF PART 9, NBCC 2010

THIS DESIGN COMPLIES WITH:
- PART 9 OF OBC 2012 , BCBC 2012 , ABC 2014
- CSA 086-09
- TPIC 2011

(55 % OF 27.2 P.S.F. G.S.L. PLUS 8.4 P.S.F. RAIN LOAD) EQUALS 23.3 P.S.F. SPECIFIED ROOF LIVE LOAD

ALLOWABLE DEFL.(LL)= L/360 (0.80")
CALCULATED VERT. DEFL.(LL) = L/ 999 (0.06")
ALLOWABLE DEFL.(TL)= L/360 (0.80")
CALCULATED VERT. DEFL.(TL) = L/ 999 (0.11")

CSI: TC=0.45 (2-3:1) , BC=0.31 (10-11:1) , WB=0.81 (5-8:1) , SSI=0.21 (5-6:1)

DOL LUMBER=1.00 NAIL=1.00 LS BEND=1.10 COMP=1.10 SHEAR=1.10 TENS= 1.10

COMPANION LIVE LOAD FACTOR = 0.50

TRUSS PLATE MANUFACTURER IS NOT RESPONSIBLE FOR QUALITY CONTROL IN THE TRUSS MANUFACTURING PLANT .

NAIL VALUES

PLATE	GRIP(DRY) (PSI) MAX	MIN	SHEAR (PLI) MAX	MIN	SECTION (PLI) MAX	MIN
MT20	618	354	1667	822	2284	1656

PLATE PLACEMENT TOL. = 0.250 inches

PLATE ROTATION TOL. = 5.0 Deg.

JSI GRIP= 0.86 (11) (INPUT = 0.90)
JSI METAL= 0.40 (2) (INPUT = 1.00)

LICENSED PROFESSIONAL ENGINEER
P.M. TREVISAN
100136551
March 16th, 2017
PROVINCE OF ONTARIO

RECEIVED
TOWN OF MILTON
MAR 29, 2017
17-5327
BUILDING DIVISION

KOTT

JOB NAME	TRUSS NAME	QUANTITY	PLY	JOB DESC.	DRWG NO.
PT0317-093	T74	2	1	TRUSS DESC. LECCO RIDGE-BLOCK 343	

KOTT , Stouffville, ON, CGC

Version 8.100 S Feb 9 2017 MiTek Industries, Inc. Thu Mar 16 07:55:28 2017 Page 1
ID:EvTixTQDI5yR1QLotZTBr_yE?HJ-Lfy7AsYDFVXMYiJdZxu1dH5TfK2TD4vB_RkzXuzaRHD

SCALE = 1:51.5

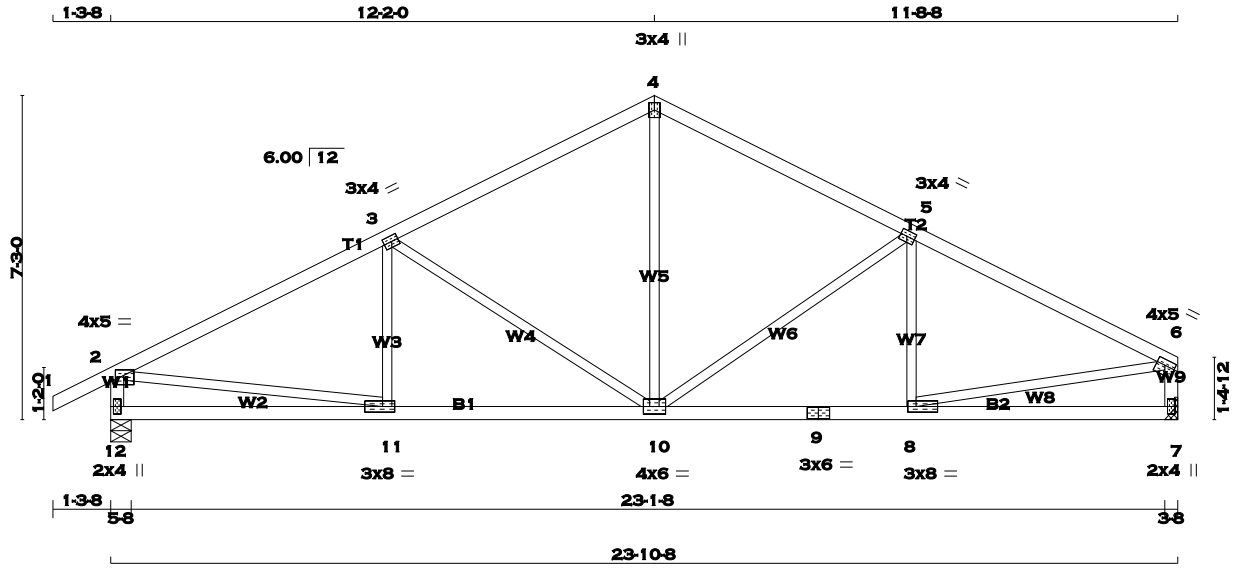

TOTAL WEIGHT = 2 X 93 = 187 lb
[M][F]

LUMBER
N. L. G. A. RULES

CHORDS	SIZE		LUMBER	DESCR.
1 - 4	2x4	DRY	No.2	SPF
4 - 6	2x4	DRY	No.2	SPF
12 - 2	2x4	DRY	No.2	SPF
7 - 6	2x4	DRY	No.2	SPF
12 - 9	2x4	DRY	No.2	SPF
9 - 7	2x4	DRY	No.2	SPF
ALL WEBS EXCEPT	2x3	DRY	No.2	SPF

DRY: SEASONED LUMBER.

PLATES (table is in inches)

JT	TYPE	PLATES	W	LEN	Y	X
2	TMVW-p	MT20	4.0	5.0	1.50	2.25
3	TMWW-t	MT20	3.0	4.0	1.50	1.75
4	TTW+p	MT20	3.0	4.0		
5	TMWW-t	MT20	3.0	4.0	1.50	1.75
6	TMVW-t	MT20	4.0	5.0	1.50	2.25
7	BMV1+p	MT20	2.0	4.0		
8	BMWW-t	MT20	3.0	8.0	1.50	2.25
9	BS-t	MT20	3.0	6.0		
10	BMWWW-t	MT20	4.0	6.0		
11	BMWW-t	MT20	3.0	8.0	1.50	3.25
12	BMV1+p	MT20	2.0	4.0		

A SIZE FOR SIZE SUBSTITUTION OF MITEK MII20 WITH TEE-LOK TL20 PLATES IS ALLOWED.

DIMENSIONS, SUPPORTS AND LOADINGS SPECIFIED BY FABRICATOR TO BE VERIFIED BY BUILDING DESIGNER

BEARINGS

JT	FACTORED GROSS REACTION VERT	HORZ	MAXIMUM FACTORED GROSS REACTION DOWN	HORZ	UPLIFT	INPUT BRG IN-SX	REQRD BRG IN-SX
12	1237	0	1237	0	0	5-8	5-8
7	1132	0	1132	0	0	HANGER BY OTHERS	
						MIN. SEAT SIZE: 3-8	

UNFACTORED REACTIONS

JT	1ST LCASE COMBINED	MAX./MIN. COMPONENT REACTIONS SNOW	LIVE	PERM.LIVE	WIND	DEAD	SOIL
12	866	619 / 0	0 / 0	0 / 0	0 / 0	247 / 0	0 / 0
7	795	556 / 0	0 / 0	0 / 0	0 / 0	239 / 0	0 / 0

BEARING MATERIAL TO BE SPF NO.2 OR BETTER AT JOINT(S) 12

BRACING
TOP CHORD TO BE SHEATHED OR MAX. PURLIN SPACING = 4.83 FT.
MAX. UNBRACED BOTTOM CHORD LENGTH = 10.00 FT. OR RIGID CEILING DIRECTLY APPLIED.

ALL PITCH BREAKS AND PERIMETER CORNER JOINTS MUST BE LATERALLY RESTRAINED.

LOADING
TOTAL LOAD CASES: (4)

CHORDS

MEMB. FR-TO	MAX. FORCE (LBS)	FACTORED VERT. LOAD (PLF) FROM	TO	MAX CSI (LC)	MAX. UNBRAC LENGTH
1- 2	0 / 23	-77.4	-77.4	0.10 (1)	10.00
2- 3	-1555 / 0	-77.4	-77.4	0.42 (1)	4.83
3- 4	-1121 / 0	-77.4	-77.4	0.38 (1)	5.51
4- 5	-1120 / 0	-77.4	-77.4	0.36 (1)	5.55
5- 6	-1469 / 0	-77.4	-77.4	0.38 (1)	4.99
12- 2	-1192 / 0	0.0	0.0	0.12 (1)	7.32
7- 6	-1088 / 0	0.0	0.0	0.11 (1)	7.57
12-11	0 / 0	-17.5	-17.5	0.15 (4)	10.00
11-10	0 / 1413	-17.5	-17.5	0.30 (1)	10.00
10- 9	0 / 1335	-17.5	-17.5	0.28 (1)	10.00
9- 8	0 / 1335	-17.5	-17.5	0.28 (1)	10.00
8- 7	0 / 0	-17.5	-17.5	0.14 (4)	10.00

WEBS

MEMB. FR-TO	MAX. FORCE (LBS)	MAX CSI (LC)
11- 3	-80 / 78	0.03 (4)
3-10	-519 / 0	0.51 (1)
10- 4	0 / 639	0.14 (1)
10- 5	-434 / 0	0.41 (1)
8- 5	-133 / 58	0.04 (1)
2-11	0 / 1427	0.32 (1)
8- 6	0 / 1357	0.31 (1)

DESIGN CRITERIA

SPECIFIED LOADS:

TOP	CH.	LL	=	23.3	PSF
		DL	=	3.0	PSF
BOT	CH.	LL	=	0.0	PSF
		DL	=	7.0	PSF
TOTAL	LOAD		=	33.3	PSF

SPACING = 24.0 IN. C/C

THIS TRUSS IS DESIGNED FOR RESIDENTIAL OR SMALL BUILDING REQUIREMENTS OF PART 9, NBCC 2010

THIS DESIGN COMPLIES WITH:
- PART 9 OF OBC 2012 , BCBC 2012 , ABC 2014
- CSA 086-09
- TPIC 2011

(55 % OF 27.2 P.S.F. G.S.L. PLUS 8.4 P.S.F. RAIN LOAD) EQUALS 23.3 P.S.F. SPECIFIED ROOF LIVE LOAD

ALLOWABLE DEFL.(LL)= L/360 (0.80")
CALCULATED VERT. DEFL.(LL) = L/ 999 (0.06")
ALLOWABLE DEFL.(TL)= L/360 (0.80")
CALCULATED VERT. DEFL.(TL) = L/ 999 (0.11")

CSI: TC=0.42 (2-3:1) , BC=0.30 (10-11:1) , WB=0.51 (3-10:1) , SSI=0.21 (2-3:1)

DOL LUMBER=1.00 NAIL=1.00 LS BEND=1.10 COMP=1.10 SHEAR=1.10 TENS= 1.10

COMPANION LIVE LOAD FACTOR = 0.50

TRUSS PLATE MANUFACTURER IS NOT RESPONSIBLE FOR QUALITY CONTROL IN THE TRUSS MANUFACTURING PLANT .

NAIL VALUES

PLATE	GRIP(DRY) (PSI) MAX	MIN	SHEAR (PLI) MAX	MIN	SECTION (PLI) MAX	MIN
MT20	618	354	1667	822	2284	1656

PLATE PLACEMENT TOL. = 0.250 inches

PLATE ROTATION TOL. = 5.0 Deg.

JSI GRIP= 0.89 (8) (INPUT = 0.90)
JSI METAL= 0.47 (6) (INPUT = 1.00)

LICENSED PROFESSIONAL ENGINEER
P.M. TREVISAN
100136551
March 16th, 2017
PROVINCE OF ONTARIO

RECEIVED
TOWN OF MILTON
MAR 29, 2017
17-5327
BUILDING DIVISION

KOTT

JOB NAME	TRUSS NAME	QUANTITY	PLY	JOB DESC.	DRWG NO.
PT0317-093	T75	1	1	TRUSS DESC. LECCO RIDGE-BLOCK 343	

KOTT , Stouffville, ON, CGC

Version 8.100 S Feb 9 2017 MiTek Industries, Inc. Thu Mar 16 07:55:28 2017 Page 1
ID:EvTixTQDI5yR1QLotZTBr_yE?HJ-Lfy7AsYDFVXMYiJdZxu1dH5ViK_QD0vB_RkzXuzaRHD

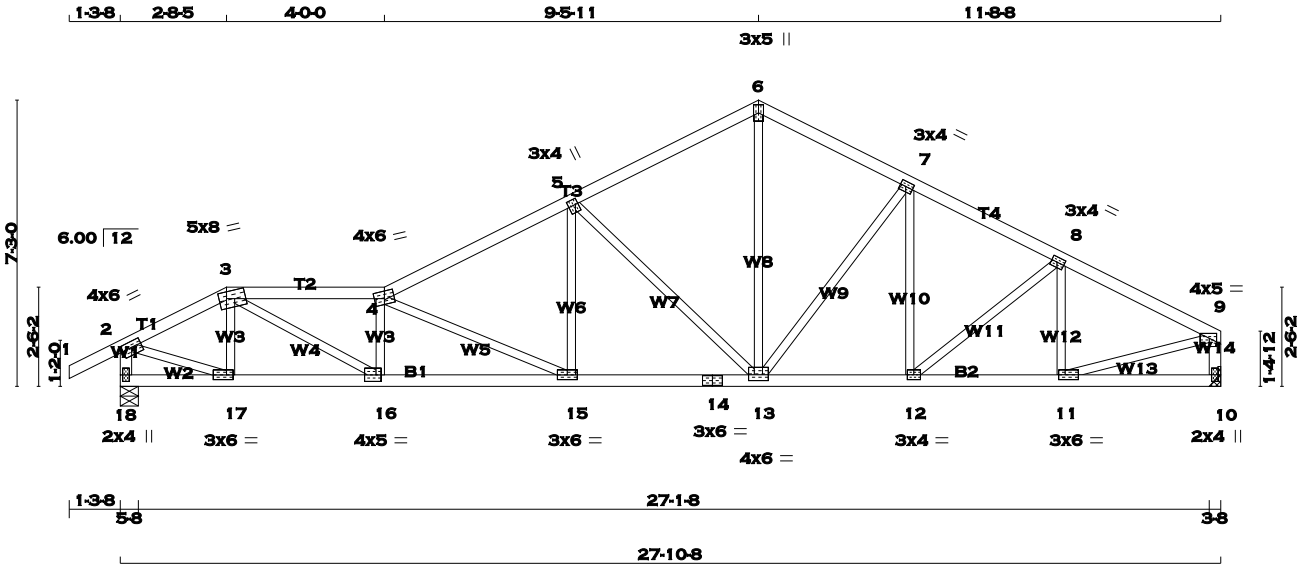

TOTAL WEIGHT = 115 lb

LUMBER
N. L. G. A. RULES

CHORDS	SIZE		LUMBER	DESCR.
1 - 3	2x4	DRY	No.2	SPF
3 - 4	2x4	DRY	No.2	SPF
4 - 6	2x4	DRY	No.2	SPF
6 - 9	2x4	DRY	No.2	SPF
18 - 2	2x4	DRY	No.2	SPF
10 - 9	2x4	DRY	No.2	SPF
18 - 14	2x4	DRY	No.2	SPF
14 - 10	2x4	DRY	No.2	SPF
ALL WEBS EXCEPT	2x3	DRY	No.2	SPF

DRY: SEASONED LUMBER.

PLATES (table is in inches)

JT	TYPE	PLATES	W	LEN	Y	X
2	TMVW-t	MT20	4.0	6.0	1.75	3.00
3	TTWW-m	MT20	5.0	8.0	2.00	2.25
4	TTWW-m	MT20	4.0	6.0	2.25	3.00
5	TMWW+t	MT20	3.0	4.0	1.75	0.75
6	TTW+p	MT20	3.0	5.0		
7	TMWW-t	MT20	3.0	4.0	1.50	1.75
8	TMWW-t	MT20	3.0	4.0	1.50	1.75
9	TMVW-p	MT20	4.0	5.0	1.50	2.25
10	BMV1+p	MT20	2.0	4.0		
11	BMWW-t	MT20	3.0	6.0	1.50	2.00
12	BMWW-t	MT20	3.0	4.0		
13	BMWWW-t	MT20	4.0	6.0	1.75	3.00
14	BS-t	MT20	3.0	6.0		
15	BMWW-t	MT20	3.0	6.0		
16	BMWW-t	MT20	4.0	5.0	2.00	1.50
17	BMWW-t	MT20	3.0	6.0	1.50	2.00
18	BMV1+p	MT20	2.0	4.0		

A SIZE FOR SIZE SUBSTITUTION OF MITEK MII20 WITH TEE-LOK TL20 PLATES IS ALLOWED.

DIMENSIONS, SUPPORTS AND LOADINGS SPECIFIED BY FABRICATOR TO BE VERIFIED BY BUILDING DESIGNER

BEARINGS

JT	FACTORED GROSS REACTION VERT	HORZ	MAXIMUM FACTORED GROSS REACTION DOWN	HORZ	UPLIFT	INPUT BRG IN-SX	REQRD BRG IN-SX
18	1427	0	1427	0	0	5-8	5-8
10	1322	0	1322	0	0	HANGER BY OTHERS	
						MIN. SEAT SIZE: 3-8	

UNFACTORED REACTIONS

JT	1ST LCASE COMBINED	MAX./MIN. COMPONENT REACTIONS SNOW	LIVE	PERM.LIVE	WIND	DEAD	SOIL
18	999	712 / 0	0 / 0	0 / 0	0 / 0	287 / 0	0 / 0
10	928	649 / 0	0 / 0	0 / 0	0 / 0	279 / 0	0 / 0

BEARING MATERIAL TO BE SPF NO.2 OR BETTER AT JOINT(S) 18

BRACING
TOP CHORD TO BE SHEATHED OR MAX. PURLIN SPACING = 3.83 FT.
MAX. UNBRACED BOTTOM CHORD LENGTH = 10.00 FT. OR RIGID CEILING DIRECTLY APPLIED.

ALL PITCH BREAKS AND PERIMETER CORNER JOINTS MUST BE LATERALLY RESTRAINED.

LOADING
TOTAL LOAD CASES: (4)

CHORDS

MEMB. FR-TO	MAX. FORCE (LBS)	FACTORED VERT. LOAD LC1 (PLF) FROM	TO	MAX CSI (LC)	MAX. UNBRAC LENGTH
1- 2	0 / 23	-77.4	-77.4	0.10 (1)	10.00
2- 3	-1662 / 0	-77.4	-77.4	0.10 (1)	5.07
3- 4	-2988 / 0	-77.4	-77.4	0.26 (1)	3.83
4- 5	-2217 / 0	-77.4	-77.4	0.29 (1)	4.34
5- 6	-1470 / 0	-77.4	-77.4	0.24 (1)	5.16
6- 7	-1463 / 0	-77.4	-77.4	0.15 (1)	5.28
7- 8	-1688 / 0	-77.4	-77.4	0.15 (1)	4.99
8- 9	-1674 / 0	-77.4	-77.4	0.18 (1)	4.98
18- 2	-1412 / 0	0.0	0.0	0.14 (1)	6.86
10- 9	-1290 / 0	0.0	0.0	0.13 (1)	7.10
18-17	0 / 0	-17.5	-17.5	0.05 (4)	10.00
17-16	0 / 1467	-17.5	-17.5	0.29 (1)	10.00
16-15	0 / 3027	-17.5	-17.5	0.56 (1)	10.00
15-14	0 / 2001	-17.5	-17.5	0.37 (1)	10.00
14-13	0 / 2001	-17.5	-17.5	0.37 (1)	10.00
13-12	0 / 1509	-17.5	-17.5	0.28 (1)	10.00
12-11	0 / 1508	-17.5	-17.5	0.27 (1)	10.00
11-10	0 / 0	-17.5	-17.5	0.06 (4)	10.00

WEBS

MEMB. FR-TO	MAX. FORCE (LBS)	MAX CSI (LC)
17- 3	-376 / 0	0.06 (1)
3-16	0 / 1749	0.39 (1)
16- 4	-814 / 0	0.13 (1)
4-15	-1132 / 0	0.53 (1)
15- 5	0 / 575	0.13 (1)
5-13	-978 / 0	0.77 (1)
13- 6	0 / 1035	0.23 (1)
13- 7	-348 / 0	0.25 (1)
12- 7	0 / 70	0.02 (4)
12- 8	-2 / 0	0.00 (4)
11- 8	-333 / 0	0.07 (1)
2-17	0 / 1553	0.35 (1)
11- 9	0 / 1562	0.35 (1)

DESIGN CRITERIA

SPECIFIED LOADS:

TOP CH.	LL	=	23.3	PSF
	DL	=	3.0	PSF
BOT CH.	LL	=	0.0	PSF
	DL	=	7.0	PSF
TOTAL LOAD		=	33.3	PSF

SPACING = 24.0 IN. C/C

LOADING IN ALL FLAT SECTIONS BASED ON A SLOPE OF 6.00/12

THIS TRUSS IS DESIGNED FOR RESIDENTIAL OR SMALL BUILDING REQUIREMENTS OF PART 9, NBCC 2010

THIS DESIGN COMPLIES WITH:
- PART 9 OF OBC 2012 , BCBC 2012 , ABC 2014
- CSA 086-09
- TPIC 2011

(55 % OF 27.2 P.S.F. G.S.L. PLUS 8.4 P.S.F. RAIN LOAD) EQUALS 23.3 P.S.F. SPECIFIED ROOF LIVE LOAD

ALLOWABLE DEFL.(LL)= L/360 (0.93")
CALCULATED VERT. DEFL.(LL) = L/ 999 (0.14")
ALLOWABLE DEFL.(TL)= L/360 (0.93")
CALCULATED VERT. DEFL.(TL) = L/ 999 (0.25")

CSI: TC=0.29 (4-5:1) , BC=0.56 (15-16:1) , WB=0.77 (5-13:1) , SSI=0.16 (4-5:1)

DOL LUMBER=1.00 NAIL=1.00 LS BEND=1.10 COMP=1.10 SHEAR=1.10 TENS= 1.10

COMPANION LIVE LOAD FACTOR = 0.50

TRUSS PLATE MANUFACTURER IS NOT RESPONSIBLE FOR QUALITY CONTROL IN THE TRUSS MANUFACTURING PLANT .

NAIL VALUES

PLATE	GRIP(DRY) (PSI) MAX	MIN	SHEAR (PLI) MAX	MIN	SECTION (PLI) MAX	MIN
MT20	618	354	1667	822	2284	1656

PLATE PLACEMENT TOL. = 0.250 inches

PLATE ROTATION TOL. = 5.0 Deg.

JSI GRIP= 0.90 (6) (INPUT = 0.90)
JSI METAL= 0.51 (14) (INPUT = 1.00)

LICENSED PROFESSIONAL ENGINEER
P.M. TREVISAN
100136551
March 16th, 2017
PROVINCE OF ONTARIO

RECEIVED
TOWN OF MILTON
MAR 29, 2017
17-5327
BUILDING DIVISION

KOTT

JOB NAME	TRUSS NAME	QUANTITY	PLY	JOB DESC.	DRWG NO.
PT0317-093	T76	1	1	TRUSS DESC. LECCO RIDGE-BLOCK 343	

KOTT , Stouffville, ON, CGC

Version 8.100 S Feb 9 2017 MiTek Industries, Inc. Thu Mar 16 07:55:29 2017 Page 1
ID:EvTixTQDI5yR1QLotZTBr_yE?HJ-prWVNCZr0ofD9sup7ePGAVefakMuyWzKD5TW4KzaRHC

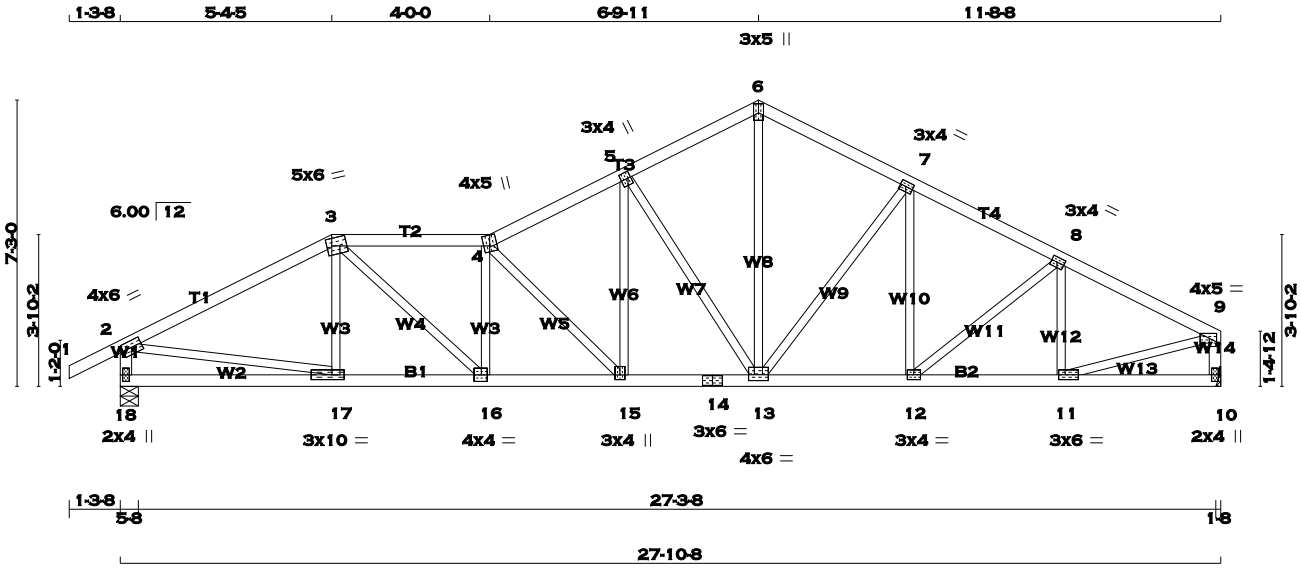

TOTAL WEIGHT = 120 lb

LUMBER
N. L. G. A. RULES

CHORDS	SIZE		LUMBER	DESCR.
1 - 3	2x4	DRY	No.2	SPF
3 - 4	2x4	DRY	No.2	SPF
4 - 6	2x4	DRY	No.2	SPF
6 - 9	2x4	DRY	No.2	SPF
18 - 2	2x4	DRY	No.2	SPF
10 - 9	2x4	DRY	No.2	SPF
18 - 14	2x4	DRY	No.2	SPF
14 - 10	2x4	DRY	No.2	SPF
ALL WEBS EXCEPT	2x3	DRY	No.2	SPF

DRY: SEASONED LUMBER.

PLATES (table is in inches)

JT	TYPE	PLATES	W	LEN	Y	X
2	TMVW-t	MT20	4.0	6.0	2.00	3.00
3	TTWW-m	MT20	5.0	6.0	2.25	1.50
4	TTWW+m	MT20	4.0	5.0	3.25	1.75
5	TMWW+t	MT20	3.0	4.0	2.00	0.75
6	TTW+p	MT20	3.0	5.0	2.75	1.50
7	TMWW-t	MT20	3.0	4.0	1.50	1.75
8	TMWW-t	MT20	3.0	4.0	1.50	1.75
9	TMVW-p	MT20	4.0	5.0	1.50	2.25
10	BMV1+p	MT20	2.0	4.0		
11	BMWW-t	MT20	3.0	6.0	1.50	2.00
12	BMWW-t	MT20	3.0	4.0		
13	BMWWW-t	MT20	4.0	6.0	1.75	3.00
14	BS-t	MT20	3.0	6.0		
15	BMWW+t	MT20	3.0	4.0	1.50	1.50
16	BMWW-t	MT20	4.0	4.0	2.00	1.75
17	BMWW-t	MT20	3.0	10.0	1.50	3.75
18	BMV1+p	MT20	2.0	4.0		

A SIZE FOR SIZE SUBSTITUTION OF MITEK MII20 WITH TEE-LOK TL20 PLATES IS ALLOWED.

DIMENSIONS, SUPPORTS AND LOADINGS SPECIFIED BY FABRICATOR TO BE VERIFIED BY BUILDING DESIGNER

BEARINGS

JT	FACTORED GROSS REACTION VERT	HORZ	MAXIMUM FACTORED GROSS REACTION DOWN	HORZ	UPLIFT	INPUT BRG IN-SX	REQRD BRG IN-SX
18	1427	0	1427	0	0	5-8	5-8
10	1322	0	1322	0	0	HANGER BY OTHERS	
						MIN. SEAT SIZE: 1-8	

UNFACTORED REACTIONS

JT	1ST LCASE COMBINED	MAX./MIN. COMPONENT REACTIONS SNOW	LIVE	PERM.LIVE	WIND	DEAD	SOIL
18	999	712 / 0	0 / 0	0 / 0	0 / 0	287 / 0	0 / 0
10	928	649 / 0	0 / 0	0 / 0	0 / 0	279 / 0	0 / 0

BEARING MATERIAL TO BE SPF NO.2 OR BETTER AT JOINT(S) 18

BRACING
TOP CHORD TO BE SHEATHED OR MAX. PURLIN SPACING = 4.33 FT.
MAX. UNBRACED BOTTOM CHORD LENGTH = 10.00 FT. OR RIGID CEILING DIRECTLY APPLIED.

ALL PITCH BREAKS AND PERIMETER CORNER JOINTS MUST BE LATERALLY RESTRAINED.

LOADING
TOTAL LOAD CASES: (4)

CHORDS

MEMB. FR-TO	MAX. FORCE (LBS)	FACTORED VERT. LOAD LC1 (PLF) FROM	TO	MAX CSI (LC)	MAX. UNBRAC LENGTH
1- 2	0 / 23	-77.4	-77.4	0.10 (1)	10.00
2- 3	-1825 / 0	-77.4	-77.4	0.34 (1)	4.63
3- 4	-2299 / 0	-77.4	-77.4	0.22 (1)	4.33
4- 5	-1958 / 0	-77.4	-77.4	0.15 (1)	4.71
5- 6	-1463 / 0	-77.4	-77.4	0.13 (1)	5.30
6- 7	-1462 / 0	-77.4	-77.4	0.15 (1)	5.28
7- 8	-1688 / 0	-77.4	-77.4	0.15 (1)	4.99
8- 9	-1674 / 0	-77.4	-77.4	0.18 (1)	4.98
18- 2	-1386 / 0	0.0	0.0	0.14 (1)	6.91
10- 9	-1290 / 0	0.0	0.0	0.13 (1)	7.10
18-17	0 / 0	-17.5	-17.5	0.11 (4)	10.00
17-16	0 / 1626	-17.5	-17.5	0.31 (1)	10.00
16-15	0 / 2315	-17.5	-17.5	0.41 (1)	10.00
15-14	0 / 1765	-17.5	-17.5	0.32 (1)	10.00
14-13	0 / 1765	-17.5	-17.5	0.32 (1)	10.00
13-12	0 / 1509	-17.5	-17.5	0.28 (1)	10.00
12-11	0 / 1508	-17.5	-17.5	0.27 (1)	10.00
11-10	0 / 0	-17.5	-17.5	0.06 (4)	10.00

WEBS

MEMB. FR-TO	MAX. FORCE (LBS)	MAX CSI (LC)
17- 3	-156 / 34	0.04 (1)
3-16	0 / 909	0.20 (1)
16- 4	-563 / 0	0.13 (1)
4-15	-795 / 0	0.32 (1)
15- 5	0 / 628	0.14 (1)
5-13	-857 / 0	0.59 (1)
13- 6	0 / 1072	0.24 (1)
13- 7	-348 / 0	0.25 (1)
12- 7	0 / 72	0.03 (4)
12- 8	-1 / 0	0.00 (4)
11- 8	-333 / 0	0.07 (1)
2-17	0 / 1651	0.37 (1)
11- 9	0 / 1562	0.35 (1)

DESIGN CRITERIA

SPECIFIED LOADS:

TOP CH.	LL	=	23.3	PSF
	DL	=	3.0	PSF
BOT CH.	LL	=	0.0	PSF
	DL	=	7.0	PSF
TOTAL LOAD		=	33.3	PSF

SPACING = 24.0 IN. C/C

LOADING IN ALL FLAT SECTIONS BASED ON A SLOPE OF 6.00/12

THIS TRUSS IS DESIGNED FOR RESIDENTIAL OR SMALL BUILDING REQUIREMENTS OF PART 9, NBCC 2010

THIS DESIGN COMPLIES WITH:
- PART 9 OF OBC 2012 , BCBC 2012 , ABC 2014
- CSA 086-09
- TPIC 2011

(55 % OF 27.2 P.S.F. G.S.L. PLUS 8.4 P.S.F. RAIN LOAD) EQUALS 23.3 P.S.F. SPECIFIED ROOF LIVE LOAD

ALLOWABLE DEFL.(LL)= L/360 (0.93")
CALCULATED VERT. DEFL.(LL) = L/ 999 (0.11")
ALLOWABLE DEFL.(TL)= L/360 (0.93")
CALCULATED VERT. DEFL.(TL) = L/ 999 (0.20")

CSI: TC=0.34 (2-3:1) , BC=0.41 (15-16:1) , WB=0.59 (5-13:1) , SSI=0.14 (2-3:1)

DOL LUMBER=1.00 NAIL=1.00 LS BEND=1.10 COMP=1.10 SHEAR=1.10 TENS= 1.10

COMPANION LIVE LOAD FACTOR = 0.50

TRUSS PLATE MANUFACTURER IS NOT RESPONSIBLE FOR QUALITY CONTROL IN THE TRUSS MANUFACTURING PLANT .

NAIL VALUES

PLATE	GRIP(DRY) (PSI) MAX	MIN	SHEAR (PLI) MAX	MIN	SECTION (PLI) MAX	MIN
MT20	618	354	1667	822	2284	1656

PLATE PLACEMENT TOL. = 0.250 inches

PLATE ROTATION TOL. = 5.0 Deg.

JSI GRIP= 0.89 (11) (INPUT = 0.90)
JSI METAL= 0.49 (2) (INPUT = 1.00)

LICENSED PROFESSIONAL ENGINEER
P.M. TREVISAN
100136551
March 16th, 2017
PROVINCE OF ONTARIO

RECEIVED
TOWN OF MILTON
MAR 29, 2017
17-5327
BUILDING DIVISION

KOTT

JOB NAME	TRUSS NAME	QUANTITY	PLY	JOB DESC.	DRWG NO.
PT0317-093	T77	1	1	TRUSS DESC. LECCO RIDGE-BLOCK 343	

KOTT , Stouffville, ON, CGC

Version 8.100 S Feb 9 2017 MiTek Industries, Inc. Thu Mar 16 07:55:30 2017 Page 1
ID:EvTixTQDI5yR1QLotZTBr_yE?HJ-H13taXaUn6o4n0T?hMwVjiApp8iUh1SUSlD3cnzaRHB

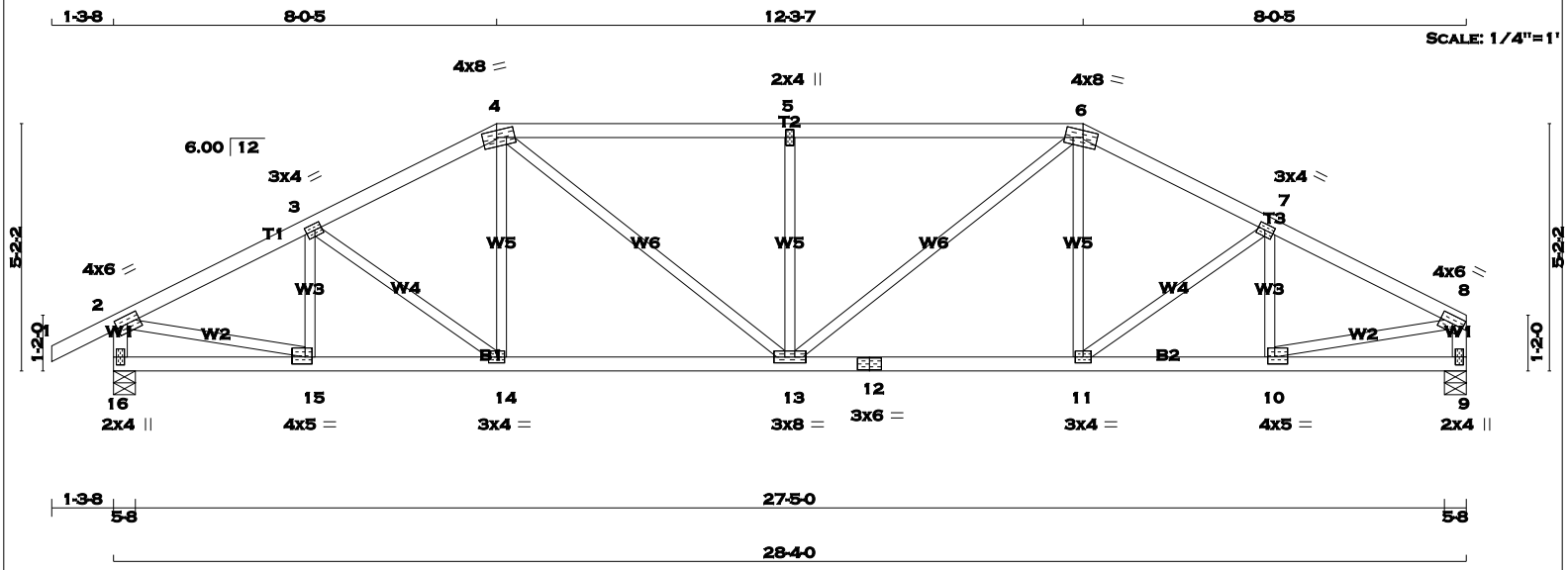

TOTAL WEIGHT = 112 lb

[M][F]

LUMBER

N. L. G. A. RULES

CHORDS	SIZE		LUMBER	DESCR.
1 - 4	2x4	DRY	No.2	SPF
4 - 6	2x4	DRY	No.2	SPF
6 - 8	2x4	DRY	No.2	SPF
16 - 2	2x4	DRY	No.2	SPF
9 - 8	2x4	DRY	No.2	SPF
16 - 12	2x4	DRY	No.2	SPF
12 - 9	2x4	DRY	No.2	SPF
ALL WEBS EXCEPT	2x3	DRY	No.2	SPF

DRY: SEASONED LUMBER.

PLATES (table is in inches)

JT	TYPE	PLATES	W	LEN	Y	X
2	TMVW-t	MT20	4.0	6.0	2.00	2.75
3	TMWW-t	MT20	3.0	4.0	1.50	1.75
4	TTWW-m	MT20	4.0	8.0	1.75	3.50
5	TMW+w	MT20	2.0	4.0		
6	TTWW-m	MT20	4.0	8.0	1.75	3.50
7	TMWW-t	MT20	3.0	4.0	1.50	1.75
8	TMVW-t	MT20	4.0	6.0	2.00	2.75
9	BMV1+p	MT20	2.0	4.0		
10	BMWW-t	MT20	4.0	5.0	1.75	1.75
11	BMWW-t	MT20	3.0	4.0		
12	BS-t	MT20	3.0	6.0		
13	BMWWW-t	MT20	3.0	8.0		
14	BMWW-t	MT20	3.0	4.0		
15	BMWW-t	MT20	4.0	5.0	1.75	1.75
16	BMV1+p	MT20	2.0	4.0		

A SIZE FOR SIZE SUBSTITUTION OF MITEK MII20 WITH TEE-LOK TL20 PLATES IS ALLOWED.

DIMENSIONS, SUPPORTS AND LOADINGS SPECIFIED BY FABRICATOR TO BE VERIFIED BY BUILDING DESIGNER

BEARINGS

JT	FACTORED GROSS REACTION VERT	HORZ	MAXIMUM FACTORED GROSS REACTION DOWN	HORZ	UPLIFT	INPUT BRG IN-SX	REQRD BRG IN-SX
16	1449	0	1449	0	0	5-8	5-8
9	1344	0	1344	0	0	5-8	5-8

UNFACTORED REACTIONS

JT	1ST LCASE COMBINED	MAX./MIN. COMPONENT REACTIONS SNOW	LIVE	PERM.LIVE	WIND	DEAD	SOIL
16	1014	723 / 0	0 / 0	0 / 0	0 / 0	291 / 0	0 / 0
9	943	660 / 0	0 / 0	0 / 0	0 / 0	283 / 0	0 / 0

BEARING MATERIAL TO BE SPF NO.2 OR BETTER AT JOINT(S) 16, 9

BRACING

TOP CHORD TO BE SHEATHED OR MAX. PURLIN SPACING = 4.31 FT.
MAX. UNBRACED BOTTOM CHORD LENGTH = 10.00 FT. OR RIGID CEILING DIRECTLY APPLIED.

ALL PITCH BREAKS AND PERIMETER CORNER JOINTS MUST BE LATERALLY RESTRAINED.

LOADING

TOTAL LOAD CASES: (4)

CHORDS

MEMB. FR-TO	MAX. FACTORED FORCE (LBS)	FACTORED VERT. LOAD (PLF) FROM	TO	LC1 MAX CSI (LC)	MAX. UNBRAC LENGTH
1- 2	0 / 23	-77.4	-77.4	0.10 (1)	10.00
2- 3	-1850 / 0	-77.4	-77.4	0.19 (1)	4.78
3- 4	-1796 / 0	-77.4	-77.4	0.18 (1)	4.84
4- 5	-2028 / 0	-77.4	-77.4	0.44 (1)	4.31
5- 6	-2028 / 0	-77.4	-77.4	0.44 (1)	4.31
6- 7	-1796 / 0	-77.4	-77.4	0.18 (1)	4.84
7- 8	-1850 / 0	-77.4	-77.4	0.19 (1)	4.78
16- 2	-1413 / 0	0.0	0.0	0.14 (1)	6.86
9- 8	-1308 / 0	0.0	0.0	0.13 (1)	7.06
16-15	0 / 0	-17.5	-17.5	0.07 (4)	10.00
15-14	0 / 1668	-17.5	-17.5	0.33 (1)	10.00
14-13	0 / 1594	-17.5	-17.5	0.32 (1)	10.00
13-12	0 / 1594	-17.5	-17.5	0.32 (1)	10.00
12-11	0 / 1594	-17.5	-17.5	0.32 (1)	10.00
11-10	0 / 1668	-17.5	-17.5	0.33 (1)	10.00
10- 9	0 / 0	-17.5	-17.5	0.07 (4)	10.00

WEBS

MEMB. FR-TO	MAX. FACTORED FORCE (LBS)	MAX CSI (LC)
15- 3	-286 / 0	0.05 (1)
3-14	-95 / 0	0.04 (1)
14- 4	0 / 154	0.04 (4)
4-13	0 / 554	0.12 (1)
13- 5	-583 / 0	0.23 (1)
13- 6	0 / 554	0.12 (1)
11- 6	0 / 154	0.04 (4)
11- 7	-95 / 0	0.04 (1)
10- 7	-286 / 0	0.05 (1)
2-15	0 / 1704	0.38 (1)
10- 8	0 / 1704	0.38 (1)

DESIGN CRITERIA

SPECIFIED LOADS:

TOP CH.	LL	=	23.3	PSF
	DL	=	3.0	PSF
BOT CH.	LL	=	0.0	PSF
	DL	=	7.0	PSF
TOTAL LOAD		=	33.3	PSF

SPACING = 24.0 IN. C/C

LOADING IN FLAT SECTION BASED ON A SLOPE OF 6.00/12

THIS TRUSS IS DESIGNED FOR RESIDENTIAL OR SMALL BUILDING REQUIREMENTS OF PART 9, NBCC 2010

THIS DESIGN COMPLIES WITH:
- PART 9 OF OBC 2012 , BCBC 2012 , ABC 2014
- CSA 086-09
- TPIC 2011

(55 % OF 27.2 P.S.F. G.S.L. PLUS 8.4 P.S.F. RAIN LOAD) EQUALS 23.3 P.S.F. SPECIFIED ROOF LIVE LOAD

ALLOWABLE DEFL.(LL)= L/360 (0.94")
CALCULATED VERT. DEFL.(LL) = L/ 999 (0.09")
ALLOWABLE DEFL.(TL)= L/360 (0.94")
CALCULATED VERT. DEFL.(TL) = L/ 999 (0.17")

CSI: TC=0.44 (4-5:1) , BC=0.33 (14-15:1) , WB=0.38 (8-10:1) , SSI=0.23 (4-5:1)

DOL LUMBER=1.00 NAIL=1.00 LS BEND=1.10 COMP=1.10 SHEAR=1.10 TENS= 1.10

COMPANION LIVE LOAD FACTOR = 0.50

TRUSS PLATE MANUFACTURER IS NOT RESPONSIBLE FOR QUALITY CONTROL IN THE TRUSS MANUFACTURING PLANT .

NAIL VALUES

PLATE	GRIP(DRY) (PSI) MAX	MIN	SHEAR (PLI) MAX	MIN	SECTION (PLI) MAX	MIN
MT20	618	354	1667	822	2284	1656

PLATE PLACEMENT TOL. = 0.250 inches

PLATE ROTATION TOL. = 5.0 Deg.

JSI GRIP= 0.89 (2) (INPUT = 0.90)
JSI METAL= 0.50 (15) (INPUT = 1.00)

LICENSED PROFESSIONAL ENGINEER
P.M. TREVISAN
100136551
March 16th, 2017
PROVINCE OF ONTARIO

RECEIVED
TOWN OF MILTON
MAR 29, 2017
17-5327
BUILDING DIVISION

KOTT

JOB NAME	TRUSS NAME	QUANTITY	PLY	JOB DESC.	DRWG NO.
PT0317-093	**T78**	**1**	**1**	TRUSS DESC. LECCO RIDGE-BLOCK 343	

ENG JOB: PT0317-093

KOTT , Stouffville, ON, CGC

Version 8.100 S Feb 9 2017 MiTek Industries, Inc. Thu Mar 16 07:55:30 2017 Page 1
ID:EvTixTQDI5yR1QLotZTBr_yE?HJ-H13taXaUn6o4n0T?hMwVjiAqQ8i3h0HUSlD3cnzaRHB

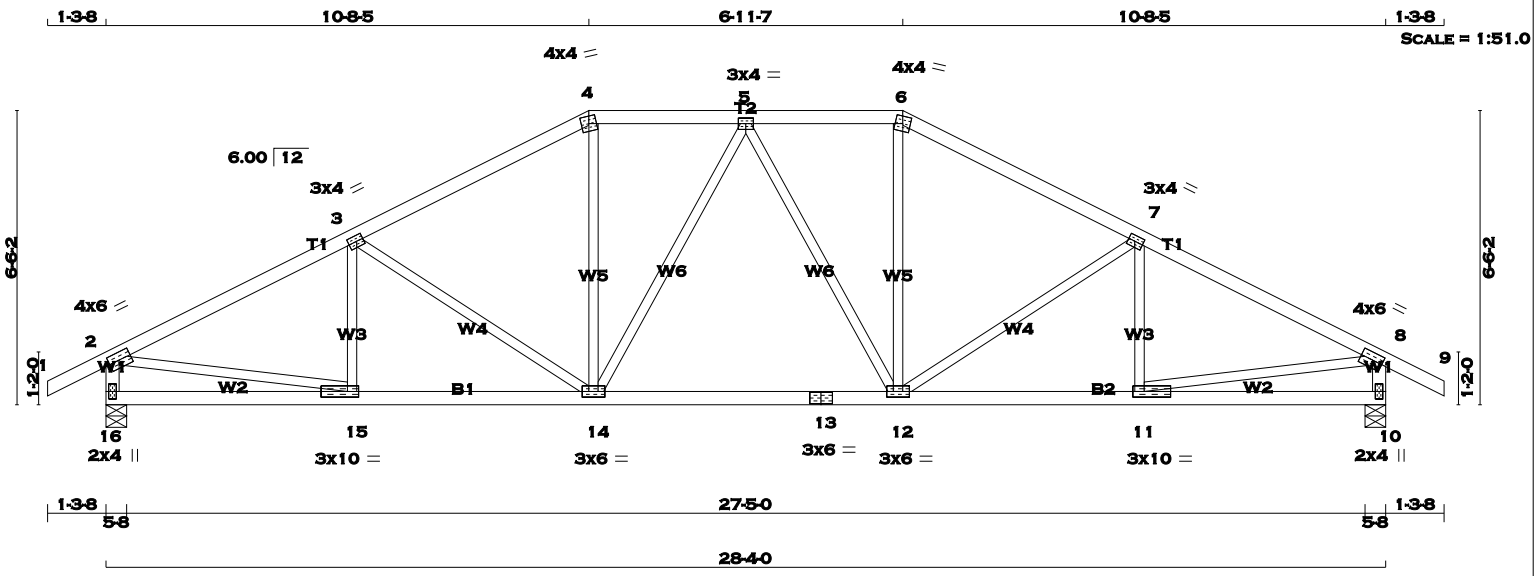

TOTAL WEIGHT = 117 lb

[M][F]

LUMBER

N. L. G. A. RULES

CHORDS	SIZE		LUMBER	DESCR.
1 - 4	2x4	DRY	No.2	SPF
4 - 6	2x4	DRY	No.2	SPF
6 - 9	2x4	DRY	No.2	SPF
16 - 2	2x4	DRY	No.2	SPF
10 - 8	2x4	DRY	No.2	SPF
16 - 13	2x4	DRY	No.2	SPF
13 - 10	2x4	DRY	No.2	SPF
ALL WEBS EXCEPT	2x3	DRY	No.2	SPF

DRY: SEASONED LUMBER.

PLATES (table is in inches)

JT	TYPE	PLATES	W	LEN	Y	X
2	TMVW-t	MT20	4.0	6.0	2.00	2.75
3	TMWW-t	MT20	3.0	4.0	1.50	1.75
4	TTW-m	MT20	4.0	4.0		
5	TMWW-t	MT20	3.0	4.0		
6	TTW-m	MT20	4.0	4.0		
7	TMWW-t	MT20	3.0	4.0	1.50	1.75
8	TMVW-t	MT20	4.0	6.0	2.00	2.75
10	BMV1+p	MT20	2.0	4.0		
11	BMWW-t	MT20	3.0	10.0	1.50	3.00
12	BMWWW-t	MT20	3.0	6.0		
13	BS-t	MT20	3.0	6.0		
14	BMWWW-t	MT20	3.0	6.0		
15	BMWW-t	MT20	3.0	10.0	1.50	3.00
16	BMV1+p	MT20	2.0	4.0		

A SIZE FOR SIZE SUBSTITUTION OF MITEK MII20 WITH TEE-LOK TL20 PLATES IS ALLOWED.

DIMENSIONS, SUPPORTS AND LOADINGS SPECIFIED BY FABRICATOR TO BE VERIFIED BY BUILDING DESIGNER

BEARINGS

JT	FACTORED GROSS REACTION VERT	HORZ	MAXIMUM FACTORED GROSS REACTION DOWN	HORZ	UPLIFT	INPUT BRG IN-SX	REQRD BRG IN-SX
16	1449	0	1449	0	0	5-8	5-8
10	1449	0	1449	0	0	5-8	5-8

UNFACTORED REACTIONS

JT	1ST LCASE COMBINED	MAX./MIN. COMPONENT REACTIONS SNOW	LIVE	PERM.LIVE	WIND	DEAD	SOIL
16	1014	723 / 0	0 / 0	0 / 0	0 / 0	291 / 0	0 / 0
10	1014	723 / 0	0 / 0	0 / 0	0 / 0	291 / 0	0 / 0

BEARING MATERIAL TO BE SPF NO.2 OR BETTER AT JOINT(S) 16, 10

BRACING

TOP CHORD TO BE SHEATHED OR MAX. PURLIN SPACING = 4.55 FT.
MAX. UNBRACED BOTTOM CHORD LENGTH = 10.00 FT. OR RIGID CEILING DIRECTLY APPLIED.

ALL PITCH BREAKS AND PERIMETER CORNER JOINTS MUST BE LATERALLY RESTRAINED.

LOADING

TOTAL LOAD CASES: (4)

CHORDS MEMB. FR-TO	MAX. FACTORED FORCE (LBS)	FACTORED VERT. LOAD (PLF) FROM	TO	LC1 MAX CSI (LC)	MAX. UNBRAC LENGTH	WEBS MEMB. FR-TO	MAX. FACTORED FORCE (LBS)	MAX CSI (LC)
1- 2	0 / 23	-77.4	-77.4	0.10 (1)	10.00	15- 3	-178 / 32	0.04 (1)
2- 3	-1914 / 0	-77.4	-77.4	0.34 (1)	4.55	3-14	-343 / 0	0.26 (1)
3- 4	-1639 / 0	-77.4	-77.4	0.31 (1)	4.86	14- 4	0 / 462	0.10 (1)
4- 5	-1453 / 0	-77.4	-77.4	0.13 (1)	5.31	14- 5	-182 / 0	0.17 (1)
5- 6	-1453 / 0	-77.4	-77.4	0.13 (1)	5.31	5-12	-182 / 0	0.17 (1)
6- 7	-1639 / 0	-77.4	-77.4	0.31 (1)	4.86	12- 6	0 / 462	0.10 (1)
7- 8	-1914 / 0	-77.4	-77.4	0.34 (1)	4.55	12- 7	-343 / 0	0.26 (1)
8- 9	0 / 23	-77.4	-77.4	0.10 (1)	10.00	11- 7	-178 / 32	0.04 (1)
16- 2	-1406 / 0	0.0	0.0	0.14 (1)	6.87	2-15	0 / 1752	0.39 (1)
10- 8	-1406 / 0	0.0	0.0	0.14 (1)	6.87	11- 8	0 / 1752	0.39 (1)
16-15	0 / 0	-17.5	-17.5	0.11 (4)	10.00			
15-14	0 / 1730	-17.5	-17.5	0.35 (1)	10.00			
14-13	0 / 1539	-17.5	-17.5	0.32 (1)	10.00			
13-12	0 / 1539	-17.5	-17.5	0.32 (1)	10.00			
12-11	0 / 1730	-17.5	-17.5	0.35 (1)	10.00			
11-10	0 / 0	-17.5	-17.5	0.11 (4)	10.00			

DESIGN CRITERIA

SPECIFIED LOADS:

TOP	CH.	LL	=	23.3	PSF
		DL	=	3.0	PSF
BOT	CH.	LL	=	0.0	PSF
		DL	=	7.0	PSF
TOTAL	LOAD		=	33.3	PSF

SPACING = 24.0 IN. C/C

LOADING IN FLAT SECTION BASED ON A SLOPE OF 6.00/12

THIS TRUSS IS DESIGNED FOR RESIDENTIAL OR SMALL BUILDING REQUIREMENTS OF PART 9, NBCC 2010

THIS DESIGN COMPLIES WITH:
- PART 9 OF OBC 2012 , BCBC 2012 , ABC 2014
- CSA 086-09
- TPIC 2011

(55 % OF 27.2 P.S.F. G.S.L. PLUS 8.4 P.S.F. RAIN LOAD) EQUALS 23.3 P.S.F. SPECIFIED ROOF LIVE LOAD

ALLOWABLE DEFL.(LL)= L/360 (0.94")
CALCULATED VERT. DEFL.(LL) = L/ 999 (0.08")
ALLOWABLE DEFL.(TL)= L/360 (0.94")
CALCULATED VERT. DEFL.(TL) = L/ 999 (0.17")

CSI: TC=0.34 (2-3:1) , BC=0.35 (14-15:1) , WB=0.39 (2-15:1) , SSI=0.18 (2-3:1)

DOL LUMBER=1.00 NAIL=1.00 LS BEND=1.10 COMP=1.10 SHEAR=1.10 TENS= 1.10

COMPANION LIVE LOAD FACTOR = 0.50

TRUSS PLATE MANUFACTURER IS NOT RESPONSIBLE FOR QUALITY CONTROL IN THE TRUSS MANUFACTURING PLANT .

NAIL VALUES

PLATE	GRIP(DRY) (PSI) MAX	MIN	SHEAR (PLI) MAX	MIN	SECTION (PLI) MAX	MIN
MT20	618	354	1667	822	2284	1656

PLATE PLACEMENT TOL. = 0.250 inches

PLATE ROTATION TOL. = 5.0 Deg.

JSI GRIP= 0.89 (11) (INPUT = 0.90)
JSI METAL= 0.51 (8) (INPUT = 1.00)

LICENSED PROFESSIONAL ENGINEER
P.M. TREVISAN
100136551
March 16th, 2017
PROVINCE OF ONTARIO

RECEIVED
TOWN OF MILTON
MAR 29, 2017
17-5327
BUILDING DIVISION

KOTT

JOB NAME	TRUSS NAME	QUANTITY	PLY	JOB DESC.	DRWG NO.
PT0317-093	T79	1	1	TRUSS DESC. LECCO RIDGE-BLOCK 343	

KOTT , Stouffville, ON, CGC

Version 8.100 S Feb 9 2017 MiTek Industries, Inc. Thu Mar 16 07:55:31 2017 Page 1
ID:EvTixTQDI5yR1QLotZTBr_yE?HJ-lEdFotb6XQwxPA2CE3RkFwjyrY2xQOvdgPyd8DzaRHA

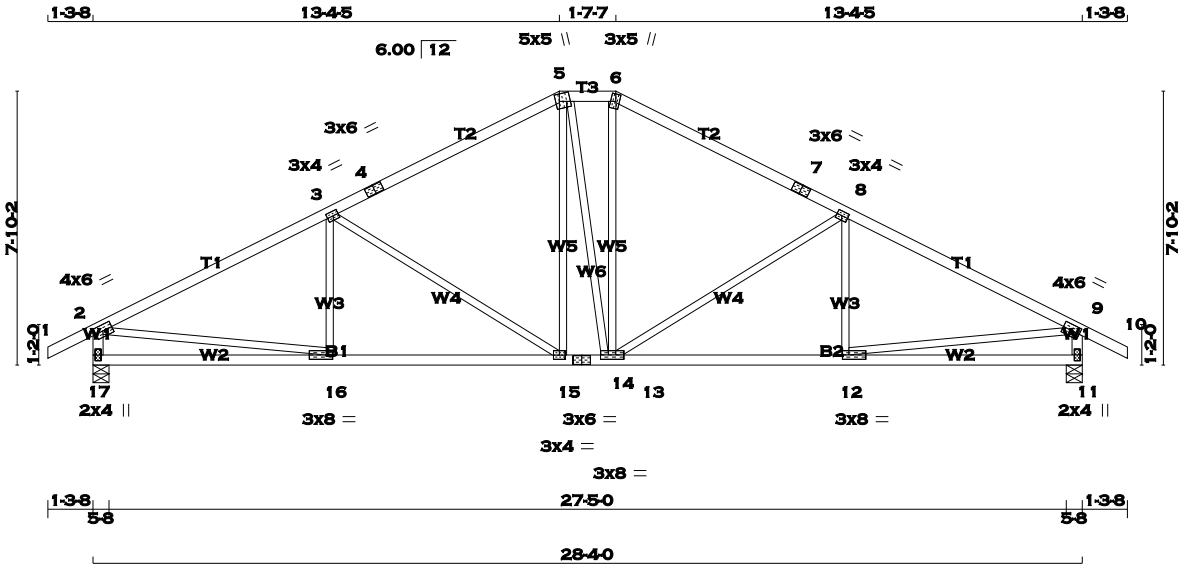

TOTAL WEIGHT = 121 lb

[M][F]

LUMBER

N. L. G. A. RULES

CHORDS	SIZE		LUMBER	DESCR.
1 - 4	2x4	DRY	No.2	SPF
4 - 5	2x4	DRY	No.2	SPF
5 - 6	2x4	DRY	No.2	SPF
6 - 7	2x4	DRY	No.2	SPF
7 - 10	2x4	DRY	No.2	SPF
17 - 2	2x4	DRY	No.2	SPF
11 - 9	2x4	DRY	No.2	SPF
17 - 14	2x4	DRY	No.2	SPF
14 - 11	2x4	DRY	No.2	SPF
ALL WEBS EXCEPT	2x3	DRY	No.2	SPF

DRY: SEASONED LUMBER.

PLATES (table is in inches)

JT	TYPE	PLATES	W	LEN	Y	X
2	TMVW-t	MT20	4.0	6.0	2.00	2.75
3	TMWW-t	MT20	3.0	4.0	1.50	1.75
4	TS-t	MT20	3.0	6.0		
5	TTWW+m	MT20	5.0	5.0	2.50	1.25
6	TTW+m	MT20	3.0	5.0	2.50	1.25
7	TS-t	MT20	3.0	6.0		
8	TMWW-t	MT20	3.0	4.0	1.50	1.75
9	TMVW-t	MT20	4.0	6.0	2.00	2.75
11	BMV1+p	MT20	2.0	4.0		
12	BMWW-t	MT20	3.0	8.0	1.50	2.25
13	BMWWW-t	MT20	3.0	8.0		
14	BS-t	MT20	3.0	6.0		
15	BMWW-t	MT20	3.0	4.0		
16	BMWW-t	MT20	3.0	8.0	1.50	2.25
17	BMV1+p	MT20	2.0	4.0		

A SIZE FOR SIZE SUBSTITUTION OF MITEK MII20 WITH TEE-LOK TL20 PLATES IS ALLOWED.

DIMENSIONS, SUPPORTS AND LOADINGS SPECIFIED BY FABRICATOR TO BE VERIFIED BY BUILDING DESIGNER

BEARINGS

JT	FACTORED GROSS REACTION VERT	HORZ	MAXIMUM FACTORED GROSS REACTION DOWN	HORZ	UPLIFT	INPUT BRG IN-SX	REQRD BRG IN-SX
17	1449	0	1449	0	0	5-8	5-8
11	1449	0	1449	0	0	5-8	5-8

UNFACTORED REACTIONS

JT	1ST LCASE COMBINED	MAX./MIN. COMPONENT REACTIONS SNOW	LIVE	PERM.LIVE	WIND	DEAD	SOIL
17	1014	723 / 0	0 / 0	0 / 0	0 / 0	291 / 0	0 / 0
11	1014	723 / 0	0 / 0	0 / 0	0 / 0	291 / 0	0 / 0

BEARING MATERIAL TO BE SPF NO.2 OR BETTER AT JOINT(S) 17, 11

BRACING

TOP CHORD TO BE SHEATHED OR MAX. PURLIN SPACING = 4.28 FT.
MAX. UNBRACED BOTTOM CHORD LENGTH = 10.00 FT. OR RIGID CEILING DIRECTLY APPLIED.

ALL PITCH BREAKS AND PERIMETER CORNER JOINTS MUST BE LATERALLY RESTRAINED.

LOADING

TOTAL LOAD CASES: (4)

CHORDS MEMB. FR-TO	MAX. FACTORED FORCE (LBS)	FACTORED VERT. LOAD (PLF) FROM	TO	LC1 MAX CSI (LC)	MAX. UNBRAC LENGTH	WEBS MEMB. FR-TO	MAX. FACTORED FORCE (LBS)	MAX CSI (LC)
1- 2	0 / 23	-77.4	-77.4	0.10 (1)	10.00	16- 3	-88 / 88	0.03 (4)
2- 3	-1924 / 0	-77.4	-77.4	0.55 (1)	4.28	3-15	-579 / 0	0.75 (1)
3- 4	-1435 / 0	-77.4	-77.4	0.49 (1)	4.87	15- 5	0 / 364	0.08 (1)
4- 5	-1435 / 0	-77.4	-77.4	0.49 (1)	4.87	5-13	0 / 12	0.00 (1)
5- 6	-1265 / 0	-77.4	-77.4	0.04 (1)	5.69	13- 6	0 / 378	0.08 (1)
6- 7	-1437 / 0	-77.4	-77.4	0.49 (1)	4.87	13- 8	-575 / 0	0.75 (1)
7- 8	-1437 / 0	-77.4	-77.4	0.49 (1)	4.87	12- 8	-91 / 87	0.03 (4)
8- 9	-1923 / 0	-77.4	-77.4	0.55 (1)	4.28	2-16	0 / 1760	0.40 (1)
9-10	0 / 23	-77.4	-77.4	0.10 (1)	10.00	12- 9	0 / 1759	0.40 (1)
17- 2	-1400 / 0	0.0	0.0	0.14 (1)	6.88			
11- 9	-1399 / 0	0.0	0.0	0.14 (1)	6.88			
17-16	0 / 0	-17.5	-17.5	0.20 (4)	10.00			
16-15	0 / 1746	-17.5	-17.5	0.38 (1)	10.00			
15-14	0 / 1262	-17.5	-17.5	0.28 (1)	10.00			
14-13	0 / 1262	-17.5	-17.5	0.28 (1)	10.00			
13-12	0 / 1745	-17.5	-17.5	0.37 (1)	10.00			
12-11	0 / 0	-17.5	-17.5	0.19 (4)	10.00			

DESIGN CRITERIA

SPECIFIED LOADS:

TOP	CH.	LL	=	23.3	PSF
		DL	=	3.0	PSF
BOT	CH.	LL	=	0.0	PSF
		DL	=	7.0	PSF
TOTAL	LOAD		=	33.3	PSF

SPACING = 24.0 IN. C/C

LOADING IN FLAT SECTION BASED ON A SLOPE OF 6.00/12

THIS TRUSS IS DESIGNED FOR RESIDENTIAL OR SMALL BUILDING REQUIREMENTS OF PART 9, NBCC 2010

THIS DESIGN COMPLIES WITH:
- PART 9 OF OBC 2012 , BCBC 2012 , ABC 2014
- CSA 086-09
- TPIC 2011

(55 % OF 27.2 P.S.F. G.S.L. PLUS 8.4 P.S.F. RAIN LOAD) EQUALS 23.3 P.S.F. SPECIFIED ROOF LIVE LOAD

ALLOWABLE DEFL.(LL)= L/360 (0.94")
CALCULATED VERT. DEFL.(LL) = L/ 999 (0.09")
ALLOWABLE DEFL.(TL)= L/360 (0.94")
CALCULATED VERT. DEFL.(TL) = L/ 999 (0.17")

CSI: TC=0.55 (2-3:1) , BC=0.38 (15-16:1) , WB=0.75 (3-15:1) , SSI=0.23 (2-3:1)

DOL LUMBER=1.00 NAIL=1.00 LS BEND=1.10 COMP=1.10 SHEAR=1.10 TENS= 1.10

COMPANION LIVE LOAD FACTOR = 0.50

TRUSS PLATE MANUFACTURER IS NOT RESPONSIBLE FOR QUALITY CONTROL IN THE TRUSS MANUFACTURING PLANT .

NAIL VALUES

PLATE	GRIP(DRY) (PSI) MAX	MIN	SHEAR (PLI) MAX	MIN	SECTION (PLI) MAX	MIN
MT20	618	354	1667	822	2284	1656

PLATE PLACEMENT TOL. = 0.250 inches

PLATE ROTATION TOL. = 5.0 Deg.

JSI GRIP= 0.89 (16) (INPUT = 0.90)
JSI METAL= 0.52 (2) (INPUT = 1.00)

LICENSED PROFESSIONAL ENGINEER
P.M. TREVISAN
100136551
March 16th, 2017
PROVINCE OF ONTARIO

RECEIVED
TOWN OF MILTON
MAR 29, 2017
17-5327
BUILDING DIVISION

KOTT

JOB NAME	TRUSS NAME	QUANTITY	PLY	JOB DESC.	DRWG NO.
PT0317-093	T80	3	1	TRUSS DESC. LECCO RIDGE-BLOCK 343	

KOTT , Stouffville, ON, CGC

Version 8.100 S Feb 9 2017 MiTek Industries, Inc. Thu Mar 16 07:55:31 2017 Page 1
ID:EvTixTQDI5yR1QLotZTBr_yE?HJ-lEdFotb6XQwxPA2CE3RkFwjxfY2sQTXdgPyd8DzaRHA

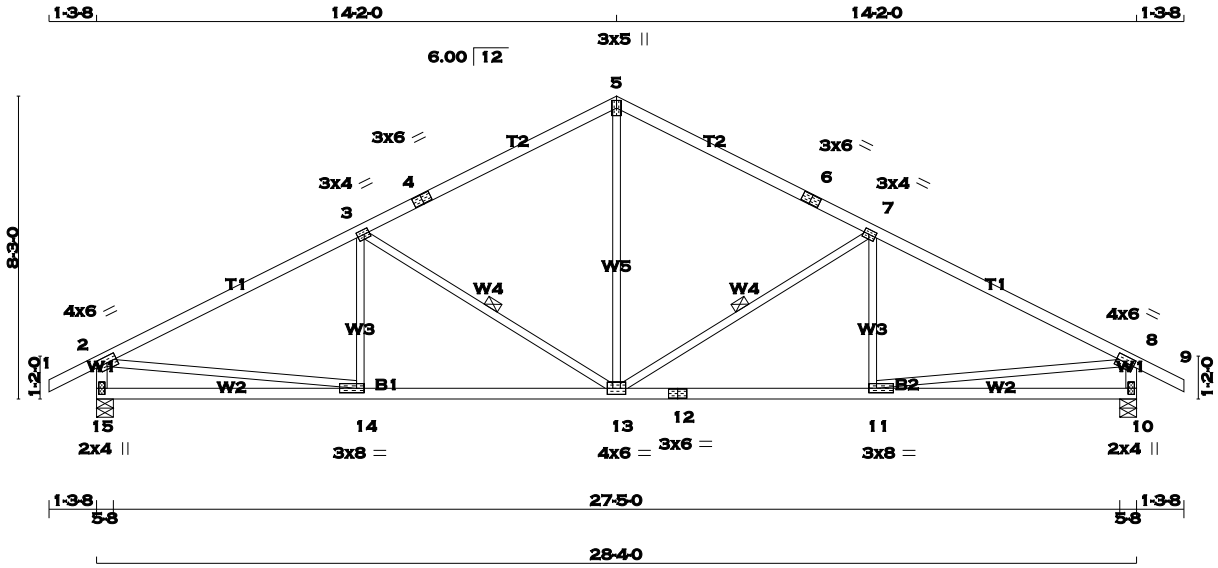

TOTAL WEIGHT = 3 X 111 = 332 lb

LUMBER

N. L. G. A. RULES

CHORDS	SIZE		LUMBER	DESCR.
1 - 4	2x4	DRY	No.2	SPF
4 - 5	2x4	DRY	No.2	SPF
5 - 6	2x4	DRY	No.2	SPF
6 - 9	2x4	DRY	No.2	SPF
15 - 2	2x4	DRY	No.2	SPF
10 - 8	2x4	DRY	No.2	SPF
15 - 12	2x4	DRY	No.2	SPF
12 - 10	2x4	DRY	No.2	SPF
ALL WEBS EXCEPT	2x3	DRY	No.2	SPF

DRY: SEASONED LUMBER.

PLATES (table is in inches)

JT	TYPE	PLATES	W	LEN	Y	X
2	TMVW-t	MT20	4.0	6.0	2.00	2.75
3	TMWW-t	MT20	3.0	4.0	1.50	1.75
4	TS-t	MT20	3.0	6.0		
5	TTW+p	MT20	3.0	5.0		
6	TS-t	MT20	3.0	6.0		
7	TMWW-t	MT20	3.0	4.0	1.50	1.75
8	TMVW-t	MT20	4.0	6.0	2.00	2.75
10	BMV1+p	MT20	2.0	4.0		
11	BMWW-t	MT20	3.0	8.0	1.50	2.50
12	BS-t	MT20	3.0	6.0		
13	BMWWW-t	MT20	4.0	6.0		
14	BMWW-t	MT20	3.0	8.0	1.50	2.50
15	BMV1+p	MT20	2.0	4.0		

A SIZE FOR SIZE SUBSTITUTION OF MITEK MII20 WITH TEE-LOK TL20 PLATES IS ALLOWED.

DIMENSIONS, SUPPORTS AND LOADINGS SPECIFIED BY FABRICATOR TO BE VERIFIED BY BUILDING DESIGNER

BEARINGS

JT	FACTORED GROSS REACTION VERT	HORZ	MAXIMUM FACTORED GROSS REACTION DOWN	HORZ	UPLIFT	INPUT BRG IN-SX	REQRD BRG IN-SX
15	1449	0	1449	0	0	5-8	5-8
10	1449	0	1449	0	0	5-8	5-8

UNFACTORED REACTIONS

JT	1ST LCASE COMBINED	MAX./MIN. COMPONENT REACTIONS SNOW	LIVE	PERM.LIVE	WIND	DEAD	SOIL
15	1014	723 / 0	0 / 0	0 / 0	0 / 0	291 / 0	0 / 0
10	1014	723 / 0	0 / 0	0 / 0	0 / 0	291 / 0	0 / 0

BEARING MATERIAL TO BE SPF NO.2 OR BETTER AT JOINT(S) 15, 10

BRACING

TOP CHORD TO BE SHEATHED OR MAX. PURLIN SPACING = 4.17 FT.
MAX. UNBRACED BOTTOM CHORD LENGTH = 10.00 FT. OR RIGID CEILING DIRECTLY APPLIED.

ALL PITCH BREAKS AND PERIMETER CORNER JOINTS MUST BE LATERALLY RESTRAINED.

1 - 2x3 SPF No.2 LATERAL BRACE(S) AT 1/ 2 LENGTH OF 7-13, 3-13. DBS = 20-0-0 . CBF = 79 LBS.

DBS = DIAGONAL BRACE SPACING (MAX). CBF = CUMULATIVE BRACING FORCE. FASTEN LATERAL BRACE(S) USING (0.122"X3") SPIRAL NAILS : 1 NAIL FOR 2x3 BRACE(S), 2 FOR 1x4, 2x4, 2x5, 3 FOR 2x6, 4 FOR 2x8, 5 FOR 2x10, AND 6 FOR 2x12.

END VERTICAL(S) MUST BE SHEATHED OR HAVE BRACES AS INDICATED IN THE MAX. UNBRACED LENGTH COLUMN OF THE TABLE BELOW

LOADING

TOTAL LOAD CASES: (4)

CHORDS

MEMB. FR-TO	MAX. FACTORED FORCE (LBS)	FACTORED VERT. LOAD LC1 (PLF) FROM	TO	MAX CSI (LC)	MAX. UNBRAC LENGTH
1- 2	0 / 23	-77.4	-77.4	0.10 (1)	10.00
2- 3	-1918 / 0	-77.4	-77.4	0.62 (1)	4.17
3- 4	-1379 / 0	-77.4	-77.4	0.55 (1)	4.84
4- 5	-1379 / 0	-77.4	-77.4	0.55 (1)	4.84
5- 6	-1379 / 0	-77.4	-77.4	0.55 (1)	4.84
6- 7	-1379 / 0	-77.4	-77.4	0.55 (1)	4.84
7- 8	-1918 / 0	-77.4	-77.4	0.62 (1)	4.17
8- 9	0 / 23	-77.4	-77.4	0.10 (1)	10.00
15- 2	-1396 / 0	0.0	0.0	0.14 (1)	6.89
10- 8	-1396 / 0	0.0	0.0	0.14 (1)	6.89
15-14	0 / 0	-17.5	-17.5	0.21 (4)	10.00
14-13	0 / 1741	-17.5	-17.5	0.38 (1)	10.00
13-12	0 / 1741	-17.5	-17.5	0.38 (1)	10.00
12-11	0 / 1741	-17.5	-17.5	0.38 (1)	10.00
11-10	0 / 0	-17.5	-17.5	0.21 (4)	10.00

WEBS

MEMB. FR-TO	MAX. FACTORED FORCE (LBS)	MAX CSI (LC)
13- 5	0 / 801	0.18 (1)
13- 7	-633 / 0	0.30 (1)
11- 7	-72 / 96	0.03 (4)
3-13	-633 / 0	0.30 (1)
14- 3	-72 / 96	0.03 (4)
2-14	0 / 1753	0.39 (1)
11- 8	0 / 1753	0.39 (1)

DESIGN CRITERIA

SPECIFIED LOADS:

TOP	CH.	LL	=	23.3	PSF
		DL	=	3.0	PSF
BOT	CH.	LL	=	0.0	PSF
		DL	=	7.0	PSF
TOTAL	LOAD		=	33.3	PSF

SPACING = 24.0 IN. C/C

THIS TRUSS IS DESIGNED FOR RESIDENTIAL OR SMALL BUILDING REQUIREMENTS OF PART 9, NBCC 2010

THIS DESIGN COMPLIES WITH:
- PART 9 OF OBC 2012 , BCBC 2012 , ABC 2014
- CSA 086-09
- TPIC 2011

(55 % OF 27.2 P.S.F. G.S.L. PLUS 8.4 P.S.F. RAIN LOAD) EQUALS 23.3 P.S.F. SPECIFIED ROOF LIVE LOAD

ALLOWABLE DEFL.(LL)= L/360 (0.94")
CALCULATED VERT. DEFL.(LL) = L/ 999 (0.09")
ALLOWABLE DEFL.(TL)= L/360 (0.94")
CALCULATED VERT. DEFL.(TL) = L/ 999 (0.17")

CSI: TC=0.62 (2-3:1) , BC=0.38 (13-14:1) , WB=0.39 (2-14:1) , SSI=0.24 (2-3:1)

DOL LUMBER=1.00 NAIL=1.00 LS BEND=1.10 COMP=1.10 SHEAR=1.10 TENS= 1.10

COMPANION LIVE LOAD FACTOR = 0.50

TRUSS PLATE MANUFACTURER IS NOT RESPONSIBLE FOR QUALITY CONTROL IN THE TRUSS MANUFACTURING PLANT .

NAIL VALUES

PLATE	GRIP(DRY) (PSI) MAX	MIN	SHEAR (PLI) MAX	MIN	SECTION (PLI) MAX	MIN
MT20	618	354	1667	822	2284	1656

PLATE PLACEMENT TOL. = 0.250 inches

PLATE ROTATION TOL. = 0.5 Deg.

JSI GRIP= 0.90 (11) (INPUT = 0.90)
JSI METAL= 0.52 (8) (INPUT = 1.00)

LICENSED PROFESSIONAL ENGINEER
P.M. TREVISAN
100136551
March 16th, 2017
PROVINCE OF ONTARIO

RECEIVED
TOWN OF MILTON
MAR 29, 2017
17-5327
BUILDING DIVISION

KOTT

JOB NAME	TRUSS NAME	QUANTITY	PLY	JOB DESC.	DRWG NO.
PT0317-093	T81	9	1	TRUSS DESC. LECCO RIDGE-BLOCK 343	

KOTT , Stouffville, ON, CGC

Version 8.100 S Feb 9 2017 MiTek Industries, Inc. Thu Mar 16 07:55:32 2017 Page 1
ID:EvTixTQDI5yR1QLotZTBr_yE?HJ-DQBd?DbkIj2o0KdOonyzo7GEHxMg9_Lmv3iAgfzaRH9

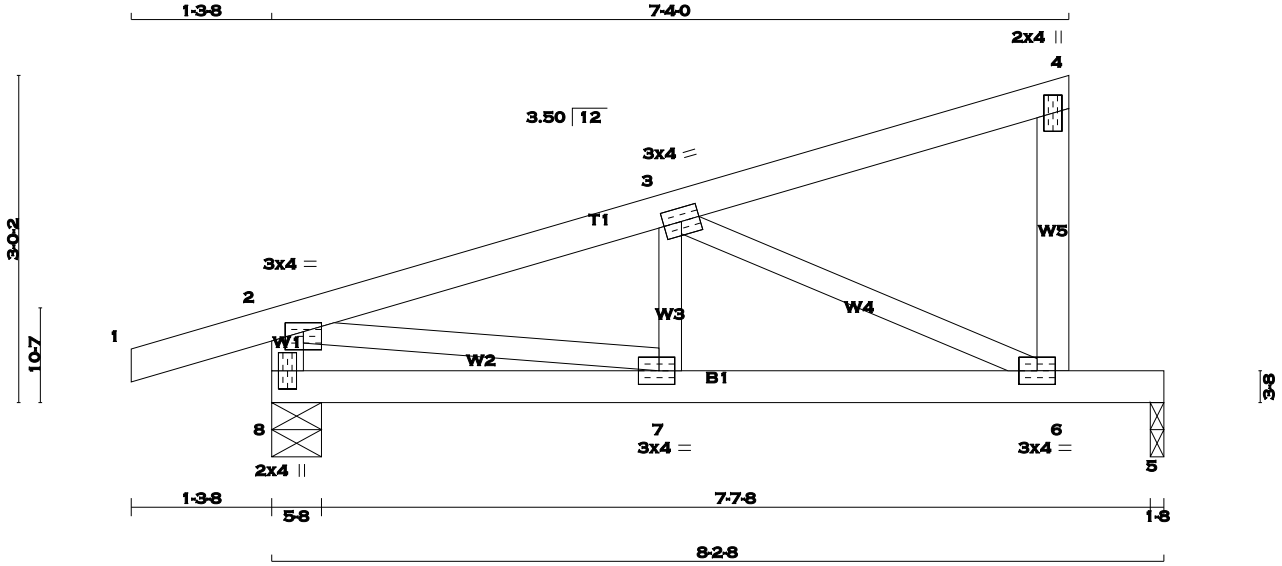

TOTAL WEIGHT = 9 X 30 = 266 lb
[M][F]

LUMBER
N. L. G. A. RULES

CHORDS	SIZE		LUMBER	DESCR.
1 - 4	2x4	DRY	No.2	SPF
6 - 4	2x4	DRY	No.2	SPF
8 - 2	2x4	DRY	No.2	SPF
8 - 5	2x4	DRY	No.2	SPF
ALL WEBS EXCEPT	2x3	DRY	No.2	SPF

DRY: SEASONED LUMBER.

PLATES (table is in inches)

JT	TYPE	PLATES	W	LEN	Y	X
2	TMVW-p	MT20	3.0	4.0	1.00	2.00
3	TMWW-t	MT20	3.0	4.0		
4	TMV+p	MT20	2.0	4.0		
6	BMVW-t	MT20	3.0	4.0		
7	BMWW-t	MT20	3.0	4.0	1.50	1.75
8	BMV1+p	MT20	2.0	4.0		

A SIZE FOR SIZE SUBSTITUTION OF MITEK MII20 WITH TEE-LOK TL20 PLATES IS ALLOWED.

DIMENSIONS, SUPPORTS AND LOADINGS SPECIFIED BY FABRICATOR TO BE VERIFIED BY BUILDING DESIGNER

BEARINGS

JT	FACTORED GROSS REACTION VERT	HORZ	MAXIMUM FACTORED GROSS REACTION DOWN	HORZ	UPLIFT	INPUT BRG IN-SX	REQRD BRG IN-SX
8	489	0	489	0	0	5-8	5-8
5	325	0	325	0	0	1-8	1-8

UNFACTORED REACTIONS

JT	1ST LCASE COMBINED	MAX./MIN. COMPONENT REACTIONS SNOW	LIVE	PERM.LIVE	WIND	DEAD	SOIL
8	341	251 / 0	0 / 0	0 / 0	0 / 0	90 / 0	0 / 0
5	230	153 / 0	0 / 0	0 / 0	0 / 0	77 / 0	0 / 0

BEARING MATERIAL TO BE SPF NO.2 OR BETTER AT JOINT(S) 8, 5

BRACING
TOP CHORD TO BE SHEATHED OR MAX. PURLIN SPACING = 6.25 FT.
MAX. UNBRACED BOTTOM CHORD LENGTH = 10.00 FT. OR RIGID CEILING DIRECTLY APPLIED.

ALL PITCH BREAKS AND PERIMETER CORNER JOINTS MUST BE LATERALLY RESTRAINED.

LOADING
TOTAL LOAD CASES: (4)

CHORDS

MEMB. FR-TO	MAX. FACTORED FORCE (LBS)	FACTORED VERT. LOAD (PLF) FROM	TO	LC1 MAX CSI (LC)	MAX. UNBRAC LENGTH
1- 2	0 / 14	-77.4	-77.4	0.10 (1)	10.00
2- 3	-604 / 0	-77.4	-77.4	0.12 (1)	6.25
3- 4	-8 / 0	-77.4	-77.4	0.12 (1)	10.00
6- 4	-112 / 0	0.0	0.0	0.02 (1)	7.81
8- 2	-478 / 0	0.0	0.0	0.05 (1)	7.81
8- 7	0 / 0	-17.5	-17.5	0.11 (1)	10.00
7- 6	0 / 588	-17.5	-17.5	0.47 (1)	10.00
6- 5	0 / 0	-17.5	-17.5	0.38 (1)	10.00

WEBS

MEMB. FR-TO	MAX. FACTORED FORCE (LBS)	MAX CSI (LC)
7- 3	0 / 94	0.03 (4)
3- 6	-644 / 0	0.17 (1)
2- 7	0 / 595	0.13 (1)

DESIGN CRITERIA

SPECIFIED LOADS:

TOP	CH.	LL	=	23.3	PSF
		DL	=	3.0	PSF
BOT	CH.	LL	=	0.0	PSF
		DL	=	7.0	PSF
TOTAL	LOAD		=	33.3	PSF

SPACING = 24.0 IN. C/C

THIS TRUSS IS DESIGNED FOR RESIDENTIAL OR SMALL BUILDING REQUIREMENTS OF PART 9, NBCC 2010

THIS DESIGN COMPLIES WITH:
- PART 9 OF OBC 2012 , BCBC 2012 , ABC 2014
- CSA 086-09
- TPIC 2011

(55 % OF 27.2 P.S.F. G.S.L. PLUS 8.4 P.S.F. RAIN LOAD) EQUALS 23.3 P.S.F. SPECIFIED ROOF LIVE LOAD

ALLOWABLE DEFL.(LL)= L/360 (0.27")
CALCULATED VERT. DEFL.(LL) = L/ 999 (0.06")
ALLOWABLE DEFL.(TL)= L/360 (0.27")
CALCULATED VERT. DEFL.(TL) = L/ 921 (0.11")

CSI: TC=0.12 (2-3:1) , BC=0.47 (6-7:1) , WB=0.17 (3-6:1) , SSI=0.25 (5-6:1)

DOL LUMBER=1.00 NAIL=1.00 LS BEND=1.10 COMP=1.10 SHEAR=1.10 TENS= 1.10

COMPANION LIVE LOAD FACTOR = 0.50

TRUSS PLATE MANUFACTURER IS NOT RESPONSIBLE FOR QUALITY CONTROL IN THE TRUSS MANUFACTURING PLANT .

NAIL VALUES

PLATE	GRIP(DRY) (PSI) MAX	MIN	SHEAR (PLI) MAX	MIN	SECTION (PLI) MAX	MIN
MT20	618	354	1667	822	2284	1656

PLATE PLACEMENT TOL. = 0.250 inches

PLATE ROTATION TOL. = 5.0 Deg.

JSI GRIP= 0.89 (6) (INPUT = 0.90)
JSI METAL= 0.22 (2) (INPUT = 1.00)

LICENSED PROFESSIONAL ENGINEER
P.M. TREVISAN
100136551
March 16th, 2017
PROVINCE OF ONTARIO

RECEIVED
TOWN OF MILTON
MAR 29, 2017
17-5327
BUILDING DIVISION

KOTT

JOB NAME	TRUSS NAME	QUANTITY	PLY	JOB DESC.	DRWG NO.
PT0317-093	T82	6	1	TRUSS DESC. LECCO RIDGE-BLOCK 343	ENG JOB: PT0317-093

KOTT , Stouffville, ON, CGC

Version 8.100 S Feb 9 2017 MiTek Industries, Inc. Thu Mar 16 07:55:32 2017 Page 1

ID:EvTixTQDI5yR1QLotZTBr_yE?HJ-DQBd?DbkIj2o0KdOonyzo7GEcxR190xmv3iAgfzaRH9

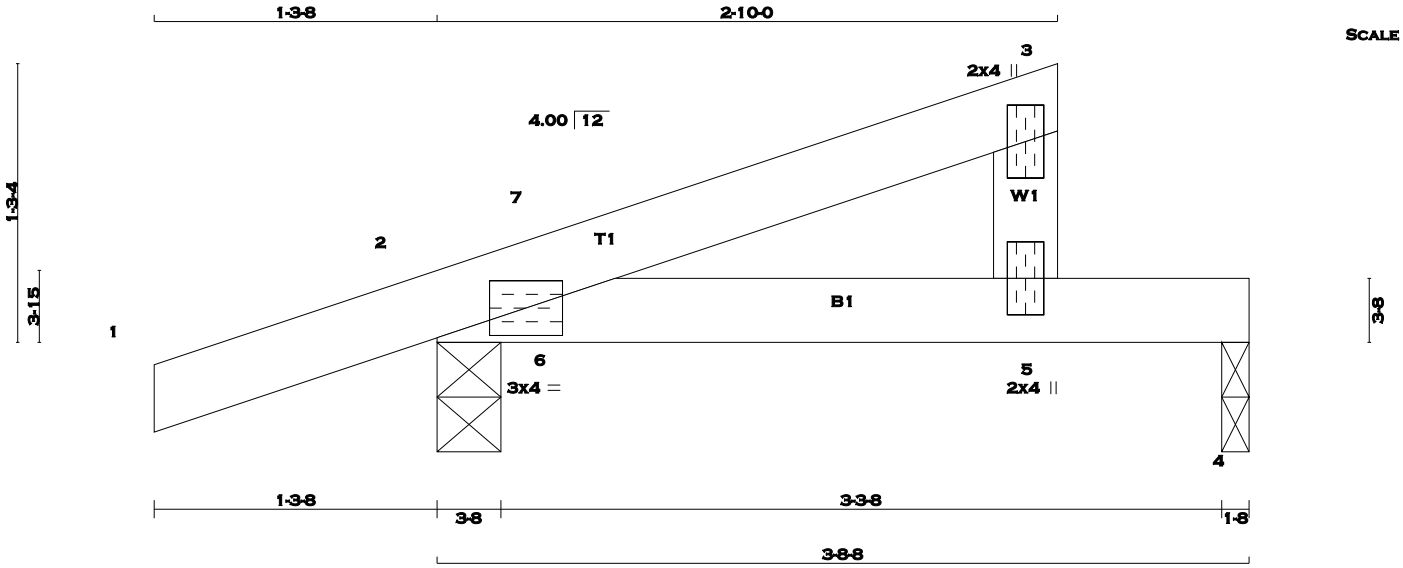

TOTAL WEIGHT = 6 X 10 = 60 lb

LUMBER

N. L. G. A. RULES

CHORDS	SIZE		LUMBER	DESCR.
1 - 3	2x4	DRY	No.2	SPF
5 - 3	2x4	DRY	No.2	SPF
2 - 4	2x4	DRY	No.2	SPF

DRY: SEASONED LUMBER.

PLATES (table is in inches)

JT	TYPE	PLATES	W	LEN	Y	X
2	TMB1-I	MT20	3.0	4.0		
3	TMV+p	MT20	2.0	4.0		
5	BMV+p	MT20	2.0	4.0		

A SIZE FOR SIZE SUBSTITUTION OF MITEK MII20 WITH TEE-LOK TL20 PLATES IS ALLOWED.

DIMENSIONS, SUPPORTS AND LOADINGS SPECIFIED BY FABRICATOR TO BE VERIFIED BY BUILDING DESIGNER

BEARINGS

JT	FACTORED GROSS REACTION VERT	HORZ	MAXIMUM FACTORED GROSS REACTION DOWN	HORZ	UPLIFT	INPUT BRG IN-SX	REQRD BRG IN-SX
2	271	0	271	0	0	3-8	3-8
4	116	0	116	0	0	1-8	1-8

UNFACTORED REACTIONS

JT	1ST LCASE COMBINED	MAX./MIN. COMPONENT REACTIONS SNOW	LIVE	PERM.LIVE	WIND	DEAD	SOIL
2	188	144 / 0	0 / 0	0 / 0	0 / 0	44 / 0	0 / 0
4	83	50 / 0	0 / 0	0 / 0	0 / 0	32 / 0	0 / 0

BEARING MATERIAL TO BE SPF NO.2 OR BETTER AT JOINT(S) 2, 4

BRACING

TOP CHORD TO BE SHEATHED OR MAX. PURLIN SPACING = 6.25 FT.
MAX. UNBRACED BOTTOM CHORD LENGTH = 10.00 FT. OR RIGID CEILING DIRECTLY APPLIED.

ALL PITCH BREAKS AND PERIMETER CORNER JOINTS MUST BE LATERALLY RESTRAINED.

LOADING

TOTAL LOAD CASES: (5)

CHORDS

MEMB. FR-TO	MAX. FACTORED FORCE (LBS)	FACTORED VERT. LOAD (PLF) FROM	TO	LC1 MAX CSI (LC)	MAX. UNBRAC LENGTH
1- 2	0 / 15	-77.4	-77.4	0.10 (1)	10.00
2- 7	-25 / 0	-77.4	-77.4	0.06 (1)	6.25
7- 3	0 / 6	-77.4	-77.4	0.10 (1)	10.00
5- 3	-106 / 0	0.0	0.0	0.01 (1)	7.81
2- 6	0 / 0	-17.5	-17.5	0.06 (1)	10.00
6- 5	0 / 0	-17.5	-17.5	0.13 (1)	10.00
5- 4	0 / 0	-17.5	-17.5	0.13 (1)	10.00

WEBS

MEMB. FR-TO	MAX. FACTORED FORCE (LBS)	MAX CSI (LC)
6- 7	-18 / 32	0.00 (1)

CANTILEVER ANALYSIS HAS BEEN CONSIDERED IN THIS DESIGN

DESIGN CRITERIA

SPECIFIED LOADS:

TOP	CH.	LL	=	23.3	PSF
		DL	=	3.0	PSF
BOT	CH.	LL	=	0.0	PSF
		DL	=	7.0	PSF
TOTAL	LOAD		=	33.3	PSF

SPACING = 24.0 IN. C/C

THIS TRUSS IS DESIGNED FOR RESIDENTIAL OR SMALL BUILDING REQUIREMENTS OF PART 9, NBCC 2010

THIS DESIGN COMPLIES WITH:
- PART 9 OF OBC 2012 , BCBC 2012 , ABC 2014
- CSA 086-09
- TPIC 2011

(55 % OF 27.2 P.S.F. G.S.L. PLUS 8.4 P.S.F. RAIN LOAD) EQUALS 23.3 P.S.F. SPECIFIED ROOF LIVE LOAD

ALLOWABLE DEFL.(LL)= L/360 (0.19")
CALCULATED VERT. DEFL.(LL) = L/ 999 (0.01")
ALLOWABLE DEFL.(TL)= L/360 (0.19")
CALCULATED VERT. DEFL.(TL) = L/ 999 (0.03")

CSI: TC=0.10 (3-7:1) , BC=0.13 (5-6:1) , WB=0.00 (6-7:1) , SSI=0.09 (4-5:1)

DOL LUMBER=1.00 NAIL=1.00 LS BEND=1.10 COMP=1.10 SHEAR=1.10 TENS= 1.10

COMPANION LIVE LOAD FACTOR = 0.50

TRUSS PLATE MANUFACTURER IS NOT RESPONSIBLE FOR QUALITY CONTROL IN THE TRUSS MANUFACTURING PLANT .

NAIL VALUES

PLATE	GRIP(DRY) (PSI) MAX	MIN	SHEAR (PLI) MAX	MIN	SECTION (PLI) MAX	MIN
MT20	618	354	1667	822	2284	1656

PLATE PLACEMENT TOL. = 0.250 inches

PLATE ROTATION TOL. = 5.0 Deg.

JSI GRIP= 0.12 (2) (INPUT = 0.90)
JSI METAL= 0.04 (2) (INPUT = 1.00)

LICENSED PROFESSIONAL ENGINEER
P.M. TREVISAN
100136551
March 16th, 2017
PROVINCE OF ONTARIO

RECEIVED
TOWN OF MILTON
MAR 29, 2017
17-5327
BUILDING DIVISION

KOTT

JOB NAME	TRUSS NAME	QUANTITY	PLY	JOB DESC.	DRWG NO.
PT0317-093	**T83**	**1**	**1**	TRUSS DESC. LECCO RIDGE-BLOCK 343	

ENG JOB: PT0317-093

KOTT , Stouffville, ON, CGC

Version 8.100 S Feb 9 2017 MiTek Industries, Inc. Thu Mar 16 07:55:33 2017 Page 1
ID:EvTixTQDI5yR1QLotZTBr_yE?HJ-icl0DZcM31AeeTBaMUTCKLoF4LcpuGHw8jRkD5zaRH8

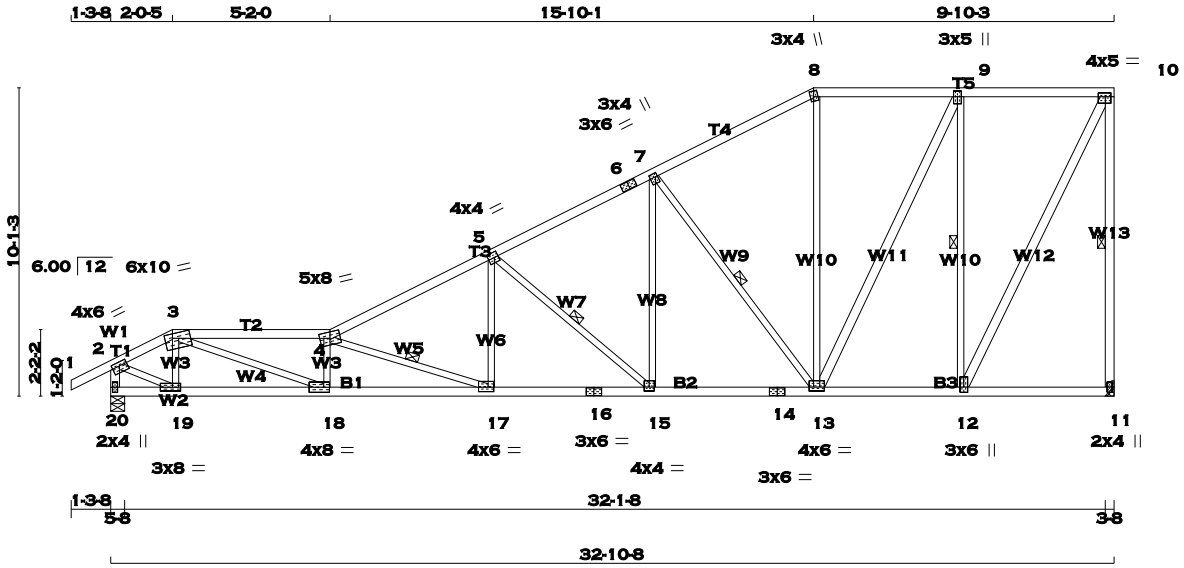

TOTAL WEIGHT = 165 lb

LUMBER
N. L. G. A. RULES

CHORDS	SIZE		LUMBER	DESCR.
1 - 3	2x4	DRY	No.2	SPF
3 - 4	2x4	DRY	No.2	SPF
4 - 6	2x4	DRY	No.2	SPF
6 - 8	2x4	DRY	No.2	SPF
8 - 10	2x4	DRY	No.2	SPF
11 - 10	2x4	DRY	No.2	SPF
20 - 2	2x4	DRY	No.2	SPF
20 - 16	2x4	DRY	No.2	SPF
16 - 14	2x4	DRY	No.2	SPF
14 - 11	2x4	DRY	No.2	SPF
ALL WEBS	2x3	DRY	No.2	SPF
EXCEPT				
13 - 9	2x4	DRY	No.2	SPF
12 - 10	2x4	DRY	No.2	SPF

DRY: SEASONED LUMBER.

PLATES (table is in inches)

JT	TYPE	PLATES	W	LEN	Y	X
2	TMVW-t	MT20	4.0	6.0	1.50	3.00
3	TTWW-m	MT20	6.0	10.0	1.75	3.00
4	TTWW-m	MT20	5.0	8.0		
5	TMWW-t	MT20	4.0	4.0	2.00	1.50
6	TS-t	MT20	3.0	6.0		
7	TMWW+t	MT20	3.0	4.0	1.50	0.75
8	TTW+m	MT20	3.0	4.0	2.25	1.25
9	TMWW+t	MT20	3.0	5.0	2.25	1.50
10	TMVW-t	MT20	4.0	5.0	1.50	2.25
11	BMV1+p	MT20	2.0	4.0		
12	BMWW+t	MT20	3.0	6.0	2.00	1.50
13	BMWWW-t	MT20	4.0	6.0	1.50	3.00
14	BS-t	MT20	3.0	6.0		
15	BMWW-t	MT20	4.0	4.0	1.50	2.00
16	BS-t	MT20	3.0	6.0		
17	BMWW-t	MT20	4.0	6.0	1.75	2.25
18	BMWW-t	MT20	4.0	8.0	2.00	2.25
19	BMWW-t	MT20	3.0	8.0	1.50	3.25
20	BMV1+p	MT20	2.0	4.0		

A SIZE FOR SIZE SUBSTITUTION OF MITEK MII20 WITH TEE-LOK TL20 PLATES IS ALLOWED.

DIMENSIONS, SUPPORTS AND LOADINGS SPECIFIED BY FABRICATOR TO BE VERIFIED BY BUILDING DESIGNER

BEARINGS

JT	FACTORED GROSS REACTION VERT	HORZ	MAXIMUM GROSS REACTION DOWN	HORZ	UPLIFT	INPUT BRG IN-SX	REQRD BRG IN-SX
11	1559	0	1559	0	0	HANGER BY OTHERS MIN. SEAT SIZE: 3-8	
20	1664	0	1664	0	0	5-8	5-8

UNFACTORED REACTIONS

JT	1ST LCASE COMBINED	SNOW	LIVE	PERM.LIVE	WIND	DEAD	SOIL
		MAX./MIN. COMPONENT REACTIONS					
11	1094	766 / 0	0 / 0	0 / 0	0 / 0	329 / 0	0 / 0
20	1166	829 / 0	0 / 0	0 / 0	0 / 0	337 / 0	0 / 0

BEARING MATERIAL TO BE SPF NO.2 OR BETTER AT JOINT(S) 20

BRACING
TOP CHORD TO BE SHEATHED OR MAX. PURLIN SPACING = 2.89 FT.
MAX. UNBRACED BOTTOM CHORD LENGTH = 10.00 FT. OR RIGID CEILING DIRECTLY APPLIED.

ALL PITCH BREAKS AND PERIMETER CORNER JOINTS MUST BE LATERALLY RESTRAINED.

1 - 2x3 SPF No.2 LATERAL BRACE(S) AT 1/ 2 LENGTH OF 10-11. DBS = 8-0-0 . CBF = 76 LBS.
1 - 2x3 SPF No.2 LATERAL BRACE(S) AT 1/ 2 LENGTH OF 4-17. DBS = 6-0-0 . CBF = 75 LBS.
1 - 2x3 SPF No.2 LATERAL BRACE(S) AT 1/ 2 LENGTH OF 5-15, 7-13. DBS = 12-0-0 . CBF = 91 LBS.
1 - 2x3 SPF No.2 LATERAL BRACE(S) AT 1/ 2 LENGTH OF 9-12. DBS = 10-0-0 . CBF = 80 LBS.

DBS = DIAGONAL BRACE SPACING (MAX). CBF = CUMULATIVE BRACING FORCE. FASTEN LATERAL BRACE(S) USING (0.122"X3") SPIRAL NAILS : 1 NAIL FOR 2x3 BRACE(S), 2 FOR 1x4, 2x4, 2x5, 3 FOR 2x6, 4 FOR 2x8, 5 FOR 2x10, AND 6 FOR 2x12.

END VERTICAL(S) MUST BE SHEATHED OR HAVE BRACES AS INDICATED IN THE MAX. UNBRACED LENGTH COLUMN OF THE TABLE BELOW

LOADING
TOTAL LOAD CASES: (4)

CHORDS MEMB. FR-TO	MAX. FACTORED FORCE (LBS)	FACTORED VERT. LOAD (PLF) FROM	TO	LC1 MAX CSI (LC)	MAX. UNBRAC LENGTH
1- 2	0 / 23	-77.4	-77.4	0.10 (1)	10.00
2- 3	-1850 / 0	-77.4	-77.4	0.08 (1)	4.89
3- 4	-4565 / 0	-77.4	-77.4	0.57 (1)	2.89
4- 5	-3036 / 0	-77.4	-77.4	0.40 (1)	3.71
5- 6	-2028 / 0	-77.4	-77.4	0.30 (1)	4.50
6- 7	-2028 / 0	-77.4	-77.4	0.30 (1)	4.50
7- 8	-1238 / 0	-77.4	-77.4	0.27 (1)	5.47
8- 9	-1093 / 0	-77.4	-77.4	0.25 (1)	5.76
9-10	-704 / 0	-77.4	-77.4	0.24 (1)	6.25
11-10	-1523 / 0	0.0	0.0	0.76 (1)	5.33
20- 2	-1682 / 0	0.0	0.0	0.17 (1)	6.40
20-19	0 / 0	-17.5	-17.5	0.10 (1)	10.00
19-18	0 / 1622	-17.5	-17.5	0.37 (1)	10.00
18-17	0 / 4624	-17.5	-17.5	0.86 (1)	10.00
17-16	0 / 2733	-17.5	-17.5	0.51 (1)	10.00
16-15	0 / 2733	-17.5	-17.5	0.51 (1)	10.00
15-14	0 / 1815	-17.5	-17.5	0.34 (1)	10.00
14-13	0 / 1815	-17.5	-17.5	0.34 (1)	10.00
13-12	0 / 704	-17.5	-17.5	0.17 (1)	10.00
12-11	0 / 0	-17.5	-17.5	0.10 (4)	10.00

WEBS MEMB. FR-TO	MAX. FACTORED FORCE (LBS)	MAX CSI (LC)
19- 3	-538 / 0	0.08 (1)
3-18	0 / 3140	0.71 (1)
18- 4	-1057 / 0	0.16 (1)
4-17	-2007 / 0	0.49 (1)
17- 5	0 / 794	0.18 (1)
5-15	-1207 / 0	0.39 (1)
15- 7	0 / 872	0.20 (1)
7-13	-1205 / 0	0.67 (1)
13- 8	0 / 240	0.05 (1)
13- 9	0 / 898	0.14 (1)
12- 9	-1278 / 0	0.89 (1)
12-10	0 / 1543	0.25 (1)
2-19	0 / 1781	0.40 (1)

RECEIVED
TOWN OF MILTON
MAR 29, 2017
17-5327
BUILDING DIVISION

DESIGN CRITERIA

SPECIFIED LOADS:

TOP	CH.	LL	=	23.3	PSF
		DL	=	3.0	PSF
BOT	CH.	LL	=	0.0	PSF
		DL	=	7.0	PSF
TOTAL	LOAD		=	33.3	PSF

SPACING = 24.0 IN. C/C

LOADING IN ALL FLAT SECTIONS BASED ON A SLOPE OF 6.00/12

THIS TRUSS IS DESIGNED FOR RESIDENTIAL OR SMALL BUILDING REQUIREMENTS OF PART 9, NBCC 2010

THIS DESIGN COMPLIES WITH:
- PART 9 OF OBC 2012 , BCBC 2012 , ABC 2014
- CSA 086-09
- TPIC 2011

(55 % OF 27.2 P.S.F. G.S.L. PLUS 8.4 P.S.F. RAIN LOAD) EQUALS 23.3 P.S.F. SPECIFIED ROOF LIVE LOAD

ALLOWABLE DEFL.(LL)= L/360 (1.10")
CALCULATED VERT. DEFL.(LL) = L/ 999 (0.29")
ALLOWABLE DEFL.(TL)= L/360 (1.10")
CALCULATED VERT. DEFL.(TL) = L/ 760 (0.52")

CSI: TC=0.76 (10-11:1) , BC=0.86 (17-18:1) , WB=0.89 (9-12:1) , SSI=0.19 (9-10:1)

DOL LUMBER=1.00 NAIL=1.00 LS BEND=1.10 COMP=1.10 SHEAR=1.10 TENS= 1.10

COMPANION LIVE LOAD FACTOR = 0.50

TRUSS PLATE MANUFACTURER IS NOT RESPONSIBLE FOR QUALITY CONTROL IN THE TRUSS MANUFACTURING PLANT .

NAIL VALUES

PLATE	GRIP(DRY) (PSI) MAX	MIN	SHEAR (PLI) MAX	MIN	SECTION (PLI) MAX	MIN
MT20	618	354	1667	822	2284	1656

PLATE PLACEMENT TOL. = 0.250 inches

PLATE ROTATION TOL. = 5.0 Deg.

JSI GRIP= 0.90 (19) (INPUT = 0.90)
JSI METAL= 0.72 (16) (INPUT = 1.00)

KOTT

JOB NAME	TRUSS NAME	QUANTITY	PLY	JOB DESC.	DRWG NO.
PT0317-093	T84	1	1	TRUSS DESC. LECCO RIDGE-BLOCK 343	

KOTT , Stouffville, ON, CGC

Version 8.100 S Feb 9 2017 MiTek Industries, Inc. Thu Mar 16 07:55:33 2017 Page 1
ID:EvTixTQDI5yR1QLotZTBr_yE?HJ-icl0DZcM31AeeTBaMUTCKLoHeLguuGBw8jRkD5zaRH8

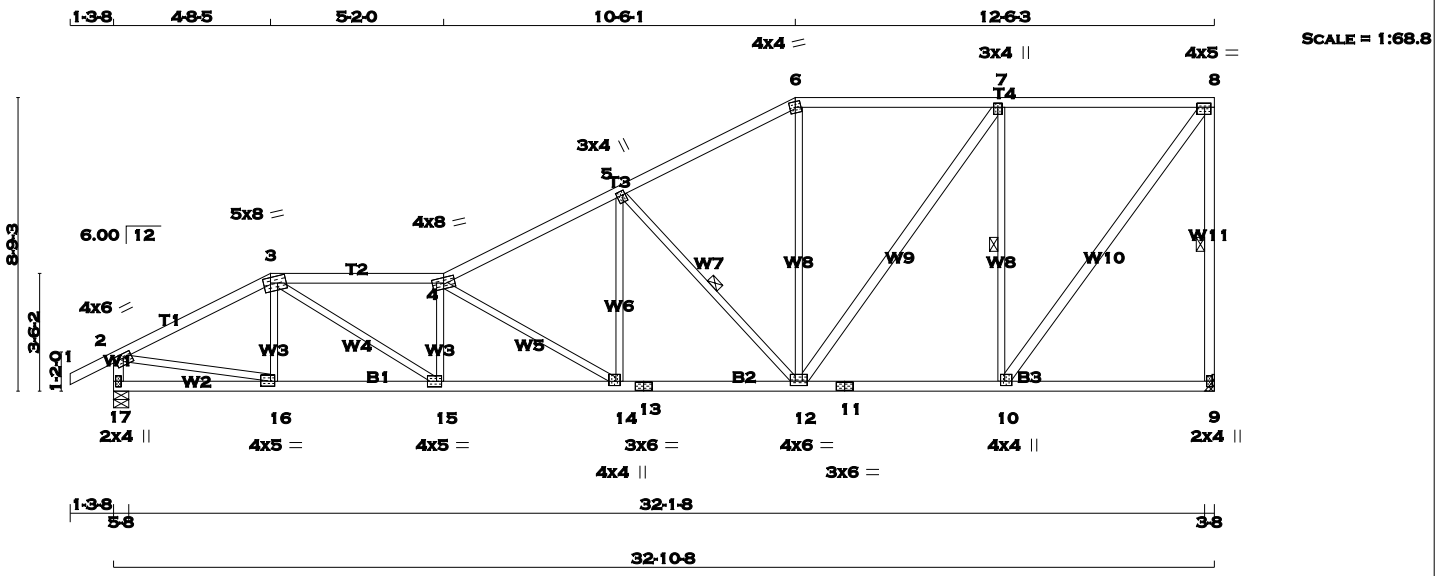

TOTAL WEIGHT = 154 lb
[M]

LUMBER
N. L. G. A. RULES

CHORDS	SIZE		LUMBER	DESCR.
1 - 3	2x4	DRY	No.2	SPF
3 - 4	2x4	DRY	No.2	SPF
4 - 6	2x4	DRY	No.2	SPF
6 - 8	2x4	DRY	No.2	SPF
9 - 8	2x4	DRY	No.2	SPF
17 - 2	2x4	DRY	No.2	SPF
17 - 13	2x4	DRY	No.2	SPF
13 - 11	2x4	DRY	No.2	SPF
11 - 9	2x4	DRY	No.2	SPF
ALL WEBS EXCEPT	2x3	DRY	No.2	SPF
12 - 7	2x4	DRY	No.2	SPF
10 - 8	2x4	DRY	No.2	SPF

DRY: SEASONED LUMBER.

PLATES (table is in inches)

JT	TYPE	PLATES	W	LEN	Y	X
2	TMVW-t	MT20	4.0	6.0	1.50	3.00
3	TTWW-m	MT20	5.0	8.0	2.00	2.50
4	TTWW-m	MT20	4.0	8.0		
5	TMWW+t	MT20	3.0	4.0	1.50	0.75
6	TTW-m	MT20	4.0	4.0		
7	TMWW+t	MT20	3.0	4.0	1.50	1.50
8	TMVW-t	MT20	4.0	5.0	1.50	2.25
9	BMV1+p	MT20	2.0	4.0		
10	BMWW+t	MT20	4.0	4.0	1.50	1.50
11	BS-t	MT20	3.0	6.0		
12	BMWWW-t	MT20	4.0	6.0	1.50	3.00
13	BS-t	MT20	3.0	6.0		
14	BMWW+t	MT20	4.0	4.0	1.50	1.50
15	BMWW-t	MT20	4.0	5.0	2.00	1.75
16	BMWW-t	MT20	4.0	5.0	1.75	1.50
17	BMV1+p	MT20	2.0	4.0		

A SIZE FOR SIZE SUBSTITUTION OF MITEK MII20 WITH TEE-LOK TL20 PLATES IS ALLOWED.

DIMENSIONS, SUPPORTS AND LOADINGS SPECIFIED BY FABRICATOR TO BE VERIFIED BY BUILDING DESIGNER

BEARINGS

JT	FACTORED GROSS REACTION VERT	HORZ	MAXIMUM FACTORED GROSS REACTION DOWN	HORZ	UPLIFT	INPUT BRG	REQRD BRG
9	1559	0	1559	0	0	HANGER BY OTHERS MIN. SEAT SIZE: 3-8	
17	1664	0	1664	0	0	5-8	5-8

UNFACTORED REACTIONS

JT	1ST LCASE COMBINED	SNOW	MAX./MIN. COMPONENT REACTIONS LIVE	PERM.LIVE	WIND	DEAD	SOIL
9	1094	766 / 0	0 / 0	0 / 0	0 / 0	329 / 0	0 / 0
17	1166	829 / 0	0 / 0	0 / 0	0 / 0	337 / 0	0 / 0

BEARING MATERIAL TO BE SPF NO.2 OR BETTER AT JOINT(S) 17

BRACING
TOP CHORD TO BE SHEATHED OR MAX. PURLIN SPACING = 3.33 FT.
MAX. UNBRACED BOTTOM CHORD LENGTH = 10.00 FT. OR RIGID CEILING DIRECTLY APPLIED.

ALL PITCH BREAKS AND PERIMETER CORNER JOINTS MUST BE LATERALLY RESTRAINED.

1 - 2x3 SPF No.2 LATERAL BRACE(S) AT 1/ 2 LENGTH OF 8-9. DBS = 8-0-0 . CBF = 76 LBS.
1 - 2x3 SPF No.2 LATERAL BRACE(S) AT 1/ 2 LENGTH OF 5-12, 7-10. DBS = 12-0-0 . CBF = 90 LBS.

DBS = DIAGONAL BRACE SPACING (MAX). CBF = CUMULATIVE BRACING FORCE. FASTEN LATERAL BRACE(S) USING (0.122"X3") SPIRAL NAILS : 1 NAIL FOR 2x3 BRACE(S), 2 FOR 1x4, 2x4, 2x5, 3 FOR 2x6, 4 FOR 2x8, 5 FOR 2x10, AND 6 FOR 2x12.

END VERTICAL(S) MUST BE SHEATHED OR HAVE BRACES AS INDICATED IN THE MAX. UNBRACED LENGTH COLUMN OF THE TABLE BELOW

LOADING
TOTAL LOAD CASES: (4)

CHORDS

MEMB. FR-TO	MAX. FACTORED FORCE (LBS)	FACTORED VERT. LOAD LC1 (PLF) FROM	TO	MAX CSI (LC)	MAX. UNBRAC LENGTH
1- 2	0 / 23	-77.4	-77.4	0.10 (1)	10.00
2- 3	-2209 / 0	-77.4	-77.4	0.40 (1)	4.20
3- 4	-3324 / 0	-77.4	-77.4	0.58 (1)	3.33
4- 5	-2475 / 0	-77.4	-77.4	0.52 (1)	3.89
5- 6	-1612 / 0	-77.4	-77.4	0.43 (1)	4.72
6- 7	-1426 / 0	-77.4	-77.4	0.59 (1)	4.66
7- 8	-996 / 0	-77.4	-77.4	0.56 (1)	5.40
9- 8	-1515 / 0	0.0	0.0	0.53 (1)	5.34
17- 2	-1630 / 0	0.0	0.0	0.16 (1)	6.48
17-16	0 / 0	-17.5	-17.5	0.10 (4)	10.00
16-15	0 / 1966	-17.5	-17.5	0.37 (1)	10.00
15-14	0 / 3349	-17.5	-17.5	0.60 (1)	10.00
14-13	0 / 2234	-17.5	-17.5	0.41 (1)	10.00
13-12	0 / 2234	-17.5	-17.5	0.41 (1)	10.00
12-11	0 / 996	-17.5	-17.5	0.25 (1)	10.00
11-10	0 / 996	-17.5	-17.5	0.25 (1)	10.00
10- 9	0 / 0	-17.5	-17.5	0.17 (4)	10.00

WEBS

MEMB. FR-TO	MAX. FACTORED FORCE (LBS)	MAX CSI (LC)
16- 3	-252 / 2	0.05 (1)
3-15	0 / 1608	0.36 (1)
15- 4	-786 / 0	0.16 (1)
4-14	-1307 / 0	0.90 (1)
14- 5	0 / 782	0.18 (1)
5-12	-1202 / 0	0.51 (1)
12- 6	0 / 378	0.09 (1)
12- 7	0 / 740	0.12 (1)
10- 7	-1202 / 0	0.59 (1)
10- 8	0 / 1659	0.27 (1)
2-16	0 / 2006	0.45 (1)

DESIGN CRITERIA

SPECIFIED LOADS:

TOP	CH.	LL	=	23.3	PSF
		DL	=	3.0	PSF
BOT	CH.	LL	=	0.0	PSF
		DL	=	7.0	PSF
TOTAL	LOAD		=	33.3	PSF

SPACING = 24.0 IN. C/C

LOADING IN ALL FLAT SECTIONS BASED ON A SLOPE OF 6.00/12

THIS TRUSS IS DESIGNED FOR RESIDENTIAL OR SMALL BUILDING REQUIREMENTS OF PART 9, NBCC 2010

THIS DESIGN COMPLIES WITH:
- PART 9 OF OBC 2012 , BCBC 2012 , ABC 2014
- CSA 086-09
- TPIC 2011

(55 % OF 27.2 P.S.F. G.S.L. PLUS 8.4 P.S.F. RAIN LOAD) EQUALS 23.3 P.S.F. SPECIFIED ROOF LIVE LOAD

ALLOWABLE DEFL.(LL)= L/360 (1.10")
CALCULATED VERT. DEFL.(LL) = L/ 999 (0.18")
ALLOWABLE DEFL.(TL)= L/360 (1.10")
CALCULATED VERT. DEFL.(TL) = L/ 999 (0.33")

CSI: TC=0.59 (6-7:1) , BC=0.60 (14-15:1) , WB=0.90 (4-14:1) , SSI=0.24 (7-8:1)

DOL LUMBER=1.00 NAIL=1.00 LS BEND=1.10 COMP=1.10 SHEAR=1.10 TENS= 1.10

COMPANION LIVE LOAD FACTOR = 0.50

TRUSS PLATE MANUFACTURER IS NOT RESPONSIBLE FOR QUALITY CONTROL IN THE TRUSS MANUFACTURING PLANT .

NAIL VALUES

PLATE	GRIP(DRY) (PSI) MAX	MIN	SHEAR (PLI) MAX	MIN	SECTION (PLI) MAX	MIN
MT20	618	354	1667	822	2284	1656

PLATE PLACEMENT TOL. = 0.250 inches

PLATE ROTATION TOL. = 5.0 Deg.

JSI GRIP= 0.90 (10) (INPUT = 0.90)
JSI METAL= 0.59 (16) (INPUT = 1.00)

LICENSED PROFESSIONAL ENGINEER
P.M. TREVISAN
100136551
March 16th, 2017
PROVINCE OF ONTARIO

RECEIVED
TOWN OF MILTON
MAR 29, 2017
17-5327
BUILDING DIVISION

KOTT

JOB NAME	TRUSS NAME	QUANTITY	PLY	JOB DESC.	DRWG NO.
PT0317-093	T85	1	1	TRUSS DESC. LECCO RIDGE-BLOCK 343	ENG JOB: PT0317-093

KOTT , Stouffville, ON, CGC

Version 8.100 S Feb 9 2017 MiTek Industries, Inc. Thu Mar 16 07:55:34 2017 Page 1

ID:EvTixTQDI5yR1QLotZTBr_yE?HJ-AoJOQvd_qLIVGdmnwC?RtYLSnl2edqS3NMBHlYzaRH7

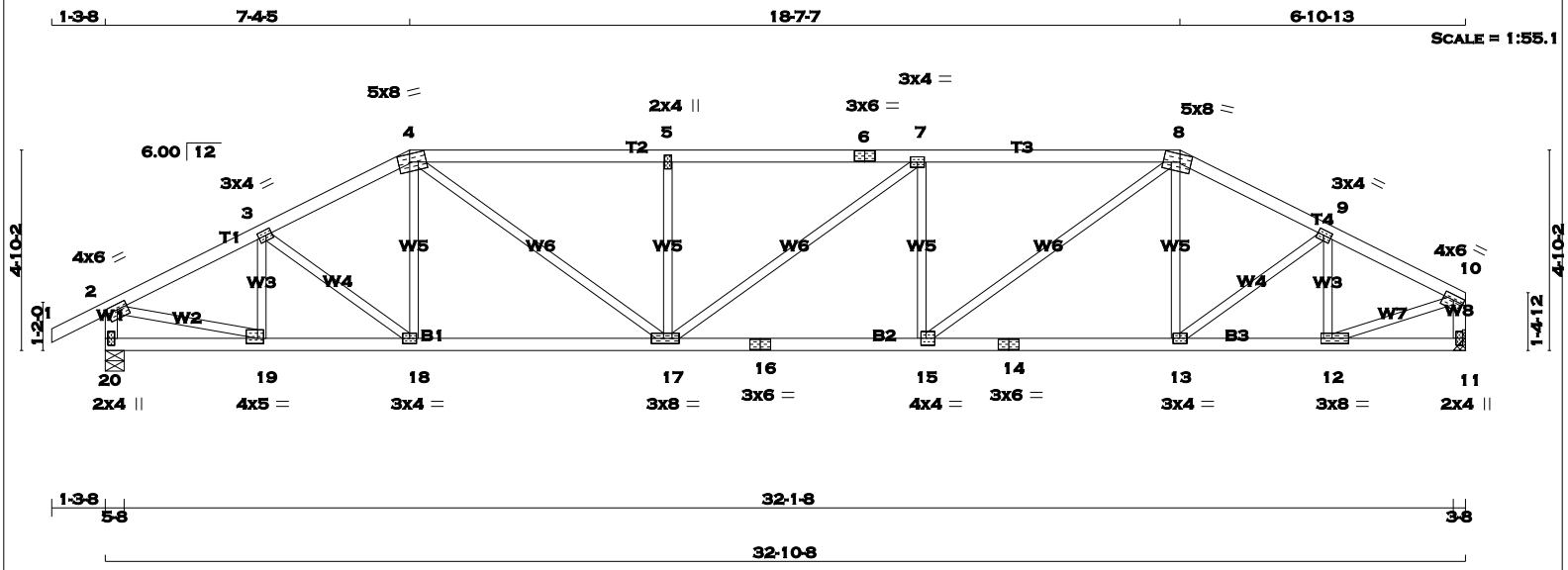

TOTAL WEIGHT = 129 lb [M]

LUMBER

N. L. G. A. RULES

CHORDS	SIZE		LUMBER	DESCR.
1 - 4	2x4	DRY	No.2	SPF
4 - 6	2x4	DRY	No.2	SPF
6 - 8	2x4	DRY	No.2	SPF
8 - 10	2x4	DRY	No.2	SPF
20 - 2	2x4	DRY	No.2	SPF
11 - 10	2x4	DRY	No.2	SPF
20 - 16	2x4	DRY	No.2	SPF
16 - 14	2x4	DRY	No.2	SPF
14 - 11	2x4	DRY	No.2	SPF
ALL WEBS EXCEPT	2x3	DRY	No.2	SPF

DRY: SEASONED LUMBER.

PLATES (table is in inches)

JT	TYPE	PLATES	W	LEN	Y	X
2	TMVW-t	MT20	4.0	6.0	1.50	3.00
3	TMWW-t	MT20	3.0	4.0	1.50	1.75
4	TTWW-m	MT20	5.0	8.0	2.25	3.25
5	TMW+w	MT20	2.0	4.0		
6	TS-t	MT20	3.0	6.0		
7	TMWW-t	MT20	3.0	4.0		
8	TTWW-m	MT20	5.0	8.0	2.25	3.25
9	TMWW-t	MT20	3.0	4.0	1.50	1.75
10	TMVW-t	MT20	4.0	6.0	1.50	3.00
11	BMV1+p	MT20	2.0	4.0		
12	BMWW-t	MT20	3.0	8.0	1.50	3.25
13	BMWW-t	MT20	3.0	4.0		
14	BS-t	MT20	3.0	6.0		
15	BMWW-t	MT20	4.0	4.0	2.00	1.50
16	BS-t	MT20	3.0	6.0		
17	BMWWW-t	MT20	3.0	8.0	1.50	3.50
18	BMWW-t	MT20	3.0	4.0		
19	BMWW-t	MT20	4.0	5.0	1.50	1.75
20	BMV1+p	MT20	2.0	4.0		

A SIZE FOR SIZE SUBSTITUTION OF MITEK MII20 WITH TEE-LOK TL20 PLATES IS ALLOWED.

DIMENSIONS, SUPPORTS AND LOADINGS SPECIFIED BY FABRICATOR TO BE VERIFIED BY BUILDING DESIGNER

BEARINGS

JT	FACTORED GROSS REACTION VERT	HORZ	MAXIMUM FACTORED GROSS REACTION DOWN	HORZ	UPLIFT	INPUT BRG IN-SX	REQRD BRG IN-SX
20	1664	0	1664	0	0	5-8	5-8
11	1559	0	1559	0	0	HANGER BY OTHERS	
						MIN. SEAT SIZE: 3-8	

UNFACTORED REACTIONS

JT	1ST LCASE COMBINED	SNOW	MAX./MIN. COMPONENT REACTIONS LIVE	PERM.LIVE	WIND	DEAD	SOIL
20	1166	829 / 0	0 / 0	0 / 0	0 / 0	337 / 0	0 / 0
11	1094	766 / 0	0 / 0	0 / 0	0 / 0	329 / 0	0 / 0

BEARING MATERIAL TO BE SPF NO.2 OR BETTER AT JOINT(S) 20

BRACING

TOP CHORD TO BE SHEATHED OR MAX. PURLIN SPACING = 3.59 FT.
MAX. UNBRACED BOTTOM CHORD LENGTH = 10.00 FT. OR RIGID CEILING DIRECTLY APPLIED.

ALL PITCH BREAKS AND PERIMETER CORNER JOINTS MUST BE LATERALLY RESTRAINED.

LOADING

TOTAL LOAD CASES: (4)

CHORDS

MEMB. FR-TO	MAX. FORCE (LBS)	FACTORED VERT. LOAD (PLF) FROM	TO	LC1 MAX CSI (LC)	MAX. UNBRAC LENGTH
1- 2	0 / 23	-77.4	-77.4	0.10 (1)	10.00
2- 3	-2149 / 0	-77.4	-77.4	0.21 (1)	4.46
3- 4	-2217 / 0	-77.4	-77.4	0.21 (1)	4.40
4- 5	-2801 / 0	-77.4	-77.4	0.63 (1)	3.60
5- 6	-2801 / 0	-77.4	-77.4	0.63 (1)	3.59
6- 7	-2801 / 0	-77.4	-77.4	0.63 (1)	3.59
7- 8	-2772 / 0	-77.4	-77.4	0.63 (1)	3.61
8- 9	-2118 / 0	-77.4	-77.4	0.19 (1)	4.51
9-10	-1917 / 0	-77.4	-77.4	0.18 (1)	4.71
20- 2	-1629 / 0	0.0	0.0	0.16 (1)	6.48
11-10	-1528 / 0	0.0	0.0	0.16 (1)	6.65
20-19	0 / 0	-17.5	-17.5	0.06 (4)	10.00
19-18	0 / 1933	-17.5	-17.5	0.37 (1)	10.00
18-17	0 / 1971	-17.5	-17.5	0.38 (1)	10.00
17-16	0 / 2773	-17.5	-17.5	0.50 (1)	10.00
16-15	0 / 2773	-17.5	-17.5	0.50 (1)	10.00
15-14	0 / 1881	-17.5	-17.5	0.36 (1)	10.00
14-13	0 / 1881	-17.5	-17.5	0.36 (1)	10.00
13-12	0 / 1726	-17.5	-17.5	0.34 (1)	10.00
12-11	0 / 0	-17.5	-17.5	0.05 (4)	10.00

WEBS

MEMB. FR-TO	MAX. FORCE (LBS)	MAX CSI (LC)
19- 3	-391 / 0	0.07 (1)
3-18	0 / 45	0.01 (1)
18- 4	0 / 88	0.03 (4)
4-17	0 / 1027	0.23 (1)
17- 5	-519 / 0	0.18 (1)
17- 7	0 / 35	0.01 (1)
15- 7	-542 / 0	0.19 (1)
15- 8	0 / 1102	0.25 (1)
13- 8	-16 / 62	0.02 (4)
13- 9	0 / 195	0.04 (1)
12- 9	-520 / 0	0.09 (1)
2-19	0 / 1982	0.45 (1)
12-10	0 / 1816	0.41 (1)

DESIGN CRITERIA

SPECIFIED LOADS:

TOP CH.	LL	=	23.3	PSF
	DL	=	3.0	PSF
BOT CH.	LL	=	0.0	PSF
	DL	=	7.0	PSF
TOTAL LOAD		=	33.3	PSF

SPACING = 24.0 IN. C/C

LOADING IN FLAT SECTION BASED ON A SLOPE OF 6.00/12

THIS TRUSS IS DESIGNED FOR RESIDENTIAL OR SMALL BUILDING REQUIREMENTS OF PART 9, NBCC 2010

THIS DESIGN COMPLIES WITH:
- PART 9 OF OBC 2012 , BCBC 2012 , ABC 2014
- CSA 086-09
- TPIC 2011

(55 % OF 27.2 P.S.F. G.S.L. PLUS 8.4 P.S.F. RAIN LOAD) EQUALS 23.3 P.S.F. SPECIFIED ROOF LIVE LOAD

ALLOWABLE DEFL.(LL)= L/360 (1.10")
CALCULATED VERT. DEFL.(LL) = L/ 999 (0.16")
ALLOWABLE DEFL.(TL)= L/360 (1.10")
CALCULATED VERT. DEFL.(TL) = L/ 999 (0.30")

CSI: TC=0.63 (7-8:1) , BC=0.50 (15-17:1) , WB=0.45 (2-19:1) , SSI=0.22 (7-8:1)

DOL LUMBER=1.00 NAIL=1.00 LS BEND=1.10 COMP=1.10 SHEAR=1.10 TENS= 1.10

COMPANION LIVE LOAD FACTOR = 0.50

TRUSS PLATE MANUFACTURER IS NOT RESPONSIBLE FOR QUALITY CONTROL IN THE TRUSS MANUFACTURING PLANT .

NAIL VALUES

PLATE	GRIP(DRY) (PSI) MAX	MIN	SHEAR (PLI) MAX	MIN	SECTION (PLI) MAX	MIN
MT20	618	354	1667	822	2284	1656

PLATE PLACEMENT TOL. = 0.250 inches

PLATE ROTATION TOL. = 5.0 Deg.

JSI GRIP= 0.89 (2) (INPUT = 0.90)
JSI METAL= 0.76 (16) (INPUT = 1.00)

LICENSED PROFESSIONAL ENGINEER
P.M. TREVISAN
100136551
March 16th, 2017
PROVINCE OF ONTARIO

RECEIVED
TOWN OF MILTON
MAR 29, 2017
17-5327
BUILDING DIVISION

KOTT

JOB NAME	TRUSS NAME	QUANTITY	PLY	JOB DESC.	DRWG NO.
PT0317-093	T86	1	1	TRUSS DESC. LECCO RIDGE-BLOCK 343	ENG JOB: PT0317-093

KOTT , Stouffville, ON, CGC

Version 8.100 S Feb 9 2017 MiTek Industries, Inc. Thu Mar 16 07:55:35 2017 Page 1

ID:EvTixTQDI5yR1QLotZTBr_yE?HJ-e?tmeFecbeQMunLzTvWgQmuhs9JeMEGDb0wqH_zaRH6

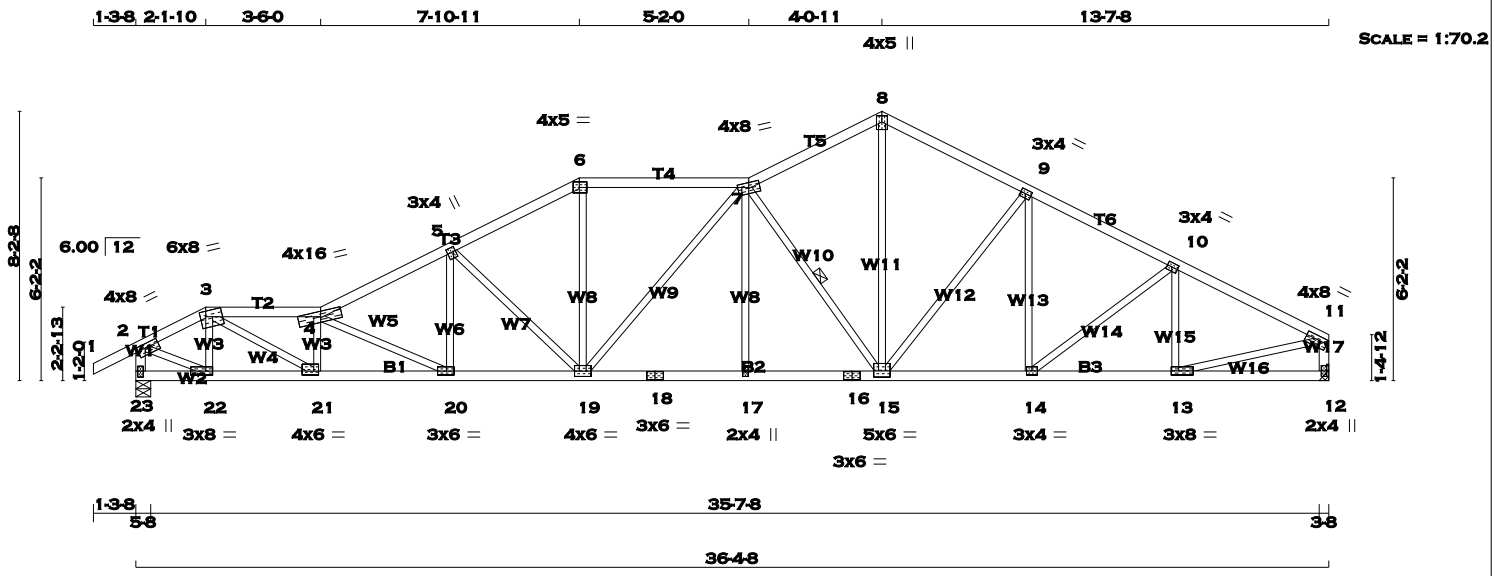

TOTAL WEIGHT = 156 lb

[M][F]

LUMBER

N. L. G. A. RULES

CHORDS	SIZE		LUMBER	DESCR.
1 - 3	2x4	DRY	No.2	SPF
3 - 4	2x4	DRY	No.2	SPF
4 - 6	2x4	DRY	No.2	SPF
6 - 7	2x4	DRY	No.2	SPF
7 - 8	2x4	DRY	No.2	SPF
8 - 11	2x4	DRY	No.2	SPF
23 - 2	2x4	DRY	No.2	SPF
12 - 11	2x4	DRY	No.2	SPF
23 - 18	2x4	DRY	No.2	SPF
18 - 16	2x4	DRY	No.2	SPF
16 - 12	2x4	DRY	No.2	SPF
ALL WEBS EXCEPT	2x3	DRY	No.2	SPF

DRY: SEASONED LUMBER.

PLATES (table is in inches)

JT	TYPE	PLATES	W	LEN	Y	X
2	TMVW-t	MT20	4.0	8.0	1.50	3.00
3	TTWW-m	MT20	6.0	8.0	2.00	2.00
4	TTWW-m	MT20	4.0	16.0	2.00	7.75
5	TMWW+t	MT20	3.0	4.0	1.75	0.75
6	TTW-l	MT20	4.0	5.0	2.00	2.75
7	TTWWW-m	MT20	4.0	8.0	1.75	4.00
8	TTW+p	MT20	4.0	5.0	2.25	2.00
9	TMWW-t	MT20	3.0	4.0	1.50	1.75
10	TMWW-t	MT20	3.0	4.0	1.50	1.75
11	TMVW-t	MT20	4.0	8.0	1.50	3.00
12	BMV1+p	MT20	2.0	4.0		
13	BMWW-t	MT20	3.0	8.0	1.50	2.75
14	BMWW-t	MT20	3.0	4.0		
15	BMWWW-t	MT20	5.0	6.0	2.25	3.00
16	BS-t	MT20	3.0	6.0		
17	BMW+w	MT20	2.0	4.0		
18	BS-t	MT20	3.0	6.0		
19	BMWWW-t	MT20	4.0	6.0		
20	BMWW-t	MT20	3.0	6.0	1.50	2.75
21	BMWW-t	MT20	4.0	6.0	1.50	1.75
22	BMWW-t	MT20	3.0	8.0	1.50	2.50
23	BMV1+p	MT20	2.0	4.0	2.25	1.00

A SIZE FOR SIZE SUBSTITUTION OF MITEK MII20 WITH TEE-LOK TL20 PLATES IS ALLOWED.

DIMENSIONS, SUPPORTS AND LOADINGS SPECIFIED BY FABRICATOR TO BE VERIFIED BY BUILDING DESIGNER

BEARINGS

JT	FACTORED GROSS REACTION VERT	HORZ	MAXIMUM FACTORED GROSS REACTION DOWN	HORZ	UPLIFT	INPUT BRG IN-SX	REQRD BRG IN-SX
23	1830	0	1830	0	0	5-8	5-8
12	1725	0	1725	0	0	HANGER BY OTHERS	
						MIN. SEAT SIZE: 3-8	

UNFACTORED REACTIONS

JT	1ST LCASE COMBINED	MAX./MIN. COMPONENT REACTIONS SNOW	LIVE	PERM.LIVE	WIND	DEAD	SOIL
23	1282	910 / 0	0 / 0	0 / 0	0 / 0	372 / 0	0 / 0
12	1211	847 / 0	0 / 0	0 / 0	0 / 0	364 / 0	0 / 0

BEARING MATERIAL TO BE SPF NO.2 OR BETTER AT JOINT(S) 23

BRACING

TOP CHORD TO BE SHEATHED OR MAX. PURLIN SPACING = 3.25 FT.
MAX. UNBRACED BOTTOM CHORD LENGTH = 10.00 FT. OR RIGID CEILING DIRECTLY APPLIED.

ALL PITCH BREAKS AND PERIMETER CORNER JOINTS MUST BE LATERALLY RESTRAINED.

1 - 2x3 SPF No.2 LATERAL BRACE(S) AT 1/ 2 LENGTH OF 7-15. DBS = 10-0-0 . CBF = 88 LBS.

DBS = DIAGONAL BRACE SPACING (MAX). CBF = CUMULATIVE BRACING FORCE. FASTEN LATERAL BRACE(S) USING (0.122"X3") SPIRAL NAILS : 1 NAIL FOR 2x3 BRACE(S), 2 FOR 1x4, 2x4, 2x5, 3 FOR 2x6, 4 FOR 2x8, 5 FOR 2x10, AND 6 FOR 2x12.

END VERTICAL(S) MUST BE SHEATHED OR HAVE BRACES AS INDICATED IN THE MAX. UNBRACED LENGTH COLUMN OF THE TABLE BELOW

LOADING

TOTAL LOAD CASES: (4)

CHORDS

MEMB. FR-TO	MAX. FACTORED FORCE (LBS)	FACTORED VERT. LOAD (PLF) FROM	TO	LC1 MAX CSI (LC)	MAX. UNBRAC LENGTH
1- 2	0 / 23	-77.4	-77.4	0.10 (1)	10.00
2- 3	-2070 / 0	-77.4	-77.4	0.09 (1)	4.66
3- 4	-4143 / 0	-77.4	-77.4	0.31 (1)	3.25
4- 5	-3516 / 0	-77.4	-77.4	0.29 (1)	3.55
5- 6	-2798 / 0	-77.4	-77.4	0.23 (1)	3.99
6- 7	-2504 / 0	-77.4	-77.4	0.35 (1)	4.05
7- 8	-2084 / 0	-77.4	-77.4	0.22 (1)	4.52
8- 9	-2099 / 0	-77.4	-77.4	0.23 (1)	4.50
9-10	-2365 / 0	-77.4	-77.4	0.23 (1)	4.28
10-11	-2334 / 0	-77.4	-77.4	0.27 (1)	4.27
23- 2	-1827 / 0	0.0	0.0	0.18 (1)	6.20
12-11	-1688 / 0	0.0	0.0	0.17 (1)	6.39
23-22	0 / 0	-17.5	-17.5	0.05 (1)	10.00
22-21	0 / 1815	-17.5	-17.5	0.38 (1)	10.00
21-20	0 / 4214	-17.5	-17.5	0.78 (1)	10.00
20-19	0 / 3160	-17.5	-17.5	0.56 (1)	10.00
19-18	0 / 2669	-17.5	-17.5	0.48 (1)	10.00
18-17	0 / 2669	-17.5	-17.5	0.48 (1)	10.00
17-16	0 / 2668	-17.5	-17.5	0.47 (1)	10.00
16-15	0 / 2668	-17.5	-17.5	0.47 (1)	10.00
15-14	0 / 2114	-17.5	-17.5	0.38 (1)	10.00
14-13	0 / 2100	-17.5	-17.5	0.37 (1)	10.00
13-12	0 / 0	-17.5	-17.5	0.08 (4)	10.00

WEBS

MEMB. FR-TO	MAX. FACTORED FORCE (LBS)	MAX CSI (LC)
22- 3	-613 / 0	0.09 (1)
3-21	0 / 2679	0.60 (1)
21- 4	-1314 / 0	0.20 (1)
4-20	-1173 / 0	0.39 (1)
20- 5	0 / 602	0.14 (1)
5-19	-934 / 0	0.50 (1)
19- 6	0 / 929	0.21 (1)
19- 7	-253 / 0	0.30 (1)
17- 7	0 / 86	0.03 (4)
7-15	-1412 / 0	0.49 (1)
15- 8	0 / 1562	0.35 (1)
15- 9	-402 / 0	0.40 (1)
14- 9	0 / 83	0.03 (4)
14-10	0 / 17	0.00 (1)
13-10	-404 / 0	0.09 (1)
2-22	0 / 1979	0.45 (1)
13-11	0 / 2156	0.49 (1)

RECEIVED
TOWN OF MILTON
MAR 29, 2017
17-5327
BUILDING DIVISION

DESIGN CRITERIA

SPECIFIED LOADS:

TOP CH.	LL	=	23.3	PSF
	DL	=	3.0	PSF
BOT CH.	LL	=	0.0	PSF
	DL	=	7.0	PSF
TOTAL LOAD		=	33.3	PSF

SPACING = 24.0 IN. C/C

LOADING IN ALL FLAT SECTIONS BASED ON A SLOPE OF 6.00/12

THIS TRUSS IS DESIGNED FOR RESIDENTIAL OR SMALL BUILDING REQUIREMENTS OF PART 9, NBCC 2010

THIS DESIGN COMPLIES WITH:
- PART 9 OF OBC 2012 , BCBC 2012 , ABC 2014
- CSA 086-09
- TPIC 2011

(55 % OF 27.2 P.S.F. G.S.L. PLUS 8.4 P.S.F. RAIN LOAD) EQUALS 23.3 P.S.F. SPECIFIED ROOF LIVE LOAD

ALLOWABLE DEFL.(LL)= L/360 (1.21")
CALCULATED VERT. DEFL.(LL) = L/ 999 (0.23")
ALLOWABLE DEFL.(TL)= L/360 (1.21")
CALCULATED VERT. DEFL.(TL) = L/ 999 (0.42")

CSI: TC=0.35 (6-7:1) , BC=0.78 (20-21:1) , WB=0.60 (3-21:1) , SSI=0.16 (6-7:1)

DOL LUMBER=1.00 NAIL=1.00 LS BEND=1.10 COMP=1.10 SHEAR=1.10 TENS= 1.10

COMPANION LIVE LOAD FACTOR = 0.50

TRUSS PLATE MANUFACTURER IS NOT RESPONSIBLE FOR QUALITY CONTROL IN THE TRUSS MANUFACTURING PLANT .

NAIL VALUES

PLATE	GRIP(DRY) (PSI) MAX	MIN	SHEAR (PLI) MAX	MIN	SECTION (PLI) MAX	MIN
MT20	618	354	1667	822	2284	1656

PLATE PLACEMENT TOL. = 0.250 inches

PLATE ROTATION TOL. = 5.0 Deg.

JSI GRIP= 0.90 (20) (INPUT = 0.90)
JSI METAL= 0.73 (18) (INPUT = 1.00)

KOTT

Version 8.100 S Feb 9 2017 MiTek Industries, Inc. Thu Mar 16 07:55:36 2017 Page 1
ID:EvTixTQDI5yR1QLotZTBr_yE?HJ-6BR8rbfEMyYDVxw91c1vyzQr_Zic5fWMqggOpQzaRH5

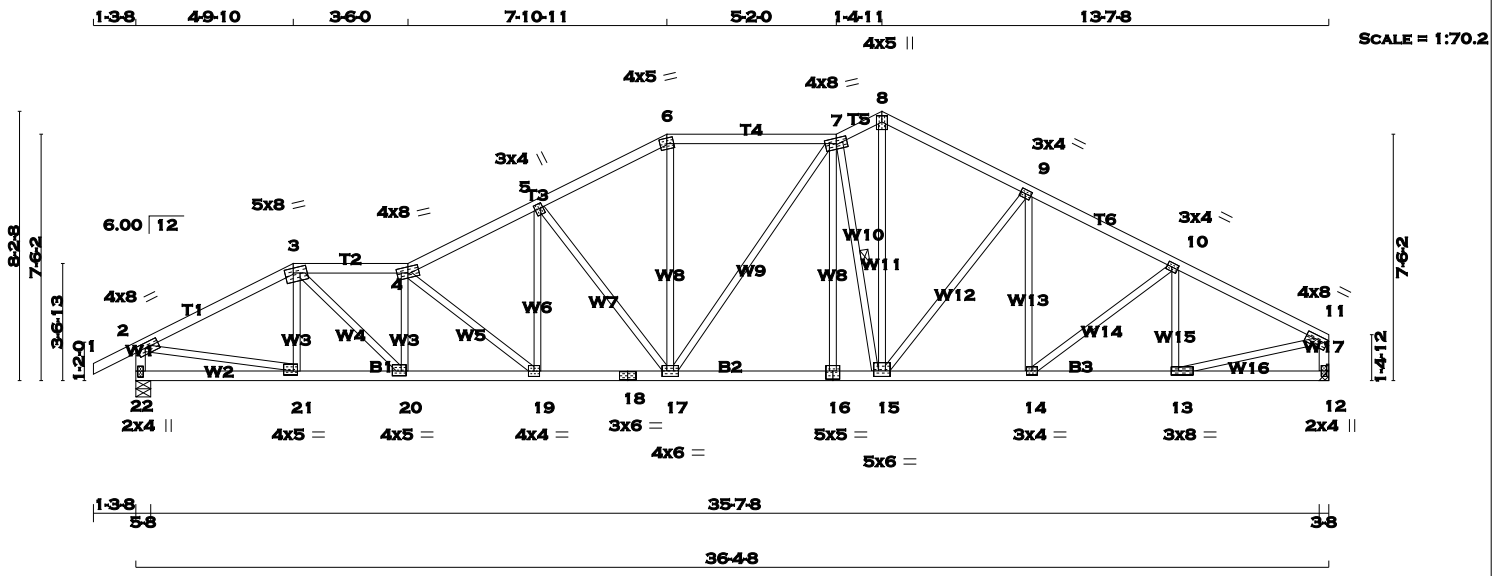

TOTAL WEIGHT = 167 lb

LUMBER
N. L. G. A. RULES

CHORDS	SIZE		LUMBER	DESCR.
1 - 3	2x4	DRY	No.2	SPF
3 - 4	2x4	DRY	No.2	SPF
4 - 6	2x4	DRY	No.2	SPF
6 - 7	2x4	DRY	No.2	SPF
7 - 8	2x4	DRY	No.2	SPF
8 - 11	2x4	DRY	No.2	SPF
22 - 2	2x4	DRY	No.2	SPF
12 - 11	2x4	DRY	No.2	SPF
22 - 18	2x4	DRY	No.2	SPF
18 - 16	2x4	DRY	No.2	SPF
16 - 12	2x4	DRY	No.2	SPF
ALL WEBS EXCEPT	2x3	DRY	No.2	SPF

DRY: SEASONED LUMBER.

PLATES (table is in inches)

JT	TYPE	PLATES	W	LEN	Y	X
2	TMVW-t	MT20	4.0	8.0	1.75	3.00
3	TTWW-m	MT20	5.0	8.0	1.75	3.00
4	TTWW-m	MT20	4.0	8.0	2.25	4.00
5	TMWW+t	MT20	3.0	4.0	1.75	0.75
6	TTW-m	MT20	4.0	5.0		
7	TTWWW-m	MT20	4.0	8.0		
8	TTW+p	MT20	4.0	5.0	2.25	2.00
9	TMWW-t	MT20	3.0	4.0	1.50	1.75
10	TMWW-t	MT20	3.0	4.0	1.50	1.75
11	TMVW-t	MT20	4.0	8.0	1.50	3.00
12	BMV1+p	MT20	2.0	4.0		
13	BMWW-t	MT20	3.0	8.0	1.50	2.75
14	BMWW-t	MT20	3.0	4.0		
15	BMWWW-t	MT20	5.0	6.0	2.00	3.00
16	BSW-l	MT20	5.0	5.0	3.00	2.50
17	BMWWW-t	MT20	4.0	6.0		
18	BS-t	MT20	3.0	6.0		
19	BMWW-t	MT20	4.0	4.0		
20	BMWW-t	MT20	4.0	5.0	1.75	1.75
21	BMWW-t	MT20	4.0	5.0	1.50	1.50
22	BMV1+p	MT20	2.0	4.0	2.25	1.00

A SIZE FOR SIZE SUBSTITUTION OF MITEK MII20 WITH TEE-LOK TL20 PLATES IS ALLOWED.

DIMENSIONS, SUPPORTS AND LOADINGS SPECIFIED BY FABRICATOR TO BE VERIFIED BY BUILDING DESIGNER

BEARINGS

JT	FACTORED GROSS REACTION VERT	HORZ	MAXIMUM FACTORED GROSS REACTION DOWN	HORZ	UPLIFT	INPUT BRG	REQRD BRG
22	1830	0	1830	0	0	5-8	5-8
12	1725	0	1725	0	0	HANGER BY OTHERS	
						MIN. SEAT SIZE: 3-8	

UNFACTORED REACTIONS

JT	1ST LCASE COMBINED	MAX./MIN. COMPONENT REACTIONS SNOW	LIVE	PERM.LIVE	WIND	DEAD	SOIL
22	1282	910 / 0	0 / 0	0 / 0	0 / 0	372 / 0	0 / 0
12	1211	847 / 0	0 / 0	0 / 0	0 / 0	364 / 0	0 / 0

BEARING MATERIAL TO BE SPF NO.2 OR BETTER AT JOINT(S) 22

BRACING
TOP CHORD TO BE SHEATHED OR MAX. PURLIN SPACING = 3.66 FT.
MAX. UNBRACED BOTTOM CHORD LENGTH = 10.00 FT. OR RIGID CEILING DIRECTLY APPLIED.

ALL PITCH BREAKS AND PERIMETER CORNER JOINTS MUST BE LATERALLY RESTRAINED.

1 - 2x3 SPF No.2 LATERAL BRACE(S) AT 1/ 2 LENGTH OF 7-15. DBS = 10-0-0 . CBF = 79 LBS.

DBS = DIAGONAL BRACE SPACING (MAX). CBF = CUMULATIVE BRACING FORCE. FASTEN LATERAL BRACE(S) USING (0.122"X3") SPIRAL NAILS : 1 NAIL FOR 2x3 BRACE(S), 2 FOR 1x4, 2x4, 2x5, 3 FOR 2x6, 4 FOR 2x8, 5 FOR 2x10, AND 6 FOR 2x12.

END VERTICAL(S) MUST BE SHEATHED OR HAVE BRACES AS INDICATED IN THE MAX. UNBRACED LENGTH COLUMN OF THE TABLE BELOW

LOADING
TOTAL LOAD CASES: (4)

CHORDS MEMB. FR-TO	MAX. FACTORED FORCE (LBS)	FACTORED VERT. LOAD LC1 (PLF) FROM	TO	MAX CSI (LC)	MAX. UNBRAC LENGTH	WEBS MEMB. FR-TO	MAX. FACTORED FORCE (LBS)	MAX CSI (LC)
1- 2	0 / 23	-77.4	-77.4	0.10 (1)	10.00	21- 3	-298 / 0	0.06 (1)
2- 3	-2484 / 0	-77.4	-77.4	0.32 (1)	4.10	3-20	0 / 1573	0.35 (1)
3- 4	-3344 / 0	-77.4	-77.4	0.25 (1)	3.66	20- 4	-1045 / 0	0.22 (1)
4- 5	-3007 / 0	-77.4	-77.4	0.25 (1)	3.85	4-19	-872 / 0	0.38 (1)
5- 6	-2415 / 0	-77.4	-77.4	0.21 (1)	4.26	19- 5	0 / 622	0.14 (1)
6- 7	-2156 / 0	-77.4	-77.4	0.33 (1)	4.33	5-17	-917 / 0	0.73 (1)
7- 8	-2082 / 0	-77.4	-77.4	0.06 (1)	4.68	17- 6	0 / 759	0.17 (1)
8- 9	-2101 / 0	-77.4	-77.4	0.23 (1)	4.49	17- 7	0 / 83	0.02 (1)
9-10	-2364 / 0	-77.4	-77.4	0.23 (1)	4.28	16- 7	0 / 47	0.02 (4)
10-11	-2335 / 0	-77.4	-77.4	0.27 (1)	4.27	7-15	-1269 / 0	0.47 (1)
22- 2	-1793 / 0	0.0	0.0	0.18 (1)	6.24	15- 8	0 / 1660	0.37 (1)
12-11	-1688 / 0	0.0	0.0	0.17 (1)	6.39	15- 9	-397 / 0	0.40 (1)
						14- 9	0 / 82	0.03 (4)
22-21	0 / 0	-17.5	-17.5	0.09 (4)	10.00	14-10	0 / 16	0.00 (1)
21-20	0 / 2210	-17.5	-17.5	0.39 (1)	10.00	13-10	-403 / 0	0.09 (1)
20-19	0 / 3377	-17.5	-17.5	0.60 (1)	10.00	2-21	0 / 2254	0.51 (1)
19-18	0 / 2706	-17.5	-17.5	0.50 (1)	10.00	13-11	0 / 2157	0.49 (1)
18-17	0 / 2706	-17.5	-17.5	0.50 (1)	10.00			
17-16	0 / 2108	-17.5	-17.5	0.40 (1)	10.00			
16-15	0 / 2108	-17.5	-17.5	0.40 (1)	10.00			
15-14	0 / 2113	-17.5	-17.5	0.40 (1)	10.00			
14-13	0 / 2101	-17.5	-17.5	0.38 (1)	10.00			
13-12	0 / 0	-17.5	-17.5	0.08 (4)	10.00			

RECEIVED
TOWN OF MILTON
MAR 29, 2017
17-5327
BUILDING DIVISION

DESIGN CRITERIA

SPECIFIED LOADS:

TOP CH.	LL	=	23.3	PSF
	DL	=	3.0	PSF
BOT CH.	LL	=	0.0	PSF
	DL	=	7.0	PSF
TOTAL LOAD		=	33.3	PSF

SPACING = 24.0 IN. C/C

LOADING IN ALL FLAT SECTIONS BASED ON A SLOPE OF 6.00/12

THIS TRUSS IS DESIGNED FOR RESIDENTIAL OR SMALL BUILDING REQUIREMENTS OF PART 9, NBCC 2010

THIS DESIGN COMPLIES WITH:
- PART 9 OF OBC 2012 , BCBC 2012 , ABC 2014
- CSA 086-09
- TPIC 2011

(55 % OF 27.2 P.S.F. G.S.L. PLUS 8.4 P.S.F. RAIN LOAD) EQUALS 23.3 P.S.F. SPECIFIED ROOF LIVE LOAD

ALLOWABLE DEFL.(LL)= L/360 (1.21")
CALCULATED VERT. DEFL.(LL) = L/ 999 (0.20")
ALLOWABLE DEFL.(TL)= L/360 (1.21")
CALCULATED VERT. DEFL.(TL) = L/ 999 (0.35")

CSI: TC=0.33 (6-7:1) , BC=0.60 (19-20:1) , WB=0.73 (5-17:1) , SSI=0.16 (6-7:1)

DOL LUMBER=1.00 NAIL=1.00 LS BEND=1.10 COMP=1.10 SHEAR=1.10 TENS= 1.10

COMPANION LIVE LOAD FACTOR = 0.50

TRUSS PLATE MANUFACTURER IS NOT RESPONSIBLE FOR QUALITY CONTROL IN THE TRUSS MANUFACTURING PLANT .

NAIL VALUES

PLATE	GRIP(DRY) (PSI) MAX	MIN	SHEAR (PLI) MAX	MIN	SECTION (PLI) MAX	MIN
MT20	618	354	1667	822	2284	1656

PLATE PLACEMENT TOL. = 0.250 inches

PLATE ROTATION TOL. = 5.0 Deg.

JSI GRIP= 0.90 (8) (INPUT = 0.90)
JSI METAL= 0.67 (18) (INPUT = 1.00)

KOTT

JOB NAME	TRUSS NAME	QUANTITY	PLY	JOB DESC.	DRWG NO.
PT0317-093	T88	1	1	TRUSS DESC. LECCO RIDGE-BLOCK 343	

KOTT , Stouffville, ON, CGC

Version 8.100 S Feb 9 2017 MiTek Industries, Inc. Thu Mar 16 07:55:36 2017 Page 1
ID:EvTixTQDI5yR1QLotZTBr_yE?HJ-6BR8rbfEMyYDVxw91c1vyzQnwZj95cbMqggOpQzaRH5

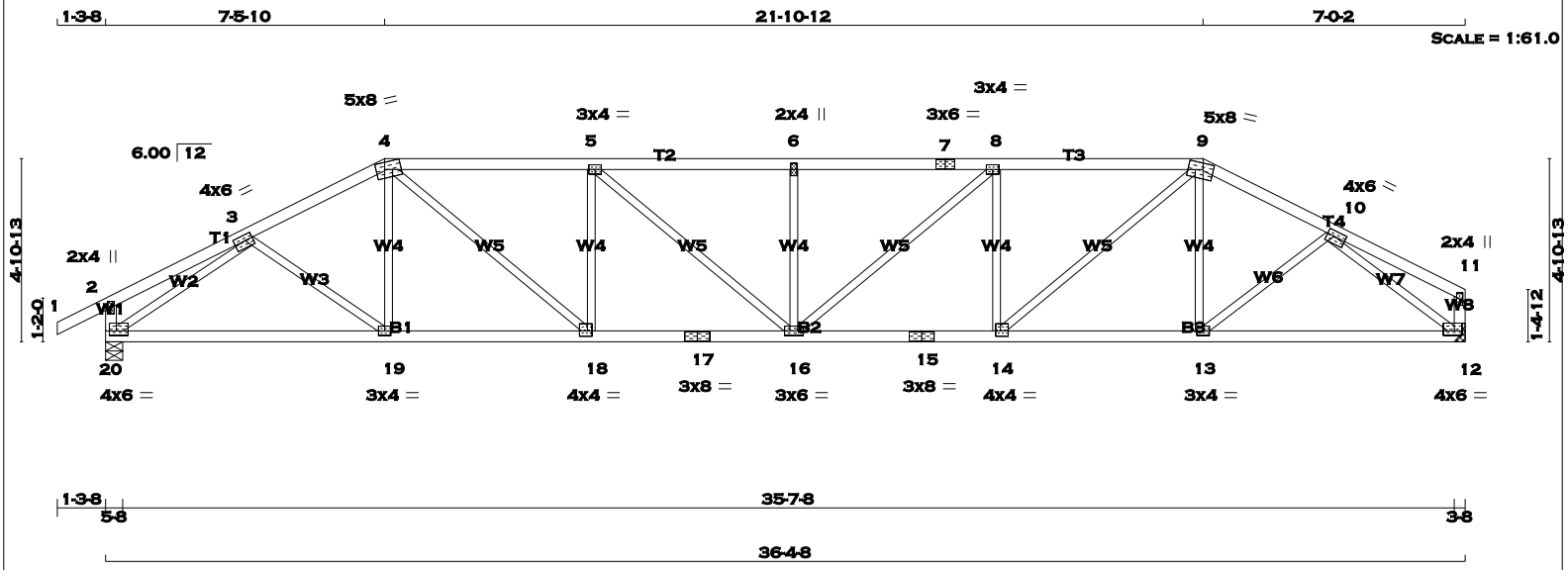

TOTAL WEIGHT = 142 lb
[M]

LUMBER
N. L. G. A. RULES

CHORDS	SIZE		LUMBER	DESCR.
1 - 4	2x4	DRY	No.2	SPF
4 - 7	2x4	DRY	No.2	SPF
7 - 9	2x4	DRY	No.2	SPF
9 - 11	2x4	DRY	No.2	SPF
20 - 2	2x4	DRY	No.2	SPF
12 - 11	2x4	DRY	No.2	SPF
20 - 17	2x4	DRY	No.2	SPF
17 - 15	2x4	DRY	No.2	SPF
15 - 12	2x4	DRY	No.2	SPF
ALL WEBS EXCEPT	2x3	DRY	No.2	SPF

DRY: SEASONED LUMBER.

PLATES (table is in inches)

JT	TYPE	PLATES	W	LEN	Y	X
2	TMV+p	MT20	2.0	4.0		
3	TMWW-t	MT20	4.0	6.0	1.75	2.50
4	TTWW-m	MT20	5.0	8.0	2.25	2.75
5	TMWW-t	MT20	3.0	4.0		
6	TMW+w	MT20	2.0	4.0		
7	TS-t	MT20	3.0	6.0		
8	TMWW-t	MT20	3.0	4.0		
9	TTWW-m	MT20	5.0	8.0	2.00	3.25
10	TMWW-t	MT20	4.0	6.0	1.75	2.25
11	TMV+p	MT20	2.0	4.0		
12	BMVW1-t	MT20	4.0	6.0	1.50	2.50
13	BMWW-t	MT20	3.0	4.0		
14	BMWW-t	MT20	4.0	4.0	1.75	1.50
15	BS-t	MT20	3.0	8.0		
16	BMWWW-t	MT20	3.0	6.0		
17	BS-t	MT20	3.0	8.0		
18	BMWW-t	MT20	4.0	4.0	1.75	1.50
19	BMWW-t	MT20	3.0	4.0		
20	BMVW1-t	MT20	4.0	6.0	1.50	2.25

A SIZE FOR SIZE SUBSTITUTION OF MITEK MII20 WITH TEE-LOK TL20 PLATES IS ALLOWED.

DIMENSIONS, SUPPORTS AND LOADINGS SPECIFIED BY FABRICATOR TO BE VERIFIED BY BUILDING DESIGNER

BEARINGS

JT	FACTORED GROSS REACTION VERT	HORZ	MAXIMUM FACTORED GROSS REACTION DOWN	HORZ	UPLIFT	INPUT BRG IN-SX	REQRD BRG IN-SX
20	1830	0	1830	0	0	5-8	5-8
12	1725	0	1725	0	0	HANGER BY OTHERS	
						MIN. SEAT SIZE: 3-8	

UNFACTORED REACTIONS

JT	1ST LCASE COMBINED	SNOW	MAX./MIN. COMPONENT REACTIONS LIVE	PERM.LIVE	WIND	DEAD	SOIL
20	1282	910 / 0	0 / 0	0 / 0	0 / 0	372 / 0	0 / 0
12	1211	847 / 0	0 / 0	0 / 0	0 / 0	364 / 0	0 / 0

BEARING MATERIAL TO BE SPF NO.2 OR BETTER AT JOINT(S) 20

BRACING
TOP CHORD TO BE SHEATHED OR MAX. PURLIN SPACING = 3.31 FT.
MAX. UNBRACED BOTTOM CHORD LENGTH = 10.00 FT. OR RIGID CEILING DIRECTLY APPLIED.

ALL PITCH BREAKS AND PERIMETER CORNER JOINTS MUST BE LATERALLY RESTRAINED.

LOADING
TOTAL LOAD CASES: (4)

CHORDS

MEMB. FR-TO	MAX. FACTORED FORCE (LBS)	VERT. LOAD LC1 (PLF) FROM	TO	MAX CSI (LC)	MAX. UNBRAC LENGTH
1- 2	0 / 23	-77.4	-77.4	0.10 (1)	10.00
2- 3	0 / 12	-77.4	-77.4	0.14 (1)	10.00
3- 4	-2523 / 0	-77.4	-77.4	0.22 (1)	4.16
4- 5	-3181 / 0	-77.4	-77.4	0.56 (1)	3.47
5- 6	-3442 / 0	-77.4	-77.4	0.59 (1)	3.31
6- 7	-3442 / 0	-77.4	-77.4	0.59 (1)	3.31
7- 8	-3442 / 0	-77.4	-77.4	0.59 (1)	3.31
8- 9	-3130 / 0	-77.4	-77.4	0.55 (1)	3.49
9-10	-2407 / 0	-77.4	-77.4	0.19 (1)	4.27
10-11	0 / 11	-77.4	-77.4	0.12 (1)	10.00
20- 2	-224 / 0	0.0	0.0	0.02 (1)	7.81
12-11	-112 / 0	0.0	0.0	0.01 (1)	7.81
20-19	0 / 2128	-17.5	-17.5	0.46 (1)	10.00
19-18	0 / 2245	-17.5	-17.5	0.47 (1)	10.00
18-17	0 / 3181	-17.5	-17.5	0.57 (1)	10.00
17-16	0 / 3181	-17.5	-17.5	0.57 (1)	10.00
16-15	0 / 3130	-17.5	-17.5	0.56 (1)	10.00
15-14	0 / 3130	-17.5	-17.5	0.56 (1)	10.00
14-13	0 / 2140	-17.5	-17.5	0.45 (1)	10.00
13-12	0 / 1931	-17.5	-17.5	0.41 (1)	10.00

WEBS

MEMB. FR-TO	MAX. FACTORED FORCE (LBS)	MAX CSI (LC)
3-19	0 / 142	0.04 (4)
19- 4	0 / 95	0.03 (4)
4-18	0 / 1218	0.27 (1)
18- 5	-699 / 0	0.25 (1)
5-16	0 / 342	0.08 (1)
16- 6	-387 / 0	0.14 (1)
16- 8	0 / 409	0.09 (1)
14- 8	-742 / 0	0.26 (1)
14- 9	0 / 1289	0.29 (1)
13- 9	-36 / 64	0.02 (4)
13-10	0 / 268	0.06 (1)
20- 3	-2633 / 0	0.92 (1)
10-12	-2483 / 0	0.82 (1)

DESIGN CRITERIA

SPECIFIED LOADS:

TOP CH.	LL	=	23.3	PSF
	DL	=	3.0	PSF
BOT CH.	LL	=	0.0	PSF
	DL	=	7.0	PSF
TOTAL LOAD		=	33.3	PSF

SPACING = 24.0 IN. C/C

LOADING IN FLAT SECTION BASED ON A SLOPE OF 6.00/12

THIS TRUSS IS DESIGNED FOR RESIDENTIAL OR SMALL BUILDING REQUIREMENTS OF PART 9, NBCC 2010

THIS DESIGN COMPLIES WITH:
- PART 9 OF OBC 2012 , BCBC 2012 , ABC 2014
- CSA 086-09
- TPIC 2011

(55 % OF 27.2 P.S.F. G.S.L. PLUS 8.4 P.S.F. RAIN LOAD) EQUALS 23.3 P.S.F. SPECIFIED ROOF LIVE LOAD

ALLOWABLE DEFL.(LL)= L/360 (1.21")
CALCULATED VERT. DEFL.(LL) = L/ 999 (0.23")
ALLOWABLE DEFL.(TL)= L/360 (1.21")
CALCULATED VERT. DEFL.(TL) = L/ 999 (0.41")

CSI: TC=0.59 (6-8:1) , BC=0.57 (16-18:1) , WB=0.92 (3-20:1) , SSI=0.20 (8-9:1)

DOL LUMBER=1.00 NAIL=1.00 LS BEND=1.10 COMP=1.10 SHEAR=1.10 TENS= 1.10

COMPANION LIVE LOAD FACTOR = 0.50

TRUSS PLATE MANUFACTURER IS NOT RESPONSIBLE FOR QUALITY CONTROL IN THE TRUSS MANUFACTURING PLANT .

NAIL VALUES

PLATE	GRIP(DRY) (PSI) MAX	MIN	SHEAR (PLI) MAX	MIN	SECTION (PLI) MAX	MIN
MT20	618	354	1667	822	2284	1656

PLATE PLACEMENT TOL. = 0.250 inches

PLATE ROTATION TOL. = 5.0 Deg.

JSI GRIP= 0.89 (12) (INPUT = 0.90)
JSI METAL= 0.87 (17) (INPUT = 1.00)

LICENSED PROFESSIONAL ENGINEER
P.M. TREVISAN
100136551
March 16th, 2017
PROVINCE OF ONTARIO

RECEIVED
TOWN OF MILTON
MAR 29, 2017
17-5327
BUILDING DIVISION

KOTT

JOB NAME	TRUSS NAME	QUANTITY	PLY	JOB DESC.	DRWG NO.
PT0317-093	T89	1	1	TRUSS DESC. LECCO RIDGE-BLOCK 343	ENG JOB: PT0317-093

KOTT , Stouffville, ON, CGC

Version 8.100 S Feb 9 2017 MiTek Industries, Inc. Thu Mar 16 07:55:37 2017 Page 1

ID:EvTixTQDI5yR1QLotZTBr_yE?HJ-aN?W2xft7Gg475VMbKY8VAz00y3wq90W3KPxMtzaRH4

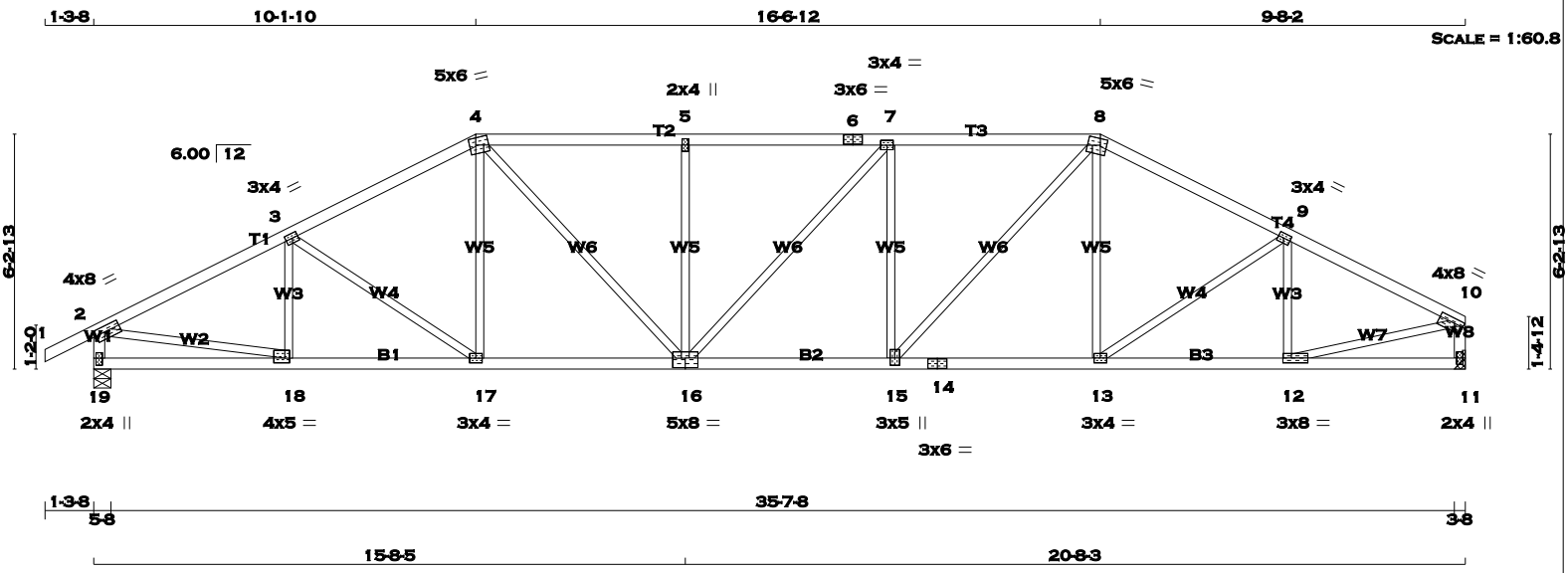

TOTAL WEIGHT = 149 lb

[M][F]

LUMBER

N. L. G. A. RULES

CHORDS	SIZE		LUMBER	DESCR.
1 - 4	2x4	DRY	No.2	SPF
4 - 6	2x4	DRY	No.2	SPF
6 - 8	2x4	DRY	No.2	SPF
8 - 10	2x4	DRY	No.2	SPF
19 - 2	2x4	DRY	No.2	SPF
11 - 10	2x4	DRY	No.2	SPF
19 - 16	2x4	DRY	No.2	SPF
16 - 14	2x4	DRY	No.2	SPF
14 - 11	2x4	DRY	No.2	SPF
ALL WEBS EXCEPT	2x3	DRY	No.2	SPF

DRY: SEASONED LUMBER.

PLATES (table is in inches)

JT	TYPE	PLATES	W	LEN	Y	X
2	TMVW-t	MT20	4.0	8.0	1.75	3.00
3	TMWW-t	MT20	3.0	4.0	1.50	1.75
4	TTWW-m	MT20	5.0	6.0	2.25	2.00
5	TMW+w	MT20	2.0	4.0		
6	TS-t	MT20	3.0	6.0		
7	TMWW-t	MT20	3.0	4.0		
8	TTWW-m	MT20	5.0	6.0	2.00	2.00
9	TMWW-t	MT20	3.0	4.0	1.50	1.75
10	TMVW-t	MT20	4.0	8.0	1.50	3.00
11	BMV1+p	MT20	2.0	4.0		
12	BMWW-t	MT20	3.0	8.0	1.50	2.75
13	BMWW-t	MT20	3.0	4.0		
14	BS-t	MT20	3.0	6.0		
15	BMWW+t	MT20	3.0	5.0	2.25	1.50
16	BSWWW-l	MT20	5.0	8.0	3.00	4.00
17	BMWW-t	MT20	3.0	4.0		
18	BMWW-t	MT20	4.0	5.0	1.50	1.50
19	BMV1+p	MT20	2.0	4.0	2.25	1.00

A SIZE FOR SIZE SUBSTITUTION OF MITEK MII20 WITH TEE-LOK TL20 PLATES IS ALLOWED.

DIMENSIONS, SUPPORTS AND LOADINGS SPECIFIED BY FABRICATOR TO BE VERIFIED BY BUILDING DESIGNER

BEARINGS

JT	FACTORED GROSS REACTION VERT	HORZ	MAXIMUM FACTORED GROSS REACTION DOWN	HORZ	UPLIFT	INPUT BRG IN-SX	REQRD BRG IN-SX
19	1830	0	1830	0	0	5-8	5-8
11	1725	0	1725	0	0	HANGER BY OTHERS MIN. SEAT SIZE: 3-8	

UNFACTORED REACTIONS

JT	1ST LCASE COMBINED	SNOW	MAX./MIN. COMPONENT REACTIONS LIVE	PERM.LIVE	WIND	DEAD	SOIL
19	1282	910 / 0	0 / 0	0 / 0	0 / 0	372 / 0	0 / 0
11	1211	847 / 0	0 / 0	0 / 0	0 / 0	364 / 0	0 / 0

BEARING MATERIAL TO BE SPF NO.2 OR BETTER AT JOINT(S) 19

BRACING

TOP CHORD TO BE SHEATHED OR MAX. PURLIN SPACING = 3.95 FT.
MAX. UNBRACED BOTTOM CHORD LENGTH = 10.00 FT. OR RIGID CEILING DIRECTLY APPLIED.

ALL PITCH BREAKS AND PERIMETER CORNER JOINTS MUST BE LATERALLY RESTRAINED.

LOADING

TOTAL LOAD CASES: (4)

CHORDS MEMB. FR-TO	MAX. FACTORED FORCE (LBS)	VERT. LOAD LC1 (PLF) FROM	TO	MAX CSI (LC)	MAX. UNBRAC LENGTH	WEBS MEMB. FR-TO	MAX. FACTORED FORCE (LBS)	MAX CSI (LC)
1- 2	0 / 23	-77.4	-77.4	0.10 (1)	10.00	18- 3	-292 / 0	0.07 (1)
2- 3	-2544 / 0	-77.4	-77.4	0.34 (1)	4.05	3-17	-197 / 0	0.13 (1)
3- 4	-2403 / 0	-77.4	-77.4	0.32 (1)	4.16	17- 4	0 / 209	0.05 (1)
4- 5	-2633 / 0	-77.4	-77.4	0.38 (1)	3.95	4-16	0 / 730	0.16 (1)
5- 6	-2633 / 0	-77.4	-77.4	0.35 (1)	3.99	16- 5	-461 / 0	0.28 (1)
6- 7	-2633 / 0	-77.4	-77.4	0.35 (1)	3.99	16- 7	0 / 28	0.01 (1)
7- 8	-2614 / 0	-77.4	-77.4	0.37 (1)	3.96	15- 7	-483 / 0	0.30 (1)
8- 9	-2335 / 0	-77.4	-77.4	0.30 (1)	4.24	15- 8	0 / 792	0.18 (1)
9-10	-2350 / 0	-77.4	-77.4	0.29 (1)	4.23	13- 8	0 / 132	0.04 (4)
19- 2	-1789 / 0	0.0	0.0	0.18 (1)	6.24	13- 9	-59 / 0	0.04 (1)
11-10	-1688 / 0	0.0	0.0	0.17 (1)	6.39	12- 9	-405 / 0	0.09 (1)
						2-18	0 / 2324	0.52 (1)
19-18	0 / 0	-17.5	-17.5	0.09 (4)	10.00	12-10	0 / 2175	0.49 (1)
18-17	0 / 2293	-17.5	-17.5	0.43 (1)	10.00			
17-16	0 / 2134	-17.5	-17.5	0.40 (1)	10.00			
16-15	0 / 2614	-17.5	-17.5	0.47 (1)	10.00			
15-14	0 / 2073	-17.5	-17.5	0.39 (1)	10.00			
14-13	0 / 2073	-17.5	-17.5	0.39 (1)	10.00			
13-12	0 / 2119	-17.5	-17.5	0.40 (1)	10.00			
12-11	0 / 0	-17.5	-17.5	0.08 (4)	10.00			

DESIGN CRITERIA

SPECIFIED LOADS:

TOP	CH.	LL	=	23.3	PSF
		DL	=	3.0	PSF
BOT	CH.	LL	=	0.0	PSF
		DL	=	7.0	PSF
TOTAL	LOAD		=	33.3	PSF

SPACING = 24.0 IN. C/C

LOADING IN FLAT SECTION BASED ON A SLOPE OF 6.00/12

THIS TRUSS IS DESIGNED FOR RESIDENTIAL OR SMALL BUILDING REQUIREMENTS OF PART 9, NBCC 2010

THIS DESIGN COMPLIES WITH:
- PART 9 OF OBC 2012 , BCBC 2012 , ABC 2014
- CSA 086-09
- TPIC 2011

(55 % OF 27.2 P.S.F. G.S.L. PLUS 8.4 P.S.F. RAIN LOAD) EQUALS 23.3 P.S.F. SPECIFIED ROOF LIVE LOAD

ALLOWABLE DEFL.(LL)= L/360 (1.21")
CALCULATED VERT. DEFL.(LL) = L/ 999 (0.16")
ALLOWABLE DEFL.(TL)= L/360 (1.21")
CALCULATED VERT. DEFL.(TL) = L/ 999 (0.29")

CSI: TC=0.38 (4-5:1) , BC=0.47 (15-16:1) , WB=0.52 (2-18:1) , SSI=0.20 (7-8:1)

DOL LUMBER=1.00 NAIL=1.00 LS BEND=1.10 COMP=1.10 SHEAR=1.10 TENS= 1.10

COMPANION LIVE LOAD FACTOR = 0.50

TRUSS PLATE MANUFACTURER IS NOT RESPONSIBLE FOR QUALITY CONTROL IN THE TRUSS MANUFACTURING PLANT .

NAIL VALUES

PLATE	GRIP(DRY) (PSI) MAX	MIN	SHEAR (PLI) MAX	MIN	SECTION (PLI) MAX	MIN
MT20	618	354	1667	822	2284	1656

PLATE PLACEMENT TOL. = 0.250 inches

PLATE ROTATION TOL. = 5.0 Deg.

JSI GRIP= 0.90 (12) (INPUT = 0.90)
JSI METAL= 0.69 (18) (INPUT = 1.00)

LICENSED PROFESSIONAL ENGINEER
P.M. TREVISAN
100136551
March 16th, 2017
PROVINCE OF ONTARIO

RECEIVED
TOWN OF MILTON
MAR 29, 2017
17-5327
BUILDING DIVISION

KOTT

JOB NAME	TRUSS NAME	QUANTITY	PLY	JOB DESC.	DRWG NO.
PT0317-093	T90	1	1	TRUSS DESC. LECCO RIDGE-BLOCK 343	ENG JOB: PT0317-093

KOTT , Stouffville, ON, CGC

Version 8.100 S Feb 9 2017 MiTek Industries, Inc. Thu Mar 16 07:55:38 2017 Page 1

ID:EvTixTQDI5yR1QLotZTBr_yE?HJ-2aYvGGgVuZoxlF4Y913N1OW8fMPMZcnfH_9UuJzaRH3

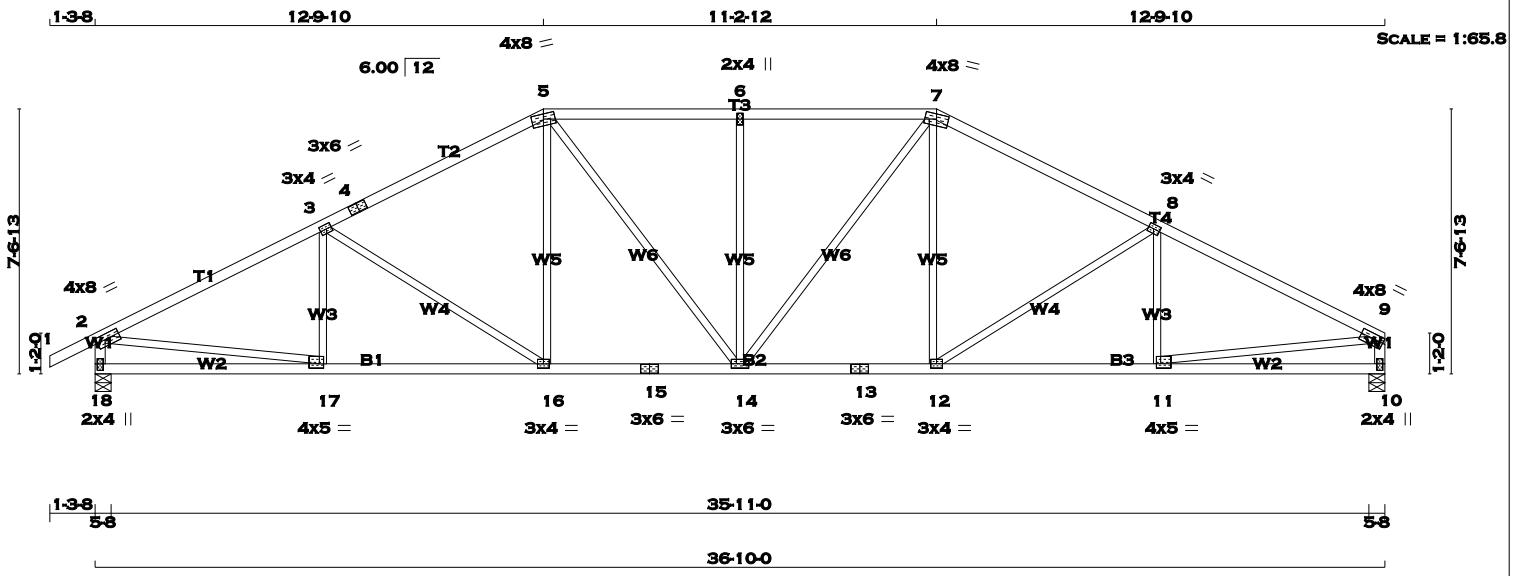

TOTAL WEIGHT = 151 lb

[M][F]

LUMBER

N. L. G. A. RULES

CHORDS	SIZE		LUMBER	DESCR.
1 - 4	2x4	DRY	No.2	SPF
4 - 5	2x4	DRY	No.2	SPF
5 - 7	2x4	DRY	No.2	SPF
7 - 9	2x4	DRY	No.2	SPF
18 - 2	2x4	DRY	No.2	SPF
10 - 9	2x4	DRY	No.2	SPF
18 - 15	2x4	DRY	No.2	SPF
15 - 13	2x4	DRY	No.2	SPF
13 - 10	2x4	DRY	No.2	SPF
ALL WEBS EXCEPT	2x3	DRY	No.2	SPF

DRY: SEASONED LUMBER.

PLATES (table is in inches)

JT	TYPE	PLATES	W	LEN	Y	X
2	TMVW-t	MT20	4.0	8.0	1.75	3.00
3	TMWW-t	MT20	3.0	4.0	1.50	1.75
4	TS-t	MT20	3.0	6.0		
5	TTWW-m	MT20	4.0	8.0	1.75	4.00
6	TMW+w	MT20	2.0	4.0		
7	TTWW-m	MT20	4.0	8.0	1.75	4.00
8	TMWW-t	MT20	3.0	4.0	1.50	1.75
9	TMVW-t	MT20	4.0	8.0	1.75	Edge
10	BMV1+p	MT20	2.0	4.0	2.25	1.00
11	BMWW-t	MT20	4.0	5.0	1.50	1.50
12	BMWW-t	MT20	3.0	4.0		
13	BS-t	MT20	3.0	6.0		
14	BMWWW-t	MT20	3.0	6.0		
15	BS-t	MT20	3.0	6.0		
16	BMWW-t	MT20	3.0	4.0		
17	BMWW-t	MT20	4.0	5.0	1.50	1.50
18	BMV1+p	MT20	2.0	4.0	2.25	1.00

Edge - INDICATES REFERENCE CORNER OF PLATE TOUCHES EDGE OF CHORD.

A SIZE FOR SIZE SUBSTITUTION OF MITEK MII20 WITH TEE-LOK TL20 PLATES IS ALLOWED.

DIMENSIONS, SUPPORTS AND LOADINGS SPECIFIED BY FABRICATOR TO BE VERIFIED BY BUILDING DESIGNER

BEARINGS

JT	FACTORED GROSS REACTION VERT	HORZ	MAXIMUM FACTORED GROSS REACTION DOWN	HORZ	UPLIFT	INPUT BRG IN-SX	REQRD BRG IN-SX
18	1852	0	1852	0	0	5-8	5-8
10	1747	0	1747	0	0	5-8	5-8

UNFACTORED REACTIONS

JT	1ST LCASE COMBINED	MAX./MIN. COMPONENT REACTIONS SNOW	LIVE	PERM.LIVE	WIND	DEAD	SOIL
18	1297	921 / 0	0 / 0	0 / 0	0 / 0	376 / 0	0 / 0
10	1226	858 / 0	0 / 0	0 / 0	0 / 0	368 / 0	0 / 0

BEARING MATERIAL TO BE SPF NO.2 OR BETTER AT JOINT(S) 18, 10

BRACING

TOP CHORD TO BE SHEATHED OR MAX. PURLIN SPACING = 3.75 FT.
MAX. UNBRACED BOTTOM CHORD LENGTH = 10.00 FT. OR RIGID CEILING DIRECTLY APPLIED.

ALL PITCH BREAKS AND PERIMETER CORNER JOINTS MUST BE LATERALLY RESTRAINED.

LOADING

TOTAL LOAD CASES: (4)

CHORDS

MEMB. FR-TO	MAX. FACTORED FORCE (LBS)	FACTORED VERT. LOAD (PLF) FROM	TO	LC1 CSI (LC)	MAX UNBRAC LENGTH
1- 2	0 / 23	-77.4	-77.4	0.10 (1)	10.00
2- 3	-2636 / 0	-77.4	-77.4	0.58 (1)	3.75
3- 4	-2276 / 0	-77.4	-77.4	0.51 (1)	4.05
4- 5	-2276 / 0	-77.4	-77.4	0.51 (1)	4.05
5- 6	-2255 / 0	-77.4	-77.4	0.38 (1)	4.19
6- 7	-2255 / 0	-77.4	-77.4	0.38 (1)	4.19
7- 8	-2276 / 0	-77.4	-77.4	0.51 (1)	4.05
8- 9	-2635 / 0	-77.4	-77.4	0.57 (1)	3.75
18- 2	-1803 / 0	0.0	0.0	0.18 (1)	6.23
10- 9	-1698 / 0	0.0	0.0	0.17 (1)	6.38
18-17	0 / 0	-17.5	-17.5	0.17 (4)	10.00
17-16	0 / 2380	-17.5	-17.5	0.45 (1)	10.00
16-15	0 / 2016	-17.5	-17.5	0.39 (1)	10.00
15-14	0 / 2016	-17.5	-17.5	0.39 (1)	10.00
14-13	0 / 2016	-17.5	-17.5	0.39 (1)	10.00
13-12	0 / 2016	-17.5	-17.5	0.39 (1)	10.00
12-11	0 / 2380	-17.5	-17.5	0.45 (1)	10.00
11-10	0 / 0	-17.5	-17.5	0.17 (4)	10.00

WEBS

MEMB. FR-TO	MAX. FACTORED FORCE (LBS)	MAX CSI (LC)
17- 3	-193 / 51	0.06 (1)
3-16	-439 / 0	0.51 (1)
16- 5	0 / 345	0.08 (1)
5-14	0 / 392	0.09 (1)
14- 6	-531 / 0	0.55 (1)
14- 7	0 / 392	0.09 (1)
12- 7	0 / 345	0.08 (1)
12- 8	-439 / 0	0.51 (1)
11- 8	-193 / 51	0.06 (1)
2-17	0 / 2401	0.54 (1)
11- 9	0 / 2401	0.54 (1)

DESIGN CRITERIA

SPECIFIED LOADS:

TOP CH.	LL	=	23.3	PSF
	DL	=	3.0	PSF
BOT CH.	LL	=	0.0	PSF
	DL	=	7.0	PSF
TOTAL LOAD		=	33.3	PSF

SPACING = 24.0 IN. C/C

LOADING IN FLAT SECTION BASED ON A SLOPE OF 6.00/12

THIS TRUSS IS DESIGNED FOR RESIDENTIAL OR SMALL BUILDING REQUIREMENTS OF PART 9, NBCC 2010

THIS DESIGN COMPLIES WITH:
- PART 9 OF OBC 2012 , BCBC 2012 , ABC 2014
- CSA 086-09
- TPIC 2011

(55 % OF 27.2 P.S.F. G.S.L. PLUS 8.4 P.S.F. RAIN LOAD) EQUALS 23.3 P.S.F. SPECIFIED ROOF LIVE LOAD

ALLOWABLE DEFL.(LL)= L/360 (1.23")
CALCULATED VERT. DEFL.(LL) = L/ 999 (0.15")
ALLOWABLE DEFL.(TL)= L/360 (1.23")
CALCULATED VERT. DEFL.(TL) = L/ 999 (0.27")

CSI: TC=0.58 (2-3:1) , BC=0.45 (16-17:1) , WB=0.55 (6-14:1) , SSI=0.22 (2-3:1)

DOL LUMBER=1.00 NAIL=1.00 LS BEND=1.10 COMP=1.10 SHEAR=1.10 TENS= 1.10

COMPANION LIVE LOAD FACTOR = 0.50

TRUSS PLATE MANUFACTURER IS NOT RESPONSIBLE FOR QUALITY CONTROL IN THE TRUSS MANUFACTURING PLANT .

NAIL VALUES

PLATE	GRIP(DRY) (PSI) MAX	MIN	SHEAR (PLI) MAX	MIN	SECTION (PLI) MAX	MIN
MT20	618	354	1667	822	2284	1656

PLATE PLACEMENT TOL. = 0.250 inches

PLATE ROTATION TOL. = 5.0 Deg.

JSI GRIP= 0.87 (11) (INPUT = 0.90)
JSI METAL= 0.71 (11) (INPUT = 1.00)

LICENSED PROFESSIONAL ENGINEER
P.M. TREVISAN
100136551
March 16th, 2017
PROVINCE OF ONTARIO

RECEIVED
TOWN OF MILTON
MAR 29, 2017
17-5327
BUILDING DIVISION

KOTT

JOB NAME	TRUSS NAME	QUANTITY	PLY	JOB DESC.	DRWG NO.
PT0317-093	T91	1	1	TRUSS DESC. LECCO RIDGE-BLOCK 343	

KOTT , Stouffville, ON, CGC

Version 8.100 S Feb 9 2017 MiTek Industries, Inc. Thu Mar 16 07:55:38 2017 Page 1
ID:EvTixTQDI5yR1QLotZTBr_yE?HJ-2aYvGGgVuZoxlF4Y913N1OW2XMORZczfH_9UuJzaRH3

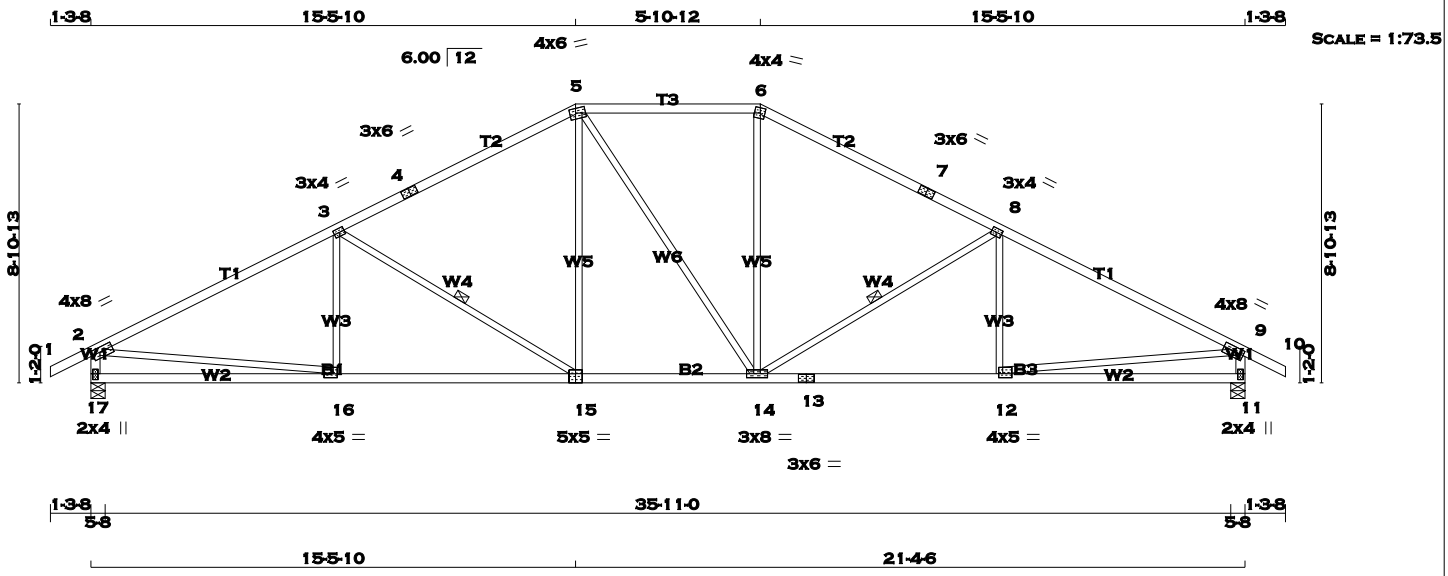

TOTAL WEIGHT = 149 lb

[M][F]

LUMBER

N. L. G. A. RULES

CHORDS	SIZE		LUMBER	DESCR.
1 - 4	2x4	DRY	No.2	SPF
4 - 5	2x4	DRY	No.2	SPF
5 - 6	2x4	DRY	No.2	SPF
6 - 7	2x4	DRY	No.2	SPF
7 - 10	2x4	DRY	No.2	SPF
17 - 2	2x4	DRY	No.2	SPF
11 - 9	2x4	DRY	No.2	SPF
17 - 15	2x4	DRY	No.2	SPF
15 - 13	2x4	DRY	No.2	SPF
13 - 11	2x4	DRY	No.2	SPF
ALL WEBS EXCEPT	2x3	DRY	No.2	SPF

DRY: SEASONED LUMBER.

PLATES (table is in inches)

JT	TYPE	PLATES	W	LEN	Y	X
2	TMVW-t	MT20	4.0	8.0	1.75	3.00
3	TMWW-t	MT20	3.0	4.0	1.50	1.75
4	TS-t	MT20	3.0	6.0		
5	TTWW-m	MT20	4.0	6.0	1.75	2.25
6	TTW-m	MT20	4.0	4.0	2.00	1.75
7	TS-t	MT20	3.0	6.0		
8	TMWW-t	MT20	3.0	4.0	1.50	1.75
9	TMVW-t	MT20	4.0	8.0	1.75	3.00
11	BMV1+p	MT20	2.0	4.0	2.25	1.00
12	BMWW-t	MT20	4.0	5.0	1.50	1.50
13	BS-t	MT20	3.0	6.0		
14	BMWWW-t	MT20	3.0	8.0		
15	BSWW-l	MT20	5.0	5.0	Edge	2.50
16	BMWW-t	MT20	4.0	5.0	1.50	1.50
17	BMV1+p	MT20	2.0	4.0	2.25	1.00

Edge - INDICATES REFERENCE CORNER OF PLATE TOUCHES EDGE OF CHORD.

A SIZE FOR SIZE SUBSTITUTION OF MITEK MII20 WITH TEE-LOK TL20 PLATES IS ALLOWED.

DIMENSIONS, SUPPORTS AND LOADINGS SPECIFIED BY FABRICATOR TO BE VERIFIED BY BUILDING DESIGNER

BEARINGS

JT	FACTORED GROSS REACTION VERT	HORZ	MAXIMUM FACTORED GROSS REACTION DOWN	HORZ	UPLIFT	INPUT BRG IN-SX	REQRD BRG IN-SX
17	1852	0	1852	0	0	5-8	5-8
11	1852	0	1852	0	0	5-8	5-8

UNFACTORED REACTIONS

JT	1ST LCASE COMBINED	MAX./MIN. COMPONENT REACTIONS SNOW	LIVE	PERM.LIVE	WIND	DEAD	SOIL
17	1297	921 / 0	0 / 0	0 / 0	0 / 0	376 / 0	0 / 0
11	1297	921 / 0	0 / 0	0 / 0	0 / 0	376 / 0	0 / 0

BEARING MATERIAL TO BE SPF NO.2 OR BETTER AT JOINT(S) 17, 11

BRACING

TOP CHORD TO BE SHEATHED OR MAX. PURLIN SPACING = 3.33 FT.
MAX. UNBRACED BOTTOM CHORD LENGTH = 10.00 FT. OR RIGID CEILING DIRECTLY APPLIED.

ALL PITCH BREAKS AND PERIMETER CORNER JOINTS MUST BE LATERALLY RESTRAINED.

1 - 2x3 SPF No.2 LATERAL BRACE(S) AT 1/ 2 LENGTH OF 3-15, 8-14. DBS = 20-0-0 . CBF = 84 LBS.

DBS = DIAGONAL BRACE SPACING (MAX). CBF = CUMULATIVE BRACING FORCE. FASTEN LATERAL BRACE(S) USING (0.122"X3") SPIRAL NAILS : 1 NAIL FOR 2x3 BRACE(S), 2 FOR 1x4, 2x4, 2x5, 3 FOR 2x6, 4 FOR 2x8, 5 FOR 2x10, AND 6 FOR 2x12.

END VERTICAL(S) MUST BE SHEATHED OR HAVE BRACES AS INDICATED IN THE MAX. UNBRACED LENGTH COLUMN OF THE TABLE BELOW

LOADING

TOTAL LOAD CASES: (4)

CHORDS

MEMB. FR-TO	MAX. FACTORED FORCE (LBS)	FACTORED VERT. LOAD LC1 (PLF) FROM	TO	MAX CSI (LC)	MAX. UNBRAC LENGTH
1- 2	0 / 23	-77.4	-77.4	0.10 (1)	10.00
2- 3	-2644 / 0	-77.4	-77.4	0.90 (1)	3.33
3- 4	-2073 / 0	-77.4	-77.4	0.77 (1)	3.82
4- 5	-2073 / 0	-77.4	-77.4	0.77 (1)	3.82
5- 6	-1830 / 0	-77.4	-77.4	0.40 (1)	4.54
6- 7	-2074 / 0	-77.4	-77.4	0.77 (1)	3.82
7- 8	-2074 / 0	-77.4	-77.4	0.77 (1)	3.82
8- 9	-2644 / 0	-77.4	-77.4	0.90 (1)	3.33
9-10	0 / 23	-77.4	-77.4	0.10 (1)	10.00
17- 2	-1796 / 0	0.0	0.0	0.18 (1)	6.24
11- 9	-1795 / 0	0.0	0.0	0.18 (1)	6.24
17-16	0 / 0	-17.5	-17.5	0.26 (4)	10.00
16-15	0 / 2394	-17.5	-17.5	0.51 (1)	10.00
15-14	0 / 1830	-17.5	-17.5	0.38 (1)	10.00
14-13	0 / 2393	-17.5	-17.5	0.51 (1)	10.00
13-12	0 / 2393	-17.5	-17.5	0.51 (1)	10.00
12-11	0 / 0	-17.5	-17.5	0.26 (4)	10.00

WEBS

MEMB. FR-TO	MAX. FACTORED FORCE (LBS)	MAX CSI (LC)
16- 3	-109 / 99	0.04 (1)
3-15	-669 / 0	0.39 (1)
15- 5	0 / 464	0.10 (1)
5-14	0 / 0	0.00 (1)
14- 6	0 / 465	0.10 (1)
14- 8	-668 / 0	0.39 (1)
12- 8	-110 / 99	0.04 (1)
2-16	0 / 2408	0.54 (1)
12- 9	0 / 2408	0.54 (1)

DESIGN CRITERIA

SPECIFIED LOADS:

TOP CH.	LL	=	23.3	PSF
	DL	=	3.0	PSF
BOT CH.	LL	=	0.0	PSF
	DL	=	7.0	PSF
TOTAL LOAD		=	33.3	PSF

SPACING = 24.0 IN. C/C

LOADING IN FLAT SECTION BASED ON A SLOPE OF 6.00/12

THIS TRUSS IS DESIGNED FOR RESIDENTIAL OR SMALL BUILDING REQUIREMENTS OF PART 9, NBCC 2010

THIS DESIGN COMPLIES WITH:
- PART 9 OF OBC 2012 , BCBC 2012 , ABC 2014
- CSA 086-09
- TPIC 2011

(55 % OF 27.2 P.S.F. G.S.L. PLUS 8.4 P.S.F. RAIN LOAD) EQUALS 23.3 P.S.F. SPECIFIED ROOF LIVE LOAD

ALLOWABLE DEFL.(LL)= L/360 (1.23")
CALCULATED VERT. DEFL.(LL) = L/ 999 (0.15")
ALLOWABLE DEFL.(TL)= L/360 (1.23")
CALCULATED VERT. DEFL.(TL) = L/ 999 (0.29")

CSI: TC=0.90 (2-3:1) , BC=0.51 (15-16:1) , WB=0.54 (2-16:1) , SSI=0.26 (2-3:1)

DOL LUMBER=1.00 NAIL=1.00 LS BEND=1.10 COMP=1.10 SHEAR=1.10 TENS= 1.10

COMPANION LIVE LOAD FACTOR = 0.50

TRUSS PLATE MANUFACTURER IS NOT RESPONSIBLE FOR QUALITY CONTROL IN THE TRUSS MANUFACTURING PLANT .

NAIL VALUES

PLATE	GRIP(DRY) (PSI) MAX	MIN	SHEAR (PLI) MAX	MIN	SECTION (PLI) MAX	MIN
MT20	618	354	1667	822	2284	1656

PLATE PLACEMENT TOL. = 0.250 inches

PLATE ROTATION TOL. = 5.0 Deg.

JSI GRIP= 0.87 (16) (INPUT = 0.90)
JSI METAL= 0.72 (16) (INPUT = 1.00)

LICENSED PROFESSIONAL ENGINEER
P.M. TREVISAN
100136551
March 16th, 2017
PROVINCE OF ONTARIO

RECEIVED
TOWN OF MILTON
MAR 29, 2017
17-5327
BUILDING DIVISION

KOTT

JOB NAME	TRUSS NAME	QUANTITY	PLY	JOB DESC.	DRWG NO.
PT0317-093	T92	1	1	TRUSS DESC. LECCO RIDGE-BLOCK 343	ENG JOB: PT0317-093

KOTT , Stouffville, ON, CGC

Version 8.100 S Feb 9 2017 MiTek Industries, Inc. Thu Mar 16 07:55:39 2017 Page 1

ID:EvTixTQDI5yR1QLotZTBr_yE?HJ-Wm6HTch7ftwoMOfkilacab2KWmmrI2KoWeu2QlzaRH2

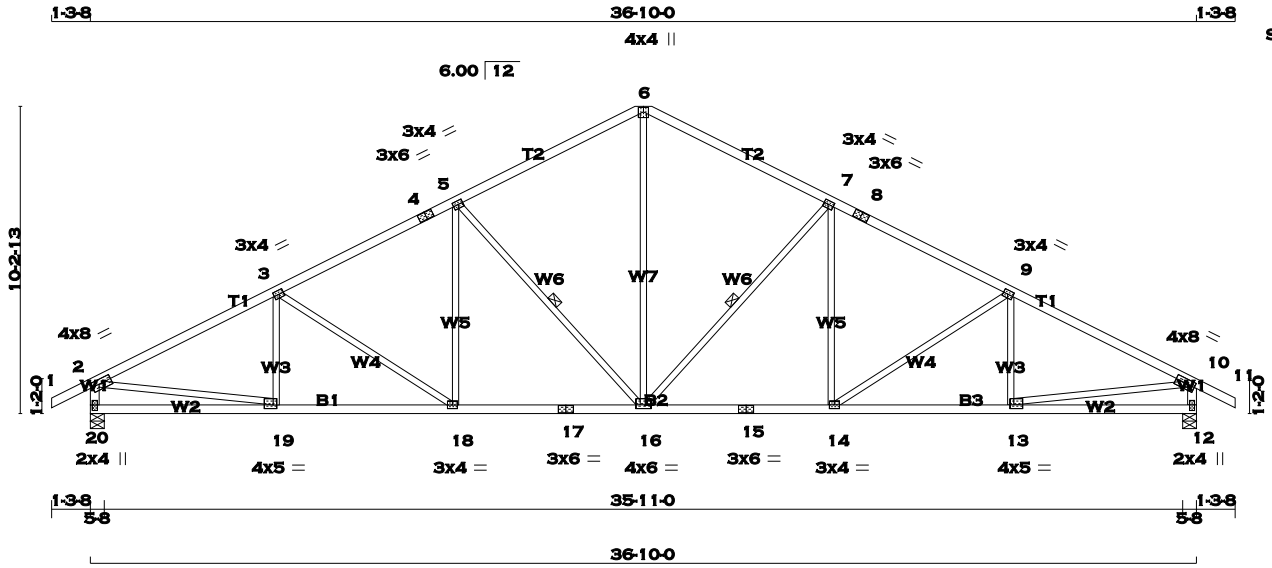

TOTAL WEIGHT = 154 lb

[M][F]

LUMBER

N. L. G. A. RULES

CHORDS	SIZE		LUMBER	DESCR.
1 - 4	2x4	DRY	No.2	SPF
4 - 6	2x4	DRY	No.2	SPF
6 - 8	2x4	DRY	No.2	SPF
8 - 11	2x4	DRY	No.2	SPF
20 - 2	2x4	DRY	No.2	SPF
12 - 10	2x4	DRY	No.2	SPF
20 - 17	2x4	DRY	No.2	SPF
17 - 15	2x4	DRY	No.2	SPF
15 - 12	2x4	DRY	No.2	SPF
ALL WEBS EXCEPT	2x3	DRY	No.2	SPF

DRY: SEASONED LUMBER.

PLATES (table is in inches)

JT	TYPE	PLATES	W	LEN	Y	X
2 3, 5, 7, 9	TMVW-t	MT20	4.0	8.0	1.75	3.00
3	TMWW-t	MT20	3.0	4.0	1.50	1.75
4	TS-t	MT20	3.0	6.0		
6	TTW+p	MT20	4.0	4.0	1.75	2.00
8	TS-t	MT20	3.0	6.0		
10	TMVW-t	MT20	4.0	8.0	1.75	3.00
12	BMV1+p	MT20	2.0	4.0	2.25	1.00
13	BMWW-t	MT20	4.0	5.0	1.50	1.50
14	BMWW-t	MT20	3.0	4.0		
15	BS-t	MT20	3.0	6.0		
16	BMWWW-t	MT20	4.0	6.0	1.50	3.00
17	BS-t	MT20	3.0	6.0		
18	BMWW-t	MT20	3.0	4.0		
19	BMWW-t	MT20	4.0	5.0	1.50	1.50
20	BMV1+p	MT20	2.0	4.0	2.25	1.00

A SIZE FOR SIZE SUBSTITUTION OF MITEK MII20 WITH TEE-LOK TL20 PLATES IS ALLOWED.

DIMENSIONS, SUPPORTS AND LOADINGS SPECIFIED BY FABRICATOR TO BE VERIFIED BY BUILDING DESIGNER

BEARINGS

JT	FACTORED GROSS REACTION VERT	HORZ	MAXIMUM FACTORED GROSS REACTION DOWN	HORZ	UPLIFT	INPUT BRG IN-SX	REQRD BRG IN-SX
20	1852	0	1852	0	0	5-8	5-8
12	1852	0	1852	0	0	5-8	5-8

UNFACTORED REACTIONS

JT	1ST LCASE COMBINED	MAX./MIN. COMPONENT REACTIONS SNOW	LIVE	PERM.LIVE	WIND	DEAD	SOIL
20	1297	921 / 0	0 / 0	0 / 0	0 / 0	376 / 0	0 / 0
12	1297	921 / 0	0 / 0	0 / 0	0 / 0	376 / 0	0 / 0

BEARING MATERIAL TO BE SPF NO.2 OR BETTER AT JOINT(S) 20, 12

BRACING

TOP CHORD TO BE SHEATHED OR MAX. PURLIN SPACING = 3.86 FT.
MAX. UNBRACED BOTTOM CHORD LENGTH = 10.00 FT. OR RIGID CEILING DIRECTLY APPLIED.

ALL PITCH BREAKS AND PERIMETER CORNER JOINTS MUST BE LATERALLY RESTRAINED.

1 - 2x3 SPF No.2 LATERAL BRACE(S) AT 1/ 2 LENGTH OF 5-16, 7-16. DBS = 20-0-0 . CBF = 92 LBS.

DBS = DIAGONAL BRACE SPACING (MAX). CBF = CUMULATIVE BRACING FORCE. FASTEN LATERAL BRACE(S) USING (0.122"X3") SPIRAL NAILS : 1 NAIL FOR 2x3 BRACE(S), 2 FOR 1x4, 2x4, 2x5, 3 FOR 2x6, 4 FOR 2x8, 5 FOR 2x10, AND 6 FOR 2x12.

END VERTICAL(S) MUST BE SHEATHED OR HAVE BRACES AS INDICATED IN THE MAX. UNBRACED LENGTH COLUMN OF THE TABLE BELOW

LOADING

TOTAL LOAD CASES: (4)

CHORDS

MEMB. FR-TO	MAX. FACTORED FORCE (LBS)	FACTORED VERT. LOAD LC1 (PLF) FROM	TO	MAX CSI (LC)	MAX. UNBRAC LENGTH
1- 2	0 / 23	-77.4	-77.4	0.10 (1)	10.00
2- 3	-2613 / 0	-77.4	-77.4	0.50 (1)	3.86
3- 4	-2345 / 0	-77.4	-77.4	0.42 (1)	4.13
4- 5	-2345 / 0	-77.4	-77.4	0.42 (1)	4.13
5- 6	-1814 / 0	-77.4	-77.4	0.43 (1)	4.55
6- 7	-1814 / 0	-77.4	-77.4	0.43 (1)	4.55
7- 8	-2345 / 0	-77.4	-77.4	0.42 (1)	4.13
8- 9	-2345 / 0	-77.4	-77.4	0.42 (1)	4.13
9-10	-2613 / 0	-77.4	-77.4	0.50 (1)	3.86
10-11	0 / 23	-77.4	-77.4	0.10 (1)	10.00
20- 2	-1805 / 0	0.0	0.0	0.18 (1)	6.23
12-10	-1805 / 0	0.0	0.0	0.18 (1)	6.23
20-19	0 / 0	-17.5	-17.5	0.15 (4)	10.00
19-18	0 / 2354	-17.5	-17.5	0.44 (1)	10.00
18-17	0 / 2099	-17.5	-17.5	0.42 (1)	10.00
17-16	0 / 2099	-17.5	-17.5	0.42 (1)	10.00
16-15	0 / 2099	-17.5	-17.5	0.42 (1)	10.00
15-14	0 / 2099	-17.5	-17.5	0.42 (1)	10.00
14-13	0 / 2354	-17.5	-17.5	0.44 (1)	10.00
13-12	0 / 0	-17.5	-17.5	0.15 (4)	10.00

WEBS

MEMB. FR-TO	MAX. FACTORED FORCE (LBS)	MAX CSI (LC)
19- 3	-213 / 37	0.06 (1)
3-18	-306 / 0	0.30 (1)
18- 5	0 / 273	0.06 (1)
5-16	-738 / 0	0.45 (1)
16- 7	-738 / 0	0.45 (1)
14- 7	0 / 273	0.06 (1)
14- 9	-306 / 0	0.30 (1)
13- 9	-213 / 37	0.06 (1)
2-19	0 / 2377	0.53 (1)
13-10	0 / 2377	0.53 (1)
16- 6	0 / 1211	0.27 (1)

DESIGN CRITERIA

SPECIFIED LOADS:

TOP	CH.	LL	=	23.3	PSF
		DL	=	3.0	PSF
BOT	CH.	LL	=	0.0	PSF
		DL	=	7.0	PSF
TOTAL	LOAD		=	33.3	PSF

SPACING = 24.0 IN. C/C

THIS TRUSS IS DESIGNED FOR RESIDENTIAL OR SMALL BUILDING REQUIREMENTS OF PART 9, NBCC 2010

THIS DESIGN COMPLIES WITH:
- PART 9 OF OBC 2012 , BCBC 2012 , ABC 2014
- CSA 086-09
- TPIC 2011

(55 % OF 27.2 P.S.F. G.S.L. PLUS 8.4 P.S.F. RAIN LOAD) EQUALS 23.3 P.S.F. SPECIFIED ROOF LIVE LOAD

ALLOWABLE DEFL.(LL)= L/360 (1.23")
CALCULATED VERT. DEFL.(LL) = L/ 999 (0.15")
ALLOWABLE DEFL.(TL)= L/360 (1.23")
CALCULATED VERT. DEFL.(TL) = L/ 999 (0.28")

CSI: TC=0.50 (2-3:1) , BC=0.44 (13-14:1) , WB=0.53 (2-19:1) , SSI=0.20 (5-6:1)

DOL LUMBER=1.00 NAIL=1.00 LS BEND=1.10 COMP=1.10 SHEAR=1.10 TENS= 1.10

COMPANION LIVE LOAD FACTOR = 0.50

TRUSS PLATE MANUFACTURER IS NOT RESPONSIBLE FOR QUALITY CONTROL IN THE TRUSS MANUFACTURING PLANT .

NAIL VALUES

PLATE	GRIP(DRY) (PSI) MAX	MIN	SHEAR (PLI) MAX	MIN	SECTION (PLI) MAX	MIN
MT20	618	354	1667	822	2284	1656

PLATE PLACEMENT TOL. = 0.250 inches

PLATE ROTATION TOL. = 5.0 Deg.

JSI GRIP= 0.90 (6) (INPUT = 0.90)
JSI METAL= 0.71 (13) (INPUT = 1.00)

LICENSED PROFESSIONAL ENGINEER
P.M. TREVISAN
100136551
March 16th, 2017
PROVINCE OF ONTARIO

RECEIVED
TOWN OF MILTON
MAR 29, 2017
17-5327
BUILDING DIVISION

KOTT

JOB NAME	TRUSS NAME	QUANTITY	PLY	JOB DESC.	DRWG NO.
PT0317-093	T93	3	1	TRUSS DESC. LECCO RIDGE-BLOCK 343	ENG JOB: PT0317-093

KOTT , Stouffville, ON, CGC

Version 8.100 S Feb 9 2017 MiTek Industries, Inc. Thu Mar 16 07:55:40 2017 Page 1
ID:EvTixTQDI5yR1QLotZTBr_yE?HJ-_ygfhyilQA2f_YEwGS5r7pbU2A6?1VYyIlebzBzaRH1

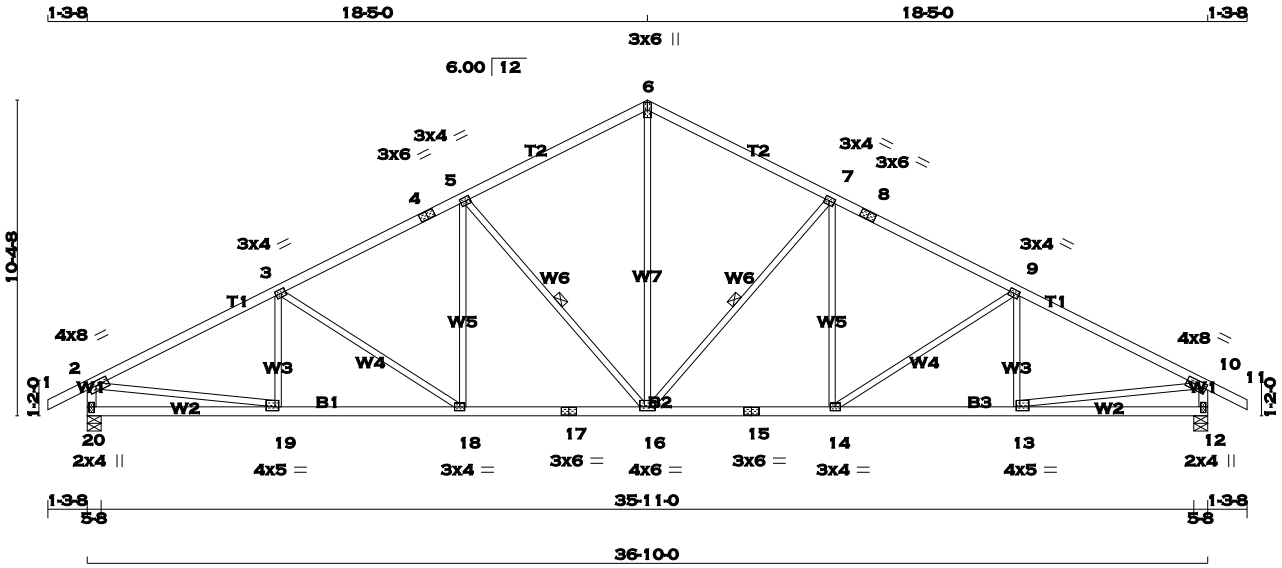

TOTAL WEIGHT = 3 X 155 = 464 lb
[M][F]

LUMBER
N. L. G. A. RULES

CHORDS	SIZE		LUMBER	DESCR.
1 - 4	2x4	DRY	No.2	SPF
4 - 6	2x4	DRY	No.2	SPF
6 - 8	2x4	DRY	No.2	SPF
8 - 11	2x4	DRY	No.2	SPF
20 - 2	2x4	DRY	No.2	SPF
12 - 10	2x4	DRY	No.2	SPF
20 - 17	2x4	DRY	No.2	SPF
17 - 15	2x4	DRY	No.2	SPF
15 - 12	2x4	DRY	No.2	SPF
ALL WEBS EXCEPT	2x3	DRY	No.2	SPF

DRY: SEASONED LUMBER.

PLATES (table is in inches)

JT	TYPE	PLATES	W	LEN	Y	X
2 3, 5, 7, 9	TMVW-t	MT20	4.0	8.0	1.75	3.00
3	TMWW-t	MT20	3.0	4.0	1.50	1.75
4	TS-t	MT20	3.0	6.0		
6	TTW+p	MT20	3.0	6.0		
8	TS-t	MT20	3.0	6.0		
10	TMVW-t	MT20	4.0	8.0	1.75	3.00
12	BMV1+p	MT20	2.0	4.0	2.25	1.00
13	BMWW-t	MT20	4.0	5.0	1.50	1.50
14	BMWW-t	MT20	3.0	4.0		
15	BS-t	MT20	3.0	6.0		
16	BMWWW-t	MT20	4.0	6.0	1.50	3.00
17	BS-t	MT20	3.0	6.0		
18	BMWW-t	MT20	3.0	4.0		
19	BMWW-t	MT20	4.0	5.0	1.50	1.50
20	BMV1+p	MT20	2.0	4.0	2.25	1.00

A SIZE FOR SIZE SUBSTITUTION OF MITEK MII20 WITH TEE-LOK TL20 PLATES IS ALLOWED.

DIMENSIONS, SUPPORTS AND LOADINGS SPECIFIED BY FABRICATOR TO BE VERIFIED BY BUILDING DESIGNER

BEARINGS

JT	FACTORED GROSS REACTION VERT	HORZ	MAXIMUM FACTORED GROSS REACTION DOWN	HORZ	UPLIFT	INPUT BRG IN-SX	REQRD BRG IN-SX
20	1852	0	1852	0	0	5-8	5-8
12	1852	0	1852	0	0	5-8	5-8

UNFACTORED REACTIONS

JT	1ST LCASE COMBINED	MAX./MIN. COMPONENT REACTIONS SNOW	LIVE	PERM.LIVE	WIND	DEAD	SOIL
20	1297	921 / 0	0 / 0	0 / 0	0 / 0	376 / 0	0 / 0
12	1297	921 / 0	0 / 0	0 / 0	0 / 0	376 / 0	0 / 0

BEARING MATERIAL TO BE SPF NO.2 OR BETTER AT JOINT(S) 20, 12

BRACING
TOP CHORD TO BE SHEATHED OR MAX. PURLIN SPACING = 3.85 FT.
MAX. UNBRACED BOTTOM CHORD LENGTH = 10.00 FT. OR RIGID CEILING DIRECTLY APPLIED.

ALL PITCH BREAKS AND PERIMETER CORNER JOINTS MUST BE LATERALLY RESTRAINED.

1 - 2x3 SPF No.2 LATERAL BRACE(S) AT 1/ 2 LENGTH OF 7-16, 5-16. DBS = 20-0-0 . CBF = 92 LBS.

DBS = DIAGONAL BRACE SPACING (MAX). CBF = CUMULATIVE BRACING FORCE. FASTEN LATERAL BRACE(S) USING (0.122"X3") SPIRAL NAILS : 1 NAIL FOR 2x3 BRACE(S), 2 FOR 1x4, 2x4, 2x5, 3 FOR 2x6, 4 FOR 2x8, 5 FOR 2x10, AND 6 FOR 2x12.

END VERTICAL(S) MUST BE SHEATHED OR HAVE BRACES AS INDICATED IN THE MAX. UNBRACED LENGTH COLUMN OF THE TABLE BELOW

LOADING
TOTAL LOAD CASES: (4)

CHORDS

MEMB. FR-TO	MAX. FACTORED FORCE (LBS)	FACTORED VERT. LOAD LC1 (PLF) FROM	TO	MAX CSI (LC)	MAX. UNBRAC LENGTH
1- 2	0 / 23	-77.4	-77.4	0.10 (1)	10.00
2- 3	-2616 / 0	-77.4	-77.4	0.52 (1)	3.85
3- 4	-2331 / 0	-77.4	-77.4	0.42 (1)	4.14
4- 5	-2331 / 0	-77.4	-77.4	0.42 (1)	4.14
5- 6	-1813 / 0	-77.4	-77.4	0.40 (1)	4.58
6- 7	-1813 / 0	-77.4	-77.4	0.40 (1)	4.58
7- 8	-2331 / 0	-77.4	-77.4	0.42 (1)	4.14
8- 9	-2331 / 0	-77.4	-77.4	0.42 (1)	4.14
9-10	-2616 / 0	-77.4	-77.4	0.52 (1)	3.85
10-11	0 / 23	-77.4	-77.4	0.10 (1)	10.00
20- 2	-1805 / 0	0.0	0.0	0.18 (1)	6.23
12-10	-1805 / 0	0.0	0.0	0.18 (1)	6.23
20-19	0 / 0	-17.5	-17.5	0.15 (4)	10.00
19-18	0 / 2358	-17.5	-17.5	0.44 (1)	10.00
18-17	0 / 2084	-17.5	-17.5	0.41 (1)	10.00
17-16	0 / 2084	-17.5	-17.5	0.41 (1)	10.00
16-15	0 / 2084	-17.5	-17.5	0.41 (1)	10.00
15-14	0 / 2084	-17.5	-17.5	0.41 (1)	10.00
14-13	0 / 2358	-17.5	-17.5	0.44 (1)	10.00
13-12	0 / 0	-17.5	-17.5	0.15 (4)	10.00

WEBS

MEMB. FR-TO	MAX. FACTORED FORCE (LBS)	MAX CSI (LC)
16- 6	0 / 1225	0.28 (1)
16- 7	-735 / 0	0.44 (1)
14- 7	0 / 283	0.06 (1)
14- 9	-327 / 0	0.34 (1)
13- 9	-206 / 41	0.06 (1)
5-16	-735 / 0	0.44 (1)
18- 5	0 / 283	0.06 (1)
3-18	-327 / 0	0.34 (1)
19- 3	-206 / 41	0.06 (1)
2-19	0 / 2380	0.54 (1)
13-10	0 / 2380	0.54 (1)

DESIGN CRITERIA

SPECIFIED LOADS:

TOP	CH.	LL	=	23.3	PSF
		DL	=	3.0	PSF
BOT	CH.	LL	=	0.0	PSF
		DL	=	7.0	PSF
TOTAL	LOAD		=	33.3	PSF

SPACING = 24.0 IN. C/C

THIS TRUSS IS DESIGNED FOR RESIDENTIAL OR SMALL BUILDING REQUIREMENTS OF PART 9, NBCC 2010

THIS DESIGN COMPLIES WITH:
- PART 9 OF OBC 2012 , BCBC 2012 , ABC 2014
- CSA 086-09
- TPIC 2011

(55 % OF 27.2 P.S.F. G.S.L. PLUS 8.4 P.S.F. RAIN LOAD) EQUALS 23.3 P.S.F. SPECIFIED ROOF LIVE LOAD

ALLOWABLE DEFL.(LL)= L/360 (1.23")
CALCULATED VERT. DEFL.(LL) = L/ 999 (0.15")
ALLOWABLE DEFL.(TL)= L/360 (1.23")
CALCULATED VERT. DEFL.(TL) = L/ 999 (0.27")

CSI: TC=0.52 (2-3:1) , BC=0.44 (18-19:1) , WB=0.54 (10-13:1) , SSI=0.20 (2-3:1)

DOL LUMBER=1.00 NAIL=1.00 LS BEND=1.10 COMP=1.10 SHEAR=1.10 TENS= 1.10

COMPANION LIVE LOAD FACTOR = 0.50

TRUSS PLATE MANUFACTURER IS NOT RESPONSIBLE FOR QUALITY CONTROL IN THE TRUSS MANUFACTURING PLANT .

NAIL VALUES

PLATE	GRIP(DRY) (PSI) MAX	MIN	SHEAR (PLI) MAX	MIN	SECTION (PLI) MAX	MIN
MT20	618	354	1667	822	2284	1656

PLATE PLACEMENT TOL. = 0.250 inches

PLATE ROTATION TOL. = 5.0 Deg.

JSI GRIP= 0.90 (6) (INPUT = 0.90)
JSI METAL= 0.71 (13) (INPUT = 1.00)

LICENSED PROFESSIONAL ENGINEER
P.M. TREVISAN
100136551
March 16th, 2017
PROVINCE OF ONTARIO

RECEIVED
TOWN OF MILTON
MAR 29, 2017
17-5327
BUILDING DIVISION

KOTT

JOB NAME	TRUSS NAME	QUANTITY	PLY	JOB DESC.	DRWG NO.
PT0317-093	T94	1	1	TRUSS DESC. LECCO RIDGE-BLOCK 343	

KOTT , Stouffville, ON, CGC

Version 8.100 S Feb 9 2017 MiTek Industries, Inc. Thu Mar 16 07:55:40 2017 Page 1
ID:EvTixTQDI5yR1QLotZTBr_yE?HJ-_ygfhyilQA2f_YEwGS5r7pbVLA9K1aVyIlebzBzaRH1

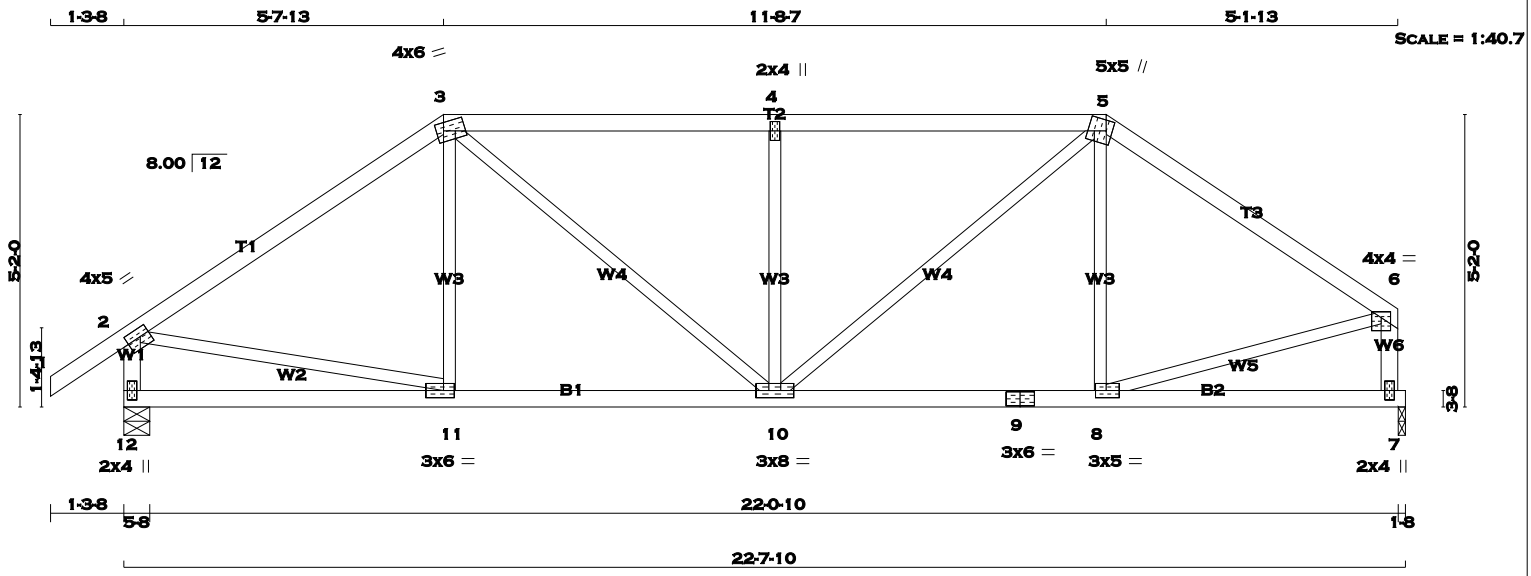

TOTAL WEIGHT = 90 lb
[M]

LUMBER
N. L. G. A. RULES

CHORDS	SIZE		LUMBER	DESCR.
1 - 3	2x4	DRY	No.2	SPF
3 - 5	2x4	DRY	No.2	SPF
5 - 6	2x4	DRY	No.2	SPF
12 - 2	2x4	DRY	No.2	SPF
7 - 6	2x4	DRY	No.2	SPF
12 - 9	2x4	DRY	No.2	SPF
9 - 7	2x4	DRY	No.2	SPF
ALL WEBS EXCEPT	2x3	DRY	No.2	SPF

DRY: SEASONED LUMBER.

PLATES (table is in inches)

JT	TYPE	PLATES	W	LEN	Y	X
2	TMVW-t	MT20	4.0	5.0	1.75	2.00
3	TTWW-m	MT20	4.0	6.0	1.75	1.50
4	TMW+w	MT20	2.0	4.0		
5	TTWW+m	MT20	5.0	5.0	2.25	1.25
6	TMVW-p	MT20	4.0	4.0	1.25	2.00
7	BMV1+p	MT20	2.0	4.0		
8	BMWW-t	MT20	3.0	5.0	1.50	2.25
9	BS-t	MT20	3.0	6.0		
10	BMWWW-t	MT20	3.0	8.0		
11	BMWW-t	MT20	3.0	6.0	1.50	2.25
12	BMV1+p	MT20	2.0	4.0		

A SIZE FOR SIZE SUBSTITUTION OF MITEK MII20 WITH TEE-LOK TL20 PLATES IS ALLOWED.

DIMENSIONS, SUPPORTS AND LOADINGS SPECIFIED BY FABRICATOR TO BE VERIFIED BY BUILDING DESIGNER

BEARINGS

JT	FACTORED GROSS REACTION VERT	HORZ	MAXIMUM FACTORED GROSS REACTION DOWN	HORZ	UPLIFT	INPUT BRG IN-SX	REQRD BRG IN-SX
12	1173	0	1173	0	0	5-8	5-8
7	1067	0	1067	0	0	1-8	1-8

UNFACTORED REACTIONS

JT	1ST LCASE COMBINED	MAX./MIN. COMPONENT REACTIONS SNOW	LIVE	PERM.LIVE	WIND	DEAD	SOIL
12	821	588 / 0	0 / 0	0 / 0	0 / 0	233 / 0	0 / 0
7	749	524 / 0	0 / 0	0 / 0	0 / 0	225 / 0	0 / 0

BEARING MATERIAL TO BE SPF NO.2 OR BETTER AT JOINT(S) 12, 7

BRACING
TOP CHORD TO BE SHEATHED OR MAX. PURLIN SPACING = 4.99 FT.
MAX. UNBRACED BOTTOM CHORD LENGTH = 10.00 FT. OR RIGID CEILING DIRECTLY APPLIED.

ALL PITCH BREAKS AND PERIMETER CORNER JOINTS MUST BE LATERALLY RESTRAINED.

LOADING
TOTAL LOAD CASES: (4)

CHORDS

MEMB. FR-TO	MAX. FACTORED FORCE (LBS)	FACTORED VERT. LOAD LC1 (PLF) FROM	TO	MAX CSI (LC)	MAX. UNBRAC LENGTH
1- 2	0 / 29	-77.4	-77.4	0.10 (1)	10.00
2- 3	-1135 / 0	-77.4	-77.4	0.49 (1)	5.30
3- 4	-1303 / 0	-77.4	-77.4	0.50 (1)	4.99
4- 5	-1303 / 0	-77.4	-77.4	0.50 (1)	4.99
5- 6	-1067 / 0	-77.4	-77.4	0.40 (1)	5.57
12- 2	-1133 / 0	0.0	0.0	0.12 (1)	7.46
7- 6	-1031 / 0	0.0	0.0	0.11 (1)	7.73
12-11	0 / 0	-17.5	-17.5	0.14 (4)	10.00
11-10	0 / 942	-17.5	-17.5	0.23 (1)	10.00
10- 9	0 / 884	-17.5	-17.5	0.21 (1)	10.00
9- 8	0 / 884	-17.5	-17.5	0.21 (1)	10.00
8- 7	0 / 0	-17.5	-17.5	0.13 (4)	10.00

WEBS

MEMB. FR-TO	MAX. FACTORED FORCE (LBS)	MAX CSI (LC)
11- 3	-62 / 74	0.03 (4)
3-10	0 / 469	0.11 (1)
10- 4	-555 / 0	0.22 (1)
10- 5	0 / 545	0.12 (1)
8- 5	-129 / 49	0.05 (1)
2-11	0 / 960	0.22 (1)
8- 6	0 / 918	0.21 (1)

DESIGN CRITERIA

SPECIFIED LOADS:

TOP CH.	LL	=	23.3	PSF
	DL	=	3.0	PSF
BOT CH.	LL	=	0.0	PSF
	DL	=	7.0	PSF
TOTAL LOAD		=	33.3	PSF

SPACING = 24.0 IN. C/C

LOADING IN FLAT SECTION BASED ON A SLOPE OF 6.00/12

THIS TRUSS IS DESIGNED FOR RESIDENTIAL OR SMALL BUILDING REQUIREMENTS OF PART 9, NBCC 2010

THIS DESIGN COMPLIES WITH:
- PART 9 OF OBC 2012 , BCBC 2012 , ABC 2014
- CSA 086-09
- TPIC 2011

(55 % OF 27.2 P.S.F. G.S.L. PLUS 8.4 P.S.F. RAIN LOAD) EQUALS 23.3 P.S.F. SPECIFIED ROOF LIVE LOAD

ALLOWABLE DEFL.(LL)= L/360 (0.75")
CALCULATED VERT. DEFL.(LL) = L/ 999 (0.04")
ALLOWABLE DEFL.(TL)= L/360 (0.75")
CALCULATED VERT. DEFL.(TL) = L/ 999 (0.08")

CSI: TC=0.50 (4-5:1) , BC=0.23 (10-11:1) , WB=0.22 (4-10:1) , SSI=0.22 (3-4:1)

DOL LUMBER=1.00 NAIL=1.00 LS BEND=1.10 COMP=1.10 SHEAR=1.10 TENS= 1.10

COMPANION LIVE LOAD FACTOR = 0.50

TRUSS PLATE MANUFACTURER IS NOT RESPONSIBLE FOR QUALITY CONTROL IN THE TRUSS MANUFACTURING PLANT .

NAIL VALUES

PLATE	GRIP(DRY) (PSI) MAX	MIN	SHEAR (PLI) MAX	MIN	SECTION (PLI) MAX	MIN
MT20	618	354	1667	822	2284	1656

PLATE PLACEMENT TOL. = 0.250 inches

PLATE ROTATION TOL. = 5.0 Deg.

JSI GRIP= 0.89 (6) (INPUT = 0.90)
JSI METAL= 0.39 (2) (INPUT = 1.00)

LICENSED PROFESSIONAL ENGINEER
P.M. TREVISAN
100136551
March 16th, 2017
PROVINCE OF ONTARIO

RECEIVED
TOWN OF MILTON
MAR 29, 2017
17-5327
BUILDING DIVISION

KOTT

JOB NAME	TRUSS NAME	QUANTITY	PLY	JOB DESC.	DRWG NO.
PT0317-093	T95	1	1	TRUSS DESC. LECCO RIDGE-BLOCK 343	

KOTT , Stouffville, ON, CGC

Version 8.100 S Feb 9 2017 MiTek Industries, Inc. Thu Mar 16 07:55:41 2017 Page 1
ID:EvTixTQDI5yR1QLotZTBr_yE?HJ-T9E1uliNBUAWcip7qAd4f08luaT0my75_yN9VezaRH0

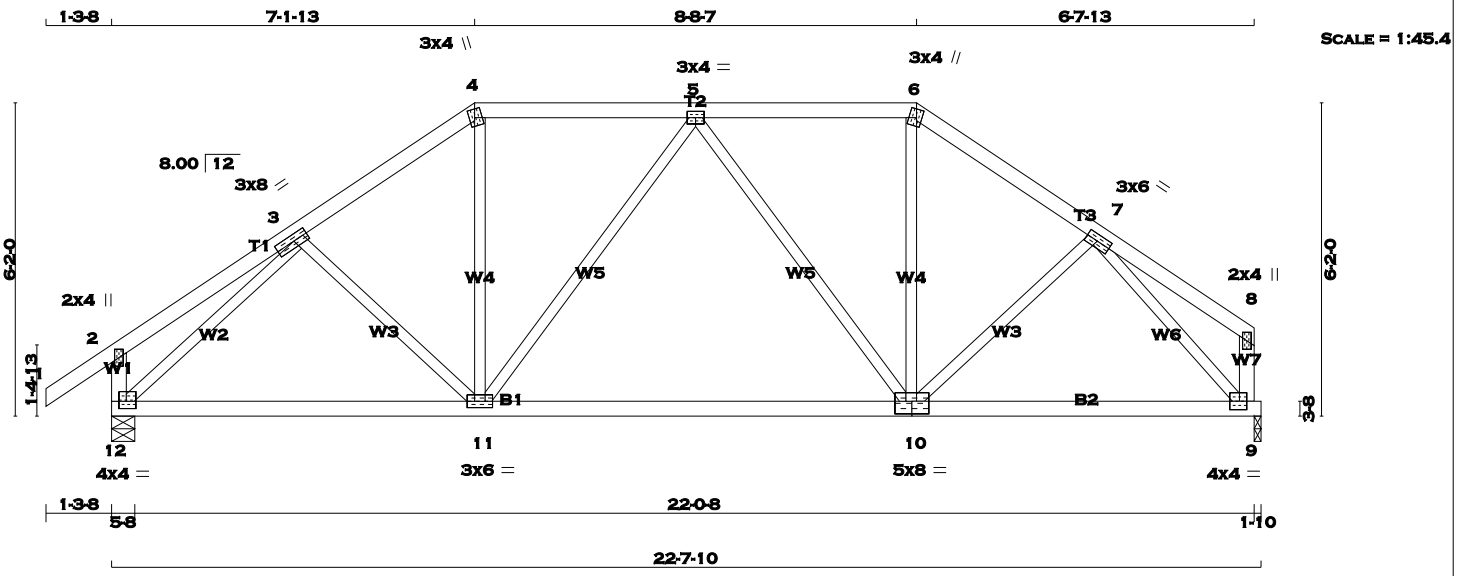

TOTAL WEIGHT = 95 lb
[M][F]

LUMBER
N. L. G. A. RULES

CHORDS	SIZE		LUMBER	DESCR.
1 - 4	2x4	DRY	No.2	SPF
4 - 6	2x4	DRY	No.2	SPF
6 - 8	2x4	DRY	No.2	SPF
12 - 2	2x4	DRY	No.2	SPF
9 - 8	2x4	DRY	No.2	SPF
12 - 10	2x4	DRY	No.2	SPF
10 - 9	2x4	DRY	No.2	SPF
ALL WEBS EXCEPT	2x3	DRY	No.2	SPF

DRY: SEASONED LUMBER.

PLATES (table is in inches)

JT	TYPE	PLATES	W	LEN	Y	X
2	TMV+p	MT20	2.0	4.0		
3	TMWW-t	MT20	3.0	8.0	1.50	3.50
4	TTW+m	MT20	3.0	4.0	2.00	1.25
5	TMWW-t	MT20	3.0	4.0		
6	TTW+m	MT20	3.0	4.0	2.00	1.25
7	TMWW-t	MT20	3.0	6.0	1.50	2.75
8	TMV+p	MT20	2.0	4.0		
9	BMVW1-t	MT20	4.0	4.0	2.00	1.75
10	BSWWW-l	MT20	5.0	8.0	3.00	4.00
11	BMWWW-t	MT20	3.0	6.0		
12	BMVW1-t	MT20	4.0	4.0	1.75	1.75

A SIZE FOR SIZE SUBSTITUTION OF MITEK MII20 WITH TEE-LOK TL20 PLATES IS ALLOWED.

DIMENSIONS, SUPPORTS AND LOADINGS SPECIFIED BY FABRICATOR TO BE VERIFIED BY BUILDING DESIGNER

BEARINGS

JT	FACTORED GROSS REACTION VERT	HORZ	MAXIMUM FACTORED GROSS REACTION DOWN	HORZ	UPLIFT	INPUT BRG IN-SX	REQRD BRG IN-SX
12	1173	0	1173	0	0	5-8	5-8
9	1067	0	1067	0	0	1-10	1-10

UNFACTORED REACTIONS

JT	1ST LCASE COMBINED	MAX./MIN. COMPONENT REACTIONS SNOW	LIVE	PERM.LIVE	WIND	DEAD	SOIL
12	821	588 / 0	0 / 0	0 / 0	0 / 0	233 / 0	0 / 0
9	749	524 / 0	0 / 0	0 / 0	0 / 0	225 / 0	0 / 0

BEARING MATERIAL TO BE SPF NO.2 OR BETTER AT JOINT(S) 12, 9

BRACING
TOP CHORD TO BE SHEATHED OR MAX. PURLIN SPACING = 5.90 FT.
MAX. UNBRACED BOTTOM CHORD LENGTH = 10.00 FT. OR RIGID CEILING DIRECTLY APPLIED.

ALL PITCH BREAKS AND PERIMETER CORNER JOINTS MUST BE LATERALLY RESTRAINED.

LOADING
TOTAL LOAD CASES: (4)

CHORDS

MEMB. FR-TO	MAX. FACTORED FORCE (LBS)	FACTORED VERT. LOAD (PLF) FROM	TO	LC1 CSI (LC)	MAX UNBRAC LENGTH
1- 2	0 / 29	-77.4	-77.4	0.10 (1)	10.00
2- 3	0 / 16	-77.4	-77.4	0.15 (1)	10.00
3- 4	-1105 / 0	-77.4	-77.4	0.13 (1)	5.90
4- 5	-911 / 0	-77.4	-77.4	0.19 (1)	6.24
5- 6	-874 / 0	-77.4	-77.4	0.19 (1)	6.25
6- 7	-1060 / 0	-77.4	-77.4	0.12 (1)	5.99
7- 8	0 / 17	-77.4	-77.4	0.13 (1)	10.00
12- 2	-214 / 0	0.0	0.0	0.02 (1)	7.81
9- 8	-89 / 0	0.0	0.0	0.01 (1)	7.81
12-11	0 / 938	-17.5	-17.5	0.32 (4)	10.00
11-10	0 / 1041	-17.5	-17.5	0.33 (4)	10.00
10- 9	0 / 828	-17.5	-17.5	0.29 (4)	10.00

WEBS

MEMB. FR-TO	MAX. FACTORED FORCE (LBS)	MAX CSI (LC)
3-11	-47 / 36	0.02 (1)
11- 4	0 / 366	0.08 (1)
11- 5	-222 / 0	0.23 (1)
5-10	-284 / 0	0.29 (1)
10- 6	0 / 338	0.08 (1)
10- 7	0 / 61	0.02 (4)
12- 3	-1307 / 0	0.51 (1)
7- 9	-1248 / 0	0.42 (1)

DESIGN CRITERIA

SPECIFIED LOADS:

TOP	CH.	LL	=	23.3	PSF
		DL	=	3.0	PSF
BOT	CH.	LL	=	0.0	PSF
		DL	=	7.0	PSF
TOTAL	LOAD		=	33.3	PSF

SPACING = 24.0 IN. C/C

LOADING IN FLAT SECTION BASED ON A SLOPE OF 6.00/12

THIS TRUSS IS DESIGNED FOR RESIDENTIAL OR SMALL BUILDING REQUIREMENTS OF PART 9, NBCC 2010

THIS DESIGN COMPLIES WITH:
- PART 9 OF OBC 2012 , BCBC 2012 , ABC 2014
- CSA 086-09
- TPIC 2011

(55 % OF 27.2 P.S.F. G.S.L. PLUS 8.4 P.S.F. RAIN LOAD) EQUALS 23.3 P.S.F. SPECIFIED ROOF LIVE LOAD

ALLOWABLE DEFL.(LL)= L/360 (0.75")
CALCULATED VERT. DEFL.(LL) = L/ 999 (0.04")
ALLOWABLE DEFL.(TL)= L/360 (0.75")
CALCULATED VERT. DEFL.(TL) = L/ 999 (0.11")

CSI: TC=0.19 (4-5:1) , BC=0.33 (10-11:4) , WB=0.51 (3-12:1) , SSI=0.16 (4-5:1)

DOL LUMBER=1.00 NAIL=1.00 LS BEND=1.10 COMP=1.10 SHEAR=1.10 TENS= 1.10

COMPANION LIVE LOAD FACTOR = 0.50

TRUSS PLATE MANUFACTURER IS NOT RESPONSIBLE FOR QUALITY CONTROL IN THE TRUSS MANUFACTURING PLANT .

NAIL VALUES

PLATE	GRIP(DRY) (PSI) MAX	MIN	SHEAR (PLI) MAX	MIN	SECTION (PLI) MAX	MIN
MT20	618	354	1667	822	2284	1656

PLATE PLACEMENT TOL. = 0.250 inches

PLATE ROTATION TOL. = 5.0 Deg.

JSI GRIP= 0.90 (3) (INPUT = 0.90)
JSI METAL= 0.35 (12) (INPUT = 1.00)

LICENSED PROFESSIONAL ENGINEER
P.M. TREVISAN
100136551
March 16th, 2017
PROVINCE OF ONTARIO

RECEIVED
TOWN OF MILTON
MAR 29, 2017
17-5327
BUILDING DIVISION

KOTT

JOB NAME	TRUSS NAME	QUANTITY	PLY	JOB DESC.	DRWG NO.
PT0317-093	T96	1	1	TRUSS DESC. LECCO RIDGE-BLOCK 343	

KOTT , Stouffville, ON, CGC

Version 8.100 S Feb 9 2017 MiTek Industries, Inc. Thu Mar 16 07:55:41 2017 Page 1
ID:EvTixTQDI5yR1QLotZTBr_yE?HJ-T9E1uIiNBUAWcip7qAd4f08iiaVxm1b5_yN9VezaRH0

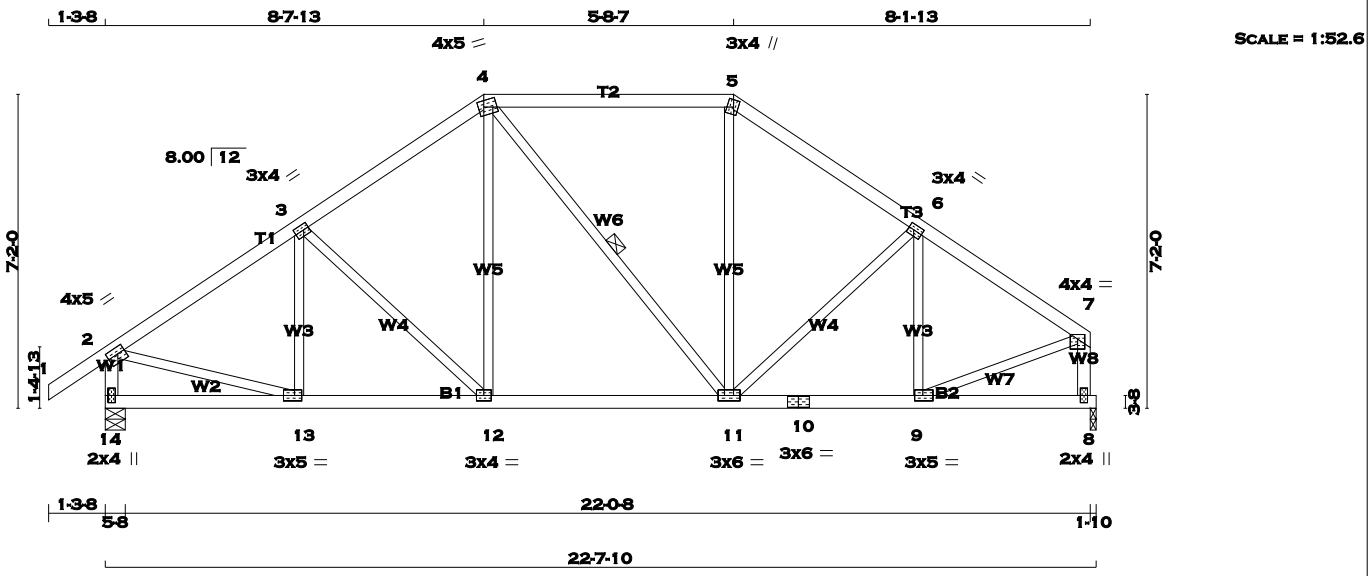

TOTAL WEIGHT = 99 lb

[M][F]

LUMBER

N. L. G. A. RULES

CHORDS	SIZE		LUMBER	DESCR.
1 - 4	2x4	DRY	No.2	SPF
4 - 5	2x4	DRY	No.2	SPF
5 - 7	2x4	DRY	No.2	SPF
14 - 2	2x4	DRY	No.2	SPF
8 - 7	2x4	DRY	No.2	SPF
14 - 10	2x4	DRY	No.2	SPF
10 - 8	2x4	DRY	No.2	SPF
ALL WEBS EXCEPT	2x3	DRY	No.2	SPF

DRY: SEASONED LUMBER.

PLATES (table is in inches)

JT	TYPE	PLATES	W	LEN	Y	X
2	TMVW-t	MT20	4.0	5.0	1.75	2.00
3	TMWW-t	MT20	3.0	4.0	1.50	1.50
4	TTWW-m	MT20	4.0	5.0	1.75	1.50
5	TTW+m	MT20	3.0	4.0	2.00	1.25
6	TMWW-t	MT20	3.0	4.0	1.50	1.50
7	TMVW-p	MT20	4.0	4.0	1.25	2.00
8	BMV1+p	MT20	2.0	4.0		
9	BMWW-t	MT20	3.0	5.0	1.50	2.25
10	BS-t	MT20	3.0	6.0		
11	BMWWW-t	MT20	3.0	6.0		
12	BMWW-t	MT20	3.0	4.0		
13	BMWW-t	MT20	3.0	5.0	1.50	2.00
14	BMV1+p	MT20	2.0	4.0		

A SIZE FOR SIZE SUBSTITUTION OF MITEK MII20 WITH TEE-LOK TL20 PLATES IS ALLOWED.

DIMENSIONS, SUPPORTS AND LOADINGS SPECIFIED BY FABRICATOR TO BE VERIFIED BY BUILDING DESIGNER

BEARINGS

JT	FACTORED GROSS REACTION VERT	HORZ	MAXIMUM FACTORED GROSS REACTION DOWN	HORZ	UPLIFT	INPUT BRG IN-SX	REQRD BRG IN-SX
14	1173	0	1173	0	0	5-8	5-8
8	1067	0	1067	0	0	1-10	1-10

UNFACTORED REACTIONS

JT	1ST LCASE COMBINED	MAX./MIN. COMPONENT REACTIONS SNOW	LIVE	PERM.LIVE	WIND	DEAD	SOIL
14	821	588 / 0	0 / 0	0 / 0	0 / 0	233 / 0	0 / 0
8	749	524 / 0	0 / 0	0 / 0	0 / 0	225 / 0	0 / 0

BEARING MATERIAL TO BE SPF NO.2 OR BETTER AT JOINT(S) 14, 8

BRACING

TOP CHORD TO BE SHEATHED OR MAX. PURLIN SPACING = 5.69 FT.
MAX. UNBRACED BOTTOM CHORD LENGTH = 10.00 FT. OR RIGID CEILING DIRECTLY APPLIED.

ALL PITCH BREAKS AND PERIMETER CORNER JOINTS MUST BE LATERALLY RESTRAINED.

1 - 2x3 SPF No.2 LATERAL BRACE(S) AT 1/ 2 LENGTH OF 4-11. DBS = 20-0-0 . CBF = 4 LBS.

DBS = DIAGONAL BRACE SPACING (MAX). CBF = CUMULATIVE BRACING FORCE. FASTEN LATERAL BRACE(S) USING (0.122"X3") SPIRAL NAILS : 1 NAIL FOR 2x3 BRACE(S), 2 FOR 1x4, 2x4, 2x5, 3 FOR 2x6, 4 FOR 2x8, 5 FOR 2x10, AND 6 FOR 2x12.

END VERTICAL(S) MUST BE SHEATHED OR HAVE BRACES AS INDICATED IN THE MAX. UNBRACED LENGTH COLUMN OF THE TABLE BELOW

LOADING

TOTAL LOAD CASES: (4)

CHORDS

MEMB. FR-TO	MAX. FACTORED FORCE (LBS)	FACTORED VERT. LOAD (PLF) FROM	TO	LC1 MAX CSI (LC)	MAX. UNBRAC LENGTH
1- 2	0 / 29	-77.4	-77.4	0.10 (1)	10.00
2- 3	-1167 / 0	-77.4	-77.4	0.20 (1)	5.69
3- 4	-1022 / 0	-77.4	-77.4	0.19 (1)	5.98
4- 5	-815 / 0	-77.4	-77.4	0.33 (1)	6.25
5- 6	-998 / 0	-77.4	-77.4	0.17 (1)	6.06
6- 7	-1060 / 0	-77.4	-77.4	0.17 (1)	5.93
14- 2	-1139 / 0	0.0	0.0	0.12 (1)	7.45
8- 7	-1037 / 0	0.0	0.0	0.11 (1)	7.71
14-13	0 / 0	-17.5	-17.5	0.07 (4)	10.00
13-12	0 / 989	-17.5	-17.5	0.21 (1)	10.00
12-11	0 / 834	-17.5	-17.5	0.19 (1)	10.00
11-10	0 / 900	-17.5	-17.5	0.20 (1)	10.00
10- 9	0 / 900	-17.5	-17.5	0.20 (1)	10.00
9- 8	0 / 0	-17.5	-17.5	0.06 (4)	10.00

WEBS

MEMB. FR-TO	MAX. FACTORED FORCE (LBS)	MAX CSI (LC)
13- 3	-163 / 21	0.05 (1)
3-12	-216 / 0	0.13 (1)
12- 4	0 / 236	0.05 (1)
4-11	-30 / 0	0.02 (1)
11- 5	0 / 196	0.04 (1)
11- 6	-120 / 0	0.07 (1)
9- 6	-252 / 0	0.07 (1)
2-13	0 / 1018	0.23 (1)
9- 7	0 / 956	0.22 (1)

DESIGN CRITERIA

SPECIFIED LOADS:

TOP CH.	LL	=	23.3	PSF
	DL	=	3.0	PSF
BOT CH.	LL	=	0.0	PSF
	DL	=	7.0	PSF
TOTAL LOAD		=	33.3	PSF

SPACING = 24.0 IN. C/C

LOADING IN FLAT SECTION BASED ON A SLOPE OF 6.00/12

THIS TRUSS IS DESIGNED FOR RESIDENTIAL OR SMALL BUILDING REQUIREMENTS OF PART 9, NBCC 2010

THIS DESIGN COMPLIES WITH:
- PART 9 OF OBC 2012 , BCBC 2012 , ABC 2014
- CSA 086-09
- TPIC 2011

(55 % OF 27.2 P.S.F. G.S.L. PLUS 8.4 P.S.F. RAIN LOAD) EQUALS 23.3 P.S.F. SPECIFIED ROOF LIVE LOAD

ALLOWABLE DEFL.(LL)= L/360 (0.75")
CALCULATED VERT. DEFL.(LL) = L/ 999 (0.03")
ALLOWABLE DEFL.(TL)= L/360 (0.75")
CALCULATED VERT. DEFL.(TL) = L/ 999 (0.06")

CSI: TC=0.33 (4-5:1) , BC=0.21 (12-13:1) , WB=0.23 (2-13:1) , SSI=0.17 (4-5:1)

DOL LUMBER=1.00 NAIL=1.00 LS BEND=1.10 COMP=1.10 SHEAR=1.10 TENS= 1.10

COMPANION LIVE LOAD FACTOR = 0.50

TRUSS PLATE MANUFACTURER IS NOT RESPONSIBLE FOR QUALITY CONTROL IN THE TRUSS MANUFACTURING PLANT .

NAIL VALUES

PLATE	GRIP(DRY) (PSI) MAX	MIN	SHEAR (PLI) MAX	MIN	SECTION (PLI) MAX	MIN
MT20	618	354	1667	822	2284	1656

PLATE PLACEMENT TOL. = 0.250 inches

PLATE ROTATION TOL. = 0.5 Deg.

JSI GRIP= 0.89 (9) (INPUT = 0.90)
JSI METAL= 0.40 (2) (INPUT = 1.00)

LICENSED PROFESSIONAL ENGINEER
P.M. TREVISAN
100136551
March 16th, 2017
PROVINCE OF ONTARIO

RECEIVED
TOWN OF MILTON
MAR 29, 2017
17-5327
BUILDING DIVISION

KOTT

JOB NAME	TRUSS NAME	QUANTITY	PLY	JOB DESC.	DRWG NO.
PT0317-093	T97	1	1	TRUSS DESC. LECCO RIDGE-BLOCK 343	ENG JOB: PT0317-093

KOTT , Stouffville, ON, CGC

Version 8.100 S Feb 9 2017 MiTek Industries, Inc. Thu Mar 16 07:55:42 2017 Page 1

ID:EvTixTQDI5yR1QLotZTBr_yE?HJ-xLoP6ej?yoINDsNJOt8JCEguKzr?VT_FCc7i14zaRH?

SCALE = 1:57.2

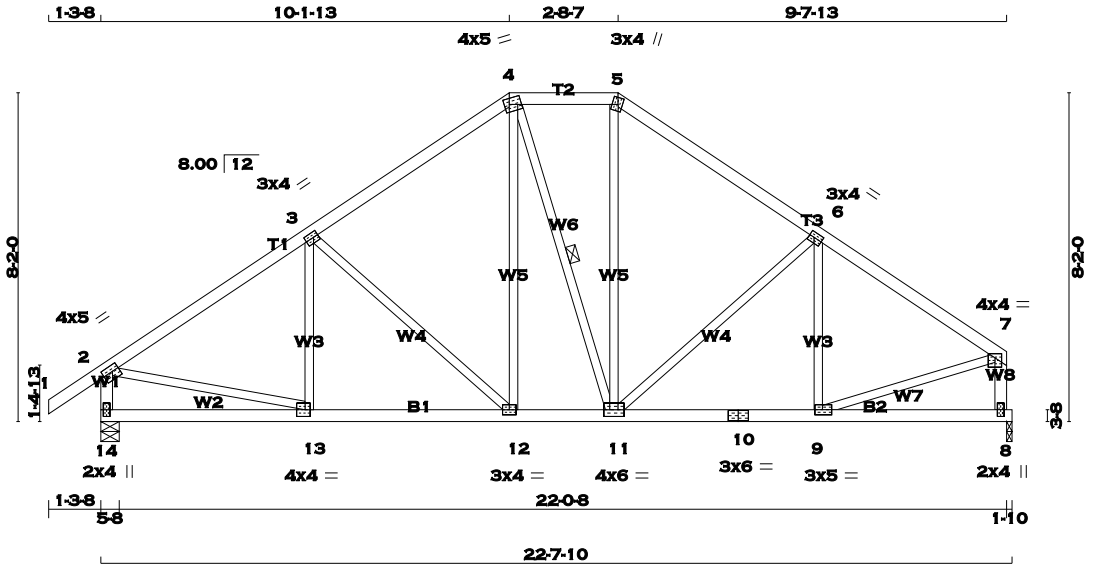

TOTAL WEIGHT = 105 lb

[M][F]

LUMBER

N. L. G. A. RULES

CHORDS	SIZE		LUMBER	DESCR.
1 - 4	2x4	DRY	No.2	SPF
4 - 5	2x4	DRY	No.2	SPF
5 - 7	2x4	DRY	No.2	SPF
14 - 2	2x4	DRY	No.2	SPF
8 - 7	2x4	DRY	No.2	SPF
14 - 10	2x4	DRY	No.2	SPF
10 - 8	2x4	DRY	No.2	SPF
ALL WEBS EXCEPT	2x3	DRY	No.2	SPF

DRY: SEASONED LUMBER.

PLATES (table is in inches)

JT	TYPE	PLATES	W	LEN	Y	X
2	TMVW-t	MT20	4.0	5.0	1.75	2.00
3	TMWW-t	MT20	3.0	4.0	1.50	1.50
4	TTWW-m	MT20	4.0	5.0	1.75	1.50
5	TTW+m	MT20	3.0	4.0	2.00	1.25
6	TMWW-t	MT20	3.0	4.0	1.50	1.50
7	TMVW-p	MT20	4.0	4.0	1.25	2.00
8	BMV1+p	MT20	2.0	4.0		
9	BMWW-t	MT20	3.0	5.0	1.50	2.25
10	BS-t	MT20	3.0	6.0		
11	BMWWW-t	MT20	4.0	6.0		
12	BMWW-t	MT20	3.0	4.0		
13	BMWW-t	MT20	4.0	4.0	2.00	1.50
14	BMV1+p	MT20	2.0	4.0		

A SIZE FOR SIZE SUBSTITUTION OF MITEK MII20 WITH TEE-LOK TL20 PLATES IS ALLOWED.

DIMENSIONS, SUPPORTS AND LOADINGS SPECIFIED BY FABRICATOR TO BE VERIFIED BY BUILDING DESIGNER

BEARINGS

JT	FACTORED GROSS REACTION VERT	HORZ	MAXIMUM FACTORED GROSS REACTION DOWN	HORZ	UPLIFT	INPUT BRG IN-SX	REQRD BRG IN-SX
14	1173	0	1173	0	0	5-8	5-8
8	1067	0	1067	0	0	1-10	1-10

UNFACTORED REACTIONS

JT	1ST LCASE COMBINED	MAX./MIN. COMPONENT REACTIONS SNOW	LIVE	PERM.LIVE	WIND	DEAD	SOIL
14	821	588 / 0	0 / 0	0 / 0	0 / 0	233 / 0	0 / 0
8	749	524 / 0	0 / 0	0 / 0	0 / 0	225 / 0	0 / 0

BEARING MATERIAL TO BE SPF NO.2 OR BETTER AT JOINT(S) 14, 8

BRACING

TOP CHORD TO BE SHEATHED OR MAX. PURLIN SPACING = 5.57 FT.
MAX. UNBRACED BOTTOM CHORD LENGTH = 10.00 FT. OR RIGID CEILING DIRECTLY APPLIED.

ALL PITCH BREAKS AND PERIMETER CORNER JOINTS MUST BE LATERALLY RESTRAINED.

1 - 2x3 SPF No.2 LATERAL BRACE(S) AT 1/ 2 LENGTH OF 4-11. DBS = 20-0-0 . CBF = 3 LBS.

DBS = DIAGONAL BRACE SPACING (MAX). CBF = CUMULATIVE BRACING FORCE. FASTEN LATERAL BRACE(S) USING (0.122"X3") SPIRAL NAILS : 1 NAIL FOR 2x3 BRACE(S), 2 FOR 1x4, 2x4, 2x5, 3 FOR 2x6, 4 FOR 2x8, 5 FOR 2x10, AND 6 FOR 2x12.

END VERTICAL(S) MUST BE SHEATHED OR HAVE BRACES AS INDICATED IN THE MAX. UNBRACED LENGTH COLUMN OF THE TABLE BELOW

LOADING

TOTAL LOAD CASES: (4)

CHORDS

MEMB. FR-TO	MAX. FACTORED FORCE (LBS)	FACTORED VERT. LOAD (PLF) FROM	TO	LC1 MAX CSI (LC)	MAX. UNBRAC LENGTH
1- 2	0 / 29	-77.4	-77.4	0.10 (1)	10.00
2- 3	-1177 / 0	-77.4	-77.4	0.28 (1)	5.57
3- 4	-936 / 0	-77.4	-77.4	0.26 (1)	6.08
4- 5	-752 / 0	-77.4	-77.4	0.08 (1)	6.25
5- 6	-926 / 0	-77.4	-77.4	0.24 (1)	6.14
6- 7	-1089 / 0	-77.4	-77.4	0.24 (1)	5.77
14- 2	-1136 / 0	0.0	0.0	0.12 (1)	7.45
8- 7	-1034 / 0	0.0	0.0	0.11 (1)	7.72
14-13	0 / 0	-17.5	-17.5	0.12 (4)	10.00
13-12	0 / 1000	-17.5	-17.5	0.22 (1)	10.00
12-11	0 / 759	-17.5	-17.5	0.16 (1)	10.00
11-10	0 / 928	-17.5	-17.5	0.20 (1)	10.00
10- 9	0 / 928	-17.5	-17.5	0.20 (1)	10.00
9- 8	0 / 0	-17.5	-17.5	0.10 (4)	10.00

WEBS

MEMB. FR-TO	MAX. FACTORED FORCE (LBS)	MAX CSI (LC)
13- 3	-106 / 56	0.04 (1)
3-12	-329 / 0	0.28 (1)
12- 4	0 / 276	0.06 (1)
4-11	-20 / 0	0.01 (1)
11- 5	0 / 248	0.06 (1)
11- 6	-240 / 0	0.21 (1)
9- 6	-186 / 27	0.06 (1)
2-13	0 / 1022	0.23 (1)
9- 7	0 / 969	0.22 (1)

DESIGN CRITERIA

SPECIFIED LOADS:

TOP	CH.	LL	=	23.3	PSF
		DL	=	3.0	PSF
BOT	CH.	LL	=	0.0	PSF
		DL	=	7.0	PSF
TOTAL	LOAD		=	33.3	PSF

SPACING = 24.0 IN. C/C

LOADING IN FLAT SECTION BASED ON A SLOPE OF 6.00/12

THIS TRUSS IS DESIGNED FOR RESIDENTIAL OR SMALL BUILDING REQUIREMENTS OF PART 9, NBCC 2010

THIS DESIGN COMPLIES WITH:
- PART 9 OF OBC 2012 , BCBC 2012 , ABC 2014
- CSA 086-09
- TPIC 2011

(55 % OF 27.2 P.S.F. G.S.L. PLUS 8.4 P.S.F. RAIN LOAD) EQUALS 23.3 P.S.F. SPECIFIED ROOF LIVE LOAD

ALLOWABLE DEFL.(LL)= L/360 (0.75")
CALCULATED VERT. DEFL.(LL) = L/ 999 (0.03")
ALLOWABLE DEFL.(TL)= L/360 (0.75")
CALCULATED VERT. DEFL.(TL) = L/ 999 (0.06")

CSI: TC=0.28 (2-3:1) , BC=0.22 (12-13:1) , WB=0.28 (3-12:1) , SSI=0.16 (2-3:1)

DOL LUMBER=1.00 NAIL=1.00 LS BEND=1.10 COMP=1.10 SHEAR=1.10 TENS= 1.10

COMPANION LIVE LOAD FACTOR = 0.50

TRUSS PLATE MANUFACTURER IS NOT RESPONSIBLE FOR QUALITY CONTROL IN THE TRUSS MANUFACTURING PLANT .

NAIL VALUES

PLATE	GRIP(DRY) (PSI) MAX	MIN	SHEAR (PLI) MAX	MIN	SECTION (PLI) MAX	MIN
MT20	618	354	1667	822	2284	1656

PLATE PLACEMENT TOL. = 0.250 inches

PLATE ROTATION TOL. = 5.0 Deg.

JSI GRIP= 0.90 (9) (INPUT = 0.90)
JSI METAL= 0.40 (2) (INPUT = 1.00)

LICENSED PROFESSIONAL ENGINEER
P.M. TREVISAN
100136551
March 16th, 2017
PROVINCE OF ONTARIO

RECEIVED
TOWN OF MILTON
MAR 29, 2017
17-5327
BUILDING DIVISION

KOTT

JOB NAME	TRUSS NAME	QUANTITY	PLY	JOB DESC.	DRWG NO.
PT0317-093	T98	1	1	TRUSS DESC. LECCO RIDGE-BLOCK 343	

KOTT , Stouffville, ON, CGC

Version 8.100 S Feb 9 2017 MiTek Industries, Inc. Thu Mar 16 07:55:42 2017 Page 1
ID:EvTixTQDI5yR1QLotZTBr_yE?HJ-xLoP6ej?yoINDsNJOt8JCEgt?zrpVQ7FCc7i14zaRH?

SCALE = 1:64.9

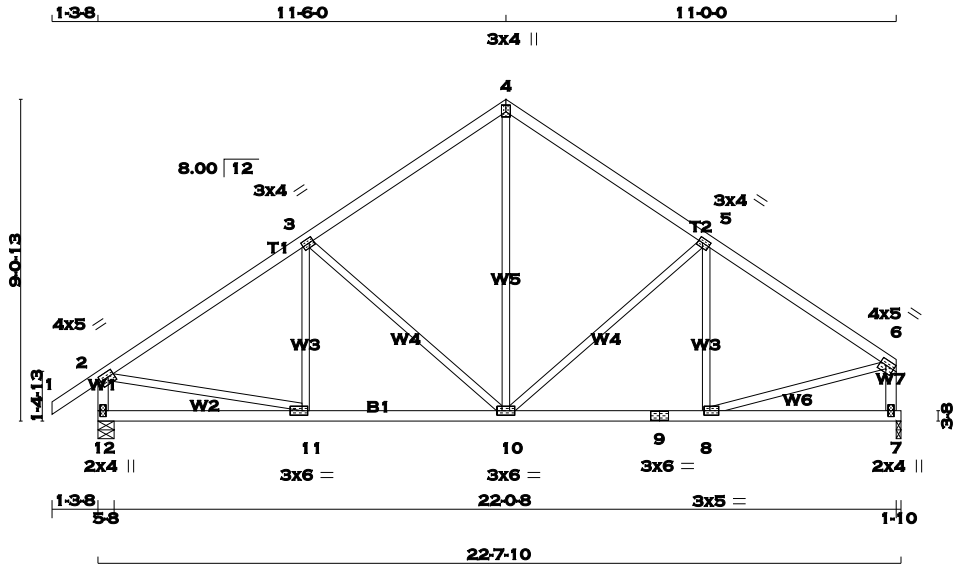

TOTAL WEIGHT = 96 lb
[M][F]

LUMBER
N. L. G. A. RULES

CHORDS	SIZE		LUMBER	DESCR.
1 - 4	2x4	DRY	No.2	SPF
4 - 6	2x4	DRY	No.2	SPF
12 - 2	2x4	DRY	No.2	SPF
7 - 6	2x4	DRY	No.2	SPF
12 - 9	2x4	DRY	No.2	SPF
9 - 7	2x4	DRY	No.2	SPF
ALL WEBS EXCEPT	2x3	DRY	No.2	SPF

DRY: SEASONED LUMBER.

PLATES (table is in inches)

JT	TYPE	PLATES	W	LEN	Y	X
2	TMVW-t	MT20	4.0	5.0	1.75	2.00
3	TMWW-t	MT20	3.0	4.0	1.50	1.50
4	TTW+p	MT20	3.0	4.0	2.25	1.50
5	TMWW-t	MT20	3.0	4.0	1.50	1.50
6	TMVW-t	MT20	4.0	5.0	1.75	Edge
7	BMV1+p	MT20	2.0	4.0		
8	BMWW-t	MT20	3.0	5.0	1.50	2.00
9	BS-t	MT20	3.0	6.0		
10	BMWWW-t	MT20	3.0	6.0		
11	BMWW-t	MT20	3.0	6.0	1.50	2.00
12	BMV1+p	MT20	2.0	4.0		

Edge - INDICATES REFERENCE CORNER OF PLATE TOUCHES EDGE OF CHORD.

A SIZE FOR SIZE SUBSTITUTION OF MITEK MII20 WITH TEE-LOK TL20 PLATES IS ALLOWED.

DIMENSIONS, SUPPORTS AND LOADINGS SPECIFIED BY FABRICATOR TO BE VERIFIED BY BUILDING DESIGNER

BEARINGS

JT	FACTORED GROSS REACTION VERT	HORZ	MAXIMUM FACTORED GROSS REACTION DOWN	HORZ	UPLIFT	INPUT BRG IN-SX	REQRD BRG IN-SX
12	1173	0	1173	0	0	5-8	5-8
7	1067	0	1067	0	0	1-10	1-10

UNFACTORED REACTIONS

JT	1ST LCASE COMBINED	MAX./MIN. COMPONENT REACTIONS SNOW	LIVE	PERM.LIVE	WIND	DEAD	SOIL
12	821	588 / 0	0 / 0	0 / 0	0 / 0	233 / 0	0 / 0
7	749	524 / 0	0 / 0	0 / 0	0 / 0	225 / 0	0 / 0

BEARING MATERIAL TO BE SPF NO.2 OR BETTER AT JOINT(S) 12, 7

BRACING
TOP CHORD TO BE SHEATHED OR MAX. PURLIN SPACING = 5.46 FT.
MAX. UNBRACED BOTTOM CHORD LENGTH = 10.00 FT. OR RIGID CEILING DIRECTLY APPLIED.

ALL PITCH BREAKS AND PERIMETER CORNER JOINTS MUST BE LATERALLY RESTRAINED.

LOADING
TOTAL LOAD CASES: (4)

CHORDS MEMB. FR-TO	MAX. FACTORED FORCE (LBS)	FACTORED VERT. LOAD (PLF) FROM	TO	LC1 MAX CSI (LC)	MAX. UNBRAC LENGTH	WEBS MEMB. FR-TO	MAX. FACTORED FORCE (LBS)	MAX CSI (LC)
1- 2	0 / 29	-77.4	-77.4	0.10 (1)	10.00	11- 3	-74 / 73	0.03 (1)
2- 3	-1172 / 0	-77.4	-77.4	0.36 (1)	5.46	3-10	-412 / 0	0.47 (1)
3- 4	-861 / 0	-77.4	-77.4	0.34 (1)	6.15	10- 4	0 / 589	0.13 (1)
4- 5	-858 / 0	-77.4	-77.4	0.32 (1)	6.20	10- 5	-332 / 0	0.38 (1)
5- 6	-1100 / 0	-77.4	-77.4	0.32 (1)	5.65	8- 5	-143 / 48	0.06 (1)
12- 2	-1131 / 0	0.0	0.0	0.12 (1)	7.46	2-11	0 / 1017	0.23 (1)
7- 6	-1029 / 0	0.0	0.0	0.11 (1)	7.74	8- 6	0 / 972	0.22 (1)
12-11	0 / 0	-17.5	-17.5	0.14 (4)	10.00			
11-10	0 / 1000	-17.5	-17.5	0.23 (1)	10.00			
10- 9	0 / 940	-17.5	-17.5	0.21 (1)	10.00			
9- 8	0 / 940	-17.5	-17.5	0.21 (1)	10.00			
8- 7	0 / 0	-17.5	-17.5	0.12 (4)	10.00			

DESIGN CRITERIA

SPECIFIED LOADS:

TOP	CH.	LL	=	23.3	PSF
		DL	=	3.0	PSF
BOT	CH.	LL	=	0.0	PSF
		DL	=	7.0	PSF
TOTAL	LOAD		=	33.3	PSF

SPACING = 24.0 IN. C/C

THIS TRUSS IS DESIGNED FOR RESIDENTIAL OR SMALL BUILDING REQUIREMENTS OF PART 9, NBCC 2010

THIS DESIGN COMPLIES WITH:
- PART 9 OF OBC 2012 , BCBC 2012 , ABC 2014
- CSA 086-09
- TPIC 2011

(55 % OF 27.2 P.S.F. G.S.L. PLUS 8.4 P.S.F. RAIN LOAD) EQUALS 23.3 P.S.F. SPECIFIED ROOF LIVE LOAD

ALLOWABLE DEFL.(LL)= L/360 (0.75")
CALCULATED VERT. DEFL.(LL) = L/ 999 (0.03")
ALLOWABLE DEFL.(TL)= L/360 (0.75")
CALCULATED VERT. DEFL.(TL) = L/ 999 (0.07")

CSI: TC=0.36 (2-3:1) , BC=0.23 (10-11:1) , WB=0.47 (3-10:1) , SSI=0.18 (2-3:1)

DOL LUMBER=1.00 NAIL=1.00 LS BEND=1.10 COMP=1.10 SHEAR=1.10 TENS= 1.10

COMPANION LIVE LOAD FACTOR = 0.50

TRUSS PLATE MANUFACTURER IS NOT RESPONSIBLE FOR QUALITY CONTROL IN THE TRUSS MANUFACTURING PLANT .

NAIL VALUES

PLATE	GRIP(DRY) (PSI) MAX	MIN	SHEAR (PLI) MAX	MIN	SECTION (PLI) MAX	MIN
MT20	618	354	1667	822	2284	1656

PLATE PLACEMENT TOL. = 0.250 inches

PLATE ROTATION TOL. = 5.0 Deg.

JSI GRIP= 0.88 (10) (INPUT = 0.90)
JSI METAL= 0.41 (2) (INPUT = 1.00)

LICENSED PROFESSIONAL ENGINEER
P.M. TREVISAN
100136551
March 16th, 2017
PROVINCE OF ONTARIO

RECEIVED
TOWN OF MILTON
MAR 29, 2017
17-5327
BUILDING DIVISION

KOTT

JOB NAME	TRUSS NAME	QUANTITY	PLY	JOB DESC.	DRWG NO.
PT0317-093	T99	1	1	TRUSS DESC. LECCO RIDGE-BLOCK 343	ENG JOB: PT0317-093

KOTT , Stouffville, ON, CGC

Version 8.100 S Feb 9 2017 MiTek Industries, Inc. Thu Mar 16 07:55:43 2017 Page 1

ID:EvTixTQDI5yR1QLotZTBr_yE?HJ-PXMoJ_kdj5QEr0yVxbfYkRD5jNAFEx8ORGsFZWzaRH_

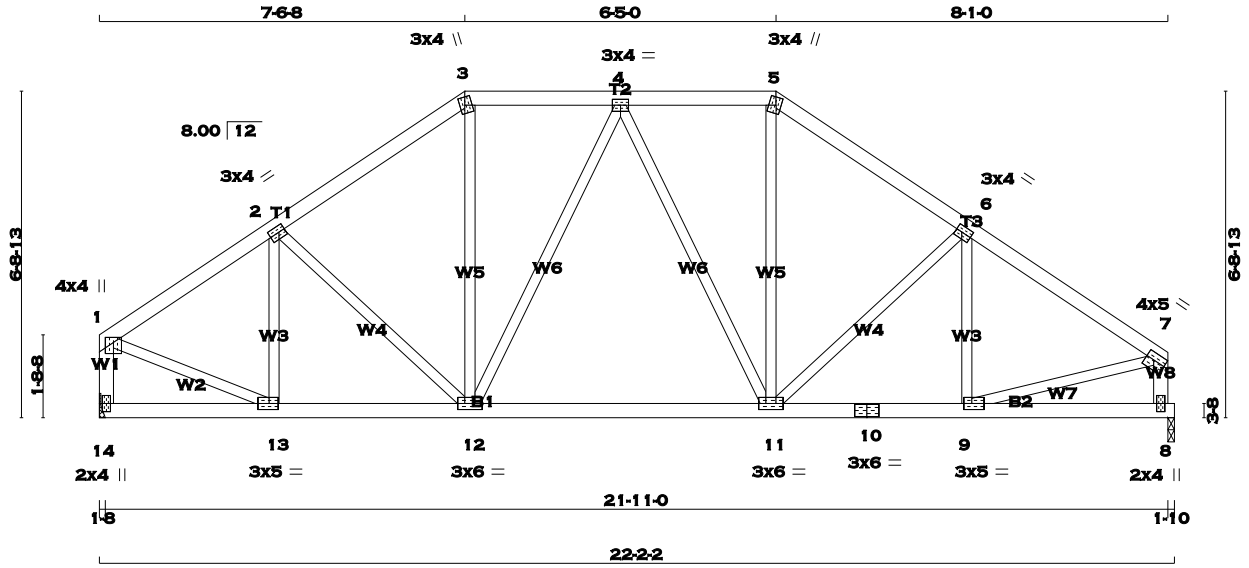

TOTAL WEIGHT = 98 lb

[M][F]

LUMBER

N. L. G. A. RULES

CHORDS	SIZE		LUMBER	DESCR.
1 - 3	2x4	DRY	No.2	SPF
3 - 5	2x4	DRY	No.2	SPF
5 - 7	2x4	DRY	No.2	SPF
14 - 1	2x4	DRY	No.2	SPF
8 - 7	2x4	DRY	No.2	SPF
14 - 10	2x4	DRY	No.2	SPF
10 - 8	2x4	DRY	No.2	SPF
ALL WEBS EXCEPT	2x3	DRY	No.2	SPF

DRY: SEASONED LUMBER.

PLATES (table is in inches)

JT	TYPE	PLATES	W	LEN	Y	X
1	TMVW+p	MT20	4.0	4.0	1.25	2.00
2	TMWW-t	MT20	3.0	4.0	1.50	1.50
3	TTW+m	MT20	3.0	4.0	2.00	1.25
4	TMWW-t	MT20	3.0	4.0		
5	TTW+m	MT20	3.0	4.0	2.00	1.25
6	TMWW-t	MT20	3.0	4.0	1.50	1.50
7	TMVW-t	MT20	4.0	5.0	1.75	Edge
8	BMV1+p	MT20	2.0	4.0		
9	BMWW-t	MT20	3.0	5.0	1.50	2.00
10	BS-t	MT20	3.0	6.0		
11	BMWWW-t	MT20	3.0	6.0		
12	BMWWW-t	MT20	3.0	6.0		
13	BMWW-t	MT20	3.0	5.0	1.50	2.25
14	BMV1+p	MT20	2.0	4.0		

Edge - INDICATES REFERENCE CORNER OF PLATE TOUCHES EDGE OF CHORD.

A SIZE FOR SIZE SUBSTITUTION OF MITEK MII20 WITH TEE-LOK TL20 PLATES IS ALLOWED.

DIMENSIONS, SUPPORTS AND LOADINGS SPECIFIED BY FABRICATOR TO BE VERIFIED BY BUILDING DESIGNER

BEARINGS

JT	FACTORED GROSS REACTION VERT	HORZ	MAXIMUM FACTORED GROSS REACTION DOWN	HORZ	UPLIFT	INPUT BRG	REQRD BRG
14	1045	0	1045	0	0	HANGER BY OTHERS	
						MIN. SEAT SIZE: 1-8	
8	1045	0	1045	0	0	1-10	1-10

UNFACTORED REACTIONS

JT	1ST LCASE COMBINED	MAX./MIN. COMPONENT REACTIONS SNOW	LIVE	PERM.LIVE	WIND	DEAD	SOIL
14	734	513 / 0	0 / 0	0 / 0	0 / 0	220 / 0	0 / 0
8	734	513 / 0	0 / 0	0 / 0	0 / 0	220 / 0	0 / 0

BEARING MATERIAL TO BE SPF NO.2 OR BETTER AT JOINT(S) 8

BRACING

TOP CHORD TO BE SHEATHED OR MAX. PURLIN SPACING = 5.76 FT.
MAX. UNBRACED BOTTOM CHORD LENGTH = 10.00 FT. OR RIGID CEILING DIRECTLY APPLIED.

ALL PITCH BREAKS AND PERIMETER CORNER JOINTS MUST BE LATERALLY RESTRAINED.

LOADING

TOTAL LOAD CASES: (4)

CHORDS

MEMB. FR-TO	MAX. FACTORED FORCE (LBS)	VERT. LOAD LC1 (PLF) FROM	TO	MAX CSI (LC)	MAX. UNBRAC LENGTH
1- 2	-1024 / 0	-77.4	-77.4	0.15 (1)	6.04
2- 3	-996 / 0	-77.4	-77.4	0.15 (1)	6.10
3- 4	-818 / 0	-77.4	-77.4	0.10 (1)	6.25
4- 5	-842 / 0	-77.4	-77.4	0.10 (1)	6.25
5- 6	-1028 / 0	-77.4	-77.4	0.17 (1)	6.01
6- 7	-1147 / 0	-77.4	-77.4	0.17 (1)	5.76
14- 1	-1017 / 0	0.0	0.0	0.11 (1)	7.77
8- 7	-1012 / 0	0.0	0.0	0.10 (1)	7.78
14-13	0 / 0	-17.5	-17.5	0.05 (4)	10.00
13-12	0 / 868	-17.5	-17.5	0.20 (1)	10.00
12-11	0 / 901	-17.5	-17.5	0.21 (1)	10.00
11-10	0 / 971	-17.5	-17.5	0.22 (1)	10.00
10- 9	0 / 971	-17.5	-17.5	0.22 (1)	10.00
9- 8	0 / 0	-17.5	-17.5	0.06 (4)	10.00

WEBS

MEMB. FR-TO	MAX. FACTORED FORCE (LBS)	MAX CSI (LC)
13- 2	-273 / 0	0.07 (1)
2-12	-76 / 0	0.04 (1)
12- 3	0 / 324	0.07 (1)
12- 4	-192 / 0	0.19 (1)
4-11	-135 / 0	0.13 (1)
11- 5	0 / 345	0.08 (1)
11- 6	-184 / 0	0.09 (1)
9- 6	-173 / 9	0.04 (1)
1-13	0 / 930	0.21 (1)
9- 7	0 / 1000	0.23 (1)

DESIGN CRITERIA

SPECIFIED LOADS:

TOP	CH.	LL	=	23.3	PSF
		DL	=	3.0	PSF
BOT	CH.	LL	=	0.0	PSF
		DL	=	7.0	PSF
TOTAL	LOAD		=	33.3	PSF

SPACING = 24.0 IN. C/C

LOADING IN FLAT SECTION BASED ON A SLOPE OF 6.00/12

THIS TRUSS IS DESIGNED FOR RESIDENTIAL OR SMALL BUILDING REQUIREMENTS OF PART 9, NBCC 2010

THIS DESIGN COMPLIES WITH:
- PART 9 OF OBC 2012 , BCBC 2012 , ABC 2014
- CSA 086-09
- TPIC 2011

(55 % OF 27.2 P.S.F. G.S.L. PLUS 8.4 P.S.F. RAIN LOAD) EQUALS 23.3 P.S.F. SPECIFIED ROOF LIVE LOAD

ALLOWABLE DEFL.(LL)= L/360 (0.73")
CALCULATED VERT. DEFL.(LL) = L/ 999 (0.03")
ALLOWABLE DEFL.(TL)= L/360 (0.73")
CALCULATED VERT. DEFL.(TL) = L/ 999 (0.07")

CSI: TC=0.17 (6-7:1) , BC=0.22 (9-11:1) , WB=0.23 (7-9:1) , SSI=0.13 (6-7:1)

DOL LUMBER=1.00 NAIL=1.00 LS BEND=1.10 COMP=1.10 SHEAR=1.10 TENS= 1.10

COMPANION LIVE LOAD FACTOR = 0.50

TRUSS PLATE MANUFACTURER IS NOT RESPONSIBLE FOR QUALITY CONTROL IN THE TRUSS MANUFACTURING PLANT .

NAIL VALUES

PLATE	GRIP(DRY) (PSI) MAX	MIN	SHEAR (PLI) MAX	MIN	SECTION (PLI) MAX	MIN
MT20	618	354	1667	822	2284	1656

PLATE PLACEMENT TOL. = 0.250 inches

PLATE ROTATION TOL. = 5.0 Deg.

JSI GRIP= 0.89 (12) (INPUT = 0.90)
JSI METAL= 0.37 (7) (INPUT = 1.00)

LICENSED PROFESSIONAL ENGINEER
P.M. TREVISAN
100136551
March 16th, 2017
PROVINCE OF ONTARIO

RECEIVED
TOWN OF MILTON
MAR 29, 2017
17-5327
BUILDING DIVISION

KOTT

JOB NAME	TRUSS NAME	QUANTITY	PLY	JOB DESC.	DRWG NO.
PT0317-093	**T100**	**1**	**1**	TRUSS DESC. LECCO RIDGE-BLOCK 343	ENG JOB: PT0317-093

KOTT , Stouffville, ON, CGC

Version 8.100 S Feb 9 2017 MiTek Industries, Inc. Thu Mar 16 07:55:43 2017 Page 1

ID:EvTixTQDI5yR1QLotZTBr_yE?HJ-PXMoJ_kdj5QEr0yVxbfYkRD6UNB9EyxORGsFZWzaRH_

SCALE = 1:37.8

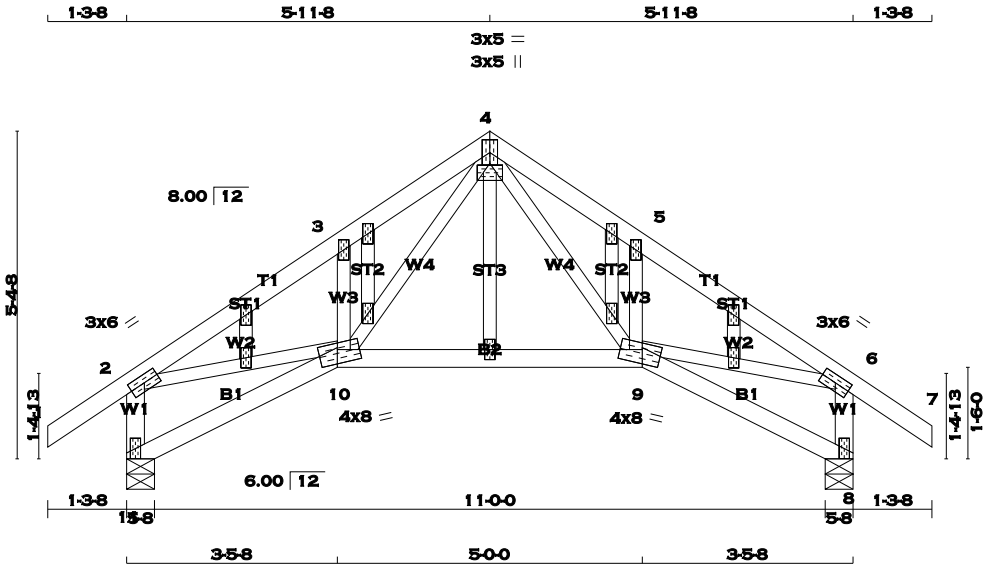

TOTAL WEIGHT = 58 lb

[M][F]

LUMBER

N. L. G. A. RULES

CHORDS	SIZE		LUMBER	DESCR.
1 - 4	2x4	DRY	No.2	SPF
4 - 7	2x4	DRY	No.2	SPF
11 - 2	2x4	DRY	No.2	SPF
8 - 6	2x4	DRY	No.2	SPF
11 - 10	2x4	DRY	No.2	SPF
10 - 9	2x4	DRY	No.2	SPF
9 - 8	2x4	DRY	No.2	SPF
ALL WEBS	2x3	DRY	No.2	SPF
EXCEPT				
ALL GABLE WEBS				
	2x3	DRY	No.2	SPF

DRY: SEASONED LUMBER.

GABLE STUDS SPACED AT 2-0-0 OC.

PLATES (table is in inches)

JT	TYPE	PLATES	W	LEN	Y	X
2	TMVW-t	MT20	3.0	6.0		
3	TMW+w	MT20	2.0	4.0		
4	TTWW+p	MT20	3.0	5.0		
4	NP-p	MT20	3.0	5.0	0.25	2.50
5	TMW+w	MT20	2.0	4.0		
6	TMVW-t	MT20	3.0	6.0		
8	BMV1+p	MT20	2.0	4.0		
9	BBWWW-m	MT20	4.0	8.0	2.75	3.75
10	BBWWW-m	MT20	4.0	8.0	2.75	3.75
11	BMV1+p	MT20	2.0	4.0		
12, 13, 14, 15, 16, 17, 18, 19, 20						
12	NP+w	MT20	2.0	4.0		

A SIZE FOR SIZE SUBSTITUTION OF MITEK MII20 WITH TEE-LOK TL20 PLATES IS ALLOWED.

DIMENSIONS, SUPPORTS AND LOADINGS SPECIFIED BY FABRICATOR TO BE VERIFIED BY BUILDING DESIGNER

BEARINGS

JT	FACTORED GROSS REACTION VERT	HORZ	MAXIMUM FACTORED GROSS REACTION DOWN	HORZ	UPLIFT	INPUT BRG IN-SX	REQRD BRG IN-SX
11	671	0	671	0	0	5-8	5-8
8	671	0	671	0	0	5-8	5-8

UNFACTORED REACTIONS

JT	1ST LCASE COMBINED	MAX./MIN. COMPONENT REACTIONS SNOW	LIVE	PERM.LIVE	WIND	DEAD	SOIL
11	469	341 / 0	0 / 0	0 / 0	0 / 0	127 / 0	0 / 0
8	469	341 / 0	0 / 0	0 / 0	0 / 0	127 / 0	0 / 0

BEARING MATERIAL TO BE SPF NO.2 OR BETTER AT JOINT(S) 11, 8

BRACING

TOP CHORD TO BE SHEATHED OR MAX. PURLIN SPACING = 6.25 FT.
MAX. UNBRACED BOTTOM CHORD LENGTH = 10.00 FT. OR RIGID CEILING DIRECTLY APPLIED.

ALL PITCH BREAKS AND PERIMETER CORNER JOINTS MUST BE LATERALLY RESTRAINED.

LOADING

TOTAL LOAD CASES: (4)

CHORDS

MEMB. FR-TO	MAX. FACTORED FORCE (LBS)	FACTORED VERT. LOAD (PLF) FROM	TO	LC1 MAX CSI (LC)	MAX. UNBRAC LENGTH
1- 2	0 / 29	-77.4	-77.4	0.10 (1)	10.00
2- 3	-917 / 0	-77.4	-77.4	0.12 (1)	6.25
3- 4	-945 / 0	-77.4	-77.4	0.08 (1)	6.25
4- 5	-945 / 0	-77.4	-77.4	0.08 (1)	6.25
5- 6	-917 / 0	-77.4	-77.4	0.12 (1)	6.25
6- 7	0 / 29	-77.4	-77.4	0.10 (1)	10.00
11- 2	-641 / 0	0.0	0.0	0.07 (1)	7.81
8- 6	-641 / 0	0.0	0.0	0.07 (1)	7.81
11-10	0 / 0	-17.5	-17.5	0.06 (4)	10.00
10- 9	0 / 460	-17.5	-17.5	0.16 (4)	10.00
9- 8	0 / 0	-17.5	-17.5	0.06 (4)	10.00

WEBS

MEMB. FR-TO	MAX. FACTORED FORCE (LBS)	MAX CSI (LC)
4- 9	0 / 546	0.12 (1)
9- 5	-277 / 0	0.04 (1)
10- 4	0 / 546	0.12 (1)
10- 3	-277 / 0	0.04 (1)
2-10	0 / 777	0.17 (1)
9- 6	0 / 777	0.17 (1)

DESIGN CRITERIA

SPECIFIED LOADS:

TOP	CH.	LL	=	23.3	PSF
		DL	=	3.0	PSF
BOT	CH.	LL	=	0.0	PSF
		DL	=	7.0	PSF
TOTAL	LOAD		=	33.3	PSF

SPACING = 24.0 IN. C/C

THIS TRUSS IS DESIGNED FOR RESIDENTIAL OR SMALL BUILDING REQUIREMENTS OF PART 9, NBCC 2010

THIS DESIGN COMPLIES WITH:
- PART 9 OF OBC 2012 , BCBC 2012 , ABC 2014
- CSA 086-09
- TPIC 2011

(55 % OF 27.2 P.S.F. G.S.L. PLUS 8.4 P.S.F. RAIN LOAD) EQUALS 23.3 P.S.F. SPECIFIED ROOF LIVE LOAD

ALLOWABLE DEFL.(LL)= L/360 (0.40")
CALCULATED VERT. DEFL.(LL) = L/ 999 (0.02")
ALLOWABLE DEFL.(TL)= L/360 (0.40")
CALCULATED VERT. DEFL.(TL) = L/ 999 (0.07")

CSI: TC=0.12 (2-3:1) , BC=0.16 (9-10:4) , WB=0.17 (2-10:1) , SSI=0.10 (2-3:1)

DOL LUMBER=1.00 NAIL=1.00 LS BEND=1.10 COMP=1.10 SHEAR=1.10 TENS= 1.10

COMPANION LIVE LOAD FACTOR = 0.50

AUTOSOLVE HEELS OFF

TRUSS PLATE MANUFACTURER IS NOT RESPONSIBLE FOR QUALITY CONTROL IN THE TRUSS MANUFACTURING PLANT .

NAIL VALUES

PLATE	GRIP(DRY) (PSI) MAX	MIN	SHEAR (PLI) MAX	MIN	SECTION (PLI) MAX	MIN
MT20	618	354	1667	822	2284	1656

PLATE PLACEMENT TOL. = 0.250 inches

PLATE ROTATION TOL. = 0.5 Deg.

JSI GRIP= 0.77 (4) (INPUT = 0.90)
JSI METAL= 0.26 (2) (INPUT = 1.00)

LICENSED PROFESSIONAL ENGINEER
P.M. TREVISAN
100136551
March 16th, 2017
PROVINCE OF ONTARIO

RECEIVED
TOWN OF MILTON
MAR 29, 2017
17-5327
BUILDING DIVISION

KOTT

JOB NAME	TRUSS NAME	QUANTITY	PLY	JOB DESC.	DRWG NO.
PT0317-093	**T101**	**1**	**1**	TRUSS DESC. LECCO RIDGE-BLOCK 343	ENG JOB: PT0317-093

KOTT , Stouffville, ON, CGC

Version 8.100 S Feb 9 2017 MiTek Industries, Inc. Thu Mar 16 07:55:44 2017 Page 1

ID:EvTixTQDI5yR1QLotZTBr_yE?HJ-tkwAWKlGUPY5TAXiVIAnHfmHEnXNzPBYgwcp5zzaRGz

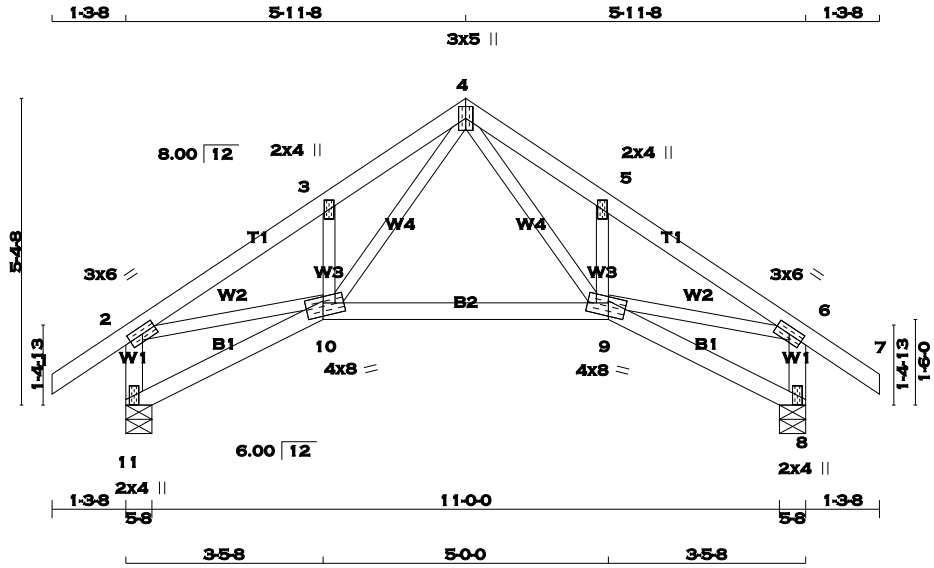

TOTAL WEIGHT = 52 lb

[M][F]

LUMBER

N. L. G. A. RULES

CHORDS	SIZE		LUMBER	DESCR.
1 - 4	2x4	DRY	No.2	SPF
4 - 7	2x4	DRY	No.2	SPF
11 - 2	2x4	DRY	No.2	SPF
8 - 6	2x4	DRY	No.2	SPF
11 - 10	2x4	DRY	No.2	SPF
10 - 9	2x4	DRY	No.2	SPF
9 - 8	2x4	DRY	No.2	SPF
ALL WEBS EXCEPT	2x3	DRY	No.2	SPF

DRY: SEASONED LUMBER.

PLATES (table is in inches)

JT	TYPE	PLATES	W	LEN	Y	X
2	TMVW-t	MT20	3.0	6.0		
3	TMW+w	MT20	2.0	4.0		
4	TTWW+p	MT20	3.0	5.0		
5	TMW+w	MT20	2.0	4.0		
6	TMVW-t	MT20	3.0	6.0		
8	BMV1+p	MT20	2.0	4.0		
9	BBWWW-m	MT20	4.0	8.0	2.75	3.75
10	BBWWW-m	MT20	4.0	8.0	2.75	3.75
11	BMV1+p	MT20	2.0	4.0		

A SIZE FOR SIZE SUBSTITUTION OF MITEK MII20 WITH TEE-LOK TL20 PLATES IS ALLOWED.

DIMENSIONS, SUPPORTS AND LOADINGS SPECIFIED BY FABRICATOR TO BE VERIFIED BY BUILDING DESIGNER

BEARINGS

JT	FACTORED GROSS REACTION VERT	HORZ	MAXIMUM FACTORED GROSS REACTION DOWN	HORZ	UPLIFT	INPUT BRG IN-SX	REQRD BRG IN-SX
11	671	0	671	0	0	5-8	5-8
8	671	0	671	0	0	5-8	5-8

UNFACTORED REACTIONS

JT	1ST LCASE COMBINED	MAX./MIN. COMPONENT REACTIONS SNOW	LIVE	PERM.LIVE	WIND	DEAD	SOIL
11	469	341 / 0	0 / 0	0 / 0	0 / 0	127 / 0	0 / 0
8	469	341 / 0	0 / 0	0 / 0	0 / 0	127 / 0	0 / 0

BEARING MATERIAL TO BE SPF NO.2 OR BETTER AT JOINT(S) 11, 8

BRACING

TOP CHORD TO BE SHEATHED OR MAX. PURLIN SPACING = 6.25 FT.
MAX. UNBRACED BOTTOM CHORD LENGTH = 10.00 FT. OR RIGID CEILING DIRECTLY APPLIED.

ALL PITCH BREAKS AND PERIMETER CORNER JOINTS MUST BE LATERALLY RESTRAINED.

LOADING

TOTAL LOAD CASES: (4)

CHORDS

MEMB. FR-TO	MAX. FACTORED FORCE (LBS)	FACTORED VERT. LOAD (PLF) FROM	TO	LC1 MAX CSI (LC)	MAX. UNBRAC LENGTH
1- 2	0 / 29	-77.4	-77.4	0.10 (1)	10.00
2- 3	-917 / 0	-77.4	-77.4	0.12 (1)	6.25
3- 4	-945 / 0	-77.4	-77.4	0.08 (1)	6.25
4- 5	-945 / 0	-77.4	-77.4	0.08 (1)	6.25
5- 6	-917 / 0	-77.4	-77.4	0.12 (1)	6.25
6- 7	0 / 29	-77.4	-77.4	0.10 (1)	10.00
11- 2	-641 / 0	0.0	0.0	0.07 (1)	7.81
8- 6	-641 / 0	0.0	0.0	0.07 (1)	7.81
11-10	0 / 0	-17.5	-17.5	0.06 (4)	10.00
10- 9	0 / 460	-17.5	-17.5	0.16 (4)	10.00
9- 8	0 / 0	-17.5	-17.5	0.06 (4)	10.00

WEBS

MEMB. FR-TO	MAX. FACTORED FORCE (LBS)	MAX CSI (LC)
4- 9	0 / 546	0.12 (1)
9- 5	-277 / 0	0.04 (1)
10- 4	0 / 546	0.12 (1)
10- 3	-277 / 0	0.04 (1)
2-10	0 / 777	0.17 (1)
9- 6	0 / 777	0.17 (1)

DESIGN CRITERIA

SPECIFIED LOADS:

TOP CH.	LL	=	23.3	PSF
	DL	=	3.0	PSF
BOT CH.	LL	=	0.0	PSF
	DL	=	7.0	PSF
TOTAL LOAD		=	33.3	PSF

SPACING = 24.0 IN. C/C

THIS TRUSS IS DESIGNED FOR RESIDENTIAL OR SMALL BUILDING REQUIREMENTS OF PART 9, NBCC 2010

THIS DESIGN COMPLIES WITH:
- PART 9 OF OBC 2012 , BCBC 2012 , ABC 2014
- CSA 086-09
- TPIC 2011

(55 % OF 27.2 P.S.F. G.S.L. PLUS 8.4 P.S.F. RAIN LOAD) EQUALS 23.3 P.S.F. SPECIFIED ROOF LIVE LOAD

ALLOWABLE DEFL.(LL)= L/360 (0.40")
CALCULATED VERT. DEFL.(LL) = L/ 999 (0.02")
ALLOWABLE DEFL.(TL)= L/360 (0.40")
CALCULATED VERT. DEFL.(TL) = L/ 999 (0.07")

CSI: TC=0.12 (2-3:1) , BC=0.16 (9-10:4) , WB=0.17 (2-10:1) , SSI=0.10 (2-3:1)

DOL LUMBER=1.00 NAIL=1.00 LS BEND=1.10 COMP=1.10 SHEAR=1.10 TENS= 1.10

COMPANION LIVE LOAD FACTOR = 0.50

AUTOSOLVE HEELS OFF

TRUSS PLATE MANUFACTURER IS NOT RESPONSIBLE FOR QUALITY CONTROL IN THE TRUSS MANUFACTURING PLANT .

NAIL VALUES

PLATE	GRIP(DRY) (PSI) MAX	MIN	SHEAR (PLI) MAX	MIN	SECTION (PLI) MAX	MIN
MT20	618	354	1667	822	2284	1656

PLATE PLACEMENT TOL. = 0.250 inches

PLATE ROTATION TOL. = 5.0 Deg.

JSI GRIP= 0.77 (4) (INPUT = 0.90)
JSI METAL= 0.26 (2) (INPUT = 1.00)

LICENSED PROFESSIONAL ENGINEER
P.M. TREVISAN
100136551
March 16th, 2017
PROVINCE OF ONTARIO

RECEIVED
TOWN OF MILTON
MAR 29, 2017
17-5327
BUILDING DIVISION

KOTT

JOB NAME	TRUSS NAME	QUANTITY	PLY	JOB DESC.	DRWG NO.
PT0317-093	T102	3	1	TRUSS DESC. LECCO RIDGE-BLOCK 343	ENG JOB: PT0317-093

KOTT , Stouffville, ON, CGC

Version 8.100 S Feb 9 2017 MiTek Industries, Inc. Thu Mar 16 07:55:44 2017 Page 1

ID:EvTixTQDI5yR1QLotZTBr_yE?HJ-tkwAWKlGUPY5TAXiVIAnHfmDbnX4zQgYgwcp5zzaRGz

SCALE = 1:39.4

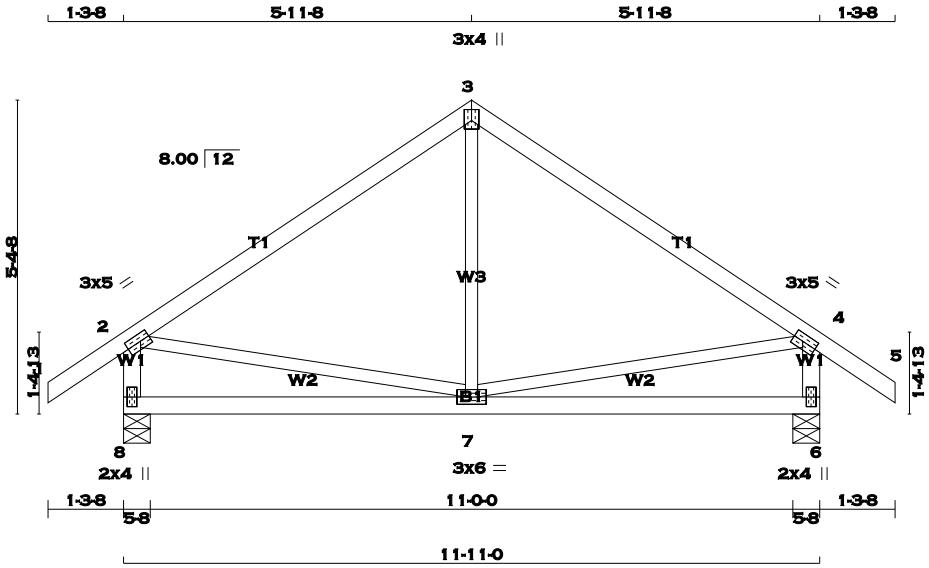

TOTAL WEIGHT = 3 X 49 = 147 lb

[M][F]

LUMBER

N. L. G. A. RULES

CHORDS	SIZE		LUMBER	DESCR.
1 - 3	2x4	DRY	No.2	SPF
3 - 5	2x4	DRY	No.2	SPF
8 - 2	2x4	DRY	No.2	SPF
6 - 4	2x4	DRY	No.2	SPF
8 - 6	2x4	DRY	No.2	SPF
ALL WEBS EXCEPT	2x3	DRY	No.2	SPF

DRY: SEASONED LUMBER.

PLATES (table is in inches)

JT	TYPE	PLATES	W	LEN	Y	X
2	TMVW-t	MT20	3.0	5.0	1.50	2.00
3	TTW+p	MT20	3.0	4.0	2.25	1.50
4	TMVW-t	MT20	3.0	5.0	1.50	2.00
6	BMV1+p	MT20	2.0	4.0		
7	BMWWW-t	MT20	3.0	6.0		
8	BMV1+p	MT20	2.0	4.0		

A SIZE FOR SIZE SUBSTITUTION OF MITEK MII20 WITH TEE-LOK TL20 PLATES IS ALLOWED.

DIMENSIONS, SUPPORTS AND LOADINGS SPECIFIED BY FABRICATOR TO BE VERIFIED BY BUILDING DESIGNER

BEARINGS

JT	FACTORED GROSS REACTION VERT	HORZ	MAXIMUM FACTORED GROSS REACTION DOWN	HORZ	UPLIFT	INPUT BRG IN-SX	REQRD BRG IN-SX
8	671	0	671	0	0	5-8	5-8
6	671	0	671	0	0	5-8	5-8

UNFACTORED REACTIONS

JT	1ST LCASE COMBINED	MAX./MIN. COMPONENT REACTIONS SNOW	LIVE	PERM.LIVE	WIND	DEAD	SOIL
8	469	341 / 0	0 / 0	0 / 0	0 / 0	127 / 0	0 / 0
6	469	341 / 0	0 / 0	0 / 0	0 / 0	127 / 0	0 / 0

BEARING MATERIAL TO BE SPF NO.2 OR BETTER AT JOINT(S) 8, 6

BRACING

TOP CHORD TO BE SHEATHED OR MAX. PURLIN SPACING = 6.25 FT.
MAX. UNBRACED BOTTOM CHORD LENGTH = 10.00 FT. OR RIGID CEILING DIRECTLY APPLIED.

ALL PITCH BREAKS AND PERIMETER CORNER JOINTS MUST BE LATERALLY RESTRAINED.

LOADING

TOTAL LOAD CASES: (4)

CHORDS

MEMB. FR-TO	MAX. FACTORED FORCE (LBS)	FACTORED VERT. LOAD (PLF) FROM	TO	LC1 CSI (LC)	MAX UNBRAC LENGTH
1- 2	0 / 29	-77.4	-77.4	0.10 (1)	10.00
2- 3	-418 / 0	-77.4	-77.4	0.35 (1)	6.25
3- 4	-418 / 0	-77.4	-77.4	0.35 (1)	6.25
4- 5	0 / 29	-77.4	-77.4	0.10 (1)	10.00
8- 2	-631 / 0	0.0	0.0	0.07 (1)	7.81
6- 4	-631 / 0	0.0	0.0	0.07 (1)	7.81
8- 7	0 / 0	-17.5	-17.5	0.18 (4)	10.00
7- 6	0 / 0	-17.5	-17.5	0.18 (4)	10.00

WEBS

MEMB. FR-TO	MAX. FACTORED FORCE (LBS)	MAX CSI (LC)
7- 3	0 / 104	0.04 (4)
2- 7	0 / 353	0.08 (1)
7- 4	0 / 353	0.08 (1)

DESIGN CRITERIA

SPECIFIED LOADS:

TOP	CH.	LL	=	23.3	PSF
		DL	=	3.0	PSF
BOT	CH.	LL	=	0.0	PSF
		DL	=	7.0	PSF
TOTAL	LOAD		=	33.3	PSF

SPACING = 24.0 IN. C/C

THIS TRUSS IS DESIGNED FOR RESIDENTIAL OR SMALL BUILDING REQUIREMENTS OF PART 9, NBCC 2010

THIS DESIGN COMPLIES WITH:
- PART 9 OF OBC 2012 , BCBC 2012 , ABC 2014
- CSA 086-09
- TPIC 2011

(55 % OF 27.2 P.S.F. G.S.L. PLUS 8.4 P.S.F. RAIN LOAD) EQUALS 23.3 P.S.F. SPECIFIED ROOF LIVE LOAD

ALLOWABLE DEFL.(LL)= L/360 (0.40")
CALCULATED VERT. DEFL.(LL) = L/ 999 (0.01")
ALLOWABLE DEFL.(TL)= L/360 (0.40")
CALCULATED VERT. DEFL.(TL) = L/ 999 (0.03")

CSI: TC=0.35 (2-3:1) , BC=0.18 (6-7:4) , WB=0.08 (4-7:1) , SSI=0.15 (2-3:1)

DOL LUMBER=1.00 NAIL=1.00 LS BEND=1.10 COMP=1.10 SHEAR=1.10 TENS= 1.10

COMPANION LIVE LOAD FACTOR = 0.50

TRUSS PLATE MANUFACTURER IS NOT RESPONSIBLE FOR QUALITY CONTROL IN THE TRUSS MANUFACTURING PLANT .

NAIL VALUES

PLATE	GRIP(DRY) (PSI) MAX	MIN	SHEAR (PLI) MAX	MIN	SECTION (PLI) MAX	MIN
MT20	618	354	1667	822	2284	1656

PLATE PLACEMENT TOL. = 0.250 inches

PLATE ROTATION TOL. = 5.0 Deg.

JSI GRIP= 0.76 (7) (INPUT = 0.90)
JSI METAL= 0.18 (4) (INPUT = 1.00)

LICENSED PROFESSIONAL ENGINEER
P.M. TREVISAN
100136551
March 16th, 2017
PROVINCE OF ONTARIO

RECEIVED
TOWN OF MILTON
MAR 29, 2017
17-5327
BUILDING DIVISION

KOTT

JOB NAME	TRUSS NAME	QUANTITY	PLY	JOB DESC.	DRWG NO.
PT0317-093	**T103**	**2**	**1**	TRUSS DESC. LECCO RIDGE-BLOCK 343	

KOTT , Stouffville, ON, CGC

Version 8.100 S Feb 9 2017 MiTek Industries, Inc. Thu Mar 16 07:55:45 2017 Page 1
ID:EvTixTQDI5yR1QLotZTBr_yE?HJ-LwTYkgmuEjgy4J6u3?h0qsIOMBtTit?huaLMdPzaRGy

SCALE = 1:39.4

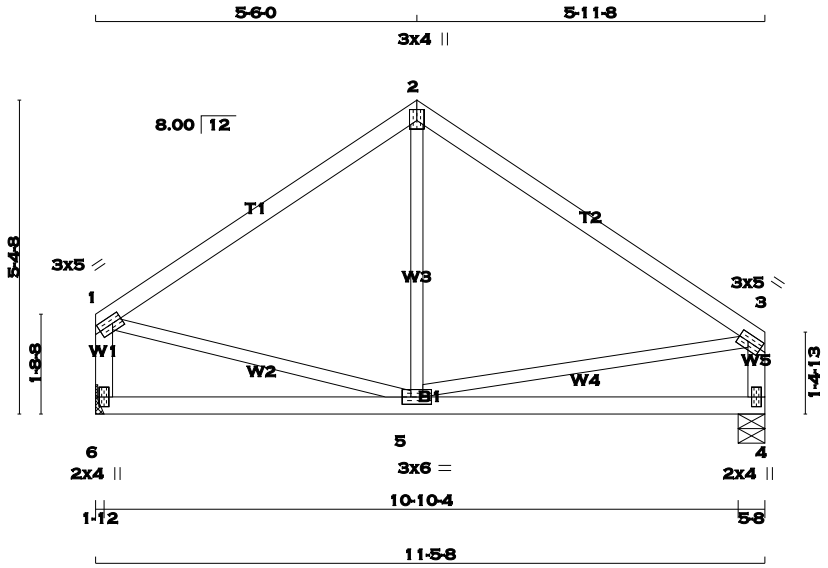

TOTAL WEIGHT = 2 X 44 = 89 lb
[M][F]

LUMBER
N. L. G. A. RULES

CHORDS	SIZE		LUMBER	DESCR.
1 - 2	2x4	DRY	No.2	SPF
2 - 3	2x4	DRY	No.2	SPF
6 - 1	2x4	DRY	No.2	SPF
4 - 3	2x4	DRY	No.2	SPF
6 - 4	2x4	DRY	No.2	SPF
ALL WEBS EXCEPT	2x3	DRY	No.2	SPF

DRY: SEASONED LUMBER.

PLATES (table is in inches)

JT	TYPE	PLATES	W	LEN	Y	X
1	TMVW-t	MT20	3.0	5.0	1.50	2.00
2	TTW+p	MT20	3.0	4.0	2.25	1.50
3	TMVW-t	MT20	3.0	5.0	1.50	2.00
4	BMV1+p	MT20	2.0	4.0		
5	BMWWW-t	MT20	3.0	6.0		
6	BMV1+p	MT20	2.0	4.0		

A SIZE FOR SIZE SUBSTITUTION OF MITEK MII20 WITH TEE-LOK TL20 PLATES IS ALLOWED.

DIMENSIONS, SUPPORTS AND LOADINGS SPECIFIED BY FABRICATOR TO BE VERIFIED BY BUILDING DESIGNER

BEARINGS

JT	FACTORED GROSS REACTION VERT	HORZ	MAXIMUM FACTORED GROSS REACTION DOWN	HORZ	UPLIFT	INPUT BRG IN-SX	REQRD BRG IN-SX
6	543	0	543	0	0	HANGER BY OTHERS MIN. SEAT SIZE: 1-12	
4	543	0	543	0	0	5-8	5-8

UNFACTORED REACTIONS

JT	1ST LCASE COMBINED	MAX./MIN. COMPONENT REACTIONS SNOW	LIVE	PERM.LIVE	WIND	DEAD	SOIL
6	381	267 / 0	0 / 0	0 / 0	0 / 0	115 / 0	0 / 0
4	381	267 / 0	0 / 0	0 / 0	0 / 0	115 / 0	0 / 0

BEARING MATERIAL TO BE SPF NO.2 OR BETTER AT JOINT(S) 4

BRACING
TOP CHORD TO BE SHEATHED OR MAX. PURLIN SPACING = 6.25 FT.
MAX. UNBRACED BOTTOM CHORD LENGTH = 10.00 FT. OR RIGID CEILING DIRECTLY APPLIED.

ALL PITCH BREAKS AND PERIMETER CORNER JOINTS MUST BE LATERALLY RESTRAINED.

LOADING
TOTAL LOAD CASES: (4)

CHORDS

MEMB. FR-TO	MAX. FACTORED FORCE (LBS)	FACTORED VERT. LOAD (PLF) FROM	TO	MAX CSI (LC)	MAX. UNBRAC LENGTH
1- 2	-385 / 0	-77.4	-77.4	0.30 (1)	6.25
2- 3	-386 / 0	-77.4	-77.4	0.35 (1)	6.25
6- 1	-510 / 0	0.0	0.0	0.05 (1)	7.81
4- 3	-501 / 0	0.0	0.0	0.05 (1)	7.81
6- 5	0 / 0	-17.5	-17.5	0.17 (4)	10.00
5- 4	0 / 0	-17.5	-17.5	0.17 (4)	10.00

WEBS

MEMB. FR-TO	MAX. FACTORED FORCE (LBS)	MAX CSI (LC)
5- 2	-16 / 94	0.03 (4)
1- 5	0 / 331	0.07 (1)
5- 3	0 / 326	0.07 (1)

DESIGN CRITERIA

SPECIFIED LOADS:

TOP	CH.	LL	=	23.3	PSF
		DL	=	3.0	PSF
BOT	CH.	LL	=	0.0	PSF
		DL	=	7.0	PSF
TOTAL	LOAD		=	33.3	PSF

SPACING = 24.0 IN. C/C

THIS TRUSS IS DESIGNED FOR RESIDENTIAL OR SMALL BUILDING REQUIREMENTS OF PART 9, NBCC 2010

THIS DESIGN COMPLIES WITH:
- PART 9 OF OBC 2012 , BCBC 2012 , ABC 2014
- CSA 086-09
- TPIC 2011

(55 % OF 27.2 P.S.F. G.S.L. PLUS 8.4 P.S.F. RAIN LOAD) EQUALS 23.3 P.S.F. SPECIFIED ROOF LIVE LOAD

ALLOWABLE DEFL.(LL)= L/360 (0.38")
CALCULATED VERT. DEFL.(LL) = L/ 999 (0.01")
ALLOWABLE DEFL.(TL)= L/360 (0.38")
CALCULATED VERT. DEFL.(TL) = L/ 999 (0.04")

CSI: TC=0.35 (2-3:1) , BC=0.17 (4-5:4) , WB=0.07 (1-5:1) , SSI=0.15 (2-3:1)

DOL LUMBER=1.00 NAIL=1.00 LS BEND=1.10 COMP=1.10 SHEAR=1.10 TENS= 1.10

COMPANION LIVE LOAD FACTOR = 0.50

TRUSS PLATE MANUFACTURER IS NOT RESPONSIBLE FOR QUALITY CONTROL IN THE TRUSS MANUFACTURING PLANT .

NAIL VALUES

PLATE	GRIP(DRY) (PSI) MAX	MIN	SHEAR (PLI) MAX	MIN	SECTION (PLI) MAX	MIN
MT20	618	354	1667	822	2284	1656

PLATE PLACEMENT TOL. = 0.250 inches

PLATE ROTATION TOL. = 5.0 Deg.

JSI GRIP= 0.70 (5) (INPUT = 0.90)
JSI METAL= 0.15 (3) (INPUT = 1.00)

LICENSED PROFESSIONAL ENGINEER
P.M. TREVISAN
100136551
March 16th, 2017
PROVINCE OF ONTARIO

RECEIVED
TOWN OF MILTON
MAR 29, 2017
17-5327
BUILDING DIVISION

KOTT

JOB NAME	TRUSS NAME	QUANTITY	PLY	JOB DESC.	DRWG NO.
PT0317-093	**T104**	**3**	**1**	TRUSS DESC. LECCO RIDGE-BLOCK 343	

KOTT , Stouffville, ON, CGC

Version 8.100 S Feb 9 2017 MiTek Industries, Inc. Thu Mar 16 07:55:45 2017 Page 1
ID:EvTixTQDI5yR1QLotZTBr_yE?HJ-LwTYkgmuEjgy4J6u3?h0qsIR4BuiiuAhuaLMdPzaRGy

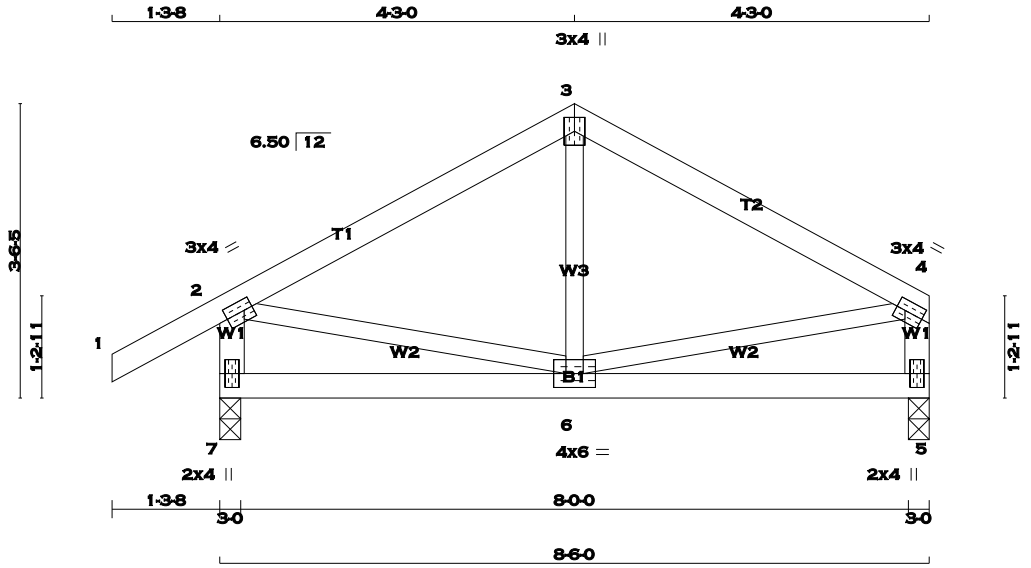

TOTAL WEIGHT = 3 X 33 = 100 lb

[M][F]

LUMBER

N. L. G. A. RULES

CHORDS	SIZE		LUMBER	DESCR.
1 - 3	2x4	DRY	No.2	SPF
3 - 4	2x4	DRY	No.2	SPF
7 - 2	2x4	DRY	No.2	SPF
5 - 4	2x4	DRY	No.2	SPF
7 - 5	2x4	DRY	No.2	SPF
ALL WEBS EXCEPT	2x3	DRY	No.2	SPF

DRY: SEASONED LUMBER.

PLATES (table is in inches)

JT	TYPE	PLATES	W	LEN	Y	X
2	TMVW-t	MT20	3.0	4.0	1.50	1.25
3	TTW+p	MT20	3.0	4.0		
4	TMVW-t	MT20	3.0	4.0	1.50	1.25
5	BMV1+p	MT20	2.0	4.0		
6	BMWWW-t	MT20	4.0	6.0		
7	BMV1+p	MT20	2.0	4.0		

A SIZE FOR SIZE SUBSTITUTION OF MITEK MII20 WITH TEE-LOK TL20 PLATES IS ALLOWED.

DIMENSIONS, SUPPORTS AND LOADINGS SPECIFIED BY FABRICATOR TO BE VERIFIED BY BUILDING DESIGNER

BEARINGS

JT	FACTORED GROSS REACTION VERT	HORZ	MAXIMUM FACTORED GROSS REACTION DOWN	HORZ	UPLIFT	INPUT BRG IN-SX	REQRD BRG IN-SX
7	508	0	508	0	0	3-0	3-0
5	403	0	403	0	0	3-0	3-0

UNFACTORED REACTIONS

JT	1ST LCASE COMBINED	MAX./MIN. COMPONENT REACTIONS SNOW	LIVE	PERM.LIVE	WIND	DEAD	SOIL
7	354	261 / 0	0 / 0	0 / 0	0 / 0	93 / 0	0 / 0
5	283	198 / 0	0 / 0	0 / 0	0 / 0	85 / 0	0 / 0

BEARING MATERIAL TO BE SPF NO.2 OR BETTER AT JOINT(S) 7, 5

BRACING

TOP CHORD TO BE SHEATHED OR MAX. PURLIN SPACING = 6.25 FT.
MAX. UNBRACED BOTTOM CHORD LENGTH = 10.00 FT. OR RIGID CEILING DIRECTLY APPLIED.

ALL PITCH BREAKS AND PERIMETER CORNER JOINTS MUST BE LATERALLY RESTRAINED.

LOADING

TOTAL LOAD CASES: (4)

CHORDS

MEMB. FR-TO	MAX. FACTORED FORCE (LBS)	FACTORED VERT. LOAD (PLF) FROM	TO	LC1 MAX CSI (LC)	MAX. UNBRAC LENGTH
1- 2	0 / 25	-77.4	-77.4	0.10 (1)	10.00
2- 3	-315 / 0	-77.4	-77.4	0.18 (1)	6.25
3- 4	-315 / 0	-77.4	-77.4	0.18 (1)	6.25
7- 2	-479 / 0	0.0	0.0	0.05 (1)	7.81
5- 4	-374 / 0	0.0	0.0	0.04 (1)	7.81
7- 6	0 / 0	-17.5	-17.5	0.09 (4)	10.00
6- 5	0 / 0	-17.5	-17.5	0.09 (4)	10.00

WEBS

MEMB. FR-TO	MAX. FACTORED FORCE (LBS)	MAX CSI (LC)
6- 3	-29 / 64	0.02 (4)
2- 6	0 / 283	0.06 (1)
6- 4	0 / 283	0.06 (1)

DESIGN CRITERIA

SPECIFIED LOADS:

TOP	CH.	LL	=	23.3	PSF
		DL	=	3.0	PSF
BOT	CH.	LL	=	0.0	PSF
		DL	=	7.0	PSF
TOTAL	LOAD		=	33.3	PSF

SPACING = 24.0 IN. C/C

THIS TRUSS IS DESIGNED FOR RESIDENTIAL OR SMALL BUILDING REQUIREMENTS OF PART 9, NBCC 2010

THIS DESIGN COMPLIES WITH:
- PART 9 OF OBC 2012 , BCBC 2012 , ABC 2014
- CSA 086-09
- TPIC 2011

(55 % OF 27.2 P.S.F. G.S.L. PLUS 8.4 P.S.F. RAIN LOAD) EQUALS 23.3 P.S.F. SPECIFIED ROOF LIVE LOAD

ALLOWABLE DEFL.(LL)= L/360 (0.28")
CALCULATED VERT. DEFL.(LL) = L/ 999 (0.00")
ALLOWABLE DEFL.(TL)= L/360 (0.28")
CALCULATED VERT. DEFL.(TL) = L/ 999 (0.01")

CSI: TC=0.18 (2-3:1) , BC=0.09 (6-7:4) , WB=0.06 (4-6:1) , SSI=0.11 (2-3:1)

DOL LUMBER=1.00 NAIL=1.00 LS BEND=1.10 COMP=1.10 SHEAR=1.10 TENS= 1.10

COMPANION LIVE LOAD FACTOR = 0.50

TRUSS PLATE MANUFACTURER IS NOT RESPONSIBLE FOR QUALITY CONTROL IN THE TRUSS MANUFACTURING PLANT .

NAIL VALUES

PLATE	GRIP(DRY) (PSI) MAX	MIN	SHEAR (PLI) MAX	MIN	SECTION (PLI) MAX	MIN
MT20	618	354	1667	822	2284	1656

PLATE PLACEMENT TOL. = 0.250 inches

PLATE ROTATION TOL. = 5.0 Deg.

JSI GRIP= 0.69 (2) (INPUT = 0.90)
JSI METAL= 0.17 (4) (INPUT = 1.00)

LICENSED PROFESSIONAL ENGINEER
P.M. TREVISAN
100136551
March 16th, 2017
PROVINCE OF ONTARIO

RECEIVED
TOWN OF MILTON
MAR 29, 2017
17-5327
BUILDING DIVISION

KOTT

JOB NAME	TRUSS NAME	QUANTITY	PLY	JOB DESC.	DRWG NO.
PT0317-093	T105	4	1	TRUSS DESC. LECCO RIDGE-BLOCK 343	

KOTT , Stouffville, ON, CGC

Version 8.100 S Feb 9 2017 MiTek Industries, Inc. Thu Mar 16 07:55:45 2017 Page 1
ID:EvTixTQDI5yR1QLotZTBr_yE?HJ-LwTYkgmuEjgy4J6u3?h0qsIPjBseiu9huaLMdPzaRGy

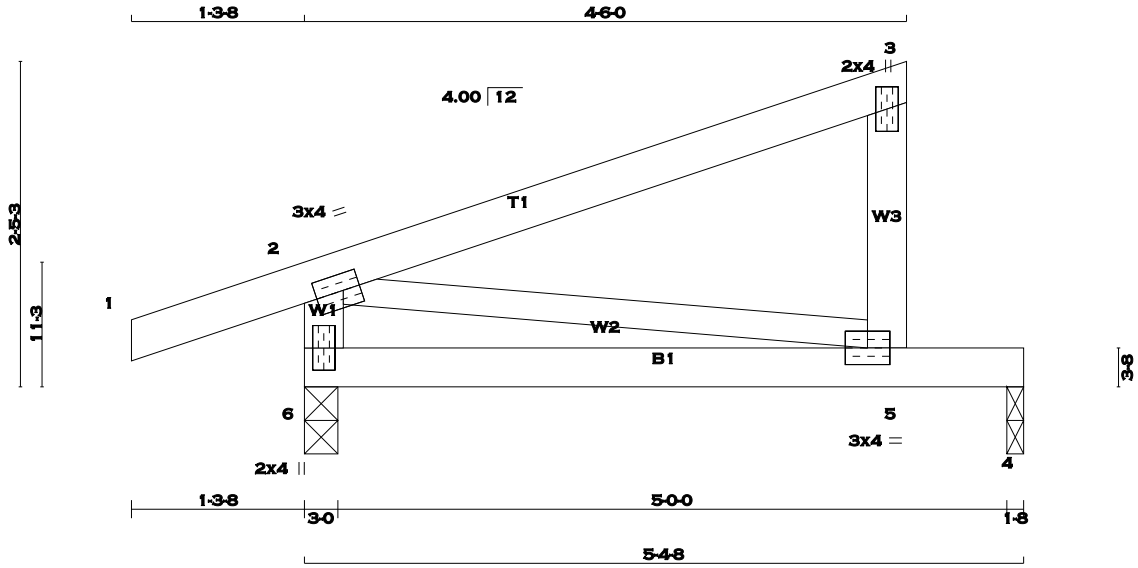

TOTAL WEIGHT = 4 X 19 = 76 lb [M]

LUMBER
N. L. G. A. RULES

CHORDS	SIZE		LUMBER	DESCR.
1 - 3	2x4	DRY	No.2	SPF
5 - 3	2x4	DRY	No.2	SPF
6 - 2	2x4	DRY	No.2	SPF
6 - 4	2x4	DRY	No.2	SPF
ALL WEBS	2x3	DRY	No.2	SPF

DRY: SEASONED LUMBER.

PLATES (table is in inches)

JT	TYPE	PLATES	W	LEN	Y	X
2	TMVW-t	MT20	3.0	4.0	1.50	1.50
3	TMV+p	MT20	2.0	4.0		
5	BMVW-t	MT20	3.0	4.0		
6	BMV1+p	MT20	2.0	4.0		

A SIZE FOR SIZE SUBSTITUTION OF MITEK MII20 WITH TEE-LOK TL20 PLATES IS ALLOWED.

DIMENSIONS, SUPPORTS AND LOADINGS SPECIFIED BY FABRICATOR TO BE VERIFIED BY BUILDING DESIGNER

BEARINGS

JT	FACTORED GROSS REACTION VERT	HORZ	MAXIMUM FACTORED GROSS REACTION DOWN	HORZ	UPLIFT	INPUT BRG IN-SX	REQRD BRG IN-SX
6	353	0	353	0	0	3-0	3-0
4	193	0	193	0	0	1-8	1-8

UNFACTORED REACTIONS

JT	1ST LCASE COMBINED	MAX./MIN. COMPONENT REACTIONS SNOW	LIVE	PERM.LIVE	WIND	DEAD	SOIL
6	246	184 / 0	0 / 0	0 / 0	0 / 0	61 / 0	0 / 0
4	137	88 / 0	0 / 0	0 / 0	0 / 0	49 / 0	0 / 0

BEARING MATERIAL TO BE SPF NO.2 OR BETTER AT JOINT(S) 6, 4

BRACING
TOP CHORD TO BE SHEATHED OR MAX. PURLIN SPACING = 10.00 FT.
MAX. UNBRACED BOTTOM CHORD LENGTH = 10.00 FT. OR RIGID CEILING DIRECTLY APPLIED.

ALL PITCH BREAKS AND PERIMETER CORNER JOINTS MUST BE LATERALLY RESTRAINED.

LOADING
TOTAL LOAD CASES: (4)

CHORDS

MEMB. FR-TO	MAX. FACTORED FORCE (LBS)	FACTORED VERT. LOAD (PLF) FROM	TO	LC1 MAX CSI (LC)	MAX. UNBRAC LENGTH
1- 2	0 / 16	-77.4	-77.4	0.10 (1)	10.00
2- 3	0 / 0	-77.4	-77.4	0.27 (1)	10.00
5- 3	-174 / 0	0.0	0.0	0.02 (1)	7.81
6- 2	-278 / 0	0.0	0.0	0.03 (1)	7.81
6- 5	0 / 0	-17.5	-17.5	0.22 (1)	10.00
5- 4	0 / 0	-17.5	-17.5	0.22 (1)	10.00

WEBS

MEMB. FR-TO	MAX. FACTORED FORCE (LBS)	MAX CSI (LC)
2- 5	0 / 0	0.00 (1)

DESIGN CRITERIA

SPECIFIED LOADS:

TOP CH.	LL	=	23.3	PSF
	DL	=	3.0	PSF
BOT CH.	LL	=	0.0	PSF
	DL	=	7.0	PSF
TOTAL LOAD		=	33.3	PSF

SPACING = 24.0 IN. C/C

THIS TRUSS IS DESIGNED FOR RESIDENTIAL OR SMALL BUILDING REQUIREMENTS OF PART 9, NBCC 2010

THIS DESIGN COMPLIES WITH:
- PART 9 OF OBC 2012 , BCBC 2012 , ABC 2014
- CSA 086-09
- TPIC 2011

(55 % OF 27.2 P.S.F. G.S.L. PLUS 8.4 P.S.F. RAIN LOAD) EQUALS 23.3 P.S.F. SPECIFIED ROOF LIVE LOAD

ALLOWABLE DEFL.(LL)= L/360 (0.19")
CALCULATED VERT. DEFL.(LL) = L/ 999 (0.04")
ALLOWABLE DEFL.(TL)= L/360 (0.19")
CALCULATED VERT. DEFL.(TL) = L/ 709 (0.09")

CSI: TC=0.27 (2-3:1) , BC=0.22 (5-6:1) , WB=0.00 (2-5:1) , SSI=0.15 (4-5:1)

DOL LUMBER=1.00 NAIL=1.00 LS BEND=1.10 COMP=1.10 SHEAR=1.10 TENS= 1.10

COMPANION LIVE LOAD FACTOR = 0.50

TRUSS PLATE MANUFACTURER IS NOT RESPONSIBLE FOR QUALITY CONTROL IN THE TRUSS MANUFACTURING PLANT .

NAIL VALUES

PLATE	GRIP(DRY) (PSI) MAX	MIN	SHEAR (PLI) MAX	MIN	SECTION (PLI) MAX	MIN
MT20	618	354	1667	822	2284	1656

PLATE PLACEMENT TOL. = 0.250 inches

PLATE ROTATION TOL. = 5.0 Deg.

JSI GRIP= 0.25 (2) (INPUT = 0.90)
JSI METAL= 0.05 (6) (INPUT = 1.00)

LICENSED PROFESSIONAL ENGINEER
P.M. TREVISAN
100136551
March 16th, 2017
PROVINCE OF ONTARIO

RECEIVED
TOWN OF MILTON
MAR 29, 2017
17-5327
BUILDING DIVISION

KOTT

JOB NAME	TRUSS NAME	QUANTITY	PLY	JOB DESC.	DRWG NO.
PT0317-093	**T106**	**2**	**1**	TRUSS DESC. LECCO RIDGE-BLOCK 343	ENG JOB: PT0317-093

KOTT , Stouffville, ON, CGC

Version 8.100 S Feb 9 2017 MiTek Industries, Inc. Thu Mar 16 07:55:46 2017 Page 1

ID:EvTixTQDI5yR1QLotZTBr_yE?HJ-p61wx0mW?0poiTh4djCFM4rZYbC?RFLq7E5w9rzaRGx

SCALE: 3/16"=1'

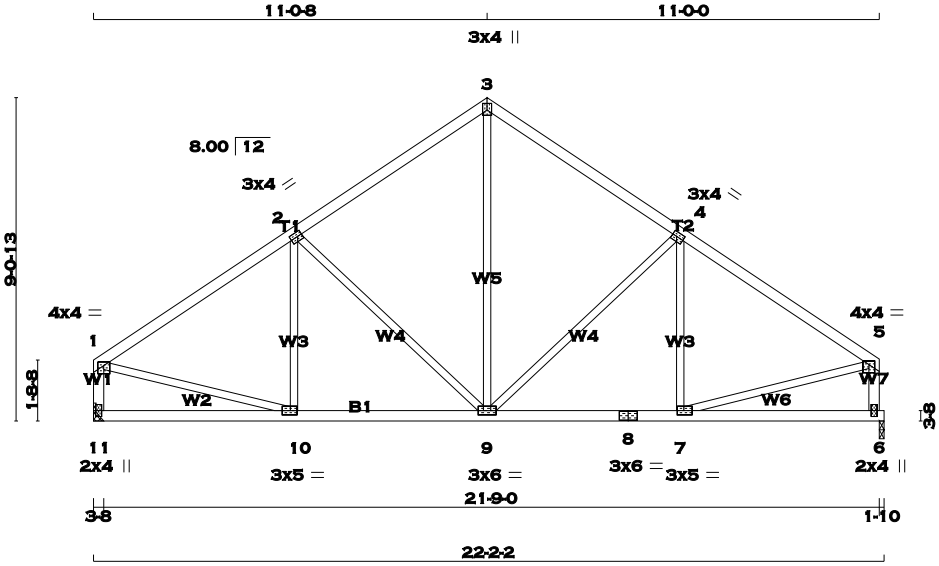

TOTAL WEIGHT = 2 X 94 = 188 lb

[M][F]

LUMBER

N. L. G. A. RULES

CHORDS	SIZE		LUMBER	DESCR.
1 - 3	2x4	DRY	No.2	SPF
3 - 5	2x4	DRY	No.2	SPF
11 - 1	2x4	DRY	No.2	SPF
6 - 5	2x4	DRY	No.2	SPF
11 - 8	2x4	DRY	No.2	SPF
8 - 6	2x4	DRY	No.2	SPF
ALL WEBS EXCEPT	2x3	DRY	No.2	SPF

DRY: SEASONED LUMBER.

PLATES (table is in inches)

JT	TYPE	PLATES	W	LEN	Y	X
1	TMVW-p	MT20	4.0	4.0	1.25	2.00
2	TMWW-t	MT20	3.0	4.0	1.50	1.50
3	TTW+p	MT20	3.0	4.0	2.25	1.50
4	TMWW-t	MT20	3.0	4.0	1.50	1.50
5	TMVW-p	MT20	4.0	4.0	1.25	2.00
6	BMV1+p	MT20	2.0	4.0		
7	BMWW-t	MT20	3.0	5.0	1.50	2.25
8	BS-t	MT20	3.0	6.0		
9	BMWWW-t	MT20	3.0	6.0		
10	BMWW-t	MT20	3.0	5.0	1.50	2.25
11	BMV1+p	MT20	2.0	4.0		

A SIZE FOR SIZE SUBSTITUTION OF MITEK MII20 WITH TEE-LOK TL20 PLATES IS ALLOWED.

DIMENSIONS, SUPPORTS AND LOADINGS SPECIFIED BY FABRICATOR TO BE VERIFIED BY BUILDING DESIGNER

BEARINGS

JT	FACTORED GROSS REACTION VERT	HORZ	MAXIMUM FACTORED GROSS REACTION DOWN	HORZ	UPLIFT	INPUT BRG IN-SX	REQRD BRG IN-SX
11	1045	0	1045	0	0	HANGER BY OTHERS MIN. SEAT SIZE: 3-8	
6	1045	0	1045	0	0	1-10	1-10

UNFACTORED REACTIONS

JT	1ST LCASE COMBINED	MAX./MIN. COMPONENT REACTIONS SNOW	LIVE	PERM.LIVE	WIND	DEAD	SOIL
11	734	513 / 0	0 / 0	0 / 0	0 / 0	220 / 0	0 / 0
6	734	513 / 0	0 / 0	0 / 0	0 / 0	220 / 0	0 / 0

BEARING MATERIAL TO BE SPF NO.2 OR BETTER AT JOINT(S) 6

BRACING

TOP CHORD TO BE SHEATHED OR MAX. PURLIN SPACING = 5.69 FT.
MAX. UNBRACED BOTTOM CHORD LENGTH = 10.00 FT. OR RIGID CEILING DIRECTLY APPLIED.

ALL PITCH BREAKS AND PERIMETER CORNER JOINTS MUST BE LATERALLY RESTRAINED.

LOADING

TOTAL LOAD CASES: (4)

CHORDS

MEMB. FR-TO	MAX. FACTORED FORCE (LBS)	FROM	FACTORED VERT. LOAD LC1 (PLF) TO	MAX CSI (LC)	MAX. UNBRAC LENGTH
1- 2	-1075 / 0	-77.4	-77.4	0.33 (1)	5.69
2- 3	-826 / 0	-77.4	-77.4	0.31 (1)	6.25
3- 4	-826 / 0	-77.4	-77.4	0.31 (1)	6.25
4- 5	-1069 / 0	-77.4	-77.4	0.32 (1)	5.71
11- 1	-1005 / 0	0.0	0.0	0.11 (1)	7.80
6- 5	-1005 / 0	0.0	0.0	0.11 (1)	7.80
11-10	0 / 0	-17.5	-17.5	0.13 (4)	10.00
10- 9	0 / 918	-17.5	-17.5	0.21 (1)	10.00
9- 8	0 / 913	-17.5	-17.5	0.21 (1)	10.00
8- 7	0 / 913	-17.5	-17.5	0.21 (1)	10.00
7- 6	0 / 0	-17.5	-17.5	0.13 (4)	10.00

WEBS

MEMB. FR-TO	MAX. FACTORED FORCE (LBS)	MAX CSI (LC)
10- 2	-119 / 57	0.05 (1)
2- 9	-351 / 0	0.39 (1)
9- 3	0 / 570	0.13 (1)
9- 4	-345 / 0	0.38 (1)
7- 4	-125 / 55	0.06 (1)
1-10	0 / 945	0.21 (1)
7- 5	0 / 942	0.21 (1)

DESIGN CRITERIA

SPECIFIED LOADS:

TOP	CH.	LL	=	23.3	PSF
		DL	=	3.0	PSF
BOT	CH.	LL	=	0.0	PSF
		DL	=	7.0	PSF
TOTAL	LOAD		=	33.3	PSF

SPACING = 24.0 IN. C/C

THIS TRUSS IS DESIGNED FOR RESIDENTIAL OR SMALL BUILDING REQUIREMENTS OF PART 9, NBCC 2010

THIS DESIGN COMPLIES WITH:
- PART 9 OF OBC 2012 , BCBC 2012 , ABC 2014
- CSA 086-09
- TPIC 2011

(55 % OF 27.2 P.S.F. G.S.L. PLUS 8.4 P.S.F. RAIN LOAD) EQUALS 23.3 P.S.F. SPECIFIED ROOF LIVE LOAD

ALLOWABLE DEFL.(LL)= L/360 (0.73")
CALCULATED VERT. DEFL.(LL) = L/ 999 (0.03")
ALLOWABLE DEFL.(TL)= L/360 (0.73")
CALCULATED VERT. DEFL.(TL) = L/ 999 (0.06")

CSI: TC=0.33 (1-2:1) , BC=0.21 (9-10:1) , WB=0.39 (2-9:1) , SSI=0.17 (1-2:1)

DOL LUMBER=1.00 NAIL=1.00 LS BEND=1.10 COMP=1.10 SHEAR=1.10 TENS= 1.10

COMPANION LIVE LOAD FACTOR = 0.50

TRUSS PLATE MANUFACTURER IS NOT RESPONSIBLE FOR QUALITY CONTROL IN THE TRUSS MANUFACTURING PLANT .

NAIL VALUES

PLATE	GRIP(DRY) (PSI) MAX	MIN	SHEAR (PLI) MAX	MIN	SECTION (PLI) MAX	MIN
MT20	618	354	1667	822	2284	1656

PLATE PLACEMENT TOL. = 0.250 inches

PLATE ROTATION TOL. = 5.0 Deg.

JSI GRIP= 0.90 (1) (INPUT = 0.90)
JSI METAL= 0.32 (1) (INPUT = 1.00)

LICENSED PROFESSIONAL ENGINEER
P.M. TREVISAN
100136551
March 16th, 2017
PROVINCE OF ONTARIO

RECEIVED
TOWN OF MILTON
MAR 29, 2017
17-5327
BUILDING DIVISION

KOTT

JOB NAME	TRUSS NAME	QUANTITY	PLY	JOB DESC.	DRWG NO.
PT0317-093	**T107**	**1**	**1**	TRUSS DESC. LECCO RIDGE-BLOCK 343	

ENG JOB: PT0317-093

KOTT , Stouffville, ON, CGC

Version 8.100 S Feb 9 2017 MiTek Industries, Inc. Thu Mar 16 07:55:46 2017 Page 1
ID:EvTixTQDI5yR1QLotZTBr_yE?HJ-p61wx0mW?0poiTh4djCFM4rZbbC1RGTq7E5w9rzaRGx

SCALE: 3/16"=1'

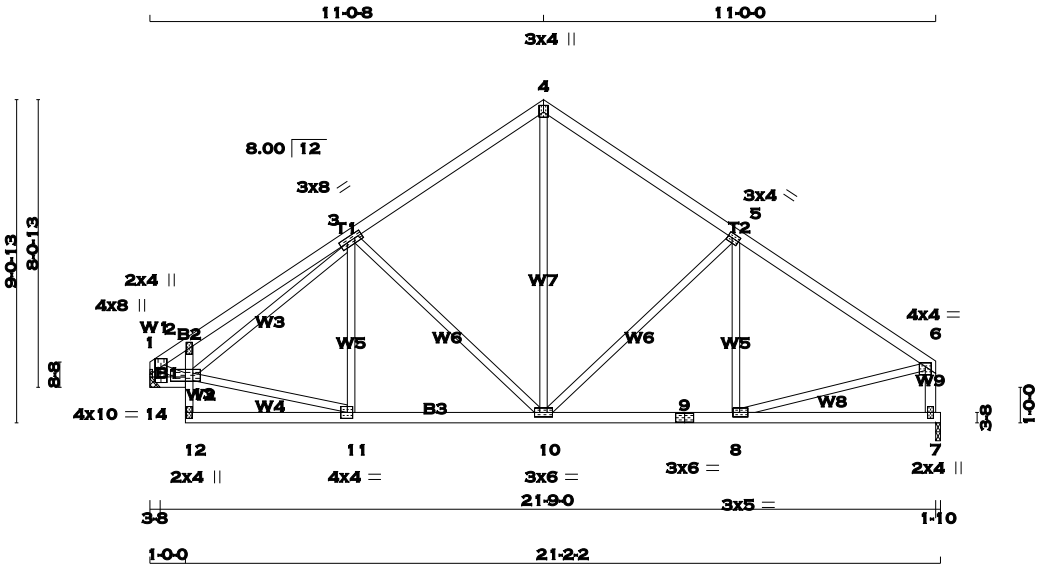

TOTAL WEIGHT = 99 lb

[M][F]

LUMBER

N. L. G. A. RULES

CHORDS	SIZE		LUMBER	DESCR.
1 - 4	2x4	DRY	No.2	SPF
4 - 6	2x4	DRY	No.2	SPF
14 - 1	2x4	DRY	No.2	SPF
7 - 6	2x4	DRY	No.2	SPF
14 - 13	2x4	DRY	No.2	SPF
12 - 2	2x3	DRY	No.2	SPF
12 - 9	2x4	DRY	No.2	SPF
9 - 7	2x4	DRY	No.2	SPF
ALL WEBS EXCEPT	2x3	DRY	No.2	SPF

DRY: SEASONED LUMBER.

PLATES (table is in inches)

JT	TYPE	PLATES	W	LEN	Y	X
1						
1	TMBMVW1*+p	MT20	4.0	8.0	5.00	1.75
2	TMV+p	MT20	2.0	4.0		
3	TMWWW-t	MT20	3.0	8.0		
4	TTW+p	MT20	3.0	4.0	2.25	1.50
5	TMWW-t	MT20	3.0	4.0	1.50	1.50
6	TMVW-p	MT20	4.0	4.0	1.25	2.00
7	BMV1+p	MT20	2.0	4.0		
8	BMWW-t	MT20	3.0	5.0	1.50	2.25
9	BS-t	MT20	3.0	6.0		
10	BMWWW-t	MT20	3.0	6.0		
11	BMWW-t	MT20	4.0	4.0	2.00	1.75
12	BMV+p	MT20	2.0	4.0		
13	BVMWWW-l	MT20	4.0	10.0	1.50	5.00
14						

A SIZE FOR SIZE SUBSTITUTION OF MITEK MII20 WITH TEE-LOK TL20 PLATES IS ALLOWED.

DIMENSIONS, SUPPORTS AND LOADINGS SPECIFIED BY FABRICATOR TO BE VERIFIED BY BUILDING DESIGNER

BEARINGS

JT	FACTORED GROSS REACTION VERT	HORZ	MAXIMUM FACTORED GROSS REACTION DOWN	HORZ	UPLIFT	INPUT BRG IN-SX	REQRD BRG IN-SX
14	1045	0	1045	0	0	HANGER BY OTHERS	
						MIN. SEAT SIZE: 3-8	
7	1045	0	1045	0	0	1-10	1-10

UNFACTORED REACTIONS

JT	1ST LCASE COMBINED	MAX./MIN. COMPONENT REACTIONS SNOW	LIVE	PERM.LIVE	WIND	DEAD	SOIL
14	734	513 / 0	0 / 0	0 / 0	0 / 0	220 / 0	0 / 0
7	734	513 / 0	0 / 0	0 / 0	0 / 0	220 / 0	0 / 0

BEARING MATERIAL TO BE SPF NO.2 OR BETTER AT JOINT(S) 7

BRACING

TOP CHORD TO BE SHEATHED OR MAX. PURLIN SPACING = 5.68 FT.
MAX. UNBRACED BOTTOM CHORD LENGTH = 7.81 FT. OR RIGID CEILING DIRECTLY APPLIED.

ALL PITCH BREAKS AND PERIMETER CORNER JOINTS MUST BE LATERALLY RESTRAINED.

LOADING

TOTAL LOAD CASES: (4)

CHORDS

MEMB. FR-TO	MAX. FORCE (LBS)	FACTORED VERT. LOAD (PLF) FROM	TO	LC1 MAX CSI (LC)	MAX. UNBRAC LENGTH
1- 2	-1202 / 0	-77.4	-77.4	0.05 (1)	5.79
2- 3	-1128 / 0	-77.4	-77.4	0.26 (1)	5.68
3- 4	-821 / 0	-77.4	-77.4	0.27 (1)	6.25
4- 5	-826 / 0	-77.4	-77.4	0.31 (1)	6.25
5- 6	-1069 / 0	-77.4	-77.4	0.32 (1)	5.71
14- 1	-1036 / 0	0.0	0.0	0.10 (1)	7.71
7- 6	-1005 / 0	0.0	0.0	0.11 (1)	7.80
14-13	0 / 0	-17.5	-17.5	0.01 (4)	10.00
12-13	0 / 34	0.0	0.0	0.14 (1)	10.00
13- 2	-177 / 0	0.0	0.0	0.10 (1)	7.81
12-11	0 / 50	-17.5	-17.5	0.10 (4)	10.00
11-10	0 / 906	-17.5	-17.5	0.20 (1)	10.00
10- 9	0 / 913	-17.5	-17.5	0.21 (1)	10.00
9- 8	0 / 913	-17.5	-17.5	0.21 (1)	10.00
8- 7	0 / 0	-17.5	-17.5	0.13 (4)	10.00

WEBS

MEMB. FR-TO	MAX. FORCE (LBS)	MAX CSI (LC)
13-11	0 / 878	0.20 (1)
13- 3	0 / 70	0.02 (1)
11- 3	-93 / 53	0.04 (1)
3-10	-334 / 0	0.37 (1)
10- 4	0 / 560	0.13 (1)
10- 5	-345 / 0	0.38 (1)
8- 5	-124 / 54	0.06 (1)
1-13	0 / 1078	0.24 (1)
8- 6	0 / 941	0.21 (1)

DESIGN CRITERIA

SPECIFIED LOADS:

TOP	CH.	LL	=	23.3	PSF
		DL	=	3.0	PSF
BOT	CH.	LL	=	0.0	PSF
		DL	=	7.0	PSF
TOTAL	LOAD		=	33.3	PSF

SPACING = 24.0 IN. C/C

THIS TRUSS IS DESIGNED FOR RESIDENTIAL OR SMALL BUILDING REQUIREMENTS OF PART 9, NBCC 2010

THIS DESIGN COMPLIES WITH:
- PART 9 OF OBC 2012 , BCBC 2012 , ABC 2014
- CSA 086-09
- TPIC 2011

(55 % OF 27.2 P.S.F. G.S.L. PLUS 8.4 P.S.F. RAIN LOAD) EQUALS 23.3 P.S.F. SPECIFIED ROOF LIVE LOAD

ALLOWABLE DEFL.(LL)= L/360 (0.73")
CALCULATED VERT. DEFL.(LL) = L/ 999 (0.03")
ALLOWABLE DEFL.(TL)= L/360 (0.73")
CALCULATED VERT. DEFL.(TL) = L/ 999 (0.06")

CSI: TC=0.32 (5-6:1) , BC=0.21 (8-10:1) , WB=0.38 (5-10:1) , SSI=0.17 (5-6:1)

DOL LUMBER=1.00 NAIL=1.00 LS BEND=1.10 COMP=1.10 SHEAR=1.10 TENS= 1.10

COMPANION LIVE LOAD FACTOR = 0.50

AUTOSOLVE RIGHT HEEL ONLY

TRUSS PLATE MANUFACTURER IS NOT RESPONSIBLE FOR QUALITY CONTROL IN THE TRUSS MANUFACTURING PLANT .

NAIL VALUES

PLATE	GRIP(DRY) (PSI) MAX	MIN	SHEAR (PLI) MAX	MIN	SECTION (PLI) MAX	MIN
MT20	618	354	1667	822	2284	1656

PLATE PLACEMENT TOL. = 0.250 inches

PLATE ROTATION TOL. = 5.0 Deg.

JSI GRIP= 0.89 (6) (INPUT = 0.90)
JSI METAL= 0.32 (11) (INPUT = 1.00)

LICENSED PROFESSIONAL ENGINEER
P.M. TREVISAN
100136551
March 16th, 2017
PROVINCE OF ONTARIO

RECEIVED
TOWN OF MILTON
MAR 29, 2017
17-5327
BUILDING DIVISION

KOTT

JOB NAME	TRUSS NAME	QUANTITY	PLY	JOB DESC.	DRWG NO.
PT0317-093	T108	1	1	TRUSS DESC. LECCO RIDGE-BLOCK 343	ENG JOB: PT0317-093

KOTT , Stouffville, ON, CGC

Version 8.100 S Feb 9 2017 MiTek Industries, Inc. Thu Mar 16 07:55:47 2017 Page 1
ID:EvTixTQDI5yR1QLotZTBr_yE?HJ-HJbI9Ln8mKxfKdGHAQjUvHOj0_YJAit_MuqThHzaRGw

SCALE = 1:64.8

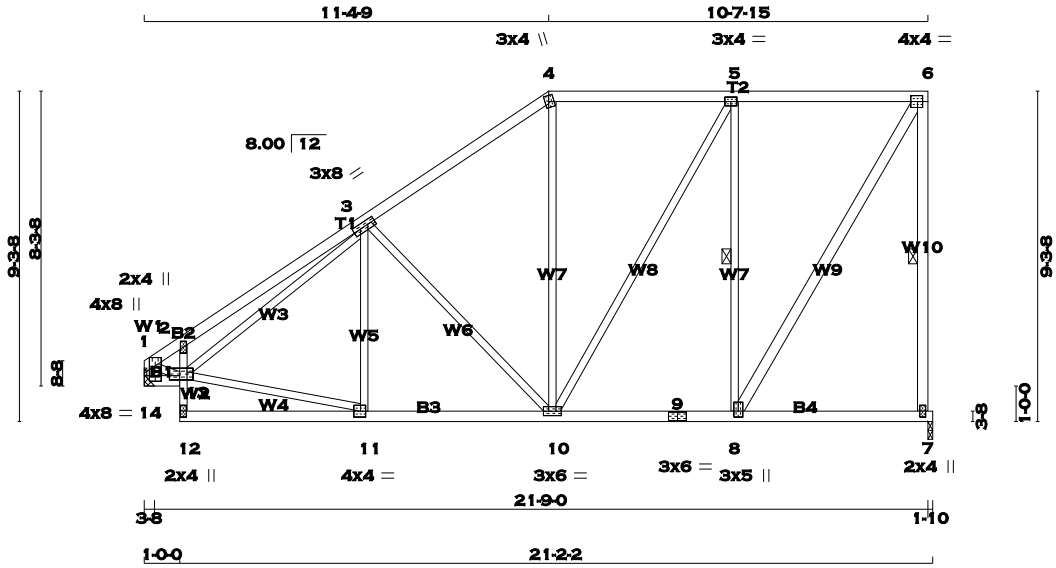

TOTAL WEIGHT = 119 lb

[M][F]

LUMBER

N. L. G. A. RULES

CHORDS	SIZE		LUMBER	DESCR.
1 - 4	2x4	DRY	No.2	SPF
4 - 6	2x4	DRY	No.2	SPF
7 - 6	2x4	DRY	No.2	SPF
14 - 1	2x4	DRY	No.2	SPF
14 - 13	2x4	DRY	No.2	SPF
12 - 2	2x3	DRY	No.2	SPF
12 - 9	2x4	DRY	No.2	SPF
9 - 7	2x4	DRY	No.2	SPF
ALL WEBS EXCEPT	2x3	DRY	No.2	SPF
8 - 6	2x4	DRY	No.2	SPF

DRY: SEASONED LUMBER.

PLATES (table is in inches)

JT	TYPE	PLATES	W	LEN	Y	X
1						
1	TMBMVW1*+p	MT20	4.0	8.0	5.00	1.75
2	TMV+p	MT20	2.0	4.0		
3	TMWWW-t	MT20	3.0	8.0		
4	TTW+m	MT20	3.0	4.0	2.00	1.25
5	TMWW-t	MT20	3.0	4.0		
6	TMVW-t	MT20	4.0	4.0	2.00	1.75
7	BMV1+p	MT20	2.0	4.0		
8	BMWW+t	MT20	3.0	5.0	2.00	1.50
9	BS-t	MT20	3.0	6.0		
10	BMWWW-t	MT20	3.0	6.0		
11	BMWW-t	MT20	4.0	4.0	2.00	1.75
12	BMV+p	MT20	2.0	4.0		
13	BVMWWW-l	MT20	4.0	8.0	1.50	3.50
14						

A SIZE FOR SIZE SUBSTITUTION OF MITEK MII20 WITH TEE-LOK TL20 PLATES IS ALLOWED.

DIMENSIONS, SUPPORTS AND LOADINGS SPECIFIED BY FABRICATOR TO BE VERIFIED BY BUILDING DESIGNER

BEARINGS

JT	FACTORED GROSS REACTION VERT	HORZ	MAXIMUM FACTORED GROSS REACTION DOWN	HORZ	UPLIFT	INPUT BRG IN-SX	REQRD BRG IN-SX
7	1045	0	1045	0	0	1-10	1-10
14	1045	0	1045	0	0	HANGER BY OTHERS	
						MIN. SEAT SIZE: 3-8	

UNFACTORED REACTIONS

JT	1ST LCASE COMBINED	MAX./MIN. COMPONENT REACTIONS SNOW	LIVE	PERM.LIVE	WIND	DEAD	SOIL
7	734	513 / 0	0 / 0	0 / 0	0 / 0	220 / 0	0 / 0
14	734	513 / 0	0 / 0	0 / 0	0 / 0	220 / 0	0 / 0

BEARING MATERIAL TO BE SPF NO.2 OR BETTER AT JOINT(S) 7

BRACING

TOP CHORD TO BE SHEATHED OR MAX. PURLIN SPACING = 5.60 FT.
MAX. UNBRACED BOTTOM CHORD LENGTH = 7.81 FT. OR RIGID CEILING DIRECTLY APPLIED.

ALL PITCH BREAKS AND PERIMETER CORNER JOINTS MUST BE LATERALLY RESTRAINED.

1 - 2x3 SPF No.2 LATERAL BRACE(S) AT 1/ 2 LENGTH OF 6-7. DBS = 14-0-0 . CBF = 88 LBS.
1 - 2x3 SPF No.2 LATERAL BRACE(S) AT 1/ 2 LENGTH OF 5-8. DBS = 20-0-0 . CBF = 93 LBS.

DBS = DIAGONAL BRACE SPACING (MAX). CBF = CUMULATIVE BRACING FORCE. FASTEN LATERAL BRACE(S) USING (0.122"X3") SPIRAL NAILS : 1 NAIL FOR 2x3 BRACE(S), 2 FOR 1x4, 2x4, 2x5, 3 FOR 2x6, 4 FOR 2x8, 5 FOR 2x10, AND 6 FOR 2x12.

END VERTICAL(S) MUST BE SHEATHED OR HAVE BRACES AS INDICATED IN THE MAX. UNBRACED LENGTH COLUMN OF THE TABLE BELOW

LOADING

TOTAL LOAD CASES: (4)

CHORDS

MEMB. FR-TO	MAX. FACTORED FORCE (LBS)	FACTORED VERT. LOAD LC1 (PLF) FROM	TO	MAX CSI (LC)	MAX. UNBRAC LENGTH
1- 2	-1227 / 0	-77.4	-77.4	0.10 (1)	5.70
2- 3	-1167 / 0	-77.4	-77.4	0.27 (1)	5.60
3- 4	-795 / 0	-77.4	-77.4	0.26 (1)	6.25
4- 5	-641 / 0	-77.4	-77.4	0.29 (1)	6.25
5- 6	-511 / 0	-77.4	-77.4	0.28 (1)	6.25
7- 6	-1007 / 0	0.0	0.0	0.41 (1)	6.24
14- 1	-1036 / 0	0.0	0.0	0.10 (1)	7.71
14-13	0 / 0	-17.5	-17.5	0.01 (4)	10.00
12-13	0 / 39	0.0	0.0	0.16 (1)	10.00
13- 2	-242 / 0	0.0	0.0	0.12 (1)	7.81
12-11	0 / 57	-17.5	-17.5	0.12 (4)	10.00
11-10	0 / 897	-17.5	-17.5	0.21 (1)	10.00
10- 9	0 / 511	-17.5	-17.5	0.16 (4)	10.00
9- 8	0 / 511	-17.5	-17.5	0.16 (4)	10.00
8- 7	0 / 0	-17.5	-17.5	0.12 (4)	10.00

WEBS

MEMB. FR-TO	MAX. FACTORED FORCE (LBS)	MAX CSI (LC)
13-11	0 / 856	0.19 (1)
13- 3	0 / 117	0.03 (1)
11- 3	-62 / 67	0.03 (1)
3-10	-368 / 0	0.43 (1)
10- 4	0 / 118	0.03 (4)
10- 5	0 / 264	0.06 (1)
8- 5	-740 / 0	0.42 (1)
8- 6	0 / 988	0.16 (1)
1-13	0 / 1119	0.25 (1)

DESIGN CRITERIA

SPECIFIED LOADS:

TOP CH.	LL	=	23.3	PSF
	DL	=	3.0	PSF
BOT CH.	LL	=	0.0	PSF
	DL	=	7.0	PSF
TOTAL LOAD		=	33.3	PSF

SPACING = 24.0 IN. C/C

LOADING IN FLAT SECTION BASED ON A SLOPE OF 6.00/12

THIS TRUSS IS DESIGNED FOR RESIDENTIAL OR SMALL BUILDING REQUIREMENTS OF PART 9, NBCC 2010

THIS DESIGN COMPLIES WITH:
- PART 9 OF OBC 2012 , BCBC 2012 , ABC 2014
- CSA 086-09
- TPIC 2011

(55 % OF 27.2 P.S.F. G.S.L. PLUS 8.4 P.S.F. RAIN LOAD) EQUALS 23.3 P.S.F. SPECIFIED ROOF LIVE LOAD

ALLOWABLE DEFL.(LL)= L/360 (0.73")
CALCULATED VERT. DEFL.(LL) = L/ 999 (0.03")
ALLOWABLE DEFL.(TL)= L/360 (0.73")
CALCULATED VERT. DEFL.(TL) = L/ 999 (0.06")

CSI: TC=0.41 (6-7:1) , BC=0.21 (10-11:1) , WB=0.43 (3-10:1) , SSI=0.20 (5-6:1)

DOL LUMBER=1.00 NAIL=1.00 LS BEND=1.10 COMP=1.10 SHEAR=1.10 TENS= 1.10

COMPANION LIVE LOAD FACTOR = 0.50

AUTOSOLVE RIGHT HEEL ONLY

TRUSS PLATE MANUFACTURER IS NOT RESPONSIBLE FOR QUALITY CONTROL IN THE TRUSS MANUFACTURING PLANT .

NAIL VALUES

PLATE	GRIP(DRY) (PSI) MAX	MIN	SHEAR (PLI) MAX	MIN	SECTION (PLI) MAX	MIN
MT20	618	354	1667	822	2284	1656

PLATE PLACEMENT TOL. = 0.250 inches

PLATE ROTATION TOL. = 5.0 Deg.

JSI GRIP= 0.89 (6) (INPUT = 0.90)
JSI METAL= 0.31 (11) (INPUT = 1.00)

LICENSED PROFESSIONAL ENGINEER
P.M. TREVISAN
100136551
March 16th, 2017
PROVINCE OF ONTARIO

RECEIVED
TOWN OF MILTON
MAR 29, 2017
17-5327
BUILDING DIVISION

KOTT

JOB NAME	TRUSS NAME	QUANTITY	PLY	JOB DESC.	DRWG NO.
PT0317-093	**T109**	**1**	**1**	TRUSS DESC. LECCO RIDGE-BLOCK 343	ENG JOB: PT0317-093

KOTT , Stouffville, ON, CGC

Version 8.100 S Feb 9 2017 MiTek Industries, Inc. Thu Mar 16 07:55:48 2017 Page 1

ID:EvTixTQDI5yR1QLotZTBr_yE?HJ-lV9hMhomXe3WxnrTk8FjRVwssOuBv7x7bYa0EkzaRGv

SCALE = 1:75.9

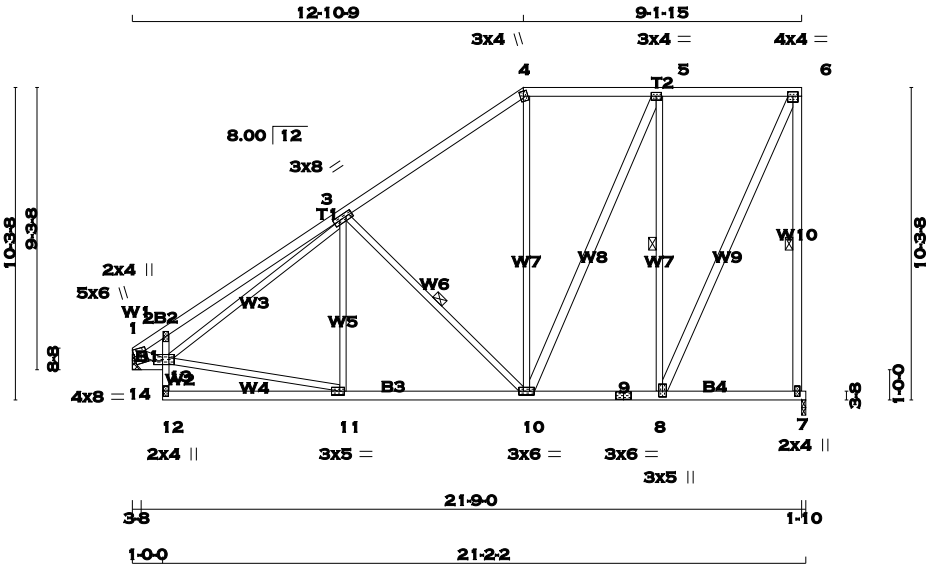

TOTAL WEIGHT = 129 lb

[M][F]

LUMBER

N. L. G. A. RULES

CHORDS	SIZE		LUMBER	DESCR.
1 - 4	2x4	DRY	No.2	SPF
4 - 6	2x4	DRY	No.2	SPF
7 - 6	2x4	DRY	No.2	SPF
14 - 1	2x4	DRY	No.2	SPF
14 - 13	2x4	DRY	No.2	SPF
12 - 2	2x3	DRY	No.2	SPF
12 - 9	2x4	DRY	No.2	SPF
9 - 7	2x4	DRY	No.2	SPF
ALL WEBS	2x3	DRY	No.2	SPF
EXCEPT				
10 - 5	2x4	DRY	No.2	SPF
8 - 6	2x4	DRY	No.2	SPF

DRY: SEASONED LUMBER.

PLATES (table is in inches)

JT	TYPE	PLATES	W	LEN	Y	X
1						
1	TMBMVW1*+m	MT20	5.0	6.0	2.00	2.00
2	TMV+p	MT20	2.0	4.0		
3	TMWWW-t	MT20	3.0	8.0		
4	TTW+m	MT20	3.0	4.0	2.00	1.25
5	TMWW-t	MT20	3.0	4.0		
6	TMVW-t	MT20	4.0	4.0	1.75	2.00
7	BMV1+p	MT20	2.0	4.0		
8	BMWW+t	MT20	3.0	5.0	2.25	1.50
9	BS-t	MT20	3.0	6.0		
10	BMWWW-t	MT20	3.0	6.0		
11	BMWW-t	MT20	3.0	5.0	1.50	1.75
12	BMV+p	MT20	2.0	4.0		
13	BVMWWW-l	MT20	4.0	8.0	1.50	3.50
14						

A SIZE FOR SIZE SUBSTITUTION OF MITEK MII20 WITH TEE-LOK TL20 PLATES IS ALLOWED.

DIMENSIONS, SUPPORTS AND LOADINGS SPECIFIED BY FABRICATOR TO BE VERIFIED BY BUILDING DESIGNER

BEARINGS

JT	FACTORED GROSS REACTION VERT	HORZ	MAXIMUM FACTORED GROSS REACTION DOWN	HORZ	UPLIFT	INPUT BRG IN-SX	REQRD BRG IN-SX
7	1045	0	1045	0	0	1-10	1-10
14	1045	0	1045	0	0	HANGER BY OTHERS	
						MIN. SEAT SIZE: 3-8	

UNFACTORED REACTIONS

JT	1ST LCASE COMBINED	MAX./MIN. COMPONENT REACTIONS SNOW	LIVE	PERM.LIVE	WIND	DEAD	SOIL
7	734	513 / 0	0 / 0	0 / 0	0 / 0	220 / 0	0 / 0
14	734	513 / 0	0 / 0	0 / 0	0 / 0	220 / 0	0 / 0

BEARING MATERIAL TO BE SPF NO.2 OR BETTER AT JOINT(S) 7

BRACING

TOP CHORD TO BE SHEATHED OR MAX. PURLIN SPACING = 5.44 FT.
MAX. UNBRACED BOTTOM CHORD LENGTH = 7.81 FT. OR RIGID CEILING DIRECTLY APPLIED.

ALL PITCH BREAKS AND PERIMETER CORNER JOINTS MUST BE LATERALLY RESTRAINED.

1 - 2x3 SPF No.2 LATERAL BRACE(S) AT 1/ 2 LENGTH OF 6-7. DBS = 14-0-0 . CBF = 89 LBS.
1 - 2x3 SPF No.2 LATERAL BRACE(S) AT 1/ 2 LENGTH OF 3-10. DBS = 20-0-0 . CBF = 58 LBS.
1 - 2x3 SPF No.2 LATERAL BRACE(S) AT 1/ 2 LENGTH OF 5-8. DBS = 18-0-0 . CBF = 88 LBS.

DBS = DIAGONAL BRACE SPACING (MAX). CBF = CUMULATIVE BRACING FORCE. FASTEN LATERAL BRACE(S) USING (0.122"X3") SPIRAL NAILS : 1 NAIL FOR 2x3 BRACE(S), 2 FOR 1x4, 2x4, 2x5, 3 FOR 2x6, 4 FOR 2x8, 5 FOR 2x10, AND 6 FOR 2x12.

END VERTICAL(S) MUST BE SHEATHED OR HAVE BRACES AS INDICATED IN THE MAX. UNBRACED LENGTH COLUMN OF THE TABLE BELOW

LOADING

TOTAL LOAD CASES: (4)

CHORDS

MEMB. FR-TO	MAX. FACTORED FORCE (LBS)	FACTORED VERT. LOAD LC1 (PLF) FROM	TO	MAX CSI (LC)	MAX. UNBRAC LENGTH
1- 2	-1251 / 0	-77.4	-77.4	0.14 (1)	5.61
2- 3	-1194 / 0	-77.4	-77.4	0.35 (1)	5.44
3- 4	-702 / 0	-77.4	-77.4	0.35 (1)	6.25
4- 5	-560 / 0	-77.4	-77.4	0.21 (1)	6.25
5- 6	-408 / 0	-77.4	-77.4	0.20 (1)	6.25
7- 6	-1012 / 0	0.0	0.0	0.53 (1)	6.23
14- 1	-1036 / 0	0.0	0.0	0.10 (1)	7.71
14-13	0 / 0	-17.5	-17.5	0.01 (4)	10.00
12-13	0 / 44	0.0	0.0	0.19 (1)	10.00
13- 2	-298 / 0	0.0	0.0	0.14 (1)	7.81
12-11	0 / 67	-17.5	-17.5	0.16 (4)	10.00
11-10	0 / 890	-17.5	-17.5	0.23 (1)	10.00
10- 9	0 / 408	-17.5	-17.5	0.11 (4)	10.00
9- 8	0 / 408	-17.5	-17.5	0.11 (4)	10.00
8- 7	0 / 0	-17.5	-17.5	0.08 (4)	10.00

WEBS

MEMB. FR-TO	MAX. FACTORED FORCE (LBS)	MAX CSI (LC)
13-11	0 / 835	0.19 (1)
13- 3	0 / 156	0.04 (1)
11- 3	-21 / 93	0.03 (4)
3-10	-464 / 0	0.23 (1)
10- 4	0 / 78	0.03 (4)
10- 5	0 / 379	0.06 (1)
8- 5	-784 / 0	0.57 (1)
8- 6	0 / 963	0.15 (1)
1-13	0 / 1158	0.26 (1)

DESIGN CRITERIA

SPECIFIED LOADS:

TOP CH.	LL	=	23.3	PSF
	DL	=	3.0	PSF
BOT CH.	LL	=	0.0	PSF
	DL	=	7.0	PSF
TOTAL LOAD		=	33.3	PSF

SPACING = 24.0 IN. C/C

LOADING IN FLAT SECTION BASED ON A SLOPE OF 6.00/12

THIS TRUSS IS DESIGNED FOR RESIDENTIAL OR SMALL BUILDING REQUIREMENTS OF PART 9, NBCC 2010

THIS DESIGN COMPLIES WITH:
- PART 9 OF OBC 2012 , BCBC 2012 , ABC 2014
- CSA 086-09
- TPIC 2011

(55 % OF 27.2 P.S.F. G.S.L. PLUS 8.4 P.S.F. RAIN LOAD) EQUALS 23.3 P.S.F. SPECIFIED ROOF LIVE LOAD

ALLOWABLE DEFL.(LL)= L/360 (0.73")
CALCULATED VERT. DEFL.(LL) = L/ 999 (0.03")
ALLOWABLE DEFL.(TL)= L/360 (0.73")
CALCULATED VERT. DEFL.(TL) = L/ 999 (0.07")

CSI: TC=0.53 (6-7:1) , BC=0.23 (10-11:1) , WB=0.57 (5-8:1) , SSI=0.18 (3-4:1)

DOL LUMBER=1.00 NAIL=1.00 LS BEND=1.10 COMP=1.10 SHEAR=1.10 TENS= 1.10

COMPANION LIVE LOAD FACTOR = 0.50

AUTOSOLVE RIGHT HEEL ONLY

TRUSS PLATE MANUFACTURER IS NOT RESPONSIBLE FOR QUALITY CONTROL IN THE TRUSS MANUFACTURING PLANT .

NAIL VALUES

PLATE	GRIP(DRY) (PSI) MAX	MIN	SHEAR (PLI) MAX	MIN	SECTION (PLI) MAX	MIN
MT20	618	354	1667	822	2284	1656

PLATE PLACEMENT TOL. = 0.250 inches

PLATE ROTATION TOL. = 5.0 Deg.

JSI GRIP= 0.90 (11) (INPUT = 0.90)
JSI METAL= 0.40 (1) (INPUT = 1.00)

LICENSED PROFESSIONAL ENGINEER
P.M. TREVISAN
100136551
March 16th, 2017
PROVINCE OF ONTARIO

RECEIVED
TOWN OF MILTON
MAR 29, 2017
17-5327
BUILDING DIVISION

KOTT

JOB NAME	TRUSS NAME	QUANTITY	PLY	JOB DESC.	DRWG NO.
PT0317-093	**T110**	**1**	**1**	TRUSS DESC. LECCO RIDGE-BLOCK 343	

KOTT , Stouffville, ON, CGC

Version 8.100 S Feb 9 2017 MiTek Industries, Inc. Thu Mar 16 07:55:48 2017 Page 1
ID:EvTixTQDI5yR1QLotZTBr_yE?HJ-lV9hMhomXe3WxnrTk8FjRVwuaOuHv8D7bYa0EkzaRGv

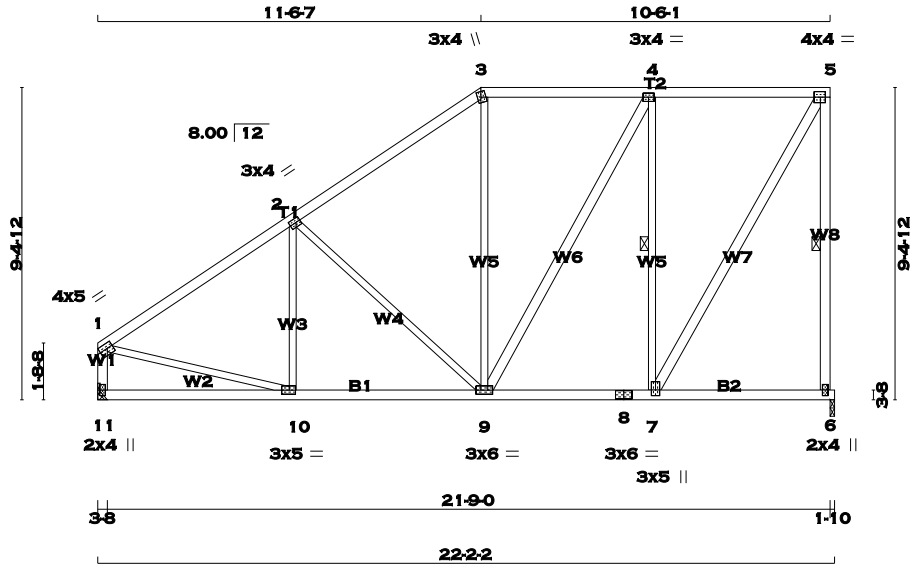

SCALE = 1:69.3

TOTAL WEIGHT = 117 lb

[M][F]

LUMBER

N. L. G. A. RULES

CHORDS	SIZE		LUMBER	DESCR.
1 - 3	2x4	DRY	No.2	SPF
3 - 5	2x4	DRY	No.2	SPF
6 - 5	2x4	DRY	No.2	SPF
11 - 1	2x4	DRY	No.2	SPF
11 - 8	2x4	DRY	No.2	SPF
8 - 6	2x4	DRY	No.2	SPF
ALL WEBS EXCEPT	2x3	DRY	No.2	SPF
9 - 4	2x4	DRY	No.2	SPF
7 - 5	2x4	DRY	No.2	SPF

DRY: SEASONED LUMBER.

PLATES (table is in inches)

JT	TYPE	PLATES	W	LEN	Y	X
1	TMVW-t	MT20	4.0	5.0	1.75	Edge
2	TMWW-t	MT20	3.0	4.0	1.50	1.50
3	TTW+m	MT20	3.0	4.0	2.00	1.25
4	TMWW-t	MT20	3.0	4.0		
5	TMVW-t	MT20	4.0	4.0	2.00	1.75
6	BMV1+p	MT20	2.0	4.0		
7	BMWW+t	MT20	3.0	5.0	2.00	1.50
8	BS-t	MT20	3.0	6.0		
9	BMWWW-t	MT20	3.0	6.0		
10	BMWW-t	MT20	3.0	5.0	1.50	2.25
11	BMV1+p	MT20	2.0	4.0		

Edge - INDICATES REFERENCE CORNER OF PLATE TOUCHES EDGE OF CHORD.

A SIZE FOR SIZE SUBSTITUTION OF MITEK MII20 WITH TEE-LOK TL20 PLATES IS ALLOWED.

DIMENSIONS, SUPPORTS AND LOADINGS SPECIFIED BY FABRICATOR TO BE VERIFIED BY BUILDING DESIGNER

BEARINGS

JT	FACTORED GROSS REACTION VERT	HORZ	MAXIMUM FACTORED GROSS REACTION DOWN	HORZ	UPLIFT	INPUT BRG IN-SX	REQRD BRG IN-SX
6	1045	0	1045	0	0	1-10	1-10
11	1045	0	1045	0	0	HANGER BY OTHERS	
						MIN. SEAT SIZE: 3-8	

UNFACTORED REACTIONS

JT	1ST LCASE COMBINED	MAX./MIN. COMPONENT REACTIONS SNOW	LIVE	PERM.LIVE	WIND	DEAD	SOIL
6	734	513 / 0	0 / 0	0 / 0	0 / 0	220 / 0	0 / 0
11	734	513 / 0	0 / 0	0 / 0	0 / 0	220 / 0	0 / 0

BEARING MATERIAL TO BE SPF NO.2 OR BETTER AT JOINT(S) 6

BRACING

TOP CHORD TO BE SHEATHED OR MAX. PURLIN SPACING = 5.65 FT.
MAX. UNBRACED BOTTOM CHORD LENGTH = 10.00 FT. OR RIGID CEILING DIRECTLY APPLIED.

ALL PITCH BREAKS AND PERIMETER CORNER JOINTS MUST BE LATERALLY RESTRAINED.

1 - 2x3 SPF No.2 LATERAL BRACE(S) AT 1/ 2 LENGTH OF 5-6. DBS = 14-0-0 . CBF = 88 LBS.
1 - 2x3 SPF No.2 LATERAL BRACE(S) AT 1/ 2 LENGTH OF 4-7. DBS = 20-0-0 . CBF = 93 LBS.

DBS = DIAGONAL BRACE SPACING (MAX). CBF = CUMULATIVE BRACING FORCE. FASTEN LATERAL BRACE(S) USING (0.122"X3") SPIRAL NAILS : 1 NAIL FOR 2x3 BRACE(S), 2 FOR 1x4, 2x4, 2x5, 3 FOR 2x6, 4 FOR 2x8, 5 FOR 2x10, AND 6 FOR 2x12.

END VERTICAL(S) MUST BE SHEATHED OR HAVE BRACES AS INDICATED IN THE MAX. UNBRACED LENGTH COLUMN OF THE TABLE BELOW

LOADING

TOTAL LOAD CASES: (4)

CHORDS

MEMB. FR-TO	MAX. FACTORED FORCE (LBS)	VERT. LOAD (PLF) FROM	TO	LC1	MAX CSI (LC)	MAX. UNBRAC LENGTH
1- 2	-1075 / 0	-77.4	-77.4	0.36 (1)	5.65	
2- 3	-792 / 0	-77.4	-77.4	0.34 (1)	6.25	
3- 4	-634 / 0	-77.4	-77.4	0.28 (1)	6.25	
4- 5	-499 / 0	-77.4	-77.4	0.27 (1)	6.25	
6- 5	-1007 / 0	0.0	0.0	0.42 (1)	6.24	
11- 1	-1004 / 0	0.0	0.0	0.11 (1)	7.80	
11-10	0 / 0	-17.5	-17.5	0.15 (4)	10.00	
10- 9	0 / 919	-17.5	-17.5	0.22 (1)	10.00	
9- 8	0 / 499	-17.5	-17.5	0.15 (4)	10.00	
8- 7	0 / 499	-17.5	-17.5	0.15 (4)	10.00	
7- 6	0 / 0	-17.5	-17.5	0.12 (4)	10.00	

WEBS

MEMB. FR-TO	MAX. FACTORED FORCE (LBS)	MAX CSI (LC)
10- 2	-101 / 67	0.05 (1)
2- 9	-390 / 0	0.49 (1)
9- 3	0 / 109	0.03 (4)
9- 4	0 / 277	0.04 (1)
7- 4	-746 / 0	0.43 (1)
7- 5	0 / 984	0.16 (1)
1-10	0 / 945	0.21 (1)

DESIGN CRITERIA

SPECIFIED LOADS:

TOP	CH.	LL	=	23.3	PSF
		DL	=	3.0	PSF
BOT	CH.	LL	=	0.0	PSF
		DL	=	7.0	PSF
TOTAL	LOAD		=	33.3	PSF

SPACING = 24.0 IN. C/C

LOADING IN FLAT SECTION BASED ON A SLOPE OF 6.00/12

THIS TRUSS IS DESIGNED FOR RESIDENTIAL OR SMALL BUILDING REQUIREMENTS OF PART 9, NBCC 2010

THIS DESIGN COMPLIES WITH:
- PART 9 OF OBC 2012 , BCBC 2012 , ABC 2014
- CSA 086-09
- TPIC 2011

(55 % OF 27.2 P.S.F. G.S.L. PLUS 8.4 P.S.F. RAIN LOAD) EQUALS 23.3 P.S.F. SPECIFIED ROOF LIVE LOAD

ALLOWABLE DEFL.(LL)= L/360 (0.73")
CALCULATED VERT. DEFL.(LL) = L/ 999 (0.03")
ALLOWABLE DEFL.(TL)= L/360 (0.73")
CALCULATED VERT. DEFL.(TL) = L/ 999 (0.07")

CSI: TC=0.42 (5-6:1) , BC=0.22 (9-10:1) , WB=0.49 (2-9:1) , SSI=0.20 (4-5:1)

DOL LUMBER=1.00 NAIL=1.00 LS BEND=1.10 COMP=1.10 SHEAR=1.10 TENS= 1.10

COMPANION LIVE LOAD FACTOR = 0.50

TRUSS PLATE MANUFACTURER IS NOT RESPONSIBLE FOR QUALITY CONTROL IN THE TRUSS MANUFACTURING PLANT .

NAIL VALUES

PLATE	GRIP(DRY) (PSI) MAX	MIN	SHEAR (PLI) MAX	MIN	SECTION (PLI) MAX	MIN
MT20	618	354	1667	822	2284	1656

PLATE PLACEMENT TOL. = 0.250 inches

PLATE ROTATION TOL. = 5.0 Deg.

JSI GRIP= 0.89 (5) (INPUT = 0.90)
JSI METAL= 0.36 (1) (INPUT = 1.00)

LICENSED PROFESSIONAL ENGINEER
P.M. TREVISAN
100136551
March 16th, 2017
PROVINCE OF ONTARIO

RECEIVED
TOWN OF MILTON
MAR 29, 2017
17-5327
BUILDING DIVISION

KOTT

JOB NAME	TRUSS NAME	QUANTITY	PLY	JOB DESC.	DRWG NO.
PT0317-093	**T111**	**2**	**1**	TRUSS DESC. LECCO RIDGE-BLOCK 343	

ENG JOB: PT0317-093

KOTT , Stouffville, ON, CGC

Version 8.100 S Feb 9 2017 MiTek Industries, Inc. Thu Mar 16 07:55:48 2017 Page 1

ID:EvTixTQDI5yR1QLotZTBr_yE?HJ-lV9hMhomXe3WxnrTk8FjRVwuvOu7v7w7bYa0EkzaRGv

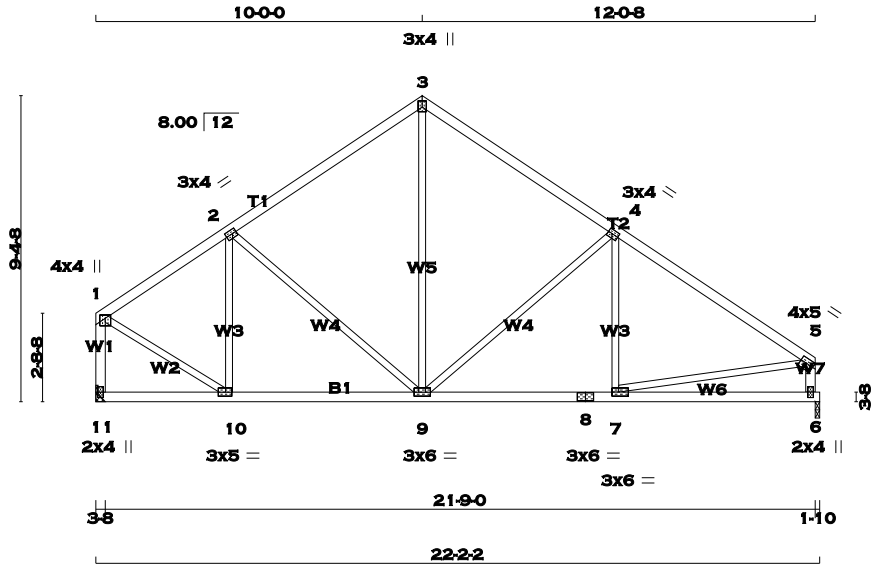

TOTAL WEIGHT = 2 X 95 = 190 lb

[M][F]

LUMBER

N. L. G. A. RULES

CHORDS	SIZE		LUMBER	DESCR.
1 - 3	2x4	DRY	No.2	SPF
3 - 5	2x4	DRY	No.2	SPF
11 - 1	2x4	DRY	No.2	SPF
6 - 5	2x4	DRY	No.2	SPF
11 - 8	2x4	DRY	No.2	SPF
8 - 6	2x4	DRY	No.2	SPF
ALL WEBS EXCEPT	2x3	DRY	No.2	SPF

DRY: SEASONED LUMBER.

PLATES (table is in inches)

JT	TYPE	PLATES	W	LEN	Y	X
1	TMVW+p	MT20	4.0	4.0	1.25	2.00
2	TMWW-t	MT20	3.0	4.0	1.50	1.50
3	TTW+p	MT20	3.0	4.0	2.25	1.50
4	TMWW-t	MT20	3.0	4.0	1.50	1.50
5	TMVW-t	MT20	4.0	5.0	1.75	Edge
6	BMV1+p	MT20	2.0	4.0		
7	BMWW-t	MT20	3.0	6.0	1.50	2.50
8	BS-t	MT20	3.0	6.0		
9	BMWWW-t	MT20	3.0	6.0		
10	BMWW-t	MT20	3.0	5.0	1.50	2.25
11	BMV1+p	MT20	2.0	4.0		

Edge - INDICATES REFERENCE CORNER OF PLATE TOUCHES EDGE OF CHORD.

A SIZE FOR SIZE SUBSTITUTION OF MITEK MII20 WITH TEE-LOK TL20 PLATES IS ALLOWED.

DIMENSIONS, SUPPORTS AND LOADINGS SPECIFIED BY FABRICATOR TO BE VERIFIED BY BUILDING DESIGNER

BEARINGS

JT	FACTORED GROSS REACTION VERT	HORZ	MAXIMUM FACTORED GROSS REACTION DOWN	HORZ	UPLIFT	INPUT BRG IN-SX	REQRD BRG IN-SX
11	1045	0	1045	0	0	HANGER BY OTHERS MIN. SEAT SIZE: 3-8	
6	1045	0	1045	0	0	1-10	1-10

UNFACTORED REACTIONS

JT	1ST LCASE COMBINED	MAX./MIN. COMPONENT REACTIONS SNOW	LIVE	PERM.LIVE	WIND	DEAD	SOIL
11	734	513 / 0	0 / 0	0 / 0	0 / 0	220 / 0	0 / 0
6	734	513 / 0	0 / 0	0 / 0	0 / 0	220 / 0	0 / 0

BEARING MATERIAL TO BE SPF NO.2 OR BETTER AT JOINT(S) 6

BRACING

TOP CHORD TO BE SHEATHED OR MAX. PURLIN SPACING = 5.44 FT.
MAX. UNBRACED BOTTOM CHORD LENGTH = 10.00 FT. OR RIGID CEILING DIRECTLY APPLIED.

ALL PITCH BREAKS AND PERIMETER CORNER JOINTS MUST BE LATERALLY RESTRAINED.

LOADING

TOTAL LOAD CASES: (4)

CHORDS

MEMB. FR-TO	MAX. FORCE (LBS)	FACTORED VERT. LOAD (PLF) FROM	TO	LC1 MAX CSI (LC)	MAX. UNBRAC LENGTH
1- 2	-853 / 0	-77.4	-77.4	0.28 (1)	6.25
2- 3	-789 / 0	-77.4	-77.4	0.33 (1)	6.25
3- 4	-797 / 0	-77.4	-77.4	0.37 (1)	6.25
4- 5	-1151 / 0	-77.4	-77.4	0.40 (1)	5.44
11- 1	-1019 / 0	0.0	0.0	0.15 (1)	7.77
6- 5	-1001 / 0	0.0	0.0	0.10 (1)	7.81
11-10	0 / 0	-17.5	-17.5	0.10 (4)	10.00
10- 9	0 / 739	-17.5	-17.5	0.19 (1)	10.00
9- 8	0 / 983	-17.5	-17.5	0.23 (1)	10.00
8- 7	0 / 983	-17.5	-17.5	0.23 (1)	10.00
7- 6	0 / 0	-17.5	-17.5	0.15 (4)	10.00

WEBS

MEMB. FR-TO	MAX. FORCE (LBS)	MAX CSI (LC)
10- 2	-337 / 0	0.15 (1)
2- 9	-135 / 0	0.17 (1)
9- 3	0 / 492	0.11 (1)
9- 4	-458 / 0	0.57 (1)
7- 4	-49 / 84	0.03 (4)
1-10	0 / 856	0.19 (1)
7- 5	0 / 997	0.22 (1)

DESIGN CRITERIA

SPECIFIED LOADS:

TOP	CH.	LL	=	23.3	PSF
		DL	=	3.0	PSF
BOT	CH.	LL	=	0.0	PSF
		DL	=	7.0	PSF
TOTAL	LOAD		=	33.3	PSF

SPACING = 24.0 IN. C/C

THIS TRUSS IS DESIGNED FOR RESIDENTIAL OR SMALL BUILDING REQUIREMENTS OF PART 9, NBCC 2010

THIS DESIGN COMPLIES WITH:
- PART 9 OF OBC 2012 , BCBC 2012 , ABC 2014
- CSA 086-09
- TPIC 2011

(55 % OF 27.2 P.S.F. G.S.L. PLUS 8.4 P.S.F. RAIN LOAD) EQUALS 23.3 P.S.F. SPECIFIED ROOF LIVE LOAD

ALLOWABLE DEFL.(LL)= L/360 (0.73")
CALCULATED VERT. DEFL.(LL) = L/ 999 (0.03")
ALLOWABLE DEFL.(TL)= L/360 (0.73")
CALCULATED VERT. DEFL.(TL) = L/ 999 (0.06")

CSI: TC=0.40 (4-5:1) , BC=0.23 (7-9:1) , WB=0.57 (4-9:1) , SSI=0.19 (4-5:1)

DOL LUMBER=1.00 NAIL=1.00 LS BEND=1.10 COMP=1.10 SHEAR=1.10 TENS= 1.10

COMPANION LIVE LOAD FACTOR = 0.50

TRUSS PLATE MANUFACTURER IS NOT RESPONSIBLE FOR QUALITY CONTROL IN THE TRUSS MANUFACTURING PLANT .

NAIL VALUES

PLATE	GRIP(DRY) (PSI) MAX	MIN	SHEAR (PLI) MAX	MIN	SECTION (PLI) MAX	MIN
MT20	618	354	1667	822	2284	1656

PLATE PLACEMENT TOL. = 0.250 inches

PLATE ROTATION TOL. = 0.0 Deg.

JSI GRIP= 0.90 (7) (INPUT = 0.90)
JSI METAL= 0.38 (5) (INPUT = 1.00)

LICENSED PROFESSIONAL ENGINEER
R.M. TREVISAN
100136551
March 16th, 2017
PROVINCE OF ONTARIO

RECEIVED
TOWN OF MILTON
MAR 29, 2017
17-5327
BUILDING DIVISION

KOTT

JOB NAME	TRUSS NAME	QUANTITY	PLY	JOB DESC.	DRWG NO.
PT0317-093	**T112**	**1**	**1**	TRUSS DESC. LECCO RIDGE-BLOCK 343	

KOTT , Stouffville, ON, CGC

Version 8.100 S Feb 9 2017 MiTek Industries, Inc. Thu Mar 16 07:55:49 2017 Page 1
ID:EvTixTQDI5yR1QLotZTBr_yE?HJ-Ehj3a1pOIxBNZxQfIrmy_iT52oDZedSHpCJamAzaRGu

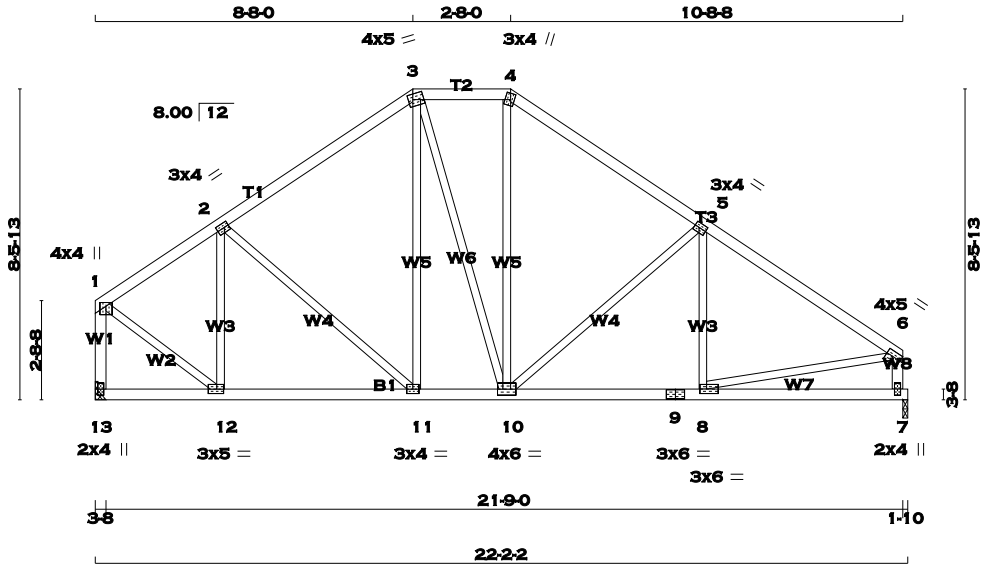

TOTAL WEIGHT = 104 lb
[M][F]

LUMBER
N. L. G. A. RULES

CHORDS	SIZE		LUMBER	DESCR.
1 - 3	2x4	DRY	No.2	SPF
3 - 4	2x4	DRY	No.2	SPF
4 - 6	2x4	DRY	No.2	SPF
13 - 1	2x4	DRY	No.2	SPF
7 - 6	2x4	DRY	No.2	SPF
13 - 9	2x4	DRY	No.2	SPF
9 - 7	2x4	DRY	No.2	SPF
ALL WEBS EXCEPT	2x3	DRY	No.2	SPF

DRY: SEASONED LUMBER.

PLATES (table is in inches)

JT	TYPE	PLATES	W	LEN	Y	X
1	TMVW+p	MT20	4.0	4.0	1.25	2.00
2	TMWW-t	MT20	3.0	4.0	1.50	1.50
3	TTWW-m	MT20	4.0	5.0	1.75	1.50
4	TTW+m	MT20	3.0	4.0	2.00	1.25
5	TMWW-t	MT20	3.0	4.0	1.50	1.50
6	TMVW-t	MT20	4.0	5.0	1.75	Edge
7	BMV1+p	MT20	2.0	4.0		
8	BMWW-t	MT20	3.0	6.0	1.50	2.25
9	BS-t	MT20	3.0	6.0		
10	BMWWW-t	MT20	4.0	6.0		
11	BMWW-t	MT20	3.0	4.0		
12	BMWW-t	MT20	3.0	5.0	1.50	2.25
13	BMV1+p	MT20	2.0	4.0		

Edge - INDICATES REFERENCE CORNER OF PLATE TOUCHES EDGE OF CHORD.

A SIZE FOR SIZE SUBSTITUTION OF MITEK MII20 WITH TEE-LOK TL20 PLATES IS ALLOWED.

DIMENSIONS, SUPPORTS AND LOADINGS SPECIFIED BY FABRICATOR TO BE VERIFIED BY BUILDING DESIGNER

BEARINGS

JT	FACTORED GROSS REACTION VERT	HORZ	MAXIMUM FACTORED GROSS REACTION DOWN	HORZ	UPLIFT	INPUT BRG IN-SX	REQRD BRG IN-SX
13	1045	0	1045	0	0	HANGER BY OTHERS MIN. SEAT SIZE: 3-8	
7	1045	0	1045	0	0	1-10	1-10

UNFACTORED REACTIONS

JT	1ST LCASE COMBINED	SNOW	LIVE	PERM.LIVE	WIND	DEAD	SOIL
		MAX./MIN. COMPONENT REACTIONS					
13	734	513 / 0	0 / 0	0 / 0	0 / 0	220 / 0	0 / 0
7	734	513 / 0	0 / 0	0 / 0	0 / 0	220 / 0	0 / 0

BEARING MATERIAL TO BE SPF NO.2 OR BETTER AT JOINT(S) 7

BRACING
TOP CHORD TO BE SHEATHED OR MAX. PURLIN SPACING = 5.56 FT.
MAX. UNBRACED BOTTOM CHORD LENGTH = 10.00 FT. OR RIGID CEILING DIRECTLY APPLIED.

ALL PITCH BREAKS AND PERIMETER CORNER JOINTS MUST BE LATERALLY RESTRAINED.

LOADING
TOTAL LOAD CASES: (4)

CHORDS

MEMB. FR-TO	MAX. FORCE (LBS)	FACTORED VERT. LOAD LC1 (PLF) FROM	TO	MAX CSI (LC)	MAX. UNBRAC LENGTH
1- 2	-805 / 0	-77.4	-77.4	0.22 (1)	6.25
2- 3	-833 / 0	-77.4	-77.4	0.25 (1)	6.25
3- 4	-706 / 0	-77.4	-77.4	0.08 (1)	6.25
4- 5	-875 / 0	-77.4	-77.4	0.29 (1)	6.19
5- 6	-1160 / 0	-77.4	-77.4	0.31 (1)	5.56
13- 1	-1025 / 0	0.0	0.0	0.15 (1)	7.74
7- 6	-1006 / 0	0.0	0.0	0.10 (1)	7.80
13-12	0 / 0	-17.5	-17.5	0.09 (4)	10.00
12-11	0 / 697	-17.5	-17.5	0.16 (1)	10.00
11-10	0 / 676	-17.5	-17.5	0.15 (1)	10.00
10- 9	0 / 988	-17.5	-17.5	0.22 (1)	10.00
9- 8	0 / 988	-17.5	-17.5	0.22 (1)	10.00
8- 7	0 / 0	-17.5	-17.5	0.13 (4)	10.00

WEBS

MEMB. FR-TO	MAX. FORCE (LBS)	MAX CSI (LC)
12- 2	-399 / 0	0.15 (1)
2-11	-29 / 0	0.03 (1)
11- 3	0 / 88	0.03 (4)
3-10	0 / 100	0.02 (1)
10- 4	0 / 215	0.05 (1)
10- 5	-378 / 0	0.36 (1)
8- 5	-78 / 69	0.03 (1)
1-12	0 / 850	0.19 (1)
8- 6	0 / 1005	0.23 (1)

DESIGN CRITERIA

SPECIFIED LOADS:

TOP CH.	LL =	23.3	PSF
	DL =	3.0	PSF
BOT CH.	LL =	0.0	PSF
	DL =	7.0	PSF
TOTAL LOAD	=	33.3	PSF

SPACING = 24.0 IN. C/C

LOADING IN FLAT SECTION BASED ON A SLOPE OF 6.00/12

THIS TRUSS IS DESIGNED FOR RESIDENTIAL OR SMALL BUILDING REQUIREMENTS OF PART 9, NBCC 2010

THIS DESIGN COMPLIES WITH:
- PART 9 OF OBC 2012 , BCBC 2012 , ABC 2014
- CSA 086-09
- TPIC 2011

(55 % OF 27.2 P.S.F. G.S.L. PLUS 8.4 P.S.F. RAIN LOAD) EQUALS 23.3 P.S.F. SPECIFIED ROOF LIVE LOAD

ALLOWABLE DEFL.(LL)= L/360 (0.73")
CALCULATED VERT. DEFL.(LL) = L/ 999 (0.03")
ALLOWABLE DEFL.(TL)= L/360 (0.73")
CALCULATED VERT. DEFL.(TL) = L/ 999 (0.06")

CSI: TC=0.31 (5-6:1) , BC=0.22 (8-10:1) , WB=0.36 (5-10:1) , SSI=0.17 (5-6:1)

DOL LUMBER=1.00 NAIL=1.00 LS BEND=1.10 COMP=1.10 SHEAR=1.10 TENS= 1.10

COMPANION LIVE LOAD FACTOR = 0.50

TRUSS PLATE MANUFACTURER IS NOT RESPONSIBLE FOR QUALITY CONTROL IN THE TRUSS MANUFACTURING PLANT .

NAIL VALUES

PLATE	GRIP(DRY) (PSI) MAX	MIN	SHEAR (PLI) MAX	MIN	SECTION (PLI) MAX	MIN
MT20	618	354	1667	822	2284	1656

PLATE PLACEMENT TOL. = 0.250 inches

PLATE ROTATION TOL. = 5.0 Deg.

JSI GRIP= 0.90 (8) (INPUT = 0.90)
JSI METAL= 0.38 (6) (INPUT = 1.00)

LICENSED PROFESSIONAL ENGINEER
P.M. TREVISAN
100136551
March 16th, 2017
PROVINCE OF ONTARIO

RECEIVED
TOWN OF MILTON
MAR 29, 2017
17-5327
BUILDING DIVISION

KOTT

JOB NAME	TRUSS NAME	QUANTITY	PLY	JOB DESC.	DRWG NO.
PT0317-093	T113	1	1	TRUSS DESC. LECCO RIDGE-BLOCK 343	

KOTT , Stouffville, ON, CGC

Version 8.100 S Feb 9 2017 MiTek Industries, Inc. Thu Mar 16 07:55:50 2017 Page 1
ID:EvTixTQDI5yR1QLotZTBr_yE?HJ-itHRnNp03FJEB5?rsZHBWw0H_CXtN_yQ2s37IczaRGt

SCALE = 1:50.2

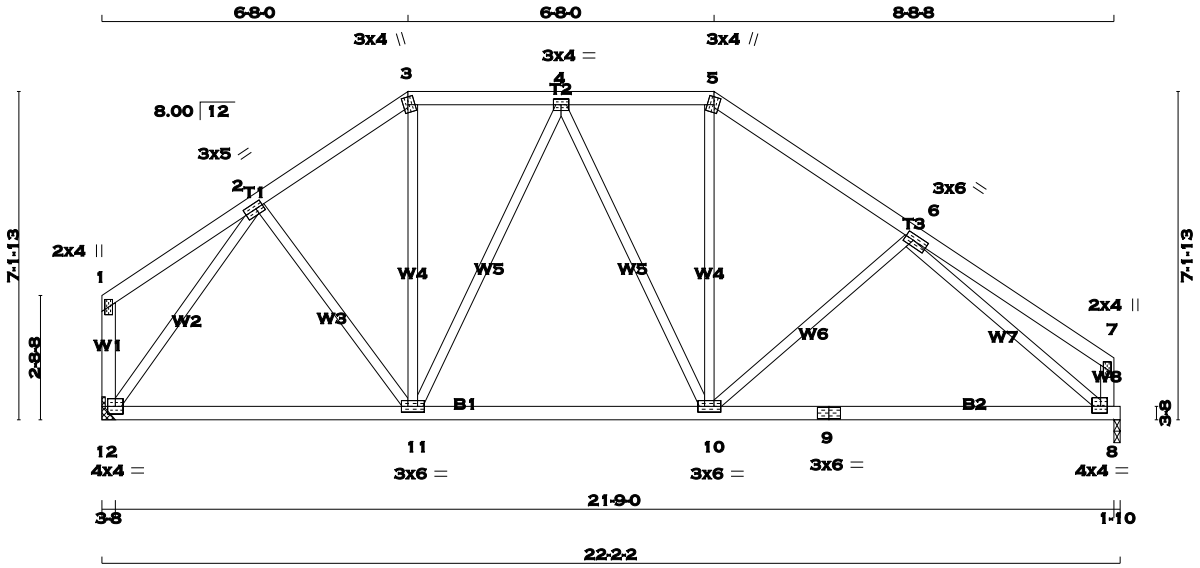

TOTAL WEIGHT = 98 lb
[M][F]

LUMBER
N. L. G. A. RULES

CHORDS	SIZE		LUMBER	DESCR.
1 - 3	2x4	DRY	No.2	SPF
3 - 5	2x4	DRY	No.2	SPF
5 - 7	2x4	DRY	No.2	SPF
12 - 1	2x4	DRY	No.2	SPF
8 - 7	2x4	DRY	No.2	SPF
12 - 9	2x4	DRY	No.2	SPF
9 - 8	2x4	DRY	No.2	SPF
ALL WEBS EXCEPT	2x3	DRY	No.2	SPF

DRY: SEASONED LUMBER.

PLATES (table is in inches)

JT	TYPE	PLATES	W	LEN	Y	X
1	TMV+p	MT20	2.0	4.0		
2	TMWW-t	MT20	3.0	5.0	1.50	2.00
3	TTW+m	MT20	3.0	4.0	2.00	1.25
4	TMWW-t	MT20	3.0	4.0		
5	TTW+m	MT20	3.0	4.0	2.00	1.25
6	TMWW-t	MT20	3.0	6.0	1.50	2.25
7	TMV+p	MT20	2.0	4.0		
8	BMVW1-t	MT20	4.0	4.0	1.75	1.75
9	BS-t	MT20	3.0	6.0		
10	BMWWW-t	MT20	3.0	6.0		
11	BMWWW-t	MT20	3.0	6.0		
12	BMVW1-t	MT20	4.0	4.0		

A SIZE FOR SIZE SUBSTITUTION OF MITEK MII20 WITH TEE-LOK TL20 PLATES IS ALLOWED.

DIMENSIONS, SUPPORTS AND LOADINGS SPECIFIED BY FABRICATOR TO BE VERIFIED BY BUILDING DESIGNER

BEARINGS

JT	FACTORED GROSS REACTION VERT	HORZ	MAXIMUM FACTORED GROSS REACTION DOWN	HORZ	UPLIFT	INPUT BRG IN-SX	REQRD BRG IN-SX
12	1045	0	1045	0	0	HANGER BY OTHERS MIN. SEAT SIZE: 3-8	
8	1045	0	1045	0	0	1-10	1-10

UNFACTORED REACTIONS

JT	1ST LCASE COMBINED	MAX./MIN. COMPONENT REACTIONS SNOW	LIVE	PERM.LIVE	WIND	DEAD	SOIL
12	734	513 / 0	0 / 0	0 / 0	0 / 0	220 / 0	0 / 0
8	734	513 / 0	0 / 0	0 / 0	0 / 0	220 / 0	0 / 0

BEARING MATERIAL TO BE SPF NO.2 OR BETTER AT JOINT(S) 8

BRACING
TOP CHORD TO BE SHEATHED OR MAX. PURLIN SPACING = 6.02 FT.
MAX. UNBRACED BOTTOM CHORD LENGTH = 10.00 FT. OR RIGID CEILING DIRECTLY APPLIED.

ALL PITCH BREAKS AND PERIMETER CORNER JOINTS MUST BE LATERALLY RESTRAINED.

LOADING
TOTAL LOAD CASES: (4)

CHORDS

MEMB. FR-TO	MAX. FORCE (LBS)	FACTORED VERT. LOAD LC1 (PLF) FROM	TO	MAX CSI (LC)	MAX. UNBRAC LENGTH
1- 2	0 / 16	-77.4	-77.4	0.13 (1)	10.00
2- 3	-883 / 0	-77.4	-77.4	0.11 (1)	6.25
3- 4	-724 / 0	-77.4	-77.4	0.11 (1)	6.25
4- 5	-823 / 0	-77.4	-77.4	0.11 (1)	6.25
5- 6	-1007 / 0	-77.4	-77.4	0.19 (1)	6.02
6- 7	0 / 21	-77.4	-77.4	0.23 (1)	10.00
12- 1	-102 / 0	0.0	0.0	0.01 (1)	7.81
8- 7	-129 / 0	0.0	0.0	0.01 (1)	7.81
12-11	0 / 648	-17.5	-17.5	0.21 (4)	10.00
11-10	0 / 846	-17.5	-17.5	0.34 (4)	10.00
10- 9	0 / 944	-17.5	-17.5	0.34 (4)	10.00
9- 8	0 / 944	-17.5	-17.5	0.34 (4)	10.00

WEBS

MEMB. FR-TO	MAX. FORCE (LBS)	MAX CSI (LC)
2-11	0 / 120	0.03 (1)
11- 3	0 / 280	0.06 (1)
11- 4	-287 / 0	0.33 (1)
4-10	-54 / 25	0.06 (1)
10- 5	0 / 314	0.07 (1)
10- 6	-167 / 12	0.10 (1)
12- 2	-1104 / 0	0.58 (1)
6- 8	-1272 / 0	0.73 (1)

DESIGN CRITERIA

SPECIFIED LOADS:

TOP	CH.	LL	=	23.3	PSF
		DL	=	3.0	PSF
BOT	CH.	LL	=	0.0	PSF
		DL	=	7.0	PSF
TOTAL	LOAD		=	33.3	PSF

SPACING = 24.0 IN. C/C

LOADING IN FLAT SECTION BASED ON A SLOPE OF 6.00/12

THIS TRUSS IS DESIGNED FOR RESIDENTIAL OR SMALL BUILDING REQUIREMENTS OF PART 9, NBCC 2010

THIS DESIGN COMPLIES WITH:
- PART 9 OF OBC 2012 , BCBC 2012 , ABC 2014
- CSA 086-09
- TPIC 2011

(55 % OF 27.2 P.S.F. G.S.L. PLUS 8.4 P.S.F. RAIN LOAD) EQUALS 23.3 P.S.F. SPECIFIED ROOF LIVE LOAD

ALLOWABLE DEFL.(LL)= L/360 (0.73")
CALCULATED VERT. DEFL.(LL) = L/ 999 (0.03")
ALLOWABLE DEFL.(TL)= L/360 (0.73")
CALCULATED VERT. DEFL.(TL) = L/ 999 (0.18")

CSI: TC=0.23 (6-7:1) , BC=0.34 (10-11:4) , WB=0.73 (6-8:1) , SSI=0.13 (5-6:1)

DOL LUMBER=1.00 NAIL=1.00 LS BEND=1.10 COMP=1.10 SHEAR=1.10 TENS= 1.10

COMPANION LIVE LOAD FACTOR = 0.50

TRUSS PLATE MANUFACTURER IS NOT RESPONSIBLE FOR QUALITY CONTROL IN THE TRUSS MANUFACTURING PLANT .

NAIL VALUES

PLATE	GRIP(DRY) (PSI) MAX	MIN	SHEAR (PLI) MAX	MIN	SECTION (PLI) MAX	MIN
MT20	618	354	1667	822	2284	1656

PLATE PLACEMENT TOL. = 0.250 inches

PLATE ROTATION TOL. = 0.5 Deg.

JSI GRIP= 0.89 (10) (INPUT = 0.90)
JSI METAL= 0.37 (9) (INPUT = 1.00)

LICENSED PROFESSIONAL ENGINEER
P.M. TREVISAN
100136551
March 16th, 2017
PROVINCE OF ONTARIO

RECEIVED
TOWN OF MILTON
MAR 29, 2017
17-5327
BUILDING DIVISION

KOTT

JOB NAME	TRUSS NAME	QUANTITY	PLY	JOB DESC.	DRWG NO.
PT0317-093	**T114**	**1**	**1**	TRUSS DESC. LECCO RIDGE-BLOCK 343	ENG JOB: PT0317-093

KOTT , Stouffville, ON, CGC

Version 8.100 S Feb 9 2017 MiTek Industries, Inc. Thu Mar 16 07:55:50 2017 Page 1

ID:EvTixTQDI5yR1QLotZTBr_yE?HJ-itHRnNp03FJEB5?rsZHBWw0HDCZuN5EQ2s37IczaRGt

SCALE = 1:56.1

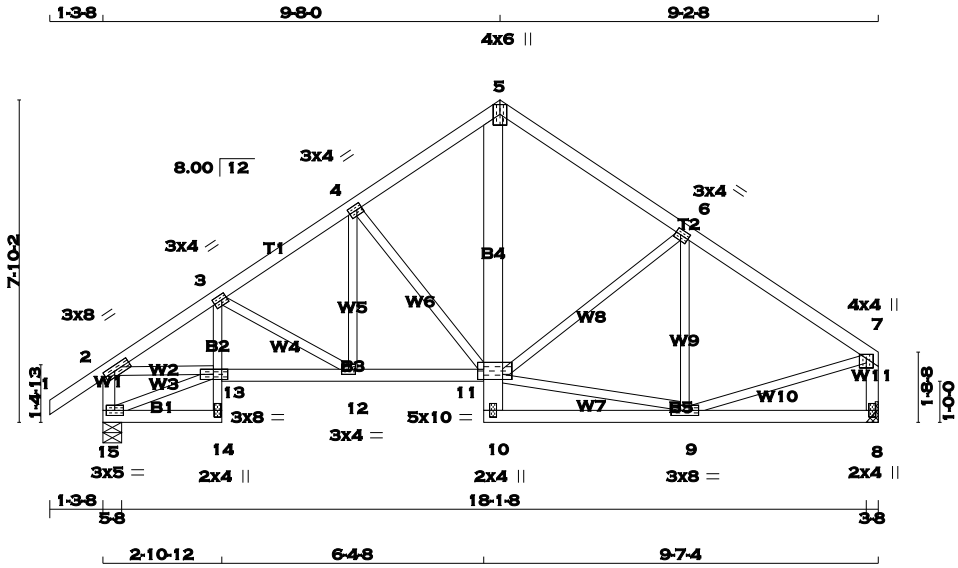

TOTAL WEIGHT = 97 lb

[M][F]

LUMBER

N. L. G. A. RULES

CHORDS	SIZE		LUMBER	DESCR.
1 - 5	2x4	DRY	No.2	SPF
5 - 7	2x4	DRY	No.2	SPF
15 - 2	2x4	DRY	No.2	SPF
8 - 7	2x4	DRY	No.2	SPF
15 - 14	2x4	DRY	No.2	SPF
14 - 3	2x3	DRY	No.2	SPF
13 - 11	2x4	DRY	No.2	SPF
10 - 5	2x6	DRY	No.2	SPF
10 - 8	2x4	DRY	No.2	SPF
ALL WEBS EXCEPT	2x3	DRY	No.2	SPF

DRY: SEASONED LUMBER.

PLATES (table is in inches)

JT	TYPE	PLATES	W	LEN	Y	X
2	TMVW-t	MT20	3.0	8.0	1.50	3.25
3	TMVW-t	MT20	3.0	4.0	1.50	1.50
4	TMWW-t	MT20	3.0	4.0	1.50	1.50
5	TTV+p	MT20	4.0	6.0	Edge	
6	TMWW-t	MT20	3.0	4.0	1.50	1.50
7	TMVW+p	MT20	4.0	4.0	1.25	2.00
8	BMV1+p	MT20	2.0	4.0		
9	BMWWW-t	MT20	3.0	8.0		
10	BMV+p	MT20	2.0	4.0		
11	BVMWWW-l	MT20	5.0	10.0	3.00	1.75
12	BMWW-t	MT20	3.0	4.0		
13	BVMWW-l	MT20	3.0	8.0	Edge	4.25
14	BMV+p	MT20	2.0	4.0		
15	BMVW1-t	MT20	3.0	5.0		

Edge - INDICATES REFERENCE CORNER OF PLATE TOUCHES EDGE OF CHORD.

A SIZE FOR SIZE SUBSTITUTION OF MITEK MII20 WITH TEE-LOK TL20 PLATES IS ALLOWED.

DIMENSIONS, SUPPORTS AND LOADINGS SPECIFIED BY FABRICATOR TO BE VERIFIED BY BUILDING DESIGNER

BEARINGS

JT	FACTORED GROSS REACTION VERT	HORZ	MAXIMUM FACTORED GROSS REACTION DOWN	HORZ	UPLIFT	INPUT BRG IN-SX	REQRD BRG IN-SX
8	895	0	895	0	0	HANGER BY OTHERS MIN. SEAT SIZE: 3-8	
15	1001	0	1001	0	0	5-8	5-8

UNFACTORED REACTIONS

JT	1ST LCASE COMBINED	SNOW	LIVE	PERM.LIVE	WIND	DEAD	SOIL
		MAX./MIN. COMPONENT REACTIONS					
8	628	440 / 0	0 / 0	0 / 0	0 / 0	189 / 0	0 / 0
15	700	503 / 0	0 / 0	0 / 0	0 / 0	197 / 0	0 / 0

BEARING MATERIAL TO BE SPF NO.2 OR BETTER AT JOINT(S) 15

BRACING

TOP CHORD TO BE SHEATHED OR MAX. PURLIN SPACING = 5.40 FT.
MAX. UNBRACED BOTTOM CHORD LENGTH = 10.00 FT. OR RIGID CEILING DIRECTLY APPLIED.

ALL PITCH BREAKS AND PERIMETER CORNER JOINTS MUST BE LATERALLY RESTRAINED.

LOADING

TOTAL LOAD CASES: (4)

CHORDS

MEMB. FR-TO	MAX. FACTORED FORCE (LBS)	FROM	TO	MAX CSI (LC)	MAX. UNBRAC LENGTH
1- 2	0 / 29	-77.4	-77.4	0.10 (1)	10.00
2- 3	-1417 / 0	-77.4	-77.4	0.09 (1)	5.40
3- 4	-1095 / 0	-77.4	-77.4	0.12 (1)	5.93
4- 5	-803 / 0	-77.4	-77.4	0.11 (1)	6.25
5- 6	-782 / 0	-77.4	-77.4	0.21 (1)	6.25
6- 7	-871 / 0	-77.4	-77.4	0.22 (1)	6.25
15- 2	-971 / 0	0.0	0.0	0.10 (1)	7.81
8- 7	-864 / 0	0.0	0.0	0.09 (1)	7.81
15-14	0 / 14	-17.5	-17.5	0.04 (4)	10.00
14-13	0 / 27	0.0	0.0	0.05 (1)	10.00
13- 3	0 / 108	0.0	0.0	0.07 (1)	10.00
13-12	0 / 1195	-17.5	-17.5	0.22 (1)	10.00
12-11	0 / 920	-17.5	-17.5	0.17 (1)	10.00
10-11	0 / 37	0.0	0.0	0.05 (1)	10.00
11- 5	0 / 616	0.0	0.0	0.12 (1)	10.00
10- 9	0 / 64	-17.5	-17.5	0.11 (4)	10.00
9- 8	0 / 0	-17.5	-17.5	0.11 (4)	10.00

WEBS

MEMB. FR-TO	MAX. FACTORED FORCE (LBS)	MAX CSI (LC)
3-12	-319 / 0	0.08 (1)
12- 4	0 / 184	0.04 (1)
4-11	-414 / 0	0.19 (1)
9- 6	-272 / 4	0.09 (1)
2-13	0 / 1186	0.27 (1)
9- 7	0 / 778	0.18 (1)
11- 6	-157 / 0	0.09 (1)
11- 9	0 / 705	0.16 (1)
15-13	-15 / 0	0.00 (1)

DESIGN CRITERIA

SPECIFIED LOADS:

TOP	CH.	LL	=	23.3	PSF
		DL	=	3.0	PSF
BOT	CH.	LL	=	0.0	PSF
		DL	=	7.0	PSF
TOTAL	LOAD		=	33.3	PSF

SPACING = 24.0 IN. C/C

THIS TRUSS IS DESIGNED FOR RESIDENTIAL OR SMALL BUILDING REQUIREMENTS OF PART 9, NBCC 2010

THIS DESIGN COMPLIES WITH:
- PART 9 OF OBC 2012 , BCBC 2012 , ABC 2014
- CSA 086-09
- TPIC 2011

(55 % OF 27.2 P.S.F. G.S.L. PLUS 8.4 P.S.F. RAIN LOAD) EQUALS 23.3 P.S.F. SPECIFIED ROOF LIVE LOAD

ALLOWABLE DEFL.(LL)= L/360 (0.63")
CALCULATED VERT. DEFL.(LL) = L/ 999 (0.03")
ALLOWABLE DEFL.(TL)= L/360 (0.63")
CALCULATED VERT. DEFL.(TL) = L/ 999 (0.06")

CSI: TC=0.22 (6-7:1) , BC=0.22 (12-13:1) , WB=0.27 (2-13:1) , SSI=0.15 (6-7:1)

DOL LUMBER=1.00 NAIL=1.00 LS BEND=1.10 COMP=1.10 SHEAR=1.10 TENS= 1.10

COMPANION LIVE LOAD FACTOR = 0.50

AUTOSOLVE RIGHT HEEL ONLY

TRUSS PLATE MANUFACTURER IS NOT RESPONSIBLE FOR QUALITY CONTROL IN THE TRUSS MANUFACTURING PLANT .

NAIL VALUES

PLATE	GRIP(DRY) (PSI) MAX	MIN	SHEAR (PLI) MAX	MIN	SECTION (PLI) MAX	MIN
MT20	618	354	1667	822	2284	1656

PLATE PLACEMENT TOL. = 0.250 inches

PLATE ROTATION TOL. = 5.0 Deg.

JSI GRIP= 0.86 (13) (INPUT = 0.90)
JSI METAL= 0.29 (13) (INPUT = 1.00)

LICENSED PROFESSIONAL ENGINEER
P.M. TREVISAN
100136551
March 16th, 2017
PROVINCE OF ONTARIO

RECEIVED
TOWN OF MILTON
MAR 29, 2017
17-5327
BUILDING DIVISION

KOTT

JOB NAME	TRUSS NAME	QUANTITY	PLY	JOB DESC.	DRWG NO.
PT0317-093	**T115**	**1**	**1**	TRUSS DESC. LECCO RIDGE-BLOCK 343	ENG JOB: PT0317-093

KOTT , Stouffville, ON, CGC

Version 8.100 S Feb 9 2017 MiTek Industries, Inc. Thu Mar 16 07:55:51 2017 Page 1

ID:EvTixTQDI5yR1QLotZTBr_yE?HJ-A4rp?jqfqZR5oEZ2PGoQ37YUncyq6cqZHWogq3zaRGs

SCALE = 1:18.7

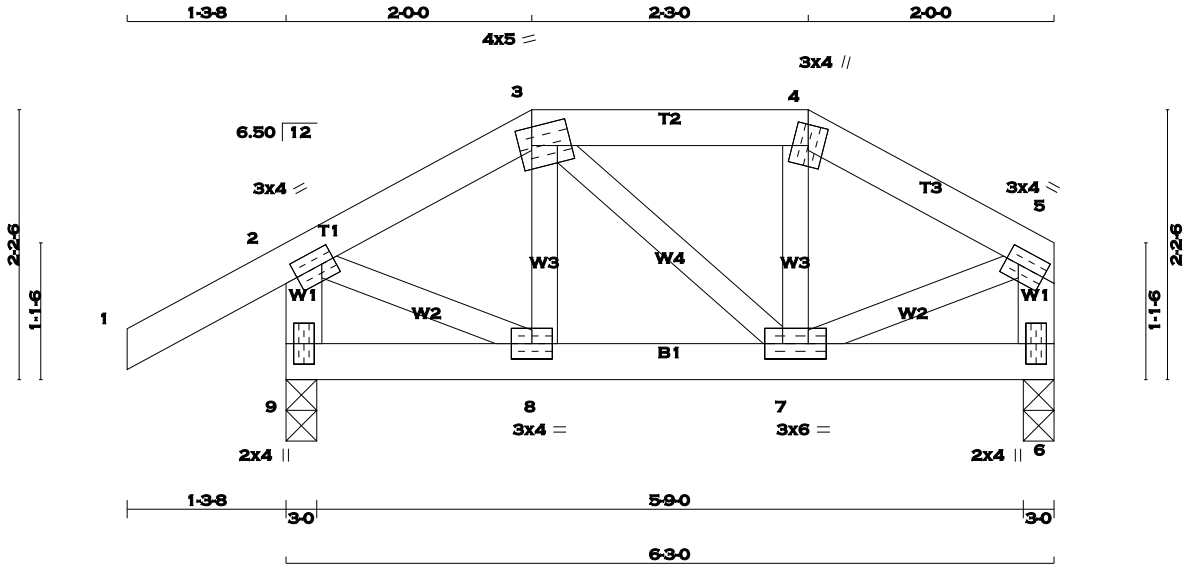

TOTAL WEIGHT = 26 lb

[M][F]

LUMBER

N. L. G. A. RULES

CHORDS	SIZE		LUMBER	DESCR.
1 - 3	2x4	DRY	No.2	SPF
3 - 4	2x4	DRY	No.2	SPF
4 - 5	2x4	DRY	No.2	SPF
9 - 2	2x4	DRY	No.2	SPF
6 - 5	2x4	DRY	No.2	SPF
9 - 6	2x4	DRY	No.2	SPF
ALL WEBS EXCEPT	2x3	DRY	No.2	SPF

DRY: SEASONED LUMBER.

PLATES (table is in inches)

JT	TYPE	PLATES	W	LEN	Y	X
2	TMVW-t	MT20	3.0	4.0	1.50	1.25
3	TTWW-m	MT20	4.0	5.0	1.75	1.25
4	TTW+m	MT20	3.0	4.0		
5	TMVW-t	MT20	3.0	4.0	1.50	1.25
6	BMV1+p	MT20	2.0	4.0		
7	BMWWW-t	MT20	3.0	6.0		
8	BMWW-t	MT20	3.0	4.0		
9	BMV1+p	MT20	2.0	4.0		

A SIZE FOR SIZE SUBSTITUTION OF MITEK MII20 WITH TEE-LOK TL20 PLATES IS ALLOWED.

DIMENSIONS, SUPPORTS AND LOADINGS SPECIFIED BY FABRICATOR TO BE VERIFIED BY BUILDING DESIGNER

BEARINGS

JT	FACTORED GROSS REACTION VERT	HORZ	MAXIMUM FACTORED GROSS REACTION DOWN	HORZ	UPLIFT	INPUT BRG IN-SX	REQRD BRG IN-SX
9	402	0	402	0	0	3-0	3-0
6	296	0	296	0	0	3-0	3-0

UNFACTORED REACTIONS

JT	1ST LCASE COMBINED	MAX./MIN. COMPONENT REACTIONS SNOW	LIVE	PERM.LIVE	WIND	DEAD	SOIL
9	280	209 / 0	0 / 0	0 / 0	0 / 0	71 / 0	0 / 0
6	208	146 / 0	0 / 0	0 / 0	0 / 0	63 / 0	0 / 0

BEARING MATERIAL TO BE SPF NO.2 OR BETTER AT JOINT(S) 9, 6

BRACING

TOP CHORD TO BE SHEATHED OR MAX. PURLIN SPACING = 6.25 FT.
MAX. UNBRACED BOTTOM CHORD LENGTH = 10.00 FT. OR RIGID CEILING DIRECTLY APPLIED.

ALL PITCH BREAKS AND PERIMETER CORNER JOINTS MUST BE LATERALLY RESTRAINED.

LOADING

TOTAL LOAD CASES: (4)

CHORDS

MEMB. FR-TO	MAX. FACTORED FORCE (LBS)	FACTORED VERT. LOAD (PLF) FROM	TO	LC1 MAX CSI (LC)	MAX. UNBRAC LENGTH
1- 2	0 / 25	-77.4	-77.4	0.10 (1)	10.00
2- 3	-249 / 0	-77.4	-77.4	0.04 (1)	6.25
3- 4	-215 / 0	-77.4	-77.4	0.05 (1)	6.25
4- 5	-248 / 0	-77.4	-77.4	0.04 (1)	6.25
9- 2	-385 / 0	0.0	0.0	0.04 (1)	7.81
6- 5	-279 / 0	0.0	0.0	0.03 (1)	7.81
9- 8	0 / 0	-17.5	-17.5	0.02 (4)	10.00
8- 7	0 / 216	-17.5	-17.5	0.04 (1)	10.00
7- 6	0 / 0	-17.5	-17.5	0.02 (4)	10.00

WEBS

MEMB. FR-TO	MAX. FACTORED FORCE (LBS)	MAX CSI (LC)
8- 3	-45 / 18	0.01 (1)
3- 7	0 / 0	0.00 (1)
7- 4	-45 / 19	0.01 (1)
2- 8	0 / 233	0.05 (1)
7- 5	0 / 233	0.05 (1)

DESIGN CRITERIA

SPECIFIED LOADS:

TOP	CH.	LL	=	23.3	PSF
		DL	=	3.0	PSF
BOT	CH.	LL	=	0.0	PSF
		DL	=	7.0	PSF
TOTAL	LOAD		=	33.3	PSF

SPACING = 24.0 IN. C/C

LOADING IN FLAT SECTION BASED ON A SLOPE OF 6.00/12

THIS TRUSS IS DESIGNED FOR RESIDENTIAL OR SMALL BUILDING REQUIREMENTS OF PART 9, NBCC 2010

THIS DESIGN COMPLIES WITH:
- PART 9 OF OBC 2012 , BCBC 2012 , ABC 2014
- CSA 086-09
- TPIC 2011

(55 % OF 27.2 P.S.F. G.S.L. PLUS 8.4 P.S.F. RAIN LOAD) EQUALS 23.3 P.S.F. SPECIFIED ROOF LIVE LOAD

ALLOWABLE DEFL.(LL)= L/360 (0.21")
CALCULATED VERT. DEFL.(LL) = L/ 999 (0.00")
ALLOWABLE DEFL.(TL)= L/360 (0.21")
CALCULATED VERT. DEFL.(TL) = L/ 999 (0.00")

CSI: TC=0.10 (1-2:1) , BC=0.04 (7-8:1) , WB=0.05 (2-8:1) , SSI=0.07 (1-2:1)

DOL LUMBER=1.00 NAIL=1.00 LS BEND=1.10 COMP=1.10 SHEAR=1.10 TENS= 1.10

COMPANION LIVE LOAD FACTOR = 0.50

TRUSS PLATE MANUFACTURER IS NOT RESPONSIBLE FOR QUALITY CONTROL IN THE TRUSS MANUFACTURING PLANT .

NAIL VALUES

PLATE	GRIP(DRY) (PSI) MAX	MIN	SHEAR (PLI) MAX	MIN	SECTION (PLI) MAX	MIN
MT20	618	354	1667	822	2284	1656

PLATE PLACEMENT TOL. = 0.250 inches

PLATE ROTATION TOL. = 0.5 Deg.

JSI GRIP= 0.59 (2) (INPUT = 0.90)
JSI METAL= 0.13 (2) (INPUT = 1.00)

LICENSED PROFESSIONAL ENGINEER
P.M. TREVISAN
100136551
March 16th, 2017
PROVINCE OF ONTARIO

RECEIVED
TOWN OF MILTON
MAR 29, 2017
17-5327
BUILDING DIVISION

KOTT

BEARING ANCHORAGE BY TOE-NAILS FOR LATERAL CAPACITY B37579H1

NAIL TYPE	LENGTH (IN)	DIAMETER (IN)	NAIL LATERAL CAPACITY (LB)	
			S-P-F	D. FIR
COMMON WIRE	3.00	0.144	132	147
	3.25	0.144	132	147
	3.50	0.160	159	177
COMMON SPIRAL	3.00	0.122	97	108
	3.25	0.122	97	108
	3.50	0.152	145	162

NOTES:

1. Rafter and ceiling members may be anchored to top and bottom chords of girder truss by toe-nailing rafter and ceiling members to girder chords provided the reaction does not exceed the lateral capacities in the table. Hangers (specified by others) are required for reactions higher than the maximum toe-nail capacity. Reactions are based on factored loads.

2. Toe nail capacities shown in the table are for **one** toe-nail. For additional toe-nails multiply values in table by the number of toe-nails used. Toe-nail capacities take into account toe-nailing factor J_A in CSA O86-09, section 10.9.4.1.

3. For 9- 3/4 gauge 3.25" common wire gun nails (diameter = 0.120") use 3" common spiral nail values.

4. Maximum number of toe-nails allowed depends on the lumber size & species to be toe-nailed to supporting member and nail diameter, as shown in tables below.

5. Nail values in table are based on the following relative lumber densities: G = 0.42 (SPF), G = 0.49 (D. Fir).

6. Toe-nails shall be driven at approximately 1/3 the nail length from the edge of the joist/truss chord and driven at an angle of 30º to the grain of the member (See next page for nailing on bearing plate).

7. For loads due to **wind** the nail lateral capacity in this table may be multiplied by 1.15 (K_D factor).

8. Lumber must be dry (< 19% moisture content) at the time of nail installation.

9. Nail values in this table comply with CSA O86-09, section 10.9.4

10. This design is not valid after April 30, 2017.

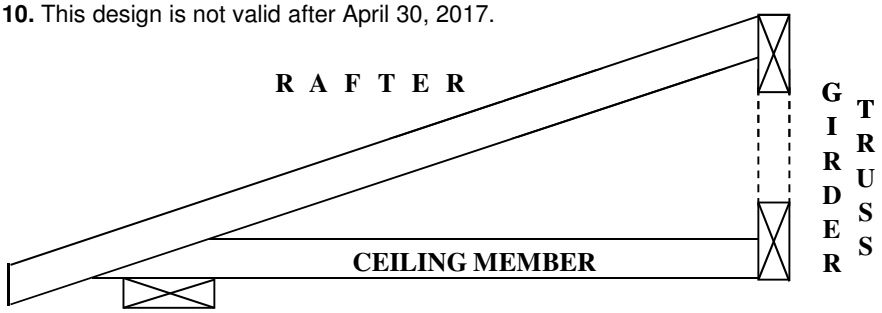

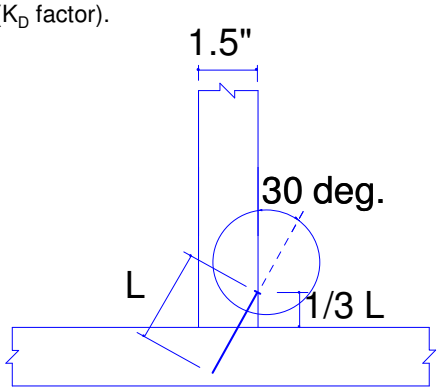

TOE-NAIL INSTALLATION

Nail type	Common wire	Common spiral	Common wire	Common spiral
Nail dia. (in)	0.160	0.152	0.144	0.122
	(3.5" nail)		(3" and 3.25" nail)	
LUMBER SIZE	**MAXIMUM NUMBER OF TOE-NAILS**			
2X4 SPF	2	2	3	3
2X4 D. Fir	2	2	2	2
2X6 SPF	4	4	4	5
2X6 D. Fir	3	3	3	4

MiTek Canada Inc
100 Industrial Rd.
Bradford, Ontario L3Z 3G7

RECEIVED
TOWN OF MILTON
MAR 29, 2017
17-5327
BUILDING DIVISION

PEO
Certificate No. 10889485

LICENSED PROFESSIONAL ENGINEER
C. Cordogiannis
90553736
PROVINCE OF ONTARIO

April 24, 2015

BEARING ANCHORAGE BY TOE-NAILS FOR WIND LOADING B37579H2

NAIL TYPE	LENGTH (IN)	DIAMETER (IN)	NAIL WITHDRAWAL CAPACITY (LB)	
			S-P-F	D. FIR
COMMON WIRE	3.00	0.144	30	42
	3.25	0.144	32	45
	3.50	0.160	38	52
COMMON SPIRAL	3.00	0.122	26	36
	3.25	0.122	28	40
	3.50	0.152	36	50

Note: If using truss with D. Fir lumber and S-P-F bearing plate, use values in table for S-P-F.

NOTES:

1. Truss chord, rafter, or ceiling members may be anchored to bearing plate by toe-nails, provided that the actual factored uplift force due to **wind** or **earthquake** load does not exceed the withdrawal capacities in the table. Hangers (specified by others) are required for uplift forces that are higher than the maximum toe-nail withdrawal capacity.
2. Toe nail capacities shown in the table are for **one** toe-nail. For additional toe-nails multiply values in table by the number of toe-nails used. Toe-nail capacities take into account toe-nailing factor J_A in CSA O86-09, section 10.9.5.2.
3. For 9- 3/4 gauge 3.25" common wire gun nails (diameter = 0.120") use 3" common spiral nail values.
4. Maximum number of toe-nails allowed depends on the lumber size & species to be toe-nailed to supporting member and nail diameter, as shown in table above.
5. Nail values in table are based on the following relative lumber densities: G = 0.42(SPF), G = 0.49(D. Fir).
6. Toe-nails shall be driven at approximately 1/3 the nail length from the edge of the joist/truss chord and driven at an angle of 30° to the grain of the member (See drawing on detail B37579H1).
7. Lumber must be dry (< 19% moisture content) at the time of nail installation.
8. Nail values in this table comply with CSA O86-09, section 10.9.5
9. This design is not valid after April 30, 2017

Toe-nailing on 2x6 Bearing Plate

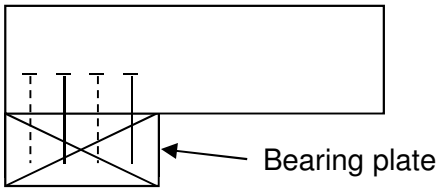

Elevation view

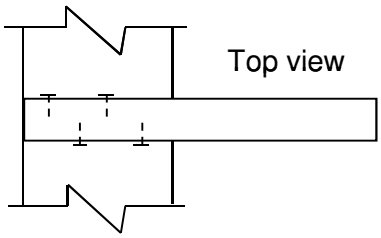

Top view

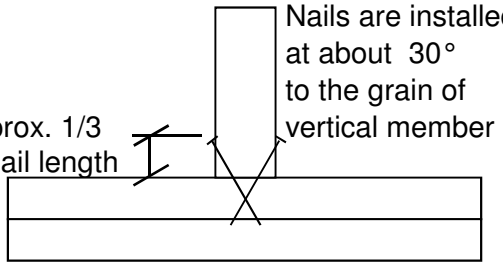

Toe-nailing viewed from end of joist or truss

Toe-nailing on 2x4 Bearing Plate

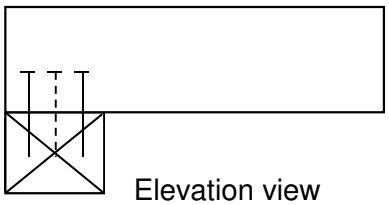

Elevation view

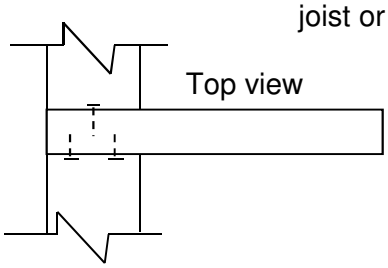

Top view

MiTek Canada Inc
100 Industrial Rd.
Bradford, Ontario L3Z 3G7

RECEIVED
TOWN OF MILTON
MAR 29, 2017
17-5327
BUILDING DIVISION

PEO
Certificate No. 10889485

LICENSED PROFESSIONAL ENGINEER
C. Cordogiannis
90553736
PROVINCE OF ONTARIO

April 24, 2015

JOB NAME	DETAILS	JOB DESC.	HIP END FRAMING	DRAWING NO.	B37579J

EXT. JOB: 10317-093

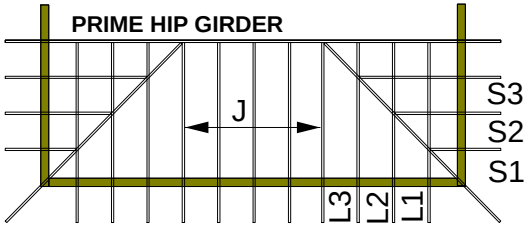

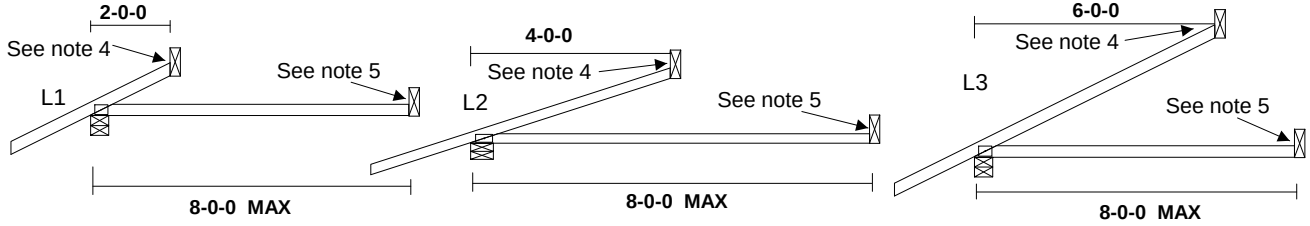

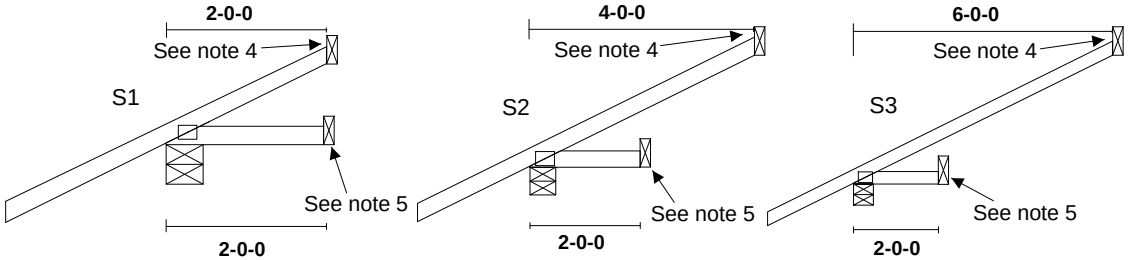

DETAIL "A"

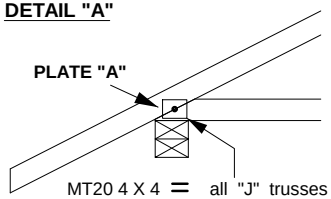

MT20 4 X 4 = all "J" trusses
MT20 3 X 4 = all other trusses

DETAIL "B"

RAISED HEEL

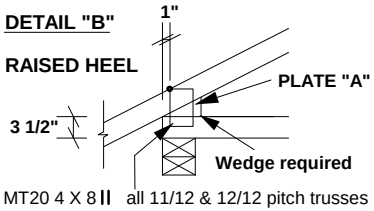

MT20 4 X 8 II all 11/12 & 12/12 pitch trusses
MT20 4 X 7 II all other trusses

DETAIL "C"

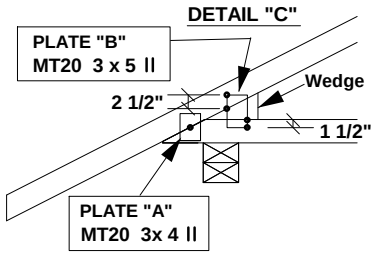

CANTILEVER DETAIL "C"

SLOPE	MAX CANTILEVER	PLATE "B"	WEDGE SIZE
3/12	17"	3 X 5	2 X 3
4/12	14"	3 X 5	2 X 3
5/12	12"	3 X 5	2 X 4
6/12	10"	3 X 5	2 X 4
7/12	9"	3 X 5	2 X 6
8/12	8.5"	3 X 5	2 X 6
9/12	8"	3 X 5	2 X 6
10/12	7.5"	3 X 5	2 X 6

"J"

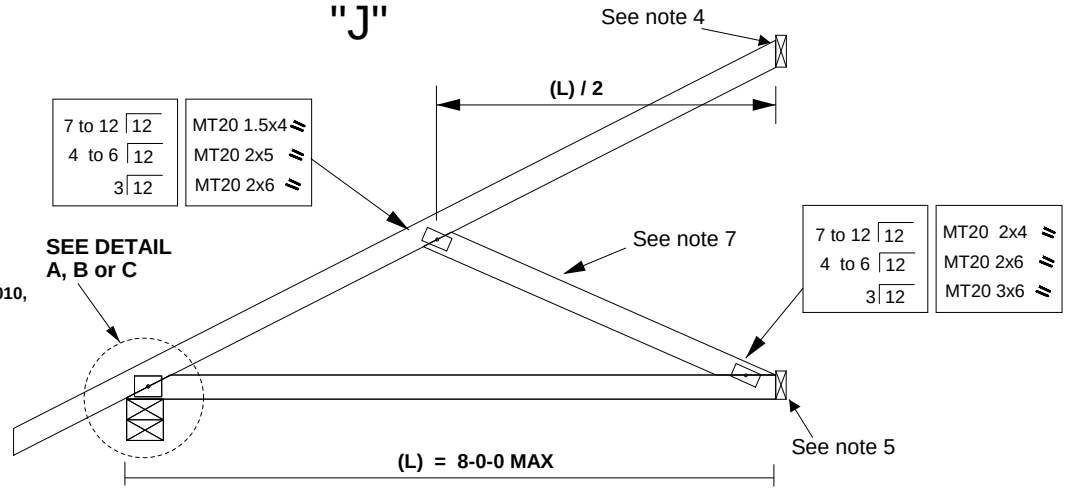

NOTES:

1. ALL LUMBER SHALL BE 2x4 SPF OR D. Fir No. 2 DRY OR BETTER.
2. THIS TRUSS IS DESIGNED FOR HOUSING AND SMALL BUILDING REQUIREMENTS OF PART 9 NBCC 2010, WHERE GROUND SNOW LOAD IS 60.0 PSF OR LESS AND RAIN LOAD DOES NOT EXCEED 12.53 PSF; TOP CHORD DEAD LOAD IS 6 PSF OR LESS; BC LIVE LOAD IS 0 PSF AND BC DEAD LOAD IS 7 PSF.
3. HIP RAFTER DESIGN SHALL CONFORM TO SECTION 9.23.14.6 OF NBCC 2010.
4. FASTEN HIGH END OF RAFTERS USING MITEK CANADA INC. "BEARING ANCHORAGE BY TOE-NAILS FOR LATERAL CAPACITY" STANDARD DETAIL B37579H1.
5. FASTEN RIGHT END OF CEILING USING MITEK CANADA INC. "BEARING ANCHORAGE BY TOE-NAILS FOR LATERAL CAPACITY" STANDARD DETAIL B37579H1.
6. OVERHANG LENGTH SHALL NOT EXCEED 2 FT.
7. WHEN SETBACK IS 6 FT OR LESS, DIAGONAL WEB MAY BE OMITTED AND HIGH END OF TOP CHORD SHALL BE CONNECTED AS PER NOTE 4.
8. ALL PLATES SPECIFIED ARE PRESSED INTO BOTH FACES OF THE TRUSS.
9. MITEK REFERENCE PAGE MII-7473C FORMS AN INTEGRAL PART OF THIS DETAIL.
10. THIS DETAIL IS NOT VALID AFTER APRIL 30, 2017

MiTek Canada, Inc.
100 Industrial Rd.
Bradford, Ontario, L3Z 3G7

PEO
Certificate No. 10889485

LICENSED PROFESSIONAL ENGINEER
C. Cordogiannis
90553736
PROVINCE OF ONTARIO

RECEIVED
TOWN OF MILTON
MAR 29, 2017
17-5327
BUILDING DIVISION

April 24, 2015

STANDARD GABLE END DETAIL

LECCO RIDGE-BLOCK 343

DRAWING NO.: ENG 103 - P70317-093 B37579K

MINIMUM ROOF PITCH: 2/12

MAXIMUM ROOF PITCH: 12/12

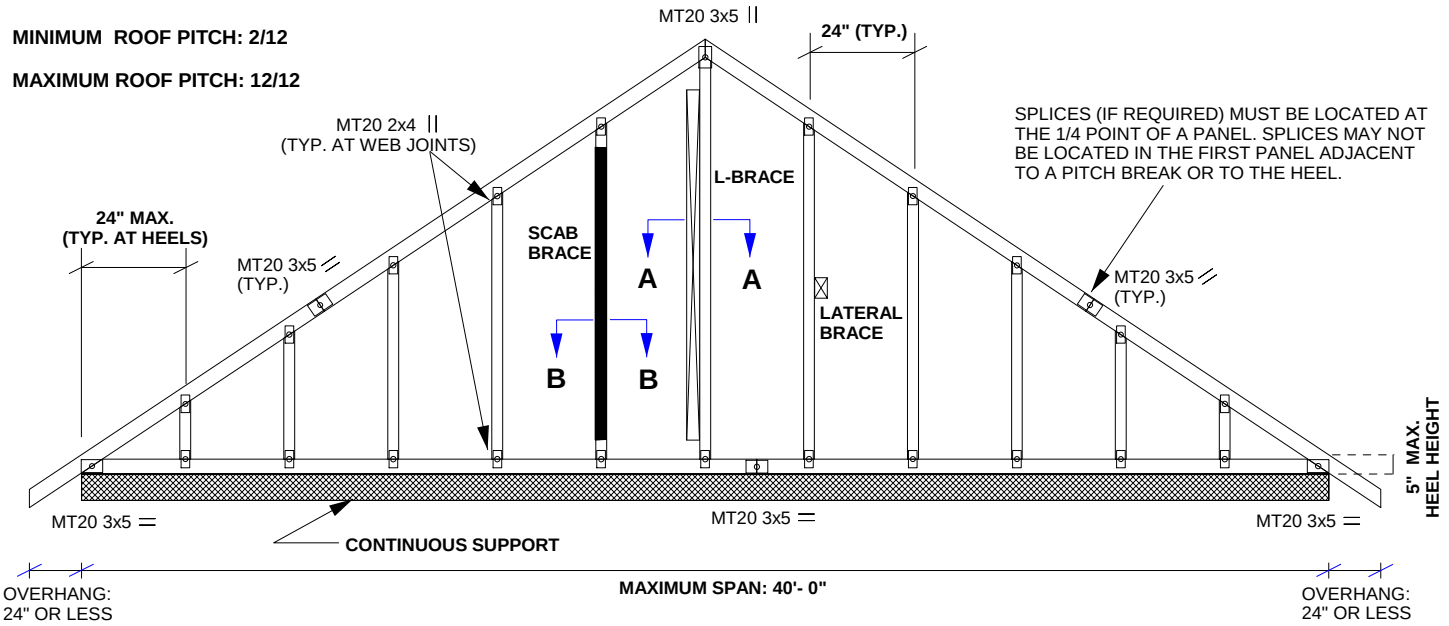

LUMBER

TOP CHORD:	**2 X 4 No. 2 DRY SPF or D- Fir**
BOTTOM CHORD:	**2 X 3 or 2 X 4 No. 2 DRY SPF or D- Fir**
GABLE WEB:	**2 X 3 or 2 X 4 No. 2 DRY SPF or D- Fir**

PLATES

JOINT	PLATES
HEELS	MT20 3 X 5
PEAK	MT20 3 X 5
TC SPLICES	MT20 3 X 5
BC SPLICES	MT20 3 X 5
WEB JOINTS	MT20 2 X 4

DESIGN CRITERIA

TOP CHORD LL = 60.0 PSF OR LESS
TOP CHORD DL = 6.0 PSF OR LESS
BOTTOM CHORD LL = 0 PSF
BOTTOM CHORD DL = 7.0 PSF

TOTAL LOAD = 73.0 PSF OR LESS

BRACING

TOP CHORD TO BE SHEATHED OR MAX. PURLIN SPACING = 2 FT.
MAX. UNBRACED BOTTOM CHORD LENGTH = 10 FT. OR RIGID CEILING DIRECTLY APPLIED.
WEBS MUST BE LATERALLY BRACED, SCAB BRACED OR L-BRACED AS INDICATED IN TABLE BELOW:

WEB LENGTH (L)	SCAB BRACE	L-BRACE	LATERAL BRACE
L < 6 FT.	NOT REQUIRED	NOT REQUIRED	NOT REQUIRED
6 FT. < L < 12 FT.	REQUIRED	2x4 L-BRACE	1 LATERAL AT 1/2 LENGTH OF WEB

SCAB BRACE DETAIL

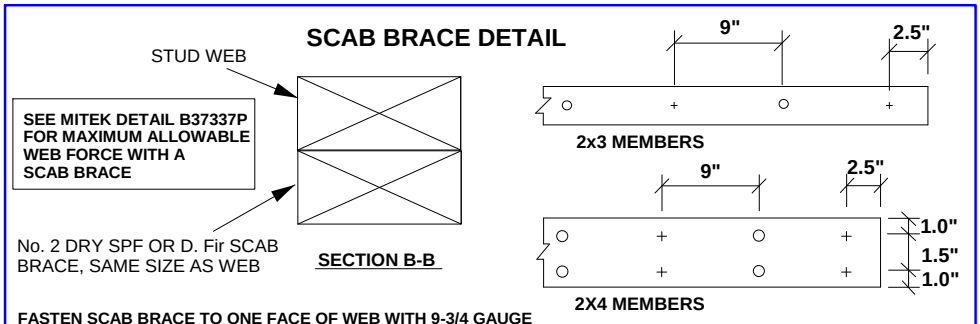

FASTEN SCAB BRACE TO ONE FACE OF WEB WITH 9-3/4 GAUGE 0.122" X 3" COMMON SPIRAL NAILS SPACED @ 9" C/C (MAX) WITH 2.5" MINIMUM END DISTANCE. SCAB BRACE MUST COVER 90% OF WEB LENGTH. DRIVE NAILS ALTERNATELY FROM FRONT AND BACK FACES.

+ NAIL FROM FRONT FACE
o NAIL FROM BACK FACE

CANTILEVER DETAIL

Note: Gable end may be cantilevered up to 6 inches past end wall as shown. Gable end to be continuously supported by 2x4 SPF No.2 (DRY) members at 12" o.c. along the bottom chord. Roof design loads shall not exceed the loading shown above.

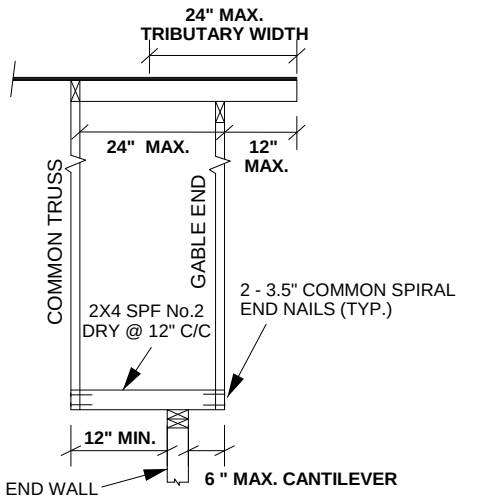

L-BRACE DETAIL

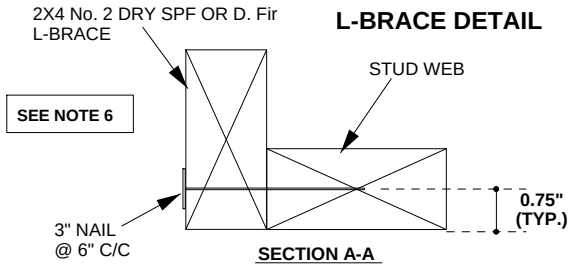

FASTEN L-BRACE TO NARROW EDGE OF WEB WITH ONE ROW OF 9-3/4 GAUGE 0.122" X 3" COMMON SPIRAL NAILS SPACED AT 6" C/C WITH 3" MINIMUM END DISTANCE. BRACE MUST COVER 90% OF WEB LENGTH.

PEO
Certificate No. 10889485

LICENSED PROFESSIONAL ENGINEER
C. Cordogiannis
90553736
PROVINCE OF ONTARIO

NOTES:

1. **Gable studs are spaced at 24" C/C (max.) with a max. length of 12 ft.**
2. **All plates specified are MiTek MT20, centered at each joint, and pressed into both faces of truss.**
3. **Truss spacing is 24" C/C, maximum.**
4. **Gable truss is designed for continuous support. Bearing material must be of the same species as chord member and of grade No. 2 or better.**
5. **This truss requires rigid sheathing attached to exposed face.**
6. **2x3 or 2x4 T-braces shown for gable webs in the MiTek engineering drawings may be replaced by a 2x4 L-brace as shown above.**
7. **This truss is designed for residential or small building requirements, conforming to Part 9, NBCC 2010.**
8. **This detail is not valid after April 30, 2017.**

RECEIVED
TOWN OF MILTON
MAR 29, 2017
17-5327
BUILDING DIVISION

April 24, 2015

MiTek Canada, Inc.
100 Industrial Rd.
Bradford, Ontario, L3Z 3G7