TOWN OF MILTON
PLANNING AND DEVELOPMENT
BUILDING PERMIT: 17-5233
BUILDING: REVIEWED
SCOTT SHERRIFFS APR 24, 2017
PLANS EXAMINER DATE
Neither the issuance of a permit nor carrying out of inspections by the Town of Milton relives the owner from full responsibility for compliance with the provisions of the Ontario Building Code Act and the Ontario Building Code, both as amended, as well as other applicable statutes and regulations of the Province on Ontario, By-laws of the Region of Halton and Town of Milton

RECEIVED
TOWN OF MILTON
MAR 29, 2017
17-5233
BUILDING DIVISION

TRUSSES BY KOTT

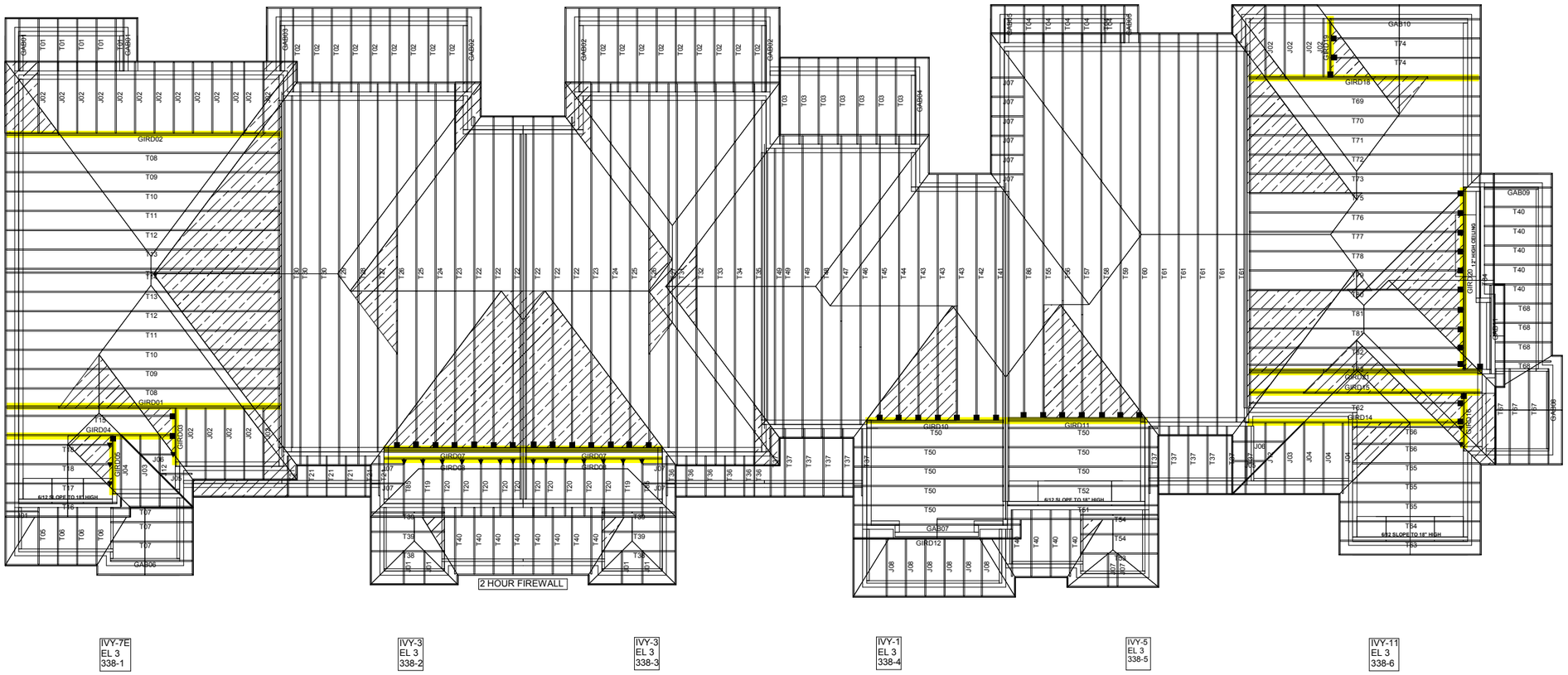

TOP OF ALL PORCH BEAMS AT 8' 7 1/4 A.F.F.

UNDERSIDE OF SOFFIT FOR PORCHES AT 8' 6" A.F.F.

GARAGE WALL PLATES AT 9' 1 2/16" A.F.F.

PARTY WALLS TO BE FRAMED ON SITE A.P.P.

HANGER LEGEND:

▼ LUS24 ■ LJS26DS
● HGUS26 ╳ HGUS26-2

CONVENTIONAL FRAMING BY OTHERS

SIZE AND LOCATION OF CONVENTIONAL FRAMING IS APPROXIMATE. ALL AREAS MAY NOT BE SHOWN. REFER TO ARCHITECTURAL PLANS FOR DETAILS.

ALL CONVENTIONAL FRAMING TO CONFORM WITH PART 9 OF THE O.B.C
ROOF RAFTERS THAT CROSS MEET OVER TRUSSES TO BE 2x4 S.P.F. @ 24"O/C WITH A 2x4 VERTICAL POST TO THE TRUSS UNDERNEATH EACH CROSS POINT. VERTICAL POST LONGER THAN 6' TO HAVE LATERAL BRACING SO THAT THE DISTANCE BETWEEN END POINT AND BETWEEN ROWS OF BRACING DOES NOT EXCEED 6'.

Model: **BLOCK 338**
Customer: GREENPARK
Project: LECCO RIDGE
Location: MILTON
Date: 3/13/2017 Drawn by: BB

ENGINEERING NOTE PAGE (ENP-1)
PLEASE READ PRIOR TO INSTALLATION

RESPONSIBILITIES

THIS DESIGN IS FOR AN INDIVIDUAL BUILDING COMPONENT AND HAS BEEN BASED ON INFORMATION PROVIDED BY THE DESIGN OFFICE OF KOTT LUMBER. THE UNDERSIGNED ENGINEER DISCLAIMS ANY RESPONSIBILITY FOR DAMAGES AS A RESULT OF FAULTY OR INCORRECT INFORMATION, SPECIFICATION AND/OR DESIGNS FURNISHED TO THE ENGINEER. THE UNDERSIGNED ENGINEER IS ONLY RESPONSIBLE FOR THE STRUCTURAL INTEGRITY OF THIS BUILDING COMPONENT FOR THE CONDITIONS AND LOADS SHOWN ON THIS DRAWING. THE STRUCTURAL INTEGRITY OF THE BUILDING AND THE VERIFICATION OF THE DIMENSIONS AND THE DESIGN LOADS USED ARE THE RESPONSIBILITY OF THE BUILDING DESIGNER.

TRUSSES ARE DESIGNED IN CONFORMANCE WITH THE RELEVANT SECTIONS OF THE NATIONAL BUILDING CODE OF CANADA OR THE CANADIAN CODE FOR FARM BUILDINGS, WHICHEVER APPLIES TO THE BUILDING TYPE INDICATED ON THE DRAWING

IT IS THE RESPONSIBILITY OF KOTT LUMBER TO ENSURE THAT TRUSSES ARE MANUFACTURED IN CONFORMANCE WITH THESE DESIGNS AND WITH THE SPECIFICATIONS OUTLINED BELOW. THE UNDERSIGNED ENGINEER IS NOT RESPONSIBLE FOR QUALITY CONTROL IN THE TRUSS MANUFACTURING PLANT.

USE AND OCCUPANCY

- The building is of the type indicated on the drawing

LOADING

- The truss loading intensity and distribution as well as load transfer mechanism is that indicated on the drawing
- No buildings, trees, parapets or other projections higher than the roof for which the trusses are used are located within a distance less than ten (10) times the difference in height, or five metres (16 ft) whichever is greater, unless the drawing indicates that the snow drifting has been taken into account

HANDLING, INSTALLATION AND BRACING

- The trusses must be handled and installed by a qualified professional as per the supplied document titled *Information for Truss Installers* and the BCSI-B1 and BCSI-B3 Summary Sheets
- The compression chords are laterally braced by continuous rigid diaphragm sheathing or as specified on the drawing
- Temporary and permanent bracing must be installed as indicated on the truss drawing and according to the BCSI-B1 and BCSI-B3 Summary Sheets. Bracing for the lateral stability of the truss is to be provided by the building designer
- **It is recommended that a Professional Engineer's advice be obtained for the bracing of trusses spanning more than 12.37m (40'-7")**

SUPPORTS

- The trusses are to be supported at the bearing points indicated and anchored to the supports where considered necessary by the designer of the overall structure
- Bearing sizes shown are the minimum required to prevent crushing of the truss members and do not necessarily take into account stability of the overall building structure
- Elevation of bearings must be carefully checked and shimmed to alignment for solid bearings
- Adequate wood truss bearing is the responsibility of the building designer.

DIMENSIONS

- Geometry of the truss and dimensions indicated on the drawing are identical to those of the installed truss.

RECEIVED
TOWN OF MILTON
MAR 29, 2017
17-5233
BUILDING DIVISION

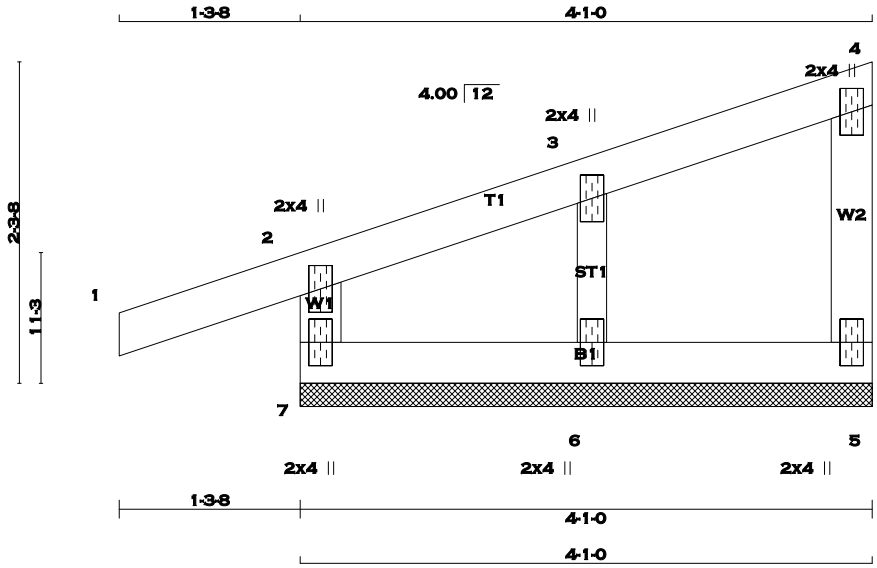

TOTAL WEIGHT = 2 X 15 = 29 lb [M]

LUMBER

N. L. G. A. RULES

CHORDS	SIZE		LUMBER	DESCR.
7 - 2	2x4	DRY	No.2	SPF
1 - 4	2x4	DRY	No.2	SPF
5 - 4	2x4	DRY	No.2	SPF
7 - 5	2x4	DRY	No.2	SPF
ALL WEBS	2x3	DRY	No.2	SPF
ALL GABLE WEBS	2x3	DRY	No.2	SPF

DRY: SEASONED LUMBER.

GABLE STUDS SPACED AT 2-0-0 OC.

PLATES (table is in inches)

JT	TYPE	PLATES	W	LEN	Y	X
2	TMV+p	MT20	2.0	4.0		
3	TMW+w	MT20	2.0	4.0		
4	TMV+p	MT20	2.0	4.0		
5	BMV1+p	MT20	2.0	4.0		
6	BMW1+w	MT20	2.0	4.0		
7	BMV1+p	MT20	2.0	4.0		

A SIZE FOR SIZE SUBSTITUTION OF MITEK MII20 WITH TEE-LOK TL20 PLATES IS ALLOWED.

DIMENSIONS, SUPPORTS AND LOADINGS SPECIFIED BY FABRICATOR TO BE VERIFIED BY BUILDING DESIGNER

BEARINGS

THIS TRUSS DESIGNED FOR CONTINUOUS BEARINGS.

THIS TRUSS REQUIRES RIGID SHEATHING ON EXPOSED FACE.

BEARING MATERIAL TO BE SPF NO.2 OR BETTER AT JOINT(S)

BRACING

TOP CHORD TO BE SHEATHED OR MAX. PURLIN SPACING = 6.25 FT.
MAX. UNBRACED BOTTOM CHORD LENGTH = 10.00 FT. OR RIGID CEILING DIRECTLY APPLIED.

ALL PITCH BREAKS AND PERIMETER CORNER JOINTS MUST BE LATERALLY RESTRAINED.

LOADING

TOTAL LOAD CASES: (4)

CHORDS

MEMB. FR-TO	MAX. FACTORED FORCE (LBS)	FACTORED VERT. LOAD (PLF) FROM	TO	LC1 MAX CSI (LC)	MAX. UNBRAC LENGTH
7- 2	-186 / 0	0.0	0.0	0.01 (1)	7.81
1- 2	0 / 16	-77.3	-77.3	0.10 (1)	10.00
2- 3	-17 / 0	-77.3	-77.3	0.04 (1)	6.25
3- 4	-13 / 0	-77.3	-77.3	0.04 (1)	6.25
5- 4	-69 / 0	0.0	0.0	0.02 (1)	7.81
7- 6	0 / 16	-17.5	-17.5	0.02 (4)	10.00
6- 5	0 / 11	-17.5	-17.5	0.02 (4)	10.00

WEBS

MEMB. FR-TO	MAX. FACTORED FORCE (LBS)	MAX CSI (LC)
6- 3	-164 / 0	0.02 (1)

DESIGN CRITERIA

SPECIFIED LOADS:

TOP	CH.	LL	=	23.3	PSF
		DL	=	3.0	PSF
BOT	CH.	LL	=	0.0	PSF
		DL	=	7.0	PSF
TOTAL	LOAD		=	33.3	PSF

SPACING = 24.0 IN. C/C

THIS TRUSS IS DESIGNED FOR RESIDENTIAL OR SMALL BUILDING REQUIREMENTS OF PART 9, NBCC 2010

THIS DESIGN COMPLIES WITH:
- PART 9 OF OBC 2012 , BCBC 2012 , ABC 2014
- CSA 086-09
- TPIC 2011

DESIGN ASSUMPTIONS
-OVERHANG NOT TO BE ALTERED OR CUT OFF.

(55 % OF 27.2 P.S.F. G.S.L. PLUS 8.4 P.S.F. RAIN LOAD) EQUALS 23.3 P.S.F. SPECIFIED ROOF LIVE LOAD

CSI: TC=0.10 (1-2:1) , BC=0.02 (6-7:4) , WB=0.02 (3-6:1) , SSI=0.08 (1-2:1)

DOL LUMBER=1.00 NAIL=1.00 LS BEND=1.10 COMP=1.10 SHEAR=1.10 TENS= 1.10

COMPANION LIVE LOAD FACTOR = 0.50

TRUSS PLATE MANUFACTURER IS NOT RESPONSIBLE FOR QUALITY CONTROL IN THE TRUSS MANUFACTURING PLANT .

NAIL VALUES

PLATE	GRIP(DRY) (PSI) MAX	MIN	SHEAR (PLI) MAX	MIN	SECTION (PLI) MAX	MIN
MT20	618	354	1667	822	2284	1656

PLATE PLACEMENT TOL. = 0.250 inches

PLATE ROTATION TOL. = 5.0 Deg.

JSI GRIP= 0.10 (2) (INPUT = 0.90)
JSI METAL= 0.04 (2) (INPUT = 1.00)

LICENSED PROFESSIONAL ENGINEER
PAUL TREVISAN
100136551
March 14th, 2017
PROVINCE OF ONTARIO

RECEIVED
TOWN OF MILTON
MAR 29, 2017
17-5233
BUILDING DIVISION

READ ALL NOTES ON THIS PAGE AND ON THE ENGINEERING NOTE PAGE ENP-1. THE NOTE PAGE IS AN INTEGRAL PART OF THIS DRAWING AS IT CONTAINS SPECIFICATIONS AND CRITERIA USED IN THE DESIGN OF THIS COMPONENT.

KOTT

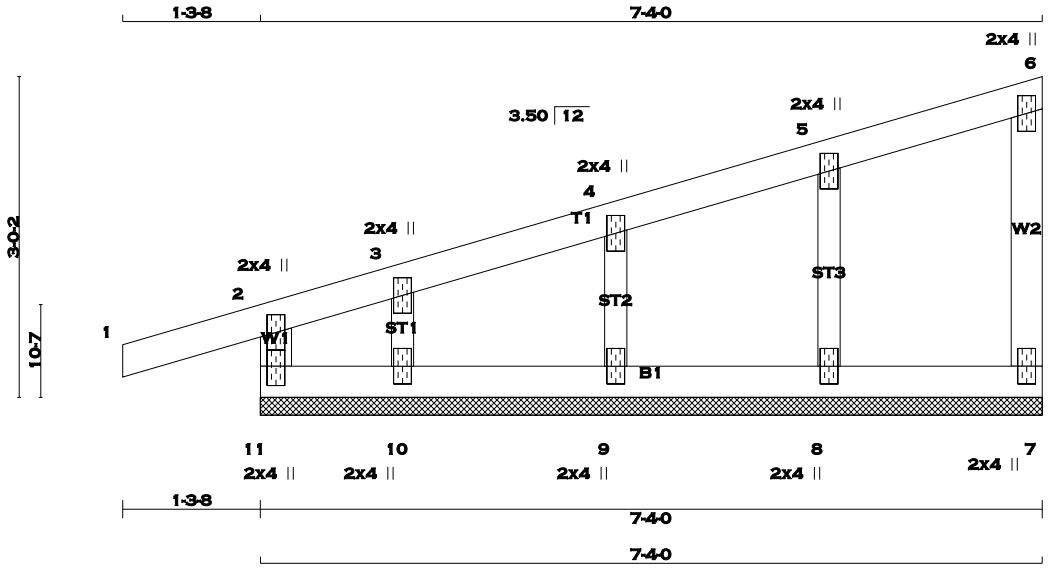

TOTAL WEIGHT = 3 X 25 = 75 lb [M]

LUMBER

N. L. G. A. RULES

CHORDS	SIZE		LUMBER	DESCR.
11 - 2	2x4	DRY	No.2	SPF
1 - 6	2x4	DRY	No.2	SPF
7 - 6	2x4	DRY	No.2	SPF
11 - 7	2x4	DRY	No.2	SPF
ALL WEBS	2x3	DRY	No.2	SPF
ALL GABLE WEBS	2x3	DRY	No.2	SPF

DRY: SEASONED LUMBER.

GABLE STUDS SPACED AT 2-0-0 OC.

PLATES (table is in inches)

JT	TYPE	PLATES	W	LEN	Y	X
2	TMV+p	MT20	2.0	4.0		
3, 4, 5						
3	TMW+w	MT20	2.0	4.0		
6	TMV+p	MT20	2.0	4.0		
7	BMV1+p	MT20	2.0	4.0		
8, 9, 10						
8	BMW1+w	MT20	2.0	4.0		
11	BMV1+p	MT20	2.0	4.0	2.25	1.00

A SIZE FOR SIZE SUBSTITUTION OF MITEK MII20 WITH TEE-LOK TL20 PLATES IS ALLOWED.

DIMENSIONS, SUPPORTS AND LOADINGS SPECIFIED BY FABRICATOR TO BE VERIFIED BY BUILDING DESIGNER

BEARINGS

THIS TRUSS DESIGNED FOR CONTINUOUS BEARINGS.

THIS TRUSS REQUIRES RIGID SHEATHING ON EXPOSED FACE.

BEARING MATERIAL TO BE SPF NO.2 OR BETTER AT JOINT(S)

BRACING

TOP CHORD TO BE SHEATHED OR MAX. PURLIN SPACING = 6.25 FT.
MAX. UNBRACED BOTTOM CHORD LENGTH = 10.00 FT. OR RIGID CEILING DIRECTLY APPLIED.

ALL PITCH BREAKS AND PERIMETER CORNER JOINTS MUST BE LATERALLY RESTRAINED.

LOADING

TOTAL LOAD CASES: (4)

CHORDS

MEMB. FR-TO	MAX. FACTORED FORCE (LBS)	FACTORED VERT. LOAD (PLF) FROM	TO	LC1 MAX CSI (LC)	MAX. UNBRAC LENGTH
11- 2	-192 / 0	0.0	0.0	0.03 (1)	7.81
1- 2	0 / 14	-77.3	-77.3	0.10 (1)	10.00
2- 3	-27 / 0	-77.3	-77.3	0.07 (1)	6.25
3- 4	-11 / 0	-77.3	-77.3	0.04 (1)	6.25
4- 5	-9 / 0	-77.3	-77.3	0.04 (1)	10.00
5- 6	-8 / 0	-77.3	-77.3	0.04 (1)	10.00
7- 6	-69 / 0	0.0	0.0	0.02 (1)	7.81
11-10	0 / 16	-17.5	-17.5	0.03 (1)	10.00
10- 9	0 / 13	-17.5	-17.5	0.01 (4)	10.00
9- 8	0 / 8	-17.5	-17.5	0.02 (4)	10.00
8- 7	0 / 5	-17.5	-17.5	0.02 (4)	10.00

WEBS

MEMB. FR-TO	MAX. FACTORED FORCE (LBS)	MAX CSI (LC)
8- 5	-164 / 0	0.03 (1)
9- 4	-162 / 0	0.02 (1)
10- 3	-84 / 0	0.01 (1)

DESIGN CRITERIA

SPECIFIED LOADS:

TOP	CH.	LL	=	23.3	PSF
		DL	=	3.0	PSF
BOT	CH.	LL	=	0.0	PSF
		DL	=	7.0	PSF
TOTAL	LOAD		=	33.3	PSF

SPACING = 24.0 IN. C/C

THIS TRUSS IS DESIGNED FOR RESIDENTIAL OR SMALL BUILDING REQUIREMENTS OF PART 9, NBCC 2010

THIS DESIGN COMPLIES WITH:
- PART 9 OF OBC 2012 , BCBC 2012 , ABC 2014
- CSA 086-09
- TPIC 2011

DESIGN ASSUMPTIONS
-OVERHANG NOT TO BE ALTERED OR CUT OFF.

(55 % OF 27.2 P.S.F. G.S.L. PLUS 8.4 P.S.F. RAIN LOAD) EQUALS 23.3 P.S.F. SPECIFIED ROOF LIVE LOAD

CSI: TC=0.10 (1-2:1) , BC=0.03 (10-11:1) , WB=0.03 (5-8:1) , SSI=0.08 (1-2:1)

DOL LUMBER=1.00 NAIL=1.00 LS BEND=1.10 COMP=1.10 SHEAR=1.10 TENS= 1.10

COMPANION LIVE LOAD FACTOR = 0.50

TRUSS PLATE MANUFACTURER IS NOT RESPONSIBLE FOR QUALITY CONTROL IN THE TRUSS MANUFACTURING PLANT .

NAIL VALUES

PLATE	GRIP(DRY) (PSI) MAX	MIN	SHEAR (PLI) MAX	MIN	SECTION (PLI) MAX	MIN
MT20	618	354	1667	822	2284	1656

PLATE PLACEMENT TOL. = 0.250 inches

PLATE ROTATION TOL. = 5.0 Deg.

JSI GRIP= 0.10 (2) (INPUT = 0.90)
JSI METAL= 0.04 (2) (INPUT = 1.00)

LICENSED PROFESSIONAL ENGINEER
R.M. TREVISAN
100136551
March 14th, 2017
PROVINCE OF ONTARIO

RECEIVED
TOWN OF MILTON
MAR 29, 2017
17-5233
BUILDING DIVISION

READ ALL NOTES ON THIS PAGE AND ON THE ENGINEERING NOTE PAGE ENP-1. THE NOTE PAGE IS AN INTEGRAL PART OF THIS DRAWING AS IT CONTAINS SPECIFICATIONS AND CRITERIA USED IN THE DESIGN OF THIS COMPONENT.

KOTT

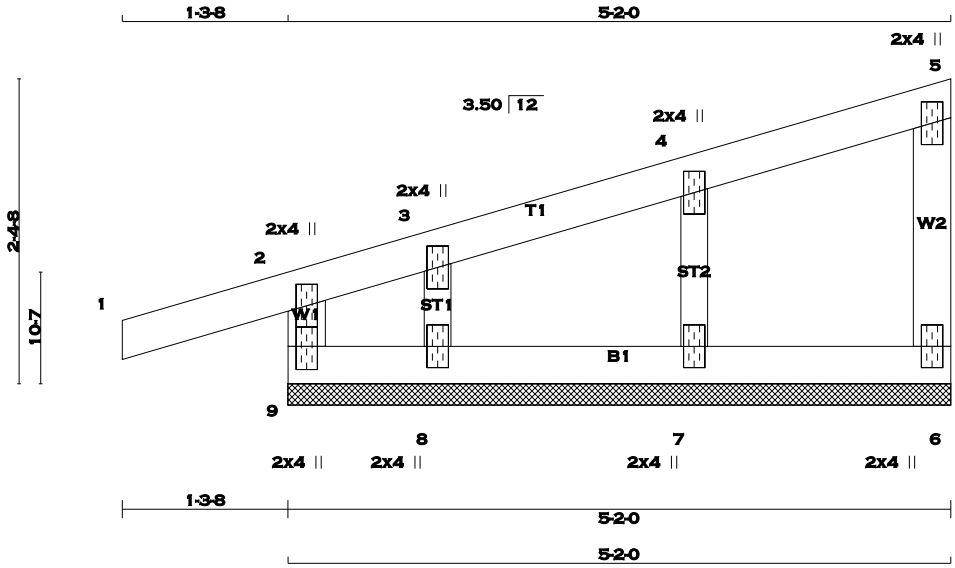

SCALE = 1:18.0

TOTAL WEIGHT = 18 lb [M]

LUMBER

N. L. G. A. RULES

CHORDS	SIZE		LUMBER	DESCR.
9 - 2	2x4	DRY	No.2	SPF
1 - 5	2x4	DRY	No.2	SPF
6 - 5	2x4	DRY	No.2	SPF
9 - 6	2x4	DRY	No.2	SPF
ALL WEBS	2x3	DRY	No.2	SPF
ALL GABLE WEBS	2x3	DRY	No.2	SPF

DRY: SEASONED LUMBER.

GABLE STUDS SPACED AT 2-0-0 OC.

PLATES (table is in inches)

JT	TYPE	PLATES	W	LEN	Y	X
2	TMV+p	MT20	2.0	4.0		
3	TMW+w	MT20	2.0	4.0		
4	TMW+w	MT20	2.0	4.0		
5	TMV+p	MT20	2.0	4.0		
6	BMV1+p	MT20	2.0	4.0		
7	BMW1+w	MT20	2.0	4.0		
8	BMW1+w	MT20	2.0	4.0		
9	BMV1+p	MT20	2.0	4.0	2.25	1.00

A SIZE FOR SIZE SUBSTITUTION OF MITEK MII20 WITH TEE-LOK TL20 PLATES IS ALLOWED.

DIMENSIONS, SUPPORTS AND LOADINGS SPECIFIED BY FABRICATOR TO BE VERIFIED BY BUILDING DESIGNER

BEARINGS

THIS TRUSS DESIGNED FOR CONTINUOUS BEARINGS.

THIS TRUSS REQUIRES RIGID SHEATHING ON EXPOSED FACE.

BEARING MATERIAL TO BE SPF NO.2 OR BETTER AT JOINT(S)

BRACING

TOP CHORD TO BE SHEATHED OR MAX. PURLIN SPACING = 6.25 FT.
MAX. UNBRACED BOTTOM CHORD LENGTH = 10.00 FT. OR RIGID CEILING DIRECTLY APPLIED.

ALL PITCH BREAKS AND PERIMETER CORNER JOINTS MUST BE LATERALLY RESTRAINED.

LOADING

TOTAL LOAD CASES: (4)

CHORDS

MEMB. FR-TO	MAX. FORCE (LBS)	FACTORED VERT. LOAD (PLF) FROM	TO	LC1	MAX CSI (LC)	MAX. UNBRAC LENGTH
9- 2	-190 / 0	0.0	0.0	0.03 (1)		7.81
1- 2	0 / 14	-77.3	-77.3	0.10 (1)		10.00
2- 3	-26 / 0	-77.3	-77.3	0.07 (1)		6.25
3- 4	-8 / 0	-77.3	-77.3	0.05 (1)		10.00
4- 5	-9 / 0	-77.3	-77.3	0.05 (1)		10.00
6- 5	-66 / 0	0.0	0.0	0.01 (1)		7.81
9- 8	0 / 14	-17.5	-17.5	0.03 (1)		10.00
8- 7	0 / 11	-17.5	-17.5	0.02 (4)		10.00
7- 6	0 / 6	-17.5	-17.5	0.02 (4)		10.00

WEBS

MEMB. FR-TO	MAX. FORCE (LBS)	MAX CSI (LC)
7- 4	-178 / 0	0.03 (1)
8- 3	-69 / 0	0.01 (1)

DESIGN CRITERIA

SPECIFIED LOADS:

TOP	CH.	LL	=	23.3	PSF
		DL	=	3.0	PSF
BOT	CH.	LL	=	0.0	PSF
		DL	=	7.0	PSF
TOTAL	LOAD		=	33.3	PSF

SPACING = 24.0 IN. C/C

THIS TRUSS IS DESIGNED FOR RESIDENTIAL OR SMALL BUILDING REQUIREMENTS OF PART 9, NBCC 2010

THIS DESIGN COMPLIES WITH:
- PART 9 OF OBC 2012 , BCBC 2012 , ABC 2014
- CSA 086-09
- TPIC 2011

DESIGN ASSUMPTIONS
-OVERHANG NOT TO BE ALTERED OR CUT OFF.

(55 % OF 27.2 P.S.F. G.S.L. PLUS 8.4 P.S.F. RAIN LOAD) EQUALS 23.3 P.S.F. SPECIFIED ROOF LIVE LOAD

CSI: TC=0.10 (1-2:1) , BC=0.03 (8-9:1) , WB=0.03 (4-7:1) , SSI=0.08 (1-2:1)

DOL LUMBER=1.00 NAIL=1.00 LS BEND=1.10 COMP=1.10 SHEAR=1.10 TENS= 1.10

COMPANION LIVE LOAD FACTOR = 0.50

TRUSS PLATE MANUFACTURER IS NOT RESPONSIBLE FOR QUALITY CONTROL IN THE TRUSS MANUFACTURING PLANT .

NAIL VALUES

PLATE	GRIP(DRY) (PSI) MAX	MIN	SHEAR (PLI) MAX	MIN	SECTION (PLI) MAX	MIN
MT20	618	354	1667	822	2284	1656

PLATE PLACEMENT TOL. = 0.250 inches

PLATE ROTATION TOL. = 5.0 Deg.

JSI GRIP= 0.10 (2) (INPUT = 0.90)
JSI METAL= 0.04 (2) (INPUT = 1.00)

LICENSED PROFESSIONAL ENGINEER
R.M. TREVISAN
100136551
March 14th, 2017
PROVINCE OF ONTARIO

RECEIVED
TOWN OF MILTON
MAR 29, 2017
17-5233
BUILDING DIVISION

READ ALL NOTES ON THIS PAGE AND ON THE ENGINEERING NOTE PAGE ENP-1. THE NOTE PAGE IS AN INTEGRAL PART OF THIS DRAWING AS IT CONTAINS SPECIFICATIONS AND CRITERIA USED IN THE DESIGN OF THIS COMPONENT.

KOTT

JOB NAME	TRUSS NAME	QUANTITY	PLY	JOB DESC.	DRWG NO.
PT0317-081	**GAB04**	**1**	**1**	TRUSS DESC. LECCO RIDGE-BLOCK 338	

ENG JOB: PT0317-081

KOTT , Stouffville, ON, CGC

Version 8.100 S Feb 9 2017 MiTek Industries, Inc. Tue Mar 14 15:56:47 2017 Page 1
ID:EvTixTQDI5yR1QLotZTBr_yE?HJ-ocB2IGpdrm04i8N9?SL06FqT7v4mnEOGPg5ofGzb_Q_

SCALE = 1:22.4

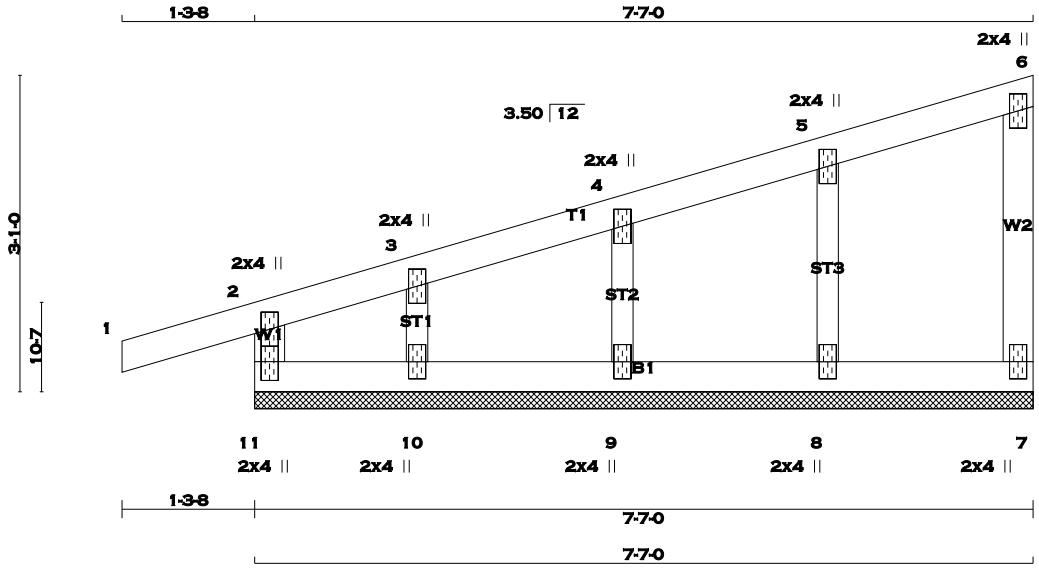

TOTAL WEIGHT = 26 lb
[M]

LUMBER
N. L. G. A. RULES

CHORDS	SIZE		LUMBER	DESCR.
11 - 2	2x4	DRY	No.2	SPF
1 - 6	2x4	DRY	No.2	SPF
7 - 6	2x4	DRY	No.2	SPF
11 - 7	2x4	DRY	No.2	SPF
ALL WEBS	2x3	DRY	No.2	SPF
ALL GABLE WEBS	2x3	DRY	No.2	SPF

DRY: SEASONED LUMBER.

GABLE STUDS SPACED AT 2-0-0 OC.

PLATES (table is in inches)

JT	TYPE	PLATES	W	LEN	Y	X
2	TMV+p	MT20	2.0	4.0		
3, 4, 5						
3	TMW+w	MT20	2.0	4.0		
6	TMV+p	MT20	2.0	4.0		
7	BMV1+p	MT20	2.0	4.0		
8, 9, 10						
8	BMW1+w	MT20	2.0	4.0		
11	BMV1+p	MT20	2.0	4.0	2.25	1.00

A SIZE FOR SIZE SUBSTITUTION OF MITEK MII20 WITH TEE-LOK TL20 PLATES IS ALLOWED.

DIMENSIONS, SUPPORTS AND LOADINGS SPECIFIED BY FABRICATOR TO BE VERIFIED BY BUILDING DESIGNER

BEARINGS

THIS TRUSS DESIGNED FOR CONTINUOUS BEARINGS.

THIS TRUSS REQUIRES RIGID SHEATHING ON EXPOSED FACE.

BEARING MATERIAL TO BE SPF NO.2 OR BETTER AT JOINT(S)

BRACING
TOP CHORD TO BE SHEATHED OR MAX. PURLIN SPACING = 6.25 FT.
MAX. UNBRACED BOTTOM CHORD LENGTH = 10.00 FT. OR RIGID CEILING DIRECTLY APPLIED.

ALL PITCH BREAKS AND PERIMETER CORNER JOINTS MUST BE LATERALLY RESTRAINED.

LOADING
TOTAL LOAD CASES: (4)

CHORDS

MEMB. FR-TO	MAX. FACTORED FORCE (LBS)	FACTORED VERT. LOAD (PLF) FROM	TO	LC1	MAX CSI (LC)	MAX. UNBRAC LENGTH
11- 2	-195 / 0	0.0	0.0	0.03 (1)		7.81
1- 2	0 / 14	-77.3	-77.3	0.10 (1)		10.00
2- 3	-25 / 0	-77.3	-77.3	0.07 (1)		6.25
3- 4	-10 / 0	-77.3	-77.3	0.04 (1)		6.25
4- 5	-8 / 0	-77.3	-77.3	0.04 (1)		10.00
5- 6	-8 / 0	-77.3	-77.3	0.04 (1)		10.00
7- 6	-69 / 0	0.0	0.0	0.01 (1)		7.81
11-10	0 / 16	-17.5	-17.5	0.03 (1)		10.00
10- 9	0 / 12	-17.5	-17.5	0.01 (4)		10.00
9- 8	0 / 8	-17.5	-17.5	0.02 (4)		10.00
8- 7	0 / 5	-17.5	-17.5	0.02 (4)		10.00

WEBS

MEMB. FR-TO	MAX. FACTORED FORCE (LBS)	MAX CSI (LC)
8- 5	-164 / 0	0.03 (1)
9- 4	-161 / 0	0.02 (1)
10- 3	-100 / 0	0.01 (1)

DESIGN CRITERIA

SPECIFIED LOADS:

TOP	CH.	LL	=	23.3	PSF
		DL	=	3.0	PSF
BOT	CH.	LL	=	0.0	PSF
		DL	=	7.0	PSF
TOTAL	LOAD		=	33.3	PSF

SPACING = 24.0 IN. C/C

THIS TRUSS IS DESIGNED FOR RESIDENTIAL OR SMALL BUILDING REQUIREMENTS OF PART 9, NBCC 2010

THIS DESIGN COMPLIES WITH:
- PART 9 OF OBC 2012 , BCBC 2012 , ABC 2014
- CSA 086-09
- TPIC 2011

DESIGN ASSUMPTIONS
-OVERHANG NOT TO BE ALTERED OR CUT OFF.

(55 % OF 27.2 P.S.F. G.S.L. PLUS 8.4 P.S.F. RAIN LOAD) EQUALS 23.3 P.S.F. SPECIFIED ROOF LIVE LOAD

CSI: TC=0.10 (1-2:1) , BC=0.03 (10-11:1) , WB=0.03 (5-8:1) , SSI=0.08 (1-2:1)

DOL LUMBER=1.00 NAIL=1.00 LS BEND=1.10 COMP=1.10 SHEAR=1.10 TENS= 1.10

COMPANION LIVE LOAD FACTOR = 0.50

TRUSS PLATE MANUFACTURER IS NOT RESPONSIBLE FOR QUALITY CONTROL IN THE TRUSS MANUFACTURING PLANT .

NAIL VALUES

PLATE	GRIP(DRY) (PSI) MAX	MIN	SHEAR (PLI) MAX	MIN	SECTION (PLI) MAX	MIN
MT20	618	354	1667	822	2284	1656

PLATE PLACEMENT TOL. = 0.250 inches

PLATE ROTATION TOL. = 5.0 Deg.

JSI GRIP= 0.11 (2) (INPUT = 0.90)
JSI METAL= 0.04 (2) (INPUT = 1.00)

LICENSED PROFESSIONAL ENGINEER
R.M. TREVISAN
100136551
March 14th, 2017
PROVINCE OF ONTARIO

RECEIVED
TOWN OF MILTON
MAR 29, 2017
17-5233
BUILDING DIVISION

READ ALL NOTES ON THIS PAGE AND ON THE ENGINEERING NOTE PAGE ENP-1. THE NOTE PAGE IS AN INTEGRAL PART OF THIS DRAWING AS IT CONTAINS SPECIFICATIONS AND CRITERIA USED IN THE DESIGN OF THIS COMPONENT.

KOTT

SCALE = 1:17.3

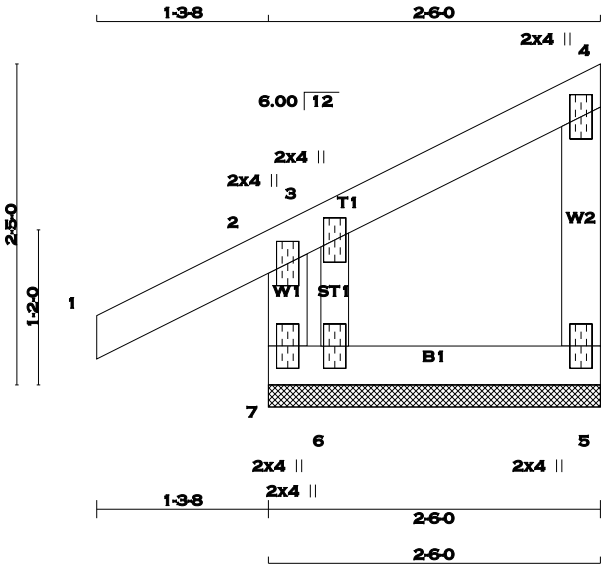

TOTAL WEIGHT = 2 X 11 = 23 lb [M]

LUMBER

N. L. G. A. RULES

CHORDS	SIZE		LUMBER	DESCR.
7 - 2	2x4	DRY	No.2	SPF
1 - 4	2x4	DRY	No.2	SPF
5 - 4	2x4	DRY	No.2	SPF
7 - 5	2x4	DRY	No.2	SPF
ALL WEBS	2x3	DRY	No.2	SPF
ALL GABLE WEBS	2x3	DRY	No.2	SPF

DRY: SEASONED LUMBER.

GABLE STUDS SPACED AT 2-0-0 OC.

PLATES (table is in inches)

JT	TYPE	PLATES	W	LEN	Y	X
2	TMV+p	MT20	2.0	4.0		
3	TMW+w	MT20	2.0	4.0		
4	TMV+p	MT20	2.0	4.0		
5	BMV1+p	MT20	2.0	4.0		
6	BMW1+w	MT20	2.0	4.0		
7	BMV1+p	MT20	2.0	4.0		

A SIZE FOR SIZE SUBSTITUTION OF MITEK MII20 WITH TEE-LOK TL20 PLATES IS ALLOWED.

DIMENSIONS, SUPPORTS AND LOADINGS SPECIFIED BY FABRICATOR TO BE VERIFIED BY BUILDING DESIGNER

BEARINGS

THIS TRUSS DESIGNED FOR CONTINUOUS BEARINGS.

THIS TRUSS REQUIRES RIGID SHEATHING ON EXPOSED FACE.

PROVIDE ANCHORAGE AT BEARING JOINT 6 FOR 150 LBS FACTORED UPLIFT
BEARING MATERIAL TO BE SPF NO.2 OR BETTER AT JOINT(S)

BRACING

TOP CHORD TO BE SHEATHED OR MAX. PURLIN SPACING = 6.25 FT.
MAX. UNBRACED BOTTOM CHORD LENGTH = 10.00 FT. OR RIGID CEILING DIRECTLY APPLIED.

ALL PITCH BREAKS AND PERIMETER CORNER JOINTS MUST BE LATERALLY RESTRAINED.

LOADING

TOTAL LOAD CASES: (5)

CHORDS MEMB. FR-TO	MAX. FACTORED FORCE (LBS)	FACTORED VERT. LOAD (PLF) FROM	TO	LC1 MAX CSI (LC)	MAX. UNBRAC LENGTH	WEBS MEMB. FR-TO	MAX. FACTORED FORCE (LBS)	MAX CSI (LC)
7- 2	-218 / 0	0.0	0.0	0.02 (5)	7.81	6- 3	-16 / 103	0.02 (5)
1- 2	0 / 23	-77.3	-77.3	0.10 (1)	10.00			
2- 3	-48 / 0	-77.3	-77.3	0.09 (1)	6.25			
3- 4	-12 / 0	-77.3	-77.3	0.03 (1)	6.25			
5- 4	-70 / 0	0.0	0.0	0.02 (1)	7.81			
7- 6	-7 / 9	-17.5	-17.5	0.02 (1)	10.00			
6- 5	-1 / 8	-17.5	-17.5	0.01 (4)	10.00			

CANTILEVER ANALYSIS HAS BEEN CONSIDERED IN THIS DESIGN

DESIGN CRITERIA

SPECIFIED LOADS:

TOP	CH.	LL	=	23.3	PSF
		DL	=	3.0	PSF
BOT	CH.	LL	=	0.0	PSF
		DL	=	7.0	PSF
TOTAL	LOAD		=	33.3	PSF

SPACING = 24.0 IN. C/C

THIS TRUSS IS DESIGNED FOR RESIDENTIAL OR SMALL BUILDING REQUIREMENTS OF PART 9, NBCC 2010

THIS DESIGN COMPLIES WITH:
- PART 9 OF OBC 2012 , BCBC 2012 , ABC 2014
- CSA 086-09
- TPIC 2011

DESIGN ASSUMPTIONS
-OVERHANG NOT TO BE ALTERED OR CUT OFF.

(55 % OF 27.2 P.S.F. G.S.L. PLUS 8.4 P.S.F. RAIN LOAD) EQUALS 23.3 P.S.F. SPECIFIED ROOF LIVE LOAD

CSI: TC=0.10 (1-2:1) , BC=0.02 (6-7:1) , WB=0.02 (3-6:5) , SSI=0.08 (2-3:5)

DOL LUMBER=1.00 NAIL=1.00 LS BEND=1.10 COMP=1.10 SHEAR=1.10 TENS= 1.10

COMPANION LIVE LOAD FACTOR = 0.50

TRUSS PLATE MANUFACTURER IS NOT RESPONSIBLE FOR QUALITY CONTROL IN THE TRUSS MANUFACTURING PLANT .

NAIL VALUES

PLATE	GRIP(DRY) (PSI) MAX	MIN	SHEAR (PLI) MAX	MIN	SECTION (PLI) MAX	MIN
MT20	618	354	1667	822	2284	1656

PLATE PLACEMENT TOL. = 0.250 inches

PLATE ROTATION TOL. = 5.0 Deg.

JSI GRIP= 0.13 (2) (INPUT = 0.90)
JSI METAL= 0.05 (2) (INPUT = 1.00)

LICENSED PROFESSIONAL ENGINEER
P.M. TREVISAN
100136551
March 14th, 2017
PROVINCE OF ONTARIO

RECEIVED
TOWN OF MILTON
MAR 29, 2017
17-5233
BUILDING DIVISION

READ ALL NOTES ON THIS PAGE AND ON THE ENGINEERING NOTE PAGE ENP-1. THE NOTE PAGE IS AN INTEGRAL PART OF THIS DRAWING AS IT CONTAINS SPECIFICATIONS AND CRITERIA USED IN THE DESIGN OF THIS COMPONENT.

KOTT

JOB NAME	TRUSS NAME	QUANTITY	PLY	JOB DESC.	DRWG NO.
PT0317-081	**GAB06**	**1**	**1**	TRUSS DESC. LECCO RIDGE-BLOCK 338	

ENG JOB: PT0317-081

KOTT , Stouffville, ON, CGC

Version 8.100 S Feb 9 2017 MiTek Industries, Inc. Tue Mar 14 15:56:48 2017 Page 1
ID:EvTixTQDI5yR1QLotZTBr_yE?HJ-GpkQWcqGc38wJHxLZAsFfTMenJQDWhYQeKqLBjzb_Pz

SCALE: 1/2"=1'

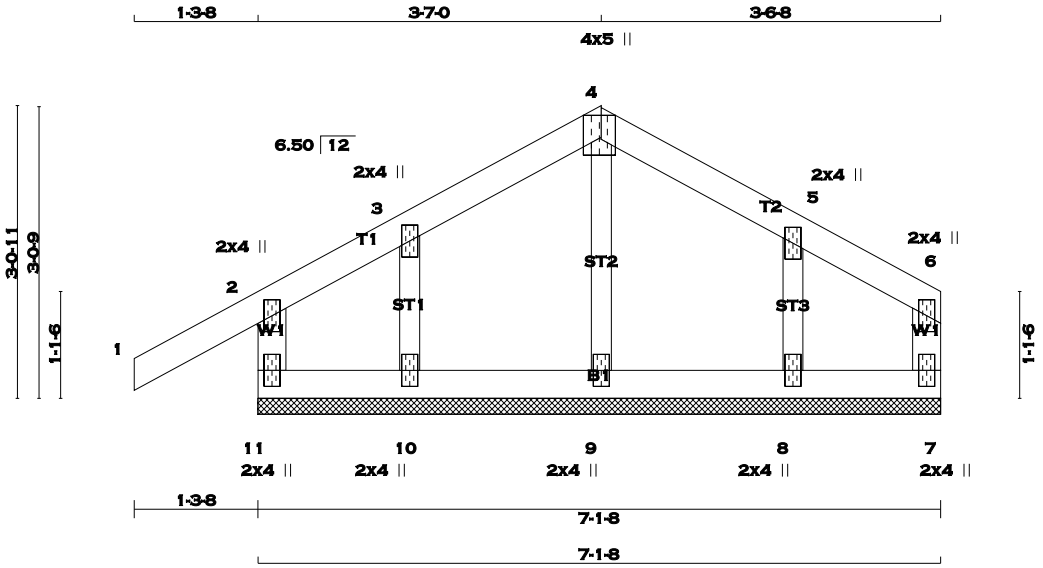

TOTAL WEIGHT = 25 lb
[M]

LUMBER
N. L. G. A. RULES

CHORDS	SIZE		LUMBER	DESCR.
11 - 2	2x4	DRY	No.2	SPF
1 - 4	2x4	DRY	No.2	SPF
4 - 6	2x4	DRY	No.2	SPF
7 - 6	2x4	DRY	No.2	SPF
11 - 7	2x4	DRY	No.2	SPF
ALL WEBS	2x3	DRY	No.2	SPF
ALL GABLE WEBS	2x3	DRY	No.2	SPF

DRY: SEASONED LUMBER.

GABLE STUDS SPACED AT 2-0-0 OC.

PLATES (table is in inches)

JT	TYPE	PLATES	W	LEN	Y	X
2	TMV+p	MT20	2.0	4.0		
3	TMW+w	MT20	2.0	4.0		
4	TTW+p	MT20	4.0	5.0	Edge 1.75	
5	TMW+w	MT20	2.0	4.0		
6	TMV+p	MT20	2.0	4.0		
7	BMV1+p	MT20	2.0	4.0		
8, 9, 10						
8	BMW1+w	MT20	2.0	4.0		
11	BMV1+p	MT20	2.0	4.0		

Edge - INDICATES REFERENCE CORNER OF PLATE TOUCHES EDGE OF CHORD.

A SIZE FOR SIZE SUBSTITUTION OF MITEK MII20 WITH TEE-LOK TL20 PLATES IS ALLOWED.

DIMENSIONS, SUPPORTS AND LOADINGS SPECIFIED BY FABRICATOR TO BE VERIFIED BY BUILDING DESIGNER

BEARINGS

THIS TRUSS DESIGNED FOR CONTINUOUS BEARINGS.

THIS TRUSS REQUIRES RIGID SHEATHING ON EXPOSED FACE.

BEARING MATERIAL TO BE SPF NO.2 OR BETTER AT JOINT(S)

BRACING
TOP CHORD TO BE SHEATHED OR MAX. PURLIN SPACING = 10.00 FT.
MAX. UNBRACED BOTTOM CHORD LENGTH = 6.25 FT. OR RIGID CEILING DIRECTLY APPLIED.

ALL PITCH BREAKS AND PERIMETER CORNER JOINTS MUST BE LATERALLY RESTRAINED.

LOADING
TOTAL LOAD CASES: (4)

CHORDS

MEMB. FR-TO	MAX. FACTORED FORCE (LBS)	FACTORED VERT. LOAD (PLF) FROM	TO	LC1 MAX CSI (LC)	MAX. UNBRAC LENGTH
11- 2	-184 / 0	0.0	0.0	0.03 (1)	7.81
1- 2	0 / 25	-77.3	-77.3	0.10 (1)	10.00
2- 3	-3 / 0	-77.3	-77.3	0.07 (1)	10.00
3- 4	0 / 17	-77.3	-77.3	0.04 (1)	10.00
4- 5	0 / 15	-77.3	-77.3	0.04 (1)	10.00
5- 6	0 / 14	-77.3	-77.3	0.03 (1)	10.00
7- 6	-38 / 0	0.0	0.0	0.01 (1)	7.81
11-10	-7 / 1	-17.5	-17.5	0.02 (1)	10.00
10- 9	-12 / 0	-17.5	-17.5	0.01 (4)	6.25
9- 8	-12 / 0	-17.5	-17.5	0.01 (4)	6.25
8- 7	-5 / 1	-17.5	-17.5	0.01 (4)	10.00

WEBS

MEMB. FR-TO	MAX. FACTORED FORCE (LBS)	MAX CSI (LC)
9- 4	-183 / 0	0.03 (1)
10- 3	-105 / 0	0.02 (1)
8- 5	-147 / 0	0.02 (1)

DESIGN CRITERIA

SPECIFIED LOADS:

TOP	CH.	LL	=	23.3	PSF
		DL	=	3.0	PSF
BOT	CH.	LL	=	0.0	PSF
		DL	=	7.0	PSF
TOTAL	LOAD		=	33.3	PSF

SPACING = 24.0 IN. C/C

THIS TRUSS IS DESIGNED FOR RESIDENTIAL OR SMALL BUILDING REQUIREMENTS OF PART 9, NBCC 2010

THIS DESIGN COMPLIES WITH:
- PART 9 OF OBC 2012 , BCBC 2012 , ABC 2014
- CSA 086-09
- TPIC 2011

DESIGN ASSUMPTIONS
-OVERHANG NOT TO BE ALTERED OR CUT OFF.

(55 % OF 27.2 P.S.F. G.S.L. PLUS 8.4 P.S.F. RAIN LOAD) EQUALS 23.3 P.S.F. SPECIFIED ROOF LIVE LOAD

CSI: TC=0.10 (1-2:1) , BC=0.02 (10-11:1) , WB=0.03 (4-9:1) , SSI=0.07 (1-2:1)

DOL LUMBER=1.00 NAIL=1.00 LS BEND=1.10 COMP=1.10 SHEAR=1.10 TENS= 1.10

COMPANION LIVE LOAD FACTOR = 0.50

TRUSS PLATE MANUFACTURER IS NOT RESPONSIBLE FOR QUALITY CONTROL IN THE TRUSS MANUFACTURING PLANT .

NAIL VALUES

PLATE	GRIP(DRY) (PSI) MAX	MIN	SHEAR (PLI) MAX	MIN	SECTION (PLI) MAX	MIN
MT20	618	354	1667	822	2284	1656

PLATE PLACEMENT TOL. = 0.250 inches

PLATE ROTATION TOL. = 5.0 Deg.

JSI GRIP= 0.11 (2) (INPUT = 0.90)
JSI METAL= 0.05 (4) (INPUT = 1.00)

RECEIVED
TOWN OF MILTON
MAR 29, 2017
17-5233
BUILDING DIVISION

READ ALL NOTES ON THIS PAGE AND ON THE ENGINEERING NOTE PAGE ENP-1. THE NOTE PAGE IS AN INTEGRAL PART OF THIS DRAWING AS IT CONTAINS SPECIFICATIONS AND CRITERIA USED IN THE DESIGN OF THIS COMPONENT.

KOTT

Version 8.100 S Feb 9 2017 MiTek Industries, Inc. Tue Mar 14 15:56:49 2017 Page 1
ID:EvTixTQDI5yR1QLotZTBr_yE?HJ-k?IojyruNNGnxRWY6tOUBgvobih1F4JZs_avj9zb_Py

SCALE = 1:44.9

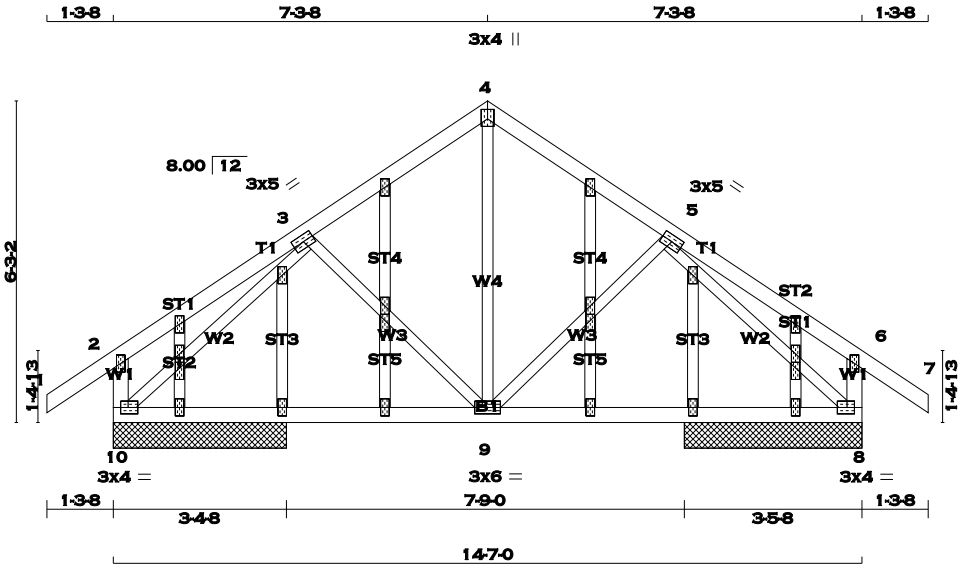

TOTAL WEIGHT = 77 lb

LUMBER

N. L. G. A. RULES

CHORDS	SIZE		LUMBER	DESCR.
1 - 4	2x4	DRY	No.2	SPF
4 - 7	2x4	DRY	No.2	SPF
10 - 2	2x4	DRY	No.2	SPF
8 - 6	2x4	DRY	No.2	SPF
10 - 8	2x4	DRY	No.2	SPF
ALL WEBS	2x3	DRY	No.2	SPF
EXCEPT				
ALL GABLE WEBS				
	2x3	DRY	No.2	SPF

DRY: SEASONED LUMBER.

GABLE STUDS SPACED AT 2-0-0 OC.

PLATES (table is in inches)

JT	TYPE	PLATES	W	LEN	Y	X
2	TMV+p	MT20	2.0	4.0		
3	TMWW-t	MT20	3.0	5.0		
4	TTW+p	MT20	3.0	4.0	2.25	1.50
5	TMWW-t	MT20	3.0	5.0		
6	TMV+p	MT20	2.0	4.0		
8	BMVW1-t	MT20	3.0	4.0	1.50	1.75
9	BMWWW-t	MT20	3.0	6.0		
10	BMVW1-t	MT20	3.0	4.0	1.50	1.75
11, 16, 21, 26						
11	NP+w	MT20	2.0	4.0	1.50	1.00
11, 12, 13, 14, 15, 16, 17, 18, 19, 20, 21, 22, 23, 24, 25, 26						
11	NP+w	MT20	2.0	4.0		

A SIZE FOR SIZE SUBSTITUTION OF MITEK MII20 WITH TEE-LOK TL20 PLATES IS ALLOWED.

DIMENSIONS, SUPPORTS AND LOADINGS SPECIFIED BY FABRICATOR TO BE VERIFIED BY BUILDING DESIGNER

BEARINGS

JT	FACTORED GROSS REACTION VERT	HORZ	MAXIMUM FACTORED GROSS REACTION DOWN	HORZ	UPLIFT	INPUT BRG IN-SX	REQRD BRG IN-SX
10	798	0	798	0	0	3-4-8	3-4-8
8	798	0	798	0	0	3-5-8	3-5-8

UNFACTORED REACTIONS

JT	1ST LCASE COMBINED	MAX./MIN. COMPONENT REACTIONS SNOW	LIVE	PERM.LIVE	WIND	DEAD	SOIL
10	558	403 / 0	0 / 0	0 / 0	0 / 0	154 / 0	0 / 0
8	558	403 / 0	0 / 0	0 / 0	0 / 0	154 / 0	0 / 0

BEARING MATERIAL TO BE SPF NO.2 OR BETTER AT JOINT(S) 10, 8

BRACING

TOP CHORD TO BE SHEATHED OR MAX. PURLIN SPACING = 6.25 FT.
MAX. UNBRACED BOTTOM CHORD LENGTH = 10.00 FT. OR RIGID CEILING DIRECTLY APPLIED.

ALL PITCH BREAKS AND PERIMETER CORNER JOINTS MUST BE LATERALLY RESTRAINED.

LOADING

TOTAL LOAD CASES: (4)

CHORDS

MEMB. FR-TO	MAX. FACTORED FORCE (LBS)	FACTORED VERT. LOAD (PLF) FROM	TO	LC1 CSI (LC)	MAX UNBRAC LENGTH
1- 2	0 / 29	-77.3	-77.3	0.10 (1)	10.00
2- 3	0 / 18	-77.3	-77.3	0.16 (1)	10.00
3- 4	-550 / 0	-77.3	-77.3	0.13 (1)	6.25
4- 5	-550 / 0	-77.3	-77.3	0.13 (1)	6.25
5- 6	0 / 18	-77.3	-77.3	0.16 (1)	10.00
6- 7	0 / 29	-77.3	-77.3	0.10 (1)	10.00
10- 2	-217 / 0	0.0	0.0	0.02 (1)	7.81
8- 6	-217 / 0	0.0	0.0	0.02 (1)	7.81
10- 9	0 / 554	-17.5	-17.5	0.30 (4)	10.00
9- 8	0 / 554	-17.5	-17.5	0.30 (4)	10.00

WEBS

MEMB. FR-TO	MAX. FACTORED FORCE (LBS)	MAX CSI (LC)
9- 4	0 / 375	0.08 (1)
9- 5	-156 / 5	0.07 (1)
3- 9	-156 / 5	0.07 (1)
10- 3	-768 / 0	0.32 (1)
5- 8	-768 / 0	0.32 (1)

[M][F]

DESIGN CRITERIA

SPECIFIED LOADS:

TOP	CH.	LL	=	23.3	PSF
		DL	=	3.0	PSF
BOT	CH.	LL	=	0.0	PSF
		DL	=	7.0	PSF
TOTAL	LOAD		=	33.3	PSF

SPACING = 24.0 IN. C/C

THIS TRUSS IS DESIGNED FOR RESIDENTIAL OR SMALL BUILDING REQUIREMENTS OF PART 9, NBCC 2010

THIS DESIGN COMPLIES WITH:
- PART 9 OF OBC 2012 , BCBC 2012 , ABC 2014
- CSA 086-09
- TPIC 2011

(55 % OF 27.2 P.S.F. G.S.L. PLUS 8.4 P.S.F. RAIN LOAD) EQUALS 23.3 P.S.F. SPECIFIED ROOF LIVE LOAD

ALLOWABLE DEFL.(LL)= L/360 (0.49")
CALCULATED VERT. DEFL.(LL) = L/ 999 (0.01")
ALLOWABLE DEFL.(TL)= L/360 (0.49")
CALCULATED VERT. DEFL.(TL) = L/ 999 (0.07")

CSI: TC=0.16 (5-6:1) , BC=0.30 (8-9:4) , WB=0.32 (5-8:1) , SSI=0.11 (5-6:1)

DOL LUMBER=1.00 NAIL=1.00 LS BEND=1.10 COMP=1.10 SHEAR=1.10 TENS= 1.10

COMPANION LIVE LOAD FACTOR = 0.50

TRUSS PLATE MANUFACTURER IS NOT RESPONSIBLE FOR QUALITY CONTROL IN THE TRUSS MANUFACTURING PLANT .

NAIL VALUES

PLATE	GRIP(DRY) (PSI) MAX	MIN	SHEAR (PLI) MAX	MIN	SECTION (PLI) MAX	MIN
MT20	618	354	1667	822	2284	1656

PLATE PLACEMENT TOL. = 0.250 inches

PLATE ROTATION TOL. = 5.0 Deg.

JSI GRIP= 0.85 (8) (INPUT = 0.90)
JSI METAL= 0.22 (5) (INPUT = 1.00)

LICENSED PROFESSIONAL ENGINEER
P.M. TREVISAN
100136551
March 14th, 2017
PROVINCE OF ONTARIO

RECEIVED
TOWN OF MILTON
MAR 29, 2017
17-5233
BUILDING DIVISION

READ ALL NOTES ON THIS PAGE AND ON THE ENGINEERING NOTE PAGE ENP-1. THE NOTE PAGE IS AN INTEGRAL PART OF THIS DRAWING AS IT CONTAINS SPECIFICATIONS AND CRITERIA USED IN THE DESIGN OF THIS COMPONENT.

KOTT

JOB NAME	TRUSS NAME	QUANTITY	PLY	JOB DESC.	DRWG NO.
PT0317-081	GAB08	1	1	TRUSS DESC. LECCO RIDGE-BLOCK 338	ENG JOB: PT0317-081

KOTT , Stouffville, ON, CGC

Version 8.100 S Feb 9 2017 MiTek Industries, Inc. Tue Mar 14 15:56:49 2017 Page 1
ID:EvTixTQDI5yR1QLotZTBr_yE?HJ-k?IojyruNNGnxRWY6tOUBgvpXilSF8uZs_avj9zb_Py

SCALE = 1:26.4

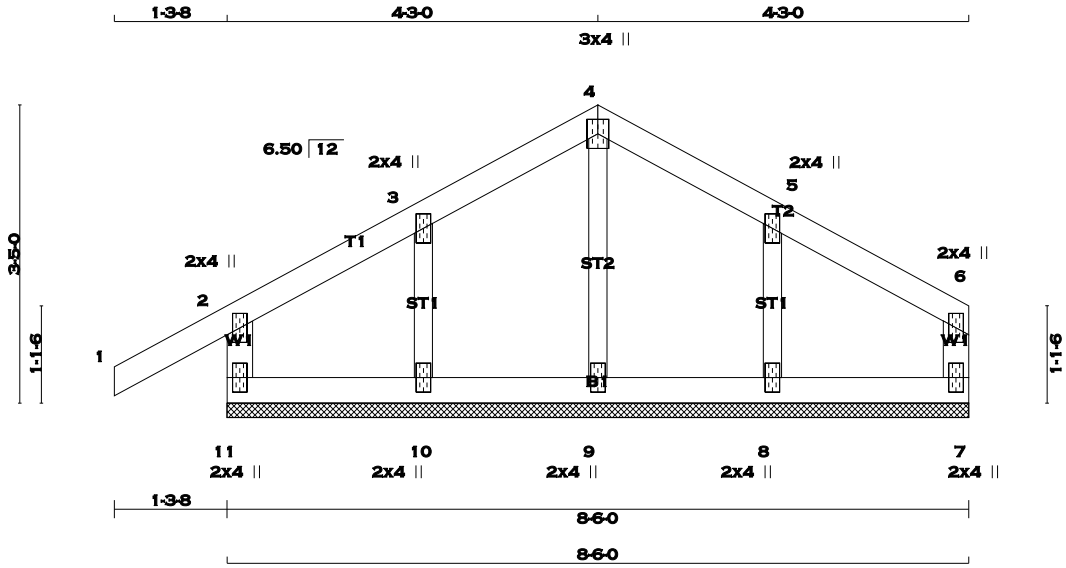

TOTAL WEIGHT = 29 lb
[M]

LUMBER
N. L. G. A. RULES

CHORDS	SIZE		LUMBER	DESCR.
11 - 2	2x4	DRY	No.2	SPF
1 - 4	2x4	DRY	No.2	SPF
4 - 6	2x4	DRY	No.2	SPF
7 - 6	2x4	DRY	No.2	SPF
11 - 7	2x4	DRY	No.2	SPF
ALL WEBS	2x3	DRY	No.2	SPF
ALL GABLE WEBS	2x3	DRY	No.2	SPF

DRY: SEASONED LUMBER.

GABLE STUDS SPACED AT 2-0-0 OC.

PLATES (table is in inches)

JT	TYPE	PLATES	W	LEN	Y	X
2	TMV+p	MT20	2.0	4.0		
3	TMW+w	MT20	2.0	4.0		
4	TTW+p	MT20	3.0	4.0		
5	TMW+w	MT20	2.0	4.0		
6	TMV+p	MT20	2.0	4.0		
7	BMV1+p	MT20	2.0	4.0		
8, 9, 10						
8	BMW1+w	MT20	2.0	4.0		
11	BMV1+p	MT20	2.0	4.0		

A SIZE FOR SIZE SUBSTITUTION OF MITEK MII20 WITH TEE-LOK TL20 PLATES IS ALLOWED.

DIMENSIONS, SUPPORTS AND LOADINGS SPECIFIED BY FABRICATOR TO BE VERIFIED BY BUILDING DESIGNER

BEARINGS

THIS TRUSS DESIGNED FOR CONTINUOUS BEARINGS.

THIS TRUSS REQUIRES RIGID SHEATHING ON EXPOSED FACE.

BEARING MATERIAL TO BE SPF NO.2 OR BETTER AT JOINT(S)

BRACING
TOP CHORD TO BE SHEATHED OR MAX. PURLIN SPACING = 6.25 FT.
MAX. UNBRACED BOTTOM CHORD LENGTH = 10.00 FT. OR RIGID CEILING DIRECTLY APPLIED.

ALL PITCH BREAKS AND PERIMETER CORNER JOINTS MUST BE LATERALLY RESTRAINED.

LOADING
TOTAL LOAD CASES: (4)

CHORDS

MEMB. FR-TO	MAX. FACTORED FORCE (LBS)	FACTORED VERT. LOAD (PLF) FROM	TO	LC1 MAX CSI (LC)	MAX. UNBRAC LENGTH
11- 2	-208 / 0	0.0	0.0	0.02 (1)	7.81
1- 2	0 / 25	-77.3	-77.3	0.10 (1)	10.00
2- 3	-37 / 0	-77.3	-77.3	0.04 (1)	6.25
3- 4	-30 / 0	-77.3	-77.3	0.04 (1)	6.25
4- 5	-31 / 0	-77.3	-77.3	0.04 (1)	6.25
5- 6	-34 / 0	-77.3	-77.3	0.04 (1)	6.25
7- 6	-97 / 0	0.0	0.0	0.03 (1)	7.81
11-10	0 / 31	-17.5	-17.5	0.02 (4)	10.00
10- 9	0 / 26	-17.5	-17.5	0.02 (4)	10.00
9- 8	0 / 26	-17.5	-17.5	0.02 (4)	10.00
8- 7	0 / 32	-17.5	-17.5	0.02 (4)	10.00

WEBS

MEMB. FR-TO	MAX. FACTORED FORCE (LBS)	MAX CSI (LC)
9- 4	-128 / 0	0.03 (1)
10- 3	-161 / 0	0.02 (1)
8- 5	-169 / 0	0.03 (1)

DESIGN CRITERIA

SPECIFIED LOADS:

TOP	CH.	LL	=	23.3	PSF
		DL	=	3.0	PSF
BOT	CH.	LL	=	0.0	PSF
		DL	=	7.0	PSF
TOTAL	LOAD		=	33.3	PSF

SPACING = 24.0 IN. C/C

THIS TRUSS IS DESIGNED FOR RESIDENTIAL OR SMALL BUILDING REQUIREMENTS OF PART 9, NBCC 2010

THIS DESIGN COMPLIES WITH:
- PART 9 OF OBC 2012 , BCBC 2012 , ABC 2014
- CSA 086-09
- TPIC 2011

DESIGN ASSUMPTIONS
-OVERHANG NOT TO BE ALTERED OR CUT OFF.

(55 % OF 27.2 P.S.F. G.S.L. PLUS 8.4 P.S.F. RAIN LOAD) EQUALS 23.3 P.S.F. SPECIFIED ROOF LIVE LOAD

CSI: TC=0.10 (1-2:1) , BC=0.02 (7-8:4) , WB=0.03 (5-8:1) , SSI=0.07 (1-2:1)

DOL LUMBER=1.00 NAIL=1.00 LS BEND=1.10 COMP=1.10 SHEAR=1.10 TENS= 1.10

COMPANION LIVE LOAD FACTOR = 0.50

TRUSS PLATE MANUFACTURER IS NOT RESPONSIBLE FOR QUALITY CONTROL IN THE TRUSS MANUFACTURING PLANT .

NAIL VALUES

PLATE	GRIP(DRY) (PSI) MAX	MIN	SHEAR (PLI) MAX	MIN	SECTION (PLI) MAX	MIN
MT20	618	354	1667	822	2284	1656

PLATE PLACEMENT TOL. = 0.250 inches

PLATE ROTATION TOL. = 5.0 Deg.

JSI GRIP= 0.15 (2) (INPUT = 0.90)
JSI METAL= 0.06 (2) (INPUT = 1.00)

LICENSED PROFESSIONAL ENGINEER
R.M. TREVISAN
100136551
March 14th, 2017
PROVINCE OF ONTARIO

RECEIVED
TOWN OF MILTON
MAR 29, 2017
17-5233
BUILDING DIVISION

READ ALL NOTES ON THIS PAGE AND ON THE ENGINEERING NOTE PAGE ENP-1. THE NOTE PAGE IS AN INTEGRAL PART OF THIS DRAWING AS IT CONTAINS SPECIFICATIONS AND CRITERIA USED IN THE DESIGN OF THIS COMPONENT.

KOTT

JOB NAME	TRUSS NAME	QUANTITY	PLY	JOB DESC.	DRWG NO.
PT0317-081	**GAB09**	**1**	**1**	TRUSS DESC. LECCO RIDGE-BLOCK 338	

ENG JOB: PT0317-081

KOTT , Stouffville, ON, CGC

Version 8.100 S Feb 9 2017 MiTek Industries, Inc. Tue Mar 14 15:56:50 2017 Page 1
ID:EvTixTQDI5yR1QLotZTBr_yE?HJ-DBsAxIsW8hOeZb5kgavjkuS_M65U_b8j5dJSFbzb_Px

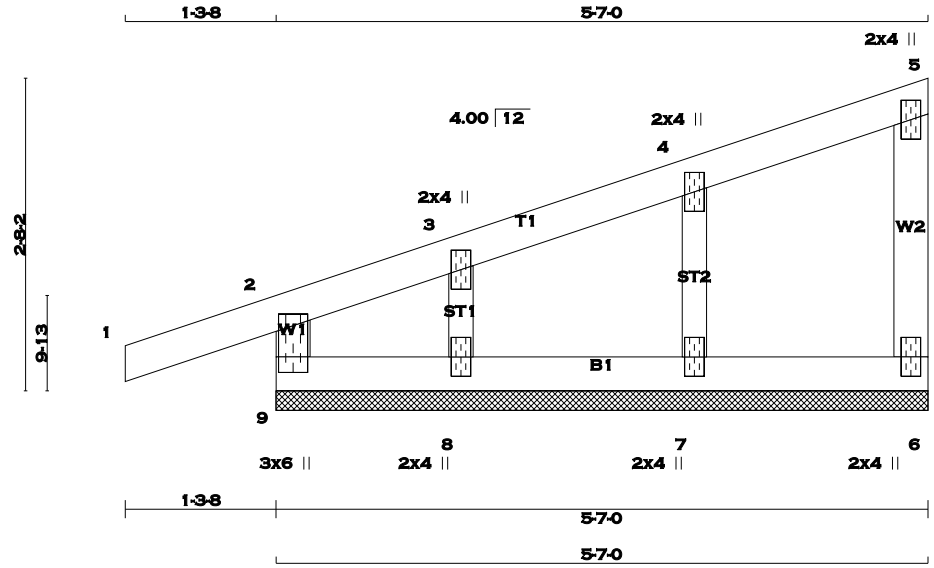

SCALE = 1:19.7

TOTAL WEIGHT = 19 lb [M]

LUMBER

N. L. G. A. RULES

CHORDS	SIZE		LUMBER	DESCR.
9 - 2	2x4	DRY	No.2	SPF
1 - 5	2x4	DRY	No.2	SPF
6 - 5	2x4	DRY	No.2	SPF
9 - 6	2x4	DRY	No.2	SPF
ALL WEBS	2x3	DRY	No.2	SPF
ALL GABLE WEBS	2x3	DRY	No.2	SPF

DRY: SEASONED LUMBER.

GABLE STUDS SPACED AT 2-0-0 OC.

PLATES (table is in inches)

JT	TYPE	PLATES	W	LEN	Y	X
2						
3	TMW+w	MT20	2.0	4.0		
4	TMW+w	MT20	2.0	4.0		
5	TMV+p	MT20	2.0	4.0		
6	BMV1+p	MT20	2.0	4.0		
7	BMW1+w	MT20	2.0	4.0		
8	BMW1+w	MT20	2.0	4.0		
9						
9	TMBMV1+p	MT20	3.0	6.0	3.50	1.50

A SIZE FOR SIZE SUBSTITUTION OF MITEK MII20 WITH TEE-LOK TL20 PLATES IS ALLOWED.

DIMENSIONS, SUPPORTS AND LOADINGS SPECIFIED BY FABRICATOR TO BE VERIFIED BY BUILDING DESIGNER

BEARINGS

THIS TRUSS DESIGNED FOR CONTINUOUS BEARINGS.

THIS TRUSS REQUIRES RIGID SHEATHING ON EXPOSED FACE.

BEARING MATERIAL TO BE SPF NO.2 OR BETTER AT JOINT(S)

BRACING

TOP CHORD TO BE SHEATHED OR MAX. PURLIN SPACING = 6.25 FT.
MAX. UNBRACED BOTTOM CHORD LENGTH = 10.00 FT. OR RIGID CEILING DIRECTLY APPLIED.

ALL PITCH BREAKS AND PERIMETER CORNER JOINTS MUST BE LATERALLY RESTRAINED.

LOADING

TOTAL LOAD CASES: (4)

CHORDS

MEMB. FR-TO	MAX. FORCE (LBS)	FACTORED VERT. LOAD (PLF) FROM	TO	LC1	MAX CSI (LC)	MAX. UNBRAC LENGTH
9- 2	-195 / 0	0.0	0.0	0.03 (1)		7.81
1- 2	0 / 16	-77.3	-77.3	0.10 (1)		10.00
2- 3	-24 / 0	-77.3	-77.3	0.07 (1)		6.25
3- 4	-7 / 0	-77.3	-77.3	0.04 (1)		10.00
4- 5	-9 / 0	-77.3	-77.3	0.04 (1)		10.00
6- 5	-66 / 0	0.0	0.0	0.01 (1)		7.81
9- 8	0 / 15	-17.5	-17.5	0.03 (1)		10.00
8- 7	0 / 10	-17.5	-17.5	0.02 (4)		10.00
7- 6	0 / 5	-17.5	-17.5	0.02 (4)		10.00

WEBS

MEMB. FR-TO	MAX. FORCE (LBS)	MAX CSI (LC)
7- 4	-177 / 0	0.03 (1)
8- 3	-97 / 0	0.01 (1)

DESIGN CRITERIA

SPECIFIED LOADS:

TOP	CH.	LL	=	23.3	PSF
		DL	=	3.0	PSF
BOT	CH.	LL	=	0.0	PSF
		DL	=	7.0	PSF
TOTAL	LOAD		=	33.3	PSF

SPACING = 24.0 IN. C/C

THIS TRUSS IS DESIGNED FOR RESIDENTIAL OR SMALL BUILDING REQUIREMENTS OF PART 9, NBCC 2010

THIS DESIGN COMPLIES WITH:
- PART 9 OF OBC 2012 , BCBC 2012 , ABC 2014
- CSA 086-09
- TPIC 2011

DESIGN ASSUMPTIONS
-OVERHANG NOT TO BE ALTERED OR CUT OFF.

(55 % OF 27.2 P.S.F. G.S.L. PLUS 8.4 P.S.F. RAIN LOAD) EQUALS 23.3 P.S.F. SPECIFIED ROOF LIVE LOAD

CSI: TC=0.10 (1-2:1) , BC=0.03 (8-9:1) , WB=0.03 (4-7:1) , SSI=0.08 (1-2:1)

DOL LUMBER=1.00 NAIL=1.00 LS BEND=1.10 COMP=1.10 SHEAR=1.10 TENS= 1.10

COMPANION LIVE LOAD FACTOR = 0.50

TRUSS PLATE MANUFACTURER IS NOT RESPONSIBLE FOR QUALITY CONTROL IN THE TRUSS MANUFACTURING PLANT .

NAIL VALUES

PLATE	GRIP(DRY) (PSI) MAX	MIN	SHEAR (PLI) MAX	MIN	SECTION (PLI) MAX	MIN
MT20	618	354	1667	822	2284	1656

PLATE PLACEMENT TOL. = 0.250 inches

PLATE ROTATION TOL. = 5.0 Deg.

JSI GRIP= 0.17 (9) (INPUT = 0.90)
JSI METAL= 0.03 (7) (INPUT = 1.00)

LICENSED PROFESSIONAL ENGINEER
P.M. TREVISAN
100136551
March 14th, 2017
PROVINCE OF ONTARIO

RECEIVED
TOWN OF MILTON
MAR 29, 2017
17-5233
BUILDING DIVISION

READ ALL NOTES ON THIS PAGE AND ON THE ENGINEERING NOTE PAGE ENP-1. THE NOTE PAGE IS AN INTEGRAL PART OF THIS DRAWING AS IT CONTAINS SPECIFICATIONS AND CRITERIA USED IN THE DESIGN OF THIS COMPONENT.

KOTT

JOB NAME	TRUSS NAME	QUANTITY	PLY	JOB DESC.	DRWG NO.
PT0317-081	**GAB10**	**1**	**1**	TRUSS DESC. LECCO RIDGE-BLOCK 338	ENG JOB: PT0317-081

KOTT , Stouffville, ON, CGC

Version 8.100 S Feb 9 2017 MiTek Industries, Inc. Tue Mar 14 15:56:51 2017 Page 1
ID:EvTixTQDI5yR1QLotZTBr_yE?HJ-hNQZ8et8v_WVAlgwEIQyG5_9_WRwj1EsKH3?n1zb_Pw

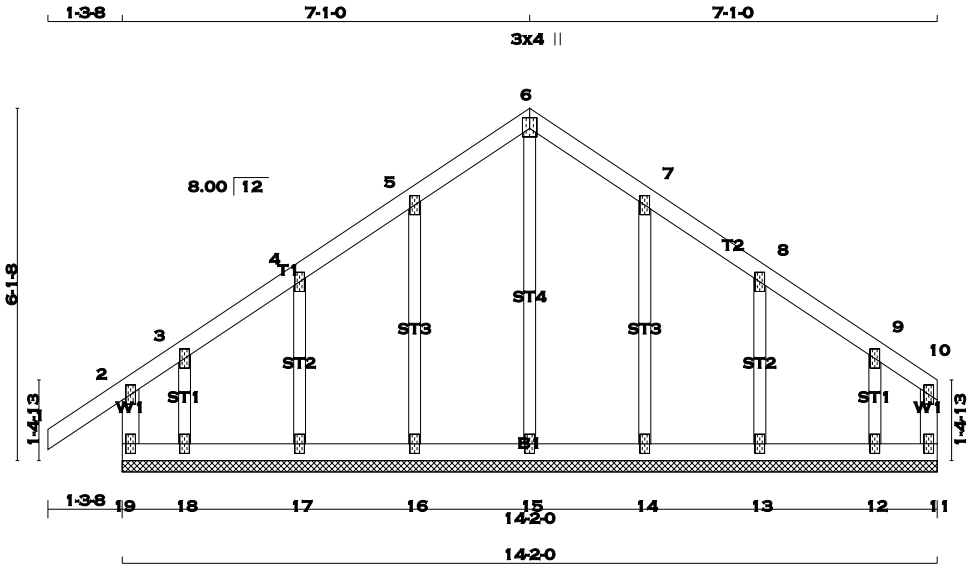

TOTAL WEIGHT = 59 lb
[M]

LUMBER
N. L. G. A. RULES

CHORDS	SIZE		LUMBER	DESCR.
19 - 2	2x4	DRY	No.2	SPF
1 - 6	2x4	DRY	No.2	SPF
6 - 10	2x4	DRY	No.2	SPF
11 - 10	2x4	DRY	No.2	SPF
19 - 11	2x4	DRY	No.2	SPF
ALL WEBS	2x3	DRY	No.2	SPF
ALL GABLE WEBS	2x3	DRY	No.2	SPF

DRY: SEASONED LUMBER.

GABLE STUDS SPACED AT 2-0-0 OC.

PLATES (table is in inches)

JT	TYPE	PLATES	W	LEN	Y	X
2	TMV+p	MT20	2.0	4.0		
3, 4, 5, 7, 8, 9						
3	TMW+w	MT20	2.0	4.0		
6	TTW+p	MT20	3.0	4.0	2.25	1.50
10	TMV+p	MT20	2.0	4.0		
11	BMV1+p	MT20	2.0	4.0		
12, 13, 14, 15, 16, 17, 18						
12	BMW1+w	MT20	2.0	4.0		
19	BMV1+p	MT20	2.0	4.0		

A SIZE FOR SIZE SUBSTITUTION OF MITEK MII20 WITH TEE-LOK TL20 PLATES IS ALLOWED.

DIMENSIONS, SUPPORTS AND LOADINGS SPECIFIED BY FABRICATOR TO BE VERIFIED BY BUILDING DESIGNER

BEARINGS

THIS TRUSS DESIGNED FOR CONTINUOUS BEARINGS.

THIS TRUSS REQUIRES RIGID SHEATHING ON EXPOSED FACE.

BEARING MATERIAL TO BE SPF NO.2 OR BETTER AT JOINT(S)

BRACING
TOP CHORD TO BE SHEATHED OR MAX. PURLIN SPACING = 6.25 FT.
MAX. UNBRACED BOTTOM CHORD LENGTH = 6.25 FT. OR RIGID CEILING DIRECTLY APPLIED.

ALL PITCH BREAKS AND PERIMETER CORNER JOINTS MUST BE LATERALLY RESTRAINED.

LOADING
TOTAL LOAD CASES: (4)

CHORDS

MEMB. FR-TO	MAX. FACTORED FORCE (LBS)	FACTORED VERT. LOAD (PLF) FROM	TO	LC1 MAX CSI (LC)	MAX. UNBRAC LENGTH
19- 2	-191 / 0	0.0	0.0	0.02 (1)	7.81
1- 2	0 / 29	-77.3	-77.3	0.10 (1)	10.00
2- 3	-25 / 0	-77.3	-77.3	0.08 (1)	6.25
3- 4	0 / 8	-77.3	-77.3	0.04 (1)	10.00
4- 5	0 / 8	-77.3	-77.3	0.04 (1)	10.00
5- 6	0 / 12	-77.3	-77.3	0.04 (1)	10.00
6- 7	0 / 12	-77.3	-77.3	0.04 (1)	10.00
7- 8	0 / 9	-77.3	-77.3	0.04 (1)	10.00
8- 9	0 / 6	-77.3	-77.3	0.04 (1)	10.00
9-10	0 / 6	-77.3	-77.3	0.03 (1)	10.00
11-10	-24 / 0	0.0	0.0	0.00 (1)	7.81
19-18	0 / 0	-17.5	-17.5	0.02 (1)	10.00
18-17	-3 / 0	-17.5	-17.5	0.01 (4)	10.00
17-16	-7 / 0	-17.5	-17.5	0.01 (4)	10.00
16-15	-10 / 0	-17.5	-17.5	0.01 (4)	6.25
15-14	-10 / 0	-17.5	-17.5	0.01 (4)	6.25
14-13	-7 / 0	-17.5	-17.5	0.01 (4)	10.00
13-12	-3 / 0	-17.5	-17.5	0.01 (4)	10.00
12-11	0 / 3	-17.5	-17.5	0.01 (4)	10.00

WEBS

MEMB. FR-TO	MAX. FACTORED FORCE (LBS)	MAX CSI (LC)
15- 6	-174 / 0	0.10 (1)
16- 5	-155 / 0	0.05 (1)
17- 4	-161 / 0	0.03 (1)
18- 3	-60 / 0	0.01 (1)
14- 7	-157 / 0	0.05 (1)
13- 8	-156 / 0	0.03 (1)
12- 9	-125 / 0	0.02 (1)

DESIGN CRITERIA

SPECIFIED LOADS:

TOP	CH.	LL	=	23.3	PSF
		DL	=	3.0	PSF
BOT	CH.	LL	=	0.0	PSF
		DL	=	7.0	PSF
TOTAL	LOAD		=	33.3	PSF

SPACING = 24.0 IN. C/C

THIS TRUSS IS DESIGNED FOR RESIDENTIAL OR SMALL BUILDING REQUIREMENTS OF PART 9, NBCC 2010

THIS DESIGN COMPLIES WITH:
- PART 9 OF OBC 2012 , BCBC 2012 , ABC 2014
- CSA 086-09
- TPIC 2011

DESIGN ASSUMPTIONS
-OVERHANG NOT TO BE ALTERED OR CUT OFF.

(55 % OF 27.2 P.S.F. G.S.L. PLUS 8.4 P.S.F. RAIN LOAD) EQUALS 23.3 P.S.F. SPECIFIED ROOF LIVE LOAD

CSI: TC=0.10 (1-2:1) , BC=0.02 (18-19:1) , WB=0.10 (6-15:1) , SSI=0.07 (1-2:1)

DOL LUMBER=1.00 NAIL=1.00 LS BEND=1.10 COMP=1.10 SHEAR=1.10 TENS= 1.10

COMPANION LIVE LOAD FACTOR = 0.50

TRUSS PLATE MANUFACTURER IS NOT RESPONSIBLE FOR QUALITY CONTROL IN THE TRUSS MANUFACTURING PLANT .

NAIL VALUES

PLATE	GRIP(DRY) (PSI) MAX	MIN	SHEAR (PLI) MAX	MIN	SECTION (PLI) MAX	MIN
MT20	618	354	1667	822	2284	1656

PLATE PLACEMENT TOL. = 0.250 inches

PLATE ROTATION TOL. = 5.0 Deg.

JSI GRIP= 0.12 (2) (INPUT = 0.90)
JSI METAL= 0.06 (6) (INPUT = 1.00)

LICENSED PROFESSIONAL ENGINEER
P.M. TREVISAN
100136551
March 14th, 2017
PROVINCE OF ONTARIO

RECEIVED
TOWN OF MILTON
MAR 29, 2017
17-5233
BUILDING DIVISION

READ ALL NOTES ON THIS PAGE AND ON THE ENGINEERING NOTE PAGE ENP-1. THE NOTE PAGE IS AN INTEGRAL PART OF THIS DRAWING AS IT CONTAINS SPECIFICATIONS AND CRITERIA USED IN THE DESIGN OF THIS COMPONENT.

KOTT

JOB NAME	TRUSS NAME	QUANTITY	PLY	JOB DESC.	DRWG NO.
PT0317-081	GAB11	1	1	TRUSS DESC. LECCO RIDGE-BLOCK 338	ENG JOB: PT0317-081

KOTT , Stouffville, ON, CGC

Version 8.100 S Feb 9 2017 MiTek Industries, Inc. Tue Mar 14 15:56:52 2017 Page 1
ID:EvTixTQDI5yR1QLotZTBr_yE?HJ-9a_xM_tmgIeMovF7o?xBpJXKkwn8SVP0ZxoZKUzb_Pv

SCALE = 1:30.9

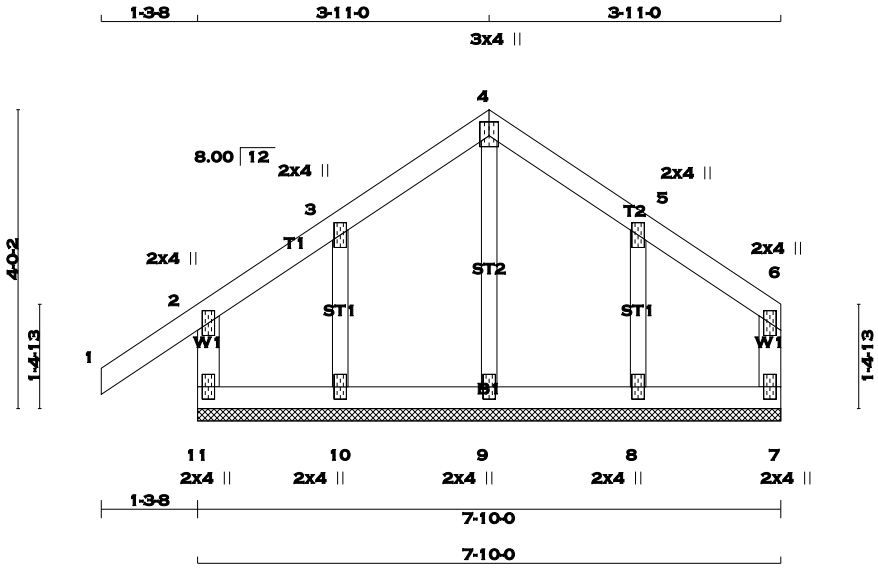

TOTAL WEIGHT = 30 lb
[M]

LUMBER
N. L. G. A. RULES

CHORDS	SIZE		LUMBER	DESCR.
11 - 2	2x4	DRY	No.2	SPF
1 - 4	2x4	DRY	No.2	SPF
4 - 6	2x4	DRY	No.2	SPF
7 - 6	2x4	DRY	No.2	SPF
11 - 7	2x4	DRY	No.2	SPF
ALL WEBS	2x3	DRY	No.2	SPF
ALL GABLE WEBS	2x3	DRY	No.2	SPF

DRY: SEASONED LUMBER.

GABLE STUDS SPACED AT 2-0-0 OC.

PLATES (table is in inches)

JT	TYPE	PLATES	W	LEN	Y	X
2	TMV+p	MT20	2.0	4.0		
3	TMW+w	MT20	2.0	4.0		
4	TTW+p	MT20	3.0	4.0	2.25	1.50
5	TMW+w	MT20	2.0	4.0		
6	TMV+p	MT20	2.0	4.0		
7	BMV1+p	MT20	2.0	4.0		
8, 9, 10						
8	BMW1+w	MT20	2.0	4.0		
11	BMV1+p	MT20	2.0	4.0		

A SIZE FOR SIZE SUBSTITUTION OF MITEK MII20 WITH TEE-LOK TL20 PLATES IS ALLOWED.

DIMENSIONS, SUPPORTS AND LOADINGS SPECIFIED BY FABRICATOR TO BE VERIFIED BY BUILDING DESIGNER

BEARINGS

THIS TRUSS DESIGNED FOR CONTINUOUS BEARINGS.

THIS TRUSS REQUIRES RIGID SHEATHING ON EXPOSED FACE.

BEARING MATERIAL TO BE SPF NO.2 OR BETTER AT JOINT(S)

BRACING
TOP CHORD TO BE SHEATHED OR MAX. PURLIN SPACING = 6.25 FT.
MAX. UNBRACED BOTTOM CHORD LENGTH = 10.00 FT. OR RIGID CEILING DIRECTLY APPLIED.

ALL PITCH BREAKS AND PERIMETER CORNER JOINTS MUST BE LATERALLY RESTRAINED.

LOADING
TOTAL LOAD CASES: (4)

CHORDS

MEMB. FR-TO	MAX. FORCE (LBS)	FACTORED VERT. LOAD (PLF) FROM	TO	LC1	MAX CSI (LC)	MAX. UNBRAC LENGTH
11- 2	-199 / 0	0.0	0.0	0.02 (1)	7.81	
1- 2	0 / 29	-77.3	-77.3	0.10 (1)	10.00	
2- 3	-12 / 0	-77.3	-77.3	0.08 (1)	6.25	
3- 4	-3 / 8	-77.3	-77.3	0.04 (1)	10.00	
4- 5	-3 / 5	-77.3	-77.3	0.04 (1)	10.00	
5- 6	-3 / 5	-77.3	-77.3	0.04 (1)	10.00	
7- 6	-60 / 0	0.0	0.0	0.01 (1)	7.81	
11-10	0 / 3	-17.5	-17.5	0.02 (1)	10.00	
10- 9	-4 / 2	-17.5	-17.5	0.01 (4)	10.00	
9- 8	-4 / 2	-17.5	-17.5	0.02 (4)	10.00	
8- 7	0 / 3	-17.5	-17.5	0.02 (4)	10.00	

WEBS

MEMB. FR-TO	MAX. FORCE (LBS)	MAX CSI (LC)
9- 4	-172 / 0	0.04 (1)
10- 3	-121 / 0	0.02 (1)
8- 5	-160 / 0	0.03 (1)

DESIGN CRITERIA

SPECIFIED LOADS:

TOP	CH.	LL	=	23.3	PSF
		DL	=	3.0	PSF
BOT	CH.	LL	=	0.0	PSF
		DL	=	7.0	PSF
TOTAL	LOAD		=	33.3	PSF

SPACING = 24.0 IN. C/C

THIS TRUSS IS DESIGNED FOR RESIDENTIAL OR SMALL BUILDING REQUIREMENTS OF PART 9, NBCC 2010

THIS DESIGN COMPLIES WITH:
- PART 9 OF OBC 2012 , BCBC 2012 , ABC 2014
- CSA 086-09
- TPIC 2011

DESIGN ASSUMPTIONS
-OVERHANG NOT TO BE ALTERED OR CUT OFF.

(55 % OF 27.2 P.S.F. G.S.L. PLUS 8.4 P.S.F. RAIN LOAD) EQUALS 23.3 P.S.F. SPECIFIED ROOF LIVE LOAD

CSI: TC=0.10 (1-2:1) , BC=0.02 (10-11:1) , WB=0.04 (4-9:1) , SSI=0.07 (1-2:1)

DOL LUMBER=1.00 NAIL=1.00 LS BEND=1.10 COMP=1.10 SHEAR=1.10 TENS= 1.10

COMPANION LIVE LOAD FACTOR = 0.50

TRUSS PLATE MANUFACTURER IS NOT RESPONSIBLE FOR QUALITY CONTROL IN THE TRUSS MANUFACTURING PLANT .

NAIL VALUES

PLATE	GRIP(DRY) (PSI) MAX	MIN	SHEAR (PLI) MAX	MIN	SECTION (PLI) MAX	MIN
MT20	618	354	1667	822	2284	1656

PLATE PLACEMENT TOL. = 0.250 inches

PLATE ROTATION TOL. = 5.0 Deg.

JSI GRIP= 0.13 (2) (INPUT = 0.90)
JSI METAL= 0.07 (4) (INPUT = 1.00)

LICENSED PROFESSIONAL ENGINEER
P.M. TREVISAN
100136551
March 14th, 2017
PROVINCE OF ONTARIO

RECEIVED
TOWN OF MILTON
MAR 29, 2017
17-5233
BUILDING DIVISION

READ ALL NOTES ON THIS PAGE AND ON THE ENGINEERING NOTE PAGE ENP-1. THE NOTE PAGE IS AN INTEGRAL PART OF THIS DRAWING AS IT CONTAINS SPECIFICATIONS AND CRITERIA USED IN THE DESIGN OF THIS COMPONENT.

KOTT

JOB NAME	TRUSS NAME	QUANTITY	PLY	JOB DESC. / TRUSS DESC.	DRWG NO.
PT0317-081	GIRD01	1	2	LECCO RIDGE-BLOCK 338	

KOTT , Stouffville, ON, CGC

Version 8.100 S Feb 9 2017 MiTek Industries, Inc. Tue Mar 14 15:56:53 2017 Page 1
ID:EvTixTQDI5yR1QLotZTBr_yE?HJ-dmYJZKuOQcmDQ3qJLjSQMW4SoK15BtQ9nbY6swzb_Pu

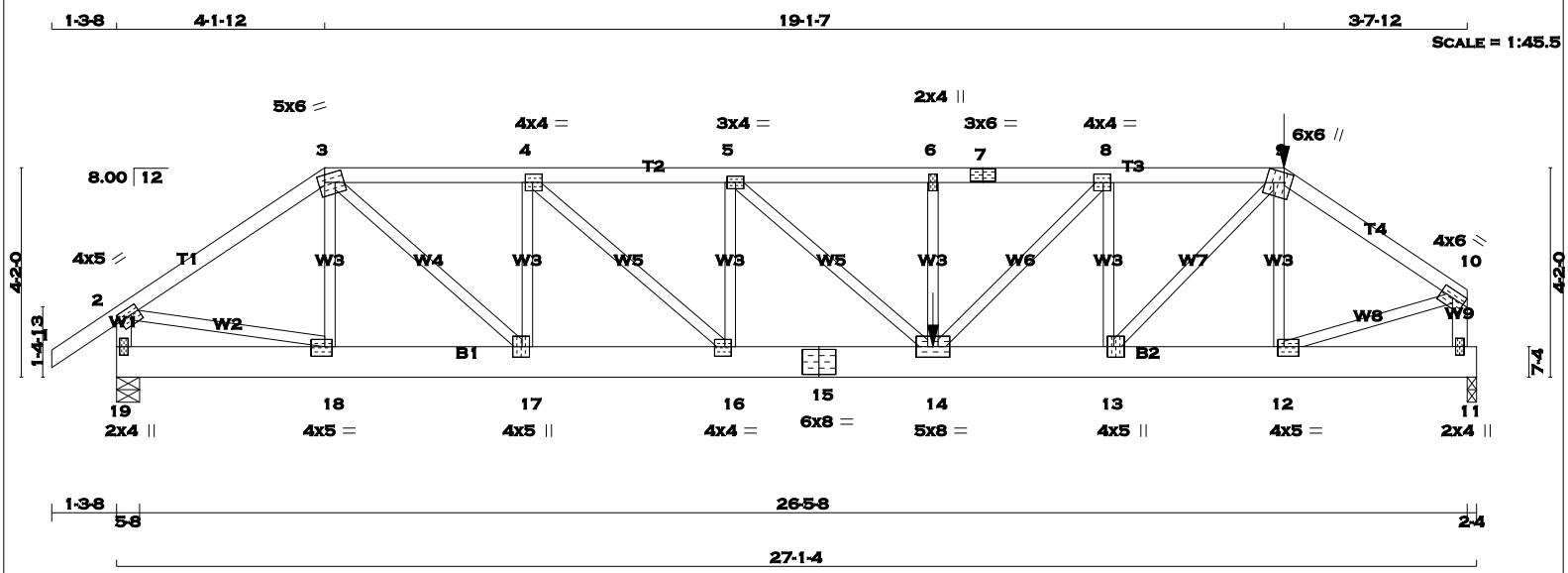

TOTAL WEIGHT = 2 X 142 = 285 lb
[M]

LUMBER
N. L. G. A. RULES

CHORDS	SIZE		LUMBER	DESCR.
1 - 3	2x4	DRY	No.2	SPF
3 - 7	2x4	DRY	No.2	SPF
7 - 9	2x4	DRY	No.2	SPF
9 - 10	2x4	DRY	No.2	SPF
19 - 2	2x4	DRY	No.2	SPF
11 - 10	2x4	DRY	No.2	SPF
19 - 15	2x8	DRY	No.2	SPF
15 - 11	2x8	DRY	No.2	SPF
ALL WEBS EXCEPT	2x3	DRY	No.2	SPF

DRY: SEASONED LUMBER.

DESIGN CONSISTS OF 2 TRUSSES BUILT SEPARATELY THEN FASTENED TOGETHER AS FOLLOWS:

CHORDS	#ROWS	SURFACE SPACING (IN)	LOAD(PLF)
TOP CHORDS : (0.122"X3") SPIRAL NAILS			
1- 3	1	12	TOP
3- 7	1	12	SIDE(34.2)
7- 9	1	12	SIDE(34.2)
9- 10	1	12	SIDE(0.0)
19- 2	1	12	TOP
11- 10	1	12	TOP
BOTTOM CHORDS : (0.122"X3") SPIRAL NAILS			
19- 15	2	12	TOP
15- 11	2	12	SIDE(8.7)
WEBS : (0.122"X3") SPIRAL NAILS			
2x3	1	6	

NAILS TO BE DRIVEN FROM ONE SIDE ONLY.

GIRDER NAILING ASSUMES NAILED HANGERS ARE FASTENED WITH MIN. 3-0 INCH NAILS.

TOP - COMPONENTS ARE LOADED FROM THE TOP AND MUST BE PLACED ON TOP EDGE OF ALL PLIES FOR THE LOAD TO BE TRANSFERRED TO EACH PLY.

SIDE - PLF SHOWN IS THE EQUIVALENT UDL APPLIED TO ONE SIDE THAT THE CORRESPONDING NAILING PATTERN SHALL BE CAPABLE OF TRANSFERING. REMAINING PLF MUST BE APPLIED ON THE OPPOSITE SIDE OR ON THE TOP.

PLATES (table is in inches)

JT	TYPE	PLATES	W	LEN	Y	X
2	TMVW-t	MT20	4.0	5.0	1.75	2.00

DIMENSIONS, SUPPORTS AND LOADINGS SPECIFIED BY FABRICATOR TO BE VERIFIED BY BUILDING DESIGNER

BEARINGS

JT	FACTORED GROSS REACTION VERT	HORZ	MAXIMUM FACTORED GROSS REACTION DOWN	HORZ	UPLIFT	INPUT BRG IN-SX	REQRD BRG IN-SX
19	2316	0	2316	0	0	5-8	5-8
11	3087	0	3087	0	0	2-4	2-4

UNFACTORED REACTIONS

JT	1ST LCASE COMBINED	MAX./MIN. COMPONENT REACTIONS SNOW	LIVE	PERM.LIVE	WIND	DEAD	SOIL
19	1623	1150 / 0	0 / 0	0 / 0	0 / 0	473 / 0	0 / 0
11	2168	1511 / 0	0 / 0	0 / 0	0 / 0	657 / 0	0 / 0

BEARING MATERIAL TO BE SPF NO.2 OR BETTER AT JOINT(S) 19, 11

BRACING
TOP CHORD TO BE SHEATHED OR MAX. PURLIN SPACING = 3.73 FT.
MAX. UNBRACED BOTTOM CHORD LENGTH = 10.00 FT. OR RIGID CEILING DIRECTLY APPLIED.

ALL PITCH BREAKS AND PERIMETER CORNER JOINTS MUST BE LATERALLY RESTRAINED.

LOADING
TOTAL LOAD CASES: (4)

CHORDS

MEMB. FR-TO	MAX. FORCE (LBS)	FACTORED VERT. LOAD (PLF) FROM	TO	LC1	MAX CSI (LC)
1- 2	0 / 29	-77.3	-77.3	0.06 (1)	
2- 3	-2734 / 0	-77.3	-77.3	0.16 (1)	
3- 4	-4013 / 0	-77.3	-77.3	0.15 (1)	
4- 5	-5365 / 0	-77.3	-77.3	0.20 (1)	
5- 6	-6162 / 0	-77.3	-77.3	0.22 (1)	
6- 7	-6162 / 0	-145.8	-145.8	0.28 (1)	
7- 8	-6162 / 0	-145.8	-145.8	0.28 (1)	
8- 9	-4889 / 0	-145.8	-145.8	0.22 (1)	
9-10	-3463 / 0	-77.3	-77.3	0.15 (1)	
19- 2	-2282 / 0	0.0	0.0	0.13 (1)	
11-10	-3034 / 0	0.0	0.0	0.17 (1)	
19-18	0 / 0	-17.5	-17.5	0.01 (4)	
18-17	0 / 2260	-17.5	-17.5	0.15 (1)	
17-16	0 / 4013	-17.5	-17.5	0.25 (1)	
16-15	0 / 5365	-17.5	-17.5	0.42 (1)	
15-14	0 / 5365	-17.5	-17.5	0.42 (1)	
14-13	0 / 4889	-33.0	-33.0	0.40 (1)	
13-12	0 / 2853	-33.0	-33.0	0.17 (1)	
12-11	0 / 0	-33.0	-33.0	0.02 (4)	

WEBS

MEMB. FR-TO	MAX. FORCE (LBS)	MAX CSI (LC)	MAX. UNBRAC LENGTH
18- 3	-388 / 0	0.05 (1)	10.00
3-17	0 / 2378	0.29 (1)	5.36
17- 4	-1578 / 0	0.19 (1)	4.63
4-16	0 / 1837	0.23 (1)	4.05
16- 5	-1043 / 0	0.13 (1)	3.81
5-14	0 / 1084	0.13 (1)	3.73
14- 6	-377 / 0	0.05 (1)	3.73
14- 8	0 / 1858	0.23 (1)	4.18
13- 8	-1921 / 0	0.24 (1)	4.91
13- 9	0 / 2964	0.37 (1)	7.41
12- 9	-814 / 0	0.10 (1)	6.63
2-18	0 / 2324	0.29 (1)	
12-10	0 / 3033	0.38 (1)	

FACTORED CONCENTRATED LOADS (LBS)

JT	LOC.	LC1	MAX-	MAX+	FACE	DIR.	TYPE
9	23-3-4	-219	-219	---	FRONT	VERT	TOTAL
14	16-3-4	-1881	-1881	---	FRONT	VERT	TOTAL

RECEIVED
TOWN OF MILTON
MAR 29, 2017
17-5233
BUILDING DIVISION

READ ALL NOTES ON THIS PAGE AND ON THE ENGINEERING NOTE PAGE ENP-1. THE NOTE PAGE IS AN INTEGRAL PART OF THIS DRAWING AS IT CONTAINS SPECIFICATIONS AND CRITERIA USED IN THE DESIGN OF THIS COMPONENT.

DESIGN CRITERIA

*** SPECIAL LOADS ANALYSIS ***
GEOMETRY AND/OR BASIC LOADS CHANGED BY USER.
LOADS WERE DERIVED FROM USER INPUT
NO FURTHER MODIFICATIONS WERE MADE

SPECIFIED LOADS:

TOP	CH.	LL	=	23.3	PSF
		DL	=	3.0	PSF
BOT	CH.	LL	=	0.0	PSF
		DL	=	7.0	PSF
TOTAL	LOAD		=	33.3	PSF

SPACING = 24.0 IN. C/C

LOADING IN FLAT SECTION BASED ON A SLOPE OF 6.00/12

GIRDER TYPE: CPrimeHip
LEFT SETBACK = 4-1-12
RIGHT SETBACK = 3-9-6
END SETBACK = 6-0-0
END WALL WIDTH = 5-8
CORNER FRAMING TYPE: CONVENTIONAL
END JACK TYPE: CONVENTIONAL
APPLIED TO FRONT SIDE
- ADDT'L LOADS BASED ON 55 % OF GSL.
LOADS APPLIED TO FIRST 10-9-6 OF SPAN MEASURED FROM THE RIGHT.

*** NON STANDARD GIRDER ***
ADDT'L USER-DEFINED LOADS APPLIED TO ALL LOAD CASES.

THIS TRUSS IS DESIGNED FOR RESIDENTIAL OR SMALL BUILDING REQUIREMENTS OF PART 9, NBCC 2010

THIS DESIGN COMPLIES WITH:
- PART 9 OF OBC 2012 , BCBC 2012 , ABC 2014
- CSA 086-09
- TPIC 2011

(55 % OF 27.2 P.S.F. G.S.L. PLUS 8.4 P.S.F. RAIN LOAD) EQUALS 23.3 P.S.F. SPECIFIED ROOF LIVE LOAD

ALLOWABLE DEFL.(LL)= L/360 (0.90")
CALCULATED VERT. DEFL.(LL) = L/ 999 (0.12")
ALLOWABLE DEFL.(TL)= L/360 (0.90")
CALCULATED VERT. DEFL.(TL) = L/ 999 (0.20")

CSI: TC=0.28 (6-8:1) , BC=0.42 (14-16:1) , WB=0.38 (10-12:1) , SSI=0.13 (8-9:1)

DOL LUMBER=1.00 NAIL=1.00 LS BEND=1.00 COMP=1.00 SHEAR=1.00 TENS= 1.00

COMPANION LIVE LOAD FACTOR = 0.50

TRUSS PLATE MANUFACTURER IS NOT RESPONSIBLE FOR QUALITY CONTROL IN THE TRUSS MANUFACTURING PLANT .

NAIL VALUES

PLATE	GRIP(DRY) (PSI) MAX	MIN	SHEAR (PLI) MAX	MIN	SECTION (PLI) MAX	MIN
MT20	618	354	1667	822	2284	1656

PLATE PLACEMENT TOL. = 0.250 inches

PLATE ROTATION TOL. = DEGREES

KOTT

CONTINUED ON PAGE 2

JOB NAME	TRUSS NAME	QUANTITY	PLY	JOB DESC.	DRWG NO.
PT0317-081	GIRD02	1	2	TRUSS DESC. LECCO RIDGE-BLOCK 338	

KOTT , Stouffville, ON, CGC

Version 8.100 S Feb 9 2017 MiTek Industries, Inc. Tue Mar 14 15:56:54 2017 Page 1
ID:EvTixTQDI5yR1QLotZTBr_yE?HJ-5y6hmfv0Bvu41CPVvQzfukccAjP9wLoI0FHfOMzb_Pt

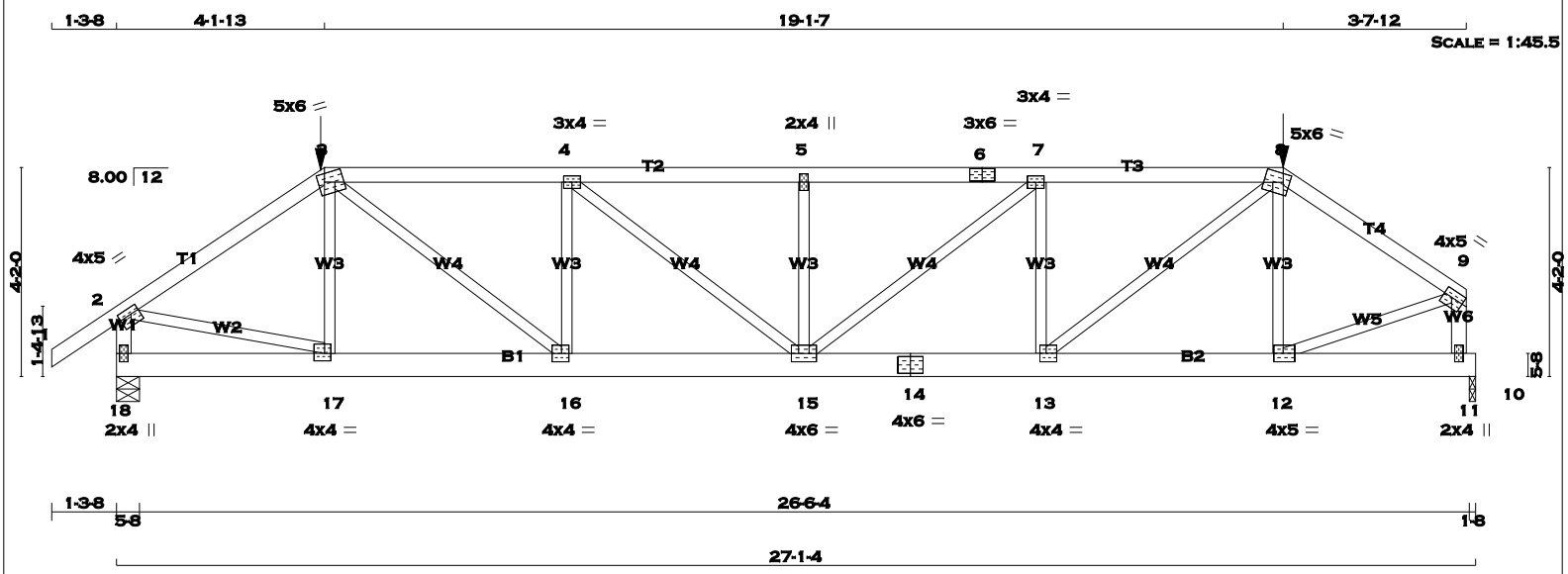

TOTAL WEIGHT = 2 X 124 = 248 lb
[M]

LUMBER
N. L. G. A. RULES

CHORDS	SIZE		LUMBER	DESCR.
1 - 3	2x4	DRY	No.2	SPF
3 - 6	2x4	DRY	No.2	SPF
6 - 8	2x4	DRY	No.2	SPF
8 - 9	2x4	DRY	No.2	SPF
18 - 2	2x4	DRY	No.2	SPF
11 - 9	2x4	DRY	No.2	SPF
18 - 14	2x6	DRY	No.2	SPF
14 - 10	2x6	DRY	No.2	SPF
ALL WEBS EXCEPT	2x3	DRY	No.2	SPF

DRY: SEASONED LUMBER.

DESIGN CONSISTS OF 2 TRUSSES BUILT SEPARATELY THEN FASTENED TOGETHER AS FOLLOWS:

CHORDS #ROWS	SURFACE SPACING (IN)		LOAD(PLF)
TOP CHORDS : (0.122"X3") SPIRAL NAILS			
1- 3	1	12	SIDE(0.0)
3- 6	1	12	SIDE(34.2)
6- 8	1	12	SIDE(34.2)
8- 9	1	12	SIDE(0.0)
18- 2	1	12	TOP
11- 9	1	12	TOP
BOTTOM CHORDS : (0.122"X3") SPIRAL NAILS			
18- 14	2	12	SIDE(8.7)
14- 10	2	12	SIDE(8.7)
WEBS : (0.122"X3") SPIRAL NAILS			
2x3	1	6	

NAILS TO BE DRIVEN FROM ONE SIDE ONLY.

GIRDER NAILING ASSUMES NAILED HANGERS ARE FASTENED WITH MIN. 3-0 INCH NAILS.

TOP - COMPONENTS ARE LOADED FROM THE TOP AND MUST BE PLACED ON TOP EDGE OF ALL PLIES FOR THE LOAD TO BE TRANSFERRED TO EACH PLY.

SIDE - PLF SHOWN IS THE EQUIVALENT UDL APPLIED TO ONE SIDE THAT THE CORRESPONDING NAILING PATTERN SHALL BE CAPABLE OF TRANSFERING. REMAINING PLF MUST BE APPLIED ON THE OPPOSITE SIDE OR ON THE TOP.

PLATES (table is in inches)

JT	TYPE	PLATES	W	LEN	Y	X
2	TMVW-t	MT20	4.0	5.0	1.50	2.00

DIMENSIONS, SUPPORTS AND LOADINGS SPECIFIED BY FABRICATOR TO BE VERIFIED BY BUILDING DESIGNER

BEARINGS

JT	FACTORED GROSS REACTION VERT	HORZ	MAXIMUM FACTORED GROSS REACTION DOWN	HORZ	UPLIFT	INPUT BRG IN-SX	REQRD BRG IN-SX
18	2484	0	2484	0	0	5-8	5-8
10	2371	0	2371	0	0	1-8	1-8

UNFACTORED REACTIONS

JT	1ST LCASE COMBINED	MAX./MIN. COMPONENT REACTIONS SNOW	LIVE	PERM.LIVE	WIND	DEAD	SOIL
18	1742	1226 / 0	0 / 0	0 / 0	0 / 0	516 / 0	0 / 0
10	1665	1158 / 0	0 / 0	0 / 0	0 / 0	507 / 0	0 / 0

BEARING MATERIAL TO BE SPF NO.2 OR BETTER AT JOINT(S) 18, 10

BRACING
TOP CHORD TO BE SHEATHED OR MAX. PURLIN SPACING = 4.18 FT.
MAX. UNBRACED BOTTOM CHORD LENGTH = 10.00 FT. OR RIGID CEILING DIRECTLY APPLIED.

ALL PITCH BREAKS AND PERIMETER CORNER JOINTS MUST BE LATERALLY RESTRAINED.

LOADING
TOTAL LOAD CASES: (4)

CHORDS

MEMB. FR-TO	MAX. FACTORED FORCE (LBS)	FACTORED VERT. LOAD (PLF) FROM	TO	LC1 CSI (LC)	MAX UNBRAC LENGTH
1- 2	0 / 29	-77.3	-77.3	0.06 (1)	10.00
2- 3	-2873 / 0	-77.3	-77.3	0.17 (1)	5.26
3- 4	-4026 / 0	-145.8	-145.8	0.35 (1)	4.39
4- 5	-4471 / 0	-145.8	-145.8	0.36 (1)	4.18
5- 6	-4471 / 0	-145.8	-145.8	0.36 (1)	4.18
6- 7	-4471 / 0	-145.8	-145.8	0.36 (1)	4.18
7- 8	-3945 / 0	-145.8	-145.8	0.34 (1)	4.43
8- 9	-2728 / 0	-77.3	-77.3	0.13 (1)	5.41
18- 2	-2426 / 0	0.0	0.0	0.14 (1)	7.23
11- 9	-2463 / 0	0.0	0.0	0.14 (1)	7.19
18-17	0 / 0	-33.0	-33.0	0.04 (4)	10.00
17-16	0 / 2376	-33.0	-33.0	0.18 (1)	10.00
16-15	0 / 4026	-33.0	-33.0	0.31 (1)	10.00
15-14	0 / 3945	-33.0	-33.0	0.31 (1)	10.00
14-13	0 / 3945	-33.0	-33.0	0.31 (1)	10.00
13-12	0 / 2253	-33.0	-33.0	0.20 (1)	10.00
12-11	0 / 0	-33.0	-33.0	0.16 (1)	10.00
11-10	0 / 0	-33.0	-33.0	0.16 (1)	10.00

WEBS

MEMB. FR-TO	MAX. FACTORED FORCE (LBS)	MAX CSI (LC)
17- 3	-386 / 23	0.05 (1)
3-16	0 / 2094	0.26 (1)
16- 4	-1140 / 0	0.15 (1)
4-15	0 / 570	0.07 (1)
15- 5	-632 / 0	0.08 (1)
15- 7	0 / 675	0.08 (1)
13- 7	-1206 / 0	0.16 (1)
13- 8	0 / 2148	0.27 (1)
12- 8	-462 / 0	0.06 (1)
2-17	0 / 2452	0.30 (1)
12- 9	0 / 2404	0.30 (1)

FACTORED CONCENTRATED LOADS (LBS)

JT	LOC.	LC1	MAX-	MAX+	FACE	DIR.	TYPE
3	4-1-13	-241	-241	---	FRONT	VERT	TOTAL
8	23-3-4	-223	-223	---	FRONT	VERT	TOTAL

DESIGN CRITERIA

SPECIFIED LOADS:

TOP	CH.	LL	=	23.3	PSF
		DL	=	3.0	PSF
BOT	CH.	LL	=	0.0	PSF
		DL	=	7.0	PSF
TOTAL	LOAD		=	33.3	PSF

SPACING = 24.0 IN. C/C

LOADING IN FLAT SECTION BASED ON A SLOPE OF 6.00/12

GIRDER TYPE: CPrimeHip
LEFT SETBACK = 4-1-13
RIGHT SETBACK = 3-10-1
END SETBACK = 6-0-0
END WALL WIDTH = 5-8
CORNER FRAMING TYPE: CONVENTIONAL
END JACK TYPE: CONVENTIONAL
APPLIED TO FRONT SIDE
- ADDT'L LOADS BASED ON 55 % OF GSL.

THIS TRUSS IS DESIGNED FOR RESIDENTIAL OR SMALL BUILDING REQUIREMENTS OF PART 9, NBCC 2010

THIS DESIGN COMPLIES WITH:
- PART 9 OF OBC 2012 , BCBC 2012 , ABC 2014
- CSA 086-09
- TPIC 2011

(55 % OF 27.2 P.S.F. G.S.L. PLUS 8.4 P.S.F. RAIN LOAD) EQUALS 23.3 P.S.F. SPECIFIED ROOF LIVE LOAD

ALLOWABLE DEFL.(LL)= L/360 (0.90")
CALCULATED VERT. DEFL.(LL) = L/ 999 (0.10")
ALLOWABLE DEFL.(TL)= L/360 (0.90")
CALCULATED VERT. DEFL.(TL) = L/ 999 (0.17")

CSI: TC=0.36 (5-7:1) , BC=0.31 (15-16:1) , WB=0.30 (2-17:1) , SSI=0.79 (10-11:1)

DOL LUMBER=1.00 NAIL=1.00 LS BEND=1.00 COMP=1.00 SHEAR=1.00 TENS= 1.00

COMPANION LIVE LOAD FACTOR = 0.50

TRUSS PLATE MANUFACTURER IS NOT RESPONSIBLE FOR QUALITY CONTROL IN THE TRUSS MANUFACTURING PLANT .

NAIL VALUES

PLATE	GRIP(DRY) (PSI) MAX	MIN	SHEAR (PLI) MAX	MIN	SECTION (PLI) MAX	MIN
MT20	618	354	1667	822	2284	1656

PLATE PLACEMENT TOL. = 0.250 inches

PLATE ROTATION TOL. = 0.5 Deg.

JSI GRIP= 0.89 (16) (INPUT = 0.90)
JSI METAL= 0.45 (2) (INPUT = 1.00)

LICENSED PROFESSIONAL ENGINEER
P.M. TREVISAN
100136551
March 14th, 2017
PROVINCE OF ONTARIO

RECEIVED
TOWN OF MILTON
MAR 29, 2017
17-5233
BUILDING DIVISION

READ ALL NOTES ON THIS PAGE AND ON THE ENGINEERING NOTE PAGE ENP-1. THE NOTE PAGE IS AN INTEGRAL PART OF THIS DRAWING AS IT CONTAINS SPECIFICATIONS AND CRITERIA USED IN THE DESIGN OF THIS COMPONENT.

KOTT

CONTINUED ON PAGE 2

SCALE = 1:30.2

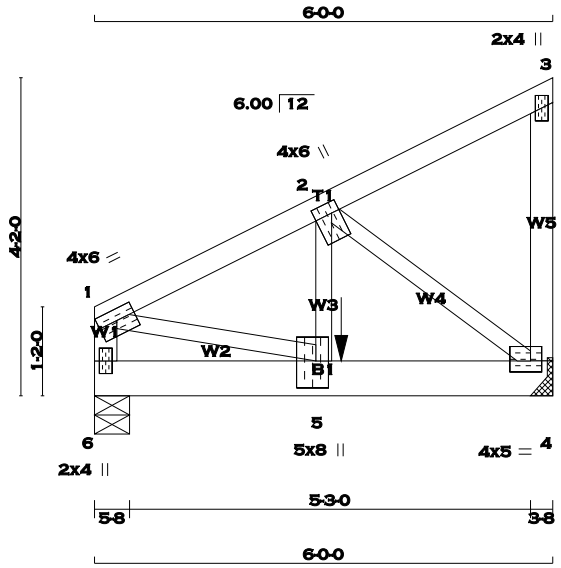

TOTAL WEIGHT = 29 lb

LUMBER

N. L. G. A. RULES

CHORDS	SIZE		LUMBER	DESCR.
1 - 3	2x4	DRY	No.2	SPF
4 - 3	2x4	DRY	No.2	SPF
6 - 1	2x4	DRY	No.2	SPF
6 - 4	2x6	DRY	No.2	SPF
ALL WEBS EXCEPT	2x3	DRY	No.2	SPF

DRY: SEASONED LUMBER.

PLATES (table is in inches)

JT	TYPE	PLATES	W	LEN	Y	X
1	TMVW-t	MT20	4.0	6.0	1.75	Edge
2	TMWW+t	MT20	4.0	6.0	1.75	1.25
3	TMV+p	MT20	2.0	4.0		
4	BMVW1-t	MT20	4.0	5.0	1.75	1.75
5	BMWW+t	MT20	5.0	8.0	4.25	2.00
6	BMV1+p	MT20	2.0	4.0		

Edge - INDICATES REFERENCE CORNER OF PLATE TOUCHES EDGE OF CHORD.

A SIZE FOR SIZE SUBSTITUTION OF MITEK MII20 WITH TEE-LOK TL20 PLATES IS ALLOWED.

HANGERS NOTES

1) SPECIAL HANGER(S) OR CONNECTION(S) REQUIRED TO SUPPORT CONCENTRATED LOAD(S) 1584.5 lbs FACTORED DOWN AT 3-2-12 ON BOTTOM CHORD. DESIGN FOR UNSPECIFIED CONNECTION(S) IS DELEGATED TO THE BUILDING DESIGNER.

DIMENSIONS, SUPPORTS AND LOADINGS SPECIFIED BY FABRICATOR TO BE VERIFIED BY BUILDING DESIGNER

BEARINGS

JT	FACTORED GROSS REACTION VERT	HORZ	MAXIMUM FACTORED GROSS REACTION DOWN	HORZ	UPLIFT	INPUT BRG IN-SX	REQRD BRG IN-SX
4	1882	0	1882	0	0	HANGER BY OTHERS MIN. SEAT SIZE: 3-8	
6	1535	0	1535	0	0	5-8	5-8

UNFACTORED REACTIONS

JT	1ST LCASE COMBINED	SNOW	LIVE	PERM.LIVE	WIND	DEAD	SOIL
		MAX./MIN. COMPONENT REACTIONS					
4	1320	924 / 0	0 / 0	0 / 0	0 / 0	397 / 0	0 / 0
6	1077	753 / 0	0 / 0	0 / 0	0 / 0	324 / 0	0 / 0

BEARING MATERIAL TO BE SPF NO.2 OR BETTER AT JOINT(S) 6

BRACING

TOP CHORD TO BE SHEATHED OR MAX. PURLIN SPACING = 4.75 FT.
MAX. UNBRACED BOTTOM CHORD LENGTH = 10.00 FT. OR RIGID CEILING DIRECTLY APPLIED.

ALL PITCH BREAKS AND PERIMETER CORNER JOINTS MUST BE LATERALLY RESTRAINED.

LOADING

TOTAL LOAD CASES: (4)

CHORDS

MEMB. FR-TO	MAX. FORCE (LBS)	FACTORED VERT. LOAD (PLF) FROM	TO	LC1 MAX CSI (LC)	MAX. UNBRAC LENGTH
1- 2	-1867 / 0	-77.3	-77.3	0.15 (1)	4.75
2- 3	-7 / 0	-77.3	-77.3	0.10 (1)	10.00
4- 3	-100 / 0	0.0	0.0	0.03 (1)	7.81
6- 1	-1371 / 0	0.0	0.0	0.15 (1)	6.90
6- 5	0 / 0	-112.3	-112.3	0.09 (1)	10.00
5- 4	0 / 1676	-343.5	-343.5	0.50 (1)	10.00

WEBS

MEMB. FR-TO	MAX. FORCE (LBS)	MAX CSI (LC)
5- 2	0 / 1845	0.46 (1)
2- 4	-2104 / 0	0.51 (1)
1- 5	0 / 1731	0.43 (1)

FACTORED CONCENTRATED LOADS (LBS)

JT	LOC.	LC1	MAX-	MAX+	FACE	DIR.	TYPE
5	3-2-12	-1584	-1584	---	FRONT	VERT	TOTAL

DESIGN CRITERIA

*** SPECIAL LOADS ANALYSIS ***
GEOMETRY AND/OR BASIC LOADS CHANGED BY USER.
LOADS WERE DERIVED FROM USER INPUT
NO FURTHER MODIFICATIONS WERE MADE

SPECIFIED LOADS:

TOP	CH.	LL =	23.3	PSF
		DL =	3.0	PSF
BOT	CH.	LL =	0.0	PSF
		DL =	7.0	PSF
TOTAL	LOAD	=	33.3	PSF

SPACING = 24.0 IN. C/C

GIRDER TYPE: CStdGirder
START DISTANCE = 0-0
START SPAN CARRIED = 6-0-0
END DISTANCE = 3-2-12
END SPAN CARRIED = 6-0-0
END WALL WIDTH = 0-0
APPLIED TO FRONT SIDE OF BOTTOM CHORD.
- ADDT'L LOADS BASED ON 55 % OF GSL.

GIRDER TYPE: CStdGirder
START DISTANCE = 3-2-12
START SPAN CARRIED = 16-2-8
END DISTANCE = 6-0-0
END SPAN CARRIED = 16-2-8
END WALL WIDTH = 5-8
APPLIED TO FRONT SIDE OF BOTTOM CHORD.
- ADDT'L LOADS BASED ON 55 % OF GSL.

*** NON STANDARD GIRDER ***
ADDT'L USER-DEFINED LOADS APPLIED TO ALL LOAD CASES.

THIS TRUSS IS DESIGNED FOR RESIDENTIAL OR SMALL BUILDING REQUIREMENTS OF PART 9, NBCC 2010

THIS DESIGN COMPLIES WITH:
- PART 9 OF OBC 2012 , BCBC 2012 , ABC 2014
- CSA 086-09
- TPIC 2011

(55 % OF 27.2 P.S.F. G.S.L. PLUS 8.4 P.S.F. RAIN LOAD) EQUALS 23.3 P.S.F. SPECIFIED ROOF LIVE LOAD

ALLOWABLE DEFL.(LL)= L/360 (0.20")
CALCULATED VERT. DEFL.(LL) = L/ 999 (0.02")
ALLOWABLE DEFL.(TL)= L/360 (0.20")
CALCULATED VERT. DEFL.(TL) = L/ 999 (0.04")

CSI: TC=0.15 (1-6:1) , BC=0.50 (4-5:1) , WB=0.51 (2-4:1) , SSI=0.34 (4-5:1)

DOL LUMBER=1.00 NAIL=1.00 LS BEND=1.00 COMP=1.00 SHEAR=1.00 TENS= 1.00

COMPANION LIVE LOAD FACTOR = 0.50

TRUSS PLATE MANUFACTURER IS NOT RESPONSIBLE FOR QUALITY CONTROL IN THE TRUSS MANUFACTURING PLANT .

NAIL VALUES

PLATE	GRIP(DRY) (PSI) MAX	MIN	SHEAR (PLI) MAX	MIN	SECTION (PLI) MAX	MIN
MT20	618	254	1667	822	2284	1656

LICENSED PROFESSIONAL ENGINEER
P.M. TREVISAN
100136551
March 14th, 2017
PROVINCE OF ONTARIO

RECEIVED
TOWN OF MILTON
MAR 29, 2017
17-5233
BUILDING DIVISION

READ ALL NOTES ON THIS PAGE AND ON THE ENGINEERING NOTE PAGE ENP-1. THE NOTE PAGE IS AN INTEGRAL PART OF THIS DRAWING AS IT CONTAINS SPECIFICATIONS AND CRITERIA USED IN THE DESIGN OF THIS COMPONENT.

KOTT

CONTINUED ON PAGE 2

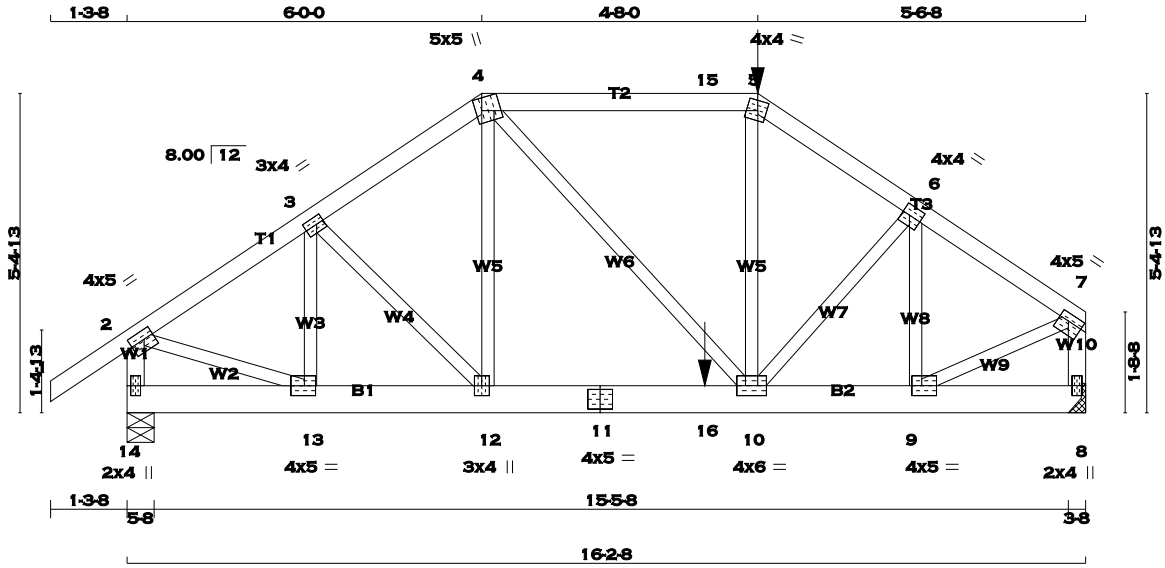

TOTAL WEIGHT = 83 lb [M]

LUMBER

N. L. G. A. RULES

CHORDS	SIZE		LUMBER	DESCR.
1 - 4	2x4	DRY	No.2	SPF
4 - 5	2x4	DRY	No.2	SPF
5 - 7	2x4	DRY	No.2	SPF
14 - 2	2x4	DRY	No.2	SPF
8 - 7	2x4	DRY	No.2	SPF
14 - 11	2x6	DRY	No.2	SPF
11 - 8	2x6	DRY	No.2	SPF
ALL WEBS EXCEPT	2x3	DRY	No.2	SPF

DRY: SEASONED LUMBER.

PLATES (table is in inches)

JT	TYPE	PLATES	W	LEN	Y	X
2	TMVW-t	MT20	4.0	5.0	1.75	2.00
3	TMWW-t	MT20	3.0	4.0	1.50	1.50
4	TTWW+m	MT20	5.0	5.0	Edge	3.75
5	TTW-m	MT20	4.0	4.0	2.00	1.75
6	TMWW-t	MT20	4.0	4.0	2.00	1.50
7	TMVW-t	MT20	4.0	5.0	1.50	2.00
8	BMV1+p	MT20	2.0	4.0		
9	BMWW-t	MT20	4.0	5.0	2.00	2.00
10	BMWWW-t	MT20	4.0	6.0		
11	BS-t	MT20	4.0	5.0		
12	BMWW+t	MT20	3.0	4.0		
13	BMWW-t	MT20	4.0	5.0	2.00	2.25
14	BMV1+p	MT20	2.0	4.0		

Edge - INDICATES REFERENCE CORNER OF PLATE TOUCHES EDGE OF CHORD.

A SIZE FOR SIZE SUBSTITUTION OF MITEK MII20 WITH TEE-LOK TL20 PLATES IS ALLOWED.

HANGERS NOTES

1) SPECIAL HANGER(S) OR CONNECTION(S) REQUIRED TO SUPPORT CONCENTRATED LOAD(S) 321.5 lbs FACTORED DOWN AT 10-8-0 ON TOP CHORD, AND 800.8 lbs FACTORED DOWN AT 9-9-4 ON BOTTOM CHORD. DESIGN FOR UNSPECIFIED CONNECTION(S) IS DELEGATED TO THE BUILDING DESIGNER.

DIMENSIONS, SUPPORTS AND LOADINGS SPECIFIED BY FABRICATOR TO BE VERIFIED BY BUILDING DESIGNER

BEARINGS

JT	FACTORED GROSS REACTION VERT	HORZ	MAXIMUM FACTORED GROSS REACTION DOWN	HORZ	UPLIFT	INPUT BRG IN-SX	REQRD BRG IN-SX
14	1345	0	1345	0	0	5-8	5-8
8	1582	0	1582	0	0	HANGER BY OTHERS MIN. SEAT SIZE: 3-8	

UNFACTORED REACTIONS

JT	1ST LCASE COMBINED	SNOW	MAX./MIN. COMPONENT REACTIONS LIVE	PERM.LIVE	WIND	DEAD	SOIL
14	941	677 / 0	0 / 0	0 / 0	0 / 0	264 / 0	0 / 0
8	1112	765 / 0	0 / 0	0 / 0	0 / 0	347 / 0	0 / 0

BEARING MATERIAL TO BE SPF NO.2 OR BETTER AT JOINT(S) 14

BRACING

TOP CHORD TO BE SHEATHED OR MAX. PURLIN SPACING = 4.88 FT.
MAX. UNBRACED BOTTOM CHORD LENGTH = 10.00 FT. OR RIGID CEILING DIRECTLY APPLIED.

ALL PITCH BREAKS AND PERIMETER CORNER JOINTS MUST BE LATERALLY RESTRAINED.

LOADING

TOTAL LOAD CASES: (4)

CHORDS MEMB. FR-TO	MAX. FACTORED FORCE (LBS)	FACTORED VERT. LOAD LC1 (PLF) FROM	TO	MAX CSI (LC)	MAX. UNBRAC LENGTH	WEBS MEMB. FR-TO	MAX. FACTORED FORCE (LBS)	MAX CSI (LC)
1- 2	0 / 29	-77.3	-77.3	0.11 (1)	10.00	13- 3	-391 / 0	0.08 (1)
2- 3	-1319 / 0	-77.3	-77.3	0.14 (1)	5.46	3-12	0 / 88	0.02 (1)
3- 4	-1424 / 0	-77.3	-77.3	0.14 (1)	5.30	12- 4	0 / 190	0.05 (1)
4-15	-1468 / 0	-77.3	-77.3	0.39 (1)	4.89	4-10	0 / 436	0.11 (1)
15- 5	-1468 / 0	-145.8	-145.8	0.39 (1)	4.89	10- 5	0 / 343	0.08 (1)
5- 6	-1772 / 0	-77.3	-77.3	0.13 (1)	4.88	10- 6	0 / 297	0.07 (1)
6- 7	-1512 / 0	-77.3	-77.3	0.12 (1)	5.21	9- 6	-618 / 0	0.13 (1)
14- 2	-1298 / 0	0.0	0.0	0.14 (1)	7.05	2-13	0 / 1164	0.29 (1)
8- 7	-1510 / 0	0.0	0.0	0.17 (1)	6.65	9- 7	0 / 1391	0.34 (1)
14-13	0 / 0	-17.5	-17.5	0.05 (1)	10.00			
13-12	0 / 1108	-17.5	-17.5	0.25 (1)	10.00			
12-11	0 / 1174	-17.5	-17.5	0.39 (1)	10.00			
11-16	0 / 1174	-17.5	-17.5	0.39 (1)	10.00			
16-10	0 / 1174	-33.0	-33.0	0.39 (1)	10.00			
10- 9	0 / 1267	-33.0	-33.0	0.34 (1)	10.00			
9- 8	0 / 0	-33.0	-33.0	0.06 (1)	10.00			

FACTORED CONCENTRATED LOADS (LBS)

JT	LOC.	LC1	MAX-	MAX+	FACE	DIR.	TYPE
5	10-8-0	-321	-321	---	FRONT	VERT	TOTAL
16	9-9-4	-801	-801	---	FRONT	VERT	TOTAL

RECEIVED
TOWN OF MILTON
MAR 29, 2017
17-5233
BUILDING DIVISION

READ ALL NOTES ON THIS PAGE AND ON THE ENGINEERING NOTE PAGE ENP-1. THE NOTE PAGE IS AN INTEGRAL PART OF THIS DRAWING AS IT CONTAINS SPECIFICATIONS AND CRITERIA USED IN THE DESIGN OF THIS COMPONENT.

DESIGN CRITERIA

*** SPECIAL LOADS ANALYSIS ***
GEOMETRY AND/OR BASIC LOADS CHANGED BY USER.
LOADS WERE DERIVED FROM USER INPUT
NO FURTHER MODIFICATIONS WERE MADE

SPECIFIED LOADS:

TOP	CH.	LL	=	23.3	PSF
		DL	=	3.0	PSF
BOT	CH.	LL	=	0.0	PSF
		DL	=	7.0	PSF
TOTAL	LOAD		=	33.3	PSF

SPACING = 24.0 IN. C/C

LOADING IN FLAT SECTION BASED ON A SLOPE OF 6.00/12

GIRDER TYPE: CPrimeHip
LEFT SETBACK = 6-0-0
RIGHT SETBACK = 5-6-8
END SETBACK = 6-0-0
END WALL WIDTH = 5-8
CORNER FRAMING TYPE: CONVENTIONAL
END JACK TYPE: CONVENTIONAL
APPLIED TO FRONT SIDE
- ADDT'L LOADS BASED ON 55 % OF GSL.
LOADS APPLIED TO FIRST 6-5-4 OF SPAN MEASURED FROM THE RIGHT.

*** NON STANDARD GIRDER ***
ADDT'L USER-DEFINED LOADS APPLIED TO ALL LOAD CASES.

THIS TRUSS IS DESIGNED FOR RESIDENTIAL OR SMALL BUILDING REQUIREMENTS OF PART 9, NBCC 2010

THIS DESIGN COMPLIES WITH:
- PART 9 OF OBC 2012 , BCBC 2012 , ABC 2014
- CSA 086-09
- TPIC 2011

(55 % OF 27.2 P.S.F. G.S.L. PLUS 8.4 P.S.F. RAIN LOAD) EQUALS 23.3 P.S.F. SPECIFIED ROOF LIVE LOAD

ALLOWABLE DEFL.(LL)= L/360 (0.54")
CALCULATED VERT. DEFL.(LL) = L/ 999 (0.04")
ALLOWABLE DEFL.(TL)= L/360 (0.54")
CALCULATED VERT. DEFL.(TL) = L/ 999 (0.07")

CSI: TC=0.39 (4-5:1) , BC=0.39 (10-12:1) , WB=0.34 (7-9:1) , SSI=0.49 (10-12:1)

DOL LUMBER=1.00 NAIL=1.00 LS BEND=1.00 COMP=1.00 SHEAR=1.00 TENS= 1.00

COMPANION LIVE LOAD FACTOR = 0.50

TRUSS PLATE MANUFACTURER IS NOT RESPONSIBLE FOR QUALITY CONTROL IN THE TRUSS MANUFACTURING PLANT .

NAIL VALUES

PLATE	GRIP(DRY) (PSI) MAX	MIN	SHEAR (PLI) MAX	MIN	SECTION (PLI) MAX	MIN
MT20	618	354	1667	822	2284	1656

PLATE PLACEMENT TOL. = 0.250 inches

PLATE ROTATION TOL. = 10 DEG.

KOTT

CONTINUED ON PAGE 2

SCALE = 1:37.9

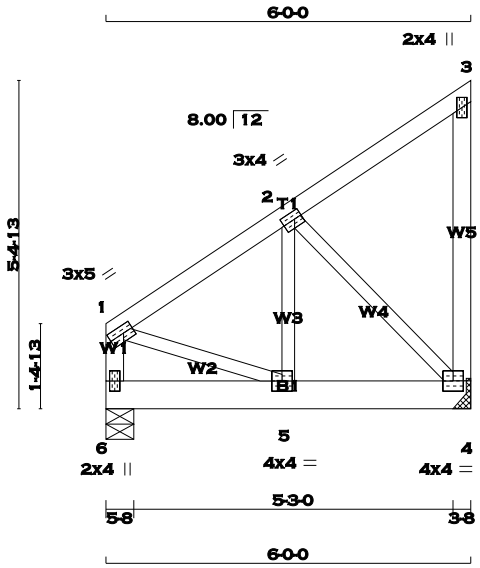

TOTAL WEIGHT = 33 lb [M]

LUMBER

N. L. G. A. RULES

CHORDS	SIZE		LUMBER	DESCR.
1 - 3	2x4	DRY	No.2	SPF
4 - 3	2x4	DRY	No.2	SPF
6 - 1	2x4	DRY	No.2	SPF
6 - 4	2x6	DRY	No.2	SPF
ALL WEBS EXCEPT	2x3	DRY	No.2	SPF

DRY: SEASONED LUMBER.

PLATES (table is in inches)

JT	TYPE	PLATES	W	LEN	Y	X
1	TMVW-t	MT20	3.0	5.0	1.50	2.00
2	TMWW-t	MT20	3.0	4.0	1.50	1.50
3	TMV+p	MT20	2.0	4.0		
4	BMVW1-t	MT20	4.0	4.0		
5	BMWW-t	MT20	4.0	4.0		
6	BMV1+p	MT20	2.0	4.0		

A SIZE FOR SIZE SUBSTITUTION OF MITEK MII20 WITH TEE-LOK TL20 PLATES IS ALLOWED.

DIMENSIONS, SUPPORTS AND LOADINGS SPECIFIED BY FABRICATOR TO BE VERIFIED BY BUILDING DESIGNER

BEARINGS

JT	FACTORED GROSS REACTION VERT	HORZ	MAXIMUM FACTORED GROSS REACTION DOWN	HORZ	UPLIFT	INPUT BRG IN-SX	REQRD BRG IN-SX
4	800	0	800	0	0	HANGER BY OTHERS MIN. SEAT SIZE: 3-8	
6	800	0	800	0	0	5-8	5-8

UNFACTORED REACTIONS

JT	1ST LCASE COMBINED	SNOW	LIVE	PERM.LIVE	WIND	DEAD	SOIL
		MAX./MIN. COMPONENT REACTIONS					
4	562	393 / 0	0 / 0	0 / 0	0 / 0	169 / 0	0 / 0
6	562	393 / 0	0 / 0	0 / 0	0 / 0	169 / 0	0 / 0

BEARING MATERIAL TO BE SPF NO.2 OR BETTER AT JOINT(S) 6

BRACING

TOP CHORD TO BE SHEATHED OR MAX. PURLIN SPACING = 6.25 FT.
MAX. UNBRACED BOTTOM CHORD LENGTH = 10.00 FT. OR RIGID CEILING DIRECTLY APPLIED.

ALL PITCH BREAKS AND PERIMETER CORNER JOINTS MUST BE LATERALLY RESTRAINED.

LOADING

TOTAL LOAD CASES: (4)

CHORDS

MEMB. FR-TO	MAX. FACTORED FORCE (LBS)	VERT. LOAD LC1 (PLF) FROM	TO	MAX CSI (LC)	MAX. UNBRAC LENGTH
1- 2	-556 / 0	-77.3	-77.3	0.12 (1)	6.25
2- 3	-14 / 0	-77.3	-77.3	0.12 (1)	6.25
4- 3	-90 / 0	0.0	0.0	0.04 (1)	7.81
6- 1	-564 / 0	0.0	0.0	0.06 (1)	7.81
6- 5	0 / 0	-189.4	-189.4	0.11 (1)	10.00
5- 4	0 / 474	-189.4	-189.4	0.17 (1)	10.00

WEBS

MEMB. FR-TO	MAX. FACTORED FORCE (LBS)	MAX CSI (LC)
5- 2	0 / 506	0.13 (1)
2- 4	-670 / 0	0.19 (1)
1- 5	0 / 500	0.12 (1)

DESIGN CRITERIA

SPECIFIED LOADS:

TOP CH.	LL =	23.3	PSF
	DL =	3.0	PSF
BOT CH.	LL =	0.0	PSF
	DL =	7.0	PSF
TOTAL LOAD	=	33.3	PSF

SPACING = 24.0 IN. C/C

GIRDER TYPE: CStdGirder
START DISTANCE = 0-0
START SPAN CARRIED = 9-8-8
END DISTANCE = 6-0-0
END SPAN CARRIED = 9-8-8
END WALL WIDTH = 5-8
APPLIED TO FRONT SIDE OF BOTTOM CHORD.
- ADDT'L LOADS BASED ON 55 % OF GSL.

THIS TRUSS IS DESIGNED FOR RESIDENTIAL OR SMALL BUILDING REQUIREMENTS OF PART 9, NBCC 2010

THIS DESIGN COMPLIES WITH:
- PART 9 OF OBC 2012 , BCBC 2012 , ABC 2014
- CSA 086-09
- TPIC 2011

(55 % OF 27.2 P.S.F. G.S.L. PLUS 8.4 P.S.F. RAIN LOAD) EQUALS 23.3 P.S.F. SPECIFIED ROOF LIVE LOAD

ALLOWABLE DEFL.(LL)= L/360 (0.20")
CALCULATED VERT. DEFL.(LL) = L/ 999 (0.01")
ALLOWABLE DEFL.(TL)= L/360 (0.20")
CALCULATED VERT. DEFL.(TL) = L/ 999 (0.01")

CSI: TC=0.12 (1-2:1) , BC=0.17 (4-5:1) , WB=0.19 (2-4:1) , SSI=0.22 (5-6:1)

DOL LUMBER=1.00 NAIL=1.00 LS BEND=1.00 COMP=1.00 SHEAR=1.00 TENS= 1.00

COMPANION LIVE LOAD FACTOR = 0.50

TRUSS PLATE MANUFACTURER IS NOT RESPONSIBLE FOR QUALITY CONTROL IN THE TRUSS MANUFACTURING PLANT .

NAIL VALUES

PLATE	GRIP(DRY) (PSI) MAX	MIN	SHEAR (PLI) MAX	MIN	SECTION (PLI) MAX	MIN
MT20	618	354	1667	822	2284	1656

PLATE PLACEMENT TOL. = 0.250 inches

PLATE ROTATION TOL. = 0.5 Deg.

JSI GRIP= 0.89 (2) (INPUT = 0.90)
JSI METAL= 0.19 (1) (INPUT = 1.00)

LICENSED PROFESSIONAL ENGINEER
P.M. TREVISAN
100136551
March 14th, 2017
PROVINCE OF ONTARIO

RECEIVED
TOWN OF MILTON
MAR 29, 2017
17-5233
BUILDING DIVISION

READ ALL NOTES ON THIS PAGE AND ON THE ENGINEERING NOTE PAGE ENP-1. THE NOTE PAGE IS AN INTEGRAL PART OF THIS DRAWING AS IT CONTAINS SPECIFICATIONS AND CRITERIA USED IN THE DESIGN OF THIS COMPONENT.

KOTT

SCALE = 1:70.3

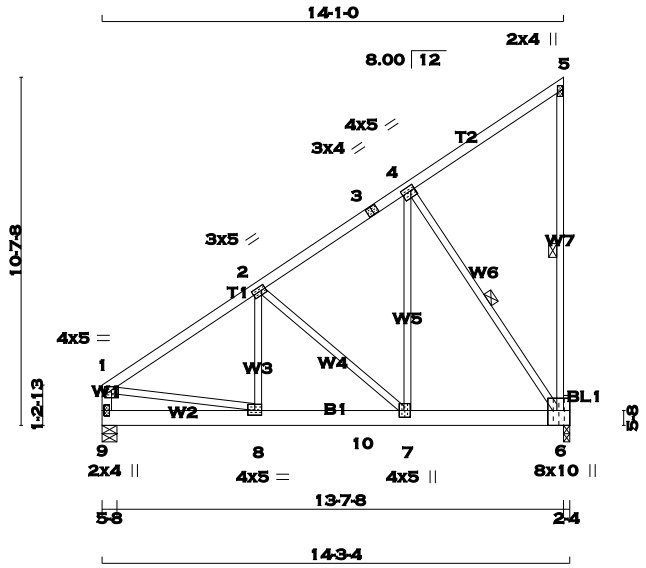

TOTAL WEIGHT = 8 X 77 = 619 lb [M]

LUMBER

N. L. G. A. RULES

CHORDS	SIZE		LUMBER	DESCR.
1 - 3	2x4	DRY	No.2	SPF
3 - 5	2x4	DRY	No.2	SPF
6 - 5	2x3	DRY	No.2	SPF
9 - 1	2x4	DRY	No.2	SPF
9 - 6	2x6	DRY	2100F 1.8E	SPF

BEARING BLOCKS

BL1	2x6	DRY	No.2	SPF
ALL WEBS EXCEPT	2x3	DRY	No.2	SPF

DRY: SEASONED LUMBER.

DESIGN CONSISTS OF 4 TRUSSES BUILT SEPARATELY THEN FASTENED TOGETHER AS FOLLOWS:

CHORDS #ROWS	SURFACE SPACING (IN)		LOAD(PLF)
TOP CHORDS : (0.122"X3") SPIRAL NAILS			
1- 3	1	12	TOP
3- 5	1	12	TOP
9- 1	1	12	TOP
5- 6	1	12	TOP
BOTTOM CHORDS : (0.122"X3") SPIRAL NAILS			
9- 6	2	4	SIDE(603.2)
WEBS : (0.122"X3") SPIRAL NAILS			
2x3	1	6	

STAGGER NAILS BY HALF THE SURFACE SPACING IN ADJACENT PLIES.

IN ADDITION, PRE-DRILL ONE 0.56" DIAM. HOLE IN EACH CHORD PANEL AND INSTALL 0.50" DIAM. ASTM A307 BOLTS WITH WASHERS, BOTH SIDES. FOR OTHER BOLT TYPES SEE CSAO86 3.3.2.

TOP - COMPONENTS ARE LOADED FROM THE TOP AND MUST BE PLACED ON TOP EDGE OF ALL PLIES FOR THE LOAD TO BE TRANSFERRED TO EACH PLY.

SIDE - PLF SHOWN IS THE EQUIVALENT UDL APPLIED TO ONE SIDE THAT THE CORRESPONDING NAILING PATTERN SHALL BE CAPABLE OF TRANSFERING. REMAINING PLF MUST BE APPLIED ON THE OPPOSITE SIDE OR ON THE TOP.

PLATES (table is in inches)

JT	TYPE	PLATES	W	LEN	Y	X
1	TMVW-p	MT20	4.0	5.0	1.25	2.50

DIMENSIONS, SUPPORTS AND LOADINGS SPECIFIED BY FABRICATOR TO BE VERIFIED BY BUILDING DESIGNER

BEARINGS

JT	FACTORED GROSS REACTION VERT	HORZ	MAXIMUM FACTORED GROSS REACTION DOWN	HORZ	UPLIFT	INPUT BRG IN-SX	REQRD BRG IN-SX
6	5890	0	5890	0	0	2-4	2-4
9	6169	0	6169	0	0	5-8	5-8

UNFACTORED REACTIONS

JT	1ST LCASE COMBINED	MAX./MIN. COMPONENT REACTIONS SNOW	LIVE	PERM.LIVE	WIND	DEAD	SOIL
6	4134	2893 / 0	0 / 0	0 / 0	0 / 0	1241 / 0	0 / 0
9	4329	3029 / 0	0 / 0	0 / 0	0 / 0	1301 / 0	0 / 0

BEARING MATERIAL TO BE SPF NO.2 OR BETTER AT JOINT(S) 6, 9
BEARING SIZE FACTOR = 1.08 AT JNT(S) 6 (BASED ON SUPPORT DEPTH = 1-8)

BRACING

TOP CHORD TO BE SHEATHED OR MAX. PURLIN SPACING = 4.82 FT.
MAX. UNBRACED BOTTOM CHORD LENGTH = 10.00 FT. OR RIGID CEILING DIRECTLY APPLIED.

ALL PITCH BREAKS AND PERIMETER CORNER JOINTS MUST BE LATERALLY RESTRAINED.

1 - 2x3 SPF No.2 LATERAL BRACE(S) AT 1/ 2 LENGTH OF 5-6. DBS = 20-0-0 . CBF = 18 LBS.
1 - 2x4 SPF No.2 LATERAL BRACE(S) AT 1/ 2 LENGTH OF 4-6. DBS = 4-0-0 . CBF = 129 LBS.

DBS = DIAGONAL BRACE SPACING (MAX). CBF = CUMULATIVE BRACING FORCE. FASTEN LATERAL BRACE(S) TO EACH PLY USING (0.122"X3") SPIRAL NAILS : 1 NAIL FOR 2x3 BRACE(S), 2 FOR 1x4, 2x4, 2x5, 3 FOR 2x6, 4 FOR 2x8, 5 FOR 2x10, AND 6 FOR 2x12.

END VERTICAL(S) MUST BE SHEATHED OR HAVE BRACES AS INDICATED IN THE MAX. UNBRACED LENGTH COLUMN OF THE TABLE BELOW

LOADING

TOTAL LOAD CASES: (4)

CHORDS

MEMB. FR-TO	MAX. FACTORED FORCE (LBS)	FACTORED VERT. LOAD LC1 (PLF) FROM	TO	MAX CSI (LC)	MAX. UNBRAC LENGTH
1- 2	-6202 / 0	-77.3	-77.3	0.18 (1)	4.82
2- 3	-3415 / 0	-77.3	-77.3	0.11 (1)	6.09
3- 4	-3415 / 0	-77.3	-77.3	0.11 (1)	6.09
4- 5	-19 / 0	-77.3	-77.3	0.09 (1)	6.25
6- 5	-148 / 0	0.0	0.0	0.06 (1)	6.25
9- 1	-4512 / 0	0.0	0.0	0.14 (1)	6.99
9- 8	0 / 0	-821.7	-821.7	0.19 (1)	10.00
8-10	0 / 5169	-821.7	-821.7	0.23 (1)	10.00
10- 7	0 / 5169	-738.7	-738.7	0.23 (1)	10.00
7- 6	0 / 2850	-738.7	-738.7	0.19 (1)	10.00

WEBS

MEMB. FR-TO	MAX. FACTORED FORCE (LBS)	MAX CSI (LC)
8- 2	0 / 3225	0.18 (1)
2- 7	-3087 / 0	0.48 (1)
7- 4	0 / 5794	0.33 (1)
4- 6	-5169 / 0	0.62 (1)
1- 8	0 / 5246	0.30 (1)

DESIGN CRITERIA

SPECIFIED LOADS:

TOP CH.	LL	=	23.3	PSF
	DL	=	3.0	PSF
BOT CH.	LL	=	0.0	PSF
	DL	=	7.0	PSF
TOTAL LOAD		=	33.3	PSF

SPACING = 24.0 IN. C/C

GIRDER TYPE: CStdGirder
START DISTANCE = 0-0
START SPAN CARRIED = 36-4-8
END DISTANCE = 7-9-0
END SPAN CARRIED = 36-4-8
END WALL WIDTH = 5-8
APPLIED TO FRONT SIDE OF BOTTOM CHORD.
- ADDT'L LOADS BASED ON 55 % OF GSL.

GIRDER TYPE: CStdGirder
START DISTANCE = 7-9-0
START SPAN CARRIED = 32-10-8
END DISTANCE = 14-3-4
END SPAN CARRIED = 32-10-8
END WALL WIDTH = 5-8
APPLIED TO FRONT SIDE OF BOTTOM CHORD.
- ADDT'L LOADS BASED ON 55 % OF GSL.

THIS TRUSS IS DESIGNED FOR RESIDENTIAL OR SMALL BUILDING REQUIREMENTS OF PART 9, NBCC 2010

THIS DESIGN COMPLIES WITH:
- PART 9 OF OBC 2012 , BCBC 2012 , ABC 2014
- CSA 086-09
- TPIC 2011

(55 % OF 27.2 P.S.F. G.S.L. PLUS 8.4 P.S.F. RAIN LOAD) EQUALS 23.3 P.S.F. SPECIFIED ROOF LIVE LOAD

ALLOWABLE DEFL.(LL)= L/360 (0.47")
CALCULATED VERT. DEFL.(LL) = L/ 999 (0.04")
ALLOWABLE DEFL.(TL)= L/360 (0.47")
CALCULATED VERT. DEFL.(TL) = L/ 999 (0.07")

CSI: TC=0.18 (1-2:1) , BC=0.23 (7-8:1) , WB=0.62 (4-6:1) , SSI=0.38 (8-9:1)

DOL LUMBER=1.00 NAIL=1.00 LS BEND=1.10 COMP=1.10 SHEAR=1.10 TENS= 1.10

COMPANION LIVE LOAD FACTOR = 0.50

TRUSS PLATE MANUFACTURER IS NOT RESPONSIBLE FOR QUALITY CONTROL IN THE TRUSS MANUFACTURING PLANT .

NAIL VALUES

PLATE	GRIP(DRY) (PSI) MAX	MIN	SHEAR (PLI) MAX	MIN	SECTION (PLI) MAX	MIN
MT20	618	354	1667	822	2284	1656

PLATE PLACEMENT TOL. = 0.250 inches

PLATE ROTATION TOL. = 5.0 Deg.

JSI GRIP= 0.89 (4) (INPUT = 0.90)
JSI METAL= 0.39 (8) (INPUT = 1.00)

LICENSED PROFESSIONAL ENGINEER
P.M. TREVISAN
100136551
March 14th, 2017
PROVINCE OF ONTARIO

RECEIVED
TOWN OF MILTON
MAR 29, 2017
17-5233
BUILDING DIVISION

READ ALL NOTES ON THIS PAGE AND ON THE ENGINEERING NOTE PAGE ENP-1. THE NOTE PAGE IS AN INTEGRAL PART OF THIS DRAWING AS IT CONTAINS SPECIFICATIONS AND CRITERIA USED IN THE DESIGN OF THIS COMPONENT.

KOTT

CONTINUED ON PAGE 2

SCALE = 1:70.3

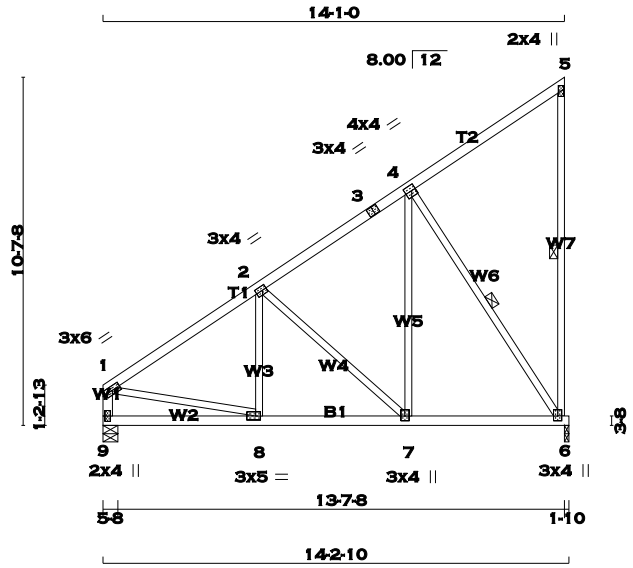

TOTAL WEIGHT = 2 X 68 = 137 lb [M]

LUMBER

N. L. G. A. RULES

CHORDS	SIZE		LUMBER	DESCR.
1 - 3	2x4	DRY	No.2	SPF
3 - 5	2x4	DRY	No.2	SPF
6 - 5	2x3	DRY	No.2	SPF
9 - 1	2x4	DRY	No.2	SPF
9 - 6	2x4	DRY	No.2	SPF
ALL WEBS	2x3	DRY	No.2	SPF
EXCEPT				

DRY: SEASONED LUMBER.

PLATES (table is in inches)

JT	TYPE	PLATES	W	LEN	Y	X
1	TMVW-t	MT20	3.0	6.0		
2	TMWW-t	MT20	3.0	4.0	1.50	1.50
3	TS-t	MT20	3.0	4.0		
4	TMWW-t	MT20	4.0	4.0	2.00	1.50
5	TMV+p	MT20	2.0	4.0		
6	BMVW1+p	MT20	3.0	4.0	1.75	1.50
7	BMWW+t	MT20	3.0	4.0	1.75	1.50
8	BMWW-t	MT20	3.0	5.0	1.50	1.75
9	BMV1+p	MT20	2.0	4.0		

A SIZE FOR SIZE SUBSTITUTION OF MITEK MII20 WITH TEE-LOK TL20 PLATES IS ALLOWED.

DIMENSIONS, SUPPORTS AND LOADINGS SPECIFIED BY FABRICATOR TO BE VERIFIED BY BUILDING DESIGNER

BEARINGS

JT	FACTORED GROSS REACTION VERT	HORZ	MAXIMUM FACTORED GROSS REACTION DOWN	HORZ	UPLIFT	INPUT BRG IN-SX	REQRD BRG IN-SX
6	1023	0	1023	0	0	1-10	1-10
9	1023	0	1023	0	0	5-8	5-8

UNFACTORED REACTIONS

JT	1ST LCASE COMBINED	MAX./MIN. COMPONENT REACTIONS SNOW	LIVE	PERM.LIVE	WIND	DEAD	SOIL
6	718	502 / 0	0 / 0	0 / 0	0 / 0	216 / 0	0 / 0
9	718	502 / 0	0 / 0	0 / 0	0 / 0	216 / 0	0 / 0

BEARING MATERIAL TO BE SPF NO.2 OR BETTER AT JOINT(S) 6, 9

BRACING

TOP CHORD TO BE SHEATHED OR MAX. PURLIN SPACING = 5.85 FT.
MAX. UNBRACED BOTTOM CHORD LENGTH = 10.00 FT. OR RIGID CEILING DIRECTLY APPLIED.

ALL PITCH BREAKS AND PERIMETER CORNER JOINTS MUST BE LATERALLY RESTRAINED.

1 - 2x3 SPF No.2 LATERAL BRACE(S) AT 1/ 2 LENGTH OF 5-6. DBS = 20-0-0 . CBF = 19 LBS.
1 - 2x3 SPF No.2 LATERAL BRACE(S) AT 1/ 2 LENGTH OF 4-6. DBS = 16-0-0 . CBF = 89 LBS.

DBS = DIAGONAL BRACE SPACING (MAX). CBF = CUMULATIVE BRACING FORCE. FASTEN LATERAL BRACE(S) USING (0.122"X3") SPIRAL NAILS : 1 NAIL FOR 2x3 BRACE(S), 2 FOR 1x4, 2x4, 2x5, 3 FOR 2x6, 4 FOR 2x8, 5 FOR 2x10, AND 6 FOR 2x12.

END VERTICAL(S) MUST BE SHEATHED OR HAVE BRACES AS INDICATED IN THE MAX. UNBRACED LENGTH COLUMN OF THE TABLE BELOW

LOADING

TOTAL LOAD CASES: (4)

CHORDS

MEMB. FR-TO	MAX. FACTORED FORCE (LBS)	FACTORED VERT. LOAD (PLF) FROM	TO	LC1 MAX CSI (LC)	MAX. UNBRAC LENGTH
1- 2	-1015 / 0	-77.3	-77.3	0.27 (1)	5.85
2- 3	-594 / 0	-77.3	-77.3	0.27 (1)	6.25
3- 4	-594 / 0	-77.3	-77.3	0.27 (1)	6.25
4- 5	-20 / 0	-77.3	-77.3	0.25 (1)	6.25
6- 5	-149 / 0	0.0	0.0	0.12 (1)	6.25
9- 1	-890 / 0	0.0	0.0	0.10 (1)	7.81
9- 8	0 / 0	-67.9	-67.9	0.20 (1)	10.00
8- 7	0 / 860	-67.9	-67.9	0.36 (1)	10.00
7- 6	0 / 496	-67.9	-67.9	0.30 (1)	10.00

WEBS

MEMB. FR-TO	MAX. FACTORED FORCE (LBS)	MAX CSI (LC)
8- 2	0 / 179	0.05 (4)
2- 7	-489 / 0	0.33 (1)
7- 4	0 / 673	0.17 (1)
4- 6	-893 / 0	0.45 (1)
1- 8	0 / 876	0.22 (1)

DESIGN CRITERIA

SPECIFIED LOADS:

TOP CH.	LL	=	23.3	PSF
	DL	=	3.0	PSF
BOT CH.	LL	=	0.0	PSF
	DL	=	7.0	PSF
TOTAL LOAD		=	33.3	PSF

SPACING = 24.0 IN. C/C

GIRDER TYPE: CStdGirder
START DISTANCE = 0-0
START SPAN CARRIED = 4-7-0
END DISTANCE = 14-2-10
END SPAN CARRIED = 4-7-0
END WALL WIDTH = 5-8
APPLIED TO FRONT SIDE OF BOTTOM CHORD.
- ADDT'L LOADS BASED ON 55 % OF GSL.

THIS TRUSS IS DESIGNED FOR RESIDENTIAL OR SMALL BUILDING REQUIREMENTS OF PART 9, NBCC 2010

THIS DESIGN COMPLIES WITH:
- PART 9 OF OBC 2012 , BCBC 2012 , ABC 2014
- CSA 086-09
- TPIC 2011

(55 % OF 27.2 P.S.F. G.S.L. PLUS 8.4 P.S.F. RAIN LOAD) EQUALS 23.3 P.S.F. SPECIFIED ROOF LIVE LOAD

ALLOWABLE DEFL.(LL)= L/360 (0.47")
CALCULATED VERT. DEFL.(LL) = L/ 999 (0.03")
ALLOWABLE DEFL.(TL)= L/360 (0.47")
CALCULATED VERT. DEFL.(TL) = L/ 999 (0.07")

CSI: TC=0.27 (2-4:1) , BC=0.36 (7-8:1) , WB=0.45 (4-6:1) , SSI=0.16 (6-7:1)

DOL LUMBER=1.00 NAIL=1.00 LS BEND=1.00
COMP=1.00 SHEAR=1.00 TENS= 1.00

COMPANION LIVE LOAD FACTOR = 0.50

TRUSS PLATE MANUFACTURER IS NOT RESPONSIBLE FOR QUALITY CONTROL IN THE TRUSS MANUFACTURING PLANT .

NAIL VALUES

PLATE	GRIP(DRY) (PSI) MAX	MIN	SHEAR (PLI) MAX	MIN	SECTION (PLI) MAX	MIN
MT20	618	354	1667	822	2284	1656

PLATE PLACEMENT TOL. = 0.250 inches

PLATE ROTATION TOL. = 5.0 Deg.

JSI GRIP= 0.88 (8) (INPUT = 0.90)
JSI METAL= 0.28 (1) (INPUT = 1.00)

LICENSED PROFESSIONAL ENGINEER
P.M. TREVISAN
100136551
March 14th, 2017
PROVINCE OF ONTARIO

RECEIVED
TOWN OF MILTON
MAR 29, 2017
17-5233
BUILDING DIVISION

READ ALL NOTES ON THIS PAGE AND ON THE ENGINEERING NOTE PAGE ENP-1. THE NOTE PAGE IS AN INTEGRAL PART OF THIS DRAWING AS IT CONTAINS SPECIFICATIONS AND CRITERIA USED IN THE DESIGN OF THIS COMPONENT.

KOTT

SCALE = 1:71.3

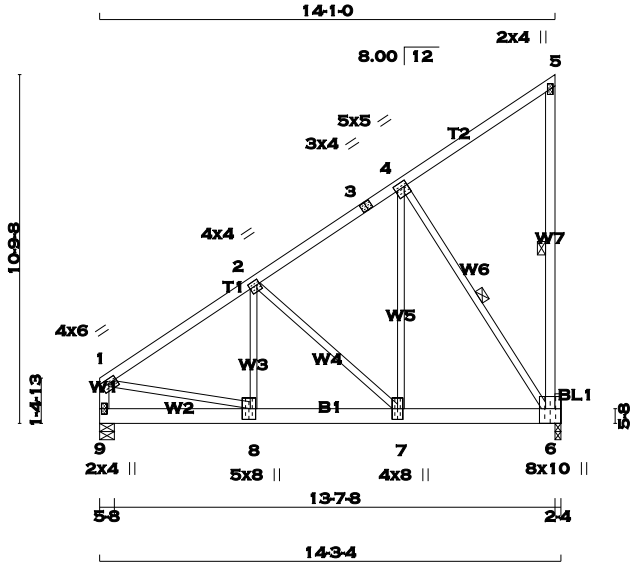

TOTAL WEIGHT = 2 X 81 = 163 lb [M]

LUMBER

N. L. G. A. RULES

CHORDS	SIZE		LUMBER	DESCR.
1 - 3	2x4	DRY	No.2	SPF
3 - 5	2x4	DRY	No.2	SPF
6 - 5	2x4	DRY	No.2	SPF
9 - 1	2x4	DRY	No.2	SPF
9 - 6	2x6	DRY	2100F 1.8E	SPF

BEARING BLOCKS

BL1	2x6	DRY	No.2	SPF
ALL WEBS EXCEPT	2x3	DRY	No.2	SPF

DRY: SEASONED LUMBER.

DESIGN CONSISTS OF 2 TRUSSES BUILT SEPARATELY THEN FASTENED TOGETHER AS FOLLOWS:

CHORDS #ROWS	SURFACE SPACING (IN)		LOAD(PLF)
TOP CHORDS : (0.122"X3") SPIRAL NAILS			
1- 3	1	12	TOP
3- 5	1	12	TOP
5- 6	1	12	TOP
9- 1	1	12	TOP
BOTTOM CHORDS : (0.122"X3") SPIRAL NAILS			
9- 6	2	9	SIDE(304.3)
WEBS : (0.122"X3") SPIRAL NAILS			
2x3	1	6	

NAILS TO BE DRIVEN FROM ONE SIDE ONLY.

TOP - COMPONENTS ARE LOADED FROM THE TOP AND MUST BE PLACED ON TOP EDGE OF ALL PLIES FOR THE LOAD TO BE TRANSFERRED TO EACH PLY.

SIDE - PLF SHOWN IS THE EQUIVALENT UDL APPLIED TO ONE SIDE THAT THE CORRESPONDING NAILING PATTERN SHALL BE CAPABLE OF TRANSFERING. REMAINING PLF MUST BE APPLIED ON THE OPPOSITE SIDE OR ON THE TOP.

PLATES (table is in inches)

JT	TYPE	PLATES	W	LEN	Y	X
1	TMVW-t	MT20	4.0	6.0	1.50	3.00
2	TMWW-t	MT20	4.0	4.0	1.75	1.00
3	TS-t	MT20	3.0	4.0		
4	TMWW-t	MT20	5.0	5.0	2.00	1.25
5	TMV+p	MT20	2.0	4.0		
6	BMVWK1+p	MT20	8.0	10.0	Edge	4.00
7	BMWW+t	MT20	4.0	8.0		

DIMENSIONS, SUPPORTS AND LOADINGS SPECIFIED BY FABRICATOR TO BE VERIFIED BY BUILDING DESIGNER

BEARINGS

JT	FACTORED GROSS REACTION VERT	HORZ	MAXIMUM FACTORED GROSS REACTION DOWN	HORZ	UPLIFT	INPUT BRG IN-SX	REQRD BRG IN-SX
6	4330	0	4330	0	0	2-4	2-4
9	4616	0	4616	0	0	5-8	5-8

UNFACTORED REACTIONS

JT	1ST LCASE COMBINED	MAX./MIN. COMPONENT REACTIONS SNOW	LIVE	PERM.LIVE	WIND	DEAD	SOIL
6	3038	2127 / 0	0 / 0	0 / 0	0 / 0	911 / 0	0 / 0
9	3239	2266 / 0	0 / 0	0 / 0	0 / 0	973 / 0	0 / 0

BEARING MATERIAL TO BE SPF NO.2 OR BETTER AT JOINT(S) 6, 9
BEARING SIZE FACTOR = 1.08 AT JNT(S) 6 (BASED ON SUPPORT DEPTH = 1-8)

BRACING

TOP CHORD TO BE SHEATHED OR MAX. PURLIN SPACING = 4.41 FT.
MAX. UNBRACED BOTTOM CHORD LENGTH = 10.00 FT. OR RIGID CEILING DIRECTLY APPLIED.

ALL PITCH BREAKS AND PERIMETER CORNER JOINTS MUST BE LATERALLY RESTRAINED.

1 - 2x3 SPF No.2 LATERAL BRACE(S) AT 1/ 2 LENGTH OF 5-6. DBS = 20-0-0 . CBF = 19 LBS.
1 - 2x3 SPF No.2 LATERAL BRACE(S) AT 1/ 2 LENGTH OF 4-6. DBS = 4-0-0 . CBF = 93 LBS.

DBS = DIAGONAL BRACE SPACING (MAX). CBF = CUMULATIVE BRACING FORCE. FASTEN LATERAL BRACE(S) TO EACH PLY USING (0.122"X3") SPIRAL NAILS : 1 NAIL FOR 2x3 BRACE(S), 2 FOR 1x4, 2x4, 2x5, 3 FOR 2x6, 4 FOR 2x8, 5 FOR 2x10, AND 6 FOR 2x12.

END VERTICAL(S) MUST BE SHEATHED OR HAVE BRACES AS INDICATED IN THE MAX. UNBRACED LENGTH COLUMN OF THE TABLE BELOW

LOADING

TOTAL LOAD CASES: (4)

CHORDS

MEMB. FR-TO	MAX. FACTORED FORCE (LBS)	VERT. LOAD (PLF) FROM	TO	MAX CSI (LC)	MAX. UNBRAC LENGTH
1- 2	-4356 / 0	-77.3	-77.3	0.24 (1)	4.41
2- 3	-2413 / 0	-77.3	-77.3	0.17 (1)	5.63
3- 4	-2413 / 0	-77.3	-77.3	0.17 (1)	5.63
4- 5	-18 / 0	-77.3	-77.3	0.13 (1)	6.25
6- 5	-149 / 0	0.0	0.0	0.04 (1)	6.25
9- 1	-3345 / 0	0.0	0.0	0.19 (1)	6.38
9- 8	0 / 0	-626.1	-626.1	0.26 (1)	10.00
8- 7	0 / 3636	-531.3	-531.3	0.31 (1)	10.00
7- 6	0 / 2014	-531.3	-531.3	0.25 (1)	10.00

WEBS

MEMB. FR-TO	MAX. FACTORED FORCE (LBS)	MAX CSI (LC)
8- 2	0 / 2196	0.27 (1)
2- 7	-2199 / 0	0.74 (1)
7- 4	0 / 4081	0.51 (1)
4- 6	-3738 / 0	0.94 (1)
1- 8	0 / 3714	0.46 (1)

RECEIVED
TOWN OF MILTON
MAR 29, 2017
17-5233
BUILDING DIVISION

READ ALL NOTES ON THIS PAGE AND ON THE ENGINEERING NOTE PAGE ENP-1. THE NOTE PAGE IS AN INTEGRAL PART OF THIS DRAWING AS IT CONTAINS SPECIFICATIONS AND CRITERIA USED IN THE DESIGN OF THIS COMPONENT.

DESIGN CRITERIA

SPECIFIED LOADS:

TOP CH.	LL	=	23.3	PSF
	DL	=	3.0	PSF
BOT CH.	LL	=	0.0	PSF
	DL	=	7.0	PSF
TOTAL LOAD		=	33.3	PSF

SPACING = 24.0 IN. C/C

GIRDER TYPE: CStdGirder
START DISTANCE = 0-0
START SPAN CARRIED = 28-1-8
END DISTANCE = 4-7-8
END SPAN CARRIED = 28-1-8
END WALL WIDTH = 5-8
APPLIED TO FRONT SIDE OF BOTTOM CHORD.
- ADDT'L LOADS BASED ON 55 % OF GSL.

GIRDER TYPE: CStdGirder
START DISTANCE = 4-7-8
START SPAN CARRIED = 24-1-8
END DISTANCE = 14-3-4
END SPAN CARRIED = 24-1-8
END WALL WIDTH = 5-8
APPLIED TO FRONT SIDE OF BOTTOM CHORD.
- ADDT'L LOADS BASED ON 55 % OF GSL.

THIS TRUSS IS DESIGNED FOR RESIDENTIAL OR SMALL BUILDING REQUIREMENTS OF PART 9, NBCC 2010

THIS DESIGN COMPLIES WITH:
- PART 9 OF OBC 2012 , BCBC 2012 , ABC 2014
- CSA 086-09
- TPIC 2011

(55 % OF 27.2 P.S.F. G.S.L. PLUS 8.4 P.S.F. RAIN LOAD) EQUALS 23.3 P.S.F. SPECIFIED ROOF LIVE LOAD

ALLOWABLE DEFL.(LL)= L/360 (0.46")
CALCULATED VERT. DEFL.(LL) = L/ 999 (0.06")
ALLOWABLE DEFL.(TL)= L/360 (0.46")
CALCULATED VERT. DEFL.(TL) = L/ 999 (0.10")

CSI: TC=0.24 (1-2:1) , BC=0.31 (7-8:1) , WB=0.94 (4-6:1) , SSI=0.57 (8-9:1)

DOL LUMBER=1.00 NAIL=1.00 LS BEND=1.00 COMP=1.00 SHEAR=1.00 TENS= 1.00

COMPANION LIVE LOAD FACTOR = 0.50

TRUSS PLATE MANUFACTURER IS NOT RESPONSIBLE FOR QUALITY CONTROL IN THE TRUSS MANUFACTURING PLANT .

NAIL VALUES

PLATE	GRIP(DRY) (PSI) MAX	MIN	SHEAR (PLI) MAX	MIN	SECTION (PLI) MAX	MIN
MT20	618	354	1667	822	2284	1656

PLATE PLACEMENT TOL. = 0.250 inches

PLATE ROTATION TOL. = 5.0 Deg.

JSI GRIP= 0.89 (8) (INPUT = 0.90)
JSI METAL= 0.56 (1) (INPUT = 1.00)

CONTINUED ON PAGE 2

JOB NAME	TRUSS NAME	QUANTITY	PLY	JOB DESC.	DRWG NO.
PT0317-081	GIRD11	1	3	TRUSS DESC. LECCO RIDGE-BLOCK 338	ENG JOB: PT0317-081

KOTT , Stouffville, ON, CGC

Version 8.100 S Feb 9 2017 MiTek Industries, Inc. Tue Mar 14 15:56:58 2017 Page 1

ID:EvTixTQDI5yR1QLotZTBr_yE?HJ-_kLCc1yXF8OWWqiG8G2b2anKALmfs?3uxtFtX7zb_Pp

SCALE = 1:71.3

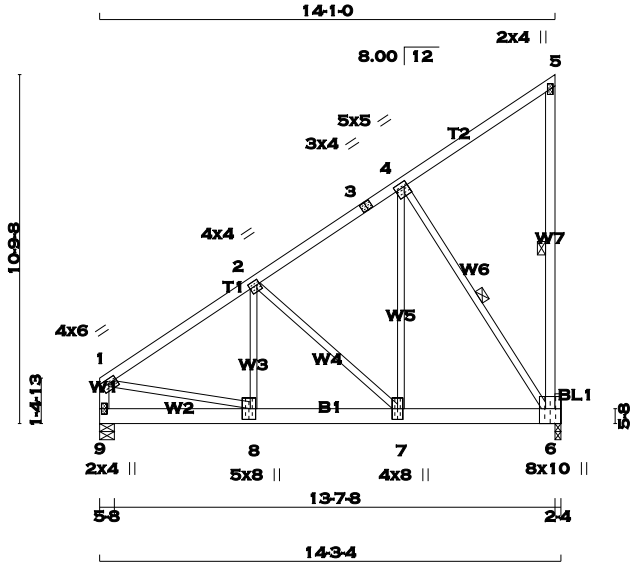

TOTAL WEIGHT = 3 X 81 = 244 lb [M]

LUMBER

N. L. G. A. RULES

CHORDS	SIZE		LUMBER	DESCR.
1 - 3	2x4	DRY	No.2	SPF
3 - 5	2x4	DRY	No.2	SPF
6 - 5	2x4	DRY	No.2	SPF
9 - 1	2x4	DRY	No.2	SPF
9 - 6	2x6	DRY	2100F 1.8E	SPF
BEARING BLOCKS				
BL1	2x6	DRY	No.2	SPF
ALL WEBS EXCEPT	2x3	DRY	No.2	SPF

DRY: SEASONED LUMBER.

DESIGN CONSISTS OF 3 TRUSSES BUILT SEPARATELY THEN FASTENED TOGETHER AS FOLLOWS:

CHORDS #ROWS	SURFACE SPACING (IN)		LOAD(PLF)
TOP CHORDS : (0.122"X3") SPIRAL NAILS			
1- 3	1	12	TOP
3- 5	1	12	TOP
5- 6	1	12	TOP
9- 1	1	12	TOP
BOTTOM CHORDS : (0.122"X3") SPIRAL NAILS			
9- 6	2	5	SIDE(567.8)
WEBS : (0.122"X3") SPIRAL NAILS			
2x3	1	6	

STAGGER NAILS BY HALF THE SURFACE SPACING IN ADJACENT PLIES.

TOP - COMPONENTS ARE LOADED FROM THE TOP AND MUST BE PLACED ON TOP EDGE OF ALL PLIES FOR THE LOAD TO BE TRANSFERRED TO EACH PLY.

SIDE - PLF SHOWN IS THE EQUIVALENT UDL APPLIED TO ONE SIDE THAT THE CORRESPONDING NAILING PATTERN SHALL BE CAPABLE OF TRANSFERING. REMAINING PLF MUST BE APPLIED ON THE OPPOSITE SIDE OR ON THE TOP.

PLATES (table is in inches)

JT	TYPE	PLATES	W	LEN	Y	X
1	TMVW-t	MT20	4.0	6.0	1.50	3.00
2	TMWW-t	MT20	4.0	4.0	1.75	1.00
3	TS-t	MT20	3.0	4.0		
4	TMWW-t	MT20	5.0	5.0	1.75	1.25
5	TMV+p	MT20	2.0	4.0		
6	BMVWK1+p	MT20	8.0	10.0	Edge	4.00

DIMENSIONS, SUPPORTS AND LOADINGS SPECIFIED BY FABRICATOR TO BE VERIFIED BY BUILDING DESIGNER

BEARINGS

JT	FACTORED GROSS REACTION VERT	HORZ	MAXIMUM FACTORED GROSS REACTION DOWN	HORZ	UPLIFT	INPUT BRG IN-SX	REQRD BRG IN-SX
6	6607	0	6607	0	0	2-4	2-4
9	6596	0	6596	0	0	5-8	5-8

UNFACTORED REACTIONS

JT	1ST LCASE COMBINED	MAX./MIN. COMPONENT REACTIONS SNOW	LIVE	PERM.LIVE	WIND	DEAD	SOIL
6	4637	3245 / 0	0 / 0	0 / 0	0 / 0	1392 / 0	0 / 0
9	4629	3238 / 0	0 / 0	0 / 0	0 / 0	1391 / 0	0 / 0

BEARING MATERIAL TO BE SPF NO.2 OR BETTER AT JOINT(S) 6, 9

BEARING SIZE FACTOR = 1.08 AT JNT(S) 6 (BASED ON SUPPORT DEPTH = 1-8)

BRACING

TOP CHORD TO BE SHEATHED OR MAX. PURLIN SPACING = 4.55 FT.

MAX. UNBRACED BOTTOM CHORD LENGTH = 10.00 FT. OR RIGID CEILING DIRECTLY APPLIED.

ALL PITCH BREAKS AND PERIMETER CORNER JOINTS MUST BE LATERALLY RESTRAINED.

1 - 2x3 SPF No.2 LATERAL BRACE(S) AT 1/ 2 LENGTH OF 5-6. DBS = 20-0-0 . CBF = 19 LBS.

1 - 2x4 SPF No.2 LATERAL BRACE(S) AT 1/ 2 LENGTH OF 4-6. DBS = 4-0-0 . CBF = 142 LBS.

DBS = DIAGONAL BRACE SPACING (MAX). CBF = CUMULATIVE BRACING FORCE. FASTEN LATERAL BRACE(S) TO EACH PLY USING (0.122"X3") SPIRAL NAILS : 1 NAIL FOR 2x3 BRACE(S), 2 FOR 1x4, 2x4, 2x5, 3 FOR 2x6, 4 FOR 2x8, 5 FOR 2x10, AND 6 FOR 2x12.

END VERTICAL(S) MUST BE SHEATHED OR HAVE BRACES AS INDICATED IN THE MAX. UNBRACED LENGTH COLUMN OF THE TABLE BELOW

LOADING

TOTAL LOAD CASES: (4)

CHORDS

MEMB. FR-TO	MAX. FACTORED FORCE (LBS)	FACTORED VERT. LOAD LC1 (PLF) FROM	TO	MAX CSI (LC)	MAX. UNBRAC LENGTH
1- 2	-6414 / 0	-77.3	-77.3	0.17 (1)	4.55
2- 3	-3668 / 0	-77.3	-77.3	0.11 (1)	5.69
3- 4	-3668 / 0	-77.3	-77.3	0.11 (1)	5.69
4- 5	-18 / 0	-77.3	-77.3	0.08 (1)	6.25
6- 5	-148 / 0	0.0	0.0	0.03 (1)	6.25
9- 1	-4848 / 0	0.0	0.0	0.16 (1)	6.51
9- 8	0 / 0	-869.2	-869.2	0.21 (1)	10.00
8- 7	0 / 5345	-869.2	-869.2	0.27 (1)	10.00
7- 6	0 / 3061	-869.2	-869.2	0.24 (1)	10.00

WEBS

MEMB. FR-TO	MAX. FACTORED FORCE (LBS)	MAX CSI (LC)
8- 2	0 / 3256	0.24 (1)
2- 7	-3097 / 0	0.68 (1)
7- 4	0 / 6406	0.48 (1)
4- 6	-5679 / 0	0.93 (1)
1- 8	0 / 5461	0.41 (1)

DESIGN CRITERIA

SPECIFIED LOADS:

TOP CH.	LL	=	23.3	PSF
	DL	=	3.0	PSF
BOT CH.	LL	=	0.0	PSF
	DL	=	7.0	PSF
TOTAL LOAD		=	33.3	PSF

SPACING = 24.0 IN. C/C

GIRDER TYPE: CStdGirder
START DISTANCE = 0-0
START SPAN CARRIED = 38-4-8
END DISTANCE = 14-3-4
END SPAN CARRIED = 38-4-8
END WALL WIDTH = 5-8
APPLIED TO FRONT SIDE OF BOTTOM CHORD.
- ADDT'L LOADS BASED ON 55 % OF GSL.

THIS TRUSS IS DESIGNED FOR RESIDENTIAL OR SMALL BUILDING REQUIREMENTS OF PART 9, NBCC 2010

THIS DESIGN COMPLIES WITH:
- PART 9 OF OBC 2012 , BCBC 2012 , ABC 2014
- CSA 086-09
- TPIC 2011

(55 % OF 27.2 P.S.F. G.S.L. PLUS 8.4 P.S.F. RAIN LOAD) EQUALS 23.3 P.S.F. SPECIFIED ROOF LIVE LOAD

ALLOWABLE DEFL.(LL)= L/360 (0.46")
CALCULATED VERT. DEFL.(LL) = L/ 999 (0.05")
ALLOWABLE DEFL.(TL)= L/360 (0.46")
CALCULATED VERT. DEFL.(TL) = L/ 999 (0.09")

CSI: TC=0.17 (1-2:1) , BC=0.27 (7-8:1) , WB=0.93 (4-6:1) , SSI=0.48 (8-9:1)

DOL LUMBER=1.00 NAIL=1.00 LS BEND=1.10 COMP=1.10 SHEAR=1.10 TENS= 1.10

COMPANION LIVE LOAD FACTOR = 0.50

TRUSS PLATE MANUFACTURER IS NOT RESPONSIBLE FOR QUALITY CONTROL IN THE TRUSS MANUFACTURING PLANT .

NAIL VALUES

PLATE	GRIP(DRY) (PSI) MAX	MIN	SHEAR (PLI) MAX	MIN	SECTION (PLI) MAX	MIN
MT20	618	354	1667	822	2284	1656

PLATE PLACEMENT TOL. = 0.250 inches

PLATE ROTATION TOL. = 5.0 Deg.

JSI GRIP= 0.87 (8) (INPUT = 0.90)
JSI METAL= 0.54 (1) (INPUT = 1.00)

LICENSED PROFESSIONAL ENGINEER
P.M. TREVISAN
100136551
March 14th, 2017
PROVINCE OF ONTARIO

RECEIVED
TOWN OF MILTON
MAR 29, 2017
17-5233
BUILDING DIVISION

READ ALL NOTES ON THIS PAGE AND ON THE ENGINEERING NOTE PAGE ENP-1. THE NOTE PAGE IS AN INTEGRAL PART OF THIS DRAWING AS IT CONTAINS SPECIFICATIONS AND CRITERIA USED IN THE DESIGN OF THIS COMPONENT.

KOTT

CONTINUED ON PAGE 2

JOB NAME	TRUSS NAME	QUANTITY	PLY	JOB DESC.	DRWG NO.
PT0317-081	**GIRD12**	**1**	**1**	TRUSS DESC. LECCO RIDGE-BLOCK 338	

ENG JOB: PT0317-081

KOTT , Stouffville, ON, CGC

Version 8.100 S Feb 9 2017 MiTek Industries, Inc. Tue Mar 14 15:56:59 2017 Page 1
ID:EvTixTQDI5yR1QLotZTBr_yE?HJ-SwvaqNz90SWN8_HTizZqbnKPwk79bcT1AX?Q4azb_Po

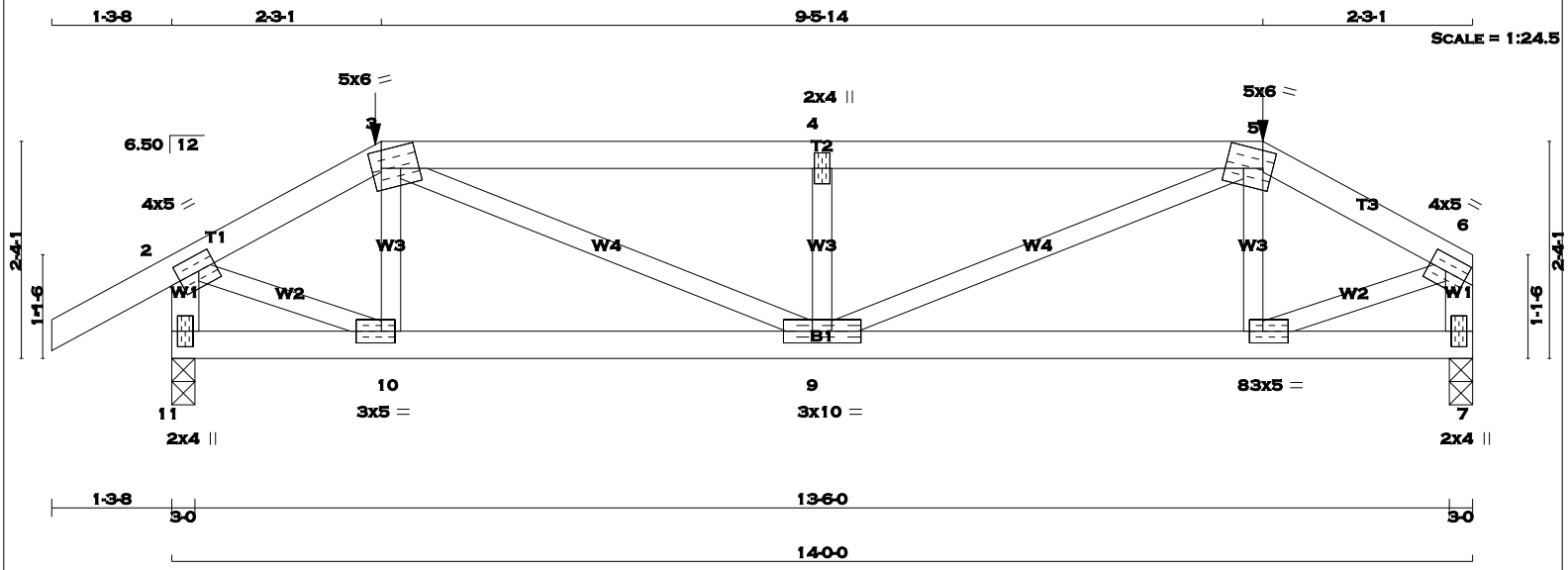

TOTAL WEIGHT = 52 lb [M]

LUMBER

N. L. G. A. RULES

CHORDS	SIZE		LUMBER	DESCR.
1 - 3	2x4	DRY	No.2	SPF
3 - 5	2x4	DRY	No.2	SPF
5 - 6	2x4	DRY	No.2	SPF
11 - 2	2x4	DRY	No.2	SPF
7 - 6	2x4	DRY	No.2	SPF
11 - 7	2x4	DRY	No.2	SPF
ALL WEBS EXCEPT	2x3	DRY	No.2	SPF

DRY: SEASONED LUMBER.

PLATES (table is in inches)

JT	TYPE	PLATES	W	LEN	Y	X
2	TMVW-t	MT20	4.0	5.0	2.00	2.25
3	TTWW-m	MT20	5.0	6.0	2.25	1.25
4	TMW+w	MT20	2.0	4.0		
5	TTWW-m	MT20	5.0	6.0	2.25	1.25
6	TMVW-t	MT20	4.0	5.0	2.00	2.25
7	BMV1+p	MT20	2.0	4.0		
8	BMWW-t	MT20	3.0	5.0	1.50	1.75
9	BMWWW-t	MT20	3.0	10.0		
10	BMWW-t	MT20	3.0	5.0	1.50	1.75
11	BMV1+p	MT20	2.0	4.0		

A SIZE FOR SIZE SUBSTITUTION OF MITEK MII20 WITH TEE-LOK TL20 PLATES IS ALLOWED.

HANGERS NOTES

1) SPECIAL HANGER(S) OR CONNECTION(S) REQUIRED TO SUPPORT CONCENTRATED LOAD(S) 88.4 lbs FACTORED DOWN AT 11-8-15, AND 88.4 lbs FACTORED DOWN AT 2-3-1 ON TOP CHORD. DESIGN FOR UNSPECIFIED CONNECTION(S) IS DELEGATED TO THE BUILDING DESIGNER.

DIMENSIONS, SUPPORTS AND LOADINGS SPECIFIED BY FABRICATOR TO BE VERIFIED BY BUILDING DESIGNER

BEARINGS

JT	FACTORED GROSS REACTION VERT	HORZ	MAXIMUM FACTORED GROSS REACTION DOWN	HORZ	UPLIFT	INPUT BRG IN-SX	REQRD BRG IN-SX
11	1138	0	1138	0	0	3-0	3-0
7	1033	0	1033	0	0	3-0	3-0

UNFACTORED REACTIONS

JT	1ST LCASE COMBINED	MAX./MIN. COMPONENT REACTIONS SNOW	LIVE	PERM.LIVE	WIND	DEAD	SOIL
11	797	569 / 0	0 / 0	0 / 0	0 / 0	227 / 0	0 / 0
7	725	506 / 0	0 / 0	0 / 0	0 / 0	219 / 0	0 / 0

BEARING MATERIAL TO BE SPF NO.2 OR BETTER AT JOINT(S) 11, 7

BRACING

TOP CHORD TO BE SHEATHED OR MAX. PURLIN SPACING = 4.07 FT.
MAX. UNBRACED BOTTOM CHORD LENGTH = 10.00 FT. OR RIGID CEILING DIRECTLY APPLIED.

ALL PITCH BREAKS AND PERIMETER CORNER JOINTS MUST BE LATERALLY RESTRAINED.

LOADING

TOTAL LOAD CASES: (4)

CHORDS

MEMB. FR-TO	MAX. FACTORED FORCE (LBS)	FACTORED VERT. LOAD (PLF) FROM	TO	LC1 CSI (LC)	MAX UNBRAC LENGTH
1- 2	0 / 25	-77.3	-77.3	0.11 (1)	10.00
2- 3	-1199 / 0	-77.3	-77.3	0.09 (1)	5.72
3- 4	-1983 / 0	-121.7	-121.7	0.55 (1)	4.07
4- 5	-1983 / 0	-121.7	-121.7	0.55 (1)	4.07
5- 6	-1199 / 0	-77.3	-77.3	0.09 (1)	5.72
11- 2	-1125 / 0	0.0	0.0	0.12 (1)	7.45
7- 6	-1020 / 0	0.0	0.0	0.11 (1)	7.73
11-10	0 / 0	-27.5	-27.5	0.10 (4)	10.00
10- 9	0 / 1040	-27.5	-27.5	0.25 (1)	10.00
9- 8	0 / 1040	-27.5	-27.5	0.25 (1)	10.00
8- 7	0 / 0	-27.5	-27.5	0.10 (4)	10.00

WEBS

MEMB. FR-TO	MAX. FACTORED FORCE (LBS)	MAX CSI (LC)
10- 3	-235 / 17	0.04 (1)
3- 9	0 / 1026	0.25 (1)
9- 4	-696 / 0	0.12 (1)
9- 5	0 / 1026	0.25 (1)
8- 5	-235 / 17	0.04 (1)
2-10	0 / 1111	0.28 (1)
8- 6	0 / 1111	0.28 (1)

FACTORED CONCENTRATED LOADS (LBS)

JT	LOC.	LC1	MAX-	MAX+	FACE	DIR.	TYPE
3	2-3-1	-88	-88	---	FRONT	VERT	TOTAL
5	11-8-15	-88	-88	---	FRONT	VERT	TOTAL

DESIGN CRITERIA

SPECIFIED LOADS:

TOP CH.	LL	=	23.3	PSF
	DL	=	3.0	PSF
BOT CH.	LL	=	0.0	PSF
	DL	=	7.0	PSF
TOTAL LOAD		=	33.3	PSF

SPACING = 24.0 IN. C/C

LOADING IN FLAT SECTION BASED ON A SLOPE OF 6.00/12

GIRDER TYPE: CPrimeHip
SIDE SETBACK = 2-3-1
END SETBACK = 4-6-8
END WALL WIDTH = 3-0
CORNER FRAMING TYPE: CONVENTIONAL
END JACK TYPE: CONVENTIONAL
APPLIED TO FRONT SIDE
- ADDT'L LOADS BASED ON 55 % OF GSL.

THIS TRUSS IS DESIGNED FOR RESIDENTIAL OR SMALL BUILDING REQUIREMENTS OF PART 9, NBCC 2010

THIS DESIGN COMPLIES WITH:
- PART 9 OF OBC 2012 , BCBC 2012 , ABC 2014
- CSA 086-09
- TPIC 2011

(55 % OF 27.2 P.S.F. G.S.L. PLUS 8.4 P.S.F. RAIN LOAD) EQUALS 23.3 P.S.F. SPECIFIED ROOF LIVE LOAD

ALLOWABLE DEFL.(LL)= L/360 (0.47")
CALCULATED VERT. DEFL.(LL) = L/ 999 (0.05")
ALLOWABLE DEFL.(TL)= L/360 (0.47")
CALCULATED VERT. DEFL.(TL) = L/ 999 (0.09")

CSI: TC=0.55 (4-5:1) , BC=0.25 (9-10:1) , WB=0.28 (6-8:1) , SSI=0.30 (3-4:1)

DOL LUMBER=1.00 NAIL=1.00 LS BEND=1.00 COMP=1.00 SHEAR=1.00 TENS= 1.00

COMPANION LIVE LOAD FACTOR = 0.50

TRUSS PLATE MANUFACTURER IS NOT RESPONSIBLE FOR QUALITY CONTROL IN THE TRUSS MANUFACTURING PLANT .

NAIL VALUES

PLATE	GRIP(DRY) (PSI) MAX	MIN	SHEAR (PLI) MAX	MIN	SECTION (PLI) MAX	MIN
MT20	618	354	1667	822	2284	1656

PLATE PLACEMENT TOL. = 0.250 inches

PLATE ROTATION TOL. = 0.5 Deg.

JSI GRIP= 0.88 (5) (INPUT = 0.90)
JSI METAL= 0.39 (6) (INPUT = 1.00)

LICENSED PROFESSIONAL ENGINEER
P.M. TREVISAN
100136551
March 14th, 2017
PROVINCE OF ONTARIO

RECEIVED
TOWN OF MILTON
MAR 29, 2017
17-5233
BUILDING DIVISION

READ ALL NOTES ON THIS PAGE AND ON THE ENGINEERING NOTE PAGE ENP-1. THE NOTE PAGE IS AN INTEGRAL PART OF THIS DRAWING AS IT CONTAINS SPECIFICATIONS AND CRITERIA USED IN THE DESIGN OF THIS COMPONENT.

KOTT

JOB NAME	TRUSS NAME	QUANTITY	PLY	JOB DESC.	DRWG NO.
PT0317-081	GIRD14	1	1	TRUSS DESC. LECCO RIDGE-BLOCK 338	ENG JOB: PT0317-081

KOTT , Stouffville, ON, CGC

Version 8.100 S Feb 9 2017 MiTek Industries, Inc. Tue Mar 14 15:57:00 2017 Page 1

ID:EvTixTQDI5yR1QLotZTBr_yE?HJ-w6Ty1j_nnleDl7sfGh438?saP8ThKwHBOBk_c0zb_Pn

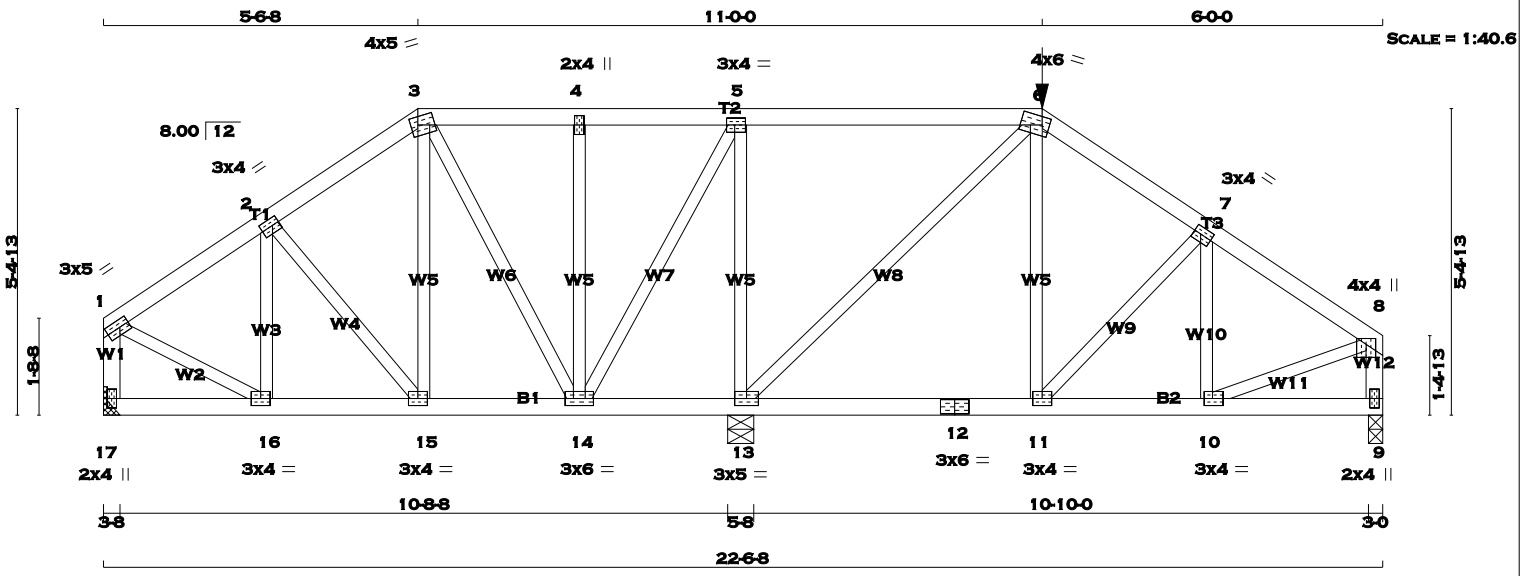

TOTAL WEIGHT = 103 lb

LUMBER

N. L. G. A. RULES

CHORDS	SIZE		LUMBER	DESCR.
1 - 3	2x4	DRY	No.2	SPF
3 - 6	2x4	DRY	No.2	SPF
6 - 8	2x4	DRY	No.2	SPF
17 - 1	2x4	DRY	No.2	SPF
9 - 8	2x4	DRY	No.2	SPF
17 - 12	2x4	DRY	No.2	SPF
12 - 9	2x4	DRY	No.2	SPF
ALL WEBS EXCEPT	2x3	DRY	No.2	SPF

DRY: SEASONED LUMBER.

PLATES (table is in inches)

JT	TYPE	PLATES	W	LEN	Y	X
1	TMVW-t	MT20	3.0	5.0	1.50	2.00
2	TMWW-t	MT20	3.0	4.0	1.50	1.50
3	TTWW-m	MT20	4.0	5.0	1.75	1.50
4	TMW+w	MT20	2.0	4.0		
5	TMWW-t	MT20	3.0	4.0	1.50	1.75
6	TTWW-m	MT20	4.0	6.0	1.75	1.50
7	TMWW-t	MT20	3.0	4.0	1.50	1.50
8	TMVW+p	MT20	4.0	4.0	1.25	2.00
9	BMV1+p	MT20	2.0	4.0		
10	BMWW-t	MT20	3.0	4.0	1.50	1.75
11, 15, 16						
11	BMWW-t	MT20	3.0	4.0		
12	BS-t	MT20	3.0	6.0		
13	BMWW1-t	MT20	3.0	5.0		
14	BMWWW-t	MT20	3.0	6.0		
17	BMV1+p	MT20	2.0	4.0		

A SIZE FOR SIZE SUBSTITUTION OF MITEK MII20 WITH TEE-LOK TL20 PLATES IS ALLOWED.

HANGERS NOTES

1) SPECIAL HANGER(S) OR CONNECTION(S) REQUIRED TO SUPPORT CONCENTRATED LOAD(S) 348.1 lbs FACTORED DOWN AT 16-6-8 ON TOP CHORD. DESIGN FOR UNSPECIFIED CONNECTION(S) IS DELEGATED TO THE BUILDING DESIGNER.

DIMENSIONS, SUPPORTS AND LOADINGS SPECIFIED BY FABRICATOR TO BE VERIFIED BY BUILDING DESIGNER

BEARINGS

JT	FACTORED GROSS REACTION VERT	HORZ	MAXIMUM FACTORED GROSS REACTION DOWN	HORZ	UPLIFT	INPUT BRG IN-SX	REQRD BRG IN-SX
17	490	0	490	0	0	HANGER BY OTHERS MIN. SEAT SIZE: 3-8	
13	1726	0	1726	0	0	5-8	5-8
9	841	0	841	0	0	3-0	3-0

UNFACTORED REACTIONS

JT	1ST LCASE COMBINED	MAX./MIN. COMPONENT REACTIONS SNOW	LIVE	PERM.LIVE	WIND	DEAD	SOIL
17	344	241 / 0	0 / 0	0 / 0	0 / 0	102 / 0	0 / 0
13	1210	854 / 0	0 / 0	0 / 0	0 / 0	357 / 0	0 / 0
9	593	396 / 0	0 / 0	0 / 0	0 / 0	197 / 0	0 / 0

BEARING MATERIAL TO BE SPF NO.2 OR BETTER AT JOINT(S) 9

BRACING

TOP CHORD TO BE SHEATHED OR MAX. PURLIN SPACING = 6.25 FT.
MAX. UNBRACED BOTTOM CHORD LENGTH = 10.00 FT. OR RIGID CEILING DIRECTLY APPLIED.

ALL PITCH BREAKS AND PERIMETER CORNER JOINTS MUST BE LATERALLY RESTRAINED.

LOADING

TOTAL LOAD CASES: (4)

CHORDS

MEMB. FR-TO	MAX. FACTORED FORCE (LBS)	FACTORED VERT. LOAD (PLF) FROM	TO	LC1	MAX CSI (LC)	MAX. UNBRAC LENGTH
1- 2	-385 / 0	-77.3	-77.3	0.10 (1)	6.25	
2- 3	-312 / 0	-77.3	-77.3	0.10 (1)	6.25	
3- 4	-144 / 0	-77.3	-77.3	0.13 (1)	6.25	
4- 5	-144 / 0	-77.3	-77.3	0.57 (1)	6.25	
5- 6	0 / 8	-149.9	-149.9	0.57 (1)	10.00	
6- 7	-741 / 0	-77.3	-77.3	0.12 (1)	6.25	
7- 8	-813 / 0	-77.3	-77.3	0.13 (1)	6.25	
17- 1	-468 / 0	0.0	0.0	0.05 (1)	7.81	
9- 8	-794 / 0	0.0	0.0	0.09 (1)	7.81	
17-16	0 / 0	-17.5	-17.5	0.03 (4)	10.00	
16-15	0 / 331	-17.5	-17.5	0.08 (1)	10.00	
15-14	0 / 250	-17.5	-17.5	0.08 (1)	10.00	
14-13	-8 / 0	-17.5	-17.5	0.17 (4)	10.00	
13-12	0 / 608	-33.9	-33.9	0.23 (1)	10.00	
12-11	0 / 608	-33.9	-33.9	0.23 (1)	10.00	
11-10	0 / 688	-33.9	-33.9	0.21 (4)	10.00	
10- 9	0 / 0	-33.9	-33.9	0.08 (4)	10.00	

WEBS

MEMB. FR-TO	MAX. FACTORED FORCE (LBS)	MAX CSI (LC)
16- 2	-109 / 14	0.02 (1)
2-15	-131 / 0	0.04 (1)
15- 3	0 / 161	0.04 (1)
3-14	-218 / 0	0.13 (1)
14- 4	-71 / 0	0.03 (1)
14- 5	0 / 301	0.07 (1)
13- 5	-984 / 0	0.44 (1)
13- 6	-846 / 0	0.88 (1)
11- 6	0 / 230	0.08 (4)
11- 7	-123 / 0	0.04 (1)
10- 7	-140 / 36	0.03 (1)
1-16	0 / 367	0.09 (1)
10- 8	0 / 729	0.18 (1)

FACTORED CONCENTRATED LOADS (LBS)

JT	LOC.	LC1	MAX-	MAX+	FACE	DIR.	TYPE
6	16-6-8	-348	-348	---	FRONT	VERT	TOTAL

DESIGN CRITERIA

SPECIFIED LOADS:

TOP	CH.	LL	=	23.3	PSF
		DL	=	3.0	PSF
BOT	CH.	LL	=	0.0	PSF
		DL	=	7.0	PSF
TOTAL	LOAD		=	33.3	PSF

SPACING = 24.0 IN. C/C

LOADING IN FLAT SECTION BASED ON A SLOPE OF 6.00/12

GIRDER TYPE: CPrimeHip
LEFT SETBACK = 5-6-8
RIGHT SETBACK = 6-0-0
END SETBACK = 6-0-0
END WALL WIDTH = 3-0
CORNER FRAMING TYPE: CONVENTIONAL
END JACK TYPE: CONVENTIONAL
APPLIED TO FRONT SIDE
- ADDT'L LOADS BASED ON 55 % OF GSL.
LOADS APPLIED TO FIRST 11-1-0 OF SPAN MEASURED FROM THE RIGHT.

THIS TRUSS IS DESIGNED FOR RESIDENTIAL OR SMALL BUILDING REQUIREMENTS OF PART 9, NBCC 2010

THIS DESIGN COMPLIES WITH:
- PART 9 OF OBC 2012 , BCBC 2012 , ABC 2014
- CSA 086-09
- TPIC 2011

(55 % OF 27.2 P.S.F. G.S.L. PLUS 8.4 P.S.F. RAIN LOAD) EQUALS 23.3 P.S.F. SPECIFIED ROOF LIVE LOAD

ALLOWABLE DEFL.(LL)= L/360 (0.38")
CALCULATED VERT. DEFL.(LL) = L/ 999 (0.01")
ALLOWABLE DEFL.(TL)= L/360 (0.38")
CALCULATED VERT. DEFL.(TL) = L/ 999 (0.03")

CSI: TC=0.57 (4-5:1) , BC=0.23 (11-13:1) , WB=0.88 (6-13:1) , SSI=0.40 (5-6:1)

DOL LUMBER=1.00 NAIL=1.00 LS BEND=1.00 COMP=1.00 SHEAR=1.00 TENS= 1.00

COMPANION LIVE LOAD FACTOR = 0.50

TRUSS PLATE MANUFACTURER IS NOT RESPONSIBLE FOR QUALITY CONTROL IN THE TRUSS MANUFACTURING PLANT .

NAIL VALUES

PLATE	GRIP(DRY) (PSI) MAX	MIN	SHEAR (PLI) MAX	MIN	SECTION (PLI) MAX	MIN
MT20	618	354	1667	822	2284	1656

PLATE PLACEMENT TOL. = 0.250 inches

PLATE ROTATION TOL. = 5.0 Deg.

JSI GRIP= 0.90 (10) (INPUT = 0.90)
JSI METAL= 0.28 (6) (INPUT = 1.00)

LICENSED PROFESSIONAL ENGINEER
R.M. TREVISAN
100136551
March 14th, 2017
PROVINCE OF ONTARIO

RECEIVED
TOWN OF MILTON
MAR 29, 2017
17-5233
BUILDING DIVISION

READ ALL NOTES ON THIS PAGE AND ON THE ENGINEERING NOTE PAGE ENP-1. THE NOTE PAGE IS AN INTEGRAL PART OF THIS DRAWING AS IT CONTAINS SPECIFICATIONS AND CRITERIA USED IN THE DESIGN OF THIS COMPONENT.

KOTT

JOB NAME	TRUSS NAME	QUANTITY	PLY	JOB DESC.	DRWG NO.
PT0317-081	GIRD15	1	1	TRUSS DESC. LECCO RIDGE-BLOCK 338	

KOTT , Stouffville, ON, CGC

Version 8.100 S Feb 9 2017 MiTek Industries, Inc. Tue Mar 14 15:57:00 2017 Page 1
ID:EvTixTQDI5yR1QLotZTBr_yE?HJ-w6Ty1j_nnleDl7sfGh438?sei8QiK_OBOBk_c0zb_Pn

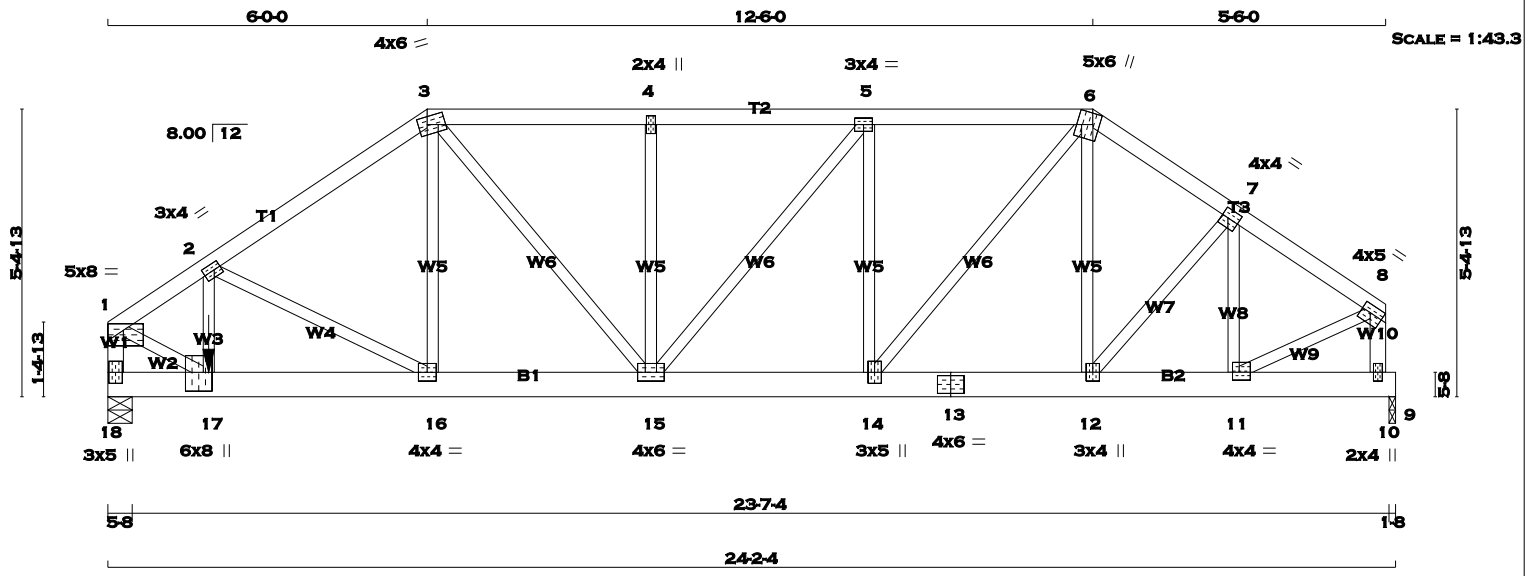

TOTAL WEIGHT = 120 lb [M]

LUMBER

N. L. G. A. RULES

CHORDS	SIZE		LUMBER	DESCR.
1 - 3	2x4	DRY	No.2	SPF
3 - 6	2x4	DRY	No.2	SPF
6 - 8	2x4	DRY	No.2	SPF
18 - 1	2x4	DRY	No.2	SPF
10 - 8	2x4	DRY	No.2	SPF
18 - 13	2x6	DRY	No.2	SPF
13 - 9	2x6	DRY	No.2	SPF
ALL WEBS EXCEPT	2x3	DRY	No.2	SPF

DRY: SEASONED LUMBER.

PLATES (table is in inches)

JT	TYPE	PLATES	W	LEN	Y	X
1	TMVW-p	MT20	5.0	8.0	1.50	Edge
2	TMWW-t	MT20	3.0	4.0	1.50	1.50
3	TTWW-m	MT20	4.0	6.0	1.75	2.00
4	TMW+w	MT20	2.0	4.0		
5	TMWW-t	MT20	3.0	4.0		
6	TTWW+m	MT20	5.0	6.0	2.50	1.50
7	TMWW-t	MT20	4.0	4.0	2.00	1.50
8	TMVW-t	MT20	4.0	5.0	1.75	Edge
10	BMV+p	MT20	2.0	4.0		
11	BMWW-t	MT20	4.0	4.0	1.75	1.50
12	BMWW+t	MT20	3.0	4.0		
13	BS-t	MT20	4.0	6.0		
14	BMWW+t	MT20	3.0	5.0		
15	BMWWW-t	MT20	4.0	6.0		
16	BMWW-t	MT20	4.0	4.0		
17	BMWW+t	MT20	6.0	8.0	4.25	2.00
18	BMV1+p	MT20	3.0	5.0		

Edge - INDICATES REFERENCE CORNER OF PLATE TOUCHES EDGE OF CHORD.

A SIZE FOR SIZE SUBSTITUTION OF MITEK MII20 WITH TEE-LOK TL20 PLATES IS ALLOWED.

HANGERS NOTES

1) SPECIAL HANGER(S) OR CONNECTION(S) REQUIRED TO SUPPORT CONCENTRATED LOAD(S) 1761.2 lbs FACTORED DOWN AT 1-10-12 ON BOTTOM CHORD. DESIGN FOR UNSPECIFIED CONNECTION(S) IS DELEGATED TO THE BUILDING DESIGNER.

DIMENSIONS, SUPPORTS AND LOADINGS SPECIFIED BY FABRICATOR TO BE VERIFIED BY BUILDING DESIGNER

BEARINGS

JT	FACTORED GROSS REACTION VERT	HORZ	MAXIMUM FACTORED GROSS REACTION DOWN	HORZ	UPLIFT	INPUT BRG IN-SX	REQRD BRG IN-SX
18	2770	0	2770	0	0	5-8	5-8
9	1271	0	1271	0	0	1-8	1-8

UNFACTORED REACTIONS

JT	1ST LCASE COMBINED	MAX./MIN. COMPONENT REACTIONS SNOW	LIVE	PERM.LIVE	WIND	DEAD	SOIL
18	1944	1360 / 0	0 / 0	0 / 0	0 / 0	584 / 0	0 / 0
9	892	622 / 0	0 / 0	0 / 0	0 / 0	270 / 0	0 / 0

BEARING MATERIAL TO BE SPF NO.2 OR BETTER AT JOINT(S) 18, 9

BRACING

TOP CHORD TO BE SHEATHED OR MAX. PURLIN SPACING = 4.04 FT.
MAX. UNBRACED BOTTOM CHORD LENGTH = 10.00 FT. OR RIGID CEILING DIRECTLY APPLIED.

ALL PITCH BREAKS AND PERIMETER CORNER JOINTS MUST BE LATERALLY RESTRAINED.

LOADING

TOTAL LOAD CASES: (3)

CHORDS

MEMB. FR-TO	MAX. FACTORED FORCE (LBS)	FACTORED VERT. LOAD (PLF) FROM	TO	LC1	MAX CSI (LC)	MAX. UNBRAC LENGTH
1- 2	-2622 / 0	-77.3	-77.3	0.22	(1)	4.04
2- 3	-1864 / 0	-77.3	-77.3	0.26	(1)	4.64
3- 4	-1749 / 0	-77.3	-77.3	0.24	(1)	4.77
4- 5	-1749 / 0	-77.3	-77.3	0.24	(1)	4.76
5- 6	-1632 / 0	-77.3	-77.3	0.24	(1)	4.91
6- 7	-1407 / 0	-77.3	-77.3	0.12	(1)	5.35
7- 8	-1308 / 0	-77.3	-77.3	0.12	(1)	5.51
18- 1	-2654 / 0	0.0	0.0	0.30	(1)	5.22
10- 8	-1333 / 0	0.0	0.0	0.15	(1)	6.97
18-17	0 / 0	-17.5	-17.5	0.14	(1)	10.00
17-16	0 / 2203	-17.5	-17.5	0.43	(1)	10.00
16-15	0 / 1549	-17.5	-17.5	0.25	(1)	10.00
15-14	0 / 1632	-17.5	-17.5	0.25	(1)	10.00
14-13	0 / 1157	-17.5	-17.5	0.17	(1)	10.00
13-12	0 / 1157	-17.5	-17.5	0.17	(1)	10.00
12-11	0 / 1098	-17.5	-17.5	0.16	(1)	10.00
11-10	0 / 0	-17.5	-17.5	0.18	(1)	10.00
10- 9	0 / 0	-17.5	-17.5	0.18	(1)	10.00

WEBS

MEMB. FR-TO	MAX. FACTORED FORCE (LBS)	MAX CSI (LC)
17- 2	0 / 495	0.12 (1)
2-16	-754 / 0	0.29 (1)
16- 3	0 / 516	0.13 (1)
3-15	0 / 311	0.08 (1)
15- 4	-343 / 0	0.14 (1)
15- 5	0 / 185	0.05 (1)
14- 5	-490 / 0	0.21 (1)
14- 6	0 / 741	0.18 (1)
12- 6	-8 / 43	0.02 (3)
12- 7	0 / 90	0.02 (1)
11- 7	-371 / 0	0.08 (1)
1-17	0 / 2489	0.62 (1)
11- 8	0 / 1212	0.30 (1)

FACTORED CONCENTRATED LOADS (LBS)

JT	LOC.	LC1	MAX-	MAX+	FACE	DIR.	TYPE
17	1-10-12	-1761	-1761	---	FRONT	VERT	TOTAL

RECEIVED
TOWN OF MILTON
MAR 29, 2017
17-5233
BUILDING DIVISION

READ ALL NOTES ON THIS PAGE AND ON THE ENGINEERING NOTE PAGE ENP-1. THE NOTE PAGE IS AN INTEGRAL PART OF THIS DRAWING AS IT CONTAINS SPECIFICATIONS AND CRITERIA USED IN THE DESIGN OF THIS COMPONENT.

DESIGN CRITERIA

*** SPECIAL LOADS ANALYSIS ***
GEOMETRY AND/OR BASIC LOADS CHANGED BY USER.
LOADS WERE DERIVED FROM USER INPUT
NO FURTHER MODIFICATIONS WERE MADE

SPECIFIED LOADS:

TOP	CH.	LL	=	23.3	PSF
		DL	=	3.0	PSF
BOT	CH.	LL	=	0.0	PSF
		DL	=	7.0	PSF
TOTAL	LOAD		=	33.3	PSF

SPACING = 24.0 IN. C/C

LOADING IN FLAT SECTION BASED ON A SLOPE OF 6.00/12

*** NON STANDARD GIRDER ***
ADDT'L USER-DEFINED LOADS APPLIED TO ALL LOAD CASES.

THIS TRUSS IS DESIGNED FOR RESIDENTIAL OR SMALL BUILDING REQUIREMENTS OF PART 9, NBCC 2010

THIS DESIGN COMPLIES WITH:
- PART 9 OF OBC 2012 , BCBC 2012 , ABC 2014
- CSA 086-09
- TPIC 2011

(55 % OF 27.2 P.S.F. G.S.L. PLUS 8.4 P.S.F. RAIN LOAD) EQUALS 23.3 P.S.F. SPECIFIED ROOF LIVE LOAD

ALLOWABLE DEFL.(LL)= L/360 (0.81")
CALCULATED VERT. DEFL.(LL) = L/ 999 (0.05")
ALLOWABLE DEFL.(TL)= L/360 (0.81")
CALCULATED VERT. DEFL.(TL) = L/ 999 (0.10")

CSI: TC=0.30 (1-18:1) , BC=0.43 (16-17:1) , WB=0.62 (1-17:1) , SSI=0.84 (9-10:1)

DOL LUMBER=1.00 NAIL=1.00 LS BEND=1.00 COMP=1.00 SHEAR=1.00 TENS= 1.00

COMPANION LIVE LOAD FACTOR = 0.50

TRUSS PLATE MANUFACTURER IS NOT RESPONSIBLE FOR QUALITY CONTROL IN THE TRUSS MANUFACTURING PLANT .

NAIL VALUES

PLATE	GRIP(DRY) (PSI) MAX	MIN	SHEAR (PLI) MAX	MIN	SECTION (PLI) MAX	MIN
MT20	618	354	1667	822	2284	1656

PLATE PLACEMENT TOL. = 0.250 inches

PLATE ROTATION TOL. = 5.0 Deg.

JSI GRIP= 0.89 (8) (INPUT = 0.90)
JSI METAL= 0.48 (17) (INPUT = 1.00)

KOTT

SCALE = 1:20.6

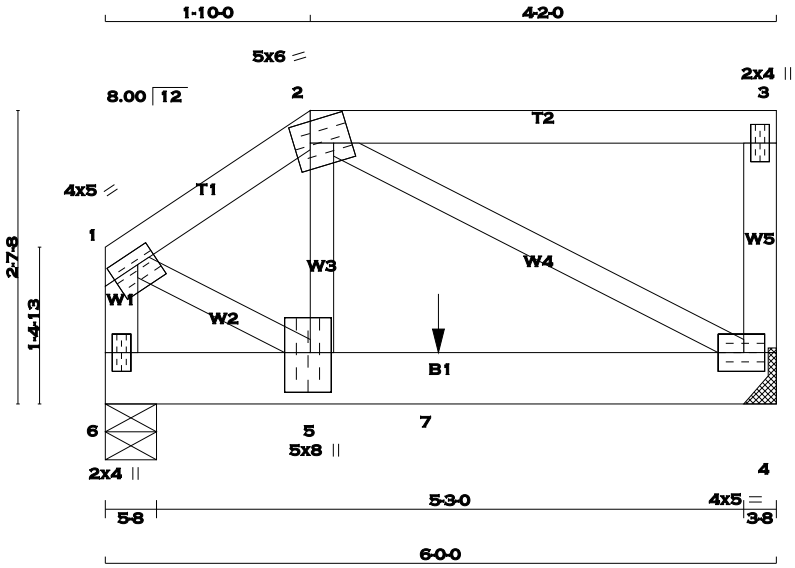

TOTAL WEIGHT = 28 lb [M]

LUMBER

N. L. G. A. RULES

CHORDS	SIZE		LUMBER	DESCR.
1 - 2	2x4	DRY	No.2	SPF
2 - 3	2x4	DRY	No.2	SPF
4 - 3	2x4	DRY	No.2	SPF
6 - 1	2x4	DRY	No.2	SPF
6 - 4	2x6	DRY	No.2	SPF
ALL WEBS EXCEPT	2x3	DRY	No.2	SPF

DRY: SEASONED LUMBER.

PLATES (table is in inches)

JT	TYPE	PLATES	W	LEN	Y	X
1	TMVW-t	MT20	4.0	5.0	1.50	2.00
2	TTWW-m	MT20	5.0	6.0	2.25	1.75
3	TMV+p	MT20	2.0	4.0		
4	BMVW1-t	MT20	4.0	5.0	2.00	2.25
5	BMWW+t	MT20	5.0	8.0	4.25	2.25
6	BMV1+p	MT20	2.0	4.0		

A SIZE FOR SIZE SUBSTITUTION OF MITEK MII20 WITH TEE-LOK TL20 PLATES IS ALLOWED.

HANGERS NOTES

1) SPECIAL HANGER(S) OR CONNECTION(S) REQUIRED TO SUPPORT CONCENTRATED LOAD(S) 490.2 lbs FACTORED DOWN AT 2-11-12 ON BOTTOM CHORD. DESIGN FOR UNSPECIFIED CONNECTION(S) IS DELEGATED TO THE BUILDING DESIGNER.

DIMENSIONS, SUPPORTS AND LOADINGS SPECIFIED BY FABRICATOR TO BE VERIFIED BY BUILDING DESIGNER

BEARINGS

JT	FACTORED GROSS REACTION VERT	HORZ	MAXIMUM FACTORED GROSS REACTION DOWN	HORZ	UPLIFT	INPUT BRG IN-SX	REQRD BRG IN-SX
4	1761	0	1761	0	0	HANGER BY OTHERS MIN. SEAT SIZE: 3-8	
6	1371	0	1371	0	0	5-8	5-8

UNFACTORED REACTIONS

JT	1ST LCASE COMBINED	SNOW	MAX./MIN. COMPONENT REACTIONS LIVE	PERM.LIVE	WIND	DEAD	SOIL
4	1236	864 / 0	0 / 0	0 / 0	0 / 0	371 / 0	0 / 0
6	962	673 / 0	0 / 0	0 / 0	0 / 0	289 / 0	0 / 0

BEARING MATERIAL TO BE SPF NO.2 OR BETTER AT JOINT(S) 6

BRACING

TOP CHORD TO BE SHEATHED OR MAX. PURLIN SPACING = 5.33 FT.
MAX. UNBRACED BOTTOM CHORD LENGTH = 10.00 FT. OR RIGID CEILING DIRECTLY APPLIED.

ALL PITCH BREAKS AND PERIMETER CORNER JOINTS MUST BE LATERALLY RESTRAINED.

LOADING

TOTAL LOAD CASES: (4)

CHORDS

MEMB. FR-TO	MAX. FACTORED FORCE (LBS)	FROM	FACTORED VERT. LOAD LC1 (PLF) TO	MAX CSI (LC)	MAX. UNBRAC LENGTH
1- 2	-1456 / 0	-77.3	-77.3	0.08 (1)	5.33
2- 3	0 / 0	-77.3	-77.3	0.25 (1)	10.00
4- 3	-161 / 0	0.0	0.0	0.02 (1)	7.81
6- 1	-1506 / 0	0.0	0.0	0.17 (1)	6.65
6- 5	0 / 0	-230.9	-230.9	0.51 (1)	10.00
5- 7	0 / 1266	-230.9	-230.9	0.80 (1)	10.00
7- 4	0 / 1266	-493.0	-493.0	0.80 (1)	10.00

WEBS

MEMB. FR-TO	MAX. FACTORED FORCE (LBS)	MAX CSI (LC)
5- 2	0 / 1262	0.31 (1)
2- 4	-1436 / 0	0.49 (1)
1- 5	0 / 1357	0.34 (1)

FACTORED CONCENTRATED LOADS (LBS)

JT	LOC.	LC1	MAX-	MAX+	FACE	DIR.	TYPE
7	2-11-12	-490	-490	---	FRONT	VERT	TOTAL

DESIGN CRITERIA

*** SPECIAL LOADS ANALYSIS ***
GEOMETRY AND/OR BASIC LOADS CHANGED BY USER.
LOADS WERE DERIVED FROM USER INPUT
NO FURTHER MODIFICATIONS WERE MADE

SPECIFIED LOADS:

TOP CH.	LL	=	23.3	PSF
	DL	=	3.0	PSF
BOT CH.	LL	=	0.0	PSF
	DL	=	7.0	PSF
TOTAL LOAD		=	33.3	PSF

SPACING = 24.0 IN. C/C

LOADING IN FLAT SECTION BASED ON A SLOPE OF 6.00/12

GIRDER TYPE: CStdGirder
START DISTANCE = 0-0
START SPAN CARRIED = 11-5-8
END DISTANCE = 2-11-12
END SPAN CARRIED = 11-5-8
END WALL WIDTH = 5-8
APPLIED TO FRONT SIDE OF BOTTOM CHORD.
- ADDT'L LOADS BASED ON 55 % OF GSL.

GIRDER TYPE: CStdGirder
START DISTANCE = 2-11-12
START SPAN CARRIED = 22-2-2
END DISTANCE = 6-0-0
END SPAN CARRIED = 22-2-2
END WALL WIDTH = 1-8
APPLIED TO FRONT SIDE OF BOTTOM CHORD.
- ADDT'L LOADS BASED ON 55 % OF GSL.

*** NON STANDARD GIRDER ***
ADDT'L USER-DEFINED LOADS APPLIED TO ALL LOAD CASES.

THIS TRUSS IS DESIGNED FOR RESIDENTIAL OR SMALL BUILDING REQUIREMENTS OF PART 9, NBCC 2010

THIS DESIGN COMPLIES WITH:
- PART 9 OF OBC 2012 , BCBC 2012 , ABC 2014
- CSA 086-09
- TPIC 2011

(55 % OF 27.2 P.S.F. G.S.L. PLUS 8.4 P.S.F. RAIN LOAD) EQUALS 23.3 P.S.F. SPECIFIED ROOF LIVE LOAD

ALLOWABLE DEFL.(LL)= L/360 (0.20")
CALCULATED VERT. DEFL.(LL) = L/ 999 (0.05")
ALLOWABLE DEFL.(TL)= L/360 (0.20")
CALCULATED VERT. DEFL.(TL) = L/ 859 (0.08")

CSI: TC=0.25 (2-3:1) , BC=0.80 (4-5:1) , WB=0.49 (2-4:1) , SSI=0.86 (4-5:1)

DOL LUMBER=1.00 NAIL=1.00 LS BEND=1.00 COMP=1.00 SHEAR=1.00 TENS= 1.00

COMPANION LIVE LOAD FACTOR = 0.50

TRUSS PLATE MANUFACTURER IS NOT RESPONSIBLE FOR QUALITY CONTROL IN THE TRUSS MANUFACTURING PLANT .

LICENSED PROFESSIONAL ENGINEER
R.M. TREVISAN
100136551
March 14th, 2017
PROVINCE OF ONTARIO

RECEIVED
TOWN OF MILTON
MAR 29, 2017
17-5233
BUILDING DIVISION

READ ALL NOTES ON THIS PAGE AND ON THE ENGINEERING NOTE PAGE ENP-1. THE NOTE PAGE IS AN INTEGRAL PART OF THIS DRAWING AS IT CONTAINS SPECIFICATIONS AND CRITERIA USED IN THE DESIGN OF THIS COMPONENT.

KOTT

CONTINUED ON PAGE 2

JOB NAME	TRUSS NAME	QUANTITY	PLY	JOB DESC.	DRWG NO.
PT0317-081	GIRD18	1	2	TRUSS DESC. LECCO RIDGE-BLOCK 338	ENG JOB: PT0317-081

KOTT , Stouffville, ON, CGC

Version 8.100 S Feb 9 2017 MiTek Industries, Inc. Tue Mar 14 15:57:02 2017 Page 1

ID:EvTixTQDI5yR1QLotZTBr_yE?HJ-sVbjSP?2JNux?R02N66XDQy_ty7hozYUsVD5gvzb_PI

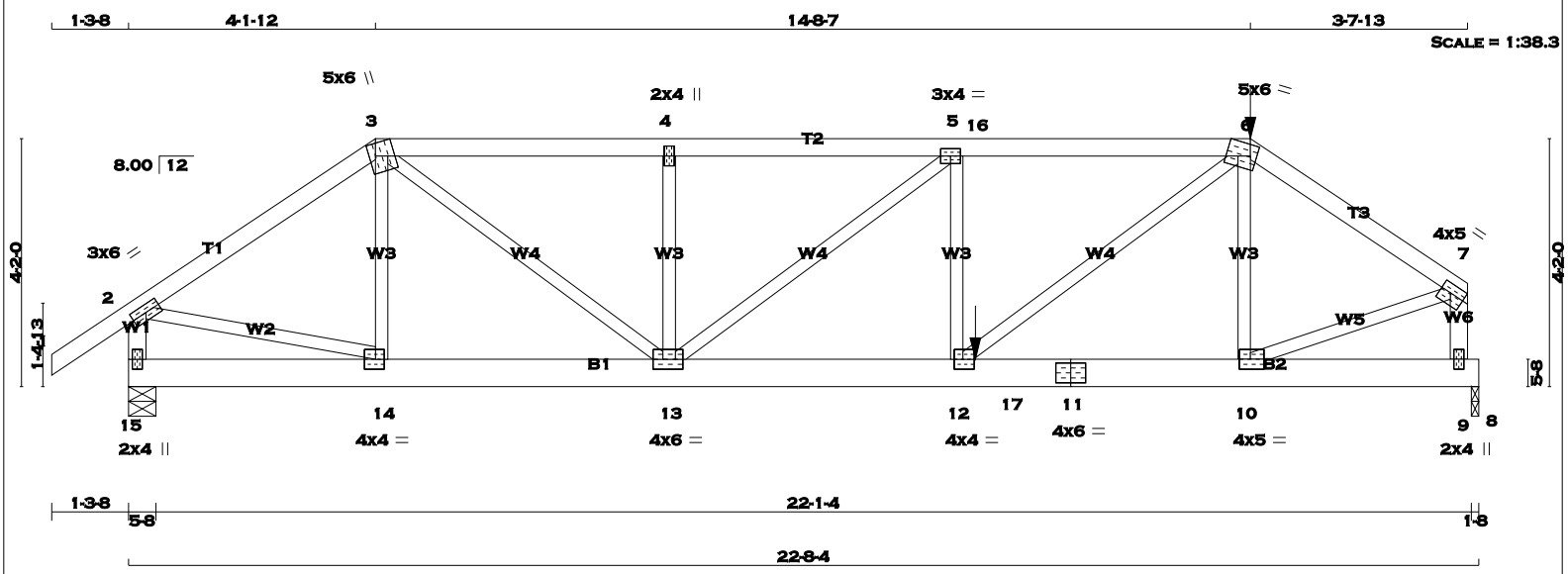

TOTAL WEIGHT = 2 X 104 = 208 lb [M]

LUMBER

N. L. G. A. RULES

CHORDS	SIZE		LUMBER	DESCR.
1 - 3	2x4	DRY	No.2	SPF
3 - 6	2x4	DRY	No.2	SPF
6 - 7	2x4	DRY	No.2	SPF
15 - 2	2x4	DRY	No.2	SPF
9 - 7	2x4	DRY	No.2	SPF
15 - 11	2x6	DRY	No.2	SPF
11 - 8	2x6	DRY	No.2	SPF
ALL WEBS EXCEPT	2x3	DRY	No.2	SPF

DRY: SEASONED LUMBER.

DESIGN CONSISTS OF 2 TRUSSES BUILT SEPARATELY THEN FASTENED TOGETHER AS FOLLOWS:

CHORDS	#ROWS	SURFACE SPACING (IN)	LOAD(PLF)
TOP CHORDS : (0.122"X3") SPIRAL NAILS			
1- 3	1	12	TOP
3- 6	1	12	SIDE(34.2)
6- 7	1	12	SIDE(0.0)
15- 2	1	12	TOP
9- 7	1	12	TOP
BOTTOM CHORDS : (0.122"X3") SPIRAL NAILS			
15- 11	2	12	SIDE(8.7)
11- 8	2	12	SIDE(8.7)
WEBS : (0.122"X3") SPIRAL NAILS			
2x3	1	6	

NAILS TO BE DRIVEN FROM ONE SIDE ONLY.

GIRDER NAILING ASSUMES NAILED HANGERS ARE FASTENED WITH MIN. 3-0 INCH NAILS.

TOP - COMPONENTS ARE LOADED FROM THE TOP AND MUST BE PLACED ON TOP EDGE OF ALL PLIES FOR THE LOAD TO BE TRANSFERRED TO EACH PLY.

SIDE - PLF SHOWN IS THE EQUIVALENT UDL APPLIED TO ONE SIDE THAT THE CORRESPONDING NAILING PATTERN SHALL BE CAPABLE OF TRANSFERING. REMAINING PLF MUST BE APPLIED ON THE OPPOSITE SIDE OR ON THE TOP.

PLATES (table is in inches)

JT	TYPE	PLATES	W	LEN	Y	X
2	TMVW-t	MT20	3.0	6.0		
3	TTWW+m	MT20	5.0	6.0	Edge	3.75
4	TMW+w	MT20	2.0	4.0		

DIMENSIONS, SUPPORTS AND LOADINGS SPECIFIED BY FABRICATOR TO BE VERIFIED BY BUILDING DESIGNER

BEARINGS

JT	FACTORED GROSS REACTION VERT	HORZ	MAXIMUM FACTORED GROSS REACTION DOWN	HORZ	UPLIFT	INPUT BRG IN-SX	REQRD BRG IN-SX
15	1749	0	1749	0	0	5-8	5-8
8	2287	0	2287	0	0	1-8	1-8

UNFACTORED REACTIONS

JT	1ST LCASE COMBINED	MAX./MIN. COMPONENT REACTIONS SNOW	LIVE	PERM.LIVE	WIND	DEAD	SOIL
15	1224	872 / 0	0 / 0	0 / 0	0 / 0	353 / 0	0 / 0
8	1606	1115 / 0	0 / 0	0 / 0	0 / 0	492 / 0	0 / 0

BEARING MATERIAL TO BE SPF NO.2 OR BETTER AT JOINT(S) 15, 8

BRACING

TOP CHORD TO BE SHEATHED OR MAX. PURLIN SPACING = 4.58 FT.
MAX. UNBRACED BOTTOM CHORD LENGTH = 10.00 FT. OR RIGID CEILING DIRECTLY APPLIED.

ALL PITCH BREAKS AND PERIMETER CORNER JOINTS MUST BE LATERALLY RESTRAINED.

LOADING

TOTAL LOAD CASES: (4)

CHORDS MEMB. FR-TO	MAX. FACTORED FORCE (LBS)	FACTORED VERT. LOAD (PLF) FROM	TO	LC1 CSI (LC)	MAX UNBRAC LENGTH	WEBS MEMB. FR-TO	MAX. FACTORED FORCE (LBS)	MAX CSI (LC)
1- 2	0 / 29	-77.3	-77.3	0.06 (1)	10.00	14- 3	-267 / 0	0.03 (1)
2- 3	-1936 / 0	-77.3	-77.3	0.15 (1)	6.13	3-13	0 / 1668	0.21 (1)
3- 4	-2925 / 0	-77.3	-77.3	0.17 (1)	5.22	13- 4	-373 / 0	0.05 (1)
4- 5	-2925 / 0	-77.3	-77.3	0.25 (1)	5.12	13- 5	-970 / 0	0.32 (1)
5-16	-3689 / 0	-77.3	-77.3	0.32 (1)	4.58	12- 5	0 / 111	0.02 (4)
16- 6	-3689 / 0	-145.8	-145.8	0.32 (1)	4.58	12- 6	0 / 1892	0.23 (1)
6- 7	-2644 / 0	-77.3	-77.3	0.13 (1)	5.47	10- 6	-354 / 29	0.05 (1)
15- 2	-1721 / 0	0.0	0.0	0.10 (1)	7.81	2-14	0 / 1652	0.20 (1)
9- 7	-2392 / 0	0.0	0.0	0.14 (1)	7.28	10- 7	0 / 2330	0.29 (1)
15-14	0 / 0	-17.5	-17.5	0.02 (4)	10.00			
14-13	0 / 1601	-17.5	-17.5	0.13 (1)	10.00			
13-12	0 / 3689	-17.5	-17.5	0.26 (1)	10.00			
12-17	0 / 2186	-17.5	-17.5	0.25 (1)	10.00			
17-11	0 / 2186	-33.0	-33.0	0.25 (1)	10.00			
11-10	0 / 2186	-33.0	-33.0	0.25 (1)	10.00			
10- 9	0 / 0	-33.0	-33.0	0.16 (1)	10.00			
9- 8	0 / 0	-33.0	-33.0	0.16 (1)	10.00			

FACTORED CONCENTRATED LOADS (LBS)

JT	LOC.	LC1	MAX-	MAX+	FACE	DIR.	TYPE
6	18-10-3	-220	-220	---	FRONT	VERT	TOTAL
17	14-2-12	-1124	-1124	---	FRONT	VERT	TOTAL

RECEIVED
TOWN OF MILTON
MAR 29, 2017
17-5233
BUILDING DIVISION

READ ALL NOTES ON THIS PAGE AND ON THE ENGINEERING NOTE PAGE ENP-1. THE NOTE PAGE IS AN INTEGRAL PART OF THIS DRAWING AS IT CONTAINS SPECIFICATIONS AND CRITERIA USED IN THE DESIGN OF THIS COMPONENT.

DESIGN CRITERIA

*** SPECIAL LOADS ANALYSIS ***
GEOMETRY AND/OR BASIC LOADS CHANGED BY USER.
LOADS WERE DERIVED FROM USER INPUT
NO FURTHER MODIFICATIONS WERE MADE

SPECIFIED LOADS:

TOP	CH.	LL	=	23.3	PSF
		DL	=	3.0	PSF
BOT	CH.	LL	=	0.0	PSF
		DL	=	7.0	PSF
TOTAL	LOAD		=	33.3	PSF

SPACING = 24.0 IN. C/C

LOADING IN FLAT SECTION BASED ON A SLOPE OF 6.00/12

GIRDER TYPE: CPrimeHip
LEFT SETBACK = 4-1-12
RIGHT SETBACK = 3-9-7
END SETBACK = 6-0-0
END WALL WIDTH = 5-8
CORNER FRAMING TYPE: CONVENTIONAL
END JACK TYPE: CONVENTIONAL
APPLIED TO FRONT SIDE
- ADDT'L LOADS BASED ON 55 % OF GSL.
LOADS APPLIED TO FIRST 8-4-14 OF SPAN MEASURED FROM THE RIGHT.

*** NON STANDARD GIRDER ***
ADDT'L USER-DEFINED LOADS APPLIED TO ALL LOAD CASES.

THIS TRUSS IS DESIGNED FOR RESIDENTIAL OR SMALL BUILDING REQUIREMENTS OF PART 9, NBCC 2010

THIS DESIGN COMPLIES WITH:
- PART 9 OF OBC 2012 , BCBC 2012 , ABC 2014
- CSA 086-09
- TPIC 2011

(55 % OF 27.2 P.S.F. G.S.L. PLUS 8.4 P.S.F. RAIN LOAD) EQUALS 23.3 P.S.F. SPECIFIED ROOF LIVE LOAD

ALLOWABLE DEFL.(LL)= L/360 (0.76")
CALCULATED VERT. DEFL.(LL) = L/ 999 (0.06")
ALLOWABLE DEFL.(TL)= L/360 (0.76")
CALCULATED VERT. DEFL.(TL) = L/ 999 (0.10")

CSI: TC=0.32 (5-6:1) , BC=0.26 (12-13:1) , WB=0.32 (5-13:1) , SSI=0.76 (8-9:1)

DOL LUMBER=1.00 NAIL=1.00 LS BEND=1.00 COMP=1.00 SHEAR=1.00 TENS= 1.00

COMPANION LIVE LOAD FACTOR = 0.50

TRUSS PLATE MANUFACTURER IS NOT RESPONSIBLE FOR QUALITY CONTROL IN THE TRUSS MANUFACTURING PLANT .

NAIL VALUES

PLATE	GRIP(DRY) (PSI) MAX	MIN	SHEAR (PLI) MAX	MIN	SECTION (PLI) MAX	MIN
MT20	618	354	1667	822	2284	1656

PLATE PLACEMENT TOL. = 0.250 inches

PLATE ROTATION TOL. = 20 DEG.

CONTINUED ON PAGE 2

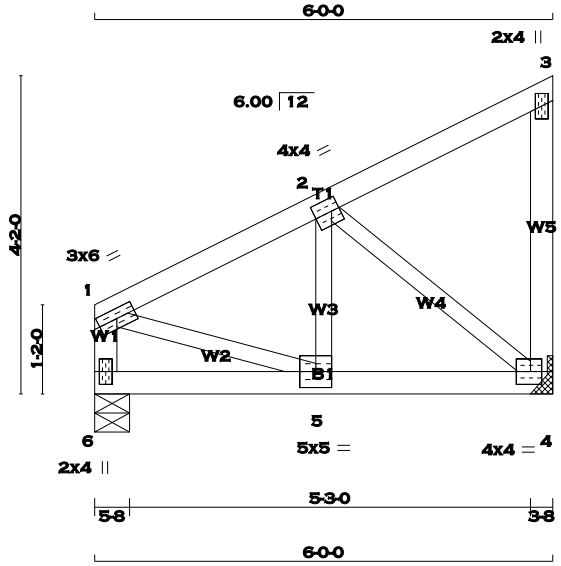

SCALE = 1:30.2

TOTAL WEIGHT = 26 lb [M]

LUMBER

N. L. G. A. RULES

CHORDS	SIZE		LUMBER	DESCR.
1 - 3	2x4	DRY	No.2	SPF
4 - 3	2x4	DRY	No.2	SPF
6 - 1	2x4	DRY	No.2	SPF
6 - 4	2x4	DRY	No.2	SPF
ALL WEBS EXCEPT	2x3	DRY	No.2	SPF

DRY: SEASONED LUMBER.

PLATES (table is in inches)

JT	TYPE	PLATES	W	LEN	Y	X
1	TMVW-t	MT20	3.0	6.0		
2	TMWW-t	MT20	4.0	4.0	2.00	1.25
3	TMV+p	MT20	2.0	4.0		
4	BMVW1-t	MT20	4.0	4.0	2.00	1.75
5	BMWW-t	MT20	5.0	5.0		
6	BMV1+p	MT20	2.0	4.0		

A SIZE FOR SIZE SUBSTITUTION OF MITEK MII20 WITH TEE-LOK TL20 PLATES IS ALLOWED.

DIMENSIONS, SUPPORTS AND LOADINGS SPECIFIED BY FABRICATOR TO BE VERIFIED BY BUILDING DESIGNER

BEARINGS

JT	FACTORED GROSS REACTION VERT	HORZ	MAXIMUM FACTORED GROSS REACTION DOWN	HORZ	UPLIFT	INPUT BRG IN-SX	REQRD BRG IN-SX
4	1117	0	1117	0	0	HANGER BY OTHERS MIN. SEAT SIZE: 3-8	
6	1117	0	1117	0	0	5-8	5-8

UNFACTORED REACTIONS

JT	1ST LCASE COMBINED	SNOW	LIVE	PERM.LIVE	WIND	DEAD	SOIL
		MAX./MIN. COMPONENT REACTIONS					
4	784	549 / 0	0 / 0	0 / 0	0 / 0	236 / 0	0 / 0
6	784	549 / 0	0 / 0	0 / 0	0 / 0	236 / 0	0 / 0

BEARING MATERIAL TO BE SPF NO.2 OR BETTER AT JOINT(S) 6

BRACING

TOP CHORD TO BE SHEATHED OR MAX. PURLIN SPACING = 6.20 FT.
MAX. UNBRACED BOTTOM CHORD LENGTH = 10.00 FT. OR RIGID CEILING DIRECTLY APPLIED.

ALL PITCH BREAKS AND PERIMETER CORNER JOINTS MUST BE LATERALLY RESTRAINED.

LOADING

TOTAL LOAD CASES: (4)

CHORDS

MEMB. FR-TO	MAX. FACTORED FORCE (LBS)	FACTORED VERT. LOAD (PLF) FROM	TO	MAX CSI (LC)	MAX. UNBRAC LENGTH
1- 2	-958 / 0	-77.3	-77.3	0.11 (1)	6.20
2- 3	-10 / 0	-77.3	-77.3	0.10 (1)	10.00
4- 3	-94 / 0	0.0	0.0	0.03 (1)	7.81
6- 1	-774 / 0	0.0	0.0	0.09 (1)	7.81
6- 5	0 / 0	-295.1	-295.1	0.45 (1)	10.00
5- 4	0 / 866	-295.1	-295.1	0.60 (1)	10.00

WEBS

MEMB. FR-TO	MAX. FACTORED FORCE (LBS)	MAX CSI (LC)
5- 2	0 / 837	0.21 (1)
2- 4	-1101 / 0	0.28 (1)
1- 5	0 / 901	0.22 (1)

DESIGN CRITERIA

SPECIFIED LOADS:

TOP CH.	LL =	23.3	PSF
	DL =	3.0	PSF
BOT CH.	LL =	0.0	PSF
	DL =	7.0	PSF
TOTAL LOAD	=	33.3	PSF

SPACING = 24.0 IN. C/C

GIRDER TYPE: CStdGirder
START DISTANCE = 0-0
START SPAN CARRIED = 14-2-0
END DISTANCE = 6-0-0
END SPAN CARRIED = 14-2-0
END WALL WIDTH = 5-8
APPLIED TO FRONT SIDE OF BOTTOM CHORD.
- ADDT'L LOADS BASED ON 55 % OF GSL.

THIS TRUSS IS DESIGNED FOR RESIDENTIAL OR SMALL BUILDING REQUIREMENTS OF PART 9, NBCC 2010

THIS DESIGN COMPLIES WITH:
- PART 9 OF OBC 2012 , BCBC 2012 , ABC 2014
- CSA 086-09
- TPIC 2011

(55 % OF 27.2 P.S.F. G.S.L. PLUS 8.4 P.S.F. RAIN LOAD) EQUALS 23.3 P.S.F. SPECIFIED ROOF LIVE LOAD

ALLOWABLE DEFL.(LL)= L/360 (0.20")
CALCULATED VERT. DEFL.(LL) = L/ 999 (0.02")
ALLOWABLE DEFL.(TL)= L/360 (0.20")
CALCULATED VERT. DEFL.(TL) = L/ 999 (0.04")

CSI: TC=0.11 (1-2:1) , BC=0.60 (4-5:1) , WB=0.28 (2-4:1) , SSI=0.47 (5-6:1)

DOL LUMBER=1.00 NAIL=1.00 LS BEND=1.00 COMP=1.00 SHEAR=1.00 TENS= 1.00

COMPANION LIVE LOAD FACTOR = 0.50

TRUSS PLATE MANUFACTURER IS NOT RESPONSIBLE FOR QUALITY CONTROL IN THE TRUSS MANUFACTURING PLANT .

NAIL VALUES

PLATE	GRIP(DRY) (PSI) MAX	MIN	SHEAR (PLI) MAX	MIN	SECTION (PLI) MAX	MIN
MT20	618	354	1667	822	2284	1656

PLATE PLACEMENT TOL. = 0.250 inches

PLATE ROTATION TOL. = 5.0 Deg.

JSI GRIP= 0.87 (2) (INPUT = 0.90)
JSI METAL= 0.32 (4) (INPUT = 1.00)

LICENSED PROFESSIONAL ENGINEER
P.M. TREVISAN
100136551
March 14th, 2017
PROVINCE OF ONTARIO

RECEIVED
TOWN OF MILTON
MAR 29, 2017
17-5233
BUILDING DIVISION

READ ALL NOTES ON THIS PAGE AND ON THE ENGINEERING NOTE PAGE ENP-1. THE NOTE PAGE IS AN INTEGRAL PART OF THIS DRAWING AS IT CONTAINS SPECIFICATIONS AND CRITERIA USED IN THE DESIGN OF THIS COMPONENT.

KOTT

SCALE = 1:55.7

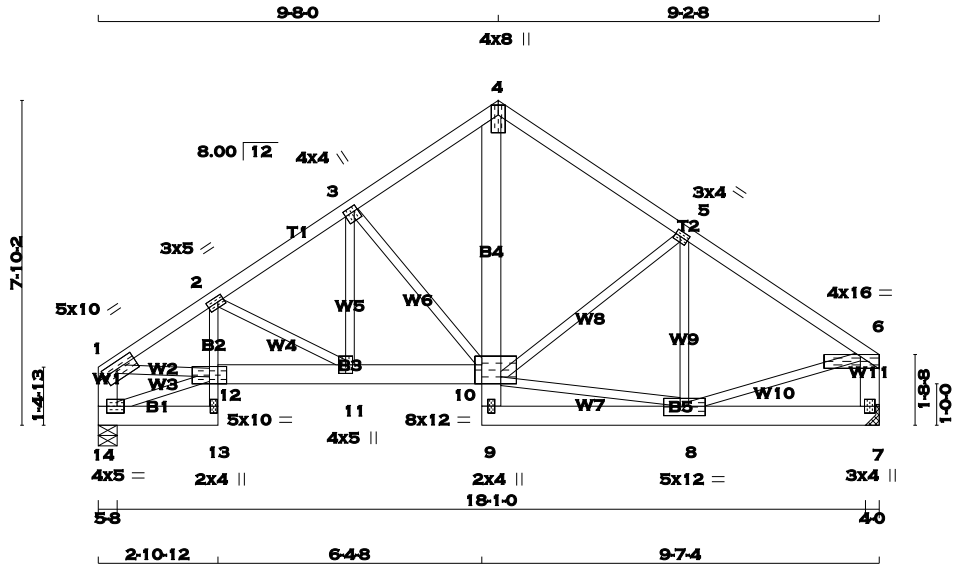

TOTAL WEIGHT = 2 X 107 = 214 lb [M]

LUMBER

N. L. G. A. RULES

CHORDS	SIZE		LUMBER	DESCR.
1 - 4	2x4	DRY	No.2	SPF
4 - 6	2x4	DRY	No.2	SPF
14 - 1	2x6	DRY	No.2	SPF
7 - 6	2x6	DRY	No.2	SPF
14 - 13	2x6	DRY	No.2	SPF
13 - 2	2x3	DRY	No.2	SPF
12 - 10	2x6	DRY	No.2	SPF
9 - 4	2x6	DRY	No.2	SPF
9 - 7	2x6	DRY	No.2	SPF
ALL WEBS EXCEPT	2x3	DRY	No.2	SPF

DRY: SEASONED LUMBER.

DESIGN CONSISTS OF 2 TRUSSES BUILT SEPARATELY THEN FASTENED TOGETHER AS FOLLOWS:

CHORDS #ROWS	SURFACE SPACING (IN)		LOAD(PLF)
TOP CHORDS : (0.122"X3") SPIRAL NAILS			
1- 4	1	12	TOP
4- 6	1	12	TOP
14- 1	2	12	TOP
7- 6	2	12	TOP
BOTTOM CHORDS : (0.122"X3") SPIRAL NAILS			
14- 13	2	9	SIDE(237.7)
12- 10	2	9	SIDE(237.7)
4- 9	2	12	TOP
9- 7	2	9	SIDE(237.7)
13- 2	1	12	TOP
WEBS : (0.122"X3") SPIRAL NAILS			
2x3	1	6	

NAILS TO BE DRIVEN FROM ONE SIDE ONLY.

TOP - COMPONENTS ARE LOADED FROM THE TOP AND MUST BE PLACED ON TOP EDGE OF ALL PLIES FOR THE LOAD TO BE TRANSFERRED TO EACH PLY.

SIDE - PLF SHOWN IS THE EQUIVALENT UDL APPLIED TO ONE SIDE THAT THE CORRESPONDING NAILING PATTERN SHALL BE CAPABLE OF TRANSFERING. REMAINING PLF MUST BE APPLIED ON THE OPPOSITE SIDE OR ON THE TOP.

PLATES (table is in inches)

JT	TYPE	PLATES	W	LEN	Y	X
1	TMVW-t	MT20	5.0	10.0	2.00	4.25
2	TMVW-t	MT20	3.0	5.0	1.50	1.75

DIMENSIONS, SUPPORTS AND LOADINGS SPECIFIED BY FABRICATOR TO BE VERIFIED BY BUILDING DESIGNER

BEARINGS

JT	FACTORED GROSS REACTION VERT	HORZ	MAXIMUM GROSS REACTION DOWN	HORZ	FACTORED UPLIFT	INPUT BRG IN-SX	REQRD BRG IN-SX
7	5382	0	5382	0	0	HANGER BY OTHERS MIN. SEAT SIZE: 4-0	
14	5382	0	5382	0	0	5-8	5-8

UNFACTORED REACTIONS

JT	1ST LCASE COMBINED	SNOW	MAX./MIN. COMPONENT REACTIONS LIVE	PERM.LIVE	WIND	DEAD	SOIL
7	3777	2642 / 0	0 / 0	0 / 0	0 / 0	1135 / 0	0 / 0
14	3777	2642 / 0	0 / 0	0 / 0	0 / 0	1135 / 0	0 / 0

BEARING MATERIAL TO BE SPF NO.2 OR BETTER AT JOINT(S) 14

BRACING

TOP CHORD TO BE SHEATHED OR MAX. PURLIN SPACING = 3.17 FT.
MAX. UNBRACED BOTTOM CHORD LENGTH = 10.00 FT. OR RIGID CEILING DIRECTLY APPLIED.

ALL PITCH BREAKS AND PERIMETER CORNER JOINTS MUST BE LATERALLY RESTRAINED.

LOADING

TOTAL LOAD CASES: (4)

CHORDS

MEMB. FR-TO	MAX. FACTORED FORCE (LBS)	FACTORED VERT. LOAD (PLF) FROM	TO	LC1 MAX CSI (LC)	MAX. UNBRAC LENGTH
1- 2	-8356 / 0	-77.3	-77.3	0.33 (1)	3.17
2- 3	-6708 / 0	-77.3	-77.3	0.26 (1)	3.61
3- 4	-4832 / 0	-77.3	-77.3	0.16 (1)	4.28
4- 5	-4613 / 0	-77.3	-77.3	0.22 (1)	4.31
5- 6	-5479 / 0	-77.3	-77.3	0.28 (1)	3.97
14- 1	-4660 / 0	0.0	0.0	0.17 (1)	6.69
7- 6	-4517 / 0	0.0	0.0	0.17 (1)	6.77
14-13	0 / 92	-493.0	-493.0	0.18 (1)	10.00
13-12	0 / 688	0.0	0.0	0.23 (1)	10.00
12- 2	0 / 1516	0.0	0.0	0.33 (1)	10.00
12-11	0 / 6991	-493.0	-493.0	0.63 (1)	10.00
11-10	0 / 5605	-493.0	-493.0	0.55 (1)	10.00
9-10	0 / 965	0.0	0.0	0.20 (1)	10.00
10- 4	0 / 4970	0.0	0.0	0.46 (1)	10.00
9- 8	0 / 374	-493.0	-493.0	0.44 (1)	10.00
8- 7	0 / 0	-493.0	-493.0	0.41 (1)	10.00

WEBS

MEMB. FR-TO	MAX. FACTORED FORCE (LBS)	MAX CSI (LC)
2-11	-1593 / 0	0.21 (1)
11- 3	0 / 2615	0.32 (1)
3-10	-2475 / 0	0.56 (1)
8- 5	0 / 614	0.08 (1)
1-12	0 / 6940	0.86 (1)
8- 6	0 / 4760	0.59 (1)
14-12	-98 / 0	0.01 (1)
10- 5	-901 / 0	0.27 (1)
10- 8	0 / 4262	0.53 (1)

RECEIVED
TOWN OF MILTON
MAR 29, 2017
17-5233
BUILDING DIVISION

READ ALL NOTES ON THIS PAGE AND ON THE ENGINEERING NOTE PAGE ENP-1. THE NOTE PAGE IS AN INTEGRAL PART OF THIS DRAWING AS IT CONTAINS SPECIFICATIONS AND CRITERIA USED IN THE DESIGN OF THIS COMPONENT.

DESIGN CRITERIA

SPECIFIED LOADS:

TOP	CH.	LL	=	23.3	PSF
		DL	=	3.0	PSF
BOT	CH.	LL	=	0.0	PSF
		DL	=	7.0	PSF
TOTAL	LOAD		=	33.3	PSF

SPACING = 24.0 IN. C/C

GIRDER TYPE: CStdGirder
START DISTANCE = 0-0
START SPAN CARRIED = 22-2-2
END DISTANCE = 18-10-8
END SPAN CARRIED = 22-2-2
END WALL WIDTH = 1-8
APPLIED TO FRONT SIDE OF BOTTOM CHORD.
- ADDT'L LOADS BASED ON 55 % OF GSL.

THIS TRUSS IS DESIGNED FOR RESIDENTIAL OR SMALL BUILDING REQUIREMENTS OF PART 9, NBCC 2010

THIS DESIGN COMPLIES WITH:
- PART 9 OF OBC 2012 , BCBC 2012 , ABC 2014
- CSA 086-09
- TPIC 2011

(55 % OF 27.2 P.S.F. G.S.L. PLUS 8.4 P.S.F. RAIN LOAD) EQUALS 23.3 P.S.F. SPECIFIED ROOF LIVE LOAD

ALLOWABLE DEFL.(LL)= L/360 (0.63")
CALCULATED VERT. DEFL.(LL) = L/ 999 (0.10")
ALLOWABLE DEFL.(TL)= L/360 (0.63")
CALCULATED VERT. DEFL.(TL) = L/ 999 (0.18")

CSI: TC=0.33 (1-2:1) , BC=0.63 (11-12:1) , WB=0.86 (1-12:1) , SSI=0.47 (8-9:1)

DOL LUMBER=1.00 NAIL=1.00 LS BEND=1.00 COMP=1.00 SHEAR=1.00 TENS= 1.00

COMPANION LIVE LOAD FACTOR = 0.50

AUTOSOLVE RIGHT HEEL ONLY

TRUSS PLATE MANUFACTURER IS NOT RESPONSIBLE FOR QUALITY CONTROL IN THE TRUSS MANUFACTURING PLANT .

NAIL VALUES

PLATE	GRIP(DRY) (PSI) MAX	MIN	SHEAR (PLI) MAX	MIN	SECTION (PLI) MAX	MIN
MT20	618	354	1667	822	2284	1656

PLATE PLACEMENT TOL. = 0.250 inches

PLATE ROTATION TOL. = 5.0 Deg.

JSI GRIP= 0.90 (11) (INPUT = 0.90)
JSI METAL= 0.67 (1) (INPUT = 1.00)

KOTT

CONTINUED ON PAGE 2

JOB NAME	TRUSS NAME	QUANTITY	PLY	JOB DESC.	DRWG NO.
PT0317-081	GIRD21	1	3	TRUSS DESC. LECCO RIDGE-BLOCK 338	

KOTT , Stouffville, ON, CGC

Version 8.100 S Feb 9 2017 MiTek Industries, Inc. Tue Mar 14 15:57:04 2017 Page 1
ID:EvTixTQDI5yR1QLotZTBr_yE?HJ-ouiTt41Ir_9fElAQVX9?Ir1MElpRGqLnJpiBlnzb_Pj

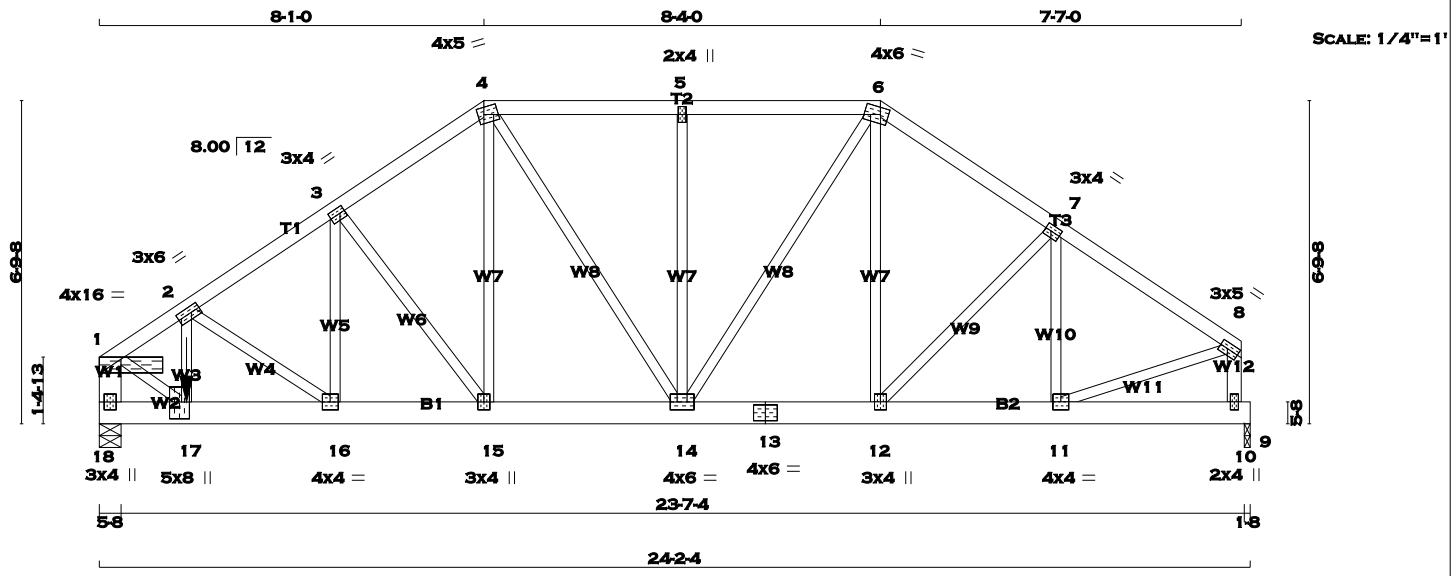

TOTAL WEIGHT = 3 X 127 = 381 lb [M]

LUMBER

N. L. G. A. RULES

CHORDS	SIZE		LUMBER	DESCR.
1 - 4	2x4	DRY	No.2	SPF
4 - 6	2x4	DRY	No.2	SPF
6 - 8	2x4	DRY	No.2	SPF
18 - 1	2x6	DRY	No.2	SPF
10 - 8	2x4	DRY	No.2	SPF
18 - 13	2x6	DRY	No.2	SPF
13 - 9	2x6	DRY	No.2	SPF
ALL WEBS EXCEPT	2x3	DRY	No.2	SPF

DRY: SEASONED LUMBER.

DESIGN CONSISTS OF 3 TRUSSES BUILT SEPARATELY THEN FASTENED TOGETHER AS FOLLOWS:

CHORDS	#ROWS	SURFACE SPACING (IN)	LOAD(PLF)
TOP CHORDS : (0.122"X3") SPIRAL NAILS			
1- 4	1	12	TOP
4- 6	1	12	TOP
6- 8	1	12	TOP
10- 8	1	12	TOP
18- 1	2	12	TOP
BOTTOM CHORDS : (0.122"X3") SPIRAL NAILS			
18- 13	3	4	SIDE(1501.3)
13- 9	2	12	TOP
WEBS : (0.122"X3") SPIRAL NAILS			
2x3	1	6	

STAGGER NAILS BY HALF THE SURFACE SPACING IN ADJACENT PLIES.

GIRDER NAILING ASSUMES NAILED HANGERS ARE FASTENED WITH MIN. 3-0 INCH NAILS.

TOP - COMPONENTS ARE LOADED FROM THE TOP AND MUST BE PLACED ON TOP EDGE OF ALL PLIES FOR THE LOAD TO BE TRANSFERRED TO EACH PLY.

SIDE - PLF SHOWN IS THE EQUIVALENT UDL APPLIED TO ONE SIDE THAT THE CORRESPONDING NAILING PATTERN SHALL BE CAPABLE OF TRANSFERING. REMAINING PLF MUST BE APPLIED ON THE OPPOSITE SIDE OR ON THE TOP.

PLATES (table is in inches)

JT	TYPE	PLATES	W	LEN	Y	X
1	TMVW-p	MT20	4.0	16.0	0.50	Edge
2	TMWW-t	MT20	3.0	6.0	1.50	2.25

DIMENSIONS, SUPPORTS AND LOADINGS SPECIFIED BY FABRICATOR TO BE VERIFIED BY BUILDING DESIGNER

BEARINGS

JT	FACTORED GROSS REACTION VERT	HORZ	MAXIMUM FACTORED GROSS REACTION DOWN	HORZ	UPLIFT	INPUT BRG IN-SX	REQRD BRG IN-SX
18	6807	0	6807	0	0	5-8	5-8
9	1568	0	1568	0	0	1-8	1-8

UNFACTORED REACTIONS

JT	1ST LCASE COMBINED	MAX./MIN. COMPONENT REACTIONS SNOW	LIVE	PERM.LIVE	WIND	DEAD	SOIL
18	4778	3342 / 0	0 / 0	0 / 0	0 / 0	1435 / 0	0 / 0
9	1100	768 / 0	0 / 0	0 / 0	0 / 0	332 / 0	0 / 0

BEARING MATERIAL TO BE SPF NO.2 OR BETTER AT JOINT(S) 18, 9

BRACING

TOP CHORD TO BE SHEATHED OR MAX. PURLIN SPACING = 4.73 FT.
MAX. UNBRACED BOTTOM CHORD LENGTH = 10.00 FT. OR RIGID CEILING DIRECTLY APPLIED.

ALL PITCH BREAKS AND PERIMETER CORNER JOINTS MUST BE LATERALLY RESTRAINED.

LOADING

TOTAL LOAD CASES: (4)

CHORDS

MEMB. FR-TO	MAX. FACTORED FORCE (LBS)	FACTORED VERT. LOAD (PLF) FROM	TO	LC1 CSI (LC)	MAX UNBRAC LENGTH
1- 2	-6030 / 0	-77.3	-77.3	0.07 (1)	4.73
2- 3	-3610 / 0	-77.3	-77.3	0.06 (1)	5.78
3- 4	-2469 / 0	-77.3	-77.3	0.05 (1)	6.25
4- 5	-1918 / 0	-77.3	-77.3	0.08 (1)	6.25
5- 6	-1918 / 0	-77.3	-77.3	0.08 (1)	6.25
6- 7	-1795 / 0	-77.3	-77.3	0.06 (1)	6.25
7- 8	-1768 / 0	-77.3	-77.3	0.06 (1)	6.25
18- 1	-6156 / 0	0.0	0.0	0.13 (1)	7.06
10- 8	-1616 / 0	0.0	0.0	0.06 (1)	7.81
18-17	0 / 0	-406.8	-406.8	0.12 (1)	10.00
17-16	0 / 5004	-17.5	-17.5	0.31 (1)	10.00
16-15	0 / 3024	-17.5	-17.5	0.13 (1)	10.00
15-14	0 / 2059	-17.5	-17.5	0.09 (1)	10.00
14-13	0 / 1476	-17.5	-17.5	0.06 (1)	10.00
13-12	0 / 1476	-17.5	-17.5	0.06 (1)	10.00
12-11	0 / 1486	-17.5	-17.5	0.07 (1)	10.00
11-10	0 / 0	-17.5	-17.5	0.07 (1)	10.00
10- 9	0 / 0	-17.5	-17.5	0.07 (1)	10.00

WEBS

MEMB. FR-TO	MAX. FACTORED FORCE (LBS)	MAX CSI (LC)
17- 2	0 / 2606	0.20 (1)
2-16	-2429 / 0	0.20 (1)
16- 3	0 / 1650	0.12 (1)
3-15	-1644 / 0	0.26 (1)
15- 4	0 / 1361	0.10 (1)
4-14	-260 / 0	0.10 (1)
14- 5	-382 / 0	0.09 (1)
14- 6	0 / 809	0.06 (1)
12- 6	0 / 71	0.01 (4)
12- 7	-16 / 0	0.00 (1)
11- 7	-347 / 0	0.03 (1)
1-17	0 / 5696	0.43 (1)
11- 8	0 / 1570	0.12 (1)

FACTORED CONCENTRATED LOADS (LBS)

JT	LOC.	LC1	MAX-	MAX+	FACE	DIR.	TYPE
17	1-10-0	-5382	-5382	---	FRONT	VERT	TOTAL

DESIGN CRITERIA

*** SPECIAL LOADS ANALYSIS ***
GEOMETRY AND/OR BASIC LOADS CHANGED BY USER.
LOADS WERE DERIVED FROM USER INPUT
NO FURTHER MODIFICATIONS WERE MADE

SPECIFIED LOADS:

TOP	CH.	LL =	23.3	PSF
		DL =	3.0	PSF
BOT	CH.	LL =	0.0	PSF
		DL =	7.0	PSF
TOTAL	LOAD	=	33.3	PSF

SPACING = 24.0 IN. C/C

LOADING IN FLAT SECTION BASED ON A SLOPE OF 6.00/12

GIRDER TYPE: CStdGirder
START DISTANCE = 0-0
START SPAN CARRIED = 18-10-8
END DISTANCE = 1-10-0
END SPAN CARRIED = 18-10-8
END WALL WIDTH = 5-8
APPLIED TO FRONT SIDE OF BOTTOM CHORD.
- ADDT'L LOADS BASED ON 55 % OF GSL.

*** NON STANDARD GIRDER ***
ADDT'L USER-DEFINED LOADS APPLIED TO ALL LOAD CASES.

THIS TRUSS IS DESIGNED FOR RESIDENTIAL OR SMALL BUILDING REQUIREMENTS OF PART 9, NBCC 2010

THIS DESIGN COMPLIES WITH:
- PART 9 OF OBC 2012 , BCBC 2012 , ABC 2014
- CSA 086-09
- TPIC 2011

(55 % OF 27.2 P.S.F. G.S.L. PLUS 8.4 P.S.F. RAIN LOAD) EQUALS 23.3 P.S.F. SPECIFIED ROOF LIVE LOAD

ALLOWABLE DEFL.(LL)= L/360 (0.81")
CALCULATED VERT. DEFL.(LL) = L/ 999 (0.03")
ALLOWABLE DEFL.(TL)= L/360 (0.81")
CALCULATED VERT. DEFL.(TL) = L/ 999 (0.05")

CSI: TC=0.13 (1-18:1) , BC=0.31 (16-17:1) , WB=0.43 (1-17:1) , SSI=0.32 (9-10:1)

DOL LUMBER=1.00 NAIL=1.00 LS BEND=1.10 COMP=1.10 SHEAR=1.10 TENS= 1.10

COMPANION LIVE LOAD FACTOR = 0.50

TRUSS PLATE MANUFACTURER IS NOT RESPONSIBLE FOR QUALITY CONTROL IN THE TRUSS MANUFACTURING PLANT .

NAIL VALUES

PLATE	GRIP(DRY) (PSI) MAX	MIN	SHEAR (PLI) MAX	MIN	SECTION (PLI) MAX	MIN
MT20	618	354	1667	822	2284	1656

PLATE PLACEMENT TOL. = 0.250 inches

PLATE ROTATION TOL. = 5.0 Deg.

JSI GRIP= 0.8[illegible] (PL[illegible] = [illegible]90
JSI METAL= 0.43[illegible] (IN[illegible] = [illegible]0

LICENSED PROFESSIONAL ENGINEER
P.M. TREVISAN
100136551
March 14th, 2017
PROVINCE OF ONTARIO

RECEIVED
TOWN OF MILTON
MAR 29, 2017
17-5233
BUILDING DIVISION

READ ALL NOTES ON THIS PAGE AND ON THE ENGINEERING NOTE PAGE ENP-1. THE NOTE PAGE IS AN INTEGRAL PART OF THIS DRAWING AS IT CONTAINS SPECIFICATIONS AND CRITERIA USED IN THE DESIGN OF THIS COMPONENT.

KOTT

CONTINUED ON PAGE 2

PLATES (table is in inches)

JT	TYPE	PLATES	W	LEN	Y	X
3	TMWW-t	MT20	3.0	4.0	1.50	1.25
4	TTWW-m	MT20	4.0	5.0	1.75	1.50
5	TMW+w	MT20	2.0	4.0		
6	TTWW-m	MT20	4.0	6.0	1.75	2.00
7	TMWW-t	MT20	3.0	4.0	1.50	1.50
8	TMVW-t	MT20	3.0	5.0	1.50	2.00
10	BMV+p	MT20	2.0	4.0		
11	BMWW-t	MT20	4.0	4.0		
12	BMWW+t	MT20	3.0	4.0		
13	BS-t	MT20	4.0	6.0		
14	BMWWW-t	MT20	4.0	6.0		
15	BMWW+t	MT20	3.0	4.0		
16	BMWW-t	MT20	4.0	4.0		
17	BMWW+t	MT20	5.0	8.0	4.25	2.00
18	BMV1+p	MT20	3.0	4.0		

Edge - INDICATES REFERENCE CORNER OF PLATE TOUCHES EDGE OF CHORD.

A SIZE FOR SIZE SUBSTITUTION OF MITEK MII20 WITH TEE-LOK TL20 PLATES IS ALLOWED.

HANGERS NOTES

1) SPECIAL HANGER(S) OR CONNECTION(S) REQUIRED TO SUPPORT CONCENTRATED LOAD(S) 5381.8 lbs FACTORED DOWN AT 1-10-0 ON BOTTOM CHORD. DESIGN FOR UNSPECIFIED CONNECTION(S) IS DELEGATED TO THE BUILDING DESIGNER.

LICENSED PROFESSIONAL ENGINEER
R.M. TREVISAN
100136551
March 14th, 2017
PROVINCE OF ONTARIO

RECEIVED
TOWN OF MILTON
MAR 29, 2017
17-5233
BUILDING DIVISION

READ ALL NOTES ON THIS PAGE AND ON THE ENGINEERING NOTE PAGE ENP-1. THE NOTE PAGE IS AN INTEGRAL PART OF THIS DRAWING AS IT CONTAINS SPECIFICATIONS AND CRITERIA USED IN THE DESIGN OF THIS COMPONENT.

KOTT

JOB NAME	TRUSS NAME	QUANTITY	PLY	JOB DESC.	DRWG NO.
PT0317-081	**J01**	**5**	**1**	TRUSS DESC. LECCO RIDGE-BLOCK 338	ENG JOB: PT0317-081

KOTT , Stouffville, ON, CGC

Version 8.100 S Feb 9 2017 MiTek Industries, Inc. Tue Mar 14 15:57:04 2017 Page 1

ID:EvTixTQDI5yR1QLotZTBr_yE?HJ-ouiTt41Ir_9fElAQVX9?Ir1Nklt1Gw0nJpiBlnzb_Pj

SCALE: 3/4"=1'

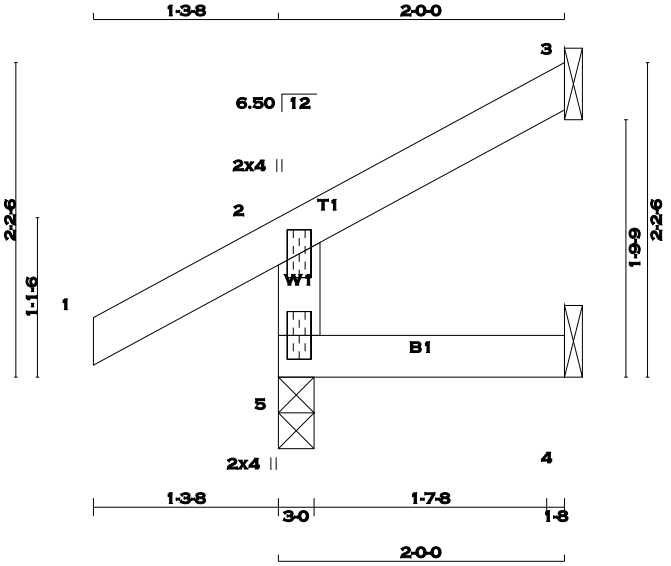

TOTAL WEIGHT = 5 X 7 = 37 lb [M]

LUMBER

N. L. G. A. RULES

CHORDS	SIZE		LUMBER	DESCR.
5 - 2	2x4	DRY	No.2	SPF
1 - 3	2x4	DRY	No.2	SPF
5 - 4	2x4	DRY	No.2	SPF

DRY: SEASONED LUMBER.

PLATES (table is in inches)

JT	TYPE	PLATES	W	LEN	Y	X
2	TMV+p	MT20	2.0	4.0		
5	BMV1+p	MT20	2.0	4.0		

A SIZE FOR SIZE SUBSTITUTION OF MITEK MII20 WITH TEE-LOK TL20 PLATES IS ALLOWED.

DIMENSIONS, SUPPORTS AND LOADINGS SPECIFIED BY FABRICATOR TO BE VERIFIED BY BUILDING DESIGNER

BEARINGS

JT	FACTORED GROSS REACTION VERT	HORZ	MAXIMUM FACTORED GROSS REACTION DOWN	HORZ	UPLIFT	INPUT BRG IN-SX	REQRD BRG IN-SX
5	221	0	221	0	0	3-0	3-0
3	58	0	58	0	0	1-8	1-8
4	16	0	17	0	0	1-8	1-8

SEE MITEK STANDARD DETAIL B37579H FOR CONNECTION TO JOINT(S) 3 , 4

UNFACTORED REACTIONS

JT	1ST LCASE COMBINED	MAX./MIN. COMPONENT REACTIONS SNOW	LIVE	PERM.LIVE	WIND	DEAD	SOIL
5	153	121 / 0	0 / 0	0 / 0	0 / 0	31 / 0	0 / 0
3	40	35 / 0	0 / 0	0 / 0	0 / 0	5 / 0	0 / 0
4	12	0 / 0	0 / 0	0 / 0	0 / 0	12 / 0	0 / 0

BEARING MATERIAL TO BE SPF NO.2 OR BETTER AT JOINT(S) 5

BRACING

TOP CHORD TO BE SHEATHED OR MAX. PURLIN SPACING = 10.00 FT.
MAX. UNBRACED BOTTOM CHORD LENGTH = 10.00 FT. OR RIGID CEILING DIRECTLY APPLIED.

ALL PITCH BREAKS AND PERIMETER CORNER JOINTS MUST BE LATERALLY RESTRAINED.

LOADING

TOTAL LOAD CASES: (5)

CHORDS MEMB. FR-TO	MAX. FACTORED FORCE (LBS)	FACTORED VERT. LOAD (PLF) FROM	TO	LC1 MAX CSI (LC)	MAX. UNBRAC LENGTH	WEBS MEMB. FR-TO	MAX. FACTORED FORCE (LBS)	MAX CSI (LC)
5- 2	-202 / 0	0.0	0.0	0.01 (4)	7.81			
1- 2	0 / 25	-77.3	-77.3	0.10 (1)	10.00			
2- 3	-9 / 0	-77.3	-77.3	0.05 (1)	10.00			
5- 4	0 / 0	-17.5	-17.5	0.02 (4)	10.00			

CANTILEVER ANALYSIS HAS BEEN CONSIDERED IN THIS DESIGN

DESIGN CRITERIA

SPECIFIED LOADS:

TOP CH.	LL	=	23.3	PSF
	DL	=	3.0	PSF
BOT CH.	LL	=	0.0	PSF
	DL	=	7.0	PSF
TOTAL LOAD		=	33.3	PSF

SPACING = 24.0 IN. C/C

THIS TRUSS IS DESIGNED FOR RESIDENTIAL OR SMALL BUILDING REQUIREMENTS OF PART 9, NBCC 2010

THIS DESIGN COMPLIES WITH:
- PART 9 OF OBC 2012 , BCBC 2012 , ABC 2014
- CSA 086-09
- TPIC 2011

DESIGN ASSUMPTIONS
-OVERHANG NOT TO BE ALTERED OR CUT OFF.

(55 % OF 27.2 P.S.F. G.S.L. PLUS 8.4 P.S.F. RAIN LOAD) EQUALS 23.3 P.S.F. SPECIFIED ROOF LIVE LOAD

ALLOWABLE DEFL.(LL)= L/360 (0.19")
CALCULATED VERT. DEFL.(LL) = L/ 999 (0.00")
ALLOWABLE DEFL.(TL)= L/360 (0.19")
CALCULATED VERT. DEFL.(TL) = L/ 999 (0.00")

CSI: TC=0.10 (1-2:1) , BC=0.02 (4-5:4) , WB=0.00 (n/a:0) , SSI=0.07 (1-2:1)

DOL LUMBER=1.00 NAIL=1.00 LS BEND=1.10 COMP=1.10 SHEAR=1.10 TENS= 1.10

COMPANION LIVE LOAD FACTOR = 0.50

TRUSS PLATE MANUFACTURER IS NOT RESPONSIBLE FOR QUALITY CONTROL IN THE TRUSS MANUFACTURING PLANT .

NAIL VALUES

PLATE	GRIP(DRY) (PSI) MAX	MIN	SHEAR (PLI) MAX	MIN	SECTION (PLI) MAX	MIN
MT20	618	354	1667	822	2284	1656

PLATE PLACEMENT TOL. = 0.250 inches

PLATE ROTATION TOL. = 0.5 Deg.

JSI GRIP= 0.12 (2) (INPUT = 0.90)
JSI METAL= 0.05 (2) (INPUT = 1.00)

LICENSED PROFESSIONAL ENGINEER
P.M. TREVISAN
100136551
March 14th, 2017
PROVINCE OF ONTARIO

RECEIVED
TOWN OF MILTON
MAR 29, 2017
17-5233
BUILDING DIVISION

READ ALL NOTES ON THIS PAGE AND ON THE ENGINEERING NOTE PAGE ENP-1. THE NOTE PAGE IS AN INTEGRAL PART OF THIS DRAWING AS IT CONTAINS SPECIFICATIONS AND CRITERIA USED IN THE DESIGN OF THIS COMPONENT.

KOTT

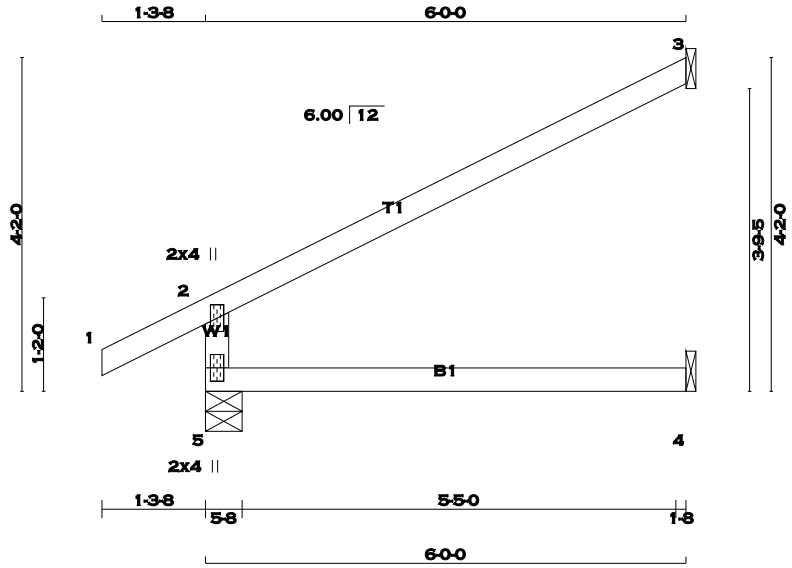

TOTAL WEIGHT = 22 X 17 = 376 lb [M]

LUMBER

N. L. G. A. RULES

CHORDS	SIZE		LUMBER	DESCR.
5 - 2	2x4	DRY	No.2	SPF
1 - 3	2x4	DRY	No.2	SPF
5 - 4	2x4	DRY	No.2	SPF

DRY: SEASONED LUMBER.

PLATES (table is in inches)

JT	TYPE	PLATES	W	LEN	Y	X
2	TMV+p	MT20	2.0	4.0		
5	BMV1+p	MT20	2.0	4.0		

A SIZE FOR SIZE SUBSTITUTION OF MITEK MII20 WITH TEE-LOK TL20 PLATES IS ALLOWED.

DIMENSIONS, SUPPORTS AND LOADINGS SPECIFIED BY FABRICATOR TO BE VERIFIED BY BUILDING DESIGNER

BEARINGS

JT	FACTORED GROSS REACTION VERT	HORZ	MAXIMUM FACTORED GROSS REACTION DOWN	HORZ	UPLIFT	INPUT BRG IN-SX	REQRD BRG IN-SX
5	457	0	457	0	0	5-8	5-8
3	174	0	174	0	0	1-8	1-8
4	43	0	49	0	0	1-8	1-8

SEE MITEK STANDARD DETAIL B37579H FOR CONNECTION TO JOINT(S) 3 , 4

UNFACTORED REACTIONS

JT	1ST LCASE COMBINED	MAX./MIN. COMPONENT REACTIONS SNOW	LIVE	PERM.LIVE	WIND	DEAD	SOIL
5	318	238 / 0	0 / 0	0 / 0	0 / 0	80 / 0	0 / 0
3	118	105 / 0	0 / 0	0 / 0	0 / 0	14 / 0	0 / 0
4	35	0 / 0	0 / 0	0 / 0	0 / 0	35 / 0	0 / 0

BEARING MATERIAL TO BE SPF NO.2 OR BETTER AT JOINT(S) 5

BRACING

TOP CHORD TO BE SHEATHED OR MAX. PURLIN SPACING = 6.25 FT.
MAX. UNBRACED BOTTOM CHORD LENGTH = 10.00 FT. OR RIGID CEILING DIRECTLY APPLIED.

ALL PITCH BREAKS AND PERIMETER CORNER JOINTS MUST BE LATERALLY RESTRAINED.

LOADING

TOTAL LOAD CASES: (4)

CHORDS MEMB. FR-TO	MAX. FACTORED FORCE (LBS)	FACTORED VERT. LOAD (PLF) FROM	TO	LC1 MAX CSI (LC)	MAX. UNBRAC LENGTH	WEBS MEMB. FR-TO	MAX. FACTORED FORCE (LBS)	MAX CSI (LC)
5- 2	-395 / 0	0.0	0.0	0.13 (4)	7.81			
1- 2	0 / 23	-77.3	-77.3	0.10 (1)	10.00			
2- 3	-26 / 0	-77.3	-77.3	0.47 (1)	6.25			
5- 4	0 / 0	-17.5	-17.5	0.13 (4)	10.00			

DESIGN CRITERIA

SPECIFIED LOADS:

TOP CH.	LL	=	23.3	PSF
	DL	=	3.0	PSF
BOT CH.	LL	=	0.0	PSF
	DL	=	7.0	PSF
TOTAL LOAD		=	33.3	PSF

SPACING = 24.0 IN. C/C

THIS TRUSS IS DESIGNED FOR RESIDENTIAL OR SMALL BUILDING REQUIREMENTS OF PART 9, NBCC 2010

THIS DESIGN COMPLIES WITH:
- PART 9 OF OBC 2012 , BCBC 2012 , ABC 2014
- CSA 086-09
- TPIC 2011

DESIGN ASSUMPTIONS
-OVERHANG NOT TO BE ALTERED OR CUT OFF.

(55 % OF 27.2 P.S.F. G.S.L. PLUS 8.4 P.S.F. RAIN LOAD) EQUALS 23.3 P.S.F. SPECIFIED ROOF LIVE LOAD

ALLOWABLE DEFL.(LL)= L/360 (0.20")
CALCULATED VERT. DEFL.(LL) = L/ 999 (0.00")
ALLOWABLE DEFL.(TL)= L/360 (0.20")
CALCULATED VERT. DEFL.(TL) = L/ 999 (0.03")

CSI: TC=0.47 (2-3:1) , BC=0.13 (4-5:4) , WB=0.00 (n/a:0) , SSI=0.20 (2-3:1)

DOL LUMBER=1.00 NAIL=1.00 LS BEND=1.10 COMP=1.10 SHEAR=1.10 TENS= 1.10

COMPANION LIVE LOAD FACTOR = 0.50

TRUSS PLATE MANUFACTURER IS NOT RESPONSIBLE FOR QUALITY CONTROL IN THE TRUSS MANUFACTURING PLANT .

NAIL VALUES

PLATE	GRIP(DRY) (PSI) MAX	MIN	SHEAR (PLI) MAX	MIN	SECTION (PLI) MAX	MIN
MT20	618	354	1667	822	2284	1656

PLATE PLACEMENT TOL. = 0.250 inches

PLATE ROTATION TOL. = 0.5 Deg.

JSI GRIP= 0.23 (2) (INPUT = 0.90)
JSI METAL= 0.09 (2) (INPUT = 1.00)

LICENSED PROFESSIONAL ENGINEER
P.M. TREVISAN
100136551
March 14th, 2017
PROVINCE OF ONTARIO

RECEIVED
TOWN OF MILTON
MAR 29, 2017
17-5233
BUILDING DIVISION

READ ALL NOTES ON THIS PAGE AND ON THE ENGINEERING NOTE PAGE ENP-1. THE NOTE PAGE IS AN INTEGRAL PART OF THIS DRAWING AS IT CONTAINS SPECIFICATIONS AND CRITERIA USED IN THE DESIGN OF THIS COMPONENT.

KOTT

JOB NAME	TRUSS NAME	QUANTITY	PLY	JOB DESC.	DRWG NO.
PT0317-081	**J03**	**2**	**1**	TRUSS DESC. LECCO RIDGE-BLOCK 338	ENG JOB: PT0317-081

KOTT , Stouffville, ON, CGC

Version 8.100 S Feb 9 2017 MiTek Industries, Inc. Tue Mar 14 15:57:05 2017 Page 1
ID:EvTixTQDI5yR1QLotZTBr_yE?HJ-G4Gr4Q1wcIHWsvld2EgEr2ZWk9BV?NFwYTSlHDzb_Pi

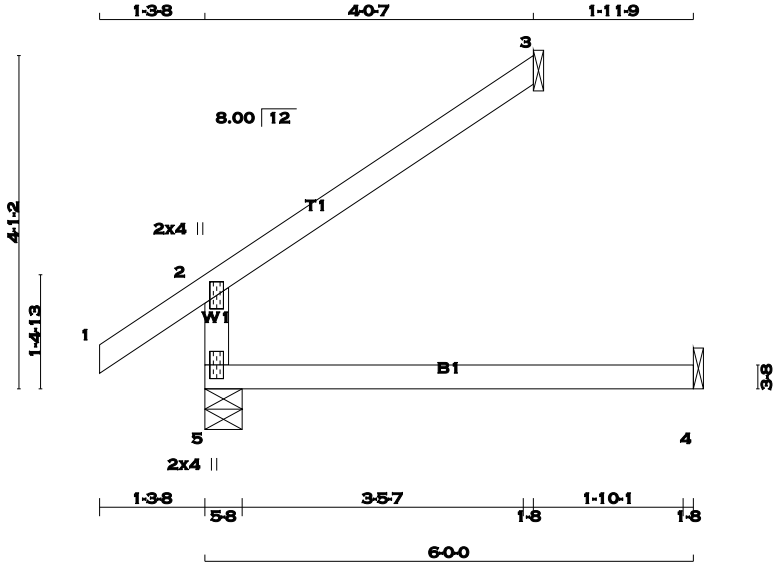

TOTAL WEIGHT = 2 X 15 = 31 lb [M]

LUMBER
N. L. G. A. RULES

CHORDS	SIZE		LUMBER	DESCR.
5 - 2	2x4	DRY	No.2	SPF
1 - 3	2x4	DRY	No.2	SPF
5 - 4	2x4	DRY	No.2	SPF

DRY: SEASONED LUMBER.

PLATES (table is in inches)

JT	TYPE	PLATES	W	LEN	Y	X
2	TMV+p	MT20	2.0	4.0		
5	BMV1+p	MT20	2.0	4.0		

A SIZE FOR SIZE SUBSTITUTION OF MITEK MII20 WITH TEE-LOK TL20 PLATES IS ALLOWED.

DIMENSIONS, SUPPORTS AND LOADINGS SPECIFIED BY FABRICATOR TO BE VERIFIED BY BUILDING DESIGNER

BEARINGS

JT	FACTORED GROSS REACTION VERT	HORZ	MAXIMUM FACTORED GROSS REACTION DOWN	HORZ	UPLIFT	INPUT BRG IN-SX	REQRD BRG IN-SX
5	362	0	362	0	0	5-8	5-8
3	117	0	117	0	0	1-8	1-8
4	44	0	49	0	0	1-8	1-8

SEE MITEK STANDARD DETAIL B37579H FOR CONNECTION TO JOINT(S) 3 , 4

UNFACTORED REACTIONS

JT	1ST LCASE COMBINED	MAX./MIN. COMPONENT REACTIONS SNOW	LIVE	PERM.LIVE	WIND	DEAD	SOIL
5	254	181 / 0	0 / 0	0 / 0	0 / 0	72 / 0	0 / 0
3	80	71 / 0	0 / 0	0 / 0	0 / 0	9 / 0	0 / 0
4	35	0 / 0	0 / 0	0 / 0	0 / 0	35 / 0	0 / 0

BEARING MATERIAL TO BE SPF NO.2 OR BETTER AT JOINT(S) 5, 3

BRACING
TOP CHORD TO BE SHEATHED OR MAX. PURLIN SPACING = 6.25 FT.
MAX. UNBRACED BOTTOM CHORD LENGTH = 10.00 FT. OR RIGID CEILING DIRECTLY APPLIED.

ALL PITCH BREAKS AND PERIMETER CORNER JOINTS MUST BE LATERALLY RESTRAINED.

LOADING
TOTAL LOAD CASES: (4)

CHORDS MEMB. FR-TO	MAX. FACTORED FORCE (LBS)	FACTORED VERT. LOAD (PLF) FROM	TO	LC1 MAX CSI (LC)	MAX. UNBRAC LENGTH	WEBS MEMB. FR-TO	MAX. FACTORED FORCE (LBS)	MAX CSI (LC)
5- 2	-301 / 0	0.0	0.0	0.12 (4)	7.81			
1- 2	0 / 29	-77.3	-77.3	0.10 (1)	10.00			
2- 3	-22 / 0	-77.3	-77.3	0.21 (1)	6.25			
5- 4	0 / 0	-17.5	-17.5	0.13 (4)	10.00			

DESIGN CRITERIA

SPECIFIED LOADS:

TOP CH.	LL	=	23.3	PSF
	DL	=	3.0	PSF
BOT CH.	LL	=	0.0	PSF
	DL	=	7.0	PSF
TOTAL LOAD		=	33.3	PSF

SPACING = 24.0 IN. C/C

THIS TRUSS IS DESIGNED FOR RESIDENTIAL OR SMALL BUILDING REQUIREMENTS OF PART 9, NBCC 2010

THIS DESIGN COMPLIES WITH:
- PART 9 OF OBC 2012 , BCBC 2012 , ABC 2014
- CSA 086-09
- TPIC 2011

DESIGN ASSUMPTIONS
-OVERHANG NOT TO BE ALTERED OR CUT OFF.

(55 % OF 27.2 P.S.F. G.S.L. PLUS 8.4 P.S.F. RAIN LOAD) EQUALS 23.3 P.S.F. SPECIFIED ROOF LIVE LOAD

ALLOWABLE DEFL.(LL)= L/360 (0.20")
CALCULATED VERT. DEFL.(LL) = L/ 999 (0.00")
ALLOWABLE DEFL.(TL)= L/360 (0.20")
CALCULATED VERT. DEFL.(TL) = L/ 999 (0.03")

CSI: TC=0.21 (2-3:1) , BC=0.13 (4-5:4) , WB=0.00 (n/a:0) , SSI=0.13 (2-3:1)

DOL LUMBER=1.00 NAIL=1.00 LS BEND=1.10 COMP=1.10 SHEAR=1.10 TENS= 1.10

COMPANION LIVE LOAD FACTOR = 0.50

TRUSS PLATE MANUFACTURER IS NOT RESPONSIBLE FOR QUALITY CONTROL IN THE TRUSS MANUFACTURING PLANT .

NAIL VALUES

PLATE	GRIP(DRY) (PSI) MAX	MIN	SHEAR (PLI) MAX	MIN	SECTION (PLI) MAX	MIN
MT20	618	354	1667	822	2284	1656

PLATE PLACEMENT TOL. = 0.250 inches

PLATE ROTATION TOL. = 0.5 Deg.

JSI GRIP= 0.19 (2) (INPUT = 0.90)
JSI METAL= 0.07 (2) (INPUT = 1.00)

LICENSED PROFESSIONAL ENGINEER
P.M. TREVISAN
100136551
March 14th, 2017
PROVINCE OF ONTARIO

RECEIVED
TOWN OF MILTON
MAR 29, 2017
17-5233
BUILDING DIVISION

READ ALL NOTES ON THIS PAGE AND ON THE ENGINEERING NOTE PAGE ENP-1. THE NOTE PAGE IS AN INTEGRAL PART OF THIS DRAWING AS IT CONTAINS SPECIFICATIONS AND CRITERIA USED IN THE DESIGN OF THIS COMPONENT.

KOTT

JOB NAME	TRUSS NAME	QUANTITY	PLY	JOB DESC.	DRWG NO.
PT0317-081	**J04**	**4**	**1**	TRUSS DESC. LECCO RIDGE-BLOCK 338	ENG JOB: PT0317-081

KOTT , Stouffville, ON, CGC

Version 8.100 S Feb 9 2017 MiTek Industries, Inc. Tue Mar 14 15:57:06 2017 Page 1

ID:EvTixTQDI5yR1QLotZTBr_yE?HJ-lGqElm2YNbPNU2JpcyBTNG6f3ZXkkqV3n7BIpgzb_Ph

SCALE = 1:36.1

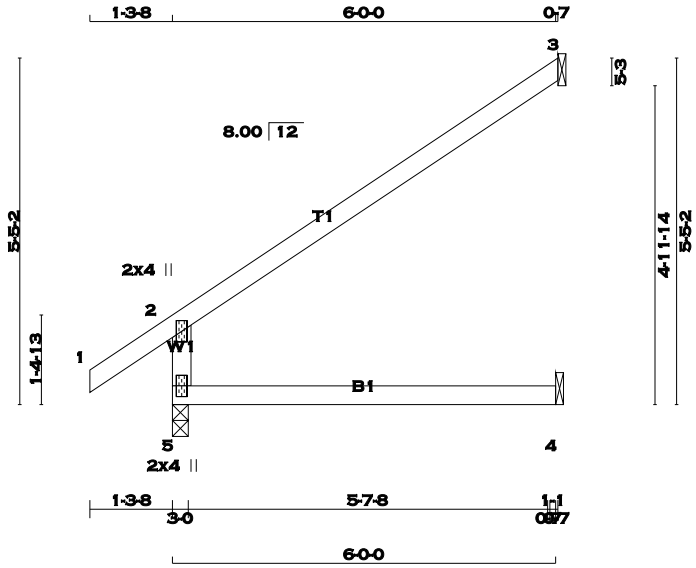

TOTAL WEIGHT = 4 X 18 = 73 lb

[M][F]

LUMBER

N. L. G. A. RULES

CHORDS	SIZE		LUMBER	DESCR.
5 - 2	2x4	DRY	No.2	SPF
1 - 3	2x4	DRY	No.2	SPF
5 - 4	2x4	DRY	No.2	SPF

DRY: SEASONED LUMBER.

PLATES (table is in inches)

JT	TYPE	PLATES	W	LEN	Y	X
2	TMV+p	MT20	2.0	4.0		
5	BMV1+p	MT20	2.0	4.0		

A SIZE FOR SIZE SUBSTITUTION OF MITEK MII20 WITH TEE-LOK TL20 PLATES IS ALLOWED.

DIMENSIONS, SUPPORTS AND LOADINGS SPECIFIED BY FABRICATOR TO BE VERIFIED BY BUILDING DESIGNER

BEARINGS

JT	FACTORED GROSS REACTION VERT	HORZ	MAXIMUM FACTORED GROSS REACTION DOWN	HORZ	UPLIFT	INPUT BRG IN-SX	REQRD BRG IN-SX
5	459	0	459	0	0	3-0	3-0
3	175	0	175	0	0	1-8	1-8
4	44	0	49	0	0	1-8	1-8

SEE MITEK STANDARD DETAIL B37579H FOR CONNECTION TO JOINT(S) 3 , 4

UNFACTORED REACTIONS

JT	1ST LCASE COMBINED	MAX./MIN. COMPONENT REACTIONS SNOW	LIVE	PERM.LIVE	WIND	DEAD	SOIL
5	319	240 / 0	0 / 0	0 / 0	0 / 0	80 / 0	0 / 0
3	119	105 / 0	0 / 0	0 / 0	0 / 0	14 / 0	0 / 0
4	35	0 / 0	0 / 0	0 / 0	0 / 0	35 / 0	0 / 0

BEARING MATERIAL TO BE SPF NO.2 OR BETTER AT JOINT(S) 5

BRACING

TOP CHORD TO BE SHEATHED OR MAX. PURLIN SPACING = 6.25 FT.
MAX. UNBRACED BOTTOM CHORD LENGTH = 10.00 FT. OR RIGID CEILING DIRECTLY APPLIED.

ALL PITCH BREAKS AND PERIMETER CORNER JOINTS MUST BE LATERALLY RESTRAINED.

LOADING

TOTAL LOAD CASES: (4)

CHORDS MEMB. FR-TO	MAX. FACTORED FORCE (LBS)	FACTORED VERT. LOAD (PLF) FROM	TO	LC1 MAX CSI (LC)	WEBS MAX. UNBRAC LENGTH	MEMB. FR-TO	MAX. FACTORED FORCE (LBS)	MAX CSI (LC)
5- 2	-398 / 0	0.0	0.0	0.10 (4)	7.81			
1- 2	0 / 29	-77.3	-77.3	0.10 (1)	10.00			
2- 3	-32 / 0	-77.3	-77.3	0.37 (1)	6.25			
5- 4	0 / 0	-17.5	-17.5	0.13 (4)	10.00			

DESIGN CRITERIA

SPECIFIED LOADS:

TOP CH.	LL	=	23.3	PSF
	DL	=	3.0	PSF
BOT CH.	LL	=	0.0	PSF
	DL	=	7.0	PSF
TOTAL LOAD		=	33.3	PSF

SPACING = 24.0 IN. C/C

THIS TRUSS IS DESIGNED FOR RESIDENTIAL OR SMALL BUILDING REQUIREMENTS OF PART 9, NBCC 2010

THIS DESIGN COMPLIES WITH:
- PART 9 OF OBC 2012 , BCBC 2012 , ABC 2014
- CSA 086-09
- TPIC 2011

DESIGN ASSUMPTIONS
-OVERHANG NOT TO BE ALTERED OR CUT OFF.

(55 % OF 27.2 P.S.F. G.S.L. PLUS 8.4 P.S.F. RAIN LOAD) EQUALS 23.3 P.S.F. SPECIFIED ROOF LIVE LOAD

ALLOWABLE DEFL.(LL)= L/360 (0.20")
CALCULATED VERT. DEFL.(LL) = L/ 999 (0.00")
ALLOWABLE DEFL.(TL)= L/360 (0.20")
CALCULATED VERT. DEFL.(TL) = L/ 999 (0.03")

CSI: TC=0.37 (2-3:1) , BC=0.13 (4-5:4) , WB=0.00 (n/a:0) , SSI=0.19 (2-3:1)

DOL LUMBER=1.00 NAIL=1.00 LS BEND=1.10 COMP=1.10 SHEAR=1.10 TENS= 1.10

COMPANION LIVE LOAD FACTOR = 0.50

TRUSS PLATE MANUFACTURER IS NOT RESPONSIBLE FOR QUALITY CONTROL IN THE TRUSS MANUFACTURING PLANT .

NAIL VALUES

PLATE	GRIP(DRY) (PSI) MAX	MIN	SHEAR (PLI) MAX	MIN	SECTION (PLI) MAX	MIN
MT20	618	354	1667	822	2284	1656

PLATE PLACEMENT TOL. = 0.250 inches

PLATE ROTATION TOL. = 0.5 Deg.

JSI GRIP= 0.26 (2) (INPUT = 0.90)
JSI METAL= 0.10 (2) (INPUT = 1.00)

LICENSED PROFESSIONAL ENGINEER
P.M. TREVISAN
100136551
March 14th, 2017
PROVINCE OF ONTARIO

RECEIVED
TOWN OF MILTON
MAR 29, 2017
17-5233
BUILDING DIVISION

READ ALL NOTES ON THIS PAGE AND ON THE ENGINEERING NOTE PAGE ENP-1. THE NOTE PAGE IS AN INTEGRAL PART OF THIS DRAWING AS IT CONTAINS SPECIFICATIONS AND CRITERIA USED IN THE DESIGN OF THIS COMPONENT.

KOTT

JOB NAME	TRUSS NAME	QUANTITY	PLY	JOB DESC.	DRWG NO.
PT0317-081	**J05**	**2**	**1**	TRUSS DESC. LECCO RIDGE-BLOCK 338	ENG JOB: PT0317-081

KOTT , Stouffville, ON, CGC

Version 8.100 S Feb 9 2017 MiTek Industries, Inc. Tue Mar 14 15:57:06 2017 Page 1

ID:EvTixTQDI5yR1QLotZTBr_yE?HJ-lGqEIm2YNbPNU2JpcyBTNG6jCZZVkqV3n7BIpgzb_Ph

SCALE = 1:19.4

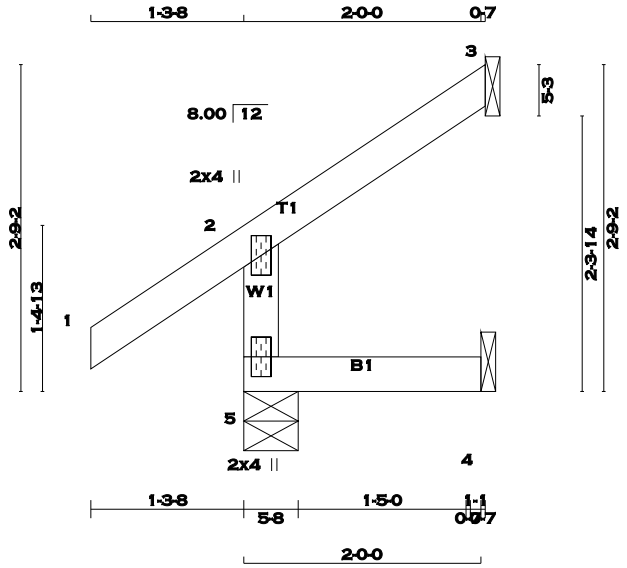

TOTAL WEIGHT = 2 X 8 = 16 lb [M]

LUMBER

N. L. G. A. RULES

CHORDS	SIZE		LUMBER	DESCR.
5 - 2	2x4	DRY	No.2	SPF
1 - 3	2x4	DRY	No.2	SPF
5 - 4	2x4	DRY	No.2	SPF

DRY: SEASONED LUMBER.

PLATES (table is in inches)

JT	TYPE	PLATES	W	LEN	Y	X
2	TMV+p	MT20	2.0	4.0		
5	BMV1+p	MT20	2.0	4.0		

A SIZE FOR SIZE SUBSTITUTION OF MITEK MII20 WITH TEE-LOK TL20 PLATES IS ALLOWED.

DIMENSIONS, SUPPORTS AND LOADINGS SPECIFIED BY FABRICATOR TO BE VERIFIED BY BUILDING DESIGNER

BEARINGS

JT	FACTORED GROSS REACTION VERT	HORZ	MAXIMUM FACTORED GROSS REACTION DOWN	HORZ	UPLIFT	INPUT BRG IN-SX	REQRD BRG IN-SX
5	223	0	223	0	0	5-8	5-8
3	60	0	60	0	0	1-8	1-8
4	16	0	18	0	0	1-8	1-8

SEE MITEK STANDARD DETAIL B37579H FOR CONNECTION TO JOINT(S) 3 , 4

UNFACTORED REACTIONS

JT	1ST LCASE COMBINED	MAX./MIN. COMPONENT REACTIONS SNOW	LIVE	PERM.LIVE	WIND	DEAD	SOIL
5	154	123 / 0	0 / 0	0 / 0	0 / 0	31 / 0	0 / 0
3	40	36 / 0	0 / 0	0 / 0	0 / 0	5 / 0	0 / 0
4	13	0 / 0	0 / 0	0 / 0	0 / 0	13 / 0	0 / 0

BEARING MATERIAL TO BE SPF NO.2 OR BETTER AT JOINT(S) 5

BRACING

TOP CHORD TO BE SHEATHED OR MAX. PURLIN SPACING = 6.25 FT.
MAX. UNBRACED BOTTOM CHORD LENGTH = 10.00 FT. OR RIGID CEILING DIRECTLY APPLIED.

ALL PITCH BREAKS AND PERIMETER CORNER JOINTS MUST BE LATERALLY RESTRAINED.

LOADING

TOTAL LOAD CASES: (5)

CHORDS MEMB. FR-TO	MAX. FACTORED FORCE (LBS)	FACTORED VERT. LOAD (PLF) FROM	TO	LC1 MAX CSI (LC)	MAX. UNBRAC LENGTH	WEBS MEMB. FR-TO	MAX. FACTORED FORCE (LBS)	MAX CSI (LC)
5- 2	-204 / 0	0.0	0.0	0.01 (4)	7.81			
1- 2	0 / 29	-77.3	-77.3	0.10 (1)	10.00			
2- 3	-11 / 0	-77.3	-77.3	0.05 (1)	6.25			
5- 4	0 / 0	-17.5	-17.5	0.02 (4)	10.00			

CANTILEVER ANALYSIS HAS BEEN CONSIDERED IN THIS DESIGN

DESIGN CRITERIA

SPECIFIED LOADS:

TOP CH.	LL	=	23.3	PSF
	DL	=	3.0	PSF
BOT CH.	LL	=	0.0	PSF
	DL	=	7.0	PSF
TOTAL LOAD		=	33.3	PSF

SPACING = 24.0 IN. C/C

THIS TRUSS IS DESIGNED FOR RESIDENTIAL OR SMALL BUILDING REQUIREMENTS OF PART 9, NBCC 2010

THIS DESIGN COMPLIES WITH:
- PART 9 OF OBC 2012 , BCBC 2012 , ABC 2014
- CSA 086-09
- TPIC 2011

DESIGN ASSUMPTIONS
-OVERHANG NOT TO BE ALTERED OR CUT OFF.

(55 % OF 27.2 P.S.F. G.S.L. PLUS 8.4 P.S.F. RAIN LOAD) EQUALS 23.3 P.S.F. SPECIFIED ROOF LIVE LOAD

ALLOWABLE DEFL.(LL)= L/360 (0.19")
CALCULATED VERT. DEFL.(LL) = L/ 999 (0.00")
ALLOWABLE DEFL.(TL)= L/360 (0.19")
CALCULATED VERT. DEFL.(TL) = L/ 999 (0.00")

CSI: TC=0.10 (1-2:1) , BC=0.02 (4-5:4) , WB=0.00 (n/a:0) , SSI=0.07 (1-2:1)

DOL LUMBER=1.00 NAIL=1.00 LS BEND=1.10 COMP=1.10 SHEAR=1.10 TENS= 1.10

COMPANION LIVE LOAD FACTOR = 0.50

TRUSS PLATE MANUFACTURER IS NOT RESPONSIBLE FOR QUALITY CONTROL IN THE TRUSS MANUFACTURING PLANT .

NAIL VALUES

PLATE	GRIP(DRY) (PSI) MAX	MIN	SHEAR (PLI) MAX	MIN	SECTION (PLI) MAX	MIN
MT20	618	354	1667	822	2284	1656

PLATE PLACEMENT TOL. = 0.250 inches

PLATE ROTATION TOL. = 0.5 Deg.

JSI GRIP= 0.13 (2) (INPUT = 0.90)
JSI METAL= 0.05 (2) (INPUT = 1.00)

LICENSED PROFESSIONAL ENGINEER
P.M. TREVISAN
100136551
March 14th, 2017
PROVINCE OF ONTARIO

RECEIVED
TOWN OF MILTON
MAR 29, 2017
17-5233
BUILDING DIVISION

READ ALL NOTES ON THIS PAGE AND ON THE ENGINEERING NOTE PAGE ENP-1. THE NOTE PAGE IS AN INTEGRAL PART OF THIS DRAWING AS IT CONTAINS SPECIFICATIONS AND CRITERIA USED IN THE DESIGN OF THIS COMPONENT.

KOTT

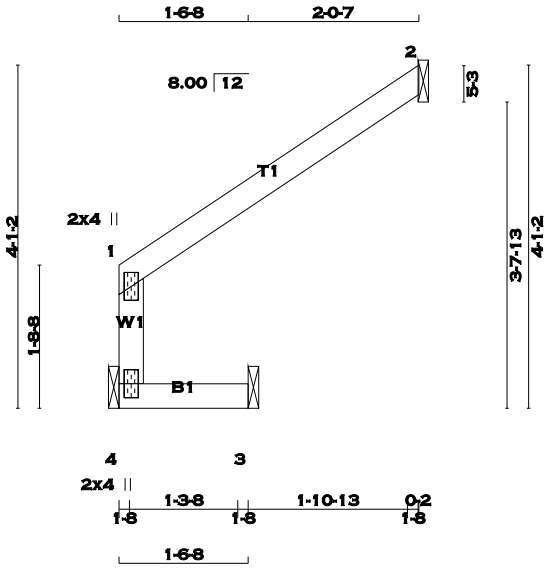

TOTAL WEIGHT = 2 X 8 = 17 lb

[M][F]

LUMBER

N. L. G. A. RULES

CHORDS	SIZE		LUMBER	DESCR.
4 - 1	2x4	DRY	No.2	SPF
1 - 2	2x4	DRY	No.2	SPF
4 - 3	2x4	DRY	No.2	SPF

DRY: SEASONED LUMBER.

PLATES (table is in inches)

JT	TYPE	PLATES	W	LEN	Y	X
1	TMV+p	MT20	2.0	4.0		
4	BMV1+p	MT20	2.0	4.0		

A SIZE FOR SIZE SUBSTITUTION OF MITEK MII20 WITH TEE-LOK TL20 PLATES IS ALLOWED.

DIMENSIONS, SUPPORTS AND LOADINGS SPECIFIED BY FABRICATOR TO BE VERIFIED BY BUILDING DESIGNER

BEARINGS

JT	FACTORED GROSS REACTION VERT	HORZ	MAXIMUM FACTORED GROSS REACTION DOWN	HORZ	UPLIFT	INPUT BRG IN-SX	REQRD BRG IN-SX
4	133	0	133	0	0	1-8	1-8
2	124	0	124	0	0	1-8	1-8
3	47	0	47	0	0	1-8	1-8

SEE MITEK STANDARD DETAIL B37579H FOR CONNECTION TO JOINT(S) 4 , 2 , 3

UNFACTORED REACTIONS

JT	1ST LCASE COMBINED	MAX./MIN. COMPONENT REACTIONS SNOW	LIVE	PERM.LIVE	WIND	DEAD	SOIL
4	92	72 / 0	0 / 0	0 / 0	0 / 0	20 / 0	0 / 0
2	84	74 / 0	0 / 0	0 / 0	0 / 0	10 / 0	0 / 0
3	34	21 / 0	0 / 0	0 / 0	0 / 0	13 / 0	0 / 0

BRACING

TOP CHORD TO BE SHEATHED OR MAX. PURLIN SPACING = 10.00 FT.
MAX. UNBRACED BOTTOM CHORD LENGTH = 10.00 FT. OR RIGID CEILING DIRECTLY APPLIED.

ALL PITCH BREAKS AND PERIMETER CORNER JOINTS MUST BE LATERALLY RESTRAINED.

LOADING

TOTAL LOAD CASES: (4)

CHORDS

MEMB. FR-TO	MAX. FACTORED FORCE (LBS)	FACTORED VERT. LOAD (PLF) FROM	TO	LC1 MAX CSI (LC)	MAX. UNBRAC LENGTH
4- 1	-153 / 0	0.0	0.0	0.06 (1)	7.81
1- 2	-8 / 0	-77.3	-77.3	0.13 (1)	10.00
4- 3	0 / 0	-17.5	-17.5	0.07 (1)	10.00

WEBS

MEMB. FR-TO	MAX. FACTORED FORCE (LBS)	MAX CSI (LC)

DESIGN CRITERIA

SPECIFIED LOADS:

TOP	CH.	LL	=	23.3	PSF
		DL	=	3.0	PSF
BOT	CH.	LL	=	0.0	PSF
		DL	=	7.0	PSF
TOTAL	LOAD		=	33.3	PSF

SPACING = 24.0 IN. C/C

THIS TRUSS IS DESIGNED FOR RESIDENTIAL OR SMALL BUILDING REQUIREMENTS OF PART 9, NBCC 2010

THIS DESIGN COMPLIES WITH:
- PART 9 OF OBC 2012 , BCBC 2012 , ABC 2014
- CSA 086-09
- TPIC 2011

(55 % OF 27.2 P.S.F. G.S.L. PLUS 8.4 P.S.F. RAIN LOAD) EQUALS 23.3 P.S.F. SPECIFIED ROOF LIVE LOAD

ALLOWABLE DEFL.(LL)= L/360 (0.19")
CALCULATED VERT. DEFL.(LL) = L/ 999 (0.00")
ALLOWABLE DEFL.(TL)= L/360 (0.19")
CALCULATED VERT. DEFL.(TL) = L/ 999 (0.00")

CSI: TC=0.13 (1-2:1) , BC=0.07 (3-4:1) , WB=0.00 (n/a:0) , SSI=0.10 (1-2:1)

DOL LUMBER=1.00 NAIL=1.00 LS BEND=1.10 COMP=1.10 SHEAR=1.10 TENS= 1.10

COMPANION LIVE LOAD FACTOR = 0.50

TRUSS PLATE MANUFACTURER IS NOT RESPONSIBLE FOR QUALITY CONTROL IN THE TRUSS MANUFACTURING PLANT .

NAIL VALUES

PLATE	GRIP(DRY) (PSI) MAX	MIN	SHEAR (PLI) MAX	MIN	SECTION (PLI) MAX	MIN
MT20	618	354	1667	822	2284	1656

PLATE PLACEMENT TOL. = 0.250 inches

PLATE ROTATION TOL. = 5.0 Deg.

JSI GRIP= 0.10 (1) (INPUT = 0.90)
JSI METAL= 0.04 (1) (INPUT = 1.00)

LICENSED PROFESSIONAL ENGINEER
R.M. TREVISAN
100136551
March 14th, 2017
PROVINCE OF ONTARIO

RECEIVED
TOWN OF MILTON
MAR 29, 2017
17-5233
BUILDING DIVISION

READ ALL NOTES ON THIS PAGE AND ON THE ENGINEERING NOTE PAGE ENP-1. THE NOTE PAGE IS AN INTEGRAL PART OF THIS DRAWING AS IT CONTAINS SPECIFICATIONS AND CRITERIA USED IN THE DESIGN OF THIS COMPONENT.

KOTT

SCALE = 1:18.3

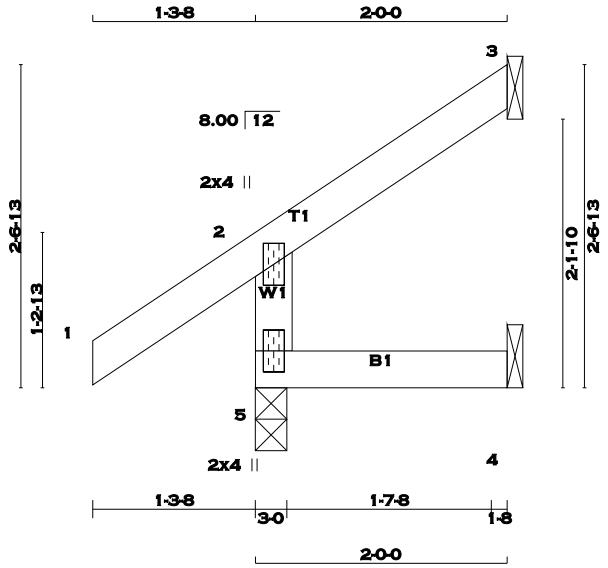

TOTAL WEIGHT = 10 X 8 = 79 lb [M]

LUMBER

N. L. G. A. RULES

CHORDS	SIZE		LUMBER	DESCR.
5 - 2	2x4	DRY	No.2	SPF
1 - 3	2x4	DRY	No.2	SPF
5 - 4	2x4	DRY	No.2	SPF

DRY: SEASONED LUMBER.

PLATES (table is in inches)

JT	TYPE	PLATES	W	LEN	Y	X
2	TMV+p	MT20	2.0	4.0		
5	BMV1+p	MT20	2.0	4.0		

A SIZE FOR SIZE SUBSTITUTION OF MITEK MII20 WITH TEE-LOK TL20 PLATES IS ALLOWED.

DIMENSIONS, SUPPORTS AND LOADINGS SPECIFIED BY FABRICATOR TO BE VERIFIED BY BUILDING DESIGNER

BEARINGS

JT	FACTORED GROSS REACTION VERT	HORZ	MAXIMUM FACTORED GROSS REACTION DOWN	HORZ	UPLIFT	INPUT BRG IN-SX	REQRD BRG IN-SX
5	222	0	222	0	0	3-0	3-0
3	58	0	58	0	0	1-8	1-8
4	16	0	18	0	0	1-8	1-8

SEE MITEK STANDARD DETAIL B37579H FOR CONNECTION TO JOINT(S) 3 , 4

UNFACTORED REACTIONS

JT	1ST LCASE COMBINED	MAX./MIN. COMPONENT REACTIONS SNOW	LIVE	PERM.LIVE	WIND	DEAD	SOIL
5	153	122 / 0	0 / 0	0 / 0	0 / 0	31 / 0	0 / 0
3	40	35 / 0	0 / 0	0 / 0	0 / 0	5 / 0	0 / 0
4	13	0 / 0	0 / 0	0 / 0	0 / 0	13 / 0	0 / 0

BEARING MATERIAL TO BE SPF NO.2 OR BETTER AT JOINT(S) 5

BRACING

TOP CHORD TO BE SHEATHED OR MAX. PURLIN SPACING = 6.25 FT.
MAX. UNBRACED BOTTOM CHORD LENGTH = 10.00 FT. OR RIGID CEILING DIRECTLY APPLIED.

ALL PITCH BREAKS AND PERIMETER CORNER JOINTS MUST BE LATERALLY RESTRAINED.

LOADING

TOTAL LOAD CASES: (5)

CHORDS MEMB. FR-TO	MAX. FACTORED FORCE (LBS)	FACTORED VERT. LOAD (PLF) FROM	TO	LC1 MAX CSI (LC)	MAX. UNBRAC LENGTH	WEBS MEMB. FR-TO	MAX. FACTORED FORCE (LBS)	MAX CSI (LC)
5- 2	-202 / 0	0.0	0.0	0.01 (4)	7.81			
1- 2	0 / 29	-77.3	-77.3	0.10 (1)	10.00			
2- 3	-10 / 0	-77.3	-77.3	0.05 (1)	6.25			
5- 4	0 / 0	-17.5	-17.5	0.02 (4)	10.00			

CANTILEVER ANALYSIS HAS BEEN CONSIDERED IN THIS DESIGN

DESIGN CRITERIA

SPECIFIED LOADS:

TOP CH.	LL	=	23.3	PSF
	DL	=	3.0	PSF
BOT CH.	LL	=	0.0	PSF
	DL	=	7.0	PSF
TOTAL LOAD		=	33.3	PSF

SPACING = 24.0 IN. C/C

THIS TRUSS IS DESIGNED FOR RESIDENTIAL OR SMALL BUILDING REQUIREMENTS OF PART 9, NBCC 2010

THIS DESIGN COMPLIES WITH:
- PART 9 OF OBC 2012 , BCBC 2012 , ABC 2014
- CSA 086-09
- TPIC 2011

DESIGN ASSUMPTIONS
-OVERHANG NOT TO BE ALTERED OR CUT OFF.

(55 % OF 27.2 P.S.F. G.S.L. PLUS 8.4 P.S.F. RAIN LOAD) EQUALS 23.3 P.S.F. SPECIFIED ROOF LIVE LOAD

ALLOWABLE DEFL.(LL)= L/360 (0.19")
CALCULATED VERT. DEFL.(LL) = L/ 999 (0.00")
ALLOWABLE DEFL.(TL)= L/360 (0.19")
CALCULATED VERT. DEFL.(TL) = L/ 999 (0.00")

CSI: TC=0.10 (1-2:1) , BC=0.02 (4-5:4) , WB=0.00 (n/a:0) , SSI=0.07 (1-2:1)

DOL LUMBER=1.00 NAIL=1.00 LS BEND=1.10 COMP=1.10 SHEAR=1.10 TENS= 1.10

COMPANION LIVE LOAD FACTOR = 0.50

TRUSS PLATE MANUFACTURER IS NOT RESPONSIBLE FOR QUALITY CONTROL IN THE TRUSS MANUFACTURING PLANT .

NAIL VALUES

PLATE	GRIP(DRY) (PSI) MAX	MIN	SHEAR (PLI) MAX	MIN	SECTION (PLI) MAX	MIN
MT20	618	354	1667	822	2284	1656

PLATE PLACEMENT TOL. = 0.250 inches

PLATE ROTATION TOL. = 0.5 Deg.

JSI GRIP= 0.13 (2) (INPUT = 0.90)
JSI METAL= 0.05 (2) (INPUT = 1.00)

LICENSED PROFESSIONAL ENGINEER
P.M. TREVISAN
100136551
March 14th, 2017
PROVINCE OF ONTARIO

RECEIVED
TOWN OF MILTON
MAR 29, 2017
17-5233
BUILDING DIVISION

READ ALL NOTES ON THIS PAGE AND ON THE ENGINEERING NOTE PAGE ENP-1. THE NOTE PAGE IS AN INTEGRAL PART OF THIS DRAWING AS IT CONTAINS SPECIFICATIONS AND CRITERIA USED IN THE DESIGN OF THIS COMPONENT.

KOTT

SCALE = 1:18.6

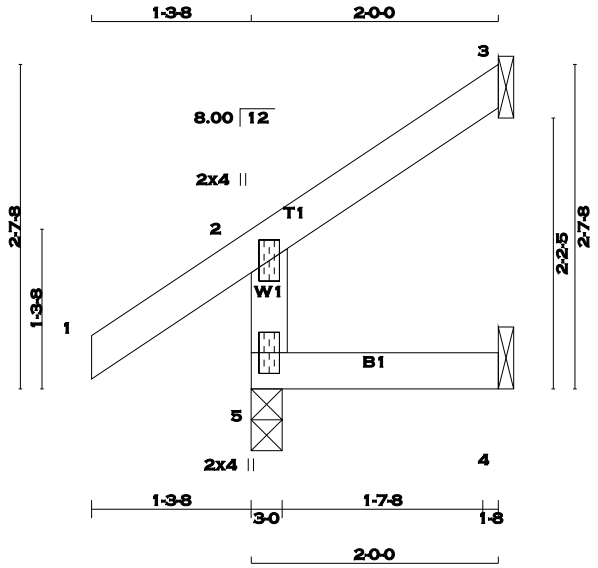

TOTAL WEIGHT = 2 X 8 = 16 lb [M]

LUMBER

N. L. G. A. RULES

CHORDS	SIZE		LUMBER	DESCR.
5 - 2	2x4	DRY	No.2	SPF
1 - 3	2x4	DRY	No.2	SPF
5 - 4	2x4	DRY	No.2	SPF

DRY: SEASONED LUMBER.

PLATES (table is in inches)

JT	TYPE	PLATES	W	LEN	Y	X
2	TMV+p	MT20	2.0	4.0		
5	BMV1+p	MT20	2.0	4.0		

A SIZE FOR SIZE SUBSTITUTION OF MITEK MII20 WITH TEE-LOK TL20 PLATES IS ALLOWED.

DIMENSIONS, SUPPORTS AND LOADINGS SPECIFIED BY FABRICATOR TO BE VERIFIED BY BUILDING DESIGNER

BEARINGS

JT	FACTORED GROSS REACTION VERT	HORZ	MAXIMUM FACTORED GROSS REACTION DOWN	HORZ	UPLIFT	INPUT BRG IN-SX	REQRD BRG IN-SX
5	222	0	222	0	0	3-0	3-0
3	58	0	58	0	0	1-8	1-8
4	16	0	18	0	0	1-8	1-8

SEE MITEK STANDARD DETAIL B37579H FOR CONNECTION TO JOINT(S) 3 , 4

UNFACTORED REACTIONS

JT	1ST LCASE COMBINED	MAX./MIN. COMPONENT REACTIONS SNOW	LIVE	PERM.LIVE	WIND	DEAD	SOIL
5	153	122 / 0	0 / 0	0 / 0	0 / 0	31 / 0	0 / 0
3	40	35 / 0	0 / 0	0 / 0	0 / 0	5 / 0	0 / 0
4	13	0 / 0	0 / 0	0 / 0	0 / 0	13 / 0	0 / 0

BEARING MATERIAL TO BE SPF NO.2 OR BETTER AT JOINT(S) 5

BRACING

TOP CHORD TO BE SHEATHED OR MAX. PURLIN SPACING = 6.25 FT.
MAX. UNBRACED BOTTOM CHORD LENGTH = 10.00 FT. OR RIGID CEILING DIRECTLY APPLIED.

ALL PITCH BREAKS AND PERIMETER CORNER JOINTS MUST BE LATERALLY RESTRAINED.

LOADING

TOTAL LOAD CASES: (5)

CHORDS MEMB. FR-TO	MAX. FACTORED FORCE (LBS)	FACTORED VERT. LOAD (PLF) FROM	TO	LC1 MAX CSI (LC)	MAX. UNBRAC LENGTH
5- 2	-202 / 0	0.0	0.0	0.01 (4)	7.81
1- 2	0 / 29	-77.3	-77.3	0.10 (1)	10.00
2- 3	-10 / 0	-77.3	-77.3	0.05 (1)	6.25
5- 4	0 / 0	-17.5	-17.5	0.02 (4)	10.00

WEBS MEMB. FR-TO	MAX. FACTORED FORCE (LBS)	MAX CSI (LC)

CANTILEVER ANALYSIS HAS BEEN CONSIDERED IN THIS DESIGN

DESIGN CRITERIA

SPECIFIED LOADS:

TOP CH.	LL =	23.3	PSF
	DL =	3.0	PSF
BOT CH.	LL =	0.0	PSF
	DL =	7.0	PSF
TOTAL LOAD	=	33.3	PSF

SPACING = 24.0 IN. C/C

THIS TRUSS IS DESIGNED FOR RESIDENTIAL OR SMALL BUILDING REQUIREMENTS OF PART 9, NBCC 2010

THIS DESIGN COMPLIES WITH:
- PART 9 OF OBC 2012 , BCBC 2012 , ABC 2014
- CSA 086-09
- TPIC 2011

DESIGN ASSUMPTIONS
-OVERHANG NOT TO BE ALTERED OR CUT OFF.

(55 % OF 27.2 P.S.F. G.S.L. PLUS 8.4 P.S.F. RAIN LOAD) EQUALS 23.3 P.S.F. SPECIFIED ROOF LIVE LOAD

ALLOWABLE DEFL.(LL)= L/360 (0.19")
CALCULATED VERT. DEFL.(LL) = L/ 999 (0.00")
ALLOWABLE DEFL.(TL)= L/360 (0.19")
CALCULATED VERT. DEFL.(TL) = L/ 999 (0.00")

CSI: TC=0.10 (1-2:1) , BC=0.02 (4-5:4) , WB=0.00 (n/a:0) , SSI=0.07 (1-2:1)

DOL LUMBER=1.00 NAIL=1.00 LS BEND=1.10 COMP=1.10 SHEAR=1.10 TENS= 1.10

COMPANION LIVE LOAD FACTOR = 0.50

TRUSS PLATE MANUFACTURER IS NOT RESPONSIBLE FOR QUALITY CONTROL IN THE TRUSS MANUFACTURING PLANT .

NAIL VALUES

PLATE	GRIP(DRY) (PSI) MAX	MIN	SHEAR (PLI) MAX	MIN	SECTION (PLI) MAX	MIN
MT20	618	354	1667	822	2284	1656

PLATE PLACEMENT TOL. = 0.250 inches

PLATE ROTATION TOL. = 5.0 Deg.

JSI GRIP= 0.13 (2) (INPUT = 0.90)
JSI METAL= 0.05 (2) (INPUT = 1.00)

LICENSED PROFESSIONAL ENGINEER
P.M. TREVISAN
100136551
March 14th, 2017
PROVINCE OF ONTARIO

RECEIVED
TOWN OF MILTON
MAR 29, 2017
17-5233
BUILDING DIVISION

READ ALL NOTES ON THIS PAGE AND ON THE ENGINEERING NOTE PAGE ENP-1. THE NOTE PAGE IS AN INTEGRAL PART OF THIS DRAWING AS IT CONTAINS SPECIFICATIONS AND CRITERIA USED IN THE DESIGN OF THIS COMPONENT.

KOTT

JOB NAME	TRUSS NAME	QUANTITY	PLY	JOB DESC.	DRWG NO.
PT0317-081	J08	6	1	TRUSS DESC. LECCO RIDGE-BLOCK 338	ENG JOB: PT0317-081

KOTT , Stouffville, ON, CGC

Version 8.100 S Feb 9 2017 MiTek Industries, Inc. Tue Mar 14 15:57:08 2017 Page 1
ID:EvTixTQDI5yR1QLotZTBr_yE?HJ-hfy_iS4ouDf5jMTBkMDxShB04NE?Ck?MERgPuYzb_Pf

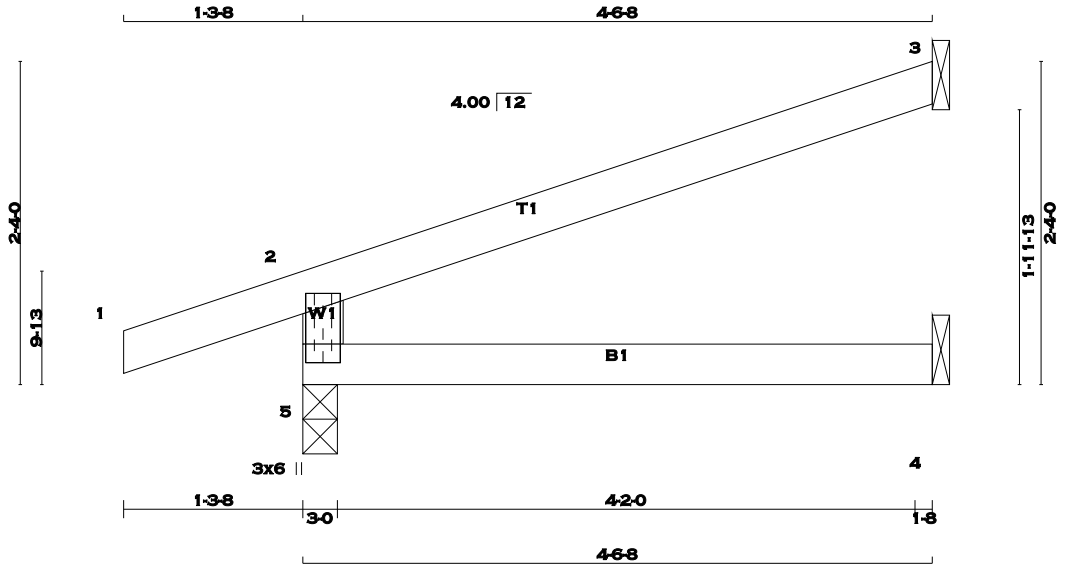

TOTAL WEIGHT = 6 X 13 = 76 lb
[M]

LUMBER
N. L. G. A. RULES

CHORDS	SIZE		LUMBER	DESCR.
5 - 2	2x4	DRY	No.2	SPF
1 - 3	2x4	DRY	No.2	SPF
5 - 4	2x4	DRY	No.2	SPF

DRY: SEASONED LUMBER.

PLATES (table is in inches)

JT	TYPE	PLATES	W	LEN	Y	X
2						
5						
5	TMBMV1+p	MT20	3.0	6.0	3.50	1.50

A SIZE FOR SIZE SUBSTITUTION OF MITEK MII20 WITH TEE-LOK TL20 PLATES IS ALLOWED.

DIMENSIONS, SUPPORTS AND LOADINGS SPECIFIED BY FABRICATOR TO BE VERIFIED BY BUILDING DESIGNER

BEARINGS

JT	FACTORED GROSS REACTION VERT	HORZ	MAXIMUM FACTORED GROSS REACTION DOWN	HORZ	UPLIFT	INPUT BRG IN-SX	REQRD BRG IN-SX
5	370	0	370	0	0	3-0	3-0
3	132	0	132	0	0	1-8	1-8
4	32	0	36	0	0	1-8	1-8

SEE MITEK STANDARD DETAIL B37579H FOR CONNECTION TO JOINT(S) 3 , 4

UNFACTORED REACTIONS

JT	1ST LCASE COMBINED	MAX./MIN. COMPONENT REACTIONS SNOW	LIVE	PERM.LIVE	WIND	DEAD	SOIL
5	257	194 / 0	0 / 0	0 / 0	0 / 0	63 / 0	0 / 0
3	90	79 / 0	0 / 0	0 / 0	0 / 0	10 / 0	0 / 0
4	26	0 / 0	0 / 0	0 / 0	0 / 0	26 / 0	0 / 0

BEARING MATERIAL TO BE SPF NO.2 OR BETTER AT JOINT(S) 5

BRACING
TOP CHORD TO BE SHEATHED OR MAX. PURLIN SPACING = 6.25 FT.
MAX. UNBRACED BOTTOM CHORD LENGTH = 10.00 FT. OR RIGID CEILING DIRECTLY APPLIED.

ALL PITCH BREAKS AND PERIMETER CORNER JOINTS MUST BE LATERALLY RESTRAINED.

LOADING
TOTAL LOAD CASES: (4)

CHORDS MEMB. FR-TO	MAX. FACTORED FORCE (LBS)	FACTORED VERT. LOAD (PLF) FROM	TO	LC1 MAX CSI (LC)	MAX. UNBRAC LENGTH	WEBS MEMB. FR-TO	MAX. FACTORED FORCE (LBS)	MAX CSI (LC)
5- 2	-323 / 0	0.0	0.0	0.08 (4)	7.81			
1- 2	0 / 16	-77.3	-77.3	0.10 (1)	10.00			
2- 3	-14 / 0	-77.3	-77.3	0.27 (1)	6.25			
5- 4	0 / 0	-17.5	-17.5	0.08 (4)	10.00			

DESIGN CRITERIA

SPECIFIED LOADS:

TOP CH.	LL	=	23.3	PSF
	DL	=	3.0	PSF
BOT CH.	LL	=	0.0	PSF
	DL	=	7.0	PSF
TOTAL LOAD		=	33.3	PSF

SPACING = 24.0 IN. C/C

THIS TRUSS IS DESIGNED FOR RESIDENTIAL OR SMALL BUILDING REQUIREMENTS OF PART 9, NBCC 2010

THIS DESIGN COMPLIES WITH:
- PART 9 OF OBC 2012 , BCBC 2012 , ABC 2014
- CSA 086-09
- TPIC 2011

DESIGN ASSUMPTIONS
-OVERHANG NOT TO BE ALTERED OR CUT OFF.

(55 % OF 27.2 P.S.F. G.S.L. PLUS 8.4 P.S.F. RAIN LOAD) EQUALS 23.3 P.S.F. SPECIFIED ROOF LIVE LOAD

ALLOWABLE DEFL.(LL)= L/360 (0.19")
CALCULATED VERT. DEFL.(LL) = L/ 999 (0.00")
ALLOWABLE DEFL.(TL)= L/360 (0.19")
CALCULATED VERT. DEFL.(TL) = L/ 999 (0.01")

CSI: TC=0.27 (2-3:1) , BC=0.08 (4-5:4) , WB=0.00 (n/a:0) , SSI=0.16 (2-3:1)

DOL LUMBER=1.00 NAIL=1.00 LS BEND=1.10 COMP=1.10 SHEAR=1.10 TENS= 1.10

COMPANION LIVE LOAD FACTOR = 0.50

TRUSS PLATE MANUFACTURER IS NOT RESPONSIBLE FOR QUALITY CONTROL IN THE TRUSS MANUFACTURING PLANT .

NAIL VALUES

PLATE	GRIP(DRY) (PSI) MAX	MIN	SHEAR (PLI) MAX	MIN	SECTION (PLI) MAX	MIN
MT20	618	354	1667	822	2284	1656

PLATE PLACEMENT TOL. = 0.250 inches

PLATE ROTATION TOL. = 0.5 Deg.

JSI GRIP= 0.28 (5) (INPUT = 0.90)
JSI METAL= 0.04 (5) (INPUT = 1.00)

LICENSED PROFESSIONAL ENGINEER
P.M. TREVISAN
100136551
March 14th, 2017
PROVINCE OF ONTARIO

RECEIVED
TOWN OF MILTON
MAR 29, 2017
17-5233
BUILDING DIVISION

READ ALL NOTES ON THIS PAGE AND ON THE ENGINEERING NOTE PAGE ENP-1. THE NOTE PAGE IS AN INTEGRAL PART OF THIS DRAWING AS IT CONTAINS SPECIFICATIONS AND CRITERIA USED IN THE DESIGN OF THIS COMPONENT.

KOTT

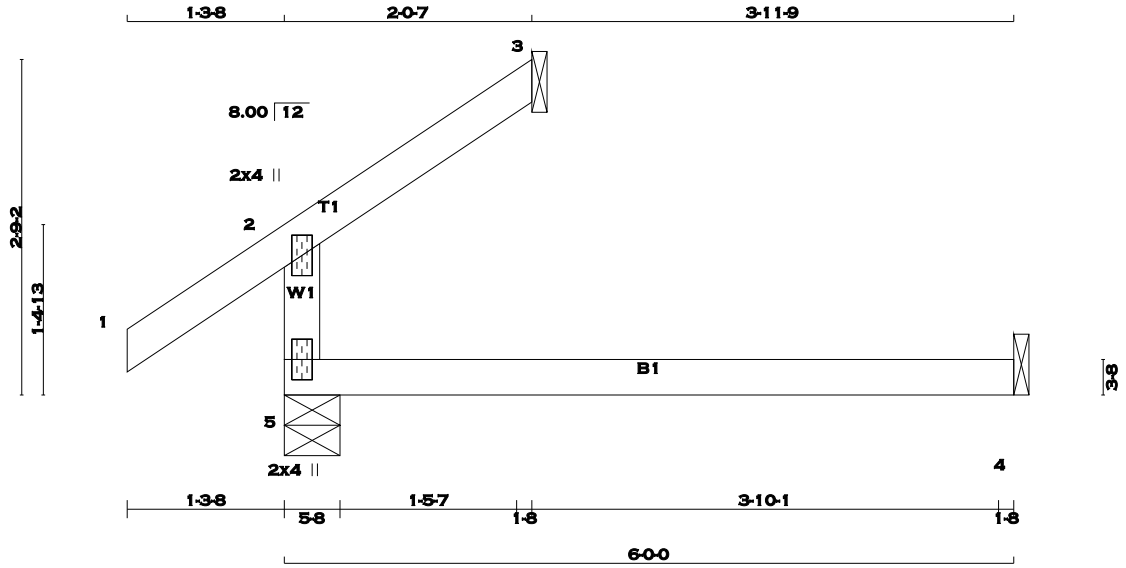

TOTAL WEIGHT = 2 X 13 = 25 lb [M]

LUMBER

N. L. G. A. RULES

CHORDS	SIZE		LUMBER	DESCR.
5 - 2	2x4	DRY	No.2	SPF
1 - 3	2x4	DRY	No.2	SPF
5 - 4	2x4	DRY	No.2	SPF

DRY: SEASONED LUMBER.

PLATES (table is in inches)

JT	TYPE	PLATES	W	LEN	Y	X
2	TMV+p	MT20	2.0	4.0		
5	BMV1+p	MT20	2.0	4.0		

A SIZE FOR SIZE SUBSTITUTION OF MITEK MII20 WITH TEE-LOK TL20 PLATES IS ALLOWED.

DIMENSIONS, SUPPORTS AND LOADINGS SPECIFIED BY FABRICATOR TO BE VERIFIED BY BUILDING DESIGNER

BEARINGS

JT	FACTORED GROSS REACTION VERT	HORZ	MAXIMUM FACTORED GROSS REACTION DOWN	HORZ	UPLIFT	INPUT BRG IN-SX	REQRD BRG IN-SX
5	265	0	265	0	0	5-8	5-8
3	60	0	60	0	0	1-8	1-8
4	44	0	49	0	0	1-8	1-8

SEE MITEK STANDARD DETAIL B37579H FOR CONNECTION TO JOINT(S) 3 , 4

UNFACTORED REACTIONS

JT	1ST LCASE COMBINED	MAX./MIN. COMPONENT REACTIONS SNOW	LIVE	PERM.LIVE	WIND	DEAD	SOIL
5	188	123 / 0	0 / 0	0 / 0	0 / 0	65 / 0	0 / 0
3	40	36 / 0	0 / 0	0 / 0	0 / 0	5 / 0	0 / 0
4	35	0 / 0	0 / 0	0 / 0	0 / 0	35 / 0	0 / 0

BEARING MATERIAL TO BE SPF NO.2 OR BETTER AT JOINT(S) 5, 3

BRACING

TOP CHORD TO BE SHEATHED OR MAX. PURLIN SPACING = 6.25 FT.
MAX. UNBRACED BOTTOM CHORD LENGTH = 10.00 FT. OR RIGID CEILING DIRECTLY APPLIED.

ALL PITCH BREAKS AND PERIMETER CORNER JOINTS MUST BE LATERALLY RESTRAINED.

LOADING

TOTAL LOAD CASES: (4)

CHORDS MEMB. FR-TO	MAX. FACTORED FORCE (LBS)	FACTORED VERT. LOAD (PLF) FROM	TO	LC1 MAX CSI (LC)	MAX. UNBRAC LENGTH	WEBS MEMB. FR-TO	MAX. FACTORED FORCE (LBS)	MAX CSI (LC)
5- 2	-204 / 0	0.0	0.0	0.12 (4)	7.81			
1- 2	0 / 29	-77.3	-77.3	0.10 (1)	10.00			
2- 3	-11 / 0	-77.3	-77.3	0.05 (1)	6.25			
5- 4	0 / 0	-17.5	-17.5	0.13 (4)	10.00			

DESIGN CRITERIA

SPECIFIED LOADS:

TOP CH.	LL	=	23.3	PSF
	DL	=	3.0	PSF
BOT CH.	LL	=	0.0	PSF
	DL	=	7.0	PSF
TOTAL LOAD		=	33.3	PSF

SPACING = 24.0 IN. C/C

THIS TRUSS IS DESIGNED FOR RESIDENTIAL OR SMALL BUILDING REQUIREMENTS OF PART 9, NBCC 2010

THIS DESIGN COMPLIES WITH:
- PART 9 OF OBC 2012 , BCBC 2012 , ABC 2014
- CSA 086-09
- TPIC 2011

DESIGN ASSUMPTIONS
-OVERHANG NOT TO BE ALTERED OR CUT OFF.

(55 % OF 27.2 P.S.F. G.S.L. PLUS 8.4 P.S.F. RAIN LOAD) EQUALS 23.3 P.S.F. SPECIFIED ROOF LIVE LOAD

ALLOWABLE DEFL.(LL)= L/360 (0.20")
CALCULATED VERT. DEFL.(LL) = L/ 999 (0.00")
ALLOWABLE DEFL.(TL)= L/360 (0.20")
CALCULATED VERT. DEFL.(TL) = L/ 999 (0.03")

CSI: TC=0.12 (2-5:4) , BC=0.13 (4-5:4) , WB=0.00 (n/a:0) , SSI=0.08 (4-5:4)

DOL LUMBER=1.00 NAIL=1.00 LS BEND=1.10 COMP=1.10 SHEAR=1.10 TENS= 1.10

COMPANION LIVE LOAD FACTOR = 0.50

TRUSS PLATE MANUFACTURER IS NOT RESPONSIBLE FOR QUALITY CONTROL IN THE TRUSS MANUFACTURING PLANT .

NAIL VALUES

PLATE	GRIP(DRY) (PSI) MAX	MIN	SHEAR (PLI) MAX	MIN	SECTION (PLI) MAX	MIN
MT20	618	354	1667	822	2284	1656

PLATE PLACEMENT TOL. = 0.250 inches

PLATE ROTATION TOL. = 0.5 Deg.

JSI GRIP= 0.13 (2) (INPUT = 0.90)
JSI METAL= 0.05 (2) (INPUT = 1.00)

LICENSED PROFESSIONAL ENGINEER
P.M. TREVISAN
100136551
March 14th, 2017
PROVINCE OF ONTARIO

RECEIVED
TOWN OF MILTON
MAR 29, 2017
17-5233
BUILDING DIVISION

READ ALL NOTES ON THIS PAGE AND ON THE ENGINEERING NOTE PAGE ENP-1. THE NOTE PAGE IS AN INTEGRAL PART OF THIS DRAWING AS IT CONTAINS SPECIFICATIONS AND CRITERIA USED IN THE DESIGN OF THIS COMPONENT.

KOTT

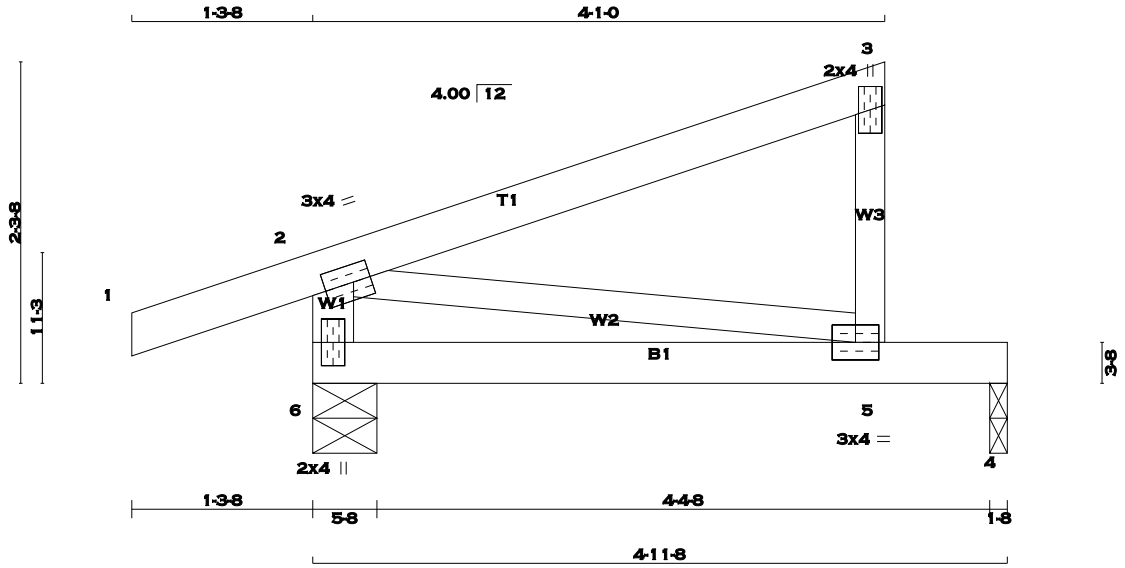

TOTAL WEIGHT = 5 X 17 = 85 lb [M]

LUMBER

N. L. G. A. RULES

CHORDS	SIZE		LUMBER	DESCR.
1 - 3	2x4	DRY	No.2	SPF
5 - 3	2x3	DRY	No.2	SPF
6 - 2	2x4	DRY	No.2	SPF
6 - 4	2x4	DRY	No.2	SPF
ALL WEBS	2x3	DRY	No.2	SPF

DRY: SEASONED LUMBER.

PLATES (table is in inches)

JT	TYPE	PLATES	W	LEN	Y	X
2	TMVW-t	MT20	3.0	4.0	1.50	1.50
3	TMV+p	MT20	2.0	4.0		
5	BMVW-t	MT20	3.0	4.0		
6	BMV1+p	MT20	2.0	4.0		

A SIZE FOR SIZE SUBSTITUTION OF MITEK MII20 WITH TEE-LOK TL20 PLATES IS ALLOWED.

DIMENSIONS, SUPPORTS AND LOADINGS SPECIFIED BY FABRICATOR TO BE VERIFIED BY BUILDING DESIGNER

BEARINGS

JT	FACTORED GROSS REACTION VERT	HORZ	MAXIMUM FACTORED GROSS REACTION DOWN	HORZ	UPLIFT	INPUT BRG IN-SX	REQRD BRG IN-SX
6	333	0	333	0	0	5-8	5-8
4	173	0	173	0	0	1-8	1-8

UNFACTORED REACTIONS

JT	1ST LCASE COMBINED	MAX./MIN. COMPONENT REACTIONS SNOW	LIVE	PERM.LIVE	WIND	DEAD	SOIL
6	231	174 / 0	0 / 0	0 / 0	0 / 0	57 / 0	0 / 0
4	123	78 / 0	0 / 0	0 / 0	0 / 0	45 / 0	0 / 0

BEARING MATERIAL TO BE SPF NO.2 OR BETTER AT JOINT(S) 6, 4

BRACING

TOP CHORD TO BE SHEATHED OR MAX. PURLIN SPACING = 10.00 FT.
MAX. UNBRACED BOTTOM CHORD LENGTH = 10.00 FT. OR RIGID CEILING DIRECTLY APPLIED.

ALL PITCH BREAKS AND PERIMETER CORNER JOINTS MUST BE LATERALLY RESTRAINED.

LOADING

TOTAL LOAD CASES: (4)

CHORDS

MEMB. FR-TO	MAX. FACTORED FORCE (LBS)	FACTORED VERT. LOAD (PLF) FROM	TO	LC1 MAX CSI (LC)	MAX. UNBRAC LENGTH
1- 2	0 / 16	-77.3	-77.3	0.10 (1)	10.00
2- 3	0 / 0	-77.3	-77.3	0.22 (1)	10.00
5- 3	-158 / 0	0.0	0.0	0.03 (1)	7.81
6- 2	-261 / 0	0.0	0.0	0.03 (1)	7.81
6- 5	0 / 0	-17.5	-17.5	0.20 (1)	10.00
5- 4	0 / 0	-17.5	-17.5	0.20 (1)	10.00

WEBS

MEMB. FR-TO	MAX. FACTORED FORCE (LBS)	MAX CSI (LC)
2- 5	0 / 0	0.00 (1)

DESIGN CRITERIA

SPECIFIED LOADS:

TOP	CH.	LL	=	23.3	PSF
		DL	=	3.0	PSF
BOT	CH.	LL	=	0.0	PSF
		DL	=	7.0	PSF
TOTAL	LOAD		=	33.3	PSF

SPACING = 24.0 IN. C/C

THIS TRUSS IS DESIGNED FOR RESIDENTIAL OR SMALL BUILDING REQUIREMENTS OF PART 9, NBCC 2010

THIS DESIGN COMPLIES WITH:
- PART 9 OF OBC 2012 , BCBC 2012 , ABC 2014
- CSA 086-09
- TPIC 2011

(55 % OF 27.2 P.S.F. G.S.L. PLUS 8.4 P.S.F. RAIN LOAD) EQUALS 23.3 P.S.F. SPECIFIED ROOF LIVE LOAD

ALLOWABLE DEFL.(LL)= L/360 (0.19")
CALCULATED VERT. DEFL.(LL) = L/ 999 (0.03")
ALLOWABLE DEFL.(TL)= L/360 (0.19")
CALCULATED VERT. DEFL.(TL) = L/ 872 (0.07")

CSI: TC=0.22 (2-3:1) , BC=0.20 (5-6:1) , WB=0.00 (2-5:1) , SSI=0.14 (4-5:1)

DOL LUMBER=1.00 NAIL=1.00 LS BEND=1.10 COMP=1.10 SHEAR=1.10 TENS= 1.10

COMPANION LIVE LOAD FACTOR = 0.50

TRUSS PLATE MANUFACTURER IS NOT RESPONSIBLE FOR QUALITY CONTROL IN THE TRUSS MANUFACTURING PLANT .

NAIL VALUES

PLATE	GRIP(DRY) (PSI) MAX	MIN	SHEAR (PLI) MAX	MIN	SECTION (PLI) MAX	MIN
MT20	618	354	1667	822	2284	1656

PLATE PLACEMENT TOL. = 0.250 inches

PLATE ROTATION TOL. = 5.0 Deg.

JSI GRIP= 0.24 (2) (INPUT = 0.90)
JSI METAL= 0.05 (6) (INPUT = 1.00)

LICENSED PROFESSIONAL ENGINEER
R.M. TREVISAN
100136551
March 14th, 2017
PROVINCE OF ONTARIO

RECEIVED
TOWN OF MILTON
MAR 29, 2017
17-5233
BUILDING DIVISION

READ ALL NOTES ON THIS PAGE AND ON THE ENGINEERING NOTE PAGE ENP-1. THE NOTE PAGE IS AN INTEGRAL PART OF THIS DRAWING AS IT CONTAINS SPECIFICATIONS AND CRITERIA USED IN THE DESIGN OF THIS COMPONENT.

KOTT

JOB NAME	TRUSS NAME	QUANTITY	PLY	JOB DESC.	DRWG NO.
PT0317-081	T02	18	1	TRUSS DESC. LECCO RIDGE-BLOCK 338	ENG JOB: PT0317-081

KOTT , Stouffville, ON, CGC

Version 8.100 S Feb 9 2017 MiTek Industries, Inc. Tue Mar 14 15:57:09 2017 Page 1

ID:EvTixTQDI5yR1QLotZTBr_yE?HJ-9rWMwo5RfWnyLW2OH4kA?ukEBmT4x9aWT5QyQ?zb_Pe

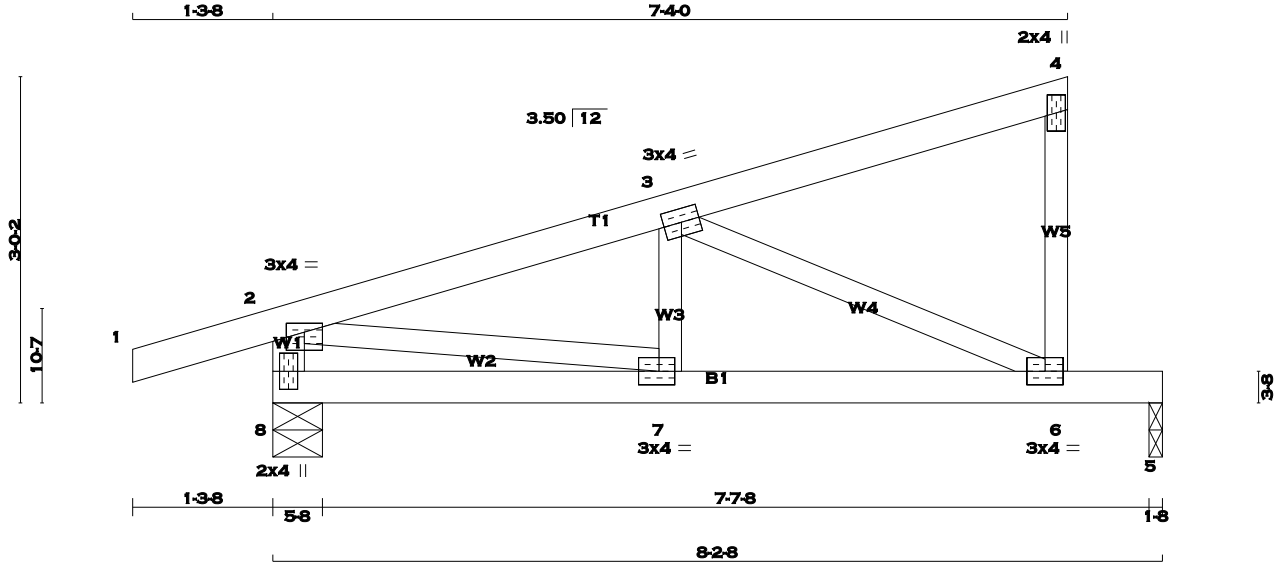

TOTAL WEIGHT = 18 X 29 = 519 lb

[M][F]

LUMBER

N. L. G. A. RULES

CHORDS	SIZE		LUMBER	DESCR.
1 - 4	2x4	DRY	No.2	SPF
6 - 4	2x3	DRY	No.2	SPF
8 - 2	2x4	DRY	No.2	SPF
8 - 5	2x4	DRY	No.2	SPF
ALL WEBS EXCEPT	2x3	DRY	No.2	SPF

DRY: SEASONED LUMBER.

PLATES (table is in inches)

JT	TYPE	PLATES	W	LEN	Y	X
2	TMVW-p	MT20	3.0	4.0	1.00	2.00
3	TMWW-t	MT20	3.0	4.0		
4	TMV+p	MT20	2.0	4.0		
6	BMVW-t	MT20	3.0	4.0		
7	BMWW-t	MT20	3.0	4.0	1.50	1.75
8	BMV1+p	MT20	2.0	4.0		

A SIZE FOR SIZE SUBSTITUTION OF MITEK MII20 WITH TEE-LOK TL20 PLATES IS ALLOWED.

DIMENSIONS, SUPPORTS AND LOADINGS SPECIFIED BY FABRICATOR TO BE VERIFIED BY BUILDING DESIGNER

BEARINGS

JT	FACTORED GROSS REACTION VERT	HORZ	MAXIMUM FACTORED GROSS REACTION DOWN	HORZ	UPLIFT	INPUT BRG IN-SX	REQRD BRG IN-SX
8	489	0	489	0	0	5-8	5-8
5	325	0	325	0	0	1-8	1-8

UNFACTORED REACTIONS

JT	1ST LCASE COMBINED	MAX./MIN. COMPONENT REACTIONS SNOW	LIVE	PERM.LIVE	WIND	DEAD	SOIL
8	341	251 / 0	0 / 0	0 / 0	0 / 0	90 / 0	0 / 0
5	230	153 / 0	0 / 0	0 / 0	0 / 0	77 / 0	0 / 0

BEARING MATERIAL TO BE SPF NO.2 OR BETTER AT JOINT(S) 8, 5

BRACING

TOP CHORD TO BE SHEATHED OR MAX. PURLIN SPACING = 6.25 FT.
MAX. UNBRACED BOTTOM CHORD LENGTH = 10.00 FT. OR RIGID CEILING DIRECTLY APPLIED.

ALL PITCH BREAKS AND PERIMETER CORNER JOINTS MUST BE LATERALLY RESTRAINED.

LOADING

TOTAL LOAD CASES: (4)

CHORDS

MEMB. FR-TO	MAX. FACTORED FORCE (LBS)	FACTORED VERT. LOAD (PLF) FROM	TO	LC1 MAX CSI (LC)	MAX. UNBRAC LENGTH
1- 2	0 / 14	-77.3	-77.3	0.10 (1)	10.00
2- 3	-604 / 0	-77.3	-77.3	0.12 (1)	6.25
3- 4	-8 / 0	-77.3	-77.3	0.12 (1)	10.00
6- 4	-112 / 0	0.0	0.0	0.02 (1)	7.81
8- 2	-478 / 0	0.0	0.0	0.05 (1)	7.81
8- 7	0 / 0	-17.5	-17.5	0.11 (1)	10.00
7- 6	0 / 588	-17.5	-17.5	0.47 (1)	10.00
6- 5	0 / 0	-17.5	-17.5	0.38 (1)	10.00

WEBS

MEMB. FR-TO	MAX. FACTORED FORCE (LBS)	MAX CSI (LC)
7- 3	0 / 94	0.03 (4)
3- 6	-644 / 0	0.17 (1)
2- 7	0 / 595	0.13 (1)

DESIGN CRITERIA

SPECIFIED LOADS:

TOP	CH.	LL	=	23.3	PSF
		DL	=	3.0	PSF
BOT	CH.	LL	=	0.0	PSF
		DL	=	7.0	PSF
TOTAL	LOAD		=	33.3	PSF

SPACING = 24.0 IN. C/C

THIS TRUSS IS DESIGNED FOR RESIDENTIAL OR SMALL BUILDING REQUIREMENTS OF PART 9, NBCC 2010

THIS DESIGN COMPLIES WITH:
- PART 9 OF OBC 2012 , BCBC 2012 , ABC 2014
- CSA 086-09
- TPIC 2011

(55 % OF 27.2 P.S.F. G.S.L. PLUS 8.4 P.S.F. RAIN LOAD) EQUALS 23.3 P.S.F. SPECIFIED ROOF LIVE LOAD

ALLOWABLE DEFL.(LL)= L/360 (0.27")
CALCULATED VERT. DEFL.(LL) = L/ 999 (0.06")
ALLOWABLE DEFL.(TL)= L/360 (0.27")
CALCULATED VERT. DEFL.(TL) = L/ 921 (0.11")

CSI: TC=0.12 (2-3:1) , BC=0.47 (6-7:1) , WB=0.17 (3-6:1) , SSI=0.25 (5-6:1)

DOL LUMBER=1.00 NAIL=1.00 LS BEND=1.10 COMP=1.10 SHEAR=1.10 TENS= 1.10

COMPANION LIVE LOAD FACTOR = 0.50

TRUSS PLATE MANUFACTURER IS NOT RESPONSIBLE FOR QUALITY CONTROL IN THE TRUSS MANUFACTURING PLANT .

NAIL VALUES

PLATE	GRIP(DRY) (PSI) MAX	MIN	SHEAR (PLI) MAX	MIN	SECTION (PLI) MAX	MIN
MT20	618	354	1667	822	2284	1656

PLATE PLACEMENT TOL. = 0.250 inches

PLATE ROTATION TOL. = 0.5 Deg.

JSI GRIP= 0.89 (6) (INPUT = 0.90)
JSI METAL= 0.22 (2) (INPUT = 1.00)

LICENSED PROFESSIONAL ENGINEER
R.M. TREVISAN
100136551
March 14th, 2017
PROVINCE OF ONTARIO

RECEIVED
TOWN OF MILTON
MAR 29, 2017
17-5233
BUILDING DIVISION

READ ALL NOTES ON THIS PAGE AND ON THE ENGINEERING NOTE PAGE ENP-1. THE NOTE PAGE IS AN INTEGRAL PART OF THIS DRAWING AS IT CONTAINS SPECIFICATIONS AND CRITERIA USED IN THE DESIGN OF THIS COMPONENT.

KOTT

JOB NAME	TRUSS NAME	QUANTITY	PLY	JOB DESC.	DRWG NO.
PT0317-081	**T03**	**7**	**1**	TRUSS DESC. LECCO RIDGE-BLOCK 338	

ENG JOB: PT0317-081

KOTT , Stouffville, ON, CGC

Version 8.100 S Feb 9 2017 MiTek Industries, Inc. Tue Mar 14 15:57:10 2017 Page 1
ID:EvTixTQDI5yR1QLotZTBr_yE?HJ-d14k7853QqvpygdarnGPY6HOnAp1gcafhl9WyRzb_Pd

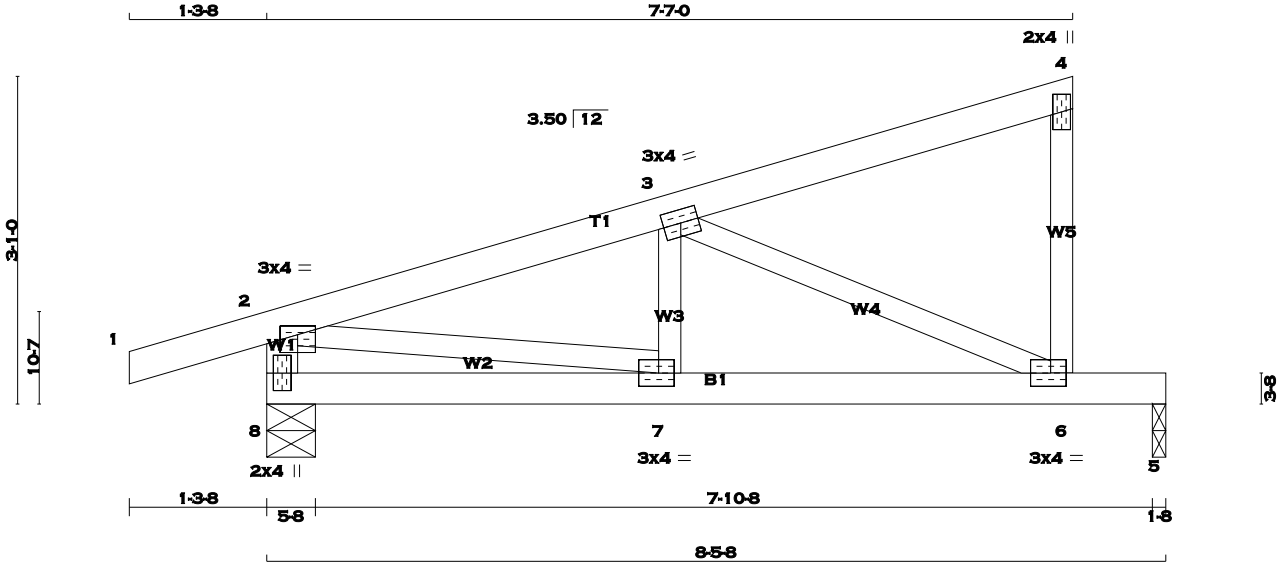

TOTAL WEIGHT = 7 X 30 = 208 lb
[M][F]

LUMBER
N. L. G. A. RULES

CHORDS	SIZE		LUMBER	DESCR.
1 - 4	2x4	DRY	No.2	SPF
6 - 4	2x3	DRY	No.2	SPF
8 - 2	2x4	DRY	No.2	SPF
8 - 5	2x4	DRY	No.2	SPF
ALL WEBS EXCEPT	2x3	DRY	No.2	SPF

DRY: SEASONED LUMBER.

PLATES (table is in inches)

JT	TYPE	PLATES	W	LEN	Y	X
2	TMVW-p	MT20	3.0	4.0	1.00	2.00
3	TMWW-t	MT20	3.0	4.0		
4	TMV+p	MT20	2.0	4.0		
6	BMVW-t	MT20	3.0	4.0	1.50	1.75
7	BMWW-t	MT20	3.0	4.0	1.50	1.75
8	BMV1+p	MT20	2.0	4.0		

A SIZE FOR SIZE SUBSTITUTION OF MITEK MII20 WITH TEE-LOK TL20 PLATES IS ALLOWED.

DIMENSIONS, SUPPORTS AND LOADINGS SPECIFIED BY FABRICATOR TO BE VERIFIED BY BUILDING DESIGNER

BEARINGS

JT	FACTORED GROSS REACTION VERT	HORZ	MAXIMUM FACTORED GROSS REACTION DOWN	HORZ	UPLIFT	INPUT BRG IN-SX	REQRD BRG IN-SX
8	501	0	501	0	0	5-8	5-8
5	337	0	337	0	0	1-8	1-8

UNFACTORED REACTIONS

JT	1ST LCASE COMBINED	MAX./MIN. COMPONENT REACTIONS SNOW	LIVE	PERM.LIVE	WIND	DEAD	SOIL
8	349	257 / 0	0 / 0	0 / 0	0 / 0	92 / 0	0 / 0
5	238	158 / 0	0 / 0	0 / 0	0 / 0	80 / 0	0 / 0

BEARING MATERIAL TO BE SPF NO.2 OR BETTER AT JOINT(S) 8, 5

BRACING
TOP CHORD TO BE SHEATHED OR MAX. PURLIN SPACING = 6.25 FT.
MAX. UNBRACED BOTTOM CHORD LENGTH = 10.00 FT. OR RIGID CEILING DIRECTLY APPLIED.

ALL PITCH BREAKS AND PERIMETER CORNER JOINTS MUST BE LATERALLY RESTRAINED.

LOADING
TOTAL LOAD CASES: (4)

CHORDS

MEMB. FR-TO	MAX. FACTORED FORCE (LBS)	FACTORED VERT. LOAD (PLF) FROM	TO	LC1 MAX CSI (LC)	MAX. UNBRAC LENGTH
1- 2	0 / 14	-77.3	-77.3	0.10 (1)	10.00
2- 3	-629 / 0	-77.3	-77.3	0.13 (1)	6.25
3- 4	-9 / 0	-77.3	-77.3	0.13 (1)	10.00
6- 4	-115 / 0	0.0	0.0	0.03 (1)	7.81
8- 2	-489 / 0	0.0	0.0	0.05 (1)	7.81
8- 7	0 / 0	-17.5	-17.5	0.11 (1)	10.00
7- 6	0 / 612	-17.5	-17.5	0.49 (1)	10.00
6- 5	0 / 0	-17.5	-17.5	0.39 (1)	10.00

WEBS

MEMB. FR-TO	MAX. FACTORED FORCE (LBS)	MAX CSI (LC)
7- 3	0 / 97	0.03 (4)
3- 6	-670 / 0	0.19 (1)
2- 7	0 / 619	0.14 (1)

DESIGN CRITERIA

SPECIFIED LOADS:

TOP	CH.	LL	=	23.3	PSF
		DL	=	3.0	PSF
BOT	CH.	LL	=	0.0	PSF
		DL	=	7.0	PSF
TOTAL	LOAD		=	33.3	PSF

SPACING = 24.0 IN. C/C

THIS TRUSS IS DESIGNED FOR RESIDENTIAL OR SMALL BUILDING REQUIREMENTS OF PART 9, NBCC 2010

THIS DESIGN COMPLIES WITH:
- PART 9 OF OBC 2012 , BCBC 2012 , ABC 2014
- CSA 086-09
- TPIC 2011

(55 % OF 27.2 P.S.F. G.S.L. PLUS 8.4 P.S.F. RAIN LOAD) EQUALS 23.3 P.S.F. SPECIFIED ROOF LIVE LOAD

ALLOWABLE DEFL.(LL)= L/360 (0.28")
CALCULATED VERT. DEFL.(LL) = L/ 999 (0.06")
ALLOWABLE DEFL.(TL)= L/360 (0.28")
CALCULATED VERT. DEFL.(TL) = L/ 873 (0.12")

CSI: TC=0.13 (2-3:1) , BC=0.49 (6-7:1) , WB=0.19 (3-6:1) , SSI=0.26 (5-6:1)

DOL LUMBER=1.00 NAIL=1.00 LS BEND=1.10 COMP=1.10 SHEAR=1.10 TENS= 1.10

COMPANION LIVE LOAD FACTOR = 0.50

TRUSS PLATE MANUFACTURER IS NOT RESPONSIBLE FOR QUALITY CONTROL IN THE TRUSS MANUFACTURING PLANT .

NAIL VALUES

PLATE	GRIP(DRY) (PSI) MAX	MIN	SHEAR (PLI) MAX	MIN	SECTION (PLI) MAX	MIN
MT20	618	354	1667	822	2284	1656

PLATE PLACEMENT TOL. = 0.250 inches

PLATE ROTATION TOL. = 0.5 Deg.

JSI GRIP= 0.83 (7) (INPUT = 0.90)
JSI METAL= 0.23 (7) (INPUT = 1.00)

LICENSED PROFESSIONAL ENGINEER
R.M. TREVISAN
100136551
March 14th, 2017
PROVINCE OF ONTARIO

RECEIVED
TOWN OF MILTON
MAR 29, 2017
17-5233
BUILDING DIVISION

READ ALL NOTES ON THIS PAGE AND ON THE ENGINEERING NOTE PAGE ENP-1. THE NOTE PAGE IS AN INTEGRAL PART OF THIS DRAWING AS IT CONTAINS SPECIFICATIONS AND CRITERIA USED IN THE DESIGN OF THIS COMPONENT.

KOTT

JOB NAME	TRUSS NAME	QUANTITY	PLY	JOB DESC.	DRWG NO.
PT0317-081	T04	6	1	TRUSS DESC. LECCO RIDGE-BLOCK 338	ENG JOB: PT0317-081

KOTT , Stouffville, ON, CGC

Version 8.100 S Feb 9 2017 MiTek Industries, Inc. Tue Mar 14 15:57:10 2017 Page 1

ID:EvTixTQDI5yR1QLotZTBr_yE?HJ-d14k7853QqvpygdarnGPY6HPFAvygeVfhl9WyRzb_Pd

SCALE = 1:17.3

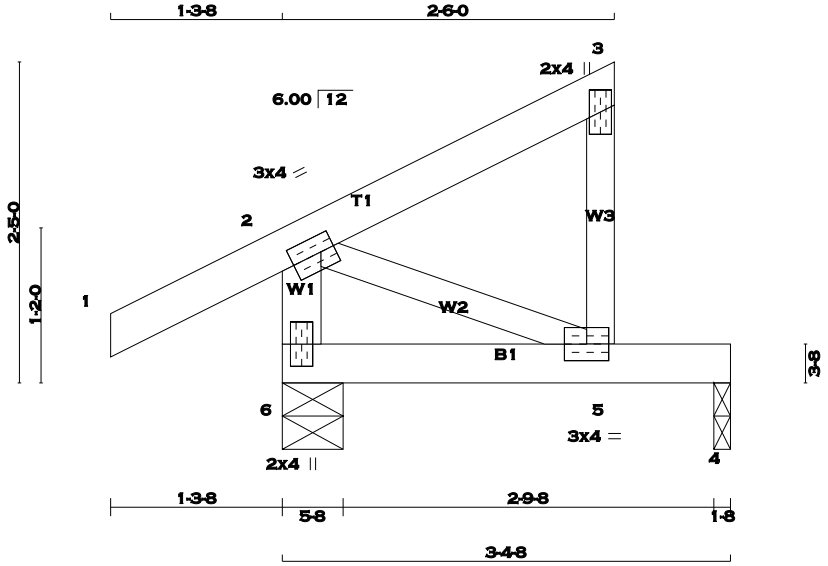

TOTAL WEIGHT = 6 X 13 = 77 lb

LUMBER

N. L. G. A. RULES

CHORDS	SIZE		LUMBER	DESCR.
1 - 3	2x4	DRY	No.2	SPF
5 - 3	2x3	DRY	No.2	SPF
6 - 2	2x4	DRY	No.2	SPF
6 - 4	2x4	DRY	No.2	SPF
ALL WEBS	2x3	DRY	No.2	SPF

DRY: SEASONED LUMBER.

PLATES (table is in inches)

JT	TYPE	PLATES	W	LEN	Y	X
2	TMVW-t	MT20	3.0	4.0	1.50	1.25
3	TMV+p	MT20	2.0	4.0		
5	BMVW-t	MT20	3.0	4.0		
6	BMV1+p	MT20	2.0	4.0		

A SIZE FOR SIZE SUBSTITUTION OF MITEK MII20 WITH TEE-LOK TL20 PLATES IS ALLOWED.

DIMENSIONS, SUPPORTS AND LOADINGS SPECIFIED BY FABRICATOR TO BE VERIFIED BY BUILDING DESIGNER

BEARINGS

JT	FACTORED GROSS REACTION VERT	HORZ	MAXIMUM FACTORED GROSS REACTION DOWN	HORZ	UPLIFT	INPUT BRG IN-SX	REQRD BRG IN-SX
6	256	0	256	0	0	5-8	5-8
4	101	0	101	0	0	1-8	1-8

UNFACTORED REACTIONS

JT	1ST LCASE COMBINED	MAX./MIN. COMPONENT REACTIONS SNOW	LIVE	PERM.LIVE	WIND	DEAD	SOIL
6	178	136 / 0	0 / 0	0 / 0	0 / 0	41 / 0	0 / 0
4	72	43 / 0	0 / 0	0 / 0	0 / 0	29 / 0	0 / 0

BEARING MATERIAL TO BE SPF NO.2 OR BETTER AT JOINT(S) 6, 4

BRACING

TOP CHORD TO BE SHEATHED OR MAX. PURLIN SPACING = 10.00 FT.
MAX. UNBRACED BOTTOM CHORD LENGTH = 10.00 FT. OR RIGID CEILING DIRECTLY APPLIED.

ALL PITCH BREAKS AND PERIMETER CORNER JOINTS MUST BE LATERALLY RESTRAINED.

LOADING

TOTAL LOAD CASES: (5)

CHORDS

MEMB. FR-TO	MAX. FACTORED FORCE (LBS)	FACTORED VERT. LOAD (PLF) FROM	TO	LC1 MAX CSI (LC)	MAX. UNBRAC LENGTH
1- 2	0 / 23	-77.3	-77.3	0.10 (1)	10.00
2- 3	0 / 0	-77.3	-77.3	0.08 (1)	10.00
5- 3	-97 / 0	0.0	0.0	0.02 (1)	7.81
6- 2	-202 / 0	0.0	0.0	0.02 (1)	7.81
6- 5	0 / 0	-17.5	-17.5	0.11 (1)	10.00
5- 4	0 / 0	-17.5	-17.5	0.11 (1)	10.00

WEBS

MEMB. FR-TO	MAX. FACTORED FORCE (LBS)	MAX CSI (LC)
2- 5	0 / 0	0.00 (1)

CANTILEVER ANALYSIS HAS BEEN CONSIDERED IN THIS DESIGN

DESIGN CRITERIA

SPECIFIED LOADS:

TOP CH.	LL	=	23.3	PSF
	DL	=	3.0	PSF
BOT CH.	LL	=	0.0	PSF
	DL	=	7.0	PSF
TOTAL LOAD		=	33.3	PSF

SPACING = 24.0 IN. C/C

THIS TRUSS IS DESIGNED FOR RESIDENTIAL OR SMALL BUILDING REQUIREMENTS OF PART 9, NBCC 2010

THIS DESIGN COMPLIES WITH:
- PART 9 OF OBC 2012 , BCBC 2012 , ABC 2014
- CSA 086-09
- TPIC 2011

(55 % OF 27.2 P.S.F. G.S.L. PLUS 8.4 P.S.F. RAIN LOAD) EQUALS 23.3 P.S.F. SPECIFIED ROOF LIVE LOAD

ALLOWABLE DEFL.(LL)= L/360 (0.19")
CALCULATED VERT. DEFL.(LL) = L/ 999 (0.01")
ALLOWABLE DEFL.(TL)= L/360 (0.19")
CALCULATED VERT. DEFL.(TL) = L/ 999 (0.02")

CSI: TC=0.10 (1-2:1) , BC=0.11 (4-5:1) , WB=0.00 (2-5:1) , SSI=0.08 (4-5:1)

DOL LUMBER=1.00 NAIL=1.00 LS BEND=1.10 COMP=1.10 SHEAR=1.10 TENS= 1.10

COMPANION LIVE LOAD FACTOR = 0.50

TRUSS PLATE MANUFACTURER IS NOT RESPONSIBLE FOR QUALITY CONTROL IN THE TRUSS MANUFACTURING PLANT .

NAIL VALUES

PLATE	GRIP(DRY) (PSI) MAX	MIN	SHEAR (PLI) MAX	MIN	SECTION (PLI) MAX	MIN
MT20	618	354	1667	822	2284	1656

PLATE PLACEMENT TOL. = 0.250 inches

PLATE ROTATION TOL. = 5.0 Deg.

JSI GRIP= 0.18 (2) (INPUT = 0.90)
JSI METAL= 0.04 (6) (INPUT = 1.00)

LICENSED PROFESSIONAL ENGINEER
P.M. TREVISAN
100136551
March 14th, 2017
PROVINCE OF ONTARIO

RECEIVED
TOWN OF MILTON
MAR 29, 2017
17-5233
BUILDING DIVISION

READ ALL NOTES ON THIS PAGE AND ON THE ENGINEERING NOTE PAGE ENP-1. THE NOTE PAGE IS AN INTEGRAL PART OF THIS DRAWING AS IT CONTAINS SPECIFICATIONS AND CRITERIA USED IN THE DESIGN OF THIS COMPONENT.

KOTT

JOB NAME	TRUSS NAME	QUANTITY	PLY	JOB DESC.	DRWG NO.
PT0317-081	T05	1	1	TRUSS DESC. LECCO RIDGE-BLOCK 338	ENG JOB: PT0317-081

KOTT , Stouffville, ON, CGC

Version 8.100 S Feb 9 2017 MiTek Industries, Inc. Tue Mar 14 15:57:11 2017 Page 1

ID:EvTixTQDI5yR1QLotZTBr_yE?HJ-5Ed6LU6hB81gaqCmPVne4Jpa2aCaP4apwPv3Vtzb_Pc

SCALE = 1:16.5

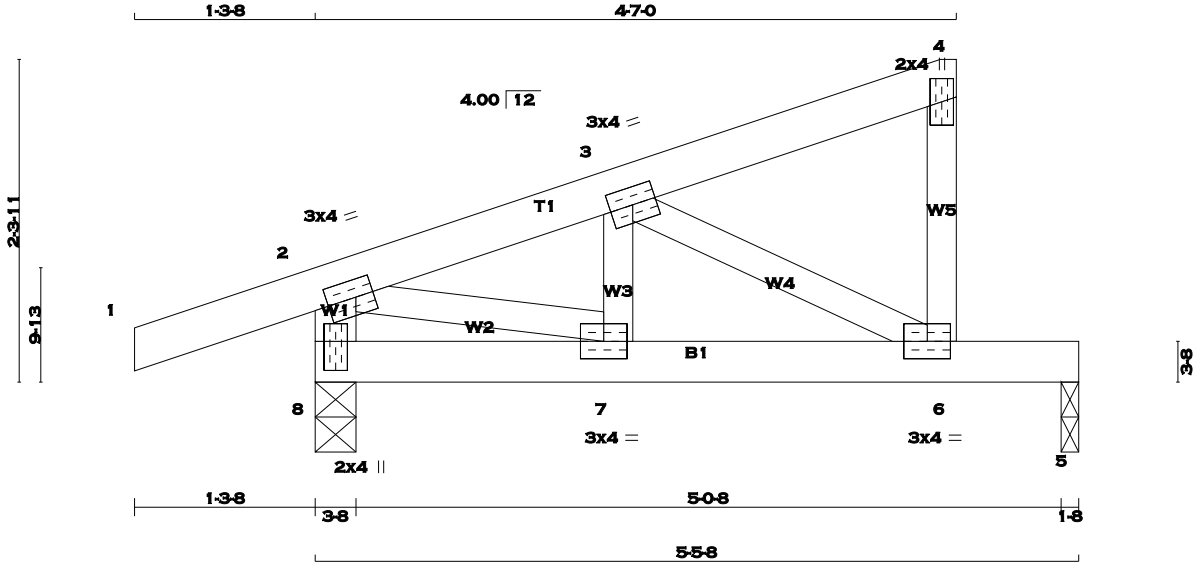

TOTAL WEIGHT = 19 lb [M]

LUMBER

N. L. G. A. RULES

CHORDS	SIZE		LUMBER	DESCR.
1 - 4	2x4	DRY	No.2	SPF
6 - 4	2x3	DRY	No.2	SPF
8 - 2	2x4	DRY	No.2	SPF
8 - 5	2x4	DRY	No.2	SPF
ALL WEBS EXCEPT	2x3	DRY	No.2	SPF

DRY: SEASONED LUMBER.

PLATES (table is in inches)

JT	TYPE	PLATES	W	LEN	Y	X
2	TMVW-t	MT20	3.0	4.0	1.50	1.50
3	TMWW-t	MT20	3.0	4.0		
4	TMV+p	MT20	2.0	4.0		
6	BMVW-t	MT20	3.0	4.0		
7	BMWW-t	MT20	3.0	4.0		
8	BMV1+p	MT20	2.0	4.0	2.50	1.00

A SIZE FOR SIZE SUBSTITUTION OF MITEK MII20 WITH TEE-LOK TL20 PLATES IS ALLOWED.

DIMENSIONS, SUPPORTS AND LOADINGS SPECIFIED BY FABRICATOR TO BE VERIFIED BY BUILDING DESIGNER

BEARINGS

JT	FACTORED GROSS REACTION VERT	HORZ	MAXIMUM FACTORED GROSS REACTION DOWN	HORZ	UPLIFT	INPUT BRG IN-SX	REQRD BRG IN-SX
8	357	0	357	0	0	3-8	3-8
5	197	0	197	0	0	1-8	1-8

UNFACTORED REACTIONS

JT	1ST LCASE COMBINED	MAX./MIN. COMPONENT REACTIONS SNOW	LIVE	PERM.LIVE	WIND	DEAD	SOIL
8	248	186 / 0	0 / 0	0 / 0	0 / 0	62 / 0	0 / 0
5	139	90 / 0	0 / 0	0 / 0	0 / 0	50 / 0	0 / 0

BEARING MATERIAL TO BE SPF NO.2 OR BETTER AT JOINT(S) 8, 5

BRACING

TOP CHORD TO BE SHEATHED OR MAX. PURLIN SPACING = 6.25 FT.
MAX. UNBRACED BOTTOM CHORD LENGTH = 10.00 FT. OR RIGID CEILING DIRECTLY APPLIED.

ALL PITCH BREAKS AND PERIMETER CORNER JOINTS MUST BE LATERALLY RESTRAINED.

LOADING

TOTAL LOAD CASES: (4)

CHORDS

MEMB. FR-TO	MAX. FACTORED FORCE (LBS)	FACTORED VERT. LOAD (PLF) FROM	TO	LC1 MAX CSI (LC)	MAX. UNBRAC LENGTH
1- 2	0 / 16	-77.3	-77.3	0.10 (1)	10.00
2- 3	-336 / 0	-77.3	-77.3	0.05 (1)	6.25
3- 4	-5 / 0	-77.3	-77.3	0.05 (1)	10.00
6- 4	-78 / 0	0.0	0.0	0.01 (1)	7.81
8- 2	-356 / 0	0.0	0.0	0.04 (1)	7.81
8- 7	0 / 0	-17.5	-17.5	0.05 (1)	10.00
7- 6	0 / 324	-17.5	-17.5	0.28 (1)	10.00
6- 5	0 / 0	-17.5	-17.5	0.22 (1)	10.00

WEBS

MEMB. FR-TO	MAX. FACTORED FORCE (LBS)	MAX CSI (LC)
7- 3	0 / 65	0.02 (4)
3- 6	-365 / 0	0.06 (1)
2- 7	0 / 334	0.08 (1)

DESIGN CRITERIA

SPECIFIED LOADS:

TOP	CH.	LL	=	23.3	PSF
		DL	=	3.0	PSF
BOT	CH.	LL	=	0.0	PSF
		DL	=	7.0	PSF
TOTAL	LOAD		=	33.3	PSF

SPACING = 24.0 IN. C/C

THIS TRUSS IS DESIGNED FOR RESIDENTIAL OR SMALL BUILDING REQUIREMENTS OF PART 9, NBCC 2010

THIS DESIGN COMPLIES WITH:
- PART 9 OF OBC 2012 , BCBC 2012 , ABC 2014
- CSA 086-09
- TPIC 2011

(55 % OF 27.2 P.S.F. G.S.L. PLUS 8.4 P.S.F. RAIN LOAD) EQUALS 23.3 P.S.F. SPECIFIED ROOF LIVE LOAD

ALLOWABLE DEFL.(LL)= L/360 (0.19")
CALCULATED VERT. DEFL.(LL) = L/ 999 (0.02")
ALLOWABLE DEFL.(TL)= L/360 (0.19")
CALCULATED VERT. DEFL.(TL) = L/ 999 (0.04")

CSI: TC=0.10 (1-2:1) , BC=0.28 (6-7:1) , WB=0.08 (2-7:1) , SSI=0.15 (5-6:1)

DOL LUMBER=1.00 NAIL=1.00 LS BEND=1.10 COMP=1.10 SHEAR=1.10 TENS= 1.10

COMPANION LIVE LOAD FACTOR = 0.50

TRUSS PLATE MANUFACTURER IS NOT RESPONSIBLE FOR QUALITY CONTROL IN THE TRUSS MANUFACTURING PLANT .

NAIL VALUES

PLATE	GRIP(DRY) (PSI) MAX	MIN	SHEAR (PLI) MAX	MIN	SECTION (PLI) MAX	MIN
MT20	618	354	1667	822	2284	1656

PLATE PLACEMENT TOL. = 0.250 inches

PLATE ROTATION TOL. = 0.5 Deg.

JSI GRIP= 0.66 (2) (INPUT = 0.90)
JSI METAL= 0.15 (2) (INPUT = 1.00)

LICENSED PROFESSIONAL ENGINEER
P.M. TREVISAN
100136551
March 14th, 2017
PROVINCE OF ONTARIO

RECEIVED
TOWN OF MILTON
MAR 29, 2017
17-5233
BUILDING DIVISION

READ ALL NOTES ON THIS PAGE AND ON THE ENGINEERING NOTE PAGE ENP-1. THE NOTE PAGE IS AN INTEGRAL PART OF THIS DRAWING AS IT CONTAINS SPECIFICATIONS AND CRITERIA USED IN THE DESIGN OF THIS COMPONENT.

KOTT

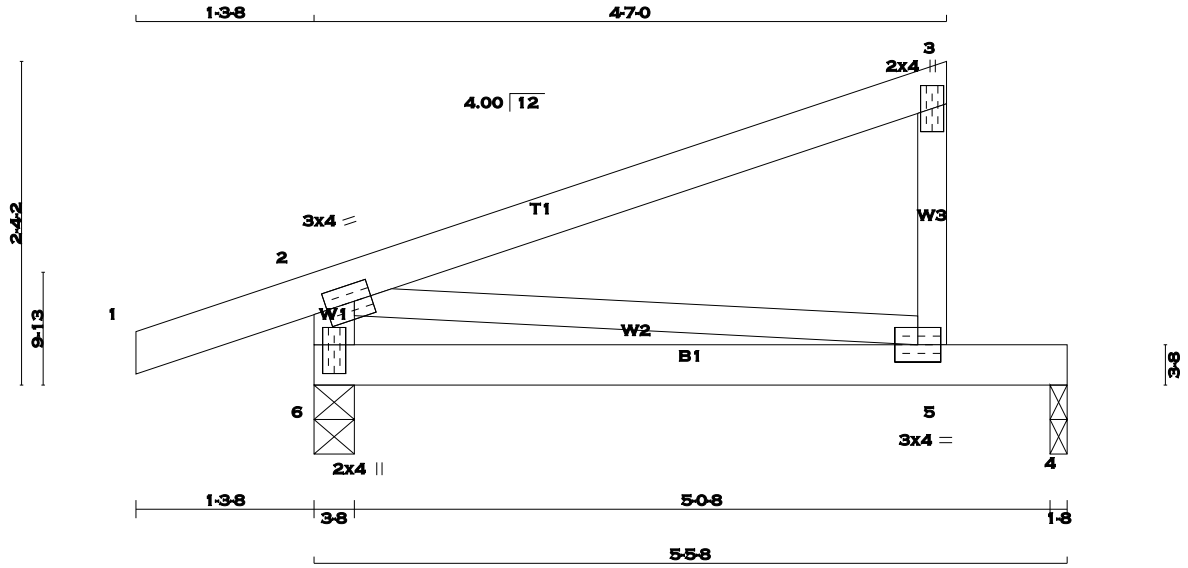

TOTAL WEIGHT = 3 X 19 = 56 lb [M]

LUMBER

N. L. G. A. RULES

CHORDS	SIZE		LUMBER	DESCR.
1 - 3	2x4	DRY	No.2	SPF
5 - 3	2x3	DRY	No.2	SPF
6 - 2	2x4	DRY	No.2	SPF
6 - 4	2x4	DRY	No.2	SPF
ALL WEBS	2x3	DRY	No.2	SPF

DRY: SEASONED LUMBER.

PLATES (table is in inches)

JT	TYPE	PLATES	W	LEN	Y	X
2	TMVW-t	MT20	3.0	4.0	1.50	1.50
3	TMV+p	MT20	2.0	4.0		
5	BMVW-t	MT20	3.0	4.0		
6	BMV1+p	MT20	2.0	4.0	2.50	1.00

A SIZE FOR SIZE SUBSTITUTION OF MITEK MII20 WITH TEE-LOK TL20 PLATES IS ALLOWED.

DIMENSIONS, SUPPORTS AND LOADINGS SPECIFIED BY FABRICATOR TO BE VERIFIED BY BUILDING DESIGNER

BEARINGS

JT	FACTORED GROSS REACTION VERT	HORZ	MAXIMUM FACTORED GROSS REACTION DOWN	HORZ	UPLIFT	INPUT BRG IN-SX	REQRD BRG IN-SX
6	357	0	357	0	0	3-8	3-8
4	197	0	197	0	0	1-8	1-8

UNFACTORED REACTIONS

JT	1ST LCASE COMBINED	MAX./MIN. COMPONENT REACTIONS SNOW	LIVE	PERM.LIVE	WIND	DEAD	SOIL
6	248	186 / 0	0 / 0	0 / 0	0 / 0	62 / 0	0 / 0
4	139	90 / 0	0 / 0	0 / 0	0 / 0	50 / 0	0 / 0

BEARING MATERIAL TO BE SPF NO.2 OR BETTER AT JOINT(S) 6, 4

BRACING

TOP CHORD TO BE SHEATHED OR MAX. PURLIN SPACING = 10.00 FT.
MAX. UNBRACED BOTTOM CHORD LENGTH = 10.00 FT. OR RIGID CEILING DIRECTLY APPLIED.

ALL PITCH BREAKS AND PERIMETER CORNER JOINTS MUST BE LATERALLY RESTRAINED.

LOADING

TOTAL LOAD CASES: (4)

CHORDS

MEMB. FR-TO	MAX. FACTORED FORCE (LBS)	FACTORED VERT. LOAD (PLF) FROM	TO	LC1 MAX CSI (LC)	MAX. UNBRAC LENGTH
1- 2	0 / 16	-77.3	-77.3	0.10 (1)	10.00
2- 3	0 / 0	-77.3	-77.3	0.28 (1)	10.00
5- 3	-177 / 0	0.0	0.0	0.03 (1)	7.81
6- 2	-281 / 0	0.0	0.0	0.03 (1)	7.81
6- 5	0 / 0	-17.5	-17.5	0.23 (1)	10.00
5- 4	0 / 0	-17.5	-17.5	0.22 (1)	10.00

WEBS

MEMB. FR-TO	MAX. FACTORED FORCE (LBS)	MAX CSI (LC)
2- 5	0 / 0	0.00 (1)

DESIGN CRITERIA

SPECIFIED LOADS:

TOP	CH.	LL	=	23.3	PSF
		DL	=	3.0	PSF
BOT	CH.	LL	=	0.0	PSF
		DL	=	7.0	PSF
TOTAL	LOAD		=	33.3	PSF

SPACING = 24.0 IN. C/C

THIS TRUSS IS DESIGNED FOR RESIDENTIAL OR SMALL BUILDING REQUIREMENTS OF PART 9, NBCC 2010

THIS DESIGN COMPLIES WITH:
- PART 9 OF OBC 2012 , BCBC 2012 , ABC 2014
- CSA 086-09
- TPIC 2011

(55 % OF 27.2 P.S.F. G.S.L. PLUS 8.4 P.S.F. RAIN LOAD) EQUALS 23.3 P.S.F. SPECIFIED ROOF LIVE LOAD

ALLOWABLE DEFL.(LL)= L/360 (0.19")
CALCULATED VERT. DEFL.(LL) = L/ 999 (0.04")
ALLOWABLE DEFL.(TL)= L/360 (0.19")
CALCULATED VERT. DEFL.(TL) = L/ 682 (0.10")

CSI: TC=0.28 (2-3:1) , BC=0.23 (5-6:1) , WB=0.00 (2-5:1) , SSI=0.15 (4-5:1)

DOL LUMBER=1.00 NAIL=1.00 LS BEND=1.10 COMP=1.10 SHEAR=1.10 TENS= 1.10

COMPANION LIVE LOAD FACTOR = 0.50

TRUSS PLATE MANUFACTURER IS NOT RESPONSIBLE FOR QUALITY CONTROL IN THE TRUSS MANUFACTURING PLANT .

NAIL VALUES

PLATE	GRIP(DRY) (PSI) MAX	MIN	SHEAR (PLI) MAX	MIN	SECTION (PLI) MAX	MIN
MT20	618	354	1667	822	2284	1656

PLATE PLACEMENT TOL. = 0.250 inches

PLATE ROTATION TOL. = 5.0 Deg.

JSI GRIP= 0.26 (2) (INPUT = 0.90)
JSI METAL= 0.05 (6) (INPUT = 1.00)

LICENSED PROFESSIONAL ENGINEER
P.M. TREVISAN
100136551
March 14th, 2017
PROVINCE OF ONTARIO

RECEIVED
TOWN OF MILTON
MAR 29, 2017
17-5233
BUILDING DIVISION

READ ALL NOTES ON THIS PAGE AND ON THE ENGINEERING NOTE PAGE ENP-1. THE NOTE PAGE IS AN INTEGRAL PART OF THIS DRAWING AS IT CONTAINS SPECIFICATIONS AND CRITERIA USED IN THE DESIGN OF THIS COMPONENT.

KOTT

JOB NAME	TRUSS NAME	QUANTITY	PLY	JOB DESC.	DRWG NO.
PT0317-081	T07	3	1	TRUSS DESC. LECCO RIDGE-BLOCK 338	ENG JOB: PT0317-081

KOTT , Stouffville, ON, CGC

Version 8.100 S Feb 9 2017 MiTek Industries, Inc. Tue Mar 14 15:57:11 2017 Page 1

ID:EvTixTQDI5yR1QLotZTBr_yE?HJ-5Ed6LU6hB81gaqCmPVne4JpaZaGzP5xpwPv3Vtzb_Pc

SCALE = 1:24.5

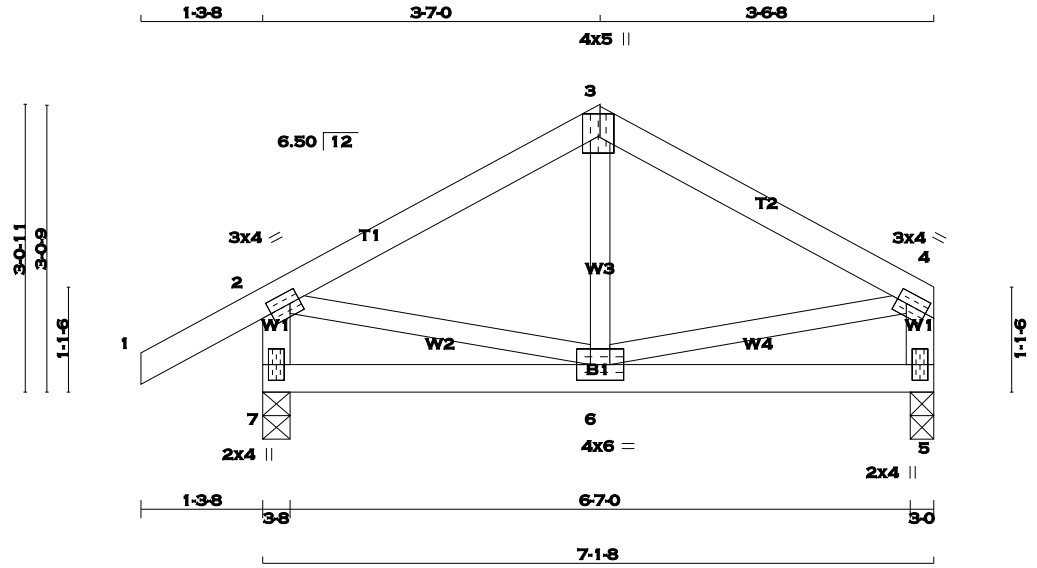

TOTAL WEIGHT = 3 X 28 = 84 lb

[M][F]

LUMBER

N. L. G. A. RULES

CHORDS	SIZE		LUMBER	DESCR.
1 - 3	2x4	DRY	No.2	SPF
3 - 4	2x4	DRY	No.2	SPF
7 - 2	2x4	DRY	No.2	SPF
5 - 4	2x4	DRY	No.2	SPF
7 - 5	2x4	DRY	No.2	SPF
ALL WEBS EXCEPT	2x3	DRY	No.2	SPF

DRY: SEASONED LUMBER.

PLATES (table is in inches)

JT	TYPE	PLATES	W	LEN	Y	X
2	TMVW-t	MT20	3.0	4.0	1.50	1.25
3	TTW+p	MT20	4.0	5.0	Edge	1.75
4	TMVW-t	MT20	3.0	4.0	1.50	1.25
5	BMV1+p	MT20	2.0	4.0		
6	BMWWW-t	MT20	4.0	6.0		
7	BMV1+p	MT20	2.0	4.0		

Edge - INDICATES REFERENCE CORNER OF PLATE TOUCHES EDGE OF CHORD.

A SIZE FOR SIZE SUBSTITUTION OF MITEK MII20 WITH TEE-LOK TL20 PLATES IS ALLOWED.

DIMENSIONS, SUPPORTS AND LOADINGS SPECIFIED BY FABRICATOR TO BE VERIFIED BY BUILDING DESIGNER

BEARINGS

JT	FACTORED GROSS REACTION VERT	HORZ	MAXIMUM FACTORED GROSS REACTION DOWN	HORZ	UPLIFT	INPUT BRG IN-SX	REQRD BRG IN-SX
7	443	0	443	0	0	3-8	3-8
5	338	0	338	0	0	3-0	3-0

UNFACTORED REACTIONS

JT	1ST LCASE COMBINED	MAX./MIN. COMPONENT REACTIONS SNOW	LIVE	PERM.LIVE	WIND	DEAD	SOIL
7	309	229 / 0	0 / 0	0 / 0	0 / 0	79 / 0	0 / 0
5	237	166 / 0	0 / 0	0 / 0	0 / 0	71 / 0	0 / 0

BEARING MATERIAL TO BE SPF NO.2 OR BETTER AT JOINT(S) 7, 5

BRACING

TOP CHORD TO BE SHEATHED OR MAX. PURLIN SPACING = 6.25 FT.
MAX. UNBRACED BOTTOM CHORD LENGTH = 10.00 FT. OR RIGID CEILING DIRECTLY APPLIED.

ALL PITCH BREAKS AND PERIMETER CORNER JOINTS MUST BE LATERALLY RESTRAINED.

LOADING

TOTAL LOAD CASES: (4)

CHORDS

MEMB. FR-TO	MAX. FACTORED FORCE (LBS)	FACTORED VERT. LOAD (PLF) FROM	TO	LC1 MAX CSI (LC)	MAX. UNBRAC LENGTH
1- 2	0 / 25	-77.3	-77.3	0.10 (1)	10.00
2- 3	-259 / 0	-77.3	-77.3	0.13 (1)	6.25
3- 4	-260 / 0	-77.3	-77.3	0.12 (1)	6.25
7- 2	-418 / 0	0.0	0.0	0.04 (1)	7.81
5- 4	-313 / 0	0.0	0.0	0.03 (1)	7.81
7- 6	0 / 0	-17.5	-17.5	0.06 (4)	10.00
6- 5	0 / 0	-17.5	-17.5	0.06 (4)	10.00

WEBS

MEMB. FR-TO	MAX. FACTORED FORCE (LBS)	MAX CSI (LC)
6- 3	-28 / 52	0.02 (4)
2- 6	0 / 234	0.05 (1)
6- 4	0 / 234	0.05 (1)

DESIGN CRITERIA

SPECIFIED LOADS:

TOP	CH.	LL	=	23.3	PSF
		DL	=	3.0	PSF
BOT	CH.	LL	=	0.0	PSF
		DL	=	7.0	PSF
TOTAL	LOAD		=	33.3	PSF

SPACING = 24.0 IN. C/C

THIS TRUSS IS DESIGNED FOR RESIDENTIAL OR SMALL BUILDING REQUIREMENTS OF PART 9, NBCC 2010

THIS DESIGN COMPLIES WITH:
- PART 9 OF OBC 2012 , BCBC 2012 , ABC 2014
- CSA 086-09
- TPIC 2011

(55 % OF 27.2 P.S.F. G.S.L. PLUS 8.4 P.S.F. RAIN LOAD) EQUALS 23.3 P.S.F. SPECIFIED ROOF LIVE LOAD

ALLOWABLE DEFL.(LL)= L/360 (0.24")
CALCULATED VERT. DEFL.(LL) = L/ 999 (0.00")
ALLOWABLE DEFL.(TL)= L/360 (0.24")
CALCULATED VERT. DEFL.(TL) = L/ 999 (0.01")

CSI: TC=0.13 (2-3:1) , BC=0.06 (6-7:4) , WB=0.05 (4-6:1) , SSI=0.10 (2-3:1)

DOL LUMBER=1.00 NAIL=1.00 LS BEND=1.10 COMP=1.10 SHEAR=1.10 TENS= 1.10

COMPANION LIVE LOAD FACTOR = 0.50

TRUSS PLATE MANUFACTURER IS NOT RESPONSIBLE FOR QUALITY CONTROL IN THE TRUSS MANUFACTURING PLANT .

NAIL VALUES

PLATE	GRIP(DRY) (PSI) MAX	MIN	SHEAR (PLI) MAX	MIN	SECTION (PLI) MAX	MIN
MT20	618	354	1667	822	2284	1656

PLATE PLACEMENT TOL. = 0.250 inches

PLATE ROTATION TOL. = 5.0 Deg.

JSI GRIP= 0.57 (4) (INPUT = 0.90)
JSI METAL= 0.14 (2) (INPUT = 1.00)

LICENSED PROFESSIONAL ENGINEER
P.M. TREVISAN
100136551
March 14th, 2017
PROVINCE OF ONTARIO

RECEIVED
TOWN OF MILTON
MAR 29, 2017
17-5233
BUILDING DIVISION

READ ALL NOTES ON THIS PAGE AND ON THE ENGINEERING NOTE PAGE ENP-1. THE NOTE PAGE IS AN INTEGRAL PART OF THIS DRAWING AS IT CONTAINS SPECIFICATIONS AND CRITERIA USED IN THE DESIGN OF THIS COMPONENT.

KOTT

JOB NAME	TRUSS NAME	QUANTITY	PLY	JOB DESC.	DRWG NO.
PT0317-081	**T08**	**2**	**1**	TRUSS DESC. LECCO RIDGE-BLOCK 338	Page 48 of 130 ENG JOB: PT0317-081

KOTT , Stouffville, ON, CGC

Version 8.100 S Feb 9 2017 MiTek Industries, Inc. Tue Mar 14 15:57:12 2017 Page 1

ID:EvTixTQDI5yR1QLotZTBr_yE?HJ-ZQBVYp7JyR9XCznzzCIudXMe9_X68Uly93ec1Kzb_Pb

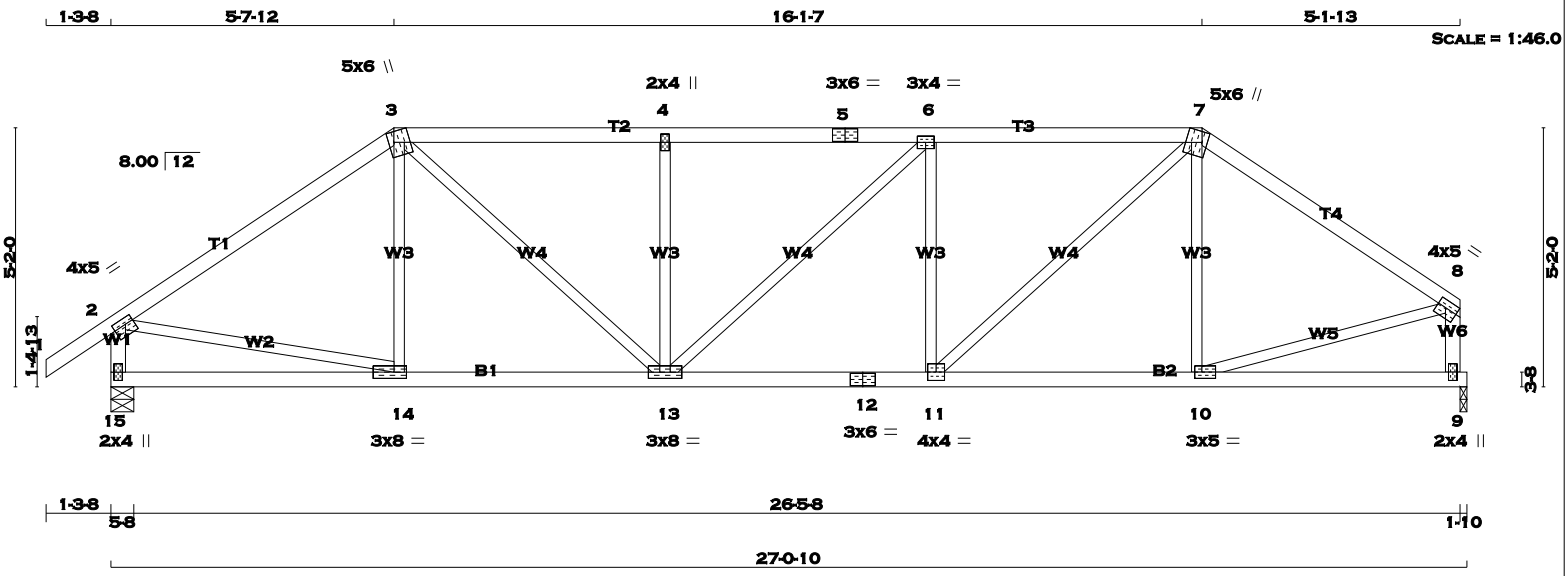

TOTAL WEIGHT = 2 X 109 = 218 lb [M]

LUMBER

N. L. G. A. RULES

CHORDS	SIZE		LUMBER	DESCR.
1 - 3	2x4	DRY	No.2	SPF
3 - 5	2x4	DRY	No.2	SPF
5 - 7	2x4	DRY	No.2	SPF
7 - 8	2x4	DRY	No.2	SPF
15 - 2	2x4	DRY	No.2	SPF
9 - 8	2x4	DRY	No.2	SPF
15 - 12	2x4	DRY	No.2	SPF
12 - 9	2x4	DRY	No.2	SPF
ALL WEBS EXCEPT	2x3	DRY	No.2	SPF

DRY: SEASONED LUMBER.

PLATES (table is in inches)

JT	TYPE	PLATES	W	LEN	Y	X
2	TMVW-t	MT20	4.0	5.0	1.50	2.00
3	TTWW+m	MT20	5.0	6.0	Edge	3.75
4	TMW+w	MT20	2.0	4.0		
5	TS-t	MT20	3.0	6.0		
6	TMWW-t	MT20	3.0	4.0		
7	TTWW+m	MT20	5.0	6.0	Edge	3.75
8	TMVW-t	MT20	4.0	5.0	1.75	Edge
9	BMV1+p	MT20	2.0	4.0		
10	BMWW-t	MT20	3.0	5.0	1.50	1.75
11	BMWW-t	MT20	4.0	4.0		
12	BS-t	MT20	3.0	6.0		
13	BMWWW-t	MT20	3.0	8.0		
14	BMWW-t	MT20	3.0	8.0	1.50	3.00
15	BMV1+p	MT20	2.0	4.0		

Edge - INDICATES REFERENCE CORNER OF PLATE TOUCHES EDGE OF CHORD.

A SIZE FOR SIZE SUBSTITUTION OF MITEK MII20 WITH TEE-LOK TL20 PLATES IS ALLOWED.

DIMENSIONS, SUPPORTS AND LOADINGS SPECIFIED BY FABRICATOR TO BE VERIFIED BY BUILDING DESIGNER

BEARINGS

JT	FACTORED GROSS REACTION VERT	HORZ	MAXIMUM FACTORED GROSS REACTION DOWN	HORZ	UPLIFT	INPUT BRG IN-SX	REQRD BRG IN-SX
15	1383	0	1383	0	0	5-8	5-8
9	1276	0	1276	0	0	1-10	1-10

UNFACTORED REACTIONS

JT	1ST LCASE COMBINED	MAX./MIN. COMPONENT REACTIONS SNOW	LIVE	PERM.LIVE	WIND	DEAD	SOIL
15	968	691 / 0	0 / 0	0 / 0	0 / 0	277 / 0	0 / 0
9	896	627 / 0	0 / 0	0 / 0	0 / 0	269 / 0	0 / 0

BEARING MATERIAL TO BE SPF NO.2 OR BETTER AT JOINT(S) 15, 9

BRACING

TOP CHORD TO BE SHEATHED OR MAX. PURLIN SPACING = 4.64 FT.
MAX. UNBRACED BOTTOM CHORD LENGTH = 10.00 FT. OR RIGID CEILING DIRECTLY APPLIED.

ALL PITCH BREAKS AND PERIMETER CORNER JOINTS MUST BE LATERALLY RESTRAINED.

LOADING

TOTAL LOAD CASES: (4)

CHORDS

MEMB. FR-TO	MAX. FACTORED FORCE (LBS)	FACTORED VERT. LOAD (PLF) FROM	TO	LC1 CSI (LC)	MAX UNBRAC LENGTH
1- 2	0 / 29	-77.3	-77.3	0.10 (1)	10.00
2- 3	-1428 / 0	-77.3	-77.3	0.52 (1)	4.83
3- 4	-1754 / 0	-77.3	-77.3	0.36 (1)	4.65
4- 5	-1754 / 0	-77.3	-77.3	0.37 (1)	4.64
5- 6	-1754 / 0	-77.3	-77.3	0.37 (1)	4.64
6- 7	-1730 / 0	-77.3	-77.3	0.37 (1)	4.68
7- 8	-1334 / 0	-77.3	-77.3	0.42 (1)	5.10
15- 2	-1342 / 0	0.0	0.0	0.14 (1)	7.00
9- 8	-1240 / 0	0.0	0.0	0.13 (1)	7.21
15-14	0 / 0	-17.5	-17.5	0.13 (4)	10.00
14-13	0 / 1184	-17.5	-17.5	0.26 (1)	10.00
13-12	0 / 1730	-17.5	-17.5	0.32 (1)	10.00
12-11	0 / 1730	-17.5	-17.5	0.32 (1)	10.00
11-10	0 / 1104	-17.5	-17.5	0.24 (1)	10.00
10- 9	0 / 0	-17.5	-17.5	0.12 (4)	10.00

WEBS

MEMB. FR-TO	MAX. FACTORED FORCE (LBS)	MAX CSI (LC)
14- 3	-111 / 57	0.04 (1)
3-13	0 / 766	0.17 (1)
13- 4	-448 / 0	0.18 (1)
13- 6	0 / 33	0.01 (1)
11- 6	-472 / 0	0.19 (1)
11- 7	0 / 841	0.19 (1)
10- 7	-194 / 27	0.08 (1)
2-14	0 / 1208	0.27 (1)
10- 8	0 / 1148	0.26 (1)

DESIGN CRITERIA

SPECIFIED LOADS:

TOP CH.	LL	=	23.3	PSF
	DL	=	3.0	PSF
BOT CH.	LL	=	0.0	PSF
	DL	=	7.0	PSF
TOTAL LOAD		=	33.3	PSF

SPACING = 24.0 IN. C/C

LOADING IN FLAT SECTION BASED ON A SLOPE OF 6.00/12

THIS TRUSS IS DESIGNED FOR RESIDENTIAL OR SMALL BUILDING REQUIREMENTS OF PART 9, NBCC 2010

THIS DESIGN COMPLIES WITH:
- PART 9 OF OBC 2012 , BCBC 2012 , ABC 2014
- CSA 086-09
- TPIC 2011

(55 % OF 27.2 P.S.F. G.S.L. PLUS 8.4 P.S.F. RAIN LOAD) EQUALS 23.3 P.S.F. SPECIFIED ROOF LIVE LOAD

ALLOWABLE DEFL.(LL)= L/360 (0.90")
CALCULATED VERT. DEFL.(LL) = L/ 999 (0.07")
ALLOWABLE DEFL.(TL)= L/360 (0.90")
CALCULATED VERT. DEFL.(TL) = L/ 999 (0.14")

CSI: TC=0.52 (2-3:1) , BC=0.32 (11-13:1) , WB=0.27 (2-14:1) , SSI=0.19 (6-7:1)

DOL LUMBER=1.00 NAIL=1.00 LS BEND=1.10 COMP=1.10 SHEAR=1.10 TENS= 1.10

COMPANION LIVE LOAD FACTOR = 0.50

TRUSS PLATE MANUFACTURER IS NOT RESPONSIBLE FOR QUALITY CONTROL IN THE TRUSS MANUFACTURING PLANT .

NAIL VALUES

PLATE	GRIP(DRY) (PSI) MAX	MIN	SHEAR (PLI) MAX	MIN	SECTION (PLI) MAX	MIN
MT20	618	354	1667	822	2284	1656

PLATE PLACEMENT TOL. = 0.250 inches

PLATE ROTATION TOL. = 5.0 Deg.

JSI GRIP= 0.90 (10) (INPUT = 0.90)
JSI METAL= 0.48 (2) (INPUT = 1.00)

LICENSED PROFESSIONAL ENGINEER
P.M. TREVISAN
100136551
March 14th, 2017
PROVINCE OF ONTARIO

RECEIVED
TOWN OF MILTON
MAR 29, 2017
17-5233
BUILDING DIVISION

READ ALL NOTES ON THIS PAGE AND ON THE ENGINEERING NOTE PAGE ENP-1. THE NOTE PAGE IS AN INTEGRAL PART OF THIS DRAWING AS IT CONTAINS SPECIFICATIONS AND CRITERIA USED IN THE DESIGN OF THIS COMPONENT.

KOTT

JOB NAME	TRUSS NAME	QUANTITY	PLY	JOB DESC.	DRWG NO.
PT0317-081	**T09**	**2**	**1**	TRUSS DESC. LECCO RIDGE-BLOCK 338	

ENG JOB: PT0317-081

KOTT , Stouffville, ON, CGC

Version 8.100 S Feb 9 2017 MiTek Industries, Inc. Tue Mar 14 15:57:13 2017 Page 1
ID:EvTixTQDI5yR1QLotZTBr_yE?HJ-1cltm98xjlHNp7M9Wwp79kvqjOudtsN5OiOAZmzb_Pa

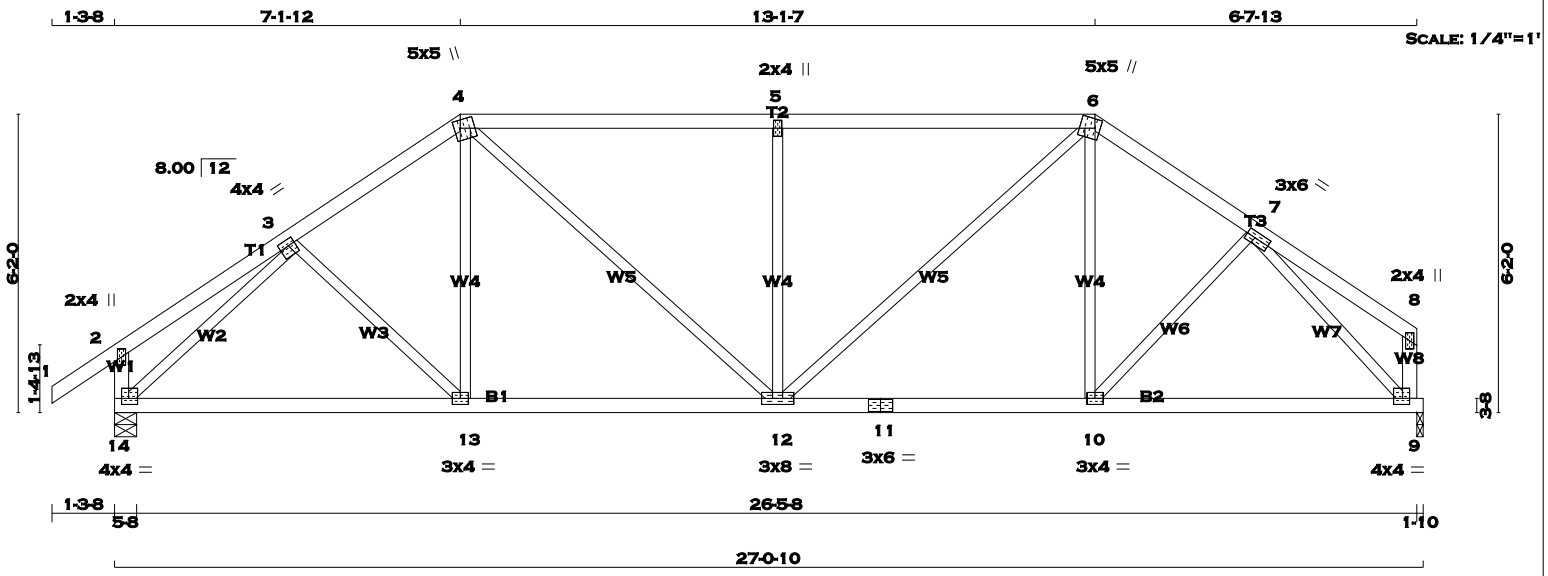

TOTAL WEIGHT = 2 X 112 = 224 lb
[M][F]

LUMBER
N. L. G. A. RULES

CHORDS	SIZE		LUMBER	DESCR.
1 - 4	2x4	DRY	No.2	SPF
4 - 6	2x4	DRY	No.2	SPF
6 - 8	2x4	DRY	No.2	SPF
14 - 2	2x4	DRY	No.2	SPF
9 - 8	2x4	DRY	No.2	SPF
14 - 11	2x4	DRY	No.2	SPF
11 - 9	2x4	DRY	No.2	SPF
ALL WEBS EXCEPT	2x3	DRY	No.2	SPF

DRY: SEASONED LUMBER.

PLATES (table is in inches)

JT	TYPE	PLATES	W	LEN	Y	X
2	TMV+p	MT20	2.0	4.0		
3	TMWW-t	MT20	4.0	4.0	1.50	1.75
4	TTWW+m	MT20	5.0	5.0	2.00	1.50
5	TMW+w	MT20	2.0	4.0		
6	TTWW+m	MT20	5.0	5.0	2.25	1.25
7	TMWW-t	MT20	3.0	6.0	1.50	2.25
8	TMV+p	MT20	2.0	4.0		
9	BMVW1-t	MT20	4.0	4.0	1.50	1.75
10	BMWW-t	MT20	3.0	4.0		
11	BS-t	MT20	3.0	6.0		
12	BMWWW-t	MT20	3.0	8.0		
13	BMWW-t	MT20	3.0	4.0		
14	BMVW1-t	MT20	4.0	4.0	1.50	1.75

A SIZE FOR SIZE SUBSTITUTION OF MITEK MII20 WITH TEE-LOK TL20 PLATES IS ALLOWED.

DIMENSIONS, SUPPORTS AND LOADINGS SPECIFIED BY FABRICATOR TO BE VERIFIED BY BUILDING DESIGNER

BEARINGS

JT	FACTORED GROSS REACTION VERT	HORZ	MAXIMUM FACTORED GROSS REACTION DOWN	HORZ	UPLIFT	INPUT BRG IN-SX	REQRD BRG IN-SX
14	1383	0	1383	0	0	5-8	5-8
9	1276	0	1276	0	0	1-10	1-10

UNFACTORED REACTIONS

JT	1ST LCASE COMBINED	MAX./MIN. COMPONENT REACTIONS SNOW	LIVE	PERM.LIVE	WIND	DEAD	SOIL
14	968	691 / 0	0 / 0	0 / 0	0 / 0	277 / 0	0 / 0
9	896	627 / 0	0 / 0	0 / 0	0 / 0	269 / 0	0 / 0

BEARING MATERIAL TO BE SPF NO.2 OR BETTER AT JOINT(S) 14, 9

BRACING
TOP CHORD TO BE SHEATHED OR MAX. PURLIN SPACING = 4.76 FT.
MAX. UNBRACED BOTTOM CHORD LENGTH = 10.00 FT. OR RIGID CEILING DIRECTLY APPLIED.

ALL PITCH BREAKS AND PERIMETER CORNER JOINTS MUST BE LATERALLY RESTRAINED.

LOADING
TOTAL LOAD CASES: (4)

CHORDS

MEMB. FR-TO	MAX. FACTORED FORCE (LBS)	FACTORED VERT. LOAD (PLF) FROM	TO	LC1 CSI (LC)	MAX UNBRAC LENGTH
1- 2	0 / 29	-77.3	-77.3	0.10 (1)	10.00
2- 3	0 / 16	-77.3	-77.3	0.14 (1)	10.00
3- 4	-1410 / 0	-77.3	-77.3	0.13 (1)	5.37
4- 5	-1537 / 0	-77.3	-77.3	0.47 (1)	4.76
5- 6	-1537 / 0	-77.3	-77.3	0.47 (1)	4.76
6- 7	-1345 / 0	-77.3	-77.3	0.11 (1)	5.49
7- 8	0 / 15	-77.3	-77.3	0.12 (1)	10.00
14- 2	-215 / 0	0.0	0.0	0.02 (1)	7.81
9- 8	-102 / 0	0.0	0.0	0.01 (1)	7.81
14-13	0 / 1151	-17.5	-17.5	0.30 (1)	10.00
13-12	0 / 1160	-17.5	-17.5	0.30 (1)	10.00
12-11	0 / 1105	-17.5	-17.5	0.29 (1)	10.00
11-10	0 / 1105	-17.5	-17.5	0.29 (1)	10.00
10- 9	0 / 1033	-17.5	-17.5	0.27 (1)	10.00

WEBS

MEMB. FR-TO	MAX. FACTORED FORCE (LBS)	MAX CSI (LC)
3-13	0 / 51	0.02 (4)
13- 4	0 / 134	0.04 (4)
4-12	0 / 506	0.11 (1)
12- 5	-623 / 0	0.37 (1)
12- 6	0 / 579	0.13 (1)
10- 6	0 / 95	0.03 (4)
10- 7	0 / 104	0.03 (4)
14- 3	-1604 / 0	0.63 (1)
7- 9	-1529 / 0	0.58 (1)

DESIGN CRITERIA

SPECIFIED LOADS:

TOP CH.	LL	=	23.3	PSF
	DL	=	3.0	PSF
BOT CH.	LL	=	0.0	PSF
	DL	=	7.0	PSF
TOTAL LOAD		=	33.3	PSF

SPACING = 24.0 IN. C/C

LOADING IN FLAT SECTION BASED ON A SLOPE OF 6.00/12

THIS TRUSS IS DESIGNED FOR RESIDENTIAL OR SMALL BUILDING REQUIREMENTS OF PART 9, NBCC 2010

THIS DESIGN COMPLIES WITH:
- PART 9 OF OBC 2012 , BCBC 2012 , ABC 2014
- CSA 086-09
- TPIC 2011

(55 % OF 27.2 P.S.F. G.S.L. PLUS 8.4 P.S.F. RAIN LOAD) EQUALS 23.3 P.S.F. SPECIFIED ROOF LIVE LOAD

ALLOWABLE DEFL.(LL)= L/360 (0.90")
CALCULATED VERT. DEFL.(LL) = L/ 999 (0.06")
ALLOWABLE DEFL.(TL)= L/360 (0.90")
CALCULATED VERT. DEFL.(TL) = L/ 999 (0.11")

CSI: TC=0.47 (4-5:1) , BC=0.30 (12-13:1) , WB=0.63 (3-14:1) , SSI=0.25 (5-6:1)

DOL LUMBER=1.00 NAIL=1.00 LS BEND=1.10 COMP=1.10 SHEAR=1.10 TENS= 1.10

COMPANION LIVE LOAD FACTOR = 0.50

TRUSS PLATE MANUFACTURER IS NOT RESPONSIBLE FOR QUALITY CONTROL IN THE TRUSS MANUFACTURING PLANT .

NAIL VALUES

PLATE	GRIP(DRY) (PSI) MAX	MIN	SHEAR (PLI) MAX	MIN	SECTION (PLI) MAX	MIN
MT20	618	354	1667	822	2284	1656

PLATE PLACEMENT TOL. = 0.250 inches

PLATE ROTATION TOL. = 5.0 Deg.

JSI GRIP= 0.89 (14) (INPUT = 0.90)
JSI METAL= 0.59 (3) (INPUT = 1.00)

LICENSED PROFESSIONAL ENGINEER
P.M. TREVISAN
100136551
March 14th, 2017
PROVINCE OF ONTARIO

RECEIVED
TOWN OF MILTON
MAR 29, 2017
17-5233
BUILDING DIVISION

READ ALL NOTES ON THIS PAGE AND ON THE ENGINEERING NOTE PAGE ENP-1. THE NOTE PAGE IS AN INTEGRAL PART OF THIS DRAWING AS IT CONTAINS SPECIFICATIONS AND CRITERIA USED IN THE DESIGN OF THIS COMPONENT.

KOTT

JOB NAME	TRUSS NAME	QUANTITY	PLY	JOB DESC.	DRWG NO.
PT0317-081	**T10**	**2**	**1**	TRUSS DESC. LECCO RIDGE-BLOCK 338	

ENG JOB: PT0317-081

KOTT , Stouffville, ON, CGC

Version 8.100 S Feb 9 2017 MiTek Industries, Inc. Tue Mar 14 15:57:14 2017 Page 1

ID:EvTixTQDI5yR1QLotZTBr_yE?HJ-WpJFzV8ZU3PERHxL4dKMiyR1bnFucMpFcM7j6Czb_PZ

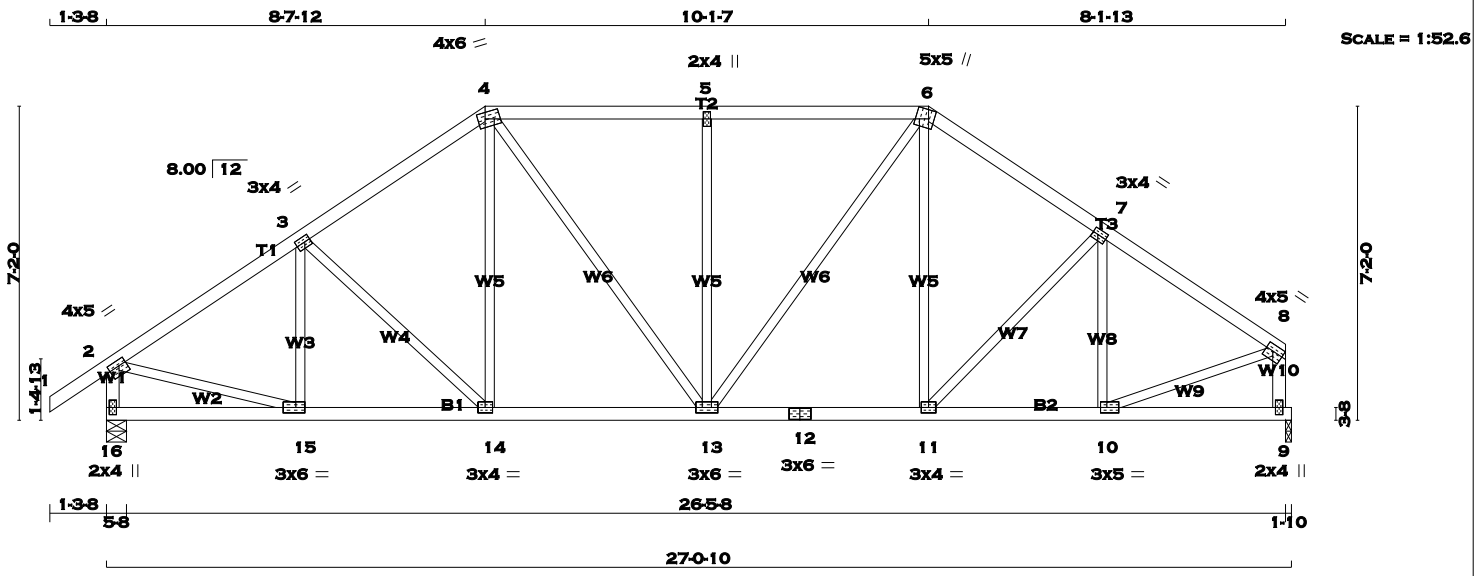

TOTAL WEIGHT = 2 X 121 = 243 lb

[M][F]

LUMBER

N. L. G. A. RULES

CHORDS	SIZE		LUMBER	DESCR.
1 - 4	2x4	DRY	No.2	SPF
4 - 6	2x4	DRY	No.2	SPF
6 - 8	2x4	DRY	No.2	SPF
16 - 2	2x4	DRY	No.2	SPF
9 - 8	2x4	DRY	No.2	SPF
16 - 12	2x4	DRY	No.2	SPF
12 - 9	2x4	DRY	No.2	SPF
ALL WEBS EXCEPT	2x3	DRY	No.2	SPF

DRY: SEASONED LUMBER.

PLATES (table is in inches)

JT	TYPE	PLATES	W	LEN	Y	X
2	TMVW-t	MT20	4.0	5.0	1.50	2.00
3	TMWW-t	MT20	3.0	4.0	1.50	1.50
4	TTWW-m	MT20	4.0	6.0	1.75	2.00
5	TMW+w	MT20	2.0	4.0		
6	TTWW+m	MT20	5.0	5.0	2.50	1.50
7	TMWW-t	MT20	3.0	4.0	1.50	1.50
8	TMVW-t	MT20	4.0	5.0	1.75	Edge
9	BMV1+p	MT20	2.0	4.0		
10	BMWW-t	MT20	3.0	5.0	1.50	1.75
11	BMWW-t	MT20	3.0	4.0		
12	BS-t	MT20	3.0	6.0		
13	BMWWW-t	MT20	3.0	6.0		
14	BMWW-t	MT20	3.0	4.0		
15	BMWW-t	MT20	3.0	6.0	1.50	2.50
16	BMV1+p	MT20	2.0	4.0		

Edge - INDICATES REFERENCE CORNER OF PLATE TOUCHES EDGE OF CHORD.

A SIZE FOR SIZE SUBSTITUTION OF MITEK MII20 WITH TEE-LOK TL20 PLATES IS ALLOWED.

DIMENSIONS, SUPPORTS AND LOADINGS SPECIFIED BY FABRICATOR TO BE VERIFIED BY BUILDING DESIGNER

BEARINGS

JT	FACTORED GROSS REACTION VERT	HORZ	MAXIMUM FACTORED GROSS REACTION DOWN	HORZ	UPLIFT	INPUT BRG IN-SX	REQRD BRG IN-SX
16	1383	0	1383	0	0	5-8	5-8
9	1276	0	1276	0	0	1-10	1-10

UNFACTORED REACTIONS

JT	1ST LCASE COMBINED	MAX./MIN. COMPONENT REACTIONS SNOW	LIVE	PERM.LIVE	WIND	DEAD	SOIL
16	968	691 / 0	0 / 0	0 / 0	0 / 0	277 / 0	0 / 0
9	896	627 / 0	0 / 0	0 / 0	0 / 0	269 / 0	0 / 0

BEARING MATERIAL TO BE SPF NO.2 OR BETTER AT JOINT(S) 16, 9

BRACING

TOP CHORD TO BE SHEATHED OR MAX. PURLIN SPACING = 5.24 FT.
MAX. UNBRACED BOTTOM CHORD LENGTH = 10.00 FT. OR RIGID CEILING DIRECTLY APPLIED.

ALL PITCH BREAKS AND PERIMETER CORNER JOINTS MUST BE LATERALLY RESTRAINED.

LOADING

TOTAL LOAD CASES: (4)

CHORDS

MEMB. FR-TO	MAX. FACTORED FORCE (LBS)	FACTORED VERT. LOAD (PLF) FROM	TO	LC1 MAX CSI (LC)	MAX. UNBRAC LENGTH
1- 2	0 / 29	-77.3	-77.3	0.10 (1)	10.00
2- 3	-1443 / 0	-77.3	-77.3	0.21 (1)	5.24
3- 4	-1339 / 0	-77.3	-77.3	0.20 (1)	5.40
4- 5	-1288 / 0	-77.3	-77.3	0.27 (1)	5.38
5- 6	-1288 / 0	-77.3	-77.3	0.27 (1)	5.38
6- 7	-1297 / 0	-77.3	-77.3	0.18 (1)	5.49
7- 8	-1318 / 0	-77.3	-77.3	0.18 (1)	5.46
16- 2	-1348 / 0	0.0	0.0	0.14 (1)	6.98
9- 8	-1244 / 0	0.0	0.0	0.13 (1)	7.20
16-15	0 / 0	-17.5	-17.5	0.07 (4)	10.00
15-14	0 / 1218	-17.5	-17.5	0.24 (1)	10.00
14-13	0 / 1097	-17.5	-17.5	0.22 (1)	10.00
13-12	0 / 1062	-17.5	-17.5	0.21 (1)	10.00
12-11	0 / 1062	-17.5	-17.5	0.21 (1)	10.00
11-10	0 / 1113	-17.5	-17.5	0.22 (1)	10.00
10- 9	0 / 0	-17.5	-17.5	0.06 (4)	10.00

WEBS

MEMB. FR-TO	MAX. FACTORED FORCE (LBS)	MAX CSI (LC)
15- 3	-219 / 7	0.06 (1)
3-14	-169 / 0	0.10 (1)
14- 4	0 / 199	0.04 (1)
4-13	0 / 321	0.07 (1)
13- 5	-477 / 0	0.43 (1)
13- 6	0 / 380	0.09 (1)
11- 6	0 / 136	0.03 (4)
11- 7	-76 / 0	0.04 (1)
10- 7	-303 / 0	0.09 (1)
2-15	0 / 1253	0.28 (1)
10- 8	0 / 1175	0.26 (1)

DESIGN CRITERIA

SPECIFIED LOADS:

TOP CH.	LL	=	23.3	PSF
	DL	=	3.0	PSF
BOT CH.	LL	=	0.0	PSF
	DL	=	7.0	PSF
TOTAL LOAD		=	33.3	PSF

SPACING = 24.0 IN. C/C

LOADING IN FLAT SECTION BASED ON A SLOPE OF 6.00/12

THIS TRUSS IS DESIGNED FOR RESIDENTIAL OR SMALL BUILDING REQUIREMENTS OF PART 9, NBCC 2010

THIS DESIGN COMPLIES WITH:
- PART 9 OF OBC 2012 , BCBC 2012 , ABC 2014
- CSA 086-09
- TPIC 2011

(55 % OF 27.2 P.S.F. G.S.L. PLUS 8.4 P.S.F. RAIN LOAD) EQUALS 23.3 P.S.F. SPECIFIED ROOF LIVE LOAD

ALLOWABLE DEFL.(LL)= L/360 (0.90")
CALCULATED VERT. DEFL.(LL) = L/ 999 (0.05")
ALLOWABLE DEFL.(TL)= L/360 (0.90")
CALCULATED VERT. DEFL.(TL) = L/ 999 (0.09")

CSI: TC=0.27 (4-5:1) , BC=0.24 (14-15:1) , WB=0.43 (5-13:1) , SSI=0.19 (4-5:1)

DOL LUMBER=1.00 NAIL=1.00 LS BEND=1.10 COMP=1.10 SHEAR=1.10 TENS= 1.10

COMPANION LIVE LOAD FACTOR = 0.50

TRUSS PLATE MANUFACTURER IS NOT RESPONSIBLE FOR QUALITY CONTROL IN THE TRUSS MANUFACTURING PLANT .

NAIL VALUES

PLATE	GRIP(DRY) (PSI) MAX	MIN	SHEAR (PLI) MAX	MIN	SECTION (PLI) MAX	MIN
MT20	618	354	1667	822	2284	1656

PLATE PLACEMENT TOL. = 0.250 inches

PLATE ROTATION TOL. = 5.0 Deg.

JSI GRIP= 0.90 (10) (INPUT = 0.90)
JSI METAL= 0.48 (2) (INPUT = 1.00)

LICENSED PROFESSIONAL ENGINEER
P.M. TREVISAN
100136551
March 14th, 2017
PROVINCE OF ONTARIO

RECEIVED
TOWN OF MILTON
MAR 29, 2017
17-5233
BUILDING DIVISION

READ ALL NOTES ON THIS PAGE AND ON THE ENGINEERING NOTE PAGE ENP-1. THE NOTE PAGE IS AN INTEGRAL PART OF THIS DRAWING AS IT CONTAINS SPECIFICATIONS AND CRITERIA USED IN THE DESIGN OF THIS COMPONENT.

KOTT

JOB NAME	TRUSS NAME	QUANTITY	PLY	JOB DESC.	DRWG NO.
PT0317-081	T11	2	1	TRUSS DESC. LECCO RIDGE-BLOCK 338	

KOTT , Stouffville, ON, CGC

Version 8.100 S Feb 9 2017 MiTek Industries, Inc. Tue Mar 14 15:57:14 2017 Page 1
ID:EvTixTQDI5yR1QLotZTBr_yE?HJ-WpJFzV8ZU3PERHxL4dKMiyR1JnEHcO2FcM7j6Czb_PZ

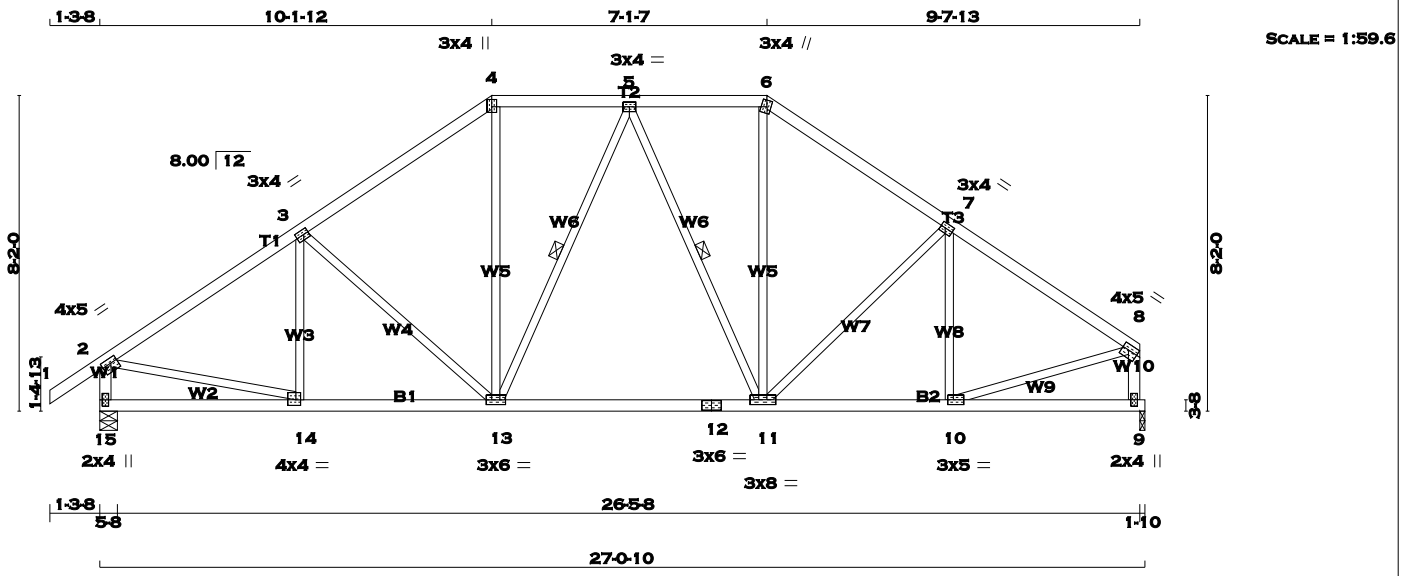

TOTAL WEIGHT = 2 X 122 = 244 lb
[M][F]

LUMBER
N. L. G. A. RULES

CHORDS	SIZE		LUMBER	DESCR.
1 - 4	2x4	DRY	No.2	SPF
4 - 6	2x4	DRY	No.2	SPF
6 - 8	2x4	DRY	No.2	SPF
15 - 2	2x4	DRY	No.2	SPF
9 - 8	2x4	DRY	No.2	SPF
15 - 12	2x4	DRY	No.2	SPF
12 - 9	2x4	DRY	No.2	SPF
ALL WEBS EXCEPT	2x3	DRY	No.2	SPF

DRY: SEASONED LUMBER.

PLATES (table is in inches)

JT	TYPE	PLATES	W	LEN	Y	X
2	TMVW-t	MT20	4.0	5.0	1.50	2.00
3	TMWW-t	MT20	3.0	4.0	1.50	1.50
4	TTW+p	MT20	3.0	4.0	2.25	1.50
5	TMWW-t	MT20	3.0	4.0		
6	TTW+m	MT20	3.0	4.0	2.00	1.25
7	TMWW-t	MT20	3.0	4.0	1.50	1.50
8	TMVW-t	MT20	4.0	5.0	1.75	Edge
9	BMV1+p	MT20	2.0	4.0		
10	BMWW-t	MT20	3.0	5.0	1.50	1.75
11	BMWWW-t	MT20	3.0	8.0		
12	BS-t	MT20	3.0	6.0		
13	BMWWW-t	MT20	3.0	6.0		
14	BMWW-t	MT20	4.0	4.0	1.75	1.50
15	BMV1+p	MT20	2.0	4.0		

Edge - INDICATES REFERENCE CORNER OF PLATE TOUCHES EDGE OF CHORD.

A SIZE FOR SIZE SUBSTITUTION OF MITEK MII20 WITH TEE-LOK TL20 PLATES IS ALLOWED.

DIMENSIONS, SUPPORTS AND LOADINGS SPECIFIED BY FABRICATOR TO BE VERIFIED BY BUILDING DESIGNER

BEARINGS

JT	FACTORED GROSS REACTION VERT	HORZ	MAXIMUM FACTORED GROSS REACTION DOWN	HORZ	UPLIFT	INPUT BRG IN-SX	REQRD BRG IN-SX
15	1383	0	1383	0	0	5-8	5-8
9	1276	0	1276	0	0	1-10	1-10

UNFACTORED REACTIONS

JT	1ST LCASE COMBINED	MAX./MIN. COMPONENT REACTIONS SNOW	LIVE	PERM.LIVE	WIND	DEAD	SOIL
15	968	691 / 0	0 / 0	0 / 0	0 / 0	277 / 0	0 / 0
9	896	627 / 0	0 / 0	0 / 0	0 / 0	269 / 0	0 / 0

BEARING MATERIAL TO BE SPF NO.2 OR BETTER AT JOINT(S) 15, 9

BRACING
TOP CHORD TO BE SHEATHED OR MAX. PURLIN SPACING = 5.12 FT.
MAX. UNBRACED BOTTOM CHORD LENGTH = 10.00 FT. OR RIGID CEILING DIRECTLY APPLIED.

ALL PITCH BREAKS AND PERIMETER CORNER JOINTS MUST BE LATERALLY RESTRAINED.

1 - 2x3 SPF No.2 LATERAL BRACE(S) AT 1/ 2 LENGTH OF 5-13, 5-11. DBS = 20-0-0 . CBF = 26 LBS.

DBS = DIAGONAL BRACE SPACING (MAX). CBF = CUMULATIVE BRACING FORCE. FASTEN LATERAL BRACE(S) USING (0.122"X3") SPIRAL NAILS : 1 NAIL FOR 2x3 BRACE(S), 2 FOR 1x4, 2x4, 2x5, 3 FOR 2x6, 4 FOR 2x8, 5 FOR 2x10, AND 6 FOR 2x12.

END VERTICAL(S) MUST BE SHEATHED OR HAVE BRACES AS INDICATED IN THE MAX. UNBRACED LENGTH COLUMN OF THE TABLE BELOW

LOADING
TOTAL LOAD CASES: (4)

CHORDS

MEMB. FR-TO	MAX. FACTORED FORCE (LBS)	FACTORED VERT. LOAD (PLF) FROM	TO	LC1	MAX CSI (LC)	MAX. UNBRAC LENGTH
1- 2	0 / 29	-77.3	-77.3	0.10 (1)		10.00
2- 3	-1461 / 0	-77.3	-77.3	0.29 (1)		5.12
3- 4	-1267 / 0	-77.3	-77.3	0.27 (1)		5.42
4- 5	-1037 / 0	-77.3	-77.3	0.12 (1)		6.04
5- 6	-1016 / 0	-77.3	-77.3	0.12 (1)		6.08
6- 7	-1241 / 0	-77.3	-77.3	0.25 (1)		5.50
7- 8	-1352 / 0	-77.3	-77.3	0.25 (1)		5.32
15- 2	-1343 / 0	0.0	0.0	0.14 (1)		6.99
9- 8	-1239 / 0	0.0	0.0	0.13 (1)		7.22
15-14	0 / 0	-17.5	-17.5	0.10 (4)		10.00
14-13	0 / 1237	-17.5	-17.5	0.28 (1)		10.00
13-12	0 / 1098	-17.5	-17.5	0.25 (1)		10.00
12-11	0 / 1098	-17.5	-17.5	0.25 (1)		10.00
11-10	0 / 1145	-17.5	-17.5	0.26 (1)		10.00
10- 9	0 / 0	-17.5	-17.5	0.09 (4)		10.00

WEBS

MEMB. FR-TO	MAX. FACTORED FORCE (LBS)	MAX CSI (LC)
14- 3	-168 / 29	0.06 (1)
3-13	-276 / 0	0.24 (1)
13- 4	0 / 434	0.10 (1)
13- 5	-153 / 0	0.08 (1)
5-11	-205 / 0	0.10 (1)
11- 6	0 / 427	0.10 (1)
11- 7	-188 / 0	0.16 (1)
10- 7	-244 / 2	0.09 (1)
2-14	0 / 1263	0.28 (1)
10- 8	0 / 1191	0.27 (1)

DESIGN CRITERIA

SPECIFIED LOADS:

TOP CH.	LL	=	23.3	PSF
	DL	=	3.0	PSF
BOT CH.	LL	=	0.0	PSF
	DL	=	7.0	PSF
TOTAL LOAD		=	33.3	PSF

SPACING = 24.0 IN. C/C

LOADING IN FLAT SECTION BASED ON A SLOPE OF 6.00/12

THIS TRUSS IS DESIGNED FOR RESIDENTIAL OR SMALL BUILDING REQUIREMENTS OF PART 9, NBCC 2010

THIS DESIGN COMPLIES WITH:
- PART 9 OF OBC 2012 , BCBC 2012 , ABC 2014
- CSA 086-09
- TPIC 2011

(55 % OF 27.2 P.S.F. G.S.L. PLUS 8.4 P.S.F. RAIN LOAD) EQUALS 23.3 P.S.F. SPECIFIED ROOF LIVE LOAD

ALLOWABLE DEFL.(LL)= L/360 (0.90")
CALCULATED VERT. DEFL.(LL) = L/ 999 (0.04")
ALLOWABLE DEFL.(TL)= L/360 (0.90")
CALCULATED VERT. DEFL.(TL) = L/ 999 (0.11")

CSI: TC=0.29 (2-3:1) , BC=0.28 (13-14:1) , WB=0.28 (2-14:1) , SSI=0.16 (2-3:1)

DOL LUMBER=1.00 NAIL=1.00 LS BEND=1.10 COMP=1.10 SHEAR=1.10 TENS= 1.10

COMPANION LIVE LOAD FACTOR = 0.50

TRUSS PLATE MANUFACTURER IS NOT RESPONSIBLE FOR QUALITY CONTROL IN THE TRUSS MANUFACTURING PLANT .

NAIL VALUES

PLATE	GRIP(DRY) (PSI) MAX	MIN	SHEAR (PLI) MAX	MIN	SECTION (PLI) MAX	MIN
MT20	618	354	1667	822	2284	1656

PLATE PLACEMENT TOL. = 0.250 inches

PLATE ROTATION TOL. = 5.0 Deg.

JSI GRIP= 0.90 (4) (INPUT = 0.90)
JSI METAL= 0.49 (2) (INPUT = 1.00)

LICENSED PROFESSIONAL ENGINEER
P.M. TREVISAN
100136551
March 14th, 2017
PROVINCE OF ONTARIO

RECEIVED
TOWN OF MILTON
MAR 29, 2017
17-5233
BUILDING DIVISION

READ ALL NOTES ON THIS PAGE AND ON THE ENGINEERING NOTE PAGE ENP-1. THE NOTE PAGE IS AN INTEGRAL PART OF THIS DRAWING AS IT CONTAINS SPECIFICATIONS AND CRITERIA USED IN THE DESIGN OF THIS COMPONENT.

KOTT

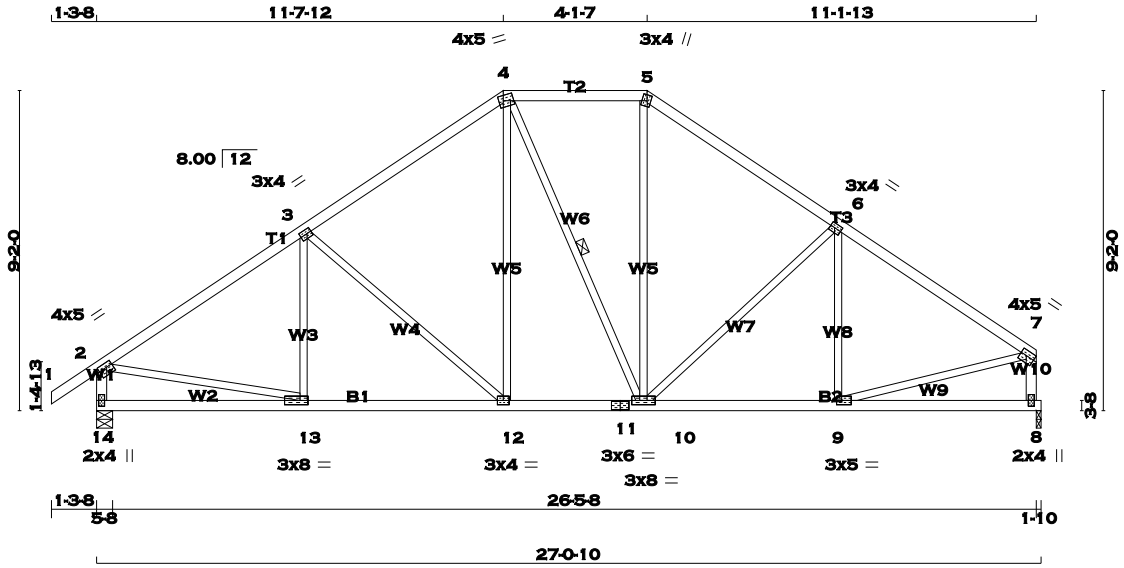

TOTAL WEIGHT = 2 X 122 = 244 lb

[M][F]

LUMBER

N. L. G. A. RULES

CHORDS	SIZE		LUMBER	DESCR.
1 - 4	2x4	DRY	No.2	SPF
4 - 5	2x4	DRY	No.2	SPF
5 - 7	2x4	DRY	No.2	SPF
14 - 2	2x4	DRY	No.2	SPF
8 - 7	2x4	DRY	No.2	SPF
14 - 11	2x4	DRY	No.2	SPF
11 - 8	2x4	DRY	No.2	SPF
ALL WEBS EXCEPT	2x3	DRY	No.2	SPF

DRY: SEASONED LUMBER.

PLATES (table is in inches)

JT	TYPE	PLATES	W	LEN	Y	X
2	TMVW-t	MT20	4.0	5.0	1.50	2.00
3	TMWW-t	MT20	3.0	4.0	1.50	1.50
4	TTWW-m	MT20	4.0	5.0	1.75	1.50
5	TTW+m	MT20	3.0	4.0	2.00	1.25
6	TMWW-t	MT20	3.0	4.0	1.50	1.50
7	TMVW-t	MT20	4.0	5.0	1.75	Edge
8	BMV1+p	MT20	2.0	4.0		
9	BMWW-t	MT20	3.0	5.0	1.50	1.75
10	BMWWW-t	MT20	3.0	8.0		
11	BS-t	MT20	3.0	6.0		
12	BMWW-t	MT20	3.0	4.0		
13	BMWW-t	MT20	3.0	8.0	1.50	2.75
14	BMV1+p	MT20	2.0	4.0		

Edge - INDICATES REFERENCE CORNER OF PLATE TOUCHES EDGE OF CHORD.

A SIZE FOR SIZE SUBSTITUTION OF MITEK MII20 WITH TEE-LOK TL20 PLATES IS ALLOWED.

DIMENSIONS, SUPPORTS AND LOADINGS SPECIFIED BY FABRICATOR TO BE VERIFIED BY BUILDING DESIGNER

BEARINGS

JT	FACTORED GROSS REACTION VERT	HORZ	MAXIMUM FACTORED GROSS REACTION DOWN	HORZ	UPLIFT	INPUT BRG IN-SX	REQRD BRG IN-SX
14	1383	0	1383	0	0	5-8	5-8
8	1276	0	1276	0	0	1-10	1-10

UNFACTORED REACTIONS

JT	1ST LCASE COMBINED	MAX./MIN. COMPONENT REACTIONS SNOW	LIVE	PERM.LIVE	WIND	DEAD	SOIL
14	968	691 / 0	0 / 0	0 / 0	0 / 0	277 / 0	0 / 0
8	896	627 / 0	0 / 0	0 / 0	0 / 0	269 / 0	0 / 0

BEARING MATERIAL TO BE SPF NO.2 OR BETTER AT JOINT(S) 14, 8

BRACING

TOP CHORD TO BE SHEATHED OR MAX. PURLIN SPACING = 4.99 FT.
MAX. UNBRACED BOTTOM CHORD LENGTH = 10.00 FT. OR RIGID CEILING DIRECTLY APPLIED.

ALL PITCH BREAKS AND PERIMETER CORNER JOINTS MUST BE LATERALLY RESTRAINED.

1 - 2x3 SPF No.2 LATERAL BRACE(S) AT 1/ 2 LENGTH OF 4-10. DBS = 20-0-0 . CBF = 3 LBS.

DBS = DIAGONAL BRACE SPACING (MAX). CBF = CUMULATIVE BRACING FORCE. FASTEN LATERAL BRACE(S) USING (0.122"X3") SPIRAL NAILS : 1 NAIL FOR 2x3 BRACE(S), 2 FOR 1x4, 2x4, 2x5, 3 FOR 2x6, 4 FOR 2x8, 5 FOR 2x10, AND 6 FOR 2x12.

END VERTICAL(S) MUST BE SHEATHED OR HAVE BRACES AS INDICATED IN THE MAX. UNBRACED LENGTH COLUMN OF THE TABLE BELOW

LOADING

TOTAL LOAD CASES: (4)

CHORDS

MEMB. FR-TO	MAX. FACTORED FORCE (LBS)	FACTORED VERT. LOAD (PLF) FROM	TO	LC1 MAX CSI (LC)	MAX. UNBRAC LENGTH
1- 2	0 / 29	-77.3	-77.3	0.10 (1)	10.00
2- 3	-1468 / 0	-77.3	-77.3	0.39 (1)	4.99
3- 4	-1176 / 0	-77.3	-77.3	0.36 (1)	5.45
4- 5	-945 / 0	-77.3	-77.3	0.18 (1)	6.17
5- 6	-1163 / 0	-77.3	-77.3	0.33 (1)	5.52
6- 7	-1372 / 0	-77.3	-77.3	0.35 (1)	5.17
14- 2	-1340 / 0	0.0	0.0	0.14 (1)	7.00
8- 7	-1236 / 0	0.0	0.0	0.13 (1)	7.22
14-13	0 / 0	-17.5	-17.5	0.15 (4)	10.00
13-12	0 / 1246	-17.5	-17.5	0.28 (1)	10.00
12-11	0 / 956	-17.5	-17.5	0.20 (1)	10.00
11-10	0 / 956	-17.5	-17.5	0.20 (1)	10.00
10- 9	0 / 1165	-17.5	-17.5	0.25 (1)	10.00
9- 8	0 / 0	-17.5	-17.5	0.14 (4)	10.00

WEBS

MEMB. FR-TO	MAX. FACTORED FORCE (LBS)	MAX CSI (LC)
13- 3	-110 / 67	0.05 (1)
3-12	-390 / 0	0.47 (1)
12- 4	0 / 335	0.08 (1)
4-10	-25 / 0	0.02 (1)
10- 5	0 / 312	0.07 (1)
10- 6	-306 / 0	0.36 (1)
9- 6	-180 / 42	0.08 (1)
2-13	0 / 1267	0.29 (1)
9- 7	0 / 1201	0.27 (1)

DESIGN CRITERIA

SPECIFIED LOADS:

TOP	CH.	LL	=	23.3	PSF
		DL	=	3.0	PSF
BOT	CH.	LL	=	0.0	PSF
		DL	=	7.0	PSF
TOTAL	LOAD		=	33.3	PSF

SPACING = 24.0 IN. C/C

LOADING IN FLAT SECTION BASED ON A SLOPE OF 6.00/12

THIS TRUSS IS DESIGNED FOR RESIDENTIAL OR SMALL BUILDING REQUIREMENTS OF PART 9, NBCC 2010

THIS DESIGN COMPLIES WITH:
- PART 9 OF OBC 2012 , BCBC 2012 , ABC 2014
- CSA 086-09
- TPIC 2011

(55 % OF 27.2 P.S.F. G.S.L. PLUS 8.4 P.S.F. RAIN LOAD) EQUALS 23.3 P.S.F. SPECIFIED ROOF LIVE LOAD

ALLOWABLE DEFL.(LL)= L/360 (0.90")
CALCULATED VERT. DEFL.(LL) = L/ 999 (0.05")
ALLOWABLE DEFL.(TL)= L/360 (0.90")
CALCULATED VERT. DEFL.(TL) = L/ 999 (0.09")

CSI: TC=0.39 (2-3:1) , BC=0.28 (12-13:1) , WB=0.47 (3-12:1) , SSI=0.18 (2-3:1)

DOL LUMBER=1.00 NAIL=1.00 LS BEND=1.10 COMP=1.10 SHEAR=1.10 TENS= 1.10

COMPANION LIVE LOAD FACTOR = 0.50

TRUSS PLATE MANUFACTURER IS NOT RESPONSIBLE FOR QUALITY CONTROL IN THE TRUSS MANUFACTURING PLANT .

NAIL VALUES

PLATE	GRIP(DRY) (PSI) MAX	MIN	SHEAR (PLI) MAX	MIN	SECTION (PLI) MAX	MIN
MT20	618	354	1667	822	2284	1656

PLATE PLACEMENT TOL. = 0.250 inches

PLATE ROTATION TOL. = 5.0 Deg.

JSI GRIP= 0.90 (10) (INPUT = 0.90)
JSI METAL= 0.50 (2) (INPUT = 1.00)

LICENSED PROFESSIONAL ENGINEER
R.M. TREVISAN
100136551
March 14th, 2017
PROVINCE OF ONTARIO

RECEIVED
TOWN OF MILTON
MAR 29, 2017
17-5233
BUILDING DIVISION

READ ALL NOTES ON THIS PAGE AND ON THE ENGINEERING NOTE PAGE ENP-1. THE NOTE PAGE IS AN INTEGRAL PART OF THIS DRAWING AS IT CONTAINS SPECIFICATIONS AND CRITERIA USED IN THE DESIGN OF THIS COMPONENT.

KOTT

JOB NAME	TRUSS NAME	QUANTITY	PLY	JOB DESC.	DRWG NO.
PT0317-081	T13	2	1	TRUSS DESC. LECCO RIDGE-BLOCK 338	ENG JOB: PT0317-081

KOTT , Stouffville, ON, CGC

Version 8.100 S Feb 9 2017 MiTek Industries, Inc. Tue Mar 14 15:57:16 2017 Page 1

ID:EvTixTQDI5yR1QLotZTBr_yE?HJ-SBR?OBAq0gfygb4kC2NqnNXKLbvK4IYY4gcqA5zb_PX

SCALE = 1:74.1

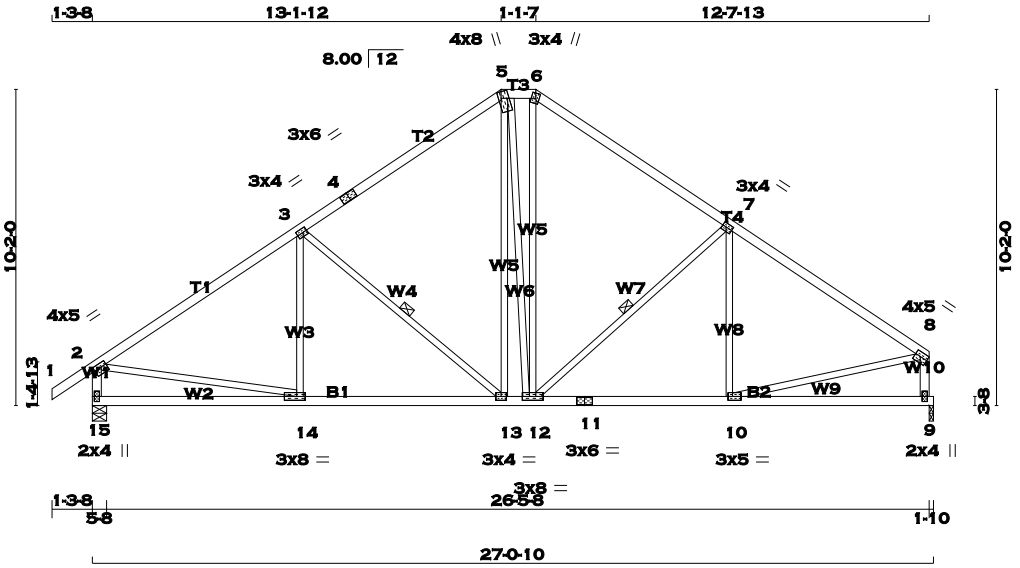

TOTAL WEIGHT = 2 X 128 = 256 lb

[M][F]

LUMBER

N. L. G. A. RULES

CHORDS	SIZE		LUMBER	DESCR.
1 - 4	2x4	DRY	No.2	SPF
4 - 5	2x4	DRY	No.2	SPF
5 - 6	2x4	DRY	No.2	SPF
6 - 8	2x4	DRY	No.2	SPF
15 - 2	2x4	DRY	No.2	SPF
9 - 8	2x4	DRY	No.2	SPF
15 - 11	2x4	DRY	No.2	SPF
11 - 9	2x4	DRY	No.2	SPF
ALL WEBS EXCEPT	2x3	DRY	No.2	SPF

DRY: SEASONED LUMBER.

PLATES (table is in inches)

JT	TYPE	PLATES	W	LEN	Y	X
2	TMVW-t	MT20	4.0	5.0	1.50	2.00
3	TMWW-t	MT20	3.0	4.0	1.50	1.50
4	TS-t	MT20	3.0	6.0		
5	TTWW+m	MT20	4.0	8.0	2.50	1.00
6	TTW+m	MT20	3.0	4.0	2.00	1.25
7	TMWW-t	MT20	3.0	4.0	1.50	1.50
8	TMVW-t	MT20	4.0	5.0	1.75	Edge
9	BMV1+p	MT20	2.0	4.0		
10	BMWW-t	MT20	3.0	5.0	1.50	1.75
11	BS-t	MT20	3.0	6.0		
12	BMWWW-t	MT20	3.0	8.0		
13	BMWW-t	MT20	3.0	4.0		
14	BMWW-t	MT20	3.0	8.0	1.50	3.25
15	BMV1+p	MT20	2.0	4.0		

Edge - INDICATES REFERENCE CORNER OF PLATE TOUCHES EDGE OF CHORD.

A SIZE FOR SIZE SUBSTITUTION OF MITEK MII20 WITH TEE-LOK TL20 PLATES IS ALLOWED.

DIMENSIONS, SUPPORTS AND LOADINGS SPECIFIED BY FABRICATOR TO BE VERIFIED BY BUILDING DESIGNER

BEARINGS

JT	FACTORED GROSS REACTION VERT	HORZ	MAXIMUM FACTORED GROSS REACTION DOWN	HORZ	UPLIFT	INPUT BRG IN-SX	REQRD BRG IN-SX
15	1383	0	1383	0	0	5-8	5-8
9	1276	0	1276	0	0	1-10	1-10

UNFACTORED REACTIONS

JT	1ST LCASE COMBINED	MAX./MIN. COMPONENT REACTIONS SNOW	LIVE	PERM.LIVE	WIND	DEAD	SOIL
15	968	691 / 0	0 / 0	0 / 0	0 / 0	277 / 0	0 / 0
9	896	627 / 0	0 / 0	0 / 0	0 / 0	269 / 0	0 / 0

BEARING MATERIAL TO BE SPF NO.2 OR BETTER AT JOINT(S) 15, 9

BRACING

TOP CHORD TO BE SHEATHED OR MAX. PURLIN SPACING = 4.82 FT.
MAX. UNBRACED BOTTOM CHORD LENGTH = 10.00 FT. OR RIGID CEILING DIRECTLY APPLIED.

ALL PITCH BREAKS AND PERIMETER CORNER JOINTS MUST BE LATERALLY RESTRAINED.

1 - 2x3 SPF No.2 LATERAL BRACE(S) AT 1/ 2 LENGTH OF 3-13, 7-12. DBS = 20-0-0 . CBF = 62 LBS.

DBS = DIAGONAL BRACE SPACING (MAX). CBF = CUMULATIVE BRACING FORCE. FASTEN LATERAL BRACE(S) USING (0.122"X3") SPIRAL NAILS : 1 NAIL FOR 2x3 BRACE(S), 2 FOR 1x4, 2x4, 2x5, 3 FOR 2x6, 4 FOR 2x8, 5 FOR 2x10, AND 6 FOR 2x12.

END VERTICAL(S) MUST BE SHEATHED OR HAVE BRACES AS INDICATED IN THE MAX. UNBRACED LENGTH COLUMN OF THE TABLE BELOW

LOADING

TOTAL LOAD CASES: (4)

CHORDS

MEMB. FR-TO	MAX. FACTORED FORCE (LBS)	FACTORED VERT. LOAD LC1 (PLF) FROM	TO	MAX CSI (LC)	MAX. UNBRAC LENGTH
1- 2	0 / 29	-77.3	-77.3	0.10 (1)	10.00
2- 3	-1464 / 0	-77.3	-77.3	0.51 (1)	4.82
3- 4	-1081 / 0	-77.3	-77.3	0.47 (1)	5.46
4- 5	-1081 / 0	-77.3	-77.3	0.47 (1)	5.46
5- 6	-874 / 0	-77.3	-77.3	0.02 (1)	6.25
6- 7	-1081 / 0	-77.3	-77.3	0.43 (1)	5.52
7- 8	-1378 / 0	-77.3	-77.3	0.46 (1)	5.00
15- 2	-1336 / 0	0.0	0.0	0.14 (1)	7.00
9- 8	-1230 / 0	0.0	0.0	0.13 (1)	7.23
15-14	0 / 0	-17.5	-17.5	0.19 (4)	10.00
14-13	0 / 1246	-17.5	-17.5	0.30 (1)	10.00
13-12	0 / 873	-17.5	-17.5	0.22 (1)	10.00
12-11	0 / 1173	-17.5	-17.5	0.27 (1)	10.00
11-10	0 / 1173	-17.5	-17.5	0.27 (1)	10.00
10- 9	0 / 0	-17.5	-17.5	0.17 (4)	10.00

WEBS

MEMB. FR-TO	MAX. FACTORED FORCE (LBS)	MAX CSI (LC)
14- 3	-67 / 92	0.04 (1)
3-13	-492 / 0	0.25 (1)
13- 5	0 / 343	0.08 (1)
5-12	0 / 9	0.00 (1)
12- 6	0 / 359	0.08 (1)
12- 7	-407 / 0	0.20 (1)
10- 7	-136 / 67	0.08 (1)
2-14	0 / 1262	0.28 (1)
10- 8	0 / 1201	0.27 (1)

DESIGN CRITERIA

SPECIFIED LOADS:

TOP CH.	LL	=	23.3	PSF
	DL	=	3.0	PSF
BOT CH.	LL	=	0.0	PSF
	DL	=	7.0	PSF
TOTAL LOAD		=	33.3	PSF

SPACING = 24.0 IN. C/C

LOADING IN FLAT SECTION BASED ON A SLOPE OF 6.00/12

THIS TRUSS IS DESIGNED FOR RESIDENTIAL OR SMALL BUILDING REQUIREMENTS OF PART 9, NBCC 2010

THIS DESIGN COMPLIES WITH:
- PART 9 OF OBC 2012 , BCBC 2012 , ABC 2014
- CSA 086-09
- TPIC 2011

(55 % OF 27.2 P.S.F. G.S.L. PLUS 8.4 P.S.F. RAIN LOAD) EQUALS 23.3 P.S.F. SPECIFIED ROOF LIVE LOAD

ALLOWABLE DEFL.(LL)= L/360 (0.90")
CALCULATED VERT. DEFL.(LL) = L/ 999 (0.05")
ALLOWABLE DEFL.(TL)= L/360 (0.90")
CALCULATED VERT. DEFL.(TL) = L/ 999 (0.11")

CSI: TC=0.51 (2-3:1) , BC=0.30 (13-14:1) , WB=0.28 (2-14:1) , SSI=0.21 (2-3:1)

DOL LUMBER=1.00 NAIL=1.00 LS BEND=1.10 COMP=1.10 SHEAR=1.10 TENS= 1.10

COMPANION LIVE LOAD FACTOR = 0.50

TRUSS PLATE MANUFACTURER IS NOT RESPONSIBLE FOR QUALITY CONTROL IN THE TRUSS MANUFACTURING PLANT .

NAIL VALUES

PLATE	GRIP(DRY) (PSI) MAX	MIN	SHEAR (PLI) MAX	MIN	SECTION (PLI) MAX	MIN
MT20	618	354	1667	822	2284	1656

PLATE PLACEMENT TOL. = 0.250 inches

PLATE ROTATION TOL. = 5.0 Deg.

JSI GRIP= 0.90 (10) (INPUT = 0.90)
JSI METAL= 0.50 (2) (INPUT = 1.00)

LICENSED PROFESSIONAL ENGINEER
P.M. TREVISAN
100136551
March 14th, 2017
PROVINCE OF ONTARIO

RECEIVED
TOWN OF MILTON
MAR 29, 2017
17-5233
BUILDING DIVISION

READ ALL NOTES ON THIS PAGE AND ON THE ENGINEERING NOTE PAGE ENP-1. THE NOTE PAGE IS AN INTEGRAL PART OF THIS DRAWING AS IT CONTAINS SPECIFICATIONS AND CRITERIA USED IN THE DESIGN OF THIS COMPONENT.

KOTT

JOB NAME	TRUSS NAME	QUANTITY	PLY	JOB DESC.	DRWG NO.
PT0317-081	T14	2	1	TRUSS DESC. LECCO RIDGE-BLOCK 338	ENG JOB: PT0317-081

KOTT , Stouffville, ON, CGC

Version 8.100 S Feb 9 2017 MiTek Industries, Inc. Tue Mar 14 15:57:16 2017 Page 1

ID:EvTixTQDI5yR1QLotZTBr_yE?HJ-SBR?OBAq0gfygb4kC2NqnNXJabvK4IaY4gcqA5zb_PX

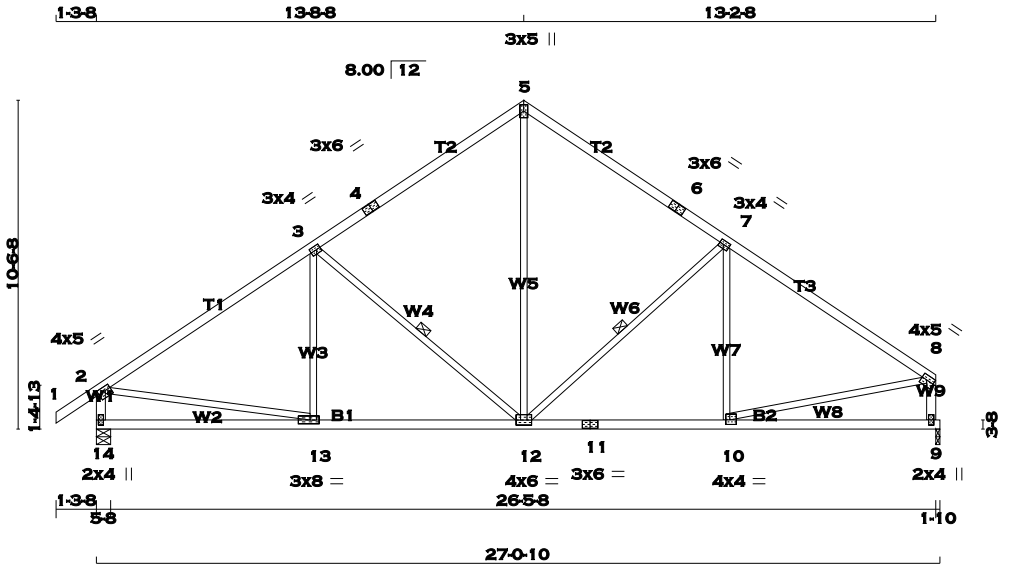

TOTAL WEIGHT = 2 X 114 = 228 lb

[M][F]

LUMBER

N. L. G. A. RULES

CHORDS	SIZE		LUMBER	DESCR.
1 - 4	2x4	DRY	No.2	SPF
4 - 5	2x4	DRY	No.2	SPF
5 - 6	2x4	DRY	No.2	SPF
6 - 8	2x4	DRY	No.2	SPF
14 - 2	2x4	DRY	No.2	SPF
9 - 8	2x4	DRY	No.2	SPF
14 - 11	2x4	DRY	No.2	SPF
11 - 9	2x4	DRY	No.2	SPF
ALL WEBS EXCEPT	2x3	DRY	No.2	SPF

DRY: SEASONED LUMBER.

PLATES (table is in inches)

JT	TYPE	PLATES	W	LEN	Y	X
2	TMVW-t	MT20	4.0	5.0	1.50	2.00
3	TMWW-t	MT20	3.0	4.0	1.50	1.50
4	TS-t	MT20	3.0	6.0		
5	TTW+p	MT20	3.0	5.0		
6	TS-t	MT20	3.0	6.0		
7	TMWW-t	MT20	3.0	4.0	1.50	1.50
8	TMVW-t	MT20	4.0	5.0	1.75	Edge
9	BMV1+p	MT20	2.0	4.0		
10	BMWW-t	MT20	4.0	4.0	1.75	1.50
11	BS-t	MT20	3.0	6.0		
12	BMWWW-t	MT20	4.0	6.0		
13	BMWW-t	MT20	3.0	8.0	1.50	3.50
14	BMV1+p	MT20	2.0	4.0		

Edge - INDICATES REFERENCE CORNER OF PLATE TOUCHES EDGE OF CHORD.

A SIZE FOR SIZE SUBSTITUTION OF MITEK MII20 WITH TEE-LOK TL20 PLATES IS ALLOWED.

DIMENSIONS, SUPPORTS AND LOADINGS SPECIFIED BY FABRICATOR TO BE VERIFIED BY BUILDING DESIGNER

BEARINGS

JT	FACTORED GROSS REACTION VERT	HORZ	MAXIMUM FACTORED GROSS REACTION DOWN	HORZ	UPLIFT	INPUT BRG IN-SX	REQRD BRG IN-SX
14	1383	0	1383	0	0	5-8	5-8
9	1276	0	1276	0	0	1-10	1-10

UNFACTORED REACTIONS

JT	1ST LCASE COMBINED	MAX./MIN. COMPONENT REACTIONS SNOW	LIVE	PERM.LIVE	WIND	DEAD	SOIL
14	968	691 / 0	0 / 0	0 / 0	0 / 0	277 / 0	0 / 0
9	896	627 / 0	0 / 0	0 / 0	0 / 0	269 / 0	0 / 0

BEARING MATERIAL TO BE SPF NO.2 OR BETTER AT JOINT(S) 14, 9

BRACING

TOP CHORD TO BE SHEATHED OR MAX. PURLIN SPACING = 4.75 FT.
MAX. UNBRACED BOTTOM CHORD LENGTH = 10.00 FT. OR RIGID CEILING DIRECTLY APPLIED.

ALL PITCH BREAKS AND PERIMETER CORNER JOINTS MUST BE LATERALLY RESTRAINED.

1 - 2x3 SPF No.2 LATERAL BRACE(S) AT 1/ 2 LENGTH OF 3-12, 7-12. DBS = 20-0-0 . CBF = 65 LBS.

DBS = DIAGONAL BRACE SPACING (MAX). CBF = CUMULATIVE BRACING FORCE. FASTEN LATERAL BRACE(S) USING (0.122"X3") SPIRAL NAILS : 1 NAIL FOR 2x3 BRACE(S), 2 FOR 1x4, 2x4, 2x5, 3 FOR 2x6, 4 FOR 2x8, 5 FOR 2x10, AND 6 FOR 2x12.

END VERTICAL(S) MUST BE SHEATHED OR HAVE BRACES AS INDICATED IN THE MAX. UNBRACED LENGTH COLUMN OF THE TABLE BELOW

LOADING

TOTAL LOAD CASES: (4)

CHORDS

MEMB. FR-TO	MAX. FACTORED FORCE (LBS)	FACTORED VERT. LOAD (PLF) FROM	TO	LC1 CSI	MAX (LC)	MAX. UNBRAC LENGTH
1- 2	0 / 29	-77.3	-77.3	0.10	(1)	10.00
2- 3	-1458 / 0	-77.3	-77.3	0.56	(1)	4.75
3- 4	-1053 / 0	-77.3	-77.3	0.51	(1)	5.44
4- 5	-1053 / 0	-77.3	-77.3	0.51	(1)	5.44
5- 6	-1052 / 0	-77.3	-77.3	0.47	(1)	5.52
6- 7	-1052 / 0	-77.3	-77.3	0.47	(1)	5.52
7- 8	-1377 / 0	-77.3	-77.3	0.51	(1)	4.94
14- 2	-1333 / 0	0.0	0.0	0.14	(1)	7.02
9- 8	-1228 / 0	0.0	0.0	0.13	(1)	7.23
14-13	0 / 0	-17.5	-17.5	0.20	(4)	10.00
13-12	0 / 1243	-17.5	-17.5	0.30	(1)	10.00
12-11	0 / 1174	-17.5	-17.5	0.29	(1)	10.00
11-10	0 / 1174	-17.5	-17.5	0.29	(1)	10.00
10- 9	0 / 0	-17.5	-17.5	0.19	(4)	10.00

WEBS

MEMB. FR-TO	MAX. FACTORED FORCE (LBS)	MAX CSI (LC)
13- 3	-59 / 97	0.03 (1)
3-12	-520 / 0	0.28 (1)
12- 5	0 / 744	0.17 (1)
12- 7	-443 / 0	0.23 (1)
10- 7	-119 / 74	0.07 (1)
2-13	0 / 1257	0.28 (1)
10- 8	0 / 1200	0.27 (1)

DESIGN CRITERIA

SPECIFIED LOADS:

TOP	CH.	LL	=	23.3	PSF
		DL	=	3.0	PSF
BOT	CH.	LL	=	0.0	PSF
		DL	=	7.0	PSF
TOTAL	LOAD		=	33.3	PSF

SPACING = 24.0 IN. C/C

THIS TRUSS IS DESIGNED FOR RESIDENTIAL OR SMALL BUILDING REQUIREMENTS OF PART 9, NBCC 2010

THIS DESIGN COMPLIES WITH:
- PART 9 OF OBC 2012 , BCBC 2012 , ABC 2014
- CSA 086-09
- TPIC 2011

(55 % OF 27.2 P.S.F. G.S.L. PLUS 8.4 P.S.F. RAIN LOAD) EQUALS 23.3 P.S.F. SPECIFIED ROOF LIVE LOAD

ALLOWABLE DEFL.(LL)= L/360 (0.90")
CALCULATED VERT. DEFL.(LL) = L/ 999 (0.05")
ALLOWABLE DEFL.(TL)= L/360 (0.90")
CALCULATED VERT. DEFL.(TL) = L/ 999 (0.11")

CSI: TC=0.56 (2-3:1) , BC=0.30 (12-13:1) , WB=0.28 (2-13:1) , SSI=0.22 (2-3:1)

DOL LUMBER=1.00 NAIL=1.00 LS BEND=1.10 COMP=1.10 SHEAR=1.10 TENS= 1.10

COMPANION LIVE LOAD FACTOR = 0.50

TRUSS PLATE MANUFACTURER IS NOT RESPONSIBLE FOR QUALITY CONTROL IN THE TRUSS MANUFACTURING PLANT .

NAIL VALUES

PLATE	GRIP(DRY) (PSI) MAX	MIN	SHEAR (PLI) MAX	MIN	SECTION (PLI) MAX	MIN
MT20	618	354	1667	822	2284	1656

PLATE PLACEMENT TOL. = 0.250 inches

PLATE ROTATION TOL. = 5.0 Deg.

JSI GRIP= 0.90 (8) (INPUT = 0.90)
JSI METAL= 0.50 (2) (INPUT = 1.00)

LICENSED PROFESSIONAL ENGINEER
P.M. TREVISAN
100136551
March 14th, 2017
PROVINCE OF ONTARIO

RECEIVED
TOWN OF MILTON
MAR 29, 2017
17-5233
BUILDING DIVISION

READ ALL NOTES ON THIS PAGE AND ON THE ENGINEERING NOTE PAGE ENP-1. THE NOTE PAGE IS AN INTEGRAL PART OF THIS DRAWING AS IT CONTAINS SPECIFICATIONS AND CRITERIA USED IN THE DESIGN OF THIS COMPONENT.

KOTT

JOB NAME	TRUSS NAME	QUANTITY	PLY	JOB DESC.	DRWG NO.
PT0317-081	**T15**	**1**	**1**	TRUSS DESC. LECCO RIDGE-BLOCK 338	

ENG JOB: PT0317-081

KOTT , Stouffville, ON, CGC

Version 8.100 S Feb 9 2017 MiTek Industries, Inc. Tue Mar 14 15:57:17 2017 Page 1
ID:EvTixTQDI5yR1QLotZTBr_yE?HJ-wO?ObXBSn_npIlfwllu3Ka3Zy?FPpjchIKMNiXzb_PW

SCALE = 1:49.1

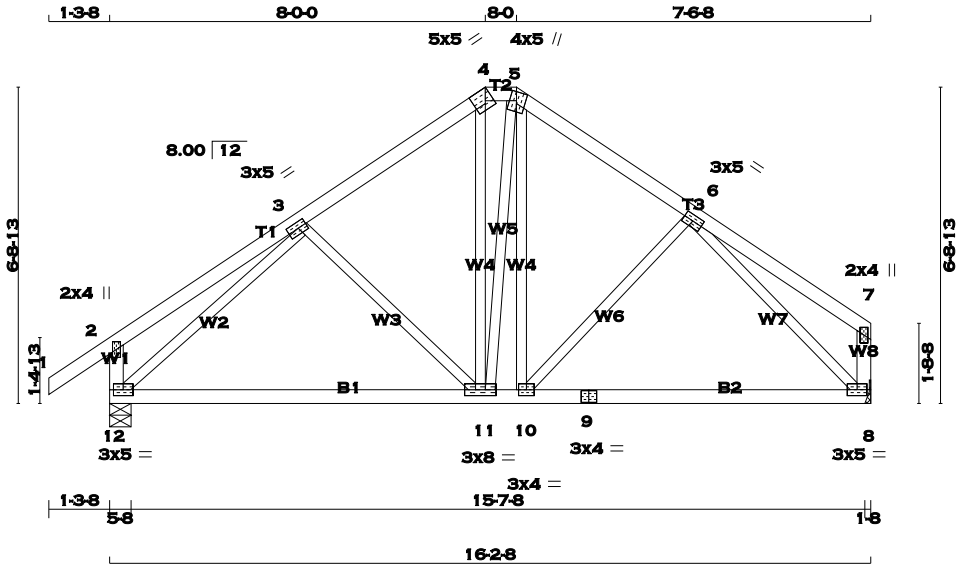

TOTAL WEIGHT = 77 lb

[M][F]

LUMBER

N. L. G. A. RULES

CHORDS	SIZE		LUMBER	DESCR.
1 - 4	2x4	DRY	No.2	SPF
4 - 5	2x4	DRY	No.2	SPF
5 - 7	2x4	DRY	No.2	SPF
12 - 2	2x4	DRY	No.2	SPF
8 - 7	2x4	DRY	No.2	SPF
12 - 9	2x4	DRY	No.2	SPF
9 - 8	2x4	DRY	No.2	SPF
ALL WEBS EXCEPT	2x3	DRY	No.2	SPF

DRY: SEASONED LUMBER.

PLATES (table is in inches)

JT	TYPE	PLATES	W	LEN	Y	X
2	TMV+p	MT20	2.0	4.0		
3	TMWW-t	MT20	3.0	5.0	1.50	2.25
4	TTW-h	MT20	5.0	5.0	Edge	2.00
5	TTWW+m	MT20	4.0	5.0	2.25	1.75
6	TMWW-t	MT20	3.0	5.0		
7	TMV+p	MT20	2.0	4.0		
8	BMVW1-t	MT20	3.0	5.0		
9	BS-t	MT20	3.0	4.0		
10	BMWW-t	MT20	3.0	4.0		
11	BMWWW-t	MT20	3.0	8.0		
12	BMVW1-t	MT20	3.0	5.0		

Edge - INDICATES REFERENCE CORNER OF PLATE TOUCHES EDGE OF CHORD.

A SIZE FOR SIZE SUBSTITUTION OF MITEK MII20 WITH TEE-LOK TL20 PLATES IS ALLOWED.

DIMENSIONS, SUPPORTS AND LOADINGS SPECIFIED BY FABRICATOR TO BE VERIFIED BY BUILDING DESIGNER

BEARINGS

JT	FACTORED GROSS REACTION VERT	HORZ	MAXIMUM FACTORED GROSS REACTION DOWN	HORZ	UPLIFT	INPUT BRG IN-SX	REQRD BRG IN-SX
12	875	0	875	0	0	5-8	5-8
8	769	0	769	0	0	HANGER BY OTHERS	
						MIN. SEAT SIZE: 1-8	

UNFACTORED REACTIONS

JT	1ST LCASE COMBINED	MAX./MIN. COMPONENT REACTIONS SNOW	LIVE	PERM.LIVE	WIND	DEAD	SOIL
12	612	441 / 0	0 / 0	0 / 0	0 / 0	170 / 0	0 / 0
8	539	377 / 0	0 / 0	0 / 0	0 / 0	162 / 0	0 / 0

BEARING MATERIAL TO BE SPF NO.2 OR BETTER AT JOINT(S) 12

BRACING

TOP CHORD TO BE SHEATHED OR MAX. PURLIN SPACING = 6.25 FT.
MAX. UNBRACED BOTTOM CHORD LENGTH = 10.00 FT. OR RIGID CEILING DIRECTLY APPLIED.

ALL PITCH BREAKS AND PERIMETER CORNER JOINTS MUST BE LATERALLY RESTRAINED.

LOADING

TOTAL LOAD CASES: (4)

CHORDS

MEMB. FR-TO	MAX. FACTORED FORCE (LBS)	VERT. LOAD LC1 (PLF) FROM	TO	MAX CSI (LC)	MAX. UNBRAC LENGTH
1- 2	0 / 29	-77.3	-77.3	0.10 (1)	10.00
2- 3	0 / 20	-77.3	-77.3	0.20 (1)	10.00
3- 4	-629 / 0	-77.3	-77.3	0.16 (1)	6.25
4- 5	-503 / 0	-77.3	-77.3	0.01 (1)	6.25
5- 6	-620 / 0	-77.3	-77.3	0.14 (1)	6.25
6- 7	0 / 19	-77.3	-77.3	0.18 (1)	10.00
12- 2	-225 / 0	0.0	0.0	0.02 (1)	7.81
8- 7	-112 / 0	0.0	0.0	0.01 (1)	7.81
12-11	0 / 636	-17.5	-17.5	0.31 (4)	10.00
11-10	0 / 497	-17.5	-17.5	0.31 (4)	10.00
10- 9	0 / 584	-17.5	-17.5	0.27 (4)	10.00
9- 8	0 / 584	-17.5	-17.5	0.27 (4)	10.00

WEBS

MEMB. FR-TO	MAX. FACTORED FORCE (LBS)	MAX CSI (LC)
3-11	-180 / 3	0.09 (1)
11- 4	0 / 194	0.04 (1)
11- 5	0 / 46	0.01 (1)
10- 5	0 / 151	0.03 (1)
10- 6	-124 / 14	0.06 (1)
12- 3	-871 / 0	0.42 (1)
6- 8	-840 / 0	0.40 (1)

DESIGN CRITERIA

SPECIFIED LOADS:

TOP	CH.	LL	=	23.3	PSF
		DL	=	3.0	PSF
BOT	CH.	LL	=	0.0	PSF
		DL	=	7.0	PSF
TOTAL	LOAD		=	33.3	PSF

SPACING = 24.0 IN. C/C

LOADING IN FLAT SECTION BASED ON A SLOPE OF 6.00/12

THIS TRUSS IS DESIGNED FOR RESIDENTIAL OR SMALL BUILDING REQUIREMENTS OF PART 9, NBCC 2010

THIS DESIGN COMPLIES WITH:
- PART 9 OF OBC 2012 , BCBC 2012 , ABC 2014
- CSA 086-09
- TPIC 2011

(55 % OF 27.2 P.S.F. G.S.L. PLUS 8.4 P.S.F. RAIN LOAD) EQUALS 23.3 P.S.F. SPECIFIED ROOF LIVE LOAD

ALLOWABLE DEFL.(LL)= L/360 (0.54")
CALCULATED VERT. DEFL.(LL) = L/ 999 (0.02")
ALLOWABLE DEFL.(TL)= L/360 (0.54")
CALCULATED VERT. DEFL.(TL) = L/ 999 (0.10")

CSI: TC=0.20 (2-3:1) , BC=0.31 (11-12:4) , WB=0.42 (3-12:1) , SSI=0.12 (3-4:1)

DOL LUMBER=1.00 NAIL=1.00 LS BEND=1.10 COMP=1.10 SHEAR=1.10 TENS= 1.10

COMPANION LIVE LOAD FACTOR = 0.50

TRUSS PLATE MANUFACTURER IS NOT RESPONSIBLE FOR QUALITY CONTROL IN THE TRUSS MANUFACTURING PLANT .

NAIL VALUES

PLATE	GRIP(DRY) (PSI) MAX	MIN	SHEAR (PLI) MAX	MIN	SECTION (PLI) MAX	MIN
MT20	618	354	1667	822	2284	1656

PLATE PLACEMENT TOL. = 0.250 inches

PLATE ROTATION TOL. = 5.0 Deg.

JSI GRIP= 0.86 (12) (INPUT = 0.90)
JSI METAL= 0.25 (3) (INPUT = 1.00)

LICENSED PROFESSIONAL ENGINEER
R.M. TREVISAN
100136551
March 14th, 2017
PROVINCE OF ONTARIO

RECEIVED
TOWN OF MILTON
MAR 29, 2017
17-5233
BUILDING DIVISION

READ ALL NOTES ON THIS PAGE AND ON THE ENGINEERING NOTE PAGE ENP-1. THE NOTE PAGE IS AN INTEGRAL PART OF THIS DRAWING AS IT CONTAINS SPECIFICATIONS AND CRITERIA USED IN THE DESIGN OF THIS COMPONENT.

KOTT

JOB NAME	TRUSS NAME	QUANTITY	PLY	JOB DESC.	DRWG NO.
PT0317-081	**T16**	**1**	**1**	TRUSS DESC. LECCO RIDGE-BLOCK 338	

ENG JOB: PT0317-081

KOTT , Stouffville, ON, CGC

Version 8.100 S Feb 9 2017 MiTek Industries, Inc. Tue Mar 14 15:57:17 2017 Page 1
ID:EvTixTQDI5yR1QLotZTBr_yE?HJ-wO?ObXBSn_npIlfwllu3Ka3bC?Ippn3hIKMNiXzb_PW

SCALE = 1:34.0

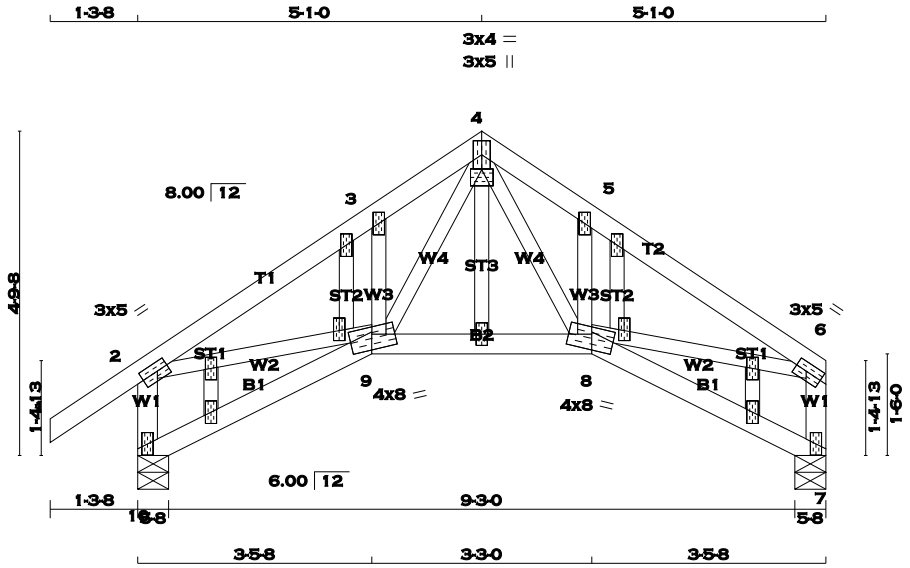

TOTAL WEIGHT = 50 lb

LUMBER
N. L. G. A. RULES

CHORDS	SIZE		LUMBER	DESCR.
1 - 4	2x4	DRY	No.2	SPF
4 - 6	2x4	DRY	No.2	SPF
10 - 2	2x4	DRY	No.2	SPF
7 - 6	2x4	DRY	No.2	SPF
10 - 9	2x4	DRY	No.2	SPF
9 - 8	2x4	DRY	No.2	SPF
8 - 7	2x4	DRY	No.2	SPF
ALL WEBS	2x3	DRY	No.2	SPF
EXCEPT				
ALL GABLE WEBS				
	2x3	DRY	No.2	SPF

DRY: SEASONED LUMBER.

GABLE STUDS SPACED AT 2-0-0 OC.

PLATES (table is in inches)

JT	TYPE	PLATES	W	LEN	Y	X
2	TMVW-t	MT20	3.0	5.0	1.50	2.00
3	TMW+w	MT20	2.0	4.0		
4	TTWW+p	MT20	3.0	5.0		
4	NP-p	MT20	3.0	4.0	0.25	2.00
5	TMW+w	MT20	2.0	4.0		
6	TMVW-t	MT20	3.0	5.0	1.50	2.00
7	BMV1+p	MT20	2.0	4.0		
8	BBWWW-m	MT20	4.0	8.0	2.75	4.00
8	NP+w	MT20	2.0	4.0	2.00	0.25
9	BBWWW-m	MT20	4.0	8.0	2.75	4.00
9	NP+w	MT20	2.0	4.0	2.00	0.25
10	BMV1+p	MT20	2.0	4.0		
11, 12, 13, 14, 15, 16, 17						
11	NP+w	MT20	2.0	4.0		

A SIZE FOR SIZE SUBSTITUTION OF MITEK MII20 WITH TEE-LOK TL20 PLATES IS ALLOWED.

DIMENSIONS, SUPPORTS AND LOADINGS SPECIFIED BY FABRICATOR TO BE VERIFIED BY BUILDING DESIGNER

BEARINGS

JT	FACTORED GROSS REACTION VERT	HORZ	MAXIMUM FACTORED GROSS REACTION DOWN	HORZ	UPLIFT	INPUT BRG IN-SX	REQRD BRG IN-SX
10	588	0	588	0	0	5-8	5-8
7	482	0	482	0	0	5-8	5-8

UNFACTORED REACTIONS

JT	1ST LCASE COMBINED	MAX./MIN. COMPONENT REACTIONS SNOW	LIVE	PERM.LIVE	WIND	DEAD	SOIL
10	411	301 / 0	0 / 0	0 / 0	0 / 0	110 / 0	0 / 0
7	338	237 / 0	0 / 0	0 / 0	0 / 0	102 / 0	0 / 0

BEARING MATERIAL TO BE SPF NO.2 OR BETTER AT JOINT(S) 10, 7

BRACING
TOP CHORD TO BE SHEATHED OR MAX. PURLIN SPACING = 6.25 FT.
MAX. UNBRACED BOTTOM CHORD LENGTH = 10.00 FT. OR RIGID CEILING DIRECTLY APPLIED.

ALL PITCH BREAKS AND PERIMETER CORNER JOINTS MUST BE LATERALLY RESTRAINED.

LOADING
TOTAL LOAD CASES: (4)

CHORDS

MEMB. FR-TO	MAX. FACTORED FORCE (LBS)	FACTORED VERT. LOAD (PLF) FROM	TO	LC1 CSI (LC)	MAX UNBRAC LENGTH
1- 2	0 / 29	-77.3	-77.3	0.10 (1)	10.00
2- 3	-732 / 0	-77.3	-77.3	0.12 (1)	6.25
3- 4	-767 / 0	-77.3	-77.3	0.07 (1)	6.25
4- 5	-767 / 0	-77.3	-77.3	0.07 (1)	6.25
5- 6	-732 / 0	-77.3	-77.3	0.12 (1)	6.25
10- 2	-558 / 0	0.0	0.0	0.06 (1)	7.81
7- 6	-452 / 0	0.0	0.0	0.05 (1)	7.81
10- 9	0 / 0	-17.5	-17.5	0.06 (4)	10.00
9- 8	0 / 406	-17.5	-17.5	0.10 (1)	10.00
8- 7	0 / 0	-17.5	-17.5	0.06 (4)	10.00

WEBS

MEMB. FR-TO	MAX. FACTORED FORCE (LBS)	MAX CSI (LC)
4- 8	0 / 445	0.10 (1)
8- 5	-255 / 0	0.04 (1)
9- 4	0 / 445	0.10 (1)
9- 3	-255 / 0	0.04 (1)
2- 9	0 / 622	0.14 (1)
8- 6	0 / 622	0.14 (1)

DESIGN CRITERIA

SPECIFIED LOADS:

TOP CH.	LL	=	23.3	PSF
	DL	=	3.0	PSF
BOT CH.	LL	=	0.0	PSF
	DL	=	7.0	PSF
TOTAL LOAD		=	33.3	PSF

SPACING = 24.0 IN. C/C

THIS TRUSS IS DESIGNED FOR RESIDENTIAL OR SMALL BUILDING REQUIREMENTS OF PART 9, NBCC 2010

THIS DESIGN COMPLIES WITH:
- PART 9 OF OBC 2012 , BCBC 2012 , ABC 2014
- CSA 086-09
- TPIC 2011

(55 % OF 27.2 P.S.F. G.S.L. PLUS 8.4 P.S.F. RAIN LOAD) EQUALS 23.3 P.S.F. SPECIFIED ROOF LIVE LOAD

ALLOWABLE DEFL.(LL)= L/360 (0.34")
CALCULATED VERT. DEFL.(LL) = L/ 999 (0.02")
ALLOWABLE DEFL.(TL)= L/360 (0.34")
CALCULATED VERT. DEFL.(TL) = L/ 999 (0.03")

CSI: TC=0.12 (2-3:1) , BC=0.10 (8-9:1) , WB=0.14 (2-9:1) , SSI=0.10 (5-6:1)

DOL LUMBER=1.00 NAIL=1.00 LS BEND=1.10 COMP=1.10 SHEAR=1.10 TENS= 1.10

COMPANION LIVE LOAD FACTOR = 0.50

AUTOSOLVE HEELS OFF

TRUSS PLATE MANUFACTURER IS NOT RESPONSIBLE FOR QUALITY CONTROL IN THE TRUSS MANUFACTURING PLANT .

NAIL VALUES

PLATE	GRIP(DRY) (PSI) MAX	MIN	SHEAR (PLI) MAX	MIN	SECTION (PLI) MAX	MIN
MT20	618	354	1667	822	2284	1656

PLATE PLACEMENT TOL. = 0.250 inches

PLATE ROTATION TOL. = 5.0 Deg.

JSI GRIP= 0.81 (8) (INPUT = 0.90)
JSI METAL= 0.26 (2) (INPUT = 1.00)

LICENSED PROFESSIONAL ENGINEER
R.M. TREVISAN
100136551
March 14th, 2017
PROVINCE OF ONTARIO

RECEIVED
TOWN OF MILTON
MAR 29, 2017
17-5233
BUILDING DIVISION

READ ALL NOTES ON THIS PAGE AND ON THE ENGINEERING NOTE PAGE ENP-1. THE NOTE PAGE IS AN INTEGRAL PART OF THIS DRAWING AS IT CONTAINS SPECIFICATIONS AND CRITERIA USED IN THE DESIGN OF THIS COMPONENT.

KOTT

JOB NAME	TRUSS NAME	QUANTITY	PLY	JOB DESC.	DRWG NO.
PT0317-081	**T17**	**1**	**1**	TRUSS DESC. LECCO RIDGE-BLOCK 338	

ENG JOB: PT0317-081

KOTT , Stouffville, ON, CGC

Version 8.100 S Feb 9 2017 MiTek Industries, Inc. Tue Mar 14 15:57:18 2017 Page 1

ID:EvTixTQDI5yR1QLotZTBr_yE?HJ-OaYmptB4YHvgwuE6JTPIsocmyPe8YEQqX_5xFzzb_PV

SCALE = 1:37.8

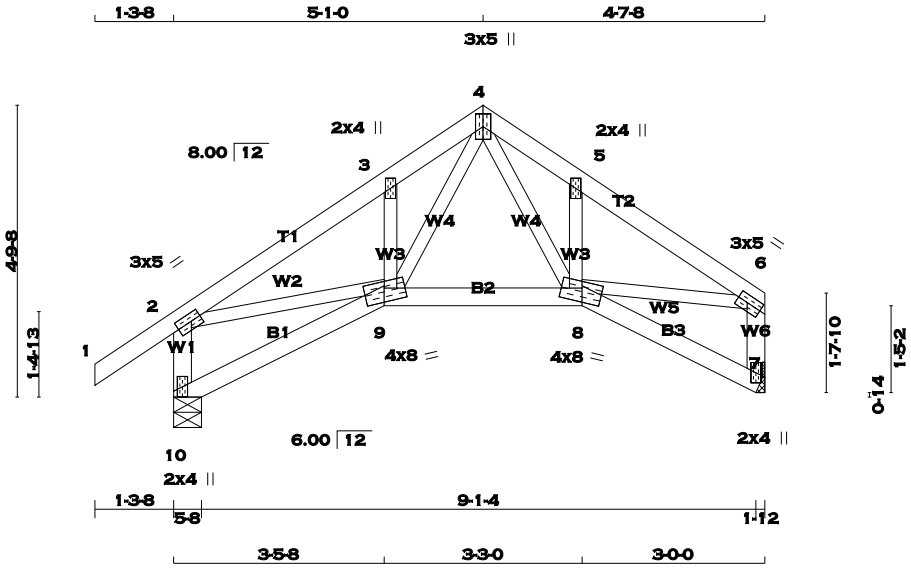

TOTAL WEIGHT = 43 lb

[M][F]

LUMBER

N. L. G. A. RULES

CHORDS	SIZE		LUMBER	DESCR.
1 - 4	2x4	DRY	No.2	SPF
4 - 6	2x4	DRY	No.2	SPF
10 - 2	2x4	DRY	No.2	SPF
7 - 6	2x4	DRY	No.2	SPF
10 - 9	2x4	DRY	No.2	SPF
9 - 8	2x4	DRY	No.2	SPF
8 - 7	2x4	DRY	No.2	SPF
ALL WEBS EXCEPT	2x3	DRY	No.2	SPF

DRY: SEASONED LUMBER.

PLATES (table is in inches)

JT	TYPE	PLATES	W	LEN	Y	X
2	TMVW-t	MT20	3.0	5.0	1.50	2.00
3	TMW+w	MT20	2.0	4.0		
4	TTWW+p	MT20	3.0	5.0		
5	TMW+w	MT20	2.0	4.0		
6	TMVW-t	MT20	3.0	5.0	1.50	2.00
7	BMV1+p	MT20	2.0	4.0		
8	BBWWW-m	MT20	4.0	8.0	2.75	4.00
9	BBWWW-m	MT20	4.0	8.0	2.75	4.00
10	BMV1+p	MT20	2.0	4.0		

A SIZE FOR SIZE SUBSTITUTION OF MITEK MII20 WITH TEE-LOK TL20 PLATES IS ALLOWED.

DIMENSIONS, SUPPORTS AND LOADINGS SPECIFIED BY FABRICATOR TO BE VERIFIED BY BUILDING DESIGNER

BEARINGS

JT	FACTORED GROSS REACTION VERT	HORZ	MAXIMUM FACTORED GROSS REACTION DOWN	HORZ	UPLIFT	INPUT BRG IN-SX	REQRD BRG IN-SX
10	567	0	567	0	0	5-8	5-8
7	460	0	460	0	0	HANGER BY OTHERS	
						MIN. SEAT SIZE: 1-12	

UNFACTORED REACTIONS

JT	1ST LCASE COMBINED	MAX./MIN. COMPONENT REACTIONS SNOW	LIVE	PERM.LIVE	WIND	DEAD	SOIL
10	395	290 / 0	0 / 0	0 / 0	0 / 0	105 / 0	0 / 0
7	323	226 / 0	0 / 0	0 / 0	0 / 0	97 / 0	0 / 0

BEARING MATERIAL TO BE SPF NO.2 OR BETTER AT JOINT(S) 10

BRACING

TOP CHORD TO BE SHEATHED OR MAX. PURLIN SPACING = 6.25 FT.
MAX. UNBRACED BOTTOM CHORD LENGTH = 10.00 FT. OR RIGID CEILING DIRECTLY APPLIED.

ALL PITCH BREAKS AND PERIMETER CORNER JOINTS MUST BE LATERALLY RESTRAINED.

LOADING

TOTAL LOAD CASES: (4)

CHORDS

MEMB. FR-TO	MAX. FORCE (LBS)	FACTORED VERT. LOAD LC1 (PLF) FROM	TO	MAX CSI (LC)	MAX. UNBRAC LENGTH
1- 2	0 / 29	-77.3	-77.3	0.10 (1)	10.00
2- 3	-684 / 0	-77.3	-77.3	0.12 (1)	6.25
3- 4	-720 / 0	-77.3	-77.3	0.07 (1)	6.25
4- 5	-656 / 0	-77.3	-77.3	0.05 (1)	6.25
5- 6	-629 / 0	-77.3	-77.3	0.09 (1)	6.25
10- 2	-536 / 0	0.0	0.0	0.06 (1)	7.81
7- 6	-434 / 0	0.0	0.0	0.05 (1)	7.81
10- 9	0 / 0	-17.5	-17.5	0.06 (4)	10.00
9- 8	0 / 369	-17.5	-17.5	0.09 (1)	10.00
8- 7	0 / 0	-17.5	-17.5	0.05 (4)	10.00

WEBS

MEMB. FR-TO	MAX. FORCE (LBS)	MAX CSI (LC)
9- 3	-256 / 0	0.04 (1)
9- 4	0 / 441	0.10 (1)
4- 8	0 / 341	0.08 (1)
8- 5	-223 / 0	0.03 (1)
2- 9	0 / 582	0.13 (1)
8- 6	0 / 531	0.12 (1)

DESIGN CRITERIA

SPECIFIED LOADS:

TOP CH.	LL	=	23.3	PSF
	DL	=	3.0	PSF
BOT CH.	LL	=	0.0	PSF
	DL	=	7.0	PSF
TOTAL LOAD		=	33.3	PSF

SPACING = 24.0 IN. C/C

THIS TRUSS IS DESIGNED FOR RESIDENTIAL OR SMALL BUILDING REQUIREMENTS OF PART 9, NBCC 2010

THIS DESIGN COMPLIES WITH:
- PART 9 OF OBC 2012 , BCBC 2012 , ABC 2014
- CSA 086-09
- TPIC 2011

(55 % OF 27.2 P.S.F. G.S.L. PLUS 8.4 P.S.F. RAIN LOAD) EQUALS 23.3 P.S.F. SPECIFIED ROOF LIVE LOAD

ALLOWABLE DEFL.(LL)= L/360 (0.32")
CALCULATED VERT. DEFL.(LL) = L/ 999 (0.01")
ALLOWABLE DEFL.(TL)= L/360 (0.32")
CALCULATED VERT. DEFL.(TL) = L/ 999 (0.03")

CSI: TC=0.12 (2-3:1) , BC=0.09 (8-9:1) , WB=0.13 (2-9:1) , SSI=0.10 (2-3:1)

DOL LUMBER=1.00 NAIL=1.00 LS BEND=1.10 COMP=1.10 SHEAR=1.10 TENS= 1.10

COMPANION LIVE LOAD FACTOR = 0.50

AUTOSOLVE HEELS OFF

TRUSS PLATE MANUFACTURER IS NOT RESPONSIBLE FOR QUALITY CONTROL IN THE TRUSS MANUFACTURING PLANT .

NAIL VALUES

PLATE	GRIP(DRY) (PSI) MAX	MIN	SHEAR (PLI) MAX	MIN	SECTION (PLI) MAX	MIN
MT20	618	354	1667	822	2284	1656

PLATE PLACEMENT TOL. = 0.250 inches

PLATE ROTATION TOL. = 5.0 Deg.

JSI GRIP= 0.80 (9) (INPUT = 0.90)
JSI METAL= 0.25 (2) (INPUT = 1.00)

LICENSED PROFESSIONAL ENGINEER
R.M. TREVISAN
100136551
March 14th, 2017
PROVINCE OF ONTARIO

RECEIVED
TOWN OF MILTON
MAR 29, 2017
17-5233
BUILDING DIVISION

READ ALL NOTES ON THIS PAGE AND ON THE ENGINEERING NOTE PAGE ENP-1. THE NOTE PAGE IS AN INTEGRAL PART OF THIS DRAWING AS IT CONTAINS SPECIFICATIONS AND CRITERIA USED IN THE DESIGN OF THIS COMPONENT.

KOTT

JOB NAME	TRUSS NAME	QUANTITY	PLY	JOB DESC.	DRWG NO.
PT0317-081	**T18**	**2**	**1**	TRUSS DESC. LECCO RIDGE-BLOCK 338	

KOTT , Stouffville, ON, CGC

Version 8.100 S Feb 9 2017 MiTek Industries, Inc. Tue Mar 14 15:57:19 2017 Page 1
ID:EvTixTQDI5yR1QLotZTBr_yE?HJ-sm680DCiJb2XX2pJtAwXP?9uXo_wHjm_merUnQzb_PU

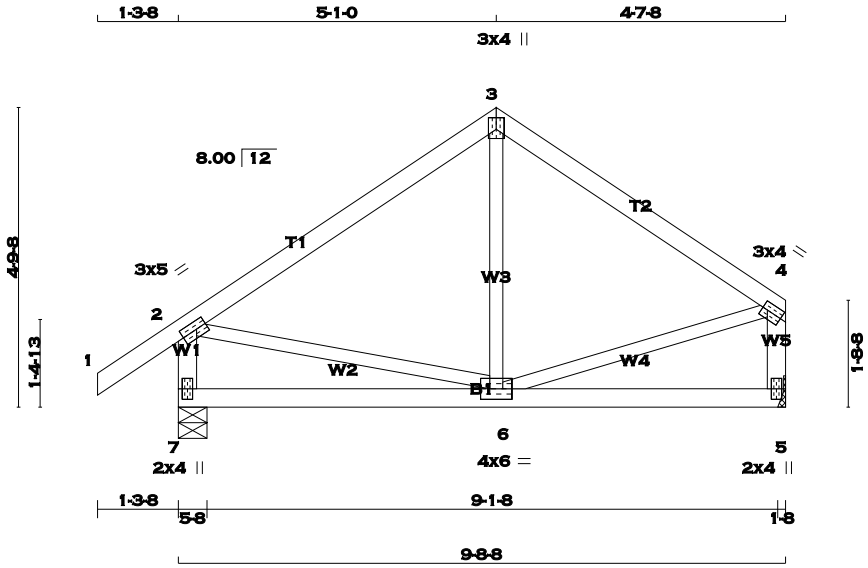

TOTAL WEIGHT = 2 X 40 = 80 lb

[M][F]

LUMBER

N. L. G. A. RULES

CHORDS	SIZE		LUMBER	DESCR.
1 - 3	2x4	DRY	No.2	SPF
3 - 4	2x4	DRY	No.2	SPF
7 - 2	2x4	DRY	No.2	SPF
5 - 4	2x4	DRY	No.2	SPF
7 - 5	2x4	DRY	No.2	SPF
ALL WEBS EXCEPT	2x3	DRY	No.2	SPF

DRY: SEASONED LUMBER.

PLATES (table is in inches)

JT	TYPE	PLATES	W	LEN	Y	X
2	TMVW-t	MT20	3.0	5.0	1.50	2.00
3	TTW+p	MT20	3.0	4.0	2.25	1.50
4	TMVW-t	MT20	3.0	4.0	1.50	1.00
5	BMV1+p	MT20	2.0	4.0		
6	BMWWW-t	MT20	4.0	6.0		
7	BMV1+p	MT20	2.0	4.0		

A SIZE FOR SIZE SUBSTITUTION OF MITEK MII20 WITH TEE-LOK TL20 PLATES IS ALLOWED.

DIMENSIONS, SUPPORTS AND LOADINGS SPECIFIED BY FABRICATOR TO BE VERIFIED BY BUILDING DESIGNER

BEARINGS

JT	FACTORED GROSS REACTION VERT	HORZ	MAXIMUM FACTORED GROSS REACTION DOWN	HORZ	UPLIFT	INPUT BRG IN-SX	REQRD BRG IN-SX
7	567	0	567	0	0	5-8	5-8
5	460	0	460	0	0	HANGER BY OTHERS MIN. SEAT SIZE: 1-8	

UNFACTORED REACTIONS

JT	1ST LCASE COMBINED	MAX./MIN. COMPONENT REACTIONS SNOW	LIVE	PERM.LIVE	WIND	DEAD	SOIL
7	395	290 / 0	0 / 0	0 / 0	0 / 0	105 / 0	0 / 0
5	323	226 / 0	0 / 0	0 / 0	0 / 0	97 / 0	0 / 0

BEARING MATERIAL TO BE SPF NO.2 OR BETTER AT JOINT(S) 7

BRACING

TOP CHORD TO BE SHEATHED OR MAX. PURLIN SPACING = 6.25 FT.
MAX. UNBRACED BOTTOM CHORD LENGTH = 10.00 FT. OR RIGID CEILING DIRECTLY APPLIED.

ALL PITCH BREAKS AND PERIMETER CORNER JOINTS MUST BE LATERALLY RESTRAINED.

LOADING

TOTAL LOAD CASES: (4)

CHORDS

MEMB. FR-TO	MAX. FACTORED FORCE (LBS)	VERT. LOAD (PLF) FROM	TO	LC1 MAX CSI (LC)	MAX. UNBRAC LENGTH
1- 2	0 / 29	-77.3	-77.3	0.10 (1)	10.00
2- 3	-313 / 0	-77.3	-77.3	0.26 (1)	6.25
3- 4	-311 / 0	-77.3	-77.3	0.21 (1)	6.25
7- 2	-530 / 0	0.0	0.0	0.05 (1)	7.81
5- 4	-432 / 0	0.0	0.0	0.05 (1)	7.81
7- 6	0 / 0	-17.5	-17.5	0.12 (4)	10.00
6- 5	0 / 0	-17.5	-17.5	0.12 (4)	10.00

WEBS

MEMB. FR-TO	MAX. FACTORED FORCE (LBS)	MAX CSI (LC)
6- 3	-29 / 74	0.03 (4)
2- 6	0 / 266	0.06 (1)
6- 4	0 / 271	0.06 (1)

DESIGN CRITERIA

SPECIFIED LOADS:

TOP	CH.	LL	=	23.3	PSF
		DL	=	3.0	PSF
BOT	CH.	LL	=	0.0	PSF
		DL	=	7.0	PSF
TOTAL	LOAD		=	33.3	PSF

SPACING = 24.0 IN. C/C

THIS TRUSS IS DESIGNED FOR RESIDENTIAL OR SMALL BUILDING REQUIREMENTS OF PART 9, NBCC 2010

THIS DESIGN COMPLIES WITH:
- PART 9 OF OBC 2012 , BCBC 2012 , ABC 2014
- CSA 086-09
- TPIC 2011

(55 % OF 27.2 P.S.F. G.S.L. PLUS 8.4 P.S.F. RAIN LOAD) EQUALS 23.3 P.S.F. SPECIFIED ROOF LIVE LOAD

ALLOWABLE DEFL.(LL)= L/360 (0.32")
CALCULATED VERT. DEFL.(LL) = L/ 999 (0.00")
ALLOWABLE DEFL.(TL)= L/360 (0.32")
CALCULATED VERT. DEFL.(TL) = L/ 999 (0.02")

CSI: TC=0.26 (2-3:1) , BC=0.12 (6-7:4) , WB=0.06 (4-6:1) , SSI=0.13 (2-3:1)

DOL LUMBER=1.00 NAIL=1.00 LS BEND=1.10 COMP=1.10 SHEAR=1.10 TENS= 1.10

COMPANION LIVE LOAD FACTOR = 0.50

TRUSS PLATE MANUFACTURER IS NOT RESPONSIBLE FOR QUALITY CONTROL IN THE TRUSS MANUFACTURING PLANT .

NAIL VALUES

PLATE	GRIP(DRY) (PSI) MAX	MIN	SHEAR (PLI) MAX	MIN	SECTION (PLI) MAX	MIN
MT20	618	354	1667	822	2284	1656

PLATE PLACEMENT TOL. = 0.250 inches

PLATE ROTATION TOL. = 5.0 Deg.

JSI GRIP= 0.88 (4) (INPUT = 0.90)
JSI METAL= 0.15 (4) (INPUT = 1.00)

LICENSED PROFESSIONAL ENGINEER
P.M. TREVISAN
100136551
March 14th, 2017
PROVINCE OF ONTARIO

RECEIVED
TOWN OF MILTON
MAR 29, 2017
17-5233
BUILDING DIVISION

READ ALL NOTES ON THIS PAGE AND ON THE ENGINEERING NOTE PAGE ENP-1. THE NOTE PAGE IS AN INTEGRAL PART OF THIS DRAWING AS IT CONTAINS SPECIFICATIONS AND CRITERIA USED IN THE DESIGN OF THIS COMPONENT.

KOTT

SCALE = 1:25.8

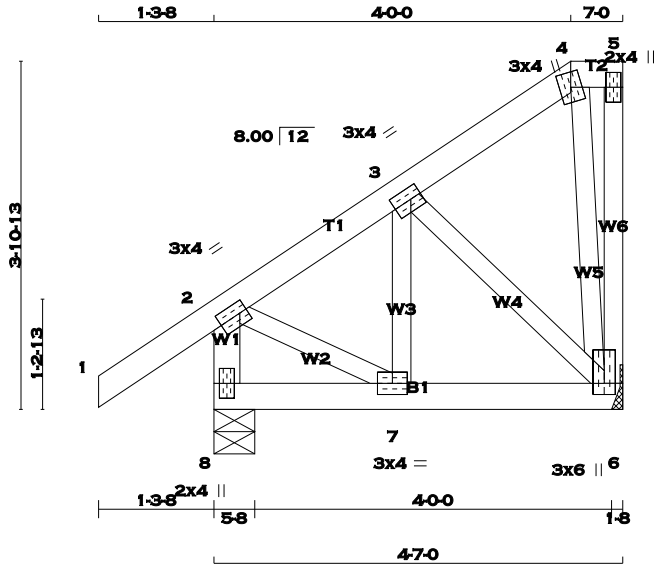

TOTAL WEIGHT = 2 X 25 = 50 lb [M]

LUMBER

N. L. G. A. RULES

CHORDS	SIZE		LUMBER	DESCR.
1 - 4	2x4	DRY	No.2	SPF
4 - 5	2x4	DRY	No.2	SPF
6 - 5	2x3	DRY	No.2	SPF
8 - 2	2x4	DRY	No.2	SPF
8 - 6	2x4	DRY	No.2	SPF
ALL WEBS EXCEPT	2x3	DRY	No.2	SPF

DRY: SEASONED LUMBER.

PLATES (table is in inches)

JT	TYPE	PLATES	W	LEN	Y	X
2	TMVW-t	MT20	3.0	4.0	1.50	1.00
3	TMWW-t	MT20	3.0	4.0	1.50	1.50
4	TTW+m	MT20	3.0	4.0		
5	TMV+p	MT20	2.0	4.0		
6	BMVWW1+p	MT20	3.0	6.0	1.50	1.50
7	BMWW-t	MT20	3.0	4.0		
8	BMV1+p	MT20	2.0	4.0		

A SIZE FOR SIZE SUBSTITUTION OF MITEK MII20 WITH TEE-LOK TL20 PLATES IS ALLOWED.

DIMENSIONS, SUPPORTS AND LOADINGS SPECIFIED BY FABRICATOR TO BE VERIFIED BY BUILDING DESIGNER

BEARINGS

JT	FACTORED GROSS REACTION VERT	HORZ	MAXIMUM FACTORED GROSS REACTION DOWN	HORZ	UPLIFT	INPUT BRG IN-SX	REQRD BRG IN-SX
6	217	0	217	0	0	HANGER BY OTHERS MIN. SEAT SIZE: 1-8	
8	324	0	324	0	0	5-8	5-8

UNFACTORED REACTIONS

JT	1ST LCASE COMBINED	MAX./MIN. COMPONENT REACTIONS SNOW	LIVE	PERM.LIVE	WIND	DEAD	SOIL
6	153	107 / 0	0 / 0	0 / 0	0 / 0	46 / 0	0 / 0
8	225	171 / 0	0 / 0	0 / 0	0 / 0	54 / 0	0 / 0

BEARING MATERIAL TO BE SPF NO.2 OR BETTER AT JOINT(S) 8

BRACING

TOP CHORD TO BE SHEATHED OR MAX. PURLIN SPACING = 6.25 FT.
MAX. UNBRACED BOTTOM CHORD LENGTH = 10.00 FT. OR RIGID CEILING DIRECTLY APPLIED.

ALL PITCH BREAKS AND PERIMETER CORNER JOINTS MUST BE LATERALLY RESTRAINED.

LOADING

TOTAL LOAD CASES: (4)

CHORDS

MEMB. FR-TO	MAX. FACTORED FORCE (LBS)	VERT. LOAD LC1 (PLF) FROM	TO	MAX CSI (LC)	MAX. UNBRAC LENGTH
1- 2	0 / 29	-77.3	-77.3	0.10 (1)	10.00
2- 3	-141 / 0	-77.3	-77.3	0.05 (1)	6.25
3- 4	-24 / 0	-77.3	-77.3	0.05 (1)	6.25
4- 5	0 / 0	-77.3	-77.3	0.00 (1)	10.00
6- 5	-23 / 0	0.0	0.0	0.01 (1)	7.81
8- 2	-308 / 0	0.0	0.0	0.03 (1)	7.81
8- 7	0 / 0	-17.5	-17.5	0.02 (4)	10.00
7- 6	0 / 125	-17.5	-17.5	0.03 (1)	10.00

WEBS

MEMB. FR-TO	MAX. FACTORED FORCE (LBS)	MAX CSI (LC)
7- 3	-8 / 38	0.01 (4)
3- 6	-156 / 0	0.03 (1)
4- 6	-70 / 0	0.02 (1)
2- 7	0 / 136	0.03 (1)

DESIGN CRITERIA

SPECIFIED LOADS:

TOP	CH.	LL	=	23.3	PSF
		DL	=	3.0	PSF
BOT	CH.	LL	=	0.0	PSF
		DL	=	7.0	PSF
TOTAL	LOAD		=	33.3	PSF

SPACING = 24.0 IN. C/C

LOADING IN FLAT SECTION BASED ON A SLOPE OF 6.00/12

THIS TRUSS IS DESIGNED FOR RESIDENTIAL OR SMALL BUILDING REQUIREMENTS OF PART 9, NBCC 2010

THIS DESIGN COMPLIES WITH:
- PART 9 OF OBC 2012 , BCBC 2012 , ABC 2014
- CSA 086-09
- TPIC 2011

(55 % OF 27.2 P.S.F. G.S.L. PLUS 8.4 P.S.F. RAIN LOAD) EQUALS 23.3 P.S.F. SPECIFIED ROOF LIVE LOAD

ALLOWABLE DEFL.(LL)= L/360 (0.19")
CALCULATED VERT. DEFL.(LL) = L/ 999 (0.00")
ALLOWABLE DEFL.(TL)= L/360 (0.19")
CALCULATED VERT. DEFL.(TL) = L/ 999 (0.00")

CSI: TC=0.10 (1-2:1) , BC=0.03 (6-7:1) , WB=0.03 (3-6:1) , SSI=0.07 (1-2:1)

DOL LUMBER=1.00 NAIL=1.00 LS BEND=1.10 COMP=1.10 SHEAR=1.10 TENS= 1.10

COMPANION LIVE LOAD FACTOR = 0.50

TRUSS PLATE MANUFACTURER IS NOT RESPONSIBLE FOR QUALITY CONTROL IN THE TRUSS MANUFACTURING PLANT .

NAIL VALUES

PLATE	GRIP(DRY) (PSI) MAX	MIN	SHEAR (PLI) MAX	MIN	SECTION (PLI) MAX	MIN
MT20	618	354	1667	822	2284	1656

PLATE PLACEMENT TOL. = 0.250 inches

PLATE ROTATION TOL. = 5.0 Deg.

JSI GRIP= 0.45 (2) (INPUT = 0.90)
JSI METAL= 0.09 (2) (INPUT = 1.00)

LICENSED PROFESSIONAL ENGINEER
P.M. TREVISAN
100136551
March 14th, 2017
PROVINCE OF ONTARIO

RECEIVED
TOWN OF MILTON
MAR 29, 2017
17-5233
BUILDING DIVISION

READ ALL NOTES ON THIS PAGE AND ON THE ENGINEERING NOTE PAGE ENP-1. THE NOTE PAGE IS AN INTEGRAL PART OF THIS DRAWING AS IT CONTAINS SPECIFICATIONS AND CRITERIA USED IN THE DESIGN OF THIS COMPONENT.

KOTT

JOB NAME	TRUSS NAME	QUANTITY	PLY	JOB DESC.	DRWG NO.
PT0317-081	T20	10	1	TRUSS DESC. LECCO RIDGE-BLOCK 338	ENG JOB: PT0317-081

KOTT , Stouffville, ON, CGC

Version 8.100 S Feb 9 2017 MiTek Industries, Inc. Tue Mar 14 15:57:19 2017 Page 1

ID:EvTixTQDI5yR1QLotZTBr_yE?HJ-sm680DCiJb2XX2pJtAwXP?9uDo_6Hjj_merUnQzb_PU

SCALE = 1:28.1

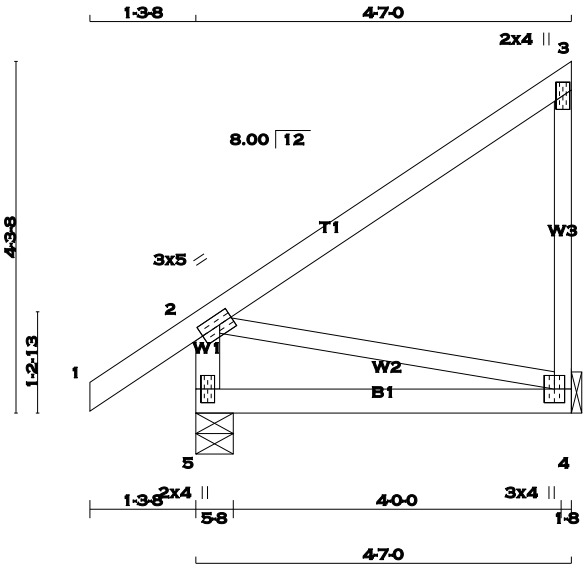

TOTAL WEIGHT = 10 X 21 = 208 lb [M]

LUMBER

N. L. G. A. RULES

CHORDS	SIZE		LUMBER	DESCR.
5 - 2	2x4	DRY	No.2	SPF
1 - 3	2x4	DRY	No.2	SPF
4 - 3	2x3	DRY	No.2	SPF
5 - 4	2x4	DRY	No.2	SPF
ALL WEBS	2x3	DRY	No.2	SPF

DRY: SEASONED LUMBER.

PLATES (table is in inches)

JT	TYPE	PLATES	W	LEN	Y	X
2	TMVW-t	MT20	3.0	5.0	1.50	2.00
3	TMV+p	MT20	2.0	4.0		
4	BMVW1+p	MT20	3.0	4.0		
5	BMV1+p	MT20	2.0	4.0		

A SIZE FOR SIZE SUBSTITUTION OF MITEK MII20 WITH TEE-LOK TL20 PLATES IS ALLOWED.

DIMENSIONS, SUPPORTS AND LOADINGS SPECIFIED BY FABRICATOR TO BE VERIFIED BY BUILDING DESIGNER

BEARINGS

JT	FACTORED GROSS REACTION VERT	HORZ	MAXIMUM FACTORED GROSS REACTION DOWN	HORZ	UPLIFT	INPUT BRG IN-SX	REQRD BRG IN-SX
5	324	0	324	0	0	5-8	5-8
4	217	0	217	0	0	1-8	1-8

SEE MITEK STANDARD DETAIL B37579H FOR CONNECTION TO JOINT(S) 4

UNFACTORED REACTIONS

JT	1ST LCASE COMBINED	MAX./MIN. COMPONENT REACTIONS SNOW	LIVE	PERM.LIVE	WIND	DEAD	SOIL
5	225	171 / 0	0 / 0	0 / 0	0 / 0	54 / 0	0 / 0
4	153	107 / 0	0 / 0	0 / 0	0 / 0	46 / 0	0 / 0

BEARING MATERIAL TO BE SPF NO.2 OR BETTER AT JOINT(S) 5

BRACING

TOP CHORD TO BE SHEATHED OR MAX. PURLIN SPACING = 10.00 FT.
MAX. UNBRACED BOTTOM CHORD LENGTH = 10.00 FT. OR RIGID CEILING DIRECTLY APPLIED.

ALL PITCH BREAKS AND PERIMETER CORNER JOINTS MUST BE LATERALLY RESTRAINED.

LOADING

TOTAL LOAD CASES: (4)

CHORDS MEMB. FR-TO	MAX. FACTORED FORCE (LBS)	FACTORED VERT. LOAD (PLF) FROM	TO	LC1 MAX CSI (LC)	MAX. UNBRAC LENGTH	WEBS MEMB. FR-TO	MAX. FACTORED FORCE (LBS)	MAX CSI (LC)
5- 2	-283 / 0	0.0	0.0	0.03 (1)	7.81	2- 4	0 / 0	0.00 (1)
1- 2	0 / 29	-77.3	-77.3	0.10 (1)	10.00			
2- 3	0 / 0	-77.3	-77.3	0.28 (1)	10.00			
4- 3	-177 / 0	0.0	0.0	0.07 (1)	7.81			
5- 4	0 / 0	-17.5	-17.5	0.11 (4)	10.00			

DESIGN CRITERIA

SPECIFIED LOADS:

TOP CH.	LL	=	23.3	PSF
	DL	=	3.0	PSF
BOT CH.	LL	=	0.0	PSF
	DL	=	7.0	PSF
TOTAL LOAD		=	33.3	PSF

SPACING = 24.0 IN. C/C

THIS TRUSS IS DESIGNED FOR RESIDENTIAL OR SMALL BUILDING REQUIREMENTS OF PART 9, NBCC 2010

THIS DESIGN COMPLIES WITH:
- PART 9 OF OBC 2012 , BCBC 2012 , ABC 2014
- CSA 086-09
- TPIC 2011

(55 % OF 27.2 P.S.F. G.S.L. PLUS 8.4 P.S.F. RAIN LOAD) EQUALS 23.3 P.S.F. SPECIFIED ROOF LIVE LOAD

ALLOWABLE DEFL.(TL)= L/360 (0.19")
CALCULATED VERT. DEFL.(TL) = L/ 999 (0.02")

CSI: TC=0.28 (2-3:1) , BC=0.11 (4-5:4) , WB=0.00 (2-4:1) , SSI=0.12 (2-3:1)

DOL LUMBER=1.00 NAIL=1.00 LS BEND=1.10 COMP=1.10 SHEAR=1.10 TENS= 1.10

COMPANION LIVE LOAD FACTOR = 0.50

TRUSS PLATE MANUFACTURER IS NOT RESPONSIBLE FOR QUALITY CONTROL IN THE TRUSS MANUFACTURING PLANT .

NAIL VALUES

PLATE	GRIP(DRY) (PSI) MAX	MIN	SHEAR (PLI) MAX	MIN	SECTION (PLI) MAX	MIN
MT20	618	354	1667	822	2284	1656

PLATE PLACEMENT TOL. = 0.250 inches

PLATE ROTATION TOL. = 0.5 Deg.

JSI GRIP= 0.26 (2) (INPUT = 0.90)
JSI METAL= 0.06 (2) (INPUT = 1.00)

LICENSED PROFESSIONAL ENGINEER
P.M. TREVISAN
100136551
March 14th, 2017
PROVINCE OF ONTARIO

RECEIVED
TOWN OF MILTON
MAR 29, 2017
17-5233
BUILDING DIVISION

READ ALL NOTES ON THIS PAGE AND ON THE ENGINEERING NOTE PAGE ENP-1. THE NOTE PAGE IS AN INTEGRAL PART OF THIS DRAWING AS IT CONTAINS SPECIFICATIONS AND CRITERIA USED IN THE DESIGN OF THIS COMPONENT.

KOTT

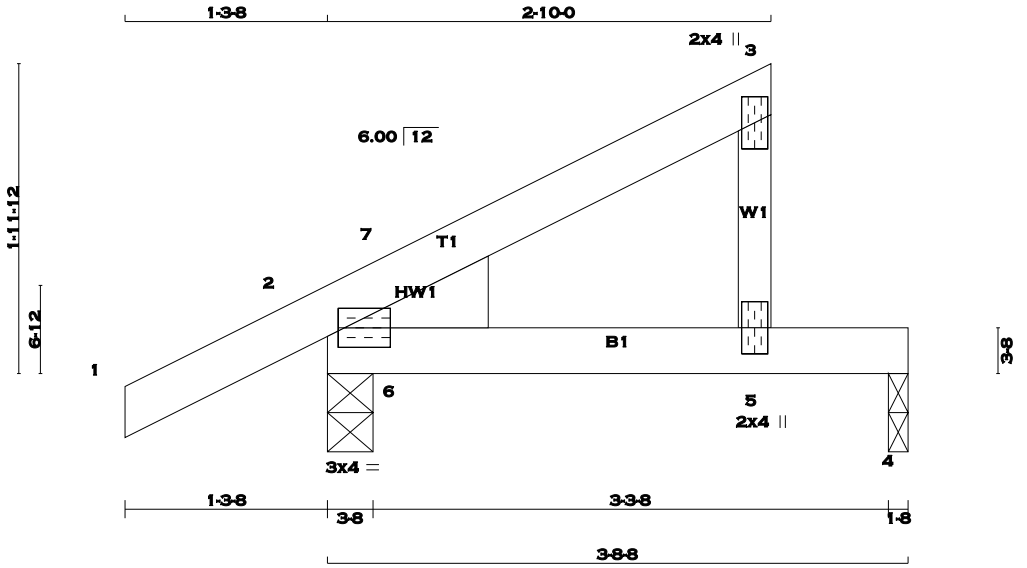

TOTAL WEIGHT = 6 X 12 = 74 lb [M]

LUMBER

N. L. G. A. RULES

CHORDS	SIZE		LUMBER	DESCR.
1 - 3	2x4	DRY	No.2	SPF
5 - 3	2x3	DRY	No.2	SPF
2 - 4	2x4	DRY	No.2	SPF

DRY: SEASONED LUMBER.

PLATES (table is in inches)

JT	TYPE	PLATES	W	LEN	Y	X
2	TMBH1-I	MT20	3.0	4.0	1.50	0.50
3	TMV+p	MT20	2.0	4.0		
5	BMV+p	MT20	2.0	4.0		

A SIZE FOR SIZE SUBSTITUTION OF MITEK MII20 WITH TEE-LOK TL20 PLATES IS ALLOWED.

DIMENSIONS, SUPPORTS AND LOADINGS SPECIFIED BY FABRICATOR TO BE VERIFIED BY BUILDING DESIGNER

BEARINGS

JT	FACTORED GROSS REACTION VERT	HORZ	MAXIMUM FACTORED GROSS REACTION DOWN	HORZ	UPLIFT	INPUT BRG IN-SX	REQRD BRG IN-SX	HEEL WEDGE
2	273	0	273	0	0	3-8	3-8	2x6 L
4	116	0	116	0	0	1-8	1-8	

UNFACTORED REACTIONS

JT	1ST LCASE COMBINED	MAX./MIN. COMPONENT REACTIONS SNOW	LIVE	PERM.LIVE	WIND	DEAD	SOIL
2	189	145 / 0	0 / 0	0 / 0	0 / 0	45 / 0	0 / 0
4	83	50 / 0	0 / 0	0 / 0	0 / 0	32 / 0	0 / 0

BEARING MATERIAL TO BE SPF NO.2 OR BETTER AT JOINT(S) 2, 4

BRACING

TOP CHORD TO BE SHEATHED OR MAX. PURLIN SPACING = 6.25 FT.
MAX. UNBRACED BOTTOM CHORD LENGTH = 10.00 FT. OR RIGID CEILING DIRECTLY APPLIED.

ALL PITCH BREAKS AND PERIMETER CORNER JOINTS MUST BE LATERALLY RESTRAINED.

LOADING

TOTAL LOAD CASES: (5)

CHORDS

MEMB. FR-TO	MAX. FACTORED FORCE (LBS)	FACTORED VERT. LOAD (PLF) FROM	TO	LC1 MAX CSI (LC)	MAX. UNBRAC LENGTH
1- 2	0 / 16	-77.3	-77.3	0.10 (1)	10.00
2- 7	-46 / 0	-77.3	-77.3	0.05 (1)	6.25
7- 3	0 / 7	-77.3	-77.3	0.10 (1)	10.00
5- 3	-104 / 0	0.0	0.0	0.02 (1)	7.81
2- 6	0 / 0	-17.5	-17.5	0.05 (1)	10.00
6- 5	0 / 0	-17.5	-17.5	0.13 (1)	10.00
5- 4	0 / 0	-17.5	-17.5	0.13 (1)	10.00

WEBS

MEMB. FR-TO	MAX. FACTORED FORCE (LBS)	MAX CSI (LC)
6- 7	-29 / 32	0.00 (1)

CANTILEVER ANALYSIS HAS BEEN CONSIDERED IN THIS DESIGN

DESIGN CRITERIA

SPECIFIED LOADS:

TOP CH.	LL	=	23.3	PSF
	DL	=	3.0	PSF
BOT CH.	LL	=	0.0	PSF
	DL	=	7.0	PSF
TOTAL LOAD		=	33.3	PSF

SPACING = 24.0 IN. C/C

THIS TRUSS IS DESIGNED FOR RESIDENTIAL OR SMALL BUILDING REQUIREMENTS OF PART 9, NBCC 2010

THIS DESIGN COMPLIES WITH:
- PART 9 OF OBC 2012 , BCBC 2012 , ABC 2014
- CSA 086-09
- TPIC 2011

(55 % OF 27.2 P.S.F. G.S.L. PLUS 8.4 P.S.F. RAIN LOAD) EQUALS 23.3 P.S.F. SPECIFIED ROOF LIVE LOAD

ALLOWABLE DEFL.(LL)= L/360 (0.19")
CALCULATED VERT. DEFL.(LL) = L/ 999 (0.01")
ALLOWABLE DEFL.(TL)= L/360 (0.19")
CALCULATED VERT. DEFL.(TL) = L/ 999 (0.03")

CSI: TC=0.10 (1-2:1) , BC=0.13 (5-6:1) , WB=0.00 (6-7:1) , SSI=0.09 (4-5:1)

DOL LUMBER=1.00 NAIL=1.00 LS BEND=1.10 COMP=1.10 SHEAR=1.10 TENS= 1.10

COMPANION LIVE LOAD FACTOR = 0.50

TRUSS PLATE MANUFACTURER IS NOT RESPONSIBLE FOR QUALITY CONTROL IN THE TRUSS MANUFACTURING PLANT .

NAIL VALUES

PLATE	GRIP(DRY) (PSI) MAX	MIN	SHEAR (PLI) MAX	MIN	SECTION (PLI) MAX	MIN
MT20	618	354	1667	822	2284	1656

PLATE PLACEMENT TOL. = 0.250 inches

PLATE ROTATION TOL. = 5.0 Deg.

JSI GRIP= 0.60 (2) (INPUT = 0.90)
JSI METAL= 0.04 (2) (INPUT = 1.00)

LICENSED PROFESSIONAL ENGINEER
R.M. TREVISAN
100136551
March 14th, 2017
PROVINCE OF ONTARIO

RECEIVED
TOWN OF MILTON
MAR 29, 2017
17-5233
BUILDING DIVISION

READ ALL NOTES ON THIS PAGE AND ON THE ENGINEERING NOTE PAGE ENP-1. THE NOTE PAGE IS AN INTEGRAL PART OF THIS DRAWING AS IT CONTAINS SPECIFICATIONS AND CRITERIA USED IN THE DESIGN OF THIS COMPONENT.

KOTT

JOB NAME	TRUSS NAME	QUANTITY	PLY	JOB DESC.	DRWG NO.
PT0317-081	T22	6	1	TRUSS DESC. LECCO RIDGE-BLOCK 338	ENG JOB: PT0317-081

KOTT , Stouffville, ON, CGC

Version 8.100 S Feb 9 2017 MiTek Industries, Inc. Tue Mar 14 15:57:21 2017 Page 1

ID:EvTixTQDI5yR1QLotZTBr_yE?HJ-o9EuRuEyqCIFnMzh_by?UQECycbLlWxHDyKbrIzb_PS

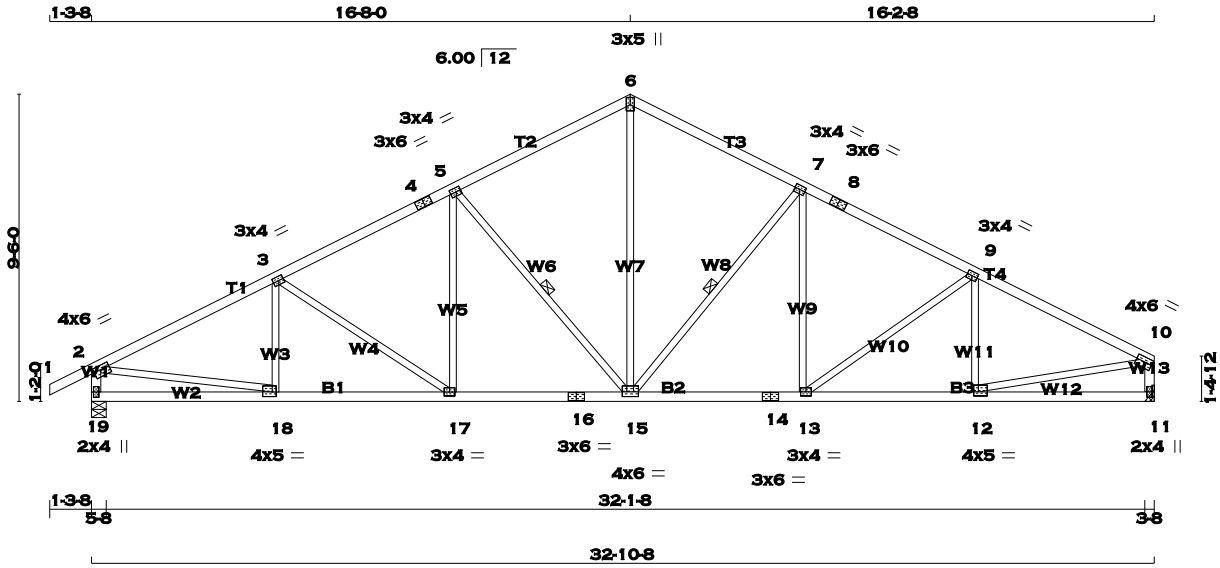

TOTAL WEIGHT = 6 X 138 = 830 lb

[M][F]

LUMBER

N. L. G. A. RULES

CHORDS	SIZE		LUMBER	DESCR.
1 - 4	2x4	DRY	No.2	SPF
4 - 6	2x4	DRY	No.2	SPF
6 - 8	2x4	DRY	No.2	SPF
8 - 10	2x4	DRY	No.2	SPF
19 - 2	2x4	DRY	No.2	SPF
11 - 10	2x4	DRY	No.2	SPF
19 - 16	2x4	DRY	No.2	SPF
16 - 14	2x4	DRY	No.2	SPF
14 - 11	2x4	DRY	No.2	SPF
ALL WEBS EXCEPT	2x3	DRY	No.2	SPF

DRY: SEASONED LUMBER.

PLATES (table is in inches)

JT	TYPE	PLATES	W	LEN	Y	X
2 3, 5, 7, 9	TMVW-t	MT20	4.0	6.0	1.50	2.75
3	TMWW-t	MT20	3.0	4.0	1.50	1.75
4	TS-t	MT20	3.0	6.0		
6	TTW+p	MT20	3.0	5.0	2.75	1.50
8	TS-t	MT20	3.0	6.0		
10	TMVW-t	MT20	4.0	6.0	1.75	2.75
11	BMV1+p	MT20	2.0	4.0		
12	BMWW-t	MT20	4.0	5.0	1.50	1.75
13	BMWW-t	MT20	3.0	4.0		
14	BS-t	MT20	3.0	6.0		
15	BMWWW-t	MT20	4.0	6.0	1.75	3.00
16	BS-t	MT20	3.0	6.0		
17	BMWW-t	MT20	3.0	4.0		
18	BMWW-t	MT20	4.0	5.0	1.75	1.50
19	BMV1+p	MT20	2.0	4.0		

A SIZE FOR SIZE SUBSTITUTION OF MITEK MII20 WITH TEE-LOK TL20 PLATES IS ALLOWED.

DIMENSIONS, SUPPORTS AND LOADINGS SPECIFIED BY FABRICATOR TO BE VERIFIED BY BUILDING DESIGNER

BEARINGS

JT	FACTORED GROSS REACTION VERT	HORZ	MAXIMUM FACTORED GROSS REACTION DOWN	HORZ	UPLIFT	INPUT BRG IN-SX	REQRD BRG IN-SX
19	1664	0	1664	0	0	5-8	5-8
11	1559	0	1559	0	0	HANGER BY OTHERS MIN. SEAT SIZE: 3-8	

UNFACTORED REACTIONS

JT	1ST LCASE COMBINED	SNOW	MAX./MIN. COMPONENT REACTIONS LIVE	PERM.LIVE	WIND	DEAD	SOIL
19	1165	829 / 0	0 / 0	0 / 0	0 / 0	337 / 0	0 / 0
11	1094	765 / 0	0 / 0	0 / 0	0 / 0	329 / 0	0 / 0

BEARING MATERIAL TO BE SPF NO.2 OR BETTER AT JOINT(S) 19

BRACING

TOP CHORD TO BE SHEATHED OR MAX. PURLIN SPACING = 4.20 FT.
MAX. UNBRACED BOTTOM CHORD LENGTH = 10.00 FT. OR RIGID CEILING DIRECTLY APPLIED.

ALL PITCH BREAKS AND PERIMETER CORNER JOINTS MUST BE LATERALLY RESTRAINED.

1 - 2x3 SPF No.2 LATERAL BRACE(S) AT 1/ 2 LENGTH OF 5-15, 7-15. DBS = 20-0-0 . CBF = 82 LBS.

DBS = DIAGONAL BRACE SPACING (MAX). CBF = CUMULATIVE BRACING FORCE. FASTEN LATERAL BRACE(S) USING (0.122"X3") SPIRAL NAILS : 1 NAIL FOR 2x3 BRACE(S), 2 FOR 1x4, 2x4, 2x5, 3 FOR 2x6, 4 FOR 2x8, 5 FOR 2x10, AND 6 FOR 2x12.

END VERTICAL(S) MUST BE SHEATHED OR HAVE BRACES AS INDICATED IN THE MAX. UNBRACED LENGTH COLUMN OF THE TABLE BELOW

LOADING

TOTAL LOAD CASES: (4)

CHORDS

MEMB. FR-TO	MAX. FACTORED FORCE (LBS)	VERT. LOAD LC1 (PLF) FROM	TO	MAX CSI (LC)	MAX. UNBRAC LENGTH
1- 2	0 / 23	-77.3	-77.3	0.10 (1)	10.00
2- 3	-2276 / 0	-77.3	-77.3	0.39 (1)	4.20
3- 4	-2039 / 0	-77.3	-77.3	0.32 (1)	4.47
4- 5	-2039 / 0	-77.3	-77.3	0.32 (1)	4.47
5- 6	-1582 / 0	-77.3	-77.3	0.31 (1)	4.94
6- 7	-1582 / 0	-77.3	-77.3	0.29 (1)	4.96
7- 8	-1986 / 0	-77.3	-77.3	0.30 (1)	4.54
8- 9	-1986 / 0	-77.3	-77.3	0.30 (1)	4.54
9-10	-2137 / 0	-77.3	-77.3	0.36 (1)	4.34
19- 2	-1620 / 0	0.0	0.0	0.16 (1)	6.50
11-10	-1517 / 0	0.0	0.0	0.16 (1)	6.67
19-18	0 / 0	-17.5	-17.5	0.12 (4)	10.00
18-17	0 / 2052	-17.5	-17.5	0.38 (1)	10.00
17-16	0 / 1824	-17.5	-17.5	0.36 (1)	10.00
16-15	0 / 1824	-17.5	-17.5	0.36 (1)	10.00
15-14	0 / 1776	-17.5	-17.5	0.35 (1)	10.00
14-13	0 / 1776	-17.5	-17.5	0.35 (1)	10.00
13-12	0 / 1927	-17.5	-17.5	0.36 (1)	10.00
12-11	0 / 0	-17.5	-17.5	0.12 (4)	10.00

WEBS

MEMB. FR-TO	MAX. FACTORED FORCE (LBS)	MAX CSI (LC)
18- 3	-205 / 31	0.05 (1)
3-17	-275 / 0	0.22 (1)
17- 5	0 / 247	0.06 (1)
5-15	-655 / 0	0.32 (1)
15- 6	0 / 1060	0.24 (1)
15- 7	-595 / 0	0.29 (1)
13- 7	0 / 199	0.05 (4)
13- 9	-187 / 0	0.15 (1)
12- 9	-275 / 8	0.07 (1)
2-18	0 / 2075	0.47 (1)
12-10	0 / 1964	0.44 (1)

DESIGN CRITERIA

SPECIFIED LOADS:

TOP	CH.	LL	=	23.3	PSF
		DL	=	3.0	PSF
BOT	CH.	LL	=	0.0	PSF
		DL	=	7.0	PSF
TOTAL	LOAD		=	33.3	PSF

SPACING = 24.0 IN. C/C

THIS TRUSS IS DESIGNED FOR RESIDENTIAL OR SMALL BUILDING REQUIREMENTS OF PART 9, NBCC 2010

THIS DESIGN COMPLIES WITH:
- PART 9 OF OBC 2012 , BCBC 2012 , ABC 2014
- CSA 086-09
- TPIC 2011

(55 % OF 27.2 P.S.F. G.S.L. PLUS 8.4 P.S.F. RAIN LOAD) EQUALS 23.3 P.S.F. SPECIFIED ROOF LIVE LOAD

ALLOWABLE DEFL.(LL)= L/360 (1.10")
CALCULATED VERT. DEFL.(LL) = L/ 999 (0.11")
ALLOWABLE DEFL.(TL)= L/360 (1.10")
CALCULATED VERT. DEFL.(TL) = L/ 999 (0.20")

CSI: TC=0.39 (2-3:1) , BC=0.38 (17-18:1) , WB=0.47 (2-18:1) , SSI=0.18 (2-3:1)

DOL LUMBER=1.00 NAIL=1.00 LS BEND=1.10 COMP=1.10 SHEAR=1.10 TENS= 1.10

COMPANION LIVE LOAD FACTOR = 0.50

TRUSS PLATE MANUFACTURER IS NOT RESPONSIBLE FOR QUALITY CONTROL IN THE TRUSS MANUFACTURING PLANT .

NAIL VALUES

PLATE	GRIP(DRY) (PSI) MAX	MIN	SHEAR (PLI) MAX	MIN	SECTION (PLI) MAX	MIN
MT20	618	354	1667	822	2284	1656

PLATE PLACEMENT TOL. = 0.250 inches

PLATE ROTATION TOL. = 5.0 Deg.

JSI GRIP= 0.90 (10) (INPUT = 0.90)
JSI METAL= 0.62 (18) (INPUT = 1.00)

LICENSED PROFESSIONAL ENGINEER
R.M. TREVISAN
100136551
March 14th, 2017
PROVINCE OF ONTARIO

RECEIVED
TOWN OF MILTON
MAR 29, 2017
17-5233
BUILDING DIVISION

READ ALL NOTES ON THIS PAGE AND ON THE ENGINEERING NOTE PAGE ENP-1. THE NOTE PAGE IS AN INTEGRAL PART OF THIS DRAWING AS IT CONTAINS SPECIFICATIONS AND CRITERIA USED IN THE DESIGN OF THIS COMPONENT.

KOTT

JOB NAME	TRUSS NAME	QUANTITY	PLY	JOB DESC.	DRWG NO.
PT0317-081	T23	2	1	TRUSS DESC. LECCO RIDGE-BLOCK 338	ENG JOB: PT0317-081

KOTT , Stouffville, ON, CGC

Version 8.100 S Feb 9 2017 MiTek Industries, Inc. Tue Mar 14 15:57:22 2017 Page 1

ID:EvTixTQDI5yR1QLotZTBr_yE?HJ-HLoHeEFbbWQ6OWYuYJTE1enOs0qJUuuQSc38Okzb_PR

SCALE = 1:74.9

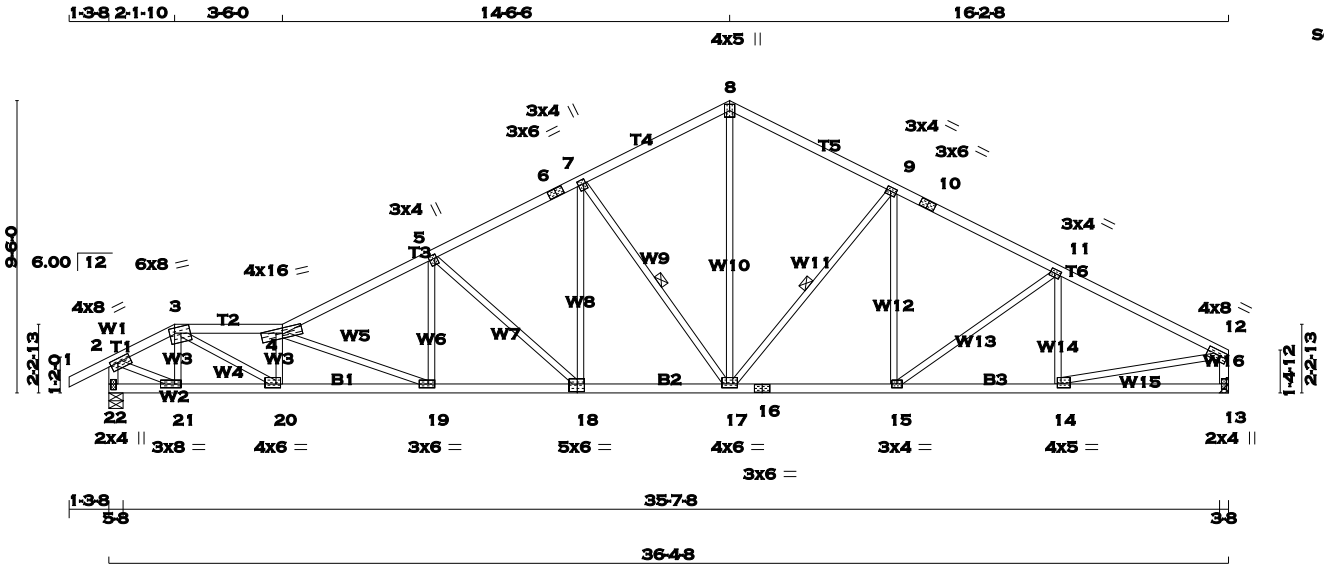

TOTAL WEIGHT = 2 X 154 = 308 lb

[M][F]

LUMBER

N. L. G. A. RULES

CHORDS	SIZE		LUMBER	DESCR.
1 - 3	2x4	DRY	No.2	SPF
3 - 4	2x4	DRY	No.2	SPF
4 - 6	2x4	DRY	No.2	SPF
6 - 8	2x4	DRY	No.2	SPF
8 - 10	2x4	DRY	No.2	SPF
10 - 12	2x4	DRY	No.2	SPF
22 - 2	2x4	DRY	No.2	SPF
13 - 12	2x4	DRY	No.2	SPF
22 - 18	2x4	DRY	No.2	SPF
18 - 16	2x4	DRY	No.2	SPF
16 - 13	2x4	DRY	No.2	SPF
ALL WEBS EXCEPT	2x3	DRY	No.2	SPF

DRY: SEASONED LUMBER.

PLATES (table is in inches)

JT	TYPE	PLATES	W	LEN	Y	X
2	TMVW-t	MT20	4.0	8.0	1.50	3.00
3	TTWW-m	MT20	6.0	8.0	2.00	2.00
4	TTWW-m	MT20	4.0	16.0	2.00	7.75
5	TMWW+t	MT20	3.0	4.0	1.50	0.75
6	TS-t	MT20	3.0	6.0		
7	TMWW+t	MT20	3.0	4.0	1.75	0.75
8	TTW+p	MT20	4.0	5.0		
9	TMWW-t	MT20	3.0	4.0	1.50	1.75
10	TS-t	MT20	3.0	6.0		
11	TMWW-t	MT20	3.0	4.0	1.50	1.75
12	TMVW-t	MT20	4.0	8.0	1.75	Edge
13	BMV1+p	MT20	2.0	4.0		
14	BMWW-t	MT20	4.0	5.0	1.50	1.50
15	BMWW-t	MT20	3.0	4.0		
16	BS-t	MT20	3.0	6.0		
17	BMWWW-t	MT20	4.0	6.0	1.50	3.00
18	BSWW-l	MT20	5.0	6.0	3.00	2.75
19	BMWW-t	MT20	3.0	6.0	1.50	2.50
20	BMWW-t	MT20	4.0	6.0	1.50	1.75
21	BMWW-t	MT20	3.0	8.0	1.50	2.50
22	BMV1+p	MT20	2.0	4.0	2.25	1.00

Edge - INDICATES REFERENCE CORNER OF PLATE TOUCHES EDGE OF CHORD.

A SIZE FOR SIZE SUBSTITUTION OF MITEK MII20 WITH TEE-LOK TL20 PLATES IS ALLOWED.

DIMENSIONS, SUPPORTS AND LOADINGS SPECIFIED BY FABRICATOR TO BE VERIFIED BY BUILDING DESIGNER

BEARINGS

JT	FACTORED GROSS REACTION VERT	HORZ	MAXIMUM FACTORED GROSS REACTION DOWN	HORZ	UPLIFT	INPUT BRG IN-SX	REQRD BRG IN-SX
22	1830	0	1830	0	0	5-8	5-8
13	1725	0	1725	0	0	HANGER BY OTHERS MIN. SEAT SIZE: 3-8	

UNFACTORED REACTIONS

JT	1ST LCASE COMBINED	SNOW	MAX./MIN. COMPONENT REACTIONS LIVE	PERM.LIVE	WIND	DEAD	SOIL
22	1282	910 / 0	0 / 0	0 / 0	0 / 0	372 / 0	0 / 0
13	1211	847 / 0	0 / 0	0 / 0	0 / 0	364 / 0	0 / 0

BEARING MATERIAL TO BE SPF NO.2 OR BETTER AT JOINT(S) 22

BRACING

TOP CHORD TO BE SHEATHED OR MAX. PURLIN SPACING = 3.25 FT.
MAX. UNBRACED BOTTOM CHORD LENGTH = 10.00 FT. OR RIGID CEILING DIRECTLY APPLIED.

ALL PITCH BREAKS AND PERIMETER CORNER JOINTS MUST BE LATERALLY RESTRAINED.

1 - 2x3 SPF No.2 LATERAL BRACE(S) AT 1/ 2 LENGTH OF 7-17. DBS = 14-0-0 . CBF = 90 LBS.
1 - 2x3 SPF No.2 LATERAL BRACE(S) AT 1/ 2 LENGTH OF 9-17. DBS = 20-0-0 . CBF = 71 LBS.

DBS = DIAGONAL BRACE SPACING (MAX). CBF = CUMULATIVE BRACING FORCE. FASTEN LATERAL BRACE(S) USING (0.122"X3") SPIRAL NAILS : 1 NAIL FOR 2x3 BRACE(S), 2 FOR 1x4, 2x4, 2x5, 3 FOR 2x6, 4 FOR 2x8, 5 FOR 2x10, AND 6 FOR 2x12.

END VERTICAL(S) MUST BE SHEATHED OR HAVE BRACES AS INDICATED IN THE MAX. UNBRACED LENGTH COLUMN OF THE TABLE BELOW

LOADING

TOTAL LOAD CASES: (4)

CHORDS

MEMB. FR-TO	MAX. FACTORED FORCE (LBS)	FROM	FACTORED VERT. LOAD LC1 (PLF) TO	MAX CSI (LC)	MAX. UNBRAC LENGTH
1- 2	0 / 23	-77.3	-77.3	0.10 (1)	10.00
2- 3	-2069 / 0	-77.3	-77.3	0.09 (1)	4.66
3- 4	-4145 / 0	-77.3	-77.3	0.31 (1)	3.25
4- 5	-3345 / 0	-77.3	-77.3	0.38 (1)	3.58
5- 6	-2557 / 0	-77.3	-77.3	0.28 (1)	4.11
6- 7	-2557 / 0	-77.3	-77.3	0.28 (1)	4.11
7- 8	-1907 / 0	-77.3	-77.3	0.26 (1)	4.65
8- 9	-1909 / 0	-77.3	-77.3	0.31 (1)	4.59
9-10	-2295 / 0	-77.3	-77.3	0.32 (1)	4.26
10-11	-2295 / 0	-77.3	-77.3	0.32 (1)	4.26
11-12	-2403 / 0	-77.3	-77.3	0.38 (1)	4.11
22- 2	-1826 / 0	0.0	0.0	0.18 (1)	6.20
13-12	-1683 / 0	0.0	0.0	0.17 (1)	6.40
22-21	0 / 0	-17.5	-17.5	0.05 (1)	10.00
21-20	0 / 1814	-17.5	-17.5	0.37 (1)	10.00
20-19	0 / 4215	-17.5	-17.5	0.78 (1)	10.00
19-18	0 / 3008	-17.5	-17.5	0.54 (1)	10.00
18-17	0 / 2287	-17.5	-17.5	0.43 (1)	10.00
17-16	0 / 2052	-17.5	-17.5	0.39 (1)	10.00
16-15	0 / 2052	-17.5	-17.5	0.39 (1)	10.00
15-14	0 / 2165	-17.5	-17.5	0.39 (1)	10.00
14-13	0 / 0	-17.5	-17.5	0.12 (4)	10.00

WEBS

MEMB. FR-TO	MAX. FACTORED FORCE (LBS)	MAX CSI (LC)
21- 3	-615 / 0	0.09 (1)
3-20	0 / 2682	0.60 (1)
20- 4	-1307 / 0	0.20 (1)
4-19	-1300 / 0	0.61 (1)
19- 5	0 / 593	0.13 (1)
5-18	-968 / 0	0.74 (1)
18- 7	0 / 720	0.16 (1)
7-17	-1024 / 0	0.48 (1)
17- 8	0 / 1372	0.31 (1)
17- 9	-569 / 0	0.27 (1)
15- 9	0 / 171	0.04 (4)
15-11	-139 / 0	0.11 (1)
14-11	-323 / 0	0.08 (1)
2-21	0 / 1978	0.45 (1)
14-12	0 / 2206	0.50 (1)

DESIGN CRITERIA

SPECIFIED LOADS:

TOP CH.	LL	=	23.3	PSF
	DL	=	3.0	PSF
BOT CH.	LL	=	0.0	PSF
	DL	=	7.0	PSF
TOTAL LOAD		=	33.3	PSF

SPACING = 24.0 IN. C/C

LOADING IN ALL FLAT SECTIONS BASED ON A SLOPE OF 6.00/12

THIS TRUSS IS DESIGNED FOR RESIDENTIAL OR SMALL BUILDING REQUIREMENTS OF PART 9, NBCC 2010

THIS DESIGN COMPLIES WITH:
- PART 9 OF OBC 2012 , BCBC 2012 , ABC 2014
- CSA 086-09
- TPIC 2011

(55 % OF 27.2 P.S.F. G.S.L. PLUS 8.4 P.S.F. RAIN LOAD) EQUALS 23.3 P.S.F. SPECIFIED ROOF LIVE LOAD

ALLOWABLE DEFL.(LL)= L/360 (1.21")
CALCULATED VERT. DEFL.(LL) = L/ 999 (0.23")
ALLOWABLE DEFL.(TL)= L/360 (1.21")
CALCULATED VERT. DEFL.(TL) = L/ 999 (0.41")

CSI: TC=0.38 (11-12:1) , BC=0.78 (19-20:1) , WB=0.74 (5-18:1) , SSI=0.18 (11-12:1)

DOL LUMBER=1.00 NAIL=1.00 LS BEND=1.10 COMP=1.10 SHEAR=1.10 TENS= 1.10

COMPANION LIVE LOAD FACTOR = 0.50

TRUSS PLATE MANUFACTURER IS NOT RESPONSIBLE FOR QUALITY CONTROL IN THE TRUSS MANUFACTURING PLANT .

NAIL VALUES

PLATE	GRIP(DRY) (PSI) MAX	MIN	SHEAR (PLI) MAX	MIN	SECTION (PLI) MAX	MIN
MT20	618	354	1667	822	2284	1656

PLATE PLACEMENT TOL. = 0.250 inches

PLATE ROTATION TOL. = 5.0 Deg.

JSI GRIP= 0.89 (3) (INPUT = 0.90)
JSI METAL= 0.65 (14) (INPUT = 1.00)

LICENSED PROFESSIONAL ENGINEER
R.M. TREVISAN
100136551
March 14th, 2017
PROVINCE OF ONTARIO

RECEIVED
TOWN OF MILTON
MAR 29, 2017
17-5233
BUILDING DIVISION

READ ALL NOTES ON THIS PAGE AND ON THE ENGINEERING NOTE PAGE ENP-1. THE NOTE PAGE IS AN INTEGRAL PART OF THIS DRAWING AS IT CONTAINS SPECIFICATIONS AND CRITERIA USED IN THE DESIGN OF THIS COMPONENT.

KOTT

CONTINUED ON PAGE 2

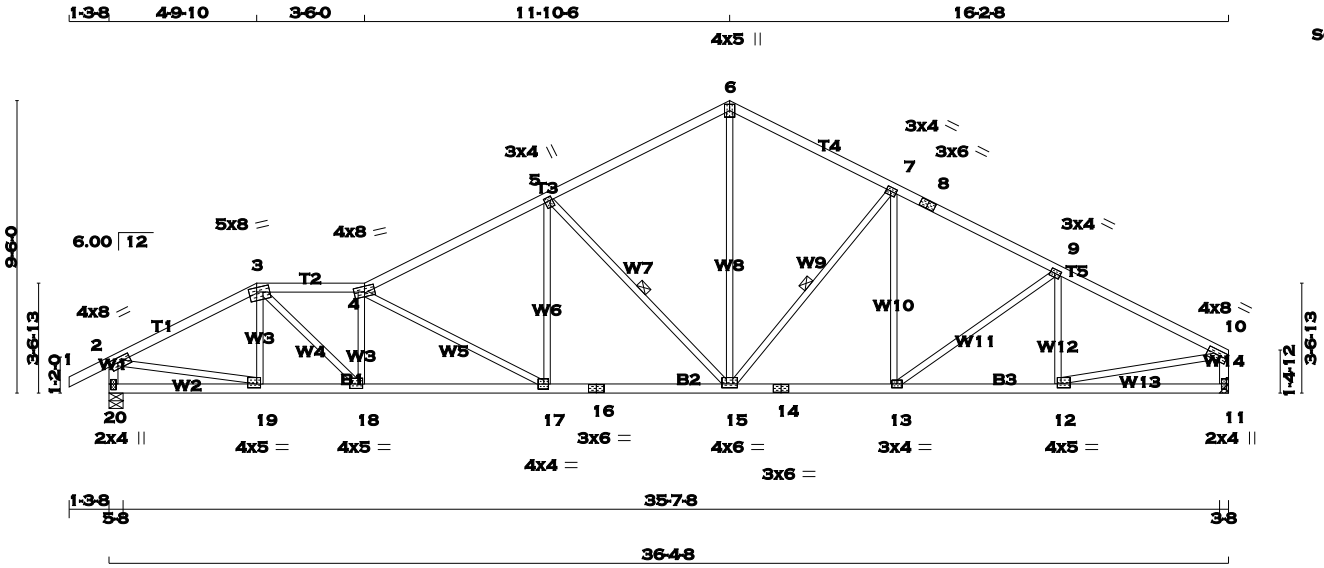

LUMBER

N. L. G. A. RULES

CHORDS	SIZE		LUMBER	DESCR.
1 - 3	2x4	DRY	No.2	SPF
3 - 4	2x4	DRY	No.2	SPF
4 - 6	2x4	DRY	No.2	SPF
6 - 8	2x4	DRY	No.2	SPF
8 - 10	2x4	DRY	No.2	SPF
20 - 2	2x4	DRY	No.2	SPF
11 - 10	2x4	DRY	No.2	SPF
20 - 16	2x4	DRY	No.2	SPF
16 - 14	2x4	DRY	No.2	SPF
14 - 11	2x4	DRY	No.2	SPF
ALL WEBS EXCEPT	2x3	DRY	No.2	SPF

DRY: SEASONED LUMBER.

PLATES (table is in inches)

JT	TYPE	PLATES	W	LEN	Y	X
2	TMVW-t	MT20	4.0	8.0	1.75	3.00
3	TTWW-m	MT20	5.0	8.0	1.75	3.00
4	TTWW-m	MT20	4.0	8.0	2.25	4.00
5	TMWW+t	MT20	3.0	4.0	1.50	0.75
6	TTW+p	MT20	4.0	5.0		
7	TMWW-t	MT20	3.0	4.0	1.50	1.75
8	TS-t	MT20	3.0	6.0		
9	TMWW-t	MT20	3.0	4.0	1.50	1.75
10	TMVW-t	MT20	4.0	8.0	1.75	Edge
11	BMV1+p	MT20	2.0	4.0		
12	BMWW-t	MT20	4.0	5.0	1.50	1.50
13	BMWW-t	MT20	3.0	4.0		
14	BS-t	MT20	3.0	6.0		
15	BMWWW-t	MT20	4.0	6.0	1.50	3.00
16	BS-t	MT20	3.0	6.0		
17	BMWW-t	MT20	4.0	4.0	2.00	1.75
18	BMWW-t	MT20	4.0	5.0	1.75	1.75
19	BMWW-t	MT20	4.0	5.0	1.50	1.50
20	BMV1+p	MT20	2.0	4.0	2.25	1.00

Edge - INDICATES REFERENCE CORNER OF PLATE TOUCHES EDGE OF CHORD.

A SIZE FOR SIZE SUBSTITUTION OF MITEK MII20 WITH TEE-LOK TL20 PLATES IS ALLOWED.

DIMENSIONS, SUPPORTS AND LOADINGS SPECIFIED BY FABRICATOR TO BE VERIFIED BY BUILDING DESIGNER

BEARINGS

JT	FACTORED GROSS REACTION VERT	HORZ	MAXIMUM FACTORED GROSS REACTION DOWN	HORZ	UPLIFT	INPUT BRG IN-SX	REQRD BRG IN-SX
20	1830	0	1830	0	0	5-8	5-8
11	1725	0	1725	0	0	HANGER BY OTHERS MIN. SEAT SIZE: 3-8	

UNFACTORED REACTIONS

JT	1ST LCASE COMBINED	SNOW	MAX./MIN. COMPONENT REACTIONS LIVE	PERM.LIVE	WIND	DEAD	SOIL
20	1282	910 / 0	0 / 0	0 / 0	0 / 0	372 / 0	0 / 0
11	1211	847 / 0	0 / 0	0 / 0	0 / 0	364 / 0	0 / 0

BEARING MATERIAL TO BE SPF NO.2 OR BETTER AT JOINT(S) 20

BRACING

TOP CHORD TO BE SHEATHED OR MAX. PURLIN SPACING = 3.66 FT.
MAX. UNBRACED BOTTOM CHORD LENGTH = 10.00 FT. OR RIGID CEILING DIRECTLY APPLIED.

ALL PITCH BREAKS AND PERIMETER CORNER JOINTS MUST BE LATERALLY RESTRAINED.

1 - 2x3 SPF No.2 LATERAL BRACE(S) AT 1/ 2 LENGTH OF 5-15. DBS = 12-0-0 . CBF = 84 LBS.
1 - 2x3 SPF No.2 LATERAL BRACE(S) AT 1/ 2 LENGTH OF 7-15. DBS = 20-0-0 . CBF = 71 LBS.

DBS = DIAGONAL BRACE SPACING (MAX). CBF = CUMULATIVE BRACING FORCE. FASTEN LATERAL BRACE(S) USING (0.122"X3") SPIRAL NAILS : 1 NAIL FOR 2x3 BRACE(S), 2 FOR 1x4, 2x4, 2x5, 3 FOR 2x6, 4 FOR 2x8, 5 FOR 2x10, AND 6 FOR 2x12.

END VERTICAL(S) MUST BE SHEATHED OR HAVE BRACES AS INDICATED IN THE MAX. UNBRACED LENGTH COLUMN OF THE TABLE BELOW

LOADING

TOTAL LOAD CASES: (4)

CHORDS MEMB. FR-TO	MAX. FACTORED FORCE (LBS)	FACTORED VERT. LOAD LC1 (PLF) FROM	TO	MAX CSI (LC)	MAX. UNBRAC LENGTH	WEBS MEMB. FR-TO	MAX. FACTORED FORCE (LBS)	MAX CSI (LC)
1- 2	0 / 23	-77.3	-77.3	0.10 (1)	10.00	19- 3	-304 / 0	0.06 (1)
2- 3	-2482 / 0	-77.3	-77.3	0.32 (1)	4.11	3-18	0 / 1581	0.36 (1)
3- 4	-3349 / 0	-77.3	-77.3	0.25 (1)	3.66	18- 4	-1031 / 0	0.22 (1)
4- 5	-2726 / 0	-77.3	-77.3	0.49 (1)	3.78	4-17	-1050 / 0	0.92 (1)
5- 6	-1916 / 0	-77.3	-77.3	0.42 (1)	4.45	17- 5	0 / 620	0.14 (1)
6- 7	-1909 / 0	-77.3	-77.3	0.31 (1)	4.59	5-15	-1115 / 0	0.56 (1)
7- 8	-2295 / 0	-77.3	-77.3	0.32 (1)	4.26	15- 6	0 / 1350	0.30 (1)
8- 9	-2295 / 0	-77.3	-77.3	0.32 (1)	4.26	15- 7	-569 / 0	0.27 (1)
9-10	-2403 / 0	-77.3	-77.3	0.38 (1)	4.11	13- 7	0 / 170	0.04 (4)
20- 2	-1792 / 0	0.0	0.0	0.18 (1)	6.24	13- 9	-139 / 0	0.11 (1)
11-10	-1683 / 0	0.0	0.0	0.17 (1)	6.40	12- 9	-322 / 0	0.08 (1)
						2-19	0 / 2252	0.51 (1)
20-19	0 / 0	-17.5	-17.5	0.09 (4)	10.00	12-10	0 / 2206	0.50 (1)
19-18	0 / 2209	-17.5	-17.5	0.39 (1)	10.00			
18-17	0 / 3381	-17.5	-17.5	0.62 (1)	10.00			
17-16	0 / 2461	-17.5	-17.5	0.46 (1)	10.00			
16-15	0 / 2461	-17.5	-17.5	0.46 (1)	10.00			
15-14	0 / 2052	-17.5	-17.5	0.40 (1)	10.00			
14-13	0 / 2052	-17.5	-17.5	0.40 (1)	10.00			
13-12	0 / 2165	-17.5	-17.5	0.39 (1)	10.00			
12-11	0 / 0	-17.5	-17.5	0.12 (4)	10.00			

RECEIVED
TOWN OF MILTON
MAR 29, 2017
17-5233
BUILDING DIVISION

READ ALL NOTES ON THIS PAGE AND ON THE ENGINEERING NOTE PAGE ENP-1. THE NOTE PAGE IS AN INTEGRAL PART OF THIS DRAWING AS IT CONTAINS SPECIFICATIONS AND CRITERIA USED IN THE DESIGN OF THIS COMPONENT.

DESIGN CRITERIA

SPECIFIED LOADS:

TOP CH.	LL	=	23.3	PSF
	DL	=	3.0	PSF
BOT CH.	LL	=	0.0	PSF
	DL	=	7.0	PSF
TOTAL LOAD		=	33.3	PSF

SPACING = 24.0 IN. C/C

LOADING IN ALL FLAT SECTIONS BASED ON A SLOPE OF 6.00/12

THIS TRUSS IS DESIGNED FOR RESIDENTIAL OR SMALL BUILDING REQUIREMENTS OF PART 9, NBCC 2010

THIS DESIGN COMPLIES WITH:
- PART 9 OF OBC 2012 , BCBC 2012 , ABC 2014
- CSA 086-09
- TPIC 2011

(55 % OF 27.2 P.S.F. G.S.L. PLUS 8.4 P.S.F. RAIN LOAD) EQUALS 23.3 P.S.F. SPECIFIED ROOF LIVE LOAD

ALLOWABLE DEFL.(LL)= L/360 (1.21")
CALCULATED VERT. DEFL.(LL) = L/ 999 (0.20")
ALLOWABLE DEFL.(TL)= L/360 (1.21")
CALCULATED VERT. DEFL.(TL) = L/ 999 (0.36")

CSI: TC=0.49 (4-5:1) , BC=0.62 (17-18:1) , WB=0.92 (4-17:1) , SSI=0.20 (4-5:1)

DOL LUMBER=1.00 NAIL=1.00 LS BEND=1.10 COMP=1.10 SHEAR=1.10 TENS= 1.10

COMPANION LIVE LOAD FACTOR = 0.50

TRUSS PLATE MANUFACTURER IS NOT RESPONSIBLE FOR QUALITY CONTROL IN THE TRUSS MANUFACTURING PLANT .

NAIL VALUES

PLATE	GRIP(DRY) (PSI) MAX	MIN	SHEAR (PLI) MAX	MIN	SECTION (PLI) MAX	MIN
MT20	618	354	1667	822	2284	1656

PLATE PLACEMENT TOL. = 0.250 inches

PLATE ROTATION TOL. = 5.0 Deg.

JSI GRIP= 0.90 (3) (INPUT = 0.90)
JSI METAL= 0.66 (19) (INPUT = 1.00)

KOTT

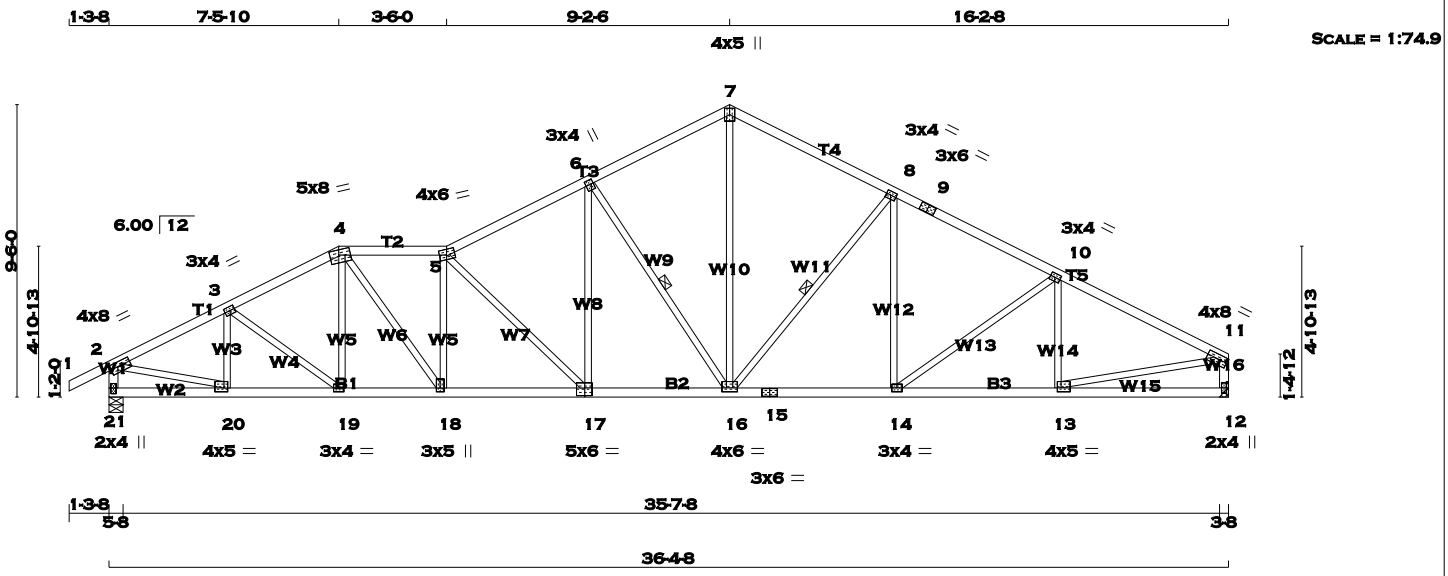

TOTAL WEIGHT = 2 X 159 = 319 lb

[M][F]

LUMBER

N. L. G. A. RULES

CHORDS	SIZE		LUMBER	DESCR.
1 - 4	2x4	DRY	No.2	SPF
4 - 5	2x4	DRY	No.2	SPF
5 - 7	2x4	DRY	No.2	SPF
7 - 9	2x4	DRY	No.2	SPF
9 - 11	2x4	DRY	No.2	SPF
21 - 2	2x4	DRY	No.2	SPF
12 - 11	2x4	DRY	No.2	SPF
21 - 17	2x4	DRY	No.2	SPF
17 - 15	2x4	DRY	No.2	SPF
15 - 12	2x4	DRY	No.2	SPF
ALL WEBS EXCEPT	2x3	DRY	No.2	SPF

DRY: SEASONED LUMBER.

PLATES (table is in inches)

JT	TYPE	PLATES	W	LEN	Y	X
2 3, 8, 10	TMVW-t	MT20	4.0	8.0	1.75	3.00
3	TMWW-t	MT20	3.0	4.0	1.50	1.75
4	TTWW-m	MT20	5.0	8.0	2.00	3.50
5	TTWW-m	MT20	4.0	6.0	2.25	2.75
6	TMWW+t	MT20	3.0	4.0	1.75	0.75
7	TTW+p	MT20	4.0	5.0		
9	TS-t	MT20	3.0	6.0		
11	TMVW-t	MT20	4.0	8.0	1.75	Edge
12	BMV1+p	MT20	2.0	4.0		
13	BMWW-t	MT20	4.0	5.0	1.50	1.50
14	BMWW-t	MT20	3.0	4.0		
15	BS-t	MT20	3.0	6.0		
16	BMWWW-t	MT20	4.0	6.0	1.50	3.00
17	BSWW-l	MT20	5.0	6.0	3.00	2.75
18	BMWW+t	MT20	3.0	5.0	1.50	1.50
19	BMWW-t	MT20	3.0	4.0		
20	BMWW-t	MT20	4.0	5.0	1.50	1.50
21	BMV1+p	MT20	2.0	4.0	2.25	1.00

Edge - INDICATES REFERENCE CORNER OF PLATE TOUCHES EDGE OF CHORD.

A SIZE FOR SIZE SUBSTITUTION OF MITEK MII20 WITH TEE-LOK TL20 PLATES IS ALLOWED.

DIMENSIONS, SUPPORTS AND LOADINGS SPECIFIED BY FABRICATOR TO BE VERIFIED BY BUILDING DESIGNER

BEARINGS

JT	FACTORED GROSS REACTION VERT	HORZ	MAXIMUM FACTORED GROSS REACTION DOWN	HORZ	UPLIFT	INPUT BRG IN-SX	REQRD BRG IN-SX
21	1830	0	1830	0	0	5-8	5-8
12	1725	0	1725	0	0	HANGER BY OTHERS MIN. SEAT SIZE: 3-8	

UNFACTORED REACTIONS

JT	1ST LCASE COMBINED	SNOW	MAX./MIN. COMPONENT REACTIONS LIVE	PERM.LIVE	WIND	DEAD	SOIL
21	1282	910 / 0	0 / 0	0 / 0	0 / 0	372 / 0	0 / 0
12	1211	847 / 0	0 / 0	0 / 0	0 / 0	364 / 0	0 / 0

BEARING MATERIAL TO BE SPF NO.2 OR BETTER AT JOINT(S) 21

BRACING

TOP CHORD TO BE SHEATHED OR MAX. PURLIN SPACING = 3.96 FT.
MAX. UNBRACED BOTTOM CHORD LENGTH = 10.00 FT. OR RIGID CEILING DIRECTLY APPLIED.

ALL PITCH BREAKS AND PERIMETER CORNER JOINTS MUST BE LATERALLY RESTRAINED.

1 - 2x3 SPF No.2 LATERAL BRACE(S) AT 1/ 2 LENGTH OF 6-16. DBS = 14-0-0 . CBF = 89 LBS.
1 - 2x3 SPF No.2 LATERAL BRACE(S) AT 1/ 2 LENGTH OF 8-16. DBS = 20-0-0 . CBF = 71 LBS.

DBS = DIAGONAL BRACE SPACING (MAX). CBF = CUMULATIVE BRACING FORCE. FASTEN LATERAL BRACE(S) USING (0.122"X3") SPIRAL NAILS : 1 NAIL FOR 2x3 BRACE(S), 2 FOR 1x4, 2x4, 2x5, 3 FOR 2x6, 4 FOR 2x8, 5 FOR 2x10, AND 6 FOR 2x12.

END VERTICAL(S) MUST BE SHEATHED OR HAVE BRACES AS INDICATED IN THE MAX. UNBRACED LENGTH COLUMN OF THE TABLE BELOW

LOADING

TOTAL LOAD CASES: (4)

CHORDS

MEMB. FR-TO	MAX. FACTORED FORCE (LBS)	FACTORED VERT. LOAD LC1 (PLF) FROM	TO	MAX CSI (LC)	MAX. UNBRAC LENGTH
1- 2	0 / 23	-77.3	-77.3	0.10 (1)	10.00
2- 3	-2413 / 0	-77.3	-77.3	0.19 (1)	4.28
3- 4	-2509 / 0	-77.3	-77.3	0.19 (1)	4.22
4- 5	-2855 / 0	-77.3	-77.3	0.21 (1)	3.96
5- 6	-2505 / 0	-77.3	-77.3	0.29 (1)	4.13
6- 7	-1909 / 0	-77.3	-77.3	0.25 (1)	4.65
7- 8	-1908 / 0	-77.3	-77.3	0.31 (1)	4.59
8- 9	-2295 / 0	-77.3	-77.3	0.32 (1)	4.26
9-10	-2295 / 0	-77.3	-77.3	0.32 (1)	4.26
10-11	-2403 / 0	-77.3	-77.3	0.38 (1)	4.11
21- 2	-1795 / 0	0.0	0.0	0.18 (1)	6.24
12-11	-1683 / 0	0.0	0.0	0.17 (1)	6.40
21-20	0 / 0	-17.5	-17.5	0.05 (4)	10.00
20-19	0 / 2169	-17.5	-17.5	0.38 (1)	10.00
19-18	0 / 2231	-17.5	-17.5	0.39 (1)	10.00
18-17	0 / 2872	-17.5	-17.5	0.51 (1)	10.00
17-16	0 / 2259	-17.5	-17.5	0.42 (1)	10.00
16-15	0 / 2052	-17.5	-17.5	0.39 (1)	10.00
15-14	0 / 2052	-17.5	-17.5	0.39 (1)	10.00
14-13	0 / 2164	-17.5	-17.5	0.39 (1)	10.00
13-12	0 / 0	-17.5	-17.5	0.12 (4)	10.00

WEBS

MEMB. FR-TO	MAX. FACTORED FORCE (LBS)	MAX CSI (LC)
20- 3	-427 / 0	0.08 (1)
3-19	0 / 77	0.02 (1)
19- 4	0 / 51	0.02 (4)
4-18	0 / 1050	0.24 (1)
18- 5	-784 / 0	0.28 (1)
5-17	-868 / 0	0.67 (1)
17- 6	0 / 692	0.16 (1)
6-16	-1022 / 0	0.48 (1)
16- 7	0 / 1387	0.31 (1)
16- 8	-570 / 0	0.28 (1)
14- 8	0 / 172	0.04 (4)
14-10	-139 / 0	0.11 (1)
13-10	-323 / 0	0.09 (1)
2-20	0 / 2222	0.50 (1)
13-11	0 / 2206	0.50 (1)

RECEIVED
TOWN OF MILTON
MAR 29, 2017
17-5233
BUILDING DIVISION

READ ALL NOTES ON THIS PAGE AND ON THE ENGINEERING NOTE PAGE ENP-1. THE NOTE PAGE IS AN INTEGRAL PART OF THIS DRAWING AS IT CONTAINS SPECIFICATIONS AND CRITERIA USED IN THE DESIGN OF THIS COMPONENT.

DESIGN CRITERIA

SPECIFIED LOADS:

TOP	CH.	LL	=	23.3	PSF
		DL	=	3.0	PSF
BOT	CH.	LL	=	0.0	PSF
		DL	=	7.0	PSF
TOTAL	LOAD		=	33.3	PSF

SPACING = 24.0 IN. C/C

LOADING IN ALL FLAT SECTIONS BASED ON A SLOPE OF 6.00/12

THIS TRUSS IS DESIGNED FOR RESIDENTIAL OR SMALL BUILDING REQUIREMENTS OF PART 9, NBCC 2010

THIS DESIGN COMPLIES WITH:
- PART 9 OF OBC 2012 , BCBC 2012 , ABC 2014
- CSA 086-09
- TPIC 2011

(55 % OF 27.2 P.S.F. G.S.L. PLUS 8.4 P.S.F. RAIN LOAD) EQUALS 23.3 P.S.F. SPECIFIED ROOF LIVE LOAD

ALLOWABLE DEFL.(LL)= L/360 (1.21")
CALCULATED VERT. DEFL.(LL) = L/ 999 (0.17")
ALLOWABLE DEFL.(TL)= L/360 (1.21")
CALCULATED VERT. DEFL.(TL) = L/ 999 (0.31")

CSI: TC=0.38 (10-11:1) , BC=0.51 (17-18:1) , WB=0.67 (5-17:1) , SSI=0.18 (10-11:1)

DOL LUMBER=1.00 NAIL=1.00 LS BEND=1.10 COMP=1.10 SHEAR=1.10 TENS= 1.10

COMPANION LIVE LOAD FACTOR = 0.50

TRUSS PLATE MANUFACTURER IS NOT RESPONSIBLE FOR QUALITY CONTROL IN THE TRUSS MANUFACTURING PLANT .

NAIL VALUES

PLATE	GRIP(DRY) (PSI) MAX	MIN	SHEAR (PLI) MAX	MIN	SECTION (PLI) MAX	MIN
MT20	618	354	1667	822	2284	1656

PLATE PLACEMENT TOL. = 0.250 inches

PLATE ROTATION TOL. = 5.0 Deg.

JSI GRIP= 0.89 (18) (INPUT = 0.90)
JSI METAL= 0.65 (20) (INPUT = 1.00)

KOTT

JOB NAME	TRUSS NAME	QUANTITY	PLY	JOB DESC.	DRWG NO.
PT0317-081	**T26**	**2**	**1**	TRUSS DESC. LECCO RIDGE-BLOCK 338	

KOTT , Stouffville, ON, CGC

Version 8.100 S Feb 9 2017 MiTek Industries, Inc. Tue Mar 14 15:57:24 2017 Page 1
ID:EvTixTQDI5yR1QLotZTBr_yE?HJ-Dkw13wGr77gqepiGgjWi63skOpbeyrpjwwYFSdzb_PP

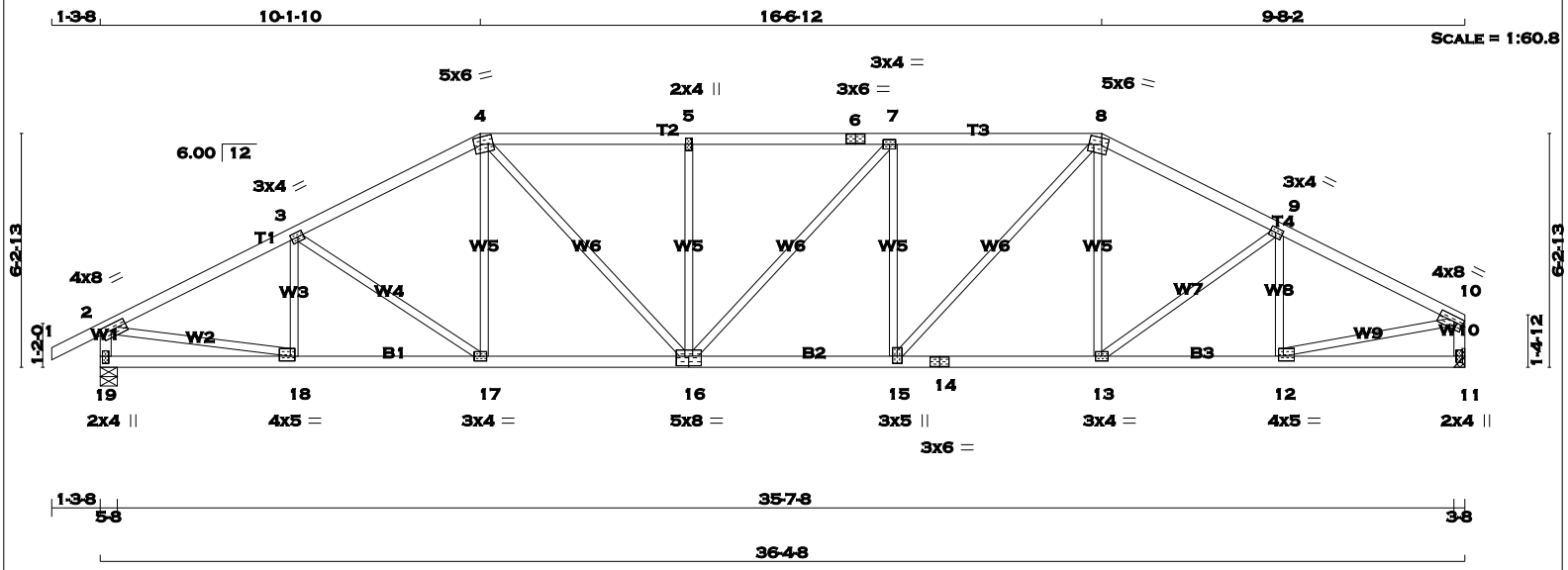

TOTAL WEIGHT = 2 X 149 = 298 lb
[M][F]

LUMBER
N. L. G. A. RULES

CHORDS	SIZE		LUMBER	DESCR.
1 - 4	2x4	DRY	No.2	SPF
4 - 6	2x4	DRY	No.2	SPF
6 - 8	2x4	DRY	No.2	SPF
8 - 10	2x4	DRY	No.2	SPF
19 - 2	2x4	DRY	No.2	SPF
11 - 10	2x4	DRY	No.2	SPF
19 - 16	2x4	DRY	No.2	SPF
16 - 14	2x4	DRY	No.2	SPF
14 - 11	2x4	DRY	No.2	SPF
ALL WEBS EXCEPT	2x3	DRY	No.2	SPF

DRY: SEASONED LUMBER.

PLATES (table is in inches)

JT	TYPE	PLATES	W	LEN	Y	X
2	TMVW-t	MT20	4.0	8.0	1.75	3.00
3	TMWW-t	MT20	3.0	4.0	1.50	1.75
4	TTWW-m	MT20	5.0	6.0	2.25	2.00
5	TMW+w	MT20	2.0	4.0		
6	TS-t	MT20	3.0	6.0		
7	TMWW-t	MT20	3.0	4.0		
8	TTWW-m	MT20	5.0	6.0	2.00	2.00
9	TMWW-t	MT20	3.0	4.0	1.50	1.75
10	TMVW-t	MT20	4.0	8.0	1.75	Edge
11	BMV1+p	MT20	2.0	4.0		
12	BMWW-t	MT20	4.0	5.0	1.50	1.50
13	BMWW-t	MT20	3.0	4.0		
14	BS-t	MT20	3.0	6.0		
15	BMWW+t	MT20	3.0	5.0	2.25	1.50
16	BSWWW-l	MT20	5.0	8.0	3.00	4.00
17	BMWW-t	MT20	3.0	4.0		
18	BMWW-t	MT20	4.0	5.0	1.50	1.50
19	BMV1+p	MT20	2.0	4.0	2.25	1.00

Edge - INDICATES REFERENCE CORNER OF PLATE TOUCHES EDGE OF CHORD.

A SIZE FOR SIZE SUBSTITUTION OF MITEK MII20 WITH TEE-LOK TL20 PLATES IS ALLOWED.

DIMENSIONS, SUPPORTS AND LOADINGS SPECIFIED BY FABRICATOR TO BE VERIFIED BY BUILDING DESIGNER

BEARINGS

JT	FACTORED GROSS REACTION VERT	HORZ	MAXIMUM FACTORED GROSS REACTION DOWN	HORZ	UPLIFT	INPUT BRG IN-SX	REQRD BRG IN-SX
19	1830	0	1830	0	0	5-8	5-8
11	1725	0	1725	0	0	HANGER BY OTHERS	
						MIN. SEAT SIZE: 3-8	

UNFACTORED REACTIONS

JT	1ST LCASE COMBINED	SNOW	MAX./MIN. COMPONENT REACTIONS LIVE	PERM.LIVE	WIND	DEAD	SOIL
19	1282	910 / 0	0 / 0	0 / 0	0 / 0	372 / 0	0 / 0
11	1211	847 / 0	0 / 0	0 / 0	0 / 0	364 / 0	0 / 0

BEARING MATERIAL TO BE SPF NO.2 OR BETTER AT JOINT(S) 19

BRACING
TOP CHORD TO BE SHEATHED OR MAX. PURLIN SPACING = 3.95 FT.
MAX. UNBRACED BOTTOM CHORD LENGTH = 10.00 FT. OR RIGID CEILING DIRECTLY APPLIED.

ALL PITCH BREAKS AND PERIMETER CORNER JOINTS MUST BE LATERALLY RESTRAINED.

LOADING
TOTAL LOAD CASES: (4)

CHORDS

MEMB. FR-TO	MAX. FACTORED FORCE (LBS)	FROM	TO	FACTORED VERT. LOAD LC1 (PLF)	MAX CSI (LC)	MAX. UNBRAC LENGTH
1- 2	0 / 23	-77.3	-77.3	0.10 (1)	10.00	
2- 3	-2544 / 0	-77.3	-77.3	0.34 (1)	4.05	
3- 4	-2403 / 0	-77.3	-77.3	0.32 (1)	4.16	
4- 5	-2632 / 0	-77.3	-77.3	0.38 (1)	3.95	
5- 6	-2632 / 0	-77.3	-77.3	0.35 (1)	3.99	
6- 7	-2632 / 0	-77.3	-77.3	0.35 (1)	3.99	
7- 8	-2614 / 0	-77.3	-77.3	0.37 (1)	3.96	
8- 9	-2335 / 0	-77.3	-77.3	0.29 (1)	4.24	
9-10	-2366 / 0	-77.3	-77.3	0.30 (1)	4.21	
19- 2	-1788 / 0	0.0	0.0	0.18 (1)	6.25	
11-10	-1685 / 0	0.0	0.0	0.17 (1)	6.39	
19-18	0 / 0	-17.5	-17.5	0.09 (4)	10.00	
18-17	0 / 2292	-17.5	-17.5	0.43 (1)	10.00	
17-16	0 / 2133	-17.5	-17.5	0.40 (1)	10.00	
16-15	0 / 2614	-17.5	-17.5	0.47 (1)	10.00	
15-14	0 / 2072	-17.5	-17.5	0.39 (1)	10.00	
14-13	0 / 2072	-17.5	-17.5	0.39 (1)	10.00	
13-12	0 / 2133	-17.5	-17.5	0.40 (1)	10.00	
12-11	0 / 0	-17.5	-17.5	0.09 (4)	10.00	

WEBS

MEMB. FR-TO	MAX. FACTORED FORCE (LBS)	MAX CSI (LC)
18- 3	-292 / 0	0.07 (1)
3-17	-196 / 0	0.13 (1)
17- 4	0 / 209	0.05 (1)
4-16	0 / 730	0.16 (1)
16- 5	-461 / 0	0.28 (1)
16- 7	0 / 27	0.01 (1)
15- 7	-483 / 0	0.30 (1)
15- 8	0 / 792	0.18 (1)
13- 8	0 / 142	0.04 (4)
13- 9	-78 / 0	0.05 (1)
12- 9	-384 / 0	0.09 (1)
2-18	0 / 2324	0.52 (1)
12-10	0 / 2184	0.49 (1)

DESIGN CRITERIA

SPECIFIED LOADS:

TOP CH.	LL	=	23.3	PSF
	DL	=	3.0	PSF
BOT CH.	LL	=	0.0	PSF
	DL	=	7.0	PSF
TOTAL LOAD		=	33.3	PSF

SPACING = 24.0 IN. C/C

LOADING IN FLAT SECTION BASED ON A SLOPE OF 6.00/12

THIS TRUSS IS DESIGNED FOR RESIDENTIAL OR SMALL BUILDING REQUIREMENTS OF PART 9, NBCC 2010

THIS DESIGN COMPLIES WITH:
- PART 9 OF OBC 2012 , BCBC 2012 , ABC 2014
- CSA 086-09
- TPIC 2011

(55 % OF 27.2 P.S.F. G.S.L. PLUS 8.4 P.S.F. RAIN LOAD) EQUALS 23.3 P.S.F. SPECIFIED ROOF LIVE LOAD

ALLOWABLE DEFL.(LL)= L/360 (1.21")
CALCULATED VERT. DEFL.(LL) = L/ 999 (0.16")
ALLOWABLE DEFL.(TL)= L/360 (1.21")
CALCULATED VERT. DEFL.(TL) = L/ 999 (0.29")

CSI: TC=0.38 (4-5:1) , BC=0.47 (15-16:1) , WB=0.52 (2-18:1) , SSI=0.20 (7-8:1)

DOL LUMBER=1.00 NAIL=1.00 LS BEND=1.10 COMP=1.10 SHEAR=1.10 TENS= 1.10

COMPANION LIVE LOAD FACTOR = 0.50

TRUSS PLATE MANUFACTURER IS NOT RESPONSIBLE FOR QUALITY CONTROL IN THE TRUSS MANUFACTURING PLANT .

NAIL VALUES

PLATE	GRIP(DRY) (PSI) MAX	MIN	SHEAR (PLI) MAX	MIN	SECTION (PLI) MAX	MIN
MT20	618	354	1667	822	2284	1656

PLATE PLACEMENT TOL. = 0.250 inches

PLATE ROTATION TOL. = 5.0 Deg.

JSI GRIP= 0.88 (11) (INPUT = 0.90)
JSI METAL= 0.69 (18) (INPUT = 1.00)

LICENSED PROFESSIONAL ENGINEER
P.M. TREVISAN
100136551
March 14th, 2017
PROVINCE OF ONTARIO

RECEIVED
TOWN OF MILTON
MAR 29, 2017
17-5233
BUILDING DIVISION

READ ALL NOTES ON THIS PAGE AND ON THE ENGINEERING NOTE PAGE ENP-1. THE NOTE PAGE IS AN INTEGRAL PART OF THIS DRAWING AS IT CONTAINS SPECIFICATIONS AND CRITERIA USED IN THE DESIGN OF THIS COMPONENT.

KOTT

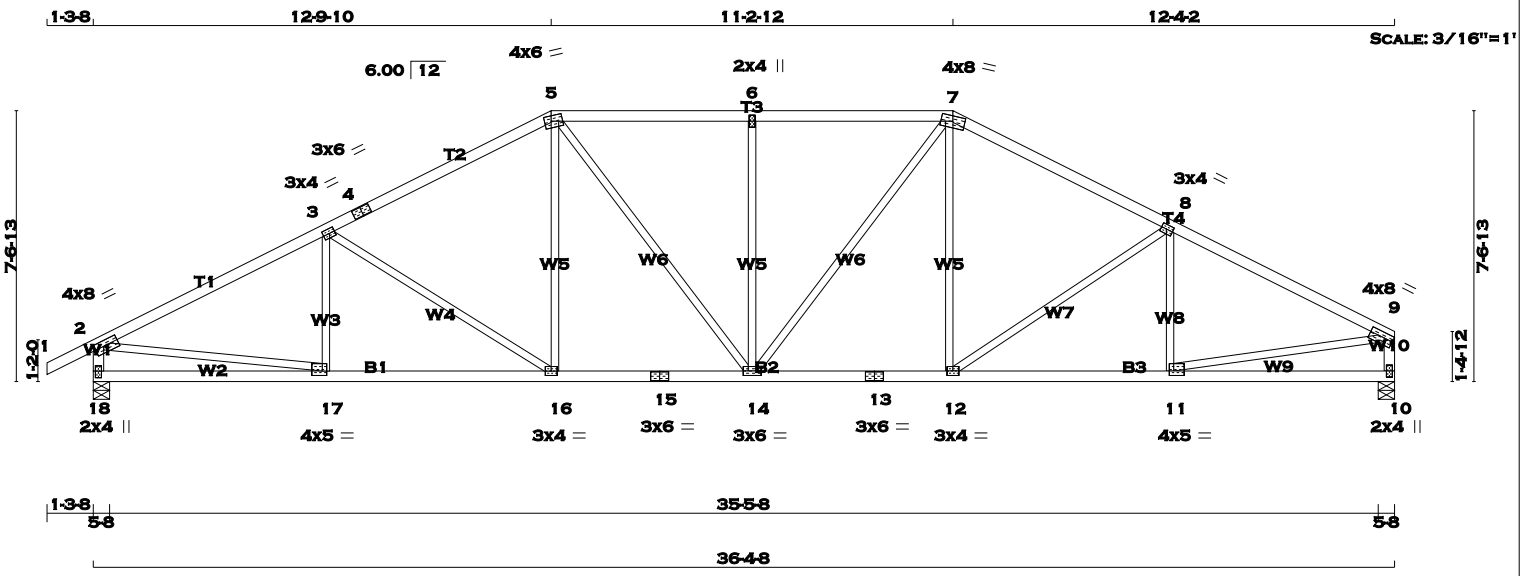

TOTAL WEIGHT = 2 X 150 = 299 lb

[M][F]

LUMBER

N. L. G. A. RULES

CHORDS	SIZE		LUMBER	DESCR.
1 - 4	2x4	DRY	No.2	SPF
4 - 5	2x4	DRY	No.2	SPF
5 - 7	2x4	DRY	No.2	SPF
7 - 9	2x4	DRY	No.2	SPF
18 - 2	2x4	DRY	No.2	SPF
10 - 9	2x4	DRY	No.2	SPF
18 - 15	2x4	DRY	No.2	SPF
15 - 13	2x4	DRY	No.2	SPF
13 - 10	2x4	DRY	No.2	SPF
ALL WEBS EXCEPT	2x3	DRY	No.2	SPF

DRY: SEASONED LUMBER.

PLATES (table is in inches)

JT	TYPE	PLATES	W	LEN	Y	X
2	TMVW-t	MT20	4.0	8.0	1.75	3.00
3	TMWW-t	MT20	3.0	4.0	1.50	1.75
4	TS-t	MT20	3.0	6.0		
5	TTWW-m	MT20	4.0	6.0	1.75	2.25
6	TMW+w	MT20	2.0	4.0		
7	TTWW-m	MT20	4.0	8.0	1.75	4.00
8	TMWW-t	MT20	3.0	4.0	1.50	1.75
9	TMVW-t	MT20	4.0	8.0	1.75	Edge
10	BMV1+p	MT20	2.0	4.0		
11	BMWW-t	MT20	4.0	5.0	1.50	1.50
12	BMWW-t	MT20	3.0	4.0		
13	BS-t	MT20	3.0	6.0		
14	BMWWW-t	MT20	3.0	6.0		
15	BS-t	MT20	3.0	6.0		
16	BMWW-t	MT20	3.0	4.0		
17	BMWW-t	MT20	4.0	5.0	1.50	1.50
18	BMV1+p	MT20	2.0	4.0	2.25	1.00

Edge - INDICATES REFERENCE CORNER OF PLATE TOUCHES EDGE OF CHORD.

A SIZE FOR SIZE SUBSTITUTION OF MITEK MII20 WITH TEE-LOK TL20 PLATES IS ALLOWED.

DIMENSIONS, SUPPORTS AND LOADINGS SPECIFIED BY FABRICATOR TO BE VERIFIED BY BUILDING DESIGNER

BEARINGS

JT	FACTORED GROSS REACTION VERT	HORZ	MAXIMUM FACTORED GROSS REACTION DOWN	HORZ	UPLIFT	INPUT BRG IN-SX	REQRD BRG IN-SX
18	1830	0	1830	0	0	5-8	5-8
10	1725	0	1725	0	0	5-8	5-8

UNFACTORED REACTIONS

JT	1ST LCASE COMBINED	MAX./MIN. COMPONENT REACTIONS SNOW	LIVE	PERM.LIVE	WIND	DEAD	SOIL
18	1282	910 / 0	0 / 0	0 / 0	0 / 0	372 / 0	0 / 0
10	1211	847 / 0	0 / 0	0 / 0	0 / 0	364 / 0	0 / 0

BEARING MATERIAL TO BE SPF NO.2 OR BETTER AT JOINT(S) 18, 10

BRACING

TOP CHORD TO BE SHEATHED OR MAX. PURLIN SPACING = 3.78 FT.
MAX. UNBRACED BOTTOM CHORD LENGTH = 10.00 FT. OR RIGID CEILING DIRECTLY APPLIED.

ALL PITCH BREAKS AND PERIMETER CORNER JOINTS MUST BE LATERALLY RESTRAINED.

LOADING

TOTAL LOAD CASES: (4)

CHORDS

MEMB. FR-TO	MAX. FACTORED FORCE (LBS)	FACTORED VERT. LOAD (PLF) FROM	TO	LC1 CSI (LC)	MAX UNBRAC LENGTH
1- 2	0 / 23	-77.3	-77.3	0.10 (1)	10.00
2- 3	-2597 / 0	-77.3	-77.3	0.57 (1)	3.78
3- 4	-2233 / 0	-77.3	-77.3	0.51 (1)	4.08
4- 5	-2233 / 0	-77.3	-77.3	0.51 (1)	4.08
5- 6	-2200 / 0	-77.3	-77.3	0.38 (1)	4.24
6- 7	-2200 / 0	-77.3	-77.3	0.38 (1)	4.24
7- 8	-2195 / 0	-77.3	-77.3	0.47 (1)	4.16
8- 9	-2451 / 0	-77.3	-77.3	0.51 (1)	3.94
18- 2	-1781 / 0	0.0	0.0	0.18 (1)	6.26
10- 9	-1678 / 0	0.0	0.0	0.17 (1)	6.41
18-17	0 / 0	-17.5	-17.5	0.17 (4)	10.00
17-16	0 / 2346	-17.5	-17.5	0.45 (1)	10.00
16-15	0 / 1977	-17.5	-17.5	0.39 (1)	10.00
15-14	0 / 1977	-17.5	-17.5	0.39 (1)	10.00
14-13	0 / 1943	-17.5	-17.5	0.38 (1)	10.00
13-12	0 / 1943	-17.5	-17.5	0.38 (1)	10.00
12-11	0 / 2214	-17.5	-17.5	0.42 (1)	10.00
11-10	0 / 0	-17.5	-17.5	0.16 (4)	10.00

WEBS

MEMB. FR-TO	MAX. FACTORED FORCE (LBS)	MAX CSI (LC)
17- 3	-188 / 52	0.05 (1)
3-16	-444 / 0	0.52 (1)
16- 5	0 / 347	0.08 (1)
5-14	0 / 365	0.08 (1)
14- 6	-531 / 0	0.55 (1)
14- 7	0 / 420	0.09 (1)
12- 7	0 / 294	0.07 (1)
12- 8	-334 / 0	0.37 (1)
11- 8	-267 / 25	0.08 (1)
2-17	0 / 2366	0.53 (1)
11- 9	0 / 2247	0.51 (1)

DESIGN CRITERIA

SPECIFIED LOADS:

TOP CH.	LL	=	23.3	PSF
	DL	=	3.0	PSF
BOT CH.	LL	=	0.0	PSF
	DL	=	7.0	PSF
TOTAL LOAD		=	33.3	PSF

SPACING = 24.0 IN. C/C

LOADING IN FLAT SECTION BASED ON A SLOPE OF 6.00/12

THIS TRUSS IS DESIGNED FOR RESIDENTIAL OR SMALL BUILDING REQUIREMENTS OF PART 9, NBCC 2010

THIS DESIGN COMPLIES WITH:
- PART 9 OF OBC 2012 , BCBC 2012 , ABC 2014
- CSA 086-09
- TPIC 2011

(55 % OF 27.2 P.S.F. G.S.L. PLUS 8.4 P.S.F. RAIN LOAD) EQUALS 23.3 P.S.F. SPECIFIED ROOF LIVE LOAD

ALLOWABLE DEFL.(LL)= L/360 (1.21")
CALCULATED VERT. DEFL.(LL) = L/ 999 (0.14")
ALLOWABLE DEFL.(TL)= L/360 (1.21")
CALCULATED VERT. DEFL.(TL) = L/ 999 (0.25")

CSI: TC=0.57 (2-3:1) , BC=0.45 (16-17:1) , WB=0.55 (6-14:1) , SSI=0.22 (2-3:1)

DOL LUMBER=1.00 NAIL=1.00 LS BEND=1.10 COMP=1.10 SHEAR=1.10 TENS= 1.10

COMPANION LIVE LOAD FACTOR = 0.50

TRUSS PLATE MANUFACTURER IS NOT RESPONSIBLE FOR QUALITY CONTROL IN THE TRUSS MANUFACTURING PLANT .

NAIL VALUES

PLATE	GRIP(DRY) (PSI) MAX	MIN	SHEAR (PLI) MAX	MIN	SECTION (PLI) MAX	MIN
MT20	618	354	1667	822	2284	1656

PLATE PLACEMENT TOL. = 0.250 inches

PLATE ROTATION TOL. = 5.0 Deg.

JSI GRIP= 0.89 (5) (INPUT = 0.90)
JSI METAL= 0.70 (17) (INPUT = 1.00)

LICENSED PROFESSIONAL ENGINEER
R.M. TREVISAN
100136551
March 14th, 2017
PROVINCE OF ONTARIO

RECEIVED
TOWN OF MILTON
MAR 29, 2017
17-5233
BUILDING DIVISION

READ ALL NOTES ON THIS PAGE AND ON THE ENGINEERING NOTE PAGE ENP-1. THE NOTE PAGE IS AN INTEGRAL PART OF THIS DRAWING AS IT CONTAINS SPECIFICATIONS AND CRITERIA USED IN THE DESIGN OF THIS COMPONENT.

KOTT

JOB NAME	TRUSS NAME	QUANTITY	PLY	JOB DESC.	DRWG NO.
PT0317-081	T28	1	1	TRUSS DESC. LECCO RIDGE-BLOCK 338	

KOTT , Stouffville, ON, CGC

Version 8.100 S Feb 9 2017 MiTek Industries, Inc. Tue Mar 14 15:57:26 2017 Page 1
ID:EvTixTQDI5yR1QLotZTBr_yE?HJ-961nUcI5flwXt7rfn8YABTxxgdGPQl?0NE1MXWzb_PN

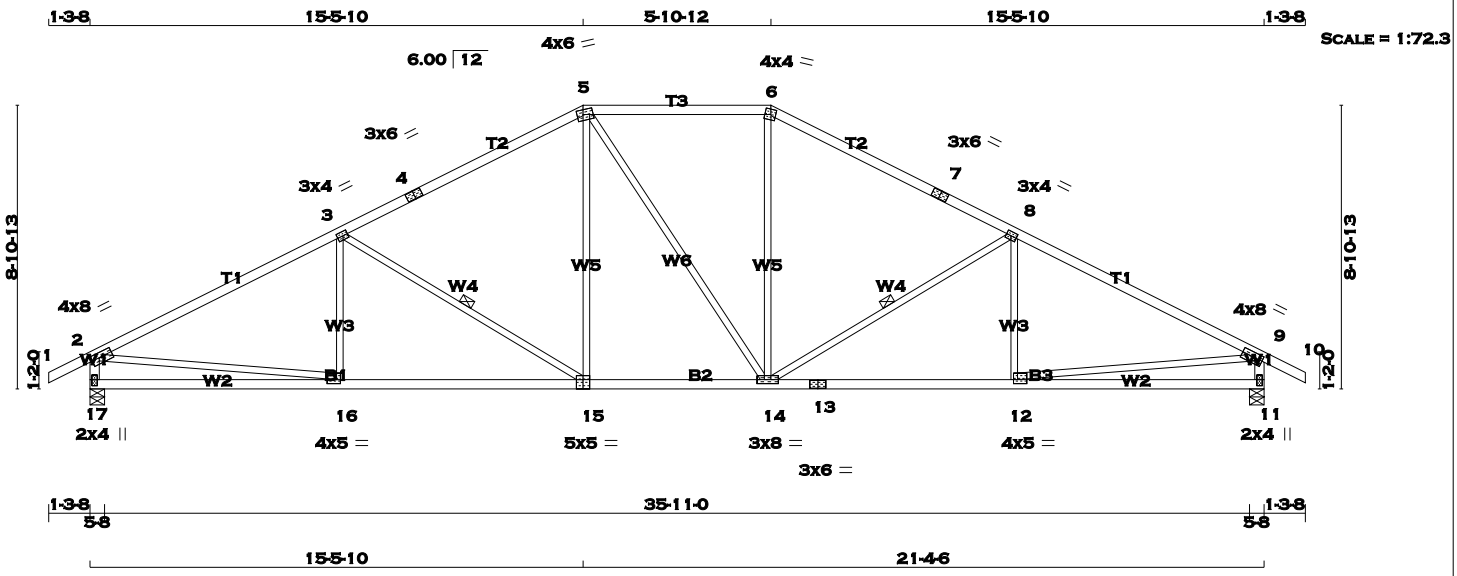

TOTAL WEIGHT = 149 lb
[M][F]

LUMBER
N. L. G. A. RULES

CHORDS	SIZE		LUMBER	DESCR.
1 - 4	2x4	DRY	No.2	SPF
4 - 5	2x4	DRY	No.2	SPF
5 - 6	2x4	DRY	No.2	SPF
6 - 7	2x4	DRY	No.2	SPF
7 - 10	2x4	DRY	No.2	SPF
17 - 2	2x4	DRY	No.2	SPF
11 - 9	2x4	DRY	No.2	SPF
17 - 15	2x4	DRY	No.2	SPF
15 - 13	2x4	DRY	No.2	SPF
13 - 11	2x4	DRY	No.2	SPF
ALL WEBS EXCEPT	2x3	DRY	No.2	SPF

DRY: SEASONED LUMBER.

PLATES (table is in inches)

JT	TYPE	PLATES	W	LEN	Y	X
2	TMVW-t	MT20	4.0	8.0	1.75	3.00
3	TMWW-t	MT20	3.0	4.0	1.50	1.75
4	TS-t	MT20	3.0	6.0		
5	TTWW-m	MT20	4.0	6.0	1.75	2.25
6	TTW-m	MT20	4.0	4.0	2.00	1.75
7	TS-t	MT20	3.0	6.0		
8	TMWW-t	MT20	3.0	4.0	1.50	1.75
9	TMVW-t	MT20	4.0	8.0	1.75	3.00
11	BMV1+p	MT20	2.0	4.0	2.25	1.00
12	BMWW-t	MT20	4.0	5.0	1.50	1.50
13	BS-t	MT20	3.0	6.0		
14	BMWWW-t	MT20	3.0	8.0		
15	BSWW-l	MT20	5.0	5.0	Edge	2.50
16	BMWW-t	MT20	4.0	5.0	1.50	1.50
17	BMV1+p	MT20	2.0	4.0	2.25	1.00

Edge - INDICATES REFERENCE CORNER OF PLATE TOUCHES EDGE OF CHORD.

A SIZE FOR SIZE SUBSTITUTION OF MITEK MII20 WITH TEE-LOK TL20 PLATES IS ALLOWED.

DIMENSIONS, SUPPORTS AND LOADINGS SPECIFIED BY FABRICATOR TO BE VERIFIED BY BUILDING DESIGNER

BEARINGS

JT	FACTORED GROSS REACTION VERT	HORZ	MAXIMUM FACTORED GROSS REACTION DOWN	HORZ	UPLIFT	INPUT BRG IN-SX	REQRD BRG IN-SX
17	1852	0	1852	0	0	5-8	5-8
11	1852	0	1852	0	0	5-8	5-8

UNFACTORED REACTIONS

JT	1ST LCASE COMBINED	MAX./MIN. COMPONENT REACTIONS SNOW	LIVE	PERM.LIVE	WIND	DEAD	SOIL
17	1297	921 / 0	0 / 0	0 / 0	0 / 0	376 / 0	0 / 0
11	1297	921 / 0	0 / 0	0 / 0	0 / 0	376 / 0	0 / 0

BEARING MATERIAL TO BE SPF NO.2 OR BETTER AT JOINT(S) 17, 11

BRACING
TOP CHORD TO BE SHEATHED OR MAX. PURLIN SPACING = 3.33 FT.
MAX. UNBRACED BOTTOM CHORD LENGTH = 10.00 FT. OR RIGID CEILING DIRECTLY APPLIED.

ALL PITCH BREAKS AND PERIMETER CORNER JOINTS MUST BE LATERALLY RESTRAINED.

1 - 2x3 SPF No.2 LATERAL BRACE(S) AT 1/ 2 LENGTH OF 3-15, 8-14. DBS = 20-0-0 . CBF = 84 LBS.

DBS = DIAGONAL BRACE SPACING (MAX). CBF = CUMULATIVE BRACING FORCE. FASTEN LATERAL BRACE(S) USING (0.122"X3") SPIRAL NAILS : 1 NAIL FOR 2x3 BRACE(S), 2 FOR 1x4, 2x4, 2x5, 3 FOR 2x6, 4 FOR 2x8, 5 FOR 2x10, AND 6 FOR 2x12.

END VERTICAL(S) MUST BE SHEATHED OR HAVE BRACES AS INDICATED IN THE MAX. UNBRACED LENGTH COLUMN OF THE TABLE BELOW

LOADING
TOTAL LOAD CASES: (4)

CHORDS

MEMB. FR-TO	MAX. FACTORED FORCE (LBS)	FACTORED VERT. LOAD (PLF) FROM	TO	LC1	MAX CSI (LC)	MAX. UNBRAC LENGTH
1- 2	0 / 23	-77.3	-77.3	0.10	(1)	10.00
2- 3	-2644 / 0	-77.3	-77.3	0.90	(1)	3.33
3- 4	-2073 / 0	-77.3	-77.3	0.77	(1)	3.83
4- 5	-2073 / 0	-77.3	-77.3	0.77	(1)	3.83
5- 6	-1830 / 0	-77.3	-77.3	0.40	(1)	4.54
6- 7	-2073 / 0	-77.3	-77.3	0.77	(1)	3.82
7- 8	-2073 / 0	-77.3	-77.3	0.77	(1)	3.82
8- 9	-2644 / 0	-77.3	-77.3	0.90	(1)	3.33
9-10	0 / 23	-77.3	-77.3	0.10	(1)	10.00
17- 2	-1795 / 0	0.0	0.0	0.18	(1)	6.24
11- 9	-1795 / 0	0.0	0.0	0.18	(1)	6.24
17-16	0 / 0	-17.5	-17.5	0.26	(4)	10.00
16-15	0 / 2393	-17.5	-17.5	0.51	(1)	10.00
15-14	0 / 1830	-17.5	-17.5	0.38	(1)	10.00
14-13	0 / 2393	-17.5	-17.5	0.51	(1)	10.00
13-12	0 / 2393	-17.5	-17.5	0.51	(1)	10.00
12-11	0 / 0	-17.5	-17.5	0.26	(4)	10.00

WEBS

MEMB. FR-TO	MAX. FACTORED FORCE (LBS)	MAX CSI (LC)
16- 3	-109 / 99	0.04 (1)
3-15	-669 / 0	0.39 (1)
15- 5	0 / 464	0.10 (1)
5-14	0 / 0	0.00 (1)
14- 6	0 / 465	0.10 (1)
14- 8	-668 / 0	0.39 (1)
12- 8	-110 / 99	0.04 (1)
2-16	0 / 2407	0.54 (1)
12- 9	0 / 2407	0.54 (1)

DESIGN CRITERIA

SPECIFIED LOADS:

TOP CH.	LL	=	23.3	PSF
	DL	=	3.0	PSF
BOT CH.	LL	=	0.0	PSF
	DL	=	7.0	PSF
TOTAL LOAD		=	33.3	PSF

SPACING = 24.0 IN. C/C

LOADING IN FLAT SECTION BASED ON A SLOPE OF 6.00/12

THIS TRUSS IS DESIGNED FOR RESIDENTIAL OR SMALL BUILDING REQUIREMENTS OF PART 9, NBCC 2010

THIS DESIGN COMPLIES WITH:
- PART 9 OF OBC 2012 , BCBC 2012 , ABC 2014
- CSA 086-09
- TPIC 2011

(55 % OF 27.2 P.S.F. G.S.L. PLUS 8.4 P.S.F. RAIN LOAD) EQUALS 23.3 P.S.F. SPECIFIED ROOF LIVE LOAD

ALLOWABLE DEFL.(LL)= L/360 (1.23")
CALCULATED VERT. DEFL.(LL) = L/ 999 (0.15")
ALLOWABLE DEFL.(TL)= L/360 (1.23")
CALCULATED VERT. DEFL.(TL) = L/ 999 (0.29")

CSI: TC=0.90 (2-3:1) , BC=0.51 (15-16:1) , WB=0.54 (2-16:1) , SSI=0.26 (2-3:1)

DOL LUMBER=1.00 NAIL=1.00 LS BEND=1.10 COMP=1.10 SHEAR=1.10 TENS= 1.10

COMPANION LIVE LOAD FACTOR = 0.50

TRUSS PLATE MANUFACTURER IS NOT RESPONSIBLE FOR QUALITY CONTROL IN THE TRUSS MANUFACTURING PLANT .

NAIL VALUES

PLATE	GRIP(DRY) (PSI) MAX	MIN	SHEAR (PLI) MAX	MIN	SECTION (PLI) MAX	MIN
MT20	618	354	1667	822	2284	1656

PLATE PLACEMENT TOL. = 0.250 inches

PLATE ROTATION TOL. = 5.0 Deg.

JSI GRIP= 0.87 (16) (INPUT = 0.90)
JSI METAL= 0.72 (16) (INPUT = 1.00)

LICENSED PROFESSIONAL ENGINEER
P.M. TREVISAN
100136551
March 14th, 2017
PROVINCE OF ONTARIO

RECEIVED
TOWN OF MILTON
MAR 29, 2017
17-5233
BUILDING DIVISION

READ ALL NOTES ON THIS PAGE AND ON THE ENGINEERING NOTE PAGE ENP-1. THE NOTE PAGE IS AN INTEGRAL PART OF THIS DRAWING AS IT CONTAINS SPECIFICATIONS AND CRITERIA USED IN THE DESIGN OF THIS COMPONENT.

KOTT

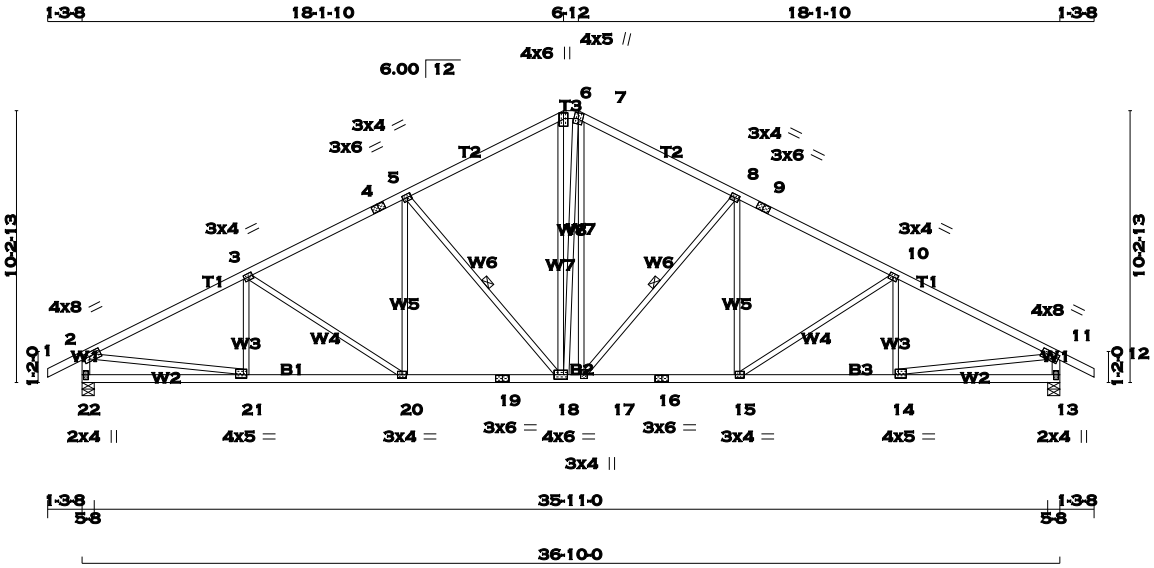

TOTAL WEIGHT = 169 lb

LUMBER

N. L. G. A. RULES

CHORDS	SIZE		LUMBER	DESCR.
1 - 4	2x4	DRY	No.2	SPF
4 - 6	2x4	DRY	No.2	SPF
6 - 7	2x4	DRY	No.2	SPF
7 - 9	2x4	DRY	No.2	SPF
9 - 12	2x4	DRY	No.2	SPF
22 - 2	2x4	DRY	No.2	SPF
13 - 11	2x4	DRY	No.2	SPF
22 - 19	2x4	DRY	No.2	SPF
19 - 16	2x4	DRY	No.2	SPF
16 - 13	2x4	DRY	No.2	SPF
ALL WEBS EXCEPT	2x3	DRY	No.2	SPF

DRY: SEASONED LUMBER.

PLATES (table is in inches)

JT	TYPE	PLATES	W	LEN	Y	X
2	TMVW-t	MT20	4.0	8.0	1.75	3.00
3, 5, 8, 10						
3	TMWW-t	MT20	3.0	4.0	1.50	1.75
4	TS-t	MT20	3.0	6.0		
6	TTW+p	MT20	4.0	6.0	2.50	2.00
7	TTWW+m	MT20	4.0	5.0		
9	TS-t	MT20	3.0	6.0		
11	TMVW-t	MT20	4.0	8.0	1.75	3.00
13	BMV1+p	MT20	2.0	4.0	2.25	1.00
14	BMWW-t	MT20	4.0	5.0	1.50	1.50
15	BMWW-t	MT20	3.0	4.0		
16	BS-t	MT20	3.0	6.0		
17	BMWW+t	MT20	3.0	4.0	1.75	1.50
18	BMWWW-t	MT20	4.0	6.0		
19	BS-t	MT20	3.0	6.0		
20	BMWW-t	MT20	3.0	4.0		
21	BMWW-t	MT20	4.0	5.0	1.50	1.50
22	BMV1+p	MT20	2.0	4.0	2.25	1.00

A SIZE FOR SIZE SUBSTITUTION OF MITEK MII20 WITH TEE-LOK TL20 PLATES IS ALLOWED.

DIMENSIONS, SUPPORTS AND LOADINGS SPECIFIED BY FABRICATOR TO BE VERIFIED BY BUILDING DESIGNER

BEARINGS

JT	FACTORED GROSS REACTION VERT	HORZ	MAXIMUM FACTORED GROSS REACTION DOWN	HORZ	UPLIFT	INPUT BRG IN-SX	REQRD BRG IN-SX
22	1852	0	1852	0	0	5-8	5-8
13	1852	0	1852	0	0	5-8	5-8

UNFACTORED REACTIONS

JT	1ST LCASE COMBINED	MAX./MIN. COMPONENT REACTIONS SNOW	LIVE	PERM.LIVE	WIND	DEAD	SOIL
22	1297	921 / 0	0 / 0	0 / 0	0 / 0	376 / 0	0 / 0
13	1297	921 / 0	0 / 0	0 / 0	0 / 0	376 / 0	0 / 0

BEARING MATERIAL TO BE SPF NO.2 OR BETTER AT JOINT(S) 22, 13

BRACING

TOP CHORD TO BE SHEATHED OR MAX. PURLIN SPACING = 3.86 FT.
MAX. UNBRACED BOTTOM CHORD LENGTH = 10.00 FT. OR RIGID CEILING DIRECTLY APPLIED.

ALL PITCH BREAKS AND PERIMETER CORNER JOINTS MUST BE LATERALLY RESTRAINED.

1 - 2x3 SPF No.2 LATERAL BRACE(S) AT 1/ 2 LENGTH OF 5-18, 8-17. DBS = 20-0-0 . CBF = 91 LBS.

DBS = DIAGONAL BRACE SPACING (MAX). CBF = CUMULATIVE BRACING FORCE. FASTEN LATERAL BRACE(S) USING (0.122"X3") SPIRAL NAILS : 1 NAIL FOR 2x3 BRACE(S), 2 FOR 1x4, 2x4, 2x5, 3 FOR 2x6, 4 FOR 2x8, 5 FOR 2x10, AND 6 FOR 2x12.

END VERTICAL(S) MUST BE SHEATHED OR HAVE BRACES AS INDICATED IN THE MAX. UNBRACED LENGTH COLUMN OF THE TABLE BELOW

LOADING

TOTAL LOAD CASES: (4)

CHORDS

MEMB. FR-TO	MAX. FACTORED FORCE (LBS)	FACTORED VERT. LOAD (PLF) FROM	TO	LC1 CSI (LC)	MAX UNBRAC LENGTH
1- 2	0 / 23	-77.3	-77.3	0.10 (1)	10.00
2- 3	-2614 / 0	-77.3	-77.3	0.50 (1)	3.86
3- 4	-2342 / 0	-77.3	-77.3	0.40 (1)	4.15
4- 5	-2342 / 0	-77.3	-77.3	0.40 (1)	4.15
5- 6	-1847 / 0	-77.3	-77.3	0.39 (1)	4.56
6- 7	-1626 / 0	-77.3	-77.3	0.03 (1)	5.19
7- 8	-1840 / 0	-77.3	-77.3	0.39 (1)	4.57
8- 9	-2344 / 0	-77.3	-77.3	0.40 (1)	4.15
9-10	-2344 / 0	-77.3	-77.3	0.40 (1)	4.15
10-11	-2613 / 0	-77.3	-77.3	0.50 (1)	3.86
11-12	0 / 23	-77.3	-77.3	0.10 (1)	10.00
22- 2	-1805 / 0	0.0	0.0	0.18 (1)	6.23
13-11	-1805 / 0	0.0	0.0	0.18 (1)	6.23
22-21	0 / 0	-17.5	-17.5	0.15 (4)	10.00
21-20	0 / 2355	-17.5	-17.5	0.44 (1)	10.00
20-19	0 / 2094	-17.5	-17.5	0.44 (1)	10.00
19-18	0 / 2094	-17.5	-17.5	0.44 (1)	10.00
18-17	0 / 1621	-17.5	-17.5	0.36 (1)	10.00
17-16	0 / 2097	-17.5	-17.5	0.41 (1)	10.00
16-15	0 / 2097	-17.5	-17.5	0.41 (1)	10.00
15-14	0 / 2354	-17.5	-17.5	0.45 (1)	10.00
14-13	0 / 0	-17.5	-17.5	0.14 (4)	10.00

WEBS

MEMB. FR-TO	MAX. FACTORED FORCE (LBS)	MAX CSI (LC)
21- 3	-211 / 38	0.06 (1)
3-20	-313 / 0	0.31 (1)
20- 5	0 / 267	0.06 (1)
5-18	-714 / 0	0.41 (1)
18- 6	0 / 611	0.14 (1)
18- 7	0 / 81	0.02 (1)
17- 7	0 / 527	0.12 (1)
17- 8	-728 / 0	0.42 (1)
15- 8	0 / 281	0.06 (1)
15-10	-309 / 0	0.31 (1)
14-10	-215 / 36	0.06 (1)
2-21	0 / 2378	0.54 (1)
14-11	0 / 2377	0.53 (1)

DESIGN CRITERIA

SPECIFIED LOADS:

TOP CH.	LL	=	23.3	PSF
	DL	=	3.0	PSF
BOT CH.	LL	=	0.0	PSF
	DL	=	7.0	PSF
TOTAL LOAD		=	33.3	PSF

SPACING = 24.0 IN. C/C

LOADING IN FLAT SECTION BASED ON A SLOPE OF 6.00/12

THIS TRUSS IS DESIGNED FOR RESIDENTIAL OR SMALL BUILDING REQUIREMENTS OF PART 9, NBCC 2010

THIS DESIGN COMPLIES WITH:
- PART 9 OF OBC 2012 , BCBC 2012 , ABC 2014
- CSA 086-09
- TPIC 2011

(55 % OF 27.2 P.S.F. G.S.L. PLUS 8.4 P.S.F. RAIN LOAD) EQUALS 23.3 P.S.F. SPECIFIED ROOF LIVE LOAD

ALLOWABLE DEFL.(LL)= L/360 (1.23")
CALCULATED VERT. DEFL.(LL) = L/ 999 (0.15")
ALLOWABLE DEFL.(TL)= L/360 (1.23")
CALCULATED VERT. DEFL.(TL) = L/ 999 (0.28")

CSI: TC=0.50 (2-3:1) , BC=0.45 (14-15:1) , WB=0.54 (2-21:1) , SSI=0.20 (2-3:1)

DOL LUMBER=1.00 NAIL=1.00 LS BEND=1.10 COMP=1.10 SHEAR=1.10 TENS= 1.10

COMPANION LIVE LOAD FACTOR = 0.50

TRUSS PLATE MANUFACTURER IS NOT RESPONSIBLE FOR QUALITY CONTROL IN THE TRUSS MANUFACTURING PLANT .

NAIL VALUES

PLATE	GRIP(DRY) (PSI) MAX	MIN	SHEAR (PLI) MAX	MIN	SECTION (PLI) MAX	MIN
MT20	618	354	1667	822	2284	1656

PLATE PLACEMENT TOL. = 0.250 inches

PLATE ROTATION TOL. = 5.0 Deg.

JSI GRIP= 0.87 (21) (INPUT = 0.90)
JSI METAL= 0.71 (21) (INPUT = 1.00)

LICENSED PROFESSIONAL ENGINEER
R.M. TREVISAN
100136551
March 14th, 2017
PROVINCE OF ONTARIO

RECEIVED
TOWN OF MILTON
MAR 29, 2017
17-5233
BUILDING DIVISION

READ ALL NOTES ON THIS PAGE AND ON THE ENGINEERING NOTE PAGE ENP-1. THE NOTE PAGE IS AN INTEGRAL PART OF THIS DRAWING AS IT CONTAINS SPECIFICATIONS AND CRITERIA USED IN THE DESIGN OF THIS COMPONENT.

KOTT

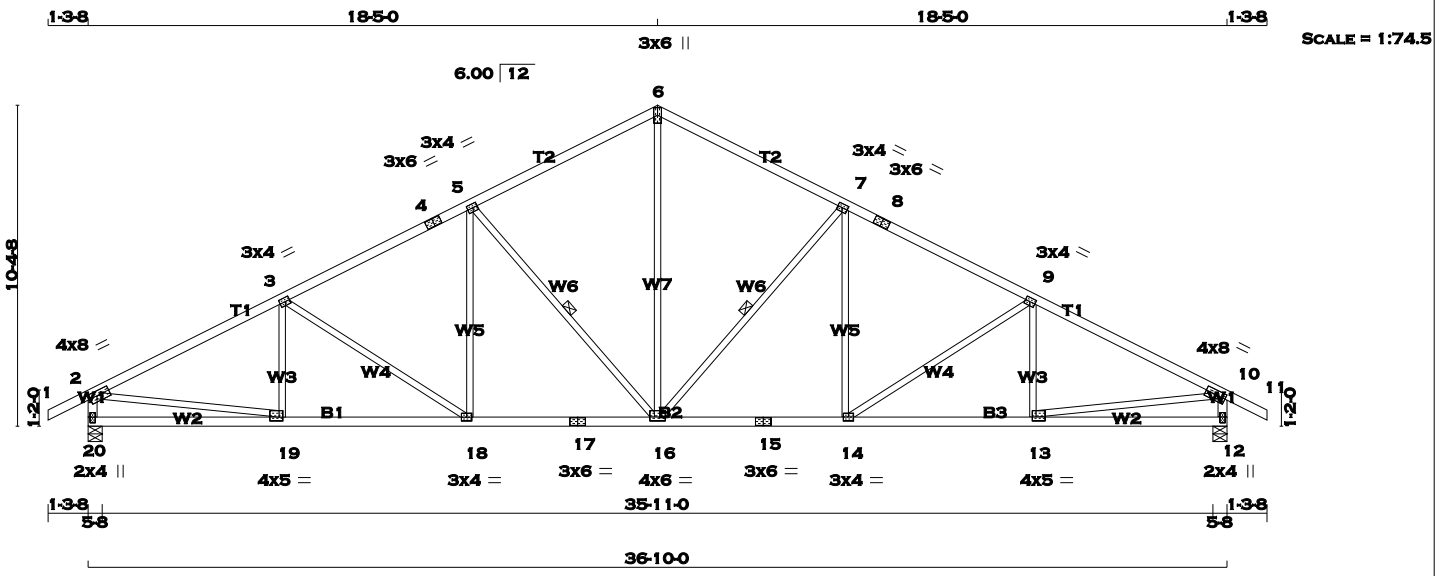

TOTAL WEIGHT = 3 X 155 = 464 lb

[M][F]

LUMBER

N. L. G. A. RULES

CHORDS	SIZE		LUMBER	DESCR.
1 - 4	2x4	DRY	No.2	SPF
4 - 6	2x4	DRY	No.2	SPF
6 - 8	2x4	DRY	No.2	SPF
8 - 11	2x4	DRY	No.2	SPF
20 - 2	2x4	DRY	No.2	SPF
12 - 10	2x4	DRY	No.2	SPF
20 - 17	2x4	DRY	No.2	SPF
17 - 15	2x4	DRY	No.2	SPF
15 - 12	2x4	DRY	No.2	SPF
ALL WEBS EXCEPT	2x3	DRY	No.2	SPF

DRY: SEASONED LUMBER.

PLATES (table is in inches)

JT	TYPE	PLATES	W	LEN	Y	X
2 3, 5, 7, 9	TMVW-t	MT20	4.0	8.0	1.75	3.00
3	TMWW-t	MT20	3.0	4.0	1.50	1.75
4	TS-t	MT20	3.0	6.0		
6	TTW+p	MT20	3.0	6.0		
8	TS-t	MT20	3.0	6.0		
10	TMVW-t	MT20	4.0	8.0	1.75	3.00
12	BMV1+p	MT20	2.0	4.0	2.25	1.00
13	BMWW-t	MT20	4.0	5.0	1.50	1.50
14	BMWW-t	MT20	3.0	4.0		
15	BS-t	MT20	3.0	6.0		
16	BMWWW-t	MT20	4.0	6.0	1.50	3.00
17	BS-t	MT20	3.0	6.0		
18	BMWW-t	MT20	3.0	4.0		
19	BMWW-t	MT20	4.0	5.0	1.50	1.50
20	BMV1+p	MT20	2.0	4.0	2.25	1.00

A SIZE FOR SIZE SUBSTITUTION OF MITEK MII20 WITH TEE-LOK TL20 PLATES IS ALLOWED.

DIMENSIONS, SUPPORTS AND LOADINGS SPECIFIED BY FABRICATOR TO BE VERIFIED BY BUILDING DESIGNER

BEARINGS

JT	FACTORED GROSS REACTION VERT	HORZ	MAXIMUM FACTORED GROSS REACTION DOWN	HORZ	UPLIFT	INPUT BRG IN-SX	REQRD BRG IN-SX
20	1852	0	1852	0	0	5-8	5-8
12	1852	0	1852	0	0	5-8	5-8

UNFACTORED REACTIONS

JT	1ST LCASE COMBINED	MAX./MIN. COMPONENT REACTIONS SNOW	LIVE	PERM.LIVE	WIND	DEAD	SOIL
20	1297	921 / 0	0 / 0	0 / 0	0 / 0	376 / 0	0 / 0
12	1297	921 / 0	0 / 0	0 / 0	0 / 0	376 / 0	0 / 0

BEARING MATERIAL TO BE SPF NO.2 OR BETTER AT JOINT(S) 20, 12

BRACING

TOP CHORD TO BE SHEATHED OR MAX. PURLIN SPACING = 3.85 FT.
MAX. UNBRACED BOTTOM CHORD LENGTH = 10.00 FT. OR RIGID CEILING DIRECTLY APPLIED.

ALL PITCH BREAKS AND PERIMETER CORNER JOINTS MUST BE LATERALLY RESTRAINED.

1 - 2x3 SPF No.2 LATERAL BRACE(S) AT 1/ 2 LENGTH OF 7-16, 5-16. DBS = 20-0-0 . CBF = 92 LBS.

DBS = DIAGONAL BRACE SPACING (MAX). CBF = CUMULATIVE BRACING FORCE. FASTEN LATERAL BRACE(S) USING (0.122"X3") SPIRAL NAILS : 1 NAIL FOR 2x3 BRACE(S), 2 FOR 1x4, 2x4, 2x5, 3 FOR 2x6, 4 FOR 2x8, 5 FOR 2x10, AND 6 FOR 2x12.

END VERTICAL(S) MUST BE SHEATHED OR HAVE BRACES AS INDICATED IN THE MAX. UNBRACED LENGTH COLUMN OF THE TABLE BELOW

LOADING

TOTAL LOAD CASES: (4)

CHORDS MEMB. FR-TO	MAX. FACTORED FORCE (LBS)	FACTORED VERT. LOAD (PLF) FROM	TO	LC1 CSI (LC)	MAX UNBRAC LENGTH	WEBS MEMB. FR-TO	MAX. FACTORED FORCE (LBS)	MAX CSI (LC)
1- 2	0 / 23	-77.3	-77.3	0.10 (1)	10.00	16- 6	0 / 1225	0.28 (1)
2- 3	-2616 / 0	-77.3	-77.3	0.52 (1)	3.85	16- 7	-735 / 0	0.44 (1)
3- 4	-2330 / 0	-77.3	-77.3	0.42 (1)	4.14	14- 7	0 / 283	0.06 (1)
4- 5	-2330 / 0	-77.3	-77.3	0.42 (1)	4.14	14- 9	-327 / 0	0.34 (1)
5- 6	-1813 / 0	-77.3	-77.3	0.40 (1)	4.58	13- 9	-206 / 41	0.06 (1)
6- 7	-1813 / 0	-77.3	-77.3	0.40 (1)	4.58	5-16	-735 / 0	0.44 (1)
7- 8	-2330 / 0	-77.3	-77.3	0.42 (1)	4.14	18- 5	0 / 283	0.06 (1)
8- 9	-2330 / 0	-77.3	-77.3	0.42 (1)	4.14	3-18	-327 / 0	0.34 (1)
9-10	-2616 / 0	-77.3	-77.3	0.52 (1)	3.85	19- 3	-206 / 41	0.06 (1)
10-11	0 / 23	-77.3	-77.3	0.10 (1)	10.00	2-19	0 / 2379	0.54 (1)
20- 2	-1804 / 0	0.0	0.0	0.18 (1)	6.23	13-10	0 / 2379	0.54 (1)
12-10	-1804 / 0	0.0	0.0	0.18 (1)	6.23			
20-19	0 / 0	-17.5	-17.5	0.15 (4)	10.00			
19-18	0 / 2357	-17.5	-17.5	0.44 (1)	10.00			
18-17	0 / 2084	-17.5	-17.5	0.41 (1)	10.00			
17-16	0 / 2084	-17.5	-17.5	0.41 (1)	10.00			
16-15	0 / 2084	-17.5	-17.5	0.41 (1)	10.00			
15-14	0 / 2084	-17.5	-17.5	0.41 (1)	10.00			
14-13	0 / 2357	-17.5	-17.5	0.44 (1)	10.00			
13-12	0 / 0	-17.5	-17.5	0.15 (4)	10.00			

DESIGN CRITERIA

SPECIFIED LOADS:

TOP	CH.	LL	=	23.3	PSF
		DL	=	3.0	PSF
BOT	CH.	LL	=	0.0	PSF
		DL	=	7.0	PSF
TOTAL	LOAD		=	33.3	PSF

SPACING = 24.0 IN. C/C

THIS TRUSS IS DESIGNED FOR RESIDENTIAL OR SMALL BUILDING REQUIREMENTS OF PART 9, NBCC 2010

THIS DESIGN COMPLIES WITH:
- PART 9 OF OBC 2012 , BCBC 2012 , ABC 2014
- CSA 086-09
- TPIC 2011

(55 % OF 27.2 P.S.F. G.S.L. PLUS 8.4 P.S.F. RAIN LOAD) EQUALS 23.3 P.S.F. SPECIFIED ROOF LIVE LOAD

ALLOWABLE DEFL.(LL)= L/360 (1.23")
CALCULATED VERT. DEFL.(LL) = L/ 999 (0.15")
ALLOWABLE DEFL.(TL)= L/360 (1.23")
CALCULATED VERT. DEFL.(TL) = L/ 999 (0.27")

CSI: TC=0.52 (2-3:1) , BC=0.44 (18-19:1) , WB=0.54 (10-13:1) , SSI=0.20 (2-3:1)

DOL LUMBER=1.00 NAIL=1.00 LS BEND=1.10 COMP=1.10 SHEAR=1.10 TENS= 1.10

COMPANION LIVE LOAD FACTOR = 0.50

TRUSS PLATE MANUFACTURER IS NOT RESPONSIBLE FOR QUALITY CONTROL IN THE TRUSS MANUFACTURING PLANT .

NAIL VALUES

PLATE	GRIP(DRY) (PSI) MAX	MIN	SHEAR (PLI) MAX	MIN	SECTION (PLI) MAX	MIN
MT20	618	354	1667	822	2284	1656

PLATE PLACEMENT TOL. = 0.250 inches

PLATE ROTATION TOL. = 5.0 Deg.

JSI GRIP= 0.90 (6) (INPUT = 0.90)
JSI METAL= 0.71 (13) (INPUT = 1.00)

LICENSED PROFESSIONAL ENGINEER
P.M. TREVISAN
100136551
March 14th, 2017
PROVINCE OF ONTARIO

RECEIVED
TOWN OF MILTON
MAR 29, 2017
17-5233
BUILDING DIVISION

READ ALL NOTES ON THIS PAGE AND ON THE ENGINEERING NOTE PAGE ENP-1. THE NOTE PAGE IS AN INTEGRAL PART OF THIS DRAWING AS IT CONTAINS SPECIFICATIONS AND CRITERIA USED IN THE DESIGN OF THIS COMPONENT.

KOTT

JOB NAME	TRUSS NAME	QUANTITY	PLY	JOB DESC.	DRWG NO.
PT0317-081	T31	1	1	TRUSS DESC. LECCO RIDGE-BLOCK 338	

KOTT , Stouffville, ON, CGC

Version 8.100 S Feb 9 2017 MiTek Industries, Inc. Tue Mar 14 15:57:28 2017 Page 1
ID:EvTixTQDI5yR1QLotZTBr_yE?HJ-5V9YvIJLBMAF6R?1vZaeGu0NTRypufKJqYWTbOzb_PL

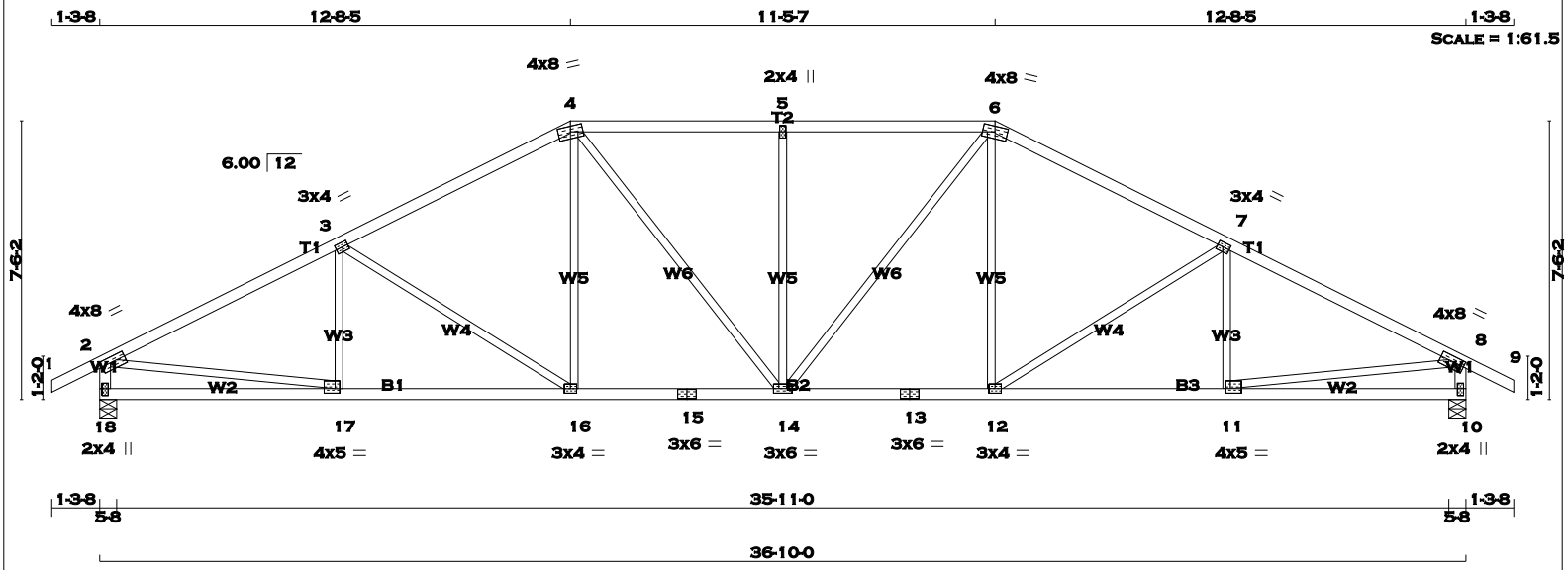

TOTAL WEIGHT = 152 lb

LUMBER
N. L. G. A. RULES

CHORDS	SIZE		LUMBER	DESCR.
1 - 4	2x4	DRY	No.2	SPF
4 - 6	2x4	DRY	No.2	SPF
6 - 9	2x4	DRY	No.2	SPF
18 - 2	2x4	DRY	No.2	SPF
10 - 8	2x4	DRY	No.2	SPF
18 - 15	2x4	DRY	No.2	SPF
15 - 13	2x4	DRY	No.2	SPF
13 - 10	2x4	DRY	No.2	SPF
ALL WEBS EXCEPT	2x3	DRY	No.2	SPF

DRY: SEASONED LUMBER.

PLATES (table is in inches)

JT	TYPE	PLATES	W	LEN	Y	X
2	TMVW-t	MT20	4.0	8.0	1.75	3.00
3	TMWW-t	MT20	3.0	4.0	1.50	1.75
4	TTWW-m	MT20	4.0	8.0	1.75	4.00
5	TMW+w	MT20	2.0	4.0		
6	TTWW-m	MT20	4.0	8.0	1.75	4.00
7	TMWW-t	MT20	3.0	4.0	1.50	1.75
8	TMVW-t	MT20	4.0	8.0	1.75	3.00
10	BMV1+p	MT20	2.0	4.0	2.25	1.00
11	BMWW-t	MT20	4.0	5.0	1.50	1.50
12	BMWW-t	MT20	3.0	4.0		
13	BS-t	MT20	3.0	6.0		
14	BMWWW-t	MT20	3.0	6.0		
15	BS-t	MT20	3.0	6.0		
16	BMWW-t	MT20	3.0	4.0		
17	BMWW-t	MT20	4.0	5.0	1.50	1.50
18	BMV1+p	MT20	2.0	4.0	2.25	1.00

A SIZE FOR SIZE SUBSTITUTION OF MITEK MII20 WITH TEE-LOK TL20 PLATES IS ALLOWED.

DIMENSIONS, SUPPORTS AND LOADINGS SPECIFIED BY FABRICATOR TO BE VERIFIED BY BUILDING DESIGNER

BEARINGS

JT	FACTORED GROSS REACTION VERT	HORZ	MAXIMUM FACTORED GROSS REACTION DOWN	HORZ	UPLIFT	INPUT BRG IN-SX	REQRD BRG IN-SX
18	1852	0	1852	0	0	5-8	5-8
10	1852	0	1852	0	0	5-8	5-8

UNFACTORED REACTIONS

JT	1ST LCASE COMBINED	MAX./MIN. COMPONENT REACTIONS SNOW	LIVE	PERM.LIVE	WIND	DEAD	SOIL
18	1297	921 / 0	0 / 0	0 / 0	0 / 0	376 / 0	0 / 0
10	1297	921 / 0	0 / 0	0 / 0	0 / 0	376 / 0	0 / 0

BEARING MATERIAL TO BE SPF NO.2 OR BETTER AT JOINT(S) 18, 10

BRACING
TOP CHORD TO BE SHEATHED OR MAX. PURLIN SPACING = 3.77 FT.
MAX. UNBRACED BOTTOM CHORD LENGTH = 10.00 FT. OR RIGID CEILING DIRECTLY APPLIED.

ALL PITCH BREAKS AND PERIMETER CORNER JOINTS MUST BE LATERALLY RESTRAINED.

LOADING
TOTAL LOAD CASES: (4)

CHORDS

MEMB. FR-TO	MAX. FACTORED FORCE (LBS)	FACTORED VERT. LOAD (PLF) FROM	TO	LC1 CSI (LC)	MAX. UNBRAC LENGTH
1- 2	0 / 23	-77.3	-77.3	0.10 (1)	10.00
2- 3	-2634 / 0	-77.3	-77.3	0.56 (1)	3.77
3- 4	-2284 / 0	-77.3	-77.3	0.50 (1)	4.05
4- 5	-2274 / 0	-77.3	-77.3	0.40 (1)	4.16
5- 6	-2274 / 0	-77.3	-77.3	0.40 (1)	4.16
6- 7	-2284 / 0	-77.3	-77.3	0.50 (1)	4.05
7- 8	-2634 / 0	-77.3	-77.3	0.56 (1)	3.77
8- 9	0 / 23	-77.3	-77.3	0.10 (1)	10.00
18- 2	-1803 / 0	0.0	0.0	0.18 (1)	6.23
10- 8	-1803 / 0	0.0	0.0	0.18 (1)	6.23
18-17	0 / 0	-17.5	-17.5	0.17 (4)	10.00
17-16	0 / 2378	-17.5	-17.5	0.45 (1)	10.00
16-15	0 / 2023	-17.5	-17.5	0.40 (1)	10.00
15-14	0 / 2023	-17.5	-17.5	0.40 (1)	10.00
14-13	0 / 2023	-17.5	-17.5	0.40 (1)	10.00
13-12	0 / 2023	-17.5	-17.5	0.40 (1)	10.00
12-11	0 / 2378	-17.5	-17.5	0.45 (1)	10.00
11-10	0 / 0	-17.5	-17.5	0.17 (4)	10.00

WEBS

MEMB. FR-TO	MAX. FACTORED FORCE (LBS)	MAX CSI (LC)
17- 3	-197 / 48	0.06 (1)
3-16	-429 / 0	0.49 (1)
16- 4	0 / 340	0.08 (1)
4-14	0 / 405	0.09 (1)
14- 5	-542 / 0	0.55 (1)
14- 6	0 / 405	0.09 (1)
12- 6	0 / 340	0.08 (1)
12- 7	-429 / 0	0.49 (1)
11- 7	-197 / 48	0.06 (1)
2-17	0 / 2399	0.54 (1)
11- 8	0 / 2399	0.54 (1)

DESIGN CRITERIA

SPECIFIED LOADS:

TOP CH.	LL	=	23.3	PSF
	DL	=	3.0	PSF
BOT CH.	LL	=	0.0	PSF
	DL	=	7.0	PSF
TOTAL LOAD		=	33.3	PSF

SPACING = 24.0 IN. C/C

LOADING IN FLAT SECTION BASED ON A SLOPE OF 6.00/12

THIS TRUSS IS DESIGNED FOR RESIDENTIAL OR SMALL BUILDING REQUIREMENTS OF PART 9, NBCC 2010

THIS DESIGN COMPLIES WITH:
- PART 9 OF OBC 2012 , BCBC 2012 , ABC 2014
- CSA 086-09
- TPIC 2011

(55 % OF 27.2 P.S.F. G.S.L. PLUS 8.4 P.S.F. RAIN LOAD) EQUALS 23.3 P.S.F. SPECIFIED ROOF LIVE LOAD

ALLOWABLE DEFL.(LL)= L/360 (1.23")
CALCULATED VERT. DEFL.(LL) = L/ 999 (0.15")
ALLOWABLE DEFL.(TL)= L/360 (1.23")
CALCULATED VERT. DEFL.(TL) = L/ 999 (0.27")

CSI: TC=0.56 (2-3:1) , BC=0.45 (16-17:1) , WB=0.55 (5-14:1) , SSI=0.21 (4-5:1)

DOL LUMBER=1.00 NAIL=1.00 LS BEND=1.10 COMP=1.10 SHEAR=1.10 TENS= 1.10

COMPANION LIVE LOAD FACTOR = 0.50

TRUSS PLATE MANUFACTURER IS NOT RESPONSIBLE FOR QUALITY CONTROL IN THE TRUSS MANUFACTURING PLANT .

NAIL VALUES

PLATE	GRIP(DRY) (PSI) MAX	MIN	SHEAR (PLI) MAX	MIN	SECTION (PLI) MAX	MIN
MT20	618	354	1667	822	2284	1656

PLATE PLACEMENT TOL. = 0.250 inches

PLATE ROTATION TOL. = 5.0 Deg.

JSI GRIP= 0.87 (17) (INPUT = 0.90)
JSI METAL= 0.71 (11) (INPUT = 1.00)

LICENSED PROFESSIONAL ENGINEER
R.M. TREVISAN
100136551
March 14th, 2017
PROVINCE OF ONTARIO

RECEIVED
TOWN OF MILTON
MAR 29, 2017
17-5233
BUILDING DIVISION

READ ALL NOTES ON THIS PAGE AND ON THE ENGINEERING NOTE PAGE ENP-1. THE NOTE PAGE IS AN INTEGRAL PART OF THIS DRAWING AS IT CONTAINS SPECIFICATIONS AND CRITERIA USED IN THE DESIGN OF THIS COMPONENT.

KOTT

JOB NAME	TRUSS NAME	QUANTITY	PLY	JOB DESC.	DRWG NO.
PT0317-081	**T32**	**1**	**1**	TRUSS DESC. LECCO RIDGE-BLOCK 338	

ENG JOB: PT0317-081

KOTT , Stouffville, ON, CGC

Version 8.100 S Feb 9 2017 MiTek Industries, Inc. Tue Mar 14 15:57:29 2017 Page 1
ID:EvTixTQDI5yR1QLotZTBr_yE?HJ-Zhjw7dK_ygI6kbaESH5tp6ZatqIYd6xS3CG07qzb_PK

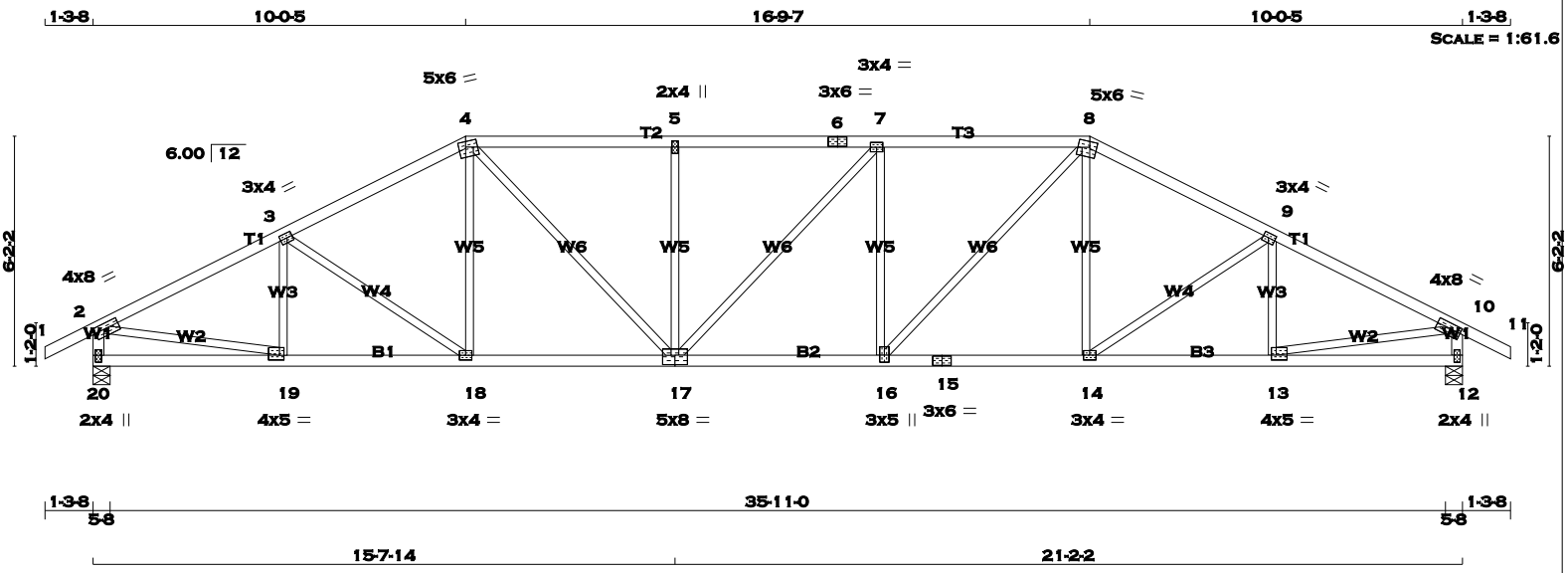

TOTAL WEIGHT = 151 lb
[M][F]

LUMBER
N. L. G. A. RULES

CHORDS	SIZE		LUMBER	DESCR.
1 - 4	2x4	DRY	No.2	SPF
4 - 6	2x4	DRY	No.2	SPF
6 - 8	2x4	DRY	No.2	SPF
8 - 11	2x4	DRY	No.2	SPF
20 - 2	2x4	DRY	No.2	SPF
12 - 10	2x4	DRY	No.2	SPF
20 - 17	2x4	DRY	No.2	SPF
17 - 15	2x4	DRY	No.2	SPF
15 - 12	2x4	DRY	No.2	SPF
ALL WEBS EXCEPT	2x3	DRY	No.2	SPF

DRY: SEASONED LUMBER.

PLATES (table is in inches)

JT	TYPE	PLATES	W	LEN	Y	X
2	TMVW-t	MT20	4.0	8.0	1.75	3.00
3	TMWW-t	MT20	3.0	4.0	1.50	1.75
4	TTWW-m	MT20	5.0	6.0	1.75	2.25
5	TMW+w	MT20	2.0	4.0		
6	TS-t	MT20	3.0	6.0		
7	TMWW-t	MT20	3.0	4.0		
8	TTWW-m	MT20	5.0	6.0	1.75	2.25
9	TMWW-t	MT20	3.0	4.0	1.50	1.75
10	TMVW-t	MT20	4.0	8.0	1.75	3.00
12	BMV1+p	MT20	2.0	4.0	2.25	1.00
13	BMWW-t	MT20	4.0	5.0	1.50	1.50
14	BMWW-t	MT20	3.0	4.0		
15	BS-t	MT20	3.0	6.0		
16	BMWW+t	MT20	3.0	5.0	2.25	1.50
17	BSWWW-l	MT20	5.0	8.0	3.00	4.00
18	BMWW-t	MT20	3.0	4.0		
19	BMWW-t	MT20	4.0	5.0	1.50	1.50
20	BMV1+p	MT20	2.0	4.0	2.25	1.00

A SIZE FOR SIZE SUBSTITUTION OF MITEK MII20 WITH TEE-LOK TL20 PLATES IS ALLOWED.

DIMENSIONS, SUPPORTS AND LOADINGS SPECIFIED BY FABRICATOR TO BE VERIFIED BY BUILDING DESIGNER

BEARINGS

JT	FACTORED GROSS REACTION VERT	HORZ	MAXIMUM FACTORED GROSS REACTION DOWN	HORZ	UPLIFT	INPUT BRG IN-SX	REQRD BRG IN-SX
20	1852	0	1852	0	0	5-8	5-8
12	1852	0	1852	0	0	5-8	5-8

UNFACTORED REACTIONS

JT	1ST LCASE COMBINED	MAX./MIN. COMPONENT REACTIONS SNOW	LIVE	PERM.LIVE	WIND	DEAD	SOIL
20	1297	921 / 0	0 / 0	0 / 0	0 / 0	376 / 0	0 / 0
12	1297	921 / 0	0 / 0	0 / 0	0 / 0	376 / 0	0 / 0

BEARING MATERIAL TO BE SPF NO.2 OR BETTER AT JOINT(S) 20, 12

BRACING
TOP CHORD TO BE SHEATHED OR MAX. PURLIN SPACING = 3.88 FT.
MAX. UNBRACED BOTTOM CHORD LENGTH = 10.00 FT. OR RIGID CEILING DIRECTLY APPLIED.

ALL PITCH BREAKS AND PERIMETER CORNER JOINTS MUST BE LATERALLY RESTRAINED.

LOADING
TOTAL LOAD CASES: (4)

CHORDS

MEMB. FR-TO	MAX. FACTORED FORCE (LBS)	FACTORED VERT. LOAD (PLF) FROM	TO	LC1 MAX CSI (LC)	MAX. UNBRAC LENGTH
1- 2	0 / 23	-77.3	-77.3	0.10 (1)	10.00
2- 3	-2576 / 0	-77.3	-77.3	0.34 (1)	4.03
3- 4	-2451 / 0	-77.3	-77.3	0.32 (1)	4.13
4- 5	-2715 / 0	-77.3	-77.3	0.39 (1)	3.88
5- 6	-2715 / 0	-77.3	-77.3	0.36 (1)	3.92
6- 7	-2715 / 0	-77.3	-77.3	0.36 (1)	3.92
7- 8	-2716 / 0	-77.3	-77.3	0.39 (1)	3.88
8- 9	-2450 / 0	-77.3	-77.3	0.32 (1)	4.13
9-10	-2576 / 0	-77.3	-77.3	0.34 (1)	4.03
10-11	0 / 23	-77.3	-77.3	0.10 (1)	10.00
20- 2	-1810 / 0	0.0	0.0	0.18 (1)	6.22
12-10	-1810 / 0	0.0	0.0	0.18 (1)	6.21
20-19	0 / 0	-17.5	-17.5	0.09 (4)	10.00
19-18	0 / 2321	-17.5	-17.5	0.43 (1)	10.00
18-17	0 / 2176	-17.5	-17.5	0.41 (1)	10.00
17-16	0 / 2716	-17.5	-17.5	0.49 (1)	10.00
16-15	0 / 2176	-17.5	-17.5	0.41 (1)	10.00
15-14	0 / 2176	-17.5	-17.5	0.41 (1)	10.00
14-13	0 / 2321	-17.5	-17.5	0.43 (1)	10.00
13-12	0 / 0	-17.5	-17.5	0.09 (4)	10.00

WEBS

MEMB. FR-TO	MAX. FACTORED FORCE (LBS)	MAX CSI (LC)
19- 3	-302 / 0	0.07 (1)
18- 4	-180 / 0	0.12 (1)
4-17	0 / 201	0.05 (1)
17- 5	0 / 779	0.18 (1)
17- 7	-467 / 0	0.28 (1)
16- 7	-2 / 0	0.00 (1)
16- 8	-468 / 0	0.28 (1)
14- 8	0 / 781	0.18 (1)
14- 9	0 / 200	0.04 (1)
13- 9	-180 / 0	0.12 (1)
2-19	-302 / 0	0.07 (1)
13-10	0 / 2354	0.53 (1)
13-10	0 / 2354	0.53 (1)

DESIGN CRITERIA

SPECIFIED LOADS:

TOP CH.	LL	=	23.3	PSF
	DL	=	3.0	PSF
BOT CH.	LL	=	0.0	PSF
	DL	=	7.0	PSF
TOTAL LOAD		=	33.3	PSF

SPACING = 24.0 IN. C/C

LOADING IN FLAT SECTION BASED ON A SLOPE OF 6.00/12

THIS TRUSS IS DESIGNED FOR RESIDENTIAL OR SMALL BUILDING REQUIREMENTS OF PART 9, NBCC 2010

THIS DESIGN COMPLIES WITH:
- PART 9 OF OBC 2012 , BCBC 2012 , ABC 2014
- CSA 086-09
- TPIC 2011

(55 % OF 27.2 P.S.F. G.S.L. PLUS 8.4 P.S.F. RAIN LOAD) EQUALS 23.3 P.S.F. SPECIFIED ROOF LIVE LOAD

ALLOWABLE DEFL.(LL)= L/360 (1.23")
CALCULATED VERT. DEFL.(LL) = L/ 999 (0.18")
ALLOWABLE DEFL.(TL)= L/360 (1.23")
CALCULATED VERT. DEFL.(TL) = L/ 999 (0.32")

CSI: TC=0.39 (4-5:1) , BC=0.49 (16-17:1) , WB=0.53 (10-13:1) , SSI=0.20 (7-8:1)

DOL LUMBER=1.00 NAIL=1.00 LS BEND=1.10 COMP=1.10 SHEAR=1.10 TENS= 1.10

COMPANION LIVE LOAD FACTOR = 0.50

TRUSS PLATE MANUFACTURER IS NOT RESPONSIBLE FOR QUALITY CONTROL IN THE TRUSS MANUFACTURING PLANT .

NAIL VALUES

PLATE	GRIP(DRY) (PSI) MAX	MIN	SHEAR (PLI) MAX	MIN	SECTION (PLI) MAX	MIN
MT20	618	354	1667	822	2284	1656

PLATE PLACEMENT TOL. = 0.250 inches

PLATE ROTATION TOL. = 5.0 Deg.

JSI GRIP= 0.89 (4) (INPUT = 0.90)
JSI METAL= 0.70 (13) (INPUT = 1.00)

LICENSED PROFESSIONAL ENGINEER
P.M. TREVISAN
100136551
March 14th, 2017
PROVINCE OF ONTARIO

RECEIVED
TOWN OF MILTON
MAR 29, 2017
17-5233
BUILDING DIVISION

READ ALL NOTES ON THIS PAGE AND ON THE ENGINEERING NOTE PAGE ENP-1. THE NOTE PAGE IS AN INTEGRAL PART OF THIS DRAWING AS IT CONTAINS SPECIFICATIONS AND CRITERIA USED IN THE DESIGN OF THIS COMPONENT.

KOTT

JOB NAME	TRUSS NAME	QUANTITY	PLY	JOB DESC.	DRWG NO.
PT0317-081	T33	1	1	TRUSS DESC. LECCO RIDGE-BLOCK 338	ENG JOB: PT0317-081

KOTT , Stouffville, ON, CGC

Version 8.100 S Feb 9 2017 MiTek Industries, Inc. Tue Mar 14 15:57:30 2017 Page 1

ID:EvTixTQDI5yR1QLotZTBr_yE?HJ-2uHIKzLcjzQzMk9Q0_d6LJ6kqEdjMTKcIs?ZgHzb_PJ

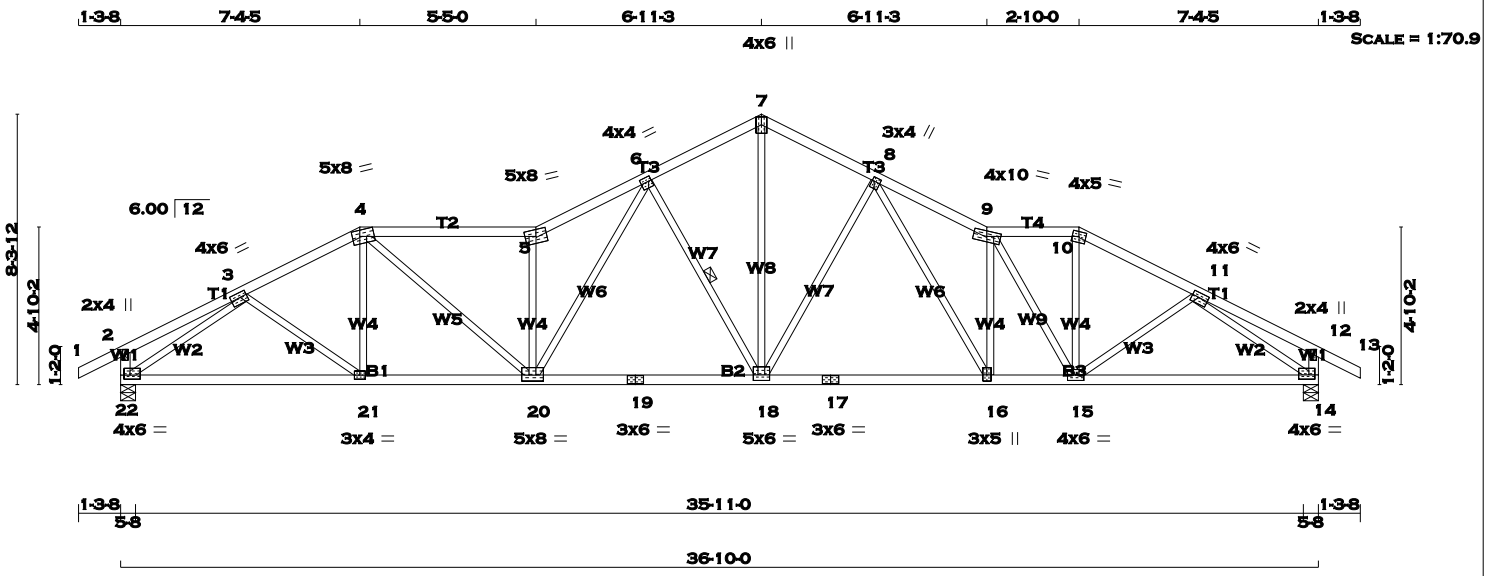

TOTAL WEIGHT = 159 lb

[M][F]

LUMBER

N. L. G. A. RULES

CHORDS	SIZE		LUMBER	DESCR.
1 - 4	2x4	DRY	No.2	SPF
4 - 5	2x4	DRY	No.2	SPF
5 - 7	2x4	DRY	No.2	SPF
7 - 9	2x4	DRY	No.2	SPF
9 - 10	2x4	DRY	No.2	SPF
10 - 13	2x4	DRY	No.2	SPF
22 - 2	2x4	DRY	No.2	SPF
14 - 12	2x4	DRY	No.2	SPF
22 - 19	2x4	DRY	No.2	SPF
19 - 17	2x4	DRY	No.2	SPF
17 - 14	2x4	DRY	No.2	SPF
ALL WEBS EXCEPT	2x3	DRY	No.2	SPF

DRY: SEASONED LUMBER.

PLATES (table is in inches)

JT	TYPE	PLATES	W	LEN	Y	X
2	TMV+p	MT20	2.0	4.0		
3	TMWW-t	MT20	4.0	6.0	1.75	2.50
4	TTWW-m	MT20	5.0	8.0	2.25	2.75
5	TTW-m	MT20	5.0	8.0		
6	TMWW-t	MT20	4.0	4.0	1.75	1.00
7	TTW+p	MT20	4.0	6.0	Edge	
8	TMWW+t	MT20	3.0	4.0	1.50	0.75
9	TTWW-m	MT20	4.0	10.0		
10	TTW-m	MT20	4.0	5.0	1.75	2.50
11	TMWW-t	MT20	4.0	6.0	1.75	2.50
12	TMV+p	MT20	2.0	4.0		
14	BMVW1-t	MT20	4.0	6.0	1.50	2.25
15	BMWWW-t	MT20	4.0	6.0		
16	BMWW+t	MT20	3.0	5.0	2.25	1.50
17	BS-t	MT20	3.0	6.0		
18	BMWWW-t	MT20	5.0	6.0	2.00	3.00
19	BS-t	MT20	3.0	6.0		
20	BMWWW-t	MT20	5.0	8.0	2.25	4.00
21	BMWW-t	MT20	3.0	4.0		
22	BMVW1-t	MT20	4.0	6.0	1.50	2.25

Edge - INDICATES REFERENCE CORNER OF PLATE TOUCHES EDGE OF CHORD.

A SIZE FOR SIZE SUBSTITUTION OF MITEK MII20 WITH TEE-LOK TL20 PLATES IS ALLOWED.

DIMENSIONS, SUPPORTS AND LOADINGS SPECIFIED BY FABRICATOR TO BE VERIFIED BY BUILDING DESIGNER

BEARINGS

JT	FACTORED GROSS REACTION VERT	HORZ	MAXIMUM FACTORED GROSS REACTION DOWN	HORZ	UPLIFT	INPUT BRG IN-SX	REQRD BRG IN-SX
22	1852	0	1852	0	0	5-8	5-8
14	1852	0	1852	0	0	5-8	5-8

UNFACTORED REACTIONS

JT	1ST LCASE COMBINED	MAX./MIN. COMPONENT REACTIONS SNOW	LIVE	PERM.LIVE	WIND	DEAD	SOIL
22	1297	921 / 0	0 / 0	0 / 0	0 / 0	376 / 0	0 / 0
14	1297	921 / 0	0 / 0	0 / 0	0 / 0	376 / 0	0 / 0

BEARING MATERIAL TO BE SPF NO.2 OR BETTER AT JOINT(S) 22, 14

BRACING

TOP CHORD TO BE SHEATHED OR MAX. PURLIN SPACING = 3.53 FT.
MAX. UNBRACED BOTTOM CHORD LENGTH = 10.00 FT. OR RIGID CEILING DIRECTLY APPLIED.

ALL PITCH BREAKS AND PERIMETER CORNER JOINTS MUST BE LATERALLY RESTRAINED.

1 - 2x3 SPF No.2 LATERAL BRACE(S) AT 1/ 2 LENGTH OF 6-18. DBS = 12-0-0 . CBF = 81 LBS.

DBS = DIAGONAL BRACE SPACING (MAX). CBF = CUMULATIVE BRACING FORCE. FASTEN LATERAL BRACE(S) USING (0.122"X3") SPIRAL NAILS : 1 NAIL FOR 2x3 BRACE(S), 2 FOR 1x4, 2x4, 2x5, 3 FOR 2x6, 4 FOR 2x8, 5 FOR 2x10, AND 6 FOR 2x12.

END VERTICAL(S) MUST BE SHEATHED OR HAVE BRACES AS INDICATED IN THE MAX. UNBRACED LENGTH COLUMN OF THE TABLE BELOW

LOADING

TOTAL LOAD CASES: (4)

CHORDS

MEMB. FR-TO	MAX. FACTORED FORCE (LBS)	FACTORED VERT. LOAD LC1 (PLF) FROM	TO	MAX CSI (LC)	MAX. UNBRAC LENGTH
1- 2	0 / 23	-77.3	-77.3	0.10 (1)	10.00
2- 3	0 / 11	-77.3	-77.3	0.13 (1)	10.00
3- 4	-2564 / 0	-77.3	-77.3	0.19 (1)	4.18
4- 5	-3191 / 0	-77.3	-77.3	0.44 (1)	3.55
5- 6	-3600 / 0	-77.3	-77.3	0.27 (1)	3.53
6- 7	-2264 / 0	-77.3	-77.3	0.17 (1)	4.41
7- 8	-2263 / 0	-77.3	-77.3	0.16 (1)	4.43
8- 9	-3173 / 0	-77.3	-77.3	0.22 (1)	3.78
9-10	-2300 / 0	-77.3	-77.3	0.14 (1)	4.42
10-11	-2561 / 0	-77.3	-77.3	0.19 (1)	4.17
11-12	0 / 11	-77.3	-77.3	0.13 (1)	10.00
12-13	0 / 23	-77.3	-77.3	0.10 (1)	10.00
22- 2	-222 / 0	0.0	0.0	0.02 (1)	7.81
14-12	-224 / 0	0.0	0.0	0.02 (1)	7.81
22-21	0 / 2150	-17.5	-17.5	0.46 (1)	10.00
21-20	0 / 2282	-17.5	-17.5	0.48 (1)	10.00
20-19	0 / 2538	-17.5	-17.5	0.54 (1)	10.00
19-18	0 / 2538	-17.5	-17.5	0.54 (1)	10.00
18-17	0 / 2402	-17.5	-17.5	0.52 (1)	10.00
17-16	0 / 2402	-17.5	-17.5	0.52 (1)	10.00
16-15	0 / 2835	-17.5	-17.5	0.55 (1)	10.00
15-14	0 / 2147	-17.5	-17.5	0.47 (1)	10.00

WEBS

MEMB. FR-TO	MAX. FACTORED FORCE (LBS)	MAX CSI (LC)
3-21	0 / 161	0.04 (4)
21- 4	0 / 86	0.03 (4)
4-20	0 / 1197	0.27 (1)
20- 5	-1923 / 0	0.66 (1)
20- 6	0 / 1409	0.32 (1)
6-18	-1087 / 0	0.38 (1)
18- 7	0 / 1804	0.41 (1)
18- 8	-804 / 0	0.80 (1)
8-16	0 / 910	0.20 (1)
16- 9	-743 / 0	0.26 (1)
9-15	-1039 / 0	0.47 (1)
15-10	0 / 918	0.21 (1)
15-11	0 / 162	0.04 (4)
22- 3	-2665 / 0	0.90 (1)
11-14	-2662 / 0	0.90 (1)

RECEIVED
TOWN OF MILTON
MAR 29, 2017
17-5233
BUILDING DIVISION

READ ALL NOTES ON THIS PAGE AND ON THE ENGINEERING NOTE PAGE ENP-1. THE NOTE PAGE IS AN INTEGRAL PART OF THIS DRAWING AS IT CONTAINS SPECIFICATIONS AND CRITERIA USED IN THE DESIGN OF THIS COMPONENT.

DESIGN CRITERIA

SPECIFIED LOADS:

TOP CH.	LL	=	23.3	PSF
	DL	=	3.0	PSF
BOT CH.	LL	=	0.0	PSF
	DL	=	7.0	PSF
TOTAL LOAD		=	33.3	PSF

SPACING = 24.0 IN. C/C

LOADING IN ALL FLAT SECTIONS BASED ON A SLOPE OF 6.00/12

THIS TRUSS IS DESIGNED FOR RESIDENTIAL OR SMALL BUILDING REQUIREMENTS OF PART 9, NBCC 2010

THIS DESIGN COMPLIES WITH:
- PART 9 OF OBC 2012 , BCBC 2012 , ABC 2014
- CSA 086-09
- TPIC 2011

(55 % OF 27.2 P.S.F. G.S.L. PLUS 8.4 P.S.F. RAIN LOAD) EQUALS 23.3 P.S.F. SPECIFIED ROOF LIVE LOAD

ALLOWABLE DEFL.(LL)= L/360 (1.23")
CALCULATED VERT. DEFL.(LL) = L/ 999 (0.24")
ALLOWABLE DEFL.(TL)= L/360 (1.23")
CALCULATED VERT. DEFL.(TL) = L/ 998 (0.44")

CSI: TC=0.44 (4-5:1) , BC=0.55 (15-16:1) , WB=0.90 (3-22:1) , SSI=0.16 (4-5:1)

DOL LUMBER=1.00 NAIL=1.00 LS BEND=1.10 COMP=1.10 SHEAR=1.10 TENS= 1.10

COMPANION LIVE LOAD FACTOR = 0.50

TRUSS PLATE MANUFACTURER IS NOT RESPONSIBLE FOR QUALITY CONTROL IN THE TRUSS MANUFACTURING PLANT .

NAIL VALUES

PLATE	GRIP(DRY) (PSI) MAX	MIN	SHEAR (PLI) MAX	MIN	SECTION (PLI) MAX	MIN
MT20	618	354	1667	822	2284	1656

PLATE PLACEMENT TOL. = 0.250 inches

PLATE ROTATION TOL. = 5.0 Deg.

JSI GRIP= 0.90 (22) (INPUT = 0.90)
JSI METAL= 0.81 (9) (INPUT = 1.00)

KOTT

CONTINUED ON PAGE 2

JOB NAME	TRUSS NAME	QUANTITY	PLY	JOB DESC.	DRWG NO.
PT0317-081	T34	1	1	TRUSS DESC. LECCO RIDGE-BLOCK 338	ENG JOB: PT0317-081

KOTT , Stouffville, ON, CGC

Version 8.100 S Feb 9 2017 MiTek Industries, Inc. Tue Mar 14 15:57:30 2017 Page 1

ID:EvTixTQDI5yR1QLotZTBr_yE?HJ-2uHIKzLcjzQzMk9Q0_d6LJ6iXEaMMSHcIs?ZgHzb_PJ

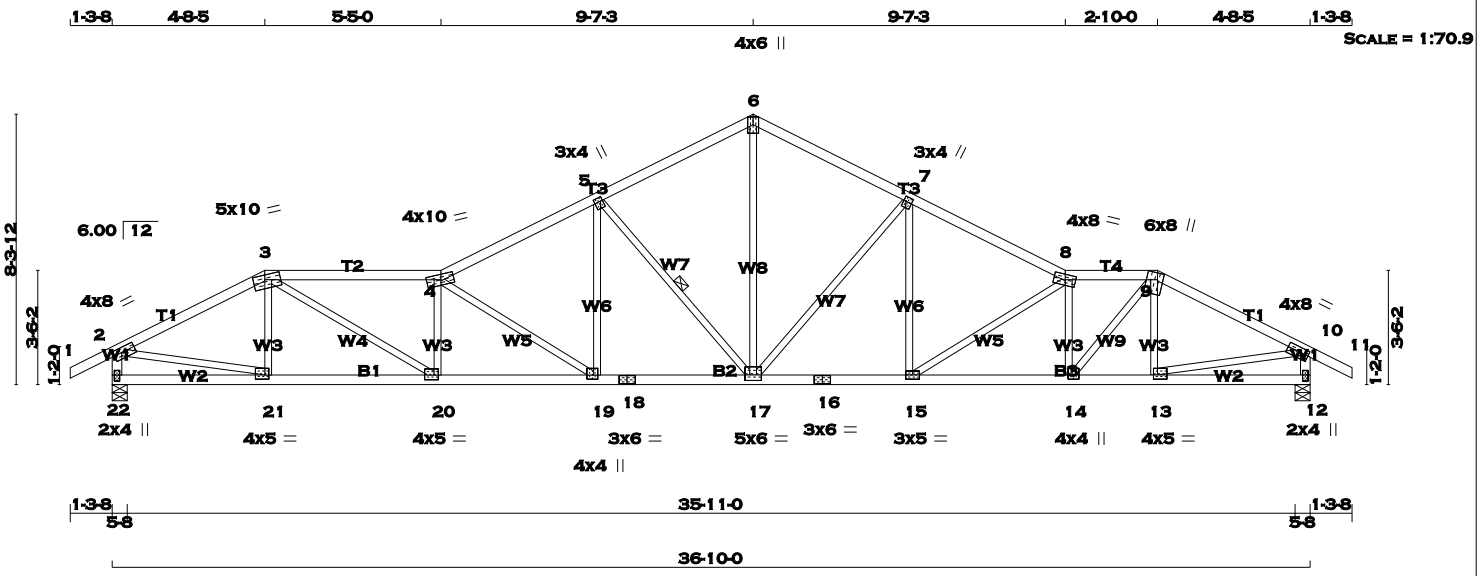

TOTAL WEIGHT = 153 lb

[M][F]

LUMBER

N. L. G. A. RULES

CHORDS	SIZE		LUMBER	DESCR.
1 - 3	2x4	DRY	No.2	SPF
3 - 4	2x4	DRY	No.2	SPF
4 - 6	2x4	DRY	No.2	SPF
6 - 8	2x4	DRY	No.2	SPF
8 - 9	2x4	DRY	No.2	SPF
9 - 11	2x4	DRY	No.2	SPF
22 - 2	2x4	DRY	No.2	SPF
12 - 10	2x4	DRY	No.2	SPF
22 - 18	2x4	DRY	No.2	SPF
18 - 16	2x4	DRY	No.2	SPF
16 - 12	2x4	DRY	No.2	SPF
ALL WEBS EXCEPT	2x3	DRY	No.2	SPF

DRY: SEASONED LUMBER.

PLATES (table is in inches)

JT	TYPE	PLATES	W	LEN	Y	X
2	TMVW-t	MT20	4.0	8.0	1.75	3.00
3	TTWW-m	MT20	5.0	10.0	1.75	4.25
4	TTWW-m	MT20	4.0	10.0	2.00	4.75
5	TMWW+t	MT20	3.0	4.0	1.50	0.75
6	TTW+p	MT20	4.0	6.0	Edge	
7	TMWW+t	MT20	3.0	4.0	1.75	0.75
8	TTWW-m	MT20	4.0	8.0	2.00	3.75
9	TTWW+m	MT20	6.0	8.0	2.50	2.00
10	TMVW-t	MT20	4.0	8.0	1.75	3.00
12	BMV1+p	MT20	2.0	4.0	2.25	1.00
13	BMWW-t	MT20	4.0	5.0	1.50	1.50
14	BMWW+t	MT20	4.0	4.0	1.50	1.50
15	BMWW-t	MT20	3.0	5.0		
16	BS-t	MT20	3.0	6.0		
17	BMWWW-t	MT20	5.0	6.0	2.00	3.00
18	BS-t	MT20	3.0	6.0		
19	BMWW+t	MT20	4.0	4.0	1.50	1.50
20	BMWW-t	MT20	4.0	5.0	1.75	1.50
21	BMWW-t	MT20	4.0	5.0	1.50	1.50
22	BMV1+p	MT20	2.0	4.0	2.25	1.00

Edge - INDICATES REFERENCE CORNER OF PLATE TOUCHES EDGE OF CHORD.

A SIZE FOR SIZE SUBSTITUTION OF MITEK MII20 WITH TEE-LOK TL20 PLATES IS ALLOWED.

DIMENSIONS, SUPPORTS AND LOADINGS SPECIFIED BY FABRICATOR TO BE VERIFIED BY BUILDING DESIGNER

BEARINGS

JT	FACTORED GROSS REACTION VERT	HORZ	MAXIMUM GROSS REACTION DOWN	HORZ	FACTORED UPLIFT	INPUT BRG IN-SX	REQRD BRG IN-SX
22	1852	0	1852	0	0	5-8	5-8
12	1852	0	1852	0	0	5-8	5-8

UNFACTORED REACTIONS

JT	1ST LCASE COMBINED	MAX./MIN. COMPONENT REACTIONS SNOW	LIVE	PERM.LIVE	WIND	DEAD	SOIL
22	1297	921 / 0	0 / 0	0 / 0	0 / 0	376 / 0	0 / 0
12	1297	921 / 0	0 / 0	0 / 0	0 / 0	376 / 0	0 / 0

BEARING MATERIAL TO BE SPF NO.2 OR BETTER AT JOINT(S) 22, 12

BRACING

TOP CHORD TO BE SHEATHED OR MAX. PURLIN SPACING = 3.14 FT.
MAX. UNBRACED BOTTOM CHORD LENGTH = 10.00 FT. OR RIGID CEILING DIRECTLY APPLIED.

ALL PITCH BREAKS AND PERIMETER CORNER JOINTS MUST BE LATERALLY RESTRAINED.

1 - 2x3 SPF No.2 LATERAL BRACE(S) AT 1/ 2 LENGTH OF 5-17. DBS = 12-0-0 . CBF = 92 LBS.

DBS = DIAGONAL BRACE SPACING (MAX). CBF = CUMULATIVE BRACING FORCE. FASTEN LATERAL BRACE(S) USING (0.122"X3") SPIRAL NAILS : 1 NAIL FOR 2x3 BRACE(S), 2 FOR 1x4, 2x4, 2x5, 3 FOR 2x6, 4 FOR 2x8, 5 FOR 2x10, AND 6 FOR 2x12.

END VERTICAL(S) MUST BE SHEATHED OR HAVE BRACES AS INDICATED IN THE MAX. UNBRACED LENGTH COLUMN OF THE TABLE BELOW

LOADING

TOTAL LOAD CASES: (4)

CHORDS MEMB. FR-TO	MAX. FACTORED FORCE (LBS)	FACTORED VERT. LOAD LC1 (PLF) FROM	TO	MAX CSI (LC)	MAX. UNBRAC LENGTH	WEBS MEMB. FR-TO	MAX. FACTORED FORCE (LBS)	MAX CSI (LC)
1- 2	0 / 23	-77.3	-77.3	0.10 (1)	10.00	21- 3	-297 / 0	0.06 (1)
2- 3	-2519 / 0	-77.3	-77.3	0.31 (1)	4.09	3-20	0 / 2001	0.45 (1)
3- 4	-3954 / 0	-77.3	-77.3	0.53 (1)	3.14	20- 4	-963 / 0	0.20 (1)
4- 5	-3117 / 0	-77.3	-77.3	0.36 (1)	3.69	4-19	-1418 / 0	0.83 (1)
5- 6	-2260 / 0	-77.3	-77.3	0.29 (1)	4.30	19- 5	0 / 875	0.20 (1)
6- 7	-2260 / 0	-77.3	-77.3	0.29 (1)	4.30	5-17	-1232 / 0	0.45 (1)
7- 8	-2883 / 0	-77.3	-77.3	0.34 (1)	3.84	17- 6	0 / 1718	0.39 (1)
8- 9	-3215 / 0	-77.3	-77.3	0.19 (1)	3.78	17- 7	-910 / 0	0.97 (1)
9-10	-2511 / 0	-77.3	-77.3	0.31 (1)	4.10	15- 7	0 / 527	0.12 (1)
10-11	0 / 23	-77.3	-77.3	0.10 (1)	10.00	15- 8	-787 / 0	0.46 (1)
22- 2	-1819 / 0	0.0	0.0	0.18 (1)	6.20	14- 8	-1110 / 0	0.23 (1)
12-10	-1814 / 0	0.0	0.0	0.18 (1)	6.21	14- 9	0 / 1515	0.34 (1)
						13- 9	-319 / 0	0.07 (1)
22-21	0 / 0	-17.5	-17.5	0.10 (4)	10.00	2-21	0 / 2287	0.51 (1)
21-20	0 / 2242	-17.5	-17.5	0.42 (1)	10.00	13-10	0 / 2280	0.51 (1)
20-19	0 / 3985	-17.5	-17.5	0.70 (1)	10.00			
19-18	0 / 2807	-17.5	-17.5	0.51 (1)	10.00			
18-17	0 / 2807	-17.5	-17.5	0.51 (1)	10.00			
17-16	0 / 2597	-17.5	-17.5	0.47 (1)	10.00			
16-15	0 / 2597	-17.5	-17.5	0.47 (1)	10.00			
15-14	0 / 3251	-17.5	-17.5	0.59 (1)	10.00			
14-13	0 / 2234	-17.5	-17.5	0.39 (1)	10.00			
13-12	0 / 0	-17.5	-17.5	0.09 (4)	10.00			

RECEIVED
TOWN OF MILTON
MAR 29, 2017
17-5233
BUILDING DIVISION

READ ALL NOTES ON THIS PAGE AND ON THE ENGINEERING NOTE PAGE ENP-1. THE NOTE PAGE IS AN INTEGRAL PART OF THIS DRAWING AS IT CONTAINS SPECIFICATIONS AND CRITERIA USED IN THE DESIGN OF THIS COMPONENT.

DESIGN CRITERIA

SPECIFIED LOADS:

TOP CH.	LL	=	23.3	PSF
	DL	=	3.0	PSF
BOT CH.	LL	=	0.0	PSF
	DL	=	7.0	PSF
TOTAL LOAD		=	33.3	PSF

SPACING = 24.0 IN. C/C

LOADING IN ALL FLAT SECTIONS BASED ON A SLOPE OF 6.00/12

THIS TRUSS IS DESIGNED FOR RESIDENTIAL OR SMALL BUILDING REQUIREMENTS OF PART 9, NBCC 2010

THIS DESIGN COMPLIES WITH:
- PART 9 OF OBC 2012 , BCBC 2012 , ABC 2014
- CSA 086-09
- TPIC 2011

(55 % OF 27.2 P.S.F. G.S.L. PLUS 8.4 P.S.F. RAIN LOAD) EQUALS 23.3 P.S.F. SPECIFIED ROOF LIVE LOAD

ALLOWABLE DEFL.(LL)= L/360 (1.23")
CALCULATED VERT. DEFL.(LL) = L/ 999 (0.27")
ALLOWABLE DEFL.(TL)= L/360 (1.23")
CALCULATED VERT. DEFL.(TL) = L/ 909 (0.49")

CSI: TC=0.53 (3-4:1) , BC=0.70 (19-20:1) , WB=0.97 (7-17:1) , SSI=0.16 (3-4:1)

DOL LUMBER=1.00 NAIL=1.00 LS BEND=1.10 COMP=1.10 SHEAR=1.10 TENS= 1.10

COMPANION LIVE LOAD FACTOR = 0.50

TRUSS PLATE MANUFACTURER IS NOT RESPONSIBLE FOR QUALITY CONTROL IN THE TRUSS MANUFACTURING PLANT .

NAIL VALUES

PLATE	GRIP(DRY) (PSI) MAX	MIN	SHEAR (PLI) MAX	MIN	SECTION (PLI) MAX	MIN
MT20	618	354	1667	822	2284	1656

PLATE PLACEMENT TOL. = 0.250 inches

PLATE ROTATION TOL. = 5.0 Deg.

JSI GRIP= 0.90 (19) (INPUT = 0.90)
JSI METAL= 0.70 (18) (INPUT = 1.00)

KOTT

CONTINUED ON PAGE 2

JOB NAME	TRUSS NAME	QUANTITY	PLY	JOB DESC.	DRWG NO.
PT0317-081	T35	1	1	TRUSS DESC. LECCO RIDGE-BLOCK 338	

KOTT , Stouffville, ON, CGC

Version 8.100 S Feb 9 2017 MiTek Industries, Inc. Tue Mar 14 15:57:32 2017 Page 1
ID:EvTixTQDI5yR1QLotZTBr_yE?HJ-_GP3lfMsFbghb2Jp8PfaRkB5H2CHqOUulAUgk9zb_PH

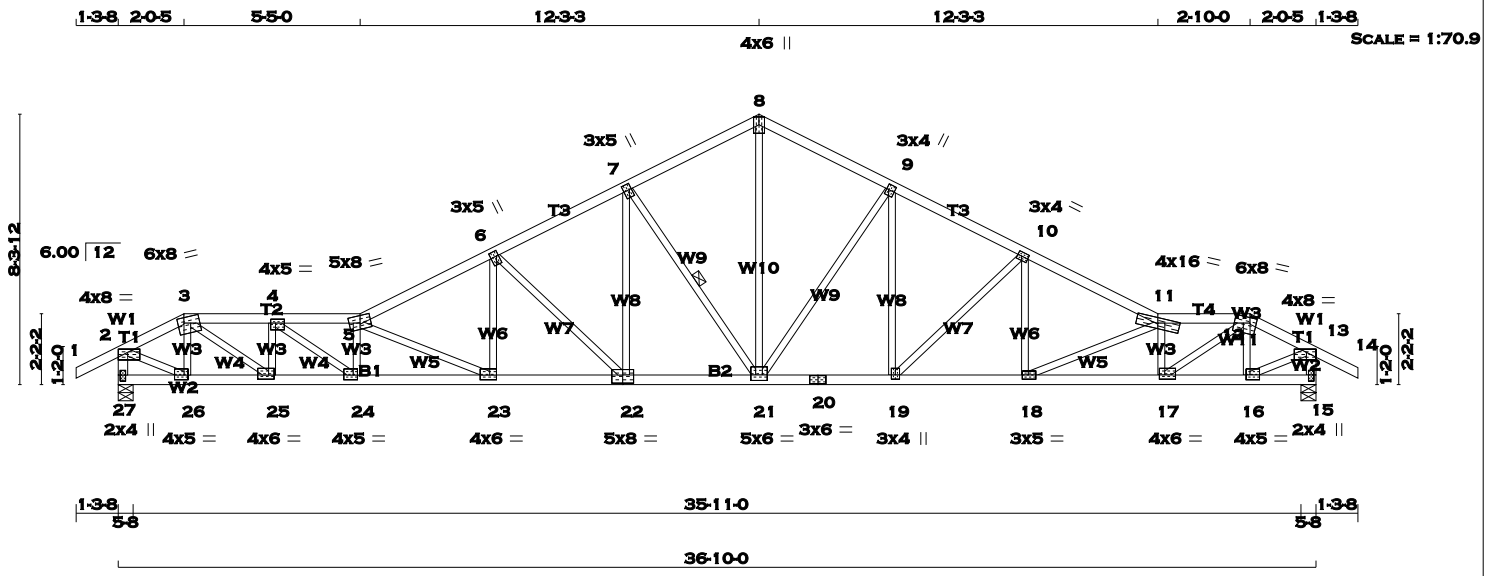

TOTAL WEIGHT = 158 lb
[M][F]

LUMBER
N. L. G. A. RULES

CHORDS	SIZE		LUMBER	DESCR.
1 - 3	2x4	DRY	No.2	SPF
3 - 5	2x4	DRY	No.2	SPF
5 - 8	2x4	DRY	No.2	SPF
8 - 11	2x4	DRY	No.2	SPF
11 - 12	2x4	DRY	No.2	SPF
12 - 14	2x4	DRY	No.2	SPF
27 - 2	2x4	DRY	No.2	SPF
15 - 13	2x4	DRY	No.2	SPF
27 - 22	2x4	DRY	No.2	SPF
22 - 20	2x4	DRY	No.2	SPF
20 - 15	2x4	DRY	No.2	SPF
ALL WEBS EXCEPT	2x3	DRY	No.2	SPF

DRY: SEASONED LUMBER.

PLATES (table is in inches)

JT	TYPE	PLATES	W	LEN	Y	X
2	TMVW-p	MT20	4.0	8.0	1.25	3.50
3	TTWW-m	MT20	6.0	8.0	2.00	2.25
4	TMWW-t	MT20	4.0	5.0	1.50	1.75
5	TTWW-m	MT20	5.0	8.0	2.75	4.00
6	TMWW+t	MT20	3.0	5.0	2.00	0.75
7	TMWW+t	MT20	3.0	5.0	2.25	0.75
8	TTW+p	MT20	4.0	6.0	Edge	
9	TMWW+t	MT20	3.0	4.0	2.00	0.75
10	TMWW-t	MT20	3.0	4.0	1.50	1.50
11	TTWW-m	MT20	4.0	16.0		
12	TTWW-m	MT20	6.0	8.0	2.00	2.25
13	TMVW-p	MT20	4.0	8.0	1.25	3.50
15	BMV1+p	MT20	2.0	4.0	2.25	1.00
16, 24, 26						
16	BMWW-t	MT20	4.0	5.0	1.75	1.50
17	BMWW-t	MT20	4.0	6.0	1.50	2.00
18	BMWW-t	MT20	3.0	5.0	1.50	2.25
19	BMWW+t	MT20	3.0	4.0	1.50	1.50
20	BS-t	MT20	3.0	6.0		
21	BMWWW-t	MT20	5.0	6.0	2.00	3.00
22	BSWW-l	MT20	5.0	8.0	3.00	4.00
23	BMWW-t	MT20	4.0	6.0	1.75	2.50
25	BMWW-t	MT20	4.0	6.0	1.50	2.00
27	BMV1+p	MT20	2.0	4.0	2.25	1.00

Edge - INDICATES REFERENCE CORNER OF PLATE TOUCHES EDGE OF CHORD.

A SIZE FOR SIZE SUBSTITUTION OF MITEK MII20 WITH TEE-LOK TL20 PLATES IS ALLOWED.

DIMENSIONS, SUPPORTS AND LOADINGS SPECIFIED BY FABRICATOR TO BE VERIFIED BY BUILDING DESIGNER

BEARINGS

JT	FACTORED GROSS REACTION VERT	HORZ	MAXIMUM FACTORED GROSS REACTION DOWN	HORZ	UPLIFT	INPUT BRG IN-SX	REQRD BRG IN-SX
27	1852	0	1852	0	0	5-8	5-8
15	1852	0	1852	0	0	5-8	5-8

UNFACTORED REACTIONS

JT	1ST LCASE COMBINED	MAX./MIN. COMPONENT REACTIONS SNOW	LIVE	PERM.LIVE	WIND	DEAD	SOIL
27	1297	921 / 0	0 / 0	0 / 0	0 / 0	376 / 0	0 / 0
15	1297	921 / 0	0 / 0	0 / 0	0 / 0	376 / 0	0 / 0

BEARING MATERIAL TO BE SPF NO.2 OR BETTER AT JOINT(S) 27, 15

BRACING
TOP CHORD TO BE SHEATHED OR MAX. PURLIN SPACING = 2.77 FT.
MAX. UNBRACED BOTTOM CHORD LENGTH = 10.00 FT. OR RIGID CEILING DIRECTLY APPLIED.

ALL PITCH BREAKS AND PERIMETER CORNER JOINTS MUST BE LATERALLY RESTRAINED.

1 - 2x3 SPF No.2 LATERAL BRACE(S) AT 1/ 2 LENGTH OF 7-21. DBS = 12-0-0 . CBF = 86 LBS.

DBS = DIAGONAL BRACE SPACING (MAX). CBF = CUMULATIVE BRACING FORCE. FASTEN LATERAL BRACE(S) USING (0.122"X3") SPIRAL NAILS : 1 NAIL FOR 2x3 BRACE(S), 2 FOR 1x4, 2x4, 2x5, 3 FOR 2x6, 4 FOR 2x8, 5 FOR 2x10, AND 6 FOR 2x12.

END VERTICAL(S) MUST BE SHEATHED OR HAVE BRACES AS INDICATED IN THE MAX. UNBRACED LENGTH COLUMN OF THE TABLE BELOW

LOADING
TOTAL LOAD CASES: (4)

CHORDS

MEMB. FR-TO	MAX. FACTORED FORCE (LBS)	FACTORED VERT. LOAD (PLF) FROM	TO	LC1 MAX CSI (LC)	MAX. UNBRAC LENGTH
1- 2	0 / 23	-77.3	-77.3	0.10 (1)	10.00
2- 3	-2045 / 0	-77.3	-77.3	0.08 (1)	4.69
3- 4	-3820 / 0	-77.3	-77.3	0.23 (1)	3.46
4- 5	-5414 / 0	-77.3	-77.3	0.38 (1)	2.77
5- 6	-3976 / 0	-77.3	-77.3	0.35 (1)	3.31
6- 7	-2970 / 0	-77.3	-77.3	0.23 (1)	3.89
7- 8	-2254 / 0	-77.3	-77.3	0.21 (1)	4.39
8- 9	-2254 / 0	-77.3	-77.3	0.21 (1)	4.39
9-10	-2782 / 0	-77.3	-77.3	0.22 (1)	4.02
10-11	-3404 / 0	-77.3	-77.3	0.29 (1)	3.61
11-12	-3811 / 0	-77.3	-77.3	0.23 (1)	3.46
12-13	-2052 / 0	-77.3	-77.3	0.08 (1)	4.68
13-14	0 / 23	-77.3	-77.3	0.10 (1)	10.00
27- 2	-1840 / 0	0.0	0.0	0.19 (1)	6.17
15-13	-1845 / 0	0.0	0.0	0.19 (1)	6.16
27-26	0 / 0	-17.5	-17.5	0.03 (4)	10.00
26-25	0 / 1788	-17.5	-17.5	0.31 (1)	10.00
25-24	0 / 3820	-17.5	-17.5	0.72 (1)	10.00
24-23	0 / 5477	-17.5	-17.5	1.00 (1)	10.00
23-22	0 / 3570	-17.5	-17.5	0.61 (1)	10.00
22-21	0 / 2656	-17.5	-17.5	0.48 (1)	10.00
21-20	0 / 2488	-17.5	-17.5	0.46 (1)	10.00
20-19	0 / 2488	-17.5	-17.5	0.46 (1)	10.00
19-18	0 / 3058	-17.5	-17.5	0.53 (1)	10.00
18-17	0 / 3888	-17.5	-17.5	0.72 (1)	10.00
17-16	0 / 1796	-17.5	-17.5	0.37 (1)	10.00
16-15	0 / 0	-17.5	-17.5	0.03 (1)	10.00

WEBS

MEMB. FR-TO	MAX. FACTORED FORCE (LBS)	MAX CSI (LC)
26- 3	-677 / 0	0.10 (1)
3-25	0 / 2472	0.56 (1)
25- 4	-1350 / 0	0.20 (1)
4-24	0 / 1969	0.44 (1)
24- 5	-1148 / 0	0.17 (1)
5-23	-2099 / 0	0.73 (1)
23- 6	0 / 981	0.22 (1)
6-22	-1264 / 0	0.68 (1)
22- 7	0 / 930	0.21 (1)
7-21	-1151 / 0	0.41 (1)
21- 8	0 / 1744	0.39 (1)
21- 9	-854 / 0	0.86 (1)
19- 9	0 / 602	0.14 (1)
19-10	-788 / 0	0.43 (1)
18-10	0 / 480	0.11 (1)
18-11	-914 / 0	0.32 (1)
17-11	-1383 / 0	0.21 (1)
17-12	0 / 2447	0.55 (1)
16-12	-653 / 0	0.10 (1)
2-26	0 / 1968	0.44 (1)
16-13	0 / 1975	0.44 (1)

RECEIVED
TOWN OF MILTON
MAR 29, 2017
17-5233
BUILDING DIVISION

READ ALL NOTES ON THIS PAGE AND ON THE ENGINEERING NOTE PAGE ENP-1. THE NOTE PAGE IS AN INTEGRAL PART OF THIS DRAWING AS IT CONTAINS SPECIFICATIONS AND CRITERIA USED IN THE DESIGN OF THIS COMPONENT.

DESIGN CRITERIA

SPECIFIED LOADS:

TOP CH.	LL	=	23.3	PSF
	DL	=	3.0	PSF
BOT CH.	LL	=	0.0	PSF
	DL	=	7.0	PSF
TOTAL LOAD		=	33.3	PSF

SPACING = 24.0 IN. C/C

LOADING IN ALL FLAT SECTIONS BASED ON A SLOPE OF 6.00/12

THIS TRUSS IS DESIGNED FOR RESIDENTIAL OR SMALL BUILDING REQUIREMENTS OF PART 9, NBCC 2010

THIS DESIGN COMPLIES WITH:
- PART 9 OF OBC 2012 , BCBC 2012 , ABC 2014
- CSA 086-09
- TPIC 2011

(55 % OF 27.2 P.S.F. G.S.L. PLUS 8.4 P.S.F. RAIN LOAD) EQUALS 23.3 P.S.F. SPECIFIED ROOF LIVE LOAD

ALLOWABLE DEFL.(LL)= L/360 (1.23")
CALCULATED VERT. DEFL.(LL) = L/ 999 (0.35")
ALLOWABLE DEFL.(TL)= L/360 (1.23")
CALCULATED VERT. DEFL.(TL) = L/ 715 (0.62")

CSI: TC=0.38 (4-5:1) , BC=1.00 (23-24:1) , WB=0.86 (9-21:1) , SSI=0.13 (7-8:1)

DOL LUMBER=1.00 NAIL=1.00 LS BEND=1.10 COMP=1.10 SHEAR=1.10 TENS= 1.10

COMPANION LIVE LOAD FACTOR = 0.50

TRUSS PLATE MANUFACTURER IS NOT RESPONSIBLE FOR QUALITY CONTROL IN THE TRUSS MANUFACTURING PLANT .

NAIL VALUES

PLATE	GRIP(DRY) (PSI) MAX	MIN	SHEAR (PLI) MAX	MIN	SECTION (PLI) MAX	MIN
MT20	618	354	1667	822	2284	1656

PLATE PLACEMENT TOL. = 0.250 inches

PLATE ROTATION TOL. = 5.0 Deg.

JSI GRIP= 0.90 (23) (INPUT = 0.90)
JSI METAL= 0.67 (22) (INPUT = 1.00)

KOTT

CONTINUED ON PAGE 2

JOB NAME	TRUSS NAME	QUANTITY	PLY	JOB DESC.	DRWG NO.
PT0317-081	**T36**	**6**	**1**	TRUSS DESC. LECCO RIDGE-BLOCK 338	

ENG JOB: PT0317-081

KOTT , Stouffville, ON, CGC

Version 8.100 S Feb 9 2017 MiTek Industries, Inc. Tue Mar 14 15:57:32 2017 Page 1
ID:EvTixTQDI5yR1QLotZTBr_yE?HJ-_GP3lfMsFbghb2Jp8PfaRkB9i2PpqbxulAUgk9zb_PH

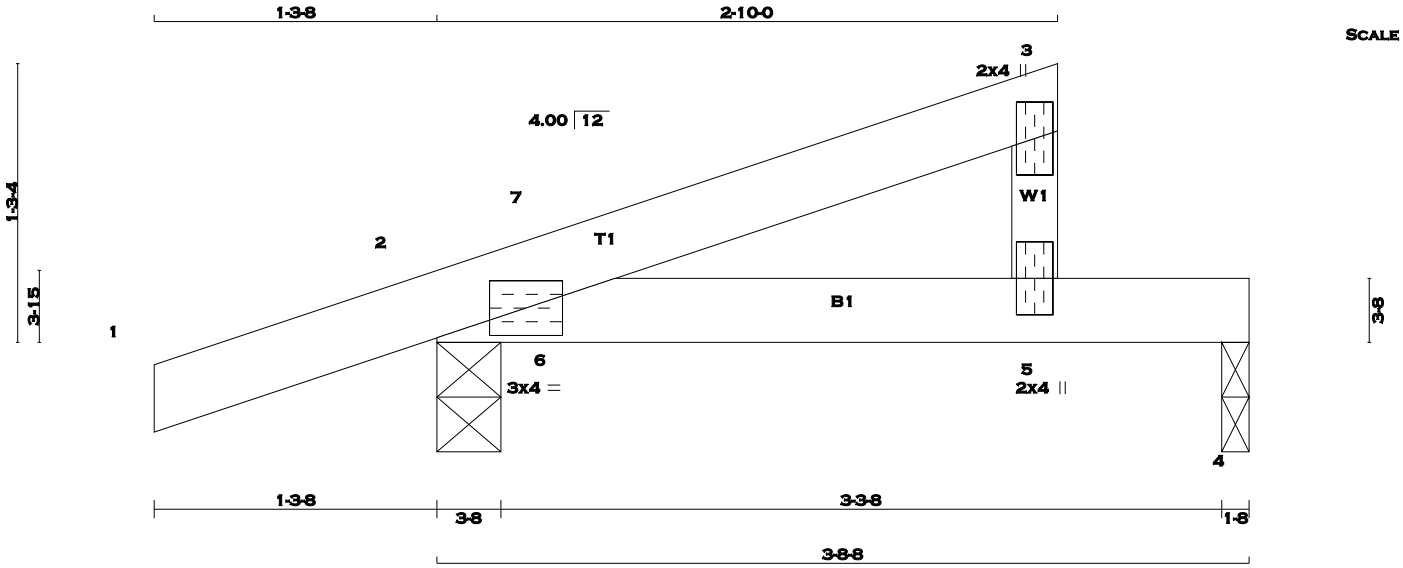

TOTAL WEIGHT = 6 X 10 = 59 lb [M]

LUMBER
N. L. G. A. RULES

CHORDS	SIZE		LUMBER	DESCR.
1 - 3	2x4	DRY	No.2	SPF
5 - 3	2x3	DRY	No.2	SPF
2 - 4	2x4	DRY	No.2	SPF

DRY: SEASONED LUMBER.

PLATES (table is in inches)

JT	TYPE	PLATES	W	LEN	Y	X
2	TMB1-I	MT20	3.0	4.0		
3	TMV+p	MT20	2.0	4.0		
5	BMV+p	MT20	2.0	4.0		

A SIZE FOR SIZE SUBSTITUTION OF MITEK MII20 WITH TEE-LOK TL20 PLATES IS ALLOWED.

DIMENSIONS, SUPPORTS AND LOADINGS SPECIFIED BY FABRICATOR TO BE VERIFIED BY BUILDING DESIGNER

BEARINGS

JT	FACTORED GROSS REACTION VERT	HORZ	MAXIMUM FACTORED GROSS REACTION DOWN	HORZ	UPLIFT	INPUT BRG IN-SX	REQRD BRG IN-SX
2	271	0	271	0	0	3-8	3-8
4	116	0	116	0	0	1-8	1-8

UNFACTORED REACTIONS

JT	1ST LCASE COMBINED	MAX./MIN. COMPONENT REACTIONS SNOW	LIVE	PERM.LIVE	WIND	DEAD	SOIL
2	188	144 / 0	0 / 0	0 / 0	0 / 0	44 / 0	0 / 0
4	83	50 / 0	0 / 0	0 / 0	0 / 0	32 / 0	0 / 0

BEARING MATERIAL TO BE SPF NO.2 OR BETTER AT JOINT(S) 2, 4

BRACING
TOP CHORD TO BE SHEATHED OR MAX. PURLIN SPACING = 6.25 FT.
MAX. UNBRACED BOTTOM CHORD LENGTH = 10.00 FT. OR RIGID CEILING DIRECTLY APPLIED.

ALL PITCH BREAKS AND PERIMETER CORNER JOINTS MUST BE LATERALLY RESTRAINED.

LOADING
TOTAL LOAD CASES: (5)

CHORDS

MEMB. FR-TO	MAX. FACTORED FORCE (LBS)	FACTORED VERT. LOAD (PLF) FROM	TO	LC1 MAX CSI (LC)	MAX. UNBRAC LENGTH
1- 2	0 / 15	-77.3	-77.3	0.10 (1)	10.00
2- 7	-25 / 0	-77.3	-77.3	0.06 (1)	6.25
7- 3	0 / 6	-77.3	-77.3	0.10 (1)	10.00
5- 3	-106 / 0	0.0	0.0	0.01 (1)	7.81
2- 6	0 / 0	-17.5	-17.5	0.06 (1)	10.00
6- 5	0 / 0	-17.5	-17.5	0.13 (1)	10.00
5- 4	0 / 0	-17.5	-17.5	0.13 (1)	10.00

WEBS

MEMB. FR-TO	MAX. FACTORED FORCE (LBS)	MAX CSI (LC)
6- 7	-18 / 32	0.00 (1)

CANTILEVER ANALYSIS HAS BEEN CONSIDERED IN THIS DESIGN

DESIGN CRITERIA

SPECIFIED LOADS:

TOP	CH.	LL	=	23.3	PSF
		DL	=	3.0	PSF
BOT	CH.	LL	=	0.0	PSF
		DL	=	7.0	PSF
TOTAL	LOAD		=	33.3	PSF

SPACING = 24.0 IN. C/C

THIS TRUSS IS DESIGNED FOR RESIDENTIAL OR SMALL BUILDING REQUIREMENTS OF PART 9, NBCC 2010

THIS DESIGN COMPLIES WITH:
- PART 9 OF OBC 2012 , BCBC 2012 , ABC 2014
- CSA 086-09
- TPIC 2011

(55 % OF 27.2 P.S.F. G.S.L. PLUS 8.4 P.S.F. RAIN LOAD) EQUALS 23.3 P.S.F. SPECIFIED ROOF LIVE LOAD

ALLOWABLE DEFL.(LL)= L/360 (0.19")
CALCULATED VERT. DEFL.(LL) = L/ 999 (0.01")
ALLOWABLE DEFL.(TL)= L/360 (0.19")
CALCULATED VERT. DEFL.(TL) = L/ 999 (0.03")

CSI: TC=0.10 (3-7:1) , BC=0.13 (5-6:1) , WB=0.00 (6-7:1) , SSI=0.09 (4-5:1)

DOL LUMBER=1.00 NAIL=1.00 LS BEND=1.10 COMP=1.10 SHEAR=1.10 TENS= 1.10

COMPANION LIVE LOAD FACTOR = 0.50

TRUSS PLATE MANUFACTURER IS NOT RESPONSIBLE FOR QUALITY CONTROL IN THE TRUSS MANUFACTURING PLANT .

NAIL VALUES

PLATE	GRIP(DRY) (PSI) MAX	MIN	SHEAR (PLI) MAX	MIN	SECTION (PLI) MAX	MIN
MT20	618	354	1667	822	2284	1656

PLATE PLACEMENT TOL. = 0.250 inches

PLATE ROTATION TOL. = 5.0 Deg.

JSI GRIP= 0.12 (2) (INPUT = 0.90)
JSI METAL= 0.04 (2) (INPUT = 1.00)

LICENSED PROFESSIONAL ENGINEER
P.M. TREVISAN
100136551
March 14th, 2017
PROVINCE OF ONTARIO

RECEIVED
TOWN OF MILTON
MAR 29, 2017
17-5233
BUILDING DIVISION

READ ALL NOTES ON THIS PAGE AND ON THE ENGINEERING NOTE PAGE ENP-1. THE NOTE PAGE IS AN INTEGRAL PART OF THIS DRAWING AS IT CONTAINS SPECIFICATIONS AND CRITERIA USED IN THE DESIGN OF THIS COMPONENT.

KOTT

JOB NAME	TRUSS NAME	QUANTITY	PLY	JOB DESC.	DRWG NO.
PT0317-081	T37	12	1	TRUSS DESC. LECCO RIDGE-BLOCK 338	ENG JOB: PT0317-081

KOTT , Stouffville, ON, CGC

Version 8.100 S Feb 9 2017 MiTek Industries, Inc. Tue Mar 14 15:57:33 2017 Page 1

ID:EvTixTQDI5yR1QLotZTBr_yE?HJ-STyRy?NU0uoYDCu?h6ApzykKVSiBZ1T2_qEEGczb_PG

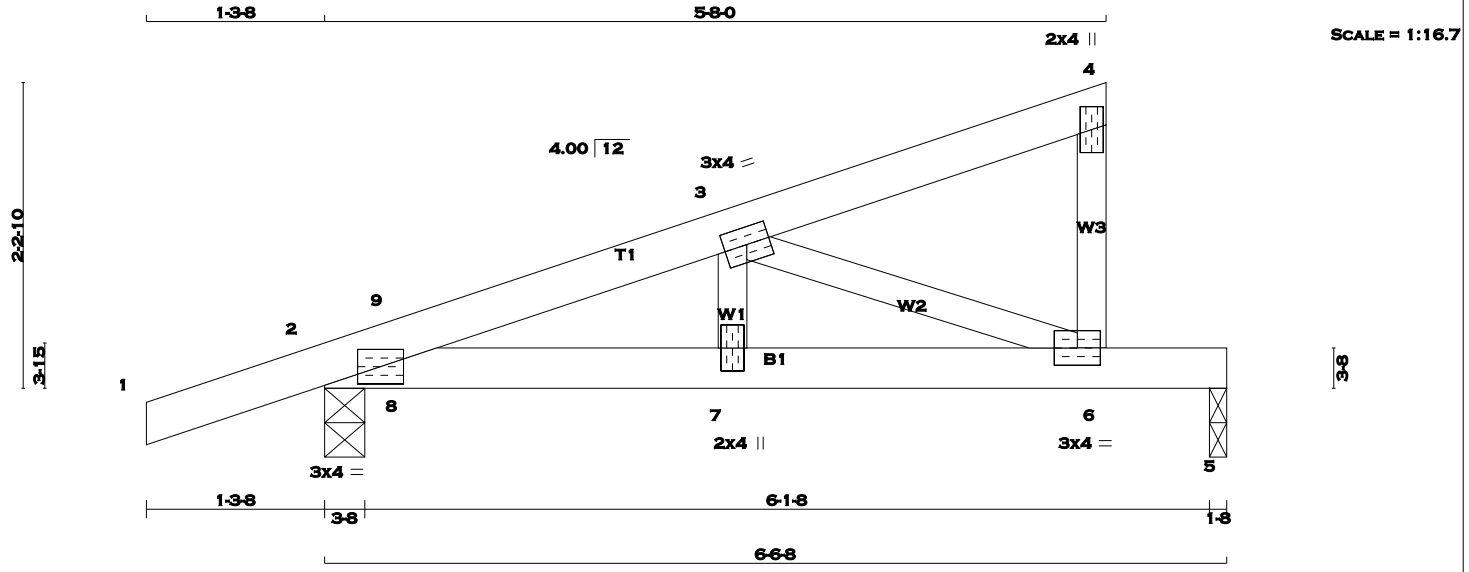

TOTAL WEIGHT = 12 X 20 = 239 lb

[M][F]

LUMBER

N. L. G. A. RULES

CHORDS	SIZE		LUMBER	DESCR.
1 - 4	2x4	DRY	No.2	SPF
6 - 4	2x3	DRY	No.2	SPF
2 - 5	2x4	DRY	No.2	SPF
ALL WEBS	2x3	DRY	No.2	SPF

DRY: SEASONED LUMBER.

PLATES (table is in inches)

JT	TYPE	PLATES	W	LEN	Y	X
2	TMB1-I	MT20	3.0	4.0		
3	TMWW-t	MT20	3.0	4.0		
4	TMV+p	MT20	2.0	4.0		
6	BMVW-t	MT20	3.0	4.0		
7	BMW+w	MT20	2.0	4.0		

A SIZE FOR SIZE SUBSTITUTION OF MITEK MII20 WITH TEE-LOK TL20 PLATES IS ALLOWED.

DIMENSIONS, SUPPORTS AND LOADINGS SPECIFIED BY FABRICATOR TO BE VERIFIED BY BUILDING DESIGNER

BEARINGS

JT	FACTORED GROSS REACTION VERT	HORZ	MAXIMUM FACTORED GROSS REACTION DOWN	HORZ	UPLIFT	INPUT BRG IN-SX	REQRD BRG IN-SX
2	409	0	409	0	0	3-8	3-8
5	247	0	247	0	0	1-8	1-8

UNFACTORED REACTIONS

JT	1ST LCASE COMBINED	MAX./MIN. COMPONENT REACTIONS SNOW	LIVE	PERM.LIVE	WIND	DEAD	SOIL
2	285	212 / 0	0 / 0	0 / 0	0 / 0	73 / 0	0 / 0
5	175	114 / 0	0 / 0	0 / 0	0 / 0	61 / 0	0 / 0

BEARING MATERIAL TO BE SPF NO.2 OR BETTER AT JOINT(S) 2, 5

BRACING

TOP CHORD TO BE SHEATHED OR MAX. PURLIN SPACING = 6.25 FT.
MAX. UNBRACED BOTTOM CHORD LENGTH = 10.00 FT. OR RIGID CEILING DIRECTLY APPLIED.

ALL PITCH BREAKS AND PERIMETER CORNER JOINTS MUST BE LATERALLY RESTRAINED.

LOADING

TOTAL LOAD CASES: (4)

CHORDS

MEMB. FR-TO	MAX. FACTORED FORCE (LBS)	FACTORED VERT. LOAD (PLF) FROM	TO	LC1 MAX CSI (LC)	MAX. UNBRAC LENGTH
1- 2	0 / 15	-77.3	-77.3	0.10 (1)	10.00
2- 9	-607 / 0	-77.3	-77.3	0.01 (1)	6.25
9- 3	-593 / 0	-77.3	-77.3	0.05 (1)	6.25
3- 4	-4 / 0	-77.3	-77.3	0.06 (1)	10.00
6- 4	-91 / 0	0.0	0.0	0.01 (1)	7.81
2- 8	0 / 568	-17.5	-17.5	0.14 (1)	10.00
8- 7	0 / 568	-17.5	-17.5	0.16 (1)	10.00
7- 6	0 / 568	-17.5	-17.5	0.38 (1)	10.00
6- 5	0 / 0	-17.5	-17.5	0.29 (1)	10.00

WEBS

MEMB. FR-TO	MAX. FACTORED FORCE (LBS)	MAX CSI (LC)
7- 3	0 / 178	0.04 (1)
3- 6	-606 / 0	0.11 (1)
8- 9	-74 / 2	0.00 (1)

DESIGN CRITERIA

SPECIFIED LOADS:

TOP	CH.	LL	=	23.3	PSF
		DL	=	3.0	PSF
BOT	CH.	LL	=	0.0	PSF
		DL	=	7.0	PSF
TOTAL	LOAD		=	33.3	PSF

SPACING = 24.0 IN. C/C

THIS TRUSS IS DESIGNED FOR RESIDENTIAL OR SMALL BUILDING REQUIREMENTS OF PART 9, NBCC 2010

THIS DESIGN COMPLIES WITH:
- PART 9 OF OBC 2012 , BCBC 2012 , ABC 2014
- CSA 086-09
- TPIC 2011

(55 % OF 27.2 P.S.F. G.S.L. PLUS 8.4 P.S.F. RAIN LOAD) EQUALS 23.3 P.S.F. SPECIFIED ROOF LIVE LOAD

ALLOWABLE DEFL.(LL)= L/360 (0.22")
CALCULATED VERT. DEFL.(LL) = L/ 999 (0.03")
ALLOWABLE DEFL.(TL)= L/360 (0.22")
CALCULATED VERT. DEFL.(TL) = L/ 999 (0.06")

CSI: TC=0.10 (1-2:1) , BC=0.38 (6-7:1) , WB=0.11 (3-6:1) , SSI=0.19 (5-6:1)

DOL LUMBER=1.00 NAIL=1.00 LS BEND=1.10 COMP=1.10 SHEAR=1.10 TENS= 1.10

COMPANION LIVE LOAD FACTOR = 0.50

TRUSS PLATE MANUFACTURER IS NOT RESPONSIBLE FOR QUALITY CONTROL IN THE TRUSS MANUFACTURING PLANT .

NAIL VALUES

PLATE	GRIP(DRY) (PSI) MAX	MIN	SHEAR (PLI) MAX	MIN	SECTION (PLI) MAX	MIN
MT20	618	354	1667	822	2284	1656

PLATE PLACEMENT TOL. = 0.250 inches

PLATE ROTATION TOL. = 5.0 Deg.

JSI GRIP= 0.86 (6) (INPUT = 0.90)
JSI METAL= 0.21 (6) (INPUT = 1.00)

LICENSED PROFESSIONAL ENGINEER
R.M. TREVISAN
100136551
March 14th, 2017
PROVINCE OF ONTARIO

RECEIVED
TOWN OF MILTON
MAR 29, 2017
17-5233
BUILDING DIVISION

READ ALL NOTES ON THIS PAGE AND ON THE ENGINEERING NOTE PAGE ENP-1. THE NOTE PAGE IS AN INTEGRAL PART OF THIS DRAWING AS IT CONTAINS SPECIFICATIONS AND CRITERIA USED IN THE DESIGN OF THIS COMPONENT.

KOTT

SCALE = 1:18.8

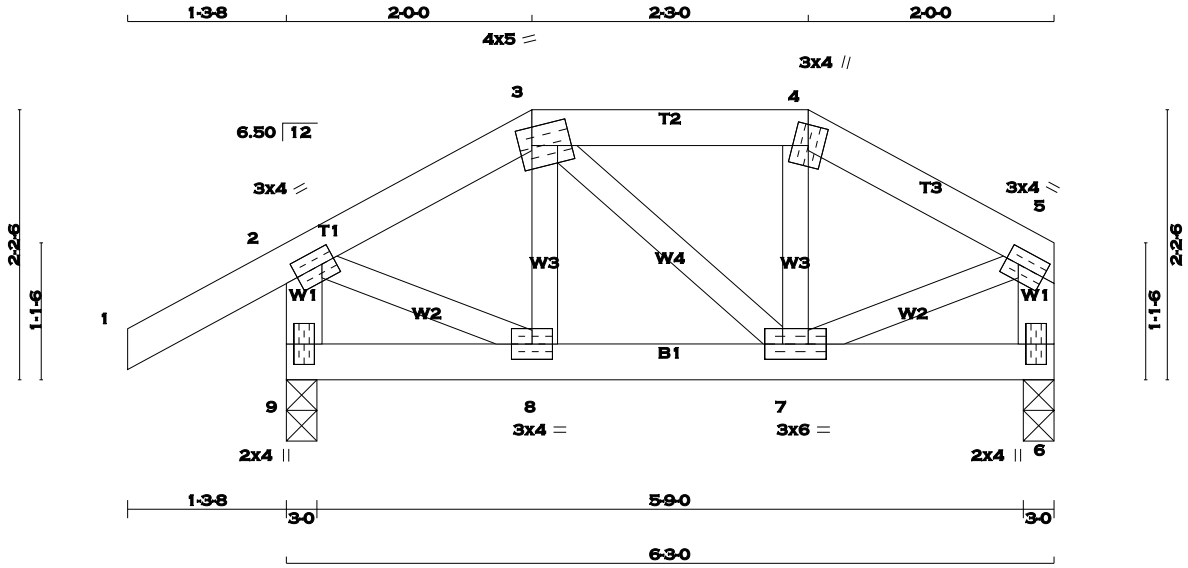

TOTAL WEIGHT = 2 X 26 = 52 lb

[M][F]

LUMBER

N. L. G. A. RULES

CHORDS	SIZE		LUMBER	DESCR.
1 - 3	2x4	DRY	No.2	SPF
3 - 4	2x4	DRY	No.2	SPF
4 - 5	2x4	DRY	No.2	SPF
9 - 2	2x4	DRY	No.2	SPF
6 - 5	2x4	DRY	No.2	SPF
9 - 6	2x4	DRY	No.2	SPF
ALL WEBS EXCEPT	2x3	DRY	No.2	SPF

DRY: SEASONED LUMBER.

PLATES (table is in inches)

JT	TYPE	PLATES	W	LEN	Y	X
2	TMVW-t	MT20	3.0	4.0	1.50	1.25
3	TTWW-m	MT20	4.0	5.0	1.75	1.25
4	TTW+m	MT20	3.0	4.0		
5	TMVW-t	MT20	3.0	4.0	1.50	1.25
6	BMV1+p	MT20	2.0	4.0		
7	BMWWW-t	MT20	3.0	6.0		
8	BMWW-t	MT20	3.0	4.0		
9	BMV1+p	MT20	2.0	4.0		

A SIZE FOR SIZE SUBSTITUTION OF MITEK MII20 WITH TEE-LOK TL20 PLATES IS ALLOWED.

DIMENSIONS, SUPPORTS AND LOADINGS SPECIFIED BY FABRICATOR TO BE VERIFIED BY BUILDING DESIGNER

BEARINGS

JT	FACTORED GROSS REACTION VERT	HORZ	MAXIMUM FACTORED GROSS REACTION DOWN	HORZ	UPLIFT	INPUT BRG IN-SX	REQRD BRG IN-SX
9	402	0	402	0	0	3-0	3-0
6	296	0	296	0	0	3-0	3-0

UNFACTORED REACTIONS

JT	1ST LCASE COMBINED	MAX./MIN. COMPONENT REACTIONS SNOW	LIVE	PERM.LIVE	WIND	DEAD	SOIL
9	280	209 / 0	0 / 0	0 / 0	0 / 0	71 / 0	0 / 0
6	208	146 / 0	0 / 0	0 / 0	0 / 0	63 / 0	0 / 0

BEARING MATERIAL TO BE SPF NO.2 OR BETTER AT JOINT(S) 9, 6

BRACING

TOP CHORD TO BE SHEATHED OR MAX. PURLIN SPACING = 6.25 FT.
MAX. UNBRACED BOTTOM CHORD LENGTH = 10.00 FT. OR RIGID CEILING DIRECTLY APPLIED.

ALL PITCH BREAKS AND PERIMETER CORNER JOINTS MUST BE LATERALLY RESTRAINED.

LOADING

TOTAL LOAD CASES: (4)

CHORDS

MEMB. FR-TO	MAX. FACTORED FORCE (LBS)	FACTORED VERT. LOAD (PLF) FROM	TO	LC1 MAX CSI (LC)	MAX. UNBRAC LENGTH
1- 2	0 / 25	-77.3	-77.3	0.10 (1)	10.00
2- 3	-248 / 0	-77.3	-77.3	0.04 (1)	6.25
3- 4	-215 / 0	-77.3	-77.3	0.05 (1)	6.25
4- 5	-248 / 0	-77.3	-77.3	0.04 (1)	6.25
9- 2	-385 / 0	0.0	0.0	0.04 (1)	7.81
6- 5	-279 / 0	0.0	0.0	0.03 (1)	7.81
9- 8	0 / 0	-17.5	-17.5	0.02 (4)	10.00
8- 7	0 / 215	-17.5	-17.5	0.04 (1)	10.00
7- 6	0 / 0	-17.5	-17.5	0.02 (4)	10.00

WEBS

MEMB. FR-TO	MAX. FACTORED FORCE (LBS)	MAX CSI (LC)
8- 3	-45 / 18	0.01 (1)
3- 7	0 / 0	0.00 (1)
7- 4	-45 / 19	0.01 (1)
2- 8	0 / 233	0.05 (1)
7- 5	0 / 233	0.05 (1)

DESIGN CRITERIA

SPECIFIED LOADS:

TOP CH.	LL	=	23.3	PSF
	DL	=	3.0	PSF
BOT CH.	LL	=	0.0	PSF
	DL	=	7.0	PSF
TOTAL LOAD		=	33.3	PSF

SPACING = 24.0 IN. C/C

LOADING IN FLAT SECTION BASED ON A SLOPE OF 6.00/12

THIS TRUSS IS DESIGNED FOR RESIDENTIAL OR SMALL BUILDING REQUIREMENTS OF PART 9, NBCC 2010

THIS DESIGN COMPLIES WITH:
- PART 9 OF OBC 2012 , BCBC 2012 , ABC 2014
- CSA 086-09
- TPIC 2011

(55 % OF 27.2 P.S.F. G.S.L. PLUS 8.4 P.S.F. RAIN LOAD) EQUALS 23.3 P.S.F. SPECIFIED ROOF LIVE LOAD

ALLOWABLE DEFL.(LL)= L/360 (0.21")
CALCULATED VERT. DEFL.(LL) = L/ 999 (0.00")
ALLOWABLE DEFL.(TL)= L/360 (0.21")
CALCULATED VERT. DEFL.(TL) = L/ 999 (0.00")

CSI: TC=0.10 (1-2:1) , BC=0.04 (7-8:1) , WB=0.05 (2-8:1) , SSI=0.07 (1-2:1)

DOL LUMBER=1.00 NAIL=1.00 LS BEND=1.10 COMP=1.10 SHEAR=1.10 TENS= 1.10

COMPANION LIVE LOAD FACTOR = 0.50

TRUSS PLATE MANUFACTURER IS NOT RESPONSIBLE FOR QUALITY CONTROL IN THE TRUSS MANUFACTURING PLANT .

NAIL VALUES

PLATE	GRIP(DRY) (PSI) MAX	MIN	SHEAR (PLI) MAX	MIN	SECTION (PLI) MAX	MIN
MT20	618	354	1667	822	2284	1656

PLATE PLACEMENT TOL. = 0.250 inches

PLATE ROTATION TOL. = 0.5 Deg.

JSI GRIP= 0.59 (2) (INPUT = 0.90)
JSI METAL= 0.13 (2) (INPUT = 1.00)

LICENSED PROFESSIONAL ENGINEER
P.M. TREVISAN
100136551
March 14th, 2017
PROVINCE OF ONTARIO

RECEIVED
TOWN OF MILTON
MAR 29, 2017
17-5233
BUILDING DIVISION

READ ALL NOTES ON THIS PAGE AND ON THE ENGINEERING NOTE PAGE ENP-1. THE NOTE PAGE IS AN INTEGRAL PART OF THIS DRAWING AS IT CONTAINS SPECIFICATIONS AND CRITERIA USED IN THE DESIGN OF THIS COMPONENT.

KOTT

SCALE = 1:23.0

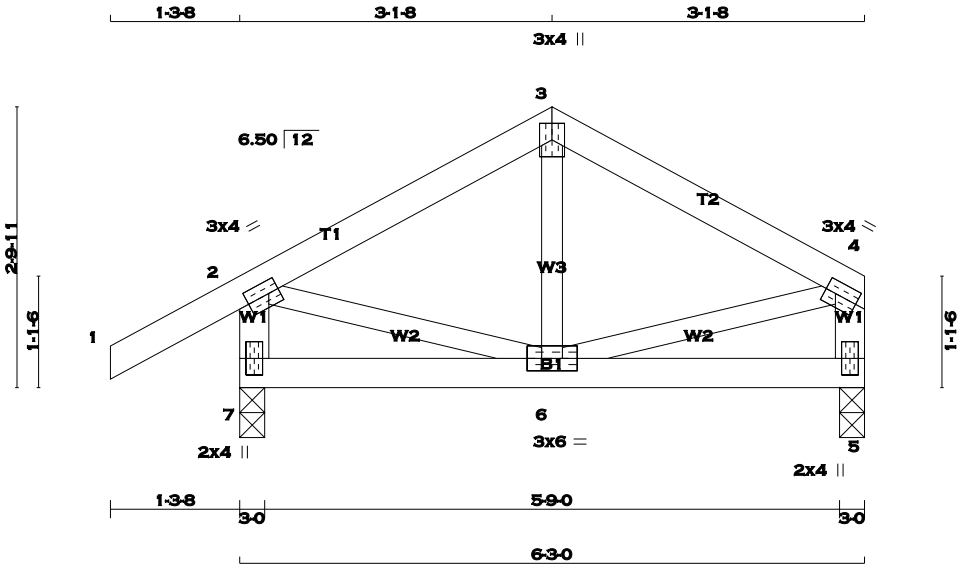

TOTAL WEIGHT = 4 X 25 = 100 lb

[M][F]

LUMBER

N. L. G. A. RULES

CHORDS	SIZE		LUMBER	DESCR.
1 - 3	2x4	DRY	No.2	SPF
3 - 4	2x4	DRY	No.2	SPF
7 - 2	2x4	DRY	No.2	SPF
5 - 4	2x4	DRY	No.2	SPF
7 - 5	2x4	DRY	No.2	SPF
ALL WEBS EXCEPT	2x3	DRY	No.2	SPF

DRY: SEASONED LUMBER.

PLATES (table is in inches)

JT	TYPE	PLATES	W	LEN	Y	X
2	TMVW-t	MT20	3.0	4.0	1.50	1.25
3	TTW+p	MT20	3.0	4.0		
4	TMVW-t	MT20	3.0	4.0	1.50	1.25
5	BMV1+p	MT20	2.0	4.0		
6	BMWWW-t	MT20	3.0	6.0		
7	BMV1+p	MT20	2.0	4.0		

A SIZE FOR SIZE SUBSTITUTION OF MITEK MII20 WITH TEE-LOK TL20 PLATES IS ALLOWED.

DIMENSIONS, SUPPORTS AND LOADINGS SPECIFIED BY FABRICATOR TO BE VERIFIED BY BUILDING DESIGNER

BEARINGS

JT	FACTORED GROSS REACTION VERT	HORZ	MAXIMUM FACTORED GROSS REACTION DOWN	HORZ	UPLIFT	INPUT BRG IN-SX	REQRD BRG IN-SX
7	402	0	402	0	0	3-0	3-0
5	296	0	296	0	0	3-0	3-0

UNFACTORED REACTIONS

JT	1ST LCASE COMBINED	MAX./MIN. COMPONENT REACTIONS SNOW	LIVE	PERM.LIVE	WIND	DEAD	SOIL
7	280	209 / 0	0 / 0	0 / 0	0 / 0	71 / 0	0 / 0
5	208	146 / 0	0 / 0	0 / 0	0 / 0	63 / 0	0 / 0

BEARING MATERIAL TO BE SPF NO.2 OR BETTER AT JOINT(S) 7, 5

BRACING

TOP CHORD TO BE SHEATHED OR MAX. PURLIN SPACING = 6.25 FT.
MAX. UNBRACED BOTTOM CHORD LENGTH = 10.00 FT. OR RIGID CEILING DIRECTLY APPLIED.

ALL PITCH BREAKS AND PERIMETER CORNER JOINTS MUST BE LATERALLY RESTRAINED.

LOADING

TOTAL LOAD CASES: (4)

CHORDS

MEMB. FR-TO	MAX. FACTORED FORCE (LBS)	FACTORED VERT. LOAD (PLF) FROM	TO	LC1 MAX CSI (LC)	MAX. UNBRAC LENGTH
1- 2	0 / 25	-77.3	-77.3	0.10 (1)	10.00
2- 3	-218 / 0	-77.3	-77.3	0.10 (1)	6.25
3- 4	-218 / 0	-77.3	-77.3	0.10 (1)	6.25
7- 2	-379 / 0	0.0	0.0	0.04 (1)	7.81
5- 4	-274 / 0	0.0	0.0	0.03 (1)	7.81
7- 6	0 / 0	-17.5	-17.5	0.05 (4)	10.00
6- 5	0 / 0	-17.5	-17.5	0.05 (4)	10.00

WEBS

MEMB. FR-TO	MAX. FACTORED FORCE (LBS)	MAX CSI (LC)
6- 3	-34 / 43	0.01 (4)
2- 6	0 / 198	0.04 (1)
6- 4	0 / 198	0.04 (1)

DESIGN CRITERIA

SPECIFIED LOADS:

TOP	CH.	LL	=	23.3	PSF
		DL	=	3.0	PSF
BOT	CH.	LL	=	0.0	PSF
		DL	=	7.0	PSF
TOTAL	LOAD		=	33.3	PSF

SPACING = 24.0 IN. C/C

THIS TRUSS IS DESIGNED FOR RESIDENTIAL OR SMALL BUILDING REQUIREMENTS OF PART 9, NBCC 2010

THIS DESIGN COMPLIES WITH:
- PART 9 OF OBC 2012 , BCBC 2012 , ABC 2014
- CSA 086-09
- TPIC 2011

(55 % OF 27.2 P.S.F. G.S.L. PLUS 8.4 P.S.F. RAIN LOAD) EQUALS 23.3 P.S.F. SPECIFIED ROOF LIVE LOAD

ALLOWABLE DEFL.(LL)= L/360 (0.21")
CALCULATED VERT. DEFL.(LL) = L/ 999 (0.00")
ALLOWABLE DEFL.(TL)= L/360 (0.21")
CALCULATED VERT. DEFL.(TL) = L/ 999 (0.00")

CSI: TC=0.10 (1-2:1) , BC=0.05 (6-7:4) , WB=0.04 (2-6:1) , SSI=0.08 (2-3:1)

DOL LUMBER=1.00 NAIL=1.00 LS BEND=1.10 COMP=1.10 SHEAR=1.10 TENS= 1.10

COMPANION LIVE LOAD FACTOR = 0.50

TRUSS PLATE MANUFACTURER IS NOT RESPONSIBLE FOR QUALITY CONTROL IN THE TRUSS MANUFACTURING PLANT .

NAIL VALUES

PLATE	GRIP(DRY) (PSI) MAX	MIN	SHEAR (PLI) MAX	MIN	SECTION (PLI) MAX	MIN
MT20	618	354	1667	822	2284	1656

PLATE PLACEMENT TOL. = 0.250 inches

PLATE ROTATION TOL. = 5.0 Deg.

JSI GRIP= 0.49 (2) (INPUT = 0.90)
JSI METAL= 0.12 (4) (INPUT = 1.00)

LICENSED PROFESSIONAL ENGINEER
P.M. TREVISAN
100136551
March 14th, 2017
PROVINCE OF ONTARIO

RECEIVED
TOWN OF MILTON
MAR 29, 2017
17-5233
BUILDING DIVISION

READ ALL NOTES ON THIS PAGE AND ON THE ENGINEERING NOTE PAGE ENP-1. THE NOTE PAGE IS AN INTEGRAL PART OF THIS DRAWING AS IT CONTAINS SPECIFICATIONS AND CRITERIA USED IN THE DESIGN OF THIS COMPONENT.

KOTT

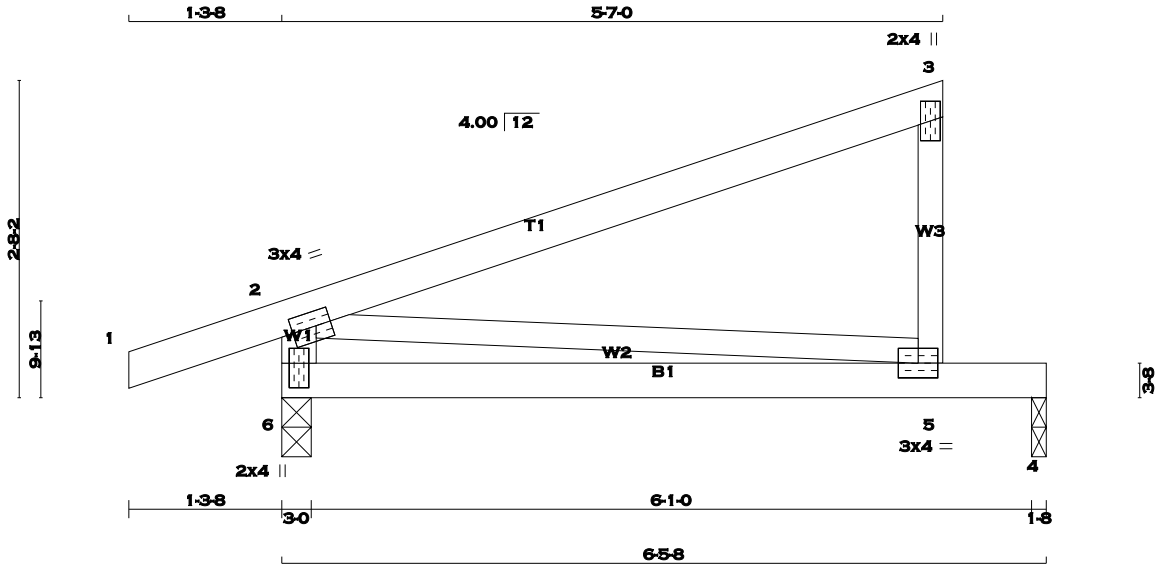

SCALE = 1:19.5

TOTAL WEIGHT = 17 X 22 = 373 lb

[M][F]

LUMBER

N. L. G. A. RULES

CHORDS	SIZE		LUMBER	DESCR.
1 - 3	2x4	DRY	No.2	SPF
5 - 3	2x3	DRY	No.2	SPF
6 - 2	2x4	DRY	No.2	SPF
6 - 4	2x4	DRY	No.2	SPF
ALL WEBS	2x3	DRY	No.2	SPF

DRY: SEASONED LUMBER.

PLATES (table is in inches)

JT	TYPE	PLATES	W	LEN	Y	X
2	TMVW-t	MT20	3.0	4.0	1.50	1.50
3	TMV+p	MT20	2.0	4.0		
5	BMVW-t	MT20	3.0	4.0		
6	BMV1+p	MT20	2.0	4.0	2.50	1.00

A SIZE FOR SIZE SUBSTITUTION OF MITEK MII20 WITH TEE-LOK TL20 PLATES IS ALLOWED.

DIMENSIONS, SUPPORTS AND LOADINGS SPECIFIED BY FABRICATOR TO BE VERIFIED BY BUILDING DESIGNER

BEARINGS

JT	FACTORED GROSS REACTION VERT	HORZ	MAXIMUM FACTORED GROSS REACTION DOWN	HORZ	UPLIFT	INPUT BRG IN-SX	REQRD BRG IN-SX
6	405	0	405	0	0	3-0	3-0
4	243	0	243	0	0	1-8	1-8

UNFACTORED REACTIONS

JT	1ST LCASE COMBINED	MAX./MIN. COMPONENT REACTIONS SNOW	LIVE	PERM.LIVE	WIND	DEAD	SOIL
6	282	210 / 0	0 / 0	0 / 0	0 / 0	72 / 0	0 / 0
4	172	112 / 0	0 / 0	0 / 0	0 / 0	60 / 0	0 / 0

BEARING MATERIAL TO BE SPF NO.2 OR BETTER AT JOINT(S) 6, 4

BRACING

TOP CHORD TO BE SHEATHED OR MAX. PURLIN SPACING = 10.00 FT.
MAX. UNBRACED BOTTOM CHORD LENGTH = 10.00 FT. OR RIGID CEILING DIRECTLY APPLIED.

ALL PITCH BREAKS AND PERIMETER CORNER JOINTS MUST BE LATERALLY RESTRAINED.

LOADING

TOTAL LOAD CASES: (4)

CHORDS

MEMB. FR-TO	MAX. FACTORED FORCE (LBS)	FACTORED VERT. LOAD (PLF) FROM	TO	LC1 MAX CSI (LC)	MAX. UNBRAC LENGTH
1- 2	0 / 16	-77.3	-77.3	0.10 (1)	10.00
2- 3	0 / 0	-77.3	-77.3	0.41 (1)	10.00
5- 3	-216 / 0	0.0	0.0	0.04 (1)	7.81
6- 2	-319 / 0	0.0	0.0	0.03 (1)	7.81
6- 5	0 / 0	-17.5	-17.5	0.29 (1)	10.00
5- 4	0 / 0	-17.5	-17.5	0.28 (1)	10.00

WEBS

MEMB. FR-TO	MAX. FACTORED FORCE (LBS)	MAX CSI (LC)
2- 5	0 / 0	0.00 (1)

DESIGN CRITERIA

SPECIFIED LOADS:

TOP	CH.	LL	=	23.3	PSF
		DL	=	3.0	PSF
BOT	CH.	LL	=	0.0	PSF
		DL	=	7.0	PSF
TOTAL	LOAD		=	33.3	PSF

SPACING = 24.0 IN. C/C

THIS TRUSS IS DESIGNED FOR RESIDENTIAL OR SMALL BUILDING REQUIREMENTS OF PART 9, NBCC 2010

THIS DESIGN COMPLIES WITH:
- PART 9 OF OBC 2012 , BCBC 2012 , ABC 2014
- CSA 086-09
- TPIC 2011

(55 % OF 27.2 P.S.F. G.S.L. PLUS 8.4 P.S.F. RAIN LOAD) EQUALS 23.3 P.S.F. SPECIFIED ROOF LIVE LOAD

ALLOWABLE DEFL.(LL)= L/360 (0.22")
CALCULATED VERT. DEFL.(LL) = L/ 999 (0.07")
ALLOWABLE DEFL.(TL)= L/360 (0.22")
CALCULATED VERT. DEFL.(TL) = L/ 444 (0.17")

CSI: TC=0.41 (2-3:1) , BC=0.29 (5-6:1) , WB=0.00 (2-5:1) , SSI=0.19 (4-5:1)

DOL LUMBER=1.00 NAIL=1.00 LS BEND=1.10 COMP=1.10 SHEAR=1.10 TENS= 1.10

COMPANION LIVE LOAD FACTOR = 0.50

TRUSS PLATE MANUFACTURER IS NOT RESPONSIBLE FOR QUALITY CONTROL IN THE TRUSS MANUFACTURING PLANT .

NAIL VALUES

PLATE	GRIP(DRY) (PSI) MAX	MIN	SHEAR (PLI) MAX	MIN	SECTION (PLI) MAX	MIN
MT20	618	354	1667	822	2284	1656

PLATE PLACEMENT TOL. = 0.250 inches

PLATE ROTATION TOL. = 0.5 Deg.

JSI GRIP= 0.29 (2) (INPUT = 0.90)
JSI METAL= 0.06 (6) (INPUT = 1.00)

LICENSED PROFESSIONAL ENGINEER
P.M. TREVISAN
100136551
March 14th, 2017
PROVINCE OF ONTARIO

RECEIVED
TOWN OF MILTON
MAR 29, 2017
17-5233
BUILDING DIVISION

READ ALL NOTES ON THIS PAGE AND ON THE ENGINEERING NOTE PAGE ENP-1. THE NOTE PAGE IS AN INTEGRAL PART OF THIS DRAWING AS IT CONTAINS SPECIFICATIONS AND CRITERIA USED IN THE DESIGN OF THIS COMPONENT.

KOTT

Version 8.100 S Feb 9 2017 MiTek Industries, Inc. Tue Mar 14 15:57:35 2017 Page 1
ID:EvTixTQDI5yR1QLotZTBr_yE?HJ-Or4BNhPkXW3GSW1OpXCH2NpZZFOr1rFLR8jKLUzb_PE

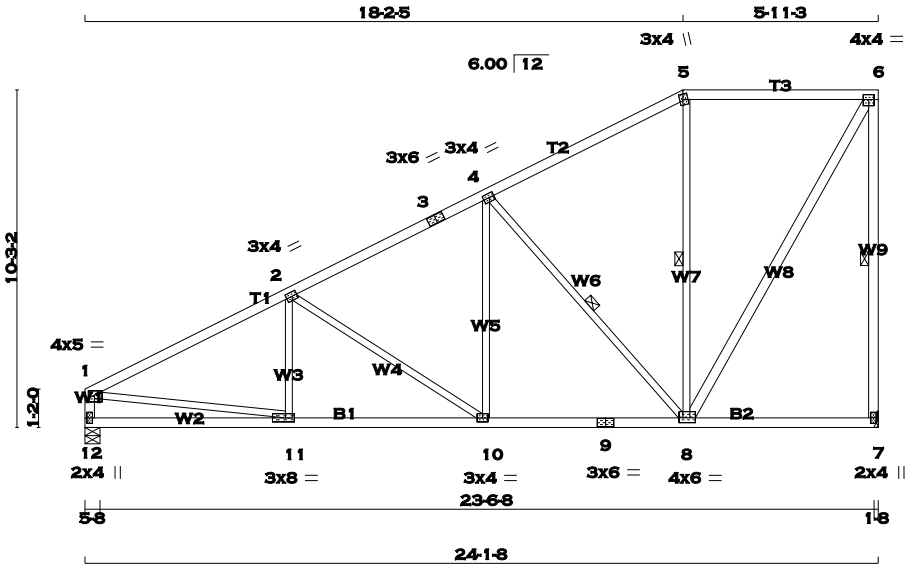

SCALE = 1:70.1

TOTAL WEIGHT = 116 lb

[M][F]

LUMBER

N. L. G. A. RULES

CHORDS	SIZE		LUMBER	DESCR.
1 - 3	2x4	DRY	No.2	SPF
3 - 5	2x4	DRY	No.2	SPF
5 - 6	2x4	DRY	No.2	SPF
7 - 6	2x4	DRY	No.2	SPF
12 - 1	2x4	DRY	No.2	SPF
12 - 9	2x4	DRY	No.2	SPF
9 - 7	2x4	DRY	No.2	SPF
ALL WEBS	2x3	DRY	No.2	SPF
EXCEPT				
8 - 6	2x4	DRY	No.2	SPF

DRY: SEASONED LUMBER.

PLATES (table is in inches)

JT	TYPE	PLATES	W	LEN	Y	X
1	TMVW-p	MT20	4.0	5.0	1.50	2.25
2	TMWW-t	MT20	3.0	4.0	1.50	1.75
3	TS-t	MT20	3.0	6.0		
4	TMWW-t	MT20	3.0	4.0	1.50	1.75
5	TTW+m	MT20	3.0	4.0	2.00	1.25
6	TMVW-t	MT20	4.0	4.0	1.75	2.00
7	BMV1+p	MT20	2.0	4.0		
8	BMWWW-t	MT20	4.0	6.0	1.75	1.50
9	BS-t	MT20	3.0	6.0		
10	BMWW-t	MT20	3.0	4.0		
11	BMWW-t	MT20	3.0	8.0	1.50	3.25
12	BMV1+p	MT20	2.0	4.0		

A SIZE FOR SIZE SUBSTITUTION OF MITEK MII20 WITH TEE-LOK TL20 PLATES IS ALLOWED.

DIMENSIONS, SUPPORTS AND LOADINGS SPECIFIED BY FABRICATOR TO BE VERIFIED BY BUILDING DESIGNER

BEARINGS

JT	FACTORED GROSS REACTION VERT	HORZ	MAXIMUM FACTORED GROSS REACTION DOWN	HORZ	UPLIFT	INPUT BRG IN-SX	REQRD BRG IN-SX
7	1144	0	1144	0	0	HANGER BY OTHERS MIN. SEAT SIZE: 1-8	
12	1144	0	1144	0	0	5-8	5-8

UNFACTORED REACTIONS

JT	1ST LCASE COMBINED	MAX./MIN. COMPONENT REACTIONS SNOW	LIVE	PERM.LIVE	WIND	DEAD	SOIL
7	803	562 / 0	0 / 0	0 / 0	0 / 0	241 / 0	0 / 0
12	803	562 / 0	0 / 0	0 / 0	0 / 0	241 / 0	0 / 0

BEARING MATERIAL TO BE SPF NO.2 OR BETTER AT JOINT(S) 12

BRACING

TOP CHORD TO BE SHEATHED OR MAX. PURLIN SPACING = 4.85 FT.
MAX. UNBRACED BOTTOM CHORD LENGTH = 10.00 FT. OR RIGID CEILING DIRECTLY APPLIED.

ALL PITCH BREAKS AND PERIMETER CORNER JOINTS MUST BE LATERALLY RESTRAINED.

1 - 2x3 SPF No.2 LATERAL BRACE(S) AT 1/ 2 LENGTH OF 6-7. DBS = 12-0-0 . CBF = 83 LBS.
1 - 2x3 SPF No.2 LATERAL BRACE(S) AT 1/ 2 LENGTH OF 4-8. DBS = 18-0-0 . CBF = 89 LBS.
1 - 2x3 SPF No.2 LATERAL BRACE(S) AT 1/ 2 LENGTH OF 5-8. DBS = 20-0-0 . CBF = 20 LBS.

DBS = DIAGONAL BRACE SPACING (MAX). CBF = CUMULATIVE BRACING FORCE. FASTEN LATERAL BRACE(S) USING (0.122"X3") SPIRAL NAILS : 1 NAIL FOR 2x3 BRACE(S), 2 FOR 1x4, 2x4, 2x5, 3 FOR 2x6, 4 FOR 2x8, 5 FOR 2x10, AND 6 FOR 2x12.

END VERTICAL(S) MUST BE SHEATHED OR HAVE BRACES AS INDICATED IN THE MAX. UNBRACED LENGTH COLUMN OF THE TABLE BELOW

LOADING

TOTAL LOAD CASES: (4)

CHORDS

MEMB. FR-TO	MAX. FACTORED FORCE (LBS)	FACTORED VERT. LOAD LC1 (PLF) FROM	TO	MAX CSI (LC)	MAX. UNBRAC LENGTH
1- 2	-1562 / 0	-77.3	-77.3	0.40 (1)	4.85
2- 3	-1160 / 0	-77.3	-77.3	0.32 (1)	5.55
3- 4	-1160 / 0	-77.3	-77.3	0.32 (1)	5.55
4- 5	-595 / 0	-77.3	-77.3	0.33 (1)	6.25
5- 6	-512 / 0	-77.3	-77.3	0.35 (1)	6.25
7- 6	-1104 / 0	0.0	0.0	0.57 (1)	6.03
12- 1	-1098 / 0	0.0	0.0	0.11 (1)	7.55
12-11	0 / 0	-17.5	-17.5	0.15 (4)	10.00
11-10	0 / 1415	-17.5	-17.5	0.30 (1)	10.00
10- 9	0 / 1037	-17.5	-17.5	0.25 (1)	10.00
9- 8	0 / 1037	-17.5	-17.5	0.25 (1)	10.00
8- 7	0 / 0	-17.5	-17.5	0.15 (4)	10.00

WEBS

MEMB. FR-TO	MAX. FACTORED FORCE (LBS)	MAX CSI (LC)
11- 2	-79 / 77	0.03 (4)
2-10	-453 / 0	0.45 (1)
10- 4	0 / 350	0.08 (1)
4- 8	-795 / 0	0.48 (1)
8- 5	-159 / 33	0.12 (1)
8- 6	0 / 1014	0.16 (1)
1-11	0 / 1429	0.32 (1)

DESIGN CRITERIA

SPECIFIED LOADS:

TOP CH.	LL	=	23.3	PSF
	DL	=	3.0	PSF
BOT CH.	LL	=	0.0	PSF
	DL	=	7.0	PSF
TOTAL LOAD		=	33.3	PSF

SPACING = 24.0 IN. C/C

LOADING IN FLAT SECTION BASED ON A SLOPE OF 6.00/12

THIS TRUSS IS DESIGNED FOR RESIDENTIAL OR SMALL BUILDING REQUIREMENTS OF PART 9, NBCC 2010

THIS DESIGN COMPLIES WITH:
- PART 9 OF OBC 2012 , BCBC 2012 , ABC 2014
- CSA 086-09
- TPIC 2011

(55 % OF 27.2 P.S.F. G.S.L. PLUS 8.4 P.S.F. RAIN LOAD) EQUALS 23.3 P.S.F. SPECIFIED ROOF LIVE LOAD

ALLOWABLE DEFL.(LL)= L/360 (0.80")
CALCULATED VERT. DEFL.(LL) = L/ 999 (0.06")
ALLOWABLE DEFL.(TL)= L/360 (0.80")
CALCULATED VERT. DEFL.(TL) = L/ 999 (0.11")

CSI: TC=0.57 (6-7:1) , BC=0.30 (10-11:1) , WB=0.48 (4-8:1) , SSI=0.20 (1-2:1)

DOL LUMBER=1.00 NAIL=1.00 LS BEND=1.10 COMP=1.10 SHEAR=1.10 TENS= 1.10

COMPANION LIVE LOAD FACTOR = 0.50

TRUSS PLATE MANUFACTURER IS NOT RESPONSIBLE FOR QUALITY CONTROL IN THE TRUSS MANUFACTURING PLANT .

NAIL VALUES

PLATE	GRIP(DRY) (PSI) MAX	MIN	SHEAR (PLI) MAX	MIN	SECTION (PLI) MAX	MIN
MT20	618	354	1667	822	2284	1656

PLATE PLACEMENT TOL. = 0.250 inches

PLATE ROTATION TOL. = 5.0 Deg.

JSI GRIP= 0.90 (6) (INPUT = 0.90)
JSI METAL= 0.39 (1) (INPUT = 1.00)

LICENSED PROFESSIONAL ENGINEER
P.M. TREVISAN
100136551
March 14th, 2017
PROVINCE OF ONTARIO

RECEIVED
TOWN OF MILTON
MAR 29, 2017
17-5233
BUILDING DIVISION

READ ALL NOTES ON THIS PAGE AND ON THE ENGINEERING NOTE PAGE ENP-1. THE NOTE PAGE IS AN INTEGRAL PART OF THIS DRAWING AS IT CONTAINS SPECIFICATIONS AND CRITERIA USED IN THE DESIGN OF THIS COMPONENT.

KOTT

JOB NAME	TRUSS NAME	QUANTITY	PLY	JOB DESC.	DRWG NO.
PT0317-081	T42	1	1	TRUSS DESC. LECCO RIDGE-BLOCK 338	ENG JOB: PT0317-081

KOTT , Stouffville, ON, CGC

Version 8.100 S Feb 9 2017 MiTek Industries, Inc. Tue Mar 14 15:57:36 2017 Page 1

ID:EvTixTQDI5yR1QLotZTBr_yE?HJ-s2eZb1PNIpB74fcaNFjWbaMmsfkVmCPUgoSutwzb_PD

SCALE = 1:61.6

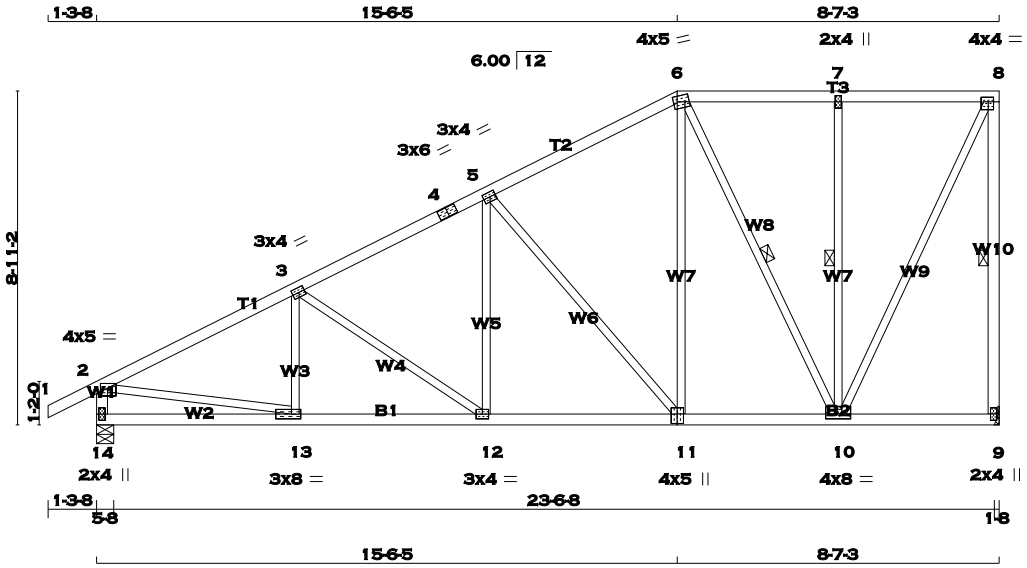

TOTAL WEIGHT = 120 lb

[M][F]

LUMBER

N. L. G. A. RULES

CHORDS	SIZE		LUMBER	DESCR.
1 - 4	2x4	DRY	No.2	SPF
4 - 6	2x4	DRY	No.2	SPF
6 - 8	2x4	DRY	No.2	SPF
9 - 8	2x4	DRY	No.2	SPF
14 - 2	2x4	DRY	No.2	SPF
14 - 11	2x4	DRY	No.2	SPF
11 - 9	2x4	DRY	No.2	SPF
ALL WEBS EXCEPT	2x3	DRY	No.2	SPF

DRY: SEASONED LUMBER.

PLATES (table is in inches)

JT	TYPE	PLATES	W	LEN	Y	X
2	TMVW-p	MT20	4.0	5.0	1.50	2.25
3	TMWW-t	MT20	3.0	4.0	1.50	1.75
4	TS-t	MT20	3.0	6.0		
5	TMWW-t	MT20	3.0	4.0	1.50	1.75
6	TTWW-m	MT20	4.0	5.0	1.75	1.25
7	TMW+w	MT20	2.0	4.0		
8	TMVW-t	MT20	4.0	4.0	1.50	1.75
9	BMV1+p	MT20	2.0	4.0		
10	BMWWW-t	MT20	4.0	8.0	1.50	4.00
11	BSWW+l	MT20	4.0	5.0	3.00	2.00
12	BMWW-t	MT20	3.0	4.0		
13	BMWW-t	MT20	3.0	8.0	1.50	3.00
14	BMV1+p	MT20	2.0	4.0		

A SIZE FOR SIZE SUBSTITUTION OF MITEK MII20 WITH TEE-LOK TL20 PLATES IS ALLOWED.

DIMENSIONS, SUPPORTS AND LOADINGS SPECIFIED BY FABRICATOR TO BE VERIFIED BY BUILDING DESIGNER

BEARINGS

JT	FACTORED GROSS REACTION VERT	HORZ	MAXIMUM FACTORED GROSS REACTION DOWN	HORZ	UPLIFT	INPUT BRG IN-SX	REQRD BRG IN-SX
9	1144	0	1144	0	0	HANGER BY OTHERS MIN. SEAT SIZE: 1-8	
14	1249	0	1249	0	0	5-8	5-8

UNFACTORED REACTIONS

JT	1ST LCASE COMBINED	MAX./MIN. COMPONENT REACTIONS SNOW	LIVE	PERM.LIVE	WIND	DEAD	SOIL
9	803	562 / 0	0 / 0	0 / 0	0 / 0	241 / 0	0 / 0
14	874	625 / 0	0 / 0	0 / 0	0 / 0	249 / 0	0 / 0

BEARING MATERIAL TO BE SPF NO.2 OR BETTER AT JOINT(S) 14

BRACING

TOP CHORD TO BE SHEATHED OR MAX. PURLIN SPACING = 4.99 FT.
MAX. UNBRACED BOTTOM CHORD LENGTH = 10.00 FT. OR RIGID CEILING DIRECTLY APPLIED.

ALL PITCH BREAKS AND PERIMETER CORNER JOINTS MUST BE LATERALLY RESTRAINED.

1 - 2x3 SPF No.2 LATERAL BRACE(S) AT 1/ 2 LENGTH OF 8-9. DBS = 12-0-0 . CBF = 83 LBS.
1 - 2x3 SPF No.2 LATERAL BRACE(S) AT 1/ 2 LENGTH OF 6-10, 7-10. DBS = 20-0-0 . CBF = 69 LBS.

DBS = DIAGONAL BRACE SPACING (MAX). CBF = CUMULATIVE BRACING FORCE. FASTEN LATERAL BRACE(S) USING (0.122"X3") SPIRAL NAILS : 1 NAIL FOR 2x3 BRACE(S), 2 FOR 1x4, 2x4, 2x5, 3 FOR 2x6, 4 FOR 2x8, 5 FOR 2x10, AND 6 FOR 2x12.

END VERTICAL(S) MUST BE SHEATHED OR HAVE BRACES AS INDICATED IN THE MAX. UNBRACED LENGTH COLUMN OF THE TABLE BELOW

LOADING

TOTAL LOAD CASES: (4)

CHORDS

MEMB. FR-TO	MAX. FACTORED FORCE (LBS)	FACTORED VERT. LOAD LC1 (PLF) FROM	TO	MAX CSI (LC)	MAX. UNBRAC LENGTH
1- 2	0 / 23	-77.3	-77.3	0.10 (1)	10.00
2- 3	-1565 / 0	-77.3	-77.3	0.29 (1)	4.99
3- 4	-1290 / 0	-77.3	-77.3	0.24 (1)	5.43
4- 5	-1290 / 0	-77.3	-77.3	0.24 (1)	5.43
5- 6	-834 / 0	-77.3	-77.3	0.24 (1)	6.25
6- 7	-490 / 0	-77.3	-77.3	0.18 (1)	6.25
7- 8	-490 / 0	-77.3	-77.3	0.18 (1)	6.25
9- 8	-1112 / 0	0.0	0.0	0.41 (1)	6.01
14- 2	-1209 / 0	0.0	0.0	0.12 (1)	7.28
14-13	0 / 0	-17.5	-17.5	0.11 (4)	10.00
13-12	0 / 1414	-17.5	-17.5	0.27 (1)	10.00
12-11	0 / 1154	-17.5	-17.5	0.23 (1)	10.00
11-10	0 / 737	-17.5	-17.5	0.16 (1)	10.00
10- 9	0 / 0	-17.5	-17.5	0.07 (4)	10.00

WEBS

MEMB. FR-TO	MAX. FACTORED FORCE (LBS)	MAX CSI (LC)
13- 3	-131 / 46	0.03 (1)
3-12	-316 / 0	0.21 (1)
12- 5	0 / 271	0.06 (1)
5-11	-650 / 0	0.87 (1)
11- 6	0 / 575	0.13 (1)
6-10	-554 / 0	0.36 (1)
10- 7	-409 / 0	0.21 (1)
10- 8	0 / 1100	0.25 (1)
2-13	0 / 1433	0.32 (1)

DESIGN CRITERIA

SPECIFIED LOADS:

TOP CH.	LL	=	23.3	PSF
	DL	=	3.0	PSF
BOT CH.	LL	=	0.0	PSF
	DL	=	7.0	PSF
TOTAL LOAD		=	33.3	PSF

SPACING = 24.0 IN. C/C

LOADING IN FLAT SECTION BASED ON A SLOPE OF 6.00/12

THIS TRUSS IS DESIGNED FOR RESIDENTIAL OR SMALL BUILDING REQUIREMENTS OF PART 9, NBCC 2010

THIS DESIGN COMPLIES WITH:
- PART 9 OF OBC 2012 , BCBC 2012 , ABC 2014
- CSA 086-09
- TPIC 2011

(55 % OF 27.2 P.S.F. G.S.L. PLUS 8.4 P.S.F. RAIN LOAD) EQUALS 23.3 P.S.F. SPECIFIED ROOF LIVE LOAD

ALLOWABLE DEFL.(LL)= L/360 (0.80")
CALCULATED VERT. DEFL.(LL) = L/ 999 (0.06")
ALLOWABLE DEFL.(TL)= L/360 (0.80")
CALCULATED VERT. DEFL.(TL) = L/ 999 (0.11")

CSI: TC=0.41 (8-9:1) , BC=0.27 (12-13:1) , WB=0.87 (5-11:1) , SSI=0.17 (2-3:1)

DOL LUMBER=1.00 NAIL=1.00 LS BEND=1.10 COMP=1.10 SHEAR=1.10 TENS= 1.10

COMPANION LIVE LOAD FACTOR = 0.50

TRUSS PLATE MANUFACTURER IS NOT RESPONSIBLE FOR QUALITY CONTROL IN THE TRUSS MANUFACTURING PLANT .

NAIL VALUES

PLATE	GRIP(DRY) (PSI) MAX	MIN	SHEAR (PLI) MAX	MIN	SECTION (PLI) MAX	MIN
MT20	618	354	1667	822	2284	1656

PLATE PLACEMENT TOL. = 0.250 inches

PLATE ROTATION TOL. = 5.0 Deg.

JSI GRIP= 0.90 (13) (INPUT = 0.90)
JSI METAL= 0.40 (2) (INPUT = 1.00)

LICENSED PROFESSIONAL ENGINEER
R.M. TREVISAN
100136551
March 14th, 2017
PROVINCE OF ONTARIO

RECEIVED
TOWN OF MILTON
MAR 29, 2017
17-5233
BUILDING DIVISION

READ ALL NOTES ON THIS PAGE AND ON THE ENGINEERING NOTE PAGE ENP-1. THE NOTE PAGE IS AN INTEGRAL PART OF THIS DRAWING AS IT CONTAINS SPECIFICATIONS AND CRITERIA USED IN THE DESIGN OF THIS COMPONENT.

KOTT

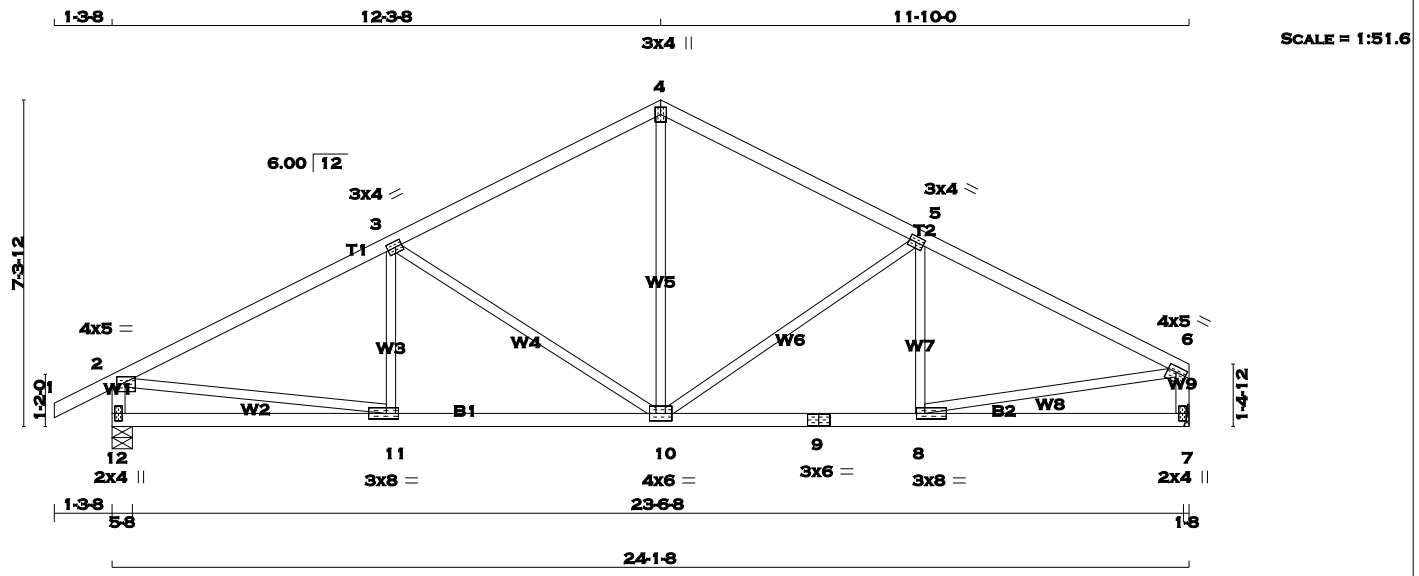

TOTAL WEIGHT = 3 X 94 = 283 lb

[M][F]

LUMBER

N. L. G. A. RULES

CHORDS	SIZE		LUMBER	DESCR.
1 - 4	2x4	DRY	No.2	SPF
4 - 6	2x4	DRY	No.2	SPF
12 - 2	2x4	DRY	No.2	SPF
7 - 6	2x4	DRY	No.2	SPF
12 - 9	2x4	DRY	No.2	SPF
9 - 7	2x4	DRY	No.2	SPF
ALL WEBS EXCEPT	2x3	DRY	No.2	SPF

DRY: SEASONED LUMBER.

PLATES (table is in inches)

JT	TYPE	PLATES	W	LEN	Y	X
2	TMVW-p	MT20	4.0	5.0	1.50	2.25
3	TMWW-t	MT20	3.0	4.0	1.50	1.75
4	TTW+p	MT20	3.0	4.0		
5	TMWW-t	MT20	3.0	4.0	1.50	1.75
6	TMVW-t	MT20	4.0	5.0	1.50	2.25
7	BMV1+p	MT20	2.0	4.0		
8	BMWW-t	MT20	3.0	8.0	1.50	2.25
9	BS-t	MT20	3.0	6.0		
10	BMWWW-t	MT20	4.0	6.0		
11	BMWW-t	MT20	3.0	8.0	1.50	3.25
12	BMV1+p	MT20	2.0	4.0		

A SIZE FOR SIZE SUBSTITUTION OF MITEK MII20 WITH TEE-LOK TL20 PLATES IS ALLOWED.

DIMENSIONS, SUPPORTS AND LOADINGS SPECIFIED BY FABRICATOR TO BE VERIFIED BY BUILDING DESIGNER

BEARINGS

JT	FACTORED GROSS REACTION VERT	HORZ	MAXIMUM FACTORED GROSS REACTION DOWN	HORZ	UPLIFT	INPUT BRG IN-SX	REQRD BRG IN-SX
12	1249	0	1249	0	0	5-8	5-8
7	1144	0	1144	0	0	HANGER BY OTHERS	
						MIN. SEAT SIZE: 1-8	

UNFACTORED REACTIONS

JT	1ST LCASE COMBINED	MAX./MIN. COMPONENT REACTIONS SNOW	LIVE	PERM.LIVE	WIND	DEAD	SOIL
12	874	625 / 0	0 / 0	0 / 0	0 / 0	249 / 0	0 / 0
7	803	562 / 0	0 / 0	0 / 0	0 / 0	241 / 0	0 / 0

BEARING MATERIAL TO BE SPF NO.2 OR BETTER AT JOINT(S) 12

BRACING

TOP CHORD TO BE SHEATHED OR MAX. PURLIN SPACING = 4.79 FT.
MAX. UNBRACED BOTTOM CHORD LENGTH = 10.00 FT. OR RIGID CEILING DIRECTLY APPLIED.

ALL PITCH BREAKS AND PERIMETER CORNER JOINTS MUST BE LATERALLY RESTRAINED.

LOADING

TOTAL LOAD CASES: (4)

CHORDS MEMB. FR-TO	MAX. FORCE (LBS)	FACTORED VERT. LOAD (PLF) FROM	TO	MAX CSI (LC)	MAX. UNBRAC LENGTH	WEBS MEMB. FR-TO	MAX. FORCE (LBS)	MAX CSI (LC)
1- 2	0 / 23	-77.3	-77.3	0.10 (1)	10.00	11- 3	-79 / 79	0.03 (4)
2- 3	-1575 / 0	-77.3	-77.3	0.43 (1)	4.79	3-10	-526 / 0	0.54 (1)
3- 4	-1135 / 0	-77.3	-77.3	0.39 (1)	5.47	10- 4	0 / 647	0.15 (1)
4- 5	-1134 / 0	-77.3	-77.3	0.36 (1)	5.52	10- 5	-441 / 0	0.43 (1)
5- 6	-1488 / 0	-77.3	-77.3	0.39 (1)	4.95	8- 5	-132 / 59	0.04 (1)
12- 2	-1203 / 0	0.0	0.0	0.12 (1)	7.29	2-11	0 / 1445	0.33 (1)
7- 6	-1100 / 0	0.0	0.0	0.11 (1)	7.55	8- 6	0 / 1374	0.31 (1)
12-11	0 / 0	-17.5	-17.5	0.16 (4)	10.00			
11-10	0 / 1431	-17.5	-17.5	0.30 (1)	10.00			
10- 9	0 / 1352	-17.5	-17.5	0.28 (1)	10.00			
9- 8	0 / 1352	-17.5	-17.5	0.28 (1)	10.00			
8- 7	0 / 0	-17.5	-17.5	0.14 (4)	10.00			

DESIGN CRITERIA

SPECIFIED LOADS:

TOP	CH.	LL	=	23.3	PSF
		DL	=	3.0	PSF
BOT	CH.	LL	=	0.0	PSF
		DL	=	7.0	PSF
TOTAL	LOAD		=	33.3	PSF

SPACING = 24.0 IN. C/C

THIS TRUSS IS DESIGNED FOR RESIDENTIAL OR SMALL BUILDING REQUIREMENTS OF PART 9, NBCC 2010

THIS DESIGN COMPLIES WITH:
- PART 9 OF OBC 2012 , BCBC 2012 , ABC 2014
- CSA 086-09
- TPIC 2011

(55 % OF 27.2 P.S.F. G.S.L. PLUS 8.4 P.S.F. RAIN LOAD) EQUALS 23.3 P.S.F. SPECIFIED ROOF LIVE LOAD

ALLOWABLE DEFL.(LL)= L/360 (0.80")
CALCULATED VERT. DEFL.(LL) = L/ 999 (0.06")
ALLOWABLE DEFL.(TL)= L/360 (0.80")
CALCULATED VERT. DEFL.(TL) = L/ 999 (0.11")

CSI: TC=0.43 (2-3:1) , BC=0.30 (10-11:1) , WB=0.54 (3-10:1) , SSI=0.21 (2-3:1)

DOL LUMBER=1.00 NAIL=1.00 LS BEND=1.10 COMP=1.10 SHEAR=1.10 TENS= 1.10

COMPANION LIVE LOAD FACTOR = 0.50

TRUSS PLATE MANUFACTURER IS NOT RESPONSIBLE FOR QUALITY CONTROL IN THE TRUSS MANUFACTURING PLANT .

NAIL VALUES

PLATE	GRIP(DRY) (PSI) MAX	MIN	SHEAR (PLI) MAX	MIN	SECTION (PLI) MAX	MIN
MT20	618	354	1667	822	2284	1656

PLATE PLACEMENT TOL. = 0.250 inches

PLATE ROTATION TOL. = 5.0 Deg.

JSI GRIP= 0.90 (8) (INPUT = 0.90)
JSI METAL= 0.48 (6) (INPUT = 1.00)

LICENSED PROFESSIONAL ENGINEER
R.M. TREVISAN
100136551
March 14th, 2017
PROVINCE OF ONTARIO

RECEIVED
TOWN OF MILTON
MAR 29, 2017
17-5233
BUILDING DIVISION

READ ALL NOTES ON THIS PAGE AND ON THE ENGINEERING NOTE PAGE ENP-1. THE NOTE PAGE IS AN INTEGRAL PART OF THIS DRAWING AS IT CONTAINS SPECIFICATIONS AND CRITERIA USED IN THE DESIGN OF THIS COMPONENT.

KOTT

JOB NAME	TRUSS NAME	QUANTITY	PLY	JOB DESC.	DRWG NO.
PT0317-081	**T44**	**1**	**1**	TRUSS DESC. LECCO RIDGE-BLOCK 338	

ENG JOB: PT0317-081

KOTT , Stouffville, ON, CGC

Version 8.100 S Feb 9 2017 MiTek Industries, Inc. Tue Mar 14 15:57:37 2017 Page 1

ID:EvTixTQDI5yR1QLotZTBr_yE?HJ-KECyoMQ?37JzipBmwyFl8ouxc30BVgmdvRCRQNzb_PC

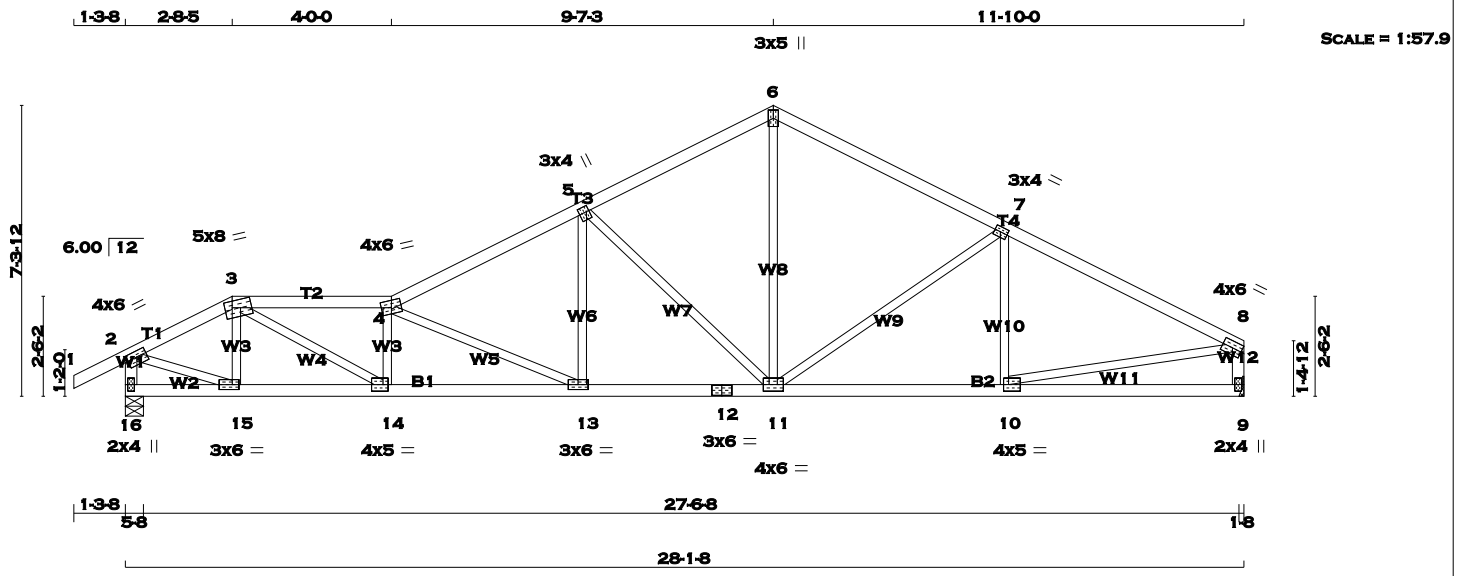

TOTAL WEIGHT = 111 lb

LUMBER

N. L. G. A. RULES

CHORDS	SIZE		LUMBER	DESCR.
1 - 3	2x4	DRY	No.2	SPF
3 - 4	2x4	DRY	No.2	SPF
4 - 6	2x4	DRY	No.2	SPF
6 - 8	2x4	DRY	No.2	SPF
16 - 2	2x4	DRY	No.2	SPF
9 - 8	2x4	DRY	No.2	SPF
16 - 12	2x4	DRY	No.2	SPF
12 - 9	2x4	DRY	No.2	SPF
ALL WEBS EXCEPT	2x3	DRY	No.2	SPF

DRY: SEASONED LUMBER.

PLATES (table is in inches)

JT	TYPE	PLATES	W	LEN	Y	X
2	TMVW-t	MT20	4.0	6.0	1.75	3.00
3	TTWW-m	MT20	5.0	8.0	2.00	2.25
4	TTWW-m	MT20	4.0	6.0	2.25	3.00
5	TMWW+t	MT20	3.0	4.0	1.75	0.75
6	TTW+p	MT20	3.0	5.0		
7	TMWW-t	MT20	3.0	4.0	1.50	1.75
8	TMVW-t	MT20	4.0	6.0		Edge
9	BMV1+p	MT20	2.0	4.0		
10	BMWW-t	MT20	4.0	5.0	2.00	1.50
11	BMWWW-t	MT20	4.0	6.0		
12	BS-t	MT20	3.0	6.0		
13	BMWW-t	MT20	3.0	6.0		
14	BMWW-t	MT20	4.0	5.0	2.00	1.50
15	BMWW-t	MT20	3.0	6.0	1.50	2.00
16	BMV1+p	MT20	2.0	4.0		

Edge - INDICATES REFERENCE CORNER OF PLATE TOUCHES EDGE OF CHORD.

A SIZE FOR SIZE SUBSTITUTION OF MITEK MII20 WITH TEE-LOK TL20 PLATES IS ALLOWED.

DIMENSIONS, SUPPORTS AND LOADINGS SPECIFIED BY FABRICATOR TO BE VERIFIED BY BUILDING DESIGNER

BEARINGS

JT	FACTORED GROSS REACTION VERT	HORZ	MAXIMUM FACTORED GROSS REACTION DOWN	HORZ	UPLIFT	INPUT BRG IN-SX	REQRD BRG IN-SX
16	1439	0	1439	0	0	5-8	5-8
9	1334	0	1334	0	0	HANGER BY OTHERS MIN. SEAT SIZE: 1-8	

UNFACTORED REACTIONS

JT	1ST LCASE COMBINED	SNOW	MAX./MIN. COMPONENT REACTIONS LIVE	PERM.LIVE	WIND	DEAD	SOIL
16	1007	718 / 0	0 / 0	0 / 0	0 / 0	289 / 0	0 / 0
9	936	655 / 0	0 / 0	0 / 0	0 / 0	281 / 0	0 / 0

BEARING MATERIAL TO BE SPF NO.2 OR BETTER AT JOINT(S) 16

BRACING

TOP CHORD TO BE SHEATHED OR MAX. PURLIN SPACING = 3.81 FT.
MAX. UNBRACED BOTTOM CHORD LENGTH = 10.00 FT. OR RIGID CEILING DIRECTLY APPLIED.

ALL PITCH BREAKS AND PERIMETER CORNER JOINTS MUST BE LATERALLY RESTRAINED.

LOADING

TOTAL LOAD CASES: (4)

CHORDS

MEMB. FR-TO	MAX. FORCE (LBS)	FACTORED VERT. LOAD LC1 (PLF) FROM	TO	MAX CSI (LC)	MAX. UNBRAC LENGTH
1- 2	0 / 23	-77.3	-77.3	0.10 (1)	10.00
2- 3	-1678 / 0	-77.3	-77.3	0.10 (1)	5.05
3- 4	-3024 / 0	-77.3	-77.3	0.27 (1)	3.81
4- 5	-2239 / 0	-77.3	-77.3	0.29 (1)	4.32
5- 6	-1485 / 0	-77.3	-77.3	0.25 (1)	5.13
6- 7	-1491 / 0	-77.3	-77.3	0.38 (1)	4.96
7- 8	-1799 / 0	-77.3	-77.3	0.41 (1)	4.58
16- 2	-1424 / 0	0.0	0.0	0.14 (1)	6.84
9- 8	-1289 / 0	0.0	0.0	0.13 (1)	7.10
16-15	0 / 0	-17.5	-17.5	0.04 (4)	10.00
15-14	0 / 1481	-17.5	-17.5	0.29 (1)	10.00
14-13	0 / 3062	-17.5	-17.5	0.56 (1)	10.00
13-12	0 / 2021	-17.5	-17.5	0.38 (1)	10.00
12-11	0 / 2021	-17.5	-17.5	0.38 (1)	10.00
11-10	0 / 1630	-17.5	-17.5	0.33 (1)	10.00
10- 9	0 / 0	-17.5	-17.5	0.15 (4)	10.00

WEBS

MEMB. FR-TO	MAX. FORCE (LBS)	MAX CSI (LC)
15- 3	-380 / 0	0.06 (1)
3-14	0 / 1773	0.40 (1)
14- 4	-825 / 0	0.13 (1)
4-13	-1146 / 0	0.55 (1)
13- 5	0 / 574	0.13 (1)
5-11	-984 / 0	0.80 (1)
11- 6	0 / 999	0.22 (1)
11- 7	-390 / 0	0.38 (1)
10- 7	-181 / 46	0.05 (1)
2-15	0 / 1568	0.35 (1)
10- 8	0 / 1657	0.37 (1)

DESIGN CRITERIA

SPECIFIED LOADS:

TOP CH.	LL	=	23.3	PSF
	DL	=	3.0	PSF
BOT CH.	LL	=	0.0	PSF
	DL	=	7.0	PSF
TOTAL LOAD		=	33.3	PSF

SPACING = 24.0 IN. C/C

LOADING IN ALL FLAT SECTIONS BASED ON A SLOPE OF 6.00/12

THIS TRUSS IS DESIGNED FOR RESIDENTIAL OR SMALL BUILDING REQUIREMENTS OF PART 9, NBCC 2010

THIS DESIGN COMPLIES WITH:
- PART 9 OF OBC 2012 , BCBC 2012 , ABC 2014
- CSA 086-09
- TPIC 2011

(55 % OF 27.2 P.S.F. G.S.L. PLUS 8.4 P.S.F. RAIN LOAD) EQUALS 23.3 P.S.F. SPECIFIED ROOF LIVE LOAD

ALLOWABLE DEFL.(LL)= L/360 (0.94")
CALCULATED VERT. DEFL.(LL) = L/ 999 (0.15")
ALLOWABLE DEFL.(TL)= L/360 (0.94")
CALCULATED VERT. DEFL.(TL) = L/ 999 (0.26")

CSI: TC=0.41 (7-8:1) , BC=0.56 (13-14:1) , WB=0.80 (5-11:1) , SSI=0.20 (7-8:1)

DOL LUMBER=1.00 NAIL=1.00 LS BEND=1.10 COMP=1.10 SHEAR=1.10 TENS= 1.10

COMPANION LIVE LOAD FACTOR = 0.50

TRUSS PLATE MANUFACTURER IS NOT RESPONSIBLE FOR QUALITY CONTROL IN THE TRUSS MANUFACTURING PLANT .

NAIL VALUES

PLATE	GRIP(DRY) (PSI) MAX	MIN	SHEAR (PLI) MAX	MIN	SECTION (PLI) MAX	MIN
MT20	618	354	1667	822	2284	1656

PLATE PLACEMENT TOL. = 0.250 inches

PLATE ROTATION TOL. = 5.0 Deg.

JSI GRIP= 0.90 (10) (INPUT = 0.90)
JSI METAL= 0.50 (12) (INPUT = 1.00)

LICENSED PROFESSIONAL ENGINEER
R.M. TREVISAN
100136551
March 14th, 2017
PROVINCE OF ONTARIO

RECEIVED
TOWN OF MILTON
MAR 29, 2017
17-5233
BUILDING DIVISION

READ ALL NOTES ON THIS PAGE AND ON THE ENGINEERING NOTE PAGE ENP-1. THE NOTE PAGE IS AN INTEGRAL PART OF THIS DRAWING AS IT CONTAINS SPECIFICATIONS AND CRITERIA USED IN THE DESIGN OF THIS COMPONENT.

KOTT

JOB NAME	TRUSS NAME	QUANTITY	PLY	JOB DESC.	DRWG NO.
PT0317-081	T45	1	1	TRUSS DESC. LECCO RIDGE-BLOCK 338	ENG JOB: PT0317-081

KOTT , Stouffville, ON, CGC

Version 8.100 S Feb 9 2017 MiTek Industries, Inc. Tue Mar 14 15:57:38 2017 Page 1

ID:EvTixTQDI5yR1QLotZTBr_yE?HJ-pQmK?iRdqRRqJzmyUgm_g?R6MTOCEA9n85x?ypzb_PB

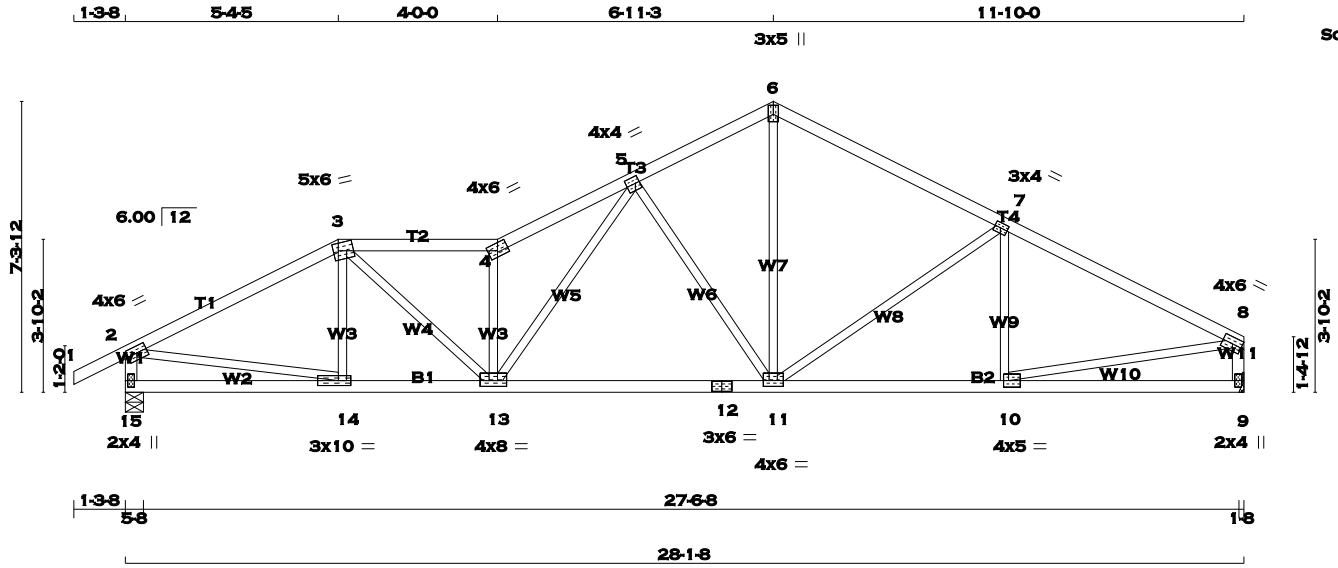

TOTAL WEIGHT = 113 lb

[M][F]

LUMBER

N. L. G. A. RULES

CHORDS	SIZE		LUMBER	DESCR.
1 - 3	2x4	DRY	No.2	SPF
3 - 4	2x4	DRY	No.2	SPF
4 - 6	2x4	DRY	No.2	SPF
6 - 8	2x4	DRY	No.2	SPF
15 - 2	2x4	DRY	No.2	SPF
9 - 8	2x4	DRY	No.2	SPF
15 - 12	2x4	DRY	No.2	SPF
12 - 9	2x4	DRY	No.2	SPF
ALL WEBS EXCEPT	2x3	DRY	No.2	SPF

DRY: SEASONED LUMBER.

PLATES (table is in inches)

JT	TYPE	PLATES	W	LEN	Y	X
2	TMVW-t	MT20	4.0	6.0	2.00	3.00
3	TTWW-m	MT20	5.0	6.0	2.25	1.50
4	TTW-h	MT20	4.0	6.0	2.25	3.25
5	TMWW-t	MT20	4.0	4.0	2.00	1.25
6	TTW+p	MT20	3.0	5.0	2.75	1.50
7	TMWW-t	MT20	3.0	4.0	1.50	1.75
8	TMVW-t	MT20	4.0	6.0		Edge
9	BMV1+p	MT20	2.0	4.0		
10	BMWW-t	MT20	4.0	5.0	2.00	1.50
11	BMWWW-t	MT20	4.0	6.0	1.75	3.00
12	BS-t	MT20	3.0	6.0		
13	BMWWW-t	MT20	4.0	8.0	1.75	4.00
14	BMWW-t	MT20	3.0	10.0	1.50	3.75
15	BMV1+p	MT20	2.0	4.0		

Edge - INDICATES REFERENCE CORNER OF PLATE TOUCHES EDGE OF CHORD.

A SIZE FOR SIZE SUBSTITUTION OF MITEK MII20 WITH TEE-LOK TL20 PLATES IS ALLOWED.

DIMENSIONS, SUPPORTS AND LOADINGS SPECIFIED BY FABRICATOR TO BE VERIFIED BY BUILDING DESIGNER

BEARINGS

JT	FACTORED GROSS REACTION VERT	HORZ	MAXIMUM FACTORED GROSS REACTION DOWN	HORZ	UPLIFT	INPUT BRG IN-SX	REQRD BRG IN-SX
15	1439	0	1439	0	0	5-8	5-8
9	1334	0	1334	0	0	HANGER BY OTHERS	
						MIN. SEAT SIZE: 1-8	

UNFACTORED REACTIONS

JT	1ST LCASE COMBINED	SNOW	LIVE	PERM.LIVE	WIND	DEAD	SOIL
		MAX./MIN. COMPONENT REACTIONS					
15	1007	718 / 0	0 / 0	0 / 0	0 / 0	289 / 0	0 / 0
9	936	655 / 0	0 / 0	0 / 0	0 / 0	281 / 0	0 / 0

BEARING MATERIAL TO BE SPF NO.2 OR BETTER AT JOINT(S) 15

BRACING

TOP CHORD TO BE SHEATHED OR MAX. PURLIN SPACING = 4.11 FT.
MAX. UNBRACED BOTTOM CHORD LENGTH = 10.00 FT. OR RIGID CEILING DIRECTLY APPLIED.

ALL PITCH BREAKS AND PERIMETER CORNER JOINTS MUST BE LATERALLY RESTRAINED.

LOADING

TOTAL LOAD CASES: (4)

CHORDS

MEMB. FR-TO	MAX. FACTORED FORCE (LBS)	VERT. LOAD LC1 FROM (PLF)	TO	MAX CSI (LC)	MAX. UNBRAC LENGTH
1- 2	0 / 23	-77.3	-77.3	0.10 (1)	10.00
2- 3	-1843 / 0	-77.3	-77.3	0.34 (1)	4.61
3- 4	-2337 / 0	-77.3	-77.3	0.22 (1)	4.30
4- 5	-2644 / 0	-77.3	-77.3	0.20 (1)	4.11
5- 6	-1486 / 0	-77.3	-77.3	0.14 (1)	5.25
6- 7	-1496 / 0	-77.3	-77.3	0.38 (1)	4.95
7- 8	-1797 / 0	-77.3	-77.3	0.41 (1)	4.58
15- 2	-1397 / 0	0.0	0.0	0.14 (1)	6.89
9- 8	-1288 / 0	0.0	0.0	0.13 (1)	7.11
15-14	0 / 0	-17.5	-17.5	0.11 (4)	10.00
14-13	0 / 1642	-17.5	-17.5	0.31 (1)	10.00
13-12	0 / 1775	-17.5	-17.5	0.39 (1)	10.00
12-11	0 / 1775	-17.5	-17.5	0.39 (1)	10.00
11-10	0 / 1628	-17.5	-17.5	0.36 (1)	10.00
10- 9	0 / 0	-17.5	-17.5	0.13 (4)	10.00

WEBS

MEMB. FR-TO	MAX. FACTORED FORCE (LBS)	MAX CSI (LC)
14- 3	-169 / 19	0.04 (1)
3-13	0 / 940	0.21 (1)
13- 4	-1441 / 0	0.33 (1)
13- 5	0 / 1077	0.24 (1)
5-11	-836 / 0	0.59 (1)
11- 6	0 / 1044	0.23 (1)
11- 7	-382 / 0	0.37 (1)
10- 7	-190 / 38	0.05 (1)
2-14	0 / 1667	0.38 (1)
10- 8	0 / 1654	0.37 (1)

DESIGN CRITERIA

SPECIFIED LOADS:

TOP CH.	LL	=	23.3	PSF
	DL	=	3.0	PSF
BOT CH.	LL	=	0.0	PSF
	DL	=	7.0	PSF
TOTAL LOAD		=	33.3	PSF

SPACING = 24.0 IN. C/C

LOADING IN ALL FLAT SECTIONS BASED ON A SLOPE OF 6.00/12

THIS TRUSS IS DESIGNED FOR RESIDENTIAL OR SMALL BUILDING REQUIREMENTS OF PART 9, NBCC 2010

THIS DESIGN COMPLIES WITH:
- PART 9 OF OBC 2012 , BCBC 2012 , ABC 2014
- CSA 086-09
- TPIC 2011

(55 % OF 27.2 P.S.F. G.S.L. PLUS 8.4 P.S.F. RAIN LOAD) EQUALS 23.3 P.S.F. SPECIFIED ROOF LIVE LOAD

ALLOWABLE DEFL.(LL)= L/360 (0.94")
CALCULATED VERT. DEFL.(LL) = L/ 999 (0.12")
ALLOWABLE DEFL.(TL)= L/360 (0.94")
CALCULATED VERT. DEFL.(TL) = L/ 999 (0.25")

CSI: TC=0.41 (7-8:1) , BC=0.39 (11-13:1) , WB=0.59 (5-11:1) , SSI=0.20 (7-8:1)

DOL LUMBER=1.00 NAIL=1.00 LS BEND=1.10 COMP=1.10 SHEAR=1.10 TENS= 1.10

COMPANION LIVE LOAD FACTOR = 0.50

TRUSS PLATE MANUFACTURER IS NOT RESPONSIBLE FOR QUALITY CONTROL IN THE TRUSS MANUFACTURING PLANT .

NAIL VALUES

PLATE	GRIP(DRY) (PSI) MAX	MIN	SHEAR (PLI) MAX	MIN	SECTION (PLI) MAX	MIN
MT20	618	354	1667	822	2284	1656

PLATE PLACEMENT TOL. = 0.250 inches

PLATE ROTATION TOL. = 5.0 Deg.

JSI GRIP= 0.90 (10) (INPUT = 0.90)
JSI METAL= 0.52 (4) (INPUT = 1.00)

LICENSED PROFESSIONAL ENGINEER
P.M. TREVISAN
100136551
March 14th, 2017
PROVINCE OF ONTARIO

RECEIVED
TOWN OF MILTON
MAR 29, 2017
17-5233
BUILDING DIVISION

READ ALL NOTES ON THIS PAGE AND ON THE ENGINEERING NOTE PAGE ENP-1. THE NOTE PAGE IS AN INTEGRAL PART OF THIS DRAWING AS IT CONTAINS SPECIFICATIONS AND CRITERIA USED IN THE DESIGN OF THIS COMPONENT.

KOTT

JOB NAME	TRUSS NAME	QUANTITY	PLY	JOB DESC.	DRWG NO.
PT0317-081	T46	1	1	TRUSS DESC. LECCO RIDGE-BLOCK 338	

ENG JOB: PT0317-081

KOTT , Stouffville, ON, CGC

Version 8.100 S Feb 9 2017 MiTek Industries, Inc. Tue Mar 14 15:57:39 2017 Page 1

ID:EvTixTQDI5yR1QLotZTBr_yE?HJ-HcKiD2SFbkZhx7L92NHDDD_GJslIzgdwMlhYUFzb_PA

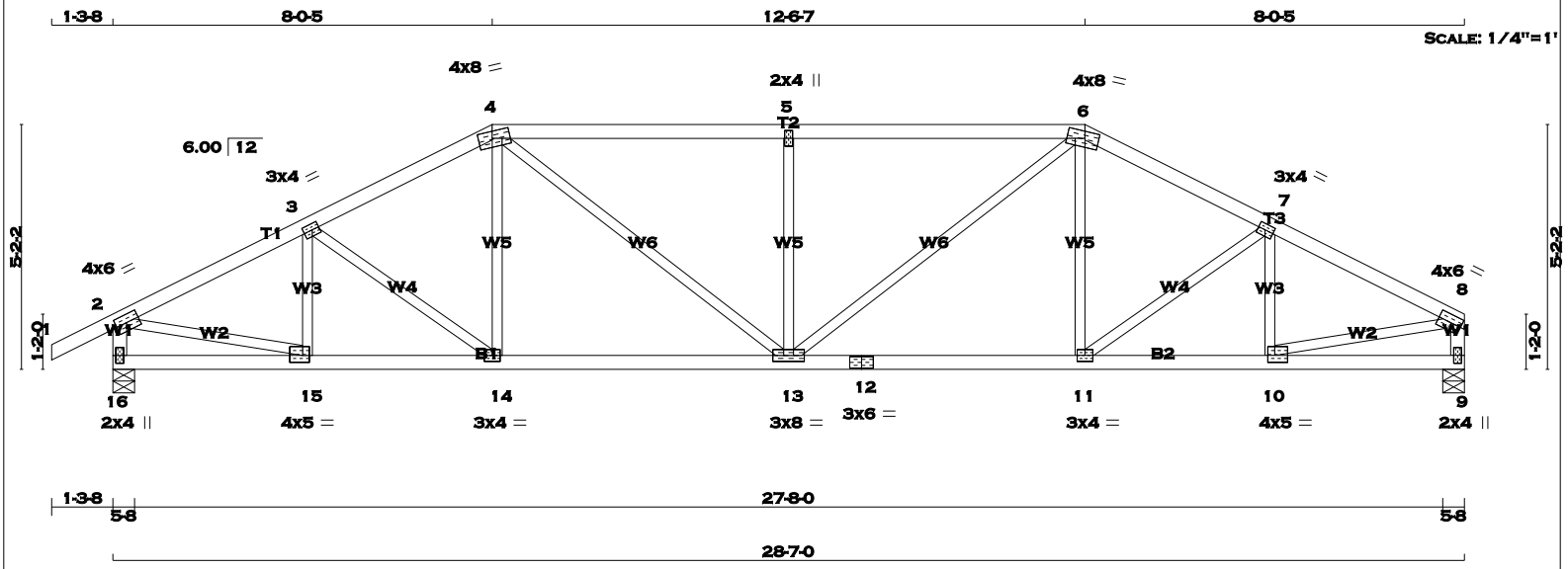

TOTAL WEIGHT = 112 lb

[M][F]

LUMBER

N. L. G. A. RULES

CHORDS	SIZE		LUMBER	DESCR.
1 - 4	2x4	DRY	No.2	SPF
4 - 6	2x4	DRY	No.2	SPF
6 - 8	2x4	DRY	No.2	SPF
16 - 2	2x4	DRY	No.2	SPF
9 - 8	2x4	DRY	No.2	SPF
16 - 12	2x4	DRY	No.2	SPF
12 - 9	2x4	DRY	No.2	SPF
ALL WEBS EXCEPT	2x3	DRY	No.2	SPF

DRY: SEASONED LUMBER.

PLATES (table is in inches)

JT	TYPE	PLATES	W	LEN	Y	X
2	TMVW-t	MT20	4.0	6.0	2.00	2.75
3	TMWW-t	MT20	3.0	4.0	1.50	1.75
4	TTWW-m	MT20	4.0	8.0	1.75	3.50
5	TMW+w	MT20	2.0	4.0		
6	TTWW-m	MT20	4.0	8.0	1.75	3.50
7	TMWW-t	MT20	3.0	4.0	1.50	1.75
8	TMVW-t	MT20	4.0	6.0	2.00	2.75
9	BMV1+p	MT20	2.0	4.0		
10	BMWW-t	MT20	4.0	5.0	1.75	1.75
11	BMWW-t	MT20	3.0	4.0		
12	BS-t	MT20	3.0	6.0		
13	BMWWW-t	MT20	3.0	8.0		
14	BMWW-t	MT20	3.0	4.0		
15	BMWW-t	MT20	4.0	5.0	1.75	1.75
16	BMV1+p	MT20	2.0	4.0		

A SIZE FOR SIZE SUBSTITUTION OF MITEK MII20 WITH TEE-LOK TL20 PLATES IS ALLOWED.

DIMENSIONS, SUPPORTS AND LOADINGS SPECIFIED BY FABRICATOR TO BE VERIFIED BY BUILDING DESIGNER

BEARINGS

JT	FACTORED GROSS REACTION VERT	HORZ	MAXIMUM FACTORED GROSS REACTION DOWN	HORZ	UPLIFT	INPUT BRG IN-SX	REQRD BRG IN-SX
16	1460	0	1460	0	0	5-8	5-8
9	1356	0	1356	0	0	5-8	5-8

UNFACTORED REACTIONS

JT	1ST LCASE COMBINED	MAX./MIN. COMPONENT REACTIONS SNOW	LIVE	PERM.LIVE	WIND	DEAD	SOIL
16	1023	729 / 0	0 / 0	0 / 0	0 / 0	294 / 0	0 / 0
9	951	665 / 0	0 / 0	0 / 0	0 / 0	286 / 0	0 / 0

BEARING MATERIAL TO BE SPF NO.2 OR BETTER AT JOINT(S) 16, 9

BRACING

TOP CHORD TO BE SHEATHED OR MAX. PURLIN SPACING = 4.25 FT.
MAX. UNBRACED BOTTOM CHORD LENGTH = 10.00 FT. OR RIGID CEILING DIRECTLY APPLIED.

ALL PITCH BREAKS AND PERIMETER CORNER JOINTS MUST BE LATERALLY RESTRAINED.

LOADING

TOTAL LOAD CASES: (4)

CHORDS

MEMB. FR-TO	MAX. FACTORED FORCE (LBS)	FACTORED VERT. LOAD (PLF) FROM	TO	LC1 MAX CSI (LC)	MAX. UNBRAC LENGTH
1- 2	0 / 23	-77.3	-77.3	0.10 (1)	10.00
2- 3	-1868 / 0	-77.3	-77.3	0.19 (1)	4.76
3- 4	-1818 / 0	-77.3	-77.3	0.18 (1)	4.82
4- 5	-2066 / 0	-77.3	-77.3	0.46 (1)	4.25
5- 6	-2066 / 0	-77.3	-77.3	0.46 (1)	4.25
6- 7	-1818 / 0	-77.3	-77.3	0.18 (1)	4.82
7- 8	-1868 / 0	-77.3	-77.3	0.19 (1)	4.76
16- 2	-1425 / 0	0.0	0.0	0.14 (1)	6.84
9- 8	-1320 / 0	0.0	0.0	0.13 (1)	7.04
16-15	0 / 0	-17.5	-17.5	0.07 (4)	10.00
15-14	0 / 1684	-17.5	-17.5	0.33 (1)	10.00
14-13	0 / 1614	-17.5	-17.5	0.32 (1)	10.00
13-12	0 / 1614	-17.5	-17.5	0.32 (1)	10.00
12-11	0 / 1614	-17.5	-17.5	0.32 (1)	10.00
11-10	0 / 1684	-17.5	-17.5	0.33 (1)	10.00
10- 9	0 / 0	-17.5	-17.5	0.07 (4)	10.00

WEBS

MEMB. FR-TO	MAX. FACTORED FORCE (LBS)	MAX CSI (LC)
15- 3	-290 / 0	0.06 (1)
3-14	-91 / 0	0.04 (1)
14- 4	0 / 153	0.04 (4)
4-13	0 / 573	0.13 (1)
13- 5	-595 / 0	0.24 (1)
13- 6	0 / 573	0.13 (1)
11- 6	0 / 153	0.04 (4)
11- 7	-91 / 0	0.04 (1)
10- 7	-290 / 0	0.06 (1)
2-15	0 / 1720	0.39 (1)
10- 8	0 / 1720	0.39 (1)

DESIGN CRITERIA

SPECIFIED LOADS:

TOP CH.	LL	=	23.3	PSF
	DL	=	3.0	PSF
BOT CH.	LL	=	0.0	PSF
	DL	=	7.0	PSF
TOTAL LOAD		=	33.3	PSF

SPACING = 24.0 IN. C/C

LOADING IN FLAT SECTION BASED ON A SLOPE OF 6.00/12

THIS TRUSS IS DESIGNED FOR RESIDENTIAL OR SMALL BUILDING REQUIREMENTS OF PART 9, NBCC 2010

THIS DESIGN COMPLIES WITH:
- PART 9 OF OBC 2012 , BCBC 2012 , ABC 2014
- CSA 086-09
- TPIC 2011

(55 % OF 27.2 P.S.F. G.S.L. PLUS 8.4 P.S.F. RAIN LOAD) EQUALS 23.3 P.S.F. SPECIFIED ROOF LIVE LOAD

ALLOWABLE DEFL.(LL)= L/360 (0.95")
CALCULATED VERT. DEFL.(LL) = L/ 999 (0.10")
ALLOWABLE DEFL.(TL)= L/360 (0.95")
CALCULATED VERT. DEFL.(TL) = L/ 999 (0.18")

CSI: TC=0.46 (4-5:1) , BC=0.33 (14-15:1) , WB=0.39 (8-10:1) , SSI=0.23 (4-5:1)

DOL LUMBER=1.00 NAIL=1.00 LS BEND=1.10 COMP=1.10 SHEAR=1.10 TENS= 1.10

COMPANION LIVE LOAD FACTOR = 0.50

TRUSS PLATE MANUFACTURER IS NOT RESPONSIBLE FOR QUALITY CONTROL IN THE TRUSS MANUFACTURING PLANT .

NAIL VALUES

PLATE	GRIP(DRY) (PSI) MAX	MIN	SHEAR (PLI) MAX	MIN	SECTION (PLI) MAX	MIN
MT20	618	354	1667	822	2284	1656

PLATE PLACEMENT TOL. = 0.250 inches

PLATE ROTATION TOL. = 5.0 Deg.

JSI GRIP= 0.89 (2) (INPUT = 0.90)
JSI METAL= 0.50 (15) (INPUT = 1.00)

LICENSED PROFESSIONAL ENGINEER
P.M. TREVISAN
100136551
March 14th, 2017
PROVINCE OF ONTARIO

RECEIVED
TOWN OF MILTON
MAR 29, 2017
17-5233
BUILDING DIVISION

READ ALL NOTES ON THIS PAGE AND ON THE ENGINEERING NOTE PAGE ENP-1. THE NOTE PAGE IS AN INTEGRAL PART OF THIS DRAWING AS IT CONTAINS SPECIFICATIONS AND CRITERIA USED IN THE DESIGN OF THIS COMPONENT.

KOTT

JOB NAME	TRUSS NAME	QUANTITY	PLY	JOB DESC.	DRWG NO.
PT0317-081	**T47**	**1**	**1**	TRUSS DESC. LECCO RIDGE-BLOCK 338	

ENG JOB: PT0317-081

KOTT , Stouffville, ON, CGC

Version 8.100 S Feb 9 2017 MiTek Industries, Inc. Tue Mar 14 15:57:39 2017 Page 1
ID:EvTixTQDI5yR1QLotZTBr_yE?HJ-HcKiD2SFbkZhx7L92NHDDD_IEslqzgSwMlhYUFzb_PA

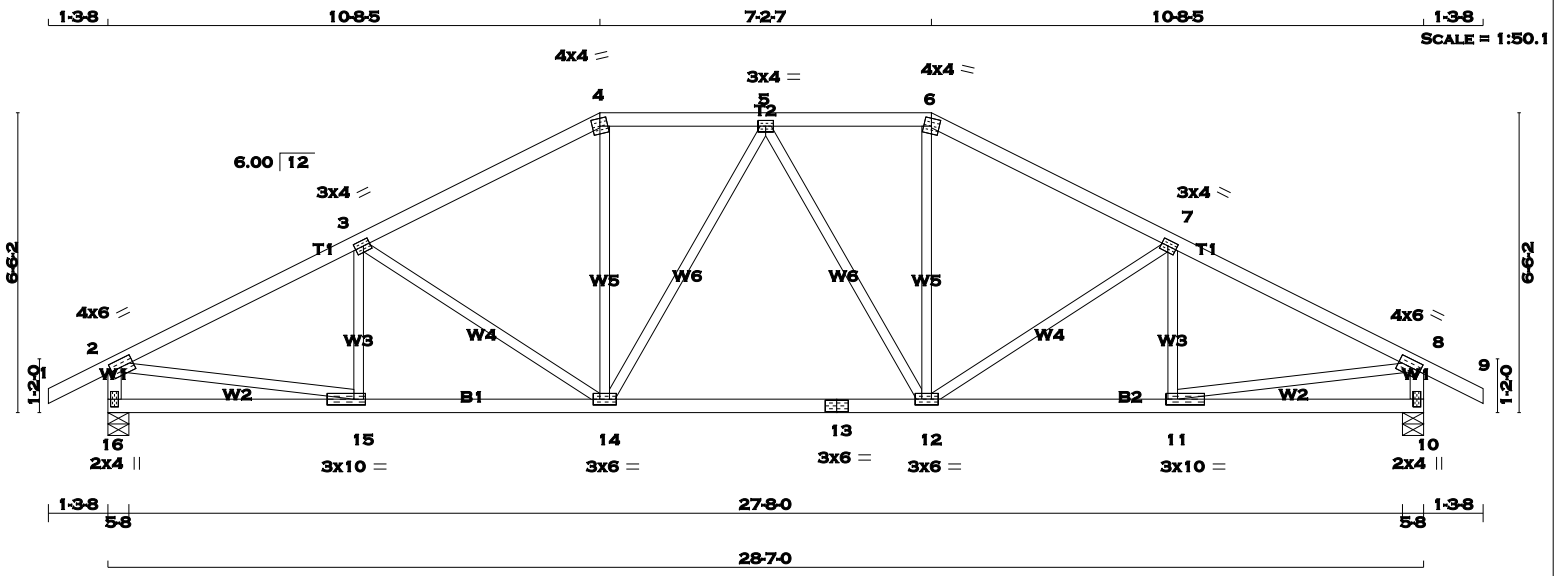

TOTAL WEIGHT = 118 lb
[M][F]

LUMBER
N. L. G. A. RULES

CHORDS	SIZE		LUMBER	DESCR.
1 - 4	2x4	DRY	No.2	SPF
4 - 6	2x4	DRY	No.2	SPF
6 - 9	2x4	DRY	No.2	SPF
16 - 2	2x4	DRY	No.2	SPF
10 - 8	2x4	DRY	No.2	SPF
16 - 13	2x4	DRY	No.2	SPF
13 - 10	2x4	DRY	No.2	SPF
ALL WEBS EXCEPT	2x3	DRY	No.2	SPF

DRY: SEASONED LUMBER.

PLATES (table is in inches)

JT	TYPE	PLATES	W	LEN	Y	X
2	TMVW-t	MT20	4.0	6.0	2.00	2.75
3	TMWW-t	MT20	3.0	4.0	1.50	1.75
4	TTW-m	MT20	4.0	4.0		
5	TMWW-t	MT20	3.0	4.0		
6	TTW-m	MT20	4.0	4.0		
7	TMWW-t	MT20	3.0	4.0	1.50	1.75
8	TMVW-t	MT20	4.0	6.0	2.00	2.75
10	BMV1+p	MT20	2.0	4.0		
11	BMWW-t	MT20	3.0	10.0	1.50	3.00
12	BMWWW-t	MT20	3.0	6.0		
13	BS-t	MT20	3.0	6.0		
14	BMWWW-t	MT20	3.0	6.0		
15	BMWW-t	MT20	3.0	10.0	1.50	3.00
16	BMV1+p	MT20	2.0	4.0		

A SIZE FOR SIZE SUBSTITUTION OF MITEK MII20 WITH TEE-LOK TL20 PLATES IS ALLOWED.

DIMENSIONS, SUPPORTS AND LOADINGS SPECIFIED BY FABRICATOR TO BE VERIFIED BY BUILDING DESIGNER

BEARINGS

JT	FACTORED GROSS REACTION VERT	HORZ	MAXIMUM FACTORED GROSS REACTION DOWN	HORZ	UPLIFT	INPUT BRG IN-SX	REQRD BRG IN-SX
16	1460	0	1460	0	0	5-8	5-8
10	1460	0	1460	0	0	5-8	5-8

UNFACTORED REACTIONS

JT	1ST LCASE COMBINED	MAX./MIN. COMPONENT REACTIONS SNOW	LIVE	PERM.LIVE	WIND	DEAD	SOIL
16	1023	729 / 0	0 / 0	0 / 0	0 / 0	294 / 0	0 / 0
10	1023	729 / 0	0 / 0	0 / 0	0 / 0	294 / 0	0 / 0

BEARING MATERIAL TO BE SPF NO.2 OR BETTER AT JOINT(S) 16, 10

BRACING
TOP CHORD TO BE SHEATHED OR MAX. PURLIN SPACING = 4.53 FT.
MAX. UNBRACED BOTTOM CHORD LENGTH = 10.00 FT. OR RIGID CEILING DIRECTLY APPLIED.

ALL PITCH BREAKS AND PERIMETER CORNER JOINTS MUST BE LATERALLY RESTRAINED.

LOADING
TOTAL LOAD CASES: (4)

CHORDS MEMB. FR-TO	MAX. FACTORED FORCE (LBS)	FACTORED VERT. LOAD (PLF) FROM	TO	LC1 MAX CSI (LC)	MAX. UNBRAC LENGTH	WEBS MEMB. FR-TO	MAX. FACTORED FORCE (LBS)	MAX CSI (LC)
1- 2	0 / 23	-77.3	-77.3	0.10 (1)	10.00	15- 3	-182 / 30	0.04 (1)
2- 3	-1933 / 0	-77.3	-77.3	0.34 (1)	4.53	3-14	-339 / 0	0.25 (1)
3- 4	-1662 / 0	-77.3	-77.3	0.31 (1)	4.83	14- 4	0 / 469	0.11 (1)
4- 5	-1474 / 0	-77.3	-77.3	0.14 (1)	5.27	14- 5	-191 / 0	0.19 (1)
5- 6	-1474 / 0	-77.3	-77.3	0.14 (1)	5.27	5-12	-191 / 0	0.19 (1)
6- 7	-1662 / 0	-77.3	-77.3	0.31 (1)	4.83	12- 6	0 / 469	0.11 (1)
7- 8	-1933 / 0	-77.3	-77.3	0.34 (1)	4.53	12- 7	-339 / 0	0.25 (1)
8- 9	0 / 23	-77.3	-77.3	0.10 (1)	10.00	11- 7	-182 / 30	0.04 (1)
16- 2	-1418 / 0	0.0	0.0	0.14 (1)	6.85	2-15	0 / 1769	0.40 (1)
10- 8	-1418 / 0	0.0	0.0	0.14 (1)	6.85	11- 8	0 / 1769	0.40 (1)
16-15	0 / 0	-17.5	-17.5	0.11 (4)	10.00			
15-14	0 / 1748	-17.5	-17.5	0.36 (1)	10.00			
14-13	0 / 1567	-17.5	-17.5	0.33 (1)	10.00			
13-12	0 / 1567	-17.5	-17.5	0.33 (1)	10.00			
12-11	0 / 1748	-17.5	-17.5	0.36 (1)	10.00			
11-10	0 / 0	-17.5	-17.5	0.11 (4)	10.00			

DESIGN CRITERIA

SPECIFIED LOADS:

TOP	CH.	LL	=	23.3	PSF
		DL	=	3.0	PSF
BOT	CH.	LL	=	0.0	PSF
		DL	=	7.0	PSF
TOTAL	LOAD		=	33.3	PSF

SPACING = 24.0 IN. C/C

LOADING IN FLAT SECTION BASED ON A SLOPE OF 6.00/12

THIS TRUSS IS DESIGNED FOR RESIDENTIAL OR SMALL BUILDING REQUIREMENTS OF PART 9, NBCC 2010

THIS DESIGN COMPLIES WITH:
- PART 9 OF OBC 2012 , BCBC 2012 , ABC 2014
- CSA 086-09
- TPIC 2011

(55 % OF 27.2 P.S.F. G.S.L. PLUS 8.4 P.S.F. RAIN LOAD) EQUALS 23.3 P.S.F. SPECIFIED ROOF LIVE LOAD

ALLOWABLE DEFL.(LL)= L/360 (0.95")
CALCULATED VERT. DEFL.(LL) = L/ 999 (0.08")
ALLOWABLE DEFL.(TL)= L/360 (0.95")
CALCULATED VERT. DEFL.(TL) = L/ 999 (0.17")

CSI: TC=0.34 (2-3:1) , BC=0.36 (14-15:1) , WB=0.40 (2-15:1) , SSI=0.18 (2-3:1)

DOL LUMBER=1.00 NAIL=1.00 LS BEND=1.10 COMP=1.10 SHEAR=1.10 TENS= 1.10

COMPANION LIVE LOAD FACTOR = 0.50

TRUSS PLATE MANUFACTURER IS NOT RESPONSIBLE FOR QUALITY CONTROL IN THE TRUSS MANUFACTURING PLANT .

NAIL VALUES

PLATE	GRIP(DRY) (PSI) MAX	MIN	SHEAR (PLI) MAX	MIN	SECTION (PLI) MAX	MIN
MT20	618	354	1667	822	2284	1656

PLATE PLACEMENT TOL. = 0.250 inches

PLATE ROTATION TOL. = 5.0 Deg.

JSI GRIP= 0.90 (11) (INPUT = 0.90)
JSI METAL= 0.52 (8) (INPUT = 1.00)

LICENSED PROFESSIONAL ENGINEER
P.M. TREVISAN
100136551
March 14th, 2017
PROVINCE OF ONTARIO

RECEIVED
TOWN OF MILTON
MAR 29, 2017
17-5233
BUILDING DIVISION

READ ALL NOTES ON THIS PAGE AND ON THE ENGINEERING NOTE PAGE ENP-1. THE NOTE PAGE IS AN INTEGRAL PART OF THIS DRAWING AS IT CONTAINS SPECIFICATIONS AND CRITERIA USED IN THE DESIGN OF THIS COMPONENT.

KOTT

JOB NAME	TRUSS NAME	QUANTITY	PLY	JOB DESC.	DRWG NO.
PT0317-081	**T48**	**1**	**1**	TRUSS DESC. LECCO RIDGE-BLOCK 338	

ENG JOB: PT0317-081

KOTT , Stouffville, ON, CGC

Version 8.100 S Feb 9 2017 MiTek Industries, Inc. Tue Mar 14 15:57:40 2017 Page 1
ID:EvTixTQDI5yR1QLotZTBr_yE?HJ-lpu4QOTtM2hYZHwLc5oSlQWQeG4ni2B4bPQ50izb_P9

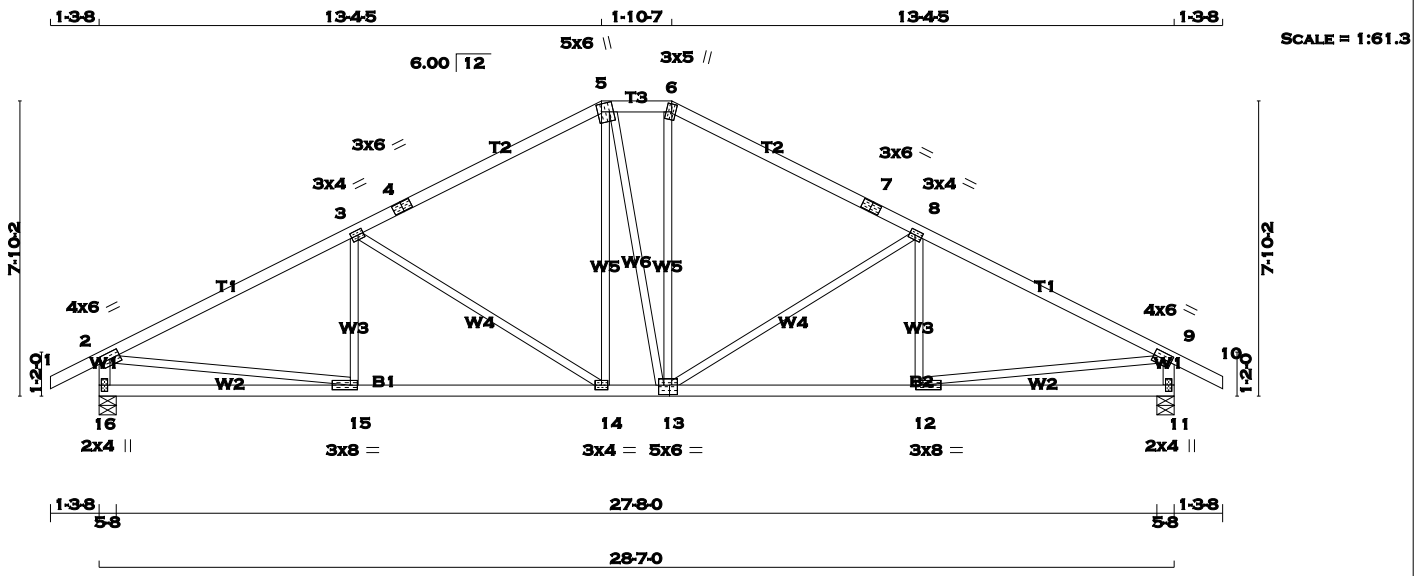

TOTAL WEIGHT = 121 lb

LUMBER
N. L. G. A. RULES

CHORDS	SIZE		LUMBER	DESCR.
1 - 4	2x4	DRY	No.2	SPF
4 - 5	2x4	DRY	No.2	SPF
5 - 6	2x4	DRY	No.2	SPF
6 - 7	2x4	DRY	No.2	SPF
7 - 10	2x4	DRY	No.2	SPF
16 - 2	2x4	DRY	No.2	SPF
11 - 9	2x4	DRY	No.2	SPF
16 - 13	2x4	DRY	No.2	SPF
13 - 11	2x4	DRY	No.2	SPF
ALL WEBS EXCEPT	2x3	DRY	No.2	SPF

DRY: SEASONED LUMBER.

PLATES (table is in inches)

JT	TYPE	PLATES	W	LEN	Y	X
2	TMVW-t	MT20	4.0	6.0	2.00	2.75
3	TMWW-t	MT20	3.0	4.0	1.50	1.75
4	TS-t	MT20	3.0	6.0		
5	TTWW+m	MT20	5.0	6.0	2.50	1.25
6	TTW+m	MT20	3.0	5.0	2.50	1.25
7	TS-t	MT20	3.0	6.0		
8	TMWW-t	MT20	3.0	4.0	1.50	1.75
9	TMVW-t	MT20	4.0	6.0	2.00	2.75
11	BMV1+p	MT20	2.0	4.0		
12	BMWW-t	MT20	3.0	8.0	1.50	2.25
13	BSWWW-l	MT20	5.0	6.0	3.00	2.50
14	BMWW-t	MT20	3.0	4.0		
15	BMWW-t	MT20	3.0	8.0	1.50	2.25
16	BMV1+p	MT20	2.0	4.0		

A SIZE FOR SIZE SUBSTITUTION OF MITEK MII20 WITH TEE-LOK TL20 PLATES IS ALLOWED.

DIMENSIONS, SUPPORTS AND LOADINGS SPECIFIED BY FABRICATOR TO BE VERIFIED BY BUILDING DESIGNER

BEARINGS

JT	FACTORED GROSS REACTION VERT	HORZ	MAXIMUM FACTORED GROSS REACTION DOWN	HORZ	UPLIFT	INPUT BRG IN-SX	REQRD BRG IN-SX
16	1460	0	1460	0	0	5-8	5-8
11	1460	0	1460	0	0	5-8	5-8

UNFACTORED REACTIONS

JT	1ST LCASE COMBINED	MAX./MIN. COMPONENT REACTIONS SNOW	LIVE	PERM.LIVE	WIND	DEAD	SOIL
16	1023	729 / 0	0 / 0	0 / 0	0 / 0	294 / 0	0 / 0
11	1023	729 / 0	0 / 0	0 / 0	0 / 0	294 / 0	0 / 0

BEARING MATERIAL TO BE SPF NO.2 OR BETTER AT JOINT(S) 16, 11

BRACING
TOP CHORD TO BE SHEATHED OR MAX. PURLIN SPACING = 4.26 FT.
MAX. UNBRACED BOTTOM CHORD LENGTH = 10.00 FT. OR RIGID CEILING DIRECTLY APPLIED.

ALL PITCH BREAKS AND PERIMETER CORNER JOINTS MUST BE LATERALLY RESTRAINED.

LOADING
TOTAL LOAD CASES: (4)

CHORDS MEMB. FR-TO	MAX. FACTORED FORCE (LBS)	FACTORED VERT. LOAD (PLF) FROM	TO	LC1 MAX CSI (LC)	MAX. UNBRAC LENGTH	WEBS MEMB. FR-TO	MAX. FACTORED FORCE (LBS)	MAX CSI (LC)
1- 2	0 / 23	-77.3	-77.3	0.10 (1)	10.00	15- 3	-90 / 88	0.03 (4)
2- 3	-1945 / 0	-77.3	-77.3	0.55 (1)	4.26	3-14	-576 / 0	0.75 (1)
3- 4	-1458 / 0	-77.3	-77.3	0.49 (1)	4.84	14- 5	0 / 368	0.08 (1)
4- 5	-1458 / 0	-77.3	-77.3	0.49 (1)	4.84	5-13	0 / 9	0.00 (1)
5- 6	-1285 / 0	-77.3	-77.3	0.05 (1)	5.65	13- 6	0 / 378	0.09 (1)
6- 7	-1460 / 0	-77.3	-77.3	0.49 (1)	4.83	13- 8	-573 / 0	0.75 (1)
7- 8	-1460 / 0	-77.3	-77.3	0.49 (1)	4.83	12- 8	-93 / 87	0.03 (4)
8- 9	-1944 / 0	-77.3	-77.3	0.55 (1)	4.26	2-15	0 / 1778	0.40 (1)
9-10	0 / 23	-77.3	-77.3	0.10 (1)	10.00	12- 9	0 / 1778	0.40 (1)
16- 2	-1411 / 0	0.0	0.0	0.14 (1)	6.86			
11- 9	-1411 / 0	0.0	0.0	0.14 (1)	6.87			
16-15	0 / 0	-17.5	-17.5	0.20 (4)	10.00			
15-14	0 / 1764	-17.5	-17.5	0.38 (1)	10.00			
14-13	0 / 1283	-17.5	-17.5	0.28 (1)	10.00			
13-12	0 / 1763	-17.5	-17.5	0.37 (1)	10.00			
12-11	0 / 0	-17.5	-17.5	0.19 (4)	10.00			

DESIGN CRITERIA

SPECIFIED LOADS:

TOP CH.	LL	=	23.3	PSF	
	DL	=	3.0	PSF	
BOT CH.	LL	=	0.0	PSF	
	DL	=	7.0	PSF	
TOTAL LOAD		=	33.3	PSF	

SPACING = 24.0 IN. C/C

LOADING IN FLAT SECTION BASED ON A SLOPE OF 6.00/12

THIS TRUSS IS DESIGNED FOR RESIDENTIAL OR SMALL BUILDING REQUIREMENTS OF PART 9, NBCC 2010

THIS DESIGN COMPLIES WITH:
- PART 9 OF OBC 2012 , BCBC 2012 , ABC 2014
- CSA 086-09
- TPIC 2011

(55 % OF 27.2 P.S.F. G.S.L. PLUS 8.4 P.S.F. RAIN LOAD) EQUALS 23.3 P.S.F. SPECIFIED ROOF LIVE LOAD

ALLOWABLE DEFL.(LL)= L/360 (0.95")
CALCULATED VERT. DEFL.(LL) = L/ 999 (0.09")
ALLOWABLE DEFL.(TL)= L/360 (0.95")
CALCULATED VERT. DEFL.(TL) = L/ 999 (0.17")

CSI: TC=0.55 (2-3:1) , BC=0.38 (14-15:1) , WB=0.75 (3-14:1) , SSI=0.23 (2-3:1)

DOL LUMBER=1.00 NAIL=1.00 LS BEND=1.10 COMP=1.10 SHEAR=1.10 TENS= 1.10

COMPANION LIVE LOAD FACTOR = 0.50

TRUSS PLATE MANUFACTURER IS NOT RESPONSIBLE FOR QUALITY CONTROL IN THE TRUSS MANUFACTURING PLANT .

NAIL VALUES

PLATE	GRIP(DRY) (PSI) MAX	MIN	SHEAR (PLI) MAX	MIN	SECTION (PLI) MAX	MIN
MT20	618	354	1667	822	2284	1656

PLATE PLACEMENT TOL. = 0.250 inches

PLATE ROTATION TOL. = 5.0 Deg.

JSI GRIP= 0.90 (15) (INPUT = 0.90)
JSI METAL= 0.53 (2) (INPUT = 1.00)

LICENSED PROFESSIONAL ENGINEER
P.M. TREVISAN
100136551
March 14th, 2017
PROVINCE OF ONTARIO

RECEIVED
TOWN OF MILTON
MAR 29, 2017
17-5233
BUILDING DIVISION

READ ALL NOTES ON THIS PAGE AND ON THE ENGINEERING NOTE PAGE ENP-1. THE NOTE PAGE IS AN INTEGRAL PART OF THIS DRAWING AS IT CONTAINS SPECIFICATIONS AND CRITERIA USED IN THE DESIGN OF THIS COMPONENT.

KOTT

JOB NAME	TRUSS NAME	QUANTITY	PLY	JOB DESC.	DRWG NO.
PT0317-081	T49	3	1	TRUSS DESC. LECCO RIDGE-BLOCK 338	ENG JOB: PT0317-081

KOTT , Stouffville, ON, CGC

Version 8.100 S Feb 9 2017 MiTek Industries, Inc. Tue Mar 14 15:57:41 2017 Page 1

ID:EvTixTQDI5yR1QLotZTBr_yE?HJ-D?RSekTV7MpPARVX9oJhIe3Z_gPvRZyDq3AfZ8zb_P8

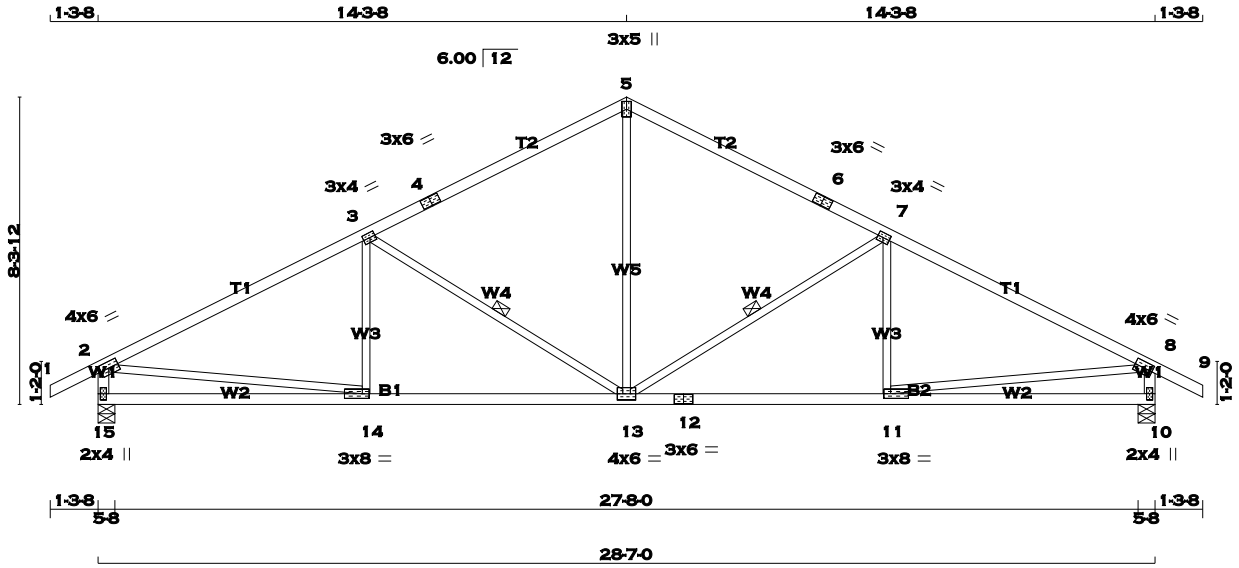

TOTAL WEIGHT = 3 X 112 = 335 lb

[M][F]

LUMBER

N. L. G. A. RULES

CHORDS	SIZE		LUMBER	DESCR.
1 - 4	2x4	DRY	No.2	SPF
4 - 5	2x4	DRY	No.2	SPF
5 - 6	2x4	DRY	No.2	SPF
6 - 9	2x4	DRY	No.2	SPF
15 - 2	2x4	DRY	No.2	SPF
10 - 8	2x4	DRY	No.2	SPF
15 - 12	2x4	DRY	No.2	SPF
12 - 10	2x4	DRY	No.2	SPF
ALL WEBS EXCEPT	2x3	DRY	No.2	SPF

DRY: SEASONED LUMBER.

PLATES (table is in inches)

JT	TYPE	PLATES	W	LEN	Y	X
2	TMVW-t	MT20	4.0	6.0	2.00	2.75
3	TMWW-t	MT20	3.0	4.0	1.50	1.75
4	TS-t	MT20	3.0	6.0		
5	TTW+p	MT20	3.0	5.0		
6	TS-t	MT20	3.0	6.0		
7	TMWW-t	MT20	3.0	4.0	1.50	1.75
8	TMVW-t	MT20	4.0	6.0	2.00	2.75
10	BMV1+p	MT20	2.0	4.0		
11	BMWW-t	MT20	3.0	8.0	1.50	2.25
12	BS-t	MT20	3.0	6.0		
13	BMWWW-t	MT20	4.0	6.0		
14	BMWW-t	MT20	3.0	8.0	1.50	2.25
15	BMV1+p	MT20	2.0	4.0		

A SIZE FOR SIZE SUBSTITUTION OF MITEK MII20 WITH TEE-LOK TL20 PLATES IS ALLOWED.

DIMENSIONS, SUPPORTS AND LOADINGS SPECIFIED BY FABRICATOR TO BE VERIFIED BY BUILDING DESIGNER

BEARINGS

JT	FACTORED GROSS REACTION VERT	HORZ	MAXIMUM FACTORED GROSS REACTION DOWN	HORZ	UPLIFT	INPUT BRG IN-SX	REQRD BRG IN-SX
15	1460	0	1460	0	0	5-8	5-8
10	1460	0	1460	0	0	5-8	5-8

UNFACTORED REACTIONS

JT	1ST LCASE COMBINED	MAX./MIN. COMPONENT REACTIONS SNOW	LIVE	PERM.LIVE	WIND	DEAD	SOIL
15	1023	729 / 0	0 / 0	0 / 0	0 / 0	294 / 0	0 / 0
10	1023	729 / 0	0 / 0	0 / 0	0 / 0	294 / 0	0 / 0

BEARING MATERIAL TO BE SPF NO.2 OR BETTER AT JOINT(S) 15, 10

BRACING

TOP CHORD TO BE SHEATHED OR MAX. PURLIN SPACING = 4.14 FT.
MAX. UNBRACED BOTTOM CHORD LENGTH = 10.00 FT. OR RIGID CEILING DIRECTLY APPLIED.

ALL PITCH BREAKS AND PERIMETER CORNER JOINTS MUST BE LATERALLY RESTRAINED.

1 - 2x3 SPF No.2 LATERAL BRACE(S) AT 1/ 2 LENGTH OF 7-13, 3-13. DBS = 20-0-0 . CBF = 80 LBS.

DBS = DIAGONAL BRACE SPACING (MAX). CBF = CUMULATIVE BRACING FORCE. FASTEN LATERAL BRACE(S) USING (0.122"X3") SPIRAL NAILS : 1 NAIL FOR 2x3 BRACE(S), 2 FOR 1x4, 2x4, 2x5, 3 FOR 2x6, 4 FOR 2x8, 5 FOR 2x10, AND 6 FOR 2x12.

END VERTICAL(S) MUST BE SHEATHED OR HAVE BRACES AS INDICATED IN THE MAX. UNBRACED LENGTH COLUMN OF THE TABLE BELOW

LOADING

TOTAL LOAD CASES: (4)

CHORDS

MEMB. FR-TO	MAX. FACTORED FORCE (LBS)	FACTORED VERT. LOAD LC1 (PLF) FROM	TO	MAX CSI (LC)	MAX. UNBRAC LENGTH
1- 2	0 / 23	-77.3	-77.3	0.10 (1)	10.00
2- 3	-1938 / 0	-77.3	-77.3	0.64 (1)	4.14
3- 4	-1393 / 0	-77.3	-77.3	0.56 (1)	4.80
4- 5	-1393 / 0	-77.3	-77.3	0.56 (1)	4.80
5- 6	-1393 / 0	-77.3	-77.3	0.56 (1)	4.80
6- 7	-1393 / 0	-77.3	-77.3	0.56 (1)	4.80
7- 8	-1938 / 0	-77.3	-77.3	0.64 (1)	4.14
8- 9	0 / 23	-77.3	-77.3	0.10 (1)	10.00
15- 2	-1408 / 0	0.0	0.0	0.14 (1)	6.87
10- 8	-1408 / 0	0.0	0.0	0.14 (1)	6.87
15-14	0 / 0	-17.5	-17.5	0.21 (4)	10.00
14-13	0 / 1759	-17.5	-17.5	0.39 (1)	10.00
13-12	0 / 1759	-17.5	-17.5	0.39 (1)	10.00
12-11	0 / 1759	-17.5	-17.5	0.39 (1)	10.00
11-10	0 / 0	-17.5	-17.5	0.21 (4)	10.00

WEBS

MEMB. FR-TO	MAX. FACTORED FORCE (LBS)	MAX CSI (LC)
13- 5	0 / 809	0.18 (1)
13- 7	-641 / 0	0.30 (1)
11- 7	-71 / 98	0.03 (4)
3-13	-641 / 0	0.30 (1)
14- 3	-71 / 98	0.03 (4)
2-14	0 / 1772	0.40 (1)
11- 8	0 / 1772	0.40 (1)

DESIGN CRITERIA

SPECIFIED LOADS:

TOP	CH.	LL	=	23.3	PSF
		DL	=	3.0	PSF
BOT	CH.	LL	=	0.0	PSF
		DL	=	7.0	PSF
TOTAL	LOAD		=	33.3	PSF

SPACING = 24.0 IN. C/C

THIS TRUSS IS DESIGNED FOR RESIDENTIAL OR SMALL BUILDING REQUIREMENTS OF PART 9, NBCC 2010

THIS DESIGN COMPLIES WITH:
- PART 9 OF OBC 2012 , BCBC 2012 , ABC 2014
- CSA 086-09
- TPIC 2011

(55 % OF 27.2 P.S.F. G.S.L. PLUS 8.4 P.S.F. RAIN LOAD) EQUALS 23.3 P.S.F. SPECIFIED ROOF LIVE LOAD

ALLOWABLE DEFL.(LL)= L/360 (0.95")
CALCULATED VERT. DEFL.(LL) = L/ 999 (0.09")
ALLOWABLE DEFL.(TL)= L/360 (0.95")
CALCULATED VERT. DEFL.(TL) = L/ 999 (0.17")

CSI: TC=0.64 (2-3:1) , BC=0.39 (13-14:1) , WB=0.40 (2-14:1) , SSI=0.24 (2-3:1)

DOL LUMBER=1.00 NAIL=1.00 LS BEND=1.10 COMP=1.10 SHEAR=1.10 TENS= 1.10

COMPANION LIVE LOAD FACTOR = 0.50

TRUSS PLATE MANUFACTURER IS NOT RESPONSIBLE FOR QUALITY CONTROL IN THE TRUSS MANUFACTURING PLANT .

NAIL VALUES

PLATE	GRIP(DRY) (PSI) MAX	MIN	SHEAR (PLI) MAX	MIN	SECTION (PLI) MAX	MIN
MT20	618	354	1667	822	2284	1656

PLATE PLACEMENT TOL. = 0.250 inches

PLATE ROTATION TOL. = 0.5 Deg.

JSI GRIP= 0.88 (2) (INPUT = 0.90)
JSI METAL= 0.53 (8) (INPUT = 1.00)

LICENSED PROFESSIONAL ENGINEER
R.M. TREVISAN
100136551
March 14th, 2017
PROVINCE OF ONTARIO

RECEIVED
TOWN OF MILTON
MAR 29, 2017
17-5233
BUILDING DIVISION

READ ALL NOTES ON THIS PAGE AND ON THE ENGINEERING NOTE PAGE ENP-1. THE NOTE PAGE IS AN INTEGRAL PART OF THIS DRAWING AS IT CONTAINS SPECIFICATIONS AND CRITERIA USED IN THE DESIGN OF THIS COMPONENT.

KOTT

Version 8.100 S Feb 9 2017 MiTek Industries, Inc. Tue Mar 14 15:57:41 2017 Page 1
ID:EvTixTQDI5yR1QLotZTBr_yE?HJ-D?RSekTV7MpPARVX9oJhIe3bqgRTRaTDq3AfZ8zb_P8

SCALE = 1:71.3

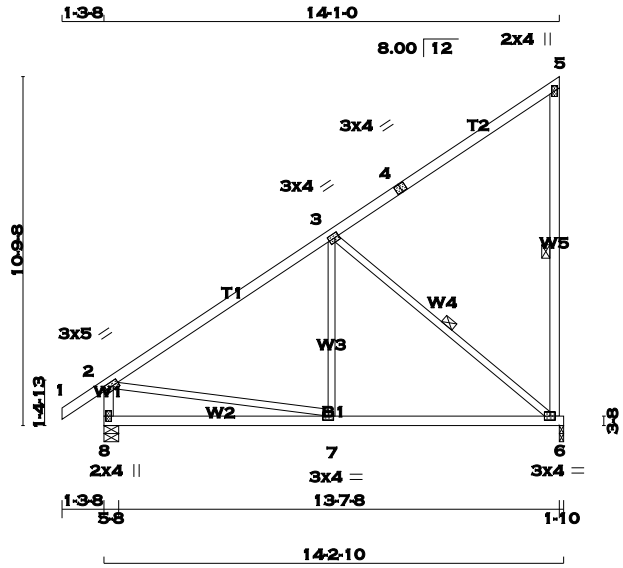

TOTAL WEIGHT = 8 X 67 = 537 lb

[M][F]

LUMBER

N. L. G. A. RULES

CHORDS	SIZE		LUMBER	DESCR.
1 - 4	2x4	DRY	No.2	SPF
4 - 5	2x4	DRY	No.2	SPF
6 - 5	2x4	DRY	No.2	SPF
8 - 2	2x4	DRY	No.2	SPF
8 - 6	2x4	DRY	No.2	SPF
ALL WEBS EXCEPT	2x3	DRY	No.2	SPF

DRY: SEASONED LUMBER.

PLATES (table is in inches)

JT	TYPE	PLATES	W	LEN	Y	X
2	TMVW-t	MT20	3.0	5.0	1.50	2.00
3	TMWW-t	MT20	3.0	4.0	1.50	1.50
4	TS-t	MT20	3.0	4.0		
5	TMV+p	MT20	2.0	4.0		
6	BMVW1-t	MT20	3.0	4.0		
7	BMWW-t	MT20	3.0	4.0		
8	BMV1+p	MT20	2.0	4.0		

A SIZE FOR SIZE SUBSTITUTION OF MITEK MII20 WITH TEE-LOK TL20 PLATES IS ALLOWED.

DIMENSIONS, SUPPORTS AND LOADINGS SPECIFIED BY FABRICATOR TO BE VERIFIED BY BUILDING DESIGNER

BEARINGS

JT	FACTORED GROSS REACTION VERT	HORZ	MAXIMUM FACTORED GROSS REACTION DOWN	HORZ	UPLIFT	INPUT BRG IN-SX	REQRD BRG IN-SX
6	668	0	668	0	0	1-10	1-10
8	774	0	774	0	0	5-8	5-8

UNFACTORED REACTIONS

JT	1ST LCASE COMBINED	MAX./MIN. COMPONENT REACTIONS SNOW	LIVE	PERM.LIVE	WIND	DEAD	SOIL
6	469	328 / 0	0 / 0	0 / 0	0 / 0	141 / 0	0 / 0
8	541	392 / 0	0 / 0	0 / 0	0 / 0	149 / 0	0 / 0

BEARING MATERIAL TO BE SPF NO.2 OR BETTER AT JOINT(S) 6, 8

BRACING

TOP CHORD TO BE SHEATHED OR MAX. PURLIN SPACING = 6.25 FT.
MAX. UNBRACED BOTTOM CHORD LENGTH = 10.00 FT. OR RIGID CEILING DIRECTLY APPLIED.

ALL PITCH BREAKS AND PERIMETER CORNER JOINTS MUST BE LATERALLY RESTRAINED.

1 - 2x3 SPF No.2 LATERAL BRACE(S) AT 1/ 2 LENGTH OF 5-6, 3-6. DBS = 20-0-0 . CBF = 82 LBS.

DBS = DIAGONAL BRACE SPACING (MAX). CBF = CUMULATIVE BRACING FORCE. FASTEN LATERAL BRACE(S) USING (0.122"X3") SPIRAL NAILS : 1 NAIL FOR 2x3 BRACE(S), 2 FOR 1x4, 2x4, 2x5, 3 FOR 2x6, 4 FOR 2x8, 5 FOR 2x10, AND 6 FOR 2x12.

END VERTICAL(S) MUST BE SHEATHED OR HAVE BRACES AS INDICATED IN THE MAX. UNBRACED LENGTH COLUMN OF THE TABLE BELOW

LOADING

TOTAL LOAD CASES: (4)

CHORDS

MEMB. FR-TO	MAX. FACTORED FORCE (LBS)	FACTORED VERT. LOAD LC1 (PLF) FROM	TO	MAX CSI (LC)	MAX. UNBRAC LENGTH
1- 2	0 / 29	-77.3	-77.3	0.10 (1)	10.00
2- 3	-572 / 0	-77.3	-77.3	0.52 (1)	6.25
3- 4	-37 / 0	-77.3	-77.3	0.51 (1)	6.25
4- 5	-37 / 0	-77.3	-77.3	0.51 (1)	6.25
6- 5	-205 / 0	0.0	0.0	0.12 (1)	6.25
8- 2	-727 / 0	0.0	0.0	0.07 (1)	7.81
8- 7	0 / 0	-17.5	-17.5	0.25 (4)	10.00
7- 6	0 / 507	-17.5	-17.5	0.29 (4)	10.00

WEBS

MEMB. FR-TO	MAX. FACTORED FORCE (LBS)	MAX CSI (LC)
7- 3	0 / 149	0.05 (4)
3- 6	-656 / 0	0.37 (1)
2- 7	0 / 513	0.12 (1)

DESIGN CRITERIA

SPECIFIED LOADS:

TOP CH.	LL	=	23.3	PSF
	DL	=	3.0	PSF
BOT CH.	LL	=	0.0	PSF
	DL	=	7.0	PSF
TOTAL LOAD		=	33.3	PSF

SPACING = 24.0 IN. C/C

THIS TRUSS IS DESIGNED FOR RESIDENTIAL OR SMALL BUILDING REQUIREMENTS OF PART 9, NBCC 2010

THIS DESIGN COMPLIES WITH:
- PART 9 OF OBC 2012 , BCBC 2012 , ABC 2014
- CSA 086-09
- TPIC 2011

(55 % OF 27.2 P.S.F. G.S.L. PLUS 8.4 P.S.F. RAIN LOAD) EQUALS 23.3 P.S.F. SPECIFIED ROOF LIVE LOAD

ALLOWABLE DEFL.(LL)= L/360 (0.47")
CALCULATED VERT. DEFL.(LL) = L/ 999 (0.01")
ALLOWABLE DEFL.(TL)= L/360 (0.47")
CALCULATED VERT. DEFL.(TL) = L/ 999 (0.06")

CSI: TC=0.52 (2-3:1) , BC=0.29 (6-7:4) , WB=0.37 (3-6:1) , SSI=0.22 (3-5:1)

DOL LUMBER=1.00 NAIL=1.00 LS BEND=1.10 COMP=1.10 SHEAR=1.10 TENS= 1.10

COMPANION LIVE LOAD FACTOR = 0.50

TRUSS PLATE MANUFACTURER IS NOT RESPONSIBLE FOR QUALITY CONTROL IN THE TRUSS MANUFACTURING PLANT .

NAIL VALUES

PLATE	GRIP(DRY) (PSI) MAX	MIN	SHEAR (PLI) MAX	MIN	SECTION (PLI) MAX	MIN
MT20	618	354	1667	822	2284	1656

PLATE PLACEMENT TOL. = 0.250 inches

PLATE ROTATION TOL. = 0.5 Deg.

JSI GRIP= 0.87 (7) (INPUT = 0.90)
JSI METAL= 0.23 (2) (INPUT = 1.00)

LICENSED PROFESSIONAL ENGINEER
R.M. TREVISAN
100136551
March 14th, 2017
PROVINCE OF ONTARIO

RECEIVED
TOWN OF MILTON
MAR 29, 2017
17-5233
BUILDING DIVISION

READ ALL NOTES ON THIS PAGE AND ON THE ENGINEERING NOTE PAGE ENP-1. THE NOTE PAGE IS AN INTEGRAL PART OF THIS DRAWING AS IT CONTAINS SPECIFICATIONS AND CRITERIA USED IN THE DESIGN OF THIS COMPONENT.

KOTT

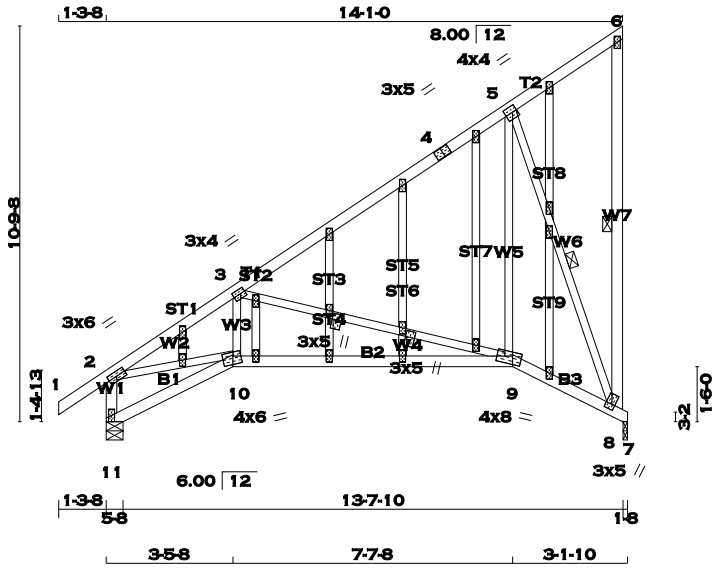

SCALE = 1:62.8

TOTAL WEIGHT = 93 lb

LUMBER

N. L. G. A. RULES

CHORDS	SIZE		LUMBER	DESCR.
1 - 4	2x4	DRY	No.2	SPF
4 - 6	2x4	DRY	No.2	SPF
8 - 6	2x4	DRY	No.2	SPF
11 - 2	2x4	DRY	No.2	SPF
11 - 10	2x4	DRY	No.2	SPF
10 - 9	2x4	DRY	No.2	SPF
9 - 7	2x4	DRY	No.2	SPF
ALL WEBS EXCEPT	2x3	DRY	No.2	SPF
ALL GABLE WEBS	2x3	DRY	No.2	SPF

DRY: SEASONED LUMBER.

GABLE STUDS SPACED AT 2-0-0 OC.

PLATES (table is in inches)

JT	TYPE	PLATES	W	LEN	Y	X
2	TMVW-t	MT20	3.0	6.0		
3	TMWW-t	MT20	3.0	4.0	1.50	1.50
4	TS-t	MT20	3.0	5.0		
5	TMWW-t	MT20	4.0	4.0	2.00	1.50
6	TMV+p	MT20	2.0	4.0		
8	BMVW+t	MT20	3.0	5.0	1.75	1.00
9	BBWW-m	MT20	4.0	8.0	2.75	3.00
10	BBWW-m	MT20	4.0	6.0	2.75	2.50
11	BMV1+p	MT20	2.0	4.0		
12, 13, 14, 14, 15, 16, 17, 18, 19, 20, 21, 22, 23, 24, 25, 26						
12	NP+w	MT20	2.0	4.0		
19	NP+t	MT20	3.0	5.0	2.00	0.25
20	NP+t	MT20	3.0	5.0	2.00	0.25

A SIZE FOR SIZE SUBSTITUTION OF MITEK MII20 WITH TEE-LOK TL20 PLATES IS ALLOWED.

DIMENSIONS, SUPPORTS AND LOADINGS SPECIFIED BY FABRICATOR TO BE VERIFIED BY BUILDING DESIGNER

BEARINGS

JT	FACTORED GROSS REACTION VERT	HORZ	MAXIMUM FACTORED GROSS REACTION DOWN	HORZ	UPLIFT	INPUT BRG IN-SX	REQRD BRG IN-SX
11	782	0	782	0	0	5-8	5-8
7	663	0	663	0	0	1-8	1-8

UNFACTORED REACTIONS

JT	1ST LCASE COMBINED	MAX./MIN. COMPONENT REACTIONS SNOW	LIVE	PERM.LIVE	WIND	DEAD	SOIL
11	547	396 / 0	0 / 0	0 / 0	0 / 0	151 / 0	0 / 0
7	465	324 / 0	0 / 0	0 / 0	0 / 0	142 / 0	0 / 0

BEARING MATERIAL TO BE SPF NO.2 OR BETTER AT JOINT(S) 11, 7

BRACING

TOP CHORD TO BE SHEATHED OR MAX. PURLIN SPACING = 5.19 FT.
MAX. UNBRACED BOTTOM CHORD LENGTH = 6.25 FT. OR RIGID CEILING DIRECTLY APPLIED.

ALL PITCH BREAKS AND PERIMETER CORNER JOINTS MUST BE LATERALLY RESTRAINED.

1 - 2x3 SPF No.2 LATERAL BRACE(S) AT 1/ 2 LENGTH OF 6-8. DBS = 20-0-0 . CBF = 3 LBS.
1 - 2x3 SPF No.2 LATERAL BRACE(S) AT 1/ 2 LENGTH OF 5-8. DBS = 16-0-0 . CBF = 85 LBS.

DBS = DIAGONAL BRACE SPACING (MAX). CBF = CUMULATIVE BRACING FORCE. FASTEN LATERAL BRACE(S) USING (0.122"X3") SPIRAL NAILS : 1 NAIL FOR 2x3 BRACE(S), 2 FOR 1x4, 2x4, 2x5, 3 FOR 2x6, 4 FOR 2x8, 5 FOR 2x10, AND 6 FOR 2x12.

END VERTICAL(S) MUST BE SHEATHED OR HAVE BRACES AS INDICATED IN THE MAX. UNBRACED LENGTH COLUMN OF THE TABLE BELOW

LOADING

TOTAL LOAD CASES: (4)

CHORDS

MEMB. FR-TO	MAX. FACTORED FORCE (LBS)	FACTORED VERT. LOAD (PLF) FROM	TO	LC1 MAX CSI (LC)	MAX. UNBRAC LENGTH
1- 2	0 / 29	-77.3	-77.3	0.10 (1)	10.00
2- 3	-1253 / 0	-77.3	-77.3	0.41 (1)	5.19
3- 4	-343 / 0	-77.3	-77.3	0.43 (1)	6.25
4- 5	-343 / 0	-77.3	-77.3	0.43 (1)	6.25
5- 6	-54 / 0	-77.3	-77.3	0.41 (1)	6.25
8- 6	-24 / 0	0.0	0.0	0.01 (1)	6.25
11- 2	-752 / 0	0.0	0.0	0.08 (1)	7.81
11-10	0 / 0	-17.5	-17.5	0.06 (4)	10.00
10- 9	0 / 1065	-17.5	-17.5	0.37 (4)	10.00
9- 8	0 / 346	-17.5	-17.5	0.21 (1)	10.00
8- 7	-296 / 0	-17.5	-17.5	0.16 (1)	6.25

WEBS

MEMB. FR-TO	MAX. FACTORED FORCE (LBS)	MAX CSI (LC)
10- 3	0 / 231	0.05 (1)
3- 9	-804 / 0	0.98 (1)
9- 5	0 / 479	0.11 (1)
5- 8	-847 / 0	0.45 (1)
2-10	0 / 1086	0.24 (1)

DESIGN CRITERIA

SPECIFIED LOADS:

TOP	CH.	LL	=	23.3	PSF
		DL	=	3.0	PSF
BOT	CH.	LL	=	0.0	PSF
		DL	=	7.0	PSF
TOTAL	LOAD		=	33.3	PSF

SPACING = 24.0 IN. C/C

THIS TRUSS IS DESIGNED FOR RESIDENTIAL OR SMALL BUILDING REQUIREMENTS OF PART 9, NBCC 2010

THIS DESIGN COMPLIES WITH:
- PART 9 OF OBC 2012 , BCBC 2012 , ABC 2014
- CSA 086-09
- TPIC 2011

(55 % OF 27.2 P.S.F. G.S.L. PLUS 8.4 P.S.F. RAIN LOAD) EQUALS 23.3 P.S.F. SPECIFIED ROOF LIVE LOAD

ALLOWABLE DEFL.(LL)= L/360 (0.48")
CALCULATED VERT. DEFL.(LL) = L/ 999 (0.04")
ALLOWABLE DEFL.(TL)= L/360 (0.48")
CALCULATED VERT. DEFL.(TL) = L/ 855 (0.20")

CSI: TC=0.43 (3-5:1) , BC=0.37 (9-10:4) , WB=0.98 (3-9:1) , SSI=0.46 (7-8:1)

DOL LUMBER=1.00 NAIL=1.00 LS BEND=1.10 COMP=1.10 SHEAR=1.10 TENS= 1.10

COMPANION LIVE LOAD FACTOR = 0.50

AUTOSOLVE RIGHT HEEL ONLY

TRUSS PLATE MANUFACTURER IS NOT RESPONSIBLE FOR QUALITY CONTROL IN THE TRUSS MANUFACTURING PLANT .

NAIL VALUES

PLATE	GRIP(DRY) (PSI) MAX	MIN	SHEAR (PLI) MAX	MIN	SECTION (PLI) MAX	MIN
MT20	618	354	1667	822	2284	1656

PLATE PLACEMENT TOL. = 0.250 inches

PLATE ROTATION TOL. = 5.0 Deg.

JSI GRIP= 0.88 (3) (INPUT = 0.90)
JSI METAL= 0.35 (2) (INPUT = 1.00)

LICENSED PROFESSIONAL ENGINEER
P.M. TREVISAN
100136551
March 14th, 2017
PROVINCE OF ONTARIO

RECEIVED
TOWN OF MILTON
MAR 29, 2017
17-5233
BUILDING DIVISION

READ ALL NOTES ON THIS PAGE AND ON THE ENGINEERING NOTE PAGE ENP-1. THE NOTE PAGE IS AN INTEGRAL PART OF THIS DRAWING AS IT CONTAINS SPECIFICATIONS AND CRITERIA USED IN THE DESIGN OF THIS COMPONENT.

KOTT

JOB NAME	TRUSS NAME	QUANTITY	PLY	JOB DESC.	DRWG NO.
PT0317-081	**T52**	**1**	**1**	TRUSS DESC. LECCO RIDGE-BLOCK 338	

ENG JOB: PT0317-081

KOTT , Stouffville, ON, CGC

Version 8.100 S Feb 9 2017 MiTek Industries, Inc. Tue Mar 14 15:57:42 2017 Page 1

ID:EvTixTQDI5yR1QLotZTBr_yE?HJ-hB?rr4U7ufxGoa4kjVqwrrcp_4mRAtBN2jvC5azb_P7

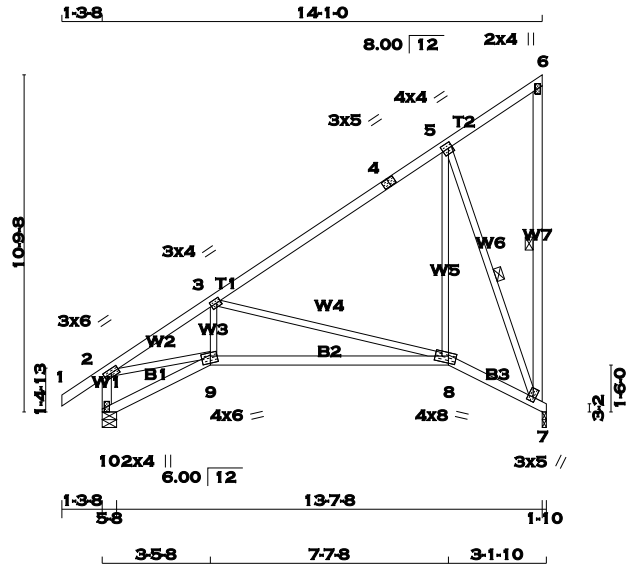

SCALE = 1:73.8

TOTAL WEIGHT = 74 lb

[M][F]

LUMBER

N. L. G. A. RULES

CHORDS	SIZE		LUMBER	DESCR.
1 - 4	2x4	DRY	No.2	SPF
4 - 6	2x4	DRY	No.2	SPF
7 - 6	2x4	DRY	No.2	SPF
10 - 2	2x4	DRY	No.2	SPF
10 - 9	2x4	DRY	No.2	SPF
9 - 8	2x4	DRY	No.2	SPF
8 - 7	2x4	DRY	No.2	SPF
ALL WEBS EXCEPT	2x3	DRY	No.2	SPF

DRY: SEASONED LUMBER.

PLATES (table is in inches)

JT	TYPE	PLATES	W	LEN	Y	X
2	TMVW-t	MT20	3.0	6.0		
3	TMWW-t	MT20	3.0	4.0	1.50	1.50
4	TS-t	MT20	3.0	5.0		
5	TMWW-t	MT20	4.0	4.0	2.00	1.50
6	TMV+p	MT20	2.0	4.0		
7	BMVW1+t	MT20	3.0	5.0	1.75	1.00
8	BBWW-m	MT20	4.0	8.0	2.75	3.00
9	BBWW-m	MT20	4.0	6.0	2.75	2.50
10	BMV1+p	MT20	2.0	4.0		

A SIZE FOR SIZE SUBSTITUTION OF MITEK MII20 WITH TEE-LOK TL20 PLATES IS ALLOWED.

DIMENSIONS, SUPPORTS AND LOADINGS SPECIFIED BY FABRICATOR TO BE VERIFIED BY BUILDING DESIGNER

BEARINGS

JT	FACTORED GROSS REACTION VERT	HORZ	MAXIMUM FACTORED GROSS REACTION DOWN	HORZ	UPLIFT	INPUT BRG IN-SX	REQRD BRG IN-SX
7	668	0	668	0	0	1-10	1-10
10	774	0	774	0	0	5-8	5-8

UNFACTORED REACTIONS

JT	1ST LCASE COMBINED	MAX./MIN. COMPONENT REACTIONS SNOW	LIVE	PERM.LIVE	WIND	DEAD	SOIL
7	469	328 / 0	0 / 0	0 / 0	0 / 0	141 / 0	0 / 0
10	541	392 / 0	0 / 0	0 / 0	0 / 0	149 / 0	0 / 0

BEARING MATERIAL TO BE SPF NO.2 OR BETTER AT JOINT(S) 7, 10

BRACING

TOP CHORD TO BE SHEATHED OR MAX. PURLIN SPACING = 5.42 FT.
MAX. UNBRACED BOTTOM CHORD LENGTH = 10.00 FT. OR RIGID CEILING DIRECTLY APPLIED.

ALL PITCH BREAKS AND PERIMETER CORNER JOINTS MUST BE LATERALLY RESTRAINED.

1 - 2x3 SPF No.2 LATERAL BRACE(S) AT 1/ 2 LENGTH OF 6-7. DBS = 20-0-0 . CBF = 3 LBS.
1 - 2x3 SPF No.2 LATERAL BRACE(S) AT 1/ 2 LENGTH OF 5-7. DBS = 18-0-0 . CBF = 91 LBS.

DBS = DIAGONAL BRACE SPACING (MAX). CBF = CUMULATIVE BRACING FORCE. FASTEN LATERAL BRACE(S) USING (0.122"X3") SPIRAL NAILS : 1 NAIL FOR 2x3 BRACE(S), 2 FOR 1x4, 2x4, 2x5, 3 FOR 2x6, 4 FOR 2x8, 5 FOR 2x10, AND 6 FOR 2x12.

END VERTICAL(S) MUST BE SHEATHED OR HAVE BRACES AS INDICATED IN THE MAX. UNBRACED LENGTH COLUMN OF THE TABLE BELOW

LOADING

TOTAL LOAD CASES: (4)

CHORDS

MEMB. FR-TO	MAX. FACTORED FORCE (LBS)	FACTORED VERT. LOAD (PLF) FROM	TO	LC1 MAX CSI (LC)	MAX. UNBRAC LENGTH
1- 2	0 / 29	-77.3	-77.3	0.10 (1)	10.00
2- 3	-1235 / 0	-77.3	-77.3	0.31 (1)	5.42
3- 4	-327 / 0	-77.3	-77.3	0.37 (1)	6.25
4- 5	-327 / 0	-77.3	-77.3	0.37 (1)	6.25
5- 6	-54 / 0	-77.3	-77.3	0.31 (1)	6.25
7- 6	-23 / 0	0.0	0.0	0.01 (1)	6.25
10- 2	-744 / 0	0.0	0.0	0.08 (1)	7.81
10- 9	0 / 0	-17.5	-17.5	0.06 (4)	10.00
9- 8	0 / 1050	-17.5	-17.5	0.37 (4)	10.00
8- 7	0 / 313	-17.5	-17.5	0.08 (1)	10.00

WEBS

MEMB. FR-TO	MAX. FACTORED FORCE (LBS)	MAX CSI (LC)
9- 3	0 / 229	0.05 (1)
3- 8	-802 / 0	0.98 (1)
8- 5	0 / 433	0.10 (1)
5- 7	-808 / 0	0.43 (1)
2- 9	0 / 1071	0.24 (1)

DESIGN CRITERIA

SPECIFIED LOADS:

TOP CH.	LL	=	23.3	PSF
	DL	=	3.0	PSF
BOT CH.	LL	=	0.0	PSF
	DL	=	7.0	PSF
TOTAL LOAD		=	33.3	PSF

SPACING = 24.0 IN. C/C

THIS TRUSS IS DESIGNED FOR RESIDENTIAL OR SMALL BUILDING REQUIREMENTS OF PART 9, NBCC 2010

THIS DESIGN COMPLIES WITH:
- PART 9 OF OBC 2012 , BCBC 2012 , ABC 2014
- CSA 086-09
- TPIC 2011

(55 % OF 27.2 P.S.F. G.S.L. PLUS 8.4 P.S.F. RAIN LOAD) EQUALS 23.3 P.S.F. SPECIFIED ROOF LIVE LOAD

ALLOWABLE DEFL.(LL)= L/360 (0.47")
CALCULATED VERT. DEFL.(LL) = L/ 999 (0.04")
ALLOWABLE DEFL.(TL)= L/360 (0.47")
CALCULATED VERT. DEFL.(TL) = L/ 868 (0.19")

CSI: TC=0.37 (3-5:1) , BC=0.37 (8-9:4) , WB=0.98 (3-8:1) , SSI=0.19 (3-5:1)

DOL LUMBER=1.00 NAIL=1.00 LS BEND=1.10 COMP=1.10 SHEAR=1.10 TENS= 1.10

COMPANION LIVE LOAD FACTOR = 0.50

AUTOSOLVE RIGHT HEEL ONLY

TRUSS PLATE MANUFACTURER IS NOT RESPONSIBLE FOR QUALITY CONTROL IN THE TRUSS MANUFACTURING PLANT .

NAIL VALUES

PLATE	GRIP(DRY) (PSI) MAX	MIN	SHEAR (PLI) MAX	MIN	SECTION (PLI) MAX	MIN
MT20	618	354	1667	822	2284	1656

PLATE PLACEMENT TOL. = 0.250 inches

PLATE ROTATION TOL. = 5.0 Deg.

JSI GRIP= 0.88 (3) (INPUT = 0.90)
JSI METAL= 0.34 (2) (INPUT = 1.00)

LICENSED PROFESSIONAL ENGINEER
R.M. TREVISAN
100136551
March 14th, 2017
PROVINCE OF ONTARIO

RECEIVED
TOWN OF MILTON
MAR 29, 2017
17-5233
BUILDING DIVISION

READ ALL NOTES ON THIS PAGE AND ON THE ENGINEERING NOTE PAGE ENP-1. THE NOTE PAGE IS AN INTEGRAL PART OF THIS DRAWING AS IT CONTAINS SPECIFICATIONS AND CRITERIA USED IN THE DESIGN OF THIS COMPONENT.

KOTT

JOB NAME	TRUSS NAME	QUANTITY	PLY	JOB DESC.	DRWG NO.
PT0317-081	T53	1	1	TRUSS DESC. LECCO RIDGE-BLOCK 338	ENG JOB: PT0317-081

KOTT , Stouffville, ON, CGC

Version 8.100 S Feb 9 2017 MiTek Industries, Inc. Tue Mar 14 15:57:43 2017 Page 1

ID:EvTixTQDI5yR1QLotZTBr_yE?HJ-9OZD3QVmfz37QkfwHDM9N382vUBgvZsWHNfld1zb_P6

SCALE = 1:21.7

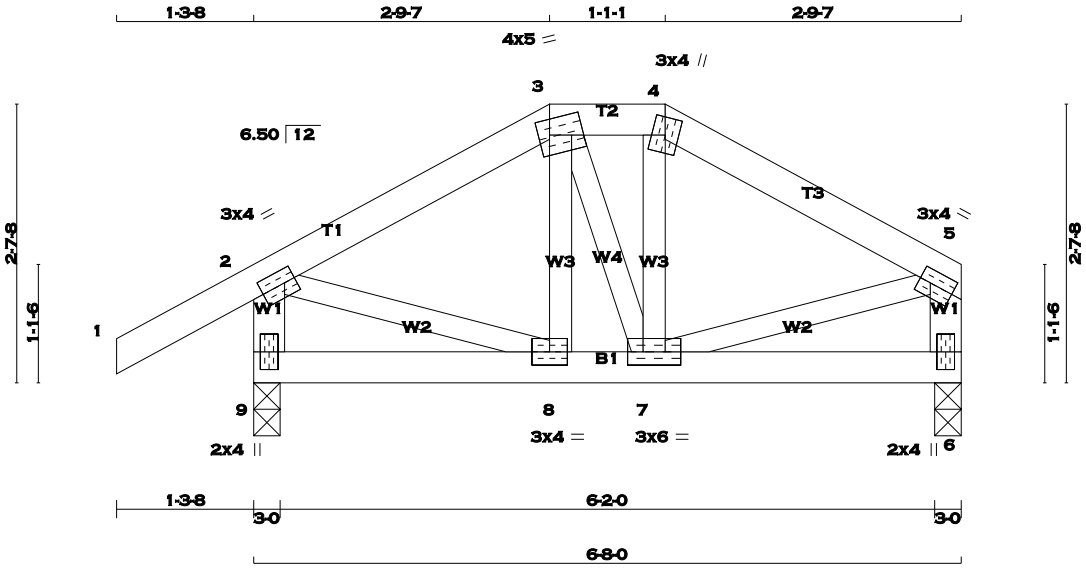

TOTAL WEIGHT = 29 lb

[M][F]

LUMBER

N. L. G. A. RULES

CHORDS	SIZE		LUMBER	DESCR.
1 - 3	2x4	DRY	No.2	SPF
3 - 4	2x4	DRY	No.2	SPF
4 - 5	2x4	DRY	No.2	SPF
9 - 2	2x4	DRY	No.2	SPF
6 - 5	2x4	DRY	No.2	SPF
9 - 6	2x4	DRY	No.2	SPF
ALL WEBS EXCEPT	2x3	DRY	No.2	SPF

DRY: SEASONED LUMBER.

PLATES (table is in inches)

JT	TYPE	PLATES	W	LEN	Y	X
2	TMVW-t	MT20	3.0	4.0	1.50	1.25
3	TTWW-m	MT20	4.0	5.0	1.75	1.25
4	TTW+m	MT20	3.0	4.0		
5	TMVW-t	MT20	3.0	4.0	1.50	1.25
6	BMV1+p	MT20	2.0	4.0		
7	BMWWW-t	MT20	3.0	6.0		
8	BMWW-t	MT20	3.0	4.0		
9	BMV1+p	MT20	2.0	4.0		

A SIZE FOR SIZE SUBSTITUTION OF MITEK MII20 WITH TEE-LOK TL20 PLATES IS ALLOWED.

DIMENSIONS, SUPPORTS AND LOADINGS SPECIFIED BY FABRICATOR TO BE VERIFIED BY BUILDING DESIGNER

BEARINGS

JT	FACTORED GROSS REACTION VERT	HORZ	MAXIMUM FACTORED GROSS REACTION DOWN	HORZ	UPLIFT	INPUT BRG IN-SX	REQRD BRG IN-SX
9	421	0	421	0	0	3-0	3-0
6	316	0	316	0	0	3-0	3-0

UNFACTORED REACTIONS

JT	1ST LCASE COMBINED	MAX./MIN. COMPONENT REACTIONS SNOW	LIVE	PERM.LIVE	WIND	DEAD	SOIL
9	293	219 / 0	0 / 0	0 / 0	0 / 0	75 / 0	0 / 0
6	222	155 / 0	0 / 0	0 / 0	0 / 0	67 / 0	0 / 0

BEARING MATERIAL TO BE SPF NO.2 OR BETTER AT JOINT(S) 9, 6

BRACING

TOP CHORD TO BE SHEATHED OR MAX. PURLIN SPACING = 6.25 FT.
MAX. UNBRACED BOTTOM CHORD LENGTH = 10.00 FT. OR RIGID CEILING DIRECTLY APPLIED.

ALL PITCH BREAKS AND PERIMETER CORNER JOINTS MUST BE LATERALLY RESTRAINED.

LOADING

TOTAL LOAD CASES: (4)

CHORDS

MEMB. FR-TO	MAX. FACTORED FORCE (LBS)	FACTORED VERT. LOAD (PLF) FROM	TO	LC1 MAX CSI (LC)	MAX. UNBRAC LENGTH
1- 2	0 / 25	-77.3	-77.3	0.10 (1)	10.00
2- 3	-257 / 0	-77.3	-77.3	0.08 (1)	6.25
3- 4	-224 / 0	-77.3	-77.3	0.01 (1)	6.25
4- 5	-257 / 0	-77.3	-77.3	0.08 (1)	6.25
9- 2	-399 / 0	0.0	0.0	0.04 (1)	7.81
6- 5	-293 / 0	0.0	0.0	0.03 (1)	7.81
9- 8	0 / 0	-17.5	-17.5	0.03 (4)	10.00
8- 7	0 / 225	-17.5	-17.5	0.05 (1)	10.00
7- 6	0 / 0	-17.5	-17.5	0.03 (4)	10.00

WEBS

MEMB. FR-TO	MAX. FACTORED FORCE (LBS)	MAX CSI (LC)
8- 3	-26 / 21	0.01 (4)
3- 7	-1 / 1	0.00 (4)
7- 4	-27 / 22	0.01 (4)
2- 8	0 / 234	0.05 (1)
7- 5	0 / 234	0.05 (1)

DESIGN CRITERIA

SPECIFIED LOADS:

TOP	CH.	LL	=	23.3	PSF
		DL	=	3.0	PSF
BOT	CH.	LL	=	0.0	PSF
		DL	=	7.0	PSF
TOTAL	LOAD		=	33.3	PSF

SPACING = 24.0 IN. C/C

LOADING IN FLAT SECTION BASED ON A SLOPE OF 6.00/12

THIS TRUSS IS DESIGNED FOR RESIDENTIAL OR SMALL BUILDING REQUIREMENTS OF PART 9, NBCC 2010

THIS DESIGN COMPLIES WITH:
- PART 9 OF OBC 2012 , BCBC 2012 , ABC 2014
- CSA 086-09
- TPIC 2011

(55 % OF 27.2 P.S.F. G.S.L. PLUS 8.4 P.S.F. RAIN LOAD) EQUALS 23.3 P.S.F. SPECIFIED ROOF LIVE LOAD

ALLOWABLE DEFL.(LL)= L/360 (0.22")
CALCULATED VERT. DEFL.(LL) = L/ 999 (0.00")
ALLOWABLE DEFL.(TL)= L/360 (0.22")
CALCULATED VERT. DEFL.(TL) = L/ 999 (0.00")

CSI: TC=0.10 (1-2:1) , BC=0.05 (7-8:1) , WB=0.05 (2-8:1) , SSI=0.07 (2-3:1)

DOL LUMBER=1.00 NAIL=1.00 LS BEND=1.10 COMP=1.10 SHEAR=1.10 TENS= 1.10

COMPANION LIVE LOAD FACTOR = 0.50

TRUSS PLATE MANUFACTURER IS NOT RESPONSIBLE FOR QUALITY CONTROL IN THE TRUSS MANUFACTURING PLANT .

NAIL VALUES

PLATE	GRIP(DRY) (PSI) MAX	MIN	SHEAR (PLI) MAX	MIN	SECTION (PLI) MAX	MIN
MT20	618	354	1667	822	2284	1656

PLATE PLACEMENT TOL. = 0.250 inches

PLATE ROTATION TOL. = 0.5 Deg.

JSI GRIP= 0.58 (2) (INPUT = 0.90)
JSI METAL= 0.13 (2) (INPUT = 1.00)

LICENSED PROFESSIONAL ENGINEER
P.M. TREVISAN
100136551
March 14th, 2017
PROVINCE OF ONTARIO

RECEIVED
TOWN OF MILTON
MAR 29, 2017
17-5233
BUILDING DIVISION

READ ALL NOTES ON THIS PAGE AND ON THE ENGINEERING NOTE PAGE ENP-1. THE NOTE PAGE IS AN INTEGRAL PART OF THIS DRAWING AS IT CONTAINS SPECIFICATIONS AND CRITERIA USED IN THE DESIGN OF THIS COMPONENT.

KOTT

JOB NAME	TRUSS NAME	QUANTITY	PLY	JOB DESC.	DRWG NO.
PT0317-081	T54	2	1	TRUSS DESC. LECCO RIDGE-BLOCK 338	

KOTT , Stouffville, ON, CGC

Version 8.100 S Feb 9 2017 MiTek Industries, Inc. Tue Mar 14 15:57:44 2017 Page 1
ID:EvTixTQDI5yR1QLotZTBr_yE?HJ-da7bGmWOQHB_1uD6rwtOwGhDVtXqe09fW1OJ9Tzb_P5

SCALE = 1:23.7

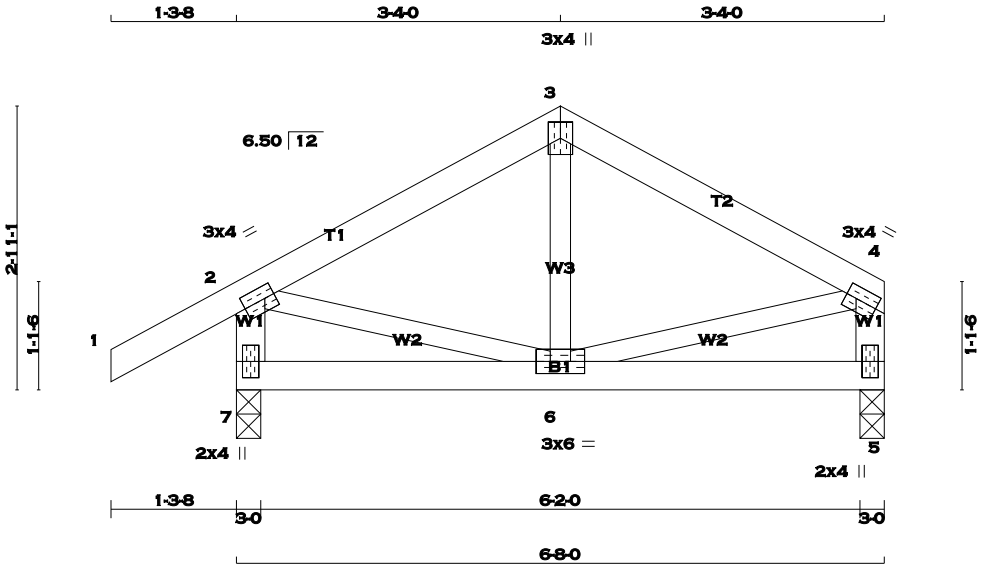

TOTAL WEIGHT = 2 X 27 = 53 lb
[M][F]

LUMBER
N. L. G. A. RULES

CHORDS	SIZE		LUMBER	DESCR.
1 - 3	2x4	DRY	No.2	SPF
3 - 4	2x4	DRY	No.2	SPF
7 - 2	2x4	DRY	No.2	SPF
5 - 4	2x4	DRY	No.2	SPF
7 - 5	2x4	DRY	No.2	SPF
ALL WEBS EXCEPT	2x3	DRY	No.2	SPF

DRY: SEASONED LUMBER.

PLATES (table is in inches)

JT	TYPE	PLATES	W	LEN	Y	X
2	TMVW-t	MT20	3.0	4.0	1.50	1.25
3	TTW+p	MT20	3.0	4.0		
4	TMVW-t	MT20	3.0	4.0	1.50	1.25
5	BMV1+p	MT20	2.0	4.0		
6	BMWWW-t	MT20	3.0	6.0		
7	BMV1+p	MT20	2.0	4.0		

A SIZE FOR SIZE SUBSTITUTION OF MITEK MII20 WITH TEE-LOK TL20 PLATES IS ALLOWED.

DIMENSIONS, SUPPORTS AND LOADINGS SPECIFIED BY FABRICATOR TO BE VERIFIED BY BUILDING DESIGNER

BEARINGS

JT	FACTORED GROSS REACTION VERT	HORZ	MAXIMUM FACTORED GROSS REACTION DOWN	HORZ	UPLIFT	INPUT BRG IN-SX	REQRD BRG IN-SX
7	421	0	421	0	0	3-0	3-0
5	316	0	316	0	0	3-0	3-0

UNFACTORED REACTIONS

JT	1ST LCASE COMBINED	MAX./MIN. COMPONENT REACTIONS SNOW	LIVE	PERM.LIVE	WIND	DEAD	SOIL
7	293	219 / 0	0 / 0	0 / 0	0 / 0	75 / 0	0 / 0
5	222	155 / 0	0 / 0	0 / 0	0 / 0	67 / 0	0 / 0

BEARING MATERIAL TO BE SPF NO.2 OR BETTER AT JOINT(S) 7, 5

BRACING
TOP CHORD TO BE SHEATHED OR MAX. PURLIN SPACING = 6.25 FT.
MAX. UNBRACED BOTTOM CHORD LENGTH = 10.00 FT. OR RIGID CEILING DIRECTLY APPLIED.

ALL PITCH BREAKS AND PERIMETER CORNER JOINTS MUST BE LATERALLY RESTRAINED.

LOADING
TOTAL LOAD CASES: (4)

CHORDS

MEMB. FR-TO	MAX. FACTORED FORCE (LBS)	FACTORED VERT. LOAD (PLF) FROM	TO	LC1 MAX CSI (LC)	MAX. UNBRAC LENGTH
1- 2	0 / 25	-77.3	-77.3	0.10 (1)	10.00
2- 3	-238 / 0	-77.3	-77.3	0.11 (1)	6.25
3- 4	-238 / 0	-77.3	-77.3	0.11 (1)	6.25
7- 2	-398 / 0	0.0	0.0	0.04 (1)	7.81
5- 4	-293 / 0	0.0	0.0	0.03 (1)	7.81
7- 6	0 / 0	-17.5	-17.5	0.05 (4)	10.00
6- 5	0 / 0	-17.5	-17.5	0.05 (4)	10.00

WEBS

MEMB. FR-TO	MAX. FACTORED FORCE (LBS)	MAX CSI (LC)
6- 3	-31 / 47	0.02 (4)
2- 6	0 / 215	0.05 (1)
6- 4	0 / 215	0.05 (1)

DESIGN CRITERIA

SPECIFIED LOADS:

TOP	CH.	LL	=	23.3	PSF
		DL	=	3.0	PSF
BOT	CH.	LL	=	0.0	PSF
		DL	=	7.0	PSF
TOTAL	LOAD		=	33.3	PSF

SPACING = 24.0 IN. C/C

THIS TRUSS IS DESIGNED FOR RESIDENTIAL OR SMALL BUILDING REQUIREMENTS OF PART 9, NBCC 2010

THIS DESIGN COMPLIES WITH:
- PART 9 OF OBC 2012 , BCBC 2012 , ABC 2014
- CSA 086-09
- TPIC 2011

(55 % OF 27.2 P.S.F. G.S.L. PLUS 8.4 P.S.F. RAIN LOAD) EQUALS 23.3 P.S.F. SPECIFIED ROOF LIVE LOAD

ALLOWABLE DEFL.(LL)= L/360 (0.22")
CALCULATED VERT. DEFL.(LL) = L/ 999 (0.00")
ALLOWABLE DEFL.(TL)= L/360 (0.22")
CALCULATED VERT. DEFL.(TL) = L/ 999 (0.01")

CSI: TC=0.11 (3-4:1) , BC=0.05 (5-6:4) , WB=0.05 (2-6:1) , SSI=0.09 (3-4:1)

DOL LUMBER=1.00 NAIL=1.00 LS BEND=1.10 COMP=1.10 SHEAR=1.10 TENS= 1.10

COMPANION LIVE LOAD FACTOR = 0.50

TRUSS PLATE MANUFACTURER IS NOT RESPONSIBLE FOR QUALITY CONTROL IN THE TRUSS MANUFACTURING PLANT .

NAIL VALUES

PLATE	GRIP(DRY) (PSI) MAX	MIN	SHEAR (PLI) MAX	MIN	SECTION (PLI) MAX	MIN
MT20	618	354	1667	822	2284	1656

PLATE PLACEMENT TOL. = 0.250 inches

PLATE ROTATION TOL. = 5.0 Deg.

JSI GRIP= 0.54 (4) (INPUT = 0.90)
JSI METAL= 0.13 (2) (INPUT = 1.00)

LICENSED PROFESSIONAL ENGINEER
R.M. TREVISAN
100136551
March 14th, 2017
PROVINCE OF ONTARIO

RECEIVED
TOWN OF MILTON
MAR 29, 2017
17-5233
BUILDING DIVISION

READ ALL NOTES ON THIS PAGE AND ON THE ENGINEERING NOTE PAGE ENP-1. THE NOTE PAGE IS AN INTEGRAL PART OF THIS DRAWING AS IT CONTAINS SPECIFICATIONS AND CRITERIA USED IN THE DESIGN OF THIS COMPONENT.

KOTT

JOB NAME	TRUSS NAME	QUANTITY	PLY	JOB DESC.	DRWG NO.
T-BLOCK338	T55	1	1	LECCO RIDGE-BLOCK 338	ENG JOB: PT0317-081

KOTT , Stouffville, ON, Alan Attwater

Version 8.100 S Feb 9 2017 MiTek Industries, Inc. Wed Mar 15 08:30:04 2017 Page 1

ID:EvTixTQDI5yR1QLotZTBr_yE?HJ-oACz_Hi3ejUWou9ATI_?Ipf1WpGozwbQjHFuvRzalsn

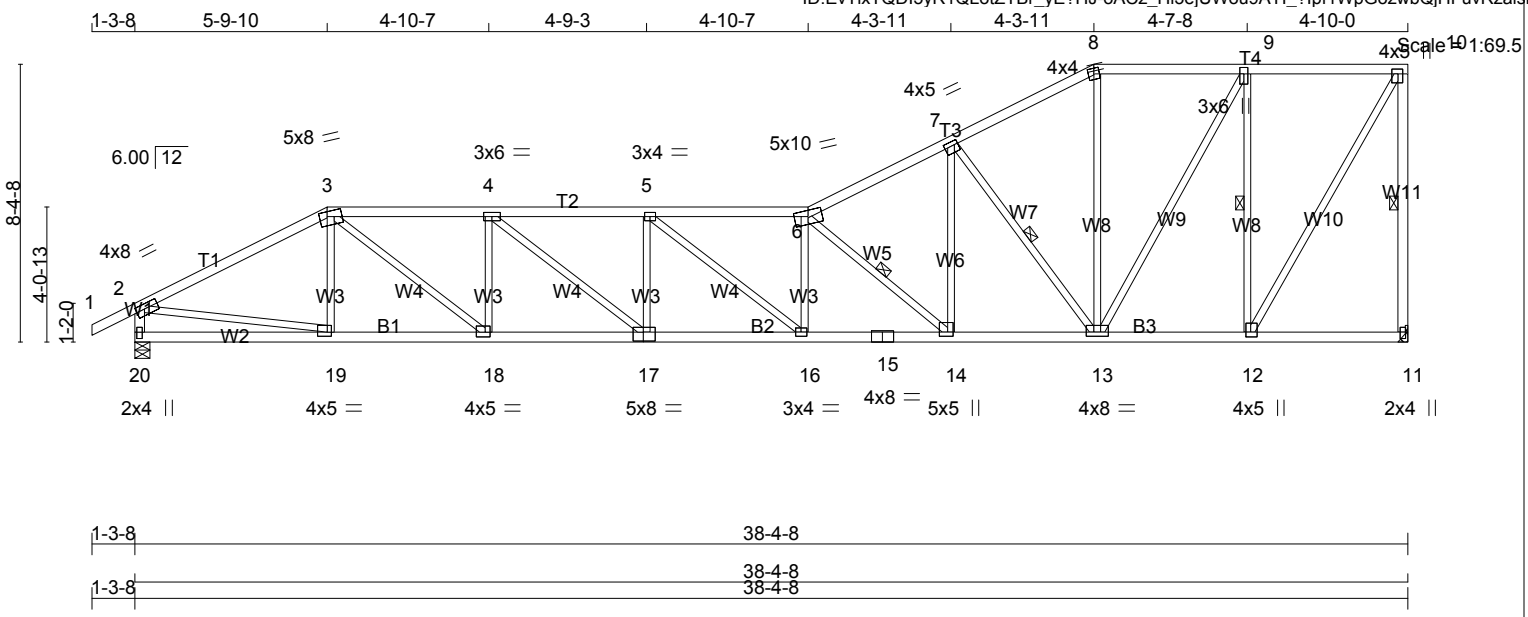

TOTAL WEIGHT = 173 lb

LUMBER

N. L. G. A. RULES

CHORDS	SIZE		LUMBER	DESCR.
1 - 3	2x4	DRY	No.2	SPF
3 - 6	2x4	DRY	No.2	SPF
6 - 8	2x4	DRY	No.2	SPF
8 - 10	2x4	DRY	No.2	SPF
11 - 10	2x4	DRY	No.2	SPF
20 - 2	2x4	DRY	No.2	SPF
20 - 17	2x4	DRY	No.2	SPF
17 - 15	2x4	DRY	No.2	SPF
15 - 11	2x4	DRY	No.2	SPF
ALL WEBS EXCEPT	2x3	DRY	No.2	SPF

DRY: SEASONED LUMBER.

PLATES (table is in inches)

JT	TYPE	PLATES	W	LEN	Y	X
2	TMVW-t	MT20	4.0	8.0	1.75	3.00
3	TTWW-m	MT20	5.0	8.0	1.75	2.75
4	TMWW-t	MT20	3.0	6.0		
5	TMWW-t	MT20	3.0	4.0		
6	TTWW-m	MT20	5.0	10.0	2.25	5.00
7	TMWW-t	MT20	4.0	5.0	1.50	1.25
8	TTW-m	MT20	4.0	4.0		
9	TMWW+t	MT20	3.0	6.0	2.25	1.50
10	TMVW+p	MT20	4.0	5.0	1.75	1.75
11	BMV1+p	MT20	2.0	4.0	2.25	1.00
12	BMWW+t	MT20	4.0	5.0	1.75	1.75
13	BMWWW-t	MT20	4.0	8.0	1.50	4.00
14	BMWW+t	MT20	5.0	5.0	1.50	2.00
15	BS-t	MT20	4.0	8.0		
16	BMWW-t	MT20	3.0	4.0		
17	BSWW-l	MT20	5.0	8.0	3.25	3.75
18	BMWW-t	MT20	4.0	5.0	1.75	1.75
19	BMWW-t	MT20	4.0	5.0	1.50	1.50
20	BMV1+p	MT20	2.0	4.0	2.25	1.00

DIMENSIONS, SUPPORTS AND LOADINGS SPECIFIED BY FABRICATOR TO BE VERIFIED BY BUILDING DESIGNER

BEARINGS

JT	FACTORED GROSS REACTION VERT	HORZ	MAXIMUM FACTORED GROSS REACTION DOWN	HORZ	UPLIFT	INPUT BRG IN-SX	REQRD BRG IN-SX
11	1820	0	1820	0	0	HANGER BY OTHERS	
						MIN. SEAT SIZE: 3-8	
20	1925	0	1925	0	0	5-8	5-8

UNFACTORED REACTIONS

JT	1ST LCASE COMBINED	MAX./MIN. COMPONENT REACTIONS SNOW	LIVE	PERM.LIVE	WIND	DEAD	SOIL
11	1277	893 / 0	0 / 0	0 / 0	0 / 0	384 / 0	0 / 0
20	1349	957 / 0	0 / 0	0 / 0	0 / 0	392 / 0	0 / 0

BEARING MATERIAL TO BE SPF NO.2 OR BETTER AT JOINT(S) 20

BRACING

TOP CHORD TO BE SHEATHED OR MAX. PURLIN SPACING = 2.89 FT.
MAX. UNBRACED BOTTOM CHORD LENGTH = 10.00 FT. OR RIGID CEILING DIRECTLY APPLIED.

ALL PITCH BREAKS AND PERIMETER CORNER JOINTS MUST BE LATERALLY RESTRAINED.

1 - 1x4 LATERAL BRACE(S) AT 1/ 2 LENGTH OF 10-11. DBS = 18-0-0 . CBF = 201 LBS.
1 - 1x4 LATERAL BRACE(S) AT 1/ 2 LENGTH OF 6-14. DBS = 12-0-0 . CBF = 186 LBS.
1 - 1x4 LATERAL BRACE(S) AT 1/ 2 LENGTH OF 7-13. DBS = 16-0-0 . CBF = 194 LBS.
1 - 1x4 LATERAL BRACE(S) AT 1/ 2 LENGTH OF 9-12. DBS = 20-0-0 . CBF = 193 LBS.

DBS = DIAGONAL BRACE SPACING (MAX). CBF = CUMULATIVE BRACING FORCE. FASTEN LATERAL BRACE(S) USING (0.122"X3") SPIRAL NAILS : 1 NAIL FOR 2x3 BRACE(S), 2 FOR 1x4, 2x4, 2x5, 3 FOR 2x6, 4 FOR 2x8, 5 FOR 2x10, AND 6 FOR 2x12.

END VERTICAL(S) MUST BE SHEATHED OR HAVE BRACES AS INDICATED IN THE MAX. UNBRACED LENGTH COLUMN OF THE TABLE BELOW

LOADING

TOTAL LOAD CASES: (4)

CHORDS

MEMB. FR-TO	MAX. FACTORED FORCE (LBS)	FACTORED VERT. LOAD (PLF) FROM	TO	LC1 MAX CSI (LC)	MAX. UNBRAC LENGTH
1- 2	0 / 23	-77.3	-77.3	0.10 (1)	10.00
2- 3	-2684 / 0	-77.3	-77.3	0.70 (1)	3.56
3- 4	-3757 / 0	-77.3	-77.3	0.45 (1)	3.30
4- 5	-4478 / 0	-77.3	-77.3	0.54 (1)	2.95
5- 6	-4616 / 0	-77.3	-77.3	0.57 (1)	2.89
6- 7	-3053 / 0	-77.3	-77.3	0.39 (1)	3.67
7- 8	-1796 / 0	-77.3	-77.3	0.29 (1)	4.69
8- 9	-1596 / 0	-77.3	-77.3	0.32 (1)	4.86
9-10	-981 / 0	-77.3	-77.3	0.30 (1)	5.90
11-10	-1785 / 0	0.0	0.0	0.57 (1)	5.00
20- 2	-1881 / 0	0.0	0.0	0.19 (1)	6.12
20-19	0 / 0	-17.5	-17.5	0.13 (4)	10.00
19-18	0 / 2393	-17.5	-17.5	0.45 (1)	10.00
18-17	0 / 3757	-17.5	-17.5	0.65 (1)	10.00
17-16	0 / 4491	-17.5	-17.5	0.78 (1)	10.00
16-15	0 / 4617	-17.5	-17.5	0.80 (1)	10.00
15-14	0 / 4617	-17.5	-17.5	0.80 (1)	10.00
14-13	0 / 2748	-17.5	-17.5	0.48 (1)	10.00
13-12	0 / 981	-17.5	-17.5	0.21 (1)	10.00

WEBS

MEMB. FR-TO	MAX. FACTORED FORCE (LBS)	MAX CSI (LC)
19- 3	-239 / 18	0.06 (1)
3-18	0 / 1725	0.39 (1)
18- 4	-983 / 0	0.25 (1)
4-17	0 / 928	0.21 (1)
17- 5	-494 / 0	0.12 (1)
5-16	0 / 160	0.04 (1)
16- 6	-26 / 52	0.02 (4)
6-14	-2483 / 0	0.60 (1)
14- 7	0 / 1713	0.39 (1)
7-13	-1938 / 0	0.71 (1)
13- 8	0 / 532	0.12 (1)
13- 9	0 / 1260	0.28 (1)
12- 9	-1547 / 0	0.69 (1)
12-10	0 / 1910	0.43 (1)
2-19	0 / 2424	0.55 (1)

DESIGN CRITERIA

SPECIFIED LOADS:

TOP CH.	LL	=	23.3	PSF	
	DL	=	3.0	PSF	
BOT CH.	LL	=	0.0	PSF	
	DL	=	7.0	PSF	
TOTAL LOAD		=	33.3	PSF	

SPACING = 24.0 IN. C/C

LOADING IN ALL FLAT SECTIONS BASED ON A SLOPE OF 6.00/12

THIS TRUSS IS DESIGNED FOR RESIDENTIAL OR SMALL BUILDING REQUIREMENTS OF PART 9, NBCC 2010

THIS DESIGN COMPLIES WITH:
- PART 9 OF OBC 2012 , BCBC 2012 , ABC 2014
- CSA 086-09
- TPIC 2011

(55 % OF 27.2 P.S.F. G.S.L. PLUS 8.4 P.S.F. RAIN LOAD) EQUALS 23.3 P.S.F. SPECIFIED ROOF LIVE LOAD

ALLOWABLE DEFL.(LL)= L/360 (1.28")
CALCULATED VERT. DEFL.(LL) = L/ 999 (0.38")
ALLOWABLE DEFL.(TL)= L/360 (1.28")
CALCULATED VERT. DEFL.(TL) = L/ 682 (0.68")

CSI: TC=0.70 (2-3:1) , BC=0.80 (14-16:1) , WB=0.71 (7-13:1) , SSI=0.18 (9-10:1)

DOL LUMBER=1.00 NAIL=1.00 LS BEND=1.10 COMP=1.10 SHEAR=1.10 TENS= 1.10

COMPANION LIVE LOAD FACTOR = 0.50

TRUSS PLATE MANUFACTURER IS NOT RESPONSIBLE FOR QUALITY CONTROL IN THE TRUSS MANUFACTURING PLANT .

NAIL VALUES

PLATE	GRIP(DRY) (PSI) MAX	MIN	SHEAR (PLI) MAX	MIN	SECTION (PLI) MAX	MIN
MT20	618	354	1667	822	2284	1656

PLATE PLACEMENT TOL. = 0.250 inches

PLATE ROTATION TOL. = 5.0 Deg.

JSI GRIP= 0.90 (12) (INPUT = 0.90)
JSI METAL= 0.90 (15) (INPUT = 1.00)

CONTINUED ON PAGE 2

LICENSED PROFESSIONAL ENGINEER
P.M. TREVISAN
100136551
March 14th, 2017
PROVINCE OF ONTARIO

RECEIVED
TOWN OF MILTON
MAR 29, 2017
17-5233
BUILDING DIVISION

READ ALL NOTES ON THIS PAGE AND ON THE ENGINEERING NOTE PAGE ENP-1. THE NOTE PAGE IS AN INTEGRAL PART OF THIS DRAWING AS IT CONTAINS SPECIFICATIONS AND CRITERIA USED IN THE DESIGN OF THIS COMPONENT.

KOTT

JOB NAME	TRUSS NAME	QUANTITY	PLY	JOB DESC.	DRWG NO.
T-BLOCK338	T56	1	1	LECCO RIDGE-BLOCK 338	ENG JOB: PT0317-081

KOTT , Stouffville, ON, Alan Attwater

Version 8.100 S Feb 9 2017 MiTek Industries, Inc. Wed Mar 15 08:20:12 2017 Page 1

ID:EvTixTQDI5yR1QLotZTBr_yE?HJ-8HRAksYj2quWnvvPnzMAJz8t4AFFFEfIaArZ8Izam01

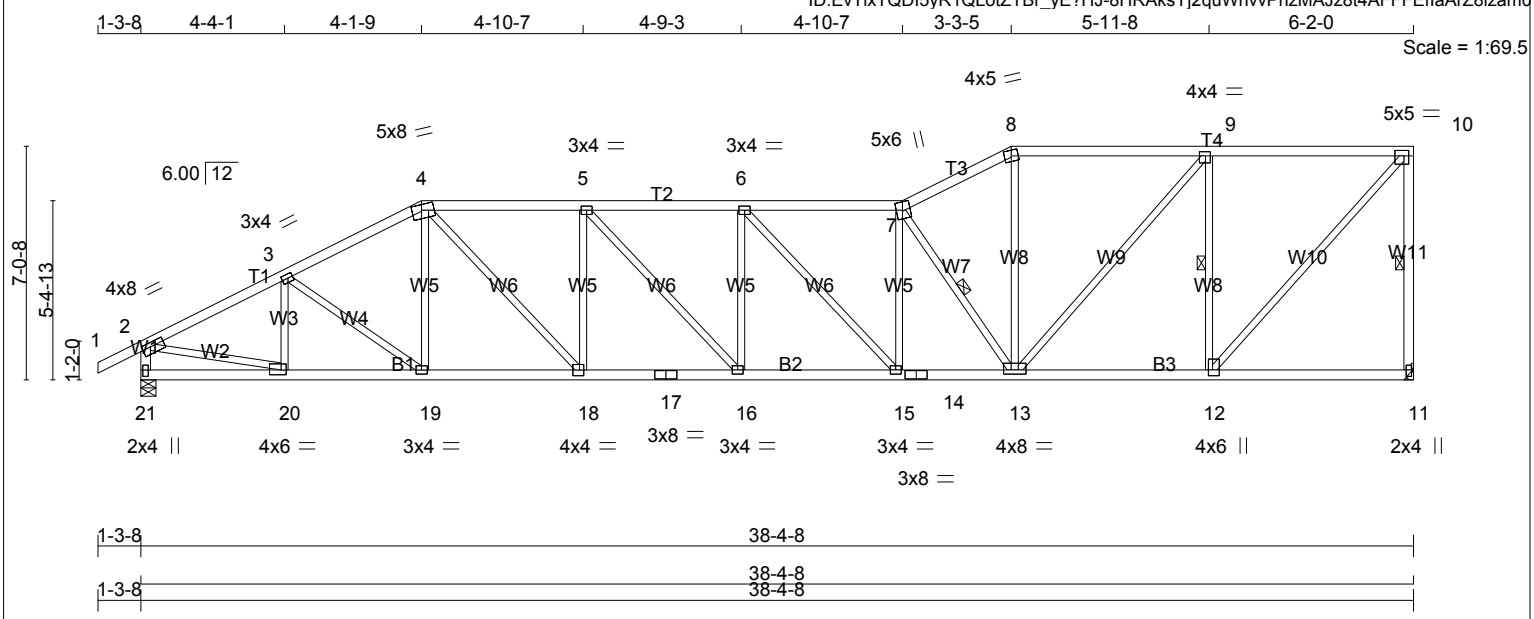

TOTAL WEIGHT = 170 lb

[M]

LUMBER

N. L. G. A. RULES

CHORDS	SIZE		LUMBER	DESCR.
1 - 4	2x4	DRY	No.2	SPF
4 - 7	2x4	DRY	No.2	SPF
7 - 8	2x4	DRY	No.2	SPF
8 - 10	2x4	DRY	No.2	SPF
11 - 10	2x4	DRY	No.2	SPF
21 - 2	2x4	DRY	No.2	SPF
21 - 17	2x4	DRY	No.2	SPF
17 - 14	2x4	DRY	No.2	SPF
14 - 11	2x4	DRY	No.2	SPF
ALL WEBS EXCEPT	2x3	DRY	No.2	SPF

DRY: SEASONED LUMBER.

PLATES (table is in inches)

JT	TYPE	PLATES	W	LEN	Y	X
2	TMVW-t	MT20	4.0	8.0	1.50	3.00
3	TMWW-t	MT20	3.0	4.0	1.50	1.75
4	TTWW-m	MT20	5.0	8.0	2.00	3.50
5	TMWW-t	MT20	3.0	4.0		
6	TMWW-t	MT20	3.0	4.0		
7	TTWW+m	MT20	5.0	6.0	3.00	2.25
8	TTW-m	MT20	4.0	5.0		
9	TMWW-t	MT20	4.0	4.0	1.50	1.75
10	TMVW-t	MT20	5.0	5.0	2.00	1.75
11	BMV1+p	MT20	2.0	4.0	2.25	1.00
12	BMWW+t	MT20	4.0	6.0	2.00	1.50
13	BMWWW-t	MT20	4.0	8.0	1.50	4.00
14	BS-t	MT20	3.0	8.0		
15, 16, 19						
15	BMWW-t	MT20	3.0	4.0		
17	BS-t	MT20	3.0	8.0		
18	BMWW-t	MT20	4.0	4.0	2.00	1.50
20	BMWW-t	MT20	4.0	6.0	1.75	1.75
21	BMV1+p	MT20	2.0	4.0	2.25	1.00

DIMENSIONS, SUPPORTS AND LOADINGS SPECIFIED BY FABRICATOR TO BE VERIFIED BY BUILDING DESIGNER

BEARINGS

JT	FACTORED GROSS REACTION VERT	HORZ	MAXIMUM FACTORED GROSS REACTION DOWN	HORZ	UPLIFT	INPUT BRG	REQRD BRG
11	1820	0	1820	0	0	HANGER BY OTHERS IN-SX	IN-SX
						MIN. SEAT SIZE: 3-8	
21	1925	0	1925	0	0	5-8	5-8

UNFACTORED REACTIONS

JT	1ST LCASE COMBINED	MAX./MIN. COMPONENT REACTIONS SNOW	LIVE	PERM.LIVE	WIND	DEAD	SOIL
11	1277	893 / 0	0 / 0	0 / 0	0 / 0	384 / 0	0 / 0
21	1349	957 / 0	0 / 0	0 / 0	0 / 0	392 / 0	0 / 0

BEARING MATERIAL TO BE SPF NO.2 OR BETTER AT JOINT(S) 21

BRACING

TOP CHORD TO BE SHEATHED OR MAX. PURLIN SPACING = 3.45 FT.
MAX. UNBRACED BOTTOM CHORD LENGTH = 10.00 FT. OR RIGID CEILING DIRECTLY APPLIED.

ALL PITCH BREAKS AND PERIMETER CORNER JOINTS MUST BE LATERALLY RESTRAINED.

1 - 1x4 LATERAL BRACE(S) AT 1/ 2 LENGTH OF 10-11. DBS = 18-0-0 . CBF = 200 LBS.
1 - 1x4 LATERAL BRACE(S) AT 1/ 2 LENGTH OF 7-13. DBS = 16-0-0 . CBF = 194 LBS.
1 - 1x4 LATERAL BRACE(S) AT 1/ 2 LENGTH OF 9-12. DBS = 20-0-0 . CBF = 184 LBS.

DBS = DIAGONAL BRACE SPACING (MAX). CBF = CUMULATIVE BRACING FORCE. FASTEN LATERAL BRACE(S) USING (0.122"X3") SPIRAL NAILS : 1 NAIL FOR 2x3 BRACE(S), 2 FOR 1x4, 2x4, 2x5, 3 FOR 2x6, 4 FOR 2x8, 5 FOR 2x10, AND 6 FOR 2x12.

END VERTICAL(S) MUST BE SHEATHED OR HAVE BRACES AS INDICATED IN THE MAX. UNBRACED LENGTH COLUMN OF THE TABLE BELOW

LOADING

TOTAL LOAD CASES: (4)

CHORDS

MEMB. FR-TO	MAX. FACTORED FORCE (LBS)	FACTORED VERT. LOAD (PLF) FROM	TO	LC1	MAX CSI (LC)	MAX. UNBRAC LENGTH
1- 2	0 / 23	-77.3	-77.3	0.10	(1)	10.00
2- 3	-2625 / 0	-77.3	-77.3	0.32	(1)	4.00
3- 4	-2657 / 0	-77.3	-77.3	0.31	(1)	3.98
4- 5	-3136 / 0	-77.3	-77.3	0.40	(1)	3.63
5- 6	-3443 / 0	-77.3	-77.3	0.42	(1)	3.45
6- 7	-3294 / 0	-77.3	-77.3	0.41	(1)	3.54
7- 8	-2480 / 0	-77.3	-77.3	0.22	(1)	4.19
8- 9	-2231 / 0	-77.3	-77.3	0.63	(1)	3.88
9-10	-1456 / 0	-77.3	-77.3	0.55	(1)	4.70
11-10	-1776 / 0	0.0	0.0	0.40	(1)	5.01
21- 2	-1887 / 0	0.0	0.0	0.19	(1)	6.11
21-20	0 / 0	-17.5	-17.5	0.07	(4)	10.00
20-19	0 / 2361	-17.5	-17.5	0.43	(1)	10.00
19-18	0 / 2362	-17.5	-17.5	0.43	(1)	10.00
18-17	0 / 3136	-17.5	-17.5	0.54	(1)	10.00
17-16	0 / 3136	-17.5	-17.5	0.54	(1)	10.00
16-15	0 / 3443	-17.5	-17.5	0.61	(1)	10.00
15-14	0 / 3289	-17.5	-17.5	0.56	(1)	10.00
14-13	0 / 3289	-17.5	-17.5	0.56	(1)	10.00
13-12	0 / 1456	-17.5	-17.5	0.32	(1)	10.00

WEBS

MEMB. FR-TO	MAX. FACTORED FORCE (LBS)	MAX CSI (LC)
20- 3	-400 / 0	0.08 (1)
3-19	0 / 7	0.00 (4)
19- 4	0 / 90	0.03 (4)
4-18	0 / 1120	0.25 (1)
18- 5	-731 / 0	0.32 (1)
5-16	0 / 451	0.10 (1)
16- 6	-240 / 0	0.10 (1)
6-15	-219 / 0	0.20 (1)
15- 7	0 / 219	0.05 (1)
7-13	-1938 / 0	0.52 (1)
13- 8	0 / 806	0.18 (1)
13- 9	0 / 1182	0.27 (1)
12- 9	-1471 / 0	0.46 (1)
12-10	0 / 2158	0.49 (1)
2-20	0 / 2407	0.54 (1)

DESIGN CRITERIA

SPECIFIED LOADS:

TOP CH.	LL	=	23.3	PSF
	DL	=	3.0	PSF
BOT CH.	LL	=	0.0	PSF
	DL	=	7.0	PSF
TOTAL LOAD		=	33.3	PSF

SPACING = 24.0 IN. C/C

LOADING IN ALL FLAT SECTIONS BASED ON A SLOPE OF 6.00/12

THIS TRUSS IS DESIGNED FOR RESIDENTIAL OR SMALL BUILDING REQUIREMENTS OF PART 9, NBCC 2010

THIS DESIGN COMPLIES WITH:
- PART 9 OF OBC 2012 , BCBC 2012 , ABC 2014
- CSA 086-09
- TPIC 2011

(55 % OF 27.2 P.S.F. G.S.L. PLUS 8.4 P.S.F. RAIN LOAD) EQUALS 23.3 P.S.F. SPECIFIED ROOF LIVE LOAD

ALLOWABLE DEFL.(LL)= L/360 (1.28")
CALCULATED VERT. DEFL.(LL) = L/ 999 (0.25")
ALLOWABLE DEFL.(TL)= L/360 (1.28")
CALCULATED VERT. DEFL.(TL) = L/ 999 (0.44")

CSI: TC=0.63 (8-9:1) , BC=0.61 (15-16:1) , WB=0.54 (2-20:1) , SSI=0.23 (9-10:1)

DOL LUMBER=1.00 NAIL=1.00 LS BEND=1.10 COMP=1.10 SHEAR=1.10 TENS= 1.10

COMPANION LIVE LOAD FACTOR = 0.50

TRUSS PLATE MANUFACTURER IS NOT RESPONSIBLE FOR QUALITY CONTROL IN THE TRUSS MANUFACTURING PLANT .

NAIL VALUES

PLATE	GRIP(DRY) (PSI) MAX	MIN	SHEAR (PLI) MAX	MIN	SECTION (PLI) MAX	MIN
MT20	618	354	1667	822	2284	1656

PLATE PLACEMENT TOL. = 0.250 inches

PLATE ROTATION TOL. = 5.0 Deg.

JSI GRIP= 0.90 (12) (INPUT = 0.90)
JSI METAL= 0.83 (14) (INPUT = 1.00)

CONTINUED ON PAGE 2

LICENSED PROFESSIONAL ENGINEER
P.M. TREVISAN
100136551
March 14th, 2017
PROVINCE OF ONTARIO

RECEIVED
TOWN OF MILTON
MAR 29, 2017
17-5233
BUILDING DIVISION

READ ALL NOTES ON THIS PAGE AND ON THE ENGINEERING NOTE PAGE ENP-1. THE NOTE PAGE IS AN INTEGRAL PART OF THIS DRAWING AS IT CONTAINS SPECIFICATIONS AND CRITERIA USED IN THE DESIGN OF THIS COMPONENT.

KOTT LUMBER ON YOUR SITE KOTT

JOB NAME	TRUSS NAME	QUANTITY	PLY	JOB DESC.	DRWG NO.
PT0317-081	**T57**	**1**	**1**	TRUSS DESC. LECCO RIDGE-BLOCK 338	

ENG JOB: PT0317-081

KOTT , Stouffville, ON, CGC

Version 8.100 S Feb 9 2017 MiTek Industries, Inc. Tue Mar 14 15:57:46 2017 Page 1

ID:EvTixTQDI5yR1QLotZTBr_yE?HJ-azFLhRXeyuRiHCNVyLvs?hmTxh6c6ofyzLtQELzb_P3

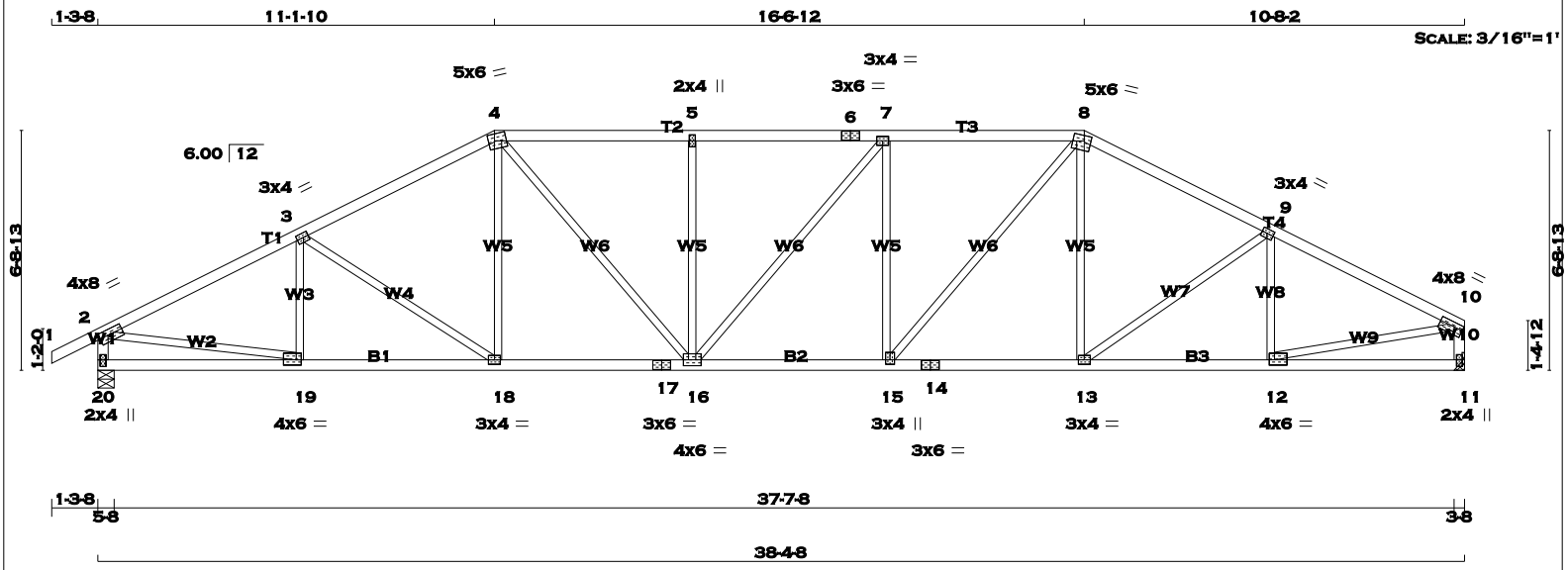

TOTAL WEIGHT = 159 lb

[M][F]

LUMBER

N. L. G. A. RULES

CHORDS	SIZE		LUMBER	DESCR.
1 - 4	2x4	DRY	No.2	SPF
4 - 6	2x4	DRY	No.2	SPF
6 - 8	2x4	DRY	No.2	SPF
8 - 10	2x4	DRY	No.2	SPF
20 - 2	2x4	DRY	No.2	SPF
11 - 10	2x4	DRY	No.2	SPF
20 - 17	2x4	DRY	No.2	SPF
17 - 14	2x4	DRY	No.2	SPF
14 - 11	2x4	DRY	No.2	SPF
ALL WEBS EXCEPT	2x3	DRY	No.2	SPF

DRY: SEASONED LUMBER.

PLATES (table is in inches)

JT	TYPE	PLATES	W	LEN	Y	X
2	TMVW-t	MT20	4.0	8.0	1.75	3.00
3	TMWW-t	MT20	3.0	4.0	1.50	1.75
4	TTWW-m	MT20	5.0	6.0	2.25	2.00
5	TMW+w	MT20	2.0	4.0		
6	TS-t	MT20	3.0	6.0		
7	TMWW-t	MT20	3.0	4.0		
8	TTWW-m	MT20	5.0	6.0	1.75	2.25
9	TMWW-t	MT20	3.0	4.0	1.50	1.75
10	TMVW-t	MT20	4.0	8.0	1.50	3.00
11	BMV1+p	MT20	2.0	4.0	2.25	1.00
12	BMWW-t	MT20	4.0	6.0	1.75	1.75
13	BMWW-t	MT20	3.0	4.0		
14	BS-t	MT20	3.0	6.0		
15	BMWW+t	MT20	3.0	4.0	1.50	1.50
16	BMWWW-t	MT20	4.0	6.0		
17	BS-t	MT20	3.0	6.0		
18	BMWW-t	MT20	3.0	4.0		
19	BMWW-t	MT20	4.0	6.0	1.75	1.75
20	BMV1+p	MT20	2.0	4.0	2.25	1.00

A SIZE FOR SIZE SUBSTITUTION OF MITEK MII20 WITH TEE-LOK TL20 PLATES IS ALLOWED.

DIMENSIONS, SUPPORTS AND LOADINGS SPECIFIED BY FABRICATOR TO BE VERIFIED BY BUILDING DESIGNER

BEARINGS

JT	FACTORED GROSS REACTION VERT	HORZ	MAXIMUM FACTORED GROSS REACTION DOWN	HORZ	UPLIFT	INPUT BRG IN-SX	REQRD BRG IN-SX
20	1925	0	1925	0	0	5-8	5-8
11	1820	0	1820	0	0	HANGER BY OTHERS	
						MIN. SEAT SIZE: 3-8	

UNFACTORED REACTIONS

JT	1ST LCASE COMBINED	SNOW	MAX./MIN. COMPONENT REACTIONS LIVE	PERM.LIVE	WIND	DEAD	SOIL
20	1349	957 / 0	0 / 0	0 / 0	0 / 0	392 / 0	0 / 0
11	1277	893 / 0	0 / 0	0 / 0	0 / 0	384 / 0	0 / 0

BEARING MATERIAL TO BE SPF NO.2 OR BETTER AT JOINT(S) 20

BRACING

TOP CHORD TO BE SHEATHED OR MAX. PURLIN SPACING = 3.84 FT.
MAX. UNBRACED BOTTOM CHORD LENGTH = 10.00 FT. OR RIGID CEILING DIRECTLY APPLIED.

ALL PITCH BREAKS AND PERIMETER CORNER JOINTS MUST BE LATERALLY RESTRAINED.

LOADING

TOTAL LOAD CASES: (4)

CHORDS

MEMB. FR-TO	MAX. FORCE (LBS)	FACTORED VERT. LOAD (PLF) FROM	TO	LC1 MAX CSI (LC)	MAX. UNBRAC LENGTH
1- 2	0 / 23	-77.3	-77.3	0.10 (1)	10.00
2- 3	-2733 / 0	-77.3	-77.3	0.43 (1)	3.84
3- 4	-2528 / 0	-77.3	-77.3	0.40 (1)	4.00
4- 5	-2703 / 0	-77.3	-77.3	0.38 (1)	3.90
5- 6	-2703 / 0	-77.3	-77.3	0.35 (1)	3.94
6- 7	-2703 / 0	-77.3	-77.3	0.35 (1)	3.94
7- 8	-2686 / 0	-77.3	-77.3	0.38 (1)	3.91
8- 9	-2465 / 0	-77.3	-77.3	0.37 (1)	4.07
9-10	-2557 / 0	-77.3	-77.3	0.38 (1)	4.00
20- 2	-1880 / 0	0.0	0.0	0.19 (1)	6.12
11-10	-1777 / 0	0.0	0.0	0.18 (1)	6.26
20-19	0 / 0	-17.5	-17.5	0.12 (4)	10.00
19-18	0 / 2463	-17.5	-17.5	0.46 (1)	10.00
18-17	0 / 2244	-17.5	-17.5	0.42 (1)	10.00
17-16	0 / 2244	-17.5	-17.5	0.42 (1)	10.00
16-15	0 / 2686	-17.5	-17.5	0.48 (1)	10.00
15-14	0 / 2187	-17.5	-17.5	0.41 (1)	10.00
14-13	0 / 2187	-17.5	-17.5	0.41 (1)	10.00
13-12	0 / 2305	-17.5	-17.5	0.43 (1)	10.00
12-11	0 / 0	-17.5	-17.5	0.11 (4)	10.00

WEBS

MEMB. FR-TO	MAX. FORCE (LBS)	MAX CSI (LC)
19- 3	-272 / 12	0.07 (1)
3-18	-269 / 0	0.22 (1)
18- 4	0 / 251	0.06 (1)
4-16	0 / 703	0.16 (1)
16- 5	-461 / 0	0.35 (1)
16- 7	0 / 26	0.01 (1)
15- 7	-483 / 0	0.37 (1)
15- 8	0 / 764	0.17 (1)
13- 8	0 / 185	0.04 (4)
13- 9	-149 / 0	0.12 (1)
12- 9	-364 / 0	0.09 (1)
2-19	0 / 2491	0.56 (1)
12-10	0 / 2351	0.53 (1)

DESIGN CRITERIA

SPECIFIED LOADS:

TOP	CH.	LL	=	23.3	PSF
		DL	=	3.0	PSF
BOT	CH.	LL	=	0.0	PSF
		DL	=	7.0	PSF
TOTAL	LOAD		=	33.3	PSF

SPACING = 24.0 IN. C/C

LOADING IN FLAT SECTION BASED ON A SLOPE OF 6.00/12

THIS TRUSS IS DESIGNED FOR RESIDENTIAL OR SMALL BUILDING REQUIREMENTS OF PART 9, NBCC 2010

THIS DESIGN COMPLIES WITH:
- PART 9 OF OBC 2012 , BCBC 2012 , ABC 2014
- CSA 086-09
- TPIC 2011

(55 % OF 27.2 P.S.F. G.S.L. PLUS 8.4 P.S.F. RAIN LOAD) EQUALS 23.3 P.S.F. SPECIFIED ROOF LIVE LOAD

ALLOWABLE DEFL.(LL)= L/360 (1.28")
CALCULATED VERT. DEFL.(LL) = L/ 999 (0.18")
ALLOWABLE DEFL.(TL)= L/360 (1.28")
CALCULATED VERT. DEFL.(TL) = L/ 999 (0.32")

CSI: TC=0.43 (2-3:1) , BC=0.48 (15-16:1) , WB=0.56 (2-19:1) , SSI=0.20 (7-8:1)

DOL LUMBER=1.00 NAIL=1.00 LS BEND=1.10 COMP=1.10 SHEAR=1.10 TENS= 1.10

COMPANION LIVE LOAD FACTOR = 0.50

TRUSS PLATE MANUFACTURER IS NOT RESPONSIBLE FOR QUALITY CONTROL IN THE TRUSS MANUFACTURING PLANT .

NAIL VALUES

PLATE	GRIP(DRY) (PSI) MAX	MIN	SHEAR (PLI) MAX	MIN	SECTION (PLI) MAX	MIN
MT20	618	354	1667	822	2284	1656

PLATE PLACEMENT TOL. = 0.250 inches

PLATE ROTATION TOL. = 5.0 Deg.

JSI GRIP= 0.89 (15) (INPUT = 0.90)
JSI METAL= 0.62 (19) (INPUT = 1.00)

LICENSED PROFESSIONAL ENGINEER
P.M. TREVISAN
100136551
March 14th, 2017
PROVINCE OF ONTARIO

RECEIVED
TOWN OF MILTON
MAR 29, 2017
17-5233
BUILDING DIVISION

READ ALL NOTES ON THIS PAGE AND ON THE ENGINEERING NOTE PAGE ENP-1. THE NOTE PAGE IS AN INTEGRAL PART OF THIS DRAWING AS IT CONTAINS SPECIFICATIONS AND CRITERIA USED IN THE DESIGN OF THIS COMPONENT.

KOTT

JOB NAME	TRUSS NAME	QUANTITY	PLY	JOB DESC.	DRWG NO.
PT0317-081	**T58**	**1**	**1**	TRUSS DESC. LECCO RIDGE-BLOCK 338	

ENG JOB: PT0317-081

KOTT , Stouffville, ON, CGC

Version 8.100 S Feb 9 2017 MiTek Industries, Inc. Tue Mar 14 15:57:47 2017 Page 1

ID:EvTixTQDI5yR1QLotZTBr_yE?HJ-29pjunYGjCZZuMyhW3Q5YvJZR5RfrDI6C?dzmozb_P2

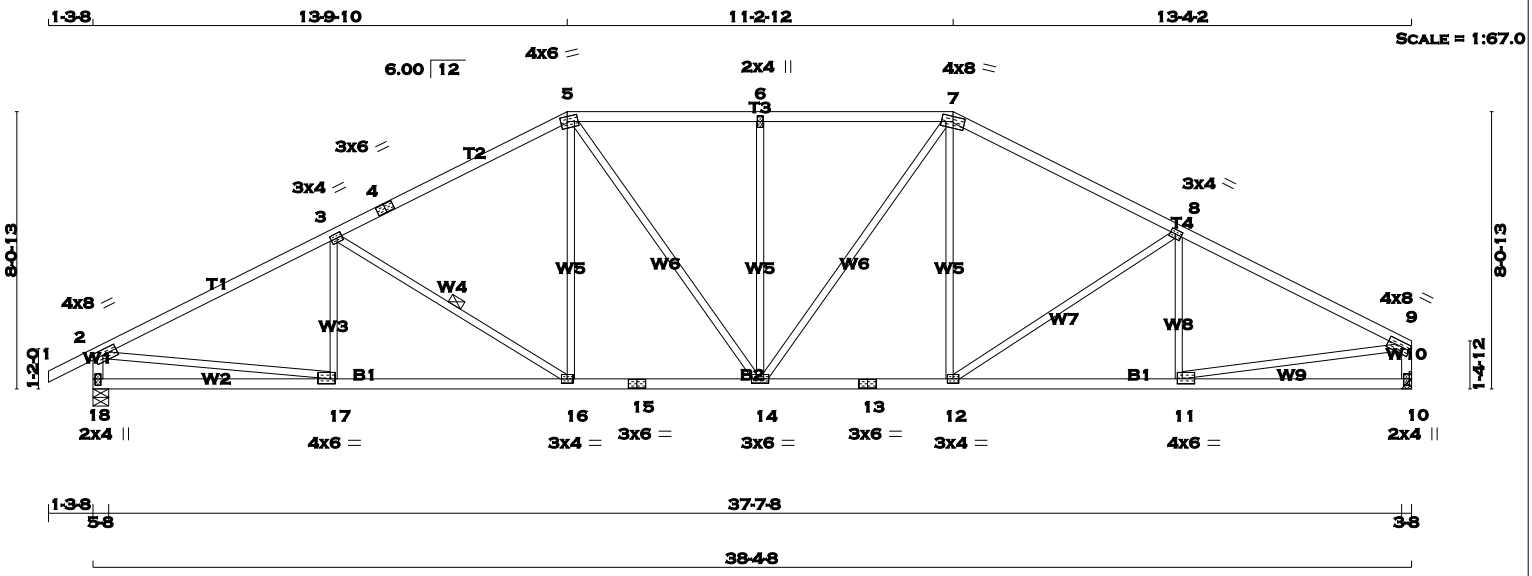

TOTAL WEIGHT = 158 lb

[M][F]

LUMBER

N. L. G. A. RULES

CHORDS	SIZE		LUMBER	DESCR.
1 - 4	2x4	DRY	No.2	SPF
4 - 5	2x4	DRY	No.2	SPF
5 - 7	2x4	DRY	No.2	SPF
7 - 9	2x4	DRY	No.2	SPF
18 - 2	2x4	DRY	No.2	SPF
10 - 9	2x4	DRY	No.2	SPF
18 - 15	2x4	DRY	No.2	SPF
15 - 13	2x4	DRY	No.2	SPF
13 - 10	2x4	DRY	No.2	SPF
ALL WEBS EXCEPT	2x3	DRY	No.2	SPF

DRY: SEASONED LUMBER.

PLATES (table is in inches)

JT	TYPE	PLATES	W	LEN	Y	X
2	TMVW-t	MT20	4.0	8.0	1.75	3.00
3	TMWW-t	MT20	3.0	4.0	1.50	1.75
4	TS-t	MT20	3.0	6.0		
5	TTWW-m	MT20	4.0	6.0	1.75	2.25
6	TMW+w	MT20	2.0	4.0		
7	TTWW-m	MT20	4.0	8.0	1.75	4.00
8	TMWW-t	MT20	3.0	4.0	1.50	1.75
9	TMVW-t	MT20	4.0	8.0	1.75	Edge
10	BMV1+p	MT20	2.0	4.0	2.25	1.00
11	BMWW-t	MT20	4.0	6.0	1.75	1.75
12	BMWW-t	MT20	3.0	4.0		
13	BS-t	MT20	3.0	6.0		
14	BMWWW-t	MT20	3.0	6.0		
15	BS-t	MT20	3.0	6.0		
16	BMWW-t	MT20	3.0	4.0		
17	BMWW-t	MT20	4.0	6.0	1.75	1.75
18	BMV1+p	MT20	2.0	4.0	2.25	1.00

Edge - INDICATES REFERENCE CORNER OF PLATE TOUCHES EDGE OF CHORD.

A SIZE FOR SIZE SUBSTITUTION OF MITEK MII20 WITH TEE-LOK TL20 PLATES IS ALLOWED.

DIMENSIONS, SUPPORTS AND LOADINGS SPECIFIED BY FABRICATOR TO BE VERIFIED BY BUILDING DESIGNER

BEARINGS

JT	FACTORED GROSS REACTION VERT	HORZ	MAXIMUM FACTORED GROSS REACTION DOWN	HORZ	UPLIFT	INPUT BRG IN-SX	REQRD BRG IN-SX
18	1925	0	1925	0	0	5-8	5-8
10	1820	0	1820	0	0	HANGER BY OTHERS	
						MIN. SEAT SIZE: 3-8	

UNFACTORED REACTIONS

JT	1ST LCASE COMBINED	MAX./MIN. COMPONENT REACTIONS SNOW	LIVE	PERM.LIVE	WIND	DEAD	SOIL
18	1349	957 / 0	0 / 0	0 / 0	0 / 0	392 / 0	0 / 0
10	1277	893 / 0	0 / 0	0 / 0	0 / 0	384 / 0	0 / 0

BEARING MATERIAL TO BE SPF NO.2 OR BETTER AT JOINT(S) 18

BRACING

TOP CHORD TO BE SHEATHED OR MAX. PURLIN SPACING = 3.53 FT.
MAX. UNBRACED BOTTOM CHORD LENGTH = 10.00 FT. OR RIGID CEILING DIRECTLY APPLIED.

ALL PITCH BREAKS AND PERIMETER CORNER JOINTS MUST BE LATERALLY RESTRAINED.

1 - 2x3 SPF No.2 LATERAL BRACE(S) AT 1/ 2 LENGTH OF 3-16. DBS = 20-0-0 . CBF = 64 LBS.

DBS = DIAGONAL BRACE SPACING (MAX). CBF = CUMULATIVE BRACING FORCE. FASTEN LATERAL BRACE(S) USING (0.122"X3") SPIRAL NAILS : 1 NAIL FOR 2x3 BRACE(S), 2 FOR 1x4, 2x4, 2x5, 3 FOR 2x6, 4 FOR 2x8, 5 FOR 2x10, AND 6 FOR 2x12.

END VERTICAL(S) MUST BE SHEATHED OR HAVE BRACES AS INDICATED IN THE MAX. UNBRACED LENGTH COLUMN OF THE TABLE BELOW

LOADING

TOTAL LOAD CASES: (4)

CHORDS

MEMB. FR-TO	MAX. FACTORED FORCE (LBS)	FACTORED VERT. LOAD (PLF) FROM	TO	LC1 MAX CSI (LC)	MAX. UNBRAC LENGTH
1- 2	0 / 23	-77.3	-77.3	0.10 (1)	10.00
2- 3	-2774 / 0	-77.3	-77.3	0.71 (1)	3.53
3- 4	-2348 / 0	-77.3	-77.3	0.62 (1)	3.87
4- 5	-2348 / 0	-77.3	-77.3	0.62 (1)	3.87
5- 6	-2286 / 0	-77.3	-77.3	0.39 (1)	4.16
6- 7	-2286 / 0	-77.3	-77.3	0.39 (1)	4.16
7- 8	-2313 / 0	-77.3	-77.3	0.57 (1)	3.96
8- 9	-2628 / 0	-77.3	-77.3	0.63 (1)	3.69
18- 2	-1873 / 0	0.0	0.0	0.19 (1)	6.13
10- 9	-1770 / 0	0.0	0.0	0.18 (1)	6.27
18-17	0 / 0	-17.5	-17.5	0.20 (4)	10.00
17-16	0 / 2506	-17.5	-17.5	0.49 (1)	10.00
16-15	0 / 2079	-17.5	-17.5	0.41 (1)	10.00
15-14	0 / 2079	-17.5	-17.5	0.41 (1)	10.00
14-13	0 / 2047	-17.5	-17.5	0.40 (1)	10.00
13-12	0 / 2047	-17.5	-17.5	0.40 (1)	10.00
12-11	0 / 2374	-17.5	-17.5	0.47 (1)	10.00
11-10	0 / 0	-17.5	-17.5	0.19 (4)	10.00

WEBS

MEMB. FR-TO	MAX. FACTORED FORCE (LBS)	MAX CSI (LC)
17- 3	-174 / 65	0.06 (1)
3-16	-511 / 0	0.23 (1)
16- 5	0 / 385	0.09 (1)
5-14	0 / 354	0.08 (1)
14- 6	-531 / 0	0.66 (1)
14- 7	0 / 409	0.09 (1)
12- 7	0 / 332	0.07 (1)
12- 8	-400 / 0	0.54 (1)
11- 8	-253 / 38	0.09 (1)
2-17	0 / 2524	0.57 (1)
11- 9	0 / 2405	0.54 (1)

DESIGN CRITERIA

SPECIFIED LOADS:

TOP CH.	LL	=	23.3	PSF
	DL	=	3.0	PSF
BOT CH.	LL	=	0.0	PSF
	DL	=	7.0	PSF
TOTAL LOAD		=	33.3	PSF

SPACING = 24.0 IN. C/C

LOADING IN FLAT SECTION BASED ON A SLOPE OF 6.00/12

THIS TRUSS IS DESIGNED FOR RESIDENTIAL OR SMALL BUILDING REQUIREMENTS OF PART 9, NBCC 2010

THIS DESIGN COMPLIES WITH:
- PART 9 OF OBC 2012 , BCBC 2012 , ABC 2014
- CSA 086-09
- TPIC 2011

(55 % OF 27.2 P.S.F. G.S.L. PLUS 8.4 P.S.F. RAIN LOAD) EQUALS 23.3 P.S.F. SPECIFIED ROOF LIVE LOAD

ALLOWABLE DEFL.(LL)= L/360 (1.28")
CALCULATED VERT. DEFL.(LL) = L/ 999 (0.16")
ALLOWABLE DEFL.(TL)= L/360 (1.28")
CALCULATED VERT. DEFL.(TL) = L/ 999 (0.28")

CSI: TC=0.71 (2-3:1) , BC=0.49 (16-17:1) , WB=0.66 (6-14:1) , SSI=0.23 (2-3:1)

DOL LUMBER=1.00 NAIL=1.00 LS BEND=1.10 COMP=1.10 SHEAR=1.10 TENS= 1.10

COMPANION LIVE LOAD FACTOR = 0.50

TRUSS PLATE MANUFACTURER IS NOT RESPONSIBLE FOR QUALITY CONTROL IN THE TRUSS MANUFACTURING PLANT .

NAIL VALUES

PLATE	GRIP(DRY) (PSI) MAX	MIN	SHEAR (PLI) MAX	MIN	SECTION (PLI) MAX	MIN
MT20	618	354	1667	822	2284	1656

PLATE PLACEMENT TOL. = 0.250 inches

PLATE ROTATION TOL. = 5.0 Deg.

JSI GRIP= 0.87 (9) (INPUT = 0.90)
JSI METAL= 0.63 (17) (INPUT = 1.00)

LICENSED PROFESSIONAL ENGINEER
R.M. TREVISAN
100136551
March 14th, 2017
PROVINCE OF ONTARIO

RECEIVED
TOWN OF MILTON
MAR 29, 2017
17-5233
BUILDING DIVISION

READ ALL NOTES ON THIS PAGE AND ON THE ENGINEERING NOTE PAGE ENP-1. THE NOTE PAGE IS AN INTEGRAL PART OF THIS DRAWING AS IT CONTAINS SPECIFICATIONS AND CRITERIA USED IN THE DESIGN OF THIS COMPONENT.

KOTT

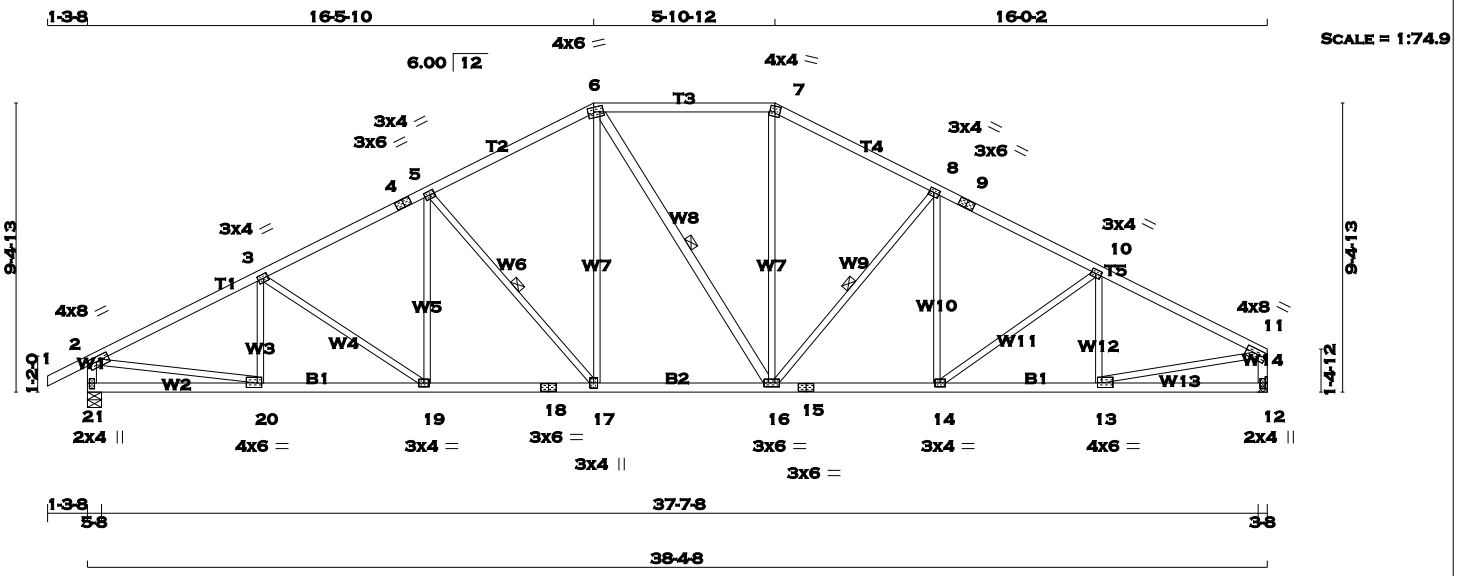

TOTAL WEIGHT = 169 lb

[M][F]

LUMBER

N. L. G. A. RULES

CHORDS	SIZE		LUMBER	DESCR.
1 - 4	2x4	DRY	No.2	SPF
4 - 6	2x4	DRY	No.2	SPF
6 - 7	2x4	DRY	No.2	SPF
7 - 9	2x4	DRY	No.2	SPF
9 - 11	2x4	DRY	No.2	SPF
21 - 2	2x4	DRY	No.2	SPF
12 - 11	2x4	DRY	No.2	SPF
21 - 18	2x4	DRY	No.2	SPF
18 - 15	2x4	DRY	No.2	SPF
15 - 12	2x4	DRY	No.2	SPF
ALL WEBS EXCEPT	2x3	DRY	No.2	SPF
6 - 16	2x4	DRY	No.2	SPF

DRY: SEASONED LUMBER.

PLATES (table is in inches)

JT	TYPE	PLATES	W	LEN	Y	X
2 3, 5, 8, 10	TMVW-t	MT20	4.0	8.0	1.75	3.00
3	TMWW-t	MT20	3.0	4.0	1.50	1.75
4	TS-t	MT20	3.0	6.0		
6	TTWW-m	MT20	4.0	6.0	1.75	2.25
7	TTW-m	MT20	4.0	4.0	2.25	2.00
9	TS-t	MT20	3.0	6.0		
11	TMVW-t	MT20	4.0	8.0	1.75	Edge
12	BMV1+p	MT20	2.0	4.0	2.25	1.00
13	BMWW-t	MT20	4.0	6.0	1.75	1.75
14	BMWW-t	MT20	3.0	4.0		
15	BS-t	MT20	3.0	6.0		
16	BMWWW-t	MT20	3.0	6.0		
17	BMWW+t	MT20	3.0	4.0		
18	BS-t	MT20	3.0	6.0		
19	BMWW-t	MT20	3.0	4.0		
20	BMWW-t	MT20	4.0	6.0	1.75	1.75
21	BMV1+p	MT20	2.0	4.0	2.25	1.00

Edge - INDICATES REFERENCE CORNER OF PLATE TOUCHES EDGE OF CHORD.

A SIZE FOR SIZE SUBSTITUTION OF MITEK MII20 WITH TEE-LOK TL20 PLATES IS ALLOWED.

DIMENSIONS, SUPPORTS AND LOADINGS SPECIFIED BY FABRICATOR TO BE VERIFIED BY BUILDING DESIGNER

BEARINGS

JT	FACTORED GROSS REACTION VERT	HORZ	MAXIMUM FACTORED GROSS REACTION DOWN	HORZ	UPLIFT	INPUT BRG IN-SX	REQRD BRG IN-SX
21	1925	0	1925	0	0	5-8	5-8
12	1820	0	1820	0	0	HANGER BY OTHERS MIN. SEAT SIZE: 3-8	

UNFACTORED REACTIONS

JT	1ST LCASE COMBINED	SNOW	LIVE	PERM.LIVE	WIND	DEAD	SOIL
21	1349	957 / 0	0 / 0	0 / 0	0 / 0	392 / 0	0 / 0
12	1277	893 / 0	0 / 0	0 / 0	0 / 0	384 / 0	0 / 0

MAX./MIN. COMPONENT REACTIONS

BEARING MATERIAL TO BE SPF NO.2 OR BETTER AT JOINT(S) 21

BRACING

TOP CHORD TO BE SHEATHED OR MAX. PURLIN SPACING = 3.87 FT.
MAX. UNBRACED BOTTOM CHORD LENGTH = 10.00 FT. OR RIGID CEILING DIRECTLY APPLIED.

ALL PITCH BREAKS AND PERIMETER CORNER JOINTS MUST BE LATERALLY RESTRAINED.

1 - 2x3 SPF No.2 LATERAL BRACE(S) AT 1/ 2 LENGTH OF 5-17, 6-16, 8-16. DBS = 20-0-0 . CBF = 77 LBS.

DBS = DIAGONAL BRACE SPACING (MAX). CBF = CUMULATIVE BRACING FORCE. FASTEN LATERAL BRACE(S) USING (0.122"X3") SPIRAL NAILS : 1 NAIL FOR 2x3 BRACE(S), 2 FOR 1x4, 2x4, 2x5, 3 FOR 2x6, 4 FOR 2x8, 5 FOR 2x10, AND 6 FOR 2x12.

END VERTICAL(S) MUST BE SHEATHED OR HAVE BRACES AS INDICATED IN THE MAX. UNBRACED LENGTH COLUMN OF THE TABLE BELOW

LOADING

TOTAL LOAD CASES: (4)

CHORDS

MEMB. FR-TO	MAX. FACTORED FORCE (LBS)	VERT. LOAD (PLF) FROM	TO	MAX CSI (LC)	MAX. UNBRAC LENGTH
1- 2	0 / 23	-77.3	-77.3	0.10 (1)	10.00
2- 3	-2719 / 0	-77.3	-77.3	0.43 (1)	3.87
3- 4	-2552 / 0	-77.3	-77.3	0.35 (1)	4.05
4- 5	-2552 / 0	-77.3	-77.3	0.35 (1)	4.05
5- 6	-2120 / 0	-77.3	-77.3	0.34 (1)	4.38
6- 7	-1872 / 0	-77.3	-77.3	0.40 (1)	4.49
7- 8	-2105 / 0	-77.3	-77.3	0.32 (1)	4.41
8- 9	-2478 / 0	-77.3	-77.3	0.32 (1)	4.13
9-10	-2478 / 0	-77.3	-77.3	0.32 (1)	4.13
10-11	-2550 / 0	-77.3	-77.3	0.39 (1)	4.01
21- 2	-1881 / 0	0.0	0.0	0.19 (1)	6.12
12-11	-1778 / 0	0.0	0.0	0.18 (1)	6.26
21-20	0 / 0	-17.5	-17.5	0.12 (4)	10.00
20-19	0 / 2447	-17.5	-17.5	0.44 (1)	10.00
19-18	0 / 2283	-17.5	-17.5	0.42 (1)	10.00
18-17	0 / 2283	-17.5	-17.5	0.42 (1)	10.00
17-16	0 / 1885	-17.5	-17.5	0.37 (1)	10.00
16-15	0 / 2216	-17.5	-17.5	0.42 (1)	10.00
15-14	0 / 2216	-17.5	-17.5	0.42 (1)	10.00
14-13	0 / 2296	-17.5	-17.5	0.41 (1)	10.00
13-12	0 / 0	-17.5	-17.5	0.11 (4)	10.00

WEBS

MEMB. FR-TO	MAX. FACTORED FORCE (LBS)	MAX CSI (LC)
20- 3	-272 / 10	0.07 (1)
3-19	-199 / 0	0.16 (1)
19- 5	0 / 206	0.05 (4)
5-17	-618 / 0	0.30 (1)
17- 6	0 / 566	0.13 (1)
6-16	-25 / 0	0.02 (1)
16- 7	0 / 543	0.12 (1)
16- 8	-548 / 0	0.26 (1)
14- 8	0 / 147	0.04 (4)
14-10	-98 / 0	0.08 (1)
13-10	-356 / 0	0.09 (1)
2-20	0 / 2476	0.56 (1)
13-11	0 / 2340	0.53 (1)

RECEIVED
TOWN OF MILTON
MAR 29, 2017
17-5233
BUILDING DIVISION

READ ALL NOTES ON THIS PAGE AND ON THE ENGINEERING NOTE PAGE ENP-1. THE NOTE PAGE IS AN INTEGRAL PART OF THIS DRAWING AS IT CONTAINS SPECIFICATIONS AND CRITERIA USED IN THE DESIGN OF THIS COMPONENT.

DESIGN CRITERIA

SPECIFIED LOADS:

TOP	CH.	LL	=	23.3	PSF
		DL	=	3.0	PSF
BOT	CH.	LL	=	0.0	PSF
		DL	=	7.0	PSF
TOTAL	LOAD		=	33.3	PSF

SPACING = 24.0 IN. C/C

LOADING IN FLAT SECTION BASED ON A SLOPE OF 6.00/12

THIS TRUSS IS DESIGNED FOR RESIDENTIAL OR SMALL BUILDING REQUIREMENTS OF PART 9, NBCC 2010

THIS DESIGN COMPLIES WITH:
- PART 9 OF OBC 2012 , BCBC 2012 , ABC 2014
- CSA 086-09
- TPIC 2011

(55 % OF 27.2 P.S.F. G.S.L. PLUS 8.4 P.S.F. RAIN LOAD) EQUALS 23.3 P.S.F. SPECIFIED ROOF LIVE LOAD

ALLOWABLE DEFL.(LL)= L/360 (1.28")
CALCULATED VERT. DEFL.(LL) = L/ 999 (0.15")
ALLOWABLE DEFL.(TL)= L/360 (1.28")
CALCULATED VERT. DEFL.(TL) = L/ 999 (0.27")

CSI: TC=0.43 (2-3:1) , BC=0.44 (19-20:1) , WB=0.56 (2-20:1) , SSI=0.18 (2-3:1)

DOL LUMBER=1.00 NAIL=1.00 LS BEND=1.10 COMP=1.10 SHEAR=1.10 TENS= 1.10

COMPANION LIVE LOAD FACTOR = 0.50

TRUSS PLATE MANUFACTURER IS NOT RESPONSIBLE FOR QUALITY CONTROL IN THE TRUSS MANUFACTURING PLANT .

NAIL VALUES

PLATE	GRIP(DRY) (PSI) MAX	MIN	SHEAR (PLI) MAX	MIN	SECTION (PLI) MAX	MIN
MT20	618	354	1667	822	2284	1656

PLATE PLACEMENT TOL. = 0.250 inches

PLATE ROTATION TOL. = 5.0 Deg.

JSI GRIP= 0.90 (11) (INPUT = 0.90)
JSI METAL= 0.61 (20) (INPUT = 1.00)

KOTT

JOB NAME	TRUSS NAME	QUANTITY	PLY	JOB DESC.	DRWG NO.
PT0317-081	T60	1	1	TRUSS DESC. LECCO RIDGE-BLOCK 338	ENG JOB: PT0317-081

KOTT , Stouffville, ON, CGC

Version 8.100 S Feb 9 2017 MiTek Industries, Inc. Tue Mar 14 15:57:49 2017 Page 1

ID:EvTixTQDI5yR1QLotZTBr_yE?HJ-_YwUJTZWEppH8f64dUSZdKOxuu7SJ9NOfJ64rgzb_P0

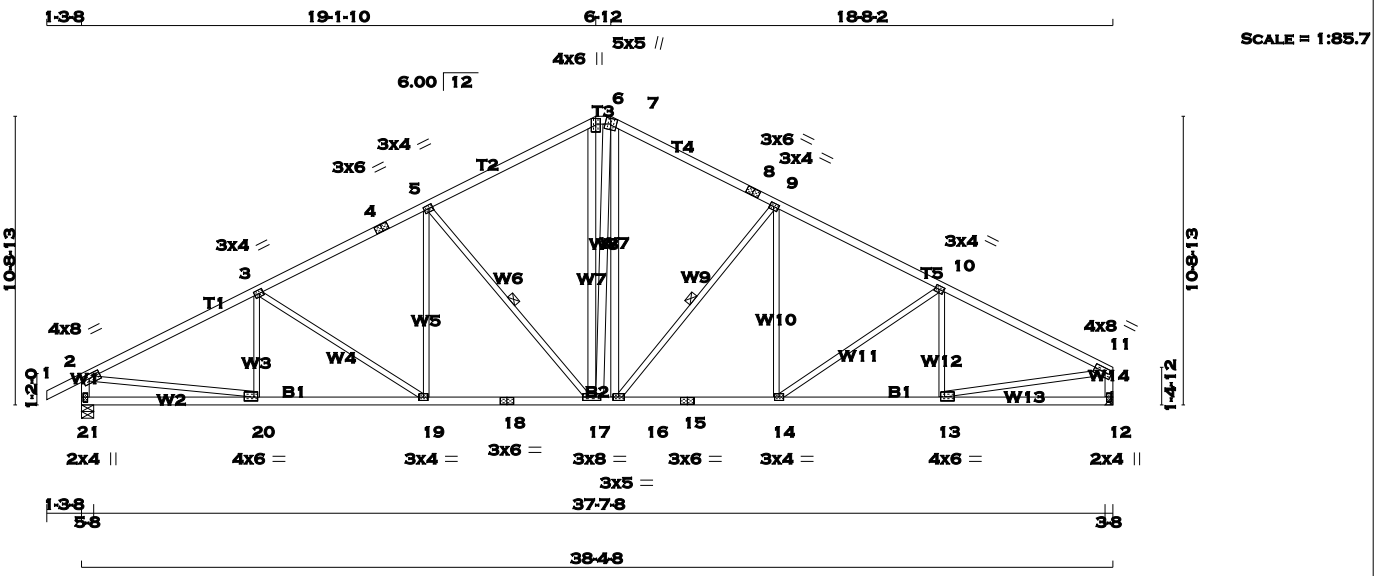

TOTAL WEIGHT = 186 lb

[M][F]

LUMBER

N. L. G. A. RULES

CHORDS	SIZE		LUMBER	DESCR.
1 - 4	2x4	DRY	No.2	SPF
4 - 6	2x4	DRY	No.2	SPF
6 - 7	2x4	DRY	No.2	SPF
7 - 8	2x4	DRY	No.2	SPF
8 - 11	2x4	DRY	No.2	SPF
21 - 2	2x4	DRY	No.2	SPF
12 - 11	2x4	DRY	No.2	SPF
21 - 18	2x4	DRY	No.2	SPF
18 - 15	2x4	DRY	No.2	SPF
15 - 12	2x4	DRY	No.2	SPF
ALL WEBS	2x3	DRY	No.2	SPF
EXCEPT				
17 - 6	2x4	DRY	No.2	SPF
17 - 7	2x4	DRY	No.2	SPF
16 - 7	2x4	DRY	No.2	SPF

DRY: SEASONED LUMBER.

PLATES (table is in inches)

JT	TYPE	PLATES	W	LEN	Y	X
2	TMVW-t	MT20	4.0	8.0	1.75	3.00
3, 5, 9, 10						
3	TMWW-t	MT20	3.0	4.0	1.50	1.75
4	TS-t	MT20	3.0	6.0		
6	TTW+p	MT20	4.0	6.0	2.50	2.00
7	TTWW+m	MT20	5.0	5.0		
8	TS-t	MT20	3.0	6.0		
11	TMVW-t	MT20	4.0	8.0	1.75	Edge
12	BMV1+p	MT20	2.0	4.0	2.25	1.00
13	BMWW-t	MT20	4.0	6.0	1.75	1.75
14	BMWW-t	MT20	3.0	4.0		
15	BS-t	MT20	3.0	6.0		
16	BMWW-t	MT20	3.0	5.0		
17	BMWWW-t	MT20	3.0	8.0		
18	BS-t	MT20	3.0	6.0		
19	BMWW-t	MT20	3.0	4.0		
20	BMWW-t	MT20	4.0	6.0	1.75	1.75
21	BMV1+p	MT20	2.0	4.0	2.25	1.00

Edge - INDICATES REFERENCE CORNER OF PLATE TOUCHES EDGE OF CHORD.

A SIZE FOR SIZE SUBSTITUTION OF MITEK MII20 WITH TEE-LOK TL20 PLATES IS ALLOWED.

DIMENSIONS, SUPPORTS AND LOADINGS SPECIFIED BY FABRICATOR TO BE VERIFIED BY BUILDING DESIGNER

BEARINGS

JT	FACTORED GROSS REACTION VERT	HORZ	MAXIMUM FACTORED GROSS REACTION DOWN	HORZ	UPLIFT	INPUT BRG IN-SX	REQRD BRG IN-SX
21	1925	0	1925	0	0	5-8	5-8
12	1820	0	1820	0	0	HANGER BY OTHERS	
						MIN. SEAT SIZE: 3-8	

UNFACTORED REACTIONS

JT	1ST LCASE COMBINED	SNOW	MAX./MIN. COMPONENT REACTIONS LIVE	PERM.LIVE	WIND	DEAD	SOIL
21	1349	957 / 0	0 / 0	0 / 0	0 / 0	392 / 0	0 / 0
12	1277	893 / 0	0 / 0	0 / 0	0 / 0	384 / 0	0 / 0

BEARING MATERIAL TO BE SPF NO.2 OR BETTER AT JOINT(S) 21

BRACING

TOP CHORD TO BE SHEATHED OR MAX. PURLIN SPACING = 3.70 FT.
MAX. UNBRACED BOTTOM CHORD LENGTH = 10.00 FT. OR RIGID CEILING DIRECTLY APPLIED.

ALL PITCH BREAKS AND PERIMETER CORNER JOINTS MUST BE LATERALLY RESTRAINED.

1 - 2x3 SPF No.2 LATERAL BRACE(S) AT 1/ 2 LENGTH OF 5-17. DBS = 18-0-0 . CBF = 86 LBS.
1 - 2x3 SPF No.2 LATERAL BRACE(S) AT 1/ 2 LENGTH OF 9-16. DBS = 20-0-0 . CBF = 89 LBS.

DBS = DIAGONAL BRACE SPACING (MAX). CBF = CUMULATIVE BRACING FORCE. FASTEN LATERAL BRACE(S) USING (0.122"X3") SPIRAL NAILS : 1 NAIL FOR 2x3 BRACE(S), 2 FOR 1x4, 2x4, 2x5, 3 FOR 2x6, 4 FOR 2x8, 5 FOR 2x10, AND 6 FOR 2x12.

END VERTICAL(S) MUST BE SHEATHED OR HAVE BRACES AS INDICATED IN THE MAX. UNBRACED LENGTH COLUMN OF THE TABLE BELOW

LOADING

TOTAL LOAD CASES: (4)

CHORDS

MEMB. FR-TO	MAX. FORCE (LBS)	FACTORED VERT. LOAD LC1 (PLF) FROM	TO	MAX CSI (LC)	MAX. UNBRAC LENGTH
1- 2	0 / 23	-77.3	-77.3	0.10 (1)	10.00
2- 3	-2750 / 0	-77.3	-77.3	0.58 (1)	3.70
3- 4	-2442 / 0	-77.3	-77.3	0.46 (1)	4.03
4- 5	-2442 / 0	-77.3	-77.3	0.46 (1)	4.03
5- 6	-1911 / 0	-77.3	-77.3	0.44 (1)	4.44
6- 7	-1680 / 0	-77.3	-77.3	0.03 (1)	5.12
7- 8	-1903 / 0	-77.3	-77.3	0.42 (1)	4.47
8- 9	-1903 / 0	-77.3	-77.3	0.42 (1)	4.47
9-10	-2387 / 0	-77.3	-77.3	0.44 (1)	4.09
10-11	-2598 / 0	-77.3	-77.3	0.53 (1)	3.84
21- 2	-1876 / 0	0.0	0.0	0.19 (1)	6.13
12-11	-1772 / 0	0.0	0.0	0.18 (1)	6.27
21-20	0 / 0	-17.5	-17.5	0.17 (4)	10.00
20-19	0 / 2478	-17.5	-17.5	0.47 (1)	10.00
19-18	0 / 2184	-17.5	-17.5	0.45 (1)	10.00
18-17	0 / 2184	-17.5	-17.5	0.45 (1)	10.00
17-16	0 / 1675	-17.5	-17.5	0.37 (1)	10.00
16-15	0 / 2135	-17.5	-17.5	0.41 (1)	10.00
15-14	0 / 2135	-17.5	-17.5	0.41 (1)	10.00
14-13	0 / 2342	-17.5	-17.5	0.45 (1)	10.00
13-12	0 / 0	-17.5	-17.5	0.16 (4)	10.00

WEBS

MEMB. FR-TO	MAX. FORCE (LBS)	MAX CSI (LC)
20- 3	-204 / 45	0.06 (1)
3-19	-350 / 0	0.40 (1)
19- 5	0 / 294	0.07 (1)
5-17	-766 / 0	0.49 (1)
17- 6	0 / 629	0.10 (1)
17- 7	0 / 76	0.01 (1)
16- 7	0 / 555	0.09 (1)
16- 9	-714 / 0	0.45 (1)
14- 9	0 / 254	0.06 (1)
14-10	-252 / 0	0.28 (1)
13-10	-283 / 19	0.09 (1)
2-20	0 / 2499	0.56 (1)
13-11	0 / 2376	0.53 (1)

RECEIVED
TOWN OF MILTON
MAR 29, 2017
17-5233
BUILDING DIVISION

READ ALL NOTES ON THIS PAGE AND ON THE ENGINEERING NOTE PAGE ENP-1. THE NOTE PAGE IS AN INTEGRAL PART OF THIS DRAWING AS IT CONTAINS SPECIFICATIONS AND CRITERIA USED IN THE DESIGN OF THIS COMPONENT.

DESIGN CRITERIA

SPECIFIED LOADS:

TOP CH.	LL	=	23.3	PSF
	DL	=	3.0	PSF
BOT CH.	LL	=	0.0	PSF
	DL	=	7.0	PSF
TOTAL LOAD		=	33.3	PSF

SPACING = 24.0 IN. C/C

LOADING IN FLAT SECTION BASED ON A SLOPE OF 6.00/12

THIS TRUSS IS DESIGNED FOR RESIDENTIAL OR SMALL BUILDING REQUIREMENTS OF PART 9, NBCC 2010

THIS DESIGN COMPLIES WITH:
- PART 9 OF OBC 2012 , BCBC 2012 , ABC 2014
- CSA 086-09
- TPIC 2011

(55 % OF 27.2 P.S.F. G.S.L. PLUS 8.4 P.S.F. RAIN LOAD) EQUALS 23.3 P.S.F. SPECIFIED ROOF LIVE LOAD

ALLOWABLE DEFL.(LL)= L/360 (1.28")
CALCULATED VERT. DEFL.(LL) = L/ 999 (0.15")
ALLOWABLE DEFL.(TL)= L/360 (1.28")
CALCULATED VERT. DEFL.(TL) = L/ 999 (0.28")

CSI: TC=0.58 (2-3:1) , BC=0.47 (19-20:1) , WB=0.56 (2-20:1) , SSI=0.21 (2-3:1)

DOL LUMBER=1.00 NAIL=1.00 LS BEND=1.10 COMP=1.10 SHEAR=1.10 TENS= 1.10

COMPANION LIVE LOAD FACTOR = 0.50

TRUSS PLATE MANUFACTURER IS NOT RESPONSIBLE FOR QUALITY CONTROL IN THE TRUSS MANUFACTURING PLANT .

NAIL VALUES

PLATE	GRIP(DRY) (PSI) MAX	MIN	SHEAR (PLI) MAX	MIN	SECTION (PLI) MAX	MIN
MT20	618	354	1667	822	2284	1656

PLATE PLACEMENT TOL. = 0.250 inches

PLATE ROTATION TOL. = 5.0 Deg.

JSI GRIP= 0.88 (5) (INPUT = 0.90)
JSI METAL= 0.62 (15) (INPUT = 1.00)

KOTT

CONTINUED ON PAGE 2

JOB NAME	TRUSS NAME	QUANTITY	PLY	JOB DESC.	DRWG NO.
PT0317-081	T61	5	1	TRUSS DESC. LECCO RIDGE-BLOCK 338	

KOTT , Stouffville, ON, CGC

Version 8.100 S Feb 9 2017 MiTek Industries, Inc. Tue Mar 14 15:57:49 2017 Page 1
ID:EvTixTQDI5yR1QLotZTBr_yE?HJ-_YwUJTZWEppH8f64dUSZdKOxVu7KJ9FOfJ64rgzb_P0

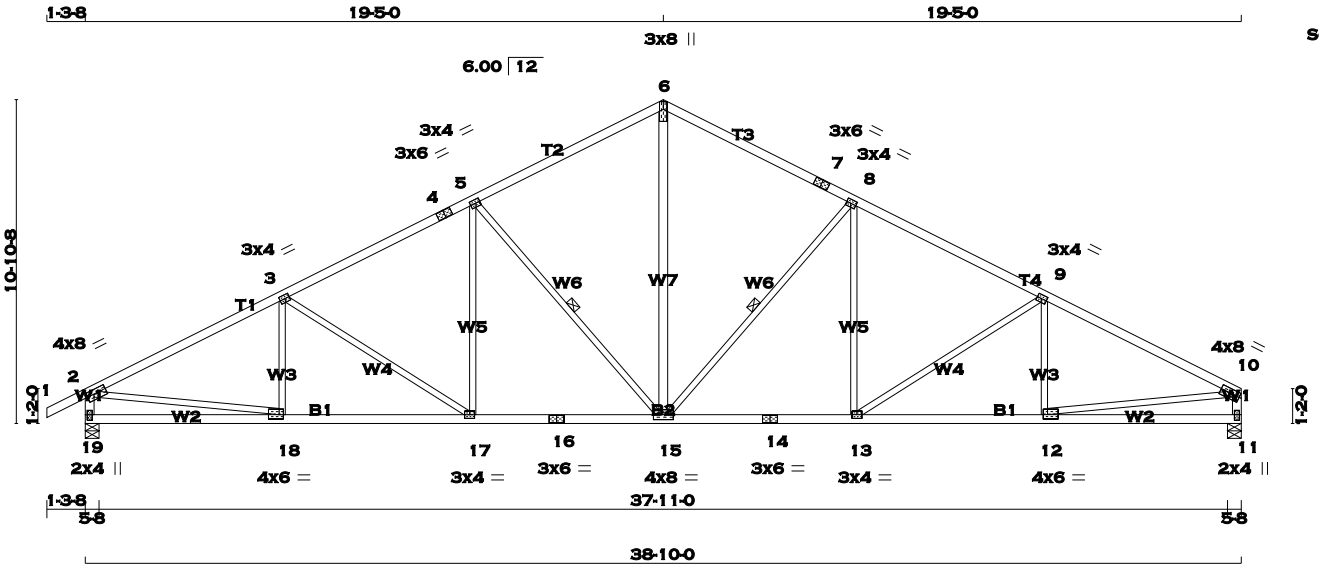

TOTAL WEIGHT = 5 X 164 = 822 lb
[M][F]

LUMBER
N. L. G. A. RULES

CHORDS	SIZE		LUMBER	DESCR.
1 - 4	2x4	DRY	No.2	SPF
4 - 6	2x4	DRY	No.2	SPF
6 - 7	2x4	DRY	No.2	SPF
7 - 10	2x4	DRY	No.2	SPF
19 - 2	2x4	DRY	No.2	SPF
11 - 10	2x4	DRY	No.2	SPF
19 - 16	2x4	DRY	No.2	SPF
16 - 14	2x4	DRY	No.2	SPF
14 - 11	2x4	DRY	No.2	SPF
ALL WEBS	2x3	DRY	No.2	SPF
EXCEPT				
15 - 6	2x4	DRY	No.2	SPF

DRY: SEASONED LUMBER.

PLATES (table is in inches)

JT	TYPE	PLATES	W	LEN	Y	X
2	TMVW-t	MT20	4.0	8.0	1.75	3.00
3, 5, 8, 9						
3	TMWW-t	MT20	3.0	4.0	1.50	1.75
4	TS-t	MT20	3.0	6.0		
6	TTW+p	MT20	3.0	8.0	Edge	
7	TS-t	MT20	3.0	6.0		
10	TMVW-t	MT20	4.0	8.0	1.75	Edge
11	BMV1+p	MT20	2.0	4.0	2.25	1.00
12	BMWW-t	MT20	4.0	6.0	1.75	1.75
13	BMWW-t	MT20	3.0	4.0		
14	BS-t	MT20	3.0	6.0		
15	BMWWW-t	MT20	4.0	8.0		
16	BS-t	MT20	3.0	6.0		
17	BMWW-t	MT20	3.0	4.0		
18	BMWW-t	MT20	4.0	6.0	1.75	1.75
19	BMV1+p	MT20	2.0	4.0	2.25	1.00

Edge - INDICATES REFERENCE CORNER OF PLATE TOUCHES EDGE OF CHORD.

A SIZE FOR SIZE SUBSTITUTION OF MITEK MII20 WITH TEE-LOK TL20 PLATES IS ALLOWED.

DIMENSIONS, SUPPORTS AND LOADINGS SPECIFIED BY FABRICATOR TO BE VERIFIED BY BUILDING DESIGNER

BEARINGS

JT	FACTORED GROSS REACTION VERT	HORZ	MAXIMUM FACTORED GROSS REACTION DOWN	HORZ	UPLIFT	INPUT BRG IN-SX	REQRD BRG IN-SX
19	1947	0	1947	0	0	5-8	5-8
11	1842	0	1842	0	0	5-8	5-8

UNFACTORED REACTIONS

JT	1ST LCASE COMBINED	MAX./MIN. COMPONENT REACTIONS SNOW	LIVE	PERM.LIVE	WIND	DEAD	SOIL
19	1364	967 / 0	0 / 0	0 / 0	0 / 0	396 / 0	0 / 0
11	1292	904 / 0	0 / 0	0 / 0	0 / 0	388 / 0	0 / 0

BEARING MATERIAL TO BE SPF NO.2 OR BETTER AT JOINT(S) 19, 11

BRACING
TOP CHORD TO BE SHEATHED OR MAX. PURLIN SPACING = 3.66 FT.
MAX. UNBRACED BOTTOM CHORD LENGTH = 10.00 FT. OR RIGID CEILING DIRECTLY APPLIED.

ALL PITCH BREAKS AND PERIMETER CORNER JOINTS MUST BE LATERALLY RESTRAINED.

1 - 2x3 SPF No.2 LATERAL BRACE(S) AT 1/ 2 LENGTH OF 8-15, 5-15. DBS = 18-0-0 . CBF = 88 LBS.

DBS = DIAGONAL BRACE SPACING (MAX). CBF = CUMULATIVE BRACING FORCE. FASTEN LATERAL BRACE(S) USING (0.122"X3") SPIRAL NAILS : 1 NAIL FOR 2x3 BRACE(S), 2 FOR 1x4, 2x4, 2x5, 3 FOR 2x6, 4 FOR 2x8, 5 FOR 2x10, AND 6 FOR 2x12.

END VERTICAL(S) MUST BE SHEATHED OR HAVE BRACES AS INDICATED IN THE MAX. UNBRACED LENGTH COLUMN OF THE TABLE BELOW

LOADING
TOTAL LOAD CASES: (4)

CHORDS MEMB. FR-TO	MAX. FACTORED FORCE (LBS)	FACTORED VERT. LOAD (PLF) FROM	TO	LC1 CSI (LC)	MAX UNBRAC LENGTH	WEBS MEMB. FR-TO	MAX. FACTORED FORCE (LBS)	MAX CSI (LC)
1- 2	0 / 23	-77.3	-77.3	0.10 (1)	10.00	15- 6	0 / 1299	0.21 (1)
2- 3	-2790 / 0	-77.3	-77.3	0.61 (1)	3.66	15- 8	-783 / 0	0.53 (1)
3- 4	-2473 / 0	-77.3	-77.3	0.48 (1)	3.99	13- 8	0 / 305	0.07 (1)
4- 5	-2473 / 0	-77.3	-77.3	0.48 (1)	3.99	13- 9	-360 / 0	0.43 (1)
5- 6	-1920 / 0	-77.3	-77.3	0.46 (1)	4.41	12- 9	-203 / 47	0.06 (1)
6- 7	-1920 / 0	-77.3	-77.3	0.46 (1)	4.41	5-15	-783 / 0	0.53 (1)
7- 8	-1920 / 0	-77.3	-77.3	0.46 (1)	4.41	17- 5	0 / 305	0.07 (1)
8- 9	-2473 / 0	-77.3	-77.3	0.48 (1)	3.99	3-17	-360 / 0	0.43 (1)
9-10	-2790 / 0	-77.3	-77.3	0.61 (1)	3.66	18- 3	-203 / 47	0.06 (1)
19- 2	-1897 / 0	0.0	0.0	0.19 (1)	6.10	2-18	0 / 2535	0.57 (1)
11-10	-1792 / 0	0.0	0.0	0.18 (1)	6.24	12-10	0 / 2535	0.57 (1)
19-18	0 / 0	-17.5	-17.5	0.17 (4)	10.00			
18-17	0 / 2514	-17.5	-17.5	0.48 (1)	10.00			
17-16	0 / 2212	-17.5	-17.5	0.44 (1)	10.00			
16-15	0 / 2212	-17.5	-17.5	0.44 (1)	10.00			
15-14	0 / 2212	-17.5	-17.5	0.44 (1)	10.00			
14-13	0 / 2212	-17.5	-17.5	0.44 (1)	10.00			
13-12	0 / 2514	-17.5	-17.5	0.48 (1)	10.00			
12-11	0 / 0	-17.5	-17.5	0.17 (4)	10.00			

RECEIVED
TOWN OF MILTON
MAR 29, 2017
17-5233
BUILDING DIVISION

READ ALL NOTES ON THIS PAGE AND ON THE ENGINEERING NOTE PAGE ENP-1. THE NOTE PAGE IS AN INTEGRAL PART OF THIS DRAWING AS IT CONTAINS SPECIFICATIONS AND CRITERIA USED IN THE DESIGN OF THIS COMPONENT.

DESIGN CRITERIA

SPECIFIED LOADS:

TOP	CH.	LL	=	23.3	PSF
		DL	=	3.0	PSF
BOT	CH.	LL	=	0.0	PSF
		DL	=	7.0	PSF
TOTAL	LOAD		=	33.3	PSF

SPACING = 24.0 IN. C/C

THIS TRUSS IS DESIGNED FOR RESIDENTIAL OR SMALL BUILDING REQUIREMENTS OF PART 9, NBCC 2010

THIS DESIGN COMPLIES WITH:
- PART 9 OF OBC 2012 , BCBC 2012 , ABC 2014
- CSA 086-09
- TPIC 2011

(55 % OF 27.2 P.S.F. G.S.L. PLUS 8.4 P.S.F. RAIN LOAD) EQUALS 23.3 P.S.F. SPECIFIED ROOF LIVE LOAD

ALLOWABLE DEFL.(LL)= L/360 (1.29")
CALCULATED VERT. DEFL.(LL) = L/ 999 (0.16")
ALLOWABLE DEFL.(TL)= L/360 (1.29")
CALCULATED VERT. DEFL.(TL) = L/ 999 (0.30")

CSI: TC=0.61 (9-10:1) , BC=0.48 (12-13:1) , WB=0.57 (10-12:1) , SSI=0.21 (2-3:1)

DOL LUMBER=1.00 NAIL=1.00 LS BEND=1.10 COMP=1.10 SHEAR=1.10 TENS= 1.10

COMPANION LIVE LOAD FACTOR = 0.50

TRUSS PLATE MANUFACTURER IS NOT RESPONSIBLE FOR QUALITY CONTROL IN THE TRUSS MANUFACTURING PLANT .

NAIL VALUES

PLATE	GRIP(DRY) (PSI) MAX	MIN	SHEAR (PLI) MAX	MIN	SECTION (PLI) MAX	MIN
MT20	618	354	1667	822	2284	1656

PLATE PLACEMENT TOL. = 0.250 inches

PLATE ROTATION TOL. = 5.0 Deg.

JSI GRIP= 0.90 (6) (INPUT = 0.90)
JSI METAL= 0.63 (12) (INPUT = 1.00)

KOTT

JOB NAME	TRUSS NAME	QUANTITY	PLY	JOB DESC.	DRWG NO.
PT0317-081	T62	1	1	TRUSS DESC. LECCO RIDGE-BLOCK 338	

KOTT , Stouffville, ON, CGC

Version 8.100 S Feb 9 2017 MiTek Industries, Inc. Tue Mar 14 15:57:50 2017 Page 1
ID:EvTixTQDI5yR1QLotZTBr_yE?HJ-SkUsXpa9?6y7lphGBB_o9XxD5IWf2bOYuzrdN7zb_P?

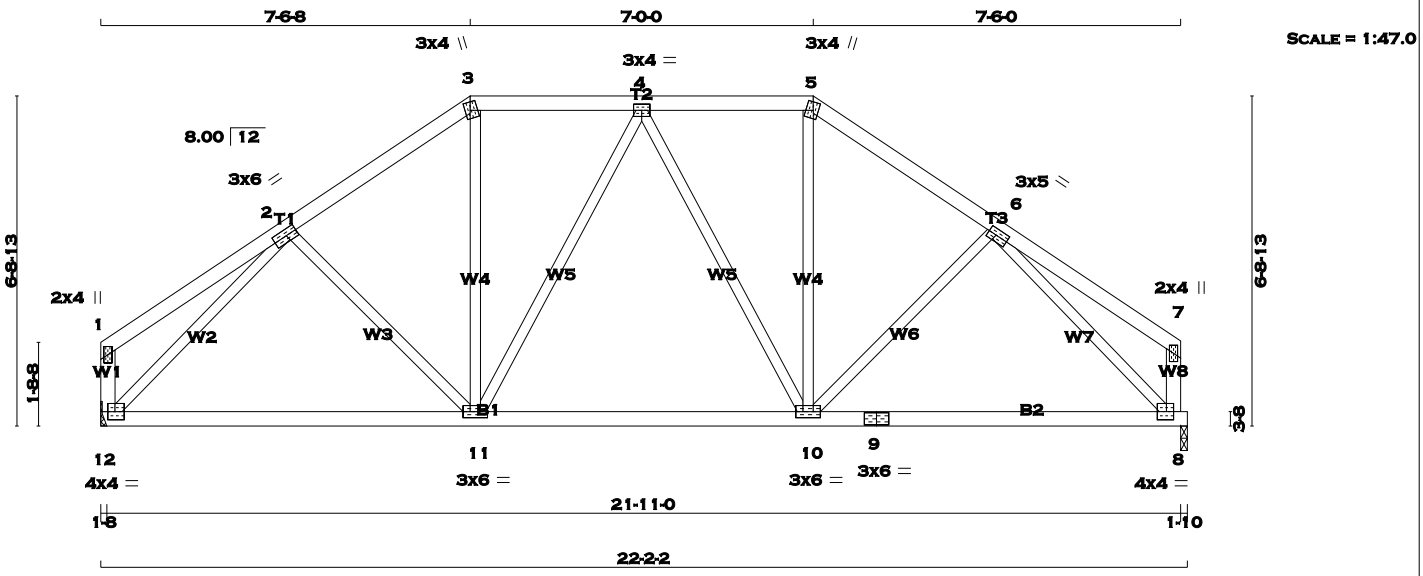

TOTAL WEIGHT = 95 lb
[M][F]

LUMBER
N. L. G. A. RULES

CHORDS	SIZE		LUMBER	DESCR.
1 - 3	2x4	DRY	No.2	SPF
3 - 5	2x4	DRY	No.2	SPF
5 - 7	2x4	DRY	No.2	SPF
12 - 1	2x4	DRY	No.2	SPF
8 - 7	2x4	DRY	No.2	SPF
12 - 9	2x4	DRY	No.2	SPF
9 - 8	2x4	DRY	No.2	SPF
ALL WEBS EXCEPT	2x3	DRY	No.2	SPF

DRY: SEASONED LUMBER.

PLATES (table is in inches)

JT	TYPE	PLATES	W	LEN	Y	X
1	TMV+p	MT20	2.0	4.0		
2	TMWW-t	MT20	3.0	6.0	1.50	2.75
3	TTW+m	MT20	3.0	4.0	2.00	1.25
4	TMWW-t	MT20	3.0	4.0		
5	TTW+m	MT20	3.0	4.0	2.00	1.25
6	TMWW-t	MT20	3.0	5.0	1.50	2.00
7	TMV+p	MT20	2.0	4.0		
8	BMVW1-t	MT20	4.0	4.0	2.00	1.75
9	BS-t	MT20	3.0	6.0		
10	BMWWW-t	MT20	3.0	6.0		
11	BMWWW-t	MT20	3.0	6.0		
12	BMVW1-t	MT20	4.0	4.0	2.00	1.75

A SIZE FOR SIZE SUBSTITUTION OF MITEK MII20 WITH TEE-LOK TL20 PLATES IS ALLOWED.

DIMENSIONS, SUPPORTS AND LOADINGS SPECIFIED BY FABRICATOR TO BE VERIFIED BY BUILDING DESIGNER

BEARINGS

JT	FACTORED GROSS REACTION VERT	HORZ	MAXIMUM FACTORED GROSS REACTION DOWN	HORZ	UPLIFT	INPUT BRG IN-SX	REQRD BRG IN-SX
12	1045	0	1045	0	0	HANGER BY OTHERS MIN. SEAT SIZE: 1-8	
8	1045	0	1045	0	0	1-10	1-10

UNFACTORED REACTIONS

JT	1ST LCASE COMBINED	SNOW	LIVE	PERM.LIVE	WIND	DEAD	SOIL
		MAX./MIN. COMPONENT REACTIONS					
12	734	513 / 0	0 / 0	0 / 0	0 / 0	220 / 0	0 / 0
8	734	513 / 0	0 / 0	0 / 0	0 / 0	220 / 0	0 / 0

BEARING MATERIAL TO BE SPF NO.2 OR BETTER AT JOINT(S) 8

BRACING
TOP CHORD TO BE SHEATHED OR MAX. PURLIN SPACING = 6.09 FT.
MAX. UNBRACED BOTTOM CHORD LENGTH = 10.00 FT. OR RIGID CEILING DIRECTLY APPLIED.

ALL PITCH BREAKS AND PERIMETER CORNER JOINTS MUST BE LATERALLY RESTRAINED.

LOADING
TOTAL LOAD CASES: (4)

CHORDS

MEMB. FR-TO	MAX. FORCE (LBS)	FACTORED VERT. LOAD LC1 (PLF) FROM	TO	MAX CSI (LC)	MAX. UNBRAC LENGTH
1- 2	0 / 18	-77.3	-77.3	0.17 (1)	10.00
2- 3	-1004 / 0	-77.3	-77.3	0.14 (1)	6.09
3- 4	-824 / 0	-77.3	-77.3	0.12 (1)	6.25
4- 5	-822 / 0	-77.3	-77.3	0.12 (1)	6.25
5- 6	-1001 / 0	-77.3	-77.3	0.14 (1)	6.10
6- 7	0 / 18	-77.3	-77.3	0.17 (1)	10.00
12- 1	-113 / 0	0.0	0.0	0.01 (1)	7.81
8- 7	-113 / 0	0.0	0.0	0.01 (1)	7.81
12-11	0 / 848	-17.5	-17.5	0.27 (4)	10.00
11-10	0 / 909	-17.5	-17.5	0.28 (4)	10.00
10- 9	0 / 841	-17.5	-17.5	0.27 (4)	10.00
9- 8	0 / 841	-17.5	-17.5	0.27 (4)	10.00

WEBS

MEMB. FR-TO	MAX. FORCE (LBS)	MAX CSI (LC)
2-11	-41 / 38	0.02 (1)
11- 3	0 / 327	0.07 (1)
11- 4	-181 / 0	0.19 (1)
4-10	-186 / 0	0.19 (1)
10- 5	0 / 326	0.07 (1)
10- 6	-34 / 39	0.02 (1)
12- 2	-1219 / 0	0.58 (1)
6- 8	-1215 / 0	0.57 (1)

DESIGN CRITERIA

SPECIFIED LOADS:

TOP	CH.	LL	=	23.3	PSF
		DL	=	3.0	PSF
BOT	CH.	LL	=	0.0	PSF
		DL	=	7.0	PSF
TOTAL	LOAD		=	33.3	PSF

SPACING = 24.0 IN. C/C

LOADING IN FLAT SECTION BASED ON A SLOPE OF 6.00/12

THIS TRUSS IS DESIGNED FOR RESIDENTIAL OR SMALL BUILDING REQUIREMENTS OF PART 9, NBCC 2010

THIS DESIGN COMPLIES WITH:
- PART 9 OF OBC 2012 , BCBC 2012 , ABC 2014
- CSA 086-09
- TPIC 2011

(55 % OF 27.2 P.S.F. G.S.L. PLUS 8.4 P.S.F. RAIN LOAD) EQUALS 23.3 P.S.F. SPECIFIED ROOF LIVE LOAD

ALLOWABLE DEFL.(LL)= L/360 (0.73")
CALCULATED VERT. DEFL.(LL) = L/ 999 (0.03")
ALLOWABLE DEFL.(TL)= L/360 (0.73")
CALCULATED VERT. DEFL.(TL) = L/ 999 (0.11")

CSI: TC=0.17 (1-2:1) , BC=0.28 (10-11:4) , WB=0.58 (2-12:1) , SSI=0.13 (3-4:1)

DOL LUMBER=1.00 NAIL=1.00 LS BEND=1.10 COMP=1.10 SHEAR=1.10 TENS= 1.10

COMPANION LIVE LOAD FACTOR = 0.50

TRUSS PLATE MANUFACTURER IS NOT RESPONSIBLE FOR QUALITY CONTROL IN THE TRUSS MANUFACTURING PLANT .

NAIL VALUES

PLATE	GRIP(DRY) (PSI) MAX	MIN	SHEAR (PLI) MAX	MIN	SECTION (PLI) MAX	MIN
MT20	618	354	1667	822	2284	1656

PLATE PLACEMENT TOL. = 0.250 inches

PLATE ROTATION TOL. = 5.0 Deg.

JSI GRIP= 0.90 (6) (INPUT = 0.90)
JSI METAL= 0.35 (6) (INPUT = 1.00)

LICENSED PROFESSIONAL ENGINEER
R.M. TREVISAN
100136551
March 14th, 2017
PROVINCE OF ONTARIO

RECEIVED
TOWN OF MILTON
MAR 29, 2017
17-5233
BUILDING DIVISION

READ ALL NOTES ON THIS PAGE AND ON THE ENGINEERING NOTE PAGE ENP-1. THE NOTE PAGE IS AN INTEGRAL PART OF THIS DRAWING AS IT CONTAINS SPECIFICATIONS AND CRITERIA USED IN THE DESIGN OF THIS COMPONENT.

KOTT

JOB NAME	TRUSS NAME	QUANTITY	PLY	JOB DESC.	DRWG NO.
PT0317-081	**T63**	**1**	**1**	TRUSS DESC. LECCO RIDGE-BLOCK 338	

KOTT , Stouffville, ON, CGC

Version 8.100 S Feb 9 2017 MiTek Industries, Inc. Tue Mar 14 15:57:51 2017 Page 1
ID:EvTixTQDI5yR1QLotZTBr_yE?HJ-ww2Ek9bnmQ4_NzGSluV1ilTPZiuon9wh7dbBvZzb_P_

SCALE = 1:37.8

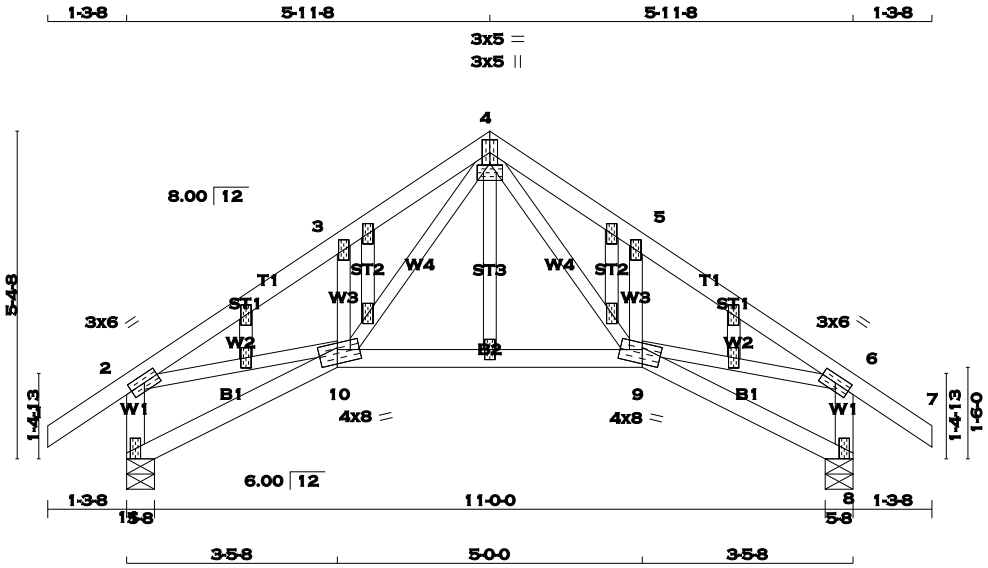

TOTAL WEIGHT = 58 lb
[M][F]

LUMBER
N. L. G. A. RULES

CHORDS	SIZE		LUMBER	DESCR.
1 - 4	2x4	DRY	No.2	SPF
4 - 7	2x4	DRY	No.2	SPF
11 - 2	2x4	DRY	No.2	SPF
8 - 6	2x4	DRY	No.2	SPF
11 - 10	2x4	DRY	No.2	SPF
10 - 9	2x4	DRY	No.2	SPF
9 - 8	2x4	DRY	No.2	SPF
ALL WEBS EXCEPT	2x3	DRY	No.2	SPF
ALL GABLE WEBS	2x3	DRY	No.2	SPF

DRY: SEASONED LUMBER.

GABLE STUDS SPACED AT 2-0-0 OC.

PLATES (table is in inches)

JT	TYPE	PLATES	W	LEN	Y	X
2	TMVW-t	MT20	3.0	6.0		
3	TMW+w	MT20	2.0	4.0		
4	TTWW+p	MT20	3.0	5.0		
4	NP-p	MT20	3.0	5.0	0.25	2.50
5	TMW+w	MT20	2.0	4.0		
6	TMVW-t	MT20	3.0	6.0		
8	BMV1+p	MT20	2.0	4.0		
9	BBWWW-m	MT20	4.0	8.0	2.75	3.75
10	BBWWW-m	MT20	4.0	8.0	2.75	3.75
11	BMV1+p	MT20	2.0	4.0		
12, 13, 14, 15, 16, 17, 18, 19, 20						
12	NP+w	MT20	2.0	4.0		

A SIZE FOR SIZE SUBSTITUTION OF MITEK MII20 WITH TEE-LOK TL20 PLATES IS ALLOWED.

DIMENSIONS, SUPPORTS AND LOADINGS SPECIFIED BY FABRICATOR TO BE VERIFIED BY BUILDING DESIGNER

BEARINGS

JT	FACTORED GROSS REACTION VERT	HORZ	MAXIMUM FACTORED GROSS REACTION DOWN	HORZ	UPLIFT	INPUT BRG IN-SX	REQRD BRG IN-SX
11	671	0	671	0	0	5-8	5-8
8	671	0	671	0	0	5-8	5-8

UNFACTORED REACTIONS

JT	1ST LCASE COMBINED	MAX./MIN. COMPONENT REACTIONS SNOW	LIVE	PERM.LIVE	WIND	DEAD	SOIL
11	469	341 / 0	0 / 0	0 / 0	0 / 0	127 / 0	0 / 0
8	469	341 / 0	0 / 0	0 / 0	0 / 0	127 / 0	0 / 0

BEARING MATERIAL TO BE SPF NO.2 OR BETTER AT JOINT(S) 11, 8

BRACING
TOP CHORD TO BE SHEATHED OR MAX. PURLIN SPACING = 6.25 FT.
MAX. UNBRACED BOTTOM CHORD LENGTH = 10.00 FT. OR RIGID CEILING DIRECTLY APPLIED.

ALL PITCH BREAKS AND PERIMETER CORNER JOINTS MUST BE LATERALLY RESTRAINED.

LOADING
TOTAL LOAD CASES: (4)

CHORDS

MEMB. FR-TO	MAX. FACTORED FORCE (LBS)	FACTORED VERT. LOAD (PLF) FROM	TO	LC1 MAX CSI (LC)	MAX. UNBRAC LENGTH
1- 2	0 / 29	-77.3	-77.3	0.10 (1)	10.00
2- 3	-917 / 0	-77.3	-77.3	0.12 (1)	6.25
3- 4	-945 / 0	-77.3	-77.3	0.08 (1)	6.25
4- 5	-945 / 0	-77.3	-77.3	0.08 (1)	6.25
5- 6	-917 / 0	-77.3	-77.3	0.12 (1)	6.25
6- 7	0 / 29	-77.3	-77.3	0.10 (1)	10.00
11- 2	-641 / 0	0.0	0.0	0.07 (1)	7.81
8- 6	-641 / 0	0.0	0.0	0.07 (1)	7.81
11-10	0 / 0	-17.5	-17.5	0.06 (4)	10.00
10- 9	0 / 460	-17.5	-17.5	0.16 (4)	10.00
9- 8	0 / 0	-17.5	-17.5	0.06 (4)	10.00

WEBS

MEMB. FR-TO	MAX. FACTORED FORCE (LBS)	MAX CSI (LC)
4- 9	0 / 546	0.12 (1)
9- 5	-277 / 0	0.04 (1)
10- 4	0 / 546	0.12 (1)
10- 3	-277 / 0	0.04 (1)
2-10	0 / 777	0.17 (1)
9- 6	0 / 777	0.17 (1)

DESIGN CRITERIA

SPECIFIED LOADS:

TOP	CH.	LL	=	23.3	PSF
		DL	=	3.0	PSF
BOT	CH.	LL	=	0.0	PSF
		DL	=	7.0	PSF
TOTAL	LOAD		=	33.3	PSF

SPACING = 24.0 IN. C/C

THIS TRUSS IS DESIGNED FOR RESIDENTIAL OR SMALL BUILDING REQUIREMENTS OF PART 9, NBCC 2010

THIS DESIGN COMPLIES WITH:
- PART 9 OF OBC 2012 , BCBC 2012 , ABC 2014
- CSA 086-09
- TPIC 2011

(55 % OF 27.2 P.S.F. G.S.L. PLUS 8.4 P.S.F. RAIN LOAD) EQUALS 23.3 P.S.F. SPECIFIED ROOF LIVE LOAD

ALLOWABLE DEFL.(LL)= L/360 (0.40")
CALCULATED VERT. DEFL.(LL) = L/ 999 (0.02")
ALLOWABLE DEFL.(TL)= L/360 (0.40")
CALCULATED VERT. DEFL.(TL) = L/ 999 (0.07")

CSI: TC=0.12 (2-3:1) , BC=0.16 (9-10:4) , WB=0.17 (6-9:1) , SSI=0.10 (2-3:1)

DOL LUMBER=1.00 NAIL=1.00 LS BEND=1.10 COMP=1.10 SHEAR=1.10 TENS= 1.10

COMPANION LIVE LOAD FACTOR = 0.50

AUTOSOLVE HEELS OFF

TRUSS PLATE MANUFACTURER IS NOT RESPONSIBLE FOR QUALITY CONTROL IN THE TRUSS MANUFACTURING PLANT .

NAIL VALUES

PLATE	GRIP(DRY) (PSI) MAX	MIN	SHEAR (PLI) MAX	MIN	SECTION (PLI) MAX	MIN
MT20	618	354	1667	822	2284	1656

PLATE PLACEMENT TOL. = 0.250 inches

PLATE ROTATION TOL. = 5.0 Deg.

JSI GRIP= 0.77 (4) (INPUT = 0.90)
JSI METAL= 0.26 (2) (INPUT = 1.00)

LICENSED PROFESSIONAL ENGINEER
R.M. TREVISAN
100136551
March 14th, 2017
PROVINCE OF ONTARIO

RECEIVED
TOWN OF MILTON
MAR 29, 2017
17-5233
BUILDING DIVISION

READ ALL NOTES ON THIS PAGE AND ON THE ENGINEERING NOTE PAGE ENP-1. THE NOTE PAGE IS AN INTEGRAL PART OF THIS DRAWING AS IT CONTAINS SPECIFICATIONS AND CRITERIA USED IN THE DESIGN OF THIS COMPONENT.

KOTT

JOB NAME	TRUSS NAME	QUANTITY	PLY	JOB DESC.	DRWG NO.
PT0317-081	**T64**	**1**	**1**	TRUSS DESC. LECCO RIDGE-BLOCK 338	

KOTT , Stouffville, ON, CGC

Version 8.100 S Feb 9 2017 MiTek Industries, Inc. Tue Mar 14 15:57:51 2017 Page 1
ID:EvTixTQDI5yR1QLotZTBr_yE?HJ-ww2Ek9bnmQ4_NzGSluV1ilTPZiuon9wh7dbBvZzb_P_

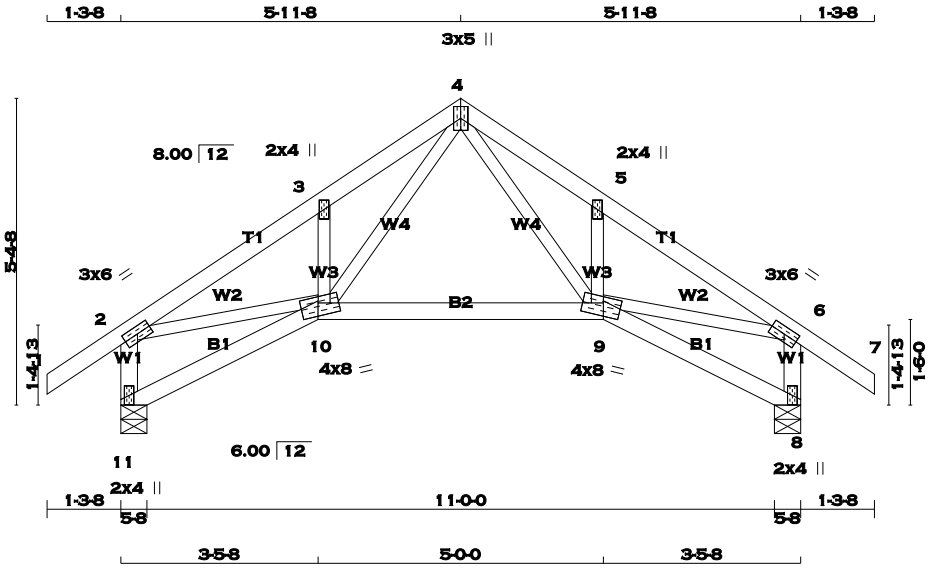

TOTAL WEIGHT = 52 lb

LUMBER
N. L. G. A. RULES

CHORDS	SIZE		LUMBER	DESCR.
1 - 4	2x4	DRY	No.2	SPF
4 - 7	2x4	DRY	No.2	SPF
11 - 2	2x4	DRY	No.2	SPF
8 - 6	2x4	DRY	No.2	SPF
11 - 10	2x4	DRY	No.2	SPF
10 - 9	2x4	DRY	No.2	SPF
9 - 8	2x4	DRY	No.2	SPF
ALL WEBS EXCEPT	2x3	DRY	No.2	SPF

DRY: SEASONED LUMBER.

PLATES (table is in inches)

JT	TYPE	PLATES	W	LEN	Y	X
2	TMVW-t	MT20	3.0	6.0		
3	TMW+w	MT20	2.0	4.0		
4	TTWW+p	MT20	3.0	5.0		
5	TMW+w	MT20	2.0	4.0		
6	TMVW-t	MT20	3.0	6.0		
8	BMV1+p	MT20	2.0	4.0		
9	BBWWW-m	MT20	4.0	8.0	2.75	3.75
10	BBWWW-m	MT20	4.0	8.0	2.75	3.75
11	BMV1+p	MT20	2.0	4.0		

A SIZE FOR SIZE SUBSTITUTION OF MITEK MII20 WITH TEE-LOK TL20 PLATES IS ALLOWED.

DIMENSIONS, SUPPORTS AND LOADINGS SPECIFIED BY FABRICATOR TO BE VERIFIED BY BUILDING DESIGNER

BEARINGS

JT	FACTORED GROSS REACTION VERT	HORZ	MAXIMUM FACTORED GROSS REACTION DOWN	HORZ	UPLIFT	INPUT BRG IN-SX	REQRD BRG IN-SX
11	671	0	671	0	0	5-8	5-8
8	671	0	671	0	0	5-8	5-8

UNFACTORED REACTIONS

JT	1ST LCASE COMBINED	MAX./MIN. COMPONENT REACTIONS SNOW	LIVE	PERM.LIVE	WIND	DEAD	SOIL
11	469	341 / 0	0 / 0	0 / 0	0 / 0	127 / 0	0 / 0
8	469	341 / 0	0 / 0	0 / 0	0 / 0	127 / 0	0 / 0

BEARING MATERIAL TO BE SPF NO.2 OR BETTER AT JOINT(S) 11, 8

BRACING
TOP CHORD TO BE SHEATHED OR MAX. PURLIN SPACING = 6.25 FT.
MAX. UNBRACED BOTTOM CHORD LENGTH = 10.00 FT. OR RIGID CEILING DIRECTLY APPLIED.

ALL PITCH BREAKS AND PERIMETER CORNER JOINTS MUST BE LATERALLY RESTRAINED.

LOADING
TOTAL LOAD CASES: (4)

CHORDS

MEMB. FR-TO	MAX. FACTORED FORCE (LBS)	FACTORED VERT. LOAD (PLF) FROM	TO	LC1 MAX CSI (LC)	MAX. UNBRAC LENGTH
1- 2	0 / 29	-77.3	-77.3	0.10 (1)	10.00
2- 3	-917 / 0	-77.3	-77.3	0.12 (1)	6.25
3- 4	-945 / 0	-77.3	-77.3	0.08 (1)	6.25
4- 5	-945 / 0	-77.3	-77.3	0.08 (1)	6.25
5- 6	-917 / 0	-77.3	-77.3	0.12 (1)	6.25
6- 7	0 / 29	-77.3	-77.3	0.10 (1)	10.00
11- 2	-641 / 0	0.0	0.0	0.07 (1)	7.81
8- 6	-641 / 0	0.0	0.0	0.07 (1)	7.81
11-10	0 / 0	-17.5	-17.5	0.06 (4)	10.00
10- 9	0 / 460	-17.5	-17.5	0.16 (4)	10.00
9- 8	0 / 0	-17.5	-17.5	0.06 (4)	10.00

WEBS

MEMB. FR-TO	MAX. FACTORED FORCE (LBS)	MAX CSI (LC)
4- 9	0 / 546	0.12 (1)
9- 5	-277 / 0	0.04 (1)
10- 4	0 / 546	0.12 (1)
10- 3	-277 / 0	0.04 (1)
2-10	0 / 777	0.17 (1)
9- 6	0 / 777	0.17 (1)

DESIGN CRITERIA

SPECIFIED LOADS:

TOP CH.	LL	=	23.3	PSF
	DL	=	3.0	PSF
BOT CH.	LL	=	0.0	PSF
	DL	=	7.0	PSF
TOTAL LOAD		=	33.3	PSF

SPACING = 24.0 IN. C/C

THIS TRUSS IS DESIGNED FOR RESIDENTIAL OR SMALL BUILDING REQUIREMENTS OF PART 9, NBCC 2010

THIS DESIGN COMPLIES WITH:
- PART 9 OF OBC 2012 , BCBC 2012 , ABC 2014
- CSA 086-09
- TPIC 2011

(55 % OF 27.2 P.S.F. G.S.L. PLUS 8.4 P.S.F. RAIN LOAD) EQUALS 23.3 P.S.F. SPECIFIED ROOF LIVE LOAD

ALLOWABLE DEFL.(LL)= L/360 (0.40")
CALCULATED VERT. DEFL.(LL) = L/ 999 (0.02")
ALLOWABLE DEFL.(TL)= L/360 (0.40")
CALCULATED VERT. DEFL.(TL) = L/ 999 (0.07")

CSI: TC=0.12 (2-3:1) , BC=0.16 (9-10:4) , WB=0.17 (6-9:1) , SSI=0.10 (2-3:1)

DOL LUMBER=1.00 NAIL=1.00 LS BEND=1.10 COMP=1.10 SHEAR=1.10 TENS= 1.10

COMPANION LIVE LOAD FACTOR = 0.50

AUTOSOLVE HEELS OFF

TRUSS PLATE MANUFACTURER IS NOT RESPONSIBLE FOR QUALITY CONTROL IN THE TRUSS MANUFACTURING PLANT .

NAIL VALUES

PLATE	GRIP(DRY) (PSI) MAX	MIN	SHEAR (PLI) MAX	MIN	SECTION (PLI) MAX	MIN
MT20	618	354	1667	822	2284	1656

PLATE PLACEMENT TOL. = 0.250 inches

PLATE ROTATION TOL. = 0.5 Deg.

JSI GRIP= 0.77 (4) (INPUT = 0.90)
JSI METAL= 0.26 (2) (INPUT = 1.00)

LICENSED PROFESSIONAL ENGINEER
R.M. TREVISAN
100136551
March 14th, 2017
PROVINCE OF ONTARIO

RECEIVED
TOWN OF MILTON
MAR 29, 2017
17-5233
BUILDING DIVISION

READ ALL NOTES ON THIS PAGE AND ON THE ENGINEERING NOTE PAGE ENP-1. THE NOTE PAGE IS AN INTEGRAL PART OF THIS DRAWING AS IT CONTAINS SPECIFICATIONS AND CRITERIA USED IN THE DESIGN OF THIS COMPONENT.

KOTT

JOB NAME	TRUSS NAME	QUANTITY	PLY	JOB DESC.	DRWG NO.
PT0317-081	**T65**	**3**	**1**	TRUSS DESC. LECCO RIDGE-BLOCK 338	Page 105 of 130 ENG JOB: PT0317-081

KOTT , Stouffville, ON, CGC

Version 8.100 S Feb 9 2017 MiTek Industries, Inc. Tue Mar 14 15:57:52 2017 Page 1
ID:EvTixTQDI5yR1QLotZTBr_yE?HJ-O7ccxVcPXkCr?7rfJc0GFy0Wg6EkWdfrMHKkQ?zb_Oz

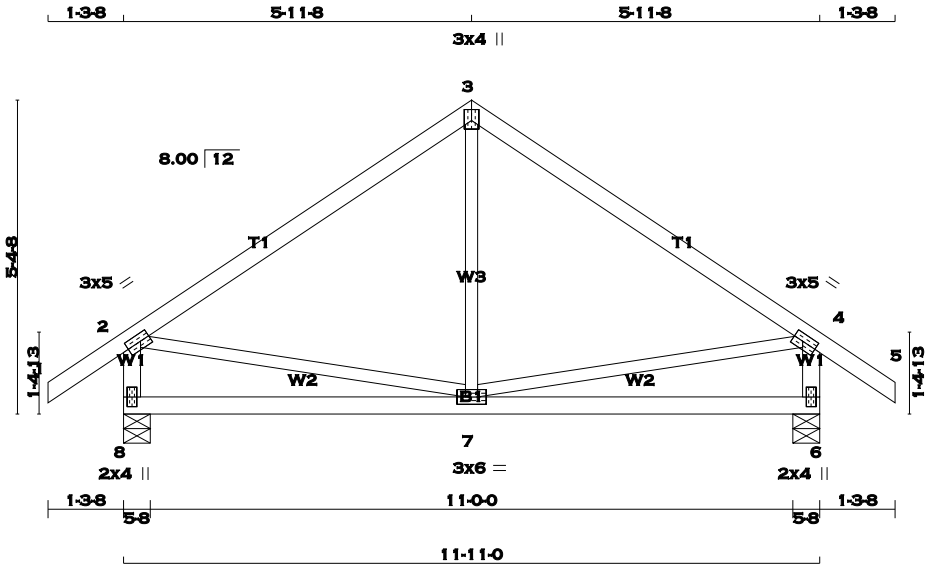

TOTAL WEIGHT = 3 X 49 = 147 lb

[M][F]

LUMBER

N. L. G. A. RULES

CHORDS	SIZE		LUMBER	DESCR.
1 - 3	2x4	DRY	No.2	SPF
3 - 5	2x4	DRY	No.2	SPF
8 - 2	2x4	DRY	No.2	SPF
6 - 4	2x4	DRY	No.2	SPF
8 - 6	2x4	DRY	No.2	SPF
ALL WEBS EXCEPT	2x3	DRY	No.2	SPF

DRY: SEASONED LUMBER.

PLATES (table is in inches)

JT	TYPE	PLATES	W	LEN	Y	X
2	TMVW-t	MT20	3.0	5.0	1.50	2.00
3	TTW+p	MT20	3.0	4.0	2.25	1.50
4	TMVW-t	MT20	3.0	5.0	1.50	2.00
6	BMV1+p	MT20	2.0	4.0		
7	BMWWW-t	MT20	3.0	6.0		
8	BMV1+p	MT20	2.0	4.0		

A SIZE FOR SIZE SUBSTITUTION OF MITEK MII20 WITH TEE-LOK TL20 PLATES IS ALLOWED.

DIMENSIONS, SUPPORTS AND LOADINGS SPECIFIED BY FABRICATOR TO BE VERIFIED BY BUILDING DESIGNER

BEARINGS

JT	FACTORED GROSS REACTION VERT	HORZ	MAXIMUM FACTORED GROSS REACTION DOWN	HORZ	UPLIFT	INPUT BRG IN-SX	REQRD BRG IN-SX
8	671	0	671	0	0	5-8	5-8
6	671	0	671	0	0	5-8	5-8

UNFACTORED REACTIONS

JT	1ST LCASE COMBINED	MAX./MIN. COMPONENT REACTIONS SNOW	LIVE	PERM.LIVE	WIND	DEAD	SOIL
8	469	341 / 0	0 / 0	0 / 0	0 / 0	127 / 0	0 / 0
6	469	341 / 0	0 / 0	0 / 0	0 / 0	127 / 0	0 / 0

BEARING MATERIAL TO BE SPF NO.2 OR BETTER AT JOINT(S) 8, 6

BRACING

TOP CHORD TO BE SHEATHED OR MAX. PURLIN SPACING = 6.25 FT.
MAX. UNBRACED BOTTOM CHORD LENGTH = 10.00 FT. OR RIGID CEILING DIRECTLY APPLIED.

ALL PITCH BREAKS AND PERIMETER CORNER JOINTS MUST BE LATERALLY RESTRAINED.

LOADING

TOTAL LOAD CASES: (4)

CHORDS

MEMB. FR-TO	MAX. FACTORED FORCE (LBS)	FACTORED VERT. LOAD (PLF) FROM	TO	LC1 CSI (LC)	MAX UNBRAC LENGTH
1- 2	0 / 29	-77.3	-77.3	0.10 (1)	10.00
2- 3	-418 / 0	-77.3	-77.3	0.35 (1)	6.25
3- 4	-418 / 0	-77.3	-77.3	0.35 (1)	6.25
4- 5	0 / 29	-77.3	-77.3	0.10 (1)	10.00
8- 2	-631 / 0	0.0	0.0	0.07 (1)	7.81
6- 4	-631 / 0	0.0	0.0	0.07 (1)	7.81
8- 7	0 / 0	-17.5	-17.5	0.18 (4)	10.00
7- 6	0 / 0	-17.5	-17.5	0.18 (4)	10.00

WEBS

MEMB. FR-TO	MAX. FACTORED FORCE (LBS)	MAX CSI (LC)
7- 3	0 / 104	0.04 (4)
2- 7	0 / 353	0.08 (1)
7- 4	0 / 353	0.08 (1)

DESIGN CRITERIA

SPECIFIED LOADS:

TOP	CH.	LL	=	23.3	PSF
		DL	=	3.0	PSF
BOT	CH.	LL	=	0.0	PSF
		DL	=	7.0	PSF
TOTAL	LOAD		=	33.3	PSF

SPACING = 24.0 IN. C/C

THIS TRUSS IS DESIGNED FOR RESIDENTIAL OR SMALL BUILDING REQUIREMENTS OF PART 9, NBCC 2010

THIS DESIGN COMPLIES WITH:
- PART 9 OF OBC 2012 , BCBC 2012 , ABC 2014
- CSA 086-09
- TPIC 2011

(55 % OF 27.2 P.S.F. G.S.L. PLUS 8.4 P.S.F. RAIN LOAD) EQUALS 23.3 P.S.F. SPECIFIED ROOF LIVE LOAD

ALLOWABLE DEFL.(LL)= L/360 (0.40")
CALCULATED VERT. DEFL.(LL) = L/ 999 (0.01")
ALLOWABLE DEFL.(TL)= L/360 (0.40")
CALCULATED VERT. DEFL.(TL) = L/ 999 (0.03")

CSI: TC=0.35 (2-3:1) , BC=0.18 (6-7:4) , WB=0.08 (2-7:1) , SSI=0.15 (2-3:1)

DOL LUMBER=1.00 NAIL=1.00 LS BEND=1.10 COMP=1.10 SHEAR=1.10 TENS= 1.10

COMPANION LIVE LOAD FACTOR = 0.50

TRUSS PLATE MANUFACTURER IS NOT RESPONSIBLE FOR QUALITY CONTROL IN THE TRUSS MANUFACTURING PLANT .

NAIL VALUES

PLATE	GRIP(DRY) (PSI) MAX	MIN	SHEAR (PLI) MAX	MIN	SECTION (PLI) MAX	MIN
MT20	618	354	1667	822	2284	1656

PLATE PLACEMENT TOL. = 0.250 inches

PLATE ROTATION TOL. = 5.0 Deg.

JSI GRIP= 0.76 (7) (INPUT = 0.90)
JSI METAL= 0.18 (4) (INPUT = 1.00)

LICENSED PROFESSIONAL ENGINEER
P.M. TREVISAN
100136551
March 14th, 2017
PROVINCE OF ONTARIO

RECEIVED
TOWN OF MILTON
MAR 29, 2017
17-5233
BUILDING DIVISION

READ ALL NOTES ON THIS PAGE AND ON THE ENGINEERING NOTE PAGE ENP-1. THE NOTE PAGE IS AN INTEGRAL PART OF THIS DRAWING AS IT CONTAINS SPECIFICATIONS AND CRITERIA USED IN THE DESIGN OF THIS COMPONENT.

KOTT

JOB NAME	TRUSS NAME	QUANTITY	PLY	JOB DESC.	DRWG NO.
PT0317-081	**T66**	**2**	**1**	TRUSS DESC. LECCO RIDGE-BLOCK 338	

KOTT , Stouffville, ON, CGC

Version 8.100 S Feb 9 2017 MiTek Industries, Inc. Tue Mar 14 15:57:52 2017 Page 1
ID:EvTixTQDI5yR1QLotZTBr_yE?HJ-O7ccxVcPXkCr?7rfJc0GFy0Wh6EuWdkrMHKkQ?zb_Oz

SCALE = 1:39.4

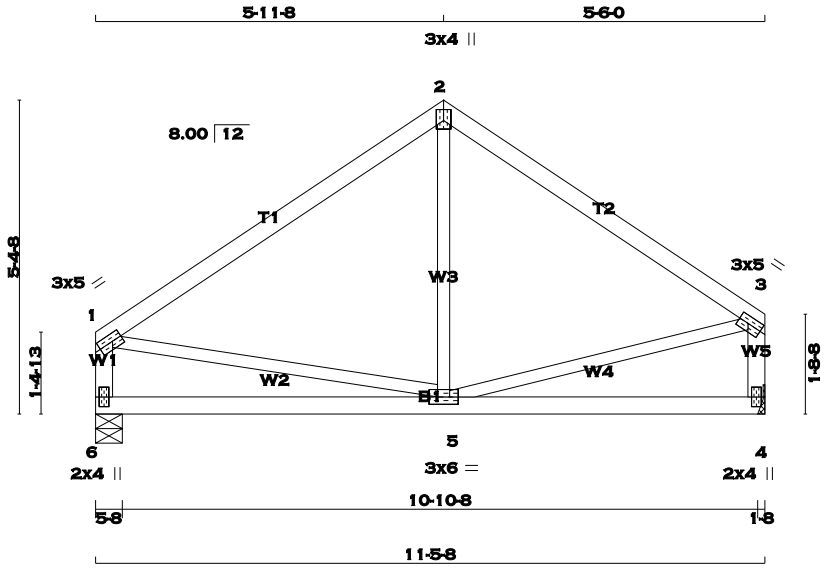

TOTAL WEIGHT = 2 X 44 = 89 lb
[M][F]

LUMBER
N. L. G. A. RULES

CHORDS	SIZE		LUMBER	DESCR.
1 - 2	2x4	DRY	No.2	SPF
2 - 3	2x4	DRY	No.2	SPF
6 - 1	2x4	DRY	No.2	SPF
4 - 3	2x4	DRY	No.2	SPF
6 - 4	2x4	DRY	No.2	SPF
ALL WEBS EXCEPT	2x3	DRY	No.2	SPF

DRY: SEASONED LUMBER.

PLATES (table is in inches)

JT	TYPE	PLATES	W	LEN	Y	X
1	TMVW-t	MT20	3.0	5.0	1.50	2.00
2	TTW+p	MT20	3.0	4.0	2.25	1.50
3	TMVW-t	MT20	3.0	5.0	1.50	2.00
4	BMV1+p	MT20	2.0	4.0		
5	BMWWW-t	MT20	3.0	6.0		
6	BMV1+p	MT20	2.0	4.0		

A SIZE FOR SIZE SUBSTITUTION OF MITEK MII20 WITH TEE-LOK TL20 PLATES IS ALLOWED.

DIMENSIONS, SUPPORTS AND LOADINGS SPECIFIED BY FABRICATOR TO BE VERIFIED BY BUILDING DESIGNER

BEARINGS

JT	FACTORED GROSS REACTION VERT	HORZ	MAXIMUM FACTORED GROSS REACTION DOWN	HORZ	UPLIFT	INPUT BRG IN-SX	REQRD BRG IN-SX
6	543	0	543	0	0	5-8	5-8
4	543	0	543	0	0	HANGER BY OTHERS MIN. SEAT SIZE: 1-8	

UNFACTORED REACTIONS

JT	1ST LCASE COMBINED	MAX./MIN. COMPONENT REACTIONS SNOW	LIVE	PERM.LIVE	WIND	DEAD	SOIL
6	381	267 / 0	0 / 0	0 / 0	0 / 0	115 / 0	0 / 0
4	381	267 / 0	0 / 0	0 / 0	0 / 0	115 / 0	0 / 0

BEARING MATERIAL TO BE SPF NO.2 OR BETTER AT JOINT(S) 6

BRACING
TOP CHORD TO BE SHEATHED OR MAX. PURLIN SPACING = 6.25 FT.
MAX. UNBRACED BOTTOM CHORD LENGTH = 10.00 FT. OR RIGID CEILING DIRECTLY APPLIED.

ALL PITCH BREAKS AND PERIMETER CORNER JOINTS MUST BE LATERALLY RESTRAINED.

LOADING
TOTAL LOAD CASES: (4)

CHORDS

MEMB. FR-TO	MAX. FACTORED FORCE (LBS)	VERT. LOAD (PLF) FROM	TO	MAX CSI (LC)	MAX. UNBRAC LENGTH
1- 2	-386 / 0	-77.3	-77.3	0.35 (1)	6.25
2- 3	-385 / 0	-77.3	-77.3	0.30 (1)	6.25
6- 1	-500 / 0	0.0	0.0	0.05 (1)	7.81
4- 3	-510 / 0	0.0	0.0	0.05 (1)	7.81
6- 5	0 / 0	-17.5	-17.5	0.17 (4)	10.00
5- 4	0 / 0	-17.5	-17.5	0.17 (4)	10.00

WEBS

MEMB. FR-TO	MAX. FACTORED FORCE (LBS)	MAX CSI (LC)
5- 2	-16 / 94	0.03 (4)
1- 5	0 / 326	0.07 (1)
5- 3	0 / 331	0.07 (1)

DESIGN CRITERIA

SPECIFIED LOADS:

TOP CH.	LL	=	23.3	PSF
	DL	=	3.0	PSF
BOT CH.	LL	=	0.0	PSF
	DL	=	7.0	PSF
TOTAL LOAD		=	33.3	PSF

SPACING = 24.0 IN. C/C

THIS TRUSS IS DESIGNED FOR RESIDENTIAL OR SMALL BUILDING REQUIREMENTS OF PART 9, NBCC 2010

THIS DESIGN COMPLIES WITH:
- PART 9 OF OBC 2012 , BCBC 2012 , ABC 2014
- CSA 086-09
- TPIC 2011

(55 % OF 27.2 P.S.F. G.S.L. PLUS 8.4 P.S.F. RAIN LOAD) EQUALS 23.3 P.S.F. SPECIFIED ROOF LIVE LOAD

ALLOWABLE DEFL.(LL)= L/360 (0.38")
CALCULATED VERT. DEFL.(LL) = L/ 999 (0.01")
ALLOWABLE DEFL.(TL)= L/360 (0.38")
CALCULATED VERT. DEFL.(TL) = L/ 999 (0.04")

CSI: TC=0.35 (1-2:1) , BC=0.17 (4-5:4) , WB=0.07 (3-5:1) , SSI=0.15 (1-2:1)

DOL LUMBER=1.00 NAIL=1.00 LS BEND=1.10 COMP=1.10 SHEAR=1.10 TENS= 1.10

COMPANION LIVE LOAD FACTOR = 0.50

TRUSS PLATE MANUFACTURER IS NOT RESPONSIBLE FOR QUALITY CONTROL IN THE TRUSS MANUFACTURING PLANT .

NAIL VALUES

PLATE	GRIP(DRY) (PSI) MAX	MIN	SHEAR (PLI) MAX	MIN	SECTION (PLI) MAX	MIN
MT20	618	354	1667	822	2284	1656

PLATE PLACEMENT TOL. = 0.250 inches

PLATE ROTATION TOL. = 5.0 Deg.

JSI GRIP= 0.70 (5) (INPUT = 0.90)
JSI METAL= 0.15 (1) (INPUT = 1.00)

LICENSED PROFESSIONAL ENGINEER
P.M. TREVISAN
100136551
March 14th, 2017
PROVINCE OF ONTARIO

RECEIVED
TOWN OF MILTON
MAR 29, 2017
17-5233
BUILDING DIVISION

READ ALL NOTES ON THIS PAGE AND ON THE ENGINEERING NOTE PAGE ENP-1. THE NOTE PAGE IS AN INTEGRAL PART OF THIS DRAWING AS IT CONTAINS SPECIFICATIONS AND CRITERIA USED IN THE DESIGN OF THIS COMPONENT.

KOTT

JOB NAME	TRUSS NAME	QUANTITY	PLY	JOB DESC.	DRWG NO.
PT0317-081	**T67**	**3**	**1**	TRUSS DESC. LECCO RIDGE-BLOCK 338	

KOTT , Stouffville, ON, CGC

Version 8.100 S Feb 9 2017 MiTek Industries, Inc. Tue Mar 14 15:57:53 2017 Page 1
ID:EvTixTQDI5yR1QLotZTBr_yE?HJ-sJA?9rd1I1KicHPrsJXVnAZk9WaNF47_ax4HzRzb_Oy

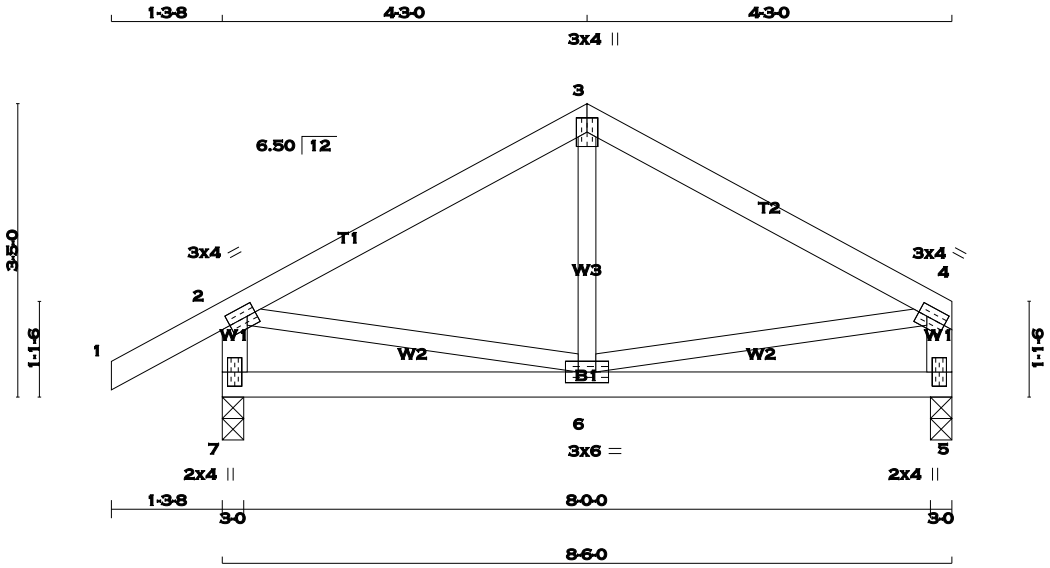

TOTAL WEIGHT = 3 X 33 = 99 lb
[M][F]

LUMBER
N. L. G. A. RULES

CHORDS	SIZE		LUMBER	DESCR.
1 - 3	2x4	DRY	No.2	SPF
3 - 4	2x4	DRY	No.2	SPF
7 - 2	2x4	DRY	No.2	SPF
5 - 4	2x4	DRY	No.2	SPF
7 - 5	2x4	DRY	No.2	SPF
ALL WEBS	2x3	DRY	No.2	SPF
EXCEPT				

DRY: SEASONED LUMBER.

PLATES (table is in inches)

JT	TYPE	PLATES	W	LEN	Y	X
2	TMVW-t	MT20	3.0	4.0	1.50	1.25
3	TTW+p	MT20	3.0	4.0		
4	TMVW-t	MT20	3.0	4.0	1.50	1.25
5	BMV1+p	MT20	2.0	4.0		
6	BMWWW-t	MT20	3.0	6.0		
7	BMV1+p	MT20	2.0	4.0		

A SIZE FOR SIZE SUBSTITUTION OF MITEK MII20 WITH TEE-LOK TL20 PLATES IS ALLOWED.

DIMENSIONS, SUPPORTS AND LOADINGS SPECIFIED BY FABRICATOR TO BE VERIFIED BY BUILDING DESIGNER

BEARINGS

JT	FACTORED GROSS REACTION VERT	HORZ	MAXIMUM FACTORED GROSS REACTION DOWN	HORZ	UPLIFT	INPUT BRG IN-SX	REQRD BRG IN-SX
7	508	0	508	0	0	3-0	3-0
5	403	0	403	0	0	3-0	3-0

UNFACTORED REACTIONS

JT	1ST LCASE COMBINED	MAX./MIN. COMPONENT REACTIONS SNOW	LIVE	PERM.LIVE	WIND	DEAD	SOIL
7	354	261 / 0	0 / 0	0 / 0	0 / 0	93 / 0	0 / 0
5	283	198 / 0	0 / 0	0 / 0	0 / 0	85 / 0	0 / 0

BEARING MATERIAL TO BE SPF NO.2 OR BETTER AT JOINT(S) 7, 5

BRACING
TOP CHORD TO BE SHEATHED OR MAX. PURLIN SPACING = 6.25 FT.
MAX. UNBRACED BOTTOM CHORD LENGTH = 10.00 FT. OR RIGID CEILING DIRECTLY APPLIED.

ALL PITCH BREAKS AND PERIMETER CORNER JOINTS MUST BE LATERALLY RESTRAINED.

LOADING
TOTAL LOAD CASES: (4)

CHORDS

MEMB. FR-TO	MAX. FACTORED FORCE (LBS)	FACTORED VERT. LOAD (PLF) FROM	TO	LC1 MAX CSI (LC)	MAX. UNBRAC LENGTH
1- 2	0 / 25	-77.3	-77.3	0.10 (1)	10.00
2- 3	-326 / 0	-77.3	-77.3	0.18 (1)	6.25
3- 4	-326 / 0	-77.3	-77.3	0.18 (1)	6.25
7- 2	-479 / 0	0.0	0.0	0.05 (1)	7.81
5- 4	-374 / 0	0.0	0.0	0.04 (1)	7.81
7- 6	0 / 0	-17.5	-17.5	0.09 (4)	10.00
6- 5	0 / 0	-17.5	-17.5	0.09 (4)	10.00

WEBS

MEMB. FR-TO	MAX. FACTORED FORCE (LBS)	MAX CSI (LC)
6- 3	-18 / 67	0.02 (4)
2- 6	0 / 292	0.07 (1)
6- 4	0 / 292	0.07 (1)

DESIGN CRITERIA

SPECIFIED LOADS:

TOP	CH.	LL	=	23.3	PSF
		DL	=	3.0	PSF
BOT	CH.	LL	=	0.0	PSF
		DL	=	7.0	PSF
TOTAL	LOAD		=	33.3	PSF

SPACING = 24.0 IN. C/C

THIS TRUSS IS DESIGNED FOR RESIDENTIAL OR SMALL BUILDING REQUIREMENTS OF PART 9, NBCC 2010

THIS DESIGN COMPLIES WITH:
- PART 9 OF OBC 2012 , BCBC 2012 , ABC 2014
- CSA 086-09
- TPIC 2011

(55 % OF 27.2 P.S.F. G.S.L. PLUS 8.4 P.S.F. RAIN LOAD) EQUALS 23.3 P.S.F. SPECIFIED ROOF LIVE LOAD

ALLOWABLE DEFL.(LL)= L/360 (0.28")
CALCULATED VERT. DEFL.(LL) = L/ 999 (0.00")
ALLOWABLE DEFL.(TL)= L/360 (0.28")
CALCULATED VERT. DEFL.(TL) = L/ 999 (0.01")

CSI: TC=0.18 (3-4:1) , BC=0.09 (6-7:4) , WB=0.07 (2-6:1) , SSI=0.11 (3-4:1)

DOL LUMBER=1.00 NAIL=1.00 LS BEND=1.10 COMP=1.10 SHEAR=1.10 TENS= 1.10

COMPANION LIVE LOAD FACTOR = 0.50

TRUSS PLATE MANUFACTURER IS NOT RESPONSIBLE FOR QUALITY CONTROL IN THE TRUSS MANUFACTURING PLANT .

NAIL VALUES

PLATE	GRIP(DRY) (PSI) MAX	MIN	SHEAR (PLI) MAX	MIN	SECTION (PLI) MAX	MIN
MT20	618	354	1667	822	2284	1656

PLATE PLACEMENT TOL. = 0.250 inches

PLATE ROTATION TOL. = 5.0 Deg.

JSI GRIP= 0.70 (2) (INPUT = 0.90)
JSI METAL= 0.17 (2) (INPUT = 1.00)

LICENSED PROFESSIONAL ENGINEER
R.M. TREVISAN
100136551
March 14th, 2017
PROVINCE OF ONTARIO

RECEIVED
TOWN OF MILTON
MAR 29, 2017
17-5233
BUILDING DIVISION

READ ALL NOTES ON THIS PAGE AND ON THE ENGINEERING NOTE PAGE ENP-1. THE NOTE PAGE IS AN INTEGRAL PART OF THIS DRAWING AS IT CONTAINS SPECIFICATIONS AND CRITERIA USED IN THE DESIGN OF THIS COMPONENT.

KOTT

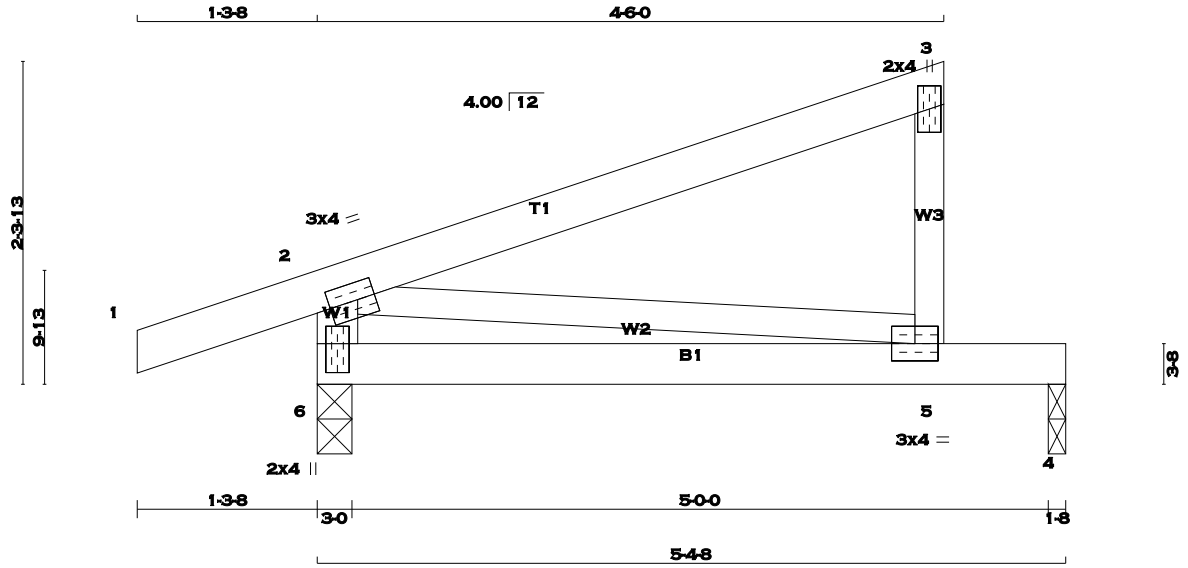

TOTAL WEIGHT = 4 X 18 = 73 lb [M]

LUMBER

N. L. G. A. RULES

CHORDS	SIZE		LUMBER	DESCR.
1 - 3	2x4	DRY	No.2	SPF
5 - 3	2x3	DRY	No.2	SPF
6 - 2	2x4	DRY	No.2	SPF
6 - 4	2x4	DRY	No.2	SPF
ALL WEBS	2x3	DRY	No.2	SPF

DRY: SEASONED LUMBER.

PLATES (table is in inches)

JT	TYPE	PLATES	W	LEN	Y	X
2	TMVW-t	MT20	3.0	4.0	1.50	1.50
3	TMV+p	MT20	2.0	4.0		
5	BMVW-t	MT20	3.0	4.0		
6	BMV1+p	MT20	2.0	4.0	2.50	1.00

A SIZE FOR SIZE SUBSTITUTION OF MITEK MII20 WITH TEE-LOK TL20 PLATES IS ALLOWED.

DIMENSIONS, SUPPORTS AND LOADINGS SPECIFIED BY FABRICATOR TO BE VERIFIED BY BUILDING DESIGNER

BEARINGS

JT	FACTORED GROSS REACTION VERT	HORZ	MAXIMUM FACTORED GROSS REACTION DOWN	HORZ	UPLIFT	INPUT BRG IN-SX	REQRD BRG IN-SX
6	353	0	353	0	0	3-0	3-0
4	193	0	193	0	0	1-8	1-8

UNFACTORED REACTIONS

JT	1ST LCASE COMBINED	MAX./MIN. COMPONENT REACTIONS SNOW	LIVE	PERM.LIVE	WIND	DEAD	SOIL
6	245	184 / 0	0 / 0	0 / 0	0 / 0	61 / 0	0 / 0
4	137	88 / 0	0 / 0	0 / 0	0 / 0	49 / 0	0 / 0

BEARING MATERIAL TO BE SPF NO.2 OR BETTER AT JOINT(S) 6, 4

BRACING

TOP CHORD TO BE SHEATHED OR MAX. PURLIN SPACING = 10.00 FT.
MAX. UNBRACED BOTTOM CHORD LENGTH = 10.00 FT. OR RIGID CEILING DIRECTLY APPLIED.

ALL PITCH BREAKS AND PERIMETER CORNER JOINTS MUST BE LATERALLY RESTRAINED.

LOADING

TOTAL LOAD CASES: (4)

CHORDS

MEMB. FR-TO	MAX. FACTORED FORCE (LBS)	FACTORED VERT. LOAD (PLF) FROM	TO	LC1 MAX CSI (LC)	MAX. UNBRAC LENGTH
1- 2	0 / 16	-77.3	-77.3	0.10 (1)	10.00
2- 3	0 / 0	-77.3	-77.3	0.27 (1)	10.00
5- 3	-174 / 0	0.0	0.0	0.03 (1)	7.81
6- 2	-278 / 0	0.0	0.0	0.03 (1)	7.81
6- 5	0 / 0	-17.5	-17.5	0.22 (1)	10.00
5- 4	0 / 0	-17.5	-17.5	0.22 (1)	10.00

WEBS

MEMB. FR-TO	MAX. FACTORED FORCE (LBS)	MAX CSI (LC)
2- 5	0 / 0	0.00 (1)

DESIGN CRITERIA

SPECIFIED LOADS:

TOP	CH.	LL	=	23.3	PSF
		DL	=	3.0	PSF
BOT	CH.	LL	=	0.0	PSF
		DL	=	7.0	PSF
TOTAL	LOAD		=	33.3	PSF

SPACING = 24.0 IN. C/C

THIS TRUSS IS DESIGNED FOR RESIDENTIAL OR SMALL BUILDING REQUIREMENTS OF PART 9, NBCC 2010

THIS DESIGN COMPLIES WITH:
- PART 9 OF OBC 2012 , BCBC 2012 , ABC 2014
- CSA 086-09
- TPIC 2011

(55 % OF 27.2 P.S.F. G.S.L. PLUS 8.4 P.S.F. RAIN LOAD) EQUALS 23.3 P.S.F. SPECIFIED ROOF LIVE LOAD

ALLOWABLE DEFL.(LL)= L/360 (0.19")
CALCULATED VERT. DEFL.(LL) = L/ 999 (0.04")
ALLOWABLE DEFL.(TL)= L/360 (0.19")
CALCULATED VERT. DEFL.(TL) = L/ 709 (0.09")

CSI: TC=0.27 (2-3:1) , BC=0.22 (5-6:1) , WB=0.00 (2-5:1) , SSI=0.15 (4-5:1)

DOL LUMBER=1.00 NAIL=1.00 LS BEND=1.10 COMP=1.10 SHEAR=1.10 TENS= 1.10

COMPANION LIVE LOAD FACTOR = 0.50

TRUSS PLATE MANUFACTURER IS NOT RESPONSIBLE FOR QUALITY CONTROL IN THE TRUSS MANUFACTURING PLANT .

NAIL VALUES

PLATE	GRIP(DRY) (PSI) MAX	MIN	SHEAR (PLI) MAX	MIN	SECTION (PLI) MAX	MIN
MT20	618	354	1667	822	2284	1656

PLATE PLACEMENT TOL. = 0.250 inches

PLATE ROTATION TOL. = 5.0 Deg.

JSI GRIP= 0.25 (2) (INPUT = 0.90)
JSI METAL= 0.05 (6) (INPUT = 1.00)

LICENSED PROFESSIONAL ENGINEER
R.M. TREVISAN
100136551
March 14th, 2017
PROVINCE OF ONTARIO

RECEIVED
TOWN OF MILTON
MAR 29, 2017
17-5233
BUILDING DIVISION

READ ALL NOTES ON THIS PAGE AND ON THE ENGINEERING NOTE PAGE ENP-1. THE NOTE PAGE IS AN INTEGRAL PART OF THIS DRAWING AS IT CONTAINS SPECIFICATIONS AND CRITERIA USED IN THE DESIGN OF THIS COMPONENT.

KOTT

JOB NAME	TRUSS NAME	QUANTITY	PLY	JOB DESC.	DRWG NO.
PT0317-081	T69	1	1	TRUSS DESC. LECCO RIDGE-BLOCK 338	

KOTT , Stouffville, ON, CGC

Version 8.100 S Feb 9 2017 MiTek Industries, Inc. Tue Mar 14 15:57:54 2017 Page 1
ID:EvTixTQDI5yR1QLotZTBr_yE?HJ-LVkNMBdf3LSZEQ_1Q12kKN5qvvuN_V_8pbprVuzb_Ox

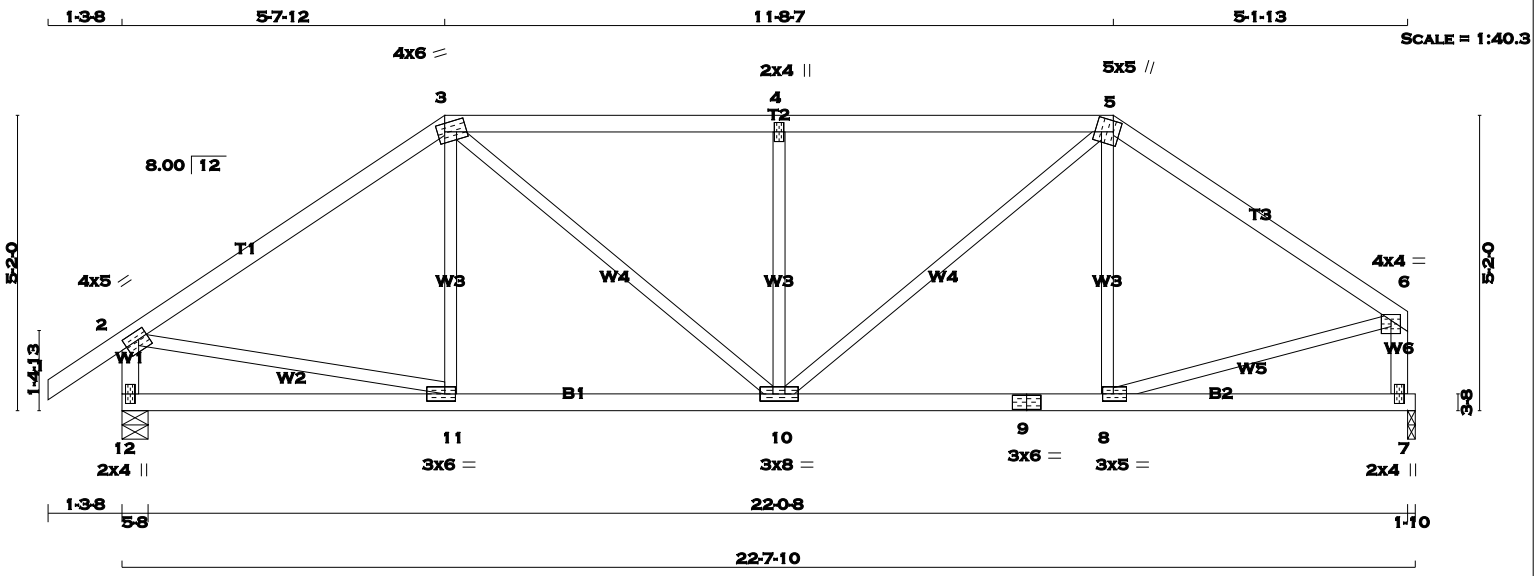

TOTAL WEIGHT = 90 lb
[M]

LUMBER
N. L. G. A. RULES

CHORDS	SIZE		LUMBER	DESCR.
1 - 3	2x4	DRY	No.2	SPF
3 - 5	2x4	DRY	No.2	SPF
5 - 6	2x4	DRY	No.2	SPF
12 - 2	2x4	DRY	No.2	SPF
7 - 6	2x4	DRY	No.2	SPF
12 - 9	2x4	DRY	No.2	SPF
9 - 7	2x4	DRY	No.2	SPF
ALL WEBS EXCEPT	2x3	DRY	No.2	SPF

DRY: SEASONED LUMBER.

PLATES (table is in inches)

JT	TYPE	PLATES	W	LEN	Y	X
2	TMVW-t	MT20	4.0	5.0	1.75	2.00
3	TTWW-m	MT20	4.0	6.0	1.75	1.50
4	TMW+w	MT20	2.0	4.0		
5	TTWW+m	MT20	5.0	5.0	2.25	1.25
6	TMVW-p	MT20	4.0	4.0	1.25	2.00
7	BMV1+p	MT20	2.0	4.0		
8	BMWW-t	MT20	3.0	5.0	1.50	2.25
9	BS-t	MT20	3.0	6.0		
10	BMWWW-t	MT20	3.0	8.0		
11	BMWW-t	MT20	3.0	6.0	1.50	2.25
12	BMV1+p	MT20	2.0	4.0		

A SIZE FOR SIZE SUBSTITUTION OF MITEK MII20 WITH TEE-LOK TL20 PLATES IS ALLOWED.

DIMENSIONS, SUPPORTS AND LOADINGS SPECIFIED BY FABRICATOR TO BE VERIFIED BY BUILDING DESIGNER

BEARINGS

JT	FACTORED GROSS REACTION VERT	HORZ	MAXIMUM FACTORED GROSS REACTION DOWN	HORZ	UPLIFT	INPUT BRG IN-SX	REQRD BRG IN-SX
12	1173	0	1173	0	0	5-8	5-8
7	1067	0	1067	0	0	1-10	1-10

UNFACTORED REACTIONS

JT	1ST LCASE COMBINED	MAX./MIN. COMPONENT REACTIONS SNOW	LIVE	PERM.LIVE	WIND	DEAD	SOIL
12	821	588 / 0	0 / 0	0 / 0	0 / 0	233 / 0	0 / 0
7	749	524 / 0	0 / 0	0 / 0	0 / 0	225 / 0	0 / 0

BEARING MATERIAL TO BE SPF NO.2 OR BETTER AT JOINT(S) 12, 7

BRACING
TOP CHORD TO BE SHEATHED OR MAX. PURLIN SPACING = 4.99 FT.
MAX. UNBRACED BOTTOM CHORD LENGTH = 10.00 FT. OR RIGID CEILING DIRECTLY APPLIED.

ALL PITCH BREAKS AND PERIMETER CORNER JOINTS MUST BE LATERALLY RESTRAINED.

LOADING
TOTAL LOAD CASES: (4)

CHORDS

MEMB. FR-TO	MAX. FACTORED FORCE (LBS)	FACTORED VERT. LOAD (PLF) FROM	TO	LC1 MAX CSI (LC)	MAX. UNBRAC LENGTH
1- 2	0 / 29	-77.3	-77.3	0.10 (1)	10.00
2- 3	-1135 / 0	-77.3	-77.3	0.49 (1)	5.30
3- 4	-1302 / 0	-77.3	-77.3	0.50 (1)	4.99
4- 5	-1302 / 0	-77.3	-77.3	0.50 (1)	4.99
5- 6	-1067 / 0	-77.3	-77.3	0.40 (1)	5.57
12- 2	-1133 / 0	0.0	0.0	0.12 (1)	7.46
7- 6	-1031 / 0	0.0	0.0	0.11 (1)	7.73
12-11	0 / 0	-17.5	-17.5	0.14 (4)	10.00
11-10	0 / 942	-17.5	-17.5	0.23 (1)	10.00
10- 9	0 / 884	-17.5	-17.5	0.21 (1)	10.00
9- 8	0 / 884	-17.5	-17.5	0.21 (1)	10.00
8- 7	0 / 0	-17.5	-17.5	0.13 (4)	10.00

WEBS

MEMB. FR-TO	MAX. FACTORED FORCE (LBS)	MAX CSI (LC)
11- 3	-62 / 74	0.03 (4)
3-10	0 / 469	0.11 (1)
10- 4	-555 / 0	0.22 (1)
10- 5	0 / 544	0.12 (1)
8- 5	-129 / 49	0.05 (1)
2-11	0 / 960	0.22 (1)
8- 6	0 / 918	0.21 (1)

DESIGN CRITERIA

SPECIFIED LOADS:

TOP CH.	LL	=	23.3	PSF
	DL	=	3.0	PSF
BOT CH.	LL	=	0.0	PSF
	DL	=	7.0	PSF
TOTAL LOAD		=	33.3	PSF

SPACING = 24.0 IN. C/C

LOADING IN FLAT SECTION BASED ON A SLOPE OF 6.00/12

THIS TRUSS IS DESIGNED FOR RESIDENTIAL OR SMALL BUILDING REQUIREMENTS OF PART 9, NBCC 2010

THIS DESIGN COMPLIES WITH:
- PART 9 OF OBC 2012 , BCBC 2012 , ABC 2014
- CSA 086-09
- TPIC 2011

(55 % OF 27.2 P.S.F. G.S.L. PLUS 8.4 P.S.F. RAIN LOAD) EQUALS 23.3 P.S.F. SPECIFIED ROOF LIVE LOAD

ALLOWABLE DEFL.(LL)= L/360 (0.75")
CALCULATED VERT. DEFL.(LL) = L/ 999 (0.04")
ALLOWABLE DEFL.(TL)= L/360 (0.75")
CALCULATED VERT. DEFL.(TL) = L/ 999 (0.08")

CSI: TC=0.50 (4-5:1) , BC=0.23 (10-11:1) , WB=0.22 (4-10:1) , SSI=0.22 (3-4:1)

DOL LUMBER=1.00 NAIL=1.00 LS BEND=1.10 COMP=1.10 SHEAR=1.10 TENS= 1.10

COMPANION LIVE LOAD FACTOR = 0.50

TRUSS PLATE MANUFACTURER IS NOT RESPONSIBLE FOR QUALITY CONTROL IN THE TRUSS MANUFACTURING PLANT .

NAIL VALUES

PLATE	GRIP(DRY) (PSI) MAX	MIN	SHEAR (PLI) MAX	MIN	SECTION (PLI) MAX	MIN
MT20	618	354	1667	822	2284	1656

PLATE PLACEMENT TOL. = 0.250 inches

PLATE ROTATION TOL. = 5.0 Deg.

JSI GRIP= 0.89 (6) (INPUT = 0.90)
JSI METAL= 0.39 (2) (INPUT = 1.00)

LICENSED PROFESSIONAL ENGINEER
P.M. TREVISAN
100136551
March 14th, 2017
PROVINCE OF ONTARIO

RECEIVED
TOWN OF MILTON
MAR 29, 2017
17-5233
BUILDING DIVISION

READ ALL NOTES ON THIS PAGE AND ON THE ENGINEERING NOTE PAGE ENP-1. THE NOTE PAGE IS AN INTEGRAL PART OF THIS DRAWING AS IT CONTAINS SPECIFICATIONS AND CRITERIA USED IN THE DESIGN OF THIS COMPONENT.

KOTT

JOB NAME	TRUSS NAME	QUANTITY	PLY	JOB DESC.	DRWG NO.
PT0317-081	**T70**	**1**	**1**	TRUSS DESC. LECCO RIDGE-BLOCK 338	

KOTT , Stouffville, ON, CGC

Version 8.100 S Feb 9 2017 MiTek Industries, Inc. Tue Mar 14 15:57:55 2017 Page 1
ID:EvTixTQDI5yR1QLotZTBr_yE?HJ-phIlaWeHqfaQsaZE_kZzsbe4UJC3jtcH2FZO1Kzb_Ow

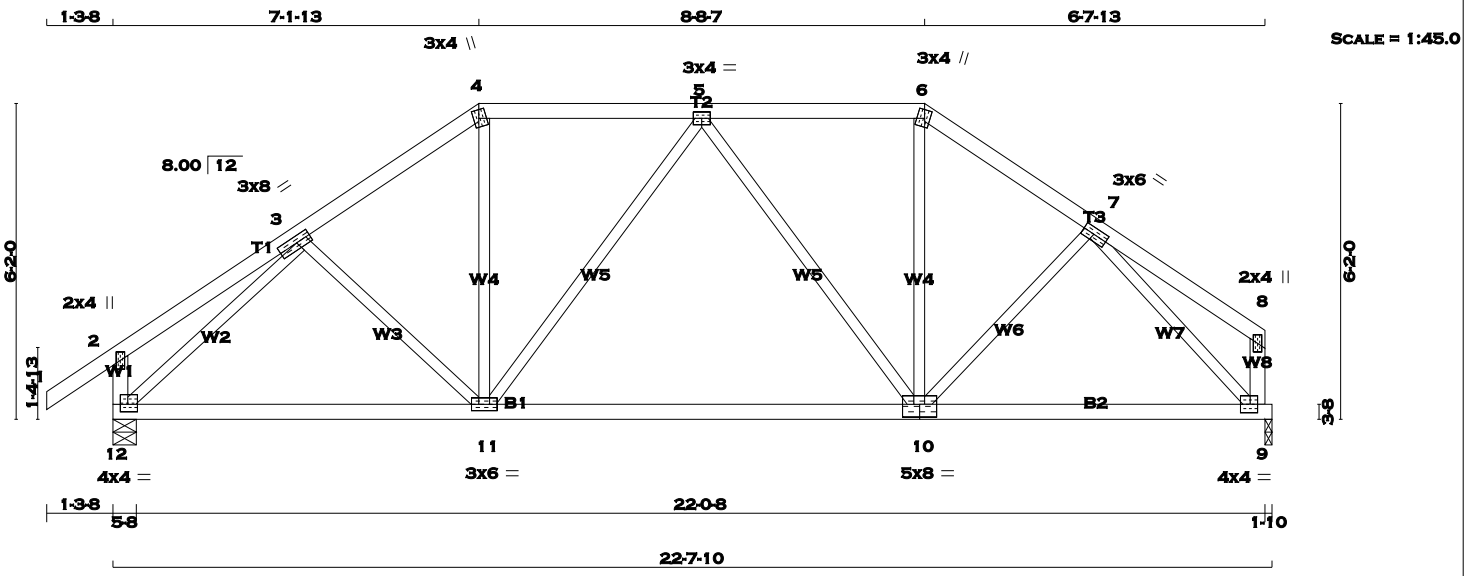

TOTAL WEIGHT = 95 lb

[M][F]

LUMBER

N. L. G. A. RULES

CHORDS	SIZE		LUMBER	DESCR.
1 - 4	2x4	DRY	No.2	SPF
4 - 6	2x4	DRY	No.2	SPF
6 - 8	2x4	DRY	No.2	SPF
12 - 2	2x4	DRY	No.2	SPF
9 - 8	2x4	DRY	No.2	SPF
12 - 10	2x4	DRY	No.2	SPF
10 - 9	2x4	DRY	No.2	SPF
ALL WEBS EXCEPT	2x3	DRY	No.2	SPF

DRY: SEASONED LUMBER.

PLATES (table is in inches)

JT	TYPE	PLATES	W	LEN	Y	X
2	TMV+p	MT20	2.0	4.0		
3	TMWW-t	MT20	3.0	8.0	1.50	3.50
4	TTW+m	MT20	3.0	4.0	2.00	1.25
5	TMWW-t	MT20	3.0	4.0		
6	TTW+m	MT20	3.0	4.0	2.00	1.25
7	TMWW-t	MT20	3.0	6.0	1.50	2.75
8	TMV+p	MT20	2.0	4.0		
9	BMVW1-t	MT20	4.0	4.0	2.00	1.75
10	BSWWW-l	MT20	5.0	8.0	3.00	4.00
11	BMWWW-t	MT20	3.0	6.0		
12	BMVW1-t	MT20	4.0	4.0	1.75	1.75

A SIZE FOR SIZE SUBSTITUTION OF MITEK MII20 WITH TEE-LOK TL20 PLATES IS ALLOWED.

DIMENSIONS, SUPPORTS AND LOADINGS SPECIFIED BY FABRICATOR TO BE VERIFIED BY BUILDING DESIGNER

BEARINGS

JT	FACTORED GROSS REACTION VERT	HORZ	MAXIMUM FACTORED GROSS REACTION DOWN	HORZ	UPLIFT	INPUT BRG IN-SX	REQRD BRG IN-SX
12	1173	0	1173	0	0	5-8	5-8
9	1067	0	1067	0	0	1-10	1-10

UNFACTORED REACTIONS

JT	1ST LCASE COMBINED	MAX./MIN. COMPONENT REACTIONS SNOW	LIVE	PERM.LIVE	WIND	DEAD	SOIL
12	821	588 / 0	0 / 0	0 / 0	0 / 0	233 / 0	0 / 0
9	749	524 / 0	0 / 0	0 / 0	0 / 0	225 / 0	0 / 0

BEARING MATERIAL TO BE SPF NO.2 OR BETTER AT JOINT(S) 12, 9

BRACING

TOP CHORD TO BE SHEATHED OR MAX. PURLIN SPACING = 5.90 FT.
MAX. UNBRACED BOTTOM CHORD LENGTH = 10.00 FT. OR RIGID CEILING DIRECTLY APPLIED.

ALL PITCH BREAKS AND PERIMETER CORNER JOINTS MUST BE LATERALLY RESTRAINED.

LOADING

TOTAL LOAD CASES: (4)

CHORDS MEMB. FR-TO	MAX. FACTORED FORCE (LBS)	FACTORED VERT. LOAD (PLF) FROM	TO	LC1 MAX CSI (LC)	MAX. UNBRAC LENGTH	WEBS MEMB. FR-TO	MAX. FACTORED FORCE (LBS)	MAX CSI (LC)
1- 2	0 / 29	-77.3	-77.3	0.10 (1)	10.00	3-11	-47 / 36	0.02 (1)
2- 3	0 / 16	-77.3	-77.3	0.15 (1)	10.00	11- 4	0 / 366	0.08 (1)
3- 4	-1105 / 0	-77.3	-77.3	0.13 (1)	5.90	11- 5	-222 / 0	0.23 (1)
4- 5	-910 / 0	-77.3	-77.3	0.19 (1)	6.24	5-10	-284 / 0	0.29 (1)
5- 6	-874 / 0	-77.3	-77.3	0.19 (1)	6.25	10- 6	0 / 350	0.08 (1)
6- 7	-1061 / 0	-77.3	-77.3	0.11 (1)	6.01	10- 7	0 / 55	0.02 (4)
7- 8	0 / 15	-77.3	-77.3	0.12 (1)	10.00	12- 3	-1307 / 0	0.51 (1)
12- 2	-214 / 0	0.0	0.0	0.02 (1)	7.81	7- 9	-1248 / 0	0.48 (1)
9- 8	-102 / 0	0.0	0.0	0.01 (1)	7.81			
12-11	0 / 938	-17.5	-17.5	0.32 (4)	10.00			
11-10	0 / 1041	-17.5	-17.5	0.33 (4)	10.00			
10- 9	0 / 843	-17.5	-17.5	0.29 (4)	10.00			

DESIGN CRITERIA

SPECIFIED LOADS:

TOP CH.	LL	=	23.3	PSF
	DL	=	3.0	PSF
BOT CH.	LL	=	0.0	PSF
	DL	=	7.0	PSF
TOTAL LOAD		=	33.3	PSF

SPACING = 24.0 IN. C/C

LOADING IN FLAT SECTION BASED ON A SLOPE OF 6.00/12

THIS TRUSS IS DESIGNED FOR RESIDENTIAL OR SMALL BUILDING REQUIREMENTS OF PART 9, NBCC 2010

THIS DESIGN COMPLIES WITH:
- PART 9 OF OBC 2012 , BCBC 2012 , ABC 2014
- CSA 086-09
- TPIC 2011

(55 % OF 27.2 P.S.F. G.S.L. PLUS 8.4 P.S.F. RAIN LOAD) EQUALS 23.3 P.S.F. SPECIFIED ROOF LIVE LOAD

ALLOWABLE DEFL.(LL)= L/360 (0.75")
CALCULATED VERT. DEFL.(LL) = L/ 999 (0.04")
ALLOWABLE DEFL.(TL)= L/360 (0.75")
CALCULATED VERT. DEFL.(TL) = L/ 999 (0.11")

CSI: TC=0.19 (4-5:1) , BC=0.33 (10-11:4) , WB=0.51 (3-12:1) , SSI=0.16 (4-5:1)

DOL LUMBER=1.00 NAIL=1.00 LS BEND=1.10 COMP=1.10 SHEAR=1.10 TENS= 1.10

COMPANION LIVE LOAD FACTOR = 0.50

TRUSS PLATE MANUFACTURER IS NOT RESPONSIBLE FOR QUALITY CONTROL IN THE TRUSS MANUFACTURING PLANT .

NAIL VALUES

PLATE	GRIP(DRY) (PSI) MAX	MIN	SHEAR (PLI) MAX	MIN	SECTION (PLI) MAX	MIN
MT20	618	354	1667	822	2284	1656

PLATE PLACEMENT TOL. = 0.250 inches

PLATE ROTATION TOL. = 0.5 Deg.

JSI GRIP= 0.90 (3) (INPUT = 0.90)
JSI METAL= 0.35 (12) (INPUT = 1.00)

LICENSED PROFESSIONAL ENGINEER
R.M. TREVISAN
100136551
March 14th, 2017
PROVINCE OF ONTARIO

RECEIVED
TOWN OF MILTON
MAR 29, 2017
17-5233
BUILDING DIVISION

READ ALL NOTES ON THIS PAGE AND ON THE ENGINEERING NOTE PAGE ENP-1. THE NOTE PAGE IS AN INTEGRAL PART OF THIS DRAWING AS IT CONTAINS SPECIFICATIONS AND CRITERIA USED IN THE DESIGN OF THIS COMPONENT.

KOTT

JOB NAME	TRUSS NAME	QUANTITY	PLY	JOB DESC.	DRWG NO.
PT0317-081	T71	1	1	TRUSS DESC. LECCO RIDGE-BLOCK 338	

KOTT , Stouffville, ON, CGC

Version 8.100 S Feb 9 2017 MiTek Industries, Inc. Tue Mar 14 15:57:55 2017 Page 1
ID:EvTixTQDI5yR1QLotZTBr_yE?HJ-phIlaWeHqfaQsaZE_kZzsbe1HJEzjy4H2FZO1Kzb_Ow

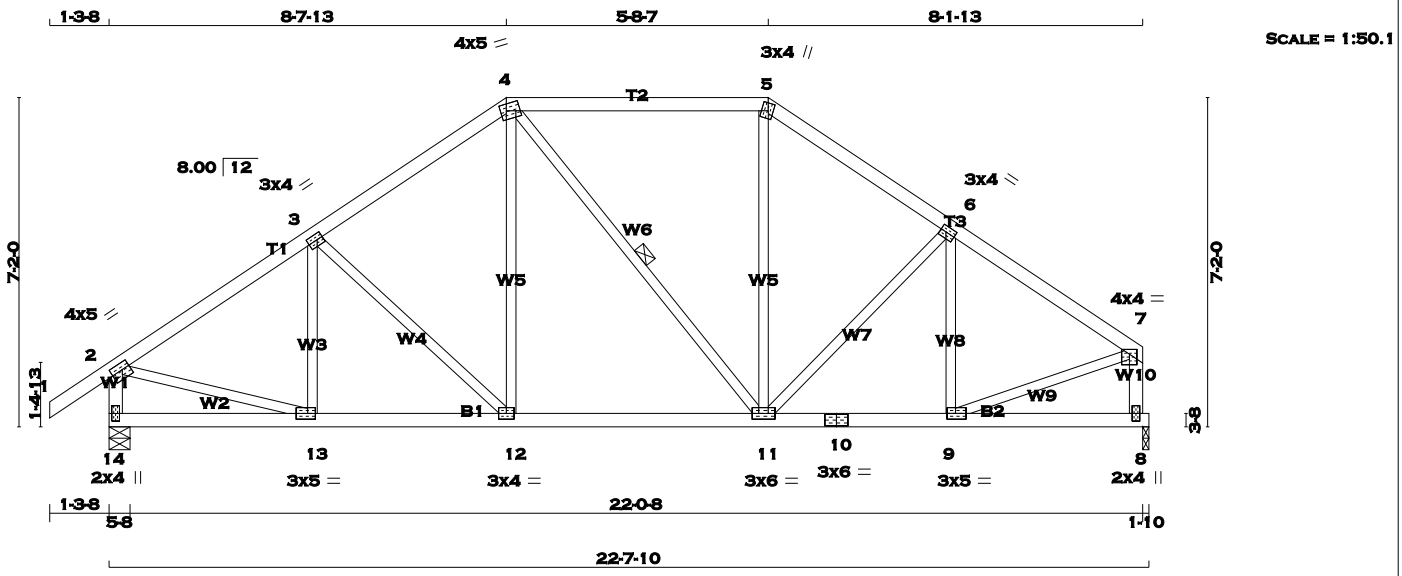

TOTAL WEIGHT = 100 lb
[M][F]

LUMBER
N. L. G. A. RULES

CHORDS	SIZE		LUMBER	DESCR.
1 - 4	2x4	DRY	No.2	SPF
4 - 5	2x4	DRY	No.2	SPF
5 - 7	2x4	DRY	No.2	SPF
14 - 2	2x4	DRY	No.2	SPF
8 - 7	2x4	DRY	No.2	SPF
14 - 10	2x4	DRY	No.2	SPF
10 - 8	2x4	DRY	No.2	SPF
ALL WEBS EXCEPT	2x3	DRY	No.2	SPF

DRY: SEASONED LUMBER.

PLATES (table is in inches)

JT	TYPE	PLATES	W	LEN	Y	X
2	TMVW-t	MT20	4.0	5.0	1.75	2.00
3	TMWW-t	MT20	3.0	4.0	1.50	1.50
4	TTWW-m	MT20	4.0	5.0	1.75	1.50
5	TTW+m	MT20	3.0	4.0	2.00	1.25
6	TMWW-t	MT20	3.0	4.0	1.50	1.50
7	TMVW-p	MT20	4.0	4.0	1.25	2.00
8	BMV1+p	MT20	2.0	4.0		
9	BMWW-t	MT20	3.0	5.0	1.50	2.25
10	BS-t	MT20	3.0	6.0		
11	BMWWW-t	MT20	3.0	6.0		
12	BMWW-t	MT20	3.0	4.0		
13	BMWW-t	MT20	3.0	5.0	1.50	2.00
14	BMV1+p	MT20	2.0	4.0		

A SIZE FOR SIZE SUBSTITUTION OF MITEK MII20 WITH TEE-LOK TL20 PLATES IS ALLOWED.

DIMENSIONS, SUPPORTS AND LOADINGS SPECIFIED BY FABRICATOR TO BE VERIFIED BY BUILDING DESIGNER

BEARINGS

JT	FACTORED GROSS REACTION VERT	HORZ	MAXIMUM FACTORED GROSS REACTION DOWN	HORZ	UPLIFT	INPUT BRG IN-SX	REQRD BRG IN-SX
14	1173	0	1173	0	0	5-8	5-8
8	1067	0	1067	0	0	1-10	1-10

UNFACTORED REACTIONS

JT	1ST LCASE COMBINED	MAX./MIN. COMPONENT REACTIONS SNOW	LIVE	PERM.LIVE	WIND	DEAD	SOIL
14	821	588 / 0	0 / 0	0 / 0	0 / 0	233 / 0	0 / 0
8	749	524 / 0	0 / 0	0 / 0	0 / 0	225 / 0	0 / 0

BEARING MATERIAL TO BE SPF NO.2 OR BETTER AT JOINT(S) 14, 8

BRACING
TOP CHORD TO BE SHEATHED OR MAX. PURLIN SPACING = 5.69 FT.
MAX. UNBRACED BOTTOM CHORD LENGTH = 10.00 FT. OR RIGID CEILING DIRECTLY APPLIED.

ALL PITCH BREAKS AND PERIMETER CORNER JOINTS MUST BE LATERALLY RESTRAINED.

1 - 2x3 SPF No.2 LATERAL BRACE(S) AT 1/ 2 LENGTH OF 4-11. DBS = 20-0-0 . CBF = 4 LBS.

DBS = DIAGONAL BRACE SPACING (MAX). CBF = CUMULATIVE BRACING FORCE. FASTEN LATERAL BRACE(S) USING (0.122"X3") SPIRAL NAILS : 1 NAIL FOR 2x3 BRACE(S), 2 FOR 1x4, 2x4, 2x5, 3 FOR 2x6, 4 FOR 2x8, 5 FOR 2x10, AND 6 FOR 2x12.

END VERTICAL(S) MUST BE SHEATHED OR HAVE BRACES AS INDICATED IN THE MAX. UNBRACED LENGTH COLUMN OF THE TABLE BELOW

LOADING
TOTAL LOAD CASES: (4)

CHORDS

MEMB. FR-TO	MAX. FACTORED FORCE (LBS)	FACTORED VERT. LOAD (PLF) FROM	TO	LC1 MAX CSI (LC)	MAX. UNBRAC LENGTH
1- 2	0 / 29	-77.3	-77.3	0.10 (1)	10.00
2- 3	-1167 / 0	-77.3	-77.3	0.20 (1)	5.69
3- 4	-1022 / 0	-77.3	-77.3	0.19 (1)	5.98
4- 5	-815 / 0	-77.3	-77.3	0.33 (1)	6.25
5- 6	-998 / 0	-77.3	-77.3	0.17 (1)	6.06
6- 7	-1067 / 0	-77.3	-77.3	0.17 (1)	5.91
14- 2	-1139 / 0	0.0	0.0	0.12 (1)	7.45
8- 7	-1035 / 0	0.0	0.0	0.11 (1)	7.72
14-13	0 / 0	-17.5	-17.5	0.07 (4)	10.00
13-12	0 / 988	-17.5	-17.5	0.21 (1)	10.00
12-11	0 / 834	-17.5	-17.5	0.18 (1)	10.00
11-10	0 / 905	-17.5	-17.5	0.20 (1)	10.00
10- 9	0 / 905	-17.5	-17.5	0.20 (1)	10.00
9- 8	0 / 0	-17.5	-17.5	0.06 (4)	10.00

WEBS

MEMB. FR-TO	MAX. FACTORED FORCE (LBS)	MAX CSI (LC)
13- 3	-163 / 21	0.05 (1)
3-12	-216 / 0	0.13 (1)
12- 4	0 / 236	0.05 (1)
4-11	-30 / 0	0.02 (1)
11- 5	0 / 208	0.05 (1)
11- 6	-134 / 0	0.08 (1)
9- 6	-234 / 0	0.07 (1)
2-13	0 / 1017	0.23 (1)
9- 7	0 / 955	0.21 (1)

DESIGN CRITERIA

SPECIFIED LOADS:

TOP CH.	LL	=	23.3	PSF
	DL	=	3.0	PSF
BOT CH.	LL	=	0.0	PSF
	DL	=	7.0	PSF
TOTAL LOAD		=	33.3	PSF

SPACING = 24.0 IN. C/C

LOADING IN FLAT SECTION BASED ON A SLOPE OF 6.00/12

THIS TRUSS IS DESIGNED FOR RESIDENTIAL OR SMALL BUILDING REQUIREMENTS OF PART 9, NBCC 2010

THIS DESIGN COMPLIES WITH:
- PART 9 OF OBC 2012 , BCBC 2012 , ABC 2014
- CSA 086-09
- TPIC 2011

(55 % OF 27.2 P.S.F. G.S.L. PLUS 8.4 P.S.F. RAIN LOAD) EQUALS 23.3 P.S.F. SPECIFIED ROOF LIVE LOAD

ALLOWABLE DEFL.(LL)= L/360 (0.75")
CALCULATED VERT. DEFL.(LL) = L/ 999 (0.03")
ALLOWABLE DEFL.(TL)= L/360 (0.75")
CALCULATED VERT. DEFL.(TL) = L/ 999 (0.06")

CSI: TC=0.33 (4-5:1) , BC=0.21 (12-13:1) , WB=0.23 (2-13:1) , SSI=0.17 (4-5:1)

DOL LUMBER=1.00 NAIL=1.00 LS BEND=1.10 COMP=1.10 SHEAR=1.10 TENS= 1.10

COMPANION LIVE LOAD FACTOR = 0.50

TRUSS PLATE MANUFACTURER IS NOT RESPONSIBLE FOR QUALITY CONTROL IN THE TRUSS MANUFACTURING PLANT .

NAIL VALUES

PLATE	GRIP(DRY) (PSI) MAX	MIN	SHEAR (PLI) MAX	MIN	SECTION (PLI) MAX	MIN
MT20	618	354	1667	822	2284	1656

PLATE PLACEMENT TOL. = 0.250 inches

PLATE ROTATION TOL. = 5.0 Deg.

JSI GRIP= 0.88 (9) (INPUT = 0.90)
JSI METAL= 0.40 (2) (INPUT = 1.00)

LICENSED PROFESSIONAL ENGINEER
P.M. TREVISAN
100136551
March 14th, 2017
PROVINCE OF ONTARIO

RECEIVED
TOWN OF MILTON
MAR 29, 2017
17-5233
BUILDING DIVISION

READ ALL NOTES ON THIS PAGE AND ON THE ENGINEERING NOTE PAGE ENP-1. THE NOTE PAGE IS AN INTEGRAL PART OF THIS DRAWING AS IT CONTAINS SPECIFICATIONS AND CRITERIA USED IN THE DESIGN OF THIS COMPONENT.

KOTT

JOB NAME	TRUSS NAME	QUANTITY	PLY	JOB DESC.	DRWG NO.
PT0317-081	T72	1	1	TRUSS DESC. LECCO RIDGE-BLOCK 338	

KOTT , Stouffville, ON, CGC

Version 8.100 S Feb 9 2017 MiTek Industries, Inc. Tue Mar 14 15:57:56 2017 Page 1
ID:EvTixTQDI5yR1QLotZTBr_yE?HJ-Hur7nsfvbyiHTk8QYS4CPoBDvja3SOUQGvIxamzb_Ov

SCALE = 1:56.8

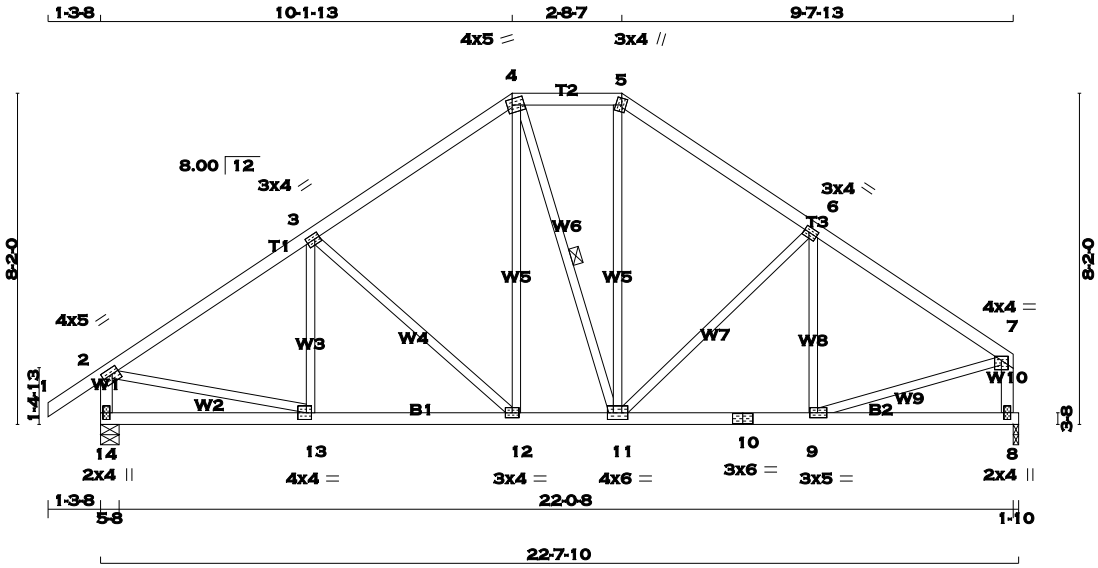

TOTAL WEIGHT = 105 lb
[M][F]

LUMBER
N. L. G. A. RULES

CHORDS	SIZE		LUMBER	DESCR.
1 - 4	2x4	DRY	No.2	SPF
4 - 5	2x4	DRY	No.2	SPF
5 - 7	2x4	DRY	No.2	SPF
14 - 2	2x4	DRY	No.2	SPF
8 - 7	2x4	DRY	No.2	SPF
14 - 10	2x4	DRY	No.2	SPF
10 - 8	2x4	DRY	No.2	SPF
ALL WEBS EXCEPT	2x3	DRY	No.2	SPF

DRY: SEASONED LUMBER.

PLATES (table is in inches)

JT	TYPE	PLATES	W	LEN	Y	X
2	TMVW-t	MT20	4.0	5.0	1.75	2.00
3	TMWW-t	MT20	3.0	4.0	1.50	1.50
4	TTWW-m	MT20	4.0	5.0	1.75	1.50
5	TTW+m	MT20	3.0	4.0	2.00	1.25
6	TMWW-t	MT20	3.0	4.0	1.50	1.50
7	TMVW-p	MT20	4.0	4.0	1.25	2.00
8	BMV1+p	MT20	2.0	4.0		
9	BMWW-t	MT20	3.0	5.0	1.50	2.25
10	BS-t	MT20	3.0	6.0		
11	BMWWW-t	MT20	4.0	6.0		
12	BMWW-t	MT20	3.0	4.0		
13	BMWW-t	MT20	4.0	4.0	2.00	1.50
14	BMV1+p	MT20	2.0	4.0		

A SIZE FOR SIZE SUBSTITUTION OF MITEK MII20 WITH TEE-LOK TL20 PLATES IS ALLOWED.

DIMENSIONS, SUPPORTS AND LOADINGS SPECIFIED BY FABRICATOR TO BE VERIFIED BY BUILDING DESIGNER

BEARINGS

JT	FACTORED GROSS REACTION VERT	HORZ	MAXIMUM FACTORED GROSS REACTION DOWN	HORZ	UPLIFT	INPUT BRG IN-SX	REQRD BRG IN-SX
14	1173	0	1173	0	0	5-8	5-8
8	1067	0	1067	0	0	1-10	1-10

UNFACTORED REACTIONS

JT	1ST LCASE COMBINED	MAX./MIN. COMPONENT REACTIONS SNOW	LIVE	PERM.LIVE	WIND	DEAD	SOIL
14	821	588 / 0	0 / 0	0 / 0	0 / 0	233 / 0	0 / 0
8	749	524 / 0	0 / 0	0 / 0	0 / 0	225 / 0	0 / 0

BEARING MATERIAL TO BE SPF NO.2 OR BETTER AT JOINT(S) 14, 8

BRACING
TOP CHORD TO BE SHEATHED OR MAX. PURLIN SPACING = 5.57 FT.
MAX. UNBRACED BOTTOM CHORD LENGTH = 10.00 FT. OR RIGID CEILING DIRECTLY APPLIED.

ALL PITCH BREAKS AND PERIMETER CORNER JOINTS MUST BE LATERALLY RESTRAINED.

1 - 2x3 SPF No.2 LATERAL BRACE(S) AT 1/ 2 LENGTH OF 4-11. DBS = 20-0-0 . CBF = 3 LBS.

DBS = DIAGONAL BRACE SPACING (MAX). CBF = CUMULATIVE BRACING FORCE. FASTEN LATERAL BRACE(S) USING (0.122"X3") SPIRAL NAILS : 1 NAIL FOR 2x3 BRACE(S), 2 FOR 1x4, 2x4, 2x5, 3 FOR 2x6, 4 FOR 2x8, 5 FOR 2x10, AND 6 FOR 2x12.

END VERTICAL(S) MUST BE SHEATHED OR HAVE BRACES AS INDICATED IN THE MAX. UNBRACED LENGTH COLUMN OF THE TABLE BELOW

LOADING
TOTAL LOAD CASES: (4)

CHORDS

MEMB. FR-TO	MAX. FACTORED FORCE (LBS)	FACTORED VERT. LOAD (PLF) FROM	TO	LC1 MAX CSI (LC)	MAX. UNBRAC LENGTH
1- 2	0 / 29	-77.3	-77.3	0.10 (1)	10.00
2- 3	-1177 / 0	-77.3	-77.3	0.28 (1)	5.57
3- 4	-936 / 0	-77.3	-77.3	0.26 (1)	6.08
4- 5	-752 / 0	-77.3	-77.3	0.08 (1)	6.25
5- 6	-926 / 0	-77.3	-77.3	0.24 (1)	6.14
6- 7	-1090 / 0	-77.3	-77.3	0.25 (1)	5.77
14- 2	-1136 / 0	0.0	0.0	0.12 (1)	7.45
8- 7	-1031 / 0	0.0	0.0	0.11 (1)	7.73
14-13	0 / 0	-17.5	-17.5	0.12 (4)	10.00
13-12	0 / 1000	-17.5	-17.5	0.22 (1)	10.00
12-11	0 / 759	-17.5	-17.5	0.15 (1)	10.00
11-10	0 / 927	-17.5	-17.5	0.20 (1)	10.00
10- 9	0 / 927	-17.5	-17.5	0.20 (1)	10.00
9- 8	0 / 0	-17.5	-17.5	0.10 (4)	10.00

WEBS

MEMB. FR-TO	MAX. FACTORED FORCE (LBS)	MAX CSI (LC)
13- 3	-106 / 56	0.04 (1)
3-12	-329 / 0	0.28 (1)
12- 4	0 / 278	0.06 (1)
4-11	-22 / 0	0.01 (1)
11- 5	0 / 260	0.06 (1)
11- 6	-250 / 0	0.21 (1)
9- 6	-171 / 32	0.06 (1)
2-13	0 / 1022	0.23 (1)
9- 7	0 / 965	0.22 (1)

DESIGN CRITERIA

SPECIFIED LOADS:

TOP CH.	LL	=	23.3	PSF
	DL	=	3.0	PSF
BOT CH.	LL	=	0.0	PSF
	DL	=	7.0	PSF
TOTAL LOAD		=	33.3	PSF

SPACING = 24.0 IN. C/C

LOADING IN FLAT SECTION BASED ON A SLOPE OF 6.00/12

THIS TRUSS IS DESIGNED FOR RESIDENTIAL OR SMALL BUILDING REQUIREMENTS OF PART 9, NBCC 2010

THIS DESIGN COMPLIES WITH:
- PART 9 OF OBC 2012 , BCBC 2012 , ABC 2014
- CSA 086-09
- TPIC 2011

(55 % OF 27.2 P.S.F. G.S.L. PLUS 8.4 P.S.F. RAIN LOAD) EQUALS 23.3 P.S.F. SPECIFIED ROOF LIVE LOAD

ALLOWABLE DEFL.(LL)= L/360 (0.75")
CALCULATED VERT. DEFL.(LL) = L/ 999 (0.03")
ALLOWABLE DEFL.(TL)= L/360 (0.75")
CALCULATED VERT. DEFL.(TL) = L/ 999 (0.06")

CSI: TC=0.28 (2-3:1) , BC=0.22 (12-13:1) , WB=0.28 (3-12:1) , SSI=0.16 (2-3:1)

DOL LUMBER=1.00 NAIL=1.00 LS BEND=1.10 COMP=1.10 SHEAR=1.10 TENS= 1.10

COMPANION LIVE LOAD FACTOR = 0.50

TRUSS PLATE MANUFACTURER IS NOT RESPONSIBLE FOR QUALITY CONTROL IN THE TRUSS MANUFACTURING PLANT .

NAIL VALUES

PLATE	GRIP(DRY) (PSI) MAX	MIN	SHEAR (PLI) MAX	MIN	SECTION (PLI) MAX	MIN
MT20	618	354	1667	822	2284	1656

PLATE PLACEMENT TOL. = 0.250 inches

PLATE ROTATION TOL. = 5.0 Deg.

JSI GRIP= 0.90 (7) (INPUT = 0.90)
JSI METAL= 0.40 (2) (INPUT = 1.00)

LICENSED PROFESSIONAL ENGINEER
P.M. TREVISAN
100136551
March 14th, 2017
PROVINCE OF ONTARIO

RECEIVED
TOWN OF MILTON
MAR 29, 2017
17-5233
BUILDING DIVISION

READ ALL NOTES ON THIS PAGE AND ON THE ENGINEERING NOTE PAGE ENP-1. THE NOTE PAGE IS AN INTEGRAL PART OF THIS DRAWING AS IT CONTAINS SPECIFICATIONS AND CRITERIA USED IN THE DESIGN OF THIS COMPONENT.

KOTT

Version 8.100 S Feb 9 2017 MiTek Industries, Inc. Tue Mar 14 15:57:57 2017 Page 1
ID:EvTixTQDI5yR1QLotZTBr_yE?HJ-l4PV?CgYMGq85ujc59cRy0jNJ7w4BoqaVZ2V6Dzb_Ou

SCALE = 1:67.4

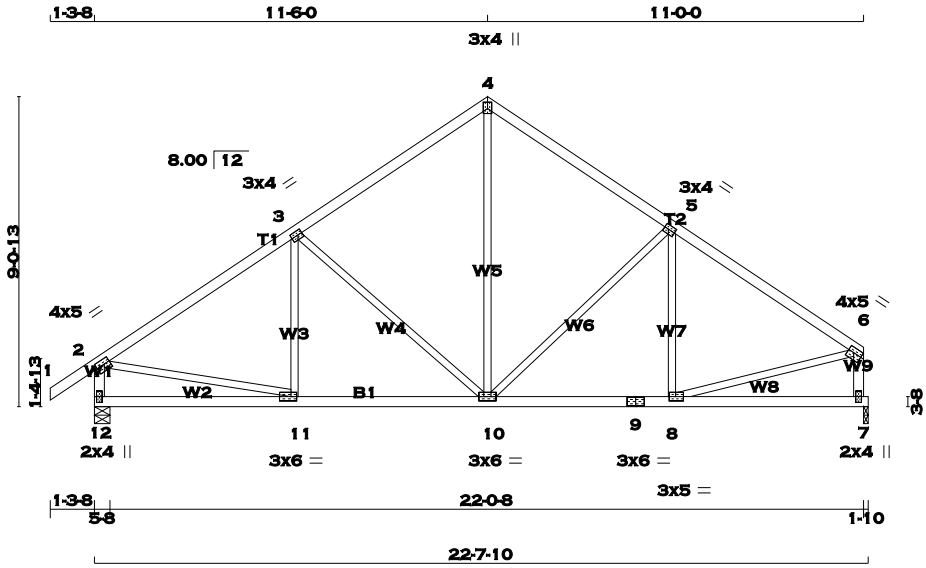

TOTAL WEIGHT = 97 lb
[M][F]

LUMBER
N. L. G. A. RULES

CHORDS	SIZE		LUMBER	DESCR.
1 - 4	2x4	DRY	No.2	SPF
4 - 6	2x4	DRY	No.2	SPF
12 - 2	2x4	DRY	No.2	SPF
7 - 6	2x4	DRY	No.2	SPF
12 - 9	2x4	DRY	No.2	SPF
9 - 7	2x4	DRY	No.2	SPF
ALL WEBS EXCEPT	2x3	DRY	No.2	SPF

DRY: SEASONED LUMBER.

PLATES (table is in inches)

JT	TYPE	PLATES	W	LEN	Y	X
2	TMVW-t	MT20	4.0	5.0	1.75	2.00
3	TMWW-t	MT20	3.0	4.0	1.50	1.50
4	TTW+p	MT20	3.0	4.0	2.25	1.50
5	TMWW-t	MT20	3.0	4.0	1.50	1.50
6	TMVW-t	MT20	4.0	5.0	1.75	Edge
7	BMV1+p	MT20	2.0	4.0		
8	BMWW-t	MT20	3.0	5.0	1.50	2.25
9	BS-t	MT20	3.0	6.0		
10	BMWWW-t	MT20	3.0	6.0		
11	BMWW-t	MT20	3.0	6.0	1.50	2.00
12	BMV1+p	MT20	2.0	4.0		

Edge - INDICATES REFERENCE CORNER OF PLATE TOUCHES EDGE OF CHORD.

A SIZE FOR SIZE SUBSTITUTION OF MITEK MII20 WITH TEE-LOK TL20 PLATES IS ALLOWED.

DIMENSIONS, SUPPORTS AND LOADINGS SPECIFIED BY FABRICATOR TO BE VERIFIED BY BUILDING DESIGNER

BEARINGS

JT	FACTORED GROSS REACTION VERT	HORZ	MAXIMUM FACTORED GROSS REACTION DOWN	HORZ	UPLIFT	INPUT BRG IN-SX	REQRD BRG IN-SX
12	1173	0	1173	0	0	5-8	5-8
7	1067	0	1067	0	0	1-10	1-10

UNFACTORED REACTIONS

JT	1ST LCASE COMBINED	MAX./MIN. COMPONENT REACTIONS SNOW	LIVE	PERM.LIVE	WIND	DEAD	SOIL
12	821	588 / 0	0 / 0	0 / 0	0 / 0	233 / 0	0 / 0
7	749	524 / 0	0 / 0	0 / 0	0 / 0	225 / 0	0 / 0

BEARING MATERIAL TO BE SPF NO.2 OR BETTER AT JOINT(S) 12, 7

BRACING
TOP CHORD TO BE SHEATHED OR MAX. PURLIN SPACING = 5.46 FT.
MAX. UNBRACED BOTTOM CHORD LENGTH = 10.00 FT. OR RIGID CEILING DIRECTLY APPLIED.

ALL PITCH BREAKS AND PERIMETER CORNER JOINTS MUST BE LATERALLY RESTRAINED.

LOADING
TOTAL LOAD CASES: (4)

CHORDS

MEMB. FR-TO	MAX. FACTORED FORCE (LBS)	FACTORED VERT. LOAD (PLF) FROM	TO	LC1 MAX CSI (LC)	MAX. UNBRAC LENGTH
1- 2	0 / 29	-77.3	-77.3	0.10 (1)	10.00
2- 3	-1172 / 0	-77.3	-77.3	0.36 (1)	5.46
3- 4	-860 / 0	-77.3	-77.3	0.34 (1)	6.15
4- 5	-859 / 0	-77.3	-77.3	0.31 (1)	6.21
5- 6	-1097 / 0	-77.3	-77.3	0.32 (1)	5.65
12- 2	-1131 / 0	0.0	0.0	0.12 (1)	7.46
7- 6	-1026 / 0	0.0	0.0	0.11 (1)	7.74
12-11	0 / 0	-17.5	-17.5	0.14 (4)	10.00
11-10	0 / 1000	-17.5	-17.5	0.23 (1)	10.00
10- 9	0 / 936	-17.5	-17.5	0.21 (1)	10.00
9- 8	0 / 936	-17.5	-17.5	0.21 (1)	10.00
8- 7	0 / 0	-17.5	-17.5	0.13 (4)	10.00

WEBS

MEMB. FR-TO	MAX. FACTORED FORCE (LBS)	MAX CSI (LC)
11- 3	-73 / 74	0.03 (1)
3-10	-413 / 0	0.47 (1)
10- 4	0 / 600	0.14 (1)
10- 5	-340 / 0	0.37 (1)
8- 5	-130 / 53	0.06 (1)
2-11	0 / 1017	0.23 (1)
8- 6	0 / 965	0.22 (1)

DESIGN CRITERIA

SPECIFIED LOADS:

TOP	CH.	LL	=	23.3	PSF
		DL	=	3.0	PSF
BOT	CH.	LL	=	0.0	PSF
		DL	=	7.0	PSF
TOTAL	LOAD		=	33.3	PSF

SPACING = 24.0 IN. C/C

THIS TRUSS IS DESIGNED FOR RESIDENTIAL OR SMALL BUILDING REQUIREMENTS OF PART 9, NBCC 2010

THIS DESIGN COMPLIES WITH:
- PART 9 OF OBC 2012 , BCBC 2012 , ABC 2014
- CSA 086-09
- TPIC 2011

(55 % OF 27.2 P.S.F. G.S.L. PLUS 8.4 P.S.F. RAIN LOAD) EQUALS 23.3 P.S.F. SPECIFIED ROOF LIVE LOAD

ALLOWABLE DEFL.(LL)= L/360 (0.75")
CALCULATED VERT. DEFL.(LL) = L/ 999 (0.03")
ALLOWABLE DEFL.(TL)= L/360 (0.75")
CALCULATED VERT. DEFL.(TL) = L/ 999 (0.07")

CSI: TC=0.36 (2-3:1) , BC=0.23 (10-11:1) , WB=0.47 (3-10:1) , SSI=0.18 (2-3:1)

DOL LUMBER=1.00 NAIL=1.00 LS BEND=1.10 COMP=1.10 SHEAR=1.10 TENS= 1.10

COMPANION LIVE LOAD FACTOR = 0.50

TRUSS PLATE MANUFACTURER IS NOT RESPONSIBLE FOR QUALITY CONTROL IN THE TRUSS MANUFACTURING PLANT .

NAIL VALUES

PLATE	GRIP(DRY) (PSI) MAX	MIN	SHEAR (PLI) MAX	MIN	SECTION (PLI) MAX	MIN
MT20	618	354	1667	822	2284	1656

PLATE PLACEMENT TOL. = 0.250 inches

PLATE ROTATION TOL. = 5.0 Deg.

JSI GRIP= 0.90 (8) (INPUT = 0.90)
JSI METAL= 0.41 (2) (INPUT = 1.00)

LICENSED PROFESSIONAL ENGINEER
P.M. TREVISAN
100136551
March 14th, 2017
PROVINCE OF ONTARIO

RECEIVED
TOWN OF MILTON
MAR 29, 2017
17-5233
BUILDING DIVISION

READ ALL NOTES ON THIS PAGE AND ON THE ENGINEERING NOTE PAGE ENP-1. THE NOTE PAGE IS AN INTEGRAL PART OF THIS DRAWING AS IT CONTAINS SPECIFICATIONS AND CRITERIA USED IN THE DESIGN OF THIS COMPONENT.

KOTT

JOB NAME	TRUSS NAME	QUANTITY	PLY	JOB DESC.	DRWG NO.
PT0317-081	**T74**	**2**	**1**	TRUSS DESC. LECCO RIDGE-BLOCK 338	

KOTT , Stouffville, ON, CGC

Version 8.100 S Feb 9 2017 MiTek Industries, Inc. Tue Mar 14 15:57:57 2017 Page 1
ID:EvTixTQDI5yR1QLotZTBr_yE?HJ-l4PV?CgYMGq85ujc59cRy0jQa7vCBreaVZ2V6Dzb_Ou

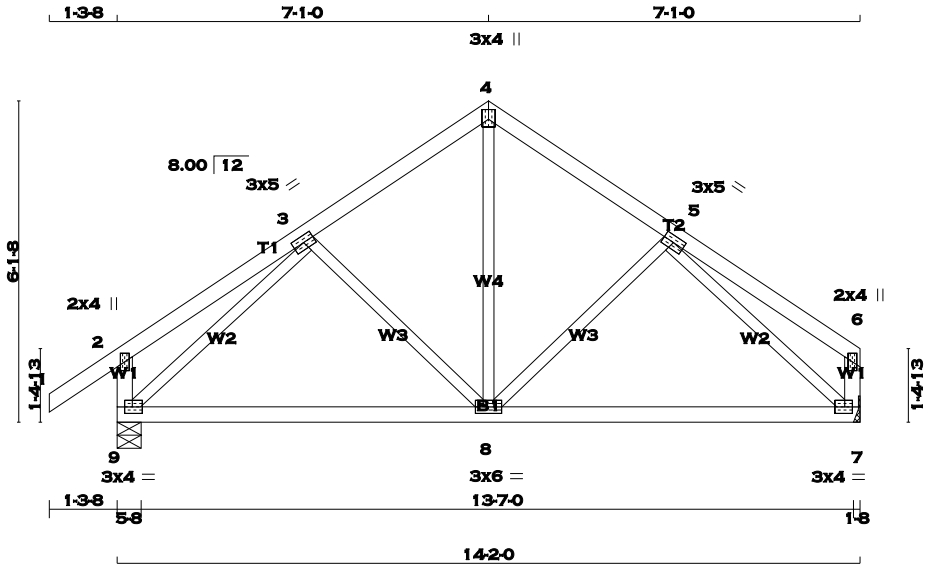

TOTAL WEIGHT = 2 X 59 = 119 lb

LUMBER
N. L. G. A. RULES

CHORDS	SIZE		LUMBER	DESCR.
1 - 4	2x4	DRY	No.2	SPF
4 - 6	2x4	DRY	No.2	SPF
9 - 2	2x4	DRY	No.2	SPF
7 - 6	2x4	DRY	No.2	SPF
9 - 7	2x4	DRY	No.2	SPF
ALL WEBS EXCEPT	2x3	DRY	No.2	SPF

DRY: SEASONED LUMBER.

PLATES (table is in inches)

JT	TYPE	PLATES	W	LEN	Y	X
2	TMV+p	MT20	2.0	4.0		
3	TMWW-t	MT20	3.0	5.0		
4	TTW+p	MT20	3.0	4.0	2.25	1.50
5	TMWW-t	MT20	3.0	5.0		
6	TMV+p	MT20	2.0	4.0		
7	BMVW1-t	MT20	3.0	4.0	1.50	1.75
8	BMWWW-t	MT20	3.0	6.0		
9	BMVW1-t	MT20	3.0	4.0	1.50	1.75

A SIZE FOR SIZE SUBSTITUTION OF MITEK MII20 WITH TEE-LOK TL20 PLATES IS ALLOWED.

DIMENSIONS, SUPPORTS AND LOADINGS SPECIFIED BY FABRICATOR TO BE VERIFIED BY BUILDING DESIGNER

BEARINGS

JT	FACTORED GROSS REACTION VERT	HORZ	MAXIMUM FACTORED GROSS REACTION DOWN	HORZ	UPLIFT	INPUT BRG IN-SX	REQRD BRG IN-SX
9	778	0	778	0	0	5-8	5-8
7	672	0	672	0	0	HANGER BY OTHERS MIN. SEAT SIZE: 1-8	

UNFACTORED REACTIONS

JT	1ST LCASE COMBINED	MAX./MIN. COMPONENT REACTIONS SNOW	LIVE	PERM.LIVE	WIND	DEAD	SOIL
9	544	394 / 0	0 / 0	0 / 0	0 / 0	150 / 0	0 / 0
7	472	330 / 0	0 / 0	0 / 0	0 / 0	142 / 0	0 / 0

BEARING MATERIAL TO BE SPF NO.2 OR BETTER AT JOINT(S) 9

BRACING
TOP CHORD TO BE SHEATHED OR MAX. PURLIN SPACING = 6.25 FT.
MAX. UNBRACED BOTTOM CHORD LENGTH = 10.00 FT. OR RIGID CEILING DIRECTLY APPLIED.

ALL PITCH BREAKS AND PERIMETER CORNER JOINTS MUST BE LATERALLY RESTRAINED.

LOADING
TOTAL LOAD CASES: (4)

CHORDS

MEMB. FR-TO	MAX. FACTORED FORCE (LBS)	VERT. LOAD (PLF) FROM	TO	LC1 MAX CSI (LC)	MAX. UNBRAC LENGTH
1- 2	0 / 29	-77.3	-77.3	0.10 (1)	10.00
2- 3	0 / 17	-77.3	-77.3	0.15 (1)	10.00
3- 4	-531 / 0	-77.3	-77.3	0.12 (1)	6.25
4- 5	-531 / 0	-77.3	-77.3	0.12 (1)	6.25
5- 6	0 / 17	-77.3	-77.3	0.15 (1)	10.00
9- 2	-212 / 0	0.0	0.0	0.02 (1)	7.81
7- 6	-106 / 0	0.0	0.0	0.01 (1)	7.81
9- 8	0 / 533	-17.5	-17.5	0.29 (4)	10.00
8- 7	0 / 533	-17.5	-17.5	0.29 (4)	10.00

WEBS

MEMB. FR-TO	MAX. FACTORED FORCE (LBS)	MAX CSI (LC)
8- 4	0 / 357	0.08 (1)
8- 5	-147 / 6	0.06 (1)
3- 8	-147 / 6	0.06 (1)
9- 3	-744 / 0	0.29 (1)
5- 7	-744 / 0	0.29 (1)

DESIGN CRITERIA

SPECIFIED LOADS:

TOP	CH.	LL	=	23.3	PSF
		DL	=	3.0	PSF
BOT	CH.	LL	=	0.0	PSF
		DL	=	7.0	PSF
TOTAL	LOAD		=	33.3	PSF

SPACING = 24.0 IN. C/C

THIS TRUSS IS DESIGNED FOR RESIDENTIAL OR SMALL BUILDING REQUIREMENTS OF PART 9, NBCC 2010

THIS DESIGN COMPLIES WITH:
- PART 9 OF OBC 2012 , BCBC 2012 , ABC 2014
- CSA 086-09
- TPIC 2011

(55 % OF 27.2 P.S.F. G.S.L. PLUS 8.4 P.S.F. RAIN LOAD) EQUALS 23.3 P.S.F. SPECIFIED ROOF LIVE LOAD

ALLOWABLE DEFL.(LL)= L/360 (0.47")
CALCULATED VERT. DEFL.(LL) = L/ 999 (0.01")
ALLOWABLE DEFL.(TL)= L/360 (0.47")
CALCULATED VERT. DEFL.(TL) = L/ 999 (0.06")

CSI: TC=0.15 (2-3:1) , BC=0.29 (8-9:4) , WB=0.29 (3-9:1) , SSI=0.11 (3-4:1)

DOL LUMBER=1.00 NAIL=1.00 LS BEND=1.10 COMP=1.10 SHEAR=1.10 TENS= 1.10

COMPANION LIVE LOAD FACTOR = 0.50

TRUSS PLATE MANUFACTURER IS NOT RESPONSIBLE FOR QUALITY CONTROL IN THE TRUSS MANUFACTURING PLANT .

NAIL VALUES

PLATE	GRIP(DRY) (PSI) MAX	MIN	SHEAR (PLI) MAX	MIN	SECTION (PLI) MAX	MIN
MT20	618	354	1667	822	2284	1656

PLATE PLACEMENT TOL. = 0.250 inches

PLATE ROTATION TOL. = 0.5 Deg.

JSI GRIP= 0.82 (5) (INPUT = 0.90)
JSI METAL= 0.21 (3) (INPUT = 1.00)

LICENSED PROFESSIONAL ENGINEER
R.M. TREVISAN
100136551
March 14th, 2017
PROVINCE OF ONTARIO

RECEIVED
TOWN OF MILTON
MAR 29, 2017
17-5233
BUILDING DIVISION

READ ALL NOTES ON THIS PAGE AND ON THE ENGINEERING NOTE PAGE ENP-1. THE NOTE PAGE IS AN INTEGRAL PART OF THIS DRAWING AS IT CONTAINS SPECIFICATIONS AND CRITERIA USED IN THE DESIGN OF THIS COMPONENT.

KOTT

JOB NAME	TRUSS NAME	QUANTITY	PLY	JOB DESC.	DRWG NO.
PT0317-081	T75	1	1	TRUSS DESC. LECCO RIDGE-BLOCK 338	

KOTT , Stouffville, ON, CGC

Version 8.100 S Feb 9 2017 MiTek Industries, Inc. Tue Mar 14 15:57:58 2017 Page 1
ID:EvTixTQDI5yR1QLotZTBr_yE?HJ-DGzuCYgA7ay?j2Iofs7gUDGW3XGiwIOjkDn2efzb_Ot

SCALE: 3/16"=1'

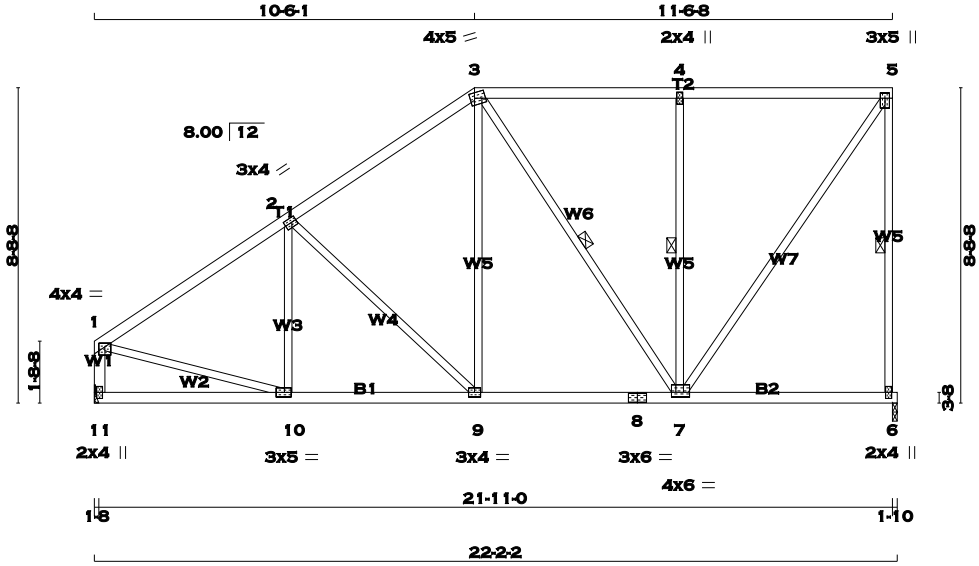

TOTAL WEIGHT = 104 lb
[M]

LUMBER
N. L. G. A. RULES

CHORDS	SIZE		LUMBER	DESCR.
1 - 3	2x4	DRY	No.2	SPF
3 - 5	2x4	DRY	No.2	SPF
6 - 5	2x3	DRY	No.2	SPF
11 - 1	2x4	DRY	No.2	SPF
11 - 8	2x4	DRY	No.2	SPF
8 - 6	2x4	DRY	No.2	SPF
ALL WEBS EXCEPT	2x3	DRY	No.2	SPF

DRY: SEASONED LUMBER.

PLATES (table is in inches)

JT	TYPE	PLATES	W	LEN	Y	X
1	TMVW-p	MT20	4.0	4.0	1.25	2.00
2	TMWW-t	MT20	3.0	4.0	1.50	1.50
3	TTWW-m	MT20	4.0	5.0	1.75	1.50
4	TMW+w	MT20	2.0	4.0		
5	TMVW+p	MT20	3.0	5.0	1.75	1.50
6	BMV1+p	MT20	2.0	4.0		
7	BMWWW-t	MT20	4.0	6.0	1.50	1.50
8	BS-t	MT20	3.0	6.0		
9	BMWW-t	MT20	3.0	4.0		
10	BMWW-t	MT20	3.0	5.0	1.50	2.25
11	BMV1+p	MT20	2.0	4.0		

A SIZE FOR SIZE SUBSTITUTION OF MITEK MII20 WITH TEE-LOK TL20 PLATES IS ALLOWED.

DIMENSIONS, SUPPORTS AND LOADINGS SPECIFIED BY FABRICATOR TO BE VERIFIED BY BUILDING DESIGNER

BEARINGS

JT	FACTORED GROSS REACTION VERT	HORZ	MAXIMUM FACTORED GROSS REACTION DOWN	HORZ	UPLIFT	INPUT BRG IN-SX	REQRD BRG IN-SX
6	1045	0	1045	0	0	1-10	1-10
11	1045	0	1045	0	0	HANGER BY OTHERS	
						MIN. SEAT SIZE: 1-8	

UNFACTORED REACTIONS

JT	1ST LCASE COMBINED	SNOW	MAX./MIN. COMPONENT REACTIONS LIVE	PERM.LIVE	WIND	DEAD	SOIL
6	734	513 / 0	0 / 0	0 / 0	0 / 0	220 / 0	0 / 0
11	734	513 / 0	0 / 0	0 / 0	0 / 0	220 / 0	0 / 0

BEARING MATERIAL TO BE SPF NO.2 OR BETTER AT JOINT(S) 6

BRACING
TOP CHORD TO BE SHEATHED OR MAX. PURLIN SPACING = 5.55 FT.
MAX. UNBRACED BOTTOM CHORD LENGTH = 10.00 FT. OR RIGID CEILING DIRECTLY APPLIED.

ALL PITCH BREAKS AND PERIMETER CORNER JOINTS MUST BE LATERALLY RESTRAINED.

1 - 2x3 SPF No.2 LATERAL BRACE(S) AT 1/ 2 LENGTH OF 5-6. DBS = 14-0-0 . CBF = 88 LBS.
1 - 2x3 SPF No.2 LATERAL BRACE(S) AT 1/ 2 LENGTH OF 3-7, 4-7. DBS = 20-0-0 . CBF = 69 LBS.

DBS = DIAGONAL BRACE SPACING (MAX). CBF = CUMULATIVE BRACING FORCE. FASTEN LATERAL BRACE(S) USING (0.122"X3") SPIRAL NAILS : 1 NAIL FOR 2x3 BRACE(S), 2 FOR 1x4, 2x4, 2x5, 3 FOR 2x6, 4 FOR 2x8, 5 FOR 2x10, AND 6 FOR 2x12.

END VERTICAL(S) MUST BE SHEATHED OR HAVE BRACES AS INDICATED IN THE MAX. UNBRACED LENGTH COLUMN OF THE TABLE BELOW

LOADING
TOTAL LOAD CASES: (4)

CHORDS

MEMB. FR-TO	MAX. FACTORED FORCE (LBS)	FACTORED VERT. LOAD LC1 (PLF) FROM	TO	MAX CSI (LC)	MAX. UNBRAC LENGTH
1- 2	-1074 / 0	-77.3	-77.3	0.40 (1)	5.55
2- 3	-852 / 0	-77.3	-77.3	0.39 (1)	6.07
3- 4	-579 / 0	-77.3	-77.3	0.45 (1)	6.25
4- 5	-579 / 0	-77.3	-77.3	0.45 (1)	6.25
6- 5	-1003 / 0	0.0	0.0	0.49 (1)	5.50
11- 1	-1006 / 0	0.0	0.0	0.11 (1)	7.80
11-10	0 / 0	-17.5	-17.5	0.12 (4)	10.00
10- 9	0 / 916	-17.5	-17.5	0.21 (1)	10.00
9- 8	0 / 689	-17.5	-17.5	0.20 (4)	10.00
8- 7	0 / 689	-17.5	-17.5	0.20 (4)	10.00
7- 6	0 / 0	-17.5	-17.5	0.14 (4)	10.00

WEBS

MEMB. FR-TO	MAX. FACTORED FORCE (LBS)	MAX CSI (LC)
10- 2	-135 / 48	0.06 (1)
2- 9	-317 / 0	0.32 (1)
9- 3	0 / 307	0.07 (1)
3- 7	-197 / 0	0.14 (1)
7- 4	-553 / 0	0.27 (1)
7- 5	0 / 1011	0.23 (1)
1-10	0 / 946	0.21 (1)

DESIGN CRITERIA

SPECIFIED LOADS:

TOP	CH.	LL	=	23.3	PSF
		DL	=	3.0	PSF
BOT	CH.	LL	=	0.0	PSF
		DL	=	7.0	PSF
TOTAL	LOAD		=	33.3	PSF

SPACING = 24.0 IN. C/C

LOADING IN FLAT SECTION BASED ON A SLOPE OF 6.00/12

THIS TRUSS IS DESIGNED FOR RESIDENTIAL OR SMALL BUILDING REQUIREMENTS OF PART 9, NBCC 2010

THIS DESIGN COMPLIES WITH:
- PART 9 OF OBC 2012 , BCBC 2012 , ABC 2014
- CSA 086-09
- TPIC 2011

(55 % OF 27.2 P.S.F. G.S.L. PLUS 8.4 P.S.F. RAIN LOAD) EQUALS 23.3 P.S.F. SPECIFIED ROOF LIVE LOAD

ALLOWABLE DEFL.(LL)= L/360 (0.73")
CALCULATED VERT. DEFL.(LL) = L/ 999 (0.03")
ALLOWABLE DEFL.(TL)= L/360 (0.73")
CALCULATED VERT. DEFL.(TL) = L/ 999 (0.06")

CSI: TC=0.49 (5-6:1) , BC=0.21 (9-10:1) , WB=0.32 (2-9:1) , SSI=0.22 (4-5:1)

DOL LUMBER=1.00 NAIL=1.00 LS BEND=1.10 COMP=1.10 SHEAR=1.10 TENS= 1.10

COMPANION LIVE LOAD FACTOR = 0.50

TRUSS PLATE MANUFACTURER IS NOT RESPONSIBLE FOR QUALITY CONTROL IN THE TRUSS MANUFACTURING PLANT .

NAIL VALUES

PLATE	GRIP(DRY) (PSI) MAX	MIN	SHEAR (PLI) MAX	MIN	SECTION (PLI) MAX	MIN
MT20	618	354	1667	822	2284	1656

PLATE PLACEMENT TOL. = 0.250 inches

PLATE ROTATION TOL. = 5.0 Deg.

JSI GRIP= 0.89 (1) (INPUT = 0.90)
JSI METAL= 0.32 (1) (INPUT = 1.00)

LICENSED PROFESSIONAL ENGINEER
R.M. TREVISAN
100136551
March 14th, 2017
PROVINCE OF ONTARIO

RECEIVED
TOWN OF MILTON
MAR 29, 2017
17-5233
BUILDING DIVISION

READ ALL NOTES ON THIS PAGE AND ON THE ENGINEERING NOTE PAGE ENP-1. THE NOTE PAGE IS AN INTEGRAL PART OF THIS DRAWING AS IT CONTAINS SPECIFICATIONS AND CRITERIA USED IN THE DESIGN OF THIS COMPONENT.

KOTT

JOB NAME	TRUSS NAME	QUANTITY	PLY	JOB DESC.	DRWG NO.
PT0317-081	T76	1	1	TRUSS DESC. LECCO RIDGE-BLOCK 338	ENG JOB: PT0317-081

KOTT , Stouffville, ON, CGC

Version 8.100 S Feb 9 2017 MiTek Industries, Inc. Tue Mar 14 15:57:58 2017 Page 1

ID:EvTixTQDI5yR1QLotZTBr_yE?HJ-DGzuCYgA7ay?j2Iofs7gUDGUmXGIwDEjkDn2efzb_Ot

SCALE = 1:70.8

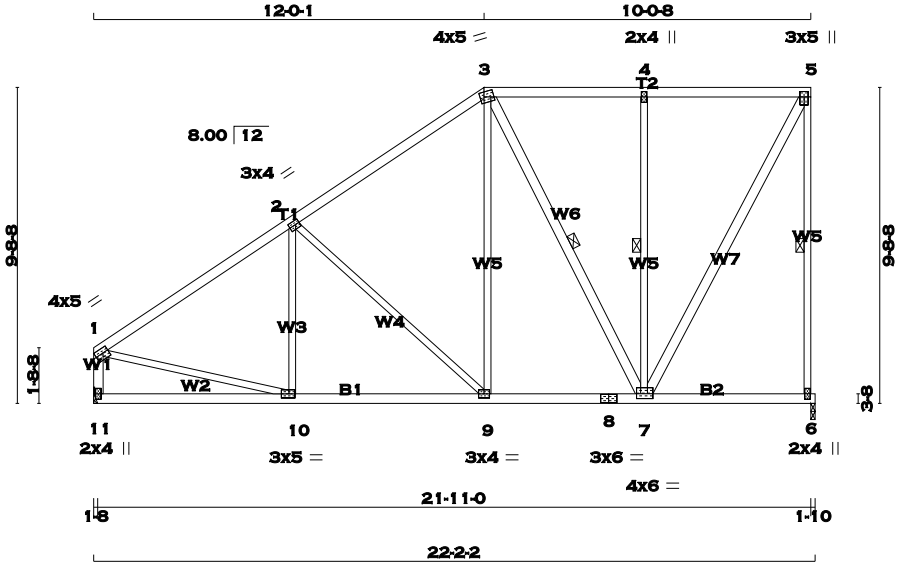

TOTAL WEIGHT = 116 lb

[M][F]

LUMBER

N. L. G. A. RULES

CHORDS	SIZE		LUMBER	DESCR.
1 - 3	2x4	DRY	No.2	SPF
3 - 5	2x4	DRY	No.2	SPF
6 - 5	2x3	DRY	No.2	SPF
11 - 1	2x4	DRY	No.2	SPF
11 - 8	2x4	DRY	No.2	SPF
8 - 6	2x4	DRY	No.2	SPF
ALL WEBS	2x3	DRY	No.2	SPF
EXCEPT				
3 - 7	2x4	DRY	No.2	SPF
7 - 5	2x4	DRY	No.2	SPF

DRY: SEASONED LUMBER.

PLATES (table is in inches)

JT	TYPE	PLATES	W	LEN	Y	X
1	TMVW-t	MT20	4.0	5.0	1.75	Edge
2	TMWW-t	MT20	3.0	4.0	1.50	1.50
3	TTWW-m	MT20	4.0	5.0	1.75	1.50
4	TMW+w	MT20	2.0	4.0		
5	TMVW+p	MT20	3.0	5.0	2.00	1.50
6	BMV1+p	MT20	2.0	4.0		
7	BMWWW-t	MT20	4.0	6.0	1.75	1.50
8	BS-t	MT20	3.0	6.0		
9	BMWW-t	MT20	3.0	4.0		
10	BMWW-t	MT20	3.0	5.0	1.50	2.25
11	BMV1+p	MT20	2.0	4.0		

Edge - INDICATES REFERENCE CORNER OF PLATE TOUCHES EDGE OF CHORD.

A SIZE FOR SIZE SUBSTITUTION OF MITEK MII20 WITH TEE-LOK TL20 PLATES IS ALLOWED.

DIMENSIONS, SUPPORTS AND LOADINGS SPECIFIED BY FABRICATOR TO BE VERIFIED BY BUILDING DESIGNER

BEARINGS

JT	FACTORED GROSS REACTION VERT	HORZ	MAXIMUM FACTORED GROSS REACTION DOWN	HORZ	UPLIFT	INPUT BRG IN-SX	REQRD BRG IN-SX
6	1045	0	1045	0	0	1-10	1-10
11	1045	0	1045	0	0	HANGER BY OTHERS	
						MIN. SEAT SIZE: 1-8	

UNFACTORED REACTIONS

JT	1ST LCASE COMBINED	MAX./MIN. COMPONENT REACTIONS SNOW	LIVE	PERM.LIVE	WIND	DEAD	SOIL
6	734	513 / 0	0 / 0	0 / 0	0 / 0	220 / 0	0 / 0
11	734	513 / 0	0 / 0	0 / 0	0 / 0	220 / 0	0 / 0

BEARING MATERIAL TO BE SPF NO.2 OR BETTER AT JOINT(S) 6

BRACING

TOP CHORD TO BE SHEATHED OR MAX. PURLIN SPACING = 5.60 FT.
MAX. UNBRACED BOTTOM CHORD LENGTH = 10.00 FT. OR RIGID CEILING DIRECTLY APPLIED.

ALL PITCH BREAKS AND PERIMETER CORNER JOINTS MUST BE LATERALLY RESTRAINED.

1 - 2x3 SPF No.2 LATERAL BRACE(S) AT 1/ 2 LENGTH OF 5-6. DBS = 14-0-0 . CBF = 88 LBS.
1 - 2x3 SPF No.2 LATERAL BRACE(S) AT 1/ 2 LENGTH OF 3-7, 4-7. DBS = 20-0-0 . CBF = 60 LBS.

DBS = DIAGONAL BRACE SPACING (MAX). CBF = CUMULATIVE BRACING FORCE. FASTEN LATERAL BRACE(S) USING (0.122"X3") SPIRAL NAILS : 1 NAIL FOR 2x3 BRACE(S), 2 FOR 1x4, 2x4, 2x5, 3 FOR 2x6, 4 FOR 2x8, 5 FOR 2x10, AND 6 FOR 2x12.

END VERTICAL(S) MUST BE SHEATHED OR HAVE BRACES AS INDICATED IN THE MAX. UNBRACED LENGTH COLUMN OF THE TABLE BELOW

LOADING

TOTAL LOAD CASES: (4)

CHORDS

MEMB. FR-TO	MAX. FACTORED FORCE (LBS)	FACTORED VERT. LOAD LC1 (PLF) FROM	TO	MAX CSI (LC)	MAX. UNBRAC LENGTH
1- 2	-1074 / 0	-77.3	-77.3	0.39 (1)	5.60
2- 3	-763 / 0	-77.3	-77.3	0.37 (1)	6.25
3- 4	-465 / 0	-77.3	-77.3	0.25 (1)	6.25
4- 5	-465 / 0	-77.3	-77.3	0.25 (1)	6.25
6- 5	-1008 / 0	0.0	0.0	0.64 (1)	5.49
11- 1	-1002 / 0	0.0	0.0	0.11 (1)	7.81
11-10	0 / 0	-17.5	-17.5	0.16 (4)	10.00
10- 9	0 / 919	-17.5	-17.5	0.23 (1)	10.00
9- 8	0 / 612	-17.5	-17.5	0.15 (1)	10.00
8- 7	0 / 612	-17.5	-17.5	0.15 (1)	10.00
7- 6	0 / 0	-17.5	-17.5	0.10 (4)	10.00

WEBS

MEMB. FR-TO	MAX. FACTORED FORCE (LBS)	MAX CSI (LC)
10- 2	-88 / 76	0.05 (1)
2- 9	-421 / 0	0.59 (1)
9- 3	0 / 373	0.08 (1)
3- 7	-316 / 0	0.19 (1)
7- 4	-480 / 0	0.30 (1)
7- 5	0 / 974	0.16 (1)
1-10	0 / 943	0.21 (1)

DESIGN CRITERIA

SPECIFIED LOADS:

TOP CH.	LL	=	23.3	PSF
	DL	=	3.0	PSF
BOT CH.	LL	=	0.0	PSF
	DL	=	7.0	PSF
TOTAL LOAD		=	33.3	PSF

SPACING = 24.0 IN. C/C

LOADING IN FLAT SECTION BASED ON A SLOPE OF 6.00/12

THIS TRUSS IS DESIGNED FOR RESIDENTIAL OR SMALL BUILDING REQUIREMENTS OF PART 9, NBCC 2010

THIS DESIGN COMPLIES WITH:
- PART 9 OF OBC 2012 , BCBC 2012 , ABC 2014
- CSA 086-09
- TPIC 2011

(55 % OF 27.2 P.S.F. G.S.L. PLUS 8.4 P.S.F. RAIN LOAD) EQUALS 23.3 P.S.F. SPECIFIED ROOF LIVE LOAD

ALLOWABLE DEFL.(LL)= L/360 (0.73")
CALCULATED VERT. DEFL.(LL) = L/ 999 (0.03")
ALLOWABLE DEFL.(TL)= L/360 (0.73")
CALCULATED VERT. DEFL.(TL) = L/ 999 (0.07")

CSI: TC=0.64 (5-6:1) , BC=0.23 (9-10:1) , WB=0.59 (2-9:1) , SSI=0.19 (4-5:1)

DOL LUMBER=1.00 NAIL=1.00 LS BEND=1.10 COMP=1.10 SHEAR=1.10 TENS= 1.10

COMPANION LIVE LOAD FACTOR = 0.50

TRUSS PLATE MANUFACTURER IS NOT RESPONSIBLE FOR QUALITY CONTROL IN THE TRUSS MANUFACTURING PLANT .

NAIL VALUES

PLATE	GRIP(DRY) (PSI) MAX	MIN	SHEAR (PLI) MAX	MIN	SECTION (PLI) MAX	MIN
MT20	618	354	1667	822	2284	1656

PLATE PLACEMENT TOL. = 0.250 inches

PLATE ROTATION TOL. = 5.0 Deg.

JSI GRIP= 0.88 (10) (INPUT = 0.90)
JSI METAL= 0.36 (1) (INPUT = 1.00)

LICENSED PROFESSIONAL ENGINEER
P.M. TREVISAN
100136551
March 14th, 2017
PROVINCE OF ONTARIO

RECEIVED
TOWN OF MILTON
MAR 29, 2017
17-5233
BUILDING DIVISION

READ ALL NOTES ON THIS PAGE AND ON THE ENGINEERING NOTE PAGE ENP-1. THE NOTE PAGE IS AN INTEGRAL PART OF THIS DRAWING AS IT CONTAINS SPECIFICATIONS AND CRITERIA USED IN THE DESIGN OF THIS COMPONENT.

KOTT

JOB NAME	TRUSS NAME	QUANTITY	PLY	JOB DESC.	DRWG NO.
PT0317-081	T77	1	1	TRUSS DESC. LECCO RIDGE-BLOCK 338	

KOTT , Stouffville, ON, CGC

Version 8.100 S Feb 9 2017 MiTek Industries, Inc. Tue Mar 14 15:57:59 2017 Page 1
ID:EvTixTQDI5yR1QLotZTBr_yE?HJ-hTXGPuhout4sKCt?Daev1RpiFwayfeTtztXcA5zb_Os

SCALE = 1:77.8

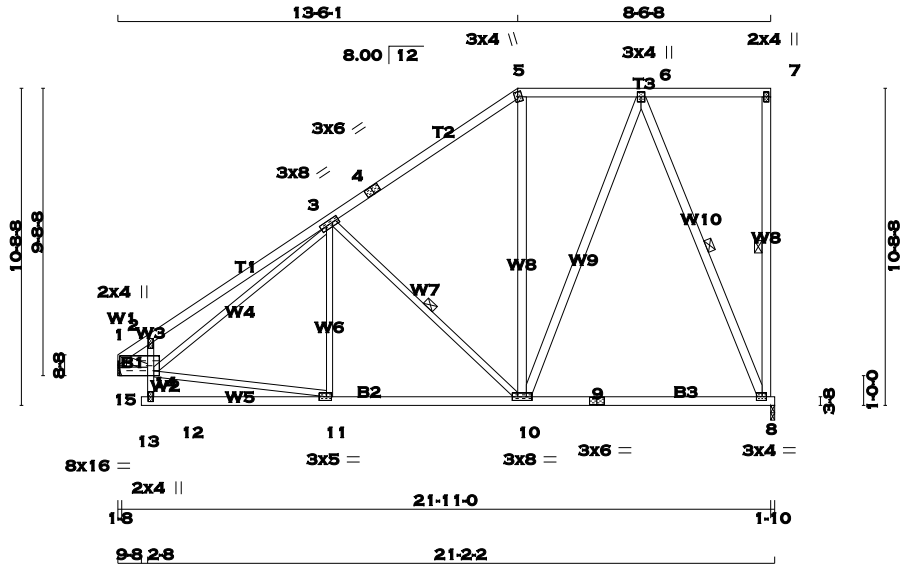

TOTAL WEIGHT = 127 lb
[M][F]

LUMBER
N. L. G. A. RULES

CHORDS	SIZE		LUMBER	DESCR.
1 - 4	2x4	DRY	No.2	SPF
4 - 5	2x4	DRY	No.2	SPF
5 - 7	2x4	DRY	No.2	SPF
8 - 7	2x4	DRY	No.2	SPF
15 - 1	2x4	DRY	No.2	SPF
15 - 14	2x4	DRY	No.2	SPF
13 - 9	2x4	DRY	No.2	SPF
9 - 8	2x4	DRY	No.2	SPF
ALL WEBS	2x3	DRY	No.2	SPF
EXCEPT				
10 - 5	2x4	DRY	No.2	SPF
10 - 6	2x4	DRY	No.2	SPF
6 - 8	2x4	DRY	No.2	SPF

DRY: SEASONED LUMBER.

PLATES (table is in inches)

JT	TYPE	PLATES	W	LEN	Y	X
1, 14, 15						
1						
2	TMW+w	MT20	2.0	4.0		
3	TMWWW-t	MT20	3.0	8.0		
4	TS-t	MT20	3.0	6.0		
5	TTW+m	MT20	3.0	4.0	2.00	1.25
6	TMWW+t	MT20	3.0	4.0		
7	TMV+p	MT20	2.0	4.0		
8	BMVW1-t	MT20	3.0	4.0	1.50	1.75
9	BS-t	MT20	3.0	6.0		
10	BMWWW-t	MT20	3.0	8.0		
11	BMWW-t	MT20	3.0	5.0	1.50	2.00
12	BMW+w	MT20	2.0	4.0		
14	TMBVWWWW-t	MII20	8.0	16.0	3.50	11.25

A SIZE FOR SIZE SUBSTITUTION OF MITEK MII20 WITH TEE-LOK TL20 PLATES IS ALLOWED.

DIMENSIONS, SUPPORTS AND LOADINGS SPECIFIED BY FABRICATOR TO BE VERIFIED BY BUILDING DESIGNER

BEARINGS

JT	FACTORED GROSS REACTION VERT	HORZ	MAXIMUM FACTORED GROSS REACTION DOWN	HORZ	UPLIFT	INPUT BRG IN-SX	REQRD BRG IN-SX
8	1046	0	1046	0	0	1-10	1-10
15	1049	0	1049	0	0	HANGER BY OTHERS	
						MIN. SEAT SIZE: 1-8	

UNFACTORED REACTIONS

JT	1ST LCASE COMBINED	MAX./MIN. COMPONENT REACTIONS SNOW	LIVE	PERM.LIVE	WIND	DEAD	SOIL
8	734	513 / 0	0 / 0	0 / 0	0 / 0	221 / 0	0 / 0
15	737	513 / 0	0 / 0	0 / 0	0 / 0	224 / 0	0 / 0

BEARING MATERIAL TO BE SPF NO.2 OR BETTER AT JOINT(S) 8

BRACING
TOP CHORD TO BE SHEATHED OR MAX. PURLIN SPACING = 5.38 FT.
MAX. UNBRACED BOTTOM CHORD LENGTH = 10.00 FT. OR RIGID CEILING DIRECTLY APPLIED.

MAX. UNBRACED INTERIOR CHORD LENGTH = 7.81 FT.

ALL PITCH BREAKS AND PERIMETER CORNER JOINTS MUST BE LATERALLY RESTRAINED.

1 - 2x3 SPF No.2 LATERAL BRACE(S) AT 1/ 2 LENGTH OF 7-8, 3-10. DBS = 20-0-0 . CBF = 61 LBS.
1 - 2x3 SPF No.2 LATERAL BRACE(S) AT 1/ 2 LENGTH OF 6-8. DBS = 16-0-0 . CBF = 93 LBS.

DBS = DIAGONAL BRACE SPACING (MAX). CBF = CUMULATIVE BRACING FORCE. FASTEN LATERAL BRACE(S) USING (0.122"X3") SPIRAL NAILS : 1 NAIL FOR 2x3 BRACE(S), 2 FOR 1x4, 2x4, 2x5, 3 FOR 2x6, 4 FOR 2x8, 5 FOR 2x10, AND 6 FOR 2x12.

END VERTICAL(S) MUST BE SHEATHED OR HAVE BRACES AS INDICATED IN THE MAX. UNBRACED LENGTH COLUMN OF THE TABLE BELOW

LOADING
TOTAL LOAD CASES: (4)

CHORDS

MEMB. FR-TO	MAX. FACTORED FORCE (LBS)	FACTORED VERT. LOAD LC1 (PLF) FROM	TO	MAX CSI (LC)	MAX. UNBRAC LENGTH
1- 2	-1229 / 0	-77.3	-77.3	0.14 (1)	5.64
2- 3	-1190 / 0	-77.3	-77.3	0.40 (1)	5.38
3- 4	-669 / 0	-77.3	-77.3	0.40 (1)	6.25
4- 5	-669 / 0	-77.3	-77.3	0.40 (1)	6.25
5- 6	-532 / 0	-77.3	-77.3	0.18 (1)	6.25
6- 7	0 / 0	-77.3	-77.3	0.24 (1)	10.00
8- 7	-130 / 0	0.0	0.0	0.08 (1)	6.25
15- 1	-1040 / 0	0.0	0.0	0.10 (1)	7.71
15-14	0 / 0	-17.5	-17.5	0.01 (4)	10.00
13-12	0 / 0	-17.5	-17.5	0.00 (4)	10.00
12-11	0 / 74	-17.5	-17.5	0.13 (4)	10.00
11-10	0 / 887	-17.5	-17.5	0.33 (4)	10.00
10- 9	0 / 359	-17.5	-17.5	0.29 (4)	10.00
9- 8	0 / 359	-17.5	-17.5	0.29 (4)	10.00

WEBS

MEMB. FR-TO	MAX. FACTORED FORCE (LBS)	MAX CSI (LC)
14-11	0 / 824	0.19 (1)
14- 3	0 / 157	0.04 (1)
11- 3	-24 / 84	0.03 (4)
3-10	-488 / 0	0.27 (1)
10- 5	0 / 76	0.02 (4)
10- 6	0 / 478	0.08 (1)
6- 8	-928 / 0	0.65 (1)
1-14	0 / 1149	0.26 (1)
12-14	0 / 57	0.20 (1)
14- 2	-311 / 0	0.15 (1)

DESIGN CRITERIA

SPECIFIED LOADS:

TOP CH.	LL	=	23.3	PSF
	DL	=	3.0	PSF
BOT CH.	LL	=	0.0	PSF
	DL	=	7.0	PSF
TOTAL LOAD		=	33.3	PSF

SPACING = 24.0 IN. C/C

LOADING IN FLAT SECTION BASED ON A SLOPE OF 6.00/12

THIS TRUSS IS DESIGNED FOR RESIDENTIAL OR SMALL BUILDING REQUIREMENTS OF PART 9, NBCC 2010

THIS DESIGN COMPLIES WITH:
- PART 9 OF OBC 2012 , BCBC 2012 , ABC 2014
- CSA 086-09
- TPIC 2011

(55 % OF 27.2 P.S.F. G.S.L. PLUS 8.4 P.S.F. RAIN LOAD) EQUALS 23.3 P.S.F. SPECIFIED ROOF LIVE LOAD

ALLOWABLE DEFL.(LL)= L/360 (0.73")
CALCULATED VERT. DEFL.(LL) = L/ 999 (0.03")
ALLOWABLE DEFL.(TL)= L/360 (0.73")
CALCULATED VERT. DEFL.(TL) = L/ 999 (0.14")

CSI: TC=0.40 (2-3:1) , BC=0.33 (10-11:4) , WB=0.65 (6-8:1) , SSI=0.20 (3-5:1)

DOL LUMBER=1.00 NAIL=1.00 LS BEND=1.10 COMP=1.10 SHEAR=1.10 TENS= 1.10

COMPANION LIVE LOAD FACTOR = 0.50

AUTOSOLVE RIGHT HEEL ONLY

TRUSS PLATE MANUFACTURER IS NOT RESPONSIBLE FOR QUALITY CONTROL IN THE TRUSS MANUFACTURING PLANT .

NAIL VALUES

PLATE	GRIP(DRY) (PSI) MAX	MIN	SHEAR (PLI) MAX	MIN	SECTION (PLI) MAX	MIN
MT20	618	354	1667	822	2284	1656

PLATE PLACEMENT TOL. = 0.250 inches

PLATE ROTATION TOL. = 5.0 Deg.

JSI GRIP= 0.90 (8) (INPUT = 0.90)
JSI METAL= 0.25 (14) (INPUT = 1.00)

LICENSED PROFESSIONAL ENGINEER
P.M. TREVISAN
100136551
March 14th, 2017
PROVINCE OF ONTARIO

RECEIVED
TOWN OF MILTON
MAR 29, 2017
17-5233
BUILDING DIVISION

READ ALL NOTES ON THIS PAGE AND ON THE ENGINEERING NOTE PAGE ENP-1. THE NOTE PAGE IS AN INTEGRAL PART OF THIS DRAWING AS IT CONTAINS SPECIFICATIONS AND CRITERIA USED IN THE DESIGN OF THIS COMPONENT.

KOTT

JOB NAME	TRUSS NAME	QUANTITY	PLY	JOB DESC.	DRWG NO.
PT0317-081	T78	1	1	TRUSS DESC. LECCO RIDGE-BLOCK 338	

KOTT , Stouffville, ON, CGC

Version 8.100 S Feb 9 2017 MiTek Industries, Inc. Tue Mar 14 15:58:00 2017 Page 1
ID:EvTixTQDI5yR1QLotZTBr_yE?HJ-9f5edEiQfBCjyLSBnH98ZeLpXKxwOB00BWG9jXzb_Or

SCALE = 1:72.8

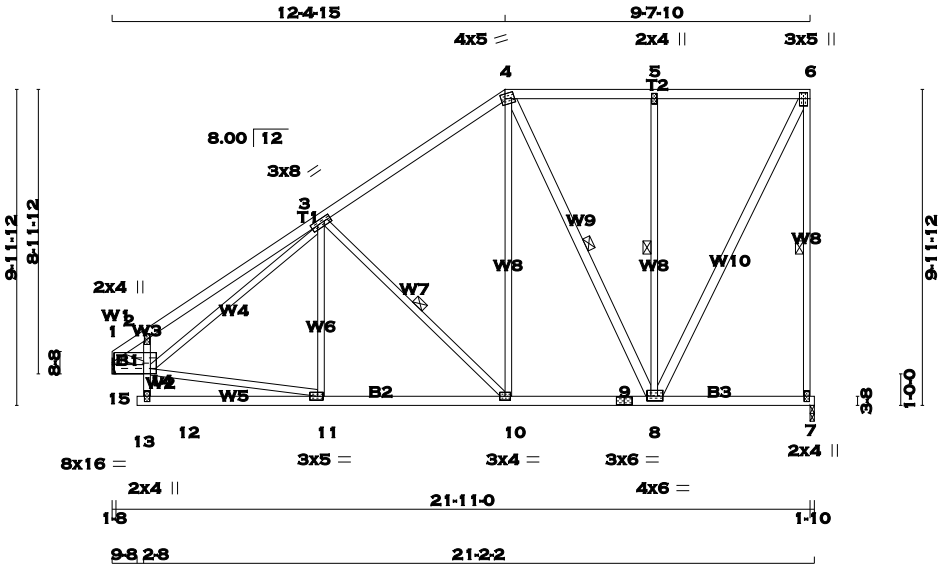

TOTAL WEIGHT = 124 lb

LUMBER
N. L. G. A. RULES

CHORDS	SIZE		LUMBER	DESCR.
1 - 4	2x4	DRY	No.2	SPF
4 - 6	2x4	DRY	No.2	SPF
7 - 6	2x3	DRY	No.2	SPF
15 - 1	2x4	DRY	No.2	SPF
15 - 14	2x4	DRY	No.2	SPF
13 - 9	2x4	DRY	No.2	SPF
9 - 7	2x4	DRY	No.2	SPF
ALL WEBS	2x3	DRY	No.2	SPF
EXCEPT				
4 - 8	2x4	DRY	No.2	SPF
8 - 6	2x4	DRY	No.2	SPF

DRY: SEASONED LUMBER.

PLATES (table is in inches)

JT	TYPE	PLATES	W	LEN	Y	X
1, 14, 15						
1						
2	TMW+w	MT20	2.0	4.0		
3	TMWWW-t	MT20	3.0	8.0		
4	TTWW-m	MT20	4.0	5.0	1.75	1.50
5	TMW+w	MT20	2.0	4.0		
6	TMVW+p	MT20	3.0	5.0	2.25	1.50
7	BMV1+p	MT20	2.0	4.0		
8	BMWWW-t	MT20	4.0	6.0	1.75	1.50
9	BS-t	MT20	3.0	6.0		
10	BMWW-t	MT20	3.0	4.0		
11	BMWW-t	MT20	3.0	5.0	1.50	2.00
12	BMW+w	MT20	2.0	4.0		
14	TMBVWWWWW-t	MT20	8.0	16.0	3.50	11.25

A SIZE FOR SIZE SUBSTITUTION OF MITEK MII20 WITH TEE-LOK TL20 PLATES IS ALLOWED.

DIMENSIONS, SUPPORTS AND LOADINGS SPECIFIED BY FABRICATOR TO BE VERIFIED BY BUILDING DESIGNER

BEARINGS

JT	FACTORED GROSS REACTION VERT	HORZ	MAXIMUM FACTORED GROSS REACTION DOWN	HORZ	UPLIFT	INPUT BRG IN-SX	REQRD BRG IN-SX
7	1046	0	1046	0	0	1-10	1-10
15	1049	0	1049	0	0	HANGER BY OTHERS	
						MIN. SEAT SIZE: 1-8	

UNFACTORED REACTIONS

JT	1ST LCASE COMBINED	SNOW	MAX./MIN. COMPONENT REACTIONS LIVE	PERM.LIVE	WIND	DEAD	SOIL
7	734	513 / 0	0 / 0	0 / 0	0 / 0	221 / 0	0 / 0
15	737	513 / 0	0 / 0	0 / 0	0 / 0	224 / 0	0 / 0

BEARING MATERIAL TO BE SPF NO.2 OR BETTER AT JOINT(S) 7

BRACING
TOP CHORD TO BE SHEATHED OR MAX. PURLIN SPACING = 5.52 FT.
MAX. UNBRACED BOTTOM CHORD LENGTH = 10.00 FT. OR RIGID CEILING DIRECTLY APPLIED.

MAX. UNBRACED INTERIOR CHORD LENGTH = 7.81 FT.

ALL PITCH BREAKS AND PERIMETER CORNER JOINTS MUST BE LATERALLY RESTRAINED.

1 - 2x3 SPF No.2 LATERAL BRACE(S) AT 1/ 2 LENGTH OF 6-7. DBS = 14-0-0 . CBF = 88 LBS.
1 - 2x3 SPF No.2 LATERAL BRACE(S) AT 1/ 2 LENGTH OF 3-10, 4-8, 5-8. DBS = 20-0-0 . CBF = 58 LBS.

DBS = DIAGONAL BRACE SPACING (MAX). CBF = CUMULATIVE BRACING FORCE. FASTEN LATERAL BRACE(S) USING (0.122"X3") SPIRAL NAILS : 1 NAIL FOR 2x3 BRACE(S), 2 FOR 1x4, 2x4, 2x5, 3 FOR 2x6, 4 FOR 2x8, 5 FOR 2x10, AND 6 FOR 2x12.

END VERTICAL(S) MUST BE SHEATHED OR HAVE BRACES AS INDICATED IN THE MAX. UNBRACED LENGTH COLUMN OF THE TABLE BELOW

LOADING
TOTAL LOAD CASES: (4)

CHORDS

MEMB. FR-TO	MAX. FACTORED FORCE (LBS)	FACTORED VERT. LOAD (PLF) FROM	TO	LC1 MAX CSI (LC)
1- 2	-1212 / 0	-77.3	-77.3	0.11 (1)
2- 3	-1169 / 0	-77.3	-77.3	0.33 (1)
3- 4	-732 / 0	-77.3	-77.3	0.33 (1)
4- 5	-438 / 0	-77.3	-77.3	0.23 (1)
5- 6	-438 / 0	-77.3	-77.3	0.23 (1)
7- 6	-1009 / 0	0.0	0.0	0.68 (1)
15- 1	-1040 / 0	0.0	0.0	0.10 (1)
15-14	0 / 0	-17.5	-17.5	0.01 (4)
13-12	0 / 0	-17.5	-17.5	0.00 (4)
12-11	0 / 66	-17.5	-17.5	0.15 (4)
11-10	0 / 897	-17.5	-17.5	0.22 (1)
10- 9	0 / 590	-17.5	-17.5	0.14 (1)
9- 8	0 / 590	-17.5	-17.5	0.14 (1)
8- 7	0 / 0	-17.5	-17.5	0.09 (4)

WEBS

MAX. UNBRAC LENGTH	MEMB. FR-TO	MAX. FACTORED FORCE (LBS)	MAX CSI (LC)
5.71	14-11	0 / 844	0.19 (1)
5.52	14- 3	0 / 121	0.03 (1)
6.25	11- 3	-35 / 85	0.03 (4)
6.25	3-10	-432 / 0	0.20 (1)
6.25	10- 4	0 / 389	0.09 (1)
5.49	4- 8	-347 / 0	0.21 (1)
7.71	8- 5	-460 / 0	0.31 (1)
	8- 6	0 / 967	0.16 (1)
10.00	12-14	0 / 49	0.18 (1)
10.00	14- 2	-270 / 0	0.13 (1)
10.00	1-14	0 / 1121	0.25 (1)
10.00			
10.00			
10.00			
10.00			

DESIGN CRITERIA

SPECIFIED LOADS:

TOP	CH.	LL	=	23.3	PSF
		DL	=	3.0	PSF
BOT	CH.	LL	=	0.0	PSF
		DL	=	7.0	PSF
TOTAL	LOAD		=	33.3	PSF

SPACING = 24.0 IN. C/C

LOADING IN FLAT SECTION BASED ON A SLOPE OF 6.00/12

THIS TRUSS IS DESIGNED FOR RESIDENTIAL OR SMALL BUILDING REQUIREMENTS OF PART 9, NBCC 2010

THIS DESIGN COMPLIES WITH:
- PART 9 OF OBC 2012 , BCBC 2012 , ABC 2014
- CSA 086-09
- TPIC 2011

(55 % OF 27.2 P.S.F. G.S.L. PLUS 8.4 P.S.F. RAIN LOAD) EQUALS 23.3 P.S.F. SPECIFIED ROOF LIVE LOAD

ALLOWABLE DEFL.(LL)= L/360 (0.73")
CALCULATED VERT. DEFL.(LL) = L/ 999 (0.03")
ALLOWABLE DEFL.(TL)= L/360 (0.73")
CALCULATED VERT. DEFL.(TL) = L/ 999 (0.07")

CSI: TC=0.68 (6-7:1) , BC=0.22 (10-11:1) , WB=0.31 (5-8:1) , SSI=0.18 (5-6:1)

DOL LUMBER=1.00 NAIL=1.00 LS BEND=1.10 COMP=1.10 SHEAR=1.10 TENS= 1.10

COMPANION LIVE LOAD FACTOR = 0.50

AUTOSOLVE RIGHT HEEL ONLY

TRUSS PLATE MANUFACTURER IS NOT RESPONSIBLE FOR QUALITY CONTROL IN THE TRUSS MANUFACTURING PLANT .

NAIL VALUES

PLATE	GRIP(DRY) (PSI) MAX	MIN	SHEAR (PLI) MAX	MIN	SECTION (PLI) MAX	MIN
MT20	618	354	1667	822	2284	1656

PLATE PLACEMENT TOL. = 0.250 inches

PLATE ROTATION TOL. = 5.0 Deg.

JSI GRIP= 0.90 (6) (INPUT = 0.90)
JSI METAL= 0.25 (11) (INPUT = 1.00)

LICENSED PROFESSIONAL ENGINEER
R.M. TREVISAN
100136551
March 14th, 2017
PROVINCE OF ONTARIO

RECEIVED
TOWN OF MILTON
MAR 29, 2017
17-5233
BUILDING DIVISION

READ ALL NOTES ON THIS PAGE AND ON THE ENGINEERING NOTE PAGE ENP-1. THE NOTE PAGE IS AN INTEGRAL PART OF THIS DRAWING AS IT CONTAINS SPECIFICATIONS AND CRITERIA USED IN THE DESIGN OF THIS COMPONENT.

KOTT

JOB NAME	TRUSS NAME	QUANTITY	PLY	JOB DESC.	DRWG NO.
PT0317-081	T79	1	1	TRUSS DESC. LECCO RIDGE-BLOCK 338	

KOTT , Stouffville, ON, CGC

Version 8.100 S Feb 9 2017 MiTek Industries, Inc. Tue Mar 14 15:58:01 2017 Page 1
ID:EvTixTQDI5yR1QLotZTBr_yE?HJ-erf0qaj2QVKaaV1NK?gN6su0lkHW7dWAQA0iF_zb_Oq

SCALE = 1:65.6

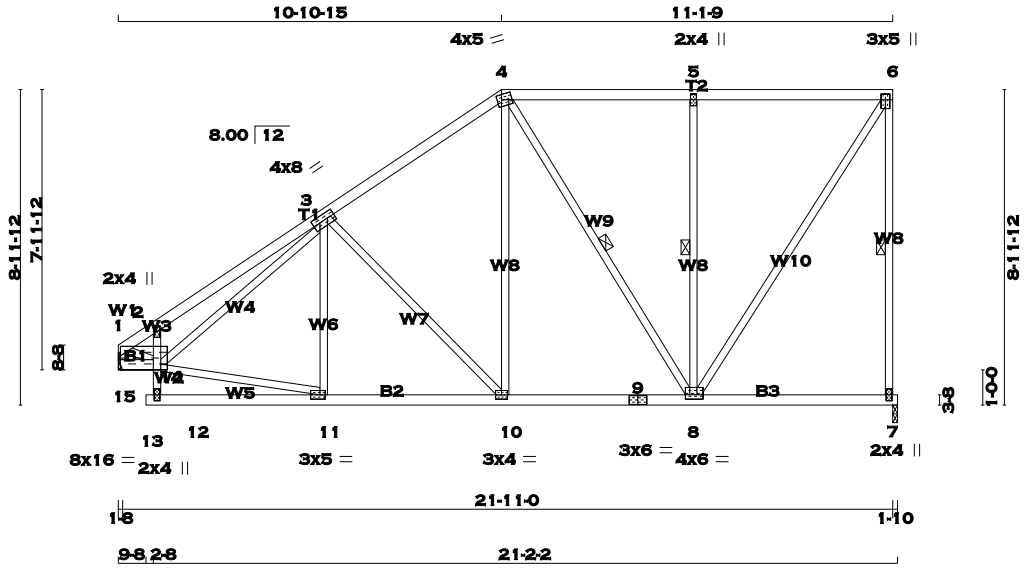

TOTAL WEIGHT = 111 lb
[M]

LUMBER
N. L. G. A. RULES

CHORDS	SIZE		LUMBER	DESCR.
1 - 4	2x4	DRY	No.2	SPF
4 - 6	2x4	DRY	No.2	SPF
7 - 6	2x3	DRY	No.2	SPF
15 - 1	2x4	DRY	No.2	SPF
15 - 14	2x4	DRY	No.2	SPF
13 - 9	2x4	DRY	No.2	SPF
9 - 7	2x4	DRY	No.2	SPF
ALL WEBS EXCEPT	2x3	DRY	No.2	SPF

DRY: SEASONED LUMBER.

PLATES (table is in inches)

JT	TYPE	PLATES	W	LEN	Y	X
1, 14, 15 1						
2	TMW+w	MT20	2.0	4.0		
3	TMWWW-t	MT20	4.0	8.0		
4	TTWW-m	MT20	4.0	5.0	1.75	1.50
5	TMW+w	MT20	2.0	4.0		
6	TMVW+p	MT20	3.0	5.0	2.00	1.50
7	BMV1+p	MT20	2.0	4.0		
8	BMWWW-t	MT20	4.0	6.0	1.50	1.50
9	BS-t	MT20	3.0	6.0		
10	BMWW-t	MT20	3.0	4.0		
11	BMWW-t	MT20	3.0	5.0	1.50	1.75
12	BMW+w	MT20	2.0	4.0		
14	TMBVWWWWW-t	MT20	8.0	16.0	3.50	11.25

A SIZE FOR SIZE SUBSTITUTION OF MITEK MII20 WITH TEE-LOK TL20 PLATES IS ALLOWED.

DIMENSIONS, SUPPORTS AND LOADINGS SPECIFIED BY FABRICATOR TO BE VERIFIED BY BUILDING DESIGNER

BEARINGS

JT	FACTORED GROSS REACTION VERT	HORZ	MAXIMUM FACTORED GROSS REACTION DOWN	HORZ	UPLIFT	INPUT BRG IN-SX	REQRD BRG IN-SX
7	1046	0	1046	0	0	1-10	1-10
15	1049	0	1049	0	0	HANGER BY OTHERS	
						MIN. SEAT SIZE: 1-8	

UNFACTORED REACTIONS

JT	1ST LCASE COMBINED	MAX./MIN. COMPONENT REACTIONS SNOW	LIVE	PERM.LIVE	WIND	DEAD	SOIL
7	734	513 / 0	0 / 0	0 / 0	0 / 0	221 / 0	0 / 0
15	737	513 / 0	0 / 0	0 / 0	0 / 0	224 / 0	0 / 0

BEARING MATERIAL TO BE SPF NO.2 OR BETTER AT JOINT(S) 7

BRACING
TOP CHORD TO BE SHEATHED OR MAX. PURLIN SPACING = 5.52 FT.
MAX. UNBRACED BOTTOM CHORD LENGTH = 10.00 FT. OR RIGID CEILING DIRECTLY APPLIED.

MAX. UNBRACED INTERIOR CHORD LENGTH = 7.81 FT.

ALL PITCH BREAKS AND PERIMETER CORNER JOINTS MUST BE LATERALLY RESTRAINED.

1 - 2x3 SPF No.2 LATERAL BRACE(S) AT 1/ 2 LENGTH OF 6-7. DBS = 14-0-0 . CBF = 88 LBS.
1 - 2x3 SPF No.2 LATERAL BRACE(S) AT 1/ 2 LENGTH OF 4-8, 5-8. DBS = 20-0-0 . CBF = 67 LBS.

DBS = DIAGONAL BRACE SPACING (MAX). CBF = CUMULATIVE BRACING FORCE. FASTEN LATERAL BRACE(S) USING (0.122"X3") SPIRAL NAILS : 1 NAIL FOR 2x3 BRACE(S), 2 FOR 1x4, 2x4, 2x5, 3 FOR 2x6, 4 FOR 2x8, 5 FOR 2x10, AND 6 FOR 2x12.

END VERTICAL(S) MUST BE SHEATHED OR HAVE BRACES AS INDICATED IN THE MAX. UNBRACED LENGTH COLUMN OF THE TABLE BELOW

LOADING
TOTAL LOAD CASES: (4)

CHORDS

MEMB. FR-TO	MAX. FACTORED FORCE (LBS)	FACTORED VERT. LOAD (PLF) FROM	TO	LC1	MAX CSI (LC)	MAX. UNBRAC LENGTH
1- 2	-1191 / 0	-77.3	-77.3	0.09 (1)		5.76
2- 3	-1142 / 0	-77.3	-77.3	0.34 (1)		5.52
3- 4	-824 / 0	-77.3	-77.3	0.33 (1)		6.25
4- 5	-546 / 0	-77.3	-77.3	0.41 (1)		6.25
5- 6	-546 / 0	-77.3	-77.3	0.41 (1)		6.25
7- 6	-1005 / 0	0.0	0.0	0.52 (1)		5.49
15- 1	-1040 / 0	0.0	0.0	0.10 (1)		7.71
15-14	0 / 0	-17.5	-17.5	0.01 (4)		10.00
13-12	0 / 0	-17.5	-17.5	0.00 (4)		10.00
12-11	0 / 57	-17.5	-17.5	0.11 (4)		10.00
11-10	0 / 900	-17.5	-17.5	0.20 (1)		10.00
10- 9	0 / 669	-17.5	-17.5	0.18 (4)		10.00
9- 8	0 / 669	-17.5	-17.5	0.18 (4)		10.00
8- 7	0 / 0	-17.5	-17.5	0.13 (4)		10.00

WEBS

MEMB. FR-TO	MAX. FACTORED FORCE (LBS)	MAX CSI (LC)
14-11	0 / 862	0.19 (1)
14- 3	0 / 86	0.02 (1)
11- 3	-79 / 58	0.04 (1)
3-10	-335 / 0	0.36 (1)
10- 4	0 / 326	0.07 (1)
4- 8	-230 / 0	0.17 (1)
8- 5	-533 / 0	0.28 (1)
8- 6	0 / 999	0.22 (1)
12-14	0 / 44	0.15 (1)
14- 2	-215 / 0	0.15 (1)
1-14	0 / 1086	0.24 (1)

DESIGN CRITERIA

SPECIFIED LOADS:

TOP CH.	LL	=	23.3	PSF
	DL	=	3.0	PSF
BOT CH.	LL	=	0.0	PSF
	DL	=	7.0	PSF
TOTAL LOAD		=	33.3	PSF

SPACING = 24.0 IN. C/C

LOADING IN FLAT SECTION BASED ON A SLOPE OF 6.00/12

THIS TRUSS IS DESIGNED FOR RESIDENTIAL OR SMALL BUILDING REQUIREMENTS OF PART 9, NBCC 2010

THIS DESIGN COMPLIES WITH:
- PART 9 OF OBC 2012 , BCBC 2012 , ABC 2014
- CSA 086-09
- TPIC 2011

(55 % OF 27.2 P.S.F. G.S.L. PLUS 8.4 P.S.F. RAIN LOAD) EQUALS 23.3 P.S.F. SPECIFIED ROOF LIVE LOAD

ALLOWABLE DEFL.(LL)= L/360 (0.73")
CALCULATED VERT. DEFL.(LL) = L/ 999 (0.03")
ALLOWABLE DEFL.(TL)= L/360 (0.73")
CALCULATED VERT. DEFL.(TL) = L/ 999 (0.06")

CSI: TC=0.52 (6-7:1) , BC=0.20 (10-11:1) , WB=0.36 (3-10:1) , SSI=0.21 (5-6:1)

DOL LUMBER=1.00 NAIL=1.00 LS BEND=1.10 COMP=1.10 SHEAR=1.10 TENS= 1.10

COMPANION LIVE LOAD FACTOR = 0.50

AUTOSOLVE RIGHT HEEL ONLY

TRUSS PLATE MANUFACTURER IS NOT RESPONSIBLE FOR QUALITY CONTROL IN THE TRUSS MANUFACTURING PLANT .

NAIL VALUES

PLATE	GRIP(DRY) (PSI) MAX	MIN	SHEAR (PLI) MAX	MIN	SECTION (PLI) MAX	MIN
MT20	618	354	1667	822	2284	1656

PLATE PLACEMENT TOL. = 0.250 inches

PLATE ROTATION TOL. = 5.0 Deg.

JSI GRIP= 0.90 (11) (INPUT = 0.90)
JSI METAL= 0.25 (11) (INPUT = 1.00)

LICENSED PROFESSIONAL ENGINEER
R.M. TREVISAN
100136551
March 14th, 2017
PROVINCE OF ONTARIO

RECEIVED
TOWN OF MILTON
MAR 29, 2017
17-5233
BUILDING DIVISION

READ ALL NOTES ON THIS PAGE AND ON THE ENGINEERING NOTE PAGE ENP-1. THE NOTE PAGE IS AN INTEGRAL PART OF THIS DRAWING AS IT CONTAINS SPECIFICATIONS AND CRITERIA USED IN THE DESIGN OF THIS COMPONENT.

KOTT

JOB NAME	TRUSS NAME	QUANTITY	PLY	JOB DESC.	DRWG NO.
PT0317-081	**T80**	**1**	**1**	TRUSS DESC. LECCO RIDGE-BLOCK 338	

ENG JOB: PT0317-081

KOTT , Stouffville, ON, CGC

Version 8.100 S Feb 9 2017 MiTek Industries, Inc. Tue Mar 14 15:58:01 2017 Page 1
ID:EvTixTQDI5yR1QLotZTBr_yE?HJ-erf0qaj2QVKaaV1NK?gN6su4lkHT7e_AQA0iF_zb_Oq

SCALE = 1:61.8

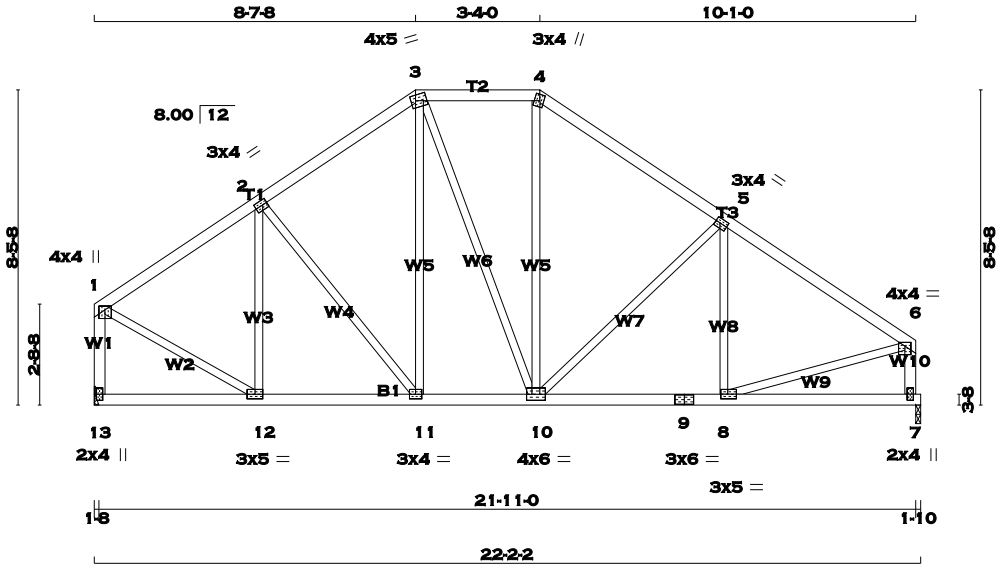

TOTAL WEIGHT = 105 lb

LUMBER

N. L. G. A. RULES

CHORDS	SIZE		LUMBER	DESCR.
1 - 3	2x4	DRY	No.2	SPF
3 - 4	2x4	DRY	No.2	SPF
4 - 6	2x4	DRY	No.2	SPF
13 - 1	2x4	DRY	No.2	SPF
7 - 6	2x4	DRY	No.2	SPF
13 - 9	2x4	DRY	No.2	SPF
9 - 7	2x4	DRY	No.2	SPF
ALL WEBS EXCEPT	2x3	DRY	No.2	SPF

DRY: SEASONED LUMBER.

PLATES (table is in inches)

JT	TYPE	PLATES	W	LEN	Y	X
1	TMVW+p	MT20	4.0	4.0	1.25	2.00
2	TMWW-t	MT20	3.0	4.0	1.50	1.50
3	TTWW-m	MT20	4.0	5.0	1.75	1.50
4	TTW+m	MT20	3.0	4.0	2.00	1.25
5	TMWW-t	MT20	3.0	4.0	1.50	1.50
6	TMVW-p	MT20	4.0	4.0	1.25	2.00
7	BMV1+p	MT20	2.0	4.0		
8	BMWW-t	MT20	3.0	5.0	1.50	2.25
9	BS-t	MT20	3.0	6.0		
10	BMWWW-t	MT20	4.0	6.0		
11	BMWW-t	MT20	3.0	4.0		
12	BMWW-t	MT20	3.0	5.0		
13	BMV1+p	MT20	2.0	4.0		

A SIZE FOR SIZE SUBSTITUTION OF MITEK MII20 WITH TEE-LOK TL20 PLATES IS ALLOWED.

DIMENSIONS, SUPPORTS AND LOADINGS SPECIFIED BY FABRICATOR TO BE VERIFIED BY BUILDING DESIGNER

BEARINGS

JT	FACTORED GROSS REACTION VERT	HORZ	MAXIMUM FACTORED GROSS REACTION DOWN	HORZ	UPLIFT	INPUT BRG	REQRD BRG
13	1045	0	1045	0	0	IN-SX	IN-SX
						HANGER BY OTHERS	
						MIN. SEAT SIZE: 1-8	
7	1045	0	1045	0	0	1-10	1-10

UNFACTORED REACTIONS

JT	1ST LCASE COMBINED	SNOW	MAX./MIN. COMPONENT REACTIONS LIVE	PERM.LIVE	WIND	DEAD	SOIL
13	734	513 / 0	0 / 0	0 / 0	0 / 0	220 / 0	0 / 0
7	734	513 / 0	0 / 0	0 / 0	0 / 0	220 / 0	0 / 0

BEARING MATERIAL TO BE SPF NO.2 OR BETTER AT JOINT(S) 7

BRACING

TOP CHORD TO BE SHEATHED OR MAX. PURLIN SPACING = 5.79 FT.
MAX. UNBRACED BOTTOM CHORD LENGTH = 10.00 FT. OR RIGID CEILING DIRECTLY APPLIED.

ALL PITCH BREAKS AND PERIMETER CORNER JOINTS MUST BE LATERALLY RESTRAINED.

LOADING

TOTAL LOAD CASES: (4)

CHORDS

MEMB. FR-TO	MAX. FACTORED FORCE (LBS)	VERT. LOAD LC1 (PLF) FROM	TO	MAX CSI (LC)	MAX. UNBRAC LENGTH
1- 2	-857 / 0	-77.3	-77.3	0.19 (1)	6.25
2- 3	-834 / 0	-77.3	-77.3	0.19 (1)	6.25
3- 4	-704 / 0	-77.3	-77.3	0.12 (1)	6.25
4- 5	-871 / 0	-77.3	-77.3	0.26 (1)	6.24
5- 6	-1066 / 0	-77.3	-77.3	0.27 (1)	5.79
13- 1	-1014 / 0	0.0	0.0	0.14 (1)	7.78
7- 6	-1008 / 0	0.0	0.0	0.11 (1)	7.80
13-12	0 / 0	-17.5	-17.5	0.08 (4)	10.00
12-11	0 / 731	-17.5	-17.5	0.16 (1)	10.00
11-10	0 / 675	-17.5	-17.5	0.14 (1)	10.00
10- 9	0 / 908	-17.5	-17.5	0.20 (1)	10.00
9- 8	0 / 908	-17.5	-17.5	0.20 (1)	10.00
8- 7	0 / 0	-17.5	-17.5	0.11 (4)	10.00

WEBS

MEMB. FR-TO	MAX. FACTORED FORCE (LBS)	MAX CSI (LC)
12- 2	-307 / 0	0.15 (1)
2-11	-91 / 0	0.08 (1)
11- 3	0 / 128	0.03 (1)
3-10	0 / 78	0.02 (1)
10- 4	0 / 198	0.04 (1)
10- 5	-287 / 0	0.27 (1)
8- 5	-149 / 42	0.06 (1)
1-12	0 / 831	0.19 (1)
8- 6	0 / 942	0.21 (1)

DESIGN CRITERIA

SPECIFIED LOADS:

TOP CH.	LL	=	23.3	PSF
	DL	=	3.0	PSF
BOT CH.	LL	=	0.0	PSF
	DL	=	7.0	PSF
TOTAL LOAD		=	33.3	PSF

SPACING = 24.0 IN. C/C

LOADING IN FLAT SECTION BASED ON A SLOPE OF 6.00/12

THIS TRUSS IS DESIGNED FOR RESIDENTIAL OR SMALL BUILDING REQUIREMENTS OF PART 9, NBCC 2010

THIS DESIGN COMPLIES WITH:
- PART 9 OF OBC 2012 , BCBC 2012 , ABC 2014
- CSA 086-09
- TPIC 2011

(55 % OF 27.2 P.S.F. G.S.L. PLUS 8.4 P.S.F. RAIN LOAD) EQUALS 23.3 P.S.F. SPECIFIED ROOF LIVE LOAD

ALLOWABLE DEFL.(LL)= L/360 (0.73")
CALCULATED VERT. DEFL.(LL) = L/ 999 (0.02")
ALLOWABLE DEFL.(TL)= L/360 (0.73")
CALCULATED VERT. DEFL.(TL) = L/ 999 (0.05")

CSI: TC=0.27 (5-6:1) , BC=0.20 (8-10:1) , WB=0.27 (5-10:1) , SSI=0.16 (5-6:1)

DOL LUMBER=1.00 NAIL=1.00 LS BEND=1.10 COMP=1.10 SHEAR=1.10 TENS= 1.10

COMPANION LIVE LOAD FACTOR = 0.50

TRUSS PLATE MANUFACTURER IS NOT RESPONSIBLE FOR QUALITY CONTROL IN THE TRUSS MANUFACTURING PLANT .

NAIL VALUES

PLATE	GRIP(DRY) (PSI) MAX	MIN	SHEAR (PLI) MAX	MIN	SECTION (PLI) MAX	MIN
MT20	618	354	1667	822	2284	1656

PLATE PLACEMENT TOL. = 0.250 inches

PLATE ROTATION TOL. = 5.0 Deg.

JSI GRIP= 0.88 (6) (INPUT = 0.90)
JSI METAL= 0.31 (6) (INPUT = 1.00)

LICENSED PROFESSIONAL ENGINEER
P.M. TREVISAN
100136551
March 14th, 2017
PROVINCE OF ONTARIO

RECEIVED
TOWN OF MILTON
MAR 29, 2017
17-5233
BUILDING DIVISION

READ ALL NOTES ON THIS PAGE AND ON THE ENGINEERING NOTE PAGE ENP-1. THE NOTE PAGE IS AN INTEGRAL PART OF THIS DRAWING AS IT CONTAINS SPECIFICATIONS AND CRITERIA USED IN THE DESIGN OF THIS COMPONENT.

KOTT

JOB NAME	TRUSS NAME	QUANTITY	PLY	JOB DESC.	DRWG NO.
PT0317-081	T81	2	1	TRUSS DESC. LECCO RIDGE-BLOCK 338	

KOTT , Stouffville, ON, CGC

Version 8.100 S Feb 9 2017 MiTek Industries, Inc. Tue Mar 14 15:58:02 2017 Page 1
ID:EvTixTQDI5yR1QLotZTBr_yE?HJ-62DO2wkgBoSQBfbauiBce3RDt8dLs1MJfqlGnQzb_Op

SCALE = 1:71.0

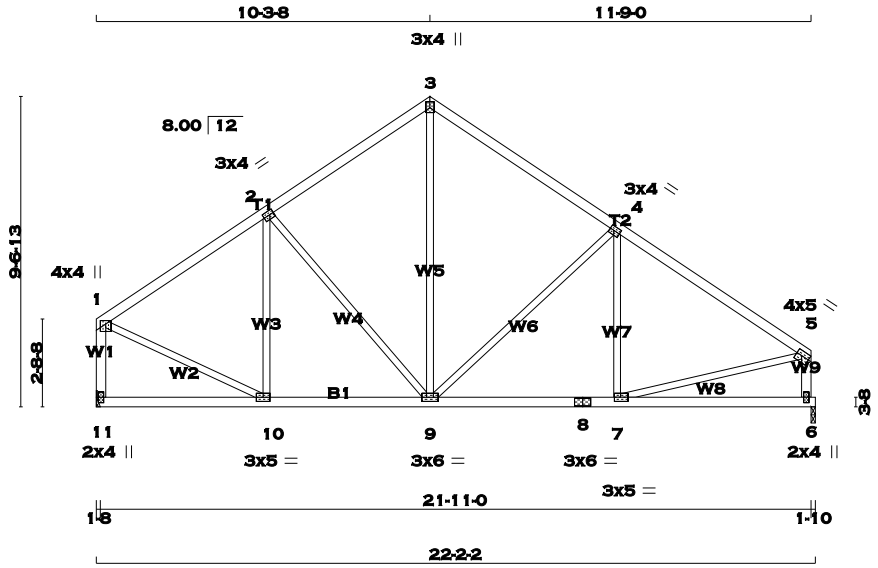

TOTAL WEIGHT = 2 X 97 = 195 lb
[M][F]

LUMBER
N. L. G. A. RULES

CHORDS	SIZE		LUMBER	DESCR.
1 - 3	2x4	DRY	No.2	SPF
3 - 5	2x4	DRY	No.2	SPF
11 - 1	2x4	DRY	No.2	SPF
6 - 5	2x4	DRY	No.2	SPF
11 - 8	2x4	DRY	No.2	SPF
8 - 6	2x4	DRY	No.2	SPF
ALL WEBS EXCEPT	2x3	DRY	No.2	SPF

DRY: SEASONED LUMBER.

PLATES (table is in inches)

JT	TYPE	PLATES	W	LEN	Y	X
1	TMVW+p	MT20	4.0	4.0	1.25	2.00
2	TMWW-t	MT20	3.0	4.0	1.50	1.50
3	TTW+p	MT20	3.0	4.0	2.25	1.50
4	TMWW-t	MT20	3.0	4.0	1.50	1.50
5	TMVW-t	MT20	4.0	5.0	1.75	Edge
6	BMV1+p	MT20	2.0	4.0		
7	BMWW-t	MT20	3.0	5.0	1.50	2.25
8	BS-t	MT20	3.0	6.0		
9	BMWWW-t	MT20	3.0	6.0		
10	BMWW-t	MT20	3.0	5.0		
11	BMV1+p	MT20	2.0	4.0		

Edge - INDICATES REFERENCE CORNER OF PLATE TOUCHES EDGE OF CHORD.

A SIZE FOR SIZE SUBSTITUTION OF MITEK MII20 WITH TEE-LOK TL20 PLATES IS ALLOWED.

DIMENSIONS, SUPPORTS AND LOADINGS SPECIFIED BY FABRICATOR TO BE VERIFIED BY BUILDING DESIGNER

BEARINGS

JT	FACTORED GROSS REACTION VERT	HORZ	MAXIMUM FACTORED GROSS REACTION DOWN	HORZ	UPLIFT	INPUT BRG IN-SX	REQRD BRG IN-SX
11	1045	0	1045	0	0	HANGER BY OTHERS MIN. SEAT SIZE: 1-8	
6	1045	0	1045	0	0	1-10	1-10

UNFACTORED REACTIONS

JT	1ST LCASE COMBINED	MAX./MIN. COMPONENT REACTIONS SNOW	LIVE	PERM.LIVE	WIND	DEAD	SOIL
11	734	513 / 0	0 / 0	0 / 0	0 / 0	220 / 0	0 / 0
6	734	513 / 0	0 / 0	0 / 0	0 / 0	220 / 0	0 / 0

BEARING MATERIAL TO BE SPF NO.2 OR BETTER AT JOINT(S) 6

BRACING
TOP CHORD TO BE SHEATHED OR MAX. PURLIN SPACING = 5.63 FT.
MAX. UNBRACED BOTTOM CHORD LENGTH = 10.00 FT. OR RIGID CEILING DIRECTLY APPLIED.

ALL PITCH BREAKS AND PERIMETER CORNER JOINTS MUST BE LATERALLY RESTRAINED.

LOADING
TOTAL LOAD CASES: (4)

CHORDS

MEMB. FR-TO	MAX. FORCE (LBS)	FACTORED VERT. LOAD (PLF) FROM	TO	MAX CSI (LC)	MAX. UNBRAC LENGTH
1- 2	-887 / 0	-77.3	-77.3	0.27 (1)	6.19
2- 3	-777 / 0	-77.3	-77.3	0.27 (1)	6.25
3- 4	-781 / 0	-77.3	-77.3	0.35 (1)	6.25
4- 5	-1069 / 0	-77.3	-77.3	0.37 (1)	5.63
11- 1	-1007 / 0	0.0	0.0	0.14 (1)	7.80
6- 5	-1003 / 0	0.0	0.0	0.11 (1)	7.81
11-10	0 / 0	-17.5	-17.5	0.11 (4)	10.00
10- 9	0 / 760	-17.5	-17.5	0.18 (1)	10.00
9- 8	0 / 914	-17.5	-17.5	0.22 (1)	10.00
8- 7	0 / 914	-17.5	-17.5	0.22 (1)	10.00
7- 6	0 / 0	-17.5	-17.5	0.15 (4)	10.00

WEBS

MEMB. FR-TO	MAX. FORCE (LBS)	MAX CSI (LC)
10- 2	-246 / 12	0.15 (1)
2- 9	-208 / 0	0.25 (1)
9- 3	0 / 519	0.12 (1)
9- 4	-397 / 0	0.51 (1)
7- 4	-100 / 69	0.05 (1)
1-10	0 / 834	0.19 (1)
7- 5	0 / 939	0.21 (1)

DESIGN CRITERIA

SPECIFIED LOADS:

TOP	CH.	LL	=	23.3	PSF
		DL	=	3.0	PSF
BOT	CH.	LL	=	0.0	PSF
		DL	=	7.0	PSF
TOTAL	LOAD		=	33.3	PSF

SPACING = 24.0 IN. C/C

THIS TRUSS IS DESIGNED FOR RESIDENTIAL OR SMALL BUILDING REQUIREMENTS OF PART 9, NBCC 2010

THIS DESIGN COMPLIES WITH:
- PART 9 OF OBC 2012 , BCBC 2012 , ABC 2014
- CSA 086-09
- TPIC 2011

(55 % OF 27.2 P.S.F. G.S.L. PLUS 8.4 P.S.F. RAIN LOAD) EQUALS 23.3 P.S.F. SPECIFIED ROOF LIVE LOAD

ALLOWABLE DEFL.(LL)= L/360 (0.73")
CALCULATED VERT. DEFL.(LL) = L/ 999 (0.03")
ALLOWABLE DEFL.(TL)= L/360 (0.73")
CALCULATED VERT. DEFL.(TL) = L/ 999 (0.06")

CSI: TC=0.37 (4-5:1) , BC=0.22 (7-9:1) , WB=0.51 (4-9:1) , SSI=0.19 (4-5:1)

DOL LUMBER=1.00 NAIL=1.00 LS BEND=1.10 COMP=1.10 SHEAR=1.10 TENS= 1.10

COMPANION LIVE LOAD FACTOR = 0.50

TRUSS PLATE MANUFACTURER IS NOT RESPONSIBLE FOR QUALITY CONTROL IN THE TRUSS MANUFACTURING PLANT .

NAIL VALUES

PLATE	GRIP(DRY) (PSI) MAX	MIN	SHEAR (PLI) MAX	MIN	SECTION (PLI) MAX	MIN
MT20	618	354	1667	822	2284	1656

PLATE PLACEMENT TOL. = 0.250 inches

PLATE ROTATION TOL. = 5.0 Deg.

JSI GRIP= 0.88 (10) (INPUT = 0.90)
JSI METAL= 0.36 (5) (INPUT = 1.00)

LICENSED PROFESSIONAL ENGINEER
R.M. TREVISAN
100136551
March 14th, 2017
PROVINCE OF ONTARIO

RECEIVED
TOWN OF MILTON
MAR 29, 2017
17-5233
BUILDING DIVISION

READ ALL NOTES ON THIS PAGE AND ON THE ENGINEERING NOTE PAGE ENP-1. THE NOTE PAGE IS AN INTEGRAL PART OF THIS DRAWING AS IT CONTAINS SPECIFICATIONS AND CRITERIA USED IN THE DESIGN OF THIS COMPONENT.

KOTT

JOB NAME	TRUSS NAME	QUANTITY	PLY	JOB DESC.	DRWG NO.
PT0317-081	T82	1	1	TRUSS DESC. LECCO RIDGE-BLOCK 338	

KOTT , Stouffville, ON, CGC

Version 8.100 S Feb 9 2017 MiTek Industries, Inc. Tue Mar 14 15:58:02 2017 Page 1
ID:EvTixTQDI5yR1QLotZTBr_yE?HJ-62DO2wkgBoSQBfbauiBce3RET8dis59JfqlGnQzb_Op

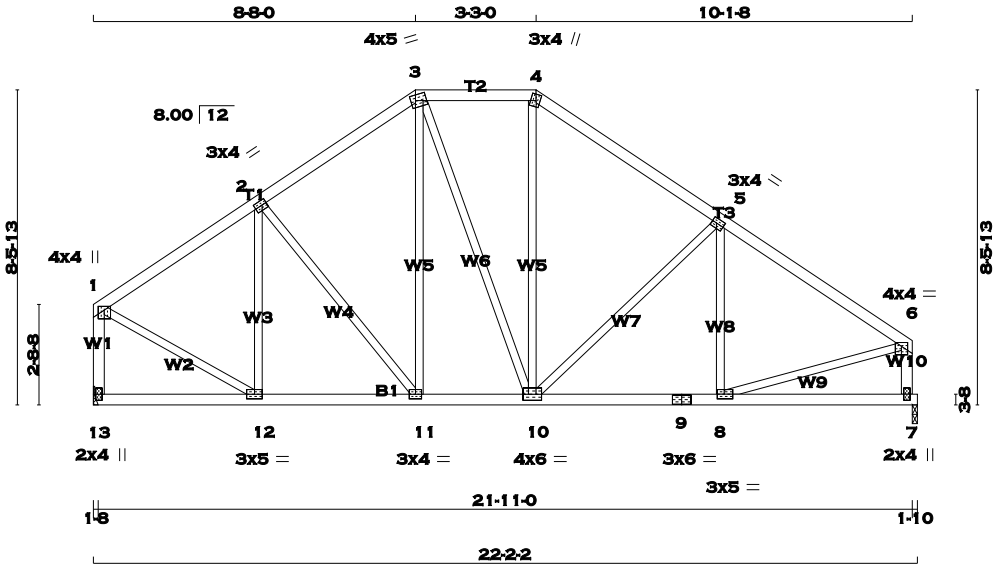

TOTAL WEIGHT = 105 lb

LUMBER

N. L. G. A. RULES

CHORDS	SIZE		LUMBER	DESCR.
1 - 3	2x4	DRY	No.2	SPF
3 - 4	2x4	DRY	No.2	SPF
4 - 6	2x4	DRY	No.2	SPF
13 - 1	2x4	DRY	No.2	SPF
7 - 6	2x4	DRY	No.2	SPF
13 - 9	2x4	DRY	No.2	SPF
9 - 7	2x4	DRY	No.2	SPF
ALL WEBS EXCEPT	2x3	DRY	No.2	SPF

DRY: SEASONED LUMBER.

PLATES (table is in inches)

JT	TYPE	PLATES	W	LEN	Y	X
1	TMVW+p	MT20	4.0	4.0	1.25	2.00
2	TMWW-t	MT20	3.0	4.0	1.50	1.50
3	TTWW-m	MT20	4.0	5.0	1.75	1.50
4	TTW+m	MT20	3.0	4.0	2.00	1.25
5	TMWW-t	MT20	3.0	4.0	1.50	1.50
6	TMVW-p	MT20	4.0	4.0	1.25	2.00
7	BMV1+p	MT20	2.0	4.0		
8	BMWW-t	MT20	3.0	5.0	1.50	2.25
9	BS-t	MT20	3.0	6.0		
10	BMWWW-t	MT20	4.0	6.0		
11	BMWW-t	MT20	3.0	4.0		
12	BMWW-t	MT20	3.0	5.0		
13	BMV1+p	MT20	2.0	4.0		

A SIZE FOR SIZE SUBSTITUTION OF MITEK MII20 WITH TEE-LOK TL20 PLATES IS ALLOWED.

DIMENSIONS, SUPPORTS AND LOADINGS SPECIFIED BY FABRICATOR TO BE VERIFIED BY BUILDING DESIGNER

BEARINGS

JT	FACTORED GROSS REACTION VERT	HORZ	MAXIMUM FACTORED GROSS REACTION DOWN	HORZ	UPLIFT	INPUT BRG	REQRD BRG
13	1045	0	1045	0	0	IN-SX	IN-SX
						HANGER BY OTHERS	
						MIN. SEAT SIZE: 1-8	
7	1045	0	1045	0	0	1-10	1-10

UNFACTORED REACTIONS

JT	1ST LCASE COMBINED	SNOW	LIVE	PERM.LIVE	WIND	DEAD	SOIL
		MAX./MIN. COMPONENT REACTIONS					
13	734	513 / 0	0 / 0	0 / 0	0 / 0	220 / 0	0 / 0
7	734	513 / 0	0 / 0	0 / 0	0 / 0	220 / 0	0 / 0

BEARING MATERIAL TO BE SPF NO.2 OR BETTER AT JOINT(S) 7

BRACING

TOP CHORD TO BE SHEATHED OR MAX. PURLIN SPACING = 5.79 FT.
MAX. UNBRACED BOTTOM CHORD LENGTH = 10.00 FT. OR RIGID CEILING DIRECTLY APPLIED.

ALL PITCH BREAKS AND PERIMETER CORNER JOINTS MUST BE LATERALLY RESTRAINED.

LOADING

TOTAL LOAD CASES: (4)

CHORDS

MEMB. FR-TO	MAX. FORCE (LBS)	FACTORED VERT. LOAD LC1 (PLF) FROM	TO	MAX CSI (LC)	MAX. UNBRAC LENGTH
1- 2	-858 / 0	-77.3	-77.3	0.19 (1)	6.25
2- 3	-833 / 0	-77.3	-77.3	0.19 (1)	6.25
3- 4	-702 / 0	-77.3	-77.3	0.11 (1)	6.25
4- 5	-869 / 0	-77.3	-77.3	0.26 (1)	6.25
5- 6	-1067 / 0	-77.3	-77.3	0.27 (1)	5.79
13- 1	-1014 / 0	0.0	0.0	0.14 (1)	7.78
7- 6	-1008 / 0	0.0	0.0	0.11 (1)	7.80
13-12	0 / 0	-17.5	-17.5	0.08 (4)	10.00
12-11	0 / 732	-17.5	-17.5	0.16 (1)	10.00
11-10	0 / 674	-17.5	-17.5	0.14 (1)	10.00
10- 9	0 / 909	-17.5	-17.5	0.20 (1)	10.00
9- 8	0 / 909	-17.5	-17.5	0.20 (1)	10.00
8- 7	0 / 0	-17.5	-17.5	0.11 (4)	10.00

WEBS

MEMB. FR-TO	MAX. FORCE (LBS)	MAX CSI (LC)
12- 2	-305 / 0	0.15 (1)
2-11	-94 / 0	0.08 (1)
11- 3	0 / 130	0.03 (1)
3-10	0 / 78	0.02 (1)
10- 4	0 / 199	0.04 (1)
10- 5	-290 / 0	0.27 (1)
8- 5	-148 / 43	0.06 (1)
1-12	0 / 831	0.19 (1)
8- 6	0 / 942	0.21 (1)

DESIGN CRITERIA

SPECIFIED LOADS:

TOP	CH.	LL	=	23.3	PSF
		DL	=	3.0	PSF
BOT	CH.	LL	=	0.0	PSF
		DL	=	7.0	PSF
TOTAL	LOAD		=	33.3	PSF

SPACING = 24.0 IN. C/C

LOADING IN FLAT SECTION BASED ON A SLOPE OF 6.00/12

THIS TRUSS IS DESIGNED FOR RESIDENTIAL OR SMALL BUILDING REQUIREMENTS OF PART 9, NBCC 2010

THIS DESIGN COMPLIES WITH:
- PART 9 OF OBC 2012 , BCBC 2012 , ABC 2014
- CSA 086-09
- TPIC 2011

(55 % OF 27.2 P.S.F. G.S.L. PLUS 8.4 P.S.F. RAIN LOAD) EQUALS 23.3 P.S.F. SPECIFIED ROOF LIVE LOAD

ALLOWABLE DEFL.(LL)= L/360 (0.73")
CALCULATED VERT. DEFL.(LL) = L/ 999 (0.02")
ALLOWABLE DEFL.(TL)= L/360 (0.73")
CALCULATED VERT. DEFL.(TL) = L/ 999 (0.05")

CSI: TC=0.27 (5-6:1) , BC=0.20 (8-10:1) , WB=0.27 (5-10:1) , SSI=0.16 (5-6:1)

DOL LUMBER=1.00 NAIL=1.00 LS BEND=1.10 COMP=1.10 SHEAR=1.10 TENS= 1.10

COMPANION LIVE LOAD FACTOR = 0.50

TRUSS PLATE MANUFACTURER IS NOT RESPONSIBLE FOR QUALITY CONTROL IN THE TRUSS MANUFACTURING PLANT .

NAIL VALUES

PLATE	GRIP(DRY) (PSI) MAX	MIN	SHEAR (PLI) MAX	MIN	SECTION (PLI) MAX	MIN
MT20	618	354	1667	822	2284	1656

PLATE PLACEMENT TOL. = 0.250 inches

PLATE ROTATION TOL. = 5.0 Deg.

JSI GRIP= 0.88 (6) (INPUT = 0.90)
JSI METAL= 0.31 (6) (INPUT = 1.00)

LICENSED PROFESSIONAL ENGINEER
P.M. TREVISAN
100136551
March 14th, 2017
PROVINCE OF ONTARIO

RECEIVED
TOWN OF MILTON
MAR 29, 2017
17-5233
BUILDING DIVISION

READ ALL NOTES ON THIS PAGE AND ON THE ENGINEERING NOTE PAGE ENP-1. THE NOTE PAGE IS AN INTEGRAL PART OF THIS DRAWING AS IT CONTAINS SPECIFICATIONS AND CRITERIA USED IN THE DESIGN OF THIS COMPONENT.

KOTT

JOB NAME	TRUSS NAME	QUANTITY	PLY	JOB DESC.	DRWG NO.
PT0317-081	**T83**	**1**	**1**	TRUSS DESC. LECCO RIDGE-BLOCK 338	

KOTT , Stouffville, ON, CGC

Version 8.100 S Feb 9 2017 MiTek Industries, Inc. Tue Mar 14 15:58:03 2017 Page 1
ID:EvTixTQDI5yR1QLotZTBr_yE?HJ-aEmnFFkIx6aHppAmSQirBHzMFYx2bRVStUVpJszb_Oo

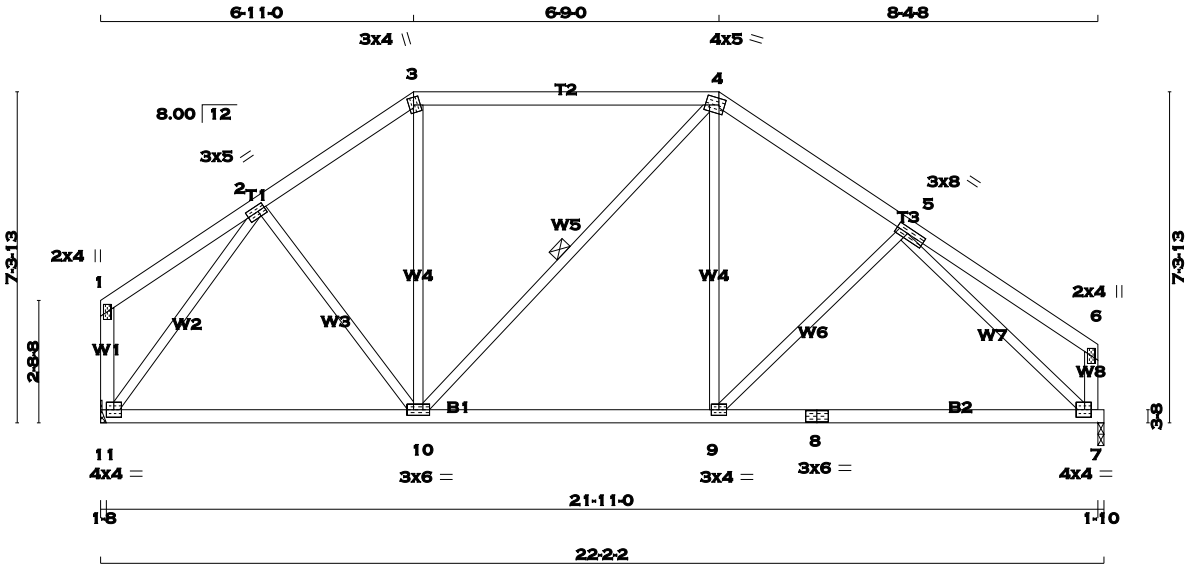

TOTAL WEIGHT = 95 lb
[M][F]

LUMBER
N. L. G. A. RULES

CHORDS	SIZE		LUMBER	DESCR.
1 - 3	2x4	DRY	No.2	SPF
3 - 4	2x4	DRY	No.2	SPF
4 - 6	2x4	DRY	No.2	SPF
11 - 1	2x4	DRY	No.2	SPF
7 - 6	2x4	DRY	No.2	SPF
11 - 8	2x4	DRY	No.2	SPF
8 - 7	2x4	DRY	No.2	SPF
ALL WEBS EXCEPT	2x3	DRY	No.2	SPF

DRY: SEASONED LUMBER.

PLATES (table is in inches)

JT	TYPE	PLATES	W	LEN	Y	X
1	TMV+p	MT20	2.0	4.0		
2	TMWW-t	MT20	3.0	5.0	1.50	2.00
3	TTW+m	MT20	3.0	4.0	2.00	1.25
4	TTWW-m	MT20	4.0	5.0	1.75	1.50
5	TMWW-t	MT20	3.0	8.0	1.50	3.25
6	TMV+p	MT20	2.0	4.0		
7	BMVW1-t	MT20	4.0	4.0	2.00	1.75
8	BS-t	MT20	3.0	6.0		
9	BMWW-t	MT20	3.0	4.0		
10	BMWWW-t	MT20	3.0	6.0		
11	BMVW1-t	MT20	4.0	4.0		

A SIZE FOR SIZE SUBSTITUTION OF MITEK MII20 WITH TEE-LOK TL20 PLATES IS ALLOWED.

DIMENSIONS, SUPPORTS AND LOADINGS SPECIFIED BY FABRICATOR TO BE VERIFIED BY BUILDING DESIGNER

BEARINGS

JT	FACTORED GROSS REACTION VERT	HORZ	MAXIMUM FACTORED GROSS REACTION DOWN	HORZ	UPLIFT	INPUT BRG IN-SX	REQRD BRG IN-SX
11	1045	0	1045	0	0	HANGER BY OTHERS MIN. SEAT SIZE: 1-8	
7	1045	0	1045	0	0	1-10	1-10

UNFACTORED REACTIONS

JT	1ST LCASE COMBINED	SNOW	LIVE	PERM.LIVE	WIND	DEAD	SOIL
		MAX./MIN. COMPONENT REACTIONS					
11	734	513 / 0	0 / 0	0 / 0	0 / 0	220 / 0	0 / 0
7	734	513 / 0	0 / 0	0 / 0	0 / 0	220 / 0	0 / 0

BEARING MATERIAL TO BE SPF NO.2 OR BETTER AT JOINT(S) 7

BRACING
TOP CHORD TO BE SHEATHED OR MAX. PURLIN SPACING = 6.12 FT.
MAX. UNBRACED BOTTOM CHORD LENGTH = 10.00 FT. OR RIGID CEILING DIRECTLY APPLIED.

ALL PITCH BREAKS AND PERIMETER CORNER JOINTS MUST BE LATERALLY RESTRAINED.

1 - 2x3 SPF No.2 LATERAL BRACE(S) AT 1/ 2 LENGTH OF 4-10. DBS = 20-0-0 . CBF = 13 LBS.

DBS = DIAGONAL BRACE SPACING (MAX). CBF = CUMULATIVE BRACING FORCE. FASTEN LATERAL BRACE(S) USING (0.122"X3") SPIRAL NAILS : 1 NAIL FOR 2x3 BRACE(S), 2 FOR 1x4, 2x4, 2x5, 3 FOR 2x6, 4 FOR 2x8, 5 FOR 2x10, AND 6 FOR 2x12.

END VERTICAL(S) MUST BE SHEATHED OR HAVE BRACES AS INDICATED IN THE MAX. UNBRACED LENGTH COLUMN OF THE TABLE BELOW

LOADING
TOTAL LOAD CASES: (4)

CHORDS

MEMB. FR-TO	MAX. FACTORED FORCE (LBS)	FACTORED VERT. LOAD (PLF) FROM	TO	LC1 MAX CSI (LC)	MAX. UNBRAC LENGTH
1- 2	0 / 17	-77.3	-77.3	0.14 (1)	10.00
2- 3	-881 / 0	-77.3	-77.3	0.12 (1)	6.25
3- 4	-720 / 0	-77.3	-77.3	0.46 (1)	6.25
4- 5	-968 / 0	-77.3	-77.3	0.18 (1)	6.12
5- 6	0 / 21	-77.3	-77.3	0.22 (1)	10.00
11- 1	-105 / 0	0.0	0.0	0.01 (1)	7.81
7- 6	-124 / 0	0.0	0.0	0.01 (1)	7.81
11-10	0 / 657	-17.5	-17.5	0.22 (4)	10.00
10- 9	0 / 790	-17.5	-17.5	0.32 (4)	10.00
9- 8	0 / 855	-17.5	-17.5	0.32 (4)	10.00
8- 7	0 / 855	-17.5	-17.5	0.32 (4)	10.00

WEBS

MEMB. FR-TO	MAX. FACTORED FORCE (LBS)	MAX CSI (LC)
2-10	0 / 101	0.02 (4)
10- 3	0 / 118	0.04 (4)
10- 4	-103 / 0	0.07 (1)
9- 4	0 / 216	0.05 (4)
9- 5	-95 / 28	0.06 (1)
11- 2	-1106 / 0	0.62 (1)
5- 7	-1213 / 0	0.71 (1)

DESIGN CRITERIA

SPECIFIED LOADS:

TOP	CH.	LL	=	23.3	PSF
		DL	=	3.0	PSF
BOT	CH.	LL	=	0.0	PSF
		DL	=	7.0	PSF
TOTAL	LOAD		=	33.3	PSF

SPACING = 24.0 IN. C/C

LOADING IN FLAT SECTION BASED ON A SLOPE OF 6.00/12

THIS TRUSS IS DESIGNED FOR RESIDENTIAL OR SMALL BUILDING REQUIREMENTS OF PART 9, NBCC 2010

THIS DESIGN COMPLIES WITH:
- PART 9 OF OBC 2012 , BCBC 2012 , ABC 2014
- CSA 086-09
- TPIC 2011

(55 % OF 27.2 P.S.F. G.S.L. PLUS 8.4 P.S.F. RAIN LOAD) EQUALS 23.3 P.S.F. SPECIFIED ROOF LIVE LOAD

ALLOWABLE DEFL.(LL)= L/360 (0.73")
CALCULATED VERT. DEFL.(LL) = L/ 999 (0.03")
ALLOWABLE DEFL.(TL)= L/360 (0.73")
CALCULATED VERT. DEFL.(TL) = L/ 999 (0.15")

CSI: TC=0.46 (3-4:1) , BC=0.32 (9-10:4) , WB=0.71 (5-7:1) , SSI=0.20 (3-4:1)

DOL LUMBER=1.00 NAIL=1.00 LS BEND=1.10 COMP=1.10 SHEAR=1.10 TENS= 1.10

COMPANION LIVE LOAD FACTOR = 0.50

TRUSS PLATE MANUFACTURER IS NOT RESPONSIBLE FOR QUALITY CONTROL IN THE TRUSS MANUFACTURING PLANT .

NAIL VALUES

PLATE	GRIP(DRY) (PSI) MAX	MIN	SHEAR (PLI) MAX	MIN	SECTION (PLI) MAX	MIN
MT20	618	354	1667	822	2284	1656

PLATE PLACEMENT TOL. = 0.250 inches

PLATE ROTATION TOL. = 5.0 Deg.

JSI GRIP= 0.89 (5) (INPUT = 0.90)
JSI METAL= 0.32 (7) (INPUT = 1.00)

LICENSED PROFESSIONAL ENGINEER
P.M. TREVISAN
100136551
March 14th, 2017
PROVINCE OF ONTARIO

RECEIVED
TOWN OF MILTON
MAR 29, 2017
17-5233
BUILDING DIVISION

READ ALL NOTES ON THIS PAGE AND ON THE ENGINEERING NOTE PAGE ENP-1. THE NOTE PAGE IS AN INTEGRAL PART OF THIS DRAWING AS IT CONTAINS SPECIFICATIONS AND CRITERIA USED IN THE DESIGN OF THIS COMPONENT.

KOTT

JOB NAME	TRUSS NAME	QUANTITY	PLY	JOB DESC.	DRWG NO.
PT0317-081	T84	1	1	TRUSS DESC. LECCO RIDGE-BLOCK 338	

KOTT , Stouffville, ON, CGC

Version 8.100 S Feb 9 2017 MiTek Industries, Inc. Tue Mar 14 15:58:04 2017 Page 1
ID:EvTixTQDI5yR1QLotZTBr_yE?HJ-2QK9TblxiQi8Rzly07E4kUWbnxJyK?ic68ENsJzb_On

SCALE = 1:55.7

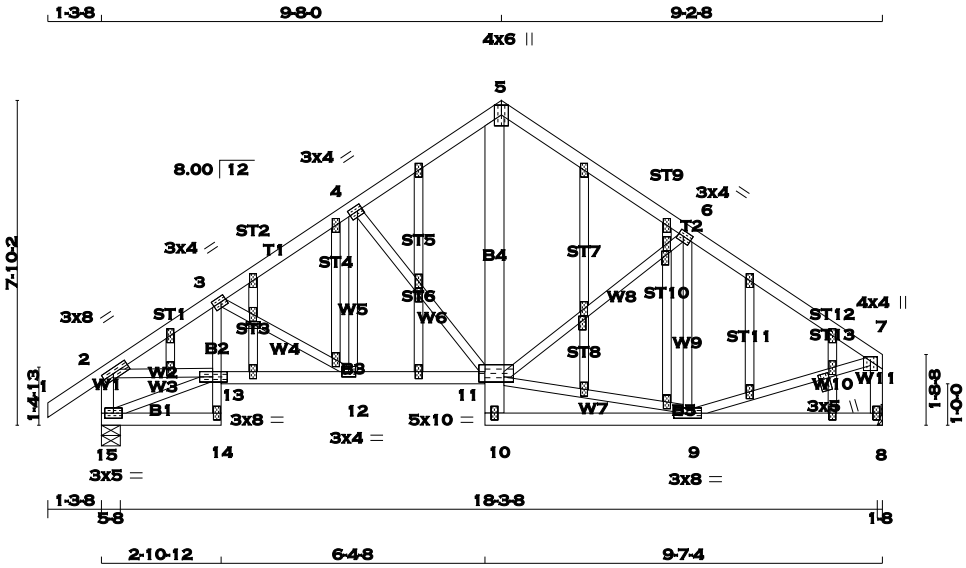

TOTAL WEIGHT = 117 lb

[M][F]

LUMBER

N. L. G. A. RULES

CHORDS	SIZE		LUMBER	DESCR.
1 - 5	2x4	DRY	No.2	SPF
5 - 7	2x4	DRY	No.2	SPF
15 - 2	2x4	DRY	No.2	SPF
8 - 7	2x4	DRY	No.2	SPF
15 - 14	2x4	DRY	No.2	SPF
14 - 3	2x3	DRY	No.2	SPF
13 - 11	2x4	DRY	No.2	SPF
10 - 5	2x6	DRY	No.2	SPF
10 - 8	2x4	DRY	No.2	SPF
ALL WEBS EXCEPT	2x3	DRY	No.2	SPF

ALL GABLE WEBS
2x3 DRY No.2 SPF

DRY: SEASONED LUMBER.

GABLE STUDS SPACED AT 2-0-0 OC.

PLATES (table is in inches)

JT	TYPE	PLATES	W	LEN	Y	X
2	TMVW-t	MT20	3.0	8.0	1.50	3.25
3	TMVW-t	MT20	3.0	4.0	1.50	1.50
4	TMWW-t	MT20	3.0	4.0	1.50	1.50
5	TTV+p	MT20	4.0	6.0	Edge	
6	TMWW-t	MT20	3.0	4.0	1.50	1.50
7	TMVW+p	MT20	4.0	4.0	1.25	2.00
8	BMV1+p	MT20	2.0	4.0		
9	BMWWW-t	MT20	3.0	8.0		
10	BMV+p	MT20	2.0	4.0		
11	BVMWWW-l	MT20	5.0	10.0	3.00	1.75
12	BMWW-t	MT20	3.0	4.0		
13	BVMWW-l	MT20	3.0	8.0	Edge	4.25
14	BMV+p	MT20	2.0	4.0		
15	BMVW1-t	MT20	3.0	5.0		
16, 17, 18, 19, 20, 21, 22, 23, 24, 25, 26, 27, 28, 29, 30, 31, 32, 33, 34, 35, 36						
16	NP+w	MT20	2.0	4.0		
21	NP-p	MT20	2.0	4.0	0.75	2.00
28	NP+w	MT20	2.0	4.0	2.00	0.25
31	NP+w	MT20	2.0	4.0	2.00	0.25
36	NP+t	MT20	3.0	5.0	1.50	0.25

Edge - INDICATES REFERENCE CORNER OF PLATE TOUCHES EDGE OF CHORD.

A SIZE FOR SIZE SUBSTITUTION OF MITEK MII20 WITH TEE-LOK TL20 PLATES IS ALLOWED.

DIMENSIONS, SUPPORTS AND LOADINGS SPECIFIED BY FABRICATOR TO BE VERIFIED BY BUILDING DESIGNER

BEARINGS

JT	FACTORED GROSS REACTION VERT	HORZ	MAXIMUM FACTORED GROSS REACTION DOWN	HORZ	UPLIFT	INPUT BRG	REQRD BRG
8	895	0	895	0	0	HANGER BY OTHERS IN-SX	IN-SX
						MIN. SEAT SIZE: 1-8	
15	1001	0	1001	0	0	5-8	5-8

UNFACTORED REACTIONS

JT	1ST LCASE COMBINED	MAX./MIN. COMPONENT REACTIONS SNOW	LIVE	PERM.LIVE	WIND	DEAD	SOIL
8	628	439 / 0	0 / 0	0 / 0	0 / 0	189 / 0	0 / 0
15	700	503 / 0	0 / 0	0 / 0	0 / 0	197 / 0	0 / 0

BEARING MATERIAL TO BE SPF NO.2 OR BETTER AT JOINT(S) 15

BRACING

TOP CHORD TO BE SHEATHED OR MAX. PURLIN SPACING = 5.40 FT.
MAX. UNBRACED BOTTOM CHORD LENGTH = 10.00 FT. OR RIGID CEILING DIRECTLY APPLIED.

ALL PITCH BREAKS AND PERIMETER CORNER JOINTS MUST BE LATERALLY RESTRAINED.

LOADING

TOTAL LOAD CASES: (4)

CHORDS

MEMB. FR-TO	MAX. FORCE (LBS)	FACTORED VERT. LOAD (PLF) FROM	TO	LC1 MAX CSI (LC)	MAX. UNBRAC LENGTH
1- 2	0 / 29	-77.3	-77.3	0.10 (1)	10.00
2- 3	-1417 / 0	-77.3	-77.3	0.09 (1)	5.40
3- 4	-1095 / 0	-77.3	-77.3	0.12 (1)	5.93
4- 5	-803 / 0	-77.3	-77.3	0.11 (1)	6.25
5- 6	-782 / 0	-77.3	-77.3	0.21 (1)	6.25
6- 7	-871 / 0	-77.3	-77.3	0.22 (1)	6.25
15- 2	-971 / 0	0.0	0.0	0.10 (1)	7.81
8- 7	-864 / 0	0.0	0.0	0.09 (1)	7.81
15-14	0 / 14	-17.5	-17.5	0.04 (4)	10.00
14-13	0 / 27	0.0	0.0	0.05 (1)	10.00
13- 3	0 / 108	0.0	0.0	0.07 (1)	10.00
13-12	0 / 1195	-17.5	-17.5	0.22 (1)	10.00
12-11	0 / 920	-17.5	-17.5	0.17 (1)	10.00
10-11	0 / 37	0.0	0.0	0.05 (1)	10.00
11- 5	0 / 616	0.0	0.0	0.12 (1)	10.00
10- 9	0 / 64	-17.5	-17.5	0.11 (4)	10.00
9- 8	0 / 0	-17.5	-17.5	0.11 (4)	10.00

WEBS

MEMB. FR-TO	MAX. FORCE (LBS)	MAX CSI (LC)
3-12	-319 / 0	0.08 (1)
12- 4	0 / 184	0.04 (1)
4-11	-414 / 0	0.19 (1)
9- 6	-271 / 4	0.09 (1)
2-13	0 / 1186	0.27 (1)
9- 7	0 / 778	0.18 (1)
15-13	-15 / 0	0.00 (1)
11- 6	-157 / 0	0.09 (1)
11- 9	0 / 705	0.16 (1)

DESIGN CRITERIA

SPECIFIED LOADS:

TOP CH.	LL	=	23.3	PSF
	DL	=	3.0	PSF
BOT CH.	LL	=	0.0	PSF
	DL	=	7.0	PSF
TOTAL LOAD		=	33.3	PSF

SPACING = 24.0 IN. C/C

THIS TRUSS IS DESIGNED FOR RESIDENTIAL OR SMALL BUILDING REQUIREMENTS OF PART 9, NBCC 2010

THIS DESIGN COMPLIES WITH:
- PART 9 OF OBC 2012 , BCBC 2012 , ABC 2014
- CSA 086-09
- TPIC 2011

(55 % OF 27.2 P.S.F. G.S.L. PLUS 8.4 P.S.F. RAIN LOAD) EQUALS 23.3 P.S.F. SPECIFIED ROOF LIVE LOAD

ALLOWABLE DEFL.(LL)= L/360 (0.63")
CALCULATED VERT. DEFL.(LL) = L/ 999 (0.03")
ALLOWABLE DEFL.(TL)= L/360 (0.63")
CALCULATED VERT. DEFL.(TL) = L/ 999 (0.06")

CSI: TC=0.22 (6-7:1) , BC=0.22 (12-13:1) , WB=0.27 (2-13:1) , SSI=0.15 (6-7:1)

DOL LUMBER=1.00 NAIL=1.00 LS BEND=1.10 COMP=1.10 SHEAR=1.10 TENS= 1.10

COMPANION LIVE LOAD FACTOR = 0.50

AUTOSOLVE RIGHT HEEL ONLY

TRUSS PLATE MANUFACTURER IS NOT RESPONSIBLE FOR QUALITY CONTROL IN THE TRUSS MANUFACTURING PLANT .

NAIL VALUES

PLATE	GRIP(DRY) (PSI) MAX	MIN	SHEAR (PLI) MAX	MIN	SECTION (PLI) MAX	MIN
MT20	618	354	1667	822	2284	1656

PLATE PLACEMENT TOL. = 0.250 inches

PLATE ROTATION TOL. = 5.0 Deg.

JSI GRIP= 0.86 (13) (INPUT = 0.90)
JSI METAL= 0.29 (13) (INPUT = 1.00)

LICENSED PROFESSIONAL ENGINEER
R.M. TREVISAN
100136551
March 14th, 2017
PROVINCE OF ONTARIO

RECEIVED
TOWN OF MILTON
MAR 29, 2017
17-5233
BUILDING DIVISION

READ ALL NOTES ON THIS PAGE AND ON THE ENGINEERING NOTE PAGE ENP-1. THE NOTE PAGE IS AN INTEGRAL PART OF THIS DRAWING AS IT CONTAINS SPECIFICATIONS AND CRITERIA USED IN THE DESIGN OF THIS COMPONENT.

KOTT

CONTINUED ON PAGE 2

JOB NAME	TRUSS NAME	QUANTITY	PLY	JOB DESC.	DRWG NO.
PT0317-081	T85	2	1	TRUSS DESC. LECCO RIDGE-BLOCK 338	ENG JOB: PT0317-081

KOTT , Stouffville, ON, CGC

Version 8.100 S Feb 9 2017 MiTek Industries, Inc. Tue Mar 14 15:58:05 2017 Page 1

ID:EvTixTQDI5yR1QLotZTBr_yE?HJ-WduXgxmZTjq?37K9ZrlJGi3oJLi23WelLo_wOlzb_Om

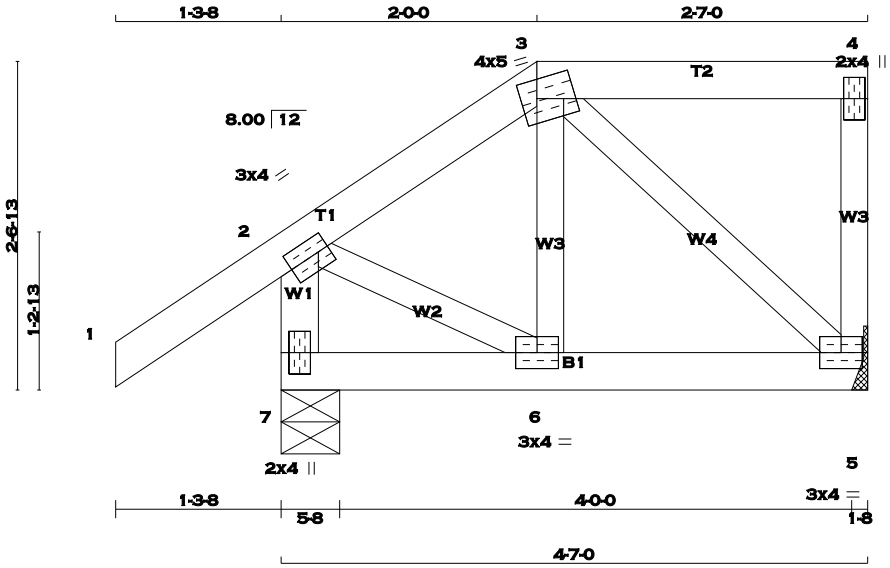

TOTAL WEIGHT = 2 X 21 = 42 lb [M]

LUMBER

N. L. G. A. RULES

CHORDS	SIZE		LUMBER	DESCR.
1 - 3	2x4	DRY	No.2	SPF
3 - 4	2x4	DRY	No.2	SPF
5 - 4	2x3	DRY	No.2	SPF
7 - 2	2x4	DRY	No.2	SPF
7 - 5	2x4	DRY	No.2	SPF
ALL WEBS EXCEPT	2x3	DRY	No.2	SPF

DRY: SEASONED LUMBER.

PLATES (table is in inches)

JT	TYPE	PLATES	W	LEN	Y	X
2	TMVW-t	MT20	3.0	4.0	1.50	1.00
3	TTWW-m	MT20	4.0	5.0	1.75	1.50
4	TMV+p	MT20	2.0	4.0		
5	BMVW1-t	MT20	3.0	4.0		
6	BMWW-t	MT20	3.0	4.0		
7	BMV1+p	MT20	2.0	4.0		

A SIZE FOR SIZE SUBSTITUTION OF MITEK MII20 WITH TEE-LOK TL20 PLATES IS ALLOWED.

DIMENSIONS, SUPPORTS AND LOADINGS SPECIFIED BY FABRICATOR TO BE VERIFIED BY BUILDING DESIGNER

BEARINGS

JT	FACTORED GROSS REACTION VERT	HORZ	MAXIMUM FACTORED GROSS REACTION DOWN	HORZ	UPLIFT	INPUT BRG IN-SX	REQRD BRG IN-SX
5	217	0	217	0	0	HANGER BY OTHERS MIN. SEAT SIZE: 1-8	
7	324	0	324	0	0	5-8	5-8

UNFACTORED REACTIONS

JT	1ST LCASE COMBINED	MAX./MIN. COMPONENT REACTIONS SNOW	LIVE	PERM.LIVE	WIND	DEAD	SOIL
5	153	107 / 0	0 / 0	0 / 0	0 / 0	46 / 0	0 / 0
7	225	171 / 0	0 / 0	0 / 0	0 / 0	54 / 0	0 / 0

BEARING MATERIAL TO BE SPF NO.2 OR BETTER AT JOINT(S) 7

BRACING

TOP CHORD TO BE SHEATHED OR MAX. PURLIN SPACING = 6.25 FT.
MAX. UNBRACED BOTTOM CHORD LENGTH = 10.00 FT. OR RIGID CEILING DIRECTLY APPLIED.

ALL PITCH BREAKS AND PERIMETER CORNER JOINTS MUST BE LATERALLY RESTRAINED.

LOADING

TOTAL LOAD CASES: (4)

CHORDS

MEMB. FR-TO	MAX. FORCE (LBS)	FACTORED VERT. LOAD (PLF) FROM	TO	MAX CSI (LC)	MAX. UNBRAC LENGTH
1- 2	0 / 29	-77.3	-77.3	0.10 (1)	10.00
2- 3	-136 / 0	-77.3	-77.3	0.05 (1)	6.25
3- 4	0 / 0	-77.3	-77.3	0.09 (1)	10.00
5- 4	-100 / 0	0.0	0.0	0.02 (1)	7.81
7- 2	-308 / 0	0.0	0.0	0.03 (1)	7.81
7- 6	0 / 0	-17.5	-17.5	0.02 (4)	10.00
6- 5	0 / 113	-17.5	-17.5	0.03 (4)	10.00

WEBS

MEMB. FR-TO	MAX. FORCE (LBS)	MAX CSI (LC)
6- 3	-3 / 39	0.01 (4)
3- 5	-150 / 0	0.03 (1)
2- 6	0 / 123	0.03 (1)

DESIGN CRITERIA

SPECIFIED LOADS:

TOP	CH.	LL	=	23.3	PSF
		DL	=	3.0	PSF
BOT	CH.	LL	=	0.0	PSF
		DL	=	7.0	PSF
TOTAL	LOAD		=	33.3	PSF

SPACING = 24.0 IN. C/C

LOADING IN FLAT SECTION BASED ON A SLOPE OF 6.00/12

THIS TRUSS IS DESIGNED FOR RESIDENTIAL OR SMALL BUILDING REQUIREMENTS OF PART 9, NBCC 2010

THIS DESIGN COMPLIES WITH:
- PART 9 OF OBC 2012 , BCBC 2012 , ABC 2014
- CSA 086-09
- TPIC 2011

(55 % OF 27.2 P.S.F. G.S.L. PLUS 8.4 P.S.F. RAIN LOAD) EQUALS 23.3 P.S.F. SPECIFIED ROOF LIVE LOAD

ALLOWABLE DEFL.(LL)= L/360 (0.19")
CALCULATED VERT. DEFL.(LL) = L/ 999 (0.00")
ALLOWABLE DEFL.(TL)= L/360 (0.19")
CALCULATED VERT. DEFL.(TL) = L/ 999 (0.00")

CSI: TC=0.10 (1-2:1) , BC=0.03 (5-6:4) , WB=0.03 (3-5:1) , SSI=0.08 (3-4:1)

DOL LUMBER=1.00 NAIL=1.00 LS BEND=1.10 COMP=1.10 SHEAR=1.10 TENS= 1.10

COMPANION LIVE LOAD FACTOR = 0.50

TRUSS PLATE MANUFACTURER IS NOT RESPONSIBLE FOR QUALITY CONTROL IN THE TRUSS MANUFACTURING PLANT .

NAIL VALUES

PLATE	GRIP(DRY) (PSI) MAX	MIN	SHEAR (PLI) MAX	MIN	SECTION (PLI) MAX	MIN
MT20	618	354	1667	822	2284	1656

PLATE PLACEMENT TOL. = 0.250 inches

PLATE ROTATION TOL. = 5.0 Deg.

JSI GRIP= 0.40 (2) (INPUT = 0.90)
JSI METAL= 0.09 (2) (INPUT = 1.00)

LICENSED PROFESSIONAL ENGINEER
P.M. TREVISAN
100136551
March 14th, 2017
PROVINCE OF ONTARIO

RECEIVED
TOWN OF MILTON
MAR 29, 2017
17-5233
BUILDING DIVISION

READ ALL NOTES ON THIS PAGE AND ON THE ENGINEERING NOTE PAGE ENP-1. THE NOTE PAGE IS AN INTEGRAL PART OF THIS DRAWING AS IT CONTAINS SPECIFICATIONS AND CRITERIA USED IN THE DESIGN OF THIS COMPONENT.

KOTT

JOB NAME	TRUSS NAME	QUANTITY	PLY	JOB DESC.	DRWG NO.
T-BLOCK338	T86	1	1	TRUSS DESC. LECCO RIDGE-BLOCK 338	ENG JOB: PT0317-081

KOTT , Stouffville, ON, Alan Attwater

Version 8.100 S Feb 9 2017 MiTek Industries, Inc. Wed Mar 15 08:18:57 2017 Page 1

ID:EvTixTQDI5yR1QLotZTBr_yE?HJ-qsOp?DdhjnR9HNg_ujWbm8X1sxhtBDUFL0A5?bzam1C

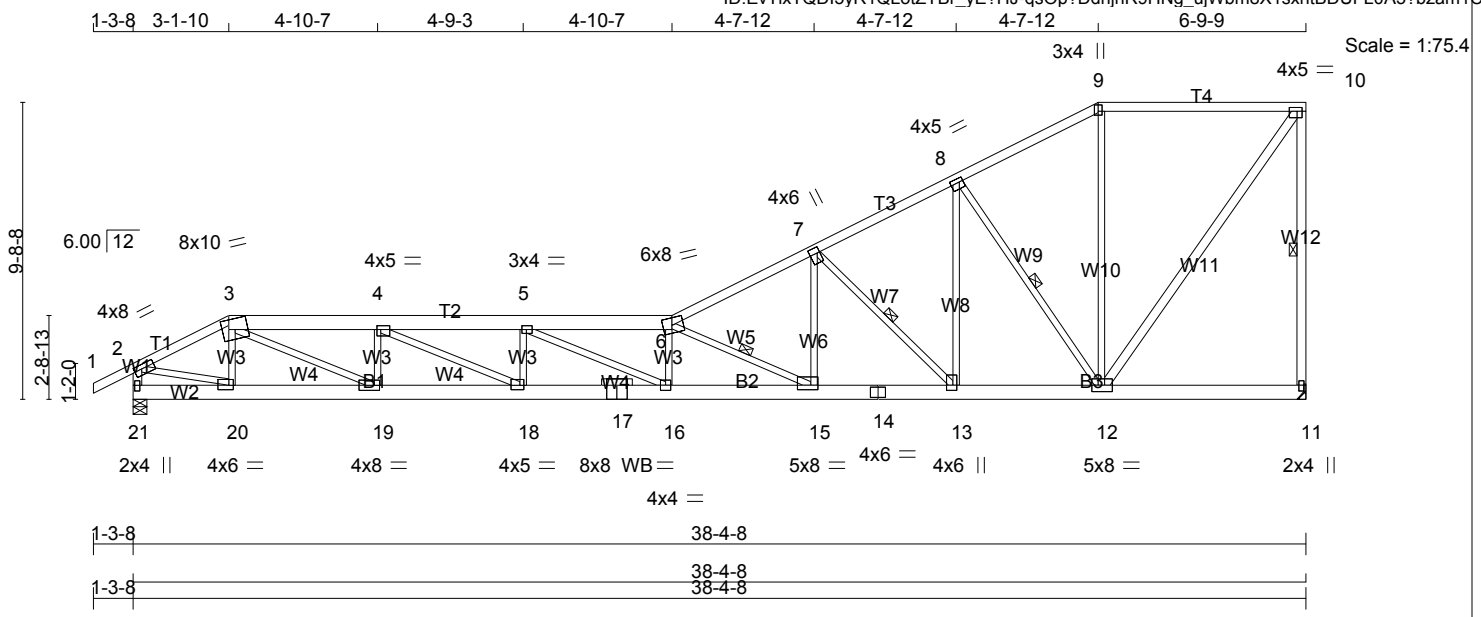

TOTAL WEIGHT = 202 lb

[M]

LUMBER

N. L. G. A. RULES

CHORDS	SIZE		LUMBER	DESCR.
1 - 3	2x4	DRY	No.2	SPF
3 - 6	2x6	DRY	No.2	SPF
6 - 9	2x4	DRY	No.2	SPF
9 - 10	2x4	DRY	No.2	SPF
11 - 10	2x4	DRY	No.2	SPF
21 - 2	2x4	DRY	No.2	SPF
21 - 17	2x6	DRY	2100F 1.8E	SPF
17 - 14	2x6	DRY	2100F 1.8E	SPF
14 - 11	2x6	DRY	2100F 1.8E	SPF
ALL WEBS	2x3	DRY	No.2	SPF
EXCEPT				
12 - 10	2x4	DRY	No.2	SPF

DRY: SEASONED LUMBER.

PLATES (table is in inches)

JT	TYPE	PLATES	W	LEN	Y	X
2	TMVW-t	MT20	4.0	8.0	1.75	3.00
3	TTWW-m	MT20	8.0	10.0	4.25	5.00
4	TMWW-t	MT20	4.0	5.0	1.50	1.50
5	TMWW-t	MT20	3.0	4.0	1.50	1.75
6	TTWW-m	MT20	6.0	8.0	3.00	3.50
7	TMWW+t	MT20	4.0	6.0	2.25	1.00
8	TMWW-t	MT20	4.0	5.0	1.50	1.50
9	TTW+p	MT20	3.0	4.0	2.50	1.50
10	TMVW-t	MT20	4.0	5.0	1.50	2.00
11	BMV1+p	MT20	2.0	4.0	2.25	1.00
12	BMWWW-t	MT20	5.0	8.0	2.50	2.50
13	BMWW+t	MT20	4.0	6.0	2.00	1.50
14	BS-t	MT20	4.0	6.0		
15	BMWW-t	MT20	5.0	8.0	1.75	2.75
16	BMWW-t	MT20	4.0	4.0		
17	BS-t	MT20	8.0	8.0		
18	BMWW-t	MT20	4.0	5.0	1.75	1.50
19	BMWW-t	MT20	4.0	8.0	2.00	2.00
20	BMWW-t	MT20	4.0	6.0	1.75	1.75
21	BMV1+p	MT20	2.0	4.0	2.25	1.00

WB - INDICATES BLOCKING REQUIRED

DIMENSIONS, SUPPORTS AND LOADINGS SPECIFIED BY FABRICATOR TO BE VERIFIED BY BUILDING DESIGNER

BEARINGS

JT	FACTORED GROSS REACTION VERT	HORZ	MAXIMUM FACTORED GROSS REACTION DOWN	HORZ	UPLIFT	INPUT BRG	REQRD BRG
11	1820	0	1820	0	0	HANGER BY OTHERS	
						MIN. SEAT SIZE: 3-8	
21	1925	0	1925	0	0	5-8	5-8

UNFACTORED REACTIONS

JT	1ST LCASE COMBINED	MAX./MIN. COMPONENT REACTIONS SNOW	LIVE	PERM.LIVE	WIND	DEAD	SOIL
11	1277	893 / 0	0 / 0	0 / 0	0 / 0	384 / 0	0 / 0
21	1349	957 / 0	0 / 0	0 / 0	0 / 0	392 / 0	0 / 0

BEARING MATERIAL TO BE SPF NO.2 OR BETTER AT JOINT(S) 21

BRACING

TOP CHORD TO BE SHEATHED OR MAX. PURLIN SPACING = 2.98 FT.
MAX. UNBRACED BOTTOM CHORD LENGTH = 10.00 FT. OR RIGID CEILING DIRECTLY APPLIED.

ALL PITCH BREAKS AND PERIMETER CORNER JOINTS MUST BE LATERALLY RESTRAINED.

1 - 1x4 LATERAL BRACE(S) AT 1/ 2 LENGTH OF 10-11. DBS = 18-0-0 . CBF = 200 LBS.
1 - 1x4 LATERAL BRACE(S) AT 1/ 2 LENGTH OF 6-15. DBS = 6-0-0 . CBF = 155 LBS.
1 - 1x4 LATERAL BRACE(S) AT 1/ 2 LENGTH OF 7-13. DBS = 14-0-0 . CBF = 195 LBS.
1 - 1x4 LATERAL BRACE(S) AT 1/ 2 LENGTH OF 8-12. DBS = 16-0-0 . CBF = 183 LBS.

DBS = DIAGONAL BRACE SPACING (MAX). CBF = CUMULATIVE BRACING FORCE. FASTEN LATERAL BRACE(S) USING (0.122"X3") SPIRAL NAILS : 1 NAIL FOR 2x3 BRACE(S), 2 FOR 1x4, 2x4, 2x5, 3 FOR 2x6, 4 FOR 2x8, 5 FOR 2x10, AND 6 FOR 2x12.

END VERTICAL(S) MUST BE SHEATHED OR HAVE BRACES AS INDICATED IN THE MAX. UNBRACED LENGTH COLUMN OF THE TABLE BELOW

LOADING

TOTAL LOAD CASES: (4)

CHORDS

MEMB. FR-TO	MAX. FACTORED FORCE (LBS)	FACTORED VERT. LOAD (PLF) FROM	TO	LC1	MAX CSI (LC)	MAX. UNBRAC LENGTH
1- 2	0 / 23	-77.3	-77.3	0.10 (1)	10.00	
2- 3	-2588 / 0	-77.3	-77.3	0.21 (1)	4.12	
3- 4	-5042 / 0	-77.3	-77.3	0.26 (1)	3.72	
4- 5	-6789 / 0	-77.3	-77.3	0.35 (1)	3.17	
5- 6	-7362 / 0	-77.3	-77.3	0.43 (1)	2.98	
6- 7	-4111 / 0	-77.3	-77.3	0.52 (1)	3.14	
7- 8	-2357 / 0	-77.3	-77.3	0.34 (1)	4.17	
8- 9	-1227 / 0	-77.3	-77.3	0.27 (1)	5.47	
9-10	-1084 / 0	-77.3	-77.3	0.69 (1)	4.94	
11-10	-1773 / 0	0.0	0.0	0.77 (1)	5.02	
21- 2	-1919 / 0	0.0	0.0	0.19 (1)	6.07	
21-20	0 / 0	-17.5	-17.5	0.03 (1)	10.00	
20-19	0 / 2305	-17.5	-17.5	0.16 (1)	10.00	
19-18	0 / 5042	-17.5	-17.5	0.30 (1)	10.00	
18-17	0 / 6789	-17.5	-17.5	0.44 (1)	10.00	
17-16	0 / 6789	-17.5	-17.5	0.44 (1)	10.00	
16-15	0 / 7376	-17.5	-17.5	0.47 (1)	10.00	
15-14	0 / 3680	-17.5	-17.5	0.20 (1)	10.00	
14-13	0 / 3680	-17.5	-17.5	0.20 (1)	10.00	

WEBS

MEMB. FR-TO	MAX. FACTORED FORCE (LBS)	MAX CSI (LC)
20- 3	-420 / 0	0.07 (1)
3-19	0 / 3029	0.68 (1)
19- 4	-1268 / 0	0.20 (1)
4-18	0 / 1936	0.44 (1)
18- 5	-690 / 0	0.11 (1)
5-16	0 / 635	0.14 (1)
16- 6	-311 / 0	0.05 (1)
6-15	-4127 / 0	0.90 (1)
15- 7	0 / 1999	0.45 (1)
7-13	-2226 / 0	0.65 (1)
13- 8	0 / 1622	0.37 (1)
8-12	-1826 / 0	0.87 (1)
12- 9	0 / 135	0.04 (4)
12-10	0 / 1860	0.30 (1)
2-20	0 / 2390	0.54 (1)

DESIGN CRITERIA

SPECIFIED LOADS:

TOP CH.	LL	=	23.3	PSF
	DL	=	3.0	PSF
BOT CH.	LL	=	0.0	PSF
	DL	=	7.0	PSF
TOTAL LOAD		=	33.3	PSF

SPACING = 24.0 IN. C/C

LOADING IN ALL FLAT SECTIONS BASED ON A SLOPE OF 6.00/12

THIS TRUSS IS DESIGNED FOR RESIDENTIAL OR SMALL BUILDING REQUIREMENTS OF PART 9, NBCC 2010

THIS DESIGN COMPLIES WITH:
- PART 9 OF OBC 2012 , BCBC 2012 , ABC 2014
- CSA 086-09
- TPIC 2011

(55 % OF 27.2 P.S.F. G.S.L. PLUS 8.4 P.S.F. RAIN LOAD) EQUALS 23.3 P.S.F. SPECIFIED ROOF LIVE LOAD

ALLOWABLE DEFL.(LL)= L/360 (1.28")
CALCULATED VERT. DEFL.(LL) = L/ 873 (0.53")
ALLOWABLE DEFL.(TL)= L/360 (1.28")
CALCULATED VERT. DEFL.(TL) = L/ 494 (0.93")

CSI: TC=0.77 (10-11:1) , BC=0.47 (15-16:1) , WB=0.90 (6-15:1) , SSI=0.21 (9-10:1)

DOL LUMBER=1.00 NAIL=1.00 LS BEND=1.10 COMP=1.10 SHEAR=1.10 TENS= 1.10

COMPANION LIVE LOAD FACTOR = 0.50

TRUSS PLATE MANUFACTURER IS NOT RESPONSIBLE FOR QUALITY CONTROL IN THE TRUSS MANUFACTURING PLANT .

NAIL VALUES

PLATE	GRIP(DRY) (PSI) MAX	MIN	SHEAR (PLI) MAX	MIN	SECTION (PLI) MAX	MIN
MT20	618	354	1667	822	2284	1656

PLATE PLACEMENT TOL. = 0.250 inches

PLATE ROTATION TOL. = 5.0 Deg.

JSI GRIP= 0.90 (2) (INPUT = 0.90)
JSI METAL= 0.88 (17) (INPUT = 1.00)

CONTINUED ON PAGE 2

LICENSED PROFESSIONAL ENGINEER
P.M. TREVISAN
100136551
March 14th, 2017
PROVINCE OF ONTARIO

RECEIVED
TOWN OF MILTON
MAR 29, 2017
17-5233
BUILDING DIVISION

READ ALL NOTES ON THIS PAGE AND ON THE ENGINEERING NOTE PAGE ENP-1. THE NOTE PAGE IS AN INTEGRAL PART OF THIS DRAWING AS IT CONTAINS SPECIFICATIONS AND CRITERIA USED IN THE DESIGN OF THIS COMPONENT.

KOTT LUMBER ON YOUR SITE KOTT

BEARING ANCHORAGE BY TOE-NAILS FOR LATERAL CAPACITY

B37579H1

NAIL TYPE	LENGTH (IN)	DIAMETER (IN)	NAIL LATERAL CAPACITY (LB)	
			S-P-F	D. FIR
COMMON WIRE	3.00	0.144	132	147
	3.25	0.144	132	147
	3.50	0.160	159	177
COMMON SPIRAL	3.00	0.122	97	108
	3.25	0.122	97	108
	3.50	0.152	145	162

NOTES:

1. Rafter and ceiling members may be anchored to top and bottom chords of girder truss by toe-nailing rafter and ceiling members to girder chords provided the reaction does not exceed the lateral capacities in the table. Hangers (specified by others) are required for reactions higher than the maximum toe-nail capacity. Reactions are based on factored loads.

2. Toe nail capacities shown in the table are for **one** toe-nail. For additional toe-nails multiply values in table by the number of toe-nails used. Toe-nail capacities take into account toe-nailing factor J_A in CSA O86-09, section 10.9.4.1.

3. For 9- 3/4 gauge 3.25" common wire gun nails (diameter = 0.120") use 3" common spiral nail values.

4. Maximum number of toe-nails allowed depends on the lumber size & species to be toe-nailed to supporting member and nail diameter, as shown in tables below.

5. Nail values in table are based on the following relative lumber densities: G = 0.42 (SPF), G = 0.49 (D. Fir).

6. Toe-nails shall be driven at approximately 1/3 the nail length from the edge of the joist/truss chord and driven at an angle of 30º to the grain of the member (See next page for nailing on bearing plate).

7. For loads due to **wind** the nail lateral capacity in this table may be multiplied by 1.15 (K_D factor).

8. Lumber must be dry (< 19% moisture content) at the time of nail installation.

9. Nail values in this table comply with CSA O86-09, section 10.9.4

10. This design is not valid after April 30, 2017.

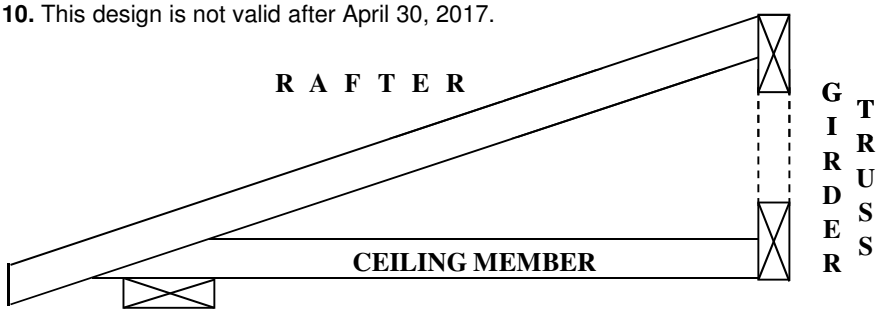

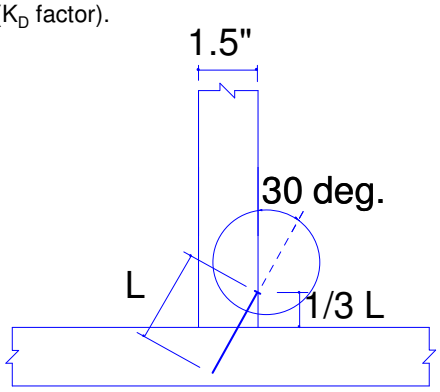

TOE-NAIL INSTALLATION

Nail type	Common wire	Common spiral	Common wire	Common spiral
Nail dia. (in)	0.160	0.152	0.144	0.122
	(3.5" nail)		**(3" and 3.25" nail)**	
LUMBER SIZE	**MAXIMUM NUMBER OF TOE-NAILS**			
2X4 SPF	2	2	3	3
2X4 D. Fir	2	2	2	2
2X6 SPF	4	4	4	5
2X6 D. Fir	3	3	3	4

MiTek Canada Inc
100 Industrial Rd.
Bradford, Ontario L3Z 3G7

RECEIVED
TOWN OF MILTON
MAR 29, 2017
17-5233
BUILDING DIVISION

PEO
Certificate No. 10889485

LICENSED PROFESSIONAL ENGINEER
C. Cordogiannis
90553736
PROVINCE OF ONTARIO

April 24, 2015

BEARING ANCHORAGE BY TOE-NAILS FOR WIND LOADING B37579H2

NAIL TYPE	LENGTH (IN)	DIAMETER (IN)	NAIL WITHDRAWAL CAPACITY (LB)	
			S-P-F	D. FIR
COMMON WIRE	3.00	0.144	30	42
	3.25	0.144	32	45
	3.50	0.160	38	52
COMMON SPIRAL	3.00	0.122	26	36
	3.25	0.122	28	40
	3.50	0.152	36	50

Note: If using truss with D. Fir lumber and S-P-F bearing plate, use values in table for S-P-F.

NOTES:

1. Truss chord, rafter, or ceiling members may be anchored to bearing plate by toe-nails, provided that the actual factored uplift force due to **wind** or **earthquake** load does not exceed the withdrawal capacities in the table. Hangers (specified by others) are required for uplift forces that are higher than the maximum toe-nail withdrawal capacity.
2. Toe nail capacities shown in the table are for **one** toe-nail. For additional toe-nails multiply values in table by the number of toe-nails used. Toe-nail capacities take into account toe-nailing factor J_A in CSA O86-09, section 10.9.5.2.
3. For 9- 3/4 gauge 3.25" common wire gun nails (diameter = 0.120") use 3" common spiral nail values.
4. Maximum number of toe-nails allowed depends on the lumber size & species to be toe-nailed to supporting member and nail diameter, as shown in table above.
5. Nail values in table are based on the following relative lumber densities: G = 0.42(SPF), G = 0.49(D. Fir).
6. Toe-nails shall be driven at approximately 1/3 the nail length from the edge of the joist/truss chord and driven at an angle of 30° to the grain of the member (See drawing on detail B37579H1).
7. Lumber must be dry (< 19% moisture content) at the time of nail installation.
8. Nail values in this table comply with CSA O86-09, section 10.9.5
9. This design is not valid after April 30, 2017

Toe-nailing on 2x6 Bearing Plate

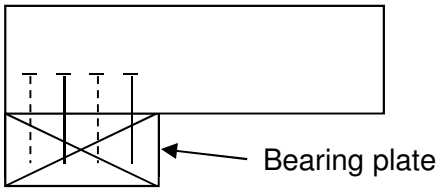

Elevation view

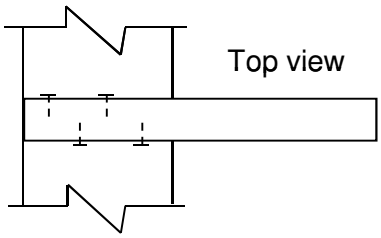

Top view

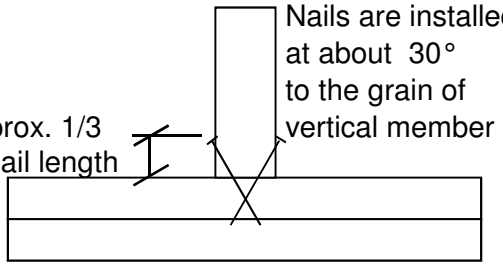

Toe-nailing viewed from end of joist or truss

Toe-nailing on 2x4 Bearing Plate

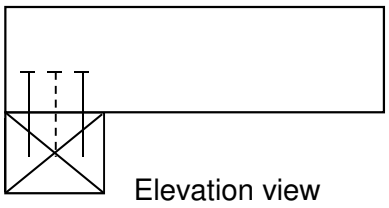

Elevation view

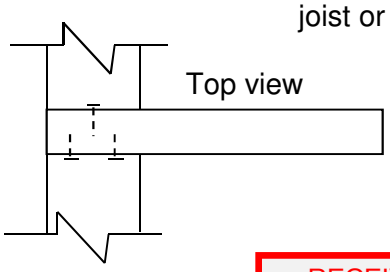

Top view

MiTek Canada Inc
100 Industrial Rd.
Bradford, Ontario L3Z 3G7

RECEIVED
TOWN OF MILTON
MAR 29, 2017
17-5233
BUILDING DIVISION

PEO
Certificate No. 10889485

LICENSED PROFESSIONAL ENGINEER
C. Cordogiannis
90553736
PROVINCE OF ONTARIO

April 24, 2015

JOB NAME	JOB DESC.	DRAWING NO.
DETAILS	HIP END FRAMING — EGO-RIDGE-BLOCK 338	B37579J — EMC JOB: P10317-081

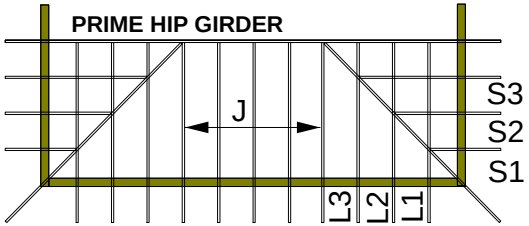

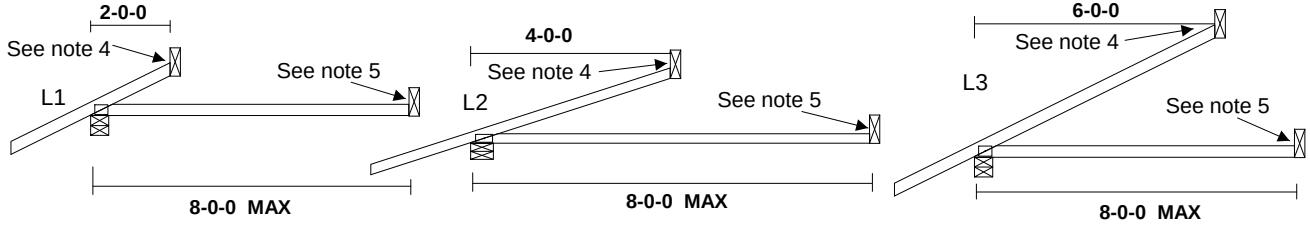

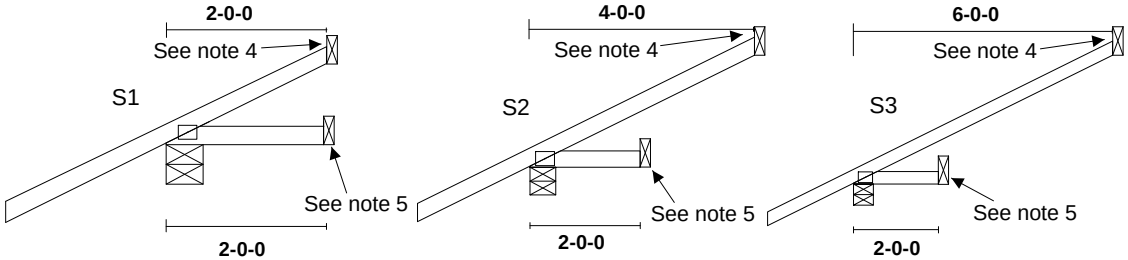

DETAIL "A"

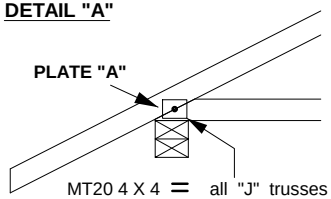

MT20 4 X 4 = all "J" trusses
MT20 3 X 4 = all other trusses

DETAIL "B"

RAISED HEEL

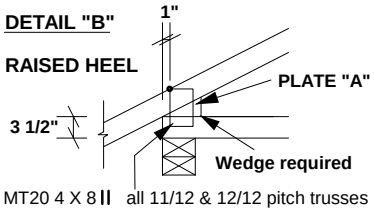

MT20 4 X 8 || all 11/12 & 12/12 pitch trusses
MT20 4 X 7 || all other trusses

DETAIL "C"

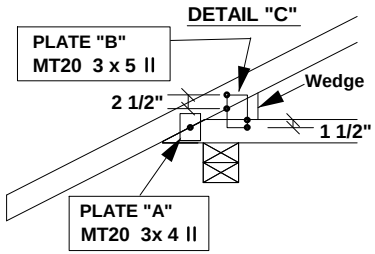

CANTILEVER DETAIL "C"

SLOPE	MAX CANTILEVER	PLATE "B"	WEDGE SIZE
3/12	17"	3 X 5	2 X 3
4/12	14"	3 X 5	2 X 3
5/12	12"	3 X 5	2 X 4
6/12	10"	3 X 5	2 X 4
7/12	9"	3 X 5	2 X 6
8/12	8.5"	3 X 5	2 X 6
9/12	8"	3 X 5	2 X 6
10/12	7.5"	3 X 5	2 X 6

"J"

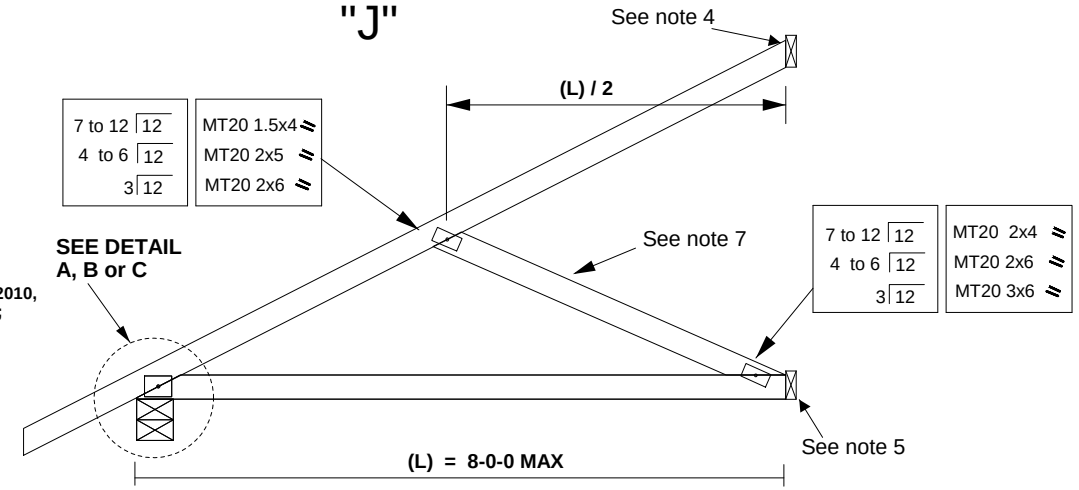

NOTES:

1. ALL LUMBER SHALL BE 2x4 SPF OR D. Fir No. 2 DRY OR BETTER.
2. THIS TRUSS IS DESIGNED FOR HOUSING AND SMALL BUILDING REQUIREMENTS OF PART 9 NBCC 2010, WHERE GROUND SNOW LOAD IS 60.0 PSF OR LESS AND RAIN LOAD DOES NOT EXCEED 12.53 PSF; TOP CHORD DEAD LOAD IS 6 PSF OR LESS; BC LIVE LOAD IS 0 PSF AND BC DEAD LOAD IS 7 PSF.
3. HIP RAFTER DESIGN SHALL CONFORM TO SECTION 9.23.14.6 OF NBCC 2010.
4. FASTEN HIGH END OF RAFTERS USING MITEK CANADA INC. "BEARING ANCHORAGE BY TOE-NAILS FOR LATERAL CAPACITY" STANDARD DETAIL B37579H1.
5. FASTEN RIGHT END OF CEILING USING MITEK CANADA INC. "BEARING ANCHORAGE BY TOE-NAILS FOR LATERAL CAPACITY" STANDARD DETAIL B37579H1.
6. OVERHANG LENGTH SHALL NOT EXCEED 2 FT.
7. WHEN SETBACK IS 6 FT OR LESS, DIAGONAL WEB MAY BE OMITTED AND HIGH END OF TOP CHORD SHALL BE CONNECTED AS PER NOTE 4.
8. ALL PLATES SPECIFIED ARE PRESSED INTO BOTH FACES OF THE TRUSS.
9. MITEK REFERENCE PAGE MII-7473C FORMS AN INTEGRAL PART OF THIS DETAIL.
10. THIS DETAIL IS NOT VALID AFTER APRIL 30, 2017

MiTek Canada, Inc.
100 Industrial Rd.
Bradford, Ontario, L3Z 3G7

PEO
Certificate No. 10889485

LICENSED PROFESSIONAL ENGINEER
C. Cordogiannis
90553736
PROVINCE OF ONTARIO

RECEIVED
TOWN OF MILTON
MAR 29, 2017
17-5233
BUILDING DIVISION

April 24, 2015

STANDARD GABLE END DETAIL

LECCO RIDGE-BLOCK 338

DRAWING NO.: ENG 103 - P70017-081 B37579K

MINIMUM ROOF PITCH: 2/12

MAXIMUM ROOF PITCH: 12/12

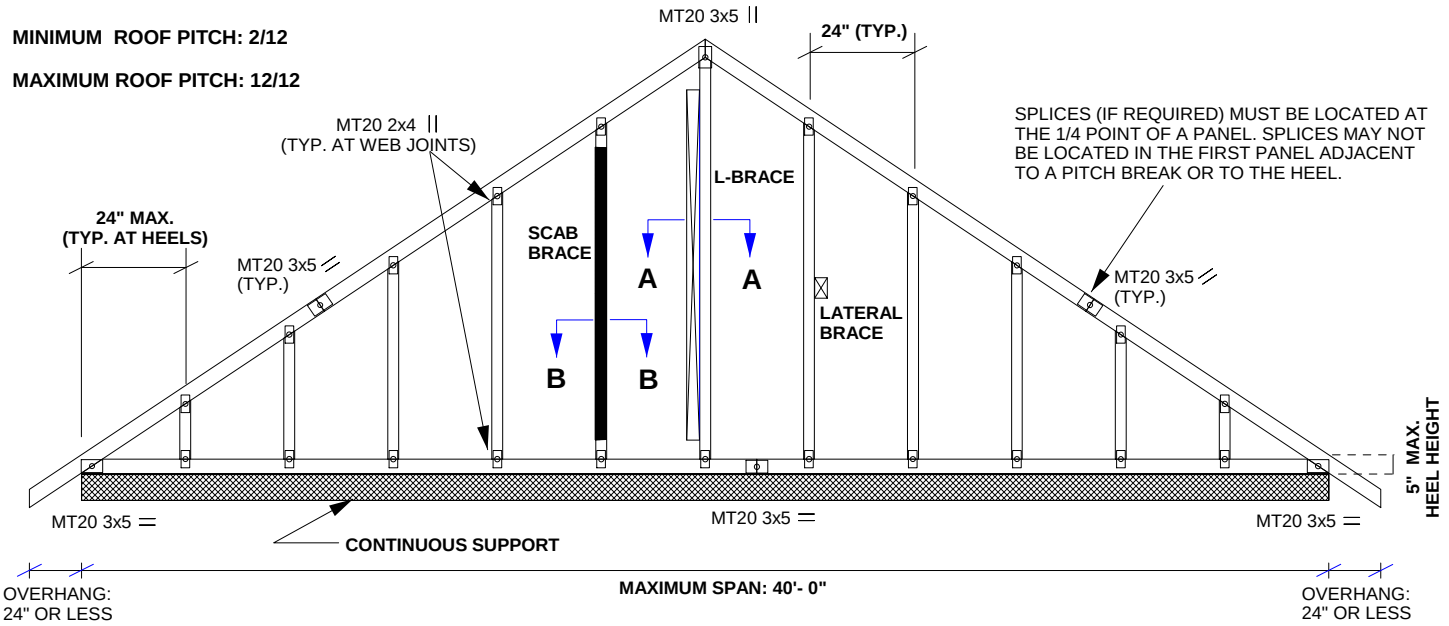

LUMBER

TOP CHORD:	**2 X 4 No. 2 DRY SPF or D- Fir**
BOTTOM CHORD:	**2 X 3 or 2 X 4 No. 2 DRY SPF or D- Fir**
GABLE WEB:	**2 X 3 or 2 X 4 No. 2 DRY SPF or D- Fir**

PLATES

JOINT	PLATES
HEELS	MT20 3 X 5
PEAK	MT20 3 X 5
TC SPLICES	MT20 3 X 5
BC SPLICES	MT20 3 X 5
WEB JOINTS	MT20 2 X 4

DESIGN CRITERIA

TOP CHORD LL = 60.0 PSF OR LESS
TOP CHORD DL = 6.0 PSF OR LESS
BOTTOM CHORD LL = 0 PSF
BOTTOM CHORD DL = 7.0 PSF

TOTAL LOAD = 73.0 PSF OR LESS

BRACING

TOP CHORD TO BE SHEATHED OR MAX. PURLIN SPACING = 2 FT.
MAX. UNBRACED BOTTOM CHORD LENGTH = 10 FT. OR RIGID CEILING DIRECTLY APPLIED.
WEBS MUST BE LATERALLY BRACED, SCAB BRACED OR L-BRACED AS INDICATED IN TABLE BELOW:

WEB LENGTH (L)	SCAB BRACE	L-BRACE	LATERAL BRACE
L < 6 FT.	NOT REQUIRED	NOT REQUIRED	NOT REQUIRED
6 FT. < L < 12 FT.	REQUIRED	2x4 L-BRACE	1 LATERAL AT 1/2 LENGTH OF WEB

SCAB BRACE DETAIL

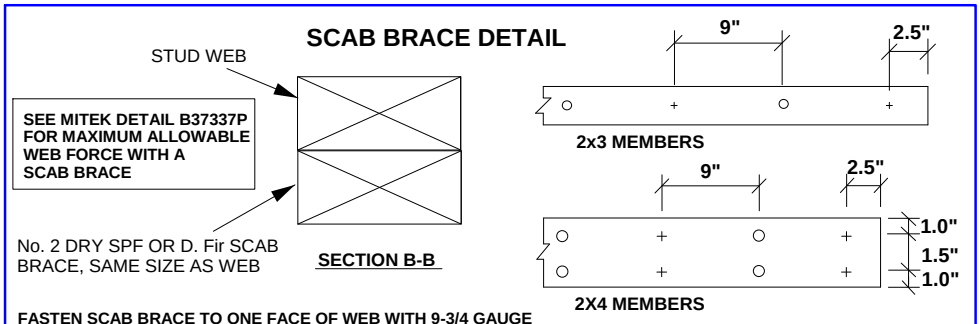

FASTEN SCAB BRACE TO ONE FACE OF WEB WITH 9-3/4 GAUGE 0.122" X 3" COMMON SPIRAL NAILS SPACED @ 9" C/C (MAX) WITH 2.5" MINIMUM END DISTANCE. SCAB BRACE MUST COVER 90% OF WEB LENGTH. DRIVE NAILS ALTERNATELY FROM FRONT AND BACK FACES.

+ NAIL FROM FRONT FACE
o NAIL FROM BACK FACE

CANTILEVER DETAIL

Note: Gable end may be cantilevered up to 6 inches past end wall as shown. Gable end to be continuously supported by 2x4 SPF No.2 (DRY) members at 12" o.c. along the bottom chord. Roof design loads shall not exceed the loading shown above.

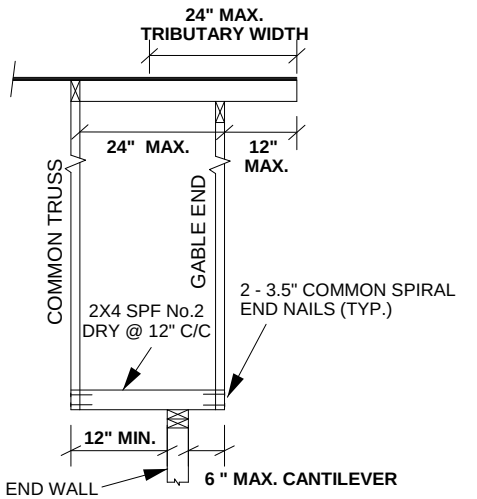

L-BRACE DETAIL

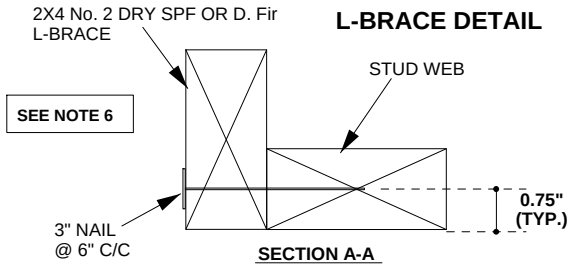

FASTEN L-BRACE TO NARROW EDGE OF WEB WITH ONE ROW OF 9-3/4 GAUGE 0.122" X 3" COMMON SPIRAL NAILS SPACED AT 6" C/C WITH 3" MINIMUM END DISTANCE. BRACE MUST COVER 90% OF WEB LENGTH.

PEO
Certificate No. 10889485

LICENSED PROFESSIONAL ENGINEER
C. Cordogiannis
90553736
PROVINCE OF ONTARIO

RECEIVED
TOWN OF MILTON
MAR 29, 2017
17-5233
BUILDING DIVISION

April 24, 2015

NOTES:

1. **Gable studs are spaced at 24" C/C (max.) with a max. length of 12 ft.**
2. **All plates specified are MiTek MT20, centered at each joint, and pressed into both faces of truss.**
3. **Truss spacing is 24" C/C, maximum.**
4. **Gable truss is designed for continuous support. Bearing material must be of the same species as chord member and of grade No. 2 or better.**
5. **This truss requires rigid sheathing attached to exposed face.**
6. **2x3 or 2x4 T-braces shown for gable webs in the MiTek engineering drawings may be replaced by a 2x4 L-brace as shown above.**
7. **This truss is designed for residential or small building requirements, conforming to Part 9, NBCC 2010.**
8. **This detail is not valid after April 30, 2017.**

MiTek Canada, Inc.
100 Industrial Rd.
Bradford, Ontario, L3Z 3G7