TOWN OF MILTON
PLANNING AND DEVELOPMENT
BUILDING PERMIT: 17-5052
BUILDING: REVIEWED
SCOTT SHERRIFFS APR 20, 2017
PLANS EXAMINER DATE
Neither the issuance of a permit nor carrying out of inspections by the Town of Milton relives the owner from full responsibility for compliance with the provisions of the Ontario Building Code Act and the Ontario Building Code, both as amended, as well as other applicable statutes and regulations of the Province on Ontario, By-laws of the Region of Halton and Town of Milton

RECEIVED
TOWN OF MILTON
MAR 29, 2017
17-5052
BUILDING DIVISION

TRUSSES BY KOTT

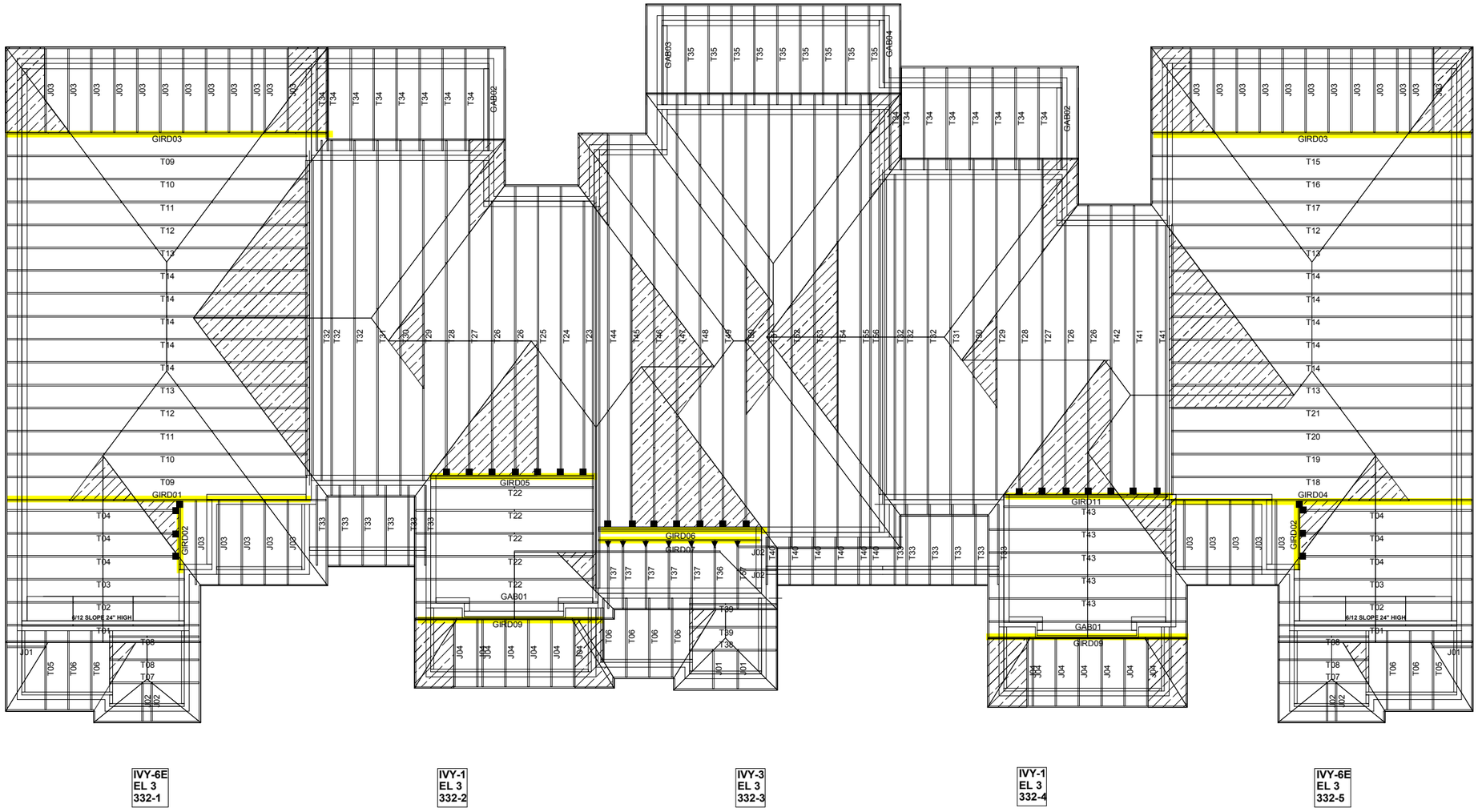

TOP OF ALL PORCH BEAMS
AT 8' 7 1/4 A.F.F.

UNDERSIDE OF SOFFIT
FOR PORCHES AT
8' 6" A.F.F.

GARAGE WALL PLATES
AT 9' 1 2/16" A.F.F.

PARTY WALLS TO BE
FRAMED ON SITE A.P.P.

HANGER LEGEND:

▼ LUS24 ■ LJS26DS
● HGUS26 ╳ HGUS26-2

CONVENTIONAL
FRAMING BY OTHERS

SIZE AND LOCATION OF CONVENTIONAL FRAMING IS APPROXIMATE. ALL AREAS MAY NOT BE SHOWN. REFER TO ARCHITECTURAL PLANS FOR DETAILS.

ALL CONVENTIONAL FRAMING TO CONFORM WITH PART 9 OF THE O.B.C
ROOF RAFTERS THAT CROSS MEET OVER TRUSSES TO BE 2x4 S.P.F. @ 24"O/C WITH A 2x4 VERTICAL POST TO THE TRUSS UNDERNEATH EACH CROSS POINT. VERTICAL POST LONGER THAN 6' TO HAVE LATERAL BRACING SO THAT THE DISTANCE BETWEEN END POINT AND BETWEEN ROWS OF BRACING DOES NOT EXCEED 6'.

Model: **BLOCK 332**
Customer: GREENPARK
Project: LECCO RIDGE
Location: MILTON
Date: 3/10/2017 Drawn by: BB

ENGINEERING NOTE PAGE (ENP-1)
PLEASE READ PRIOR TO INSTALLATION

RESPONSIBILITIES

THIS DESIGN IS FOR AN INDIVIDUAL BUILDING COMPONENT AND HAS BEEN BASED ON INFORMATION PROVIDED BY THE DESIGN OFFICE OF KOTT LUMBER. THE UNDERSIGNED ENGINEER DISCLAIMS ANY RESPONSIBILITY FOR DAMAGES AS A RESULT OF FAULTY OR INCORRECT INFORMATION, SPECIFICATION AND/OR DESIGNS FURNISHED TO THE ENGINEER. THE UNDERSIGNED ENGINEER IS ONLY RESPONSIBLE FOR THE STRUCTURAL INTEGRITY OF THIS BUILDING COMPONENT FOR THE CONDITIONS AND LOADS SHOWN ON THIS DRAWING. THE STRUCTURAL INTEGRITY OF THE BUILDING AND THE VERIFICATION OF THE DIMENSIONS AND THE DESIGN LOADS USED ARE THE RESPONSIBILITY OF THE BUILDING DESIGNER.

TRUSSES ARE DESIGNED IN CONFORMANCE WITH THE RELEVANT SECTIONS OF THE NATIONAL BUILDING CODE OF CANADA OR THE CANADIAN CODE FOR FARM BUILDINGS, WHICHEVER APPLIES TO THE BUILDING TYPE INDICATED ON THE DRAWING

IT IS THE RESPONSIBILITY OF KOTT LUMBER TO ENSURE THAT TRUSSES ARE MANUFACTURED IN CONFORMANCE WITH THESE DESIGNS AND WITH THE SPECIFICATIONS OUTLINED BELOW. THE UNDERSIGNED ENGINEER IS NOT RESPONSIBLE FOR QUALITY CONTROL IN THE TRUSS MANUFACTURING PLANT.

USE AND OCCUPANCY

- The building is of the type indicated on the drawing

LOADING

- The truss loading intensity and distribution as well as load transfer mechanism is that indicated on the drawing
- No buildings, trees, parapets or other projections higher than the roof for which the trusses are used are located within a distance less than ten (10) times the difference in height, or five metres (16 ft) whichever is greater, unless the drawing indicates that the snow drifting has been taken into account

HANDLING, INSTALLATION AND BRACING

- The trusses must be handled and installed by a qualified professional as per the supplied document titled *Information for Truss Installers* and the BCSI-B1 and BCSI-B3 Summary Sheets
- The compression chords are laterally braced by continuous rigid diaphragm sheathing or as specified on the drawing
- Temporary and permanent bracing must be installed as indicated on the truss drawing and according to the BCSI-B1 and BCSI-B3 Summary Sheets. Bracing for the lateral stability of the truss is to be provided by the building designer
- **It is recommended that a Professional Engineer's advice be obtained for the bracing of trusses spanning more than 12.37m (40'-7")**

SUPPORTS

- The trusses are to be supported at the bearing points indicated and anchored to the supports where considered necessary by the designer of the overall structure
- Bearing sizes shown are the minimum required to prevent crushing of the truss members and do not necessarily take into account stability of the overall building structure
- Elevation of bearings must be carefully checked and shimmed to alignment for solid bearings
- Adequate wood truss bearing is the responsibility of the building designer.

DIMENSIONS

- Geometry of the truss and dimensions indicated on the drawing are identical to those of the installed truss.

WHERE CONTINUOUS LATERAL BRACING IS REQUIRED FOR WEBS BUT CAN NOT BE PROVIDED SUBSTITUTE EACH WITH ONE SPF #2 2" X 4" T-BRACE COVERING 90% OF WEB LENGTH AND FASTENED TO EDGE OF WEB USING 3 1/4" SPIRAL NAILS @ 6" C/C

RECEIVED
TOWN OF MILTON
MAR 29, 2017
17-5052
BUILDING DIVISION

01/29/2013

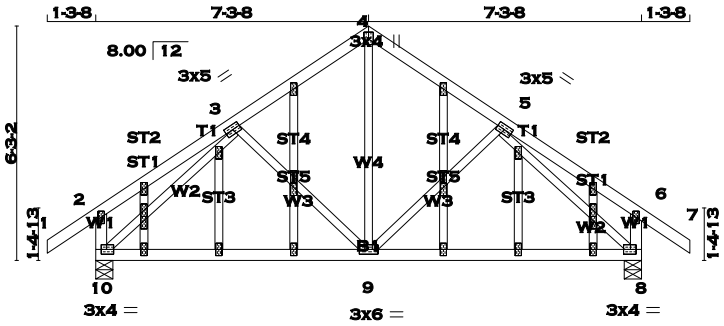

SCALE = 1:61.6

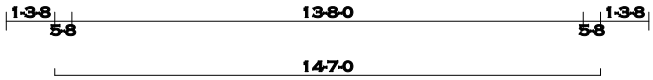

TOTAL WEIGHT = 2 X 77 = 153 lb

[M][F]

LUMBER

N. L. G. A. RULES

CHORDS	SIZE		LUMBER	DESCR.
1 - 4	2x4	DRY	No.2	SPF
4 - 7	2x4	DRY	No.2	SPF
10 - 2	2x4	DRY	No.2	SPF
8 - 6	2x4	DRY	No.2	SPF
10 - 8	2x4	DRY	No.2	SPF
ALL WEBS	2x3	DRY	No.2	SPF

EXCEPT

ALL GABLE WEBS

2x3 DRY No.2 SPF

DRY: SEASONED LUMBER.

GABLE STUDS SPACED AT 2-0-0 OC.

PLATES (table is in inches)

JT	TYPE	PLATES	W	LEN	Y	X
2	TMV+p	MT20	2.0	4.0		
3	TMWW-t	MT20	3.0	5.0		
4	TTW+p	MT20	3.0	4.0	2.25	1.50
5	TMWW-t	MT20	3.0	5.0		
6	TMV+p	MT20	2.0	4.0		
8	BMVW1-t	MT20	3.0	4.0	1.50	1.75
9	BMWWW-t	MT20	3.0	6.0		
10	BMVW1-t	MT20	3.0	4.0	1.50	1.75
11, 16, 21, 26						
11	NP+w	MT20	2.0	4.0	1.50	1.00
11, 12, 13, 14, 15, 16, 17, 18, 19, 20, 21, 22, 23, 24, 25, 26						
11	NP+w	MT20	2.0	4.0		

A SIZE FOR SIZE SUBSTITUTION OF MITEK MII20 WITH TEE-LOK TL20 PLATES IS ALLOWED.

DIMENSIONS, SUPPORTS AND LOADINGS SPECIFIED BY FABRICATOR TO BE VERIFIED BY BUILDING DESIGNER

BEARINGS

JT	FACTORED GROSS REACTION VERT	HORZ	MAXIMUM FACTORED GROSS REACTION DOWN	HORZ	UPLIFT	INPUT BRG IN-SX	REQRD BRG IN-SX
10	798	0	798	0	0	5-8	5-8
8	798	0	798	0	0	5-8	5-8

UNFACTORED REACTIONS

JT	1ST LCASE COMBINED	MAX./MIN. COMPONENT REACTIONS SNOW	LIVE	PERM.LIVE	WIND	DEAD	SOIL
10	558	403 / 0	0 / 0	0 / 0	0 / 0	154 / 0	0 / 0
8	558	403 / 0	0 / 0	0 / 0	0 / 0	154 / 0	0 / 0

BEARING MATERIAL TO BE SPF NO.2 OR BETTER AT JOINT(S) 10, 8

BRACING

TOP CHORD TO BE SHEATHED OR MAX. PURLIN SPACING = 6.25 FT.
MAX. UNBRACED BOTTOM CHORD LENGTH = 10.00 FT. OR RIGID CEILING DIRECTLY APPLIED.

ALL PITCH BREAKS AND PERIMETER CORNER JOINTS MUST BE LATERALLY RESTRAINED.

LOADING

TOTAL LOAD CASES: (4)

CHORDS

MEMB. FR-TO	MAX. FACTORED FORCE (LBS)	FACTORED VERT. LOAD (PLF) FROM	TO	LC1 MAX CSI (LC)	MAX. UNBRAC LENGTH
1- 2	0 / 29	-77.3	-77.3	0.10 (1)	10.00
2- 3	0 / 18	-77.3	-77.3	0.16 (1)	10.00
3- 4	-550 / 0	-77.3	-77.3	0.13 (1)	6.25
4- 5	-550 / 0	-77.3	-77.3	0.13 (1)	6.25
5- 6	0 / 18	-77.3	-77.3	0.16 (1)	10.00
6- 7	0 / 29	-77.3	-77.3	0.10 (1)	10.00
10- 2	-215 / 0	0.0	0.0	0.02 (1)	7.81
8- 6	-215 / 0	0.0	0.0	0.02 (1)	7.81
10- 9	0 / 554	-17.5	-17.5	0.30 (4)	10.00
9- 8	0 / 554	-17.5	-17.5	0.30 (4)	10.00

WEBS

MEMB. FR-TO	MAX. FACTORED FORCE (LBS)	MAX CSI (LC)
9- 4	0 / 371	0.08 (1)
9- 5	-155 / 5	0.07 (1)
3- 9	-155 / 5	0.07 (1)
10- 3	-770 / 0	0.31 (1)
5- 8	-770 / 0	0.31 (1)

DESIGN CRITERIA

SPECIFIED LOADS:

TOP CH.	LL	=	23.3	PSF
	DL	=	3.0	PSF
BOT CH.	LL	=	0.0	PSF
	DL	=	7.0	PSF
TOTAL LOAD		=	33.3	PSF

SPACING = 24.0 IN. C/C

THIS TRUSS IS DESIGNED FOR RESIDENTIAL OR SMALL BUILDING REQUIREMENTS OF PART 9, NBCC 2010

THIS DESIGN COMPLIES WITH:
- PART 9 OF OBC 2012 , BCBC 2012 , ABC 2014
- CSA 086-09
- TPIC 2011

(55 % OF 27.2 P.S.F. G.S.L. PLUS 8.4 P.S.F. RAIN LOAD) EQUALS 23.3 P.S.F. SPECIFIED ROOF LIVE LOAD

ALLOWABLE DEFL.(LL)= L/360 (0.49")
CALCULATED VERT. DEFL.(LL) = L/ 999 (0.01")
ALLOWABLE DEFL.(TL)= L/360 (0.49")
CALCULATED VERT. DEFL.(TL) = L/ 999 (0.07")

CSI: TC=0.16 (5-6:1) , BC=0.30 (8-9:4) , WB=0.31 (5-8:1) , SSI=0.11 (4-5:1)

DOL LUMBER=1.00 NAIL=1.00 LS BEND=1.10 COMP=1.10 SHEAR=1.10 TENS= 1.10

COMPANION LIVE LOAD FACTOR = 0.50

TRUSS PLATE MANUFACTURER IS NOT RESPONSIBLE FOR QUALITY CONTROL IN THE TRUSS MANUFACTURING PLANT .

NAIL VALUES

PLATE	GRIP(DRY) (PSI) MAX	MIN	SHEAR (PLI) MAX	MIN	SECTION (PLI) MAX	MIN
MT20	618	354	1667	822	2284	1656

PLATE PLACEMENT TOL. = 0.250 inches

PLATE ROTATION TOL. = 5.0 Deg.

JSI GRIP= 0.85 (8) (INPUT = 0.90)
JSI METAL= 0.22 (3) (INPUT = 1.00)

LICENSED PROFESSIONAL ENGINEER
P.M. TREVISAN
100136551
March 13th, 2017
PROVINCE OF ONTARIO

RECEIVED
TOWN OF MILTON
MAR 29, 2017
17-5052
BUILDING DIVISION

READ ALL NOTES ON THIS PAGE AND ON THE ENGINEERING NOTE PAGE ENP-1. THE NOTE PAGE IS AN INTEGRAL PART OF THIS DRAWING AS IT CONTAINS SPECIFICATIONS AND CRITERIA USED IN THE DESIGN OF THIS COMPONENT.

KOTT

Version 8.100 S Feb 9 2017 MiTek Industries, Inc. Mon Mar 13 13:24:26 2017 Page 1
ID:gtheX5EqOVSIkwpr5Eyn2TyGKTI-i5jcLUa6tnrD2XzxbenIObJBDl3ds1ETntxgqTzbLkp

SCALE = 1:22.4

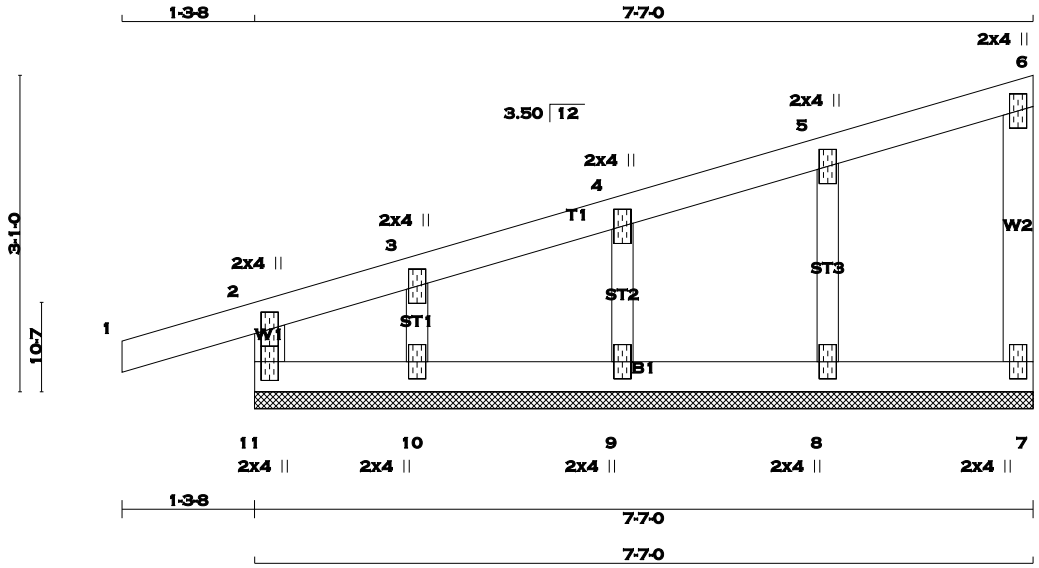

TOTAL WEIGHT = 2 X 26 = 52 lb [M]

LUMBER

N. L. G. A. RULES

CHORDS	SIZE		LUMBER	DESCR.
11 - 2	2x4	DRY	No.2	SPF
1 - 6	2x4	DRY	No.2	SPF
7 - 6	2x4	DRY	No.2	SPF
11 - 7	2x4	DRY	No.2	SPF
ALL WEBS	2x3	DRY	No.2	SPF
ALL GABLE WEBS	2x3	DRY	No.2	SPF

DRY: SEASONED LUMBER.

GABLE STUDS SPACED AT 2-0-0 OC.

PLATES (table is in inches)

JT	TYPE	PLATES	W	LEN	Y	X
2	TMV+p	MT20	2.0	4.0		
3, 4, 5						
3	TMW+w	MT20	2.0	4.0		
6	TMV+p	MT20	2.0	4.0		
7	BMV1+p	MT20	2.0	4.0		
8, 9, 10						
8	BMW1+w	MT20	2.0	4.0		
11	BMV1+p	MT20	2.0	4.0	2.25	1.00

A SIZE FOR SIZE SUBSTITUTION OF MITEK MII20 WITH TEE-LOK TL20 PLATES IS ALLOWED.

DIMENSIONS, SUPPORTS AND LOADINGS SPECIFIED BY FABRICATOR TO BE VERIFIED BY BUILDING DESIGNER

BEARINGS

THIS TRUSS DESIGNED FOR CONTINUOUS BEARINGS.

THIS TRUSS REQUIRES RIGID SHEATHING ON EXPOSED FACE.

BEARING MATERIAL TO BE SPF NO.2 OR BETTER AT JOINT(S)

BRACING

TOP CHORD TO BE SHEATHED OR MAX. PURLIN SPACING = 6.25 FT.
MAX. UNBRACED BOTTOM CHORD LENGTH = 10.00 FT. OR RIGID CEILING DIRECTLY APPLIED.

ALL PITCH BREAKS AND PERIMETER CORNER JOINTS MUST BE LATERALLY RESTRAINED.

LOADING

TOTAL LOAD CASES: (4)

CHORDS

MEMB. FR-TO	MAX. FACTORED FORCE (LBS)	FACTORED VERT. LOAD (PLF) FROM	TO	LC1 MAX CSI (LC)	MAX. UNBRAC LENGTH
11- 2	-195 / 0	0.0	0.0	0.03 (1)	7.81
1- 2	0 / 14	-77.3	-77.3	0.10 (1)	10.00
2- 3	-25 / 0	-77.3	-77.3	0.07 (1)	6.25
3- 4	-10 / 0	-77.3	-77.3	0.04 (1)	6.25
4- 5	-8 / 0	-77.3	-77.3	0.04 (1)	10.00
5- 6	-8 / 0	-77.3	-77.3	0.04 (1)	10.00
7- 6	-69 / 0	0.0	0.0	0.01 (1)	7.81
11-10	0 / 16	-17.5	-17.5	0.03 (1)	10.00
10- 9	0 / 12	-17.5	-17.5	0.01 (4)	10.00
9- 8	0 / 8	-17.5	-17.5	0.02 (4)	10.00
8- 7	0 / 5	-17.5	-17.5	0.02 (4)	10.00

WEBS

MEMB. FR-TO	MAX. FACTORED FORCE (LBS)	MAX CSI (LC)
8- 5	-164 / 0	0.03 (1)
9- 4	-161 / 0	0.02 (1)
10- 3	-100 / 0	0.01 (1)

DESIGN CRITERIA

SPECIFIED LOADS:

TOP	CH.	LL	=	23.3	PSF
		DL	=	3.0	PSF
BOT	CH.	LL	=	0.0	PSF
		DL	=	7.0	PSF
TOTAL	LOAD		=	33.3	PSF

SPACING = 24.0 IN. C/C

THIS TRUSS IS DESIGNED FOR RESIDENTIAL OR SMALL BUILDING REQUIREMENTS OF PART 9, NBCC 2010

THIS DESIGN COMPLIES WITH:
- PART 9 OF OBC 2012 , BCBC 2012 , ABC 2014
- CSA 086-09
- TPIC 2011

DESIGN ASSUMPTIONS
-OVERHANG NOT TO BE ALTERED OR CUT OFF.

(55 % OF 27.2 P.S.F. G.S.L. PLUS 8.4 P.S.F. RAIN LOAD) EQUALS 23.3 P.S.F. SPECIFIED ROOF LIVE LOAD

CSI: TC=0.10 (1-2:1) , BC=0.03 (10-11:1) , WB=0.03 (5-8:1) , SSI=0.08 (1-2:1)

DOL LUMBER=1.00 NAIL=1.00 LS BEND=1.10 COMP=1.10 SHEAR=1.10 TENS= 1.10

COMPANION LIVE LOAD FACTOR = 0.50

TRUSS PLATE MANUFACTURER IS NOT RESPONSIBLE FOR QUALITY CONTROL IN THE TRUSS MANUFACTURING PLANT .

NAIL VALUES

PLATE	GRIP(DRY) (PSI) MAX	MIN	SHEAR (PLI) MAX	MIN	SECTION (PLI) MAX	MIN
MT20	618	354	1667	822	2284	1656

PLATE PLACEMENT TOL. = 0.250 inches

PLATE ROTATION TOL. = 5.0 Deg.

JSI GRIP= 0.11 (2) (INPUT = 0.90)
JSI METAL= 0.04 (2) (INPUT = 1.00)

LICENSED PROFESSIONAL ENGINEER
P.M. TREVISAN
100136551
March 13th, 2017
PROVINCE OF ONTARIO

RECEIVED
TOWN OF MILTON
MAR 29, 2017
17-5052
BUILDING DIVISION

READ ALL NOTES ON THIS PAGE AND ON THE ENGINEERING NOTE PAGE ENP-1. THE NOTE PAGE IS AN INTEGRAL PART OF THIS DRAWING AS IT CONTAINS SPECIFICATIONS AND CRITERIA USED IN THE DESIGN OF THIS COMPONENT.

KOTT

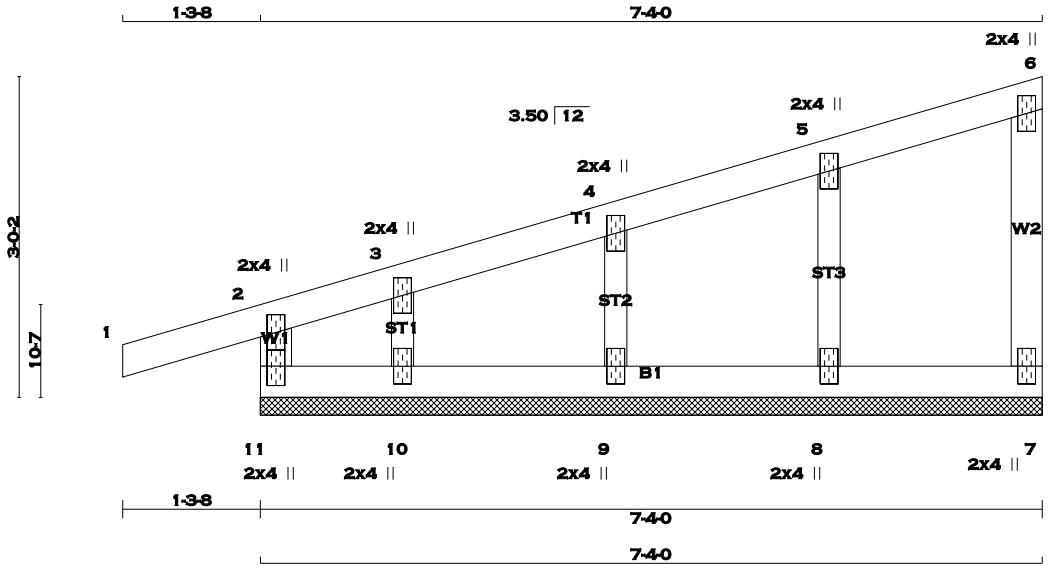

TOTAL WEIGHT = 25 lb [M]

LUMBER

N. L. G. A. RULES

CHORDS	SIZE		LUMBER	DESCR.
11 - 2	2x4	DRY	No.2	SPF
1 - 6	2x4	DRY	No.2	SPF
7 - 6	2x4	DRY	No.2	SPF
11 - 7	2x4	DRY	No.2	SPF
ALL WEBS	2x3	DRY	No.2	SPF
ALL GABLE WEBS	2x3	DRY	No.2	SPF

DRY: SEASONED LUMBER.

GABLE STUDS SPACED AT 2-0-0 OC.

PLATES (table is in inches)

JT	TYPE	PLATES	W	LEN	Y	X
2	TMV+p	MT20	2.0	4.0		
3, 4, 5						
3	TMW+w	MT20	2.0	4.0		
6	TMV+p	MT20	2.0	4.0		
7	BMV1+p	MT20	2.0	4.0		
8, 9, 10						
8	BMW1+w	MT20	2.0	4.0		
11	BMV1+p	MT20	2.0	4.0	2.25	1.00

A SIZE FOR SIZE SUBSTITUTION OF MITEK MII20 WITH TEE-LOK TL20 PLATES IS ALLOWED.

DIMENSIONS, SUPPORTS AND LOADINGS SPECIFIED BY FABRICATOR TO BE VERIFIED BY BUILDING DESIGNER

BEARINGS

THIS TRUSS DESIGNED FOR CONTINUOUS BEARINGS.

THIS TRUSS REQUIRES RIGID SHEATHING ON EXPOSED FACE.

BEARING MATERIAL TO BE SPF NO.2 OR BETTER AT JOINT(S)

BRACING

TOP CHORD TO BE SHEATHED OR MAX. PURLIN SPACING = 6.25 FT.
MAX. UNBRACED BOTTOM CHORD LENGTH = 10.00 FT. OR RIGID CEILING DIRECTLY APPLIED.

ALL PITCH BREAKS AND PERIMETER CORNER JOINTS MUST BE LATERALLY RESTRAINED.

LOADING

TOTAL LOAD CASES: (4)

CHORDS

MEMB. FR-TO	MAX. FACTORED FORCE (LBS)	FACTORED VERT. LOAD (PLF) FROM	TO	LC1 MAX CSI (LC)	MAX. UNBRAC LENGTH
11- 2	-192 / 0	0.0	0.0	0.03 (1)	7.81
1- 2	0 / 14	-77.3	-77.3	0.10 (1)	10.00
2- 3	-27 / 0	-77.3	-77.3	0.07 (1)	6.25
3- 4	-11 / 0	-77.3	-77.3	0.04 (1)	6.25
4- 5	-9 / 0	-77.3	-77.3	0.04 (1)	10.00
5- 6	-8 / 0	-77.3	-77.3	0.04 (1)	10.00
7- 6	-69 / 0	0.0	0.0	0.02 (1)	7.81
11-10	0 / 16	-17.5	-17.5	0.03 (1)	10.00
10- 9	0 / 13	-17.5	-17.5	0.01 (4)	10.00
9- 8	0 / 8	-17.5	-17.5	0.02 (4)	10.00
8- 7	0 / 5	-17.5	-17.5	0.02 (4)	10.00

WEBS

MEMB. FR-TO	MAX. FACTORED FORCE (LBS)	MAX CSI (LC)
8- 5	-164 / 0	0.03 (1)
9- 4	-162 / 0	0.02 (1)
10- 3	-84 / 0	0.01 (1)

DESIGN CRITERIA

SPECIFIED LOADS:

TOP	CH.	LL	=	23.3	PSF
		DL	=	3.0	PSF
BOT	CH.	LL	=	0.0	PSF
		DL	=	7.0	PSF
TOTAL	LOAD		=	33.3	PSF

SPACING = 24.0 IN. C/C

THIS TRUSS IS DESIGNED FOR RESIDENTIAL OR SMALL BUILDING REQUIREMENTS OF PART 9, NBCC 2010

THIS DESIGN COMPLIES WITH:
- PART 9 OF OBC 2012 , BCBC 2012 , ABC 2014
- CSA 086-09
- TPIC 2011

DESIGN ASSUMPTIONS
-OVERHANG NOT TO BE ALTERED OR CUT OFF.

(55 % OF 27.2 P.S.F. G.S.L. PLUS 8.4 P.S.F. RAIN LOAD) EQUALS 23.3 P.S.F. SPECIFIED ROOF LIVE LOAD

CSI: TC=0.10 (1-2:1) , BC=0.03 (10-11:1) , WB=0.03 (5-8:1) , SSI=0.08 (1-2:1)

DOL LUMBER=1.00 NAIL=1.00 LS BEND=1.10 COMP=1.10 SHEAR=1.10 TENS= 1.10

COMPANION LIVE LOAD FACTOR = 0.50

TRUSS PLATE MANUFACTURER IS NOT RESPONSIBLE FOR QUALITY CONTROL IN THE TRUSS MANUFACTURING PLANT .

NAIL VALUES

PLATE	GRIP(DRY) (PSI) MAX	MIN	SHEAR (PLI) MAX	MIN	SECTION (PLI) MAX	MIN
MT20	618	354	1667	822	2284	1656

PLATE PLACEMENT TOL. = 0.250 inches

PLATE ROTATION TOL. = 5.0 Deg.

JSI GRIP= 0.10 (2) (INPUT = 0.90)
JSI METAL= 0.04 (2) (INPUT = 1.00)

LICENSED PROFESSIONAL ENGINEER
P.M. TREVISAN
100136551
March 13th, 2017
PROVINCE OF ONTARIO

RECEIVED
TOWN OF MILTON
MAR 29, 2017
17-5052
BUILDING DIVISION

READ ALL NOTES ON THIS PAGE AND ON THE ENGINEERING NOTE PAGE ENP-1. THE NOTE PAGE IS AN INTEGRAL PART OF THIS DRAWING AS IT CONTAINS SPECIFICATIONS AND CRITERIA USED IN THE DESIGN OF THIS COMPONENT.

KOTT

SCALE = 1:18.4

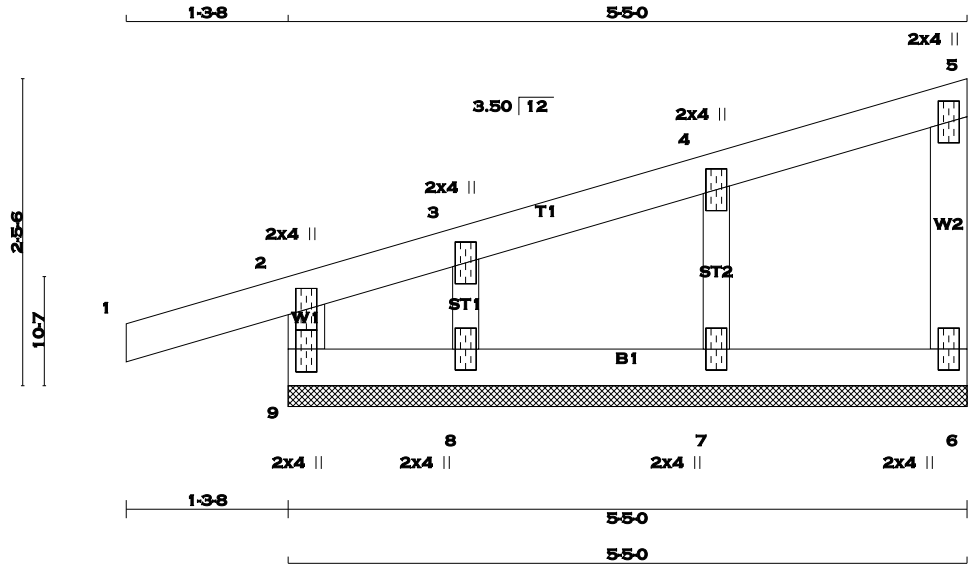

TOTAL WEIGHT = 18 lb [M]

LUMBER

N. L. G. A. RULES

CHORDS	SIZE		LUMBER	DESCR.
9 - 2	2x4	DRY	No.2	SPF
1 - 5	2x4	DRY	No.2	SPF
6 - 5	2x4	DRY	No.2	SPF
9 - 6	2x4	DRY	No.2	SPF
ALL WEBS	2x3	DRY	No.2	SPF
ALL GABLE WEBS	2x3	DRY	No.2	SPF

DRY: SEASONED LUMBER.

GABLE STUDS SPACED AT 2-0-0 OC.

PLATES (table is in inches)

JT	TYPE	PLATES	W	LEN	Y	X
2	TMV+p	MT20	2.0	4.0		
3	TMW+w	MT20	2.0	4.0		
4	TMW+w	MT20	2.0	4.0		
5	TMV+p	MT20	2.0	4.0		
6	BMV1+p	MT20	2.0	4.0		
7	BMW1+w	MT20	2.0	4.0		
8	BMW1+w	MT20	2.0	4.0		
9	BMV1+p	MT20	2.0	4.0	2.25	1.00

A SIZE FOR SIZE SUBSTITUTION OF MITEK MII20 WITH TEE-LOK TL20 PLATES IS ALLOWED.

DIMENSIONS, SUPPORTS AND LOADINGS SPECIFIED BY FABRICATOR TO BE VERIFIED BY BUILDING DESIGNER

BEARINGS

THIS TRUSS DESIGNED FOR CONTINUOUS BEARINGS.

THIS TRUSS REQUIRES RIGID SHEATHING ON EXPOSED FACE.

BEARING MATERIAL TO BE SPF NO.2 OR BETTER AT JOINT(S)

BRACING

TOP CHORD TO BE SHEATHED OR MAX. PURLIN SPACING = 6.25 FT.
MAX. UNBRACED BOTTOM CHORD LENGTH = 10.00 FT. OR RIGID CEILING DIRECTLY APPLIED.

ALL PITCH BREAKS AND PERIMETER CORNER JOINTS MUST BE LATERALLY RESTRAINED.

LOADING

TOTAL LOAD CASES: (4)

CHORDS

MEMB. FR-TO	MAX. FACTORED FORCE (LBS)	FACTORED VERT. LOAD (PLF) FROM	TO	LC1 MAX CSI (LC)	MAX. UNBRAC LENGTH
9- 2	-192 / 0	0.0	0.0	0.03 (1)	7.81
1- 2	0 / 14	-77.3	-77.3	0.10 (1)	10.00
2- 3	-23 / 0	-77.3	-77.3	0.07 (1)	6.25
3- 4	-7 / 0	-77.3	-77.3	0.05 (1)	10.00
4- 5	-9 / 0	-77.3	-77.3	0.05 (1)	10.00
6- 5	-66 / 0	0.0	0.0	0.01 (1)	7.81
9- 8	0 / 14	-17.5	-17.5	0.03 (1)	10.00
8- 7	0 / 10	-17.5	-17.5	0.02 (4)	10.00
7- 6	0 / 5	-17.5	-17.5	0.02 (4)	10.00

WEBS

MEMB. FR-TO	MAX. FACTORED FORCE (LBS)	MAX CSI (LC)
7- 4	-178 / 0	0.03 (1)
8- 3	-86 / 0	0.01 (1)

DESIGN CRITERIA

SPECIFIED LOADS:

TOP	CH.	LL	=	23.3	PSF
		DL	=	3.0	PSF
BOT	CH.	LL	=	0.0	PSF
		DL	=	7.0	PSF
TOTAL	LOAD		=	33.3	PSF

SPACING = 24.0 IN. C/C

THIS TRUSS IS DESIGNED FOR RESIDENTIAL OR SMALL BUILDING REQUIREMENTS OF PART 9, NBCC 2010

THIS DESIGN COMPLIES WITH:
- PART 9 OF OBC 2012 , BCBC 2012 , ABC 2014
- CSA 086-09
- TPIC 2011

DESIGN ASSUMPTIONS
-OVERHANG NOT TO BE ALTERED OR CUT OFF.

(55 % OF 27.2 P.S.F. G.S.L. PLUS 8.4 P.S.F. RAIN LOAD) EQUALS 23.3 P.S.F. SPECIFIED ROOF LIVE LOAD

CSI: TC=0.10 (1-2:1) , BC=0.03 (8-9:1) , WB=0.03 (4-7:1) , SSI=0.08 (1-2:1)

DOL LUMBER=1.00 NAIL=1.00 LS BEND=1.10 COMP=1.10 SHEAR=1.10 TENS= 1.10

COMPANION LIVE LOAD FACTOR = 0.50

TRUSS PLATE MANUFACTURER IS NOT RESPONSIBLE FOR QUALITY CONTROL IN THE TRUSS MANUFACTURING PLANT .

NAIL VALUES

PLATE	GRIP(DRY) (PSI) MAX	MIN	SHEAR (PLI) MAX	MIN	SECTION (PLI) MAX	MIN
MT20	618	354	1667	822	2284	1656

PLATE PLACEMENT TOL. = 0.250 inches

PLATE ROTATION TOL. = 5.0 Deg.

JSI GRIP= 0.10 (2) (INPUT = 0.90)
JSI METAL= 0.04 (2) (INPUT = 1.00)

LICENSED PROFESSIONAL ENGINEER
P.M. TREVISAN
100136551
March 13th, 2017
PROVINCE OF ONTARIO

RECEIVED
TOWN OF MILTON
MAR 29, 2017
17-5052
BUILDING DIVISION

READ ALL NOTES ON THIS PAGE AND ON THE ENGINEERING NOTE PAGE ENP-1. THE NOTE PAGE IS AN INTEGRAL PART OF THIS DRAWING AS IT CONTAINS SPECIFICATIONS AND CRITERIA USED IN THE DESIGN OF THIS COMPONENT.

KOTT

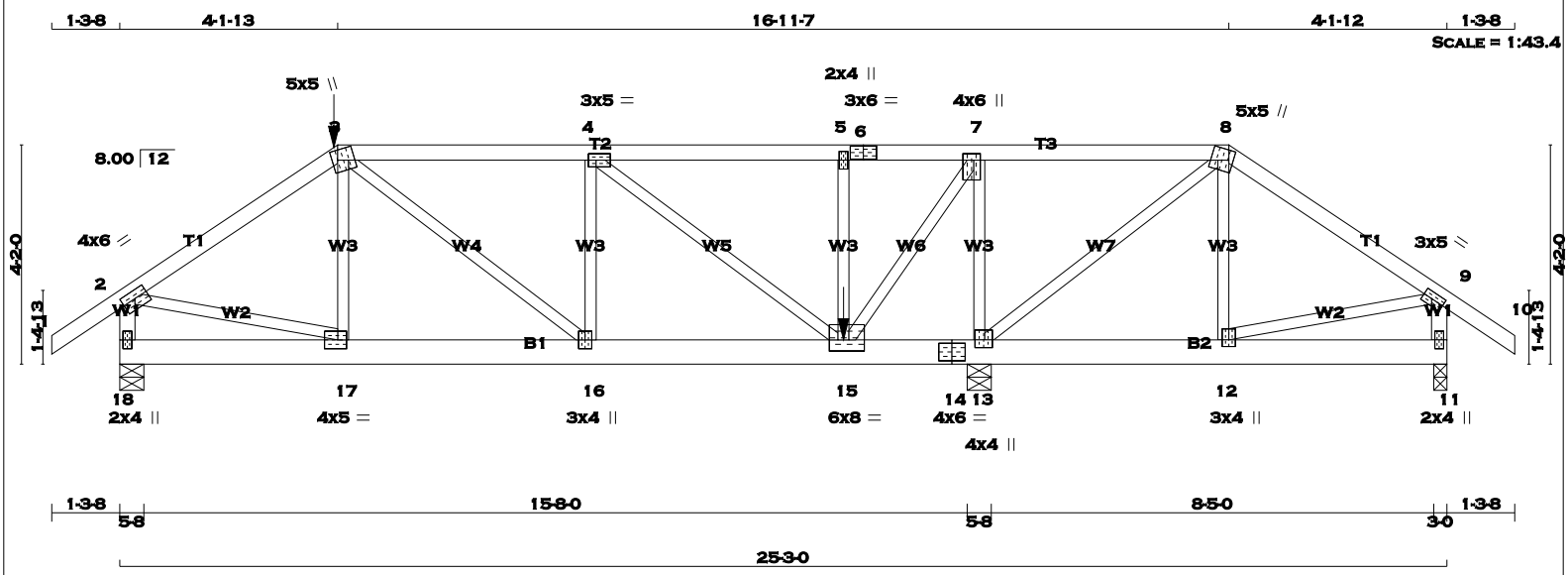

TOTAL WEIGHT = 119 lb

[M]

LUMBER

N. L. G. A. RULES

CHORDS	SIZE		LUMBER	DESCR.
1 - 3	2x4	DRY	No.2	SPF
3 - 6	2x4	DRY	No.2	SPF
6 - 8	2x4	DRY	No.2	SPF
8 - 10	2x4	DRY	No.2	SPF
18 - 2	2x4	DRY	No.2	SPF
11 - 9	2x4	DRY	No.2	SPF
18 - 14	2x6	DRY	No.2	SPF
14 - 11	2x6	DRY	No.2	SPF
ALL WEBS EXCEPT	2x3	DRY	No.2	SPF

DRY: SEASONED LUMBER.

PLATES (table is in inches)

JT	TYPE	PLATES	W	LEN	Y	X
2	TMVW-t	MT20	4.0	6.0	1.75	3.00
3	TTWW+m	MT20	5.0	5.0	2.25	1.25
4	TMWW-t	MT20	3.0	5.0	1.50	1.75
5	TMW+w	MT20	2.0	4.0		
6	TS-t	MT20	3.0	6.0		
7	TMWW+t	MT20	4.0	6.0	1.50	1.50
8	TTWW+m	MT20	5.0	5.0	2.25	1.00
9	TMVW-t	MT20	3.0	5.0	1.50	2.00
11	BMV1+p	MT20	2.0	4.0		
12	BMWW+t	MT20	3.0	4.0	1.50	1.50
13	BMWW1+t	MT20	4.0	4.0	1.75	1.75
14	BS-t	MT20	4.0	6.0		
15	BMWWW-t	MT20	6.0	8.0	2.50	2.00
16	BMWW+t	MT20	3.0	4.0		
17	BMWW-t	MT20	4.0	5.0	2.00	2.00
18	BMV1+p	MT20	2.0	4.0		

A SIZE FOR SIZE SUBSTITUTION OF MITEK MII20 WITH TEE-LOK TL20 PLATES IS ALLOWED.

HANGERS NOTES

1) SPECIAL HANGER(S) OR CONNECTION(S) REQUIRED TO SUPPORT CONCENTRATED LOAD(S) 240.8 lbs FACTORED DOWN AT 4-1-13 ON TOP CHORD, AND 1084.3 lbs FACTORED DOWN AT 13-9-4 ON BOTTOM CHORD. DESIGN FOR UNSPECIFIED CONNECTION(S) IS DELEGATED TO THE BUILDING DESIGNER.

DIMENSIONS, SUPPORTS AND LOADINGS SPECIFIED BY FABRICATOR TO BE VERIFIED BY BUILDING DESIGNER

BEARINGS

JT	FACTORED GROSS REACTION VERT	HORZ	MAXIMUM FACTORED GROSS REACTION DOWN	HORZ	UPLIFT	INPUT BRG IN-SX	REQRD BRG IN-SX
18	1483	0	1483	0	0	5-8	5-8
13	3108	0	3108	0	0	5-8	5-8
11	214	0	214	0	0	3-0	3-0

UNFACTORED REACTIONS

JT	1ST LCASE COMBINED	SNOW	LIVE	PERM.LIVE	WIND	DEAD	SOIL
	MAX./MIN. COMPONENT REACTIONS						
18	1041	731 / 0	0 / 0	0 / 0	0 / 0	310 / 0	0 / 0
13	2179	1534 / 0	0 / 0	0 / 0	0 / 0	645 / 0	0 / 0
11	148	113 / 0	0 / 0	0 / 0	0 / 0	35 / 0	0 / 0

BEARING MATERIAL TO BE SPF NO.2 OR BETTER AT JOINT(S) 18, 13, 11

BRACING

TOP CHORD TO BE SHEATHED OR MAX. PURLIN SPACING = 4.16 FT.
MAX. UNBRACED BOTTOM CHORD LENGTH = 6.25 FT. OR RIGID CEILING DIRECTLY APPLIED.

ALL PITCH BREAKS AND PERIMETER CORNER JOINTS MUST BE LATERALLY RESTRAINED.

LOADING

TOTAL LOAD CASES: (4)

CHORDS MEMB. FR-TO	MAX. FACTORED FORCE (LBS)	FACTORED VERT. LOAD (PLF) FROM	TO	LC1 MAX CSI (LC)	MAX. UNBRAC LENGTH	WEBS MEMB. FR-TO	MAX. FACTORED FORCE (LBS)	MAX CSI (LC)
1- 2	0 / 29	-77.3	-77.3	0.11 (1)	10.00	17- 3	-145 / 90	0.04 (1)
2- 3	-1537 / 0	-77.3	-77.3	0.31 (1)	4.94	3-16	0 / 519	0.13 (1)
3- 4	-1681 / 0	-145.8	-145.8	0.65 (1)	4.16	16- 4	-130 / 103	0.04 (4)
4- 5	-799 / 0	-145.8	-145.8	0.59 (1)	5.70	4-15	-1124 / 0	0.73 (1)
5- 6	-799 / 0	-77.3	-77.3	0.26 (1)	6.25	15- 5	-384 / 0	0.10 (1)
6- 7	-799 / 0	-77.3	-77.3	0.26 (1)	6.25	15- 7	0 / 2534	0.63 (1)
7- 8	0 / 628	-77.3	-77.3	0.36 (1)	10.00	13- 7	-2431 / 0	0.63 (1)
8- 9	0 / 131	-77.3	-77.3	0.27 (1)	10.00	13- 8	-665 / 0	0.41 (1)
9-10	0 / 29	-77.3	-77.3	0.11 (1)	10.00	12- 8	0 / 82	0.03 (4)
18- 2	-1421 / 0	0.0	0.0	0.16 (1)	6.81	2-17	0 / 1311	0.32 (1)
11- 9	-168 / 0	0.0	0.0	0.02 (1)	7.81	12- 9	-112 / 0	0.04 (1)
18-17	0 / 0	-33.0	-33.0	0.07 (4)	10.00			
17-16	0 / 1273	-33.0	-33.0	0.20 (1)	10.00			
16-15	0 / 1681	-33.0	-33.0	0.33 (1)	10.00			
15-14	-628 / 0	-17.5	-17.5	0.18 (1)	6.25			
14-13	-628 / 0	-17.5	-17.5	0.18 (1)	6.25			
13-12	-108 / 0	-17.5	-17.5	0.18 (1)	6.25			
12-11	0 / 0	-17.5	-17.5	0.04 (1)	10.00			

FACTORED CONCENTRATED LOADS (LBS)

JT	LOC.	LC1	MAX-	MAX+	FACE	DIR.	TYPE
3	4-1-13	-241	-241	---	FRONT	VERT	TOTAL
15	13-9-4	-1084	-1084	---	FRONT	VERT	TOTAL

RECEIVED
TOWN OF MILTON
MAR 29, 2017
17-5052
BUILDING DIVISION

READ ALL NOTES ON THIS PAGE AND ON THE ENGINEERING NOTE PAGE ENP-1. THE NOTE PAGE IS AN INTEGRAL PART OF THIS DRAWING AS IT CONTAINS SPECIFICATIONS AND CRITERIA USED IN THE DESIGN OF THIS COMPONENT.

DESIGN CRITERIA

*** SPECIAL LOADS ANALYSIS ***
GEOMETRY AND/OR BASIC LOADS CHANGED BY USER.
LOADS WERE DERIVED FROM USER INPUT
NO FURTHER MODIFICATIONS WERE MADE

SPECIFIED LOADS:

TOP	CH.	LL	=	23.3	PSF
		DL	=	3.0	PSF
BOT	CH.	LL	=	0.0	PSF
		DL	=	7.0	PSF
TOTAL	LOAD		=	33.3	PSF

SPACING = 24.0 IN. C/C

LOADING IN FLAT SECTION BASED ON A SLOPE OF 6.00/12

GIRDER TYPE: CPrimeHip
LEFT SETBACK = 4-1-13
RIGHT SETBACK = 4-1-12
END SETBACK = 6-0-0
END WALL WIDTH = 5-8
CORNER FRAMING TYPE: CONVENTIONAL
END JACK TYPE: CONVENTIONAL
APPLIED TO FRONT SIDE
- ADDT'L LOADS BASED ON 55 % OF GSL.
LOADS APPLIED TO FIRST 13-9-4 OF SPAN MEASURED FROM THE LEFT.

*** NON STANDARD GIRDER ***
ADDT'L USER-DEFINED LOADS APPLIED TO ALL LOAD CASES.

THIS TRUSS IS DESIGNED FOR RESIDENTIAL OR SMALL BUILDING REQUIREMENTS OF PART 9, NBCC 2010

THIS DESIGN COMPLIES WITH:
- PART 9 OF OBC 2012 , BCBC 2012 , ABC 2014
- CSA 086-09
- TPIC 2011

(55 % OF 27.2 P.S.F. G.S.L. PLUS 8.4 P.S.F. RAIN LOAD) EQUALS 23.3 P.S.F. SPECIFIED ROOF LIVE LOAD

ALLOWABLE DEFL.(LL)= L/360 (0.55")
CALCULATED VERT. DEFL.(LL) = L/ 999 (0.05")
ALLOWABLE DEFL.(TL)= L/360 (0.55")
CALCULATED VERT. DEFL.(TL) = L/ 999 (0.09")

CSI: TC=0.65 (3-4:1) , BC=0.33 (15-16:1) , WB=0.73 (4-15:1) , SSI=0.37 (3-4:1)

DOL LUMBER=1.00 NAIL=1.00 LS BEND=1.00 COMP=1.00 SHEAR=1.00 TENS= 1.00

COMPANION LIVE LOAD FACTOR = 0.50

TRUSS PLATE MANUFACTURER IS NOT RESPONSIBLE FOR QUALITY CONTROL IN THE TRUSS MANUFACTURING PLANT .

NAIL VALUES

PLATE	GRIP(DRY) (PSI) MAX	MIN	SHEAR (PLI) MAX	MIN	SECTION (PLI) MAX	MIN
MT20	618	354	1667	822	2284	1656

PLATE PLACEMENT TOL. = 0.250 inches

PLATE ROTATION TOL. = Deg

CONTINUED ON PAGE 2

SCALE = 1:30.2

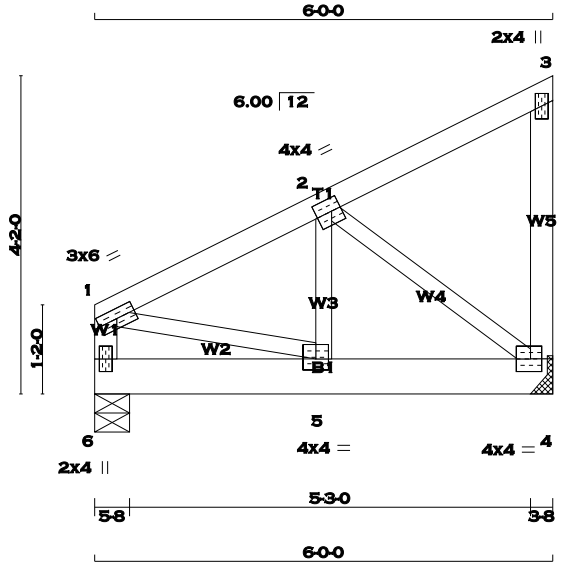

TOTAL WEIGHT = 2 X 29 = 59 lb [M]

LUMBER

N. L. G. A. RULES

CHORDS	SIZE		LUMBER	DESCR.
1 - 3	2x4	DRY	No.2	SPF
4 - 3	2x4	DRY	No.2	SPF
6 - 1	2x4	DRY	No.2	SPF
6 - 4	2x6	DRY	No.2	SPF
ALL WEBS EXCEPT	2x3	DRY	No.2	SPF

DRY: SEASONED LUMBER.

PLATES (table is in inches)

JT	TYPE	PLATES	W	LEN	Y	X
1	TMVW-t	MT20	3.0	6.0		
2	TMWW-t	MT20	4.0	4.0	2.00	1.50
3	TMV+p	MT20	2.0	4.0		
4	BMVW1-t	MT20	4.0	4.0	2.00	1.75
5	BMWW-t	MT20	4.0	4.0	1.75	2.00
6	BMV1+p	MT20	2.0	4.0		

A SIZE FOR SIZE SUBSTITUTION OF MITEK MII20 WITH TEE-LOK TL20 PLATES IS ALLOWED.

DIMENSIONS, SUPPORTS AND LOADINGS SPECIFIED BY FABRICATOR TO BE VERIFIED BY BUILDING DESIGNER

BEARINGS

JT	FACTORED GROSS REACTION VERT	HORZ	MAXIMUM FACTORED GROSS REACTION DOWN	HORZ	UPLIFT	INPUT BRG IN-SX	REQRD BRG IN-SX
4	1085	0	1085	0	0	HANGER BY OTHERS MIN. SEAT SIZE: 3-8	
6	1085	0	1085	0	0	5-8	5-8

UNFACTORED REACTIONS

JT	1ST LCASE COMBINED	MAX./MIN. COMPONENT REACTIONS SNOW	LIVE	PERM.LIVE	WIND	DEAD	SOIL
4	761	533 / 0	0 / 0	0 / 0	0 / 0	229 / 0	0 / 0
6	761	533 / 0	0 / 0	0 / 0	0 / 0	229 / 0	0 / 0

BEARING MATERIAL TO BE SPF NO.2 OR BETTER AT JOINT(S) 6

BRACING

TOP CHORD TO BE SHEATHED OR MAX. PURLIN SPACING = 6.25 FT.
MAX. UNBRACED BOTTOM CHORD LENGTH = 10.00 FT. OR RIGID CEILING DIRECTLY APPLIED.

ALL PITCH BREAKS AND PERIMETER CORNER JOINTS MUST BE LATERALLY RESTRAINED.

LOADING

TOTAL LOAD CASES: (4)

CHORDS

MEMB. FR-TO	MAX. FACTORED FORCE (LBS)	FACTORED VERT. LOAD (PLF) FROM	TO	MAX CSI (LC)	MAX. UNBRAC LENGTH
1- 2	-923 / 0	-77.3	-77.3	0.11 (1)	6.25
2- 3	-10 / 0	-77.3	-77.3	0.10 (1)	6.25
4- 3	-93 / 0	0.0	0.0	0.02 (1)	7.81
6- 1	-726 / 0	0.0	0.0	0.08 (1)	7.81
6- 5	0 / 0	-284.3	-284.3	0.17 (1)	10.00
5- 4	0 / 834	-284.3	-284.3	0.27 (1)	10.00

WEBS

MEMB. FR-TO	MAX. FACTORED FORCE (LBS)	MAX CSI (LC)
5- 2	0 / 773	0.19 (1)
2- 4	-1047 / 0	0.26 (1)
1- 5	0 / 862	0.21 (1)

DESIGN CRITERIA

SPECIFIED LOADS:

TOP CH.	LL	=	23.3	PSF
	DL	=	3.0	PSF
BOT CH.	LL	=	0.0	PSF
	DL	=	7.0	PSF
TOTAL LOAD		=	33.3	PSF

SPACING = 24.0 IN. C/C

GIRDER TYPE: CStdGirder
START DISTANCE = 0-0
START SPAN CARRIED = 13-8-8
END DISTANCE = 6-0-0
END SPAN CARRIED = 13-8-8
END WALL WIDTH = 5-8
APPLIED TO FRONT SIDE OF BOTTOM CHORD.
- ADDT'L LOADS BASED ON 55 % OF GSL.

THIS TRUSS IS DESIGNED FOR RESIDENTIAL OR SMALL BUILDING REQUIREMENTS OF PART 9, NBCC 2010

THIS DESIGN COMPLIES WITH:
- PART 9 OF OBC 2012 , BCBC 2012 , ABC 2014
- CSA 086-09
- TPIC 2011

(55 % OF 27.2 P.S.F. G.S.L. PLUS 8.4 P.S.F. RAIN LOAD) EQUALS 23.3 P.S.F. SPECIFIED ROOF LIVE LOAD

ALLOWABLE DEFL.(LL)= L/360 (0.20")
CALCULATED VERT. DEFL.(LL) = L/ 999 (0.01")
ALLOWABLE DEFL.(TL)= L/360 (0.20")
CALCULATED VERT. DEFL.(TL) = L/ 999 (0.02")

CSI: TC=0.11 (1-2:1) , BC=0.27 (4-5:1) , WB=0.26 (2-4:1) , SSI=0.33 (5-6:1)

DOL LUMBER=1.00 NAIL=1.00 LS BEND=1.00 COMP=1.00 SHEAR=1.00 TENS= 1.00

COMPANION LIVE LOAD FACTOR = 0.50

TRUSS PLATE MANUFACTURER IS NOT RESPONSIBLE FOR QUALITY CONTROL IN THE TRUSS MANUFACTURING PLANT .

NAIL VALUES

PLATE	GRIP(DRY) (PSI) MAX	MIN	SHEAR (PLI) MAX	MIN	SECTION (PLI) MAX	MIN
MT20	618	354	1667	822	2284	1656

PLATE PLACEMENT TOL. = 0.250 inches

PLATE ROTATION TOL. = 5.0 Deg.

JSI GRIP= 0.87 (2) (INPUT = 0.90)
JSI METAL= 0.31 (5) (INPUT = 1.00)

LICENSED PROFESSIONAL ENGINEER
P.M. TREVISAN
100136551
March 13th, 2017
PROVINCE OF ONTARIO

RECEIVED
TOWN OF MILTON
MAR 29, 2017
17-5052
BUILDING DIVISION

READ ALL NOTES ON THIS PAGE AND ON THE ENGINEERING NOTE PAGE ENP-1. THE NOTE PAGE IS AN INTEGRAL PART OF THIS DRAWING AS IT CONTAINS SPECIFICATIONS AND CRITERIA USED IN THE DESIGN OF THIS COMPONENT.

KOTT

JOB NAME	TRUSS NAME	QUANTITY	PLY	JOB DESC.	DRWG NO.
PT0317-060	GIRD03	2	1	TRUSS DESC. LECCO RIDGE-BLOCK 332	ENG JOB: PT0317-060

KOTT , Stouffville, ON, CGC

Version 8.100 S Feb 9 2017 MiTek Industries, Inc. Mon Mar 13 13:24:28 2017 Page 1

ID:gtheX5EqOVSIkwpr5Eyn2TyGKTI-eUrMmAcNPP5xHr7Ki3pmT0OOmYb?KpWmFBQnuMzbLkn

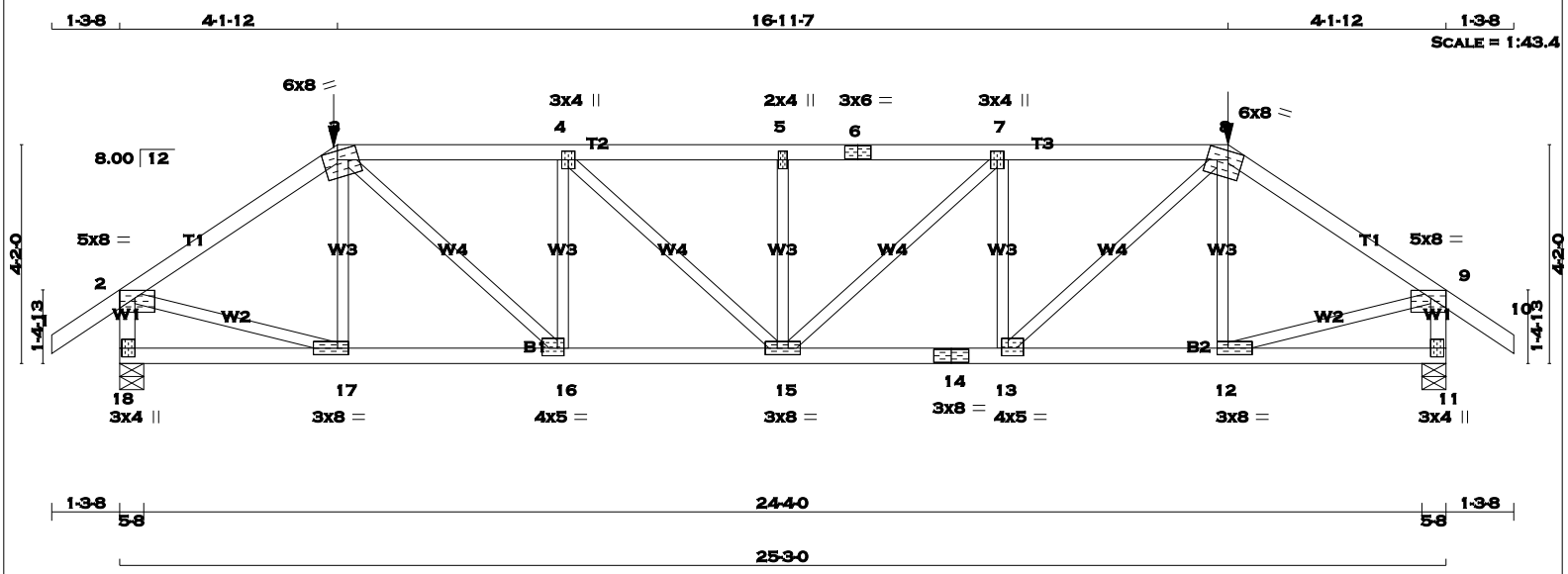

TOTAL WEIGHT = 2 X 104 = 208 lb [M]

LUMBER

N. L. G. A. RULES

CHORDS	SIZE		LUMBER	DESCR.
1 - 3	2x4	DRY	No.2	SPF
3 - 6	2x4	DRY	No.2	SPF
6 - 8	2x4	DRY	No.2	SPF
8 - 10	2x4	DRY	No.2	SPF
18 - 2	2x4	DRY	No.2	SPF
11 - 9	2x4	DRY	No.2	SPF
18 - 14	2x4	DRY	No.2	SPF
14 - 11	2x4	DRY	No.2	SPF
ALL WEBS EXCEPT	2x3	DRY	No.2	SPF

DRY: SEASONED LUMBER.

PLATES (table is in inches)

JT	TYPE	PLATES	W	LEN	Y	X
2	TMVW-p	MT20	5.0	8.0	1.75	3.50
3	TTWW-m	MT20	6.0	8.0	2.00	3.25
4	TMWW+t	MT20	3.0	4.0		
5	TMW+w	MT20	2.0	4.0		
6	TS-t	MT20	3.0	6.0		
7	TMWW+t	MT20	3.0	4.0		
8	TTWW-m	MT20	6.0	8.0	2.00	3.25
9	TMVW-p	MT20	5.0	8.0	1.75	3.50
11	BMV1+p	MT20	3.0	4.0	2.00	
12	BMWW-t	MT20	3.0	8.0	1.50	2.50
13	BMWW-t	MT20	4.0	5.0	1.75	1.50
14	BS-t	MT20	3.0	8.0		
15	BMWWW-t	MT20	3.0	8.0		
16	BMWW-t	MT20	4.0	5.0	1.75	1.50
17	BMWW-t	MT20	3.0	8.0	1.50	2.50
18	BMV1+p	MT20	3.0	4.0	2.00	0.50

A SIZE FOR SIZE SUBSTITUTION OF MITEK MII20 WITH TEE-LOK TL20 PLATES IS ALLOWED.

HANGERS NOTES

1) SPECIAL HANGER(S) OR CONNECTION(S) REQUIRED TO SUPPORT CONCENTRATED LOAD(S) 240.5 lbs FACTORED DOWN AT 21-1-4, AND 240.5 lbs FACTORED DOWN AT 4-1-12 ON TOP CHORD. DESIGN FOR UNSPECIFIED CONNECTION(S) IS DELEGATED TO THE BUILDING DESIGNER.

DIMENSIONS, SUPPORTS AND LOADINGS SPECIFIED BY FABRICATOR TO BE VERIFIED BY BUILDING DESIGNER

BEARINGS

JT	FACTORED GROSS REACTION VERT	HORZ	MAXIMUM FACTORED GROSS REACTION DOWN	HORZ	UPLIFT	INPUT BRG IN-SX	REQRD BRG IN-SX
18	2320	0	2320	0	0	5-8	5-8
11	2320	0	2320	0	0	5-8	5-8

UNFACTORED REACTIONS

JT	1ST LCASE COMBINED	MAX./MIN. COMPONENT REACTIONS SNOW	LIVE	PERM.LIVE	WIND	DEAD	SOIL
18	1627	1146 / 0	0 / 0	0 / 0	0 / 0	481 / 0	0 / 0
11	1627	1146 / 0	0 / 0	0 / 0	0 / 0	481 / 0	0 / 0

BEARING MATERIAL TO BE SPF NO.2 OR BETTER AT JOINT(S) 18, 11

BRACING

TOP CHORD TO BE SHEATHED OR MAX. PURLIN SPACING = 2.89 FT.
MAX. UNBRACED BOTTOM CHORD LENGTH = 10.00 FT. OR RIGID CEILING DIRECTLY APPLIED.

ALL PITCH BREAKS AND PERIMETER CORNER JOINTS MUST BE LATERALLY RESTRAINED.

LOADING

TOTAL LOAD CASES: (4)

CHORDS

MEMB. FR-TO	MAX. FACTORED FORCE (LBS)	FACTORED VERT. LOAD (PLF) FROM	TO	LC1	MAX CSI (LC)	MAX. UNBRAC LENGTH
1- 2	0 / 29	-77.3	-77.3	0.11 (1)	10.00	
2- 3	-2601 / 0	-77.3	-77.3	0.39 (1)	3.89	
3- 4	-3453 / 0	-145.8	-145.8	0.63 (1)	3.10	
4- 5	-3830 / 0	-145.8	-145.8	0.67 (1)	2.89	
5- 6	-3830 / 0	-145.8	-145.8	0.67 (1)	2.89	
6- 7	-3830 / 0	-145.8	-145.8	0.67 (1)	2.89	
7- 8	-3453 / 0	-145.8	-145.8	0.63 (1)	3.10	
8- 9	-2601 / 0	-77.3	-77.3	0.39 (1)	3.89	
9-10	0 / 29	-77.3	-77.3	0.11 (1)	10.00	
18- 2	-2263 / 0	0.0	0.0	0.26 (1)	5.61	
11- 9	-2263 / 0	0.0	0.0	0.26 (1)	5.61	
18-17	0 / 0	-33.0	-33.0	0.15 (4)	10.00	
17-16	0 / 2150	-33.0	-33.0	0.46 (1)	10.00	
16-15	0 / 3453	-33.0	-33.0	0.68 (1)	10.00	
15-14	0 / 3453	-33.0	-33.0	0.68 (1)	10.00	
14-13	0 / 3453	-33.0	-33.0	0.68 (1)	10.00	
13-12	0 / 2150	-33.0	-33.0	0.46 (1)	10.00	
12-11	0 / 0	-33.0	-33.0	0.15 (4)	10.00	

WEBS

MEMB. FR-TO	MAX. FACTORED FORCE (LBS)	MAX CSI (LC)
17- 3	-390 / 17	0.11 (1)
3-16	0 / 1753	0.43 (1)
16- 4	-1040 / 0	0.29 (1)
4-15	0 / 514	0.13 (1)
15- 5	-562 / 0	0.15 (1)
15- 7	0 / 514	0.13 (1)
13- 7	-1040 / 0	0.29 (1)
13- 8	0 / 1753	0.43 (1)
12- 8	-390 / 17	0.11 (1)
2-17	0 / 2229	0.55 (1)
12- 9	0 / 2229	0.55 (1)

FACTORED CONCENTRATED LOADS (LBS)

JT	LOC.	LC1	MAX-	MAX+	FACE	DIR.	TYPE
3	4-1-12	-241	-241	---	FRONT	VERT	TOTAL
8	21-1-4	-241	-241	---	FRONT	VERT	TOTAL

RECEIVED
TOWN OF MILTON
MAR 29, 2017
17-5052
BUILDING DIVISION

READ ALL NOTES ON THIS PAGE AND ON THE ENGINEERING NOTE PAGE ENP-1. THE NOTE PAGE IS AN INTEGRAL PART OF THIS DRAWING AS IT CONTAINS SPECIFICATIONS AND CRITERIA USED IN THE DESIGN OF THIS COMPONENT.

DESIGN CRITERIA

SPECIFIED LOADS:

TOP CH.	LL	=	23.3	PSF
	DL	=	3.0	PSF
BOT CH.	LL	=	0.0	PSF
	DL	=	7.0	PSF
TOTAL LOAD		=	33.3	PSF

SPACING = 24.0 IN. C/C

LOADING IN FLAT SECTION BASED ON A SLOPE OF 6.00/12

GIRDER TYPE: CPrimeHip
SIDE SETBACK = 4-1-12
END SETBACK = 6-0-0
END WALL WIDTH = 5-8
CORNER FRAMING TYPE: CONVENTIONAL
END JACK TYPE: CONVENTIONAL
APPLIED TO FRONT SIDE
- ADDT'L LOADS BASED ON 55 % OF GSL.

THIS TRUSS IS DESIGNED FOR RESIDENTIAL OR SMALL BUILDING REQUIREMENTS OF PART 9, NBCC 2010

THIS DESIGN COMPLIES WITH:
- PART 9 OF OBC 2012 , BCBC 2012 , ABC 2014
- CSA 086-09
- TPIC 2011

(55 % OF 27.2 P.S.F. G.S.L. PLUS 8.4 P.S.F. RAIN LOAD) EQUALS 23.3 P.S.F. SPECIFIED ROOF LIVE LOAD

ALLOWABLE DEFL.(LL)= L/360 (0.84")
CALCULATED VERT. DEFL.(LL) = L/ 999 (0.16")
ALLOWABLE DEFL.(TL)= L/360 (0.84")
CALCULATED VERT. DEFL.(TL) = L/ 999 (0.28")

CSI: TC=0.67 (5-7:1) , BC=0.68 (15-16:1) , WB=0.55 (2-17:1) , SSI=0.32 (3-4:1)

DOL LUMBER=1.00 NAIL=1.00 LS BEND=1.00 COMP=1.00 SHEAR=1.00 TENS= 1.00

COMPANION LIVE LOAD FACTOR = 0.50

TRUSS PLATE MANUFACTURER IS NOT RESPONSIBLE FOR QUALITY CONTROL IN THE TRUSS MANUFACTURING PLANT .

NAIL VALUES

PLATE	GRIP(DRY) (PSI) MAX	MIN	SHEAR (PLI) MAX	MIN	SECTION (PLI) MAX	MIN
MT20	618	354	1667	822	2284	1656

PLATE PLACEMENT TOL. = 0.250 inches

PLATE ROTATION TOL. = 5.0 Deg.

JSI GRIP= 0.90 (13) (INPUT = 0.90)
JSI METAL= 0.91 (14) (INPUT = 1.00)

KOTT

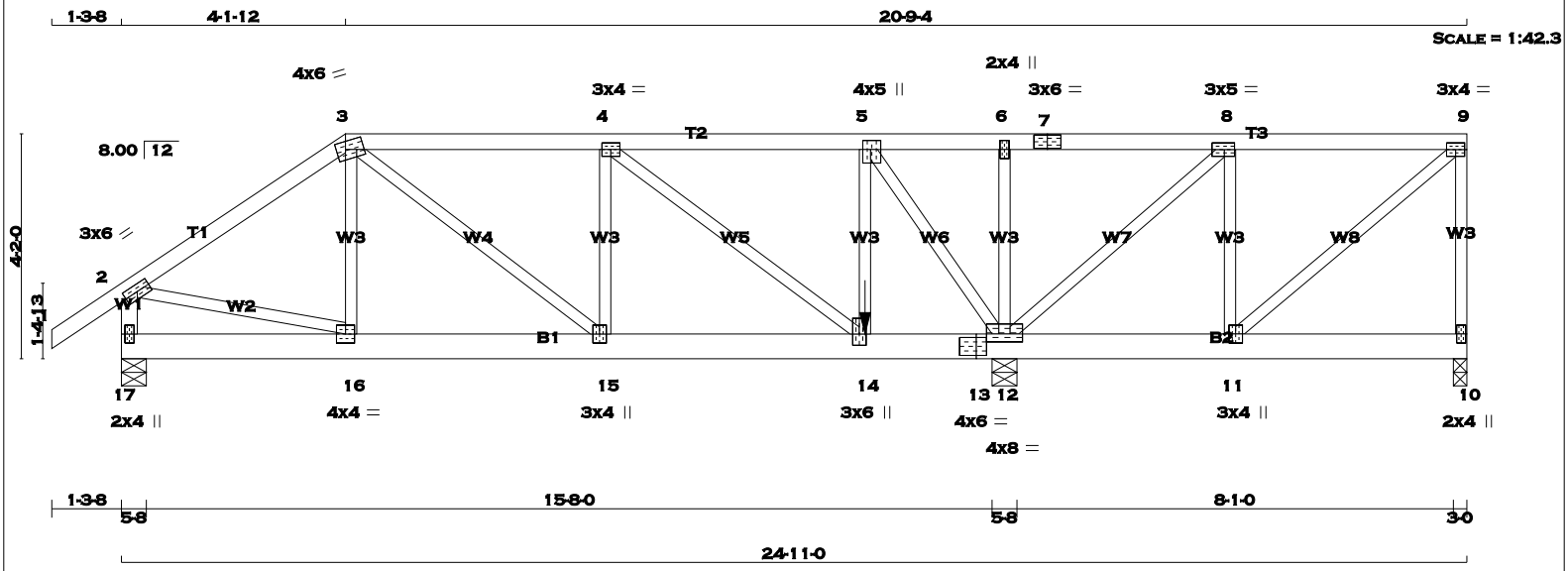

TOTAL WEIGHT = 118 lb [M]

LUMBER

N. L. G. A. RULES

CHORDS	SIZE		LUMBER	DESCR.
1 - 3	2x4	DRY	No.2	SPF
3 - 7	2x4	DRY	No.2	SPF
7 - 9	2x4	DRY	No.2	SPF
10 - 9	2x3	DRY	No.2	SPF
17 - 2	2x4	DRY	No.2	SPF
17 - 13	2x6	DRY	No.2	SPF
13 - 10	2x6	DRY	No.2	SPF
ALL WEBS EXCEPT	2x3	DRY	No.2	SPF

DRY: SEASONED LUMBER.

PLATES (table is in inches)

JT	TYPE	PLATES	W	LEN	Y	X
2	TMVW-t	MT20	3.0	6.0		
3	TTWW-m	MT20	4.0	6.0	1.75	2.00
4	TMWW-t	MT20	3.0	4.0		
5	TMWW+t	MT20	4.0	5.0	2.00	1.75
6	TMW+w	MT20	2.0	4.0		
7	TS-t	MT20	3.0	6.0		
8	TMWW-t	MT20	3.0	5.0	1.50	2.25
9	TMVW-t	MT20	3.0	4.0		
10	BMV1+p	MT20	2.0	4.0		
11	BMWW+t	MT20	3.0	4.0		
12	BMWWW1-t	MT20	4.0	8.0	1.75	4.00
13	BS-t	MT20	4.0	6.0	2.00	2.25
14	BMWW+t	MT20	3.0	6.0	2.50	1.50
15	BMWW+t	MT20	3.0	4.0		
16	BMWW-t	MT20	4.0	4.0		
17	BMV1+p	MT20	2.0	4.0		

A SIZE FOR SIZE SUBSTITUTION OF MITEK MII20 WITH TEE-LOK TL20 PLATES IS ALLOWED.

HANGERS NOTES

1) SPECIAL HANGER(S) OR CONNECTION(S) REQUIRED TO SUPPORT CONCENTRATED LOAD(S) 1084.3 lbs FACTORED DOWN AT 13-9-4 ON BOTTOM CHORD. DESIGN FOR UNSPECIFIED CONNECTION(S) IS DELEGATED TO THE BUILDING DESIGNER.

DIMENSIONS, SUPPORTS AND LOADINGS SPECIFIED BY FABRICATOR TO BE VERIFIED BY BUILDING DESIGNER

BEARINGS

JT	FACTORED GROSS REACTION VERT	HORZ	MAXIMUM FACTORED GROSS REACTION DOWN	HORZ	UPLIFT	INPUT BRG IN-SX	REQRD BRG IN-SX
10	490	0	490	0	0	3-0	3-0
17	926	0	926	0	0	5-8	5-8
12	3074	0	3074	0	0	5-8	5-8

UNFACTORED REACTIONS

JT	1ST LCASE COMBINED	MAX./MIN. COMPONENT REACTIONS SNOW	LIVE	PERM.LIVE	WIND	DEAD	SOIL
10	345	235 / 0	0 / 0	0 / 0	0 / 0	110 / 0	0 / 0
17	648	463 / 0	0 / 0	0 / 0	0 / 0	185 / 0	0 / 0
12	2156	1518 / 0	0 / 0	0 / 0	0 / 0	638 / 0	0 / 0

BEARING MATERIAL TO BE SPF NO.2 OR BETTER AT JOINT(S) 10, 17, 12

BRACING

TOP CHORD TO BE SHEATHED OR MAX. PURLIN SPACING = 5.83 FT.
MAX. UNBRACED BOTTOM CHORD LENGTH = 10.00 FT. OR RIGID CEILING DIRECTLY APPLIED.

ALL PITCH BREAKS AND PERIMETER CORNER JOINTS MUST BE LATERALLY RESTRAINED.

LOADING

TOTAL LOAD CASES: (4)

CHORDS

MEMB. FR-TO	MAX. FACTORED FORCE (LBS)	FACTORED VERT. LOAD (PLF) FROM	TO	LC1 MAX CSI (LC)	MAX. UNBRAC LENGTH
1- 2	0 / 29	-77.3	-77.3	0.11 (1)	10.00
2- 3	-833 / 0	-77.3	-77.3	0.27 (1)	6.25
3- 4	-990 / 0	-77.3	-77.3	0.31 (1)	5.83
4- 5	-602 / 0	-77.3	-77.3	0.29 (1)	6.25
5- 6	0 / 520	-145.8	-145.8	0.33 (1)	10.00
6- 7	0 / 520	-145.8	-145.8	0.52 (1)	10.00
7- 8	0 / 520	-145.8	-145.8	0.52 (1)	10.00
8- 9	-184 / 0	-145.8	-145.8	0.43 (1)	6.25
10- 9	-413 / 0	0.0	0.0	0.15 (1)	7.81
17- 2	-893 / 0	0.0	0.0	0.10 (1)	7.81
17-16	0 / 0	-17.5	-17.5	0.04 (4)	10.00
16-15	0 / 690	-17.5	-17.5	0.11 (1)	10.00
15-14	0 / 990	-17.5	-17.5	0.21 (1)	10.00
14-13	0 / 602	-33.0	-33.0	0.25 (1)	10.00
13-12	0 / 602	-33.0	-33.0	0.25 (1)	10.00
12-11	0 / 184	-33.0	-33.0	0.19 (1)	10.00
11-10	0 / 0	-33.0	-33.0	0.07 (4)	10.00

WEBS

MEMB. FR-TO	MAX. FACTORED FORCE (LBS)	MAX CSI (LC)
16- 3	-82 / 43	0.02 (1)
3-15	0 / 382	0.09 (1)
15- 4	-122 / 38	0.03 (1)
4-14	-495 / 0	0.32 (1)
14- 5	0 / 1320	0.33 (1)
5-12	-1991 / 0	0.69 (1)
12- 6	-491 / 0	0.13 (1)
12- 8	-950 / 0	0.51 (1)
11- 8	-82 / 102	0.04 (4)
11- 9	0 / 243	0.06 (1)
2-16	0 / 711	0.18 (1)

FACTORED CONCENTRATED LOADS (LBS)

JT	LOC.	LC1	MAX-	MAX+	FACE	DIR.	TYPE
14	13-9-4	-1084	-1084	---	FRONT	VERT	TOTAL

RECEIVED
TOWN OF MILTON
MAR 29, 2017
17-5052
BUILDING DIVISION

READ ALL NOTES ON THIS PAGE AND ON THE ENGINEERING NOTE PAGE ENP-1. THE NOTE PAGE IS AN INTEGRAL PART OF THIS DRAWING AS IT CONTAINS SPECIFICATIONS AND CRITERIA USED IN THE DESIGN OF THIS COMPONENT.

DESIGN CRITERIA

*** SPECIAL LOADS ANALYSIS ***
GEOMETRY AND/OR BASIC LOADS CHANGED BY USER.
LOADS WERE DERIVED FROM USER INPUT
NO FURTHER MODIFICATIONS WERE MADE

SPECIFIED LOADS:

TOP	CH.	LL	=	23.3	PSF
		DL	=	3.0	PSF
BOT	CH.	LL	=	0.0	PSF
		DL	=	7.0	PSF
TOTAL	LOAD		=	33.3	PSF

SPACING = 24.0 IN. C/C

LOADING IN FLAT SECTION BASED ON A SLOPE OF 6.00/12

GIRDER TYPE: CPrimeHip
LEFT SETBACK = 4-1-12
RIGHT SETBACK = 0-0
END SETBACK = 6-0-0
END WALL WIDTH = 5-8
CORNER FRAMING TYPE: CONVENTIONAL
END JACK TYPE: CONVENTIONAL
APPLIED TO FRONT SIDE
- ADDT'L LOADS BASED ON 55 % OF GSL.
LOADS APPLIED TO FIRST 11-1-12 OF SPAN MEASURED FROM THE RIGHT.

*** NON STANDARD GIRDER ***
ADDT'L USER-DEFINED LOADS APPLIED TO ALL LOAD CASES.

THIS TRUSS IS DESIGNED FOR RESIDENTIAL OR SMALL BUILDING REQUIREMENTS OF PART 9, NBCC 2010

THIS DESIGN COMPLIES WITH:
- PART 9 OF OBC 2012 , BCBC 2012 , ABC 2014
- CSA 086-09
- TPIC 2011

(55 % OF 27.2 P.S.F. G.S.L. PLUS 8.4 P.S.F. RAIN LOAD) EQUALS 23.3 P.S.F. SPECIFIED ROOF LIVE LOAD

ALLOWABLE DEFL.(LL)= L/360 (0.55")
CALCULATED VERT. DEFL.(LL) = L/ 999 (0.03")
ALLOWABLE DEFL.(TL)= L/360 (0.55")
CALCULATED VERT. DEFL.(TL) = L/ 999 (0.05")

CSI: TC=0.52 (6-8:1) , BC=0.25 (12-14:1) , WB=0.69 (5-12:1) , SSI=0.33 (8-9:1)

DOL LUMBER=1.00 NAIL=1.00 LS BEND=1.00 COMP=1.00 SHEAR=1.00 TENS= 1.00

COMPANION LIVE LOAD FACTOR = 0.50

TRUSS PLATE MANUFACTURER IS NOT RESPONSIBLE FOR QUALITY CONTROL IN THE TRUSS MANUFACTURING PLANT .

NAIL VALUES

PLATE	GRIP(DRY) (PSI) MAX	MIN	SHEAR (PLI) MAX	MIN	SECTION (PLI) MAX	MIN
MT20	618	354	1667	822	2284	1656

PLATE PLACEMENT TOL. = 0.250 inches

PLATE ROTATION TOL. = Deg

CONTINUED ON PAGE 2

SCALE = 1:71.3

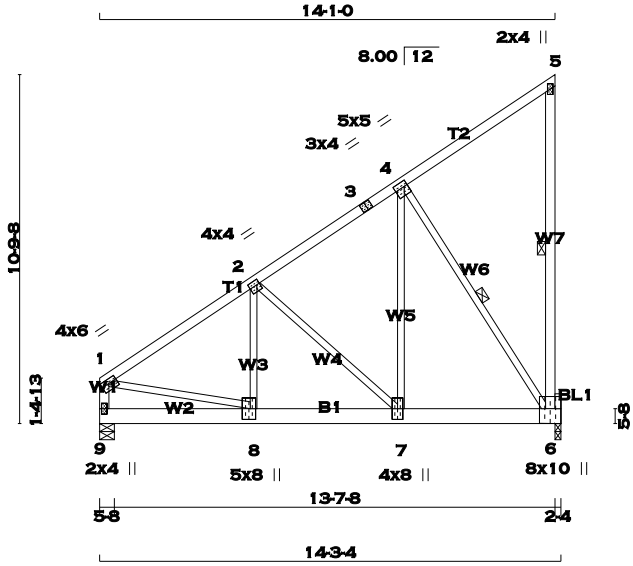

TOTAL WEIGHT = 2 X 81 = 163 lb [M]

LUMBER

N. L. G. A. RULES

CHORDS	SIZE		LUMBER	DESCR.
1 - 3	2x4	DRY	No.2	SPF
3 - 5	2x4	DRY	No.2	SPF
6 - 5	2x4	DRY	No.2	SPF
9 - 1	2x4	DRY	No.2	SPF
9 - 6	2x6	DRY	No.2	SPF
BEARING BLOCKS				
BL1	2x6	DRY	No.2	SPF
ALL WEBS EXCEPT	2x3	DRY	No.2	SPF

DRY: SEASONED LUMBER.

DESIGN CONSISTS OF 2 TRUSSES BUILT SEPARATELY THEN FASTENED TOGETHER AS FOLLOWS:

CHORDS #ROWS	SURFACE SPACING (IN)		LOAD(PLF)
TOP CHORDS : (0.122"X3") SPIRAL NAILS			
1- 3	1	12	TOP
3- 5	1	12	TOP
5- 6	1	12	TOP
9- 1	1	12	TOP
BOTTOM CHORDS : (0.122"X3") SPIRAL NAILS			
9- 6	2	8	SIDE(301.3)
WEBS : (0.122"X3") SPIRAL NAILS			
2x3	1	6	

NAILS TO BE DRIVEN FROM ONE SIDE ONLY.

TOP - COMPONENTS ARE LOADED FROM THE TOP AND MUST BE PLACED ON TOP EDGE OF ALL PLIES FOR THE LOAD TO BE TRANSFERRED TO EACH PLY.

SIDE - PLF SHOWN IS THE EQUIVALENT UDL APPLIED TO ONE SIDE THAT THE CORRESPONDING NAILING PATTERN SHALL BE CAPABLE OF TRANSFERING. REMAINING PLF MUST BE APPLIED ON THE OPPOSITE SIDE OR ON THE TOP.

PLATES (table is in inches)

JT	TYPE	PLATES	W	LEN	Y	X
1	TMVW-t	MT20	4.0	6.0	1.50	3.00
2	TMWW-t	MT20	4.0	4.0	1.75	1.00
3	TS-t	MT20	3.0	4.0		
4	TMWW-t	MT20	5.0	5.0	2.00	1.25
5	TMV+p	MT20	2.0	4.0		
6	BMVWK1+t	MT20	8.0	10.0	Edge	4.00
7	BMWW+t	MT20	4.0	8.0		

DIMENSIONS, SUPPORTS AND LOADINGS SPECIFIED BY FABRICATOR TO BE VERIFIED BY BUILDING DESIGNER

BEARINGS

JT	FACTORED GROSS REACTION VERT	HORZ	MAXIMUM FACTORED GROSS REACTION DOWN	HORZ	UPLIFT	INPUT BRG IN-SX	REQRD BRG IN-SX
6	4288	0	4288	0	0	2-4	2-4
9	4574	0	4574	0	0	5-8	5-8

UNFACTORED REACTIONS

JT	1ST LCASE COMBINED	MAX./MIN. COMPONENT REACTIONS SNOW	LIVE	PERM.LIVE	WIND	DEAD	SOIL
6	3009	2107 / 0	0 / 0	0 / 0	0 / 0	903 / 0	0 / 0
9	3210	2246 / 0	0 / 0	0 / 0	0 / 0	965 / 0	0 / 0

BEARING MATERIAL TO BE SPF NO.2 OR BETTER AT JOINT(S) 6, 9
BEARING SIZE FACTOR = 1.08 AT JNT(S) 6 (BASED ON SUPPORT DEPTH = 1-8)

BRACING

TOP CHORD TO BE SHEATHED OR MAX. PURLIN SPACING = 4.42 FT.
MAX. UNBRACED BOTTOM CHORD LENGTH = 10.00 FT. OR RIGID CEILING DIRECTLY APPLIED.

ALL PITCH BREAKS AND PERIMETER CORNER JOINTS MUST BE LATERALLY RESTRAINED.

1 - 2x3 SPF No.2 LATERAL BRACE(S) AT 1/ 2 LENGTH OF 5-6. DBS = 20-0-0 . CBF = 19 LBS.
1 - 2x3 SPF No.2 LATERAL BRACE(S) AT 1/ 2 LENGTH OF 4-6. DBS = 4-0-0 . CBF = 93 LBS.

DBS = DIAGONAL BRACE SPACING (MAX). CBF = CUMULATIVE BRACING FORCE. FASTEN LATERAL BRACE(S) TO EACH PLY USING (0.122"X3") SPIRAL NAILS : 1 NAIL FOR 2x3 BRACE(S), 2 FOR 1x4, 2x4, 2x5, 3 FOR 2x6, 4 FOR 2x8, 5 FOR 2x10, AND 6 FOR 2x12.

END VERTICAL(S) MUST BE SHEATHED OR HAVE BRACES AS INDICATED IN THE MAX. UNBRACED LENGTH COLUMN OF THE TABLE BELOW

LOADING

TOTAL LOAD CASES: (4)

CHORDS MEMB. FR-TO	MAX. FACTORED FORCE (LBS)	FACTORED VERT. LOAD LC1 (PLF) FROM	TO	MAX CSI (LC)	MAX. UNBRAC LENGTH
1- 2	-4332 / 0	-77.3	-77.3	0.24 (1)	4.42
2- 3	-2397 / 0	-77.3	-77.3	0.17 (1)	5.64
3- 4	-2397 / 0	-77.3	-77.3	0.17 (1)	5.64
4- 5	-18 / 0	-77.3	-77.3	0.13 (1)	6.25
6- 5	-149 / 0	0.0	0.0	0.04 (1)	6.25
9- 1	-3327 / 0	0.0	0.0	0.19 (1)	6.39
9- 8	0 / 0	-620.2	-620.2	0.46 (1)	10.00
8- 7	0 / 3615	-525.3	-525.3	0.64 (1)	10.00
7- 6	0 / 2001	-525.3	-525.3	0.49 (1)	10.00

WEBS MEMB. FR-TO	MAX. FACTORED FORCE (LBS)	MAX CSI (LC)
8- 2	0 / 2186	0.27 (1)
2- 7	-2190 / 0	0.73 (1)
7- 4	0 / 4050	0.50 (1)
4- 6	-3713 / 0	0.93 (1)
1- 8	0 / 3694	0.46 (1)

DESIGN CRITERIA

SPECIFIED LOADS:

TOP CH.	LL	=	23.3	PSF
	DL	=	3.0	PSF
BOT CH.	LL	=	0.0	PSF
	DL	=	7.0	PSF
TOTAL LOAD		=	33.3	PSF

SPACING = 24.0 IN. C/C

GIRDER TYPE: CStdGirder
START DISTANCE = 0-0
START SPAN CARRIED = 27-10-8
END DISTANCE = 4-7-8
END SPAN CARRIED = 27-10-8
END WALL WIDTH = 5-8
APPLIED TO FRONT SIDE OF BOTTOM CHORD.
- ADDT'L LOADS BASED ON 55 % OF GSL.

GIRDER TYPE: CStdGirder
START DISTANCE = 4-7-8
START SPAN CARRIED = 23-10-8
END DISTANCE = 14-2-10
END SPAN CARRIED = 23-10-8
END WALL WIDTH = 5-8
APPLIED TO FRONT SIDE OF BOTTOM CHORD.
- ADDT'L LOADS BASED ON 55 % OF GSL.

THIS TRUSS IS DESIGNED FOR RESIDENTIAL OR SMALL BUILDING REQUIREMENTS OF PART 9, NBCC 2010

THIS DESIGN COMPLIES WITH:
- PART 9 OF OBC 2012 , BCBC 2012 , ABC 2014
- CSA 086-09
- TPIC 2011

(55 % OF 27.2 P.S.F. G.S.L. PLUS 8.4 P.S.F. RAIN LOAD) EQUALS 23.3 P.S.F. SPECIFIED ROOF LIVE LOAD

ALLOWABLE DEFL.(LL)= L/360 (0.46")
CALCULATED VERT. DEFL.(LL) = L/ 999 (0.06")
ALLOWABLE DEFL.(TL)= L/360 (0.46")
CALCULATED VERT. DEFL.(TL) = L/ 999 (0.11")

CSI: TC=0.24 (1-2:1) , BC=0.64 (7-8:1) , WB=0.93 (4-6:1) , SSI=0.57 (8-9:1)

DOL LUMBER=1.00 NAIL=1.00 LS BEND=1.00 COMP=1.00 SHEAR=1.00 TENS= 1.00

COMPANION LIVE LOAD FACTOR = 0.50

TRUSS PLATE MANUFACTURER IS NOT RESPONSIBLE FOR QUALITY CONTROL IN THE TRUSS MANUFACTURING PLANT .

NAIL VALUES

PLATE	GRIP(DRY) (PSI) MAX	MIN	SHEAR (PLI) MAX	MIN	SECTION (PLI) MAX	MIN
MT20	618	354	1667	822	2284	1656

PLATE PLACEMENT TOL. = 0.250 inches

PLATE ROTATION TOL. = 5.0 Deg.

JSI GRIP= 0.88 (8) (INPUT = 0.90)
JSI METAL= 0.55 (1) (INPUT = 1.00)

LICENSED PROFESSIONAL ENGINEER
P.M. TREVISAN
100136551
March 13th, 2017
PROVINCE OF ONTARIO

RECEIVED
TOWN OF MILTON
MAR 29, 2017
17-5052
BUILDING DIVISION

READ ALL NOTES ON THIS PAGE AND ON THE ENGINEERING NOTE PAGE ENP-1. THE NOTE PAGE IS AN INTEGRAL PART OF THIS DRAWING AS IT CONTAINS SPECIFICATIONS AND CRITERIA USED IN THE DESIGN OF THIS COMPONENT.

KOTT

CONTINUED ON PAGE 2

JOB NAME	TRUSS NAME	QUANTITY	PLY	JOB DESC.	DRWG NO.
PT0317-060	GIRD06	1	3	TRUSS DESC. LECCO RIDGE-BLOCK 332	

KOTT , Stouffville, ON, CGC

Version 8.100 S Feb 9 2017 MiTek Industries, Inc. Mon Mar 13 13:24:30 2017 Page 1
ID:gtheX5EqOVSIkwpr5Eyn2TyGKTI-bsz6Bsddx0MfX8HjqUrEZRTs7MN4ofv3iVvuzEzbLkl

SCALE = 1:70.2

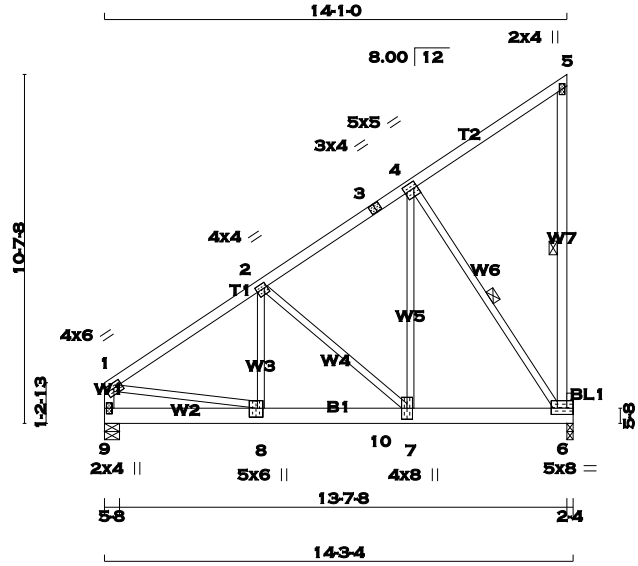

TOTAL WEIGHT = 3 X 81 = 242 lb
[M]

LUMBER
N. L. G. A. RULES

CHORDS	SIZE		LUMBER	DESCR.
1 - 3	2x4	DRY	No.2	SPF
3 - 5	2x4	DRY	No.2	SPF
6 - 5	2x4	DRY	No.2	SPF
9 - 1	2x4	DRY	No.2	SPF
9 - 6	2x6	DRY	2100F 1.8E	SPF
BEARING BLOCKS				
BL1	2x6	DRY	No.2	SPF
ALL WEBS EXCEPT	2x3	DRY	No.2	SPF

DRY: SEASONED LUMBER.

DESIGN CONSISTS OF 3 TRUSSES BUILT SEPARATELY THEN FASTENED TOGETHER AS FOLLOWS:

CHORDS #ROWS	SURFACE SPACING (IN)		LOAD(PLF)
TOP CHORDS : (0.122"X3") SPIRAL NAILS			
1- 3	1	12	TOP
3- 5	1	12	TOP
5- 6	1	12	TOP
9- 1	1	12	TOP
BOTTOM CHORDS : (0.122"X3") SPIRAL NAILS			
9- 6	2	5	SIDE(536.2)
WEBS : (0.122"X3") SPIRAL NAILS			
2x3	1	6	

STAGGER NAILS BY HALF THE SURFACE SPACING IN ADJACENT PLIES.

TOP - COMPONENTS ARE LOADED FROM THE TOP AND MUST BE PLACED ON TOP EDGE OF ALL PLIES FOR THE LOAD TO BE TRANSFERRED TO EACH PLY.

SIDE - PLF SHOWN IS THE EQUIVALENT UDL APPLIED TO ONE SIDE THAT THE CORRESPONDING NAILING PATTERN SHALL BE CAPABLE OF TRANSFERING. REMAINING PLF MUST BE APPLIED ON THE OPPOSITE SIDE OR ON THE TOP.

PLATES (table is in inches)

JT	TYPE	PLATES	W	LEN	Y	X
1	TMVW-t	MT20	4.0	6.0	1.75	Edge
2	TMWW-t	MT20	4.0	4.0	1.75	1.00
3	TS-t	MT20	3.0	4.0		
4	TMWW-t	MT20	5.0	5.0	2.25	1.25
5	TMV+p	MT20	2.0	4.0		
6	BMVWK1-t	MT20	5.0	8.0	2.25	Edge

DIMENSIONS, SUPPORTS AND LOADINGS SPECIFIED BY FABRICATOR TO BE VERIFIED BY BUILDING DESIGNER

BEARINGS

JT	FACTORED GROSS REACTION VERT	HORZ	MAXIMUM FACTORED GROSS REACTION DOWN	HORZ	UPLIFT	INPUT BRG IN-SX	REQRD BRG IN-SX
6	5899	0	5899	0	0	2-4	2-4
9	6168	0	6168	0	0	5-8	5-8

UNFACTORED REACTIONS

JT	1ST LCASE COMBINED	MAX./MIN. COMPONENT REACTIONS SNOW	LIVE	PERM.LIVE	WIND	DEAD	SOIL
6	4140	2897 / 0	0 / 0	0 / 0	0 / 0	1242 / 0	0 / 0
9	4329	3028 / 0	0 / 0	0 / 0	0 / 0	1301 / 0	0 / 0

BEARING MATERIAL TO BE SPF NO.2 OR BETTER AT JOINT(S) 6, 9

BRACING
TOP CHORD TO BE SHEATHED OR MAX. PURLIN SPACING = 4.61 FT.
MAX. UNBRACED BOTTOM CHORD LENGTH = 10.00 FT. OR RIGID CEILING DIRECTLY APPLIED.

ALL PITCH BREAKS AND PERIMETER CORNER JOINTS MUST BE LATERALLY RESTRAINED.

1 - 2x3 SPF No.2 LATERAL BRACE(S) AT 1/ 2 LENGTH OF 5-6. DBS = 20-0-0 . CBF = 18 LBS.
1 - 2x4 SPF No.2 LATERAL BRACE(S) AT 1/ 2 LENGTH OF 4-6. DBS = 4-0-0 . CBF = 130 LBS.

DBS = DIAGONAL BRACE SPACING (MAX). CBF = CUMULATIVE BRACING FORCE. FASTEN LATERAL BRACE(S) TO EACH PLY USING (0.122"X3") SPIRAL NAILS : 1 NAIL FOR 2x3 BRACE(S), 2 FOR 1x4, 2x4, 2x5, 3 FOR 2x6, 4 FOR 2x8, 5 FOR 2x10, AND 6 FOR 2x12.

END VERTICAL(S) MUST BE SHEATHED OR HAVE BRACES AS INDICATED IN THE MAX. UNBRACED LENGTH COLUMN OF THE TABLE BELOW

LOADING
TOTAL LOAD CASES: (4)

CHORDS

MEMB. FR-TO	MAX. FACTORED FORCE (LBS)	FACTORED VERT. LOAD (PLF) FROM	TO	LC1	MAX CSI (LC)	MAX. UNBRAC LENGTH
1- 2	-6204 / 0	-77.3	-77.3	0.16	(1)	4.61
2- 3	-3402 / 0	-77.3	-77.3	0.11	(1)	5.86
3- 4	-3402 / 0	-77.3	-77.3	0.11	(1)	5.86
4- 5	-18 / 0	-77.3	-77.3	0.08	(1)	6.25
6- 5	-148 / 0	0.0	0.0	0.03	(1)	6.25
9- 1	-4513 / 0	0.0	0.0	0.15	(1)	6.69
9- 8	0 / 0	-821.7	-821.7	0.20	(1)	10.00
8-10	0 / 5170	-821.7	-821.7	0.26	(1)	10.00
10- 7	0 / 5170	-738.7	-738.7	0.26	(1)	10.00
7- 6	0 / 2840	-738.7	-738.7	0.21	(1)	10.00

WEBS

MEMB. FR-TO	MAX. FACTORED FORCE (LBS)	MAX CSI (LC)
8- 2	0 / 3244	0.24 (1)
2- 7	-3103 / 0	0.65 (1)
7- 4	0 / 5811	0.44 (1)
4- 6	-5183 / 0	0.81 (1)
1- 8	0 / 5248	0.39 (1)

DESIGN CRITERIA

SPECIFIED LOADS:

TOP CH.	LL	=	23.3	PSF
	DL	=	3.0	PSF
BOT CH.	LL	=	0.0	PSF
	DL	=	7.0	PSF
TOTAL LOAD		=	33.3	PSF

SPACING = 24.0 IN. C/C

GIRDER TYPE: CStdGirder
START DISTANCE = 0-0
START SPAN CARRIED = 36-4-8
END DISTANCE = 8-2-8
END SPAN CARRIED = 36-4-8
END WALL WIDTH = 5-8
APPLIED TO FRONT SIDE OF BOTTOM CHORD.
- ADDT'L LOADS BASED ON 55 % OF GSL.

GIRDER TYPE: CStdGirder
START DISTANCE = 8-2-8
START SPAN CARRIED = 32-10-8
END DISTANCE = 14-2-10
END SPAN CARRIED = 32-10-8
END WALL WIDTH = 5-8
APPLIED TO FRONT SIDE OF BOTTOM CHORD.
- ADDT'L LOADS BASED ON 55 % OF GSL.

THIS TRUSS IS DESIGNED FOR RESIDENTIAL OR SMALL BUILDING REQUIREMENTS OF PART 9, NBCC 2010

THIS DESIGN COMPLIES WITH:
- PART 9 OF OBC 2012 , BCBC 2012 , ABC 2014
- CSA 086-09
- TPIC 2011

(55 % OF 27.2 P.S.F. G.S.L. PLUS 8.4 P.S.F. RAIN LOAD) EQUALS 23.3 P.S.F. SPECIFIED ROOF LIVE LOAD

ALLOWABLE DEFL.(LL)= L/360 (0.46")
CALCULATED VERT. DEFL.(LL) = L/ 999 (0.05")
ALLOWABLE DEFL.(TL)= L/360 (0.46")
CALCULATED VERT. DEFL.(TL) = L/ 999 (0.09")

CSI: TC=0.16 (1-2:1) , BC=0.26 (7-8:1) , WB=0.81 (4-6:1) , SSI=0.45 (8-9:1)

DOL LUMBER=1.00 NAIL=1.00 LS BEND=1.10 COMP=1.10 SHEAR=1.10 TENS= 1.10

COMPANION LIVE LOAD FACTOR = 0.50

TRUSS PLATE MANUFACTURER IS NOT RESPONSIBLE FOR QUALITY CONTROL IN THE TRUSS MANUFACTURING PLANT .

NAIL VALUES

PLATE	GRIP(DRY) (PSI) MAX	MIN	SHEAR (PLI) MAX	MIN	SECTION (PLI) MAX	MIN
MT20	618	354	1667	822	2284	1656

PLATE PLACEMENT TOL. = 0.250 inches

PLATE ROTATION TOL. = 5.0 Deg.

JSI GRIP= 0.89 (4) (INPUT = 0.90)
JSI METAL= 0.53 (1) (INPUT = 1.00)

LICENSED PROFESSIONAL ENGINEER
P.M. TREVISAN
100136551
March 13th, 2017
PROVINCE OF ONTARIO

RECEIVED
TOWN OF MILTON
MAR 29, 2017
17-5052
BUILDING DIVISION

READ ALL NOTES ON THIS PAGE AND ON THE ENGINEERING NOTE PAGE ENP-1. THE NOTE PAGE IS AN INTEGRAL PART OF THIS DRAWING AS IT CONTAINS SPECIFICATIONS AND CRITERIA USED IN THE DESIGN OF THIS COMPONENT.

KOTT

CONTINUED ON PAGE 2

JOB NAME	TRUSS NAME	QUANTITY	PLY	JOB DESC.	DRWG NO.
PT0317-060	**GIRD07**	**1**	**1**	TRUSS DESC. LECCO RIDGE-BLOCK 332	

ENG JOB: PT0317-060

KOTT , Stouffville, ON, CGC

Version 8.100 S Feb 9 2017 MiTek Industries, Inc. Mon Mar 13 13:24:30 2017 Page 1

ID:gtheX5EqOVSIkwpr5Eyn2TyGKTI-bsz6Bsddx0MfX8HjqUrEZRTqTMK3okA3iVvuzEzbLkl

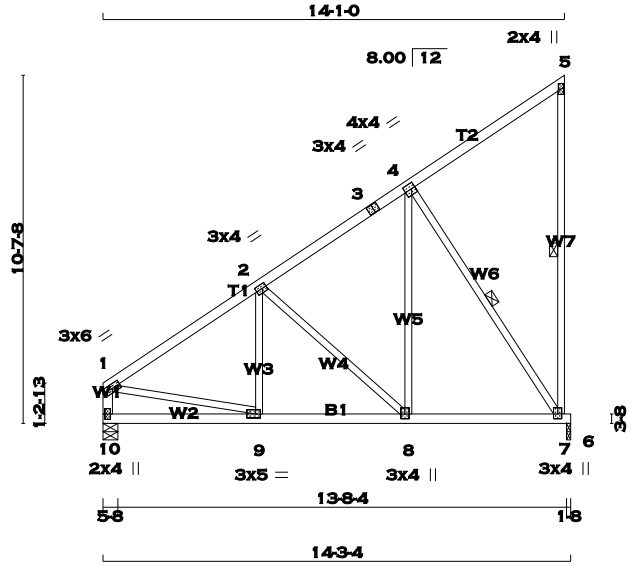

SCALE = 1:70.3

TOTAL WEIGHT = 69 lb [M]

LUMBER

N. L. G. A. RULES

CHORDS	SIZE		LUMBER	DESCR.
1 - 3	2x4	DRY	No.2	SPF
3 - 5	2x4	DRY	No.2	SPF
7 - 5	2x3	DRY	No.2	SPF
10 - 1	2x4	DRY	No.2	SPF
10 - 6	2x4	DRY	No.2	SPF
ALL WEBS EXCEPT	2x3	DRY	No.2	SPF

DRY: SEASONED LUMBER.

PLATES (table is in inches)

JT	TYPE	PLATES	W	LEN	Y	X
1	TMVW-t	MT20	3.0	6.0		
2	TMWW-t	MT20	3.0	4.0	1.50	1.50
3	TS-t	MT20	3.0	4.0		
4	TMWW-t	MT20	4.0	4.0	2.00	1.25
5	TMV+p	MT20	2.0	4.0		
7	BMVW+p	MT20	3.0	4.0	1.75	1.50
8	BMWW+t	MT20	3.0	4.0	1.75	1.50
9	BMWW-t	MT20	3.0	5.0	1.50	1.75
10	BMV1+p	MT20	2.0	4.0		

A SIZE FOR SIZE SUBSTITUTION OF MITEK MII20 WITH TEE-LOK TL20 PLATES IS ALLOWED.

DIMENSIONS, SUPPORTS AND LOADINGS SPECIFIED BY FABRICATOR TO BE VERIFIED BY BUILDING DESIGNER

BEARINGS

JT	FACTORED GROSS REACTION VERT	HORZ	MAXIMUM FACTORED GROSS REACTION DOWN	HORZ	UPLIFT	INPUT BRG IN-SX	REQRD BRG IN-SX
10	1036	0	1036	0	0	5-8	5-8
6	1022	0	1022	0	0	1-8	1-8

UNFACTORED REACTIONS

JT	1ST LCASE COMBINED	MAX./MIN. COMPONENT REACTIONS SNOW	LIVE	PERM.LIVE	WIND	DEAD	SOIL
10	727	509 / 0	0 / 0	0 / 0	0 / 0	219 / 0	0 / 0
6	718	500 / 0	0 / 0	0 / 0	0 / 0	217 / 0	0 / 0

BEARING MATERIAL TO BE SPF NO.2 OR BETTER AT JOINT(S) 10, 6

BRACING

TOP CHORD TO BE SHEATHED OR MAX. PURLIN SPACING = 5.82 FT.
MAX. UNBRACED BOTTOM CHORD LENGTH = 10.00 FT. OR RIGID CEILING DIRECTLY APPLIED.

ALL PITCH BREAKS AND PERIMETER CORNER JOINTS MUST BE LATERALLY RESTRAINED.

1 - 2x3 SPF No.2 LATERAL BRACE(S) AT 1/ 2 LENGTH OF 5-7. DBS = 20-0-0 . CBF = 19 LBS.
1 - 2x3 SPF No.2 LATERAL BRACE(S) AT 1/ 2 LENGTH OF 4-7. DBS = 14-0-0 . CBF = 82 LBS.

DBS = DIAGONAL BRACE SPACING (MAX). CBF = CUMULATIVE BRACING FORCE. FASTEN LATERAL BRACE(S) USING (0.122"X3") SPIRAL NAILS : 1 NAIL FOR 2x3 BRACE(S), 2 FOR 1x4, 2x4, 2x5, 3 FOR 2x6, 4 FOR 2x8, 5 FOR 2x10, AND 6 FOR 2x12.

END VERTICAL(S) MUST BE SHEATHED OR HAVE BRACES AS INDICATED IN THE MAX. UNBRACED LENGTH COLUMN OF THE TABLE BELOW

LOADING

TOTAL LOAD CASES: (4)

CHORDS

MEMB. FR-TO	MAX. FACTORED FORCE (LBS)	FACTORED VERT. LOAD (PLF) FROM	TO	LC1 MAX CSI (LC)	MAX. UNBRAC LENGTH
1- 2	-1031 / 0	-77.3	-77.3	0.27 (1)	5.82
2- 3	-624 / 0	-77.3	-77.3	0.27 (1)	6.25
3- 4	-624 / 0	-77.3	-77.3	0.27 (1)	6.25
4- 5	-20 / 0	-77.3	-77.3	0.25 (1)	6.25
7- 5	-149 / 0	0.0	0.0	0.12 (1)	6.25
10- 1	-901 / 0	0.0	0.0	0.10 (1)	7.81
10- 9	0 / 0	-67.9	-67.9	0.20 (1)	10.00
9- 8	0 / 873	-67.9	-67.9	0.44 (1)	10.00
8- 7	0 / 521	-67.9	-67.9	0.45 (1)	10.00
7- 6	0 / 0	-67.9	-67.9	0.28 (1)	10.00

WEBS

MEMB. FR-TO	MAX. FACTORED FORCE (LBS)	MAX CSI (LC)
9- 2	0 / 160	0.05 (4)
2- 8	-473 / 0	0.32 (1)
8- 4	0 / 727	0.18 (1)
4- 7	-937 / 0	0.48 (1)
1- 9	0 / 888	0.22 (1)

DESIGN CRITERIA

SPECIFIED LOADS:

TOP CH.	LL	=	23.3	PSF
	DL	=	3.0	PSF
BOT CH.	LL	=	0.0	PSF
	DL	=	7.0	PSF
TOTAL LOAD		=	33.3	PSF

SPACING = 24.0 IN. C/C

GIRDER TYPE: CStdGirder
START DISTANCE = 0-0
START SPAN CARRIED = 4-7-0
END DISTANCE = 14-2-10
END SPAN CARRIED = 4-7-0
END WALL WIDTH = 5-8
APPLIED TO FRONT SIDE OF BOTTOM CHORD.
- ADDT'L LOADS BASED ON 55 % OF GSL.

THIS TRUSS IS DESIGNED FOR RESIDENTIAL OR SMALL BUILDING REQUIREMENTS OF PART 9, NBCC 2010

THIS DESIGN COMPLIES WITH:
- PART 9 OF OBC 2012 , BCBC 2012 , ABC 2014
- CSA 086-09
- TPIC 2011

(55 % OF 27.2 P.S.F. G.S.L. PLUS 8.4 P.S.F. RAIN LOAD) EQUALS 23.3 P.S.F. SPECIFIED ROOF LIVE LOAD

ALLOWABLE DEFL.(LL)= L/360 (0.48")
CALCULATED VERT. DEFL.(LL) = L/ 999 (0.06")
ALLOWABLE DEFL.(TL)= L/360 (0.48")
CALCULATED VERT. DEFL.(TL) = L/ 999 (0.13")

CSI: TC=0.27 (2-4:1) , BC=0.45 (7-8:1) , WB=0.48 (4-7:1) , SSI=0.88 (6-7:1)

DOL LUMBER=1.00 NAIL=1.00 LS BEND=1.00
COMP=1.00 SHEAR=1.00 TENS= 1.00

COMPANION LIVE LOAD FACTOR = 0.50

TRUSS PLATE MANUFACTURER IS NOT RESPONSIBLE FOR QUALITY CONTROL IN THE TRUSS MANUFACTURING PLANT .

NAIL VALUES

PLATE	GRIP(DRY) (PSI) MAX	MIN	SHEAR (PLI) MAX	MIN	SECTION (PLI) MAX	MIN
MT20	618	354	1667	822	2284	1656

PLATE PLACEMENT TOL. = 0.250 inches

PLATE ROTATION TOL. = 5.0 Deg.

JSI GRIP= 0.90 (9) (INPUT = 0.90)
JSI METAL= 0.28 (1) (INPUT = 1.00)

LICENSED PROFESSIONAL ENGINEER
P.M. TREVISAN
100136551
March 13th, 2017
PROVINCE OF ONTARIO

RECEIVED
TOWN OF MILTON
MAR 29, 2017
17-5052
BUILDING DIVISION

READ ALL NOTES ON THIS PAGE AND ON THE ENGINEERING NOTE PAGE ENP-1. THE NOTE PAGE IS AN INTEGRAL PART OF THIS DRAWING AS IT CONTAINS SPECIFICATIONS AND CRITERIA USED IN THE DESIGN OF THIS COMPONENT.

KOTT

JOB NAME	TRUSS NAME	QUANTITY	PLY	JOB DESC.	DRWG NO.
PT0317-060	**GIRD09**	**2**	**1**	TRUSS DESC. LECCO RIDGE-BLOCK 332	

ENG JOB: PT0317-060

KOTT , Stouffville, ON, CGC

Version 8.100 S Feb 9 2017 MiTek Industries, Inc. Mon Mar 13 13:24:31 2017 Page 1

ID:gtheX5EqOVSIkwpr5Eyn2TyGKTI-33WVOCeFiKUW8IrvNBNT5e0wZmjHXDsCx9fRVhzbLkk

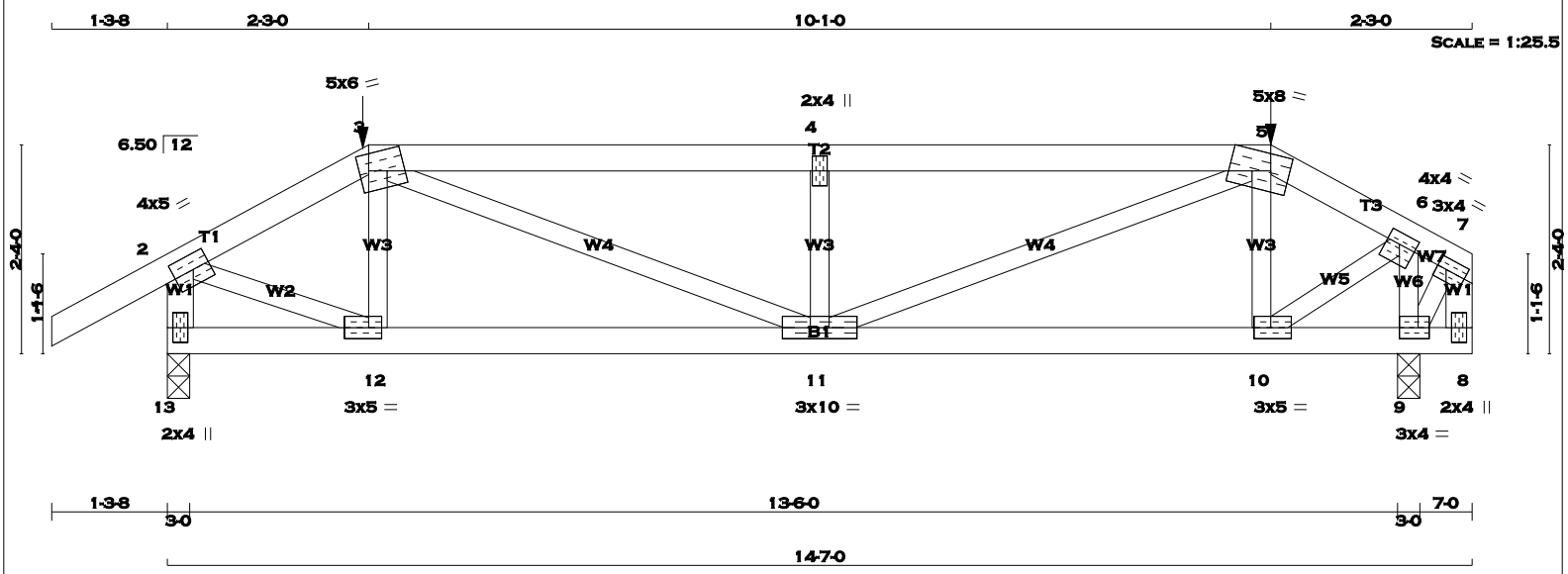

TOTAL WEIGHT = 2 X 54 = 109 lb [M]

LUMBER

N. L. G. A. RULES

CHORDS	SIZE		LUMBER	DESCR.
1 - 3	2x4	DRY	No.2	SPF
3 - 5	2x4	DRY	No.2	SPF
5 - 7	2x4	DRY	No.2	SPF
13 - 2	2x4	DRY	No.2	SPF
8 - 7	2x4	DRY	No.2	SPF
13 - 8	2x4	DRY	No.2	SPF
ALL WEBS EXCEPT	2x3	DRY	No.2	SPF

DRY: SEASONED LUMBER.

PLATES (table is in inches)

JT	TYPE	PLATES	W	LEN	Y	X
2	TMVW-t	MT20	4.0	5.0	2.00	2.25
3	TTWW-m	MT20	5.0	6.0	2.25	1.25
4	TMW+w	MT20	2.0	4.0		
5	TTWW-m	MT20	5.0	8.0	Edge	5.50
6	TMWW-t	MT20	4.0	4.0	1.50	1.75
7	TMVW-t	MT20	3.0	4.0	1.50	1.25
8	BMV+p	MT20	2.0	4.0		
9	BMWW1-t	MT20	3.0	4.0	1.50	1.50
10	BMWW-t	MT20	3.0	5.0	1.50	2.25
11	BMWWW-t	MT20	3.0	10.0		
12	BMWW-t	MT20	3.0	5.0	1.50	1.75
13	BMV1+p	MT20	2.0	4.0		

Edge - INDICATES REFERENCE CORNER OF PLATE TOUCHES EDGE OF CHORD.

A SIZE FOR SIZE SUBSTITUTION OF MITEK MII20 WITH TEE-LOK TL20 PLATES IS ALLOWED.

HANGERS NOTES

1) SPECIAL HANGER(S) OR CONNECTION(S) REQUIRED TO SUPPORT CONCENTRATED LOAD(S) 88.2 lbs FACTORED DOWN AT 12-4-0, AND 88.2 lbs FACTORED DOWN AT 2-3-0 ON TOP CHORD. DESIGN FOR UNSPECIFIED CONNECTION(S) IS DELEGATED TO THE BUILDING DESIGNER.

DIMENSIONS, SUPPORTS AND LOADINGS SPECIFIED BY FABRICATOR TO BE VERIFIED BY BUILDING DESIGNER

BEARINGS

JT	FACTORED GROSS REACTION VERT	HORZ	MAXIMUM FACTORED GROSS REACTION DOWN	HORZ	UPLIFT	INPUT BRG IN-SX	REQRD BRG IN-SX
13	1127	0	1127	0	0	3-0	3-0
9	1131	0	1131	0	0	3-0	3-0

UNFACTORED REACTIONS

JT	1ST LCASE COMBINED	MAX./MIN. COMPONENT REACTIONS SNOW	LIVE	PERM.LIVE	WIND	DEAD	SOIL
13	789	564 / 0	0 / 0	0 / 0	0 / 0	225 / 0	0 / 0
9	794	554 / 0	0 / 0	0 / 0	0 / 0	240 / 0	0 / 0

BEARING MATERIAL TO BE SPF NO.2 OR BETTER AT JOINT(S) 13, 9

BRACING

TOP CHORD TO BE SHEATHED OR MAX. PURLIN SPACING = 3.96 FT.
MAX. UNBRACED BOTTOM CHORD LENGTH = 10.00 FT. OR RIGID CEILING DIRECTLY APPLIED.

ALL PITCH BREAKS AND PERIMETER CORNER JOINTS MUST BE LATERALLY RESTRAINED.

LOADING

TOTAL LOAD CASES: (4)

CHORDS

MEMB. FR-TO	MAX. FACTORED FORCE (LBS)	FACTORED VERT. LOAD (PLF) FROM	TO	LC1 MAX CSI (LC)	MAX. UNBRAC LENGTH
1- 2	0 / 25	-77.3	-77.3	0.11 (1)	10.00
2- 3	-1187 / 0	-77.3	-77.3	0.09 (1)	5.74
3- 4	-1964 / 0	-121.7	-121.7	0.63 (1)	3.96
4- 5	-1964 / 0	-121.7	-121.7	0.63 (1)	3.96
5- 6	-901 / 0	-77.3	-77.3	0.05 (1)	6.25
6- 7	-10 / 5	-77.3	-77.3	0.04 (1)	10.00
13- 2	-1116 / 0	0.0	0.0	0.12 (1)	7.47
8- 7	-30 / 6	0.0	0.0	0.00 (1)	7.81
13-12	0 / 0	-27.5	-27.5	0.11 (4)	10.00
12-11	0 / 1030	-27.5	-27.5	0.26 (1)	10.00
11-10	0 / 760	-27.5	-27.5	0.22 (1)	10.00
10- 9	-1 / 25	-27.5	-27.5	0.12 (4)	10.00
9- 8	0 / 0	-27.5	-27.5	0.04 (1)	10.00

WEBS

MEMB. FR-TO	MAX. FACTORED FORCE (LBS)	MAX CSI (LC)
12- 3	-226 / 24	0.04 (1)
3-11	0 / 1008	0.25 (1)
11- 4	-742 / 0	0.12 (1)
11- 5	0 / 1298	0.32 (1)
10- 5	-429 / 0	0.07 (1)
2-12	0 / 1100	0.27 (1)
10- 6	0 / 933	0.23 (1)
9- 6	-1106 / 0	0.17 (1)
9- 7	-2 / 38	0.01 (1)

FACTORED CONCENTRATED LOADS (LBS)

JT	LOC.	LC1	MAX-	MAX+	FACE	DIR.	TYPE
3	2-3-0	-88	-88	---	FRONT	VERT	TOTAL
5	12-4-0	-88	-88	---	FRONT	VERT	TOTAL

DESIGN CRITERIA

SPECIFIED LOADS:

TOP	CH.	LL	=	23.3	PSF
		DL	=	3.0	PSF
BOT	CH.	LL	=	0.0	PSF
		DL	=	7.0	PSF
TOTAL	LOAD		=	33.3	PSF

SPACING = 24.0 IN. C/C

LOADING IN FLAT SECTION BASED ON A SLOPE OF 6.00/12

GIRDER TYPE: CPrimeHip
SIDE SETBACK = 2-3-0
END SETBACK = 4-6-8
END WALL WIDTH = 3-0
CORNER FRAMING TYPE: CONVENTIONAL
END JACK TYPE: CONVENTIONAL
APPLIED TO FRONT SIDE
- ADDT'L LOADS BASED ON 55 % OF GSL.

THIS TRUSS IS DESIGNED FOR RESIDENTIAL OR SMALL BUILDING REQUIREMENTS OF PART 9, NBCC 2010

THIS DESIGN COMPLIES WITH:
- PART 9 OF OBC 2012 , BCBC 2012 , ABC 2014
- CSA 086-09
- TPIC 2011

(55 % OF 27.2 P.S.F. G.S.L. PLUS 8.4 P.S.F. RAIN LOAD) EQUALS 23.3 P.S.F. SPECIFIED ROOF LIVE LOAD

ALLOWABLE DEFL.(LL)= L/360 (0.46")
CALCULATED VERT. DEFL.(LL) = L/ 999 (0.06")
ALLOWABLE DEFL.(TL)= L/360 (0.46")
CALCULATED VERT. DEFL.(TL) = L/ 999 (0.10")

CANTILEVER DEFLECTION:
ALLOWABLE DEFL.(LL)= L/120 (0.19")
CALCULATED VERT. DEFL.(LL) = L/ 999 (0.00")
ALLOWABLE DEFL.(TL)= L/120 (0.19")
CALCULATED VERT. DEFL.(TL) = L/ 999 (0.01")

CSI: TC=0.63 (3-4:1) , BC=0.26 (11-12:1) , WB=0.32 (5-11:1) , SSI=0.32 (3-4:1)

DOL LUMBER=1.00 NAIL=1.00 LS BEND=1.00 COMP=1.00 SHEAR=1.00 TENS= 1.00

COMPANION LIVE LOAD FACTOR = 0.50

AUTOSOLVE LEFT HEEL ONLY

TRUSS PLATE MANUFACTURER IS NOT RESPONSIBLE FOR QUALITY CONTROL IN THE TRUSS MANUFACTURING PLANT .

NAIL VALUES

PLATE	GRIP(DRY) (PSI) MAX	MIN	SHEAR (PLI) MAX	MIN	SECTION (PLI) MAX	MIN
MT20	618	354	1667	822	2284	1656

PLATE PLACEMENT TOL. = 0.250 inches

PLATE ROTATION TOL. = 5.0 Deg.

JSI GRIP= 0.90 (10) (INPUT = 0.90)
JSI METAL= 0.38 (2) (INPUT = 1.00)

LICENSED PROFESSIONAL ENGINEER
P.M. TREVISAN
100136551
March 13th, 2017
PROVINCE OF ONTARIO

RECEIVED
TOWN OF MILTON
MAR 29, 2017
17-5052
BUILDING DIVISION

READ ALL NOTES ON THIS PAGE AND ON THE ENGINEERING NOTE PAGE ENP-1. THE NOTE PAGE IS AN INTEGRAL PART OF THIS DRAWING AS IT CONTAINS SPECIFICATIONS AND CRITERIA USED IN THE DESIGN OF THIS COMPONENT.

KOTT

Version 8.100 S Feb 9 2017 MiTek Industries, Inc. Mon Mar 13 13:24:31 2017 Page 1
ID:gtheX5EqOVSIkwpr5Eyn2TyGKTI-33WVOCeFiKUW8IrvNBNT5e00HmkCXBYCx9fRVhzbLkk

SCALE = 1:44.9

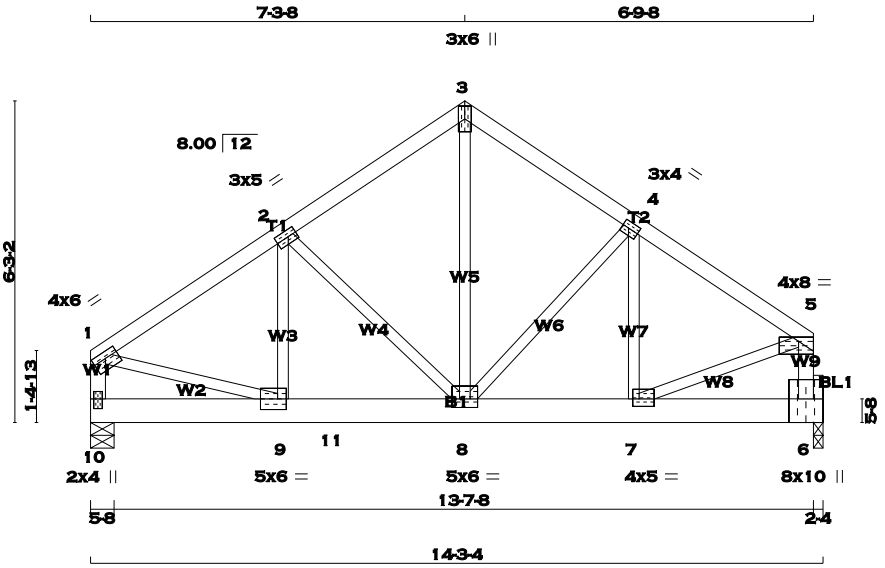

TOTAL WEIGHT = 2 X 70 = 141 lb [M]

LUMBER

N. L. G. A. RULES

CHORDS	SIZE		LUMBER	DESCR.
1 - 3	2x4	DRY	No.2	SPF
3 - 5	2x4	DRY	No.2	SPF
10 - 1	2x4	DRY	No.2	SPF
6 - 5	2x4	DRY	No.2	SPF
10 - 6	2x6	DRY	2100F 1.8E	SPF

BEARING BLOCKS

BL1	2x6	DRY	No.2	SPF
ALL WEBS EXCEPT	2x3	DRY	No.2	SPF

DRY: SEASONED LUMBER.

DESIGN CONSISTS OF 2 TRUSSES BUILT SEPARATELY THEN FASTENED TOGETHER AS FOLLOWS:

CHORDS #ROWS	SURFACE SPACING (IN)		LOAD(PLF)
TOP CHORDS : (0.122"X3") SPIRAL NAILS			
1- 3	1	12	TOP
3- 5	1	12	TOP
10- 1	1	12	TOP
6- 5	1	12	TOP
BOTTOM CHORDS : (0.122"X3") SPIRAL NAILS			
10- 6	2	9	SIDE(301.3)
WEBS : (0.122"X3") SPIRAL NAILS			
2x3	1	6	

NAILS TO BE DRIVEN FROM ONE SIDE ONLY.

TOP - COMPONENTS ARE LOADED FROM THE TOP AND MUST BE PLACED ON TOP EDGE OF ALL PLIES FOR THE LOAD TO BE TRANSFERRED TO EACH PLY.

SIDE - PLF SHOWN IS THE EQUIVALENT UDL APPLIED TO ONE SIDE THAT THE CORRESPONDING NAILING PATTERN SHALL BE CAPABLE OF TRANSFERING. REMAINING PLF MUST BE APPLIED ON THE OPPOSITE SIDE OR ON THE TOP.

PLATES (table is in inches)

JT	TYPE	PLATES	W	LEN	Y	X
1	TMVW-t	MT20	4.0	6.0	1.50	3.00
2	TMWW-t	MT20	3.0	5.0	1.50	2.00
3	TTW+p	MT20	3.0	6.0		
4	TMWW-t	MT20	3.0	4.0	1.50	1.50
5	TMVW-p	MT20	4.0	8.0	1.00	Edge
6	BMVK1+p	MT20	8.0	10.0	5.50	Edge
7	BMWW-t	MT20	4.0	5.0	1.75	1.50

DIMENSIONS, SUPPORTS AND LOADINGS SPECIFIED BY FABRICATOR TO BE VERIFIED BY BUILDING DESIGNER

BEARINGS

JT	FACTORED GROSS REACTION VERT	HORZ	MAXIMUM FACTORED GROSS REACTION DOWN	HORZ	UPLIFT	INPUT BRG IN-SX	REQRD BRG IN-SX
10	4566	0	4566	0	0	5-8	5-8
6	4284	0	4284	0	0	2-4	2-4

UNFACTORED REACTIONS

JT	1ST LCASE COMBINED	MAX./MIN. COMPONENT REACTIONS SNOW	LIVE	PERM.LIVE	WIND	DEAD	SOIL
10	3204	2242 / 0	0 / 0	0 / 0	0 / 0	963 / 0	0 / 0
6	3006	2104 / 0	0 / 0	0 / 0	0 / 0	902 / 0	0 / 0

BEARING MATERIAL TO BE SPF NO.2 OR BETTER AT JOINT(S) 10, 6
BEARING SIZE FACTOR = 1.08 AT JNT(S) 6 (BASED ON SUPPORT DEPTH = 1-8)

BRACING

TOP CHORD TO BE SHEATHED OR MAX. PURLIN SPACING = 4.46 FT.
MAX. UNBRACED BOTTOM CHORD LENGTH = 6.25 FT. OR RIGID CEILING DIRECTLY APPLIED.

ALL PITCH BREAKS AND PERIMETER CORNER JOINTS MUST BE LATERALLY RESTRAINED.

LOADING

TOTAL LOAD CASES: (4)

CHORDS

MEMB. FR-TO	MAX. FORCE (LBS)	FACTORED VERT. LOAD (PLF) FROM	TO	LC1 MAX CSI (LC)	MAX. UNBRAC LENGTH
1- 2	-4392 / 0	-77.3	-77.3	0.16 (1)	4.46
2- 3	-3204 / 0	-77.3	-77.3	0.11 (1)	5.11
3- 4	-3203 / 0	-77.3	-77.3	0.10 (1)	5.12
4- 5	-3706 / 0	-77.3	-77.3	0.12 (1)	4.80
10- 1	-3542 / 0	0.0	0.0	0.20 (1)	6.23
6- 5	-3521 / 0	0.0	0.0	0.20 (1)	6.24
10- 9	0 / 0	-620.2	-620.2	0.17 (1)	10.00
9-11	0 / 3663	-620.2	-620.2	0.20 (1)	10.00
11- 8	0 / 3663	-525.3	-525.3	0.20 (1)	10.00
8- 7	0 / 3091	-525.3	-525.3	0.18 (1)	10.00
7- 6	-384 / 0	-525.3	-525.3	0.12 (1)	6.25

WEBS

MEMB. FR-TO	MAX. FORCE (LBS)	MAX CSI (LC)
9- 2	0 / 1344	0.17 (1)
2- 8	-1413 / 0	0.29 (1)
8- 3	0 / 3315	0.41 (1)
8- 4	-649 / 0	0.13 (1)
7- 4	0 / 477	0.06 (1)
1- 9	0 / 3790	0.47 (1)
7- 5	0 / 3717	0.46 (1)

RECEIVED
TOWN OF MILTON
MAR 29, 2017
17-5052
BUILDING DIVISION

READ ALL NOTES ON THIS PAGE AND ON THE ENGINEERING NOTE PAGE ENP-1. THE NOTE PAGE IS AN INTEGRAL PART OF THIS DRAWING AS IT CONTAINS SPECIFICATIONS AND CRITERIA USED IN THE DESIGN OF THIS COMPONENT.

DESIGN CRITERIA

SPECIFIED LOADS:

TOP	CH.	LL	=	23.3	PSF
		DL	=	3.0	PSF
BOT	CH.	LL	=	0.0	PSF
		DL	=	7.0	PSF
TOTAL	LOAD		=	33.3	PSF

SPACING = 24.0 IN. C/C

GIRDER TYPE: CStdGirder
START DISTANCE = 0-0
START SPAN CARRIED = 27-10-8
END DISTANCE = 4-7-8
END SPAN CARRIED = 27-10-8
END WALL WIDTH = 5-8
APPLIED TO FRONT SIDE OF BOTTOM CHORD.
- ADDT'L LOADS BASED ON 55 % OF GSL.

GIRDER TYPE: CStdGirder
START DISTANCE = 4-7-8
START SPAN CARRIED = 23-10-8
END DISTANCE = 14-2-10
END SPAN CARRIED = 23-10-8
END WALL WIDTH = 5-8
APPLIED TO FRONT SIDE OF BOTTOM CHORD.
- ADDT'L LOADS BASED ON 55 % OF GSL.

THIS TRUSS IS DESIGNED FOR RESIDENTIAL OR SMALL BUILDING REQUIREMENTS OF PART 9, NBCC 2010

THIS DESIGN COMPLIES WITH:
- PART 9 OF OBC 2012 , BCBC 2012 , ABC 2014
- CSA 086-09
- TPIC 2011

(55 % OF 27.2 P.S.F. G.S.L. PLUS 8.4 P.S.F. RAIN LOAD) EQUALS 23.3 P.S.F. SPECIFIED ROOF LIVE LOAD

ALLOWABLE DEFL.(LL)= L/360 (0.46")
CALCULATED VERT. DEFL.(LL) = L/ 999 (0.04")
ALLOWABLE DEFL.(TL)= L/360 (0.46")
CALCULATED VERT. DEFL.(TL) = L/ 999 (0.07")

CSI: TC=0.20 (5-6:1) , BC=0.20 (8-9:1) , WB=0.47 (1-9:1) , SSI=0.43 (9-10:1)

DOL LUMBER=1.00 NAIL=1.00 LS BEND=1.00 COMP=1.00 SHEAR=1.00 TENS= 1.00

COMPANION LIVE LOAD FACTOR = 0.50

TRUSS PLATE MANUFACTURER IS NOT RESPONSIBLE FOR QUALITY CONTROL IN THE TRUSS MANUFACTURING PLANT .

NAIL VALUES

PLATE	GRIP(DRY) (PSI) MAX	MIN	SHEAR (PLI) MAX	MIN	SECTION (PLI) MAX	MIN
MT20	618	354	1667	822	2284	1656

PLATE PLACEMENT TOL. = 0.250 inches

PLATE ROTATION TOL. = 5.0 Deg.

JSI GRIP= 0.89 (1) (INPUT = 0.90)
JSI METAL= 0.56 (1) (INPUT = 1.00)

KOTT

CONTINUED ON PAGE 2

SCALE: 3/4"=1'

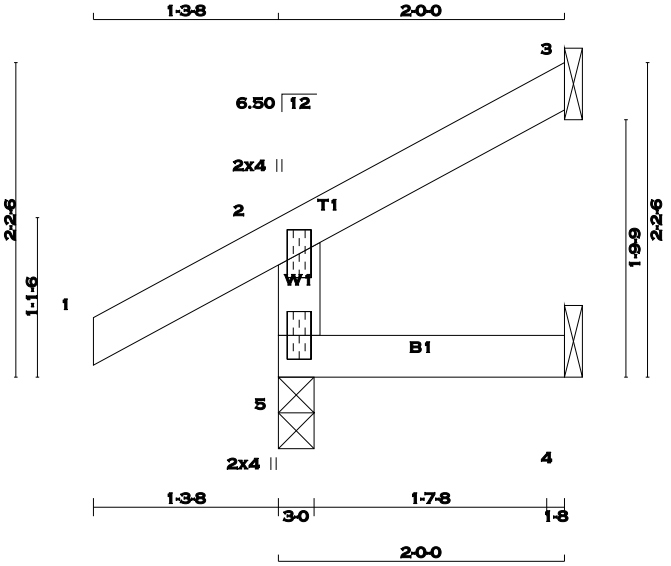

TOTAL WEIGHT = 4 X 7 = 30 lb [M]

LUMBER

N. L. G. A. RULES

CHORDS	SIZE		LUMBER	DESCR.
5 - 2	2x4	DRY	No.2	SPF
1 - 3	2x4	DRY	No.2	SPF
5 - 4	2x4	DRY	No.2	SPF

DRY: SEASONED LUMBER.

PLATES (table is in inches)

JT	TYPE	PLATES	W	LEN	Y	X
2	TMV+p	MT20	2.0	4.0		
5	BMV1+p	MT20	2.0	4.0		

A SIZE FOR SIZE SUBSTITUTION OF MITEK MII20 WITH TEE-LOK TL20 PLATES IS ALLOWED.

DIMENSIONS, SUPPORTS AND LOADINGS SPECIFIED BY FABRICATOR TO BE VERIFIED BY BUILDING DESIGNER

BEARINGS

JT	FACTORED GROSS REACTION VERT	HORZ	MAXIMUM FACTORED GROSS REACTION DOWN	HORZ	UPLIFT	INPUT BRG IN-SX	REQRD BRG IN-SX
5	221	0	221	0	0	3-0	3-0
3	58	0	58	0	0	1-8	1-8
4	16	0	17	0	0	1-8	1-8

SEE MITEK STANDARD DETAIL B37579H FOR CONNECTION TO JOINT(S) 3 , 4

UNFACTORED REACTIONS

JT	1ST LCASE COMBINED	MAX./MIN. COMPONENT REACTIONS SNOW	LIVE	PERM.LIVE	WIND	DEAD	SOIL
5	153	121 / 0	0 / 0	0 / 0	0 / 0	31 / 0	0 / 0
3	40	35 / 0	0 / 0	0 / 0	0 / 0	5 / 0	0 / 0
4	12	0 / 0	0 / 0	0 / 0	0 / 0	12 / 0	0 / 0

BEARING MATERIAL TO BE SPF NO.2 OR BETTER AT JOINT(S) 5

BRACING

TOP CHORD TO BE SHEATHED OR MAX. PURLIN SPACING = 10.00 FT.
MAX. UNBRACED BOTTOM CHORD LENGTH = 10.00 FT. OR RIGID CEILING DIRECTLY APPLIED.

ALL PITCH BREAKS AND PERIMETER CORNER JOINTS MUST BE LATERALLY RESTRAINED.

LOADING

TOTAL LOAD CASES: (5)

CHORDS MEMB. FR-TO	MAX. FACTORED FORCE (LBS)	FACTORED VERT. LOAD (PLF) FROM	TO	LC1 MAX CSI (LC)	MAX. UNBRAC LENGTH	WEBS MEMB. FR-TO	MAX. FACTORED FORCE (LBS)	MAX CSI (LC)
5- 2	-202 / 0	0.0	0.0	0.01 (4)	7.81			
1- 2	0 / 25	-77.3	-77.3	0.10 (1)	10.00			
2- 3	-9 / 0	-77.3	-77.3	0.05 (1)	10.00			
5- 4	0 / 0	-17.5	-17.5	0.02 (4)	10.00			

CANTILEVER ANALYSIS HAS BEEN CONSIDERED IN THIS DESIGN

DESIGN CRITERIA

SPECIFIED LOADS:

TOP CH.	LL	=	23.3	PSF
	DL	=	3.0	PSF
BOT CH.	LL	=	0.0	PSF
	DL	=	7.0	PSF
TOTAL LOAD		=	33.3	PSF

SPACING = 24.0 IN. C/C

THIS TRUSS IS DESIGNED FOR RESIDENTIAL OR SMALL BUILDING REQUIREMENTS OF PART 9, NBCC 2010

THIS DESIGN COMPLIES WITH:
- PART 9 OF OBC 2012 , BCBC 2012 , ABC 2014
- CSA 086-09
- TPIC 2011

DESIGN ASSUMPTIONS
-OVERHANG NOT TO BE ALTERED OR CUT OFF.

(55 % OF 27.2 P.S.F. G.S.L. PLUS 8.4 P.S.F. RAIN LOAD) EQUALS 23.3 P.S.F. SPECIFIED ROOF LIVE LOAD

ALLOWABLE DEFL.(LL)= L/360 (0.19")
CALCULATED VERT. DEFL.(LL) = L/ 999 (0.00")
ALLOWABLE DEFL.(TL)= L/360 (0.19")
CALCULATED VERT. DEFL.(TL) = L/ 999 (0.00")

CSI: TC=0.10 (1-2:1) , BC=0.02 (4-5:4) , WB=0.00 (n/a:0) , SSI=0.07 (1-2:1)

DOL LUMBER=1.00 NAIL=1.00 LS BEND=1.10 COMP=1.10 SHEAR=1.10 TENS= 1.10

COMPANION LIVE LOAD FACTOR = 0.50

TRUSS PLATE MANUFACTURER IS NOT RESPONSIBLE FOR QUALITY CONTROL IN THE TRUSS MANUFACTURING PLANT .

NAIL VALUES

PLATE	GRIP(DRY) (PSI) MAX	MIN	SHEAR (PLI) MAX	MIN	SECTION (PLI) MAX	MIN
MT20	618	354	1667	822	2284	1656

PLATE PLACEMENT TOL. = 0.250 inches

PLATE ROTATION TOL. = 0.5 Deg.

JSI GRIP= 0.12 (2) (INPUT = 0.90)
JSI METAL= 0.05 (2) (INPUT = 1.00)

LICENSED PROFESSIONAL ENGINEER
P.M. TREVISAN
100136551
March 13th, 2017
PROVINCE OF ONTARIO

RECEIVED
TOWN OF MILTON
MAR 29, 2017
17-5052
BUILDING DIVISION

READ ALL NOTES ON THIS PAGE AND ON THE ENGINEERING NOTE PAGE ENP-1. THE NOTE PAGE IS AN INTEGRAL PART OF THIS DRAWING AS IT CONTAINS SPECIFICATIONS AND CRITERIA USED IN THE DESIGN OF THIS COMPONENT.

KOTT

SCALE = 1:18.6

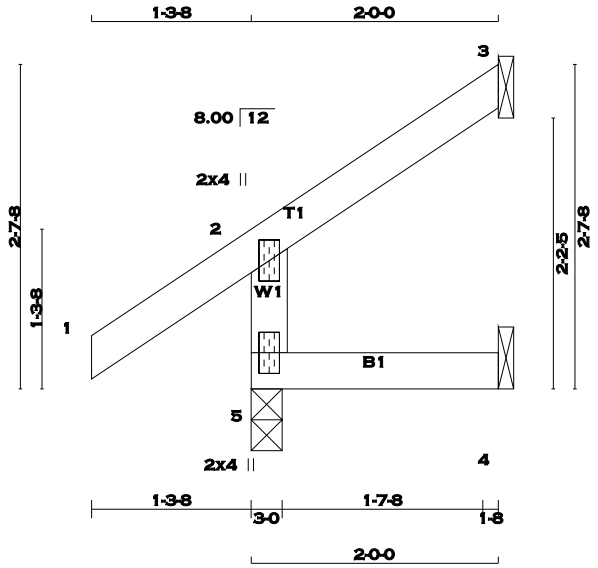

TOTAL WEIGHT = 6 X 8 = 48 lb [M]

LUMBER

N. L. G. A. RULES

CHORDS	SIZE		LUMBER	DESCR.
5 - 2	2x4	DRY	No.2	SPF
1 - 3	2x4	DRY	No.2	SPF
5 - 4	2x4	DRY	No.2	SPF

DRY: SEASONED LUMBER.

PLATES (table is in inches)

JT	TYPE	PLATES	W	LEN	Y	X
2	TMV+p	MT20	2.0	4.0		
5	BMV1+p	MT20	2.0	4.0		

A SIZE FOR SIZE SUBSTITUTION OF MITEK MII20 WITH TEE-LOK TL20 PLATES IS ALLOWED.

DIMENSIONS, SUPPORTS AND LOADINGS SPECIFIED BY FABRICATOR TO BE VERIFIED BY BUILDING DESIGNER

BEARINGS

JT	FACTORED GROSS REACTION VERT	HORZ	MAXIMUM FACTORED GROSS REACTION DOWN	HORZ	UPLIFT	INPUT BRG IN-SX	REQRD BRG IN-SX
5	222	0	222	0	0	3-0	3-0
3	58	0	58	0	0	1-8	1-8
4	16	0	18	0	0	1-8	1-8

SEE MITEK STANDARD DETAIL B37579H FOR CONNECTION TO JOINT(S) 3 , 4

UNFACTORED REACTIONS

JT	1ST LCASE COMBINED	MAX./MIN. COMPONENT REACTIONS SNOW	LIVE	PERM.LIVE	WIND	DEAD	SOIL
5	153	122 / 0	0 / 0	0 / 0	0 / 0	31 / 0	0 / 0
3	40	35 / 0	0 / 0	0 / 0	0 / 0	5 / 0	0 / 0
4	13	0 / 0	0 / 0	0 / 0	0 / 0	13 / 0	0 / 0

BEARING MATERIAL TO BE SPF NO.2 OR BETTER AT JOINT(S) 5

BRACING

TOP CHORD TO BE SHEATHED OR MAX. PURLIN SPACING = 6.25 FT.
MAX. UNBRACED BOTTOM CHORD LENGTH = 10.00 FT. OR RIGID CEILING DIRECTLY APPLIED.

ALL PITCH BREAKS AND PERIMETER CORNER JOINTS MUST BE LATERALLY RESTRAINED.

LOADING

TOTAL LOAD CASES: (5)

CHORDS MEMB. FR-TO	MAX. FACTORED FORCE (LBS)	FACTORED VERT. LOAD (PLF) FROM	TO	LC1 MAX CSI (LC)	MAX. UNBRAC LENGTH	WEBS MEMB. FR-TO	MAX. FACTORED FORCE (LBS)	MAX CSI (LC)
5- 2	-202 / 0	0.0	0.0	0.01 (4)	7.81			
1- 2	0 / 29	-77.3	-77.3	0.10 (1)	10.00			
2- 3	-10 / 0	-77.3	-77.3	0.05 (1)	6.25			
5- 4	0 / 0	-17.5	-17.5	0.02 (4)	10.00			

CANTILEVER ANALYSIS HAS BEEN CONSIDERED IN THIS DESIGN

DESIGN CRITERIA

SPECIFIED LOADS:

TOP CH.	LL	=	23.3	PSF
	DL	=	3.0	PSF
BOT CH.	LL	=	0.0	PSF
	DL	=	7.0	PSF
TOTAL LOAD		=	33.3	PSF

SPACING = 24.0 IN. C/C

THIS TRUSS IS DESIGNED FOR RESIDENTIAL OR SMALL BUILDING REQUIREMENTS OF PART 9, NBCC 2010

THIS DESIGN COMPLIES WITH:
- PART 9 OF OBC 2012 , BCBC 2012 , ABC 2014
- CSA 086-09
- TPIC 2011

DESIGN ASSUMPTIONS
-OVERHANG NOT TO BE ALTERED OR CUT OFF.

(55 % OF 27.2 P.S.F. G.S.L. PLUS 8.4 P.S.F. RAIN LOAD) EQUALS 23.3 P.S.F. SPECIFIED ROOF LIVE LOAD

ALLOWABLE DEFL.(LL)= L/360 (0.19")
CALCULATED VERT. DEFL.(LL) = L/ 999 (0.00")
ALLOWABLE DEFL.(TL)= L/360 (0.19")
CALCULATED VERT. DEFL.(TL) = L/ 999 (0.00")

CSI: TC=0.10 (1-2:1) , BC=0.02 (4-5:4) , WB=0.00 (n/a:0) , SSI=0.07 (1-2:1)

DOL LUMBER=1.00 NAIL=1.00 LS BEND=1.10 COMP=1.10 SHEAR=1.10 TENS= 1.10

COMPANION LIVE LOAD FACTOR = 0.50

TRUSS PLATE MANUFACTURER IS NOT RESPONSIBLE FOR QUALITY CONTROL IN THE TRUSS MANUFACTURING PLANT .

NAIL VALUES

PLATE	GRIP(DRY) (PSI) MAX	MIN	SHEAR (PLI) MAX	MIN	SECTION (PLI) MAX	MIN
MT20	618	354	1667	822	2284	1656

PLATE PLACEMENT TOL. = 0.250 inches

PLATE ROTATION TOL. = 0.5 Deg.

JSI GRIP= 0.13 (2) (INPUT = 0.90)
JSI METAL= 0.05 (2) (INPUT = 1.00)

LICENSED PROFESSIONAL ENGINEER
P.M. TREVISAN
100136551
March 13th, 2017
PROVINCE OF ONTARIO

RECEIVED
TOWN OF MILTON
MAR 29, 2017
17-5052
BUILDING DIVISION

READ ALL NOTES ON THIS PAGE AND ON THE ENGINEERING NOTE PAGE ENP-1. THE NOTE PAGE IS AN INTEGRAL PART OF THIS DRAWING AS IT CONTAINS SPECIFICATIONS AND CRITERIA USED IN THE DESIGN OF THIS COMPONENT.

KOTT

JOB NAME	TRUSS NAME	QUANTITY	PLY	JOB DESC.	DRWG NO.
PT0317-060	J03	34	1	TRUSS DESC. LECCO RIDGE-BLOCK 332	

KOTT , Stouffville, ON, CGC

Version 8.100 S Feb 9 2017 MiTek Industries, Inc. Mon Mar 13 13:24:32 2017 Page 1
ID:gtheX5EqOVSIkwpr5Eyn2TyGKTI-XF4tbXftTdcNmSQ5xvuiesY7nA4YGI7MApO?17zbLkj

SCALE = 1:28.8

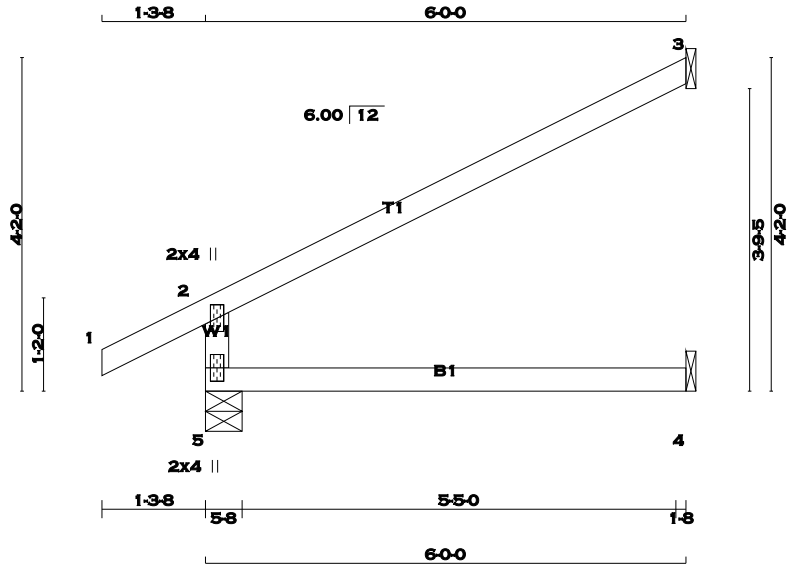

TOTAL WEIGHT = 34 X 17 = 581 lb [M]

LUMBER
N. L. G. A. RULES

CHORDS	SIZE		LUMBER	DESCR.
5 - 2	2x4	DRY	No.2	SPF
1 - 3	2x4	DRY	No.2	SPF
5 - 4	2x4	DRY	No.2	SPF

DRY: SEASONED LUMBER.

PLATES (table is in inches)

JT	TYPE	PLATES	W	LEN	Y	X
2	TMV+p	MT20	2.0	4.0		
5	BMV1+p	MT20	2.0	4.0		

A SIZE FOR SIZE SUBSTITUTION OF MITEK MII20 WITH TEE-LOK TL20 PLATES IS ALLOWED.

DIMENSIONS, SUPPORTS AND LOADINGS SPECIFIED BY FABRICATOR TO BE VERIFIED BY BUILDING DESIGNER

BEARINGS

JT	FACTORED GROSS REACTION VERT	HORZ	MAXIMUM FACTORED GROSS REACTION DOWN	HORZ	UPLIFT	INPUT BRG IN-SX	REQRD BRG IN-SX
5	457	0	457	0	0	5-8	5-8
3	174	0	174	0	0	1-8	1-8
4	43	0	49	0	0	1-8	1-8

SEE MITEK STANDARD DETAIL B37579H FOR CONNECTION TO JOINT(S) 3 , 4

UNFACTORED REACTIONS

JT	1ST LCASE COMBINED	MAX./MIN. COMPONENT REACTIONS SNOW	LIVE	PERM.LIVE	WIND	DEAD	SOIL
5	318	238 / 0	0 / 0	0 / 0	0 / 0	80 / 0	0 / 0
3	118	105 / 0	0 / 0	0 / 0	0 / 0	14 / 0	0 / 0
4	35	0 / 0	0 / 0	0 / 0	0 / 0	35 / 0	0 / 0

BEARING MATERIAL TO BE SPF NO.2 OR BETTER AT JOINT(S) 5

BRACING
TOP CHORD TO BE SHEATHED OR MAX. PURLIN SPACING = 6.25 FT.
MAX. UNBRACED BOTTOM CHORD LENGTH = 10.00 FT. OR RIGID CEILING DIRECTLY APPLIED.

ALL PITCH BREAKS AND PERIMETER CORNER JOINTS MUST BE LATERALLY RESTRAINED.

LOADING
TOTAL LOAD CASES: (4)

CHORDS MEMB. FR-TO	MAX. FACTORED FORCE (LBS)	FACTORED VERT. LOAD (PLF) FROM	TO	LC1 MAX CSI (LC)	MAX. UNBRAC LENGTH	WEBS MEMB. FR-TO	MAX. FACTORED FORCE (LBS)	MAX CSI (LC)
5- 2	-395 / 0	0.0	0.0	0.13 (4)	7.81			
1- 2	0 / 23	-77.3	-77.3	0.10 (1)	10.00			
2- 3	-26 / 0	-77.3	-77.3	0.47 (1)	6.25			
5- 4	0 / 0	-17.5	-17.5	0.13 (4)	10.00			

DESIGN CRITERIA

SPECIFIED LOADS:

TOP CH.	LL	=	23.3	PSF
	DL	=	3.0	PSF
BOT CH.	LL	=	0.0	PSF
	DL	=	7.0	PSF
TOTAL LOAD		=	33.3	PSF

SPACING = 24.0 IN. C/C

THIS TRUSS IS DESIGNED FOR RESIDENTIAL OR SMALL BUILDING REQUIREMENTS OF PART 9, NBCC 2010

THIS DESIGN COMPLIES WITH:
- PART 9 OF OBC 2012 , BCBC 2012 , ABC 2014
- CSA 086-09
- TPIC 2011

DESIGN ASSUMPTIONS
-OVERHANG NOT TO BE ALTERED OR CUT OFF.

(55 % OF 27.2 P.S.F. G.S.L. PLUS 8.4 P.S.F. RAIN LOAD) EQUALS 23.3 P.S.F. SPECIFIED ROOF LIVE LOAD

ALLOWABLE DEFL.(LL)= L/360 (0.20")
CALCULATED VERT. DEFL.(LL) = L/ 999 (0.00")
ALLOWABLE DEFL.(TL)= L/360 (0.20")
CALCULATED VERT. DEFL.(TL) = L/ 999 (0.03")

CSI: TC=0.47 (2-3:1) , BC=0.13 (4-5:4) , WB=0.00 (n/a:0) , SSI=0.20 (2-3:1)

DOL LUMBER=1.00 NAIL=1.00 LS BEND=1.10 COMP=1.10 SHEAR=1.10 TENS= 1.10

COMPANION LIVE LOAD FACTOR = 0.50

TRUSS PLATE MANUFACTURER IS NOT RESPONSIBLE FOR QUALITY CONTROL IN THE TRUSS MANUFACTURING PLANT .

NAIL VALUES

PLATE	GRIP(DRY) (PSI) MAX	MIN	SHEAR (PLI) MAX	MIN	SECTION (PLI) MAX	MIN
MT20	618	354	1667	822	2284	1656

PLATE PLACEMENT TOL. = 0.250 inches

PLATE ROTATION TOL. = 0.5 Deg.

JSI GRIP= 0.23 (2) (INPUT = 0.90)
JSI METAL= 0.09 (2) (INPUT = 1.00)

LICENSED PROFESSIONAL ENGINEER
P.M. TREVISAN
100136551
March 13th, 2017
PROVINCE OF ONTARIO

RECEIVED
TOWN OF MILTON
MAR 29, 2017
17-5052
BUILDING DIVISION

READ ALL NOTES ON THIS PAGE AND ON THE ENGINEERING NOTE PAGE ENP-1. THE NOTE PAGE IS AN INTEGRAL PART OF THIS DRAWING AS IT CONTAINS SPECIFICATIONS AND CRITERIA USED IN THE DESIGN OF THIS COMPONENT.

KOTT

JOB NAME	TRUSS NAME	QUANTITY	PLY	JOB DESC.	DRWG NO.
PT0317-060	J04	14	1	TRUSS DESC. LECCO RIDGE-BLOCK 332	

KOTT , Stouffville, ON, CGC

Version 8.100 S Feb 9 2017 MiTek Industries, Inc. Mon Mar 13 13:24:32 2017 Page 1
ID:gtheX5EqOVSIkwpr5Eyn2TyGKTI-XF4tbXftTdcNmSQ5xvuiesYAyA5LGI7MApO?17zbLkj

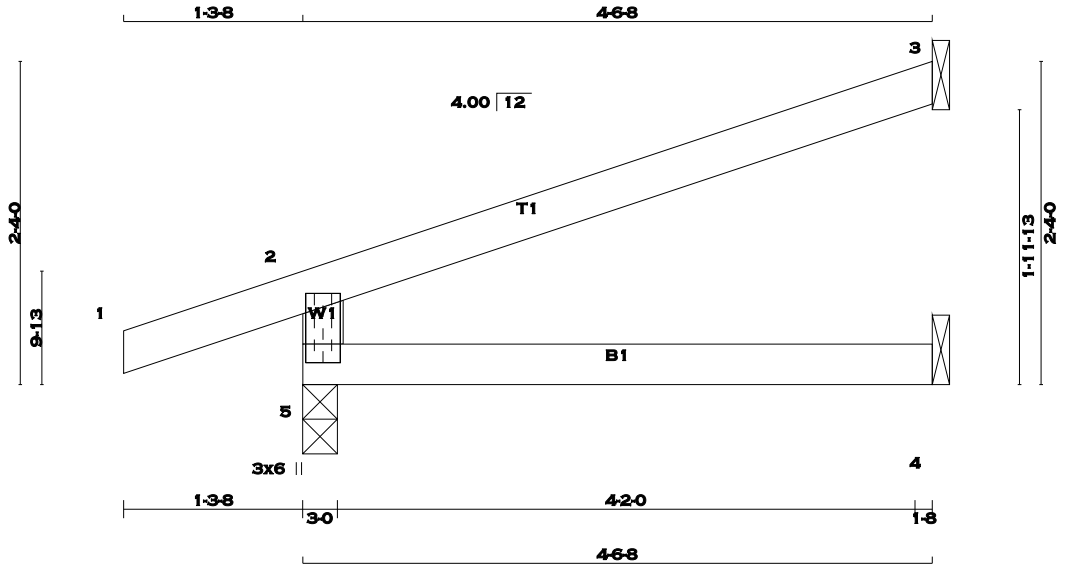

TOTAL WEIGHT = 14 X 13 = 177 lb
[M]

LUMBER
N. L. G. A. RULES

CHORDS	SIZE		LUMBER	DESCR.
5 - 2	2x4	DRY	No.2	SPF
1 - 3	2x4	DRY	No.2	SPF
5 - 4	2x4	DRY	No.2	SPF

DRY: SEASONED LUMBER.

PLATES (table is in inches)

JT	TYPE	PLATES	W	LEN	Y	X
2						
5						
5	TMBMV1+p	MT20	3.0	6.0	3.50	1.50

A SIZE FOR SIZE SUBSTITUTION OF MITEK MII20 WITH TEE-LOK TL20 PLATES IS ALLOWED.

DIMENSIONS, SUPPORTS AND LOADINGS SPECIFIED BY FABRICATOR TO BE VERIFIED BY BUILDING DESIGNER

BEARINGS

JT	FACTORED GROSS REACTION VERT	HORZ	MAXIMUM FACTORED GROSS REACTION DOWN	HORZ	UPLIFT	INPUT BRG IN-SX	REQRD BRG IN-SX
5	370	0	370	0	0	3-0	3-0
3	132	0	132	0	0	1-8	1-8
4	32	0	36	0	0	1-8	1-8

SEE MITEK STANDARD DETAIL B37579H FOR CONNECTION TO JOINT(S) 3 , 4

UNFACTORED REACTIONS

JT	1ST LCASE COMBINED	MAX./MIN. COMPONENT REACTIONS SNOW	LIVE	PERM.LIVE	WIND	DEAD	SOIL
5	257	194 / 0	0 / 0	0 / 0	0 / 0	63 / 0	0 / 0
3	90	79 / 0	0 / 0	0 / 0	0 / 0	10 / 0	0 / 0
4	26	0 / 0	0 / 0	0 / 0	0 / 0	26 / 0	0 / 0

BEARING MATERIAL TO BE SPF NO.2 OR BETTER AT JOINT(S) 5

BRACING
TOP CHORD TO BE SHEATHED OR MAX. PURLIN SPACING = 6.25 FT.
MAX. UNBRACED BOTTOM CHORD LENGTH = 10.00 FT. OR RIGID CEILING DIRECTLY APPLIED.

ALL PITCH BREAKS AND PERIMETER CORNER JOINTS MUST BE LATERALLY RESTRAINED.

LOADING
TOTAL LOAD CASES: (4)

CHORDS MEMB. FR-TO	MAX. FACTORED FORCE (LBS)	FACTORED VERT. LOAD (PLF) FROM	TO	LC1 MAX CSI (LC)	MAX. UNBRAC LENGTH	WEBS MEMB. FR-TO	MAX. FACTORED FORCE (LBS)	MAX CSI (LC)
5- 2	-323 / 0	0.0	0.0	0.08 (4)	7.81			
1- 2	0 / 16	-77.3	-77.3	0.10 (1)	10.00			
2- 3	-14 / 0	-77.3	-77.3	0.27 (1)	6.25			
5- 4	0 / 0	-17.5	-17.5	0.08 (4)	10.00			

DESIGN CRITERIA

SPECIFIED LOADS:

TOP CH.	LL	=	23.3	PSF
	DL	=	3.0	PSF
BOT CH.	LL	=	0.0	PSF
	DL	=	7.0	PSF
TOTAL LOAD		=	33.3	PSF

SPACING = 24.0 IN. C/C

THIS TRUSS IS DESIGNED FOR RESIDENTIAL OR SMALL BUILDING REQUIREMENTS OF PART 9, NBCC 2010

THIS DESIGN COMPLIES WITH:
- PART 9 OF OBC 2012 , BCBC 2012 , ABC 2014
- CSA 086-09
- TPIC 2011

DESIGN ASSUMPTIONS
-OVERHANG NOT TO BE ALTERED OR CUT OFF.

(55 % OF 27.2 P.S.F. G.S.L. PLUS 8.4 P.S.F. RAIN LOAD) EQUALS 23.3 P.S.F. SPECIFIED ROOF LIVE LOAD

ALLOWABLE DEFL.(LL)= L/360 (0.19")
CALCULATED VERT. DEFL.(LL) = L/ 999 (0.00")
ALLOWABLE DEFL.(TL)= L/360 (0.19")
CALCULATED VERT. DEFL.(TL) = L/ 999 (0.01")

CSI: TC=0.27 (2-3:1) , BC=0.08 (4-5:4) , WB=0.00 (n/a:0) , SSI=0.16 (2-3:1)

DOL LUMBER=1.00 NAIL=1.00 LS BEND=1.10 COMP=1.10 SHEAR=1.10 TENS= 1.10

COMPANION LIVE LOAD FACTOR = 0.50

TRUSS PLATE MANUFACTURER IS NOT RESPONSIBLE FOR QUALITY CONTROL IN THE TRUSS MANUFACTURING PLANT .

NAIL VALUES

PLATE	GRIP(DRY) (PSI) MAX	MIN	SHEAR (PLI) MAX	MIN	SECTION (PLI) MAX	MIN
MT20	618	354	1667	822	2284	1656

PLATE PLACEMENT TOL. = 0.250 inches

PLATE ROTATION TOL. = 5.0 Deg.

JSI GRIP= 0.28 (5) (INPUT = 0.90)
JSI METAL= 0.04 (5) (INPUT = 1.00)

LICENSED PROFESSIONAL ENGINEER
P.M. TREVISAN
100136551
March 13th, 2017
PROVINCE OF ONTARIO

RECEIVED
TOWN OF MILTON
MAR 29, 2017
17-5052
BUILDING DIVISION

READ ALL NOTES ON THIS PAGE AND ON THE ENGINEERING NOTE PAGE ENP-1. THE NOTE PAGE IS AN INTEGRAL PART OF THIS DRAWING AS IT CONTAINS SPECIFICATIONS AND CRITERIA USED IN THE DESIGN OF THIS COMPONENT.

KOTT

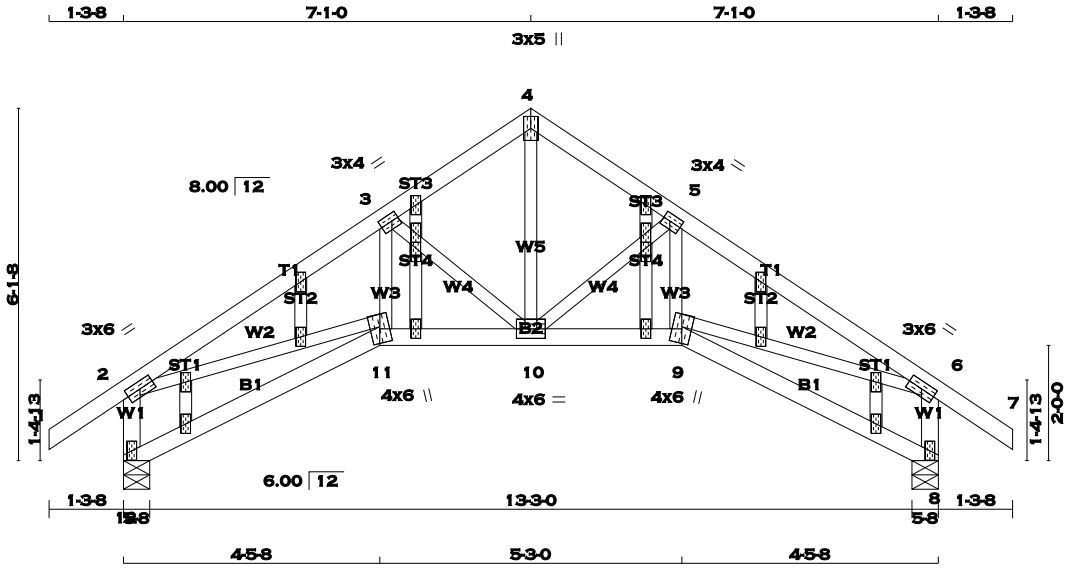

TOTAL WEIGHT = 2 X 68 = 136 lb

[M][F]

LUMBER

N. L. G. A. RULES

CHORDS	SIZE		LUMBER	DESCR.
1 - 4	2x4	DRY	No.2	SPF
4 - 7	2x4	DRY	No.2	SPF
12 - 2	2x4	DRY	No.2	SPF
8 - 6	2x4	DRY	No.2	SPF
12 - 11	2x4	DRY	No.2	SPF
11 - 9	2x4	DRY	No.2	SPF
9 - 8	2x4	DRY	No.2	SPF
ALL WEBS EXCEPT	2x3	DRY	No.2	SPF
ALL GABLE WEBS	2x3	DRY	No.2	SPF

DRY: SEASONED LUMBER.

GABLE STUDS SPACED AT 2-0-0 OC.

PLATES (table is in inches)

JT	TYPE	PLATES	W	LEN	Y	X
2	TMVW-t	MT20	3.0	6.0		
3	TMWW-t	MT20	3.0	4.0	1.50	1.50
4	TTW+p	MT20	3.0	5.0		
5	TMWW-t	MT20	3.0	4.0	1.50	1.50
6	TMVW-t	MT20	3.0	6.0		
8	BMV1+p	MT20	2.0	4.0		
9	BBWW+m	MT20	4.0	6.0		
10	BMWWW-t	MT20	4.0	6.0		
11	BBWW+m	MT20	4.0	6.0		
12	BMV1+p	MT20	2.0	4.0		
13	NP+w	MT20	2.0	4.0	1.25	1.00
13, 14, 15, 16, 17, 18, 19, 20, 21, 22, 23, 24, 25, 26						
13	NP+w	MT20	2.0	4.0		
22	NP+w	MT20	2.0	4.0	1.25	1.00

A SIZE FOR SIZE SUBSTITUTION OF MITEK MII20 WITH TEE-LOK TL20 PLATES IS ALLOWED.

DIMENSIONS, SUPPORTS AND LOADINGS SPECIFIED BY FABRICATOR TO BE VERIFIED BY BUILDING DESIGNER

BEARINGS

JT	FACTORED GROSS REACTION VERT	HORZ	MAXIMUM FACTORED GROSS REACTION DOWN	HORZ	UPLIFT	INPUT BRG IN-SX	REQRD BRG IN-SX
12	778	0	778	0	0	5-8	5-8
8	778	0	778	0	0	5-8	5-8

UNFACTORED REACTIONS

JT	1ST LCASE COMBINED	MAX./MIN. COMPONENT REACTIONS SNOW	LIVE	PERM.LIVE	WIND	DEAD	SOIL
12	544	394 / 0	0 / 0	0 / 0	0 / 0	150 / 0	0 / 0
8	544	394 / 0	0 / 0	0 / 0	0 / 0	150 / 0	0 / 0

BEARING MATERIAL TO BE SPF NO.2 OR BETTER AT JOINT(S) 12, 8

BRACING

TOP CHORD TO BE SHEATHED OR MAX. PURLIN SPACING = 5.52 FT.
MAX. UNBRACED BOTTOM CHORD LENGTH = 10.00 FT. OR RIGID CEILING DIRECTLY APPLIED.

ALL PITCH BREAKS AND PERIMETER CORNER JOINTS MUST BE LATERALLY RESTRAINED.

LOADING

TOTAL LOAD CASES: (4)

CHORDS

MEMB. FR-TO	MAX. FACTORED FORCE (LBS)	FACTORED VERT. LOAD (PLF) FROM	TO	LC1 MAX CSI (LC)	MAX. UNBRAC LENGTH
1- 2	0 / 29	-77.3	-77.3	0.10 (1)	10.00
2- 3	-1252 / 0	-77.3	-77.3	0.22 (1)	5.52
3- 4	-783 / 0	-77.3	-77.3	0.14 (1)	6.25
4- 5	-783 / 0	-77.3	-77.3	0.14 (1)	6.25
5- 6	-1252 / 0	-77.3	-77.3	0.22 (1)	5.52
6- 7	0 / 29	-77.3	-77.3	0.10 (1)	10.00
12- 2	-739 / 0	0.0	0.0	0.08 (1)	7.81
8- 6	-739 / 0	0.0	0.0	0.08 (1)	7.81
12-11	0 / 0	-17.5	-17.5	0.10 (4)	10.00
11-10	0 / 1041	-17.5	-17.5	0.18 (1)	10.00
10- 9	0 / 1041	-17.5	-17.5	0.18 (1)	10.00
9- 8	0 / 0	-17.5	-17.5	0.10 (4)	10.00

WEBS

MEMB. FR-TO	MAX. FACTORED FORCE (LBS)	MAX CSI (LC)
10- 4	0 / 741	0.17 (1)
10- 5	-538 / 0	0.11 (1)
9- 5	0 / 281	0.06 (1)
3-10	-538 / 0	0.11 (1)
11- 3	0 / 281	0.06 (1)
2-11	0 / 1077	0.24 (1)
9- 6	0 / 1077	0.24 (1)

DESIGN CRITERIA

SPECIFIED LOADS:

TOP CH.	LL	=	23.3	PSF
	DL	=	3.0	PSF
BOT CH.	LL	=	0.0	PSF
	DL	=	7.0	PSF
TOTAL LOAD		=	33.3	PSF

SPACING = 24.0 IN. C/C

THIS TRUSS IS DESIGNED FOR RESIDENTIAL OR SMALL BUILDING REQUIREMENTS OF PART 9, NBCC 2010

THIS DESIGN COMPLIES WITH:
- PART 9 OF OBC 2012 , BCBC 2012 , ABC 2014
- CSA 086-09
- TPIC 2011

(55 % OF 27.2 P.S.F. G.S.L. PLUS 8.4 P.S.F. RAIN LOAD) EQUALS 23.3 P.S.F. SPECIFIED ROOF LIVE LOAD

ALLOWABLE DEFL.(LL)= L/360 (0.47")
CALCULATED VERT. DEFL.(LL) = L/ 999 (0.04")
ALLOWABLE DEFL.(TL)= L/360 (0.47")
CALCULATED VERT. DEFL.(TL) = L/ 999 (0.07")

CSI: TC=0.22 (5-6:1) , BC=0.18 (10-11:1) , WB=0.24 (2-11:1) , SSI=0.13 (5-6:1)

DOL LUMBER=1.00 NAIL=1.00 LS BEND=1.10 COMP=1.10 SHEAR=1.10 TENS= 1.10

COMPANION LIVE LOAD FACTOR = 0.50

AUTOSOLVE HEELS OFF

TRUSS PLATE MANUFACTURER IS NOT RESPONSIBLE FOR QUALITY CONTROL IN THE TRUSS MANUFACTURING PLANT .

NAIL VALUES

PLATE	GRIP(DRY) (PSI) MAX	MIN	SHEAR (PLI) MAX	MIN	SECTION (PLI) MAX	MIN
MT20	618	354	1667	822	2284	1656

PLATE PLACEMENT TOL. = 0.250 inches

PLATE ROTATION TOL. = 5.0 Deg.

JSI GRIP= 0.78 (6) (INPUT = 0.90)
JSI METAL= 0.37 (11) (INPUT = 1.00)

LICENSED PROFESSIONAL ENGINEER
P.M. TREVISAN
100136551
March 13th, 2017
PROVINCE OF ONTARIO

RECEIVED
TOWN OF MILTON
MAR 29, 2017
17-5052
BUILDING DIVISION

READ ALL NOTES ON THIS PAGE AND ON THE ENGINEERING NOTE PAGE ENP-1. THE NOTE PAGE IS AN INTEGRAL PART OF THIS DRAWING AS IT CONTAINS SPECIFICATIONS AND CRITERIA USED IN THE DESIGN OF THIS COMPONENT.

KOTT

JOB NAME	TRUSS NAME	QUANTITY	PLY	JOB DESC.	DRWG NO.
PT0317-060	T02	2	1	TRUSS DESC. LECCO RIDGE-BLOCK 332	

KOTT , Stouffville, ON, CGC

Version 8.100 S Feb 9 2017 MiTek Industries, Inc. Mon Mar 13 13:24:33 2017 Page 1
ID:gtheX5EqOVSIkwpr5Eyn2TyGKTI-?ReFptgVExkEOc?HVcPxA35MZZQx?9aVOS8YaZzbLki

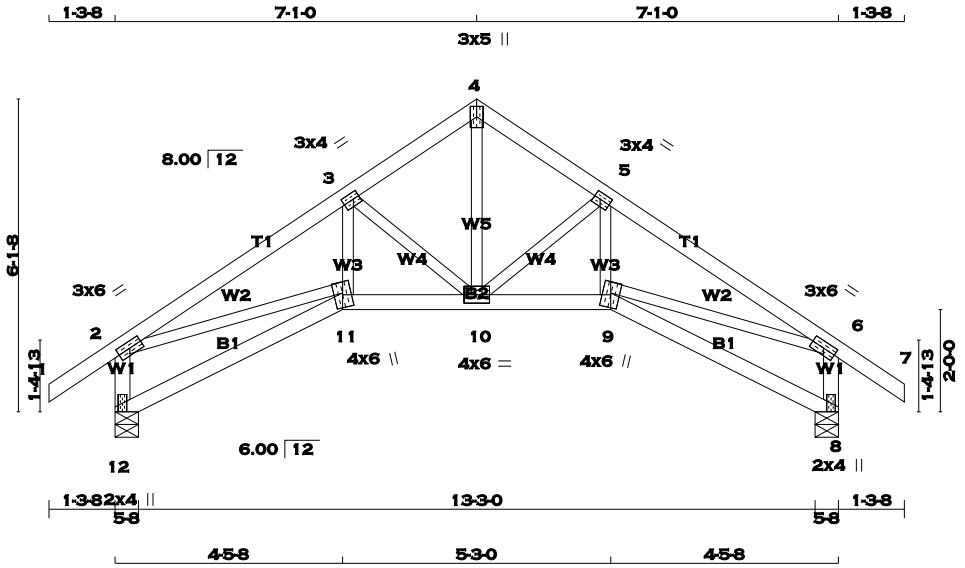

TOTAL WEIGHT = 2 X 61 = 123 lb
[M][F]

LUMBER
N. L. G. A. RULES

CHORDS	SIZE		LUMBER	DESCR.
1 - 4	2x4	DRY	No.2	SPF
4 - 7	2x4	DRY	No.2	SPF
12 - 2	2x4	DRY	No.2	SPF
8 - 6	2x4	DRY	No.2	SPF
12 - 11	2x4	DRY	No.2	SPF
11 - 9	2x4	DRY	No.2	SPF
9 - 8	2x4	DRY	No.2	SPF
ALL WEBS EXCEPT	2x3	DRY	No.2	SPF

DRY: SEASONED LUMBER.

PLATES (table is in inches)

JT	TYPE	PLATES	W	LEN	Y	X
2	TMVW-t	MT20	3.0	6.0		
3	TMWW-t	MT20	3.0	4.0	1.50	1.50
4	TTW+p	MT20	3.0	5.0		
5	TMWW-t	MT20	3.0	4.0	1.50	1.50
6	TMVW-t	MT20	3.0	6.0		
8	BMV1+p	MT20	2.0	4.0		
9	BBWW+m	MT20	4.0	6.0		
10	BMWWW-t	MT20	4.0	6.0		
11	BBWW+m	MT20	4.0	6.0		
12	BMV1+p	MT20	2.0	4.0		

A SIZE FOR SIZE SUBSTITUTION OF MITEK MII20 WITH TEE-LOK TL20 PLATES IS ALLOWED.

DIMENSIONS, SUPPORTS AND LOADINGS SPECIFIED BY FABRICATOR TO BE VERIFIED BY BUILDING DESIGNER

BEARINGS

JT	FACTORED GROSS REACTION VERT	HORZ	MAXIMUM FACTORED GROSS REACTION DOWN	HORZ	UPLIFT	INPUT BRG IN-SX	REQRD BRG IN-SX
12	778	0	778	0	0	5-8	5-8
8	778	0	778	0	0	5-8	5-8

UNFACTORED REACTIONS

JT	1ST LCASE COMBINED	MAX./MIN. COMPONENT REACTIONS SNOW	LIVE	PERM.LIVE	WIND	DEAD	SOIL
12	544	394 / 0	0 / 0	0 / 0	0 / 0	150 / 0	0 / 0
8	544	394 / 0	0 / 0	0 / 0	0 / 0	150 / 0	0 / 0

BEARING MATERIAL TO BE SPF NO.2 OR BETTER AT JOINT(S) 12, 8

BRACING
TOP CHORD TO BE SHEATHED OR MAX. PURLIN SPACING = 5.52 FT.
MAX. UNBRACED BOTTOM CHORD LENGTH = 10.00 FT. OR RIGID CEILING DIRECTLY APPLIED.

ALL PITCH BREAKS AND PERIMETER CORNER JOINTS MUST BE LATERALLY RESTRAINED.

LOADING
TOTAL LOAD CASES: (4)

CHORDS

MEMB. FR-TO	MAX. FACTORED FORCE (LBS)	FACTORED VERT. LOAD (PLF) FROM	TO	LC1	MAX CSI (LC)	MAX. UNBRAC LENGTH
1- 2	0 / 29	-77.3	-77.3		0.10 (1)	10.00
2- 3	-1252 / 0	-77.3	-77.3		0.22 (1)	5.52
3- 4	-783 / 0	-77.3	-77.3		0.14 (1)	6.25
4- 5	-783 / 0	-77.3	-77.3		0.14 (1)	6.25
5- 6	-1252 / 0	-77.3	-77.3		0.22 (1)	5.52
6- 7	0 / 29	-77.3	-77.3		0.10 (1)	10.00
12- 2	-739 / 0	0.0	0.0		0.08 (1)	7.81
8- 6	-739 / 0	0.0	0.0		0.08 (1)	7.81
12-11	0 / 0	-17.5	-17.5		0.10 (4)	10.00
11-10	0 / 1041	-17.5	-17.5		0.18 (1)	10.00
10- 9	0 / 1041	-17.5	-17.5		0.18 (1)	10.00
9- 8	0 / 0	-17.5	-17.5		0.10 (4)	10.00

WEBS

MEMB. FR-TO	MAX. FACTORED FORCE (LBS)	MAX CSI (LC)
10- 4	0 / 741	0.17 (1)
10- 5	-538 / 0	0.11 (1)
9- 5	0 / 281	0.06 (1)
3-10	-538 / 0	0.11 (1)
11- 3	0 / 281	0.06 (1)
2-11	0 / 1077	0.24 (1)
9- 6	0 / 1077	0.24 (1)

DESIGN CRITERIA

SPECIFIED LOADS:

TOP CH.	LL	=	23.3	PSF
	DL	=	3.0	PSF
BOT CH.	LL	=	0.0	PSF
	DL	=	7.0	PSF
TOTAL LOAD		=	33.3	PSF

SPACING = 24.0 IN. C/C

THIS TRUSS IS DESIGNED FOR RESIDENTIAL OR SMALL BUILDING REQUIREMENTS OF PART 9, NBCC 2010

THIS DESIGN COMPLIES WITH:
- PART 9 OF OBC 2012 , BCBC 2012 , ABC 2014
- CSA 086-09
- TPIC 2011

(55 % OF 27.2 P.S.F. G.S.L. PLUS 8.4 P.S.F. RAIN LOAD) EQUALS 23.3 P.S.F. SPECIFIED ROOF LIVE LOAD

ALLOWABLE DEFL.(LL)= L/360 (0.47")
CALCULATED VERT. DEFL.(LL) = L/ 999 (0.04")
ALLOWABLE DEFL.(TL)= L/360 (0.47")
CALCULATED VERT. DEFL.(TL) = L/ 999 (0.07")

CSI: TC=0.22 (5-6:1) , BC=0.18 (10-11:1) , WB=0.24 (2-11:1) , SSI=0.13 (5-6:1)

DOL LUMBER=1.00 NAIL=1.00 LS BEND=1.10 COMP=1.10 SHEAR=1.10 TENS= 1.10

COMPANION LIVE LOAD FACTOR = 0.50

AUTOSOLVE HEELS OFF

TRUSS PLATE MANUFACTURER IS NOT RESPONSIBLE FOR QUALITY CONTROL IN THE TRUSS MANUFACTURING PLANT .

NAIL VALUES

PLATE	GRIP(DRY) (PSI) MAX	MIN	SHEAR (PLI) MAX	MIN	SECTION (PLI) MAX	MIN
MT20	618	354	1667	822	2284	1656

PLATE PLACEMENT TOL. = 0.250 inches

PLATE ROTATION TOL. = 5.0 Deg.

JSI GRIP= 0.78 (6) (INPUT = 0.90)
JSI METAL= 0.37 (11) (INPUT = 1.00)

LICENSED PROFESSIONAL ENGINEER
P.M. TREVISAN
100136551
March 13th, 2017
PROVINCE OF ONTARIO

RECEIVED
TOWN OF MILTON
MAR 29, 2017
17-5052
BUILDING DIVISION

READ ALL NOTES ON THIS PAGE AND ON THE ENGINEERING NOTE PAGE ENP-1. THE NOTE PAGE IS AN INTEGRAL PART OF THIS DRAWING AS IT CONTAINS SPECIFICATIONS AND CRITERIA USED IN THE DESIGN OF THIS COMPONENT.

KOTT

JOB NAME	TRUSS NAME	QUANTITY	PLY	JOB DESC.	DRWG NO.
PT0317-060	**T03**	**2**	**1**	TRUSS DESC. LECCO RIDGE-BLOCK 332	

KOTT , Stouffville, ON, CGC

Version 8.100 S Feb 9 2017 MiTek Industries, Inc. Mon Mar 13 13:24:33 2017 Page 1
ID:gtheX5EqOVSIkwpr5Eyn2TyGKTI-?ReFptgVExkEOc?HVcPxA35NaZOK?8tVOS8YaZzbLki

SCALE = 1:43.9

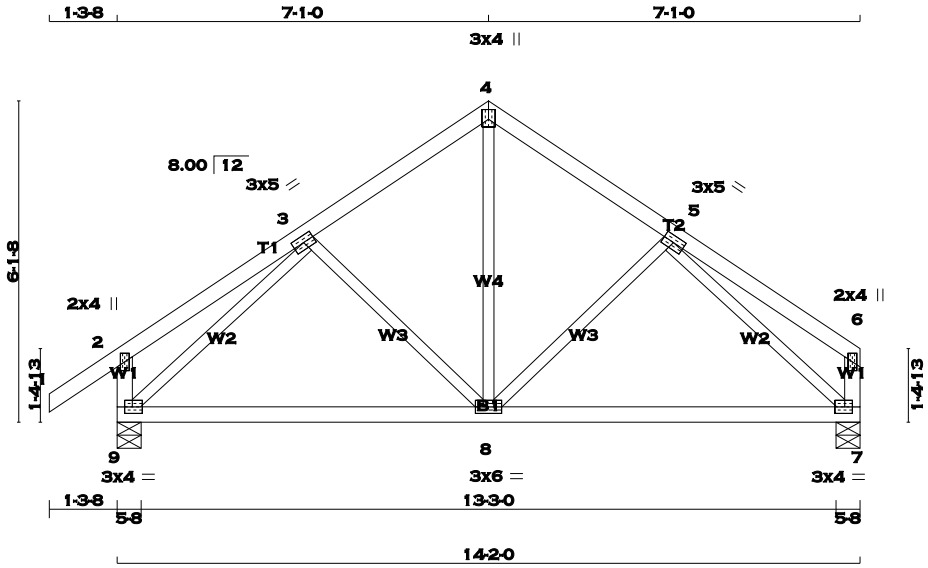

TOTAL WEIGHT = 2 X 59 = 119 lb
[M][F]

LUMBER
N. L. G. A. RULES

CHORDS	SIZE		LUMBER	DESCR.
1 - 4	2x4	DRY	No.2	SPF
4 - 6	2x4	DRY	No.2	SPF
9 - 2	2x4	DRY	No.2	SPF
7 - 6	2x4	DRY	No.2	SPF
9 - 7	2x4	DRY	No.2	SPF
ALL WEBS EXCEPT	2x3	DRY	No.2	SPF

DRY: SEASONED LUMBER.

PLATES (table is in inches)

JT	TYPE	PLATES	W	LEN	Y	X
2	TMV+p	MT20	2.0	4.0		
3	TMWW-t	MT20	3.0	5.0		
4	TTW+p	MT20	3.0	4.0	2.25	1.50
5	TMWW-t	MT20	3.0	5.0		
6	TMV+p	MT20	2.0	4.0		
7	BMVW1-t	MT20	3.0	4.0	1.50	1.75
8	BMWWW-t	MT20	3.0	6.0		
9	BMVW1-t	MT20	3.0	4.0	1.50	1.75

A SIZE FOR SIZE SUBSTITUTION OF MITEK MII20 WITH TEE-LOK TL20 PLATES IS ALLOWED.

DIMENSIONS, SUPPORTS AND LOADINGS SPECIFIED BY FABRICATOR TO BE VERIFIED BY BUILDING DESIGNER

BEARINGS

JT	FACTORED GROSS REACTION VERT	HORZ	MAXIMUM FACTORED GROSS REACTION DOWN	HORZ	UPLIFT	INPUT BRG IN-SX	REQRD BRG IN-SX
9	778	0	778	0	0	5-8	5-8
7	672	0	672	0	0	5-8	5-8

UNFACTORED REACTIONS

JT	1ST LCASE COMBINED	MAX./MIN. COMPONENT REACTIONS SNOW	LIVE	PERM.LIVE	WIND	DEAD	SOIL
9	544	394 / 0	0 / 0	0 / 0	0 / 0	150 / 0	0 / 0
7	472	330 / 0	0 / 0	0 / 0	0 / 0	142 / 0	0 / 0

BEARING MATERIAL TO BE SPF NO.2 OR BETTER AT JOINT(S) 9, 7

BRACING
TOP CHORD TO BE SHEATHED OR MAX. PURLIN SPACING = 6.25 FT.
MAX. UNBRACED BOTTOM CHORD LENGTH = 10.00 FT. OR RIGID CEILING DIRECTLY APPLIED.

ALL PITCH BREAKS AND PERIMETER CORNER JOINTS MUST BE LATERALLY RESTRAINED.

LOADING
TOTAL LOAD CASES: (4)

CHORDS

MEMB. FR-TO	MAX. FACTORED FORCE (LBS)	FACTORED VERT. LOAD (PLF) FROM	TO	LC1 MAX CSI (LC)	MAX. UNBRAC LENGTH
1- 2	0 / 29	-77.3	-77.3	0.10 (1)	10.00
2- 3	0 / 17	-77.3	-77.3	0.15 (1)	10.00
3- 4	-531 / 0	-77.3	-77.3	0.12 (1)	6.25
4- 5	-531 / 0	-77.3	-77.3	0.12 (1)	6.25
5- 6	0 / 17	-77.3	-77.3	0.15 (1)	10.00
9- 2	-212 / 0	0.0	0.0	0.02 (1)	7.81
7- 6	-106 / 0	0.0	0.0	0.01 (1)	7.81
9- 8	0 / 533	-17.5	-17.5	0.29 (4)	10.00
8- 7	0 / 533	-17.5	-17.5	0.29 (4)	10.00

WEBS

MEMB. FR-TO	MAX. FACTORED FORCE (LBS)	MAX CSI (LC)
8- 4	0 / 357	0.08 (1)
8- 5	-147 / 6	0.06 (1)
3- 8	-147 / 6	0.06 (1)
9- 3	-744 / 0	0.29 (1)
5- 7	-744 / 0	0.29 (1)

DESIGN CRITERIA

SPECIFIED LOADS:

TOP	CH.	LL	=	23.3	PSF
		DL	=	3.0	PSF
BOT	CH.	LL	=	0.0	PSF
		DL	=	7.0	PSF
TOTAL	LOAD		=	33.3	PSF

SPACING = 24.0 IN. C/C

THIS TRUSS IS DESIGNED FOR RESIDENTIAL OR SMALL BUILDING REQUIREMENTS OF PART 9, NBCC 2010

THIS DESIGN COMPLIES WITH:
- PART 9 OF OBC 2012 , BCBC 2012 , ABC 2014
- CSA 086-09
- TPIC 2011

(55 % OF 27.2 P.S.F. G.S.L. PLUS 8.4 P.S.F. RAIN LOAD) EQUALS 23.3 P.S.F. SPECIFIED ROOF LIVE LOAD

ALLOWABLE DEFL.(LL)= L/360 (0.47")
CALCULATED VERT. DEFL.(LL) = L/ 999 (0.01")
ALLOWABLE DEFL.(TL)= L/360 (0.47")
CALCULATED VERT. DEFL.(TL) = L/ 999 (0.06")

CSI: TC=0.15 (2-3:1) , BC=0.29 (8-9:4) , WB=0.29 (3-9:1) , SSI=0.11 (3-4:1)

DOL LUMBER=1.00 NAIL=1.00 LS BEND=1.10 COMP=1.10 SHEAR=1.10 TENS= 1.10

COMPANION LIVE LOAD FACTOR = 0.50

TRUSS PLATE MANUFACTURER IS NOT RESPONSIBLE FOR QUALITY CONTROL IN THE TRUSS MANUFACTURING PLANT .

NAIL VALUES

PLATE	GRIP(DRY) (PSI) MAX	MIN	SHEAR (PLI) MAX	MIN	SECTION (PLI) MAX	MIN
MT20	618	354	1667	822	2284	1656

PLATE PLACEMENT TOL. = 0.250 inches

PLATE ROTATION TOL. = 5.0 Deg.

JSI GRIP= 0.82 (3) (INPUT = 0.90)
JSI METAL= 0.21 (5) (INPUT = 1.00)

LICENSED PROFESSIONAL ENGINEER
P.M. TREVISAN
100136551
March 13th, 2017
PROVINCE OF ONTARIO

RECEIVED
TOWN OF MILTON
MAR 29, 2017
17-5052
BUILDING DIVISION

READ ALL NOTES ON THIS PAGE AND ON THE ENGINEERING NOTE PAGE ENP-1. THE NOTE PAGE IS AN INTEGRAL PART OF THIS DRAWING AS IT CONTAINS SPECIFICATIONS AND CRITERIA USED IN THE DESIGN OF THIS COMPONENT.

KOTT

JOB NAME	TRUSS NAME	QUANTITY	PLY	JOB DESC.	DRWG NO.
PT0317-060	T04	6	1	TRUSS DESC. LECCO RIDGE-BLOCK 332	ENG JOB: PT0317-060

KOTT , Stouffville, ON, CGC

Version 8.100 S Feb 9 2017 MiTek Industries, Inc. Mon Mar 13 13:24:33 2017 Page 1
ID:gtheX5EqOVSIkwpr5Eyn2TyGKTI-?ReFptgVExkEOc?HVcPxA35NZZOb?83VOS8YaZzbLki

SCALE = 1:43.9

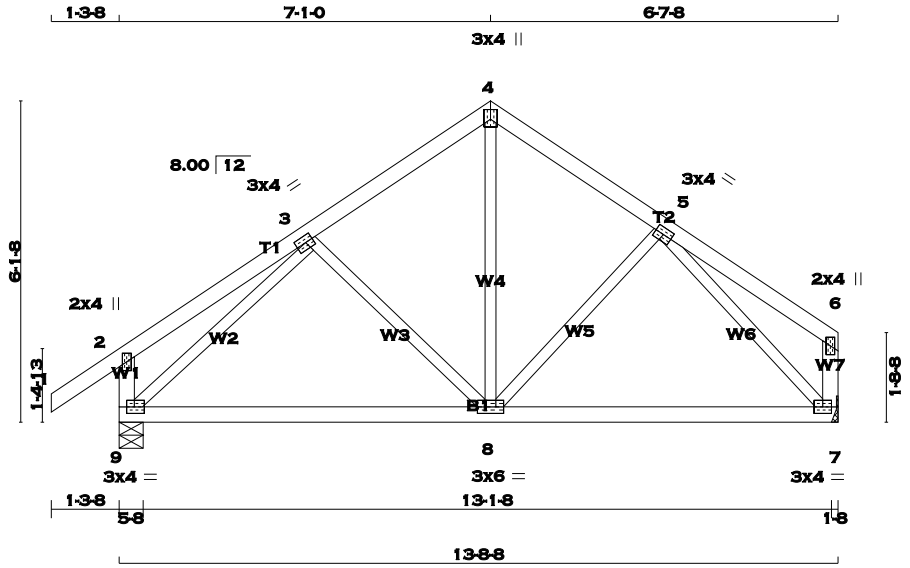

TOTAL WEIGHT = 6 X 58 = 351 lb
[M][F]

LUMBER
N. L. G. A. RULES

CHORDS	SIZE		LUMBER	DESCR.
1 - 4	2x4	DRY	No.2	SPF
4 - 6	2x4	DRY	No.2	SPF
9 - 2	2x4	DRY	No.2	SPF
7 - 6	2x4	DRY	No.2	SPF
9 - 7	2x4	DRY	No.2	SPF
ALL WEBS EXCEPT	2x3	DRY	No.2	SPF

DRY: SEASONED LUMBER.

PLATES (table is in inches)

JT	TYPE	PLATES	W	LEN	Y	X
2	TMV+p	MT20	2.0	4.0		
3	TMWW-t	MT20	3.0	4.0	1.50	1.75
4	TTW+p	MT20	3.0	4.0	2.25	1.50
5	TMWW-t	MT20	3.0	4.0		
6	TMV+p	MT20	2.0	4.0		
7	BMVW1-t	MT20	3.0	4.0		
8	BMWWW-t	MT20	3.0	6.0		
9	BMVW1-t	MT20	3.0	4.0	1.50	1.75

A SIZE FOR SIZE SUBSTITUTION OF MITEK MII20 WITH TEE-LOK TL20 PLATES IS ALLOWED.

DIMENSIONS, SUPPORTS AND LOADINGS SPECIFIED BY FABRICATOR TO BE VERIFIED BY BUILDING DESIGNER

BEARINGS

JT	FACTORED GROSS REACTION VERT	HORZ	MAXIMUM FACTORED GROSS REACTION DOWN	HORZ	UPLIFT	INPUT BRG IN-SX	REQRD BRG IN-SX
9	756	0	756	0	0	5-8	5-8
7	650	0	650	0	0	HANGER BY OTHERS MIN. SEAT SIZE: 1-8	

UNFACTORED REACTIONS

JT	1ST LCASE COMBINED	MAX./MIN. COMPONENT REACTIONS SNOW	LIVE	PERM.LIVE	WIND	DEAD	SOIL
9	528	383 / 0	0 / 0	0 / 0	0 / 0	145 / 0	0 / 0
7	456	319 / 0	0 / 0	0 / 0	0 / 0	137 / 0	0 / 0

BEARING MATERIAL TO BE SPF NO.2 OR BETTER AT JOINT(S) 9

BRACING
TOP CHORD TO BE SHEATHED OR MAX. PURLIN SPACING = 6.25 FT.
MAX. UNBRACED BOTTOM CHORD LENGTH = 10.00 FT. OR RIGID CEILING DIRECTLY APPLIED.

ALL PITCH BREAKS AND PERIMETER CORNER JOINTS MUST BE LATERALLY RESTRAINED.

LOADING
TOTAL LOAD CASES: (4)

CHORDS

MEMB. FR-TO	MAX. FACTORED FORCE (LBS)	FACTORED VERT. LOAD (PLF) FROM	TO	LC1 MAX CSI (LC)	MAX. UNBRAC LENGTH
1- 2	0 / 29	-77.3	-77.3	0.10 (1)	10.00
2- 3	0 / 17	-77.3	-77.3	0.15 (1)	10.00
3- 4	-498 / 0	-77.3	-77.3	0.12 (1)	6.25
4- 5	-497 / 0	-77.3	-77.3	0.10 (1)	6.25
5- 6	0 / 16	-77.3	-77.3	0.13 (1)	10.00
9- 2	-212 / 0	0.0	0.0	0.02 (1)	7.81
7- 6	-100 / 0	0.0	0.0	0.01 (1)	7.81
9- 8	0 / 510	-17.5	-17.5	0.27 (4)	10.00
8- 7	0 / 468	-17.5	-17.5	0.27 (4)	10.00

WEBS

MEMB. FR-TO	MAX. FACTORED FORCE (LBS)	MAX CSI (LC)
3- 8	-153 / 4	0.06 (1)
8- 4	0 / 328	0.07 (1)
8- 5	-100 / 15	0.04 (1)
9- 3	-712 / 0	0.28 (1)
5- 7	-690 / 0	0.26 (1)

DESIGN CRITERIA

SPECIFIED LOADS:

TOP	CH.	LL	=	23.3	PSF
		DL	=	3.0	PSF
BOT	CH.	LL	=	0.0	PSF
		DL	=	7.0	PSF
TOTAL	LOAD		=	33.3	PSF

SPACING = 24.0 IN. C/C

THIS TRUSS IS DESIGNED FOR RESIDENTIAL OR SMALL BUILDING REQUIREMENTS OF PART 9, NBCC 2010

THIS DESIGN COMPLIES WITH:
- PART 9 OF OBC 2012 , BCBC 2012 , ABC 2014
- CSA 086-09
- TPIC 2011

(55 % OF 27.2 P.S.F. G.S.L. PLUS 8.4 P.S.F. RAIN LOAD) EQUALS 23.3 P.S.F. SPECIFIED ROOF LIVE LOAD

ALLOWABLE DEFL.(LL)= L/360 (0.46")
CALCULATED VERT. DEFL.(LL) = L/ 999 (0.01")
ALLOWABLE DEFL.(TL)= L/360 (0.46")
CALCULATED VERT. DEFL.(TL) = L/ 999 (0.06")

CSI: TC=0.15 (2-3:1) , BC=0.27 (8-9:4) , WB=0.28 (3-9:1) , SSI=0.11 (3-4:1)

DOL LUMBER=1.00 NAIL=1.00 LS BEND=1.10 COMP=1.10 SHEAR=1.10 TENS= 1.10

COMPANION LIVE LOAD FACTOR = 0.50

TRUSS PLATE MANUFACTURER IS NOT RESPONSIBLE FOR QUALITY CONTROL IN THE TRUSS MANUFACTURING PLANT .

NAIL VALUES

PLATE	GRIP(DRY) (PSI) MAX	MIN	SHEAR (PLI) MAX	MIN	SECTION (PLI) MAX	MIN
MT20	618	354	1667	822	2284	1656

PLATE PLACEMENT TOL. = 0.250 inches

PLATE ROTATION TOL. = 5.0 Deg.

JSI GRIP= 0.88 (5) (INPUT = 0.90)
JSI METAL= 0.25 (3) (INPUT = 1.00)

LICENSED PROFESSIONAL ENGINEER
P.M. TREVISAN
100136551
March 13th, 2017
PROVINCE OF ONTARIO

RECEIVED
TOWN OF MILTON
MAR 29, 2017
17-5052
BUILDING DIVISION

READ ALL NOTES ON THIS PAGE AND ON THE ENGINEERING NOTE PAGE ENP-1. THE NOTE PAGE IS AN INTEGRAL PART OF THIS DRAWING AS IT CONTAINS SPECIFICATIONS AND CRITERIA USED IN THE DESIGN OF THIS COMPONENT.

KOTT

JOB NAME	TRUSS NAME	QUANTITY	PLY	JOB DESC.	DRWG NO.
PT0317-060	T05	2	1	TRUSS DESC. LECCO RIDGE-BLOCK 332	ENG JOB: PT0317-060

KOTT , Stouffville, ON, CGC

Version 8.100 S Feb 9 2017 MiTek Industries, Inc. Mon Mar 13 13:24:34 2017 Page 1

ID:gtheX5EqOVSIkwpr5Eyn2TyGKTI-TdCd0Dg8?Fs5?maU3JwAjHeX8zjQkeVfd6t66?zbLkh

SCALE = 1:17.7

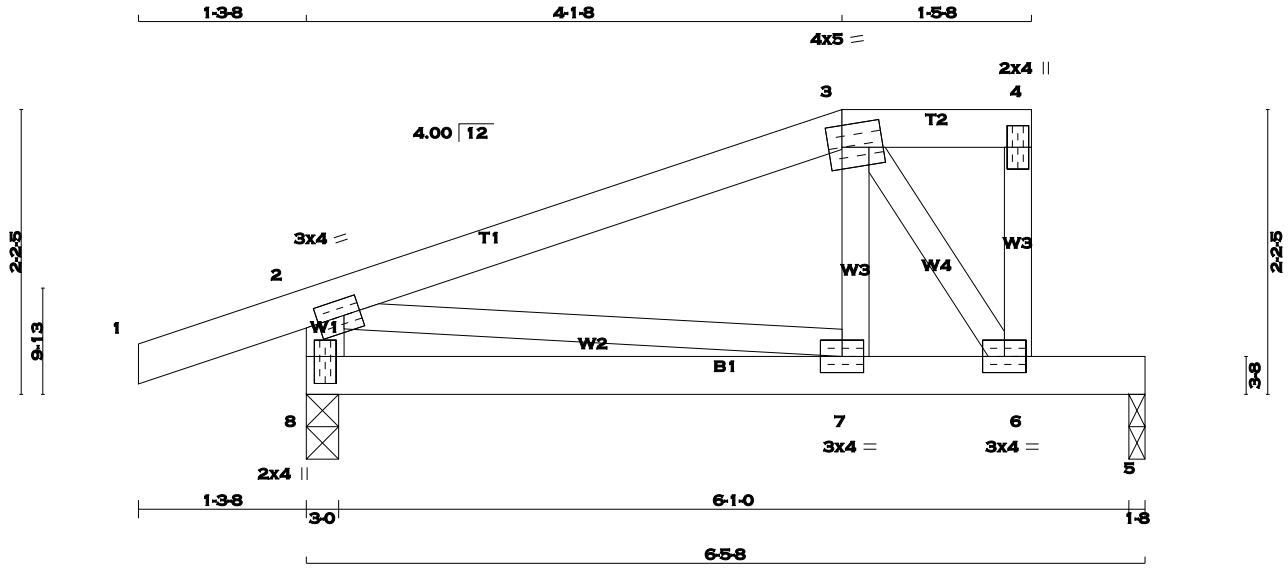

TOTAL WEIGHT = 2 X 23 = 47 lb [M]

LUMBER

N. L. G. A. RULES

CHORDS	SIZE		LUMBER	DESCR.
1 - 3	2x4	DRY	No.2	SPF
3 - 4	2x4	DRY	No.2	SPF
6 - 4	2x3	DRY	No.2	SPF
8 - 2	2x4	DRY	No.2	SPF
8 - 5	2x4	DRY	No.2	SPF
ALL WEBS EXCEPT	2x3	DRY	No.2	SPF

DRY: SEASONED LUMBER.

PLATES (table is in inches)

JT	TYPE	PLATES	W	LEN	Y	X
2	TMVW-t	MT20	3.0	4.0	1.50	1.50
3	TTWW-m	MT20	4.0	5.0	2.00	1.25
4	TMV+p	MT20	2.0	4.0		
6	BMVW-t	MT20	3.0	4.0		
7	BMWW-t	MT20	3.0	4.0		
8	BMV1+p	MT20	2.0	4.0	2.50	1.00

A SIZE FOR SIZE SUBSTITUTION OF MITEK MII20 WITH TEE-LOK TL20 PLATES IS ALLOWED.

DIMENSIONS, SUPPORTS AND LOADINGS SPECIFIED BY FABRICATOR TO BE VERIFIED BY BUILDING DESIGNER

BEARINGS

JT	FACTORED GROSS REACTION VERT	HORZ	MAXIMUM FACTORED GROSS REACTION DOWN	HORZ	UPLIFT	INPUT BRG IN-SX	REQRD BRG IN-SX
8	410	0	410	0	0	3-0	3-0
5	306	0	306	0	0	1-8	1-8

UNFACTORED REACTIONS

JT	1ST LCASE COMBINED	MAX./MIN. COMPONENT REACTIONS SNOW	LIVE	PERM.LIVE	WIND	DEAD	SOIL
8	285	213 / 0	0 / 0	0 / 0	0 / 0	73 / 0	0 / 0
5	215	150 / 0	0 / 0	0 / 0	0 / 0	65 / 0	0 / 0

BEARING MATERIAL TO BE SPF NO.2 OR BETTER AT JOINT(S) 8, 5

BRACING

TOP CHORD TO BE SHEATHED OR MAX. PURLIN SPACING = 6.25 FT.
MAX. UNBRACED BOTTOM CHORD LENGTH = 10.00 FT. OR RIGID CEILING DIRECTLY APPLIED.

ALL PITCH BREAKS AND PERIMETER CORNER JOINTS MUST BE LATERALLY RESTRAINED.

LOADING

TOTAL LOAD CASES: (4)

CHORDS

MEMB. FR-TO	MAX. FACTORED FORCE (LBS)	FACTORED VERT. LOAD (PLF) FROM	TO	LC1 MAX CSI (LC)	MAX. UNBRAC LENGTH
1- 2	0 / 16	-77.3	-77.3	0.10 (1)	10.00
2- 3	-278 / 0	-77.3	-77.3	0.23 (1)	6.25
3- 4	0 / 0	-77.3	-77.3	0.03 (1)	10.00
6- 4	-56 / 0	0.0	0.0	0.01 (1)	7.81
8- 2	-383 / 0	0.0	0.0	0.04 (1)	7.81
8- 7	0 / 0	-17.5	-17.5	0.08 (4)	10.00
7- 6	0 / 276	-17.5	-17.5	0.36 (1)	10.00
6- 5	0 / 0	-94.8	-94.8	0.32 (1)	10.00

WEBS

MEMB. FR-TO	MAX. FACTORED FORCE (LBS)	MAX CSI (LC)
7- 3	0 / 231	0.05 (1)
3- 6	-453 / 0	0.07 (1)
2- 7	0 / 265	0.06 (1)

DESIGN CRITERIA

SPECIFIED LOADS:

TOP	CH.	LL	=	23.3	PSF
		DL	=	3.0	PSF
BOT	CH.	LL	=	0.0	PSF
		DL	=	7.0	PSF
TOTAL	LOAD		=	33.3	PSF

SPACING = 24.0 IN. C/C

LOADING IN FLAT SECTION BASED ON A SLOPE OF 6.00/12

THIS TRUSS IS DESIGNED FOR RESIDENTIAL OR SMALL BUILDING REQUIREMENTS OF PART 9, NBCC 2010

THIS DESIGN COMPLIES WITH:
- PART 9 OF OBC 2012 , BCBC 2012 , ABC 2014
- CSA 086-09
- TPIC 2011

(55 % OF 27.2 P.S.F. G.S.L. PLUS 8.4 P.S.F. RAIN LOAD) EQUALS 23.3 P.S.F. SPECIFIED ROOF LIVE LOAD

ALLOWABLE DEFL.(LL)= L/360 (0.22")
CALCULATED VERT. DEFL.(LL) = L/ 999 (0.02")
ALLOWABLE DEFL.(TL)= L/360 (0.22")
CALCULATED VERT. DEFL.(TL) = L/ 999 (0.03")

CSI: TC=0.23 (2-3:1) , BC=0.36 (6-7:1) , WB=0.07 (3-6:1) , SSI=0.24 (5-6:1)

DOL LUMBER=1.00 NAIL=1.00 LS BEND=1.10 COMP=1.10 SHEAR=1.10 TENS= 1.10

COMPANION LIVE LOAD FACTOR = 0.50

TRUSS PLATE MANUFACTURER IS NOT RESPONSIBLE FOR QUALITY CONTROL IN THE TRUSS MANUFACTURING PLANT .

NAIL VALUES

PLATE	GRIP(DRY) (PSI) MAX	MIN	SHEAR (PLI) MAX	MIN	SECTION (PLI) MAX	MIN
MT20	618	354	1667	822	2284	1656

PLATE PLACEMENT TOL. = 0.250 inches

PLATE ROTATION TOL. = 5.0 Deg.

JSI GRIP= 0.64 (3) (INPUT = 0.90)
JSI METAL= 0.16 (3) (INPUT = 1.00)

LICENSED PROFESSIONAL ENGINEER
P.M. TREVISAN
100136551
March 13th, 2017
PROVINCE OF ONTARIO

RECEIVED
TOWN OF MILTON
MAR 29, 2017
17-5052
BUILDING DIVISION

READ ALL NOTES ON THIS PAGE AND ON THE ENGINEERING NOTE PAGE ENP-1. THE NOTE PAGE IS AN INTEGRAL PART OF THIS DRAWING AS IT CONTAINS SPECIFICATIONS AND CRITERIA USED IN THE DESIGN OF THIS COMPONENT.

KOTT

JOB NAME	TRUSS NAME	QUANTITY	PLY	JOB DESC.	DRWG NO.
PT0317-060	**T06**	**8**	**1**	TRUSS DESC. LECCO RIDGE-BLOCK 332	ENG JOB: PT0317-060

KOTT , Stouffville, ON, CGC

Version 8.100 S Feb 9 2017 MiTek Industries, Inc. Mon Mar 13 13:24:34 2017 Page 1
ID:gtheX5EqOVSIkwpr5Eyn2TyGKTI-TdCd0Dg8?Fs5?maU3JwAjHeUGzkakfcfd6t66?zbLkh

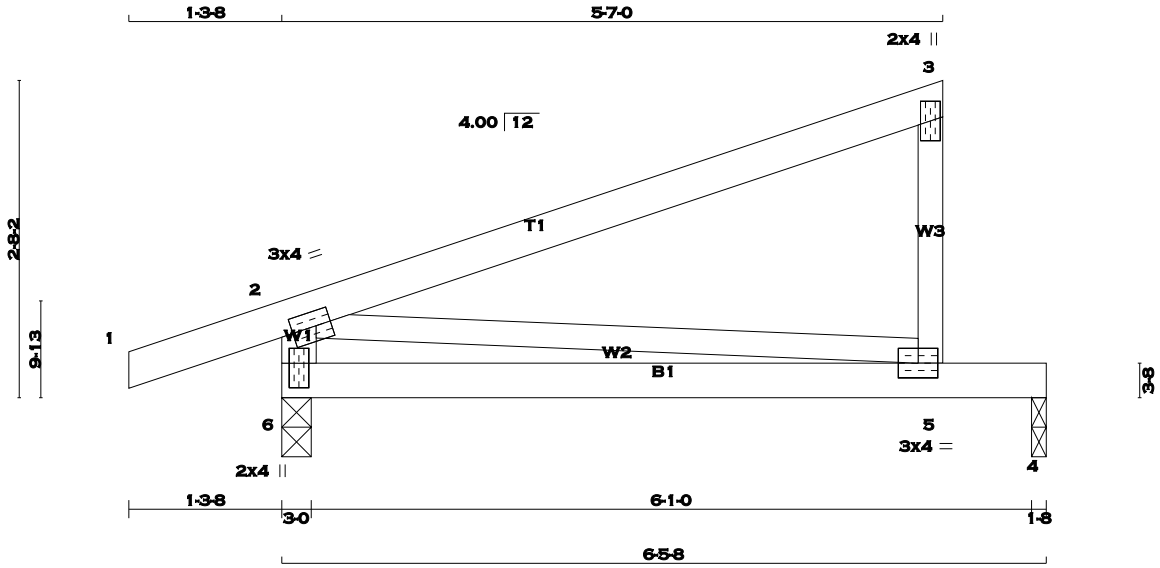

SCALE = 1:19.5

TOTAL WEIGHT = 8 X 22 = 176 lb
[M][F]

LUMBER
N. L. G. A. RULES

CHORDS	SIZE		LUMBER	DESCR.
1 - 3	2x4	DRY	No.2	SPF
5 - 3	2x3	DRY	No.2	SPF
6 - 2	2x4	DRY	No.2	SPF
6 - 4	2x4	DRY	No.2	SPF
ALL WEBS	2x3	DRY	No.2	SPF

DRY: SEASONED LUMBER.

PLATES (table is in inches)

JT	TYPE	PLATES	W	LEN	Y	X
2	TMVW-t	MT20	3.0	4.0	1.50	1.50
3	TMV+p	MT20	2.0	4.0		
5	BMVW-t	MT20	3.0	4.0		
6	BMV1+p	MT20	2.0	4.0	2.50	1.00

A SIZE FOR SIZE SUBSTITUTION OF MITEK MII20 WITH TEE-LOK TL20 PLATES IS ALLOWED.

DIMENSIONS, SUPPORTS AND LOADINGS SPECIFIED BY FABRICATOR TO BE VERIFIED BY BUILDING DESIGNER

BEARINGS

JT	FACTORED GROSS REACTION VERT	HORZ	MAXIMUM FACTORED GROSS REACTION DOWN	HORZ	UPLIFT	INPUT BRG IN-SX	REQRD BRG IN-SX
6	405	0	405	0	0	3-0	3-0
4	243	0	243	0	0	1-8	1-8

UNFACTORED REACTIONS

JT	1ST LCASE COMBINED	MAX./MIN. COMPONENT REACTIONS SNOW	LIVE	PERM.LIVE	WIND	DEAD	SOIL
6	282	210 / 0	0 / 0	0 / 0	0 / 0	72 / 0	0 / 0
4	172	112 / 0	0 / 0	0 / 0	0 / 0	60 / 0	0 / 0

BEARING MATERIAL TO BE SPF NO.2 OR BETTER AT JOINT(S) 6, 4

BRACING
TOP CHORD TO BE SHEATHED OR MAX. PURLIN SPACING = 10.00 FT.
MAX. UNBRACED BOTTOM CHORD LENGTH = 10.00 FT. OR RIGID CEILING DIRECTLY APPLIED.

ALL PITCH BREAKS AND PERIMETER CORNER JOINTS MUST BE LATERALLY RESTRAINED.

LOADING
TOTAL LOAD CASES: (4)

CHORDS

MEMB. FR-TO	MAX. FACTORED FORCE (LBS)	FACTORED VERT. LOAD (PLF) FROM	TO	LC1 MAX CSI (LC)	MAX. UNBRAC LENGTH
1- 2	0 / 16	-77.3	-77.3	0.10 (1)	10.00
2- 3	0 / 0	-77.3	-77.3	0.41 (1)	10.00
5- 3	-216 / 0	0.0	0.0	0.04 (1)	7.81
6- 2	-319 / 0	0.0	0.0	0.03 (1)	7.81
6- 5	0 / 0	-17.5	-17.5	0.29 (1)	10.00
5- 4	0 / 0	-17.5	-17.5	0.28 (1)	10.00

WEBS

MEMB. FR-TO	MAX. FACTORED FORCE (LBS)	MAX CSI (LC)
2- 5	0 / 0	0.00 (1)

DESIGN CRITERIA

SPECIFIED LOADS:

TOP CH.	LL =	23.3	PSF
	DL =	3.0	PSF
BOT CH.	LL =	0.0	PSF
	DL =	7.0	PSF
TOTAL LOAD	=	33.3	PSF

SPACING = 24.0 IN. C/C

THIS TRUSS IS DESIGNED FOR RESIDENTIAL OR SMALL BUILDING REQUIREMENTS OF PART 9, NBCC 2010

THIS DESIGN COMPLIES WITH:
- PART 9 OF OBC 2012 , BCBC 2012 , ABC 2014
- CSA 086-09
- TPIC 2011

(55 % OF 27.2 P.S.F. G.S.L. PLUS 8.4 P.S.F. RAIN LOAD) EQUALS 23.3 P.S.F. SPECIFIED ROOF LIVE LOAD

ALLOWABLE DEFL.(LL)= L/360 (0.22")
CALCULATED VERT. DEFL.(LL) = L/ 999 (0.07")
ALLOWABLE DEFL.(TL)= L/360 (0.22")
CALCULATED VERT. DEFL.(TL) = L/ 444 (0.17")

CSI: TC=0.41 (2-3:1) , BC=0.29 (5-6:1) , WB=0.00 (2-5:1) , SSI=0.19 (4-5:1)

DOL LUMBER=1.00 NAIL=1.00 LS BEND=1.10 COMP=1.10 SHEAR=1.10 TENS= 1.10

COMPANION LIVE LOAD FACTOR = 0.50

TRUSS PLATE MANUFACTURER IS NOT RESPONSIBLE FOR QUALITY CONTROL IN THE TRUSS MANUFACTURING PLANT .

NAIL VALUES

PLATE	GRIP(DRY) (PSI) MAX	MIN	SHEAR (PLI) MAX	MIN	SECTION (PLI) MAX	MIN
MT20	618	354	1667	822	2284	1656

PLATE PLACEMENT TOL. = 0.250 inches

PLATE ROTATION TOL. = 5.0 Deg.

JSI GRIP= 0.29 (2) (INPUT = 0.90)
JSI METAL= 0.06 (6) (INPUT = 1.00)

LICENSED PROFESSIONAL ENGINEER
P.M. TREVISAN
100136551
March 13th, 2017
PROVINCE OF ONTARIO

RECEIVED
TOWN OF MILTON
MAR 29, 2017
17-5052
BUILDING DIVISION

READ ALL NOTES ON THIS PAGE AND ON THE ENGINEERING NOTE PAGE ENP-1. THE NOTE PAGE IS AN INTEGRAL PART OF THIS DRAWING AS IT CONTAINS SPECIFICATIONS AND CRITERIA USED IN THE DESIGN OF THIS COMPONENT.

KOTT

JOB NAME	TRUSS NAME	QUANTITY	PLY	JOB DESC.	DRWG NO.
PT0317-060	**T07**	**2**	**1**	TRUSS DESC. LECCO RIDGE-BLOCK 332	

KOTT , Stouffville, ON, CGC

Version 8.100 S Feb 9 2017 MiTek Industries, Inc. Mon Mar 13 13:24:34 2017 Page 1
ID:gtheX5EqOVSIkwpr5Eyn2TyGKTI-TdCd0Dg8?Fs5?maU3JwAjHeZ5zoIkfqfd6t66?zbLkh

SCALE = 1:21.5

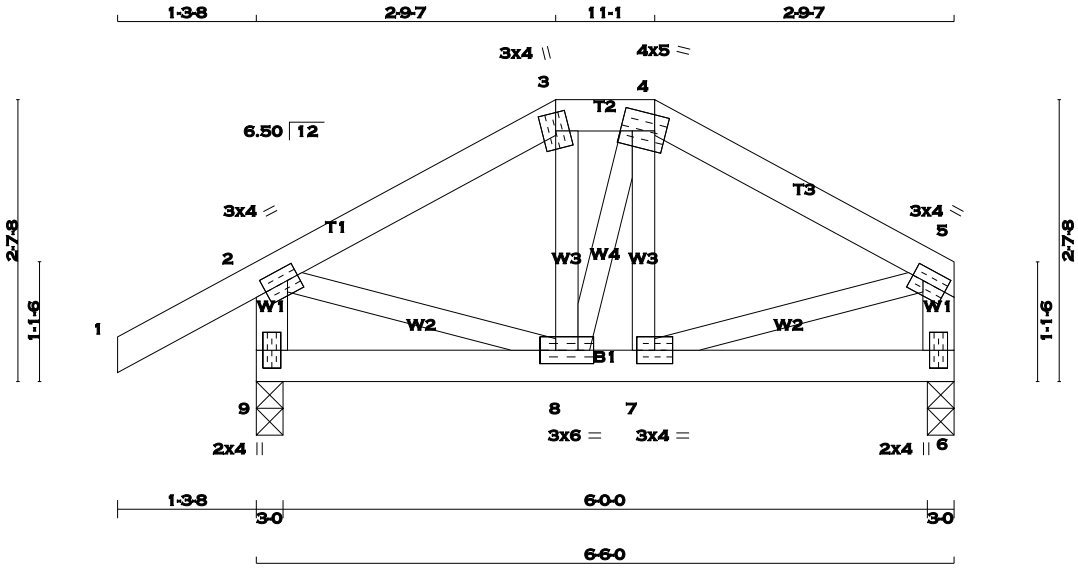

TOTAL WEIGHT = 2 X 28 = 57 lb

[M][F]

LUMBER

N. L. G. A. RULES

CHORDS	SIZE		LUMBER	DESCR.
1 - 3	2x4	DRY	No.2	SPF
3 - 4	2x4	DRY	No.2	SPF
4 - 5	2x4	DRY	No.2	SPF
9 - 2	2x4	DRY	No.2	SPF
6 - 5	2x4	DRY	No.2	SPF
9 - 6	2x4	DRY	No.2	SPF
ALL WEBS EXCEPT	2x3	DRY	No.2	SPF

DRY: SEASONED LUMBER.

PLATES (table is in inches)

JT	TYPE	PLATES	W	LEN	Y	X
2	TMVW-t	MT20	3.0	4.0	1.50	1.25
3	TTW+m	MT20	3.0	4.0		
4	TTWW-m	MT20	4.0	5.0	1.75	1.25
5	TMVW-t	MT20	3.0	4.0	1.50	1.25
6	BMV1+p	MT20	2.0	4.0		
7	BMWW-t	MT20	3.0	4.0		
8	BMWWW-t	MT20	3.0	6.0		
9	BMV1+p	MT20	2.0	4.0		

A SIZE FOR SIZE SUBSTITUTION OF MITEK MII20 WITH TEE-LOK TL20 PLATES IS ALLOWED.

DIMENSIONS, SUPPORTS AND LOADINGS SPECIFIED BY FABRICATOR TO BE VERIFIED BY BUILDING DESIGNER

BEARINGS

JT	FACTORED GROSS REACTION VERT	HORZ	MAXIMUM FACTORED GROSS REACTION DOWN	HORZ	UPLIFT	INPUT BRG IN-SX	REQRD BRG IN-SX
9	414	0	414	0	0	3-0	3-0
6	308	0	308	0	0	3-0	3-0

UNFACTORED REACTIONS

JT	1ST LCASE COMBINED	MAX./MIN. COMPONENT REACTIONS SNOW	LIVE	PERM.LIVE	WIND	DEAD	SOIL
9	288	215 / 0	0 / 0	0 / 0	0 / 0	73 / 0	0 / 0
6	216	151 / 0	0 / 0	0 / 0	0 / 0	65 / 0	0 / 0

BEARING MATERIAL TO BE SPF NO.2 OR BETTER AT JOINT(S) 9, 6

BRACING

TOP CHORD TO BE SHEATHED OR MAX. PURLIN SPACING = 6.25 FT.
MAX. UNBRACED BOTTOM CHORD LENGTH = 10.00 FT. OR RIGID CEILING DIRECTLY APPLIED.

ALL PITCH BREAKS AND PERIMETER CORNER JOINTS MUST BE LATERALLY RESTRAINED.

LOADING

TOTAL LOAD CASES: (4)

CHORDS

MEMB. FR-TO	MAX. FACTORED FORCE (LBS)	FACTORED VERT. LOAD (PLF) FROM	TO	LC1 MAX CSI (LC)	MAX. UNBRAC LENGTH
1- 2	0 / 25	-77.3	-77.3	0.10 (1)	10.00
2- 3	-246 / 0	-77.3	-77.3	0.08 (1)	6.25
3- 4	-215 / 0	-77.3	-77.3	0.01 (1)	6.25
4- 5	-247 / 0	-77.3	-77.3	0.08 (1)	6.25
9- 2	-391 / 0	0.0	0.0	0.04 (1)	7.81
6- 5	-286 / 0	0.0	0.0	0.03 (1)	7.81
9- 8	0 / 0	-17.5	-17.5	0.03 (4)	10.00
8- 7	0 / 216	-17.5	-17.5	0.05 (1)	10.00
7- 6	0 / 0	-17.5	-17.5	0.03 (4)	10.00

WEBS

MEMB. FR-TO	MAX. FACTORED FORCE (LBS)	MAX CSI (LC)
8- 3	-26 / 21	0.01 (4)
8- 4	-2 / 2	0.00 (4)
7- 4	-23 / 20	0.01 (4)
2- 8	0 / 224	0.05 (1)
7- 5	0 / 225	0.05 (1)

DESIGN CRITERIA

SPECIFIED LOADS:

TOP	CH.	LL	=	23.3	PSF
		DL	=	3.0	PSF
BOT	CH.	LL	=	0.0	PSF
		DL	=	7.0	PSF
TOTAL	LOAD		=	33.3	PSF

SPACING = 24.0 IN. C/C

LOADING IN FLAT SECTION BASED ON A SLOPE OF 6.00/12

THIS TRUSS IS DESIGNED FOR RESIDENTIAL OR SMALL BUILDING REQUIREMENTS OF PART 9, NBCC 2010

THIS DESIGN COMPLIES WITH:
- PART 9 OF OBC 2012 , BCBC 2012 , ABC 2014
- CSA 086-09
- TPIC 2011

(55 % OF 27.2 P.S.F. G.S.L. PLUS 8.4 P.S.F. RAIN LOAD) EQUALS 23.3 P.S.F. SPECIFIED ROOF LIVE LOAD

ALLOWABLE DEFL.(LL)= L/360 (0.22")
CALCULATED VERT. DEFL.(LL) = L/ 999 (0.00")
ALLOWABLE DEFL.(TL)= L/360 (0.22")
CALCULATED VERT. DEFL.(TL) = L/ 999 (0.00")

CSI: TC=0.10 (1-2:1) , BC=0.05 (7-8:1) , WB=0.05 (5-7:1) , SSI=0.07 (4-5:1)

DOL LUMBER=1.00 NAIL=1.00 LS BEND=1.10 COMP=1.10 SHEAR=1.10 TENS= 1.10

COMPANION LIVE LOAD FACTOR = 0.50

TRUSS PLATE MANUFACTURER IS NOT RESPONSIBLE FOR QUALITY CONTROL IN THE TRUSS MANUFACTURING PLANT .

NAIL VALUES

PLATE	GRIP(DRY) (PSI) MAX	MIN	SHEAR (PLI) MAX	MIN	SECTION (PLI) MAX	MIN
MT20	618	354	1667	822	2284	1656

PLATE PLACEMENT TOL. = 0.250 inches

PLATE ROTATION TOL. = 5.0 Deg.

JSI GRIP= 0.56 (5) (INPUT = 0.90)
JSI METAL= 0.13 (2) (INPUT = 1.00)

LICENSED PROFESSIONAL ENGINEER
P.M. TREVISAN
100136551
March 13th, 2017
PROVINCE OF ONTARIO

RECEIVED
TOWN OF MILTON
MAR 29, 2017
17-5052
BUILDING DIVISION

READ ALL NOTES ON THIS PAGE AND ON THE ENGINEERING NOTE PAGE ENP-1. THE NOTE PAGE IS AN INTEGRAL PART OF THIS DRAWING AS IT CONTAINS SPECIFICATIONS AND CRITERIA USED IN THE DESIGN OF THIS COMPONENT.

KOTT

JOB NAME	TRUSS NAME	QUANTITY	PLY	JOB DESC.	DRWG NO.
PT0317-060	**T08**	**4**	**1**	TRUSS DESC. LECCO RIDGE-BLOCK 332	Page 26 of 79 ENG JOB: PT0317-060

KOTT , Stouffville, ON, CGC

Version 8.100 S Feb 9 2017 MiTek Industries, Inc. Mon Mar 13 13:24:35 2017 Page 1
ID:gtheX5EqOVSIkwpr5Eyn2TyGKTI-xqm?EZhmmY_ydv9gc1RPGUAkoN8VT68osmdfeSzbLkg

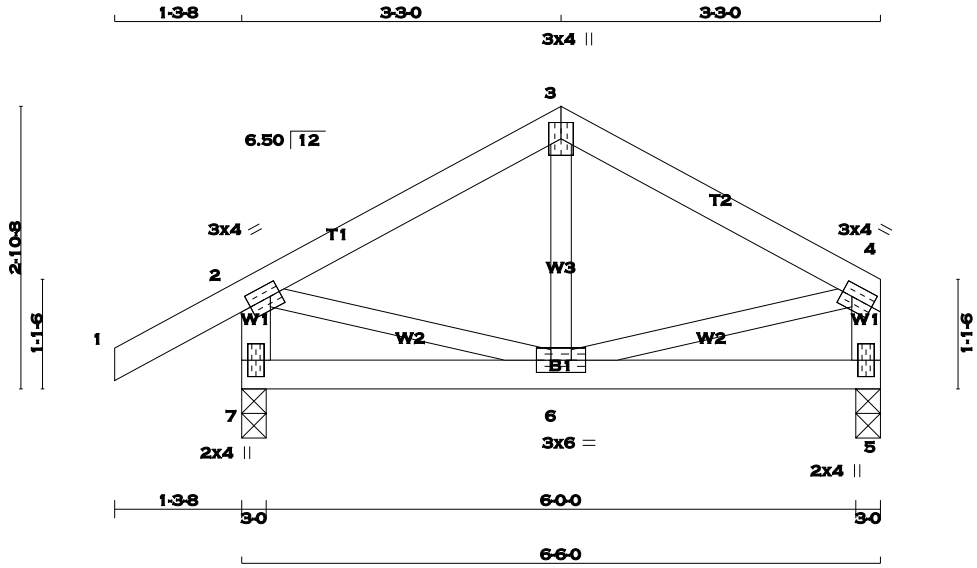

TOTAL WEIGHT = 4 X 26 = 104 lb
[M][F]

LUMBER
N. L. G. A. RULES

CHORDS	SIZE		LUMBER	DESCR.
1 - 3	2x4	DRY	No.2	SPF
3 - 4	2x4	DRY	No.2	SPF
7 - 2	2x4	DRY	No.2	SPF
5 - 4	2x4	DRY	No.2	SPF
7 - 5	2x4	DRY	No.2	SPF
ALL WEBS EXCEPT	2x3	DRY	No.2	SPF

DRY: SEASONED LUMBER.

PLATES (table is in inches)

JT	TYPE	PLATES	W	LEN	Y	X
2	TMVW-t	MT20	3.0	4.0	1.50	1.25
3	TTW+p	MT20	3.0	4.0		
4	TMVW-t	MT20	3.0	4.0	1.50	1.25
5	BMV1+p	MT20	2.0	4.0		
6	BMWWW-t	MT20	3.0	6.0		
7	BMV1+p	MT20	2.0	4.0		

A SIZE FOR SIZE SUBSTITUTION OF MITEK MII20 WITH TEE-LOK TL20 PLATES IS ALLOWED.

DIMENSIONS, SUPPORTS AND LOADINGS SPECIFIED BY FABRICATOR TO BE VERIFIED BY BUILDING DESIGNER

BEARINGS

JT	FACTORED GROSS REACTION VERT	HORZ	MAXIMUM FACTORED GROSS REACTION DOWN	HORZ	UPLIFT	INPUT BRG IN-SX	REQRD BRG IN-SX
7	414	0	414	0	0	3-0	3-0
5	308	0	308	0	0	3-0	3-0

UNFACTORED REACTIONS

JT	1ST LCASE COMBINED	MAX./MIN. COMPONENT REACTIONS SNOW	LIVE	PERM.LIVE	WIND	DEAD	SOIL
7	288	215 / 0	0 / 0	0 / 0	0 / 0	73 / 0	0 / 0
5	216	151 / 0	0 / 0	0 / 0	0 / 0	65 / 0	0 / 0

BEARING MATERIAL TO BE SPF NO.2 OR BETTER AT JOINT(S) 7, 5

BRACING
TOP CHORD TO BE SHEATHED OR MAX. PURLIN SPACING = 6.25 FT.
MAX. UNBRACED BOTTOM CHORD LENGTH = 10.00 FT. OR RIGID CEILING DIRECTLY APPLIED.

ALL PITCH BREAKS AND PERIMETER CORNER JOINTS MUST BE LATERALLY RESTRAINED.

LOADING
TOTAL LOAD CASES: (4)

CHORDS

MEMB. FR-TO	MAX. FACTORED FORCE (LBS)	FACTORED VERT. LOAD (PLF) FROM	TO	LC1 MAX CSI (LC)	MAX. UNBRAC LENGTH
1- 2	0 / 25	-77.3	-77.3	0.10 (1)	10.00
2- 3	-230 / 0	-77.3	-77.3	0.10 (1)	6.25
3- 4	-230 / 0	-77.3	-77.3	0.10 (1)	6.25
7- 2	-391 / 0	0.0	0.0	0.04 (1)	7.81
5- 4	-285 / 0	0.0	0.0	0.03 (1)	7.81
7- 6	0 / 0	-17.5	-17.5	0.05 (4)	10.00
6- 5	0 / 0	-17.5	-17.5	0.05 (4)	10.00

WEBS

MEMB. FR-TO	MAX. FACTORED FORCE (LBS)	MAX CSI (LC)
6- 3	-32 / 45	0.02 (4)
2- 6	0 / 208	0.05 (1)
6- 4	0 / 208	0.05 (1)

DESIGN CRITERIA

SPECIFIED LOADS:

TOP	CH.	LL	=	23.3	PSF
		DL	=	3.0	PSF
BOT	CH.	LL	=	0.0	PSF
		DL	=	7.0	PSF
TOTAL	LOAD		=	33.3	PSF

SPACING = 24.0 IN. C/C

THIS TRUSS IS DESIGNED FOR RESIDENTIAL OR SMALL BUILDING REQUIREMENTS OF PART 9, NBCC 2010

THIS DESIGN COMPLIES WITH:
- PART 9 OF OBC 2012 , BCBC 2012 , ABC 2014
- CSA 086-09
- TPIC 2011

(55 % OF 27.2 P.S.F. G.S.L. PLUS 8.4 P.S.F. RAIN LOAD) EQUALS 23.3 P.S.F. SPECIFIED ROOF LIVE LOAD

ALLOWABLE DEFL.(LL)= L/360 (0.22")
CALCULATED VERT. DEFL.(LL) = L/ 999 (0.00")
ALLOWABLE DEFL.(TL)= L/360 (0.22")
CALCULATED VERT. DEFL.(TL) = L/ 999 (0.00")

CSI: TC=0.10 (3-4:1) , BC=0.05 (6-7:4) , WB=0.05 (2-6:1) , SSI=0.09 (2-3:1)

DOL LUMBER=1.00 NAIL=1.00 LS BEND=1.10 COMP=1.10 SHEAR=1.10 TENS= 1.10

COMPANION LIVE LOAD FACTOR = 0.50

TRUSS PLATE MANUFACTURER IS NOT RESPONSIBLE FOR QUALITY CONTROL IN THE TRUSS MANUFACTURING PLANT .

NAIL VALUES

PLATE	GRIP(DRY) (PSI) MAX	MIN	SHEAR (PLI) MAX	MIN	SECTION (PLI) MAX	MIN
MT20	618	354	1667	822	2284	1656

PLATE PLACEMENT TOL. = 0.250 inches

PLATE ROTATION TOL. = 5.0 Deg.

JSI GRIP= 0.52 (4) (INPUT = 0.90)
JSI METAL= 0.13 (4) (INPUT = 1.00)

LICENSED PROFESSIONAL ENGINEER
P.M. TREVISAN
100136551
March 13th, 2017
PROVINCE OF ONTARIO

RECEIVED
TOWN OF MILTON
MAR 29, 2017
17-5052
BUILDING DIVISION

READ ALL NOTES ON THIS PAGE AND ON THE ENGINEERING NOTE PAGE ENP-1. THE NOTE PAGE IS AN INTEGRAL PART OF THIS DRAWING AS IT CONTAINS SPECIFICATIONS AND CRITERIA USED IN THE DESIGN OF THIS COMPONENT.

KOTT

JOB NAME	TRUSS NAME	QUANTITY	PLY	JOB DESC.	DRWG NO.
PT0317-060	**T09**	**2**	**1**	TRUSS DESC. LECCO RIDGE-BLOCK 332	Page 27 of 79 ENG JOB: PT0317-060

KOTT , Stouffville, ON, CGC

Version 8.100 S Feb 9 2017 MiTek Industries, Inc. Mon Mar 13 13:24:35 2017 Page 1

ID:gtheX5EqOVSIkwpr5Eyn2TyGKTI-xqm?EZhmmY_ydv9gc1RPGUAZDN49T2nosmdfeSzbLkg

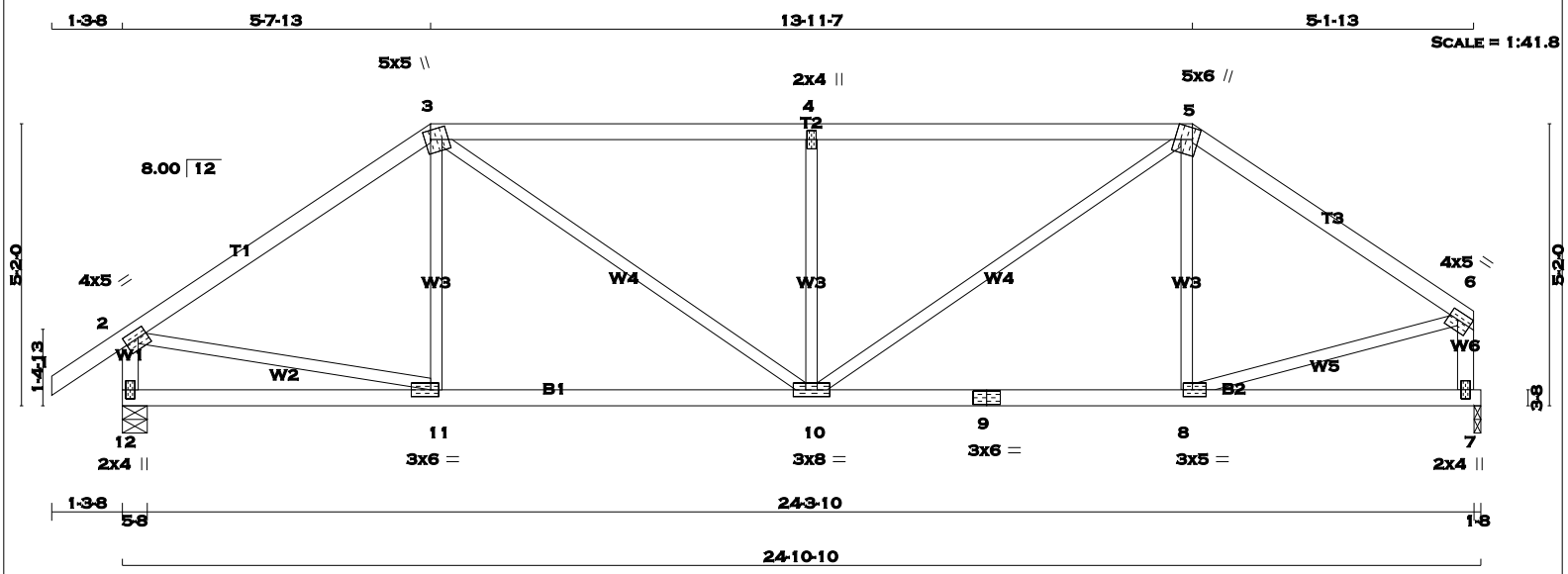

TOTAL WEIGHT = 2 X 97 = 194 lb [M]

LUMBER

N. L. G. A. RULES

CHORDS	SIZE		LUMBER	DESCR.
1 - 3	2x4	DRY	No.2	SPF
3 - 5	2x4	DRY	No.2	SPF
5 - 6	2x4	DRY	No.2	SPF
12 - 2	2x4	DRY	No.2	SPF
7 - 6	2x4	DRY	No.2	SPF
12 - 9	2x4	DRY	No.2	SPF
9 - 7	2x4	DRY	No.2	SPF
ALL WEBS EXCEPT	2x3	DRY	No.2	SPF

DRY: SEASONED LUMBER.

PLATES (table is in inches)

JT	TYPE	PLATES	W	LEN	Y	X
2	TMVW-t	MT20	4.0	5.0	1.75	2.00
3	TTWW+m	MT20	5.0	5.0	2.00	1.25
4	TMW+w	MT20	2.0	4.0		
5	TTWW+m	MT20	5.0	6.0	Edge	3.75
6	TMVW-t	MT20	4.0	5.0	1.75	Edge
7	BMV1+p	MT20	2.0	4.0		
8	BMWW-t	MT20	3.0	5.0	1.50	2.00
9	BS-t	MT20	3.0	6.0		
10	BMWWW-t	MT20	3.0	8.0		
11	BMWW-t	MT20	3.0	6.0	1.50	1.75
12	BMV1+p	MT20	2.0	4.0		

Edge - INDICATES REFERENCE CORNER OF PLATE TOUCHES EDGE OF CHORD.

A SIZE FOR SIZE SUBSTITUTION OF MITEK MII20 WITH TEE-LOK TL20 PLATES IS ALLOWED.

DIMENSIONS, SUPPORTS AND LOADINGS SPECIFIED BY FABRICATOR TO BE VERIFIED BY BUILDING DESIGNER

BEARINGS

JT	FACTORED GROSS REACTION VERT	HORZ	MAXIMUM FACTORED GROSS REACTION DOWN	HORZ	UPLIFT	INPUT BRG IN-SX	REQRD BRG IN-SX
12	1280	0	1280	0	0	5-8	5-8
7	1174	0	1174	0	0	1-8	1-8

UNFACTORED REACTIONS

JT	1ST LCASE COMBINED	MAX./MIN. COMPONENT REACTIONS SNOW	LIVE	PERM.LIVE	WIND	DEAD	SOIL
12	896	640 / 0	0 / 0	0 / 0	0 / 0	256 / 0	0 / 0
7	824	576 / 0	0 / 0	0 / 0	0 / 0	248 / 0	0 / 0

BEARING MATERIAL TO BE SPF NO.2 OR BETTER AT JOINT(S) 12, 7

BRACING

TOP CHORD TO BE SHEATHED OR MAX. PURLIN SPACING = 4.14 FT.
MAX. UNBRACED BOTTOM CHORD LENGTH = 10.00 FT. OR RIGID CEILING DIRECTLY APPLIED.

ALL PITCH BREAKS AND PERIMETER CORNER JOINTS MUST BE LATERALLY RESTRAINED.

LOADING

TOTAL LOAD CASES: (4)

CHORDS MEMB. FR-TO	MAX. FACTORED FORCE (LBS)	FACTORED VERT. LOAD (PLF) FROM	TO	LC1 MAX CSI (LC)	MAX. UNBRAC LENGTH	WEBS MEMB. FR-TO	MAX. FACTORED FORCE (LBS)	MAX CSI (LC)
1- 2	0 / 29	-77.3	-77.3	0.10 (1)	10.00	11- 3	-77 / 76	0.03 (1)
2- 3	-1287 / 0	-77.3	-77.3	0.51 (1)	5.04	3-10	0 / 641	0.14 (1)
3- 4	-1594 / 0	-77.3	-77.3	0.78 (1)	4.14	10- 4	-663 / 0	0.26 (1)
4- 5	-1594 / 0	-77.3	-77.3	0.78 (1)	4.14	10- 5	0 / 725	0.16 (1)
5- 6	-1206 / 0	-77.3	-77.3	0.41 (1)	5.31	8- 5	-150 / 50	0.06 (1)
12- 2	-1241 / 0	0.0	0.0	0.13 (1)	7.20	2-11	0 / 1088	0.24 (1)
7- 6	-1140 / 0	0.0	0.0	0.12 (1)	7.45	8- 6	0 / 1038	0.23 (1)
12-11	0 / 0	-17.5	-17.5	0.16 (4)	10.00			
11-10	0 / 1068	-17.5	-17.5	0.26 (1)	10.00			
10- 9	0 / 999	-17.5	-17.5	0.25 (1)	10.00			
9- 8	0 / 999	-17.5	-17.5	0.25 (1)	10.00			
8- 7	0 / 0	-17.5	-17.5	0.15 (4)	10.00			

DESIGN CRITERIA

SPECIFIED LOADS:

TOP CH.	LL	=	23.3	PSF
	DL	=	3.0	PSF
BOT CH.	LL	=	0.0	PSF
	DL	=	7.0	PSF
TOTAL LOAD		=	33.3	PSF

SPACING = 24.0 IN. C/C

LOADING IN FLAT SECTION BASED ON A SLOPE OF 6.00/12

THIS TRUSS IS DESIGNED FOR RESIDENTIAL OR SMALL BUILDING REQUIREMENTS OF PART 9, NBCC 2010

THIS DESIGN COMPLIES WITH:
- PART 9 OF OBC 2012 , BCBC 2012 , ABC 2014
- CSA 086-09
- TPIC 2011

(55 % OF 27.2 P.S.F. G.S.L. PLUS 8.4 P.S.F. RAIN LOAD) EQUALS 23.3 P.S.F. SPECIFIED ROOF LIVE LOAD

ALLOWABLE DEFL.(LL)= L/360 (0.82")
CALCULATED VERT. DEFL.(LL) = L/ 999 (0.06")
ALLOWABLE DEFL.(TL)= L/360 (0.82")
CALCULATED VERT. DEFL.(TL) = L/ 999 (0.11")

CSI: TC=0.78 (3-4:1) , BC=0.26 (10-11:1) , WB=0.26 (4-10:1) , SSI=0.26 (3-4:1)

DOL LUMBER=1.00 NAIL=1.00 LS BEND=1.10 COMP=1.10 SHEAR=1.10 TENS= 1.10

COMPANION LIVE LOAD FACTOR = 0.50

TRUSS PLATE MANUFACTURER IS NOT RESPONSIBLE FOR QUALITY CONTROL IN THE TRUSS MANUFACTURING PLANT .

NAIL VALUES

PLATE	GRIP(DRY) (PSI) MAX	MIN	SHEAR (PLI) MAX	MIN	SECTION (PLI) MAX	MIN
MT20	618	354	1667	822	2284	1656

PLATE PLACEMENT TOL. = 0.250 inches

PLATE ROTATION TOL. = 5.0 Deg.

JSI GRIP= 0.90 (11) (INPUT = 0.90)
JSI METAL= 0.44 (2) (INPUT = 1.00)

LICENSED PROFESSIONAL ENGINEER
P.M. TREVISAN
100136551
March 13th, 2017
PROVINCE OF ONTARIO

RECEIVED
TOWN OF MILTON
MAR 29, 2017
17-5052
BUILDING DIVISION

READ ALL NOTES ON THIS PAGE AND ON THE ENGINEERING NOTE PAGE ENP-1. THE NOTE PAGE IS AN INTEGRAL PART OF THIS DRAWING AS IT CONTAINS SPECIFICATIONS AND CRITERIA USED IN THE DESIGN OF THIS COMPONENT.

KOTT

JOB NAME	TRUSS NAME	QUANTITY	PLY	JOB DESC.	DRWG NO.
PT0317-060	**T10**	**2**	**1**	TRUSS DESC. LECCO RIDGE-BLOCK 332	

KOTT , Stouffville, ON, CGC

Version 8.100 S Feb 9 2017 MiTek Industries, Inc. Mon Mar 13 13:24:35 2017 Page 1

ID:gtheX5EqOVSIkwpr5Eyn2TyGKTI-xqm?EZhmmY_ydv9gc1RPGUAhUN4uT_vosmdfeSzbLkg

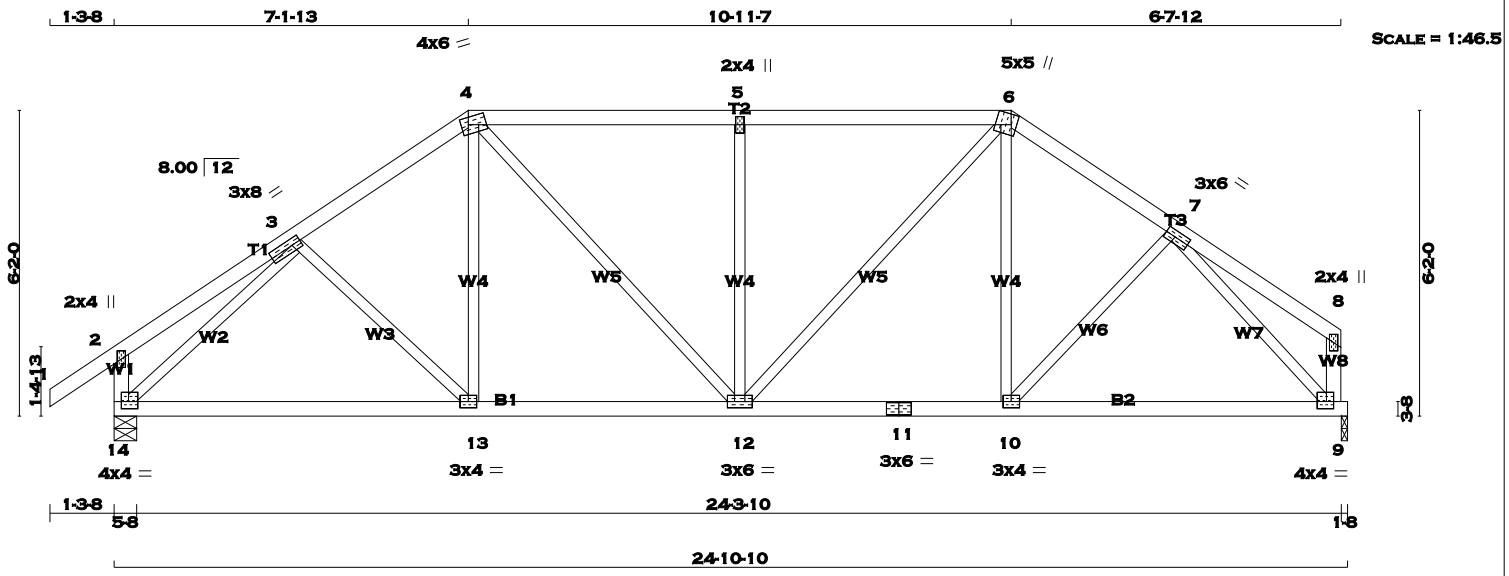

TOTAL WEIGHT = 2 X 106 = 211 lb

[M][F]

LUMBER

N. L. G. A. RULES

CHORDS	SIZE		LUMBER	DESCR.
1 - 4	2x4	DRY	No.2	SPF
4 - 6	2x4	DRY	No.2	SPF
6 - 8	2x4	DRY	No.2	SPF
14 - 2	2x4	DRY	No.2	SPF
9 - 8	2x4	DRY	No.2	SPF
14 - 11	2x4	DRY	No.2	SPF
11 - 9	2x4	DRY	No.2	SPF
ALL WEBS EXCEPT	2x3	DRY	No.2	SPF

DRY: SEASONED LUMBER.

PLATES (table is in inches)

JT	TYPE	PLATES	W	LEN	Y	X
2	TMV+p	MT20	2.0	4.0		
3	TMWW-t	MT20	3.0	8.0	1.50	2.25
4	TTWW-m	MT20	4.0	6.0	1.75	1.75
5	TMW+w	MT20	2.0	4.0		
6	TTWW+m	MT20	5.0	5.0	Edge	3.75
7	TMWW-t	MT20	3.0	6.0	1.50	2.50
8	TMV+p	MT20	2.0	4.0		
9	BMVW1-t	MT20	4.0	4.0	1.75	1.75
10	BMWW-t	MT20	3.0	4.0		
11	BS-t	MT20	3.0	6.0		
12	BMWWW-t	MT20	3.0	6.0		
13	BMWW-t	MT20	3.0	4.0		
14	BMVW1-t	MT20	4.0	4.0	1.75	1.75

Edge - INDICATES REFERENCE CORNER OF PLATE TOUCHES EDGE OF CHORD.

A SIZE FOR SIZE SUBSTITUTION OF MITEK MII20 WITH TEE-LOK TL20 PLATES IS ALLOWED.

DIMENSIONS, SUPPORTS AND LOADINGS SPECIFIED BY FABRICATOR TO BE VERIFIED BY BUILDING DESIGNER

BEARINGS

JT	FACTORED GROSS REACTION VERT	HORZ	MAXIMUM FACTORED GROSS REACTION DOWN	HORZ	UPLIFT	INPUT BRG IN-SX	REQRD BRG IN-SX
14	1280	0	1280	0	0	5-8	5-8
9	1174	0	1174	0	0	1-8	1-8

UNFACTORED REACTIONS

JT	1ST LCASE COMBINED	MAX./MIN. COMPONENT REACTIONS SNOW	LIVE	PERM.LIVE	WIND	DEAD	SOIL
14	896	640 / 0	0 / 0	0 / 0	0 / 0	256 / 0	0 / 0
9	824	576 / 0	0 / 0	0 / 0	0 / 0	247 / 0	0 / 0

BEARING MATERIAL TO BE SPF NO.2 OR BETTER AT JOINT(S) 14, 9

BRACING

TOP CHORD TO BE SHEATHED OR MAX. PURLIN SPACING = 5.33 FT.
MAX. UNBRACED BOTTOM CHORD LENGTH = 10.00 FT. OR RIGID CEILING DIRECTLY APPLIED.

ALL PITCH BREAKS AND PERIMETER CORNER JOINTS MUST BE LATERALLY RESTRAINED.

LOADING

TOTAL LOAD CASES: (4)

CHORDS

MEMB. FR-TO	MAX. FACTORED FORCE (LBS)	FACTORED VERT. LOAD (PLF) FROM	TO	LC1 MAX CSI (LC)	MAX. UNBRAC LENGTH
1- 2	0 / 29	-77.3	-77.3	0.10 (1)	10.00
2- 3	0 / 16	-77.3	-77.3	0.15 (1)	10.00
3- 4	-1257 / 0	-77.3	-77.3	0.13 (1)	5.62
4- 5	-1286 / 0	-77.3	-77.3	0.32 (1)	5.33
5- 6	-1286 / 0	-77.3	-77.3	0.32 (1)	5.33
6- 7	-1203 / 0	-77.3	-77.3	0.11 (1)	5.73
7- 8	0 / 15	-77.3	-77.3	0.12 (1)	10.00
14- 2	-215 / 0	0.0	0.0	0.02 (1)	7.81
9- 8	-102 / 0	0.0	0.0	0.01 (1)	7.81
14-13	0 / 1045	-17.5	-17.5	0.28 (1)	10.00
13-12	0 / 1033	-17.5	-17.5	0.28 (4)	10.00
12-11	0 / 988	-17.5	-17.5	0.26 (1)	10.00
11-10	0 / 988	-17.5	-17.5	0.26 (1)	10.00
10- 9	0 / 938	-17.5	-17.5	0.25 (1)	10.00

WEBS

MEMB. FR-TO	MAX. FACTORED FORCE (LBS)	MAX CSI (LC)
3-13	-20 / 43	0.01 (4)
13- 4	0 / 148	0.04 (4)
4-12	0 / 370	0.08 (1)
12- 5	-518 / 0	0.31 (1)
12- 6	0 / 437	0.10 (1)
10- 6	0 / 97	0.03 (4)
10- 7	0 / 70	0.02 (4)
14- 3	-1456 / 0	0.57 (1)
7- 9	-1389 / 0	0.53 (1)

DESIGN CRITERIA

SPECIFIED LOADS:

TOP CH.	LL	=	23.3	PSF
	DL	=	3.0	PSF
BOT CH.	LL	=	0.0	PSF
	DL	=	7.0	PSF
TOTAL LOAD		=	33.3	PSF

SPACING = 24.0 IN. C/C

LOADING IN FLAT SECTION BASED ON A SLOPE OF 6.00/12

THIS TRUSS IS DESIGNED FOR RESIDENTIAL OR SMALL BUILDING REQUIREMENTS OF PART 9, NBCC 2010

THIS DESIGN COMPLIES WITH:
- PART 9 OF OBC 2012 , BCBC 2012 , ABC 2014
- CSA 086-09
- TPIC 2011

(55 % OF 27.2 P.S.F. G.S.L. PLUS 8.4 P.S.F. RAIN LOAD) EQUALS 23.3 P.S.F. SPECIFIED ROOF LIVE LOAD

ALLOWABLE DEFL.(LL)= L/360 (0.82")
CALCULATED VERT. DEFL.(LL) = L/ 999 (0.05")
ALLOWABLE DEFL.(TL)= L/360 (0.82")
CALCULATED VERT. DEFL.(TL) = L/ 999 (0.10")

CSI: TC=0.32 (4-5:1) , BC=0.28 (12-13:4) , WB=0.57 (3-14:1) , SSI=0.20 (4-5:1)

DOL LUMBER=1.00 NAIL=1.00 LS BEND=1.10 COMP=1.10 SHEAR=1.10 TENS= 1.10

COMPANION LIVE LOAD FACTOR = 0.50

TRUSS PLATE MANUFACTURER IS NOT RESPONSIBLE FOR QUALITY CONTROL IN THE TRUSS MANUFACTURING PLANT .

NAIL VALUES

PLATE	GRIP(DRY) (PSI) MAX	MIN	SHEAR (PLI) MAX	MIN	SECTION (PLI) MAX	MIN
MT20	618	354	1667	822	2284	1656

PLATE PLACEMENT TOL. = 0.250 inches

PLATE ROTATION TOL. = 5.0 Deg.

JSI GRIP= 0.90 (14) (INPUT = 0.90)
JSI METAL= 0.39 (14) (INPUT = 1.00)

LICENSED PROFESSIONAL ENGINEER
P.M. TREVISAN
100136551
March 13th, 2017
PROVINCE OF ONTARIO

RECEIVED
TOWN OF MILTON
MAR 29, 2017
17-5052
BUILDING DIVISION

READ ALL NOTES ON THIS PAGE AND ON THE ENGINEERING NOTE PAGE ENP-1. THE NOTE PAGE IS AN INTEGRAL PART OF THIS DRAWING AS IT CONTAINS SPECIFICATIONS AND CRITERIA USED IN THE DESIGN OF THIS COMPONENT.

KOTT

JOB NAME	TRUSS NAME	QUANTITY	PLY	JOB DESC.	DRWG NO.
PT0317-060	T11	2	1	TRUSS DESC. LECCO RIDGE-BLOCK 332	

KOTT , Stouffville, ON, CGC

Version 8.100 S Feb 9 2017 MiTek Industries, Inc. Mon Mar 13 13:24:36 2017 Page 1
ID:gtheX5EqOVSIkwpr5Eyn2TyGKTI-Q0KORviOXs6pF3ksAkyeoijtfnPoCM3x5QMCBuzbLkf

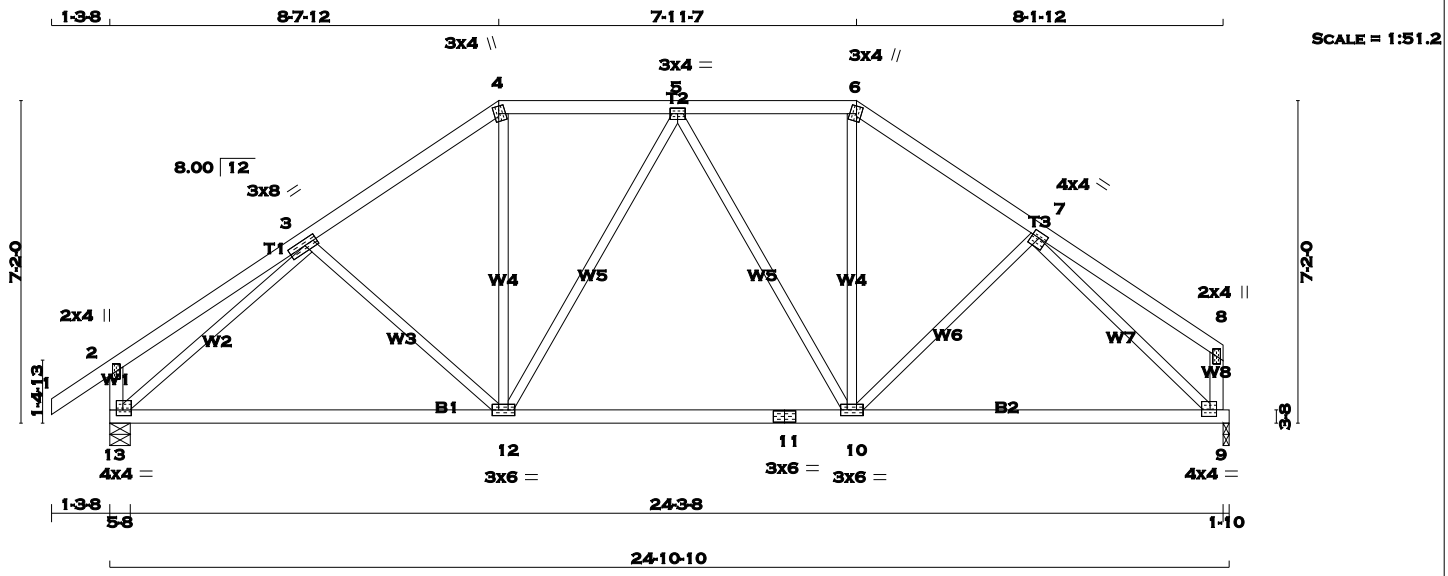

TOTAL WEIGHT = 2 X 106 = 213 lb
[M][F]

LUMBER
N. L. G. A. RULES

CHORDS	SIZE		LUMBER	DESCR.
1 - 4	2x4	DRY	No.2	SPF
4 - 6	2x4	DRY	No.2	SPF
6 - 8	2x4	DRY	No.2	SPF
13 - 2	2x4	DRY	No.2	SPF
9 - 8	2x4	DRY	No.2	SPF
13 - 11	2x4	DRY	No.2	SPF
11 - 9	2x4	DRY	No.2	SPF
ALL WEBS EXCEPT	2x3	DRY	No.2	SPF

DRY: SEASONED LUMBER.

PLATES (table is in inches)

JT	TYPE	PLATES	W	LEN	Y	X
2	TMV+p	MT20	2.0	4.0		
3	TMWW-t	MT20	3.0	8.0	1.50	3.50
4	TTW+m	MT20	3.0	4.0	2.00	1.25
5	TMWW-t	MT20	3.0	4.0		
6	TTW+m	MT20	3.0	4.0	2.00	1.25
7	TMWW-t	MT20	4.0	4.0	1.50	2.00
8	TMV+p	MT20	2.0	4.0		
9	BMVW1-t	MT20	4.0	4.0	1.75	1.75
10	BMWWW-t	MT20	3.0	6.0		
11	BS-t	MT20	3.0	6.0		
12	BMWWW-t	MT20	3.0	6.0		
13	BMVW1-t	MT20	4.0	4.0	1.50	1.75

A SIZE FOR SIZE SUBSTITUTION OF MITEK MII20 WITH TEE-LOK TL20 PLATES IS ALLOWED.

DIMENSIONS, SUPPORTS AND LOADINGS SPECIFIED BY FABRICATOR TO BE VERIFIED BY BUILDING DESIGNER

BEARINGS

JT	FACTORED GROSS REACTION VERT	HORZ	MAXIMUM FACTORED GROSS REACTION DOWN	HORZ	UPLIFT	INPUT BRG IN-SX	REQRD BRG IN-SX
13	1280	0	1280	0	0	5-8	5-8
9	1174	0	1174	0	0	1-10	1-10

UNFACTORED REACTIONS

JT	1ST LCASE COMBINED	MAX./MIN. COMPONENT REACTIONS SNOW	LIVE	PERM.LIVE	WIND	DEAD	SOIL
13	896	640 / 0	0 / 0	0 / 0	0 / 0	256 / 0	0 / 0
9	824	576 / 0	0 / 0	0 / 0	0 / 0	247 / 0	0 / 0

BEARING MATERIAL TO BE SPF NO.2 OR BETTER AT JOINT(S) 13, 9

BRACING
TOP CHORD TO BE SHEATHED OR MAX. PURLIN SPACING = 5.64 FT.
MAX. UNBRACED BOTTOM CHORD LENGTH = 10.00 FT. OR RIGID CEILING DIRECTLY APPLIED.

ALL PITCH BREAKS AND PERIMETER CORNER JOINTS MUST BE LATERALLY RESTRAINED.

LOADING
TOTAL LOAD CASES: (4)

CHORDS

MEMB. FR-TO	MAX. FACTORED FORCE (LBS)	FACTORED VERT. LOAD (PLF) FROM	TO	LC1 MAX CSI (LC)	MAX. UNBRAC LENGTH
1- 2	0 / 29	-77.3	-77.3	0.10 (1)	10.00
2- 3	0 / 21	-77.3	-77.3	0.23 (1)	10.00
3- 4	-1197 / 0	-77.3	-77.3	0.19 (1)	5.64
4- 5	-983 / 0	-77.3	-77.3	0.16 (1)	6.11
5- 6	-955 / 0	-77.3	-77.3	0.16 (1)	6.18
6- 7	-1162 / 0	-77.3	-77.3	0.17 (1)	5.73
7- 8	0 / 20	-77.3	-77.3	0.20 (1)	10.00
13- 2	-235 / 0	0.0	0.0	0.02 (1)	7.81
9- 8	-122 / 0	0.0	0.0	0.01 (1)	7.81
13-12	0 / 1071	-17.5	-17.5	0.36 (4)	10.00
12-11	0 / 1074	-17.5	-17.5	0.37 (4)	10.00
11-10	0 / 1074	-17.5	-17.5	0.37 (4)	10.00
10- 9	0 / 978	-17.5	-17.5	0.32 (4)	10.00

WEBS

MEMB. FR-TO	MAX. FACTORED FORCE (LBS)	MAX CSI (LC)
3-12	-125 / 23	0.08 (1)
12- 4	0 / 403	0.09 (1)
12- 5	-184 / 0	0.24 (1)
5-10	-242 / 0	0.31 (1)
10- 6	0 / 391	0.09 (1)
10- 7	-42 / 42	0.02 (1)
13- 3	-1453 / 0	0.84 (1)
7- 9	-1394 / 0	0.77 (1)

DESIGN CRITERIA

SPECIFIED LOADS:

TOP CH.	LL	=	23.3	PSF
	DL	=	3.0	PSF
BOT CH.	LL	=	0.0	PSF
	DL	=	7.0	PSF
TOTAL LOAD		=	33.3	PSF

SPACING = 24.0 IN. C/C

LOADING IN FLAT SECTION BASED ON A SLOPE OF 6.00/12

THIS TRUSS IS DESIGNED FOR RESIDENTIAL OR SMALL BUILDING REQUIREMENTS OF PART 9, NBCC 2010

THIS DESIGN COMPLIES WITH:
- PART 9 OF OBC 2012 , BCBC 2012 , ABC 2014
- CSA 086-09
- TPIC 2011

(55 % OF 27.2 P.S.F. G.S.L. PLUS 8.4 P.S.F. RAIN LOAD) EQUALS 23.3 P.S.F. SPECIFIED ROOF LIVE LOAD

ALLOWABLE DEFL.(LL)= L/360 (0.82")
CALCULATED VERT. DEFL.(LL) = L/ 999 (0.04")
ALLOWABLE DEFL.(TL)= L/360 (0.82")
CALCULATED VERT. DEFL.(TL) = L/ 999 (0.18")

CSI: TC=0.23 (2-3:1) , BC=0.37 (10-12:4) , WB=0.84 (3-13:1) , SSI=0.15 (4-5:1)

DOL LUMBER=1.00 NAIL=1.00 LS BEND=1.10 COMP=1.10 SHEAR=1.10 TENS= 1.10

COMPANION LIVE LOAD FACTOR = 0.50

TRUSS PLATE MANUFACTURER IS NOT RESPONSIBLE FOR QUALITY CONTROL IN THE TRUSS MANUFACTURING PLANT .

NAIL VALUES

PLATE	GRIP(DRY) (PSI) MAX	MIN	SHEAR (PLI) MAX	MIN	SECTION (PLI) MAX	MIN
MT20	618	354	1667	822	2284	1656

PLATE PLACEMENT TOL. = 0.250 inches

PLATE ROTATION TOL. = 5.0 Deg.

JSI GRIP= 0.89 (3) (INPUT = 0.90)
JSI METAL= 0.51 (7) (INPUT = 1.00)

LICENSED PROFESSIONAL ENGINEER
P.M. TREVISAN
100136551
March 13th, 2017
PROVINCE OF ONTARIO

RECEIVED
TOWN OF MILTON
MAR 29, 2017
17-5052
BUILDING DIVISION

READ ALL NOTES ON THIS PAGE AND ON THE ENGINEERING NOTE PAGE ENP-1. THE NOTE PAGE IS AN INTEGRAL PART OF THIS DRAWING AS IT CONTAINS SPECIFICATIONS AND CRITERIA USED IN THE DESIGN OF THIS COMPONENT.

KOTT

JOB NAME	TRUSS NAME	QUANTITY	PLY	JOB DESC.	DRWG NO.
PT0317-060	T12	3	1	TRUSS DESC. LECCO RIDGE-BLOCK 332	

KOTT , Stouffville, ON, CGC

Version 8.100 S Feb 9 2017 MiTek Industries, Inc. Mon Mar 13 13:24:36 2017 Page 1
ID:gtheX5EqOVSIkwpr5Eyn2TyGKTI-Q0KORviOXs6pF3ksAkyeoijsnnRwCV2x5QMCBuzbLkf

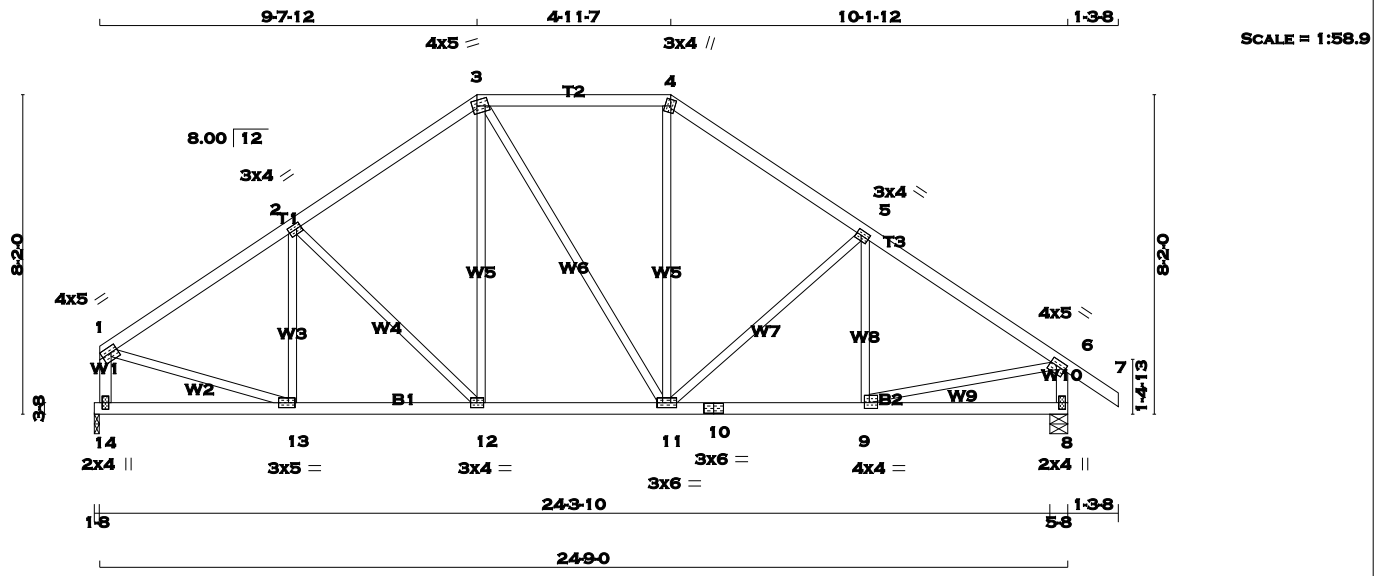

TOTAL WEIGHT = 3 X 111 = 333 lb
[M][F]

LUMBER
N. L. G. A. RULES

CHORDS	SIZE		LUMBER	DESCR.
1 - 3	2x4	DRY	No.2	SPF
3 - 4	2x4	DRY	No.2	SPF
4 - 7	2x4	DRY	No.2	SPF
14 - 1	2x4	DRY	No.2	SPF
8 - 6	2x4	DRY	No.2	SPF
14 - 10	2x4	DRY	No.2	SPF
10 - 8	2x4	DRY	No.2	SPF
ALL WEBS EXCEPT	2x3	DRY	No.2	SPF

DRY: SEASONED LUMBER.

PLATES (table is in inches)

JT	TYPE	PLATES	W	LEN	Y	X
1	TMVW-t	MT20	4.0	5.0	1.75	Edge
2	TMWW-t	MT20	3.0	4.0	1.50	1.50
3	TTWW-m	MT20	4.0	5.0	1.75	1.50
4	TTW+m	MT20	3.0	4.0	2.00	1.25
5	TMWW-t	MT20	3.0	4.0	1.50	1.50
6	TMVW-t	MT20	4.0	5.0	1.75	2.00
8	BMV1+p	MT20	2.0	4.0		
9	BMWW-t	MT20	4.0	4.0	1.75	1.50
10	BS-t	MT20	3.0	6.0		
11	BMWWW-t	MT20	3.0	6.0		
12	BMWW-t	MT20	3.0	4.0		
13	BMWW-t	MT20	3.0	5.0	1.50	2.00
14	BMV1+p	MT20	2.0	4.0		

Edge - INDICATES REFERENCE CORNER OF PLATE TOUCHES EDGE OF CHORD.

A SIZE FOR SIZE SUBSTITUTION OF MITEK MII20 WITH TEE-LOK TL20 PLATES IS ALLOWED.

DIMENSIONS, SUPPORTS AND LOADINGS SPECIFIED BY FABRICATOR TO BE VERIFIED BY BUILDING DESIGNER

BEARINGS

JT	FACTORED GROSS REACTION VERT	HORZ	MAXIMUM FACTORED GROSS REACTION DOWN	HORZ	UPLIFT	INPUT BRG IN-SX	REQRD BRG IN-SX
14	1174	0	1174	0	0	1-8	1-8
8	1280	0	1280	0	0	5-8	5-8

UNFACTORED REACTIONS

JT	1ST LCASE COMBINED	MAX./MIN. COMPONENT REACTIONS SNOW	LIVE	PERM.LIVE	WIND	DEAD	SOIL
14	824	576 / 0	0 / 0	0 / 0	0 / 0	247 / 0	0 / 0
8	896	640 / 0	0 / 0	0 / 0	0 / 0	256 / 0	0 / 0

BEARING MATERIAL TO BE SPF NO.2 OR BETTER AT JOINT(S) 14, 8

BRACING
TOP CHORD TO BE SHEATHED OR MAX. PURLIN SPACING = 5.33 FT.
MAX. UNBRACED BOTTOM CHORD LENGTH = 10.00 FT. OR RIGID CEILING DIRECTLY APPLIED.

ALL PITCH BREAKS AND PERIMETER CORNER JOINTS MUST BE LATERALLY RESTRAINED.

LOADING
TOTAL LOAD CASES: (4)

CHORDS

MEMB. FR-TO	MAX. FACTORED FORCE (LBS)	FACTORED VERT. LOAD (PLF) FROM	TO	LC1 MAX CSI (LC)	MAX. UNBRAC LENGTH
1- 2	-1224 / 0	-77.3	-77.3	0.25 (1)	5.52
2- 3	-1085 / 0	-77.3	-77.3	0.24 (1)	5.79
3- 4	-899 / 0	-77.3	-77.3	0.25 (1)	6.18
4- 5	-1104 / 0	-77.3	-77.3	0.27 (1)	5.71
5- 6	-1322 / 0	-77.3	-77.3	0.28 (1)	5.33
6- 7	0 / 29	-77.3	-77.3	0.10 (1)	10.00
14- 1	-1137 / 0	0.0	0.0	0.12 (1)	7.45
8- 6	-1242 / 0	0.0	0.0	0.13 (1)	7.20
14-13	0 / 0	-17.5	-17.5	0.10 (4)	10.00
13-12	0 / 1039	-17.5	-17.5	0.21 (1)	10.00
12-11	0 / 883	-17.5	-17.5	0.19 (1)	10.00
11-10	0 / 1121	-17.5	-17.5	0.23 (1)	10.00
10- 9	0 / 1121	-17.5	-17.5	0.23 (1)	10.00
9- 8	0 / 0	-17.5	-17.5	0.11 (4)	10.00

WEBS

MEMB. FR-TO	MAX. FACTORED FORCE (LBS)	MAX CSI (LC)
13- 2	-205 / 20	0.08 (1)
2-12	-222 / 0	0.19 (1)
12- 3	0 / 236	0.05 (1)
3-11	0 / 29	0.01 (1)
11- 4	0 / 264	0.06 (1)
11- 5	-303 / 0	0.26 (1)
9- 5	-137 / 44	0.05 (1)
1-13	0 / 1081	0.24 (1)
9- 6	0 / 1145	0.26 (1)

DESIGN CRITERIA

SPECIFIED LOADS:

TOP CH.	LL	=	23.3	PSF
	DL	=	3.0	PSF
BOT CH.	LL	=	0.0	PSF
	DL	=	7.0	PSF
TOTAL LOAD		=	33.3	PSF

SPACING = 24.0 IN. C/C

LOADING IN FLAT SECTION BASED ON A SLOPE OF 6.00/12

THIS TRUSS IS DESIGNED FOR RESIDENTIAL OR SMALL BUILDING REQUIREMENTS OF PART 9, NBCC 2010

THIS DESIGN COMPLIES WITH:
- PART 9 OF OBC 2012 , BCBC 2012 , ABC 2014
- CSA 086-09
- TPIC 2011

(55 % OF 27.2 P.S.F. G.S.L. PLUS 8.4 P.S.F. RAIN LOAD) EQUALS 23.3 P.S.F. SPECIFIED ROOF LIVE LOAD

ALLOWABLE DEFL.(LL)= L/360 (0.82")
CALCULATED VERT. DEFL.(LL) = L/ 999 (0.04")
ALLOWABLE DEFL.(TL)= L/360 (0.82")
CALCULATED VERT. DEFL.(TL) = L/ 999 (0.07")

CSI: TC=0.28 (5-6:1) , BC=0.23 (9-11:1) , WB=0.26 (5-11:1) , SSI=0.16 (5-6:1)

DOL LUMBER=1.00 NAIL=1.00 LS BEND=1.10 COMP=1.10 SHEAR=1.10 TENS= 1.10

COMPANION LIVE LOAD FACTOR = 0.50

TRUSS PLATE MANUFACTURER IS NOT RESPONSIBLE FOR QUALITY CONTROL IN THE TRUSS MANUFACTURING PLANT .

NAIL VALUES

PLATE	GRIP(DRY) (PSI) MAX	MIN	SHEAR (PLI) MAX	MIN	SECTION (PLI) MAX	MIN
MT20	618	354	1667	822	2284	1656

PLATE PLACEMENT TOL. = 0.250 inches

PLATE ROTATION TOL. = 5.0 Deg.

JSI GRIP= 0.89 (13) (INPUT = 0.90)
JSI METAL= 0.45 (6) (INPUT = 1.00)

LICENSED PROFESSIONAL ENGINEER
P.M. TREVISAN
100136551
March 13th, 2017
PROVINCE OF ONTARIO

RECEIVED
TOWN OF MILTON
MAR 29, 2017
17-5052
BUILDING DIVISION

READ ALL NOTES ON THIS PAGE AND ON THE ENGINEERING NOTE PAGE ENP-1. THE NOTE PAGE IS AN INTEGRAL PART OF THIS DRAWING AS IT CONTAINS SPECIFICATIONS AND CRITERIA USED IN THE DESIGN OF THIS COMPONENT.

KOTT

JOB NAME	TRUSS NAME	QUANTITY	PLY	JOB DESC.	DRWG NO.
PT0317-060	**T13**	**4**	**1**	TRUSS DESC. LECCO RIDGE-BLOCK 332	Page 31 of 79 ENG JOB: PT0317-060

KOTT , Stouffville, ON, CGC

Version 8.100 S Feb 9 2017 MiTek Industries, Inc. Mon Mar 13 13:24:36 2017 Page 1

ID:gtheX5EqOVSIkwpr5Eyn2TyGKTI-Q0KORviOXs6pF3ksAkyeoijrFnQSCSQx5QMCBuzbLkf

SCALE: 3/16"=1'

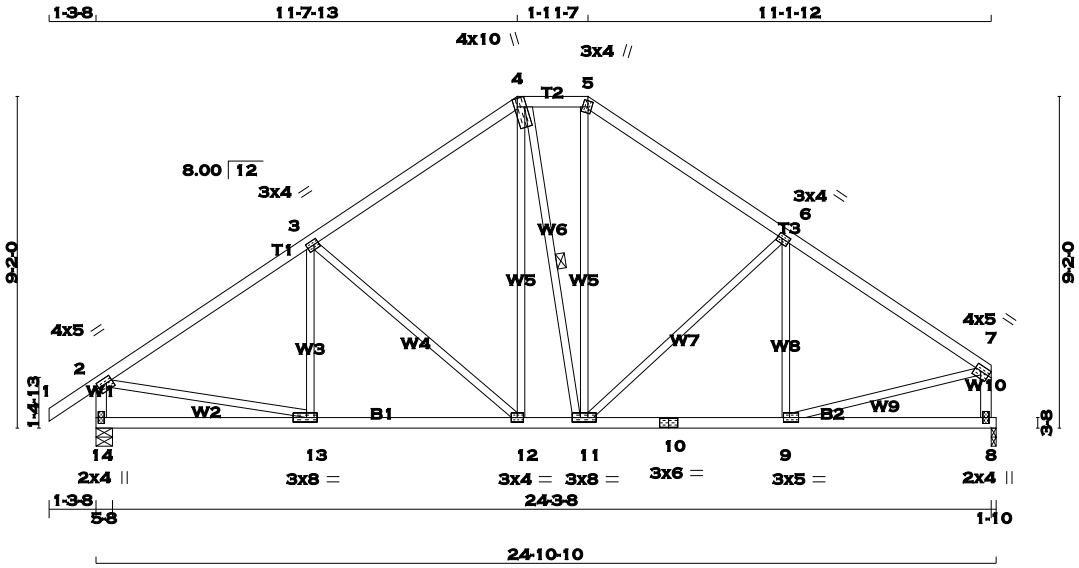

TOTAL WEIGHT = 4 X 117 = 466 lb

[M][F]

LUMBER

N. L. G. A. RULES

CHORDS	SIZE		LUMBER	DESCR.
1 - 4	2x4	DRY	No.2	SPF
4 - 5	2x4	DRY	No.2	SPF
5 - 7	2x4	DRY	No.2	SPF
14 - 2	2x4	DRY	No.2	SPF
8 - 7	2x4	DRY	No.2	SPF
14 - 10	2x4	DRY	No.2	SPF
10 - 8	2x4	DRY	No.2	SPF
ALL WEBS EXCEPT	2x3	DRY	No.2	SPF

DRY: SEASONED LUMBER.

PLATES (table is in inches)

JT	TYPE	PLATES	W	LEN	Y	X
2	TMVW-t	MT20	4.0	5.0	1.75	2.00
3	TMWW-t	MT20	3.0	4.0	1.50	1.50
4	TTWW+m	MT20	4.0	10.0	Edge	1.00
5	TTW+m	MT20	3.0	4.0	2.00	1.25
6	TMWW-t	MT20	3.0	4.0	1.50	1.50
7	TMVW-t	MT20	4.0	5.0	1.75	Edge
8	BMV1+p	MT20	2.0	4.0		
9	BMWW-t	MT20	3.0	5.0	1.50	2.00
10	BS-t	MT20	3.0	6.0		
11	BMWWW-t	MT20	3.0	8.0		
12	BMWW-t	MT20	3.0	4.0		
13	BMWW-t	MT20	3.0	8.0	1.50	3.50
14	BMV1+p	MT20	2.0	4.0		

Edge - INDICATES REFERENCE CORNER OF PLATE TOUCHES EDGE OF CHORD.

A SIZE FOR SIZE SUBSTITUTION OF MITEK MII20 WITH TEE-LOK TL20 PLATES IS ALLOWED.

DIMENSIONS, SUPPORTS AND LOADINGS SPECIFIED BY FABRICATOR TO BE VERIFIED BY BUILDING DESIGNER

BEARINGS

JT	FACTORED GROSS REACTION VERT	HORZ	MAXIMUM FACTORED GROSS REACTION DOWN	HORZ	UPLIFT	INPUT BRG IN-SX	REQRD BRG IN-SX
14	1280	0	1280	0	0	5-8	5-8
8	1174	0	1174	0	0	1-10	1-10

UNFACTORED REACTIONS

JT	1ST LCASE COMBINED	MAX./MIN. COMPONENT REACTIONS SNOW	LIVE	PERM.LIVE	WIND	DEAD	SOIL
14	896	640 / 0	0 / 0	0 / 0	0 / 0	256 / 0	0 / 0
8	824	576 / 0	0 / 0	0 / 0	0 / 0	247 / 0	0 / 0

BEARING MATERIAL TO BE SPF NO.2 OR BETTER AT JOINT(S) 14, 8

BRACING

TOP CHORD TO BE SHEATHED OR MAX. PURLIN SPACING = 5.19 FT.
MAX. UNBRACED BOTTOM CHORD LENGTH = 10.00 FT. OR RIGID CEILING DIRECTLY APPLIED.

ALL PITCH BREAKS AND PERIMETER CORNER JOINTS MUST BE LATERALLY RESTRAINED.

1 - 2x3 SPF No.2 LATERAL BRACE(S) AT 1/ 2 LENGTH OF 4-11. DBS = 20-0-0 . CBF = 2 LBS.

DBS = DIAGONAL BRACE SPACING (MAX). CBF = CUMULATIVE BRACING FORCE. FASTEN LATERAL BRACE(S) USING (0.122"X3") SPIRAL NAILS : 1 NAIL FOR 2x3 BRACE(S), 2 FOR 1x4, 2x4, 2x5, 3 FOR 2x6, 4 FOR 2x8, 5 FOR 2x10, AND 6 FOR 2x12.

END VERTICAL(S) MUST BE SHEATHED OR HAVE BRACES AS INDICATED IN THE MAX. UNBRACED LENGTH COLUMN OF THE TABLE BELOW

LOADING

TOTAL LOAD CASES: (4)

CHORDS

MEMB. FR-TO	MAX. FACTORED FORCE (LBS)	FACTORED VERT. LOAD (PLF) FROM	TO	LC1 MAX CSI (LC)	MAX. UNBRAC LENGTH
1- 2	0 / 29	-77.3	-77.3	0.10 (1)	10.00
2- 3	-1324 / 0	-77.3	-77.3	0.38 (1)	5.19
3- 4	-1012 / 0	-77.3	-77.3	0.35 (1)	5.77
4- 5	-816 / 0	-77.3	-77.3	0.04 (1)	6.25
5- 6	-1007 / 0	-77.3	-77.3	0.32 (1)	5.83
6- 7	-1238 / 0	-77.3	-77.3	0.34 (1)	5.38
14- 2	-1238 / 0	0.0	0.0	0.13 (1)	7.22
8- 7	-1133 / 0	0.0	0.0	0.12 (1)	7.46
14-13	0 / 0	-17.5	-17.5	0.15 (4)	10.00
13-12	0 / 1126	-17.5	-17.5	0.26 (1)	10.00
12-11	0 / 820	-17.5	-17.5	0.18 (1)	10.00
11-10	0 / 1053	-17.5	-17.5	0.24 (1)	10.00
10- 9	0 / 1053	-17.5	-17.5	0.24 (1)	10.00
9- 8	0 / 0	-17.5	-17.5	0.14 (4)	10.00

WEBS

MEMB. FR-TO	MAX. FACTORED FORCE (LBS)	MAX CSI (LC)
13- 3	-87 / 75	0.04 (1)
3-12	-410 / 0	0.49 (1)
12- 4	0 / 321	0.07 (1)
4-11	-17 / 0	0.01 (1)
11- 5	0 / 310	0.07 (1)
11- 6	-329 / 0	0.39 (1)
9- 6	-152 / 50	0.07 (1)
2-13	0 / 1145	0.26 (1)
9- 7	0 / 1085	0.24 (1)

DESIGN CRITERIA

SPECIFIED LOADS:

TOP CH.	LL	=	23.3	PSF
	DL	=	3.0	PSF
BOT CH.	LL	=	0.0	PSF
	DL	=	7.0	PSF
TOTAL LOAD		=	33.3	PSF

SPACING = 24.0 IN. C/C

LOADING IN FLAT SECTION BASED ON A SLOPE OF 6.00/12

THIS TRUSS IS DESIGNED FOR RESIDENTIAL OR SMALL BUILDING REQUIREMENTS OF PART 9, NBCC 2010

THIS DESIGN COMPLIES WITH:
- PART 9 OF OBC 2012 , BCBC 2012 , ABC 2014
- CSA 086-09
- TPIC 2011

(55 % OF 27.2 P.S.F. G.S.L. PLUS 8.4 P.S.F. RAIN LOAD) EQUALS 23.3 P.S.F. SPECIFIED ROOF LIVE LOAD

ALLOWABLE DEFL.(LL)= L/360 (0.82")
CALCULATED VERT. DEFL.(LL) = L/ 999 (0.04")
ALLOWABLE DEFL.(TL)= L/360 (0.82")
CALCULATED VERT. DEFL.(TL) = L/ 999 (0.09")

CSI: TC=0.38 (2-3:1) , BC=0.26 (12-13:1) , WB=0.49 (3-12:1) , SSI=0.18 (2-3:1)

DOL LUMBER=1.00 NAIL=1.00 LS BEND=1.10 COMP=1.10 SHEAR=1.10 TENS= 1.10

COMPANION LIVE LOAD FACTOR = 0.50

TRUSS PLATE MANUFACTURER IS NOT RESPONSIBLE FOR QUALITY CONTROL IN THE TRUSS MANUFACTURING PLANT .

NAIL VALUES

PLATE	GRIP(DRY) (PSI) MAX	MIN	SHEAR (PLI) MAX	MIN	SECTION (PLI) MAX	MIN
MT20	618	354	1667	822	2284	1656

PLATE PLACEMENT TOL. = 0.250 inches

PLATE ROTATION TOL. = 5.0 Deg.

JSI GRIP= 0.90 (9) (INPUT = 0.90)
JSI METAL= 0.45 (2) (INPUT = 1.00)

LICENSED PROFESSIONAL ENGINEER
P.M. TREVISAN
100136551
March 13th, 2017
PROVINCE OF ONTARIO

RECEIVED
TOWN OF MILTON
MAR 29, 2017
17-5052
BUILDING DIVISION

READ ALL NOTES ON THIS PAGE AND ON THE ENGINEERING NOTE PAGE ENP-1. THE NOTE PAGE IS AN INTEGRAL PART OF THIS DRAWING AS IT CONTAINS SPECIFICATIONS AND CRITERIA USED IN THE DESIGN OF THIS COMPONENT.

KOTT

JOB NAME	TRUSS NAME	QUANTITY	PLY	JOB DESC.	DRWG NO.
PT0317-060	T14	10	1	TRUSS DESC. LECCO RIDGE-BLOCK 332	

KOTT , Stouffville, ON, CGC

Version 8.100 S Feb 9 2017 MiTek Industries, Inc. Mon Mar 13 13:24:37 2017 Page 1
ID:gtheX5EqOVSIkwpr5Eyn2TyGKTI-uCumfFj0lAEgtDJ3kSTtLvG_sBmZxup5J46mjKzbLke

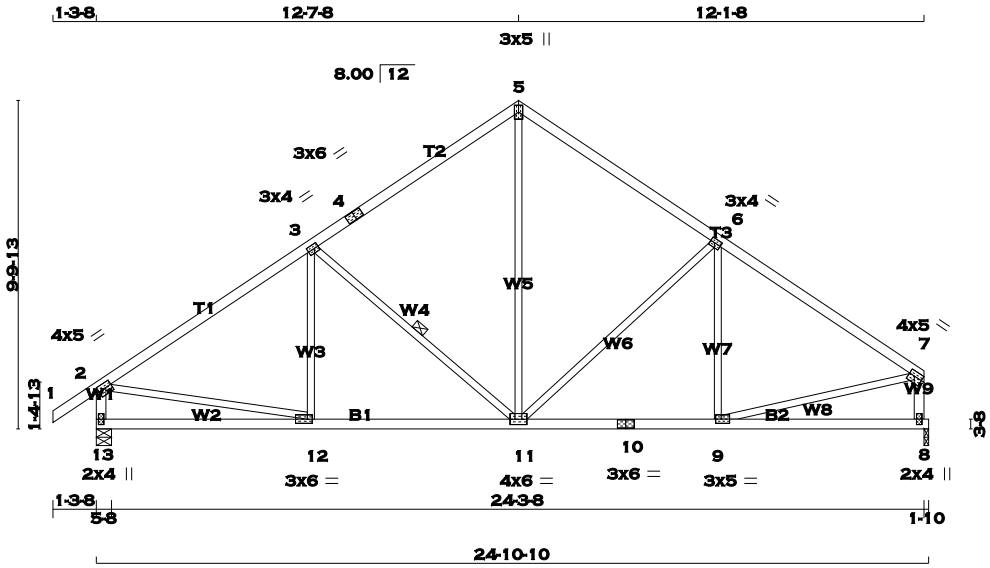

TOTAL WEIGHT = 10 X 106 = 1055 lb

[M][F]

LUMBER

N. L. G. A. RULES

CHORDS	SIZE		LUMBER	DESCR.
1 - 4	2x4	DRY	No.2	SPF
4 - 5	2x4	DRY	No.2	SPF
5 - 7	2x4	DRY	No.2	SPF
13 - 2	2x4	DRY	No.2	SPF
8 - 7	2x4	DRY	No.2	SPF
13 - 10	2x4	DRY	No.2	SPF
10 - 8	2x4	DRY	No.2	SPF
ALL WEBS EXCEPT	2x3	DRY	No.2	SPF

DRY: SEASONED LUMBER.

PLATES (table is in inches)

JT	TYPE	PLATES	W	LEN	Y	X
2	TMVW-t	MT20	4.0	5.0	1.75	2.00
3	TMWW-t	MT20	3.0	4.0	1.50	1.50
4	TS-t	MT20	3.0	6.0		
5	TTW+p	MT20	3.0	5.0		
6	TMWW-t	MT20	3.0	4.0	1.50	1.50
7	TMVW-t	MT20	4.0	5.0	1.75	Edge
8	BMV1+p	MT20	2.0	4.0		
9	BMWW-t	MT20	3.0	5.0	1.50	2.00
10	BS-t	MT20	3.0	6.0		
11	BMWWW-t	MT20	4.0	6.0		
12	BMWW-t	MT20	3.0	6.0	1.50	1.75
13	BMV1+p	MT20	2.0	4.0		

Edge - INDICATES REFERENCE CORNER OF PLATE TOUCHES EDGE OF CHORD.

A SIZE FOR SIZE SUBSTITUTION OF MITEK MII20 WITH TEE-LOK TL20 PLATES IS ALLOWED.

DIMENSIONS, SUPPORTS AND LOADINGS SPECIFIED BY FABRICATOR TO BE VERIFIED BY BUILDING DESIGNER

BEARINGS

JT	FACTORED GROSS REACTION VERT	HORZ	MAXIMUM FACTORED GROSS REACTION DOWN	HORZ	UPLIFT	INPUT BRG IN-SX	REQRD BRG IN-SX
13	1280	0	1280	0	0	5-8	5-8
8	1174	0	1174	0	0	1-10	1-10

UNFACTORED REACTIONS

JT	1ST LCASE COMBINED	MAX./MIN. COMPONENT REACTIONS SNOW	LIVE	PERM.LIVE	WIND	DEAD	SOIL
13	896	640 / 0	0 / 0	0 / 0	0 / 0	256 / 0	0 / 0
8	824	576 / 0	0 / 0	0 / 0	0 / 0	248 / 0	0 / 0

BEARING MATERIAL TO BE SPF NO.2 OR BETTER AT JOINT(S) 13, 8

BRACING

TOP CHORD TO BE SHEATHED OR MAX. PURLIN SPACING = 5.10 FT.
MAX. UNBRACED BOTTOM CHORD LENGTH = 10.00 FT. OR RIGID CEILING DIRECTLY APPLIED.

ALL PITCH BREAKS AND PERIMETER CORNER JOINTS MUST BE LATERALLY RESTRAINED.

1 - 2x3 SPF No.2 LATERAL BRACE(S) AT 1/ 2 LENGTH OF 3-11. DBS = 20-0-0 . CBF = 58 LBS.

DBS = DIAGONAL BRACE SPACING (MAX). CBF = CUMULATIVE BRACING FORCE. FASTEN LATERAL BRACE(S) USING (0.122"X3") SPIRAL NAILS : 1 NAIL FOR 2x3 BRACE(S), 2 FOR 1x4, 2x4, 2x5, 3 FOR 2x6, 4 FOR 2x8, 5 FOR 2x10, AND 6 FOR 2x12.

END VERTICAL(S) MUST BE SHEATHED OR HAVE BRACES AS INDICATED IN THE MAX. UNBRACED LENGTH COLUMN OF THE TABLE BELOW

LOADING

TOTAL LOAD CASES: (4)

CHORDS MEMB. FR-TO	MAX. FACTORED FORCE (LBS)	FACTORED VERT. LOAD (PLF) FROM	TO	LC1 MAX CSI (LC)	MAX. UNBRAC LENGTH
1- 2	0 / 29	-77.3	-77.3	0.10 (1)	10.00
2- 3	-1317 / 0	-77.3	-77.3	0.45 (1)	5.10
3- 4	-958 / 0	-77.3	-77.3	0.42 (1)	5.79
4- 5	-958 / 0	-77.3	-77.3	0.42 (1)	5.79
5- 6	-957 / 0	-77.3	-77.3	0.38 (1)	5.85
6- 7	-1239 / 0	-77.3	-77.3	0.41 (1)	5.29
13- 2	-1234 / 0	0.0	0.0	0.13 (1)	7.23
8- 7	-1129 / 0	0.0	0.0	0.12 (1)	7.47
13-12	0 / 0	-17.5	-17.5	0.17 (4)	10.00
12-11	0 / 1123	-17.5	-17.5	0.27 (1)	10.00
11-10	0 / 1057	-17.5	-17.5	0.25 (1)	10.00
10- 9	0 / 1057	-17.5	-17.5	0.25 (1)	10.00
9- 8	0 / 0	-17.5	-17.5	0.16 (4)	10.00

WEBS MEMB. FR-TO	MAX. FACTORED FORCE (LBS)	MAX CSI (LC)
12- 3	-66 / 86	0.03 (1)
3-11	-467 / 0	0.21 (1)
11- 5	0 / 674	0.15 (1)
11- 6	-392 / 0	0.55 (1)
9- 6	-125 / 64	0.07 (1)
2-12	0 / 1139	0.26 (1)
9- 7	0 / 1084	0.24 (1)

DESIGN CRITERIA

SPECIFIED LOADS:

TOP	CH.	LL	=	23.3	PSF
		DL	=	3.0	PSF
BOT	CH.	LL	=	0.0	PSF
		DL	=	7.0	PSF
TOTAL	LOAD		=	33.3	PSF

SPACING = 24.0 IN. C/C

THIS TRUSS IS DESIGNED FOR RESIDENTIAL OR SMALL BUILDING REQUIREMENTS OF PART 9, NBCC 2010

THIS DESIGN COMPLIES WITH:
- PART 9 OF OBC 2012 , BCBC 2012 , ABC 2014
- CSA 086-09
- TPIC 2011

(55 % OF 27.2 P.S.F. G.S.L. PLUS 8.4 P.S.F. RAIN LOAD) EQUALS 23.3 P.S.F. SPECIFIED ROOF LIVE LOAD

ALLOWABLE DEFL.(LL)= L/360 (0.82")
CALCULATED VERT. DEFL.(LL) = L/ 999 (0.04")
ALLOWABLE DEFL.(TL)= L/360 (0.82")
CALCULATED VERT. DEFL.(TL) = L/ 999 (0.09")

CSI: TC=0.45 (2-3:1) , BC=0.27 (11-12:1) , WB=0.55 (6-11:1) , SSI=0.20 (2-3:1)

DOL LUMBER=1.00 NAIL=1.00 LS BEND=1.10 COMP=1.10 SHEAR=1.10 TENS= 1.10

COMPANION LIVE LOAD FACTOR = 0.50

TRUSS PLATE MANUFACTURER IS NOT RESPONSIBLE FOR QUALITY CONTROL IN THE TRUSS MANUFACTURING PLANT .

NAIL VALUES

PLATE	GRIP(DRY) (PSI) MAX	MIN	SHEAR (PLI) MAX	MIN	SECTION (PLI) MAX	MIN
MT20	618	354	1667	822	2284	1656

PLATE PLACEMENT TOL. = 0.250 inches

PLATE ROTATION TOL. = 0.5 Deg.

JSI GRIP= 0.90 (9) (INPUT = 0.90)
JSI METAL= 0.45 (2) (INPUT = 1.00)

LICENSED PROFESSIONAL ENGINEER
P.M. TREVISAN
100136551
March 13th, 2017
PROVINCE OF ONTARIO

RECEIVED
TOWN OF MILTON
MAR 29, 2017
17-5052
BUILDING DIVISION

READ ALL NOTES ON THIS PAGE AND ON THE ENGINEERING NOTE PAGE ENP-1. THE NOTE PAGE IS AN INTEGRAL PART OF THIS DRAWING AS IT CONTAINS SPECIFICATIONS AND CRITERIA USED IN THE DESIGN OF THIS COMPONENT.

KOTT

JOB NAME	TRUSS NAME	QUANTITY	PLY	JOB DESC.	DRWG NO.
PT0317-060	**T15**	**1**	**1**	TRUSS DESC. LECCO RIDGE-BLOCK 332	

ENG JOB: PT0317-060

KOTT , Stouffville, ON, CGC

Version 8.100 S Feb 9 2017 MiTek Industries, Inc. Mon Mar 13 13:24:37 2017 Page 1
ID:gtheX5EqOVSIkwpr5Eyn2TyGKTI-uCumfFj0IAEgtDJ3kSTtLvGvbBmYxyH5J46mjKzbLke

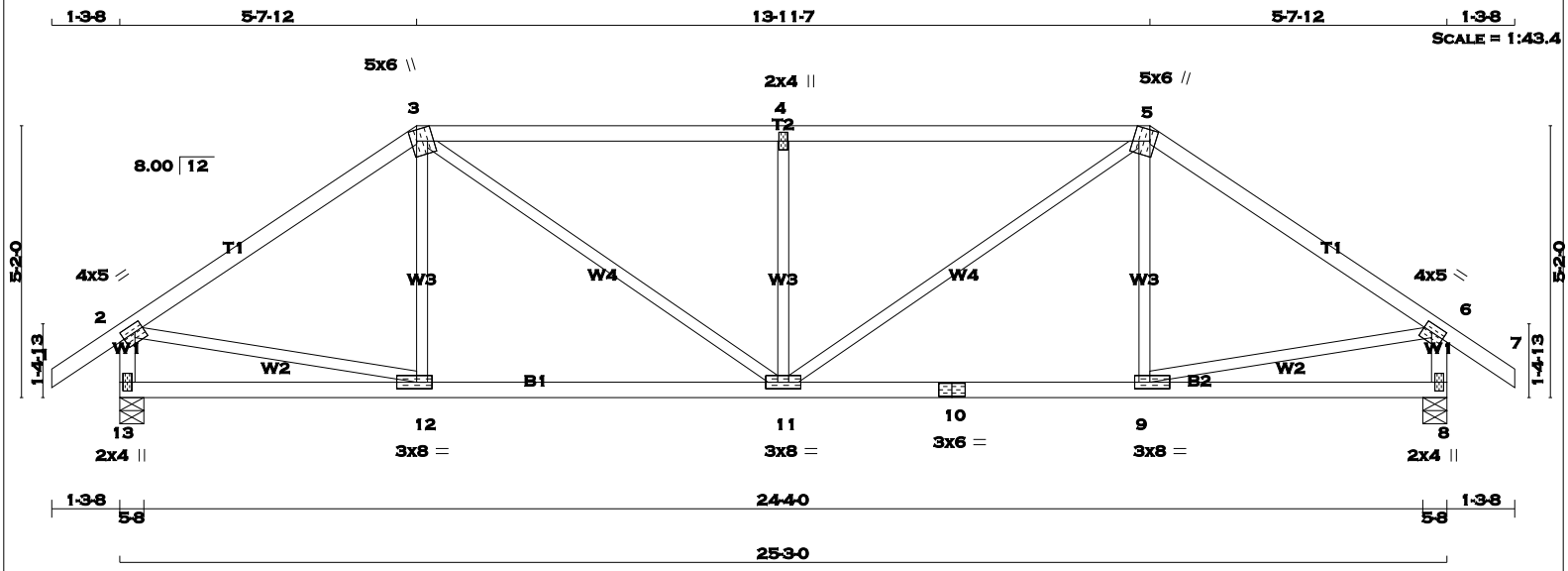

TOTAL WEIGHT = 100 lb
[M]

LUMBER
N. L. G. A. RULES

CHORDS	SIZE		LUMBER	DESCR.
1 - 3	2x4	DRY	No.2	SPF
3 - 5	2x4	DRY	No.2	SPF
5 - 7	2x4	DRY	No.2	SPF
13 - 2	2x4	DRY	No.2	SPF
8 - 6	2x4	DRY	No.2	SPF
13 - 10	2x4	DRY	No.2	SPF
10 - 8	2x4	DRY	No.2	SPF
ALL WEBS EXCEPT	2x3	DRY	No.2	SPF

DRY: SEASONED LUMBER.

PLATES (table is in inches)

JT	TYPE	PLATES	W	LEN	Y	X
2	TMVW-t	MT20	4.0	5.0	1.75	2.00
3	TTWW+m	MT20	5.0	6.0	Edge	3.75
4	TMW+w	MT20	2.0	4.0		
5	TTWW+m	MT20	5.0	6.0	Edge	3.75
6	TMVW-t	MT20	4.0	5.0	1.75	2.00
8	BMV1+p	MT20	2.0	4.0		
9	BMWW-t	MT20	3.0	8.0	1.50	3.50
10	BS-t	MT20	3.0	6.0		
11	BMWWW-t	MT20	3.0	8.0		
12	BMWW-t	MT20	3.0	8.0	1.50	3.50
13	BMV1+p	MT20	2.0	4.0		

Edge - INDICATES REFERENCE CORNER OF PLATE TOUCHES EDGE OF CHORD.

A SIZE FOR SIZE SUBSTITUTION OF MITEK MII20 WITH TEE-LOK TL20 PLATES IS ALLOWED.

DIMENSIONS, SUPPORTS AND LOADINGS SPECIFIED BY FABRICATOR TO BE VERIFIED BY BUILDING DESIGNER

BEARINGS

JT	FACTORED GROSS REACTION VERT	HORZ	MAXIMUM FACTORED GROSS REACTION DOWN	HORZ	UPLIFT	INPUT BRG IN-SX	REQRD BRG IN-SX
13	1304	0	1304	0	0	5-8	5-8
8	1304	0	1304	0	0	5-8	5-8

UNFACTORED REACTIONS

JT	1ST LCASE COMBINED	MAX./MIN. COMPONENT REACTIONS SNOW	LIVE	PERM.LIVE	WIND	DEAD	SOIL
13	913	652 / 0	0 / 0	0 / 0	0 / 0	261 / 0	0 / 0
8	913	652 / 0	0 / 0	0 / 0	0 / 0	261 / 0	0 / 0

BEARING MATERIAL TO BE SPF NO.2 OR BETTER AT JOINT(S) 13, 8

BRACING
TOP CHORD TO BE SHEATHED OR MAX. PURLIN SPACING = 4.08 FT.
MAX. UNBRACED BOTTOM CHORD LENGTH = 10.00 FT. OR RIGID CEILING DIRECTLY APPLIED.

ALL PITCH BREAKS AND PERIMETER CORNER JOINTS MUST BE LATERALLY RESTRAINED.

LOADING
TOTAL LOAD CASES: (4)

CHORDS

MEMB. FR-TO	MAX. FACTORED FORCE (LBS)	FACTORED VERT. LOAD (PLF) FROM	TO	LC1 MAX CSI (LC)	MAX. UNBRAC LENGTH
1- 2	0 / 29	-77.3	-77.3	0.10 (1)	10.00
2- 3	-1321 / 0	-77.3	-77.3	0.51 (1)	4.99
3- 4	-1655 / 0	-77.3	-77.3	0.79 (1)	4.08
4- 5	-1655 / 0	-77.3	-77.3	0.79 (1)	4.08
5- 6	-1321 / 0	-77.3	-77.3	0.51 (1)	4.99
6- 7	0 / 29	-77.3	-77.3	0.10 (1)	10.00
13- 2	-1265 / 0	0.0	0.0	0.13 (1)	7.16
8- 6	-1265 / 0	0.0	0.0	0.13 (1)	7.16
13-12	0 / 0	-17.5	-17.5	0.16 (4)	10.00
12-11	0 / 1096	-17.5	-17.5	0.27 (1)	10.00
11-10	0 / 1096	-17.5	-17.5	0.27 (1)	10.00
10- 9	0 / 1096	-17.5	-17.5	0.27 (1)	10.00
9- 8	0 / 0	-17.5	-17.5	0.16 (4)	10.00

WEBS

MEMB. FR-TO	MAX. FACTORED FORCE (LBS)	MAX CSI (LC)
12- 3	-82 / 75	0.03 (1)
3-11	0 / 682	0.15 (1)
11- 4	-663 / 0	0.26 (1)
11- 5	0 / 682	0.15 (1)
9- 5	-82 / 75	0.03 (1)
2-12	0 / 1117	0.25 (1)
9- 6	0 / 1117	0.25 (1)

DESIGN CRITERIA

SPECIFIED LOADS:

TOP CH.	LL	=	23.3	PSF
	DL	=	3.0	PSF
BOT CH.	LL	=	0.0	PSF
	DL	=	7.0	PSF
TOTAL LOAD		=	33.3	PSF

SPACING = 24.0 IN. C/C

LOADING IN FLAT SECTION BASED ON A SLOPE OF 6.00/12

THIS TRUSS IS DESIGNED FOR RESIDENTIAL OR SMALL BUILDING REQUIREMENTS OF PART 9, NBCC 2010

THIS DESIGN COMPLIES WITH:
- PART 9 OF OBC 2012 , BCBC 2012 , ABC 2014
- CSA 086-09
- TPIC 2011

(55 % OF 27.2 P.S.F. G.S.L. PLUS 8.4 P.S.F. RAIN LOAD) EQUALS 23.3 P.S.F. SPECIFIED ROOF LIVE LOAD

ALLOWABLE DEFL.(LL)= L/360 (0.84")
CALCULATED VERT. DEFL.(LL) = L/ 999 (0.06")
ALLOWABLE DEFL.(TL)= L/360 (0.84")
CALCULATED VERT. DEFL.(TL) = L/ 999 (0.12")

CSI: TC=0.79 (4-5:1) , BC=0.27 (11-12:1) , WB=0.26 (4-11:1) , SSI=0.26 (3-4:1)

DOL LUMBER=1.00 NAIL=1.00 LS BEND=1.10 COMP=1.10 SHEAR=1.10 TENS= 1.10

COMPANION LIVE LOAD FACTOR = 0.50

TRUSS PLATE MANUFACTURER IS NOT RESPONSIBLE FOR QUALITY CONTROL IN THE TRUSS MANUFACTURING PLANT .

NAIL VALUES

PLATE	GRIP(DRY) (PSI) MAX	MIN	SHEAR (PLI) MAX	MIN	SECTION (PLI) MAX	MIN
MT20	618	354	1667	822	2284	1656

PLATE PLACEMENT TOL. = 0.250 inches

PLATE ROTATION TOL. = 5.0 Deg.

JSI GRIP= 0.88 (9) (INPUT = 0.90)
JSI METAL= 0.45 (2) (INPUT = 1.00)

LICENSED PROFESSIONAL ENGINEER
P.M. TREVISAN
100136551
March 13th, 2017
PROVINCE OF ONTARIO

RECEIVED
TOWN OF MILTON
MAR 29, 2017
17-5052
BUILDING DIVISION

READ ALL NOTES ON THIS PAGE AND ON THE ENGINEERING NOTE PAGE ENP-1. THE NOTE PAGE IS AN INTEGRAL PART OF THIS DRAWING AS IT CONTAINS SPECIFICATIONS AND CRITERIA USED IN THE DESIGN OF THIS COMPONENT.

KOTT

JOB NAME	TRUSS NAME	QUANTITY	PLY	JOB DESC.	DRWG NO.
PT0317-060	**T16**	**1**	**1**	TRUSS DESC. LECCO RIDGE-BLOCK 332	

KOTT , Stouffville, ON, CGC

Version 8.100 S Feb 9 2017 MiTek Industries, Inc. Mon Mar 13 13:24:38 2017 Page 1
ID:gtheX5EqOVSIkwpr5Eyn2TyGKTI-MPS8sbke3TMWUNuFI9?6t7oCia6XgKSEYkrJFnzbLkd

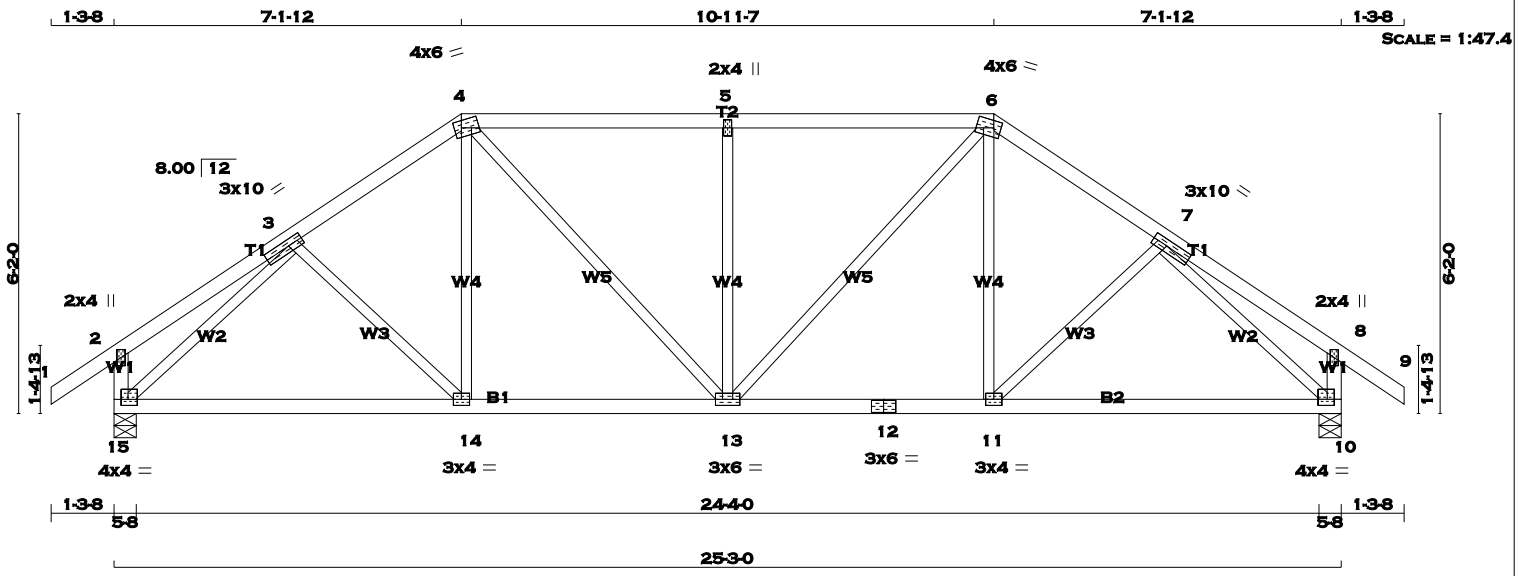

TOTAL WEIGHT = 108 lb

[M][F]

LUMBER

N. L. G. A. RULES

CHORDS	SIZE		LUMBER	DESCR.
1 - 4	2x4	DRY	No.2	SPF
4 - 6	2x4	DRY	No.2	SPF
6 - 9	2x4	DRY	No.2	SPF
15 - 2	2x4	DRY	No.2	SPF
10 - 8	2x4	DRY	No.2	SPF
15 - 12	2x4	DRY	No.2	SPF
12 - 10	2x4	DRY	No.2	SPF
ALL WEBS EXCEPT	2x3	DRY	No.2	SPF

DRY: SEASONED LUMBER.

PLATES (table is in inches)

JT	TYPE	PLATES	W	LEN	Y	X
2	TMV+p	MT20	2.0	4.0		
3	TMWW-t	MT20	3.0	10.0	1.50	3.75
4	TTWW-m	MT20	4.0	6.0	1.75	1.75
5	TMW+w	MT20	2.0	4.0		
6	TTWW-m	MT20	4.0	6.0	1.75	1.75
7	TMWW-t	MT20	3.0	10.0	1.50	3.75
8	TMV+p	MT20	2.0	4.0		
10	BMVW1-t	MT20	4.0	4.0	1.50	1.75
11	BMWW-t	MT20	3.0	4.0		
12	BS-t	MT20	3.0	6.0		
13	BMWWW-t	MT20	3.0	6.0		
14	BMWW-t	MT20	3.0	4.0		
15	BMVW1-t	MT20	4.0	4.0	1.50	1.75

A SIZE FOR SIZE SUBSTITUTION OF MITEK MII20 WITH TEE-LOK TL20 PLATES IS ALLOWED.

DIMENSIONS, SUPPORTS AND LOADINGS SPECIFIED BY FABRICATOR TO BE VERIFIED BY BUILDING DESIGNER

BEARINGS

JT	FACTORED GROSS REACTION VERT	HORZ	MAXIMUM FACTORED GROSS REACTION DOWN	HORZ	UPLIFT	INPUT BRG IN-SX	REQRD BRG IN-SX
15	1304	0	1304	0	0	5-8	5-8
10	1304	0	1304	0	0	5-8	5-8

UNFACTORED REACTIONS

JT	1ST LCASE COMBINED	MAX./MIN. COMPONENT REACTIONS SNOW	LIVE	PERM.LIVE	WIND	DEAD	SOIL
15	913	652 / 0	0 / 0	0 / 0	0 / 0	261 / 0	0 / 0
10	913	652 / 0	0 / 0	0 / 0	0 / 0	261 / 0	0 / 0

BEARING MATERIAL TO BE SPF NO.2 OR BETTER AT JOINT(S) 15, 10

BRACING

TOP CHORD TO BE SHEATHED OR MAX. PURLIN SPACING = 5.25 FT.
MAX. UNBRACED BOTTOM CHORD LENGTH = 10.00 FT. OR RIGID CEILING DIRECTLY APPLIED.

ALL PITCH BREAKS AND PERIMETER CORNER JOINTS MUST BE LATERALLY RESTRAINED.

LOADING

TOTAL LOAD CASES: (4)

CHORDS

MEMB. FR-TO	MAX. FACTORED FORCE (LBS)	FACTORED VERT. LOAD (PLF) FROM	TO	LC1 MAX CSI (LC)	MAX. UNBRAC LENGTH
1- 2	0 / 29	-77.3	-77.3	0.10 (1)	10.00
2- 3	0 / 16	-77.3	-77.3	0.15 (1)	10.00
3- 4	-1292 / 0	-77.3	-77.3	0.13 (1)	5.55
4- 5	-1336 / 0	-77.3	-77.3	0.32 (1)	5.25
5- 6	-1336 / 0	-77.3	-77.3	0.32 (1)	5.25
6- 7	-1292 / 0	-77.3	-77.3	0.13 (1)	5.55
7- 8	0 / 16	-77.3	-77.3	0.15 (1)	10.00
8- 9	0 / 29	-77.3	-77.3	0.10 (1)	10.00
15- 2	-215 / 0	0.0	0.0	0.02 (1)	7.81
10- 8	-215 / 0	0.0	0.0	0.02 (1)	7.81
15-14	0 / 1069	-17.5	-17.5	0.28 (1)	10.00
14-13	0 / 1062	-17.5	-17.5	0.28 (4)	10.00
13-12	0 / 1062	-17.5	-17.5	0.28 (4)	10.00
12-11	0 / 1062	-17.5	-17.5	0.28 (4)	10.00
11-10	0 / 1069	-17.5	-17.5	0.28 (1)	10.00

WEBS

MEMB. FR-TO	MAX. FACTORED FORCE (LBS)	MAX CSI (LC)
3-14	-13 / 45	0.02 (4)
14- 4	0 / 144	0.04 (4)
4-13	0 / 401	0.09 (1)
13- 5	-518 / 0	0.31 (1)
13- 6	0 / 401	0.09 (1)
11- 6	0 / 144	0.04 (4)
11- 7	-13 / 45	0.02 (4)
15- 3	-1490 / 0	0.59 (1)
7-10	-1490 / 0	0.59 (1)

DESIGN CRITERIA

SPECIFIED LOADS:

TOP	CH.	LL	=	23.3	PSF
		DL	=	3.0	PSF
BOT	CH.	LL	=	0.0	PSF
		DL	=	7.0	PSF
TOTAL	LOAD		=	33.3	PSF

SPACING = 24.0 IN. C/C

LOADING IN FLAT SECTION BASED ON A SLOPE OF 6.00/12

THIS TRUSS IS DESIGNED FOR RESIDENTIAL OR SMALL BUILDING REQUIREMENTS OF PART 9, NBCC 2010

THIS DESIGN COMPLIES WITH:
- PART 9 OF OBC 2012 , BCBC 2012 , ABC 2014
- CSA 086-09
- TPIC 2011

(55 % OF 27.2 P.S.F. G.S.L. PLUS 8.4 P.S.F. RAIN LOAD) EQUALS 23.3 P.S.F. SPECIFIED ROOF LIVE LOAD

ALLOWABLE DEFL.(LL)= L/360 (0.84")
CALCULATED VERT. DEFL.(LL) = L/ 999 (0.05")
ALLOWABLE DEFL.(TL)= L/360 (0.84")
CALCULATED VERT. DEFL.(TL) = L/ 999 (0.10")

CSI: TC=0.32 (4-5:1) , BC=0.28 (14-15:1) , WB=0.59 (3-15:1) , SSI=0.20 (4-5:1)

DOL LUMBER=1.00 NAIL=1.00 LS BEND=1.10 COMP=1.10 SHEAR=1.10 TENS= 1.10

COMPANION LIVE LOAD FACTOR = 0.50

TRUSS PLATE MANUFACTURER IS NOT RESPONSIBLE FOR QUALITY CONTROL IN THE TRUSS MANUFACTURING PLANT .

NAIL VALUES

PLATE	GRIP(DRY) (PSI) MAX	MIN	SHEAR (PLI) MAX	MIN	SECTION (PLI) MAX	MIN
MT20	618	354	1667	822	2284	1656

PLATE PLACEMENT TOL. = 0.250 inches

PLATE ROTATION TOL. = 5.0 Deg.

JSI GRIP= 0.90 (3) (INPUT = 0.90)
JSI METAL= 0.40 (15) (INPUT = 1.00)

LICENSED PROFESSIONAL ENGINEER
P.M. TREVISAN
100136551
March 13th, 2017
PROVINCE OF ONTARIO

RECEIVED
TOWN OF MILTON
MAR 29, 2017
17-5052
BUILDING DIVISION

READ ALL NOTES ON THIS PAGE AND ON THE ENGINEERING NOTE PAGE ENP-1. THE NOTE PAGE IS AN INTEGRAL PART OF THIS DRAWING AS IT CONTAINS SPECIFICATIONS AND CRITERIA USED IN THE DESIGN OF THIS COMPONENT.

KOTT

JOB NAME	TRUSS NAME	QUANTITY	PLY	JOB DESC.	DRWG NO.
PT0317-060	**T17**	**1**	**1**	TRUSS DESC. LECCO RIDGE-BLOCK 332	Page 35 of 79 ENG JOB: PT0317-060

KOTT , Stouffville, ON, CGC

Version 8.100 S Feb 9 2017 MiTek Industries, Inc. Mon Mar 13 13:24:38 2017 Page 1

ID:gtheX5EqOVSIkwpr5Eyn2TyGKTI-MPS8sbke3TMWUNuFI9?6t7oD9a5JgGFEYkrJFnzbLkd

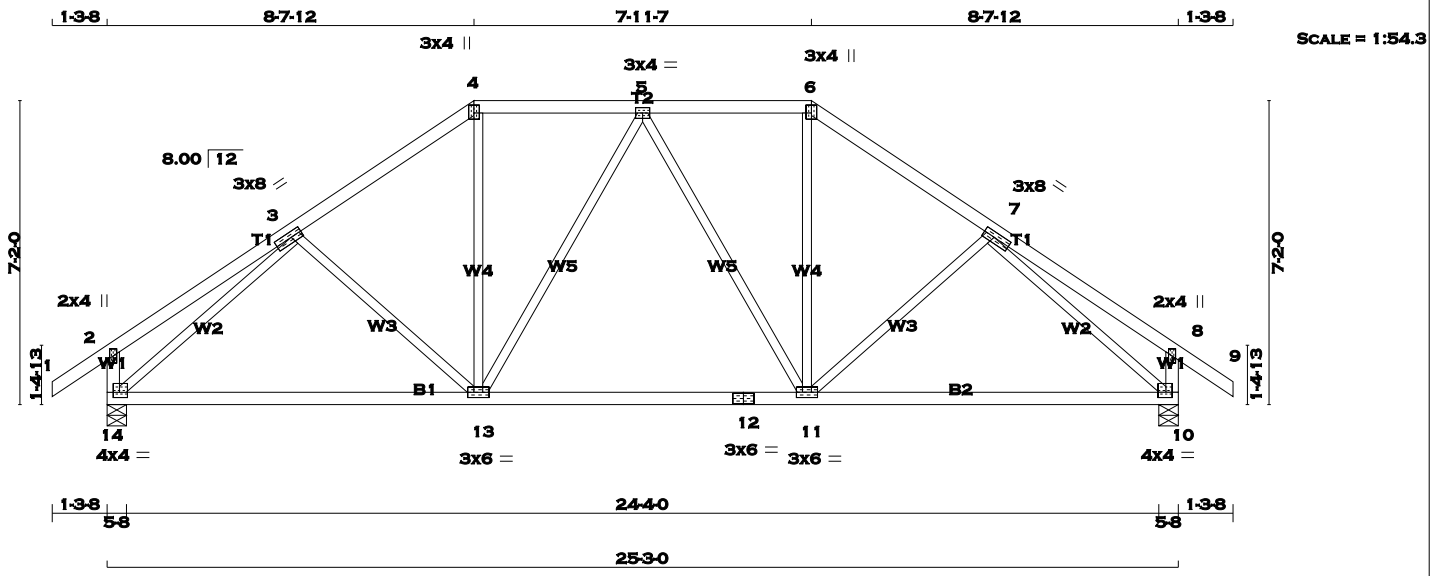

TOTAL WEIGHT = 109 lb

[M][F]

LUMBER

N. L. G. A. RULES

CHORDS	SIZE		LUMBER	DESCR.
1 - 4	2x4	DRY	No.2	SPF
4 - 6	2x4	DRY	No.2	SPF
6 - 9	2x4	DRY	No.2	SPF
14 - 2	2x4	DRY	No.2	SPF
10 - 8	2x4	DRY	No.2	SPF
14 - 12	2x4	DRY	No.2	SPF
12 - 10	2x4	DRY	No.2	SPF
ALL WEBS EXCEPT	2x3	DRY	No.2	SPF

DRY: SEASONED LUMBER.

PLATES (table is in inches)

JT	TYPE	PLATES	W	LEN	Y	X
2	TMV+p	MT20	2.0	4.0		
3	TMWW-t	MT20	3.0	8.0	1.50	3.25
4	TTW+p	MT20	3.0	4.0	2.25	1.50
5	TMWW-t	MT20	3.0	4.0		
6	TTW+p	MT20	3.0	4.0	2.25	1.50
7	TMWW-t	MT20	3.0	8.0	1.50	3.25
8	TMV+p	MT20	2.0	4.0		
10	BMVW1-t	MT20	4.0	4.0	1.50	1.75
11	BMWWW-t	MT20	3.0	6.0		
12	BS-t	MT20	3.0	6.0		
13	BMWWW-t	MT20	3.0	6.0		
14	BMVW1-t	MT20	4.0	4.0	1.50	1.75

A SIZE FOR SIZE SUBSTITUTION OF MITEK MII20 WITH TEE-LOK TL20 PLATES IS ALLOWED.

DIMENSIONS, SUPPORTS AND LOADINGS SPECIFIED BY FABRICATOR TO BE VERIFIED BY BUILDING DESIGNER

BEARINGS

JT	FACTORED GROSS REACTION VERT	HORZ	MAXIMUM FACTORED GROSS REACTION DOWN	HORZ	UPLIFT	INPUT BRG IN-SX	REQRD BRG IN-SX
14	1304	0	1304	0	0	5-8	5-8
10	1304	0	1304	0	0	5-8	5-8

UNFACTORED REACTIONS

JT	1ST LCASE COMBINED	MAX./MIN. COMPONENT REACTIONS SNOW	LIVE	PERM.LIVE	WIND	DEAD	SOIL
14	913	652 / 0	0 / 0	0 / 0	0 / 0	261 / 0	0 / 0
10	913	652 / 0	0 / 0	0 / 0	0 / 0	261 / 0	0 / 0

BEARING MATERIAL TO BE SPF NO.2 OR BETTER AT JOINT(S) 14, 10

BRACING

TOP CHORD TO BE SHEATHED OR MAX. PURLIN SPACING = 5.58 FT.
MAX. UNBRACED BOTTOM CHORD LENGTH = 10.00 FT. OR RIGID CEILING DIRECTLY APPLIED.

ALL PITCH BREAKS AND PERIMETER CORNER JOINTS MUST BE LATERALLY RESTRAINED.

LOADING

TOTAL LOAD CASES: (4)

CHORDS

MEMB. FR-TO	MAX. FACTORED FORCE (LBS)	FACTORED VERT. LOAD (PLF) FROM	TO	LC1 MAX CSI (LC)	MAX. UNBRAC LENGTH
1- 2	0 / 29	-77.3	-77.3	0.10 (1)	10.00
2- 3	0 / 21	-77.3	-77.3	0.23 (1)	10.00
3- 4	-1233 / 0	-77.3	-77.3	0.19 (1)	5.58
4- 5	-1013 / 0	-77.3	-77.3	0.16 (1)	6.04
5- 6	-1013 / 0	-77.3	-77.3	0.16 (1)	6.04
6- 7	-1233 / 0	-77.3	-77.3	0.19 (1)	5.58
7- 8	0 / 21	-77.3	-77.3	0.23 (1)	10.00
8- 9	0 / 29	-77.3	-77.3	0.10 (1)	10.00
14- 2	-235 / 0	0.0	0.0	0.02 (1)	7.81
10- 8	-235 / 0	0.0	0.0	0.02 (1)	7.81
14-13	0 / 1096	-17.5	-17.5	0.35 (4)	10.00
13-12	0 / 1118	-17.5	-17.5	0.36 (4)	10.00
12-11	0 / 1118	-17.5	-17.5	0.36 (4)	10.00
11-10	0 / 1096	-17.5	-17.5	0.35 (4)	10.00

WEBS

MEMB. FR-TO	MAX. FACTORED FORCE (LBS)	MAX CSI (LC)
3-13	-120 / 25	0.07 (1)
13- 4	0 / 423	0.10 (1)
13- 5	-213 / 0	0.28 (1)
5-11	-213 / 0	0.28 (1)
11- 6	0 / 423	0.10 (1)
11- 7	-120 / 25	0.07 (1)
14- 3	-1487 / 0	0.86 (1)
7-10	-1487 / 0	0.86 (1)

DESIGN CRITERIA

SPECIFIED LOADS:

TOP CH.	LL =	23.3	PSF
	DL =	3.0	PSF
BOT CH.	LL =	0.0	PSF
	DL =	7.0	PSF
TOTAL LOAD	=	33.3	PSF

SPACING = 24.0 IN. C/C

LOADING IN FLAT SECTION BASED ON A SLOPE OF 6.00/12

THIS TRUSS IS DESIGNED FOR RESIDENTIAL OR SMALL BUILDING REQUIREMENTS OF PART 9, NBCC 2010

THIS DESIGN COMPLIES WITH:
- PART 9 OF OBC 2012 , BCBC 2012 , ABC 2014
- CSA 086-09
- TPIC 2011

(55 % OF 27.2 P.S.F. G.S.L. PLUS 8.4 P.S.F. RAIN LOAD) EQUALS 23.3 P.S.F. SPECIFIED ROOF LIVE LOAD

ALLOWABLE DEFL.(LL)= L/360 (0.84")
CALCULATED VERT. DEFL.(LL) = L/ 999 (0.05")
ALLOWABLE DEFL.(TL)= L/360 (0.84")
CALCULATED VERT. DEFL.(TL) = L/ 999 (0.18")

CSI: TC=0.23 (2-3:1) , BC=0.36 (11-13:4) , WB=0.86 (3-14:1) , SSI=0.15 (4-5:1)

DOL LUMBER=1.00 NAIL=1.00 LS BEND=1.10 COMP=1.10 SHEAR=1.10 TENS= 1.10

COMPANION LIVE LOAD FACTOR = 0.50

TRUSS PLATE MANUFACTURER IS NOT RESPONSIBLE FOR QUALITY CONTROL IN THE TRUSS MANUFACTURING PLANT .

NAIL VALUES

PLATE	GRIP(DRY) (PSI) MAX	MIN	SHEAR (PLI) MAX	MIN	SECTION (PLI) MAX	MIN
MT20	618	354	1667	822	2284	1656

PLATE PLACEMENT TOL. = 0.250 inches

PLATE ROTATION TOL. = 5.0 Deg.

JSI GRIP= 0.90 (4) (INPUT = 0.90)
JSI METAL= 0.41 (14) (INPUT = 1.00)

LICENSED PROFESSIONAL ENGINEER
P.M. TREVISAN
100136551
March 13th, 2017
PROVINCE OF ONTARIO

RECEIVED
TOWN OF MILTON
MAR 29, 2017
17-5052
BUILDING DIVISION

READ ALL NOTES ON THIS PAGE AND ON THE ENGINEERING NOTE PAGE ENP-1. THE NOTE PAGE IS AN INTEGRAL PART OF THIS DRAWING AS IT CONTAINS SPECIFICATIONS AND CRITERIA USED IN THE DESIGN OF THIS COMPONENT.

KOTT

JOB NAME	TRUSS NAME	QUANTITY	PLY	JOB DESC.	DRWG NO.
PT0317-060	**T18**	**1**	**1**	TRUSS DESC. LECCO RIDGE-BLOCK 332	

ENG JOB: PT0317-060

KOTT , Stouffville, ON, CGC

Version 8.100 S Feb 9 2017 MiTek Industries, Inc. Mon Mar 13 13:24:38 2017 Page 1
ID:gtheX5EqOVSIkwpr5Eyn2TyGKTI-MPS8sbke3TMWUNuFI9?6t7o8Pa6PgOCEYkrJFnzbLkd

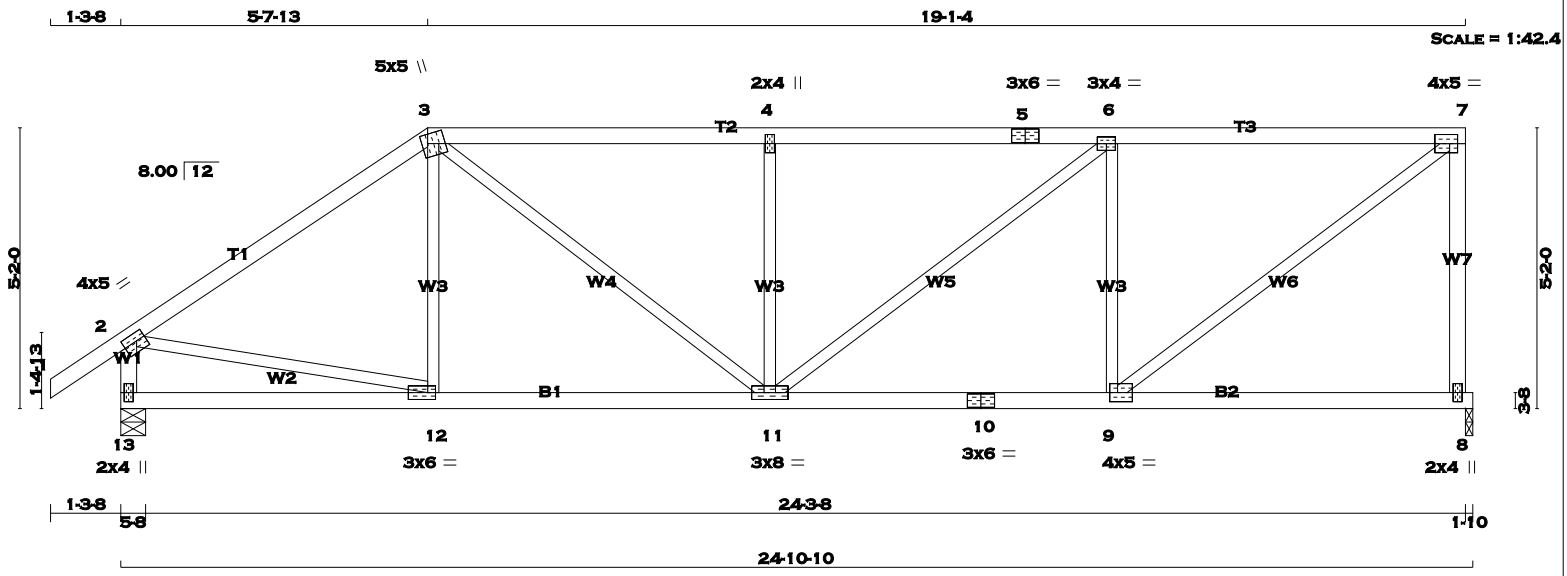

TOTAL WEIGHT = 100 lb
[M]

LUMBER
N. L. G. A. RULES

CHORDS	SIZE		LUMBER	DESCR.
1 - 3	2x4	DRY	No.2	SPF
3 - 5	2x4	DRY	No.2	SPF
5 - 7	2x4	DRY	No.2	SPF
8 - 7	2x4	DRY	No.2	SPF
13 - 2	2x4	DRY	No.2	SPF
13 - 10	2x4	DRY	No.2	SPF
10 - 8	2x4	DRY	No.2	SPF
ALL WEBS EXCEPT	2x3	DRY	No.2	SPF

DRY: SEASONED LUMBER.

PLATES (table is in inches)

JT	TYPE	PLATES	W	LEN	Y	X
2	TMVW-t	MT20	4.0	5.0	1.75	2.00
3	TTWW+m	MT20	5.0	5.0	2.00	1.25
4	TMW+w	MT20	2.0	4.0		
5	TS-t	MT20	3.0	6.0		
6	TMWW-t	MT20	3.0	4.0		
7	TMVW-t	MT20	4.0	5.0	2.00	1.75
8	BMV1+p	MT20	2.0	4.0		
9	BMWW-t	MT20	4.0	5.0	2.00	1.75
10	BS-t	MT20	3.0	6.0		
11	BMWWW-t	MT20	3.0	8.0		
12	BMWW-t	MT20	3.0	6.0	1.50	1.75
13	BMV1+p	MT20	2.0	4.0		

A SIZE FOR SIZE SUBSTITUTION OF MITEK MII20 WITH TEE-LOK TL20 PLATES IS ALLOWED.

DIMENSIONS, SUPPORTS AND LOADINGS SPECIFIED BY FABRICATOR TO BE VERIFIED BY BUILDING DESIGNER

BEARINGS

JT	FACTORED GROSS REACTION VERT	HORZ	MAXIMUM FACTORED GROSS REACTION DOWN	HORZ	UPLIFT	INPUT BRG IN-SX	REQRD BRG IN-SX
8	1174	0	1174	0	0	1-10	1-10
13	1280	0	1280	0	0	5-8	5-8

UNFACTORED REACTIONS

JT	1ST LCASE COMBINED	MAX./MIN. COMPONENT REACTIONS SNOW	LIVE	PERM.LIVE	WIND	DEAD	SOIL
8	824	576 / 0	0 / 0	0 / 0	0 / 0	248 / 0	0 / 0
13	896	640 / 0	0 / 0	0 / 0	0 / 0	256 / 0	0 / 0

BEARING MATERIAL TO BE SPF NO.2 OR BETTER AT JOINT(S) 8, 13

BRACING
TOP CHORD TO BE SHEATHED OR MAX. PURLIN SPACING = 4.64 FT.
MAX. UNBRACED BOTTOM CHORD LENGTH = 10.00 FT. OR RIGID CEILING DIRECTLY APPLIED.

ALL PITCH BREAKS AND PERIMETER CORNER JOINTS MUST BE LATERALLY RESTRAINED.

LOADING
TOTAL LOAD CASES: (4)

CHORDS

MEMB. FR-TO	MAX. FACTORED FORCE (LBS)	FACTORED VERT. LOAD (PLF) FROM	TO	LC1 MAX CSI (LC)	MAX. UNBRAC LENGTH
1- 2	0 / 29	-77.3	-77.3	0.10 (1)	10.00
2- 3	-1286 / 0	-77.3	-77.3	0.51 (1)	5.04
3- 4	-1556 / 0	-77.3	-77.3	0.50 (1)	4.70
4- 5	-1556 / 0	-77.3	-77.3	0.53 (1)	4.64
5- 6	-1556 / 0	-77.3	-77.3	0.53 (1)	4.64
6- 7	-1233 / 0	-77.3	-77.3	0.50 (1)	5.11
8- 7	-1127 / 0	0.0	0.0	0.51 (1)	7.48
13- 2	-1240 / 0	0.0	0.0	0.13 (1)	7.21
13-12	0 / 0	-17.5	-17.5	0.15 (4)	10.00
12-11	0 / 1067	-17.5	-17.5	0.26 (1)	10.00
11-10	0 / 1233	-17.5	-17.5	0.29 (1)	10.00
10- 9	0 / 1233	-17.5	-17.5	0.29 (1)	10.00
9- 8	0 / 0	-17.5	-17.5	0.18 (4)	10.00

WEBS

MEMB. FR-TO	MAX. FACTORED FORCE (LBS)	MAX CSI (LC)
12- 3	-82 / 71	0.03 (1)
3-11	0 / 618	0.14 (1)
11- 4	-526 / 0	0.21 (1)
11- 6	0 / 408	0.09 (1)
9- 6	-797 / 0	0.31 (1)
9- 7	0 / 1541	0.35 (1)
2-12	0 / 1087	0.24 (1)

DESIGN CRITERIA

SPECIFIED LOADS:

TOP CH.	LL	=	23.3	PSF
	DL	=	3.0	PSF
BOT CH.	LL	=	0.0	PSF
	DL	=	7.0	PSF
TOTAL LOAD		=	33.3	PSF

SPACING = 24.0 IN. C/C

LOADING IN FLAT SECTION BASED ON A SLOPE OF 6.00/12

THIS TRUSS IS DESIGNED FOR RESIDENTIAL OR SMALL BUILDING REQUIREMENTS OF PART 9, NBCC 2010

THIS DESIGN COMPLIES WITH:
- PART 9 OF OBC 2012 , BCBC 2012 , ABC 2014
- CSA 086-09
- TPIC 2011

(55 % OF 27.2 P.S.F. G.S.L. PLUS 8.4 P.S.F. RAIN LOAD) EQUALS 23.3 P.S.F. SPECIFIED ROOF LIVE LOAD

ALLOWABLE DEFL.(LL)= L/360 (0.83")
CALCULATED VERT. DEFL.(LL) = L/ 999 (0.07")
ALLOWABLE DEFL.(TL)= L/360 (0.83")
CALCULATED VERT. DEFL.(TL) = L/ 999 (0.12")

CSI: TC=0.53 (4-6:1) , BC=0.29 (9-11:1) , WB=0.35 (7-9:1) , SSI=0.23 (6-7:1)

DOL LUMBER=1.00 NAIL=1.00 LS BEND=1.10 COMP=1.10 SHEAR=1.10 TENS= 1.10

COMPANION LIVE LOAD FACTOR = 0.50

TRUSS PLATE MANUFACTURER IS NOT RESPONSIBLE FOR QUALITY CONTROL IN THE TRUSS MANUFACTURING PLANT .

NAIL VALUES

PLATE	GRIP(DRY) (PSI) MAX	MIN	SHEAR (PLI) MAX	MIN	SECTION (PLI) MAX	MIN
MT20	618	354	1667	822	2284	1656

PLATE PLACEMENT TOL. = 0.250 inches

PLATE ROTATION TOL. = 5.0 Deg.

JSI GRIP= 0.90 (12) (INPUT = 0.90)
JSI METAL= 0.44 (2) (INPUT = 1.00)

LICENSED PROFESSIONAL ENGINEER
P.M. TREVISAN
100136551
March 13th, 2017
PROVINCE OF ONTARIO

RECEIVED
TOWN OF MILTON
MAR 29, 2017
17-5052
BUILDING DIVISION

READ ALL NOTES ON THIS PAGE AND ON THE ENGINEERING NOTE PAGE ENP-1. THE NOTE PAGE IS AN INTEGRAL PART OF THIS DRAWING AS IT CONTAINS SPECIFICATIONS AND CRITERIA USED IN THE DESIGN OF THIS COMPONENT.

KOTT

JOB NAME	TRUSS NAME	QUANTITY	PLY	JOB DESC.	DRWG NO.
PT0317-060	T19	1	1	TRUSS DESC. LECCO RIDGE-BLOCK 332	

KOTT , Stouffville, ON, CGC

Version 8.100 S Feb 9 2017 MiTek Industries, Inc. Mon Mar 13 13:24:39 2017 Page 1
ID:gtheX5EqOVSIkwpr5Eyn2TyGKTI-qb?W3xkGqnUN6XTRrtWLQKLEI_RFPowOnObsnDzbLkc

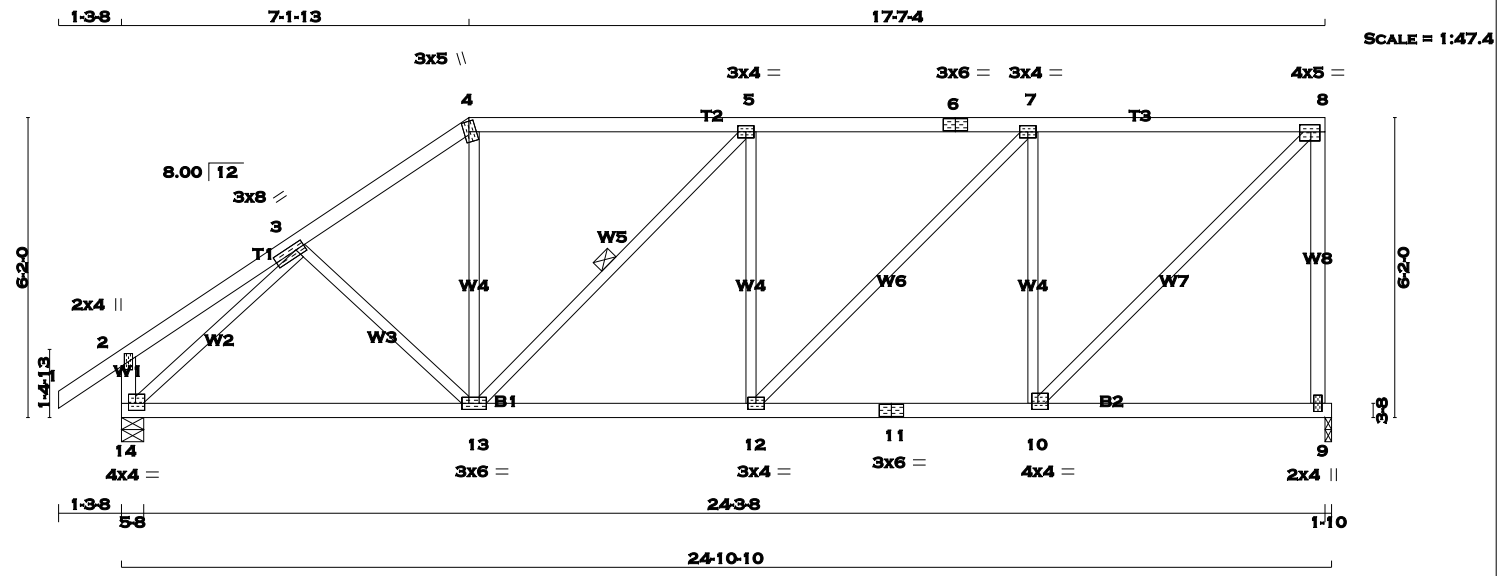

TOTAL WEIGHT = 108 lb
[M]

LUMBER
N. L. G. A. RULES

CHORDS	SIZE		LUMBER	DESCR.
1 - 4	2x4	DRY	No.2	SPF
4 - 6	2x4	DRY	No.2	SPF
6 - 8	2x4	DRY	No.2	SPF
9 - 8	2x4	DRY	No.2	SPF
14 - 2	2x4	DRY	No.2	SPF
14 - 11	2x4	DRY	No.2	SPF
11 - 9	2x4	DRY	No.2	SPF
ALL WEBS EXCEPT	2x3	DRY	No.2	SPF

DRY: SEASONED LUMBER.

PLATES (table is in inches)

JT	TYPE	PLATES	W	LEN	Y	X
2	TMV+p	MT20	2.0	4.0		
3	TMWW-t	MT20	3.0	8.0	1.50	2.25
4	TTW+m	MT20	3.0	5.0	2.50	1.25
5	TMWW-t	MT20	3.0	4.0		
6	TS-t	MT20	3.0	6.0		
7	TMWW-t	MT20	3.0	4.0		
8	TMVW-t	MT20	4.0	5.0	1.75	2.25
9	BMV1+p	MT20	2.0	4.0		
10	BMWW-t	MT20	4.0	4.0	1.50	1.50
11	BS-t	MT20	3.0	6.0		
12	BMWW-t	MT20	3.0	4.0		
13	BMWWW-t	MT20	3.0	6.0		
14	BMVW1-t	MT20	4.0	4.0	1.75	1.75

A SIZE FOR SIZE SUBSTITUTION OF MITEK MII20 WITH TEE-LOK TL20 PLATES IS ALLOWED.

DIMENSIONS, SUPPORTS AND LOADINGS SPECIFIED BY FABRICATOR TO BE VERIFIED BY BUILDING DESIGNER

BEARINGS

JT	FACTORED GROSS REACTION VERT	HORZ	MAXIMUM FACTORED GROSS REACTION DOWN	HORZ	UPLIFT	INPUT BRG IN-SX	REQRD BRG IN-SX
9	1174	0	1174	0	0	1-10	1-10
14	1280	0	1280	0	0	5-8	5-8

UNFACTORED REACTIONS

JT	1ST LCASE COMBINED	MAX./MIN. COMPONENT REACTIONS SNOW	LIVE	PERM.LIVE	WIND	DEAD	SOIL
9	824	576 / 0	0 / 0	0 / 0	0 / 0	248 / 0	0 / 0
14	896	640 / 0	0 / 0	0 / 0	0 / 0	256 / 0	0 / 0

BEARING MATERIAL TO BE SPF NO.2 OR BETTER AT JOINT(S) 9, 14

BRACING
TOP CHORD TO BE SHEATHED OR MAX. PURLIN SPACING = 5.16 FT.
MAX. UNBRACED BOTTOM CHORD LENGTH = 10.00 FT. OR RIGID CEILING DIRECTLY APPLIED.

ALL PITCH BREAKS AND PERIMETER CORNER JOINTS MUST BE LATERALLY RESTRAINED.

1 - 2x3 SPF No.2 LATERAL BRACE(S) AT 1/ 2 LENGTH OF 5-13. DBS = 20-0-0 . CBF = 44 LBS.

DBS = DIAGONAL BRACE SPACING (MAX). CBF = CUMULATIVE BRACING FORCE. FASTEN LATERAL BRACE(S) USING (0.122"X3") SPIRAL NAILS : 1 NAIL FOR 2x3 BRACE(S), 2 FOR 1x4, 2x4, 2x5, 3 FOR 2x6, 4 FOR 2x8, 5 FOR 2x10, AND 6 FOR 2x12.

END VERTICAL(S) MUST BE SHEATHED OR HAVE BRACES AS INDICATED IN THE MAX. UNBRACED LENGTH COLUMN OF THE TABLE BELOW

LOADING
TOTAL LOAD CASES: (4)

CHORDS

MEMB. FR-TO	MAX. FACTORED FORCE (LBS)	FACTORED VERT. LOAD (PLF) FROM	TO	LC1 MAX CSI (LC)	MAX. UNBRAC LENGTH
1- 2	0 / 29	-77.3	-77.3	0.10 (1)	10.00
2- 3	0 / 16	-77.3	-77.3	0.14 (1)	10.00
3- 4	-1257 / 0	-77.3	-77.3	0.17 (1)	5.55
4- 5	-1038 / 0	-77.3	-77.3	0.38 (1)	5.65
5- 6	-1280 / 0	-77.3	-77.3	0.42 (1)	5.16
6- 7	-1280 / 0	-77.3	-77.3	0.42 (1)	5.16
7- 8	-965 / 0	-77.3	-77.3	0.40 (1)	5.76
9- 8	-1131 / 0	0.0	0.0	0.84 (1)	7.46
14- 2	-215 / 0	0.0	0.0	0.02 (1)	7.81
14-13	0 / 1045	-17.5	-17.5	0.28 (1)	10.00
13-12	0 / 1280	-17.5	-17.5	0.32 (1)	10.00
12-11	0 / 965	-17.5	-17.5	0.24 (1)	10.00
11-10	0 / 965	-17.5	-17.5	0.24 (1)	10.00
10- 9	0 / 0	-17.5	-17.5	0.16 (4)	10.00

WEBS

MEMB. FR-TO	MAX. FACTORED FORCE (LBS)	MAX CSI (LC)
3-13	-19 / 43	0.01 (4)
13- 4	0 / 398	0.09 (1)
13- 5	-348 / 0	0.16 (1)
12- 5	-235 / 5	0.14 (1)
12- 7	0 / 449	0.10 (1)
10- 7	-824 / 0	0.49 (1)
10- 8	0 / 1349	0.30 (1)
14- 3	-1455 / 0	0.57 (1)

DESIGN CRITERIA

SPECIFIED LOADS:

TOP CH.	LL	=	23.3	PSF
	DL	=	3.0	PSF
BOT CH.	LL	=	0.0	PSF
	DL	=	7.0	PSF
TOTAL LOAD		=	33.3	PSF

SPACING = 24.0 IN. C/C

LOADING IN FLAT SECTION BASED ON A SLOPE OF 6.00/12

THIS TRUSS IS DESIGNED FOR RESIDENTIAL OR SMALL BUILDING REQUIREMENTS OF PART 9, NBCC 2010

THIS DESIGN COMPLIES WITH:
- PART 9 OF OBC 2012 , BCBC 2012 , ABC 2014
- CSA 086-09
- TPIC 2011

(55 % OF 27.2 P.S.F. G.S.L. PLUS 8.4 P.S.F. RAIN LOAD) EQUALS 23.3 P.S.F. SPECIFIED ROOF LIVE LOAD

ALLOWABLE DEFL.(LL)= L/360 (0.82")
CALCULATED VERT. DEFL.(LL) = L/ 999 (0.05")
ALLOWABLE DEFL.(TL)= L/360 (0.82")
CALCULATED VERT. DEFL.(TL) = L/ 999 (0.11")

CSI: TC=0.84 (8-9:1) , BC=0.32 (12-13:1) , WB=0.57 (3-14:1) , SSI=0.22 (7-8:1)

DOL LUMBER=1.00 NAIL=1.00 LS BEND=1.10 COMP=1.10 SHEAR=1.10 TENS= 1.10

COMPANION LIVE LOAD FACTOR = 0.50

TRUSS PLATE MANUFACTURER IS NOT RESPONSIBLE FOR QUALITY CONTROL IN THE TRUSS MANUFACTURING PLANT .

NAIL VALUES

PLATE	GRIP(DRY) (PSI) MAX	MIN	SHEAR (PLI) MAX	MIN	SECTION (PLI) MAX	MIN
MT20	618	354	1667	822	2284	1656

PLATE PLACEMENT TOL. = 0.250 inches

PLATE ROTATION TOL. = 5.0 Deg.

JSI GRIP= 0.90 (14) (INPUT = 0.90)
JSI METAL= 0.39 (14) (INPUT = 1.00)

LICENSED PROFESSIONAL ENGINEER
P.M. TREVISAN
100136551
March 13th, 2017
PROVINCE OF ONTARIO

RECEIVED
TOWN OF MILTON
MAR 29, 2017
17-5052
BUILDING DIVISION

READ ALL NOTES ON THIS PAGE AND ON THE ENGINEERING NOTE PAGE ENP-1. THE NOTE PAGE IS AN INTEGRAL PART OF THIS DRAWING AS IT CONTAINS SPECIFICATIONS AND CRITERIA USED IN THE DESIGN OF THIS COMPONENT.

KOTT

JOB NAME	TRUSS NAME	QUANTITY	PLY	JOB DESC.	DRWG NO.
PT0317-060	**T20**	**1**	**1**	TRUSS DESC. LECCO RIDGE-BLOCK 332	

ENG JOB: PT0317-060

KOTT , Stouffville, ON, CGC

Version 8.100 S Feb 9 2017 MiTek Industries, Inc. Mon Mar 13 13:24:39 2017 Page 1
ID:gtheX5EqOVSIkwpr5Eyn2TyGKTI-qb?W3xkGqnUN6XTRrtWLQKLM6_SiPlvOnObsnDzbLkc

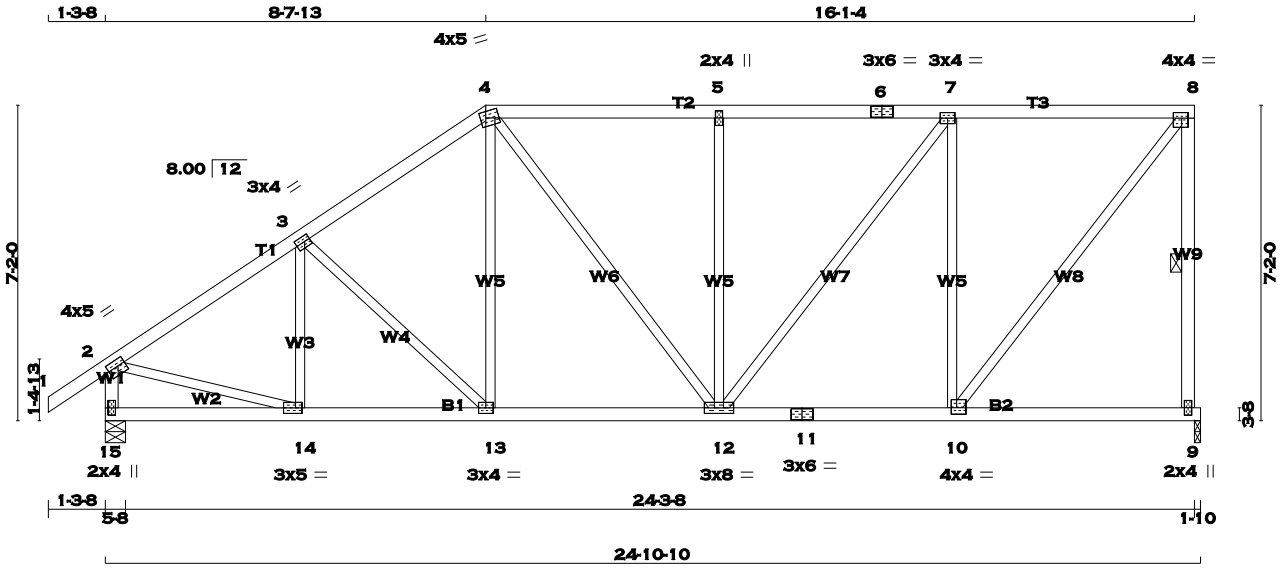

TOTAL WEIGHT = 117 lb
[M]

LUMBER
N. L. G. A. RULES

CHORDS	SIZE		LUMBER	DESCR.
1 - 4	2x4	DRY	No.2	SPF
4 - 6	2x4	DRY	No.2	SPF
6 - 8	2x4	DRY	No.2	SPF
9 - 8	2x4	DRY	No.2	SPF
15 - 2	2x4	DRY	No.2	SPF
15 - 11	2x4	DRY	No.2	SPF
11 - 9	2x4	DRY	No.2	SPF
ALL WEBS EXCEPT	2x3	DRY	No.2	SPF

DRY: SEASONED LUMBER.

PLATES (table is in inches)

JT	TYPE	PLATES	W	LEN	Y	X
2	TMVW-t	MT20	4.0	5.0	1.75	2.00
3	TMWW-t	MT20	3.0	4.0	1.50	1.50
4	TTWW-m	MT20	4.0	5.0	1.75	1.50
5	TMW+w	MT20	2.0	4.0		
6	TS-t	MT20	3.0	6.0		
7	TMWW-t	MT20	3.0	4.0		
8	TMVW-t	MT20	4.0	4.0	1.50	1.75
9	BMV1+p	MT20	2.0	4.0		
10	BMWW-t	MT20	4.0	4.0	1.75	1.50
11	BS-t	MT20	3.0	6.0		
12	BMWWW-t	MT20	3.0	8.0		
13	BMWW-t	MT20	3.0	4.0		
14	BMWW-t	MT20	3.0	5.0	1.50	1.75
15	BMV1+p	MT20	2.0	4.0		

A SIZE FOR SIZE SUBSTITUTION OF MITEK MII20 WITH TEE-LOK TL20 PLATES IS ALLOWED.

DIMENSIONS, SUPPORTS AND LOADINGS SPECIFIED BY FABRICATOR TO BE VERIFIED BY BUILDING DESIGNER

BEARINGS

JT	FACTORED GROSS REACTION VERT	HORZ	MAXIMUM FACTORED GROSS REACTION DOWN	HORZ	UPLIFT	INPUT BRG IN-SX	REQRD BRG IN-SX
9	1174	0	1174	0	0	1-10	1-10
15	1280	0	1280	0	0	5-8	5-8

UNFACTORED REACTIONS

JT	1ST LCASE COMBINED	MAX./MIN. COMPONENT REACTIONS SNOW	LIVE	PERM.LIVE	WIND	DEAD	SOIL
9	824	576 / 0	0 / 0	0 / 0	0 / 0	248 / 0	0 / 0
15	896	640 / 0	0 / 0	0 / 0	0 / 0	256 / 0	0 / 0

BEARING MATERIAL TO BE SPF NO.2 OR BETTER AT JOINT(S) 9, 15

BRACING
TOP CHORD TO BE SHEATHED OR MAX. PURLIN SPACING = 5.34 FT.
MAX. UNBRACED BOTTOM CHORD LENGTH = 10.00 FT. OR RIGID CEILING DIRECTLY APPLIED.

ALL PITCH BREAKS AND PERIMETER CORNER JOINTS MUST BE LATERALLY RESTRAINED.

1 - 2x3 SPF No.2 LATERAL BRACE(S) AT 1/ 2 LENGTH OF 8-9. DBS = 12-0-0 . CBF = 85 LBS.

DBS = DIAGONAL BRACE SPACING (MAX). CBF = CUMULATIVE BRACING FORCE. FASTEN LATERAL BRACE(S) USING (0.122"X3") SPIRAL NAILS : 1 NAIL FOR 2x3 BRACE(S), 2 FOR 1x4, 2x4, 2x5, 3 FOR 2x6, 4 FOR 2x8, 5 FOR 2x10, AND 6 FOR 2x12.

END VERTICAL(S) MUST BE SHEATHED OR HAVE BRACES AS INDICATED IN THE MAX. UNBRACED LENGTH COLUMN OF THE TABLE BELOW

LOADING
TOTAL LOAD CASES: (4)

CHORDS

MEMB. FR-TO	MAX. FACTORED FORCE (LBS)	FACTORED VERT. LOAD (PLF) FROM	TO	LC1 MAX CSI (LC)	MAX. UNBRAC LENGTH
1- 2	0 / 29	-77.3	-77.3	0.10 (1)	10.00
2- 3	-1307 / 0	-77.3	-77.3	0.27 (1)	5.34
3- 4	-1184 / 0	-77.3	-77.3	0.26 (1)	5.55
4- 5	-1073 / 0	-77.3	-77.3	0.31 (1)	5.68
5- 6	-1073 / 0	-77.3	-77.3	0.34 (1)	5.64
6- 7	-1073 / 0	-77.3	-77.3	0.34 (1)	5.64
7- 8	-771 / 0	-77.3	-77.3	0.33 (1)	6.25
9- 8	-1135 / 0	0.0	0.0	0.26 (1)	5.96
15- 2	-1246 / 0	0.0	0.0	0.13 (1)	7.20
15-14	0 / 0	-17.5	-17.5	0.07 (4)	10.00
14-13	0 / 1105	-17.5	-17.5	0.22 (1)	10.00
13-12	0 / 968	-17.5	-17.5	0.20 (1)	10.00
12-11	0 / 771	-17.5	-17.5	0.19 (1)	10.00
11-10	0 / 771	-17.5	-17.5	0.19 (1)	10.00
10- 9	0 / 0	-17.5	-17.5	0.12 (4)	10.00

WEBS

MEMB. FR-TO	MAX. FACTORED FORCE (LBS)	MAX CSI (LC)
14- 3	-192 / 14	0.05 (1)
3-13	-192 / 0	0.12 (1)
13- 4	0 / 218	0.05 (1)
4-12	0 / 172	0.04 (1)
12- 5	-442 / 0	0.40 (1)
12- 7	0 / 496	0.11 (1)
10- 7	-855 / 0	0.77 (1)
10- 8	0 / 1233	0.28 (1)
2-14	0 / 1138	0.26 (1)

DESIGN CRITERIA

SPECIFIED LOADS:

TOP CH.	LL	=	23.3	PSF
	DL	=	3.0	PSF
BOT CH.	LL	=	0.0	PSF
	DL	=	7.0	PSF
TOTAL LOAD		=	33.3	PSF

SPACING = 24.0 IN. C/C

LOADING IN FLAT SECTION BASED ON A SLOPE OF 6.00/12

THIS TRUSS IS DESIGNED FOR RESIDENTIAL OR SMALL BUILDING REQUIREMENTS OF PART 9, NBCC 2010

THIS DESIGN COMPLIES WITH:
- PART 9 OF OBC 2012 , BCBC 2012 , ABC 2014
- CSA 086-09
- TPIC 2011

(55 % OF 27.2 P.S.F. G.S.L. PLUS 8.4 P.S.F. RAIN LOAD) EQUALS 23.3 P.S.F. SPECIFIED ROOF LIVE LOAD

ALLOWABLE DEFL.(LL)= L/360 (0.82")
CALCULATED VERT. DEFL.(LL) = L/ 999 (0.05")
ALLOWABLE DEFL.(TL)= L/360 (0.82")
CALCULATED VERT. DEFL.(TL) = L/ 999 (0.09")

CSI: TC=0.34 (5-7:1) , BC=0.22 (13-14:1) , WB=0.77 (7-10:1) , SSI=0.20 (7-8:1)

DOL LUMBER=1.00 NAIL=1.00 LS BEND=1.10 COMP=1.10 SHEAR=1.10 TENS= 1.10

COMPANION LIVE LOAD FACTOR = 0.50

TRUSS PLATE MANUFACTURER IS NOT RESPONSIBLE FOR QUALITY CONTROL IN THE TRUSS MANUFACTURING PLANT .

NAIL VALUES

PLATE	GRIP(DRY) (PSI) MAX	MIN	SHEAR (PLI) MAX	MIN	SECTION (PLI) MAX	MIN
MT20	618	354	1667	822	2284	1656

PLATE PLACEMENT TOL. = 0.250 inches

PLATE ROTATION TOL. = 5.0 Deg.

JSI GRIP= 0.90 (14) (INPUT = 0.90)
JSI METAL= 0.44 (2) (INPUT = 1.00)

LICENSED PROFESSIONAL ENGINEER
PAUL TREVISAN
100136551
March 13th, 2017
PROVINCE OF ONTARIO

RECEIVED
TOWN OF MILTON
MAR 29, 2017
17-5052
BUILDING DIVISION

READ ALL NOTES ON THIS PAGE AND ON THE ENGINEERING NOTE PAGE ENP-1. THE NOTE PAGE IS AN INTEGRAL PART OF THIS DRAWING AS IT CONTAINS SPECIFICATIONS AND CRITERIA USED IN THE DESIGN OF THIS COMPONENT.

KOTT

JOB NAME	TRUSS NAME	QUANTITY	PLY	JOB DESC.	DRWG NO.
PT0317-060	T21	1	1	TRUSS DESC. LECCO RIDGE-BLOCK 332	ENG JOB: PT0317-060

KOTT , Stouffville, ON, CGC

Version 8.100 S Feb 9 2017 MiTek Industries, Inc. Mon Mar 13 13:24:39 2017 Page 1

ID:gtheX5EqOVSIkwpr5Eyn2TyGKTI-qb?W3xkGqnUN6XTRrtWLQKLFL_RRPigOnObsnDzbLkc

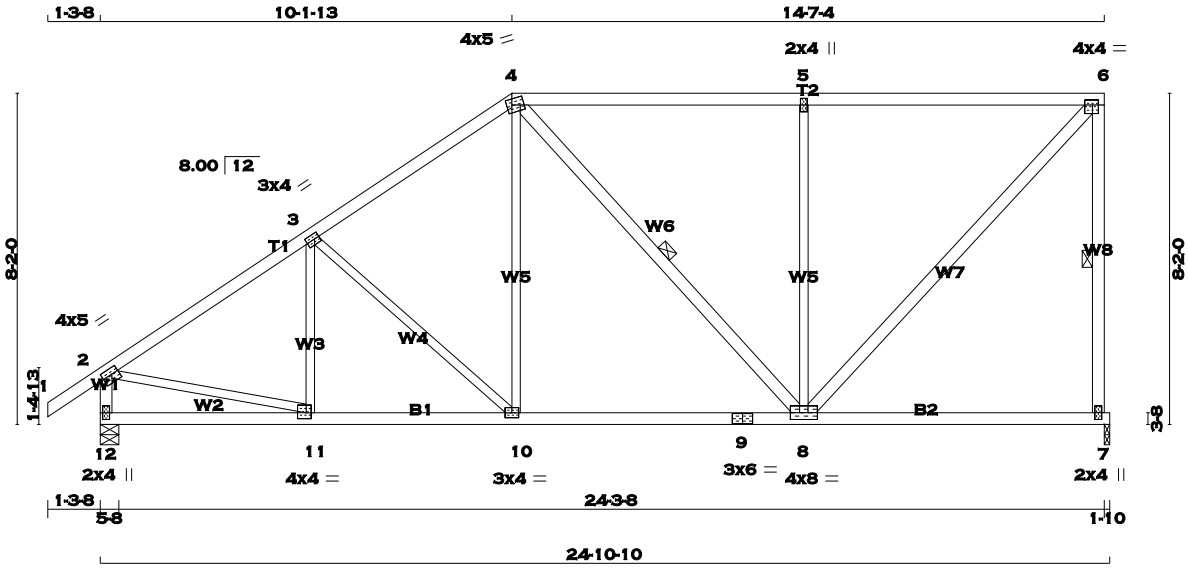

TOTAL WEIGHT = 119 lb [M]

LUMBER

N. L. G. A. RULES

CHORDS	SIZE		LUMBER	DESCR.
1 - 4	2x4	DRY	No.2	SPF
4 - 6	2x4	DRY	No.2	SPF
7 - 6	2x4	DRY	No.2	SPF
12 - 2	2x4	DRY	No.2	SPF
12 - 9	2x4	DRY	No.2	SPF
9 - 7	2x4	DRY	No.2	SPF
ALL WEBS	2x3	DRY	No.2	SPF
EXCEPT				
4 - 8	2x4	DRY	No.2	SPF
8 - 6	2x4	DRY	No.2	SPF

DRY: SEASONED LUMBER.

PLATES (table is in inches)

JT	TYPE	PLATES	W	LEN	Y	X
2	TMVW-t	MT20	4.0	5.0	1.75	2.00
3	TMWW-t	MT20	3.0	4.0	1.50	1.50
4	TTWW-m	MT20	4.0	5.0	1.75	1.50
5	TMW+w	MT20	2.0	4.0		
6	TMVW-t	MT20	4.0	4.0	1.50	1.75
7	BMV1+p	MT20	2.0	4.0		
8	BMWWW-t	MT20	4.0	8.0		
9	BS-t	MT20	3.0	6.0		
10	BMWW-t	MT20	3.0	4.0		
11	BMWW-t	MT20	4.0	4.0	1.75	1.50
12	BMV1+p	MT20	2.0	4.0		

A SIZE FOR SIZE SUBSTITUTION OF MITEK MII20 WITH TEE-LOK TL20 PLATES IS ALLOWED.

DIMENSIONS, SUPPORTS AND LOADINGS SPECIFIED BY FABRICATOR TO BE VERIFIED BY BUILDING DESIGNER

BEARINGS

JT	FACTORED GROSS REACTION VERT	HORZ	MAXIMUM FACTORED GROSS REACTION DOWN	HORZ	UPLIFT	INPUT BRG IN-SX	REQRD BRG IN-SX
7	1174	0	1174	0	0	1-10	1-10
12	1280	0	1280	0	0	5-8	5-8

UNFACTORED REACTIONS

JT	1ST LCASE COMBINED	MAX./MIN. COMPONENT REACTIONS SNOW	LIVE	PERM.LIVE	WIND	DEAD	SOIL
7	824	576 / 0	0 / 0	0 / 0	0 / 0	248 / 0	0 / 0
12	896	640 / 0	0 / 0	0 / 0	0 / 0	256 / 0	0 / 0

BEARING MATERIAL TO BE SPF NO.2 OR BETTER AT JOINT(S) 7, 12

BRACING

TOP CHORD TO BE SHEATHED OR MAX. PURLIN SPACING = 5.16 FT.
MAX. UNBRACED BOTTOM CHORD LENGTH = 10.00 FT. OR RIGID CEILING DIRECTLY APPLIED.

ALL PITCH BREAKS AND PERIMETER CORNER JOINTS MUST BE LATERALLY RESTRAINED.

1 - 2x3 SPF No.2 LATERAL BRACE(S) AT 1/ 2 LENGTH OF 6-7. DBS = 12-0-0 . CBF = 84 LBS.
1 - 2x3 SPF No.2 LATERAL BRACE(S) AT 1/ 2 LENGTH OF 4-8. DBS = 20-0-0 . CBF = 9 LBS.

DBS = DIAGONAL BRACE SPACING (MAX). CBF = CUMULATIVE BRACING FORCE. FASTEN LATERAL BRACE(S) USING (0.122"X3") SPIRAL NAILS : 1 NAIL FOR 2x3 BRACE(S), 2 FOR 1x4, 2x4, 2x5, 3 FOR 2x6, 4 FOR 2x8, 5 FOR 2x10, AND 6 FOR 2x12.

END VERTICAL(S) MUST BE SHEATHED OR HAVE BRACES AS INDICATED IN THE MAX. UNBRACED LENGTH COLUMN OF THE TABLE BELOW

LOADING

TOTAL LOAD CASES: (4)

CHORDS MEMB. FR-TO	MAX. FACTORED FORCE (LBS)	FACTORED VERT. LOAD (PLF) FROM	TO	LC1 MAX CSI (LC)	MAX. UNBRAC LENGTH	WEBS MEMB. FR-TO	MAX. FACTORED FORCE (LBS)	MAX CSI (LC)
1- 2	0 / 29	-77.3	-77.3	0.10 (1)	10.00	11- 3	-141 / 40	0.05 (1)
2- 3	-1321 / 0	-77.3	-77.3	0.39 (1)	5.16	3-10	-299 / 0	0.26 (1)
3- 4	-1106 / 0	-77.3	-77.3	0.37 (1)	5.54	10- 4	0 / 302	0.07 (1)
4- 5	-850 / 0	-77.3	-77.3	0.77 (1)	5.18	4- 8	-75 / 0	0.04 (1)
5- 6	-850 / 0	-77.3	-77.3	0.77 (1)	5.16	8- 5	-702 / 0	0.91 (1)
7- 6	-1122 / 0	0.0	0.0	0.34 (1)	5.99	8- 6	0 / 1241	0.20 (1)
12- 2	-1241 / 0	0.0	0.0	0.13 (1)	7.21	2-11	0 / 1144	0.26 (1)
12-11	0 / 0	-17.5	-17.5	0.10 (4)	10.00			
11-10	0 / 1120	-17.5	-17.5	0.25 (1)	10.00			
10- 9	0 / 901	-17.5	-17.5	0.31 (4)	10.00			
9- 8	0 / 901	-17.5	-17.5	0.31 (4)	10.00			
8- 7	0 / 0	-17.5	-17.5	0.24 (4)	10.00			

DESIGN CRITERIA

SPECIFIED LOADS:

TOP	CH.	LL	=	23.3	PSF
		DL	=	3.0	PSF
BOT	CH.	LL	=	0.0	PSF
		DL	=	7.0	PSF
TOTAL	LOAD		=	33.3	PSF

SPACING = 24.0 IN. C/C

LOADING IN FLAT SECTION BASED ON A SLOPE OF 6.00/12

THIS TRUSS IS DESIGNED FOR RESIDENTIAL OR SMALL BUILDING REQUIREMENTS OF PART 9, NBCC 2010

THIS DESIGN COMPLIES WITH:
- PART 9 OF OBC 2012 , BCBC 2012 , ABC 2014
- CSA 086-09
- TPIC 2011

(55 % OF 27.2 P.S.F. G.S.L. PLUS 8.4 P.S.F. RAIN LOAD) EQUALS 23.3 P.S.F. SPECIFIED ROOF LIVE LOAD

ALLOWABLE DEFL.(LL)= L/360 (0.82")
CALCULATED VERT. DEFL.(LL) = L/ 999 (0.04")
ALLOWABLE DEFL.(TL)= L/360 (0.82")
CALCULATED VERT. DEFL.(TL) = L/ 999 (0.10")

CSI: TC=0.77 (5-6:1) , BC=0.31 (8-10:4) , WB=0.91 (5-8:1) , SSI=0.28 (5-6:1)

DOL LUMBER=1.00 NAIL=1.00 LS BEND=1.10 COMP=1.10 SHEAR=1.10 TENS= 1.10

COMPANION LIVE LOAD FACTOR = 0.50

TRUSS PLATE MANUFACTURER IS NOT RESPONSIBLE FOR QUALITY CONTROL IN THE TRUSS MANUFACTURING PLANT .

NAIL VALUES

PLATE	GRIP(DRY) (PSI) MAX	MIN	SHEAR (PLI) MAX	MIN	SECTION (PLI) MAX	MIN
MT20	618	354	1667	822	2284	1656

PLATE PLACEMENT TOL. = 0.250 inches

PLATE ROTATION TOL. = 5.0 Deg.

JSI GRIP= 0.86 (2) (INPUT = 0.90)
JSI METAL= 0.45 (2) (INPUT = 1.00)

LICENSED PROFESSIONAL ENGINEER
P.M. TREVISAN
100136551
March 13th, 2017
PROVINCE OF ONTARIO

RECEIVED
TOWN OF MILTON
MAR 29, 2017
17-5052
BUILDING DIVISION

READ ALL NOTES ON THIS PAGE AND ON THE ENGINEERING NOTE PAGE ENP-1. THE NOTE PAGE IS AN INTEGRAL PART OF THIS DRAWING AS IT CONTAINS SPECIFICATIONS AND CRITERIA USED IN THE DESIGN OF THIS COMPONENT.

KOTT

SCALE = 1:44.9

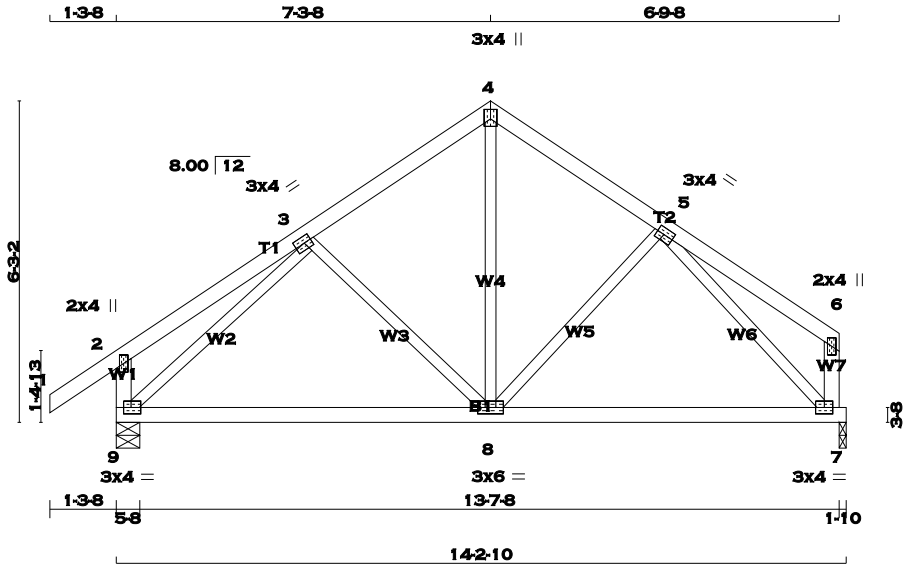

TOTAL WEIGHT = 5 X 60 = 300 lb

[M][F]

LUMBER

N. L. G. A. RULES

CHORDS	SIZE		LUMBER	DESCR.
1 - 4	2x4	DRY	No.2	SPF
4 - 6	2x4	DRY	No.2	SPF
9 - 2	2x4	DRY	No.2	SPF
7 - 6	2x4	DRY	No.2	SPF
9 - 7	2x4	DRY	No.2	SPF
ALL WEBS EXCEPT	2x3	DRY	No.2	SPF

DRY: SEASONED LUMBER.

PLATES (table is in inches)

JT	TYPE	PLATES	W	LEN	Y	X
2	TMV+p	MT20	2.0	4.0		
3	TMWW-t	MT20	3.0	4.0	1.50	1.75
4	TTW+p	MT20	3.0	4.0	2.25	1.50
5	TMWW-t	MT20	3.0	4.0	1.50	1.75
6	TMV+p	MT20	2.0	4.0		
7	BMVW1-t	MT20	3.0	4.0		
8	BMWWW-t	MT20	3.0	6.0		
9	BMVW1-t	MT20	3.0	4.0	1.50	1.75

A SIZE FOR SIZE SUBSTITUTION OF MITEK MII20 WITH TEE-LOK TL20 PLATES IS ALLOWED.

DIMENSIONS, SUPPORTS AND LOADINGS SPECIFIED BY FABRICATOR TO BE VERIFIED BY BUILDING DESIGNER

BEARINGS

JT	FACTORED GROSS REACTION VERT	HORZ	MAXIMUM FACTORED GROSS REACTION DOWN	HORZ	UPLIFT	INPUT BRG IN-SX	REQRD BRG IN-SX
9	774	0	774	0	0	5-8	5-8
7	668	0	668	0	0	1-10	1-10

UNFACTORED REACTIONS

JT	1ST LCASE COMBINED	MAX./MIN. COMPONENT REACTIONS SNOW	LIVE	PERM.LIVE	WIND	DEAD	SOIL
9	541	392 / 0	0 / 0	0 / 0	0 / 0	149 / 0	0 / 0
7	469	328 / 0	0 / 0	0 / 0	0 / 0	141 / 0	0 / 0

BEARING MATERIAL TO BE SPF NO.2 OR BETTER AT JOINT(S) 9, 7

BRACING

TOP CHORD TO BE SHEATHED OR MAX. PURLIN SPACING = 6.25 FT.
MAX. UNBRACED BOTTOM CHORD LENGTH = 10.00 FT. OR RIGID CEILING DIRECTLY APPLIED.

ALL PITCH BREAKS AND PERIMETER CORNER JOINTS MUST BE LATERALLY RESTRAINED.

LOADING

TOTAL LOAD CASES: (4)

CHORDS

MEMB. FR-TO	MAX. FACTORED FORCE (LBS)	FACTORED VERT. LOAD (PLF) FROM	TO	LC1 MAX CSI (LC)	MAX. UNBRAC LENGTH
1- 2	0 / 29	-77.3	-77.3	0.10 (1)	10.00
2- 3	0 / 18	-77.3	-77.3	0.16 (1)	10.00
3- 4	-514 / 0	-77.3	-77.3	0.13 (1)	6.25
4- 5	-512 / 0	-77.3	-77.3	0.11 (1)	6.25
5- 6	0 / 16	-77.3	-77.3	0.14 (1)	10.00
9- 2	-215 / 0	0.0	0.0	0.02 (1)	7.81
7- 6	-102 / 0	0.0	0.0	0.01 (1)	7.81
9- 8	0 / 529	-17.5	-17.5	0.28 (4)	10.00
8- 7	0 / 482	-17.5	-17.5	0.28 (4)	10.00

WEBS

MEMB. FR-TO	MAX. FACTORED FORCE (LBS)	MAX CSI (LC)
3- 8	-161 / 3	0.07 (1)
8- 4	0 / 339	0.08 (1)
8- 5	-102 / 16	0.04 (1)
9- 3	-735 / 0	0.30 (1)
5- 7	-710 / 0	0.28 (1)

DESIGN CRITERIA

SPECIFIED LOADS:

TOP	CH.	LL	=	23.3	PSF
		DL	=	3.0	PSF
BOT	CH.	LL	=	0.0	PSF
		DL	=	7.0	PSF
TOTAL	LOAD		=	33.3	PSF

SPACING = 24.0 IN. C/C

THIS TRUSS IS DESIGNED FOR RESIDENTIAL OR SMALL BUILDING REQUIREMENTS OF PART 9, NBCC 2010

THIS DESIGN COMPLIES WITH:
- PART 9 OF OBC 2012 , BCBC 2012 , ABC 2014
- CSA 086-09
- TPIC 2011

(55 % OF 27.2 P.S.F. G.S.L. PLUS 8.4 P.S.F. RAIN LOAD) EQUALS 23.3 P.S.F. SPECIFIED ROOF LIVE LOAD

ALLOWABLE DEFL.(LL)= L/360 (0.47")
CALCULATED VERT. DEFL.(LL) = L/ 999 (0.01")
ALLOWABLE DEFL.(TL)= L/360 (0.47")
CALCULATED VERT. DEFL.(TL) = L/ 999 (0.07")

CSI: TC=0.16 (2-3:1) , BC=0.28 (8-9:4) , WB=0.30 (3-9:1) , SSI=0.11 (3-4:1)

DOL LUMBER=1.00 NAIL=1.00 LS BEND=1.10 COMP=1.10 SHEAR=1.10 TENS= 1.10

COMPANION LIVE LOAD FACTOR = 0.50

TRUSS PLATE MANUFACTURER IS NOT RESPONSIBLE FOR QUALITY CONTROL IN THE TRUSS MANUFACTURING PLANT .

NAIL VALUES

PLATE	GRIP(DRY) (PSI) MAX	MIN	SHEAR (PLI) MAX	MIN	SECTION (PLI) MAX	MIN
MT20	618	354	1667	822	2284	1656

PLATE PLACEMENT TOL. = 0.250 inches

PLATE ROTATION TOL. = 5.0 Deg.

JSI GRIP= 0.90 (3) (INPUT = 0.90)
JSI METAL= 0.26 (3) (INPUT = 1.00)

LICENSED PROFESSIONAL ENGINEER
P.M. TREVISAN
100136551
March 13th, 2017
PROVINCE OF ONTARIO

RECEIVED
TOWN OF MILTON
MAR 29, 2017
17-5052
BUILDING DIVISION

READ ALL NOTES ON THIS PAGE AND ON THE ENGINEERING NOTE PAGE ENP-1. THE NOTE PAGE IS AN INTEGRAL PART OF THIS DRAWING AS IT CONTAINS SPECIFICATIONS AND CRITERIA USED IN THE DESIGN OF THIS COMPONENT.

KOTT

JOB NAME	TRUSS NAME	QUANTITY	PLY	JOB DESC.	DRWG NO.
PT0317-060	T23	1	1	TRUSS DESC. LECCO RIDGE-BLOCK 332	ENG JOB: PT0317-060

KOTT , Stouffville, ON, CGC

Version 8.100 S Feb 9 2017 MiTek Industries, Inc. Mon Mar 13 13:24:40 2017 Page 1
ID:gtheX5EqOVSIkwpr5Eyn2TyGKTI-InZuHHlua5cEkh1ePa1azXuWXOno8CwX?2KQKfzbLkb

SCALE = 1:70.3

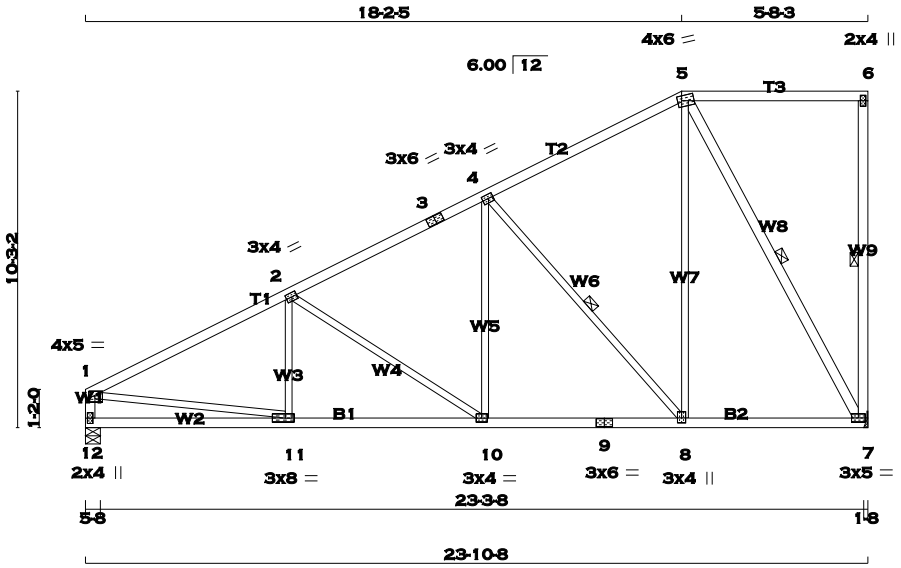

TOTAL WEIGHT = 115 lb

LUMBER
N. L. G. A. RULES

CHORDS	SIZE		LUMBER	DESCR.
1 - 3	2x4	DRY	No.2	SPF
3 - 5	2x4	DRY	No.2	SPF
5 - 6	2x4	DRY	No.2	SPF
7 - 6	2x4	DRY	No.2	SPF
12 - 1	2x4	DRY	No.2	SPF
12 - 9	2x4	DRY	No.2	SPF
9 - 7	2x4	DRY	No.2	SPF
ALL WEBS EXCEPT	2x3	DRY	No.2	SPF
5 - 7	2x4	DRY	No.2	SPF

DRY: SEASONED LUMBER.

PLATES (table is in inches)

JT	TYPE	PLATES	W	LEN	Y	X
1	TMVW-p	MT20	4.0	5.0	1.50	2.25
2	TMWW-t	MT20	3.0	4.0	1.50	1.75
3	TS-t	MT20	3.0	6.0		
4	TMWW-t	MT20	3.0	4.0	1.50	1.75
5	TTWW-m	MT20	4.0	6.0	1.75	1.50
6	TMV+p	MT20	2.0	4.0		
7	BMVW1-t	MT20	3.0	5.0		
8	BMWW+t	MT20	3.0	4.0	1.75	1.50
9	BS-t	MT20	3.0	6.0		
10	BMWW-t	MT20	3.0	4.0		
11	BMWW-t	MT20	3.0	8.0	1.50	3.25
12	BMV1+p	MT20	2.0	4.0		

A SIZE FOR SIZE SUBSTITUTION OF MITEK MII20 WITH TEE-LOK TL20 PLATES IS ALLOWED.

DIMENSIONS, SUPPORTS AND LOADINGS SPECIFIED BY FABRICATOR TO BE VERIFIED BY BUILDING DESIGNER

BEARINGS

JT	FACTORED GROSS REACTION VERT	HORZ	MAXIMUM FACTORED GROSS REACTION DOWN	HORZ	UPLIFT	INPUT BRG	REQRD BRG
7	1132	0	1132	0	0	IN-SX	IN-SX
						HANGER BY OTHERS	
						MIN. SEAT SIZE: 1-8	
12	1132	0	1132	0	0	5-8	5-8

UNFACTORED REACTIONS

JT	1ST LCASE COMBINED	SNOW	MAX./MIN. COMPONENT REACTIONS LIVE	PERM.LIVE	WIND	DEAD	SOIL
7	795	556 / 0	0 / 0	0 / 0	0 / 0	239 / 0	0 / 0
12	795	556 / 0	0 / 0	0 / 0	0 / 0	239 / 0	0 / 0

BEARING MATERIAL TO BE SPF NO.2 OR BETTER AT JOINT(S) 12

BRACING
TOP CHORD TO BE SHEATHED OR MAX. PURLIN SPACING = 4.88 FT.
MAX. UNBRACED BOTTOM CHORD LENGTH = 10.00 FT. OR RIGID CEILING DIRECTLY APPLIED.

ALL PITCH BREAKS AND PERIMETER CORNER JOINTS MUST BE LATERALLY RESTRAINED.

1 - 2x3 SPF No.2 LATERAL BRACE(S) AT 1/ 2 LENGTH OF 6-7. DBS = 20-0-0 . CBF = 27 LBS.
1 - 2x3 SPF No.2 LATERAL BRACE(S) AT 1/ 2 LENGTH OF 4-8. DBS = 18-0-0 . CBF = 90 LBS.
1 - 2x3 SPF No.2 LATERAL BRACE(S) AT 1/ 2 LENGTH OF 5-7. DBS = 14-0-0 . CBF = 88 LBS.

DBS = DIAGONAL BRACE SPACING (MAX). CBF = CUMULATIVE BRACING FORCE. FASTEN LATERAL BRACE(S) USING (0.122"X3") SPIRAL NAILS : 1 NAIL FOR 2x3 BRACE(S), 2 FOR 1x4, 2x4, 2x5, 3 FOR 2x6, 4 FOR 2x8, 5 FOR 2x10, AND 6 FOR 2x12.

END VERTICAL(S) MUST BE SHEATHED OR HAVE BRACES AS INDICATED IN THE MAX. UNBRACED LENGTH COLUMN OF THE TABLE BELOW

LOADING
TOTAL LOAD CASES: (4)

CHORDS

MEMB. FR-TO	MAX. FACTORED FORCE (LBS)	FACTORED VERT. LOAD (PLF) FROM	TO	LC1 MAX CSI (LC)	MAX. UNBRAC LENGTH
1- 2	-1542 / 0	-77.3	-77.3	0.40 (1)	4.88
2- 3	-1137 / 0	-77.3	-77.3	0.32 (1)	5.59
3- 4	-1137 / 0	-77.3	-77.3	0.32 (1)	5.59
4- 5	-570 / 0	-77.3	-77.3	0.32 (1)	6.25
5- 6	0 / 0	-77.3	-77.3	0.43 (1)	10.00
7- 6	-220 / 0	0.0	0.0	0.11 (1)	6.25
12- 1	-1087 / 0	0.0	0.0	0.11 (1)	7.58
12-11	0 / 0	-17.5	-17.5	0.15 (4)	10.00
11-10	0 / 1397	-17.5	-17.5	0.30 (1)	10.00
10- 9	0 / 1016	-17.5	-17.5	0.24 (1)	10.00
9- 8	0 / 1016	-17.5	-17.5	0.24 (1)	10.00
8- 7	0 / 499	-17.5	-17.5	0.18 (4)	10.00

WEBS

MEMB. FR-TO	MAX. FACTORED FORCE (LBS)	MAX CSI (LC)
11- 2	-76 / 78	0.03 (4)
2-10	-456 / 0	0.45 (1)
10- 4	0 / 353	0.08 (1)
4- 8	-797 / 0	0.48 (1)
8- 5	0 / 714	0.16 (1)
5- 7	-1006 / 0	0.72 (1)
1-11	0 / 1410	0.32 (1)

DESIGN CRITERIA

SPECIFIED LOADS:

TOP CH.	LL	=	23.3	PSF
	DL	=	3.0	PSF
BOT CH.	LL	=	0.0	PSF
	DL	=	7.0	PSF
TOTAL LOAD		=	33.3	PSF

SPACING = 24.0 IN. C/C

LOADING IN FLAT SECTION BASED ON A SLOPE OF 6.00/12

THIS TRUSS IS DESIGNED FOR RESIDENTIAL OR SMALL BUILDING REQUIREMENTS OF PART 9, NBCC 2010

THIS DESIGN COMPLIES WITH:
- PART 9 OF OBC 2012 , BCBC 2012 , ABC 2014
- CSA 086-09
- TPIC 2011

(55 % OF 27.2 P.S.F. G.S.L. PLUS 8.4 P.S.F. RAIN LOAD) EQUALS 23.3 P.S.F. SPECIFIED ROOF LIVE LOAD

ALLOWABLE DEFL.(LL)= L/360 (0.80")
CALCULATED VERT. DEFL.(LL) = L/ 999 (0.06")
ALLOWABLE DEFL.(TL)= L/360 (0.80")
CALCULATED VERT. DEFL.(TL) = L/ 999 (0.11")

CSI: TC=0.43 (5-6:1) , BC=0.30 (10-11:1) , WB=0.72 (5-7:1) , SSI=0.20 (1-2:1)

DOL LUMBER=1.00 NAIL=1.00 LS BEND=1.10 COMP=1.10 SHEAR=1.10 TENS= 1.10

COMPANION LIVE LOAD FACTOR = 0.50

TRUSS PLATE MANUFACTURER IS NOT RESPONSIBLE FOR QUALITY CONTROL IN THE TRUSS MANUFACTURING PLANT .

NAIL VALUES

PLATE	GRIP(DRY) (PSI) MAX	MIN	SHEAR (PLI) MAX	MIN	SECTION (PLI) MAX	MIN
MT20	618	354	1667	822	2284	1656

PLATE PLACEMENT TOL. = 0.250 inches

PLATE ROTATION TOL. = 5.0 Deg.

JSI GRIP= 0.89 (7) (INPUT = 0.90)
JSI METAL= 0.39 (1) (INPUT = 1.00)

LICENSED PROFESSIONAL ENGINEER
P.M. TREVISAN
100136551
March 13th, 2017
PROVINCE OF ONTARIO

RECEIVED
TOWN OF MILTON
MAR 29, 2017
17-5052
BUILDING DIVISION

READ ALL NOTES ON THIS PAGE AND ON THE ENGINEERING NOTE PAGE ENP-1. THE NOTE PAGE IS AN INTEGRAL PART OF THIS DRAWING AS IT CONTAINS SPECIFICATIONS AND CRITERIA USED IN THE DESIGN OF THIS COMPONENT.

KOTT

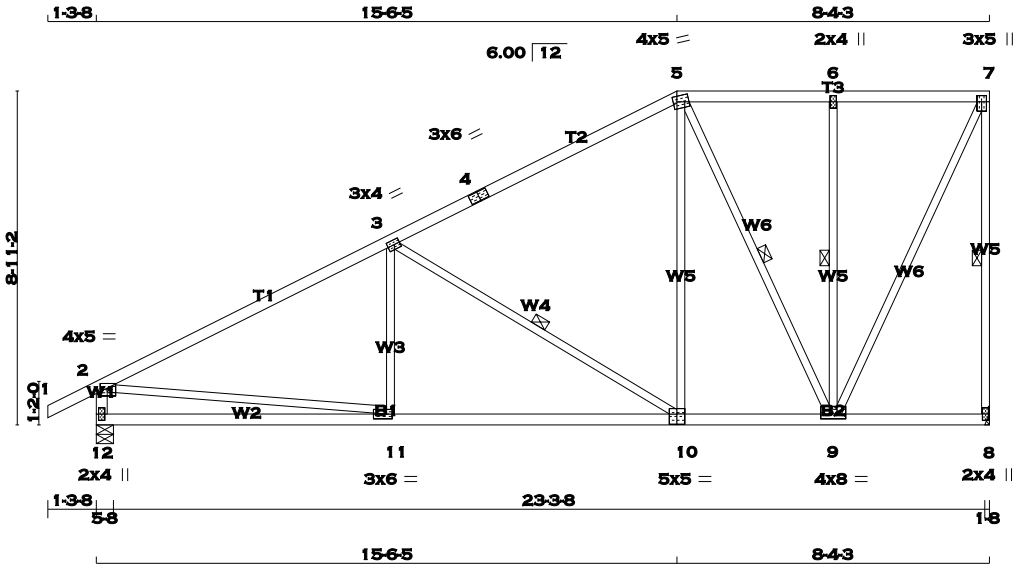

TOTAL WEIGHT = 111 lb

[M][F]

LUMBER

N. L. G. A. RULES

CHORDS	SIZE		LUMBER	DESCR.
1 - 4	2x4	DRY	No.2	SPF
4 - 5	2x4	DRY	No.2	SPF
5 - 7	2x4	DRY	No.2	SPF
8 - 7	2x3	DRY	No.2	SPF
12 - 2	2x4	DRY	No.2	SPF
12 - 10	2x4	DRY	No.2	SPF
10 - 8	2x4	DRY	No.2	SPF
ALL WEBS EXCEPT	2x3	DRY	No.2	SPF

DRY: SEASONED LUMBER.

PLATES (table is in inches)

JT	TYPE	PLATES	W	LEN	Y	X
2	TMVW-p	MT20	4.0	5.0	1.50	2.25
3	TMWW-t	MT20	3.0	4.0	1.50	1.75
4	TS-t	MT20	3.0	6.0		
5	TTWW-m	MT20	4.0	5.0	1.75	1.25
6	TMW+w	MT20	2.0	4.0		
7	TMVW+p	MT20	3.0	5.0	2.00	1.50
8	BMV1+p	MT20	2.0	4.0		
9	BMWWW-t	MT20	4.0	8.0	1.50	4.00
10	BSWW-l	MT20	5.0	5.0	3.25	2.50
11	BMWW-t	MT20	3.0	6.0	1.50	1.75
12	BMV1+p	MT20	2.0	4.0		

A SIZE FOR SIZE SUBSTITUTION OF MITEK MII20 WITH TEE-LOK TL20 PLATES IS ALLOWED.

DIMENSIONS, SUPPORTS AND LOADINGS SPECIFIED BY FABRICATOR TO BE VERIFIED BY BUILDING DESIGNER

BEARINGS

JT	FACTORED GROSS REACTION VERT	HORZ	MAXIMUM FACTORED GROSS REACTION DOWN	HORZ	UPLIFT	INPUT BRG IN-SX	REQRD BRG IN-SX
8	1132	0	1132	0	0	HANGER BY OTHERS MIN. SEAT SIZE: 1-8	
12	1237	0	1237	0	0	5-8	5-8

UNFACTORED REACTIONS

JT	1ST LCASE COMBINED	MAX./MIN. COMPONENT REACTIONS SNOW	LIVE	PERM.LIVE	WIND	DEAD	SOIL
8	795	556 / 0	0 / 0	0 / 0	0 / 0	239 / 0	0 / 0
12	866	619 / 0	0 / 0	0 / 0	0 / 0	247 / 0	0 / 0

BEARING MATERIAL TO BE SPF NO.2 OR BETTER AT JOINT(S) 12

BRACING

TOP CHORD TO BE SHEATHED OR MAX. PURLIN SPACING = 4.37 FT.
MAX. UNBRACED BOTTOM CHORD LENGTH = 10.00 FT. OR RIGID CEILING DIRECTLY APPLIED.

ALL PITCH BREAKS AND PERIMETER CORNER JOINTS MUST BE LATERALLY RESTRAINED.

1 - 2x3 SPF No.2 LATERAL BRACE(S) AT 1/ 2 LENGTH OF 7-8. DBS = 12-0-0 . CBF = 82 LBS.
1 - 2x3 SPF No.2 LATERAL BRACE(S) AT 1/ 2 LENGTH OF 3-10. DBS = 18-0-0 . CBF = 89 LBS.
1 - 2x3 SPF No.2 LATERAL BRACE(S) AT 1/ 2 LENGTH OF 5-9, 6-9. DBS = 20-0-0 . CBF = 71 LBS.

DBS = DIAGONAL BRACE SPACING (MAX). CBF = CUMULATIVE BRACING FORCE. FASTEN LATERAL BRACE(S) USING (0.122"X3") SPIRAL NAILS : 1 NAIL FOR 2x3 BRACE(S), 2 FOR 1x4, 2x4, 2x5, 3 FOR 2x6, 4 FOR 2x8, 5 FOR 2x10, AND 6 FOR 2x12.

END VERTICAL(S) MUST BE SHEATHED OR HAVE BRACES AS INDICATED IN THE MAX. UNBRACED LENGTH COLUMN OF THE TABLE BELOW

LOADING

TOTAL LOAD CASES: (4)

CHORDS

MEMB. FR-TO	MAX. FACTORED FORCE (LBS)	FACTORED VERT. LOAD LC1 (PLF) FROM	TO	MAX CSI (LC)	MAX. UNBRAC LENGTH
1- 2	0 / 23	-77.3	-77.3	0.10 (1)	10.00
2- 3	-1519 / 0	-77.3	-77.3	0.72 (1)	4.37
3- 4	-831 / 0	-77.3	-77.3	0.64 (1)	5.63
4- 5	-831 / 0	-77.3	-77.3	0.64 (1)	5.63
5- 6	-471 / 0	-77.3	-77.3	0.17 (1)	6.25
6- 7	-471 / 0	-77.3	-77.3	0.17 (1)	6.25
8- 7	-1099 / 0	0.0	0.0	0.57 (1)	5.31
12- 2	-1182 / 0	0.0	0.0	0.12 (1)	7.34
12-11	0 / 0	-17.5	-17.5	0.27 (4)	10.00
11-10	0 / 1387	-17.5	-17.5	0.37 (4)	10.00
10- 9	0 / 719	-17.5	-17.5	0.19 (1)	10.00
9- 8	0 / 0	-17.5	-17.5	0.07 (4)	10.00

WEBS

MEMB. FR-TO	MAX. FACTORED FORCE (LBS)	MAX CSI (LC)
11- 3	0 / 134	0.05 (4)
3-10	-792 / 0	0.46 (1)
10- 5	0 / 523	0.12 (1)
5- 9	-570 / 0	0.37 (1)
9- 6	-397 / 0	0.20 (1)
9- 7	0 / 1083	0.24 (1)
2-11	0 / 1395	0.31 (1)

DESIGN CRITERIA

SPECIFIED LOADS:

TOP	CH.	LL	=	23.3	PSF
		DL	=	3.0	PSF
BOT	CH.	LL	=	0.0	PSF
		DL	=	7.0	PSF
TOTAL	LOAD		=	33.3	PSF

SPACING = 24.0 IN. C/C

LOADING IN FLAT SECTION BASED ON A SLOPE OF 6.00/12

THIS TRUSS IS DESIGNED FOR RESIDENTIAL OR SMALL BUILDING REQUIREMENTS OF PART 9, NBCC 2010

THIS DESIGN COMPLIES WITH:
- PART 9 OF OBC 2012 , BCBC 2012 , ABC 2014
- CSA 086-09
- TPIC 2011

(55 % OF 27.2 P.S.F. G.S.L. PLUS 8.4 P.S.F. RAIN LOAD) EQUALS 23.3 P.S.F. SPECIFIED ROOF LIVE LOAD

ALLOWABLE DEFL.(LL)= L/360 (0.80")
CALCULATED VERT. DEFL.(LL) = L/ 999 (0.06")
ALLOWABLE DEFL.(TL)= L/360 (0.80")
CALCULATED VERT. DEFL.(TL) = L/ 999 (0.14")

CSI: TC=0.72 (2-3:1) , BC=0.37 (10-11:4) , WB=0.46 (3-10:1) , SSI=0.26 (2-3:1)

DOL LUMBER=1.00 NAIL=1.00 LS BEND=1.10 COMP=1.10 SHEAR=1.10 TENS= 1.10

COMPANION LIVE LOAD FACTOR = 0.50

TRUSS PLATE MANUFACTURER IS NOT RESPONSIBLE FOR QUALITY CONTROL IN THE TRUSS MANUFACTURING PLANT .

NAIL VALUES

PLATE	GRIP(DRY) (PSI) MAX	MIN	SHEAR (PLI) MAX	MIN	SECTION (PLI) MAX	MIN
MT20	618	354	1667	822	2284	1656

PLATE PLACEMENT TOL. = 0.250 inches

PLATE ROTATION TOL. = 5.0 Deg.

JSI GRIP= 0.90 (7) (INPUT = 0.90)
JSI METAL= 0.40 (2) (INPUT = 1.00)

LICENSED PROFESSIONAL ENGINEER
P.M. TREVISAN
100136551
March 13th, 2017
PROVINCE OF ONTARIO

RECEIVED
TOWN OF MILTON
MAR 29, 2017
17-5052
BUILDING DIVISION

READ ALL NOTES ON THIS PAGE AND ON THE ENGINEERING NOTE PAGE ENP-1. THE NOTE PAGE IS AN INTEGRAL PART OF THIS DRAWING AS IT CONTAINS SPECIFICATIONS AND CRITERIA USED IN THE DESIGN OF THIS COMPONENT.

KOTT

JOB NAME	TRUSS NAME	QUANTITY	PLY	JOB DESC.	DRWG NO.
PT0317-060	**T25**	**1**	**1**	TRUSS DESC. LECCO RIDGE-BLOCK 332	

KOTT , Stouffville, ON, CGC

Version 8.100 S Feb 9 2017 MiTek Industries, Inc. Mon Mar 13 13:24:41 2017 Page 1
ID:gtheX5EqOVSIkwpr5Eyn2TyGKTI-m_7HUcmXLOk5LqcqzHYpVlQfYo7ntgdhEi4zs5zbLka

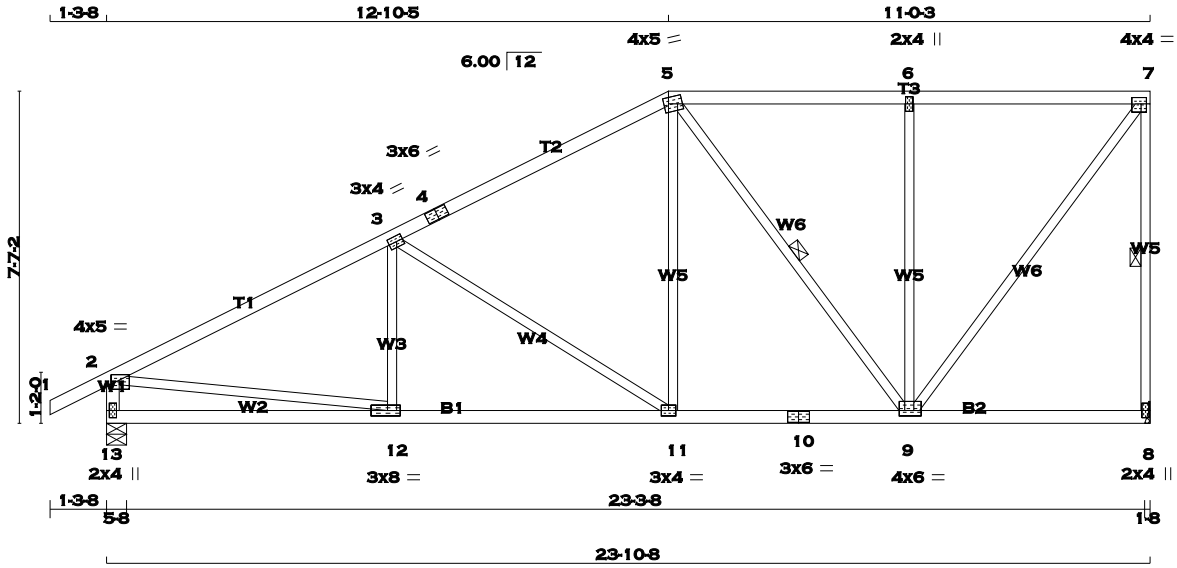

TOTAL WEIGHT = 104 lb
[M][F]

LUMBER
N. L. G. A. RULES

CHORDS	SIZE		LUMBER	DESCR.
1 - 4	2x4	DRY	No.2	SPF
4 - 5	2x4	DRY	No.2	SPF
5 - 7	2x4	DRY	No.2	SPF
8 - 7	2x3	DRY	No.2	SPF
13 - 2	2x4	DRY	No.2	SPF
13 - 10	2x4	DRY	No.2	SPF
10 - 8	2x4	DRY	No.2	SPF
ALL WEBS EXCEPT	2x3	DRY	No.2	SPF

DRY: SEASONED LUMBER.

PLATES (table is in inches)

JT	TYPE	PLATES	W	LEN	Y	X
2	TMVW-p	MT20	4.0	5.0	1.50	2.25
3	TMWW-t	MT20	3.0	4.0	1.50	1.75
4	TS-t	MT20	3.0	6.0		
5	TTWW-m	MT20	4.0	5.0	1.75	1.25
6	TMW+w	MT20	2.0	4.0		
7	TMVW-t	MT20	4.0	4.0	1.75	1.50
8	BMV1+p	MT20	2.0	4.0		
9	BMWWW-t	MT20	4.0	6.0	1.50	1.50
10	BS-t	MT20	3.0	6.0		
11	BMWW-t	MT20	3.0	4.0		
12	BMWW-t	MT20	3.0	8.0	1.50	3.50
13	BMV1+p	MT20	2.0	4.0		

A SIZE FOR SIZE SUBSTITUTION OF MITEK MII20 WITH TEE-LOK TL20 PLATES IS ALLOWED.

DIMENSIONS, SUPPORTS AND LOADINGS SPECIFIED BY FABRICATOR TO BE VERIFIED BY BUILDING DESIGNER

BEARINGS

JT	FACTORED GROSS REACTION VERT	HORZ	MAXIMUM FACTORED GROSS REACTION DOWN	HORZ	UPLIFT	INPUT BRG	REQRD BRG
8	1132	0	1132	0	0	HANGER BY OTHERS MIN. SEAT SIZE: 1-8	
13	1237	0	1237	0	0	5-8	5-8

UNFACTORED REACTIONS

JT	1ST LCASE COMBINED	SNOW	LIVE	PERM.LIVE	WIND	DEAD	SOIL
		MAX./MIN. COMPONENT REACTIONS					
8	795	556 / 0	0 / 0	0 / 0	0 / 0	239 / 0	0 / 0
13	866	619 / 0	0 / 0	0 / 0	0 / 0	247 / 0	0 / 0

BEARING MATERIAL TO BE SPF NO.2 OR BETTER AT JOINT(S) 13

BRACING
TOP CHORD TO BE SHEATHED OR MAX. PURLIN SPACING = 4.75 FT.
MAX. UNBRACED BOTTOM CHORD LENGTH = 10.00 FT. OR RIGID CEILING DIRECTLY APPLIED.

ALL PITCH BREAKS AND PERIMETER CORNER JOINTS MUST BE LATERALLY RESTRAINED.

1 - 2x3 SPF No.2 LATERAL BRACE(S) AT 1/ 2 LENGTH OF 7-8. DBS = 12-0-0 . CBF = 82 LBS.
1 - 2x3 SPF No.2 LATERAL BRACE(S) AT 1/ 2 LENGTH OF 5-9. DBS = 20-0-0 . CBF = 47 LBS.

DBS = DIAGONAL BRACE SPACING (MAX). CBF = CUMULATIVE BRACING FORCE. FASTEN LATERAL BRACE(S) USING (0.122"X3") SPIRAL NAILS : 1 NAIL FOR 2x3 BRACE(S), 2 FOR 1x4, 2x4, 2x5, 3 FOR 2x6, 4 FOR 2x8, 5 FOR 2x10, AND 6 FOR 2x12.

END VERTICAL(S) MUST BE SHEATHED OR HAVE BRACES AS INDICATED IN THE MAX. UNBRACED LENGTH COLUMN OF THE TABLE BELOW

LOADING
TOTAL LOAD CASES: (4)

CHORDS

MEMB. FR-TO	MAX. FACTORED FORCE (LBS)	FACTORED VERT. LOAD LC1 (PLF) FROM	TO	MAX CSI (LC)	MAX. UNBRAC LENGTH
1- 2	0 / 23	-77.3	-77.3	0.10 (1)	10.00
2- 3	-1552 / 0	-77.3	-77.3	0.47 (1)	4.75
3- 4	-1058 / 0	-77.3	-77.3	0.43 (1)	5.56
4- 5	-1058 / 0	-77.3	-77.3	0.43 (1)	5.56
5- 6	-702 / 0	-77.3	-77.3	0.30 (1)	6.25
6- 7	-702 / 0	-77.3	-77.3	0.30 (1)	6.25
8- 7	-1092 / 0	0.0	0.0	0.40 (1)	5.32
13- 2	-1190 / 0	0.0	0.0	0.12 (1)	7.32
13-12	0 / 0	-17.5	-17.5	0.18 (4)	10.00
12-11	0 / 1411	-17.5	-17.5	0.31 (1)	10.00
11-10	0 / 928	-17.5	-17.5	0.21 (1)	10.00
10- 9	0 / 928	-17.5	-17.5	0.21 (1)	10.00
9- 8	0 / 0	-17.5	-17.5	0.12 (4)	10.00

WEBS

MEMB. FR-TO	MAX. FACTORED FORCE (LBS)	MAX CSI (LC)
12- 3	-59 / 91	0.03 (4)
3-11	-582 / 0	0.69 (1)
11- 5	0 / 415	0.09 (1)
5- 9	-375 / 0	0.21 (1)
9- 6	-528 / 0	0.56 (1)
9- 7	0 / 1166	0.26 (1)
2-12	0 / 1424	0.32 (1)

DESIGN CRITERIA

SPECIFIED LOADS:

TOP	CH.	LL	=	23.3	PSF
		DL	=	3.0	PSF
BOT	CH.	LL	=	0.0	PSF
		DL	=	7.0	PSF
TOTAL	LOAD		=	33.3	PSF

SPACING = 24.0 IN. C/C

LOADING IN FLAT SECTION BASED ON A SLOPE OF 6.00/12

THIS TRUSS IS DESIGNED FOR RESIDENTIAL OR SMALL BUILDING REQUIREMENTS OF PART 9, NBCC 2010

THIS DESIGN COMPLIES WITH:
- PART 9 OF OBC 2012 , BCBC 2012 , ABC 2014
- CSA 086-09
- TPIC 2011

(55 % OF 27.2 P.S.F. G.S.L. PLUS 8.4 P.S.F. RAIN LOAD) EQUALS 23.3 P.S.F. SPECIFIED ROOF LIVE LOAD

ALLOWABLE DEFL.(LL)= L/360 (0.80")
CALCULATED VERT. DEFL.(LL) = L/ 999 (0.06")
ALLOWABLE DEFL.(TL)= L/360 (0.80")
CALCULATED VERT. DEFL.(TL) = L/ 999 (0.11")

CSI: TC=0.47 (2-3:1) , BC=0.31 (11-12:1) , WB=0.69 (3-11:1) , SSI=0.22 (2-3:1)

DOL LUMBER=1.00 NAIL=1.00 LS BEND=1.10 COMP=1.10 SHEAR=1.10 TENS= 1.10

COMPANION LIVE LOAD FACTOR = 0.50

TRUSS PLATE MANUFACTURER IS NOT RESPONSIBLE FOR QUALITY CONTROL IN THE TRUSS MANUFACTURING PLANT .

NAIL VALUES

PLATE	GRIP(DRY) (PSI) MAX	MIN	SHEAR (PLI) MAX	MIN	SECTION (PLI) MAX	MIN
MT20	618	354	1667	822	2284	1656

PLATE PLACEMENT TOL. = 0.250 inches

PLATE ROTATION TOL. = 5.0 Deg.

JSI GRIP= 0.90 (9) (INPUT = 0.90)
JSI METAL= 0.40 (2) (INPUT = 1.00)

LICENSED PROFESSIONAL ENGINEER
P.M. TREVISAN
100136551
March 13th, 2017
PROVINCE OF ONTARIO

RECEIVED
TOWN OF MILTON
MAR 29, 2017
17-5052
BUILDING DIVISION

READ ALL NOTES ON THIS PAGE AND ON THE ENGINEERING NOTE PAGE ENP-1. THE NOTE PAGE IS AN INTEGRAL PART OF THIS DRAWING AS IT CONTAINS SPECIFICATIONS AND CRITERIA USED IN THE DESIGN OF THIS COMPONENT.

KOTT

JOB NAME	TRUSS NAME	QUANTITY	PLY	JOB DESC.	DRWG NO.
PT0317-060	T26	4	1	TRUSS DESC. LECCO RIDGE-BLOCK 332	

KOTT , Stouffville, ON, CGC

Version 8.100 S Feb 9 2017 MiTek Industries, Inc. Mon Mar 13 13:24:41 2017 Page 1
ID:gtheX5EqOVSIkwpr5Eyn2TyGKTI-m_7HUcmXLOk5LqcqzHYpVlQgPo71tiJhEi4zs5zbLka

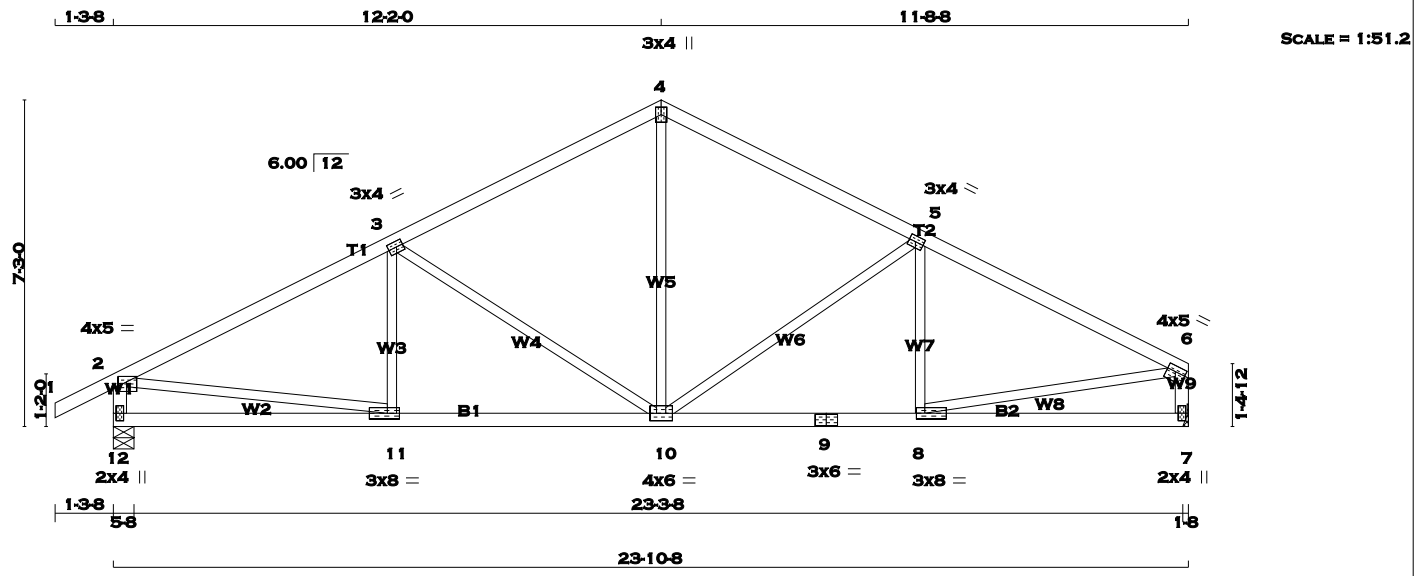

TOTAL WEIGHT = 4 X 93 = 374 lb
[M][F]

LUMBER
N. L. G. A. RULES

CHORDS	SIZE		LUMBER	DESCR.
1 - 4	2x4	DRY	No.2	SPF
4 - 6	2x4	DRY	No.2	SPF
12 - 2	2x4	DRY	No.2	SPF
7 - 6	2x4	DRY	No.2	SPF
12 - 9	2x4	DRY	No.2	SPF
9 - 7	2x4	DRY	No.2	SPF
ALL WEBS EXCEPT	2x3	DRY	No.2	SPF

DRY: SEASONED LUMBER.

PLATES (table is in inches)

JT	TYPE	PLATES	W	LEN	Y	X
2	TMVW-p	MT20	4.0	5.0	1.50	2.25
3	TMWW-t	MT20	3.0	4.0	1.50	1.75
4	TTW+p	MT20	3.0	4.0		
5	TMWW-t	MT20	3.0	4.0	1.50	1.75
6	TMVW-t	MT20	4.0	5.0	1.50	2.25
7	BMV1+p	MT20	2.0	4.0		
8	BMWW-t	MT20	3.0	8.0	1.50	2.25
9	BS-t	MT20	3.0	6.0		
10	BMWWW-t	MT20	4.0	6.0		
11	BMWW-t	MT20	3.0	8.0	1.50	3.25
12	BMV1+p	MT20	2.0	4.0		

A SIZE FOR SIZE SUBSTITUTION OF MITEK MII20 WITH TEE-LOK TL20 PLATES IS ALLOWED.

DIMENSIONS, SUPPORTS AND LOADINGS SPECIFIED BY FABRICATOR TO BE VERIFIED BY BUILDING DESIGNER

BEARINGS

JT	FACTORED GROSS REACTION VERT	HORZ	MAXIMUM FACTORED GROSS REACTION DOWN	HORZ	UPLIFT	INPUT BRG IN-SX	REQRD BRG IN-SX
12	1237	0	1237	0	0	5-8	5-8
7	1132	0	1132	0	0	HANGER BY OTHERS	
						MIN. SEAT SIZE: 1-8	

UNFACTORED REACTIONS

JT	1ST LCASE COMBINED	MAX./MIN. COMPONENT REACTIONS SNOW	LIVE	PERM.LIVE	WIND	DEAD	SOIL
12	866	619 / 0	0 / 0	0 / 0	0 / 0	247 / 0	0 / 0
7	795	556 / 0	0 / 0	0 / 0	0 / 0	239 / 0	0 / 0

BEARING MATERIAL TO BE SPF NO.2 OR BETTER AT JOINT(S) 12

BRACING
TOP CHORD TO BE SHEATHED OR MAX. PURLIN SPACING = 4.83 FT.
MAX. UNBRACED BOTTOM CHORD LENGTH = 10.00 FT. OR RIGID CEILING DIRECTLY APPLIED.

ALL PITCH BREAKS AND PERIMETER CORNER JOINTS MUST BE LATERALLY RESTRAINED.

LOADING
TOTAL LOAD CASES: (4)

CHORDS

MEMB. FR-TO	MAX. FORCE (LBS)	FACTORED VERT. LOAD (PLF) FROM	TO	MAX CSI (LC)	MAX. UNBRAC LENGTH
1- 2	0 / 23	-77.3	-77.3	0.10 (1)	10.00
2- 3	-1555 / 0	-77.3	-77.3	0.42 (1)	4.83
3- 4	-1121 / 0	-77.3	-77.3	0.38 (1)	5.51
4- 5	-1120 / 0	-77.3	-77.3	0.36 (1)	5.56
5- 6	-1468 / 0	-77.3	-77.3	0.38 (1)	4.99
12- 2	-1191 / 0	0.0	0.0	0.12 (1)	7.32
7- 6	-1088 / 0	0.0	0.0	0.11 (1)	7.58
12-11	0 / 0	-17.5	-17.5	0.15 (4)	10.00
11-10	0 / 1413	-17.5	-17.5	0.30 (1)	10.00
10- 9	0 / 1334	-17.5	-17.5	0.28 (1)	10.00
9- 8	0 / 1334	-17.5	-17.5	0.28 (1)	10.00
8- 7	0 / 0	-17.5	-17.5	0.14 (4)	10.00

WEBS

MEMB. FR-TO	MAX. FORCE (LBS)	MAX CSI (LC)
11- 3	-80 / 78	0.03 (4)
3-10	-519 / 0	0.51 (1)
10- 4	0 / 638	0.14 (1)
10- 5	-434 / 0	0.41 (1)
8- 5	-133 / 58	0.04 (1)
2-11	0 / 1426	0.32 (1)
8- 6	0 / 1357	0.31 (1)

DESIGN CRITERIA

SPECIFIED LOADS:

TOP	CH.	LL	=	23.3	PSF
		DL	=	3.0	PSF
BOT	CH.	LL	=	0.0	PSF
		DL	=	7.0	PSF
TOTAL	LOAD		=	33.3	PSF

SPACING = 24.0 IN. C/C

THIS TRUSS IS DESIGNED FOR RESIDENTIAL OR SMALL BUILDING REQUIREMENTS OF PART 9, NBCC 2010

THIS DESIGN COMPLIES WITH:
- PART 9 OF OBC 2012 , BCBC 2012 , ABC 2014
- CSA 086-09
- TPIC 2011

(55 % OF 27.2 P.S.F. G.S.L. PLUS 8.4 P.S.F. RAIN LOAD) EQUALS 23.3 P.S.F. SPECIFIED ROOF LIVE LOAD

ALLOWABLE DEFL.(LL)= L/360 (0.80")
CALCULATED VERT. DEFL.(LL) = L/ 999 (0.06")
ALLOWABLE DEFL.(TL)= L/360 (0.80")
CALCULATED VERT. DEFL.(TL) = L/ 999 (0.11")

CSI: TC=0.42 (2-3:1) , BC=0.30 (10-11:1) , WB=0.51 (3-10:1) , SSI=0.21 (2-3:1)

DOL LUMBER=1.00 NAIL=1.00 LS BEND=1.10 COMP=1.10 SHEAR=1.10 TENS= 1.10

COMPANION LIVE LOAD FACTOR = 0.50

TRUSS PLATE MANUFACTURER IS NOT RESPONSIBLE FOR QUALITY CONTROL IN THE TRUSS MANUFACTURING PLANT .

NAIL VALUES

PLATE	GRIP(DRY) (PSI) MAX	MIN	SHEAR (PLI) MAX	MIN	SECTION (PLI) MAX	MIN
MT20	618	354	1667	822	2284	1656

PLATE PLACEMENT TOL. = 0.250 inches

PLATE ROTATION TOL. = 5.0 Deg.

JSI GRIP= 0.89 (8) (INPUT = 0.90)
JSI METAL= 0.47 (6) (INPUT = 1.00)

LICENSED PROFESSIONAL ENGINEER
P.M. TREVISAN
100136551
March 13th, 2017
PROVINCE OF ONTARIO

RECEIVED
TOWN OF MILTON
MAR 29, 2017
17-5052
BUILDING DIVISION

READ ALL NOTES ON THIS PAGE AND ON THE ENGINEERING NOTE PAGE ENP-1. THE NOTE PAGE IS AN INTEGRAL PART OF THIS DRAWING AS IT CONTAINS SPECIFICATIONS AND CRITERIA USED IN THE DESIGN OF THIS COMPONENT.

KOTT

JOB NAME	TRUSS NAME	QUANTITY	PLY	JOB DESC.	DRWG NO.
PT0317-060	**T27**	**2**	**1**	TRUSS DESC. LECCO RIDGE-BLOCK 332	Page 45 of 79 ENG JOB: PT0317-060

KOTT , Stouffville, ON, CGC

Version 8.100 S Feb 9 2017 MiTek Industries, Inc. Mon Mar 13 13:24:42 2017 Page 1
ID:gtheX5EqOVSIkwpr5Eyn2TyGKTI-EAhfiyn96isyz_B0X?322yzrSCPCc5bqTMpXOYzbLkZ

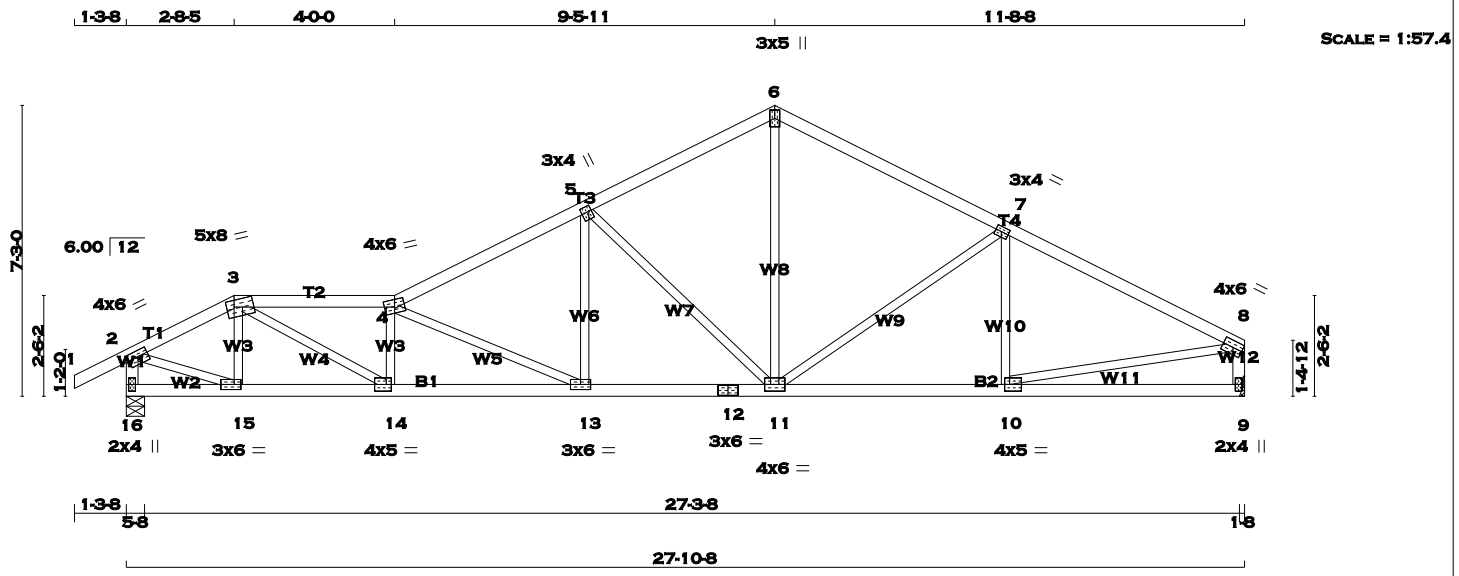

TOTAL WEIGHT = 2 X 111 = 221 lb
[M][F]

LUMBER
N. L. G. A. RULES

CHORDS	SIZE		LUMBER	DESCR.
1 - 3	2x4	DRY	No.2	SPF
3 - 4	2x4	DRY	No.2	SPF
4 - 6	2x4	DRY	No.2	SPF
6 - 8	2x4	DRY	No.2	SPF
16 - 2	2x4	DRY	No.2	SPF
9 - 8	2x4	DRY	No.2	SPF
16 - 12	2x4	DRY	No.2	SPF
12 - 9	2x4	DRY	No.2	SPF
ALL WEBS EXCEPT	2x3	DRY	No.2	SPF

DRY: SEASONED LUMBER.

PLATES (table is in inches)

JT	TYPE	PLATES	W	LEN	Y	X
2	TMVW-t	MT20	4.0	6.0	1.75	3.00
3	TTWW-m	MT20	5.0	8.0	2.00	2.25
4	TTWW-m	MT20	4.0	6.0	2.25	3.00
5	TMWW+t	MT20	3.0	4.0	1.75	0.75
6	TTW+p	MT20	3.0	5.0		
7	TMWW-t	MT20	3.0	4.0	1.50	1.75
8	TMVW-t	MT20	4.0	6.0		Edge
9	BMV1+p	MT20	2.0	4.0		
10	BMWW-t	MT20	4.0	5.0	2.00	1.50
11	BMWWW-t	MT20	4.0	6.0		
12	BS-t	MT20	3.0	6.0		
13	BMWW-t	MT20	3.0	6.0		
14	BMWW-t	MT20	4.0	5.0	2.00	1.50
15	BMWW-t	MT20	3.0	6.0	1.50	2.00
16	BMV1+p	MT20	2.0	4.0		

Edge - INDICATES REFERENCE CORNER OF PLATE TOUCHES EDGE OF CHORD.

A SIZE FOR SIZE SUBSTITUTION OF MITEK MII20 WITH TEE-LOK TL20 PLATES IS ALLOWED.

DIMENSIONS, SUPPORTS AND LOADINGS SPECIFIED BY FABRICATOR TO BE VERIFIED BY BUILDING DESIGNER

BEARINGS

JT	FACTORED GROSS REACTION VERT	HORZ	MAXIMUM FACTORED GROSS REACTION DOWN	HORZ	UPLIFT	INPUT BRG IN-SX	REQRD BRG IN-SX
16	1427	0	1427	0	0	5-8	5-8
9	1322	0	1322	0	0	HANGER BY OTHERS MIN. SEAT SIZE: 1-8	

UNFACTORED REACTIONS

JT	1ST LCASE COMBINED	MAX./MIN. COMPONENT REACTIONS SNOW	LIVE	PERM.LIVE	WIND	DEAD	SOIL
16	999	712 / 0	0 / 0	0 / 0	0 / 0	287 / 0	0 / 0
9	928	649 / 0	0 / 0	0 / 0	0 / 0	279 / 0	0 / 0

BEARING MATERIAL TO BE SPF NO.2 OR BETTER AT JOINT(S) 16

BRACING
TOP CHORD TO BE SHEATHED OR MAX. PURLIN SPACING = 3.83 FT.
MAX. UNBRACED BOTTOM CHORD LENGTH = 10.00 FT. OR RIGID CEILING DIRECTLY APPLIED.

ALL PITCH BREAKS AND PERIMETER CORNER JOINTS MUST BE LATERALLY RESTRAINED.

LOADING
TOTAL LOAD CASES: (4)

CHORDS

MEMB. FR-TO	MAX. FORCE (LBS)	FACTORED VERT. LOAD LC1 (PLF) FROM	TO	MAX CSI (LC)	MAX. UNBRAC LENGTH
1- 2	0 / 23	-77.3	-77.3	0.10 (1)	10.00
2- 3	-1662 / 0	-77.3	-77.3	0.10 (1)	5.07
3- 4	-2988 / 0	-77.3	-77.3	0.26 (1)	3.83
4- 5	-2216 / 0	-77.3	-77.3	0.29 (1)	4.34
5- 6	-1472 / 0	-77.3	-77.3	0.24 (1)	5.15
6- 7	-1477 / 0	-77.3	-77.3	0.37 (1)	4.99
7- 8	-1778 / 0	-77.3	-77.3	0.40 (1)	4.61
16- 2	-1412 / 0	0.0	0.0	0.14 (1)	6.86
9- 8	-1278 / 0	0.0	0.0	0.13 (1)	7.13
16-15	0 / 0	-17.5	-17.5	0.04 (4)	10.00
15-14	0 / 1467	-17.5	-17.5	0.28 (1)	10.00
14-13	0 / 3027	-17.5	-17.5	0.56 (1)	10.00
13-12	0 / 2000	-17.5	-17.5	0.38 (1)	10.00
12-11	0 / 2000	-17.5	-17.5	0.38 (1)	10.00
11-10	0 / 1611	-17.5	-17.5	0.32 (1)	10.00
10- 9	0 / 0	-17.5	-17.5	0.14 (4)	10.00

WEBS

MEMB. FR-TO	MAX. FORCE (LBS)	MAX CSI (LC)
15- 3	-376 / 0	0.06 (1)
3-14	0 / 1749	0.39 (1)
14- 4	-814 / 0	0.13 (1)
4-13	-1132 / 0	0.53 (1)
13- 5	0 / 572	0.13 (1)
5-11	-975 / 0	0.77 (1)
11- 6	0 / 991	0.22 (1)
11- 7	-383 / 0	0.36 (1)
10- 7	-182 / 44	0.05 (1)
2-15	0 / 1553	0.35 (1)
10- 8	0 / 1638	0.37 (1)

DESIGN CRITERIA

SPECIFIED LOADS:

TOP CH.	LL	=	23.3	PSF
	DL	=	3.0	PSF
BOT CH.	LL	=	0.0	PSF
	DL	=	7.0	PSF
TOTAL LOAD		=	33.3	PSF

SPACING = 24.0 IN. C/C

LOADING IN ALL FLAT SECTIONS BASED ON A SLOPE OF 6.00/12

THIS TRUSS IS DESIGNED FOR RESIDENTIAL OR SMALL BUILDING REQUIREMENTS OF PART 9, NBCC 2010

THIS DESIGN COMPLIES WITH:
- PART 9 OF OBC 2012 , BCBC 2012 , ABC 2014
- CSA 086-09
- TPIC 2011

(55 % OF 27.2 P.S.F. G.S.L. PLUS 8.4 P.S.F. RAIN LOAD) EQUALS 23.3 P.S.F. SPECIFIED ROOF LIVE LOAD

ALLOWABLE DEFL.(LL)= L/360 (0.93")
CALCULATED VERT. DEFL.(LL) = L/ 999 (0.14")
ALLOWABLE DEFL.(TL)= L/360 (0.93")
CALCULATED VERT. DEFL.(TL) = L/ 999 (0.26")

CSI: TC=0.40 (7-8:1) , BC=0.56 (13-14:1) , WB=0.77 (5-11:1) , SSI=0.20 (7-8:1)

DOL LUMBER=1.00 NAIL=1.00 LS BEND=1.10 COMP=1.10 SHEAR=1.10 TENS= 1.10

COMPANION LIVE LOAD FACTOR = 0.50

TRUSS PLATE MANUFACTURER IS NOT RESPONSIBLE FOR QUALITY CONTROL IN THE TRUSS MANUFACTURING PLANT .

NAIL VALUES

PLATE	GRIP(DRY) (PSI) MAX	MIN	SHEAR (PLI) MAX	MIN	SECTION (PLI) MAX	MIN
MT20	618	354	1667	822	2284	1656

PLATE PLACEMENT TOL. = 0.250 inches

PLATE ROTATION TOL. = 5.0 Deg.

JSI GRIP= 0.89 (10) (INPUT = 0.90)
JSI METAL= 0.49 (12) (INPUT = 1.00)

LICENSED PROFESSIONAL ENGINEER
P.M. TREVISAN
100136551
March 13th, 2017
PROVINCE OF ONTARIO

RECEIVED
TOWN OF MILTON
MAR 29, 2017
17-5052
BUILDING DIVISION

READ ALL NOTES ON THIS PAGE AND ON THE ENGINEERING NOTE PAGE ENP-1. THE NOTE PAGE IS AN INTEGRAL PART OF THIS DRAWING AS IT CONTAINS SPECIFICATIONS AND CRITERIA USED IN THE DESIGN OF THIS COMPONENT.

KOTT

JOB NAME	TRUSS NAME	QUANTITY	PLY	JOB DESC.	DRWG NO.
PT0317-060	**T28**	**2**	**1**	TRUSS DESC. LECCO RIDGE-BLOCK 332	Page 46 of 79 ENG JOB: PT0317-060

KOTT , Stouffville, ON, CGC

Version 8.100 S Feb 9 2017 MiTek Industries, Inc. Mon Mar 13 13:24:42 2017 Page 1
ID:gtheX5EqOVSIkwpr5Eyn2TyGKTI-EAhfiyn96isyz_B0X?322yzrSCS_c9dqTMpXOYzbLkZ

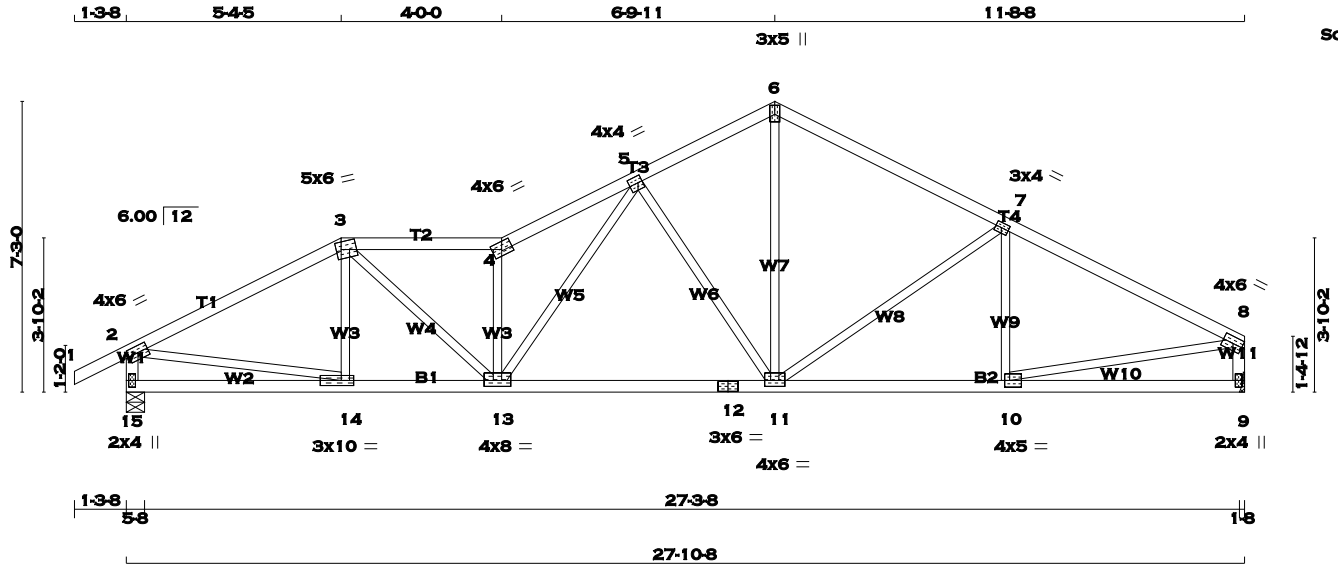

TOTAL WEIGHT = 2 X 112 = 225 lb
[M][F]

LUMBER
N. L. G. A. RULES

CHORDS	SIZE		LUMBER	DESCR.
1 - 3	2x4	DRY	No.2	SPF
3 - 4	2x4	DRY	No.2	SPF
4 - 6	2x4	DRY	No.2	SPF
6 - 8	2x4	DRY	No.2	SPF
15 - 2	2x4	DRY	No.2	SPF
9 - 8	2x4	DRY	No.2	SPF
15 - 12	2x4	DRY	No.2	SPF
12 - 9	2x4	DRY	No.2	SPF
ALL WEBS EXCEPT	2x3	DRY	No.2	SPF

DRY: SEASONED LUMBER.

PLATES (table is in inches)

JT	TYPE	PLATES	W	LEN	Y	X
2	TMVW-t	MT20	4.0	6.0	2.00	3.00
3	TTWW-m	MT20	5.0	6.0	2.25	1.50
4	TTW-h	MT20	4.0	6.0	2.25	3.25
5	TMWW-t	MT20	4.0	4.0	2.00	1.25
6	TTW+p	MT20	3.0	5.0	2.75	1.50
7	TMWW-t	MT20	3.0	4.0	1.50	1.75
8	TMVW-t	MT20	4.0	6.0		Edge
9	BMV1+p	MT20	2.0	4.0		
10	BMWW-t	MT20	4.0	5.0	2.00	1.50
11	BMWWW-t	MT20	4.0	6.0	1.75	3.00
12	BS-t	MT20	3.0	6.0		
13	BMWWW-t	MT20	4.0	8.0	1.75	4.00
14	BMWW-t	MT20	3.0	10.0	1.50	3.75
15	BMV1+p	MT20	2.0	4.0		

Edge - INDICATES REFERENCE CORNER OF PLATE TOUCHES EDGE OF CHORD.

A SIZE FOR SIZE SUBSTITUTION OF MITEK MII20 WITH TEE-LOK TL20 PLATES IS ALLOWED.

DIMENSIONS, SUPPORTS AND LOADINGS SPECIFIED BY FABRICATOR TO BE VERIFIED BY BUILDING DESIGNER

BEARINGS

JT	FACTORED GROSS REACTION VERT	HORZ	MAXIMUM FACTORED GROSS REACTION DOWN	HORZ	UPLIFT	INPUT BRG IN-SX	REQRD BRG IN-SX
15	1427	0	1427	0	0	5-8	5-8
9	1322	0	1322	0	0	HANGER BY OTHERS	
						MIN. SEAT SIZE: 1-8	

UNFACTORED REACTIONS

JT	1ST LCASE COMBINED	MAX./MIN. COMPONENT REACTIONS SNOW	LIVE	PERM.LIVE	WIND	DEAD	SOIL
15	999	712 / 0	0 / 0	0 / 0	0 / 0	287 / 0	0 / 0
9	928	649 / 0	0 / 0	0 / 0	0 / 0	279 / 0	0 / 0

BEARING MATERIAL TO BE SPF NO.2 OR BETTER AT JOINT(S) 15

BRACING
TOP CHORD TO BE SHEATHED OR MAX. PURLIN SPACING = 4.14 FT.
MAX. UNBRACED BOTTOM CHORD LENGTH = 10.00 FT. OR RIGID CEILING DIRECTLY APPLIED.

ALL PITCH BREAKS AND PERIMETER CORNER JOINTS MUST BE LATERALLY RESTRAINED.

LOADING
TOTAL LOAD CASES: (4)

CHORDS

MEMB. FR-TO	MAX. FORCE (LBS)	FACTORED VERT. LOAD LC1 (PLF) FROM	TO	MAX CSI (LC)	MAX. UNBRAC LENGTH
1- 2	0 / 23	-77.3	-77.3	0.10 (1)	10.00
2- 3	-1823 / 0	-77.3	-77.3	0.34 (1)	4.63
3- 4	-2306 / 0	-77.3	-77.3	0.22 (1)	4.33
4- 5	-2608 / 0	-77.3	-77.3	0.19 (1)	4.14
5- 6	-1472 / 0	-77.3	-77.3	0.14 (1)	5.27
6- 7	-1482 / 0	-77.3	-77.3	0.37 (1)	4.98
7- 8	-1776 / 0	-77.3	-77.3	0.40 (1)	4.61
15- 2	-1385 / 0	0.0	0.0	0.14 (1)	6.91
9- 8	-1276 / 0	0.0	0.0	0.13 (1)	7.13
15-14	0 / 0	-17.5	-17.5	0.11 (4)	10.00
14-13	0 / 1624	-17.5	-17.5	0.31 (1)	10.00
13-12	0 / 1755	-17.5	-17.5	0.38 (1)	10.00
12-11	0 / 1755	-17.5	-17.5	0.38 (1)	10.00
11-10	0 / 1610	-17.5	-17.5	0.36 (1)	10.00
10- 9	0 / 0	-17.5	-17.5	0.13 (4)	10.00

WEBS

MEMB. FR-TO	MAX. FORCE (LBS)	MAX CSI (LC)
14- 3	-165 / 21	0.04 (1)
3-13	0 / 922	0.21 (1)
13- 4	-1423 / 0	0.33 (1)
13- 5	0 / 1065	0.24 (1)
5-11	-829 / 0	0.57 (1)
11- 6	0 / 1035	0.23 (1)
11- 7	-375 / 0	0.35 (1)
10- 7	-190 / 37	0.05 (1)
2-14	0 / 1649	0.37 (1)
10- 8	0 / 1636	0.37 (1)

DESIGN CRITERIA

SPECIFIED LOADS:

TOP	CH.	LL	=	23.3	PSF
		DL	=	3.0	PSF
BOT	CH.	LL	=	0.0	PSF
		DL	=	7.0	PSF
TOTAL	LOAD		=	33.3	PSF

SPACING = 24.0 IN. C/C

LOADING IN ALL FLAT SECTIONS BASED ON A SLOPE OF 6.00/12

THIS TRUSS IS DESIGNED FOR RESIDENTIAL OR SMALL BUILDING REQUIREMENTS OF PART 9, NBCC 2010

THIS DESIGN COMPLIES WITH:
- PART 9 OF OBC 2012 , BCBC 2012 , ABC 2014
- CSA 086-09
- TPIC 2011

(55 % OF 27.2 P.S.F. G.S.L. PLUS 8.4 P.S.F. RAIN LOAD) EQUALS 23.3 P.S.F. SPECIFIED ROOF LIVE LOAD

ALLOWABLE DEFL.(LL)= L/360 (0.93")
CALCULATED VERT. DEFL.(LL) = L/ 999 (0.12")
ALLOWABLE DEFL.(TL)= L/360 (0.93")
CALCULATED VERT. DEFL.(TL) = L/ 999 (0.24")

CSI: TC=0.40 (7-8:1) , BC=0.38 (11-13:1) , WB=0.57 (5-11:1) , SSI=0.20 (7-8:1)

DOL LUMBER=1.00 NAIL=1.00 LS BEND=1.10 COMP=1.10 SHEAR=1.10 TENS= 1.10

COMPANION LIVE LOAD FACTOR = 0.50

TRUSS PLATE MANUFACTURER IS NOT RESPONSIBLE FOR QUALITY CONTROL IN THE TRUSS MANUFACTURING PLANT .

NAIL VALUES

PLATE	GRIP(DRY) (PSI) MAX	MIN	SHEAR (PLI) MAX	MIN	SECTION (PLI) MAX	MIN
MT20	618	354	1667	822	2284	1656

PLATE PLACEMENT TOL. = 0.250 inches

PLATE ROTATION TOL. = 5.0 Deg.

JSI GRIP= 0.89 (10) (INPUT = 0.90)
JSI METAL= 0.52 (4) (INPUT = 1.00)

LICENSED PROFESSIONAL ENGINEER
P.M. TREVISAN
100136551
March 13th, 2017
PROVINCE OF ONTARIO

RECEIVED
TOWN OF MILTON
MAR 29, 2017
17-5052
BUILDING DIVISION

READ ALL NOTES ON THIS PAGE AND ON THE ENGINEERING NOTE PAGE ENP-1. THE NOTE PAGE IS AN INTEGRAL PART OF THIS DRAWING AS IT CONTAINS SPECIFICATIONS AND CRITERIA USED IN THE DESIGN OF THIS COMPONENT.

KOTT

JOB NAME	TRUSS NAME	QUANTITY	PLY	JOB DESC.	DRWG NO.
PT0317-060	T29	2	1	TRUSS DESC. LECCO RIDGE-BLOCK 332	

KOTT , Stouffville, ON, CGC

Version 8.100 S Feb 9 2017 MiTek Industries, Inc. Mon Mar 13 13:24:42 2017 Page 1
ID:gtheX5EqOVSIkwpr5Eyn2TyGKTI-EAhfiyn96isyz_B0X?322yzrpCSpcCcqTMpXOYzbLkZ

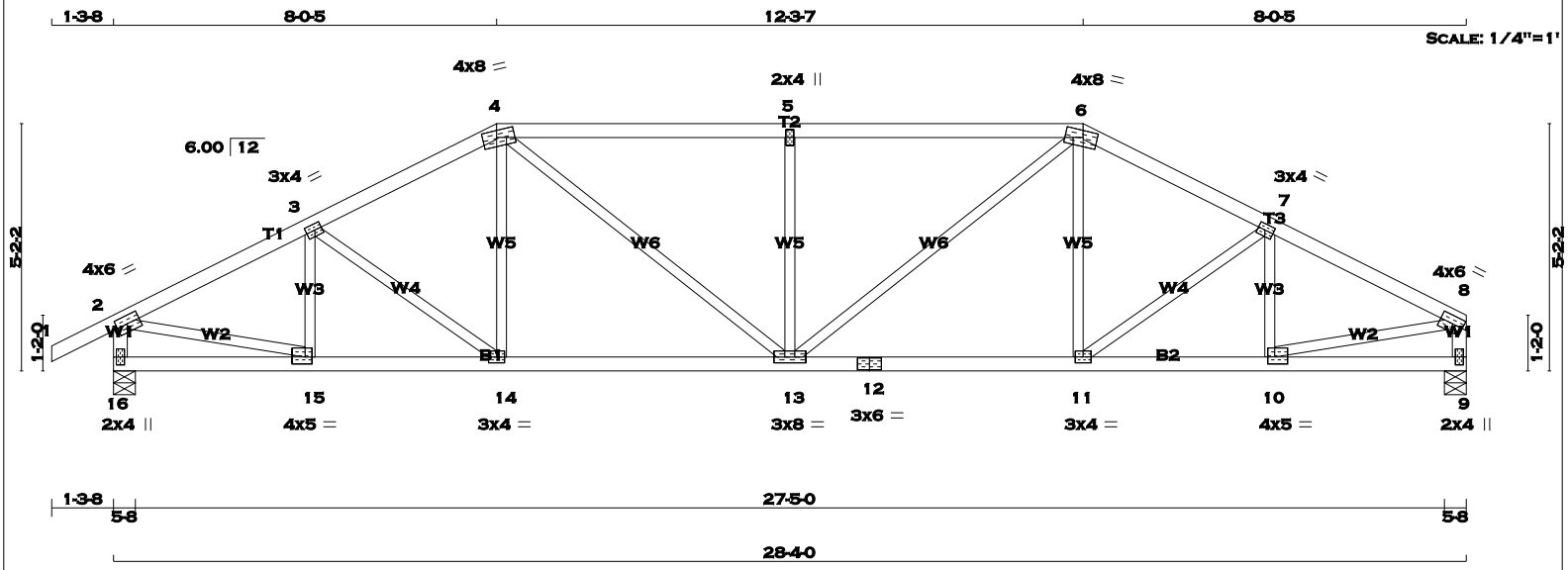

TOTAL WEIGHT = 2 X 112 = 223 lb
[M][F]

LUMBER
N. L. G. A. RULES

CHORDS	SIZE		LUMBER	DESCR.
1 - 4	2x4	DRY	No.2	SPF
4 - 6	2x4	DRY	No.2	SPF
6 - 8	2x4	DRY	No.2	SPF
16 - 2	2x4	DRY	No.2	SPF
9 - 8	2x4	DRY	No.2	SPF
16 - 12	2x4	DRY	No.2	SPF
12 - 9	2x4	DRY	No.2	SPF
ALL WEBS EXCEPT	2x3	DRY	No.2	SPF

DRY: SEASONED LUMBER.

PLATES (table is in inches)

JT	TYPE	PLATES	W	LEN	Y	X
2	TMVW-t	MT20	4.0	6.0	2.00	2.75
3	TMWW-t	MT20	3.0	4.0	1.50	1.75
4	TTWW-m	MT20	4.0	8.0	1.75	3.50
5	TMW+w	MT20	2.0	4.0		
6	TTWW-m	MT20	4.0	8.0	1.75	3.50
7	TMWW-t	MT20	3.0	4.0	1.50	1.75
8	TMVW-t	MT20	4.0	6.0	2.00	2.75
9	BMV1+p	MT20	2.0	4.0		
10	BMWW-t	MT20	4.0	5.0	1.75	1.75
11	BMWW-t	MT20	3.0	4.0		
12	BS-t	MT20	3.0	6.0		
13	BMWWW-t	MT20	3.0	8.0		
14	BMWW-t	MT20	3.0	4.0		
15	BMWW-t	MT20	4.0	5.0	1.75	1.75
16	BMV1+p	MT20	2.0	4.0		

A SIZE FOR SIZE SUBSTITUTION OF MITEK MII20 WITH TEE-LOK TL20 PLATES IS ALLOWED.

DIMENSIONS, SUPPORTS AND LOADINGS SPECIFIED BY FABRICATOR TO BE VERIFIED BY BUILDING DESIGNER

BEARINGS

JT	FACTORED GROSS REACTION VERT	HORZ	MAXIMUM FACTORED GROSS REACTION DOWN	HORZ	UPLIFT	INPUT BRG IN-SX	REQRD BRG IN-SX
16	1449	0	1449	0	0	5-8	5-8
9	1344	0	1344	0	0	5-8	5-8

UNFACTORED REACTIONS

JT	1ST LCASE COMBINED	MAX./MIN. COMPONENT REACTIONS SNOW	LIVE	PERM.LIVE	WIND	DEAD	SOIL
16	1014	723 / 0	0 / 0	0 / 0	0 / 0	291 / 0	0 / 0
9	943	660 / 0	0 / 0	0 / 0	0 / 0	283 / 0	0 / 0

BEARING MATERIAL TO BE SPF NO.2 OR BETTER AT JOINT(S) 16, 9

BRACING
TOP CHORD TO BE SHEATHED OR MAX. PURLIN SPACING = 4.31 FT.
MAX. UNBRACED BOTTOM CHORD LENGTH = 10.00 FT. OR RIGID CEILING DIRECTLY APPLIED.

ALL PITCH BREAKS AND PERIMETER CORNER JOINTS MUST BE LATERALLY RESTRAINED.

LOADING
TOTAL LOAD CASES: (4)

CHORDS

MEMB. FR-TO	MAX. FACTORED FORCE (LBS)	FACTORED VERT. LOAD (PLF) FROM	TO	LC1 MAX CSI (LC)	MAX. UNBRAC LENGTH
1- 2	0 / 23	-77.3	-77.3	0.10 (1)	10.00
2- 3	-1850 / 0	-77.3	-77.3	0.19 (1)	4.78
3- 4	-1795 / 0	-77.3	-77.3	0.18 (1)	4.84
4- 5	-2028 / 0	-77.3	-77.3	0.44 (1)	4.31
5- 6	-2028 / 0	-77.3	-77.3	0.44 (1)	4.31
6- 7	-1795 / 0	-77.3	-77.3	0.18 (1)	4.84
7- 8	-1850 / 0	-77.3	-77.3	0.19 (1)	4.78
16- 2	-1413 / 0	0.0	0.0	0.14 (1)	6.86
9- 8	-1308 / 0	0.0	0.0	0.13 (1)	7.06
16-15	0 / 0	-17.5	-17.5	0.07 (4)	10.00
15-14	0 / 1667	-17.5	-17.5	0.33 (1)	10.00
14-13	0 / 1594	-17.5	-17.5	0.32 (1)	10.00
13-12	0 / 1594	-17.5	-17.5	0.32 (1)	10.00
12-11	0 / 1594	-17.5	-17.5	0.32 (1)	10.00
11-10	0 / 1667	-17.5	-17.5	0.33 (1)	10.00
10- 9	0 / 0	-17.5	-17.5	0.07 (4)	10.00

WEBS

MEMB. FR-TO	MAX. FACTORED FORCE (LBS)	MAX CSI (LC)
15- 3	-286 / 0	0.05 (1)
3-14	-95 / 0	0.04 (1)
14- 4	0 / 154	0.04 (4)
4-13	0 / 554	0.12 (1)
13- 5	-583 / 0	0.23 (1)
13- 6	0 / 554	0.12 (1)
11- 6	0 / 154	0.04 (4)
11- 7	-95 / 0	0.04 (1)
10- 7	-286 / 0	0.05 (1)
2-15	0 / 1703	0.38 (1)
10- 8	0 / 1703	0.38 (1)

DESIGN CRITERIA

SPECIFIED LOADS:

TOP CH.	LL	=	23.3	PSF
	DL	=	3.0	PSF
BOT CH.	LL	=	0.0	PSF
	DL	=	7.0	PSF
TOTAL LOAD		=	33.3	PSF

SPACING = 24.0 IN. C/C

LOADING IN FLAT SECTION BASED ON A SLOPE OF 6.00/12

THIS TRUSS IS DESIGNED FOR RESIDENTIAL OR SMALL BUILDING REQUIREMENTS OF PART 9, NBCC 2010

THIS DESIGN COMPLIES WITH:
- PART 9 OF OBC 2012 , BCBC 2012 , ABC 2014
- CSA 086-09
- TPIC 2011

(55 % OF 27.2 P.S.F. G.S.L. PLUS 8.4 P.S.F. RAIN LOAD) EQUALS 23.3 P.S.F. SPECIFIED ROOF LIVE LOAD

ALLOWABLE DEFL.(LL)= L/360 (0.94")
CALCULATED VERT. DEFL.(LL) = L/ 999 (0.09")
ALLOWABLE DEFL.(TL)= L/360 (0.94")
CALCULATED VERT. DEFL.(TL) = L/ 999 (0.17")

CSI: TC=0.44 (5-6:1) , BC=0.33 (14-15:1) , WB=0.38 (8-10:1) , SSI=0.23 (5-6:1)

DOL LUMBER=1.00 NAIL=1.00 LS BEND=1.10 COMP=1.10 SHEAR=1.10 TENS= 1.10

COMPANION LIVE LOAD FACTOR = 0.50

TRUSS PLATE MANUFACTURER IS NOT RESPONSIBLE FOR QUALITY CONTROL IN THE TRUSS MANUFACTURING PLANT .

NAIL VALUES

PLATE	GRIP(DRY) (PSI) MAX	MIN	SHEAR (PLI) MAX	MIN	SECTION (PLI) MAX	MIN
MT20	618	354	1667	822	2284	1656

PLATE PLACEMENT TOL. = 0.250 inches

PLATE ROTATION TOL. = 5.0 Deg.

JSI GRIP= 0.89 (2) (INPUT = 0.90)
JSI METAL= 0.50 (15) (INPUT = 1.00)

LICENSED PROFESSIONAL ENGINEER
P.M. TREVISAN
100136551
March 13th, 2017
PROVINCE OF ONTARIO

RECEIVED
TOWN OF MILTON
MAR 29, 2017
17-5052
BUILDING DIVISION

READ ALL NOTES ON THIS PAGE AND ON THE ENGINEERING NOTE PAGE ENP-1. THE NOTE PAGE IS AN INTEGRAL PART OF THIS DRAWING AS IT CONTAINS SPECIFICATIONS AND CRITERIA USED IN THE DESIGN OF THIS COMPONENT.

KOTT

JOB NAME	TRUSS NAME	QUANTITY	PLY	JOB DESC.	DRWG NO.
PT0317-060	T30	2	1	TRUSS DESC. LECCO RIDGE-BLOCK 332	

KOTT , Stouffville, ON, CGC

Version 8.100 S Feb 9 2017 MiTek Industries, Inc. Mon Mar 13 13:24:43 2017 Page 1
ID:gtheX5EqOVSIkwpr5Eyn2TyGKTI-iMF1vInnt0_pb8mC4iaHaAW1AbodLdhzi0Z4w_zbLkY

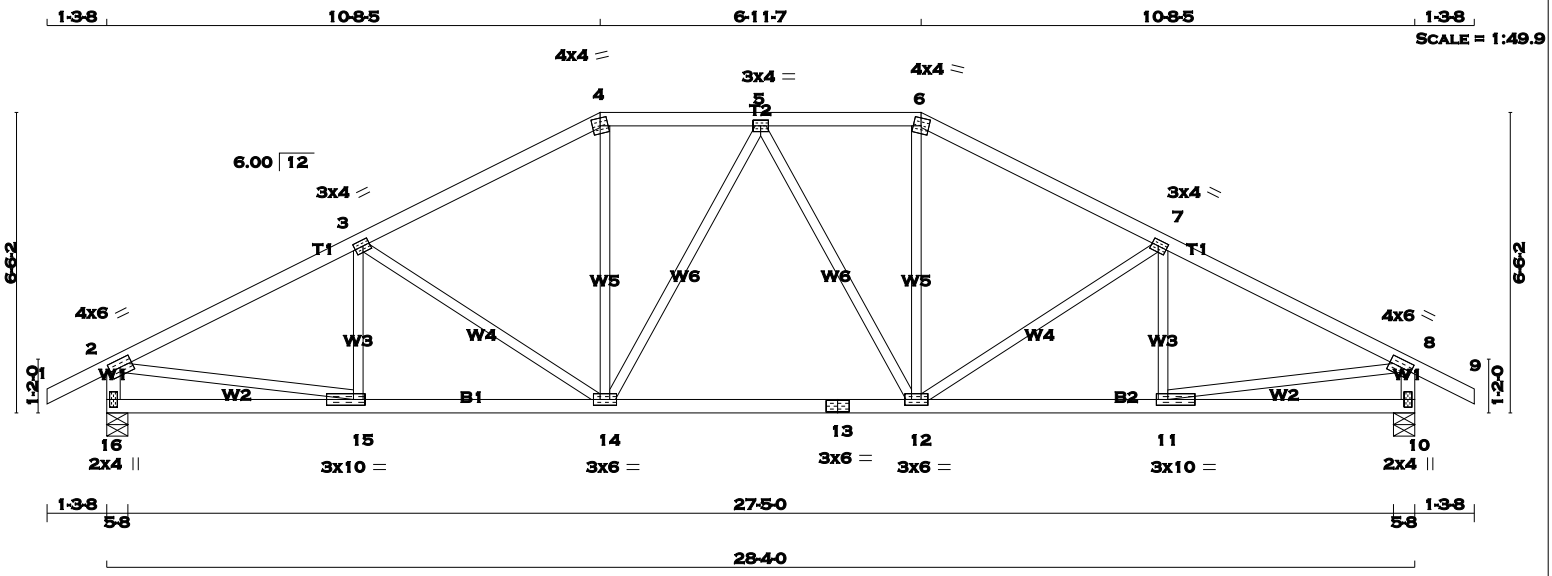

TOTAL WEIGHT = 2 X 117 = 234 lb

LUMBER

N. L. G. A. RULES

CHORDS	SIZE		LUMBER	DESCR.
1 - 4	2x4	DRY	No.2	SPF
4 - 6	2x4	DRY	No.2	SPF
6 - 9	2x4	DRY	No.2	SPF
16 - 2	2x4	DRY	No.2	SPF
10 - 8	2x4	DRY	No.2	SPF
16 - 13	2x4	DRY	No.2	SPF
13 - 10	2x4	DRY	No.2	SPF
ALL WEBS EXCEPT	2x3	DRY	No.2	SPF

DRY: SEASONED LUMBER.

PLATES (table is in inches)

JT	TYPE	PLATES	W	LEN	Y	X
2	TMVW-t	MT20	4.0	6.0	2.00	2.75
3	TMWW-t	MT20	3.0	4.0	1.50	1.75
4	TTW-m	MT20	4.0	4.0		
5	TMWW-t	MT20	3.0	4.0		
6	TTW-m	MT20	4.0	4.0		
7	TMWW-t	MT20	3.0	4.0	1.50	1.75
8	TMVW-t	MT20	4.0	6.0	2.00	2.75
10	BMV1+p	MT20	2.0	4.0		
11	BMWW-t	MT20	3.0	10.0	1.50	3.00
12	BMWWW-t	MT20	3.0	6.0		
13	BS-t	MT20	3.0	6.0		
14	BMWWW-t	MT20	3.0	6.0		
15	BMWW-t	MT20	3.0	10.0	1.50	3.00
16	BMV1+p	MT20	2.0	4.0		

A SIZE FOR SIZE SUBSTITUTION OF MITEK MII20 WITH TEE-LOK TL20 PLATES IS ALLOWED.

DIMENSIONS, SUPPORTS AND LOADINGS SPECIFIED BY FABRICATOR TO BE VERIFIED BY BUILDING DESIGNER

BEARINGS

JT	FACTORED GROSS REACTION VERT	HORZ	MAXIMUM FACTORED GROSS REACTION DOWN	HORZ	UPLIFT	INPUT BRG IN-SX	REQRD BRG IN-SX
16	1449	0	1449	0	0	5-8	5-8
10	1449	0	1449	0	0	5-8	5-8

UNFACTORED REACTIONS

JT	1ST LCASE COMBINED	MAX./MIN. COMPONENT REACTIONS SNOW	LIVE	PERM.LIVE	WIND	DEAD	SOIL
16	1014	723 / 0	0 / 0	0 / 0	0 / 0	291 / 0	0 / 0
10	1014	723 / 0	0 / 0	0 / 0	0 / 0	291 / 0	0 / 0

BEARING MATERIAL TO BE SPF NO.2 OR BETTER AT JOINT(S) 16, 10

BRACING

TOP CHORD TO BE SHEATHED OR MAX. PURLIN SPACING = 4.55 FT.
MAX. UNBRACED BOTTOM CHORD LENGTH = 10.00 FT. OR RIGID CEILING DIRECTLY APPLIED.

ALL PITCH BREAKS AND PERIMETER CORNER JOINTS MUST BE LATERALLY RESTRAINED.

LOADING

TOTAL LOAD CASES: (4)

CHORDS MEMB. FR-TO	MAX. FACTORED FORCE (LBS)	FACTORED VERT. LOAD (PLF) FROM	TO	LC1 MAX CSI (LC)	MAX. UNBRAC LENGTH	WEBS MEMB. FR-TO	MAX. FACTORED FORCE (LBS)	MAX CSI (LC)
1- 2	0 / 23	-77.3	-77.3	0.10 (1)	10.00	15- 3	-178 / 32	0.04 (1)
2- 3	-1913 / 0	-77.3	-77.3	0.34 (1)	4.55	3-14	-343 / 0	0.26 (1)
3- 4	-1638 / 0	-77.3	-77.3	0.31 (1)	4.86	14- 4	0 / 462	0.10 (1)
4- 5	-1453 / 0	-77.3	-77.3	0.13 (1)	5.31	14- 5	-182 / 0	0.17 (1)
5- 6	-1453 / 0	-77.3	-77.3	0.13 (1)	5.31	5-12	-182 / 0	0.17 (1)
6- 7	-1638 / 0	-77.3	-77.3	0.31 (1)	4.86	12- 6	0 / 462	0.10 (1)
7- 8	-1913 / 0	-77.3	-77.3	0.34 (1)	4.55	12- 7	-343 / 0	0.26 (1)
8- 9	0 / 23	-77.3	-77.3	0.10 (1)	10.00	11- 7	-178 / 32	0.04 (1)
16- 2	-1406 / 0	0.0	0.0	0.14 (1)	6.87	2-15	0 / 1751	0.39 (1)
10- 8	-1406 / 0	0.0	0.0	0.14 (1)	6.87	11- 8	0 / 1751	0.39 (1)
16-15	0 / 0	-17.5	-17.5	0.11 (4)	10.00			
15-14	0 / 1730	-17.5	-17.5	0.35 (1)	10.00			
14-13	0 / 1539	-17.5	-17.5	0.32 (1)	10.00			
13-12	0 / 1539	-17.5	-17.5	0.32 (1)	10.00			
12-11	0 / 1730	-17.5	-17.5	0.35 (1)	10.00			
11-10	0 / 0	-17.5	-17.5	0.11 (4)	10.00			

DESIGN CRITERIA

SPECIFIED LOADS:

TOP	CH.	LL	=	23.3	PSF
		DL	=	3.0	PSF
BOT	CH.	LL	=	0.0	PSF
		DL	=	7.0	PSF
TOTAL	LOAD		=	33.3	PSF

SPACING = 24.0 IN. C/C

LOADING IN FLAT SECTION BASED ON A SLOPE OF 6.00/12

THIS TRUSS IS DESIGNED FOR RESIDENTIAL OR SMALL BUILDING REQUIREMENTS OF PART 9, NBCC 2010

THIS DESIGN COMPLIES WITH:
- PART 9 OF OBC 2012 , BCBC 2012 , ABC 2014
- CSA 086-09
- TPIC 2011

(55 % OF 27.2 P.S.F. G.S.L. PLUS 8.4 P.S.F. RAIN LOAD) EQUALS 23.3 P.S.F. SPECIFIED ROOF LIVE LOAD

ALLOWABLE DEFL.(LL)= L/360 (0.94")
CALCULATED VERT. DEFL.(LL) = L/ 999 (0.08")
ALLOWABLE DEFL.(TL)= L/360 (0.94")
CALCULATED VERT. DEFL.(TL) = L/ 999 (0.17")

CSI: TC=0.34 (2-3:1) , BC=0.35 (14-15:1) , WB=0.39 (2-15:1) , SSI=0.18 (2-3:1)

DOL LUMBER=1.00 NAIL=1.00 LS BEND=1.10 COMP=1.10 SHEAR=1.10 TENS= 1.10

COMPANION LIVE LOAD FACTOR = 0.50

TRUSS PLATE MANUFACTURER IS NOT RESPONSIBLE FOR QUALITY CONTROL IN THE TRUSS MANUFACTURING PLANT .

NAIL VALUES

PLATE	GRIP(DRY) (PSI) MAX	MIN	SHEAR (PLI) MAX	MIN	SECTION (PLI) MAX	MIN
MT20	618	354	1667	822	2284	1656

PLATE PLACEMENT TOL. = 0.250 inches

PLATE ROTATION TOL. = 5.0 Deg.

JSI GRIP= 0.89 (11) (INPUT = 0.90)
JSI METAL= 0.51 (8) (INPUT = 1.00)

LICENSED PROFESSIONAL ENGINEER
P.M. TREVISAN
100136551
March 13th, 2017
PROVINCE OF ONTARIO

RECEIVED
TOWN OF MILTON
MAR 29, 2017
17-5052
BUILDING DIVISION

READ ALL NOTES ON THIS PAGE AND ON THE ENGINEERING NOTE PAGE ENP-1. THE NOTE PAGE IS AN INTEGRAL PART OF THIS DRAWING AS IT CONTAINS SPECIFICATIONS AND CRITERIA USED IN THE DESIGN OF THIS COMPONENT.

KOTT

JOB NAME	TRUSS NAME	QUANTITY	PLY	JOB DESC.	DRWG NO.
PT0317-060	**T31**	**2**	**1**	TRUSS DESC. LECCO RIDGE-BLOCK 332	ENG JOB: PT0317-060

KOTT , Stouffville, ON, CGC

Version 8.100 S Feb 9 2017 MiTek Industries, Inc. Mon Mar 13 13:24:43 2017 Page 1

ID:gtheX5EqOVSIkwpr5Eyn2TyGKTI-iMF1vInnt0_pb8mC4iaHaAW_rboGLY3zi0Z4w_zbLkY

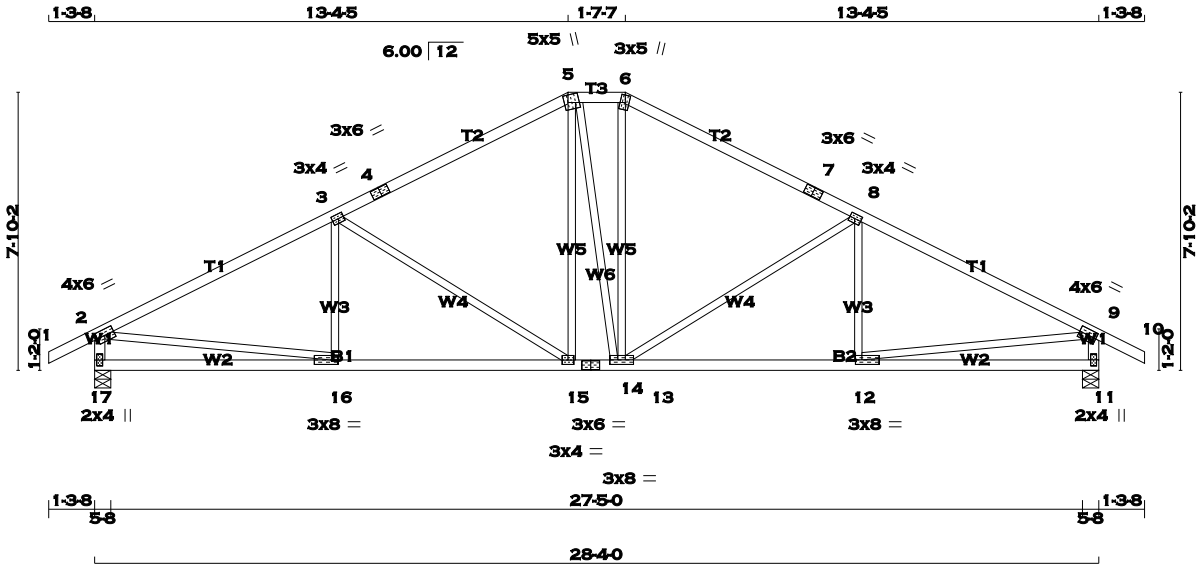

TOTAL WEIGHT = 2 X 121 = 241 lb

[M][F]

LUMBER

N. L. G. A. RULES

CHORDS	SIZE		LUMBER	DESCR.
1 - 4	2x4	DRY	No.2	SPF
4 - 5	2x4	DRY	No.2	SPF
5 - 6	2x4	DRY	No.2	SPF
6 - 7	2x4	DRY	No.2	SPF
7 - 10	2x4	DRY	No.2	SPF
17 - 2	2x4	DRY	No.2	SPF
11 - 9	2x4	DRY	No.2	SPF
17 - 14	2x4	DRY	No.2	SPF
14 - 11	2x4	DRY	No.2	SPF
ALL WEBS EXCEPT	2x3	DRY	No.2	SPF

DRY: SEASONED LUMBER.

PLATES (table is in inches)

JT	TYPE	PLATES	W	LEN	Y	X
2	TMVW-t	MT20	4.0	6.0	2.00	2.75
3	TMWW-t	MT20	3.0	4.0	1.50	1.75
4	TS-t	MT20	3.0	6.0		
5	TTWW+m	MT20	5.0	5.0	2.50	1.25
6	TTW+m	MT20	3.0	5.0	2.50	1.25
7	TS-t	MT20	3.0	6.0		
8	TMWW-t	MT20	3.0	4.0	1.50	1.75
9	TMVW-t	MT20	4.0	6.0	2.00	2.75
11	BMV1+p	MT20	2.0	4.0		
12	BMWW-t	MT20	3.0	8.0	1.50	2.25
13	BMWWW-t	MT20	3.0	8.0		
14	BS-t	MT20	3.0	6.0		
15	BMWW-t	MT20	3.0	4.0		
16	BMWW-t	MT20	3.0	8.0	1.50	2.25
17	BMV1+p	MT20	2.0	4.0		

A SIZE FOR SIZE SUBSTITUTION OF MITEK MII20 WITH TEE-LOK TL20 PLATES IS ALLOWED.

DIMENSIONS, SUPPORTS AND LOADINGS SPECIFIED BY FABRICATOR TO BE VERIFIED BY BUILDING DESIGNER

BEARINGS

JT	FACTORED GROSS REACTION VERT	HORZ	MAXIMUM FACTORED GROSS REACTION DOWN	HORZ	UPLIFT	INPUT BRG IN-SX	REQRD BRG IN-SX
17	1449	0	1449	0	0	5-8	5-8
11	1449	0	1449	0	0	5-8	5-8

UNFACTORED REACTIONS

JT	1ST LCASE COMBINED	MAX./MIN. COMPONENT REACTIONS SNOW	LIVE	PERM.LIVE	WIND	DEAD	SOIL
17	1014	723 / 0	0 / 0	0 / 0	0 / 0	291 / 0	0 / 0
11	1014	723 / 0	0 / 0	0 / 0	0 / 0	291 / 0	0 / 0

BEARING MATERIAL TO BE SPF NO.2 OR BETTER AT JOINT(S) 17, 11

BRACING

TOP CHORD TO BE SHEATHED OR MAX. PURLIN SPACING = 4.28 FT.
MAX. UNBRACED BOTTOM CHORD LENGTH = 10.00 FT. OR RIGID CEILING DIRECTLY APPLIED.

ALL PITCH BREAKS AND PERIMETER CORNER JOINTS MUST BE LATERALLY RESTRAINED.

LOADING

TOTAL LOAD CASES: (4)

CHORDS MEMB. FR-TO	MAX. FACTORED FORCE (LBS)	FACTORED VERT. LOAD (PLF) FROM	TO	LC1 MAX CSI (LC)	MAX. UNBRAC LENGTH	WEBS MEMB. FR-TO	MAX. FACTORED FORCE (LBS)	MAX CSI (LC)
1- 2	0 / 23	-77.3	-77.3	0.10 (1)	10.00	16- 3	-88 / 88	0.03 (4)
2- 3	-1924 / 0	-77.3	-77.3	0.55 (1)	4.28	3-15	-579 / 0	0.75 (1)
3- 4	-1434 / 0	-77.3	-77.3	0.49 (1)	4.87	15- 5	0 / 364	0.08 (1)
4- 5	-1434 / 0	-77.3	-77.3	0.49 (1)	4.87	5-13	0 / 12	0.00 (1)
5- 6	-1265 / 0	-77.3	-77.3	0.04 (1)	5.69	13- 6	0 / 378	0.08 (1)
6- 7	-1437 / 0	-77.3	-77.3	0.49 (1)	4.87	13- 8	-575 / 0	0.75 (1)
7- 8	-1437 / 0	-77.3	-77.3	0.49 (1)	4.87	12- 8	-91 / 87	0.03 (4)
8- 9	-1923 / 0	-77.3	-77.3	0.55 (1)	4.28	2-16	0 / 1759	0.40 (1)
9-10	0 / 23	-77.3	-77.3	0.10 (1)	10.00	12- 9	0 / 1758	0.40 (1)
17- 2	-1400 / 0	0.0	0.0	0.14 (1)	6.88			
11- 9	-1399 / 0	0.0	0.0	0.14 (1)	6.88			
17-16	0 / 0	-17.5	-17.5	0.20 (4)	10.00			
16-15	0 / 1745	-17.5	-17.5	0.38 (1)	10.00			
15-14	0 / 1262	-17.5	-17.5	0.28 (1)	10.00			
14-13	0 / 1262	-17.5	-17.5	0.28 (1)	10.00			
13-12	0 / 1744	-17.5	-17.5	0.37 (1)	10.00			
12-11	0 / 0	-17.5	-17.5	0.19 (4)	10.00			

DESIGN CRITERIA

SPECIFIED LOADS:

TOP	CH.	LL	=	23.3	PSF
		DL	=	3.0	PSF
BOT	CH.	LL	=	0.0	PSF
		DL	=	7.0	PSF
TOTAL	LOAD		=	33.3	PSF

SPACING = 24.0 IN. C/C

LOADING IN FLAT SECTION BASED ON A SLOPE OF 6.00/12

THIS TRUSS IS DESIGNED FOR RESIDENTIAL OR SMALL BUILDING REQUIREMENTS OF PART 9, NBCC 2010

THIS DESIGN COMPLIES WITH:
- PART 9 OF OBC 2012 , BCBC 2012 , ABC 2014
- CSA 086-09
- TPIC 2011

(55 % OF 27.2 P.S.F. G.S.L. PLUS 8.4 P.S.F. RAIN LOAD) EQUALS 23.3 P.S.F. SPECIFIED ROOF LIVE LOAD

ALLOWABLE DEFL.(LL)= L/360 (0.94")
CALCULATED VERT. DEFL.(LL) = L/ 999 (0.09")
ALLOWABLE DEFL.(TL)= L/360 (0.94")
CALCULATED VERT. DEFL.(TL) = L/ 999 (0.17")

CSI: TC=0.55 (2-3:1) , BC=0.38 (15-16:1) , WB=0.75 (3-15:1) , SSI=0.23 (2-3:1)

DOL LUMBER=1.00 NAIL=1.00 LS BEND=1.10 COMP=1.10 SHEAR=1.10 TENS= 1.10

COMPANION LIVE LOAD FACTOR = 0.50

TRUSS PLATE MANUFACTURER IS NOT RESPONSIBLE FOR QUALITY CONTROL IN THE TRUSS MANUFACTURING PLANT .

NAIL VALUES

PLATE	GRIP(DRY) (PSI) MAX	MIN	SHEAR (PLI) MAX	MIN	SECTION (PLI) MAX	MIN
MT20	618	354	1667	822	2284	1656

PLATE PLACEMENT TOL. = 0.250 inches

PLATE ROTATION TOL. = 5.0 Deg.

JSI GRIP= 0.89 (16) (INPUT = 0.90)
JSI METAL= 0.52 (2) (INPUT = 1.00)

LICENSED PROFESSIONAL ENGINEER
P.M. TREVISAN
100136551
March 13th, 2017
PROVINCE OF ONTARIO

RECEIVED
TOWN OF MILTON
MAR 29, 2017
17-5052
BUILDING DIVISION

READ ALL NOTES ON THIS PAGE AND ON THE ENGINEERING NOTE PAGE ENP-1. THE NOTE PAGE IS AN INTEGRAL PART OF THIS DRAWING AS IT CONTAINS SPECIFICATIONS AND CRITERIA USED IN THE DESIGN OF THIS COMPONENT.

KOTT

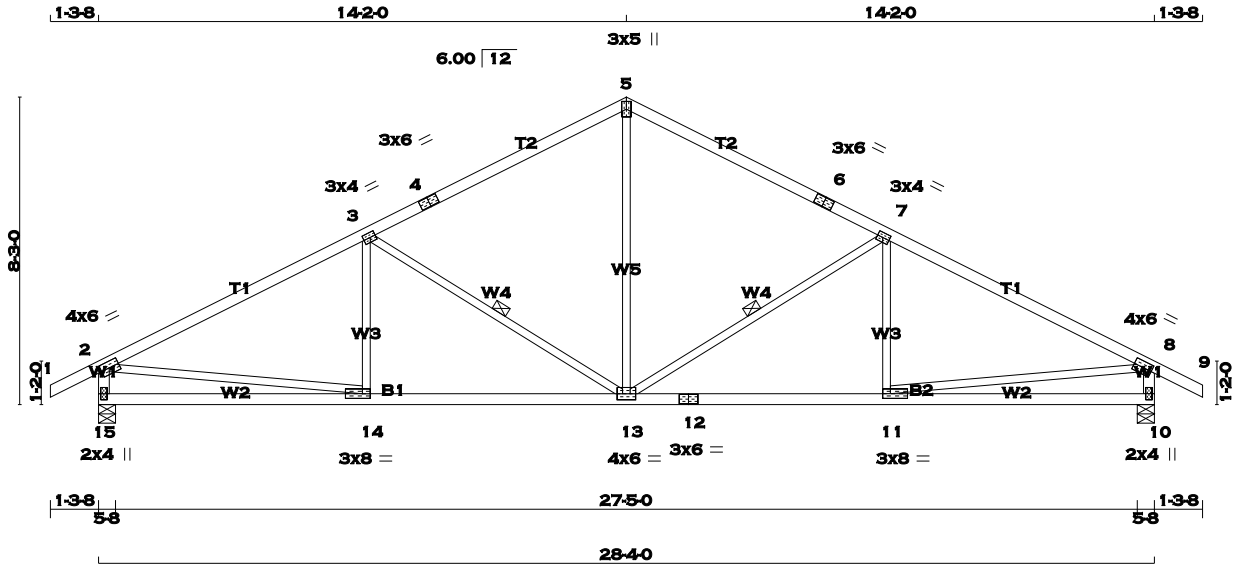

TOTAL WEIGHT = 6 X 111 = 665 lb

[M][F]

LUMBER

N. L. G. A. RULES

CHORDS	SIZE		LUMBER	DESCR.
1 - 4	2x4	DRY	No.2	SPF
4 - 5	2x4	DRY	No.2	SPF
5 - 6	2x4	DRY	No.2	SPF
6 - 9	2x4	DRY	No.2	SPF
15 - 2	2x4	DRY	No.2	SPF
10 - 8	2x4	DRY	No.2	SPF
15 - 12	2x4	DRY	No.2	SPF
12 - 10	2x4	DRY	No.2	SPF
ALL WEBS EXCEPT	2x3	DRY	No.2	SPF

DRY: SEASONED LUMBER.

PLATES (table is in inches)

JT	TYPE	PLATES	W	LEN	Y	X
2	TMVW-t	MT20	4.0	6.0	2.00	2.75
3	TMWW-t	MT20	3.0	4.0	1.50	1.75
4	TS-t	MT20	3.0	6.0		
5	TTW+p	MT20	3.0	5.0		
6	TS-t	MT20	3.0	6.0		
7	TMWW-t	MT20	3.0	4.0	1.50	1.75
8	TMVW-t	MT20	4.0	6.0	2.00	2.75
10	BMV1+p	MT20	2.0	4.0		
11	BMWW-t	MT20	3.0	8.0	1.50	2.50
12	BS-t	MT20	3.0	6.0		
13	BMWWW-t	MT20	4.0	6.0		
14	BMWW-t	MT20	3.0	8.0	1.50	2.50
15	BMV1+p	MT20	2.0	4.0		

A SIZE FOR SIZE SUBSTITUTION OF MITEK MII20 WITH TEE-LOK TL20 PLATES IS ALLOWED.

DIMENSIONS, SUPPORTS AND LOADINGS SPECIFIED BY FABRICATOR TO BE VERIFIED BY BUILDING DESIGNER

BEARINGS

JT	FACTORED GROSS REACTION VERT	HORZ	MAXIMUM FACTORED GROSS REACTION DOWN	HORZ	UPLIFT	INPUT BRG IN-SX	REQRD BRG IN-SX
15	1449	0	1449	0	0	5-8	5-8
10	1449	0	1449	0	0	5-8	5-8

UNFACTORED REACTIONS

JT	1ST LCASE COMBINED	MAX./MIN. COMPONENT REACTIONS SNOW	LIVE	PERM.LIVE	WIND	DEAD	SOIL
15	1014	723 / 0	0 / 0	0 / 0	0 / 0	291 / 0	0 / 0
10	1014	723 / 0	0 / 0	0 / 0	0 / 0	291 / 0	0 / 0

BEARING MATERIAL TO BE SPF NO.2 OR BETTER AT JOINT(S) 15, 10

BRACING

TOP CHORD TO BE SHEATHED OR MAX. PURLIN SPACING = 4.17 FT.
MAX. UNBRACED BOTTOM CHORD LENGTH = 10.00 FT. OR RIGID CEILING DIRECTLY APPLIED.

ALL PITCH BREAKS AND PERIMETER CORNER JOINTS MUST BE LATERALLY RESTRAINED.

1 - 2x3 SPF No.2 LATERAL BRACE(S) AT 1/ 2 LENGTH OF 7-13, 3-13. DBS = 20-0-0 . CBF = 79 LBS.

DBS = DIAGONAL BRACE SPACING (MAX). CBF = CUMULATIVE BRACING FORCE. FASTEN LATERAL BRACE(S) USING (0.122"X3") SPIRAL NAILS : 1 NAIL FOR 2x3 BRACE(S), 2 FOR 1x4, 2x4, 2x5, 3 FOR 2x6, 4 FOR 2x8, 5 FOR 2x10, AND 6 FOR 2x12.

END VERTICAL(S) MUST BE SHEATHED OR HAVE BRACES AS INDICATED IN THE MAX. UNBRACED LENGTH COLUMN OF THE TABLE BELOW

LOADING

TOTAL LOAD CASES: (4)

CHORDS

MEMB. FR-TO	MAX. FACTORED FORCE (LBS)	FACTORED VERT. LOAD (PLF) FROM	TO	LC1 MAX CSI (LC)	MAX. UNBRAC LENGTH
1- 2	0 / 23	-77.3	-77.3	0.10 (1)	10.00
2- 3	-1917 / 0	-77.3	-77.3	0.62 (1)	4.17
3- 4	-1379 / 0	-77.3	-77.3	0.55 (1)	4.84
4- 5	-1379 / 0	-77.3	-77.3	0.55 (1)	4.84
5- 6	-1379 / 0	-77.3	-77.3	0.55 (1)	4.84
6- 7	-1379 / 0	-77.3	-77.3	0.55 (1)	4.84
7- 8	-1917 / 0	-77.3	-77.3	0.62 (1)	4.17
8- 9	0 / 23	-77.3	-77.3	0.10 (1)	10.00
15- 2	-1396 / 0	0.0	0.0	0.14 (1)	6.89
10- 8	-1396 / 0	0.0	0.0	0.14 (1)	6.89
15-14	0 / 0	-17.5	-17.5	0.21 (4)	10.00
14-13	0 / 1741	-17.5	-17.5	0.38 (1)	10.00
13-12	0 / 1741	-17.5	-17.5	0.38 (1)	10.00
12-11	0 / 1741	-17.5	-17.5	0.38 (1)	10.00
11-10	0 / 0	-17.5	-17.5	0.21 (4)	10.00

WEBS

MEMB. FR-TO	MAX. FACTORED FORCE (LBS)	MAX CSI (LC)
13- 5	0 / 801	0.18 (1)
13- 7	-633 / 0	0.30 (1)
11- 7	-72 / 96	0.03 (4)
3-13	-633 / 0	0.30 (1)
14- 3	-72 / 96	0.03 (4)
2-14	0 / 1753	0.39 (1)
11- 8	0 / 1753	0.39 (1)

DESIGN CRITERIA

SPECIFIED LOADS:

TOP	CH.	LL	=	23.3	PSF
		DL	=	3.0	PSF
BOT	CH.	LL	=	0.0	PSF
		DL	=	7.0	PSF
TOTAL	LOAD		=	33.3	PSF

SPACING = 24.0 IN. C/C

THIS TRUSS IS DESIGNED FOR RESIDENTIAL OR SMALL BUILDING REQUIREMENTS OF PART 9, NBCC 2010

THIS DESIGN COMPLIES WITH:
- PART 9 OF OBC 2012 , BCBC 2012 , ABC 2014
- CSA 086-09
- TPIC 2011

(55 % OF 27.2 P.S.F. G.S.L. PLUS 8.4 P.S.F. RAIN LOAD) EQUALS 23.3 P.S.F. SPECIFIED ROOF LIVE LOAD

ALLOWABLE DEFL.(LL)= L/360 (0.94")
CALCULATED VERT. DEFL.(LL) = L/ 999 (0.09")
ALLOWABLE DEFL.(TL)= L/360 (0.94")
CALCULATED VERT. DEFL.(TL) = L/ 999 (0.17")

CSI: TC=0.62 (2-3:1) , BC=0.38 (13-14:1) , WB=0.39 (2-14:1) , SSI=0.24 (2-3:1)

DOL LUMBER=1.00 NAIL=1.00 LS BEND=1.10 COMP=1.10 SHEAR=1.10 TENS= 1.10

COMPANION LIVE LOAD FACTOR = 0.50

TRUSS PLATE MANUFACTURER IS NOT RESPONSIBLE FOR QUALITY CONTROL IN THE TRUSS MANUFACTURING PLANT .

NAIL VALUES

PLATE	GRIP(DRY) (PSI) MAX	MIN	SHEAR (PLI) MAX	MIN	SECTION (PLI) MAX	MIN
MT20	618	354	1667	822	2284	1656

PLATE PLACEMENT TOL. = 0.250 inches

PLATE ROTATION TOL. = 5.0 Deg.

JSI GRIP= 0.90 (11) (INPUT = 0.90)
JSI METAL= 0.52 (2) (INPUT = 1.00)

LICENSED PROFESSIONAL ENGINEER
P.M. TREVISAN
100136551
March 13th, 2017
PROVINCE OF ONTARIO

RECEIVED
TOWN OF MILTON
MAR 29, 2017
17-5052
BUILDING DIVISION

READ ALL NOTES ON THIS PAGE AND ON THE ENGINEERING NOTE PAGE ENP-1. THE NOTE PAGE IS AN INTEGRAL PART OF THIS DRAWING AS IT CONTAINS SPECIFICATIONS AND CRITERIA USED IN THE DESIGN OF THIS COMPONENT.

KOTT

JOB NAME	TRUSS NAME	QUANTITY	PLY	JOB DESC.	DRWG NO.
PT0317-060	**T33**	**12**	**1**	TRUSS DESC. LECCO RIDGE-BLOCK 332	

KOTT , Stouffville, ON, CGC

Version 8.100 S Feb 9 2017 MiTek Industries, Inc. Mon Mar 13 13:24:44 2017 Page 1
ID:gtheX5EqOVSIkwpr5Eyn2TyGKTI-BZpP7eoPeJ6gCILPeQ5W7N2Gf?8V49N7wgIdTQzbLkX

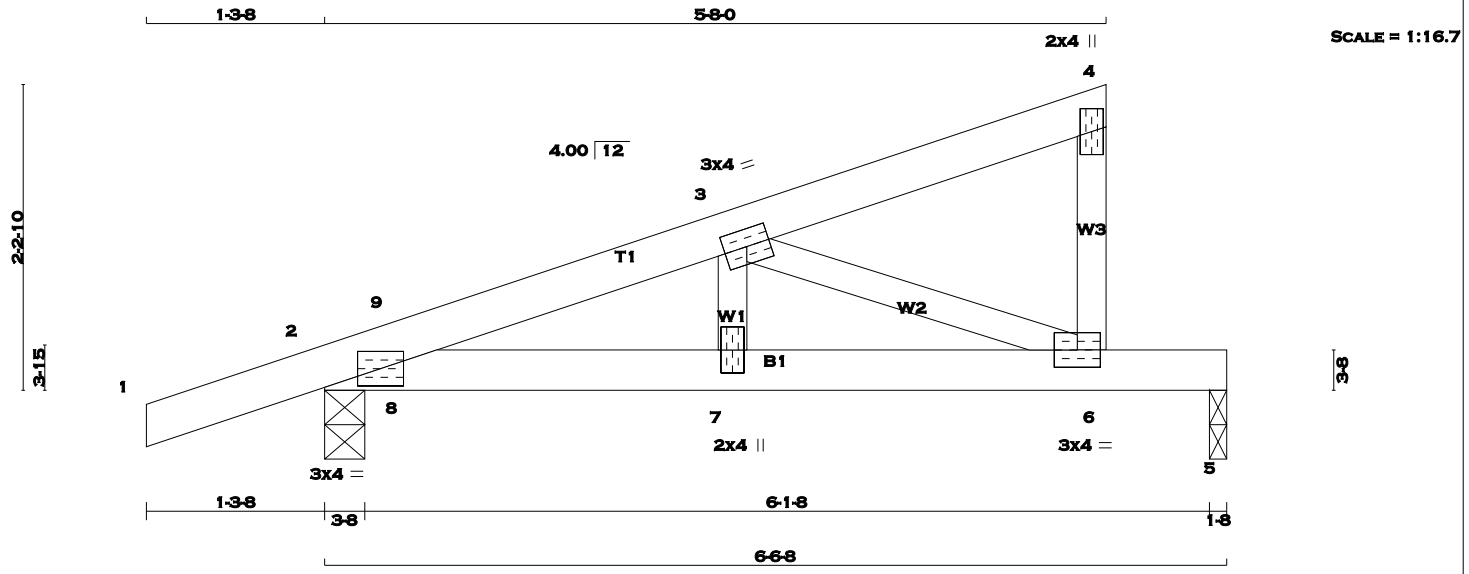

TOTAL WEIGHT = 12 X 20 = 239 lb
[M][F]

LUMBER
N. L. G. A. RULES

CHORDS	SIZE		LUMBER	DESCR.
1 - 4	2x4	DRY	No.2	SPF
6 - 4	2x3	DRY	No.2	SPF
2 - 5	2x4	DRY	No.2	SPF
ALL WEBS	2x3	DRY	No.2	SPF

DRY: SEASONED LUMBER.

PLATES (table is in inches)

JT	TYPE	PLATES	W	LEN	Y	X
2	TMB1-I	MT20	3.0	4.0		
3	TMWW-t	MT20	3.0	4.0		
4	TMV+p	MT20	2.0	4.0		
6	BMVW-t	MT20	3.0	4.0		
7	BMW+w	MT20	2.0	4.0		

A SIZE FOR SIZE SUBSTITUTION OF MITEK MII20 WITH TEE-LOK TL20 PLATES IS ALLOWED.

DIMENSIONS, SUPPORTS AND LOADINGS SPECIFIED BY FABRICATOR TO BE VERIFIED BY BUILDING DESIGNER

BEARINGS

JT	FACTORED GROSS REACTION VERT	HORZ	MAXIMUM FACTORED GROSS REACTION DOWN	HORZ	UPLIFT	INPUT BRG IN-SX	REQRD BRG IN-SX
2	409	0	409	0	0	3-8	3-8
5	247	0	247	0	0	1-8	1-8

UNFACTORED REACTIONS

JT	1ST LCASE COMBINED	MAX./MIN. COMPONENT REACTIONS SNOW	LIVE	PERM.LIVE	WIND	DEAD	SOIL
2	285	212 / 0	0 / 0	0 / 0	0 / 0	73 / 0	0 / 0
5	175	114 / 0	0 / 0	0 / 0	0 / 0	61 / 0	0 / 0

BEARING MATERIAL TO BE SPF NO.2 OR BETTER AT JOINT(S) 2, 5

BRACING
TOP CHORD TO BE SHEATHED OR MAX. PURLIN SPACING = 6.25 FT.
MAX. UNBRACED BOTTOM CHORD LENGTH = 10.00 FT. OR RIGID CEILING DIRECTLY APPLIED.

ALL PITCH BREAKS AND PERIMETER CORNER JOINTS MUST BE LATERALLY RESTRAINED.

LOADING
TOTAL LOAD CASES: (4)

CHORDS

MEMB. FR-TO	MAX. FACTORED FORCE (LBS)	FACTORED VERT. LOAD (PLF) FROM	TO	LC1 MAX CSI (LC)	MAX. UNBRAC LENGTH
1- 2	0 / 15	-77.3	-77.3	0.10 (1)	10.00
2- 9	-607 / 0	-77.3	-77.3	0.01 (1)	6.25
9- 3	-593 / 0	-77.3	-77.3	0.05 (1)	6.25
3- 4	-4 / 0	-77.3	-77.3	0.06 (1)	10.00
6- 4	-91 / 0	0.0	0.0	0.01 (1)	7.81
2- 8	0 / 568	-17.5	-17.5	0.14 (1)	10.00
8- 7	0 / 568	-17.5	-17.5	0.16 (1)	10.00
7- 6	0 / 568	-17.5	-17.5	0.38 (1)	10.00
6- 5	0 / 0	-17.5	-17.5	0.29 (1)	10.00

WEBS

MEMB. FR-TO	MAX. FACTORED FORCE (LBS)	MAX CSI (LC)
7- 3	0 / 178	0.04 (1)
3- 6	-606 / 0	0.11 (1)
8- 9	-74 / 2	0.00 (1)

DESIGN CRITERIA

SPECIFIED LOADS:

TOP	CH.	LL	=	23.3	PSF
		DL	=	3.0	PSF
BOT	CH.	LL	=	0.0	PSF
		DL	=	7.0	PSF
TOTAL	LOAD		=	33.3	PSF

SPACING = 24.0 IN. C/C

THIS TRUSS IS DESIGNED FOR RESIDENTIAL OR SMALL BUILDING REQUIREMENTS OF PART 9, NBCC 2010

THIS DESIGN COMPLIES WITH:
- PART 9 OF OBC 2012 , BCBC 2012 , ABC 2014
- CSA 086-09
- TPIC 2011

(55 % OF 27.2 P.S.F. G.S.L. PLUS 8.4 P.S.F. RAIN LOAD) EQUALS 23.3 P.S.F. SPECIFIED ROOF LIVE LOAD

ALLOWABLE DEFL.(LL)= L/360 (0.22")
CALCULATED VERT. DEFL.(LL) = L/ 999 (0.03")
ALLOWABLE DEFL.(TL)= L/360 (0.22")
CALCULATED VERT. DEFL.(TL) = L/ 999 (0.06")

CSI: TC=0.10 (1-2:1) , BC=0.38 (6-7:1) , WB=0.11 (3-6:1) , SSI=0.19 (5-6:1)

DOL LUMBER=1.00 NAIL=1.00 LS BEND=1.10 COMP=1.10 SHEAR=1.10 TENS= 1.10

COMPANION LIVE LOAD FACTOR = 0.50

TRUSS PLATE MANUFACTURER IS NOT RESPONSIBLE FOR QUALITY CONTROL IN THE TRUSS MANUFACTURING PLANT .

NAIL VALUES

PLATE	GRIP(DRY) (PSI) MAX	MIN	SHEAR (PLI) MAX	MIN	SECTION (PLI) MAX	MIN
MT20	618	354	1667	822	2284	1656

PLATE PLACEMENT TOL. = 0.250 inches

PLATE ROTATION TOL. = 5.0 Deg.

JSI GRIP= 0.86 (6) (INPUT = 0.90)
JSI METAL= 0.21 (6) (INPUT = 1.00)

LICENSED PROFESSIONAL ENGINEER
P.M. TREVISAN
100136551
March 13th, 2017
PROVINCE OF ONTARIO

RECEIVED
TOWN OF MILTON
MAR 29, 2017
17-5052
BUILDING DIVISION

READ ALL NOTES ON THIS PAGE AND ON THE ENGINEERING NOTE PAGE ENP-1. THE NOTE PAGE IS AN INTEGRAL PART OF THIS DRAWING AS IT CONTAINS SPECIFICATIONS AND CRITERIA USED IN THE DESIGN OF THIS COMPONENT.

KOTT

JOB NAME	TRUSS NAME	QUANTITY	PLY	JOB DESC.	DRWG NO.
PT0317-060	**T34**	**16**	**1**	TRUSS DESC. LECCO RIDGE-BLOCK 332	

KOTT , Stouffville, ON, CGC

Version 8.100 S Feb 9 2017 MiTek Industries, Inc. Mon Mar 13 13:24:44 2017 Page 1
ID:gtheX5EqOVSIkwpr5Eyn2TyGKTI-BZpP7eoPeJ6gCILPeQ5W7N2F7?6j48A7wgIdTQzbLkX

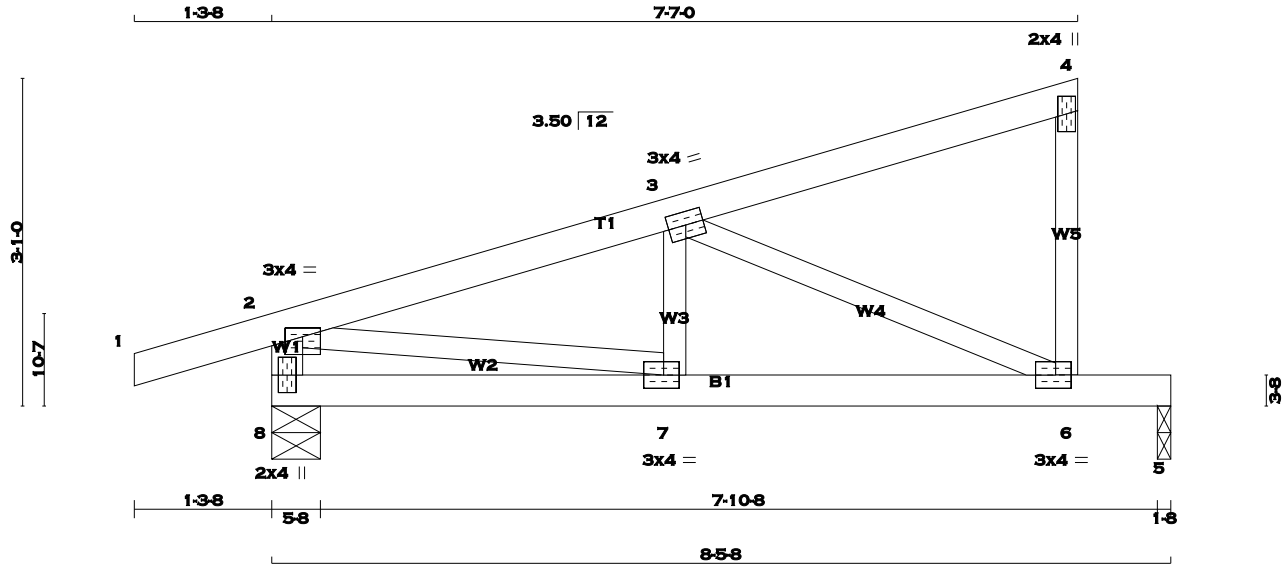

TOTAL WEIGHT = 16 X 30 = 475 lb

LUMBER
N. L. G. A. RULES

CHORDS	SIZE		LUMBER	DESCR.
1 - 4	2x4	DRY	No.2	SPF
6 - 4	2x3	DRY	No.2	SPF
8 - 2	2x4	DRY	No.2	SPF
8 - 5	2x4	DRY	No.2	SPF
ALL WEBS EXCEPT	2x3	DRY	No.2	SPF

DRY: SEASONED LUMBER.

PLATES (table is in inches)

JT	TYPE	PLATES	W	LEN	Y	X
2	TMVW-p	MT20	3.0	4.0	1.00	2.00
3	TMWW-t	MT20	3.0	4.0		
4	TMV+p	MT20	2.0	4.0		
6	BMVW-t	MT20	3.0	4.0	1.50	1.75
7	BMWW-t	MT20	3.0	4.0	1.50	1.75
8	BMV1+p	MT20	2.0	4.0		

A SIZE FOR SIZE SUBSTITUTION OF MITEK MII20 WITH TEE-LOK TL20 PLATES IS ALLOWED.

DIMENSIONS, SUPPORTS AND LOADINGS SPECIFIED BY FABRICATOR TO BE VERIFIED BY BUILDING DESIGNER

BEARINGS

JT	FACTORED GROSS REACTION VERT	HORZ	MAXIMUM FACTORED GROSS REACTION DOWN	HORZ	UPLIFT	INPUT BRG IN-SX	REQRD BRG IN-SX
8	501	0	501	0	0	5-8	5-8
5	337	0	337	0	0	1-8	1-8

UNFACTORED REACTIONS

JT	1ST LCASE COMBINED	MAX./MIN. COMPONENT REACTIONS SNOW	LIVE	PERM.LIVE	WIND	DEAD	SOIL
8	349	257 / 0	0 / 0	0 / 0	0 / 0	92 / 0	0 / 0
5	238	158 / 0	0 / 0	0 / 0	0 / 0	80 / 0	0 / 0

BEARING MATERIAL TO BE SPF NO.2 OR BETTER AT JOINT(S) 8, 5

BRACING
TOP CHORD TO BE SHEATHED OR MAX. PURLIN SPACING = 6.25 FT.
MAX. UNBRACED BOTTOM CHORD LENGTH = 10.00 FT. OR RIGID CEILING DIRECTLY APPLIED.

ALL PITCH BREAKS AND PERIMETER CORNER JOINTS MUST BE LATERALLY RESTRAINED.

LOADING
TOTAL LOAD CASES: (4)

CHORDS

MEMB. FR-TO	MAX. FACTORED FORCE (LBS)	FACTORED VERT. LOAD (PLF) FROM	TO	LC1 MAX CSI (LC)	MAX. UNBRAC LENGTH
1- 2	0 / 14	-77.3	-77.3	0.10 (1)	10.00
2- 3	-629 / 0	-77.3	-77.3	0.13 (1)	6.25
3- 4	-9 / 0	-77.3	-77.3	0.13 (1)	10.00
6- 4	-115 / 0	0.0	0.0	0.03 (1)	7.81
8- 2	-489 / 0	0.0	0.0	0.05 (1)	7.81
8- 7	0 / 0	-17.5	-17.5	0.11 (1)	10.00
7- 6	0 / 612	-17.5	-17.5	0.49 (1)	10.00
6- 5	0 / 0	-17.5	-17.5	0.39 (1)	10.00

WEBS

MEMB. FR-TO	MAX. FACTORED FORCE (LBS)	MAX CSI (LC)
7- 3	0 / 97	0.03 (4)
3- 6	-670 / 0	0.19 (1)
2- 7	0 / 619	0.14 (1)

DESIGN CRITERIA

SPECIFIED LOADS:

TOP	CH.	LL	=	23.3	PSF
		DL	=	3.0	PSF
BOT	CH.	LL	=	0.0	PSF
		DL	=	7.0	PSF
TOTAL	LOAD		=	33.3	PSF

SPACING = 24.0 IN. C/C

THIS TRUSS IS DESIGNED FOR RESIDENTIAL OR SMALL BUILDING REQUIREMENTS OF PART 9, NBCC 2010

THIS DESIGN COMPLIES WITH:
- PART 9 OF OBC 2012 , BCBC 2012 , ABC 2014
- CSA 086-09
- TPIC 2011

(55 % OF 27.2 P.S.F. G.S.L. PLUS 8.4 P.S.F. RAIN LOAD) EQUALS 23.3 P.S.F. SPECIFIED ROOF LIVE LOAD

ALLOWABLE DEFL.(LL)= L/360 (0.28")
CALCULATED VERT. DEFL.(LL) = L/ 999 (0.06")
ALLOWABLE DEFL.(TL)= L/360 (0.28")
CALCULATED VERT. DEFL.(TL) = L/ 873 (0.12")

CSI: TC=0.13 (2-3:1) , BC=0.49 (6-7:1) , WB=0.19 (3-6:1) , SSI=0.26 (5-6:1)

DOL LUMBER=1.00 NAIL=1.00 LS BEND=1.10 COMP=1.10 SHEAR=1.10 TENS= 1.10

COMPANION LIVE LOAD FACTOR = 0.50

TRUSS PLATE MANUFACTURER IS NOT RESPONSIBLE FOR QUALITY CONTROL IN THE TRUSS MANUFACTURING PLANT .

NAIL VALUES

PLATE	GRIP(DRY) (PSI) MAX	MIN	SHEAR (PLI) MAX	MIN	SECTION (PLI) MAX	MIN
MT20	618	354	1667	822	2284	1656

PLATE PLACEMENT TOL. = 0.250 inches

PLATE ROTATION TOL. = 5.0 Deg.

JSI GRIP= 0.83 (7) (INPUT = 0.90)
JSI METAL= 0.23 (7) (INPUT = 1.00)

LICENSED PROFESSIONAL ENGINEER
P.M. TREVISAN
100136551
March 13th, 2017
PROVINCE OF ONTARIO

RECEIVED
TOWN OF MILTON
MAR 29, 2017
17-5052
BUILDING DIVISION

READ ALL NOTES ON THIS PAGE AND ON THE ENGINEERING NOTE PAGE ENP-1. THE NOTE PAGE IS AN INTEGRAL PART OF THIS DRAWING AS IT CONTAINS SPECIFICATIONS AND CRITERIA USED IN THE DESIGN OF THIS COMPONENT.

KOTT

JOB NAME	TRUSS NAME	QUANTITY	PLY	JOB DESC.	DRWG NO.
PT0317-060	**T35**	**9**	**1**	TRUSS DESC. LECCO RIDGE-BLOCK 332	

KOTT , Stouffville, ON, CGC

Version 8.100 S Feb 9 2017 MiTek Industries, Inc. Mon Mar 13 13:24:44 2017 Page 1
ID:gtheX5EqOVSIkwpr5Eyn2TyGKTI-BZpP7eoPeJ6gCILPeQ5W7N2GH?6?48Q7wgIdTQzbLkX

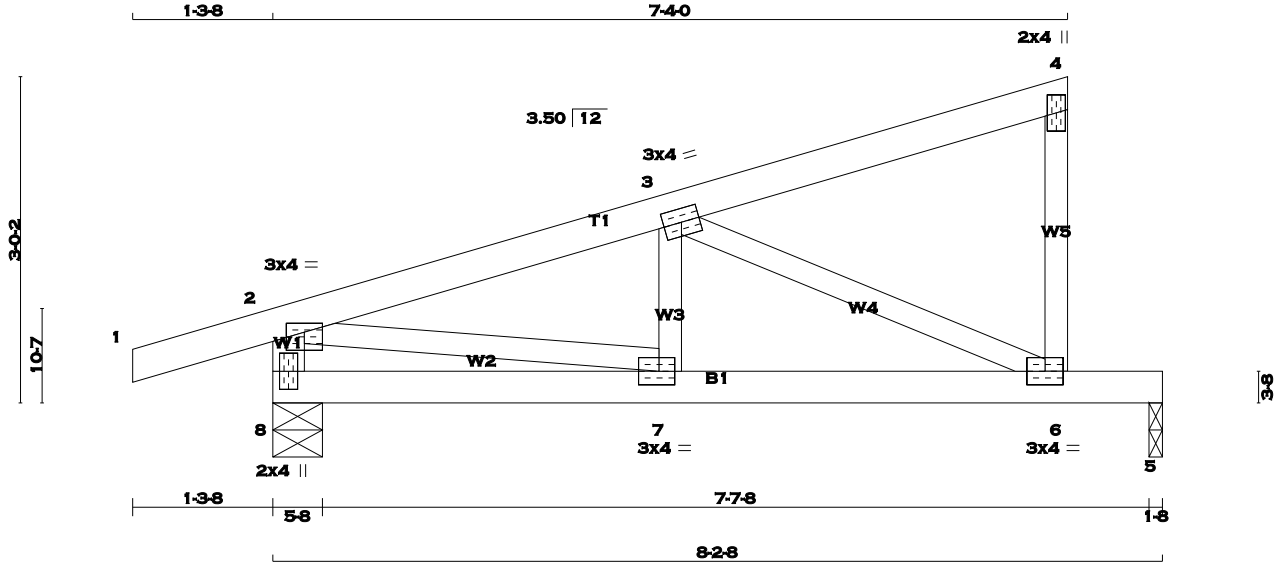

TOTAL WEIGHT = 9 X 29 = 259 lb
[M][F]

LUMBER
N. L. G. A. RULES

CHORDS	SIZE		LUMBER	DESCR.
1 - 4	2x4	DRY	No.2	SPF
6 - 4	2x3	DRY	No.2	SPF
8 - 2	2x4	DRY	No.2	SPF
8 - 5	2x4	DRY	No.2	SPF
ALL WEBS EXCEPT	2x3	DRY	No.2	SPF

DRY: SEASONED LUMBER.

PLATES (table is in inches)

JT	TYPE	PLATES	W	LEN	Y	X
2	TMVW-p	MT20	3.0	4.0	1.00	2.00
3	TMWW-t	MT20	3.0	4.0		
4	TMV+p	MT20	2.0	4.0		
6	BMVW-t	MT20	3.0	4.0		
7	BMWW-t	MT20	3.0	4.0	1.50	1.75
8	BMV1+p	MT20	2.0	4.0		

A SIZE FOR SIZE SUBSTITUTION OF MITEK MII20 WITH TEE-LOK TL20 PLATES IS ALLOWED.

DIMENSIONS, SUPPORTS AND LOADINGS SPECIFIED BY FABRICATOR TO BE VERIFIED BY BUILDING DESIGNER

BEARINGS

JT	FACTORED GROSS REACTION VERT	HORZ	MAXIMUM FACTORED GROSS REACTION DOWN	HORZ	UPLIFT	INPUT BRG IN-SX	REQRD BRG IN-SX
8	489	0	489	0	0	5-8	5-8
5	325	0	325	0	0	1-8	1-8

UNFACTORED REACTIONS

JT	1ST LCASE COMBINED	MAX./MIN. COMPONENT REACTIONS SNOW	LIVE	PERM.LIVE	WIND	DEAD	SOIL
8	341	251 / 0	0 / 0	0 / 0	0 / 0	90 / 0	0 / 0
5	230	153 / 0	0 / 0	0 / 0	0 / 0	77 / 0	0 / 0

BEARING MATERIAL TO BE SPF NO.2 OR BETTER AT JOINT(S) 8, 5

BRACING
TOP CHORD TO BE SHEATHED OR MAX. PURLIN SPACING = 6.25 FT.
MAX. UNBRACED BOTTOM CHORD LENGTH = 10.00 FT. OR RIGID CEILING DIRECTLY APPLIED.

ALL PITCH BREAKS AND PERIMETER CORNER JOINTS MUST BE LATERALLY RESTRAINED.

LOADING
TOTAL LOAD CASES: (4)

CHORDS

MEMB. FR-TO	MAX. FACTORED FORCE (LBS)	FACTORED VERT. LOAD (PLF) FROM	TO	LC1 MAX CSI (LC)	MAX. UNBRAC LENGTH
1- 2	0 / 14	-77.3	-77.3	0.10 (1)	10.00
2- 3	-604 / 0	-77.3	-77.3	0.12 (1)	6.25
3- 4	-8 / 0	-77.3	-77.3	0.12 (1)	10.00
6- 4	-112 / 0	0.0	0.0	0.02 (1)	7.81
8- 2	-478 / 0	0.0	0.0	0.05 (1)	7.81
8- 7	0 / 0	-17.5	-17.5	0.11 (1)	10.00
7- 6	0 / 588	-17.5	-17.5	0.47 (1)	10.00
6- 5	0 / 0	-17.5	-17.5	0.38 (1)	10.00

WEBS

MEMB. FR-TO	MAX. FACTORED FORCE (LBS)	MAX CSI (LC)
7- 3	0 / 94	0.03 (4)
3- 6	-644 / 0	0.17 (1)
2- 7	0 / 595	0.13 (1)

DESIGN CRITERIA

SPECIFIED LOADS:

TOP	CH.	LL	=	23.3	PSF
		DL	=	3.0	PSF
BOT	CH.	LL	=	0.0	PSF
		DL	=	7.0	PSF
TOTAL	LOAD		=	33.3	PSF

SPACING = 24.0 IN. C/C

THIS TRUSS IS DESIGNED FOR RESIDENTIAL OR SMALL BUILDING REQUIREMENTS OF PART 9, NBCC 2010

THIS DESIGN COMPLIES WITH:
- PART 9 OF OBC 2012 , BCBC 2012 , ABC 2014
- CSA 086-09
- TPIC 2011

(55 % OF 27.2 P.S.F. G.S.L. PLUS 8.4 P.S.F. RAIN LOAD) EQUALS 23.3 P.S.F. SPECIFIED ROOF LIVE LOAD

ALLOWABLE DEFL.(LL)= L/360 (0.27")
CALCULATED VERT. DEFL.(LL) = L/ 999 (0.06")
ALLOWABLE DEFL.(TL)= L/360 (0.27")
CALCULATED VERT. DEFL.(TL) = L/ 921 (0.11")

CSI: TC=0.12 (2-3:1) , BC=0.47 (6-7:1) , WB=0.17 (3-6:1) , SSI=0.25 (5-6:1)

DOL LUMBER=1.00 NAIL=1.00 LS BEND=1.10 COMP=1.10 SHEAR=1.10 TENS= 1.10

COMPANION LIVE LOAD FACTOR = 0.50

TRUSS PLATE MANUFACTURER IS NOT RESPONSIBLE FOR QUALITY CONTROL IN THE TRUSS MANUFACTURING PLANT .

NAIL VALUES

PLATE	GRIP(DRY) (PSI) MAX	MIN	SHEAR (PLI) MAX	MIN	SECTION (PLI) MAX	MIN
MT20	618	354	1667	822	2284	1656

PLATE PLACEMENT TOL. = 0.250 inches

PLATE ROTATION TOL. = 5.0 Deg.

JSI GRIP= 0.89 (6) (INPUT = 0.90)
JSI METAL= 0.22 (2) (INPUT = 1.00)

LICENSED PROFESSIONAL ENGINEER
P.M. TREVISAN
100136551
March 13th, 2017
PROVINCE OF ONTARIO

RECEIVED
TOWN OF MILTON
MAR 29, 2017
17-5052
BUILDING DIVISION

READ ALL NOTES ON THIS PAGE AND ON THE ENGINEERING NOTE PAGE ENP-1. THE NOTE PAGE IS AN INTEGRAL PART OF THIS DRAWING AS IT CONTAINS SPECIFICATIONS AND CRITERIA USED IN THE DESIGN OF THIS COMPONENT.

KOTT

JOB NAME	TRUSS NAME	QUANTITY	PLY	JOB DESC.	DRWG NO.
PT0317-060	T36	1	1	TRUSS DESC. LECCO RIDGE-BLOCK 332	ENG JOB: PT0317-060

KOTT , Stouffville, ON, CGC

Version 8.100 S Feb 9 2017 MiTek Industries, Inc. Mon Mar 13 13:24:45 2017 Page 1

ID:gtheX5EqOVSIkwpr5Eyn2TyGKTl-flNnK_p1PdFXqSwbC7dlgbbPdPXwpdlG9K2B?tzbLkW

SCALE = 1:25.8

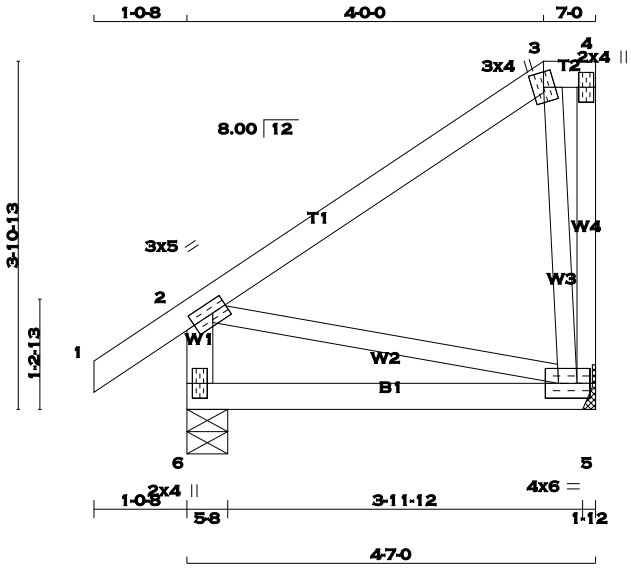

TOTAL WEIGHT = 23 lb [M]

LUMBER

N. L. G. A. RULES

CHORDS	SIZE		LUMBER	DESCR.
1 - 3	2x4	DRY	No.2	SPF
3 - 4	2x4	DRY	No.2	SPF
5 - 4	2x3	DRY	No.2	SPF
6 - 2	2x4	DRY	No.2	SPF
6 - 5	2x4	DRY	No.2	SPF
ALL WEBS EXCEPT	2x3	DRY	No.2	SPF

DRY: SEASONED LUMBER.

PLATES (table is in inches)

JT	TYPE	PLATES	W	LEN	Y	X
2	TMVW-t	MT20	3.0	5.0	1.50	2.00
3	TTW+m	MT20	3.0	4.0		
4	TMV+p	MT20	2.0	4.0		
5	BMVWW1-t	MT20	4.0	6.0		
6	BMV1+p	MT20	2.0	4.0		

A SIZE FOR SIZE SUBSTITUTION OF MITEK MII20 WITH TEE-LOK TL20 PLATES IS ALLOWED.

DIMENSIONS, SUPPORTS AND LOADINGS SPECIFIED BY FABRICATOR TO BE VERIFIED BY BUILDING DESIGNER

BEARINGS

JT	FACTORED GROSS REACTION VERT	HORZ	MAXIMUM FACTORED GROSS REACTION DOWN	HORZ	UPLIFT	INPUT BRG IN-SX	REQRD BRG IN-SX
5	217	0	217	0	0	HANGER BY OTHERS MIN. SEAT SIZE: 1-12	
6	304	0	304	0	0	5-8	5-8

UNFACTORED REACTIONS

JT	1ST LCASE COMBINED	MAX./MIN. COMPONENT REACTIONS SNOW	LIVE	PERM.LIVE	WIND	DEAD	SOIL
5	153	107 / 0	0 / 0	0 / 0	0 / 0	46 / 0	0 / 0
6	212	159 / 0	0 / 0	0 / 0	0 / 0	53 / 0	0 / 0

BEARING MATERIAL TO BE SPF NO.2 OR BETTER AT JOINT(S) 6

BRACING

TOP CHORD TO BE SHEATHED OR MAX. PURLIN SPACING = 6.25 FT.
MAX. UNBRACED BOTTOM CHORD LENGTH = 10.00 FT. OR RIGID CEILING DIRECTLY APPLIED.

ALL PITCH BREAKS AND PERIMETER CORNER JOINTS MUST BE LATERALLY RESTRAINED.

LOADING

TOTAL LOAD CASES: (4)

CHORDS

MEMB. FR-TO	MAX. FACTORED FORCE (LBS)	VERT. LOAD (PLF) FROM	TO	MAX CSI (LC)	MAX. UNBRAC LENGTH
1- 2	0 / 24	-77.3	-77.3	0.07 (1)	10.00
2- 3	-31 / 0	-77.3	-77.3	0.21 (1)	6.25
3- 4	0 / 0	-77.3	-77.3	0.00 (1)	10.00
5- 4	-23 / 0	0.0	0.0	0.01 (1)	7.81
6- 2	-264 / 0	0.0	0.0	0.03 (1)	7.81
6- 5	0 / 0	-17.5	-17.5	0.11 (4)	10.00

WEBS

MEMB. FR-TO	MAX. FACTORED FORCE (LBS)	MAX CSI (LC)
3- 5	-162 / 0	0.04 (1)
2- 5	0 / 26	0.01 (1)

DESIGN CRITERIA

SPECIFIED LOADS:

TOP CH.	LL	=	23.3	PSF
	DL	=	3.0	PSF
BOT CH.	LL	=	0.0	PSF
	DL	=	7.0	PSF
TOTAL LOAD		=	33.3	PSF

SPACING = 24.0 IN. C/C

LOADING IN FLAT SECTION BASED ON A SLOPE OF 6.00/12

THIS TRUSS IS DESIGNED FOR RESIDENTIAL OR SMALL BUILDING REQUIREMENTS OF PART 9, NBCC 2010

THIS DESIGN COMPLIES WITH:
- PART 9 OF OBC 2012 , BCBC 2012 , ABC 2014
- CSA 086-09
- TPIC 2011

(55 % OF 27.2 P.S.F. G.S.L. PLUS 8.4 P.S.F. RAIN LOAD) EQUALS 23.3 P.S.F. SPECIFIED ROOF LIVE LOAD

ALLOWABLE DEFL.(TL)= L/360 (0.19")
CALCULATED VERT. DEFL.(TL) = L/ 999 (0.02")

CSI: TC=0.21 (2-3:1) , BC=0.11 (5-6:4) , WB=0.04 (3-5:1) , SSI=0.10 (2-3:1)

DOL LUMBER=1.00 NAIL=1.00 LS BEND=1.10 COMP=1.10 SHEAR=1.10 TENS= 1.10

COMPANION LIVE LOAD FACTOR = 0.50

AUTOSOLVE RIGHT HEEL ONLY

TRUSS PLATE MANUFACTURER IS NOT RESPONSIBLE FOR QUALITY CONTROL IN THE TRUSS MANUFACTURING PLANT .

NAIL VALUES

PLATE	GRIP(DRY) (PSI) MAX	MIN	SHEAR (PLI) MAX	MIN	SECTION (PLI) MAX	MIN
MT20	618	354	1667	822	2284	1656

PLATE PLACEMENT TOL. = 0.250 inches

PLATE ROTATION TOL. = 5.0 Deg.

JSI GRIP= 0.24 (2) (INPUT = 0.90)
JSI METAL= 0.07 (3) (INPUT = 1.00)

LICENSED PROFESSIONAL ENGINEER
P.M. TREVISAN
100136551
March 13th, 2017
PROVINCE OF ONTARIO

RECEIVED
TOWN OF MILTON
MAR 29, 2017
17-5052
BUILDING DIVISION

READ ALL NOTES ON THIS PAGE AND ON THE ENGINEERING NOTE PAGE ENP-1. THE NOTE PAGE IS AN INTEGRAL PART OF THIS DRAWING AS IT CONTAINS SPECIFICATIONS AND CRITERIA USED IN THE DESIGN OF THIS COMPONENT.

KOTT

JOB NAME	TRUSS NAME	QUANTITY	PLY	JOB DESC.	DRWG NO.
PT0317-060	**T37**	**5**	**1**	TRUSS DESC. LECCO RIDGE-BLOCK 332	

KOTT , Stouffville, ON, CGC

Version 8.100 S Feb 9 2017 MiTek Industries, Inc. Mon Mar 13 13:24:45 2017 Page 1
ID:gtheX5EqOVSIkwpr5Eyn2TyGKTI-flNnK_p1PdFXqSwbC7dlgbbObPXwpdLG9K2B?tzbLkW

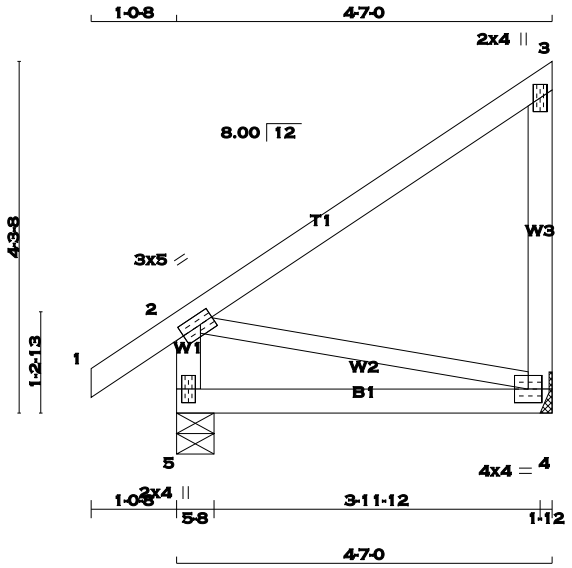

SCALE = 1:28.1

TOTAL WEIGHT = 5 X 22 = 108 lb [M]

LUMBER
N. L. G. A. RULES

CHORDS	SIZE		LUMBER	DESCR.
5 - 2	2x4	DRY	No.2	SPF
1 - 3	2x4	DRY	No.2	SPF
4 - 3	2x4	DRY	No.2	SPF
5 - 4	2x4	DRY	No.2	SPF
ALL WEBS	2x3	DRY	No.2	SPF

DRY: SEASONED LUMBER.

PLATES (table is in inches)

JT	TYPE	PLATES	W	LEN	Y	X
2	TMVW-t	MT20	3.0	5.0	1.50	2.00
3	TMV+p	MT20	2.0	4.0		
4	BMVW1-t	MT20	4.0	4.0		
5	BMV1+p	MT20	2.0	4.0		

A SIZE FOR SIZE SUBSTITUTION OF MITEK MII20 WITH TEE-LOK TL20 PLATES IS ALLOWED.

DIMENSIONS, SUPPORTS AND LOADINGS SPECIFIED BY FABRICATOR TO BE VERIFIED BY BUILDING DESIGNER

BEARINGS

JT	FACTORED GROSS REACTION VERT	HORZ	MAXIMUM FACTORED GROSS REACTION DOWN	HORZ	UPLIFT	INPUT BRG IN-SX	REQRD BRG IN-SX
5	304	0	304	0	0	5-8	5-8
4	217	0	217	0	0	HANGER BY OTHERS MIN. SEAT SIZE: 1-12	

UNFACTORED REACTIONS

JT	1ST LCASE COMBINED	SNOW	MAX./MIN. COMPONENT REACTIONS LIVE	PERM.LIVE	WIND	DEAD	SOIL
5	212	159 / 0	0 / 0	0 / 0	0 / 0	53 / 0	0 / 0
4	153	107 / 0	0 / 0	0 / 0	0 / 0	46 / 0	0 / 0

BEARING MATERIAL TO BE SPF NO.2 OR BETTER AT JOINT(S) 5

BRACING
TOP CHORD TO BE SHEATHED OR MAX. PURLIN SPACING = 10.00 FT.
MAX. UNBRACED BOTTOM CHORD LENGTH = 10.00 FT. OR RIGID CEILING DIRECTLY APPLIED.

ALL PITCH BREAKS AND PERIMETER CORNER JOINTS MUST BE LATERALLY RESTRAINED.

LOADING
TOTAL LOAD CASES: (4)

CHORDS

MEMB. FR-TO	MAX. FACTORED FORCE (LBS)	VERT. LOAD (PLF) FROM	TO	LC1 MAX CSI (LC)	MAX. UNBRAC LENGTH
5- 2	-264 / 0	0.0	0.0	0.03 (1)	7.81
1- 2	0 / 24	-77.3	-77.3	0.07 (1)	10.00
2- 3	0 / 0	-77.3	-77.3	0.28 (1)	10.00
4- 3	-177 / 0	0.0	0.0	0.05 (1)	7.81
5- 4	0 / 0	-17.5	-17.5	0.11 (4)	10.00

WEBS

MEMB. FR-TO	MAX. FACTORED FORCE (LBS)	MAX CSI (LC)
2- 4	0 / 0	0.00 (1)

DESIGN CRITERIA

SPECIFIED LOADS:

TOP CH.	LL =	23.3	PSF
	DL =	3.0	PSF
BOT CH.	LL =	0.0	PSF
	DL =	7.0	PSF
TOTAL LOAD	=	33.3	PSF

SPACING = 24.0 IN. C/C

THIS TRUSS IS DESIGNED FOR RESIDENTIAL OR SMALL BUILDING REQUIREMENTS OF PART 9, NBCC 2010

THIS DESIGN COMPLIES WITH:
- PART 9 OF OBC 2012 , BCBC 2012 , ABC 2014
- CSA 086-09
- TPIC 2011

(55 % OF 27.2 P.S.F. G.S.L. PLUS 8.4 P.S.F. RAIN LOAD) EQUALS 23.3 P.S.F. SPECIFIED ROOF LIVE LOAD

ALLOWABLE DEFL.(TL)= L/360 (0.19")
CALCULATED VERT. DEFL.(TL) = L/ 999 (0.02")

CSI: TC=0.28 (2-3:1) , BC=0.11 (4-5:4) , WB=0.00 (2-4:1) , SSI=0.12 (2-3:1)

DOL LUMBER=1.00 NAIL=1.00 LS BEND=1.10 COMP=1.10 SHEAR=1.10 TENS= 1.10

COMPANION LIVE LOAD FACTOR = 0.50

TRUSS PLATE MANUFACTURER IS NOT RESPONSIBLE FOR QUALITY CONTROL IN THE TRUSS MANUFACTURING PLANT .

NAIL VALUES

PLATE	GRIP(DRY) (PSI) MAX	MIN	SHEAR (PLI) MAX	MIN	SECTION (PLI) MAX	MIN
MT20	618	354	1667	822	2284	1656

PLATE PLACEMENT TOL. = 0.250 inches

PLATE ROTATION TOL. = 5.0 Deg.

JSI GRIP= 0.24 (2) (INPUT = 0.90)
JSI METAL= 0.05 (2) (INPUT = 1.00)

LICENSED PROFESSIONAL ENGINEER
P.M. TREVISAN
100136551
March 13th, 2017
PROVINCE OF ONTARIO

RECEIVED
TOWN OF MILTON
MAR 29, 2017
17-5052
BUILDING DIVISION

READ ALL NOTES ON THIS PAGE AND ON THE ENGINEERING NOTE PAGE ENP-1. THE NOTE PAGE IS AN INTEGRAL PART OF THIS DRAWING AS IT CONTAINS SPECIFICATIONS AND CRITERIA USED IN THE DESIGN OF THIS COMPONENT.

KOTT

JOB NAME	TRUSS NAME	QUANTITY	PLY	JOB DESC.	DRWG NO.
PT0317-060	**T38**	**1**	**1**	TRUSS DESC. LECCO RIDGE-BLOCK 332	ENG JOB: PT0317-060

KOTT , Stouffville, ON, CGC

Version 8.100 S Feb 9 2017 MiTek Industries, Inc. Mon Mar 13 13:24:45 2017 Page 1

ID:gtheX5EqOVSIkwpr5Eyn2TyGKTI-flNnK_p1PdFXqSwbC7dlgbbRKPYxpdXG9K2B?tzbLkW

SCALE = 1:18.8

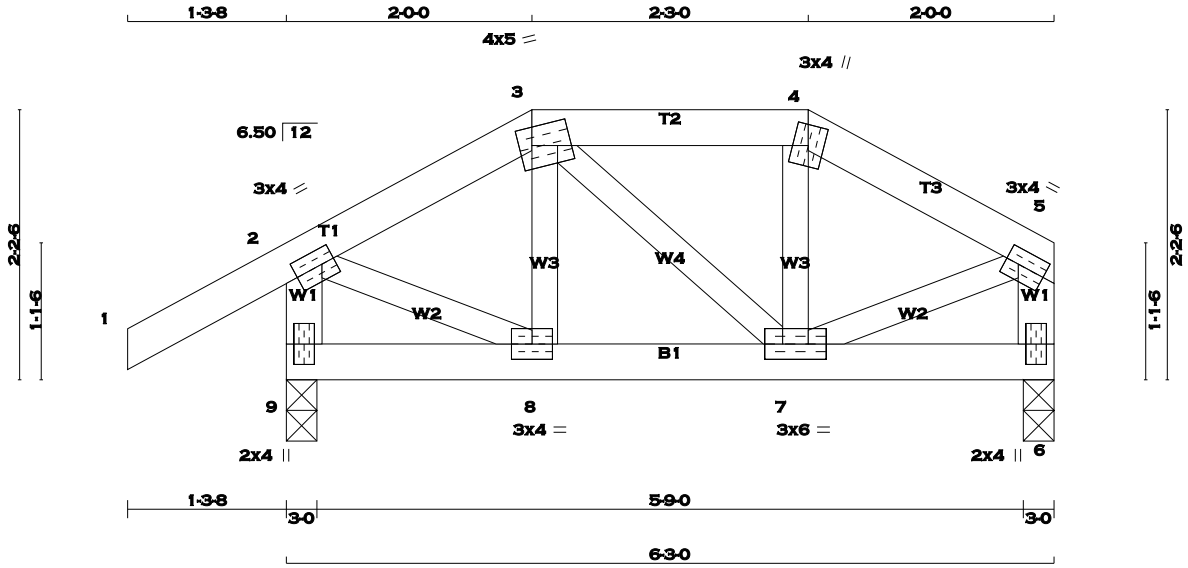

TOTAL WEIGHT = 26 lb

[M][F]

LUMBER

N. L. G. A. RULES

CHORDS	SIZE		LUMBER	DESCR.
1 - 3	2x4	DRY	No.2	SPF
3 - 4	2x4	DRY	No.2	SPF
4 - 5	2x4	DRY	No.2	SPF
9 - 2	2x4	DRY	No.2	SPF
6 - 5	2x4	DRY	No.2	SPF
9 - 6	2x4	DRY	No.2	SPF
ALL WEBS EXCEPT	2x3	DRY	No.2	SPF

DRY: SEASONED LUMBER.

PLATES (table is in inches)

JT	TYPE	PLATES	W	LEN	Y	X
2	TMVW-t	MT20	3.0	4.0	1.50	1.25
3	TTWW-m	MT20	4.0	5.0	1.75	1.25
4	TTW+m	MT20	3.0	4.0		
5	TMVW-t	MT20	3.0	4.0	1.50	1.25
6	BMV1+p	MT20	2.0	4.0		
7	BMWWW-t	MT20	3.0	6.0		
8	BMWW-t	MT20	3.0	4.0		
9	BMV1+p	MT20	2.0	4.0		

A SIZE FOR SIZE SUBSTITUTION OF MITEK MII20 WITH TEE-LOK TL20 PLATES IS ALLOWED.

DIMENSIONS, SUPPORTS AND LOADINGS SPECIFIED BY FABRICATOR TO BE VERIFIED BY BUILDING DESIGNER

BEARINGS

JT	FACTORED GROSS REACTION VERT	HORZ	MAXIMUM FACTORED GROSS REACTION DOWN	HORZ	UPLIFT	INPUT BRG IN-SX	REQRD BRG IN-SX
9	402	0	402	0	0	3-0	3-0
6	296	0	296	0	0	3-0	3-0

UNFACTORED REACTIONS

JT	1ST LCASE COMBINED	MAX./MIN. COMPONENT REACTIONS SNOW	LIVE	PERM.LIVE	WIND	DEAD	SOIL
9	280	209 / 0	0 / 0	0 / 0	0 / 0	71 / 0	0 / 0
6	208	146 / 0	0 / 0	0 / 0	0 / 0	63 / 0	0 / 0

BEARING MATERIAL TO BE SPF NO.2 OR BETTER AT JOINT(S) 9, 6

BRACING

TOP CHORD TO BE SHEATHED OR MAX. PURLIN SPACING = 6.25 FT.
MAX. UNBRACED BOTTOM CHORD LENGTH = 10.00 FT. OR RIGID CEILING DIRECTLY APPLIED.

ALL PITCH BREAKS AND PERIMETER CORNER JOINTS MUST BE LATERALLY RESTRAINED.

LOADING

TOTAL LOAD CASES: (4)

CHORDS

MEMB. FR-TO	MAX. FACTORED FORCE (LBS)	FACTORED VERT. LOAD (PLF) FROM	TO	LC1 MAX CSI (LC)	MAX. UNBRAC LENGTH
1- 2	0 / 25	-77.3	-77.3	0.10 (1)	10.00
2- 3	-248 / 0	-77.3	-77.3	0.04 (1)	6.25
3- 4	-215 / 0	-77.3	-77.3	0.05 (1)	6.25
4- 5	-248 / 0	-77.3	-77.3	0.04 (1)	6.25
9- 2	-385 / 0	0.0	0.0	0.04 (1)	7.81
6- 5	-279 / 0	0.0	0.0	0.03 (1)	7.81
9- 8	0 / 0	-17.5	-17.5	0.02 (4)	10.00
8- 7	0 / 215	-17.5	-17.5	0.04 (1)	10.00
7- 6	0 / 0	-17.5	-17.5	0.02 (4)	10.00

WEBS

MEMB. FR-TO	MAX. FACTORED FORCE (LBS)	MAX CSI (LC)
8- 3	-45 / 18	0.01 (1)
3- 7	0 / 0	0.00 (1)
7- 4	-45 / 19	0.01 (1)
2- 8	0 / 233	0.05 (1)
7- 5	0 / 233	0.05 (1)

DESIGN CRITERIA

SPECIFIED LOADS:

TOP CH.	LL	=	23.3	PSF
	DL	=	3.0	PSF
BOT CH.	LL	=	0.0	PSF
	DL	=	7.0	PSF
TOTAL LOAD		=	33.3	PSF

SPACING = 24.0 IN. C/C

LOADING IN FLAT SECTION BASED ON A SLOPE OF 6.00/12

THIS TRUSS IS DESIGNED FOR RESIDENTIAL OR SMALL BUILDING REQUIREMENTS OF PART 9, NBCC 2010

THIS DESIGN COMPLIES WITH:
- PART 9 OF OBC 2012 , BCBC 2012 , ABC 2014
- CSA 086-09
- TPIC 2011

(55 % OF 27.2 P.S.F. G.S.L. PLUS 8.4 P.S.F. RAIN LOAD) EQUALS 23.3 P.S.F. SPECIFIED ROOF LIVE LOAD

ALLOWABLE DEFL.(LL)= L/360 (0.21")
CALCULATED VERT. DEFL.(LL) = L/ 999 (0.00")
ALLOWABLE DEFL.(TL)= L/360 (0.21")
CALCULATED VERT. DEFL.(TL) = L/ 999 (0.00")

CSI: TC=0.10 (1-2:1) , BC=0.04 (7-8:1) , WB=0.05 (2-8:1) , SSI=0.07 (1-2:1)

DOL LUMBER=1.00 NAIL=1.00 LS BEND=1.10 COMP=1.10 SHEAR=1.10 TENS= 1.10

COMPANION LIVE LOAD FACTOR = 0.50

TRUSS PLATE MANUFACTURER IS NOT RESPONSIBLE FOR QUALITY CONTROL IN THE TRUSS MANUFACTURING PLANT .

NAIL VALUES

PLATE	GRIP(DRY) (PSI) MAX	MIN	SHEAR (PLI) MAX	MIN	SECTION (PLI) MAX	MIN
MT20	618	354	1667	822	2284	1656

PLATE PLACEMENT TOL. = 0.250 inches

PLATE ROTATION TOL. = 5.0 Deg.

JSI GRIP= 0.59 (2) (INPUT = 0.90)
JSI METAL= 0.13 (2) (INPUT = 1.00)

LICENSED PROFESSIONAL ENGINEER
P.M. TREVISAN
100136551
March 13th, 2017
PROVINCE OF ONTARIO

RECEIVED
TOWN OF MILTON
MAR 29, 2017
17-5052
BUILDING DIVISION

READ ALL NOTES ON THIS PAGE AND ON THE ENGINEERING NOTE PAGE ENP-1. THE NOTE PAGE IS AN INTEGRAL PART OF THIS DRAWING AS IT CONTAINS SPECIFICATIONS AND CRITERIA USED IN THE DESIGN OF THIS COMPONENT.

KOTT

JOB NAME	TRUSS NAME	QUANTITY	PLY	JOB DESC.	DRWG NO.
PT0317-060	**T39**	**2**	**1**	TRUSS DESC. LECCO RIDGE-BLOCK 332	

KOTT , Stouffville, ON, CGC

Version 8.100 S Feb 9 2017 MiTek Industries, Inc. Mon Mar 13 13:24:45 2017 Page 1
ID:gtheX5EqOVSIkwpr5Eyn2TyGKTI-flNnK_p1PdFXqSwbC7dlgbbRKPYupdfG9K2B?tzbLkW

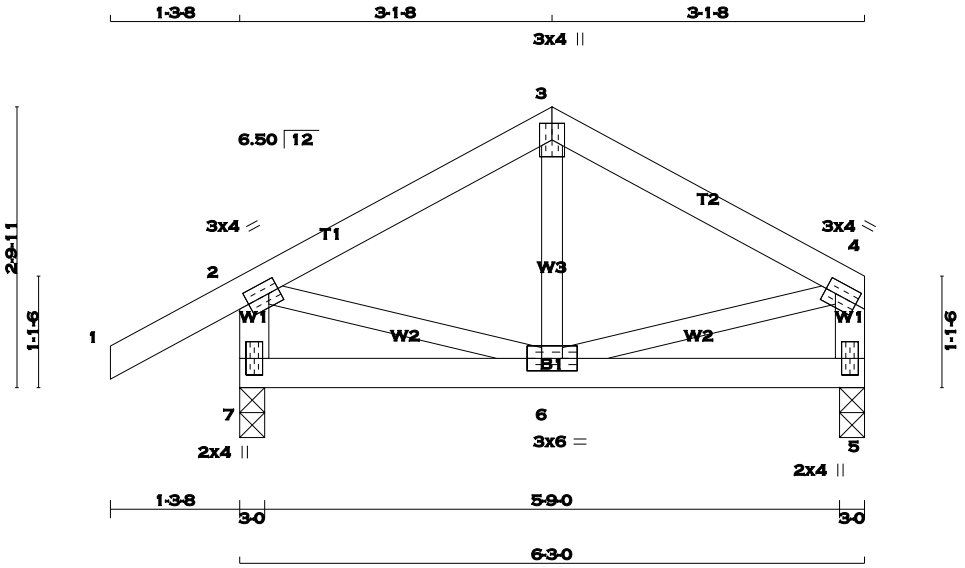

TOTAL WEIGHT = 2 X 25 = 50 lb
[M][F]

LUMBER
N. L. G. A. RULES

CHORDS	SIZE		LUMBER	DESCR.
1 - 3	2x4	DRY	No.2	SPF
3 - 4	2x4	DRY	No.2	SPF
7 - 2	2x4	DRY	No.2	SPF
5 - 4	2x4	DRY	No.2	SPF
7 - 5	2x4	DRY	No.2	SPF
ALL WEBS EXCEPT	2x3	DRY	No.2	SPF

DRY: SEASONED LUMBER.

PLATES (table is in inches)

JT	TYPE	PLATES	W	LEN	Y	X
2	TMVW-t	MT20	3.0	4.0	1.50	1.25
3	TTW+p	MT20	3.0	4.0		
4	TMVW-t	MT20	3.0	4.0	1.50	1.25
5	BMV1+p	MT20	2.0	4.0		
6	BMWWW-t	MT20	3.0	6.0		
7	BMV1+p	MT20	2.0	4.0		

A SIZE FOR SIZE SUBSTITUTION OF MITEK MII20 WITH TEE-LOK TL20 PLATES IS ALLOWED.

DIMENSIONS, SUPPORTS AND LOADINGS SPECIFIED BY FABRICATOR TO BE VERIFIED BY BUILDING DESIGNER

BEARINGS

JT	FACTORED GROSS REACTION VERT	HORZ	MAXIMUM FACTORED GROSS REACTION DOWN	HORZ	UPLIFT	INPUT BRG IN-SX	REQRD BRG IN-SX
7	402	0	402	0	0	3-0	3-0
5	296	0	296	0	0	3-0	3-0

UNFACTORED REACTIONS

JT	1ST LCASE COMBINED	MAX./MIN. COMPONENT REACTIONS SNOW	LIVE	PERM.LIVE	WIND	DEAD	SOIL
7	280	209 / 0	0 / 0	0 / 0	0 / 0	71 / 0	0 / 0
5	208	146 / 0	0 / 0	0 / 0	0 / 0	63 / 0	0 / 0

BEARING MATERIAL TO BE SPF NO.2 OR BETTER AT JOINT(S) 7, 5

BRACING
TOP CHORD TO BE SHEATHED OR MAX. PURLIN SPACING = 6.25 FT.
MAX. UNBRACED BOTTOM CHORD LENGTH = 10.00 FT. OR RIGID CEILING DIRECTLY APPLIED.

ALL PITCH BREAKS AND PERIMETER CORNER JOINTS MUST BE LATERALLY RESTRAINED.

LOADING
TOTAL LOAD CASES: (4)

CHORDS

MEMB. FR-TO	MAX. FACTORED FORCE (LBS)	FACTORED VERT. LOAD (PLF) FROM	TO	LC1 MAX CSI (LC)	MAX. UNBRAC LENGTH
1- 2	0 / 25	-77.3	-77.3	0.10 (1)	10.00
2- 3	-218 / 0	-77.3	-77.3	0.10 (1)	6.25
3- 4	-218 / 0	-77.3	-77.3	0.10 (1)	6.25
7- 2	-379 / 0	0.0	0.0	0.04 (1)	7.81
5- 4	-274 / 0	0.0	0.0	0.03 (1)	7.81
7- 6	0 / 0	-17.5	-17.5	0.05 (4)	10.00
6- 5	0 / 0	-17.5	-17.5	0.05 (4)	10.00

WEBS

MEMB. FR-TO	MAX. FACTORED FORCE (LBS)	MAX CSI (LC)
6- 3	-34 / 43	0.01 (4)
2- 6	0 / 198	0.04 (1)
6- 4	0 / 198	0.04 (1)

DESIGN CRITERIA

SPECIFIED LOADS:

TOP	CH.	LL	=	23.3	PSF
		DL	=	3.0	PSF
BOT	CH.	LL	=	0.0	PSF
		DL	=	7.0	PSF
TOTAL	LOAD		=	33.3	PSF

SPACING = 24.0 IN. C/C

THIS TRUSS IS DESIGNED FOR RESIDENTIAL OR SMALL BUILDING REQUIREMENTS OF PART 9, NBCC 2010

THIS DESIGN COMPLIES WITH:
- PART 9 OF OBC 2012 , BCBC 2012 , ABC 2014
- CSA 086-09
- TPIC 2011

(55 % OF 27.2 P.S.F. G.S.L. PLUS 8.4 P.S.F. RAIN LOAD) EQUALS 23.3 P.S.F. SPECIFIED ROOF LIVE LOAD

ALLOWABLE DEFL.(LL)= L/360 (0.21")
CALCULATED VERT. DEFL.(LL) = L/ 999 (0.00")
ALLOWABLE DEFL.(TL)= L/360 (0.21")
CALCULATED VERT. DEFL.(TL) = L/ 999 (0.00")

CSI: TC=0.10 (1-2:1) , BC=0.05 (6-7:4) , WB=0.04 (2-6:1) , SSI=0.08 (3-4:1)

DOL LUMBER=1.00 NAIL=1.00 LS BEND=1.10 COMP=1.10 SHEAR=1.10 TENS= 1.10

COMPANION LIVE LOAD FACTOR = 0.50

TRUSS PLATE MANUFACTURER IS NOT RESPONSIBLE FOR QUALITY CONTROL IN THE TRUSS MANUFACTURING PLANT .

NAIL VALUES

PLATE	GRIP(DRY) (PSI) MAX	MIN	SHEAR (PLI) MAX	MIN	SECTION (PLI) MAX	MIN
MT20	618	354	1667	822	2284	1656

PLATE PLACEMENT TOL. = 0.250 inches

PLATE ROTATION TOL. = 5.0 Deg.

JSI GRIP= 0.49 (2) (INPUT = 0.90)
JSI METAL= 0.12 (2) (INPUT = 1.00)

LICENSED PROFESSIONAL ENGINEER
P.M. TREVISAN
100136551
March 13th, 2017
PROVINCE OF ONTARIO

RECEIVED
TOWN OF MILTON
MAR 29, 2017
17-5052
BUILDING DIVISION

READ ALL NOTES ON THIS PAGE AND ON THE ENGINEERING NOTE PAGE ENP-1. THE NOTE PAGE IS AN INTEGRAL PART OF THIS DRAWING AS IT CONTAINS SPECIFICATIONS AND CRITERIA USED IN THE DESIGN OF THIS COMPONENT.

KOTT

JOB NAME	TRUSS NAME	QUANTITY	PLY	JOB DESC.	DRWG NO.
PT0317-060	T40	6	1	TRUSS DESC. LECCO RIDGE-BLOCK 332	

KOTT , Stouffville, ON, CGC

Version 8.100 S Feb 9 2017 MiTek Industries, Inc. Mon Mar 13 13:24:46 2017 Page 1
ID:gtheX5EqOVSIkwpr5Eyn2TyGKTI-7xwAXKqfAxNOScVnmr8_Co8c6pspY4aQO_nkXJzbLkV

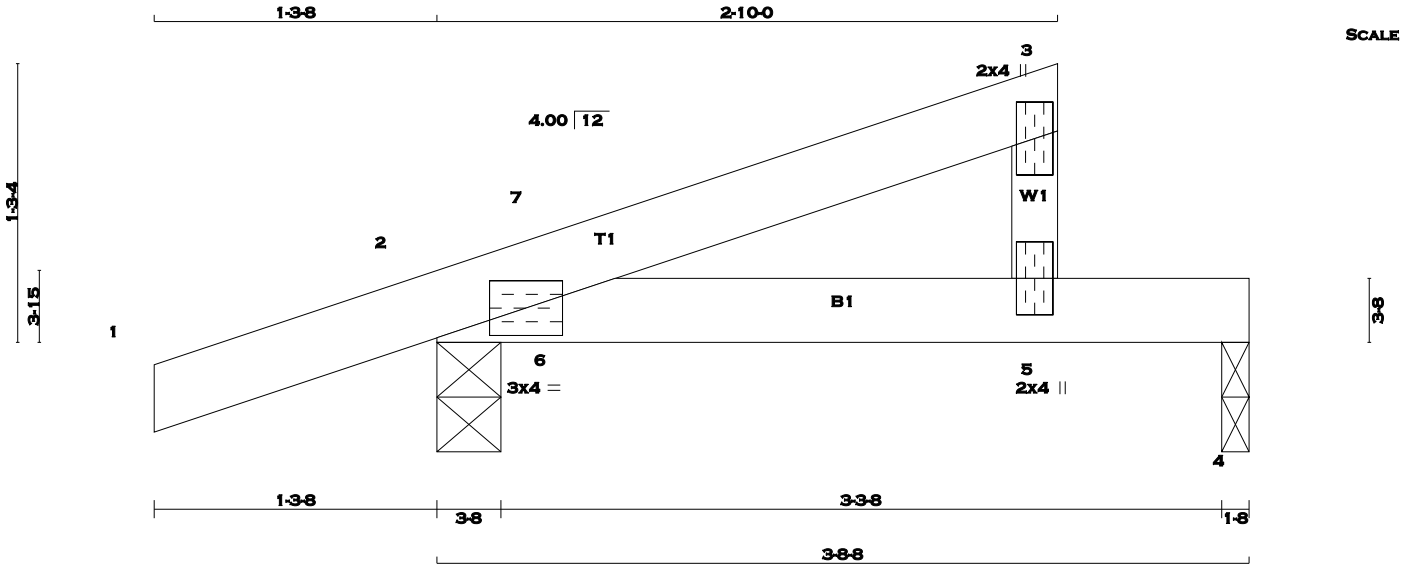

TOTAL WEIGHT = 6 X 10 = 59 lb [M]

LUMBER
N. L. G. A. RULES

CHORDS	SIZE		LUMBER	DESCR.
1 - 3	2x4	DRY	No.2	SPF
5 - 3	2x3	DRY	No.2	SPF
2 - 4	2x4	DRY	No.2	SPF

DRY: SEASONED LUMBER.

PLATES (table is in inches)

JT	TYPE	PLATES	W	LEN	Y	X
2	TMB1-I	MT20	3.0	4.0		
3	TMV+p	MT20	2.0	4.0		
5	BMV+p	MT20	2.0	4.0		

A SIZE FOR SIZE SUBSTITUTION OF MITEK MII20 WITH TEE-LOK TL20 PLATES IS ALLOWED.

DIMENSIONS, SUPPORTS AND LOADINGS SPECIFIED BY FABRICATOR TO BE VERIFIED BY BUILDING DESIGNER

BEARINGS

JT	FACTORED GROSS REACTION VERT	HORZ	MAXIMUM FACTORED GROSS REACTION DOWN	HORZ	UPLIFT	INPUT BRG IN-SX	REQRD BRG IN-SX
2	271	0	271	0	0	3-8	3-8
4	116	0	116	0	0	1-8	1-8

UNFACTORED REACTIONS

JT	1ST LCASE COMBINED	MAX./MIN. COMPONENT REACTIONS SNOW	LIVE	PERM.LIVE	WIND	DEAD	SOIL
2	188	144 / 0	0 / 0	0 / 0	0 / 0	44 / 0	0 / 0
4	83	50 / 0	0 / 0	0 / 0	0 / 0	32 / 0	0 / 0

BEARING MATERIAL TO BE SPF NO.2 OR BETTER AT JOINT(S) 2, 4

BRACING
TOP CHORD TO BE SHEATHED OR MAX. PURLIN SPACING = 6.25 FT.
MAX. UNBRACED BOTTOM CHORD LENGTH = 10.00 FT. OR RIGID CEILING DIRECTLY APPLIED.

ALL PITCH BREAKS AND PERIMETER CORNER JOINTS MUST BE LATERALLY RESTRAINED.

LOADING
TOTAL LOAD CASES: (5)

CHORDS

MEMB. FR-TO	MAX. FACTORED FORCE (LBS)	FACTORED VERT. LOAD (PLF) FROM	TO	LC1 MAX CSI (LC)	MAX. UNBRAC LENGTH
1- 2	0 / 15	-77.3	-77.3	0.10 (1)	10.00
2- 7	-25 / 0	-77.3	-77.3	0.06 (1)	6.25
7- 3	0 / 6	-77.3	-77.3	0.10 (1)	10.00
5- 3	-106 / 0	0.0	0.0	0.01 (1)	7.81
2- 6	0 / 0	-17.5	-17.5	0.06 (1)	10.00
6- 5	0 / 0	-17.5	-17.5	0.13 (1)	10.00
5- 4	0 / 0	-17.5	-17.5	0.13 (1)	10.00

WEBS

MEMB. FR-TO	MAX. FACTORED FORCE (LBS)	MAX CSI (LC)
6- 7	-18 / 32	0.00 (1)

CANTILEVER ANALYSIS HAS BEEN CONSIDERED IN THIS DESIGN

DESIGN CRITERIA

SPECIFIED LOADS:

TOP CH.	LL	=	23.3	PSF
	DL	=	3.0	PSF
BOT CH.	LL	=	0.0	PSF
	DL	=	7.0	PSF
TOTAL LOAD		=	33.3	PSF

SPACING = 24.0 IN. C/C

THIS TRUSS IS DESIGNED FOR RESIDENTIAL OR SMALL BUILDING REQUIREMENTS OF PART 9, NBCC 2010

THIS DESIGN COMPLIES WITH:
- PART 9 OF OBC 2012 , BCBC 2012 , ABC 2014
- CSA 086-09
- TPIC 2011

(55 % OF 27.2 P.S.F. G.S.L. PLUS 8.4 P.S.F. RAIN LOAD) EQUALS 23.3 P.S.F. SPECIFIED ROOF LIVE LOAD

ALLOWABLE DEFL.(LL)= L/360 (0.19")
CALCULATED VERT. DEFL.(LL) = L/ 999 (0.01")
ALLOWABLE DEFL.(TL)= L/360 (0.19")
CALCULATED VERT. DEFL.(TL) = L/ 999 (0.03")

CSI: TC=0.10 (3-7:1) , BC=0.13 (4-5:1) , WB=0.00 (6-7:1) , SSI=0.09 (4-5:1)

DOL LUMBER=1.00 NAIL=1.00 LS BEND=1.10 COMP=1.10 SHEAR=1.10 TENS= 1.10

COMPANION LIVE LOAD FACTOR = 0.50

TRUSS PLATE MANUFACTURER IS NOT RESPONSIBLE FOR QUALITY CONTROL IN THE TRUSS MANUFACTURING PLANT .

NAIL VALUES

PLATE	GRIP(DRY) (PSI) MAX	MIN	SHEAR (PLI) MAX	MIN	SECTION (PLI) MAX	MIN
MT20	618	354	1667	822	2284	1656

PLATE PLACEMENT TOL. = 0.250 inches

PLATE ROTATION TOL. = 5.0 Deg.

JSI GRIP= 0.12 (2) (INPUT = 0.90)
JSI METAL= 0.04 (2) (INPUT = 1.00)

LICENSED PROFESSIONAL ENGINEER
P.M. TREVISAN
100136551
March 13th, 2017
PROVINCE OF ONTARIO

RECEIVED
TOWN OF MILTON
MAR 29, 2017
17-5052
BUILDING DIVISION

READ ALL NOTES ON THIS PAGE AND ON THE ENGINEERING NOTE PAGE ENP-1. THE NOTE PAGE IS AN INTEGRAL PART OF THIS DRAWING AS IT CONTAINS SPECIFICATIONS AND CRITERIA USED IN THE DESIGN OF THIS COMPONENT.

KOTT

JOB NAME	TRUSS NAME	QUANTITY	PLY	JOB DESC.	DRWG NO.
PT0317-060	T41	2	1	TRUSS DESC. LECCO RIDGE-BLOCK 332	

KOTT , Stouffville, ON, CGC

Version 8.100 S Feb 9 2017 MiTek Industries, Inc. Mon Mar 13 13:24:46 2017 Page 1
ID:gtheX5EqOVSIkwpr5Eyn2TyGKTI-7xwAXKqfAxNOScVnmr8_Co8TxppFY_6QO_nkXJzbLkV

SCALE: 3/16"=1'

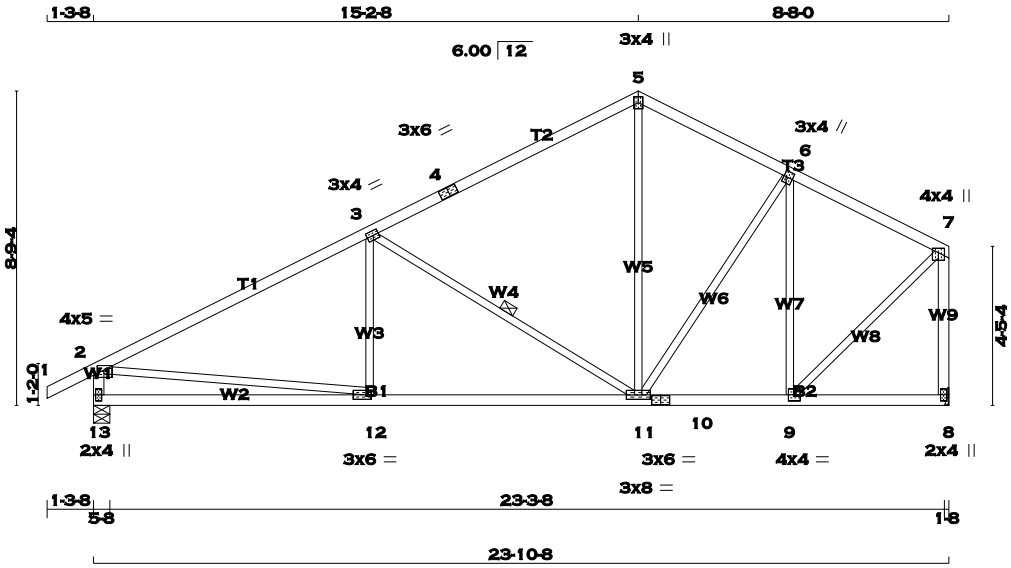

TOTAL WEIGHT = 2 X 104 = 207 lb

LUMBER

N. L. G. A. RULES

CHORDS	SIZE		LUMBER	DESCR.
1 - 4	2x4	DRY	No.2	SPF
4 - 5	2x4	DRY	No.2	SPF
5 - 7	2x4	DRY	No.2	SPF
13 - 2	2x4	DRY	No.2	SPF
8 - 7	2x4	DRY	No.2	SPF
13 - 10	2x4	DRY	No.2	SPF
10 - 8	2x4	DRY	No.2	SPF
ALL WEBS EXCEPT	2x3	DRY	No.2	SPF

DRY: SEASONED LUMBER.

PLATES (table is in inches)

JT	TYPE	PLATES	W	LEN	Y	X
2	TMVW-p	MT20	4.0	5.0	1.50	2.25
3	TMWW-t	MT20	3.0	4.0	1.50	1.75
4	TS-t	MT20	3.0	6.0		
5	TTW+p	MT20	3.0	4.0		
6	TMWW+t	MT20	3.0	4.0	2.00	0.75
7	TMVW+p	MT20	4.0	4.0	1.50	2.00
8	BMV1+p	MT20	2.0	4.0		
9	BMWW-t	MT20	4.0	4.0	2.00	1.75
10	BS-t	MT20	3.0	6.0		
11	BMWWW-t	MT20	3.0	8.0		
12	BMWW-t	MT20	3.0	6.0	1.50	1.75
13	BMV1+p	MT20	2.0	4.0		

A SIZE FOR SIZE SUBSTITUTION OF MITEK MII20 WITH TEE-LOK TL20 PLATES IS ALLOWED.

DIMENSIONS, SUPPORTS AND LOADINGS SPECIFIED BY FABRICATOR TO BE VERIFIED BY BUILDING DESIGNER

BEARINGS

JT	FACTORED GROSS REACTION VERT	HORZ	MAXIMUM FACTORED GROSS REACTION DOWN	HORZ	UPLIFT	INPUT BRG IN-SX	REQRD BRG IN-SX
13	1237	0	1237	0	0	5-8	5-8
8	1132	0	1132	0	0	HANGER BY OTHERS	
						MIN. SEAT SIZE: 1-8	

UNFACTORED REACTIONS

JT	1ST LCASE COMBINED	MAX./MIN. COMPONENT REACTIONS SNOW	LIVE	PERM.LIVE	WIND	DEAD	SOIL
13	866	619 / 0	0 / 0	0 / 0	0 / 0	247 / 0	0 / 0
8	795	556 / 0	0 / 0	0 / 0	0 / 0	239 / 0	0 / 0

BEARING MATERIAL TO BE SPF NO.2 OR BETTER AT JOINT(S) 13

BRACING

TOP CHORD TO BE SHEATHED OR MAX. PURLIN SPACING = 4.43 FT.
MAX. UNBRACED BOTTOM CHORD LENGTH = 10.00 FT. OR RIGID CEILING DIRECTLY APPLIED.

ALL PITCH BREAKS AND PERIMETER CORNER JOINTS MUST BE LATERALLY RESTRAINED.

1 - 2x3 SPF No.2 LATERAL BRACE(S) AT 1/ 2 LENGTH OF 3-11. DBS = 18-0-0 . CBF = 86 LBS.

DBS = DIAGONAL BRACE SPACING (MAX). CBF = CUMULATIVE BRACING FORCE. FASTEN LATERAL BRACE(S) USING (0.122"X3") SPIRAL NAILS : 1 NAIL FOR 2x3 BRACE(S), 2 FOR 1x4, 2x4, 2x5, 3 FOR 2x6, 4 FOR 2x8, 5 FOR 2x10, AND 6 FOR 2x12.

END VERTICAL(S) MUST BE SHEATHED OR HAVE BRACES AS INDICATED IN THE MAX. UNBRACED LENGTH COLUMN OF THE TABLE BELOW

LOADING

TOTAL LOAD CASES: (4)

CHORDS

MEMB. FR-TO	MAX. FACTORED FORCE (LBS)	FACTORED VERT. LOAD LC1 (PLF) FROM	TO	MAX CSI (LC)	MAX. UNBRAC LENGTH
1- 2	0 / 23	-77.3	-77.3	0.10 (1)	10.00
2- 3	-1523 / 0	-77.3	-77.3	0.69 (1)	4.43
3- 4	-865 / 0	-77.3	-77.3	0.61 (1)	5.61
4- 5	-865 / 0	-77.3	-77.3	0.61 (1)	5.61
5- 6	-851 / 0	-77.3	-77.3	0.19 (1)	6.25
6- 7	-738 / 0	-77.3	-77.3	0.19 (1)	6.25
13- 2	-1182 / 0	0.0	0.0	0.12 (1)	7.34
8- 7	-1099 / 0	0.0	0.0	0.36 (1)	7.55
13-12	0 / 0	-17.5	-17.5	0.26 (4)	10.00
12-11	0 / 1391	-17.5	-17.5	0.36 (4)	10.00
11-10	0 / 675	-17.5	-17.5	0.18 (1)	10.00
10- 9	0 / 675	-17.5	-17.5	0.18 (1)	10.00
9- 8	0 / 0	-17.5	-17.5	0.07 (4)	10.00

WEBS

MEMB. FR-TO	MAX. FACTORED FORCE (LBS)	MAX CSI (LC)
12- 3	-3 / 128	0.04 (4)
3-11	-763 / 0	0.41 (1)
11- 5	0 / 405	0.09 (1)
11- 6	0 / 126	0.03 (1)
9- 6	-554 / 0	0.41 (1)
2-12	0 / 1399	0.31 (1)
9- 7	0 / 922	0.21 (1)

DESIGN CRITERIA

SPECIFIED LOADS:

TOP	CH.	LL	=	23.3	PSF
		DL	=	3.0	PSF
BOT	CH.	LL	=	0.0	PSF
		DL	=	7.0	PSF
TOTAL	LOAD		=	33.3	PSF

SPACING = 24.0 IN. C/C

THIS TRUSS IS DESIGNED FOR RESIDENTIAL OR SMALL BUILDING REQUIREMENTS OF PART 9, NBCC 2010

THIS DESIGN COMPLIES WITH:
- PART 9 OF OBC 2012 , BCBC 2012 , ABC 2014
- CSA 086-09
- TPIC 2011

(55 % OF 27.2 P.S.F. G.S.L. PLUS 8.4 P.S.F. RAIN LOAD) EQUALS 23.3 P.S.F. SPECIFIED ROOF LIVE LOAD

ALLOWABLE DEFL.(LL)= L/360 (0.80")
CALCULATED VERT. DEFL.(LL) = L/ 999 (0.06")
ALLOWABLE DEFL.(TL)= L/360 (0.80")
CALCULATED VERT. DEFL.(TL) = L/ 999 (0.13")

CSI: TC=0.69 (2-3:1) , BC=0.36 (11-12:4) , WB=0.41 (3-11:1) , SSI=0.26 (2-3:1)

DOL LUMBER=1.00 NAIL=1.00 LS BEND=1.10 COMP=1.10 SHEAR=1.10 TENS= 1.10

COMPANION LIVE LOAD FACTOR = 0.50

TRUSS PLATE MANUFACTURER IS NOT RESPONSIBLE FOR QUALITY CONTROL IN THE TRUSS MANUFACTURING PLANT .

NAIL VALUES

PLATE	GRIP(DRY) (PSI) MAX	MIN	SHEAR (PLI) MAX	MIN	SECTION (PLI) MAX	MIN
MT20	618	354	1667	822	2284	1656

PLATE PLACEMENT TOL. = 0.250 inches

PLATE ROTATION TOL. = 5.0 Deg.

JSI GRIP= 0.90 (12) (INPUT = 0.90)
JSI METAL= 0.40 (2) (INPUT = 1.00)

LICENSED PROFESSIONAL ENGINEER
P.M. TREVISAN
100136551
March 13th, 2017
PROVINCE OF ONTARIO

RECEIVED
TOWN OF MILTON
MAR 29, 2017
17-5052
BUILDING DIVISION

READ ALL NOTES ON THIS PAGE AND ON THE ENGINEERING NOTE PAGE ENP-1. THE NOTE PAGE IS AN INTEGRAL PART OF THIS DRAWING AS IT CONTAINS SPECIFICATIONS AND CRITERIA USED IN THE DESIGN OF THIS COMPONENT.

KOTT

JOB NAME	TRUSS NAME	QUANTITY	PLY	JOB DESC.	DRWG NO.
PT0317-060	**T42**	**1**	**1**	TRUSS DESC. LECCO RIDGE-BLOCK 332	

KOTT , Stouffville, ON, CGC

Version 8.100 S Feb 9 2017 MiTek Industries, Inc. Mon Mar 13 13:24:46 2017 Page 1
ID:gtheX5EqOVSIkwpr5Eyn2TyGKTI-7xwAXKqfAxNOScVnmr8_Co8WIpqtYwoQO_nkXJzbLkV

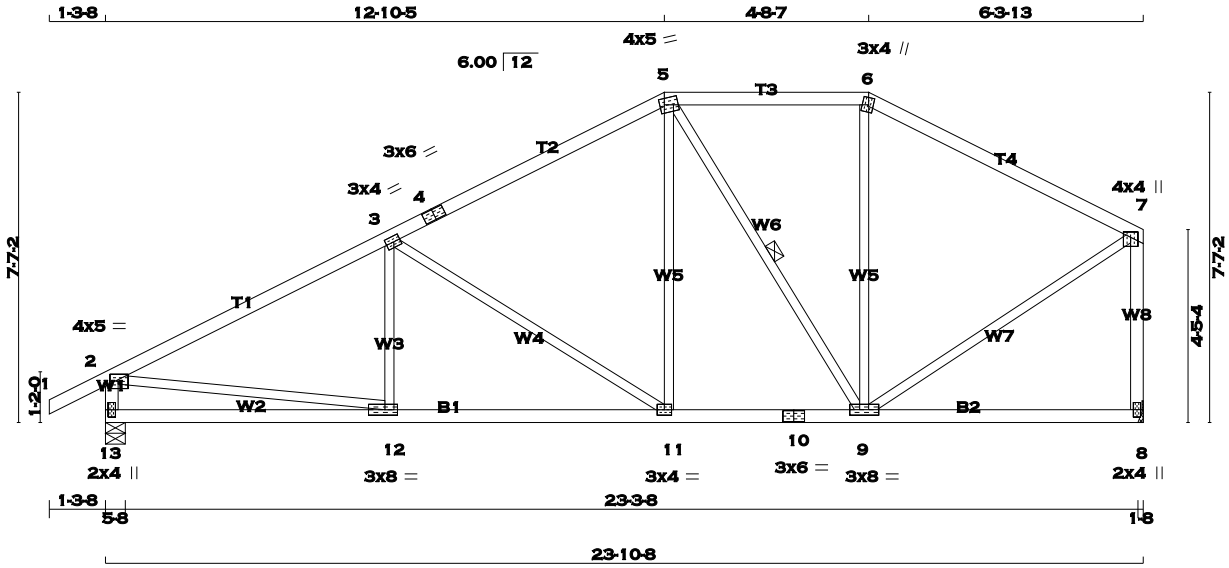

TOTAL WEIGHT = 102 lb

LUMBER

N. L. G. A. RULES

CHORDS	SIZE		LUMBER	DESCR.
1 - 4	2x4	DRY	No.2	SPF
4 - 5	2x4	DRY	No.2	SPF
5 - 6	2x4	DRY	No.2	SPF
6 - 7	2x4	DRY	No.2	SPF
13 - 2	2x4	DRY	No.2	SPF
8 - 7	2x4	DRY	No.2	SPF
13 - 10	2x4	DRY	No.2	SPF
10 - 8	2x4	DRY	No.2	SPF
ALL WEBS EXCEPT	2x3	DRY	No.2	SPF

DRY: SEASONED LUMBER.

PLATES (table is in inches)

JT	TYPE	PLATES	W	LEN	Y	X
2	TMVW-p	MT20	4.0	5.0	1.50	2.25
3	TMWW-t	MT20	3.0	4.0	1.50	1.75
4	TS-t	MT20	3.0	6.0		
5	TTWW-m	MT20	4.0	5.0	1.75	1.25
6	TTW+m	MT20	3.0	4.0	2.00	1.25
7	TMVW+p	MT20	4.0	4.0	1.50	2.00
8	BMV1+p	MT20	2.0	4.0		
9	BMWWW-t	MT20	3.0	8.0		
10	BS-t	MT20	3.0	6.0		
11	BMWW-t	MT20	3.0	4.0		
12	BMWW-t	MT20	3.0	8.0	1.50	3.50
13	BMV1+p	MT20	2.0	4.0		

A SIZE FOR SIZE SUBSTITUTION OF MITEK MII20 WITH TEE-LOK TL20 PLATES IS ALLOWED.

DIMENSIONS, SUPPORTS AND LOADINGS SPECIFIED BY FABRICATOR TO BE VERIFIED BY BUILDING DESIGNER

BEARINGS

JT	FACTORED GROSS REACTION VERT	HORZ	MAXIMUM FACTORED GROSS REACTION DOWN	HORZ	UPLIFT	INPUT BRG IN-SX	REQRD BRG IN-SX
13	1237	0	1237	0	0	5-8	5-8
8	1132	0	1132	0	0	HANGER BY OTHERS MIN. SEAT SIZE: 1-8	

UNFACTORED REACTIONS

JT	1ST LCASE COMBINED	MAX./MIN. COMPONENT REACTIONS SNOW	LIVE	PERM.LIVE	WIND	DEAD	SOIL
13	866	619 / 0	0 / 0	0 / 0	0 / 0	247 / 0	0 / 0
8	795	556 / 0	0 / 0	0 / 0	0 / 0	239 / 0	0 / 0

BEARING MATERIAL TO BE SPF NO.2 OR BETTER AT JOINT(S) 13

BRACING

TOP CHORD TO BE SHEATHED OR MAX. PURLIN SPACING = 4.75 FT.
MAX. UNBRACED BOTTOM CHORD LENGTH = 10.00 FT. OR RIGID CEILING DIRECTLY APPLIED.

ALL PITCH BREAKS AND PERIMETER CORNER JOINTS MUST BE LATERALLY RESTRAINED.

1 - 2x3 SPF No.2 LATERAL BRACE(S) AT 1/ 2 LENGTH OF 5-9. DBS = 20-0-0 . CBF = 45 LBS.

DBS = DIAGONAL BRACE SPACING (MAX). CBF = CUMULATIVE BRACING FORCE. FASTEN LATERAL BRACE(S) USING (0.122"X3") SPIRAL NAILS : 1 NAIL FOR 2x3 BRACE(S), 2 FOR 1x4, 2x4, 2x5, 3 FOR 2x6, 4 FOR 2x8, 5 FOR 2x10, AND 6 FOR 2x12.

END VERTICAL(S) MUST BE SHEATHED OR HAVE BRACES AS INDICATED IN THE MAX. UNBRACED LENGTH COLUMN OF THE TABLE BELOW

LOADING

TOTAL LOAD CASES: (4)

CHORDS

MEMB. FR-TO	MAX. FACTORED FORCE (LBS)	FACTORED VERT. LOAD (PLF) FROM	TO	LC1 MAX CSI (LC)	MAX. UNBRAC LENGTH
1- 2	0 / 23	-77.3	-77.3	0.10 (1)	10.00
2- 3	-1553 / 0	-77.3	-77.3	0.47 (1)	4.75
3- 4	-1056 / 0	-77.3	-77.3	0.43 (1)	5.57
4- 5	-1056 / 0	-77.3	-77.3	0.43 (1)	5.57
5- 6	-734 / 0	-77.3	-77.3	0.23 (1)	6.25
6- 7	-822 / 0	-77.3	-77.3	0.41 (1)	6.13
13- 2	-1190 / 0	0.0	0.0	0.12 (1)	7.32
8- 7	-1086 / 0	0.0	0.0	0.36 (1)	7.58
13-12	0 / 0	-17.5	-17.5	0.19 (4)	10.00
12-11	0 / 1412	-17.5	-17.5	0.32 (1)	10.00
11-10	0 / 926	-17.5	-17.5	0.23 (1)	10.00
10- 9	0 / 926	-17.5	-17.5	0.23 (1)	10.00
9- 8	0 / 0	-17.5	-17.5	0.15 (4)	10.00

WEBS

MEMB. FR-TO	MAX. FACTORED FORCE (LBS)	MAX CSI (LC)
12- 3	-57 / 94	0.03 (4)
3-11	-585 / 0	0.69 (1)
11- 5	0 / 400	0.09 (1)
5- 9	-359 / 0	0.18 (1)
9- 6	-57 / 66	0.06 (1)
2-12	0 / 1424	0.32 (1)
9- 7	0 / 874	0.20 (1)

DESIGN CRITERIA

SPECIFIED LOADS:

TOP CH.	LL	=	23.3	PSF
	DL	=	3.0	PSF
BOT CH.	LL	=	0.0	PSF
	DL	=	7.0	PSF
TOTAL LOAD		=	33.3	PSF

SPACING = 24.0 IN. C/C

LOADING IN FLAT SECTION BASED ON A SLOPE OF 6.00/12

THIS TRUSS IS DESIGNED FOR RESIDENTIAL OR SMALL BUILDING REQUIREMENTS OF PART 9, NBCC 2010

THIS DESIGN COMPLIES WITH:
- PART 9 OF OBC 2012 , BCBC 2012 , ABC 2014
- CSA 086-09
- TPIC 2011

(55 % OF 27.2 P.S.F. G.S.L. PLUS 8.4 P.S.F. RAIN LOAD) EQUALS 23.3 P.S.F. SPECIFIED ROOF LIVE LOAD

ALLOWABLE DEFL.(LL)= L/360 (0.80")
CALCULATED VERT. DEFL.(LL) = L/ 999 (0.05")
ALLOWABLE DEFL.(TL)= L/360 (0.80")
CALCULATED VERT. DEFL.(TL) = L/ 999 (0.11")

CSI: TC=0.47 (2-3:1) , BC=0.32 (11-12:1) , WB=0.69 (3-11:1) , SSI=0.22 (2-3:1)

DOL LUMBER=1.00 NAIL=1.00 LS BEND=1.10 COMP=1.10 SHEAR=1.10 TENS= 1.10

COMPANION LIVE LOAD FACTOR = 0.50

TRUSS PLATE MANUFACTURER IS NOT RESPONSIBLE FOR QUALITY CONTROL IN THE TRUSS MANUFACTURING PLANT .

NAIL VALUES

PLATE	GRIP(DRY) (PSI) MAX	MIN	SHEAR (PLI) MAX	MIN	SECTION (PLI) MAX	MIN
MT20	618	354	1667	822	2284	1656

PLATE PLACEMENT TOL. = 0.250 inches

PLATE ROTATION TOL. = 5.0 Deg.

JSI GRIP= 0.90 (12) (INPUT = 0.90)
JSI METAL= 0.40 (2) (INPUT = 1.00)

LICENSED PROFESSIONAL ENGINEER
P.M. TREVISAN
100136551
March 13th, 2017
PROVINCE OF ONTARIO

RECEIVED
TOWN OF MILTON
MAR 29, 2017
17-5052
BUILDING DIVISION

READ ALL NOTES ON THIS PAGE AND ON THE ENGINEERING NOTE PAGE ENP-1. THE NOTE PAGE IS AN INTEGRAL PART OF THIS DRAWING AS IT CONTAINS SPECIFICATIONS AND CRITERIA USED IN THE DESIGN OF THIS COMPONENT.

KOTT

JOB NAME	TRUSS NAME	QUANTITY	PLY	JOB DESC.	DRWG NO.
PT0317-060	**T43**	**5**	**1**	TRUSS DESC. LECCO RIDGE-BLOCK 332	Page 61 of 79 ENG JOB: PT0317-060

KOTT , Stouffville, ON, CGC

Version 8.100 S Feb 9 2017 MiTek Industries, Inc. Mon Mar 13 13:24:47 2017 Page 1
ID:gtheX5EqOVSIkwpr5Eyn2TyGKTI-b8UYlgqIxEVF3l4_JYfDl0gmtDAKHTwZceXI3lzbLkU

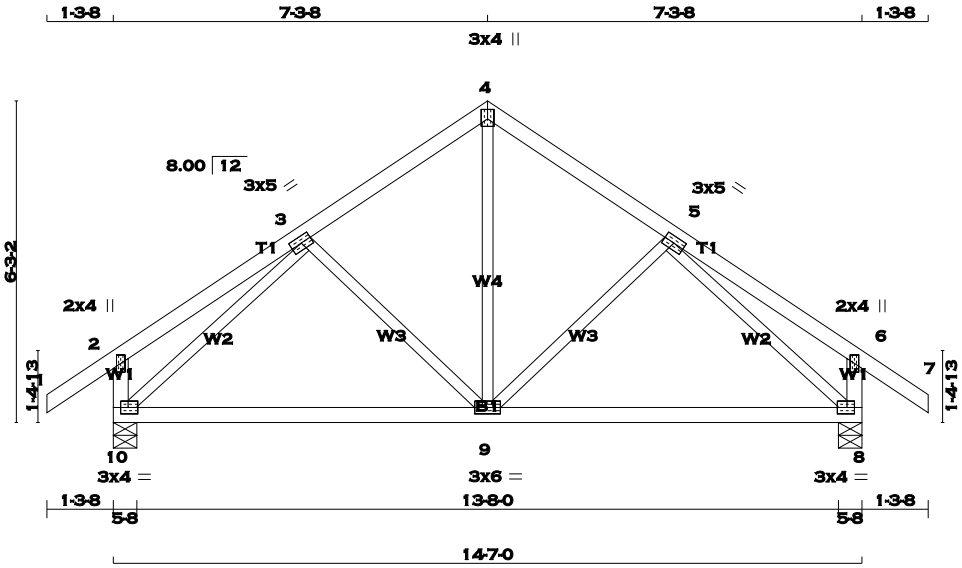

TOTAL WEIGHT = 5 X 63 = 313 lb
[M][F]

LUMBER
N. L. G. A. RULES

CHORDS	SIZE		LUMBER	DESCR.
1 - 4	2x4	DRY	No.2	SPF
4 - 7	2x4	DRY	No.2	SPF
10 - 2	2x4	DRY	No.2	SPF
8 - 6	2x4	DRY	No.2	SPF
10 - 8	2x4	DRY	No.2	SPF
ALL WEBS EXCEPT	2x3	DRY	No.2	SPF

DRY: SEASONED LUMBER.

PLATES (table is in inches)

JT	TYPE	PLATES	W	LEN	Y	X
2	TMV+p	MT20	2.0	4.0		
3	TMWW-t	MT20	3.0	5.0		
4	TTW+p	MT20	3.0	4.0	2.25	1.50
5	TMWW-t	MT20	3.0	5.0		
6	TMV+p	MT20	2.0	4.0		
8	BMVW1-t	MT20	3.0	4.0	1.50	1.75
9	BMWWW-t	MT20	3.0	6.0		
10	BMVW1-t	MT20	3.0	4.0	1.50	1.75

A SIZE FOR SIZE SUBSTITUTION OF MITEK MII20 WITH TEE-LOK TL20 PLATES IS ALLOWED.

DIMENSIONS, SUPPORTS AND LOADINGS SPECIFIED BY FABRICATOR TO BE VERIFIED BY BUILDING DESIGNER

BEARINGS

JT	FACTORED GROSS REACTION VERT	HORZ	MAXIMUM FACTORED GROSS REACTION DOWN	HORZ	UPLIFT	INPUT BRG IN-SX	REQRD BRG IN-SX
10	798	0	798	0	0	5-8	5-8
8	798	0	798	0	0	5-8	5-8

UNFACTORED REACTIONS

JT	1ST LCASE COMBINED	MAX./MIN. COMPONENT REACTIONS SNOW	LIVE	PERM.LIVE	WIND	DEAD	SOIL
10	558	403 / 0	0 / 0	0 / 0	0 / 0	154 / 0	0 / 0
8	558	403 / 0	0 / 0	0 / 0	0 / 0	154 / 0	0 / 0

BEARING MATERIAL TO BE SPF NO.2 OR BETTER AT JOINT(S) 10, 8

BRACING
TOP CHORD TO BE SHEATHED OR MAX. PURLIN SPACING = 6.25 FT.
MAX. UNBRACED BOTTOM CHORD LENGTH = 10.00 FT. OR RIGID CEILING DIRECTLY APPLIED.

ALL PITCH BREAKS AND PERIMETER CORNER JOINTS MUST BE LATERALLY RESTRAINED.

LOADING
TOTAL LOAD CASES: (4)

CHORDS

MEMB. FR-TO	MAX. FACTORED FORCE (LBS)	FACTORED VERT. LOAD (PLF) FROM	TO	LC1 MAX CSI (LC)	MAX. UNBRAC LENGTH
1- 2	0 / 29	-77.3	-77.3	0.10 (1)	10.00
2- 3	0 / 18	-77.3	-77.3	0.16 (1)	10.00
3- 4	-550 / 0	-77.3	-77.3	0.13 (1)	6.25
4- 5	-550 / 0	-77.3	-77.3	0.13 (1)	6.25
5- 6	0 / 18	-77.3	-77.3	0.16 (1)	10.00
6- 7	0 / 29	-77.3	-77.3	0.10 (1)	10.00
10- 2	-215 / 0	0.0	0.0	0.02 (1)	7.81
8- 6	-215 / 0	0.0	0.0	0.02 (1)	7.81
10- 9	0 / 554	-17.5	-17.5	0.30 (4)	10.00
9- 8	0 / 554	-17.5	-17.5	0.30 (4)	10.00

WEBS

MEMB. FR-TO	MAX. FACTORED FORCE (LBS)	MAX CSI (LC)
9- 4	0 / 371	0.08 (1)
9- 5	-155 / 5	0.07 (1)
3- 9	-155 / 5	0.07 (1)
10- 3	-770 / 0	0.31 (1)
5- 8	-770 / 0	0.31 (1)

DESIGN CRITERIA

SPECIFIED LOADS:

TOP	CH.	LL	=	23.3	PSF
		DL	=	3.0	PSF
BOT	CH.	LL	=	0.0	PSF
		DL	=	7.0	PSF
TOTAL	LOAD		=	33.3	PSF

SPACING = 24.0 IN. C/C

THIS TRUSS IS DESIGNED FOR RESIDENTIAL OR SMALL BUILDING REQUIREMENTS OF PART 9, NBCC 2010

THIS DESIGN COMPLIES WITH:
- PART 9 OF OBC 2012 , BCBC 2012 , ABC 2014
- CSA 086-09
- TPIC 2011

(55 % OF 27.2 P.S.F. G.S.L. PLUS 8.4 P.S.F. RAIN LOAD) EQUALS 23.3 P.S.F. SPECIFIED ROOF LIVE LOAD

ALLOWABLE DEFL.(LL)= L/360 (0.49")
CALCULATED VERT. DEFL.(LL) = L/ 999 (0.01")
ALLOWABLE DEFL.(TL)= L/360 (0.49")
CALCULATED VERT. DEFL.(TL) = L/ 999 (0.07")

CSI: TC=0.16 (5-6:1) , BC=0.30 (8-9:4) , WB=0.31 (5-8:1) , SSI=0.11 (4-5:1)

DOL LUMBER=1.00 NAIL=1.00 LS BEND=1.10 COMP=1.10 SHEAR=1.10 TENS= 1.10

COMPANION LIVE LOAD FACTOR = 0.50

TRUSS PLATE MANUFACTURER IS NOT RESPONSIBLE FOR QUALITY CONTROL IN THE TRUSS MANUFACTURING PLANT .

NAIL VALUES

PLATE	GRIP(DRY) (PSI) MAX	MIN	SHEAR (PLI) MAX	MIN	SECTION (PLI) MAX	MIN
MT20	618	354	1667	822	2284	1656

PLATE PLACEMENT TOL. = 0.250 inches

PLATE ROTATION TOL. = 5.0 Deg.

JSI GRIP= 0.85 (8) (INPUT = 0.90)
JSI METAL= 0.22 (3) (INPUT = 1.00)

LICENSED PROFESSIONAL ENGINEER
P.M. TREVISAN
100136551
March 13th, 2017
PROVINCE OF ONTARIO

RECEIVED
TOWN OF MILTON
MAR 29, 2017
17-5052
BUILDING DIVISION

READ ALL NOTES ON THIS PAGE AND ON THE ENGINEERING NOTE PAGE ENP-1. THE NOTE PAGE IS AN INTEGRAL PART OF THIS DRAWING AS IT CONTAINS SPECIFICATIONS AND CRITERIA USED IN THE DESIGN OF THIS COMPONENT.

KOTT

JOB NAME	TRUSS NAME	QUANTITY	PLY	JOB DESC.	DRWG NO.
PT0317-060	**T44**	**1**	**1**	TRUSS DESC. LECCO RIDGE-BLOCK 332	Page 62 of 79 ENG JOB: PT0317-060

KOTT , Stouffville, ON, CGC

Version 8.100 S Feb 9 2017 MiTek Industries, Inc. Mon Mar 13 13:24:47 2017 Page 1

ID:gtheX5EqOVSIkwpr5Eyn2TyGKTI-b8UYlgqIxEVF3l4_JYfDl0gZlD2UHJRZceXI3lzbLkU

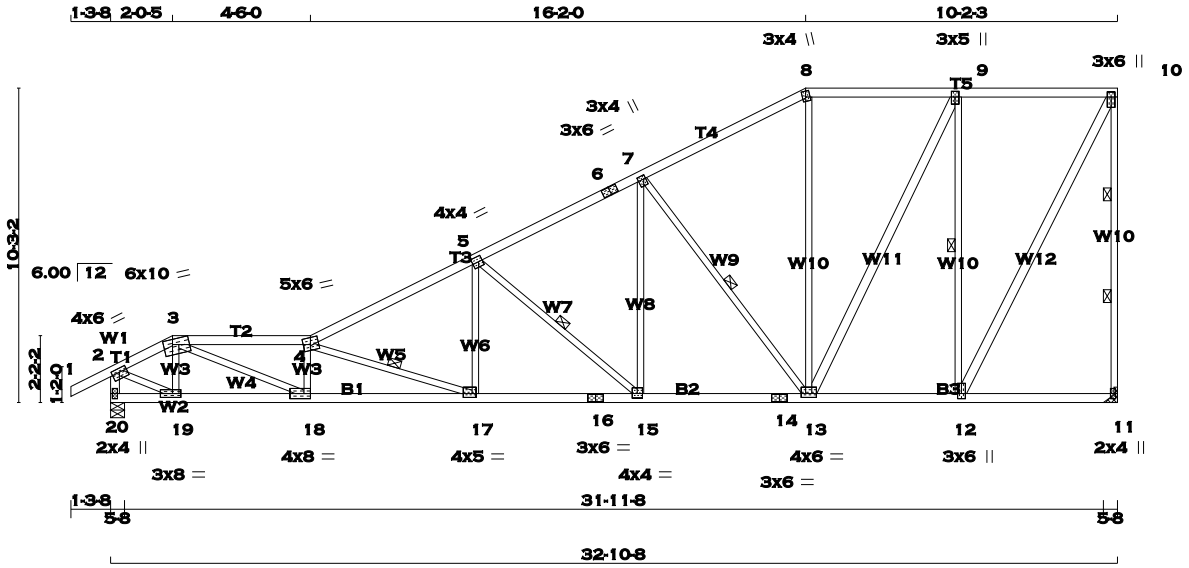

TOTAL WEIGHT = 162 lb

[M][F]

LUMBER

N. L. G. A. RULES

CHORDS	SIZE		LUMBER	DESCR.
1 - 3	2x4	DRY	No.2	SPF
3 - 4	2x4	DRY	No.2	SPF
4 - 6	2x4	DRY	No.2	SPF
6 - 8	2x4	DRY	No.2	SPF
8 - 10	2x4	DRY	No.2	SPF
11 - 10	2x3	DRY	No.2	SPF
20 - 2	2x4	DRY	No.2	SPF
20 - 16	2x4	DRY	No.2	SPF
16 - 14	2x4	DRY	No.2	SPF
14 - 11	2x4	DRY	No.2	SPF
ALL WEBS	2x3	DRY	No.2	SPF
EXCEPT				
13 - 9	2x4	DRY	No.2	SPF
12 - 10	2x4	DRY	No.2	SPF

DRY: SEASONED LUMBER.

PLATES (table is in inches)

JT	TYPE	PLATES	W	LEN	Y	X
2	TMVW-t	MT20	4.0	6.0	1.50	3.00
3	TTWW-m	MT20	6.0	10.0	2.00	3.50
4	TTWW-m	MT20	5.0	6.0	2.75	2.75
5	TMWW-t	MT20	4.0	4.0	2.00	1.50
6	TS-t	MT20	3.0	6.0		
7	TMWW+t	MT20	3.0	4.0	1.50	0.75
8	TTW+m	MT20	3.0	4.0	2.25	1.25
9	TMWW+t	MT20	3.0	5.0	2.25	1.50
10	TMVW+p	MT20	3.0	6.0	2.00	1.50
11	BMV1+p	MT20	2.0	4.0	2.00	0.25
12	BMWW+t	MT20	3.0	6.0	2.00	1.50
13	BMWWW-t	MT20	4.0	6.0	1.50	3.00
14	BS-t	MT20	3.0	6.0		
15	BMWW-t	MT20	4.0	4.0	1.75	2.00
16	BS-t	MT20	3.0	6.0		
17	BMWW-t	MT20	4.0	5.0	1.50	1.50
18	BMWW-t	MT20	4.0	8.0	2.00	2.50
19	BMWW-t	MT20	3.0	8.0	1.50	3.25
20	BMV1+p	MT20	2.0	4.0		

A SIZE FOR SIZE SUBSTITUTION OF MITEK MII20 WITH TEE-LOK TL20 PLATES IS ALLOWED.

DIMENSIONS, SUPPORTS AND LOADINGS SPECIFIED BY FABRICATOR TO BE VERIFIED BY BUILDING DESIGNER

BEARINGS

JT	FACTORED GROSS REACTION VERT	HORZ	MAXIMUM GROSS REACTION DOWN	HORZ	FACTORED UPLIFT	INPUT BRG IN-SX	REQRD BRG IN-SX
11	1559	0	1559	0	0	HANGER BY OTHERS MIN. SEAT SIZE: 5-8	
20	1664	0	1664	0	0	5-8	5-8

UNFACTORED REACTIONS

JT	1ST LCASE COMBINED	SNOW	MAX./MIN. COMPONENT REACTIONS LIVE	PERM.LIVE	WIND	DEAD	SOIL
11	1094	765 / 0	0 / 0	0 / 0	0 / 0	329 / 0	0 / 0
20	1165	829 / 0	0 / 0	0 / 0	0 / 0	337 / 0	0 / 0

BEARING MATERIAL TO BE SPF NO.2 OR BETTER AT JOINT(S) 20

BRACING

TOP CHORD TO BE SHEATHED OR MAX. PURLIN SPACING = 3.12 FT.
MAX. UNBRACED BOTTOM CHORD LENGTH = 10.00 FT. OR RIGID CEILING DIRECTLY APPLIED.

ALL PITCH BREAKS AND PERIMETER CORNER JOINTS MUST BE LATERALLY RESTRAINED.

2 - 2x3 SPF No.2 LATERAL BRACE(S) AT 1/ 3 LENGTH OF 10-11. DBS = 8-0-0 . CBF = 76 LBS.
1 - 2x3 SPF No.2 LATERAL BRACE(S) AT 1/ 2 LENGTH OF 4-17. DBS = 8-0-0 . CBF = 87 LBS.
1 - 2x3 SPF No.2 LATERAL BRACE(S) AT 1/ 2 LENGTH OF 5-15, 7-13. DBS = 12-0-0 . CBF = 87 LBS.
1 - 2x3 SPF No.2 LATERAL BRACE(S) AT 1/ 2 LENGTH OF 9-12. DBS = 10-0-0 . CBF = 79 LBS.

DBS = DIAGONAL BRACE SPACING (MAX). CBF = CUMULATIVE BRACING FORCE. FASTEN LATERAL BRACE(S) USING (0.122"X3") SPIRAL NAILS : 1 NAIL FOR 2x3 BRACE(S), 2 FOR 1x4, 2x4, 2x5, 3 FOR 2x6, 4 FOR 2x8, 5 FOR 2x10, AND 6 FOR 2x12.

END VERTICAL(S) MUST BE SHEATHED OR HAVE BRACES AS INDICATED IN THE MAX. UNBRACED LENGTH COLUMN OF THE TABLE BELOW

LOADING

TOTAL LOAD CASES: (4)

CHORDS

MEMB. FR-TO	MAX. FACTORED FORCE (LBS)	FACTORED VERT. LOAD LC1 (PLF) FROM	TO	MAX CSI (LC)	MAX. UNBRAC LENGTH
1- 2	0 / 23	-77.3	-77.3	0.10 (1)	10.00
2- 3	-1839 / 0	-77.3	-77.3	0.08 (1)	4.90
3- 4	-4245 / 0	-77.3	-77.3	0.43 (1)	3.12
4- 5	-2946 / 0	-77.3	-77.3	0.41 (1)	3.75
5- 6	-2006 / 0	-77.3	-77.3	0.31 (1)	4.51
6- 7	-2006 / 0	-77.3	-77.3	0.31 (1)	4.51
7- 8	-1242 / 0	-77.3	-77.3	0.28 (1)	5.46
8- 9	-1096 / 0	-77.3	-77.3	0.27 (1)	5.73
9-10	-712 / 0	-77.3	-77.3	0.26 (1)	6.25
11-10	-1522 / 0	0.0	0.0	1.00 (1)	4.65
20- 2	-1673 / 0	0.0	0.0	0.17 (1)	6.42
20-19	0 / 0	-17.5	-17.5	0.08 (1)	10.00
19-18	0 / 1611	-17.5	-17.5	0.35 (1)	10.00
18-17	0 / 4305	-17.5	-17.5	0.81 (1)	10.00
17-16	0 / 2653	-17.5	-17.5	0.50 (1)	10.00
16-15	0 / 2653	-17.5	-17.5	0.50 (1)	10.00
15-14	0 / 1795	-17.5	-17.5	0.34 (1)	10.00
14-13	0 / 1795	-17.5	-17.5	0.34 (1)	10.00
13-12	0 / 712	-17.5	-17.5	0.17 (1)	10.00
12-11	0 / 0	-17.5	-17.5	0.11 (4)	10.00

WEBS

MEMB. FR-TO	MAX. FACTORED FORCE (LBS)	MAX CSI (LC)
19- 3	-551 / 0	0.08 (1)
3-18	0 / 2864	0.64 (1)
18- 4	-1091 / 0	0.16 (1)
4-17	-1750 / 0	0.43 (1)
17- 5	0 / 697	0.16 (1)
5-15	-1124 / 0	0.38 (1)
15- 7	0 / 817	0.18 (1)
7-13	-1163 / 0	0.67 (1)
13- 8	0 / 234	0.05 (1)
13- 9	0 / 872	0.14 (1)
12- 9	-1269 / 0	0.92 (1)
12-10	0 / 1541	0.25 (1)
2-19	0 / 1770	0.40 (1)

RECEIVED
TOWN OF MILTON
MAR 29, 2017
17-5052
BUILDING DIVISION

READ ALL NOTES ON THIS PAGE AND ON THE ENGINEERING NOTE PAGE ENP-1. THE NOTE PAGE IS AN INTEGRAL PART OF THIS DRAWING AS IT CONTAINS SPECIFICATIONS AND CRITERIA USED IN THE DESIGN OF THIS COMPONENT.

DESIGN CRITERIA

SPECIFIED LOADS:

TOP CH.	LL	=	23.3	PSF
	DL	=	3.0	PSF
BOT CH.	LL	=	0.0	PSF
	DL	=	7.0	PSF
TOTAL LOAD		=	33.3	PSF

SPACING = 24.0 IN. C/C

LOADING IN ALL FLAT SECTIONS BASED ON A SLOPE OF 6.00/12

THIS TRUSS IS DESIGNED FOR RESIDENTIAL OR SMALL BUILDING REQUIREMENTS OF PART 9, NBCC 2010

THIS DESIGN COMPLIES WITH:
- PART 9 OF OBC 2012 , BCBC 2012 , ABC 2014
- CSA 086-09
- TPIC 2011

(55 % OF 27.2 P.S.F. G.S.L. PLUS 8.4 P.S.F. RAIN LOAD) EQUALS 23.3 P.S.F. SPECIFIED ROOF LIVE LOAD

ALLOWABLE DEFL.(LL)= L/360 (1.10")
CALCULATED VERT. DEFL.(LL) = L/ 999 (0.25")
ALLOWABLE DEFL.(TL)= L/360 (1.10")
CALCULATED VERT. DEFL.(TL) = L/ 873 (0.45")

CSI: TC=1.00 (10-11:1) , BC=0.81 (17-18:1) , WB=0.92 (9-12:1) , SSI=0.19 (9-10:1)

DOL LUMBER=1.00 NAIL=1.00 LS BEND=1.10 COMP=1.10 SHEAR=1.10 TENS= 1.10

COMPANION LIVE LOAD FACTOR = 0.50

TRUSS PLATE MANUFACTURER IS NOT RESPONSIBLE FOR QUALITY CONTROL IN THE TRUSS MANUFACTURING PLANT .

NAIL VALUES

PLATE	GRIP(DRY) (PSI) MAX	MIN	SHEAR (PLI) MAX	MIN	SECTION (PLI) MAX	MIN
MT20	618	354	1667	822	2284	1656

PLATE PLACEMENT TOL. = 0.250 inches

PLATE ROTATION TOL. = 5.0 Deg.

JSI GRIP= 0.89 (17) (INPUT = 0.90)
JSI METAL= 0.68 (16) (INPUT = 1.00)

KOTT

JOB NAME	TRUSS NAME	QUANTITY	PLY	JOB DESC.	DRWG NO.
PT0317-060	**T45**	**1**	**1**	TRUSS DESC. LECCO RIDGE-BLOCK 332	

ENG JOB: PT0317-060

KOTT , Stouffville, ON, CGC

Version 8.100 S Feb 9 2017 MiTek Industries, Inc. Mon Mar 13 13:24:48 2017 Page 1

ID:gtheX5EqOVSIkwpr5Eyn2TyGKTI-3K2wy0rwiYd6hvfAtGATHDDqKcRC0nfjrIGrcCzbLkT

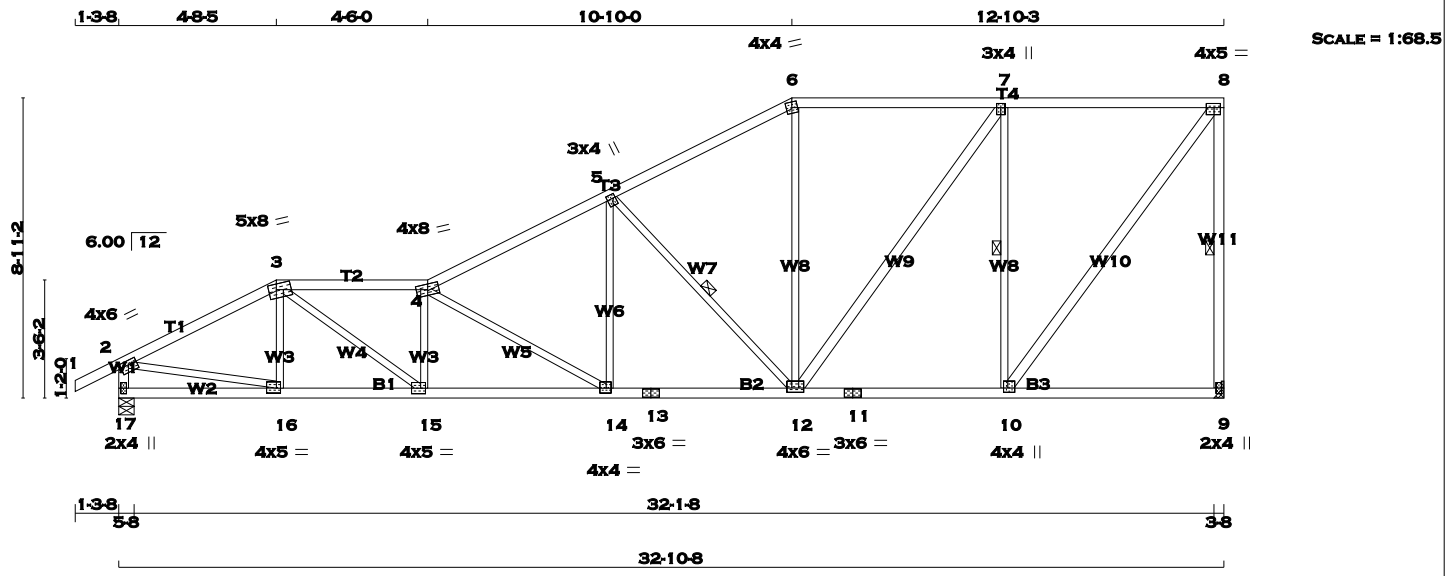

TOTAL WEIGHT = 155 lb

[M]

LUMBER

N. L. G. A. RULES

CHORDS	SIZE		LUMBER	DESCR.
1 - 3	2x4	DRY	No.2	SPF
3 - 4	2x4	DRY	No.2	SPF
4 - 6	2x4	DRY	No.2	SPF
6 - 8	2x4	DRY	No.2	SPF
9 - 8	2x4	DRY	No.2	SPF
17 - 2	2x4	DRY	No.2	SPF
17 - 13	2x4	DRY	No.2	SPF
13 - 11	2x4	DRY	No.2	SPF
11 - 9	2x4	DRY	No.2	SPF
ALL WEBS	2x3	DRY	No.2	SPF
EXCEPT				
12 - 7	2x4	DRY	No.2	SPF
10 - 8	2x4	DRY	No.2	SPF

DRY: SEASONED LUMBER.

PLATES (table is in inches)

JT	TYPE	PLATES	W	LEN	Y	X
2	TMVW-t	MT20	4.0	6.0	1.50	3.00
3	TTWW-m	MT20	5.0	8.0	2.00	2.75
4	TTWW-m	MT20	4.0	8.0		
5	TMWW+t	MT20	3.0	4.0	1.50	0.75
6	TTW-m	MT20	4.0	4.0		
7	TMWW+t	MT20	3.0	4.0	1.50	1.50
8	TMVW-t	MT20	4.0	5.0	1.50	2.25
9	BMV1+p	MT20	2.0	4.0		
10	BMWW+t	MT20	4.0	4.0	1.50	1.50
11	BS-t	MT20	3.0	6.0		
12	BMWWW-t	MT20	4.0	6.0	1.50	3.00
13	BS-t	MT20	3.0	6.0		
14	BMWW-t	MT20	4.0	4.0	1.75	1.75
15	BMWW-t	MT20	4.0	5.0	2.00	1.75
16	BMWW-t	MT20	4.0	5.0	1.75	1.50
17	BMV1+p	MT20	2.0	4.0		

A SIZE FOR SIZE SUBSTITUTION OF MITEK MII20 WITH TEE-LOK TL20 PLATES IS ALLOWED.

DIMENSIONS, SUPPORTS AND LOADINGS SPECIFIED BY FABRICATOR TO BE VERIFIED BY BUILDING DESIGNER

BEARINGS

JT	FACTORED GROSS REACTION VERT	HORZ	MAXIMUM FACTORED GROSS REACTION DOWN	HORZ	UPLIFT	INPUT BRG	REQRD BRG
9	1559	0	1559	0	0	HANGER BY OTHERS	
						MIN. SEAT SIZE: 3-8	
17	1664	0	1664	0	0	5-8	5-8

UNFACTORED REACTIONS

JT	1ST LCASE COMBINED	SNOW	MAX./MIN. COMPONENT REACTIONS LIVE	PERM.LIVE	WIND	DEAD	SOIL
9	1094	765 / 0	0 / 0	0 / 0	0 / 0	329 / 0	0 / 0
17	1165	829 / 0	0 / 0	0 / 0	0 / 0	337 / 0	0 / 0

BEARING MATERIAL TO BE SPF NO.2 OR BETTER AT JOINT(S) 17

BRACING

TOP CHORD TO BE SHEATHED OR MAX. PURLIN SPACING = 3.54 FT.
MAX. UNBRACED BOTTOM CHORD LENGTH = 10.00 FT. OR RIGID CEILING DIRECTLY APPLIED.

ALL PITCH BREAKS AND PERIMETER CORNER JOINTS MUST BE LATERALLY RESTRAINED.

1 - 2x3 SPF No.2 LATERAL BRACE(S) AT 1/ 2 LENGTH OF 8-9. DBS = 8-0-0 . CBF = 76 LBS.
1 - 2x3 SPF No.2 LATERAL BRACE(S) AT 1/ 2 LENGTH OF 5-12, 7-10. DBS = 12-0-0 . CBF = 89 LBS.

DBS = DIAGONAL BRACE SPACING (MAX). CBF = CUMULATIVE BRACING FORCE. FASTEN LATERAL BRACE(S) USING (0.122"X3") SPIRAL NAILS : 1 NAIL FOR 2x3 BRACE(S), 2 FOR 1x4, 2x4, 2x5, 3 FOR 2x6, 4 FOR 2x8, 5 FOR 2x10, AND 6 FOR 2x12.

END VERTICAL(S) MUST BE SHEATHED OR HAVE BRACES AS INDICATED IN THE MAX. UNBRACED LENGTH COLUMN OF THE TABLE BELOW

LOADING

TOTAL LOAD CASES: (4)

CHORDS

MEMB. FR-TO	MAX. FACTORED FORCE (LBS)	FACTORED VERT. LOAD LC1 (PLF) FROM	TO	MAX CSI (LC)	MAX. UNBRAC LENGTH
1- 2	0 / 23	-77.3	-77.3	0.10 (1)	10.00
2- 3	-2206 / 0	-77.3	-77.3	0.40 (1)	4.20
3- 4	-3186 / 0	-77.3	-77.3	0.43 (1)	3.54
4- 5	-2429 / 0	-77.3	-77.3	0.55 (1)	3.89
5- 6	-1598 / 0	-77.3	-77.3	0.46 (1)	4.69
6- 7	-1413 / 0	-77.3	-77.3	0.63 (1)	4.61
7- 8	-998 / 0	-77.3	-77.3	0.59 (1)	5.32
9- 8	-1513 / 0	0.0	0.0	0.56 (1)	5.34
17- 2	-1629 / 0	0.0	0.0	0.16 (1)	6.48
17-16	0 / 0	-17.5	-17.5	0.08 (4)	10.00
16-15	0 / 1963	-17.5	-17.5	0.36 (1)	10.00
15-14	0 / 3212	-17.5	-17.5	0.58 (1)	10.00
14-13	0 / 2194	-17.5	-17.5	0.41 (1)	10.00
13-12	0 / 2194	-17.5	-17.5	0.41 (1)	10.00
12-11	0 / 998	-17.5	-17.5	0.26 (1)	10.00
11-10	0 / 998	-17.5	-17.5	0.26 (1)	10.00
10- 9	0 / 0	-17.5	-17.5	0.18 (4)	10.00

WEBS

MEMB. FR-TO	MAX. FACTORED FORCE (LBS)	MAX CSI (LC)
16- 3	-259 / 0	0.05 (1)
3-15	0 / 1514	0.34 (1)
15- 4	-823 / 0	0.17 (1)
4-14	-1184 / 0	0.86 (1)
14- 5	0 / 708	0.16 (1)
5-12	-1151 / 0	0.51 (1)
12- 6	0 / 363	0.08 (1)
12- 7	0 / 710	0.11 (1)
10- 7	-1192 / 0	0.61 (1)
10- 8	0 / 1655	0.27 (1)
2-16	0 / 2003	0.45 (1)

DESIGN CRITERIA

SPECIFIED LOADS:

TOP CH.	LL	=	23.3	PSF
	DL	=	3.0	PSF
BOT CH.	LL	=	0.0	PSF
	DL	=	7.0	PSF
TOTAL LOAD		=	33.3	PSF

SPACING = 24.0 IN. C/C

LOADING IN ALL FLAT SECTIONS BASED ON A SLOPE OF 6.00/12

THIS TRUSS IS DESIGNED FOR RESIDENTIAL OR SMALL BUILDING REQUIREMENTS OF PART 9, NBCC 2010

THIS DESIGN COMPLIES WITH:
- PART 9 OF OBC 2012 , BCBC 2012 , ABC 2014
- CSA 086-09
- TPIC 2011

(55 % OF 27.2 P.S.F. G.S.L. PLUS 8.4 P.S.F. RAIN LOAD) EQUALS 23.3 P.S.F. SPECIFIED ROOF LIVE LOAD

ALLOWABLE DEFL.(LL)= L/360 (1.10")
CALCULATED VERT. DEFL.(LL) = L/ 999 (0.17")
ALLOWABLE DEFL.(TL)= L/360 (1.10")
CALCULATED VERT. DEFL.(TL) = L/ 999 (0.31")

CSI: TC=0.63 (6-7:1) , BC=0.58 (14-15:1) , WB=0.86 (4-14:1) , SSI=0.24 (7-8:1)

DOL LUMBER=1.00 NAIL=1.00 LS BEND=1.10 COMP=1.10 SHEAR=1.10 TENS= 1.10

COMPANION LIVE LOAD FACTOR = 0.50

TRUSS PLATE MANUFACTURER IS NOT RESPONSIBLE FOR QUALITY CONTROL IN THE TRUSS MANUFACTURING PLANT .

NAIL VALUES

PLATE	GRIP(DRY) (PSI) MAX	MIN	SHEAR (PLI) MAX	MIN	SECTION (PLI) MAX	MIN
MT20	618	354	1667	822	2284	1656

PLATE PLACEMENT TOL. = 0.250 inches

PLATE ROTATION TOL. = 5.0 Deg.

JSI GRIP= 0.90 (10) (INPUT = 0.90)
JSI METAL= 0.59 (16) (INPUT = 1.00)

LICENSED PROFESSIONAL ENGINEER
P.M. TREVISAN
100136551
March 13th, 2017
PROVINCE OF ONTARIO

RECEIVED
TOWN OF MILTON
MAR 29, 2017
17-5052
BUILDING DIVISION

READ ALL NOTES ON THIS PAGE AND ON THE ENGINEERING NOTE PAGE ENP-1. THE NOTE PAGE IS AN INTEGRAL PART OF THIS DRAWING AS IT CONTAINS SPECIFICATIONS AND CRITERIA USED IN THE DESIGN OF THIS COMPONENT.

KOTT

JOB NAME	TRUSS NAME	QUANTITY	PLY	JOB DESC.	DRWG NO.
PT0317-060	**T46**	**1**	**1**	TRUSS DESC. LECCO RIDGE-BLOCK 332	Page 64 of 79 ENG JOB: PT0317-060

KOTT , Stouffville, ON, CGC

Version 8.100 S Feb 9 2017 MiTek Industries, Inc. Mon Mar 13 13:24:48 2017 Page 1
ID:gtheX5EqOVSIkwpr5Eyn2TyGKTI-3K2wy0rwiYd6hvfAtGATHDDqDcSG0odjrIGrcCzbLkT

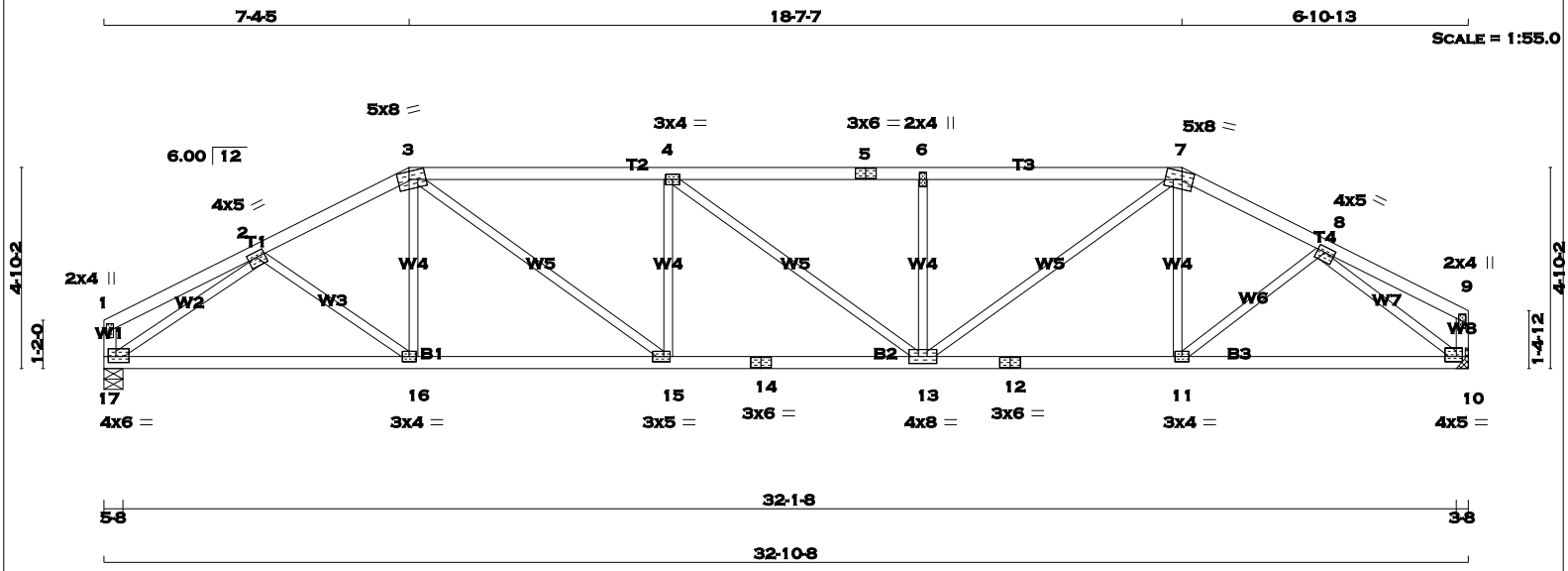

TOTAL WEIGHT = 125 lb [M]

LUMBER
N. L. G. A. RULES

CHORDS	SIZE		LUMBER	DESCR.
1 - 3	2x4	DRY	No.2	SPF
3 - 5	2x4	DRY	No.2	SPF
5 - 7	2x4	DRY	No.2	SPF
7 - 9	2x4	DRY	No.2	SPF
17 - 1	2x4	DRY	No.2	SPF
10 - 9	2x4	DRY	No.2	SPF
17 - 14	2x4	DRY	No.2	SPF
14 - 12	2x4	DRY	No.2	SPF
12 - 10	2x4	DRY	No.2	SPF
ALL WEBS EXCEPT	2x3	DRY	No.2	SPF

DRY: SEASONED LUMBER.

PLATES (table is in inches)

JT	TYPE	PLATES	W	LEN	Y	X
1	TMV+p	MT20	2.0	4.0		
2	TMWW-t	MT20	4.0	5.0	1.50	2.50
3	TTWW-m	MT20	5.0	8.0	2.25	3.25
4	TMWW-t	MT20	3.0	4.0		
5	TS-t	MT20	3.0	6.0		
6	TMW+w	MT20	2.0	4.0		
7	TTWW-m	MT20	5.0	8.0	2.25	3.25
8	TMWW-t	MT20	4.0	5.0	1.50	2.25
9	TMV+p	MT20	2.0	4.0		
10	BMVW1-t	MT20	4.0	5.0	1.50	1.75
11	BMWW-t	MT20	3.0	4.0		
12	BS-t	MT20	3.0	6.0		
13	BMWWW-t	MT20	4.0	8.0		
14	BS-t	MT20	3.0	6.0		
15	BMWW-t	MT20	3.0	5.0	1.50	1.75
16	BMWW-t	MT20	3.0	4.0		
17	BMVW1-t	MT20	4.0	6.0	1.75	2.25

A SIZE FOR SIZE SUBSTITUTION OF MITEK MII20 WITH TEE-LOK TL20 PLATES IS ALLOWED.

DIMENSIONS, SUPPORTS AND LOADINGS SPECIFIED BY FABRICATOR TO BE VERIFIED BY BUILDING DESIGNER

BEARINGS

JT	FACTORED GROSS REACTION VERT	HORZ	MAXIMUM FACTORED GROSS REACTION DOWN	HORZ	UPLIFT	INPUT BRG IN-SX	REQRD BRG IN-SX
17	1559	0	1559	0	0	5-8	5-8
10	1559	0	1559	0	0	HANGER BY OTHERS MIN. SEAT SIZE: 3-8	

UNFACTORED REACTIONS

JT	1ST LCASE COMBINED	SNOW	LIVE	PERM.LIVE	WIND	DEAD	SOIL
		MAX./MIN. COMPONENT REACTIONS					
17	1094	765 / 0	0 / 0	0 / 0	0 / 0	329 / 0	0 / 0
10	1094	765 / 0	0 / 0	0 / 0	0 / 0	329 / 0	0 / 0

BEARING MATERIAL TO BE SPF NO.2 OR BETTER AT JOINT(S) 17

BRACING
TOP CHORD TO BE SHEATHED OR MAX. PURLIN SPACING = 3.59 FT.
MAX. UNBRACED BOTTOM CHORD LENGTH = 10.00 FT. OR RIGID CEILING DIRECTLY APPLIED.

ALL PITCH BREAKS AND PERIMETER CORNER JOINTS MUST BE LATERALLY RESTRAINED.

LOADING
TOTAL LOAD CASES: (4)

CHORDS

MEMB. FR-TO	MAX. FORCE (LBS)	FACTORED VERT. LOAD (PLF) FROM	TO	LC1 MAX CSI (LC)	MAX. UNBRAC LENGTH
1- 2	0 / 12	-77.3	-77.3	0.13 (1)	10.00
2- 3	-2224 / 0	-77.3	-77.3	0.20 (1)	4.41
3- 4	-2800 / 0	-77.3	-77.3	0.64 (1)	3.59
4- 5	-2770 / 0	-77.3	-77.3	0.62 (1)	3.61
5- 6	-2770 / 0	-77.3	-77.3	0.62 (1)	3.61
6- 7	-2770 / 0	-77.3	-77.3	0.63 (1)	3.62
7- 8	-2124 / 0	-77.3	-77.3	0.18 (1)	4.52
8- 9	0 / 11	-77.3	-77.3	0.12 (1)	10.00
17- 1	-116 / 0	0.0	0.0	0.01 (1)	7.81
10- 9	-109 / 0	0.0	0.0	0.01 (1)	7.81
17-16	0 / 1896	-17.5	-17.5	0.42 (1)	10.00
16-15	0 / 1979	-17.5	-17.5	0.43 (1)	10.00
15-14	0 / 2800	-17.5	-17.5	0.51 (1)	10.00
14-13	0 / 2800	-17.5	-17.5	0.51 (1)	10.00
13-12	0 / 1888	-17.5	-17.5	0.41 (1)	10.00
12-11	0 / 1888	-17.5	-17.5	0.41 (1)	10.00
11-10	0 / 1719	-17.5	-17.5	0.38 (1)	10.00

WEBS

MEMB. FR-TO	MAX. FORCE (LBS)	MAX CSI (LC)
2-16	0 / 99	0.03 (4)
16- 3	0 / 104	0.04 (4)
3-15	0 / 1016	0.23 (1)
15- 4	-498 / 0	0.17 (1)
4-13	-37 / 0	0.04 (1)
13- 6	-519 / 0	0.18 (1)
13- 7	0 / 1091	0.25 (1)
11- 7	-2 / 76	0.03 (4)
11- 8	0 / 216	0.05 (1)
17- 2	-2350 / 0	0.80 (1)
8-10	-2217 / 0	0.71 (1)

DESIGN CRITERIA

SPECIFIED LOADS:

TOP CH.	LL	=	23.3	PSF
	DL	=	3.0	PSF
BOT CH.	LL	=	0.0	PSF
	DL	=	7.0	PSF
TOTAL LOAD		=	33.3	PSF

SPACING = 24.0 IN. C/C

LOADING IN FLAT SECTION BASED ON A SLOPE OF 6.00/12

THIS TRUSS IS DESIGNED FOR RESIDENTIAL OR SMALL BUILDING REQUIREMENTS OF PART 9, NBCC 2010

THIS DESIGN COMPLIES WITH:
- PART 9 OF OBC 2012 , BCBC 2012 , ABC 2014
- CSA 086-09
- TPIC 2011

(55 % OF 27.2 P.S.F. G.S.L. PLUS 8.4 P.S.F. RAIN LOAD) EQUALS 23.3 P.S.F. SPECIFIED ROOF LIVE LOAD

ALLOWABLE DEFL.(LL)= L/360 (1.10")
CALCULATED VERT. DEFL.(LL) = L/ 999 (0.17")
ALLOWABLE DEFL.(TL)= L/360 (1.10")
CALCULATED VERT. DEFL.(TL) = L/ 999 (0.31")

CSI: TC=0.64 (3-4:1) , BC=0.51 (13-15:1) , WB=0.80 (2-17:1) , SSI=0.22 (3-4:1)

DOL LUMBER=1.00 NAIL=1.00 LS BEND=1.10 COMP=1.10 SHEAR=1.10 TENS= 1.10

COMPANION LIVE LOAD FACTOR = 0.50

TRUSS PLATE MANUFACTURER IS NOT RESPONSIBLE FOR QUALITY CONTROL IN THE TRUSS MANUFACTURING PLANT .

NAIL VALUES

PLATE	GRIP(DRY) (PSI) MAX	MIN	SHEAR (PLI) MAX	MIN	SECTION (PLI) MAX	MIN
MT20	618	354	1667	822	2284	1656

PLATE PLACEMENT TOL. = 0.250 inches

PLATE ROTATION TOL. = 5.0 Deg.

JSI GRIP= 0.90 (15) (INPUT = 0.90)
JSI METAL= 0.78 (14) (INPUT = 1.00)

LICENSED PROFESSIONAL ENGINEER
P.M. TREVISAN
100136551
March 13th, 2017
PROVINCE OF ONTARIO

RECEIVED
TOWN OF MILTON
MAR 29, 2017
17-5052
BUILDING DIVISION

READ ALL NOTES ON THIS PAGE AND ON THE ENGINEERING NOTE PAGE ENP-1. THE NOTE PAGE IS AN INTEGRAL PART OF THIS DRAWING AS IT CONTAINS SPECIFICATIONS AND CRITERIA USED IN THE DESIGN OF THIS COMPONENT.

KOTT

JOB NAME	TRUSS NAME	QUANTITY	PLY	JOB DESC.	DRWG NO.
PT0317-060	**T47**	**1**	**1**	TRUSS DESC. LECCO RIDGE-BLOCK 332	

ENG JOB: PT0317-060

KOTT , Stouffville, ON, CGC

Version 8.100 S Feb 9 2017 MiTek Industries, Inc. Mon Mar 13 13:24:49 2017 Page 1
ID:gtheX5EqOVSIkwpr5Eyn2TyGKTI-XWcIAMsYTsIzJ3DMRzhiqRm?r0kQIlws4y0O8ezbLkS

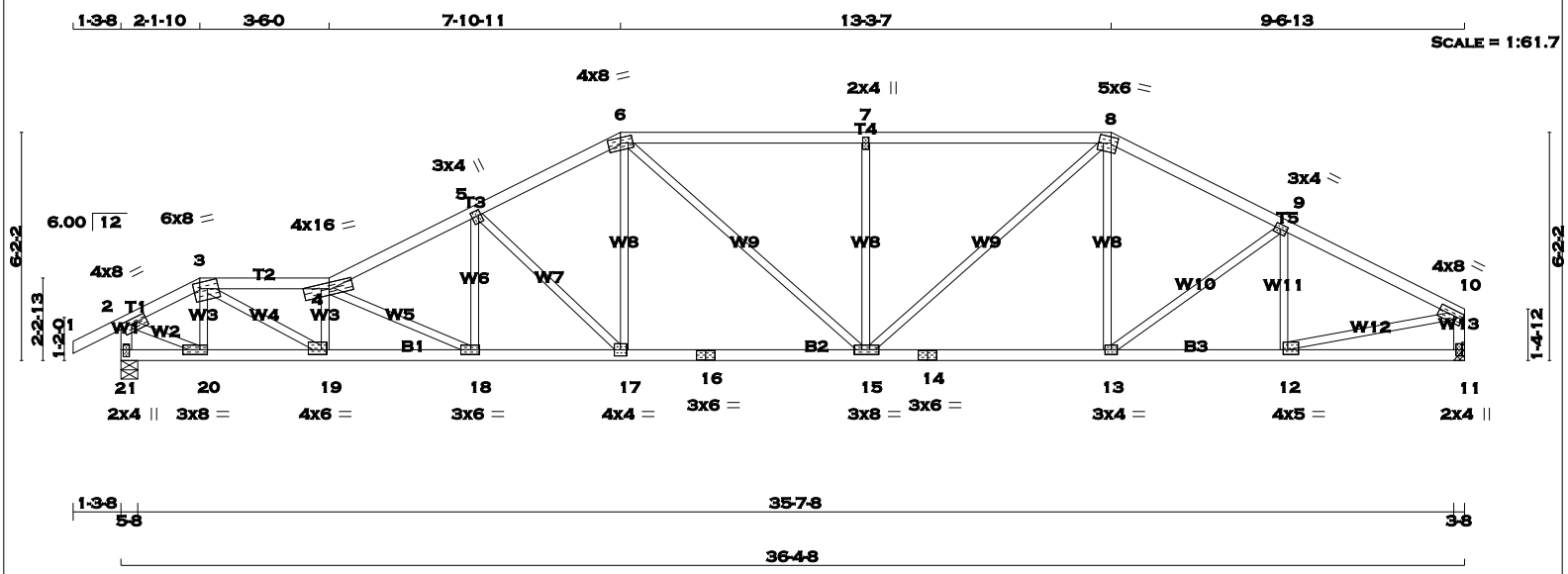

TOTAL WEIGHT = 146 lb
[M][F]

LUMBER
N. L. G. A. RULES

CHORDS	SIZE		LUMBER	DESCR.
1 - 3	2x4	DRY	No.2	SPF
3 - 4	2x4	DRY	No.2	SPF
4 - 6	2x4	DRY	No.2	SPF
6 - 8	2x4	DRY	No.2	SPF
8 - 10	2x4	DRY	No.2	SPF
21 - 2	2x4	DRY	No.2	SPF
11 - 10	2x4	DRY	No.2	SPF
21 - 16	2x4	DRY	No.2	SPF
16 - 14	2x4	DRY	No.2	SPF
14 - 11	2x4	DRY	No.2	SPF
ALL WEBS EXCEPT	2x3	DRY	No.2	SPF

DRY: SEASONED LUMBER.

PLATES (table is in inches)

JT	TYPE	PLATES	W	LEN	Y	X
2	TMVW-t	MT20	4.0	8.0	1.50	3.00
3	TTWW-m	MT20	6.0	8.0	2.00	2.00
4	TTWW-m	MT20	4.0	16.0	2.00	7.75
5	TMWW+t	MT20	3.0	4.0	1.75	0.75
6	TTWW-m	MT20	4.0	8.0	1.75	4.00
7	TMW+w	MT20	2.0	4.0		
8	TTWW-m	MT20	5.0	6.0	2.00	2.00
9	TMWW-t	MT20	3.0	4.0	1.50	1.75
10	TMVW-t	MT20	4.0	8.0	1.75	Edge
11	BMV1+p	MT20	2.0	4.0		
12	BMWW-t	MT20	4.0	5.0	1.50	1.50
13	BMWW-t	MT20	3.0	4.0		
14	BS-t	MT20	3.0	6.0		
15	BMWWW-t	MT20	3.0	8.0	1.50	2.50
16	BS-t	MT20	3.0	6.0		
17	BMWW-t	MT20	4.0	4.0		
18	BMWW-t	MT20	3.0	6.0	1.50	2.75
19	BMWW-t	MT20	4.0	6.0	1.50	1.75
20	BMWW-t	MT20	3.0	8.0	1.50	2.50
21	BMV1+p	MT20	2.0	4.0	2.25	1.00

Edge - INDICATES REFERENCE CORNER OF PLATE TOUCHES EDGE OF CHORD.

A SIZE FOR SIZE SUBSTITUTION OF MITEK MII20 WITH TEE-LOK TL20 PLATES IS ALLOWED.

DIMENSIONS, SUPPORTS AND LOADINGS SPECIFIED BY FABRICATOR TO BE VERIFIED BY BUILDING DESIGNER

BEARINGS

JT	FACTORED GROSS REACTION VERT	HORZ	MAXIMUM FACTORED GROSS REACTION DOWN	HORZ	UPLIFT	INPUT BRG IN-SX	REQRD BRG IN-SX
21	1830	0	1830	0	0	5-8	5-8
11	1725	0	1725	0	0	HANGER BY OTHERS	
						MIN. SEAT SIZE: 3-8	

UNFACTORED REACTIONS

JT	1ST LCASE COMBINED	SNOW	MAX./MIN. COMPONENT REACTIONS LIVE	PERM.LIVE	WIND	DEAD	SOIL
21	1282	910 / 0	0 / 0	0 / 0	0 / 0	372 / 0	0 / 0
11	1211	847 / 0	0 / 0	0 / 0	0 / 0	364 / 0	0 / 0

BEARING MATERIAL TO BE SPF NO.2 OR BETTER AT JOINT(S) 21

BRACING
TOP CHORD TO BE SHEATHED OR MAX. PURLIN SPACING = 3.25 FT.
MAX. UNBRACED BOTTOM CHORD LENGTH = 10.00 FT. OR RIGID CEILING DIRECTLY APPLIED.

ALL PITCH BREAKS AND PERIMETER CORNER JOINTS MUST BE LATERALLY RESTRAINED.

LOADING
TOTAL LOAD CASES: (4)

CHORDS

MEMB. FR-TO	MAX. FORCE (LBS)	FACTORED VERT. LOAD LC1 (PLF) FROM	TO	MAX CSI (LC)	MAX. UNBRAC LENGTH
1- 2	0 / 23	-77.3	-77.3	0.10 (1)	10.00
2- 3	-2069 / 0	-77.3	-77.3	0.09 (1)	4.66
3- 4	-4143 / 0	-77.3	-77.3	0.31 (1)	3.25
4- 5	-3515 / 0	-77.3	-77.3	0.29 (1)	3.55
5- 6	-2799 / 0	-77.3	-77.3	0.23 (1)	3.99
6- 7	-2712 / 0	-77.3	-77.3	0.58 (1)	3.66
7- 8	-2712 / 0	-77.3	-77.3	0.58 (1)	3.66
8- 9	-2342 / 0	-77.3	-77.3	0.29 (1)	4.24
9-10	-2360 / 0	-77.3	-77.3	0.30 (1)	4.22
21- 2	-1827 / 0	0.0	0.0	0.18 (1)	6.20
11-10	-1685 / 0	0.0	0.0	0.17 (1)	6.39
21-20	0 / 0	-17.5	-17.5	0.05 (1)	10.00
20-19	0 / 1815	-17.5	-17.5	0.38 (1)	10.00
19-18	0 / 4214	-17.5	-17.5	0.78 (1)	10.00
18-17	0 / 3159	-17.5	-17.5	0.57 (1)	10.00
17-16	0 / 2502	-17.5	-17.5	0.48 (1)	10.00
16-15	0 / 2502	-17.5	-17.5	0.48 (1)	10.00
15-14	0 / 2079	-17.5	-17.5	0.41 (1)	10.00
14-13	0 / 2079	-17.5	-17.5	0.41 (1)	10.00
13-12	0 / 2127	-17.5	-17.5	0.41 (1)	10.00
12-11	0 / 0	-17.5	-17.5	0.09 (4)	10.00

WEBS

MEMB. FR-TO	MAX. FORCE (LBS)	MAX CSI (LC)
20- 3	-613 / 0	0.09 (1)
3-19	0 / 2679	0.60 (1)
19- 4	-1313 / 0	0.20 (1)
4-18	-1174 / 0	0.39 (1)
18- 5	0 / 599	0.13 (1)
5-17	-931 / 0	0.50 (1)
17- 6	0 / 745	0.17 (1)
6-15	0 / 281	0.06 (1)
15- 7	-630 / 0	0.38 (1)
15- 8	0 / 846	0.19 (1)
13- 8	0 / 144	0.04 (4)
13- 9	-63 / 0	0.04 (1)
12- 9	-393 / 0	0.09 (1)
2-20	0 / 1979	0.45 (1)
12-10	0 / 2179	0.49 (1)

DESIGN CRITERIA

SPECIFIED LOADS:

TOP CH.	LL	=	23.3	PSF
	DL	=	3.0	PSF
BOT CH.	LL	=	0.0	PSF
	DL	=	7.0	PSF
TOTAL LOAD		=	33.3	PSF

SPACING = 24.0 IN. C/C

LOADING IN ALL FLAT SECTIONS BASED ON A SLOPE OF 6.00/12

THIS TRUSS IS DESIGNED FOR RESIDENTIAL OR SMALL BUILDING REQUIREMENTS OF PART 9, NBCC 2010

THIS DESIGN COMPLIES WITH:
- PART 9 OF OBC 2012 , BCBC 2012 , ABC 2014
- CSA 086-09
- TPIC 2011

(55 % OF 27.2 P.S.F. G.S.L. PLUS 8.4 P.S.F. RAIN LOAD) EQUALS 23.3 P.S.F. SPECIFIED ROOF LIVE LOAD

ALLOWABLE DEFL.(LL)= L/360 (1.21")
CALCULATED VERT. DEFL.(LL) = L/ 999 (0.22")
ALLOWABLE DEFL.(TL)= L/360 (1.21")
CALCULATED VERT. DEFL.(TL) = L/ 999 (0.41")

CSI: TC=0.58 (6-7:1) , BC=0.78 (18-19:1) , WB=0.60 (3-19:1) , SSI=0.25 (6-7:1)

DOL LUMBER=1.00 NAIL=1.00 LS BEND=1.10 COMP=1.10 SHEAR=1.10 TENS= 1.10

COMPANION LIVE LOAD FACTOR = 0.50

TRUSS PLATE MANUFACTURER IS NOT RESPONSIBLE FOR QUALITY CONTROL IN THE TRUSS MANUFACTURING PLANT .

NAIL VALUES

PLATE	GRIP(DRY) (PSI) MAX	MIN	SHEAR (PLI) MAX	MIN	SECTION (PLI) MAX	MIN
MT20	618	354	1667	822	2284	1656

PLATE PLACEMENT TOL. = 0.250 inches

PLATE ROTATION TOL. = 5.0 Deg.

JSI GRIP= 0.90 (15) (INPUT = 0.90)
JSI METAL= 0.70 (16) (INPUT = 1.00)

LICENSED PROFESSIONAL ENGINEER
P.M. TREVISAN
100136551
March 13th, 2017
PROVINCE OF ONTARIO

RECEIVED
TOWN OF MILTON
MAR 29, 2017
17-5052
BUILDING DIVISION

READ ALL NOTES ON THIS PAGE AND ON THE ENGINEERING NOTE PAGE ENP-1. THE NOTE PAGE IS AN INTEGRAL PART OF THIS DRAWING AS IT CONTAINS SPECIFICATIONS AND CRITERIA USED IN THE DESIGN OF THIS COMPONENT.

KOTT

JOB NAME	TRUSS NAME	QUANTITY	PLY	JOB DESC.	DRWG NO.
PT0317-060	**T48**	**1**	**1**	TRUSS DESC. LECCO RIDGE-BLOCK 332	Page 66 of 79 ENG JOB: PT0317-060

KOTT , Stouffville, ON, CGC

Version 8.100 S Feb 9 2017 MiTek Industries, Inc. Mon Mar 13 13:24:49 2017 Page 1

ID:gtheX5EqOVSIkwpr5Eyn2TyGKTI-XWcIAMsYTslzJ3DMRzhiqRm150nBlGqs4y0O8ezbLkS

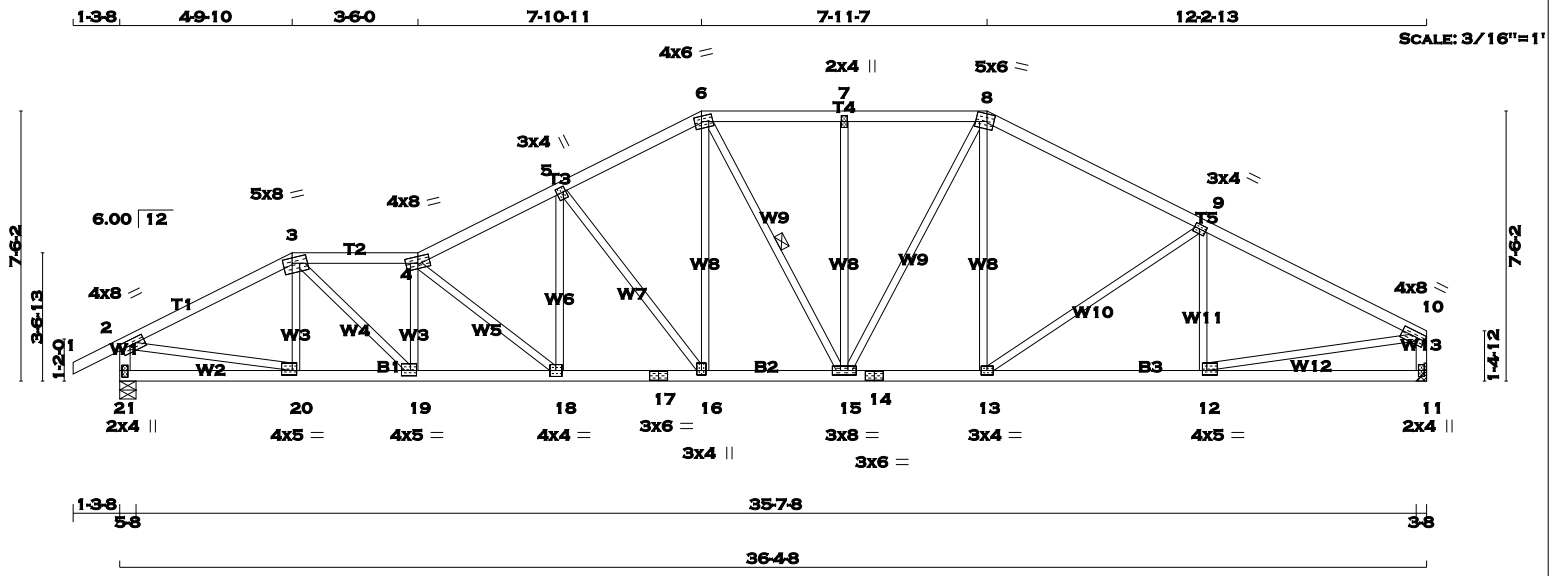

TOTAL WEIGHT = 159 lb

[M][F]

LUMBER

N. L. G. A. RULES

CHORDS	SIZE		LUMBER	DESCR.
1 - 3	2x4	DRY	No.2	SPF
3 - 4	2x4	DRY	No.2	SPF
4 - 6	2x4	DRY	No.2	SPF
6 - 8	2x4	DRY	No.2	SPF
8 - 10	2x4	DRY	No.2	SPF
21 - 2	2x4	DRY	No.2	SPF
11 - 10	2x4	DRY	No.2	SPF
21 - 17	2x4	DRY	No.2	SPF
17 - 14	2x4	DRY	No.2	SPF
14 - 11	2x4	DRY	No.2	SPF
ALL WEBS EXCEPT	2x3	DRY	No.2	SPF

DRY: SEASONED LUMBER.

PLATES (table is in inches)

JT	TYPE	PLATES	W	LEN	Y	X
2	TMVW-t	MT20	4.0	8.0	1.75	3.00
3	TTWW-m	MT20	5.0	8.0	1.75	3.00
4	TTWW-m	MT20	4.0	8.0	2.25	4.00
5	TMWW+t	MT20	3.0	4.0	1.75	0.75
6	TTWW-m	MT20	4.0	6.0	1.75	2.25
7	TMW+w	MT20	2.0	4.0		
8	TTWW-m	MT20	5.0	6.0	2.50	2.25
9	TMWW-t	MT20	3.0	4.0	1.50	1.75
10	TMVW-t	MT20	4.0	8.0	1.75	Edge
11	BMV1+p	MT20	2.0	4.0		
12	BMWW-t	MT20	4.0	5.0	1.50	1.50
13	BMWW-t	MT20	3.0	4.0		
14	BS-t	MT20	3.0	6.0		
15	BMWWW-t	MT20	3.0	8.0		
16	BMWW+t	MT20	3.0	4.0	1.50	1.50
17	BS-t	MT20	3.0	6.0		
18	BMWW-t	MT20	4.0	4.0		
19	BMWW-t	MT20	4.0	5.0	1.75	2.00
20	BMWW-t	MT20	4.0	5.0	1.50	1.50
21	BMV1+p	MT20	2.0	4.0	2.25	1.00

Edge - INDICATES REFERENCE CORNER OF PLATE TOUCHES EDGE OF CHORD.

A SIZE FOR SIZE SUBSTITUTION OF MITEK MII20 WITH TEE-LOK TL20 PLATES IS ALLOWED.

DIMENSIONS, SUPPORTS AND LOADINGS SPECIFIED BY FABRICATOR TO BE VERIFIED BY BUILDING DESIGNER

BEARINGS

JT	FACTORED GROSS REACTION VERT	HORZ	MAXIMUM FACTORED GROSS REACTION DOWN	HORZ	UPLIFT	INPUT BRG IN-SX	REQRD BRG IN-SX
21	1830	0	1830	0	0	5-8	5-8
11	1725	0	1725	0	0	HANGER BY OTHERS MIN. SEAT SIZE: 3-8	

UNFACTORED REACTIONS

JT	1ST LCASE COMBINED	SNOW	MAX./MIN. COMPONENT REACTIONS LIVE	PERM.LIVE	WIND	DEAD	SOIL
21	1282	910 / 0	0 / 0	0 / 0	0 / 0	372 / 0	0 / 0
11	1211	847 / 0	0 / 0	0 / 0	0 / 0	364 / 0	0 / 0

BEARING MATERIAL TO BE SPF NO.2 OR BETTER AT JOINT(S) 21

BRACING

TOP CHORD TO BE SHEATHED OR MAX. PURLIN SPACING = 3.66 FT.
MAX. UNBRACED BOTTOM CHORD LENGTH = 10.00 FT. OR RIGID CEILING DIRECTLY APPLIED.

ALL PITCH BREAKS AND PERIMETER CORNER JOINTS MUST BE LATERALLY RESTRAINED.

1 - 2x3 SPF No.2 LATERAL BRACE(S) AT 1/ 2 LENGTH OF 6-15. DBS = 20-0-0 . CBF = 2 LBS.

DBS = DIAGONAL BRACE SPACING (MAX). CBF = CUMULATIVE BRACING FORCE. FASTEN LATERAL BRACE(S) USING (0.122"X3") SPIRAL NAILS : 1 NAIL FOR 2x3 BRACE(S), 2 FOR 1x4, 2x4, 2x5, 3 FOR 2x6, 4 FOR 2x8, 5 FOR 2x10, AND 6 FOR 2x12.

END VERTICAL(S) MUST BE SHEATHED OR HAVE BRACES AS INDICATED IN THE MAX. UNBRACED LENGTH COLUMN OF THE TABLE BELOW

LOADING

TOTAL LOAD CASES: (4)

CHORDS

MEMB. FR-TO	MAX. FACTORED FORCE (LBS)	FACTORED VERT. LOAD LC1 (PLF) FROM	TO	MAX CSI (LC)	MAX. UNBRAC LENGTH
1- 2	0 / 23	-77.3	-77.3	0.10 (1)	10.00
2- 3	-2484 / 0	-77.3	-77.3	0.32 (1)	4.11
3- 4	-3343 / 0	-77.3	-77.3	0.25 (1)	3.66
4- 5	-3008 / 0	-77.3	-77.3	0.25 (1)	3.85
5- 6	-2411 / 0	-77.3	-77.3	0.21 (1)	4.27
6- 7	-2168 / 0	-77.3	-77.3	0.20 (1)	4.46
7- 8	-2168 / 0	-77.3	-77.3	0.20 (1)	4.46
8- 9	-2200 / 0	-77.3	-77.3	0.46 (1)	4.16
9-10	-2449 / 0	-77.3	-77.3	0.50 (1)	3.95
21- 2	-1793 / 0	0.0	0.0	0.18 (1)	6.24
11-10	-1679 / 0	0.0	0.0	0.17 (1)	6.41
21-20	0 / 0	-17.5	-17.5	0.09 (4)	10.00
20-19	0 / 2210	-17.5	-17.5	0.39 (1)	10.00
19-18	0 / 3376	-17.5	-17.5	0.60 (1)	10.00
18-17	0 / 2707	-17.5	-17.5	0.46 (1)	10.00
17-16	0 / 2707	-17.5	-17.5	0.46 (1)	10.00
16-15	0 / 2152	-17.5	-17.5	0.38 (1)	10.00
15-14	0 / 1948	-17.5	-17.5	0.37 (1)	10.00
14-13	0 / 1948	-17.5	-17.5	0.37 (1)	10.00
13-12	0 / 2212	-17.5	-17.5	0.42 (1)	10.00
12-11	0 / 0	-17.5	-17.5	0.16 (4)	10.00

WEBS

MEMB. FR-TO	MAX. FACTORED FORCE (LBS)	MAX CSI (LC)
20- 3	-297 / 0	0.06 (1)
3-19	0 / 1571	0.35 (1)
19- 4	-1047 / 0	0.22 (1)
4-18	-869 / 0	0.38 (1)
18- 5	0 / 630	0.14 (1)
5-16	-924 / 0	0.74 (1)
16- 6	0 / 805	0.18 (1)
6-15	0 / 32	0.01 (1)
15- 7	-367 / 0	0.37 (1)
15- 8	0 / 455	0.10 (1)
13- 8	0 / 276	0.06 (1)
13- 9	-326 / 0	0.35 (1)
12- 9	-269 / 25	0.08 (1)
2-20	0 / 2253	0.51 (1)
12-10	0 / 2246	0.51 (1)

DESIGN CRITERIA

SPECIFIED LOADS:

TOP CH.	LL	=	23.3	PSF
	DL	=	3.0	PSF
BOT CH.	LL	=	0.0	PSF
	DL	=	7.0	PSF
TOTAL LOAD		=	33.3	PSF

SPACING = 24.0 IN. C/C

LOADING IN ALL FLAT SECTIONS BASED ON A SLOPE OF 6.00/12

THIS TRUSS IS DESIGNED FOR RESIDENTIAL OR SMALL BUILDING REQUIREMENTS OF PART 9, NBCC 2010

THIS DESIGN COMPLIES WITH:
- PART 9 OF OBC 2012 , BCBC 2012 , ABC 2014
- CSA 086-09
- TPIC 2011

(55 % OF 27.2 P.S.F. G.S.L. PLUS 8.4 P.S.F. RAIN LOAD) EQUALS 23.3 P.S.F. SPECIFIED ROOF LIVE LOAD

ALLOWABLE DEFL.(LL)= L/360 (1.21")
CALCULATED VERT. DEFL.(LL) = L/ 999 (0.19")
ALLOWABLE DEFL.(TL)= L/360 (1.21")
CALCULATED VERT. DEFL.(TL) = L/ 999 (0.33")

CSI: TC=0.50 (9-10:1) , BC=0.60 (18-19:1) , WB=0.74 (5-16:1) , SSI=0.21 (9-10:1)

DOL LUMBER=1.00 NAIL=1.00 LS BEND=1.10 COMP=1.10 SHEAR=1.10 TENS= 1.10

COMPANION LIVE LOAD FACTOR = 0.50

TRUSS PLATE MANUFACTURER IS NOT RESPONSIBLE FOR QUALITY CONTROL IN THE TRUSS MANUFACTURING PLANT .

NAIL VALUES

PLATE	GRIP(DRY) (PSI) MAX	MIN	SHEAR (PLI) MAX	MIN	SECTION (PLI) MAX	MIN
MT20	618	354	1667	822	2284	1656

PLATE PLACEMENT TOL. = 0.250 inches

PLATE ROTATION TOL. = 5.0 Deg.

JSI GRIP= 0.90 (19) (INPUT = 0.90)
JSI METAL= 0.70 (17) (INPUT = 1.00)

LICENSED PROFESSIONAL ENGINEER
P.M. TREVISAN
100136551
March 13th, 2017
PROVINCE OF ONTARIO

RECEIVED
TOWN OF MILTON
MAR 29, 2017
17-5052
BUILDING DIVISION

READ ALL NOTES ON THIS PAGE AND ON THE ENGINEERING NOTE PAGE ENP-1. THE NOTE PAGE IS AN INTEGRAL PART OF THIS DRAWING AS IT CONTAINS SPECIFICATIONS AND CRITERIA USED IN THE DESIGN OF THIS COMPONENT.

KOTT

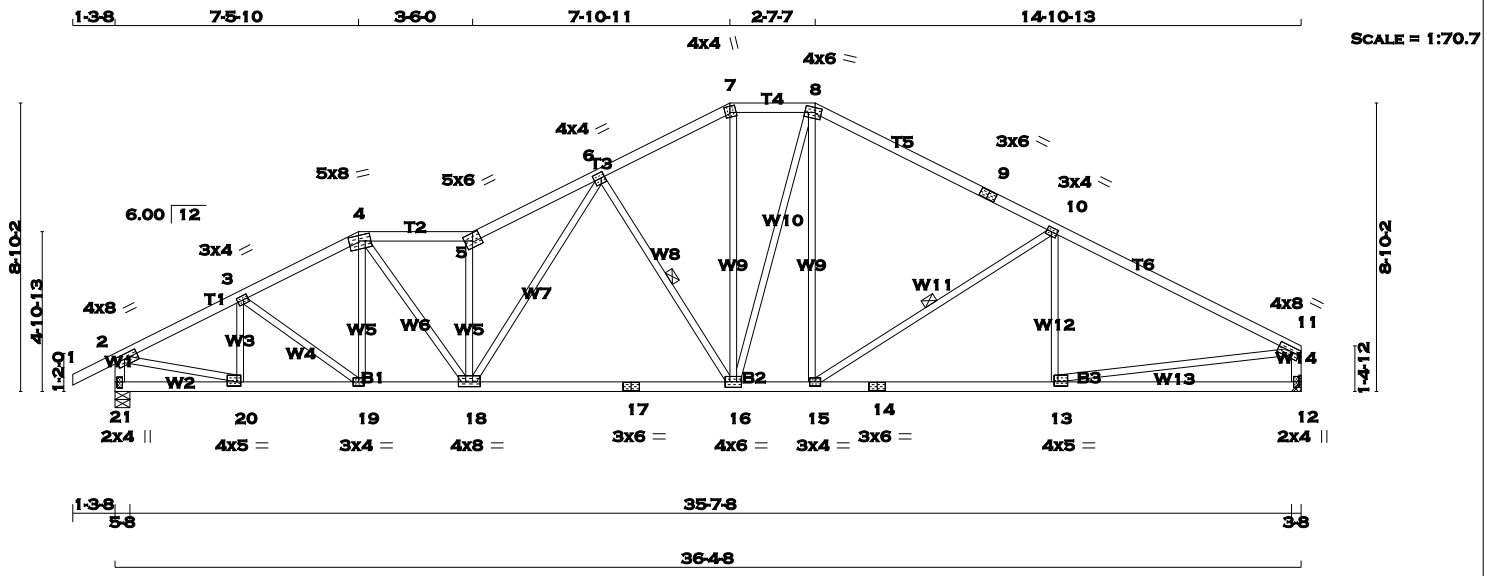

TOTAL WEIGHT = 160 lb

[M][F]

LUMBER

N. L. G. A. RULES

CHORDS	SIZE		LUMBER	DESCR.
1 - 4	2x4	DRY	No.2	SPF
4 - 5	2x4	DRY	No.2	SPF
5 - 7	2x4	DRY	No.2	SPF
7 - 8	2x4	DRY	No.2	SPF
8 - 9	2x4	DRY	No.2	SPF
9 - 11	2x4	DRY	No.2	SPF
21 - 2	2x4	DRY	No.2	SPF
12 - 11	2x4	DRY	No.2	SPF
21 - 17	2x4	DRY	No.2	SPF
17 - 14	2x4	DRY	No.2	SPF
14 - 12	2x4	DRY	No.2	SPF
ALL WEBS EXCEPT	2x3	DRY	No.2	SPF

DRY: SEASONED LUMBER.

PLATES (table is in inches)

JT	TYPE	PLATES	W	LEN	Y	X
2	TMVW-t	MT20	4.0	8.0	1.75	3.00
3	TMWW-t	MT20	3.0	4.0	1.50	1.75
4	TTWW-m	MT20	5.0	8.0	2.00	3.50
5	TTW-h	MT20	5.0	6.0	2.75	3.25
6	TMWW-t	MT20	4.0	4.0	2.00	1.25
7	TTW+m	MT20	4.0	4.0	2.25	1.75
8	TTWW-m	MT20	4.0	6.0	1.75	2.25
9	TS-t	MT20	3.0	6.0		
10	TMWW-t	MT20	3.0	4.0	1.50	1.75
11	TMVW-t	MT20	4.0	8.0	1.75	Edge
12	BMV1+p	MT20	2.0	4.0		
13	BMWW-t	MT20	4.0	5.0	1.50	1.50
14	BS-t	MT20	3.0	6.0		
15	BMWW-t	MT20	3.0	4.0		
16	BMWWW-t	MT20	4.0	6.0		
17	BS-t	MT20	3.0	6.0		
18	BMWWW-t	MT20	4.0	8.0	1.75	4.00
19	BMWW-t	MT20	3.0	4.0		
20	BMWW-t	MT20	4.0	5.0	1.50	1.50
21	BMV1+p	MT20	2.0	4.0	2.25	1.00

Edge - INDICATES REFERENCE CORNER OF PLATE TOUCHES EDGE OF CHORD.

A SIZE FOR SIZE SUBSTITUTION OF MITEK MII20 WITH TEE-LOK TL20 PLATES IS ALLOWED.

DIMENSIONS, SUPPORTS AND LOADINGS SPECIFIED BY FABRICATOR TO BE VERIFIED BY BUILDING DESIGNER

BEARINGS

JT	FACTORED GROSS REACTION VERT	HORZ	MAXIMUM FACTORED GROSS REACTION DOWN	HORZ	UPLIFT	INPUT BRG IN-SX	REQRD BRG IN-SX
21	1830	0	1830	0	0	5-8	5-8
12	1725	0	1725	0	0	HANGER BY OTHERS	
						MIN. SEAT SIZE: 3-8	

UNFACTORED REACTIONS

JT	1ST LCASE COMBINED	SNOW	MAX./MIN. COMPONENT REACTIONS LIVE	PERM.LIVE	WIND	DEAD	SOIL
21	1282	910 / 0	0 / 0	0 / 0	0 / 0	372 / 0	0 / 0
12	1211	847 / 0	0 / 0	0 / 0	0 / 0	364 / 0	0 / 0

BEARING MATERIAL TO BE SPF NO.2 OR BETTER AT JOINT(S) 21

BRACING

TOP CHORD TO BE SHEATHED OR MAX. PURLIN SPACING = 3.56 FT.
MAX. UNBRACED BOTTOM CHORD LENGTH = 10.00 FT. OR RIGID CEILING DIRECTLY APPLIED.

ALL PITCH BREAKS AND PERIMETER CORNER JOINTS MUST BE LATERALLY RESTRAINED.

1 - 2x3 SPF No.2 LATERAL BRACE(S) AT 1/ 2 LENGTH OF 6-16. DBS = 16-0-0 . CBF = 93 LBS.
1 - 2x3 SPF No.2 LATERAL BRACE(S) AT 1/ 2 LENGTH OF 10-15. DBS = 20-0-0 . CBF = 70 LBS.

DBS = DIAGONAL BRACE SPACING (MAX). CBF = CUMULATIVE BRACING FORCE. FASTEN LATERAL BRACE(S) USING (0.122"X3") SPIRAL NAILS : 1 NAIL FOR 2x3 BRACE(S), 2 FOR 1x4, 2x4, 2x5, 3 FOR 2x6, 4 FOR 2x8, 5 FOR 2x10, AND 6 FOR 2x12.

END VERTICAL(S) MUST BE SHEATHED OR HAVE BRACES AS INDICATED IN THE MAX. UNBRACED LENGTH COLUMN OF THE TABLE BELOW

LOADING

TOTAL LOAD CASES: (4)

CHORDS

MEMB. FR-TO	MAX. FORCE (LBS)	FACTORED VERT. LOAD LC1 (PLF) FROM	TO	MAX CSI (LC)	MAX. UNBRAC LENGTH
1- 2	0 / 23	-77.3	-77.3	0.10 (1)	10.00
2- 3	-2414 / 0	-77.3	-77.3	0.19 (1)	4.28
3- 4	-2507 / 0	-77.3	-77.3	0.19 (1)	4.22
4- 5	-2864 / 0	-77.3	-77.3	0.21 (1)	3.96
5- 6	-3225 / 0	-77.3	-77.3	0.29 (1)	3.69
6- 7	-2068 / 0	-77.3	-77.3	0.21 (1)	4.54
7- 8	-1842 / 0	-77.3	-77.3	0.10 (1)	4.87
8- 9	-2018 / 0	-77.3	-77.3	0.69 (1)	3.98
9-10	-2018 / 0	-77.3	-77.3	0.69 (1)	3.98
10-11	-2483 / 0	-77.3	-77.3	0.79 (1)	3.56
21- 2	-1796 / 0	0.0	0.0	0.18 (1)	6.24
12-11	-1671 / 0	0.0	0.0	0.17 (1)	6.42
21-20	0 / 0	-17.5	-17.5	0.05 (4)	10.00
20-19	0 / 2170	-17.5	-17.5	0.38 (1)	10.00
19-18	0 / 2229	-17.5	-17.5	0.42 (1)	10.00
18-17	0 / 2323	-17.5	-17.5	0.50 (1)	10.00
17-16	0 / 2323	-17.5	-17.5	0.50 (1)	10.00
16-15	0 / 1781	-17.5	-17.5	0.41 (1)	10.00
15-14	0 / 2248	-17.5	-17.5	0.49 (1)	10.00
14-13	0 / 2248	-17.5	-17.5	0.49 (1)	10.00
13-12	0 / 0	-17.5	-17.5	0.25 (4)	10.00

WEBS

MEMB. FR-TO	MAX. FORCE (LBS)	MAX CSI (LC)
20- 3	-424 / 0	0.08 (1)
3-19	0 / 73	0.02 (1)
19- 4	0 / 28	0.01 (4)
4-18	0 / 1069	0.24 (1)
18- 5	-1695 / 0	0.60 (1)
18- 6	0 / 1102	0.25 (1)
6-16	-934 / 0	0.37 (1)
16- 7	0 / 704	0.16 (1)
16- 8	0 / 216	0.05 (1)
15- 8	0 / 368	0.08 (1)
15-10	-563 / 0	0.31 (1)
13-10	-174 / 77	0.07 (1)
2-20	0 / 2223	0.50 (1)
13-11	0 / 2271	0.51 (1)

RECEIVED
TOWN OF MILTON
MAR 29, 2017
17-5052
BUILDING DIVISION

READ ALL NOTES ON THIS PAGE AND ON THE ENGINEERING NOTE PAGE ENP-1. THE NOTE PAGE IS AN INTEGRAL PART OF THIS DRAWING AS IT CONTAINS SPECIFICATIONS AND CRITERIA USED IN THE DESIGN OF THIS COMPONENT.

DESIGN CRITERIA

SPECIFIED LOADS:

TOP	CH.	LL	=	23.3	PSF
		DL	=	3.0	PSF
BOT	CH.	LL	=	0.0	PSF
		DL	=	7.0	PSF
TOTAL	LOAD		=	33.3	PSF

SPACING = 24.0 IN. C/C

LOADING IN ALL FLAT SECTIONS BASED ON A SLOPE OF 6.00/12

THIS TRUSS IS DESIGNED FOR RESIDENTIAL OR SMALL BUILDING REQUIREMENTS OF PART 9, NBCC 2010

THIS DESIGN COMPLIES WITH:
- PART 9 OF OBC 2012 , BCBC 2012 , ABC 2014
- CSA 086-09
- TPIC 2011

(55 % OF 27.2 P.S.F. G.S.L. PLUS 8.4 P.S.F. RAIN LOAD) EQUALS 23.3 P.S.F. SPECIFIED ROOF LIVE LOAD

ALLOWABLE DEFL.(LL)= L/360 (1.21")
CALCULATED VERT. DEFL.(LL) = L/ 999 (0.18")
ALLOWABLE DEFL.(TL)= L/360 (1.21")
CALCULATED VERT. DEFL.(TL) = L/ 999 (0.37")

CSI: TC=0.79 (10-11:1) , BC=0.50 (16-18:1) , WB=0.60 (5-18:1) , SSI=0.25 (10-11:1)

DOL LUMBER=1.00 NAIL=1.00 LS BEND=1.10 COMP=1.10 SHEAR=1.10 TENS= 1.10

COMPANION LIVE LOAD FACTOR = 0.50

TRUSS PLATE MANUFACTURER IS NOT RESPONSIBLE FOR QUALITY CONTROL IN THE TRUSS MANUFACTURING PLANT .

NAIL VALUES

PLATE	GRIP(DRY) (PSI) MAX	MIN	SHEAR (PLI) MAX	MIN	SECTION (PLI) MAX	MIN
MT20	618	354	1667	822	2284	1656

PLATE PLACEMENT TOL. = 0.250 inches

PLATE ROTATION TOL. = 5.0 Deg.

JSI GRIP= 0.89 (7) (INPUT = 0.90)
JSI METAL= 0.72 (17) (INPUT = 1.00)

KOTT

CONTINUED ON PAGE 2

JOB NAME	TRUSS NAME	QUANTITY	PLY	JOB DESC.	DRWG NO.
PT0317-060	T50	1	1	TRUSS DESC. LECCO RIDGE-BLOCK 332	

KOTT , Stouffville, ON, CGC

Version 8.100 S Feb 9 2017 MiTek Industries, Inc. Mon Mar 13 13:24:50 2017 Page 1
ID:gtheX5EqOVSIkwpr5Eyn2TyGKTI-?iAgNhtAE9tpwDoZ?gCxNeIEoQA3UgO?Jclyg4zbLkR

SCALE = 1:75.4

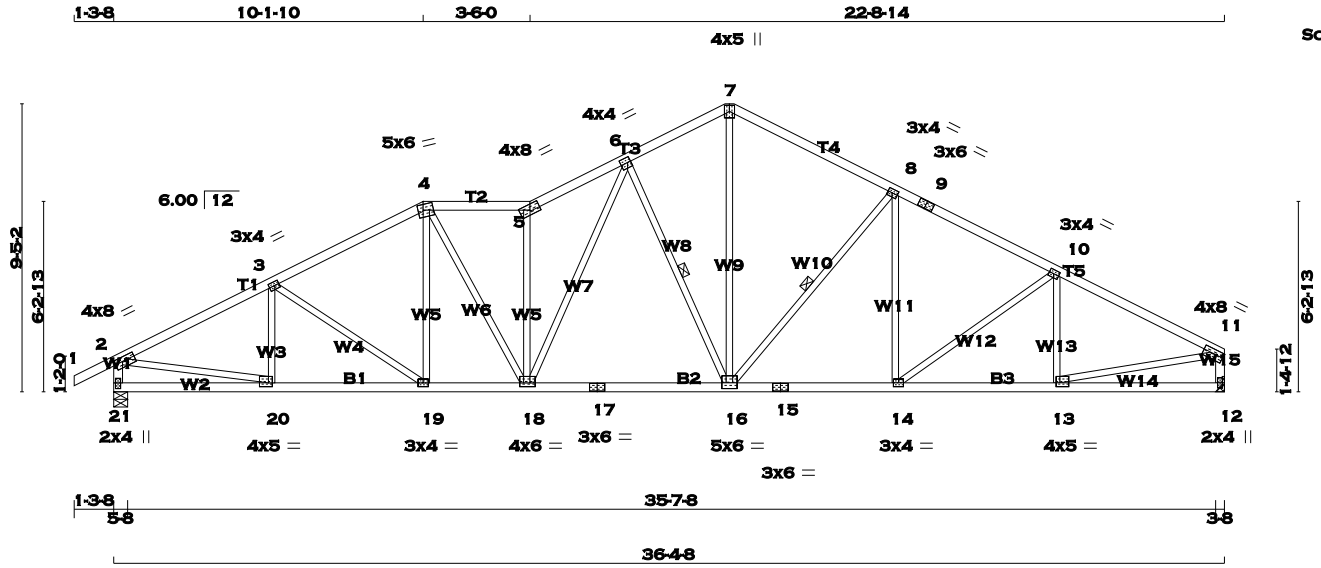

TOTAL WEIGHT = 161 lb

LUMBER
N. L. G. A. RULES

CHORDS	SIZE		LUMBER	DESCR.
1 - 4	2x4	DRY	No.2	SPF
4 - 5	2x4	DRY	No.2	SPF
5 - 7	2x4	DRY	No.2	SPF
7 - 9	2x4	DRY	No.2	SPF
9 - 11	2x4	DRY	No.2	SPF
21 - 2	2x4	DRY	No.2	SPF
12 - 11	2x4	DRY	No.2	SPF
21 - 17	2x4	DRY	No.2	SPF
17 - 15	2x4	DRY	No.2	SPF
15 - 12	2x4	DRY	No.2	SPF
ALL WEBS EXCEPT	2x3	DRY	No.2	SPF

DRY: SEASONED LUMBER.

PLATES (table is in inches)

JT	TYPE	PLATES	W	LEN	Y	X
2 3, 8, 10	TMVW-t	MT20	4.0	8.0	1.75	3.00
3	TMWW-t	MT20	3.0	4.0	1.50	1.75
4	TTWW-m	MT20	5.0	6.0	2.25	2.00
5	TTW-h	MT20	4.0	8.0	2.25	4.00
6	TMWW-t	MT20	4.0	4.0	2.00	1.25
7	TTW+p	MT20	4.0	5.0		
9	TS-t	MT20	3.0	6.0		
11	TMVW-t	MT20	4.0	8.0	1.75	Edge
12	BMV1+p	MT20	2.0	4.0		
13	BMWW-t	MT20	4.0	5.0	1.50	1.50
14	BMWW-t	MT20	3.0	4.0		
15	BS-t	MT20	3.0	6.0		
16	BMWWW-t	MT20	5.0	6.0	2.25	3.00
17	BS-t	MT20	3.0	6.0		
18	BMWWW-t	MT20	4.0	6.0	1.50	1.50
19	BMWW-t	MT20	3.0	4.0		
20	BMWW-t	MT20	4.0	5.0	1.50	1.50
21	BMV1+p	MT20	2.0	4.0	2.25	1.00

Edge - INDICATES REFERENCE CORNER OF PLATE TOUCHES EDGE OF CHORD.

A SIZE FOR SIZE SUBSTITUTION OF MITEK MII20 WITH TEE-LOK TL20 PLATES IS ALLOWED.

DIMENSIONS, SUPPORTS AND LOADINGS SPECIFIED BY FABRICATOR TO BE VERIFIED BY BUILDING DESIGNER

BEARINGS

JT	FACTORED GROSS REACTION VERT	HORZ	MAXIMUM FACTORED GROSS REACTION DOWN	HORZ	UPLIFT	INPUT BRG IN-SX	REQRD BRG IN-SX
21	1830	0	1830	0	0	5-8	5-8
12	1725	0	1725	0	0	HANGER BY OTHERS MIN. SEAT SIZE: 3-8	

UNFACTORED REACTIONS

JT	1ST LCASE COMBINED	SNOW	LIVE	PERM.LIVE	WIND	DEAD	SOIL
		MAX./MIN. COMPONENT REACTIONS					
21	1282	910 / 0	0 / 0	0 / 0	0 / 0	372 / 0	0 / 0
12	1211	847 / 0	0 / 0	0 / 0	0 / 0	364 / 0	0 / 0

BEARING MATERIAL TO BE SPF NO.2 OR BETTER AT JOINT(S) 21

BRACING
TOP CHORD TO BE SHEATHED OR MAX. PURLIN SPACING = 4.03 FT.
MAX. UNBRACED BOTTOM CHORD LENGTH = 10.00 FT. OR RIGID CEILING DIRECTLY APPLIED.

ALL PITCH BREAKS AND PERIMETER CORNER JOINTS MUST BE LATERALLY RESTRAINED.

1 - 2x3 SPF No.2 LATERAL BRACE(S) AT 1/ 2 LENGTH OF 6-16. DBS = 14-0-0 . CBF = 83 LBS.
1 - 2x3 SPF No.2 LATERAL BRACE(S) AT 1/ 2 LENGTH OF 8-16. DBS = 20-0-0 . CBF = 71 LBS.

DBS = DIAGONAL BRACE SPACING (MAX). CBF = CUMULATIVE BRACING FORCE. FASTEN LATERAL BRACE(S) USING (0.122"X3") SPIRAL NAILS : 1 NAIL FOR 2x3 BRACE(S), 2 FOR 1x4, 2x4, 2x5, 3 FOR 2x6, 4 FOR 2x8, 5 FOR 2x10, AND 6 FOR 2x12.

END VERTICAL(S) MUST BE SHEATHED OR HAVE BRACES AS INDICATED IN THE MAX. UNBRACED LENGTH COLUMN OF THE TABLE BELOW

LOADING
TOTAL LOAD CASES: (4)

CHORDS

MEMB. FR-TO	MAX. FORCE (LBS)	FACTORED VERT. LOAD LC1 (PLF) FROM	TO	MAX CSI (LC)	MAX. UNBRAC LENGTH
1- 2	0 / 23	-77.3	-77.3	0.10 (1)	10.00
2- 3	-2545 / 0	-77.3	-77.3	0.34 (1)	4.05
3- 4	-2400 / 0	-77.3	-77.3	0.32 (1)	4.16
4- 5	-2471 / 0	-77.3	-77.3	0.19 (1)	4.24
5- 6	-2775 / 0	-77.3	-77.3	0.19 (1)	4.03
6- 7	-1907 / 0	-77.3	-77.3	0.14 (1)	4.76
7- 8	-1912 / 0	-77.3	-77.3	0.32 (1)	4.57
8- 9	-2299 / 0	-77.3	-77.3	0.32 (1)	4.26
9-10	-2299 / 0	-77.3	-77.3	0.32 (1)	4.26
10-11	-2400 / 0	-77.3	-77.3	0.37 (1)	4.13
21- 2	-1789 / 0	0.0	0.0	0.18 (1)	6.24
12-11	-1683 / 0	0.0	0.0	0.17 (1)	6.40
21-20	0 / 0	-17.5	-17.5	0.10 (4)	10.00
20-19	0 / 2293	-17.5	-17.5	0.41 (1)	10.00
19-18	0 / 2131	-17.5	-17.5	0.38 (1)	10.00
18-17	0 / 2080	-17.5	-17.5	0.43 (1)	10.00
17-16	0 / 2080	-17.5	-17.5	0.43 (1)	10.00
16-15	0 / 2057	-17.5	-17.5	0.43 (1)	10.00
15-14	0 / 2057	-17.5	-17.5	0.43 (1)	10.00
14-13	0 / 2161	-17.5	-17.5	0.39 (1)	10.00
13-12	0 / 0	-17.5	-17.5	0.12 (4)	10.00

WEBS

MEMB. FR-TO	MAX. FORCE (LBS)	MAX CSI (LC)
20- 3	-288 / 3	0.06 (1)
3-19	-201 / 0	0.13 (1)
19- 4	0 / 190	0.04 (1)
4-18	0 / 685	0.15 (1)
18- 5	-1471 / 0	0.91 (1)
18- 6	0 / 1039	0.23 (1)
6-16	-951 / 0	0.44 (1)
16- 8	-564 / 0	0.27 (1)
14- 8	0 / 160	0.04 (4)
14-10	-129 / 0	0.10 (1)
13-10	-325 / 0	0.08 (1)
2-20	0 / 2325	0.52 (1)
13-11	0 / 2203	0.50 (1)
16- 7	0 / 1423	0.32 (1)

RECEIVED
TOWN OF MILTON
MAR 29, 2017
17-5052
BUILDING DIVISION

READ ALL NOTES ON THIS PAGE AND ON THE ENGINEERING NOTE PAGE ENP-1. THE NOTE PAGE IS AN INTEGRAL PART OF THIS DRAWING AS IT CONTAINS SPECIFICATIONS AND CRITERIA USED IN THE DESIGN OF THIS COMPONENT.

DESIGN CRITERIA

SPECIFIED LOADS:

TOP CH.	LL	=	23.3	PSF
	DL	=	3.0	PSF
BOT CH.	LL	=	0.0	PSF
	DL	=	7.0	PSF
TOTAL LOAD		=	33.3	PSF

SPACING = 24.0 IN. C/C

LOADING IN ALL FLAT SECTIONS BASED ON A SLOPE OF 6.00/12

THIS TRUSS IS DESIGNED FOR RESIDENTIAL OR SMALL BUILDING REQUIREMENTS OF PART 9, NBCC 2010

THIS DESIGN COMPLIES WITH:
- PART 9 OF OBC 2012 , BCBC 2012 , ABC 2014
- CSA 086-09
- TPIC 2011

(55 % OF 27.2 P.S.F. G.S.L. PLUS 8.4 P.S.F. RAIN LOAD) EQUALS 23.3 P.S.F. SPECIFIED ROOF LIVE LOAD

ALLOWABLE DEFL.(LL)= L/360 (1.21")
CALCULATED VERT. DEFL.(LL) = L/ 999 (0.17")
ALLOWABLE DEFL.(TL)= L/360 (1.21")
CALCULATED VERT. DEFL.(TL) = L/ 999 (0.33")

CSI: TC=0.37 (10-11:1) , BC=0.43 (16-18:1) , WB=0.91 (5-18:1) , SSI=0.17 (10-11:1)

DOL LUMBER=1.00 NAIL=1.00 LS BEND=1.10 COMP=1.10 SHEAR=1.10 TENS= 1.10

COMPANION LIVE LOAD FACTOR = 0.50

TRUSS PLATE MANUFACTURER IS NOT RESPONSIBLE FOR QUALITY CONTROL IN THE TRUSS MANUFACTURING PLANT .

NAIL VALUES

PLATE	GRIP(DRY) (PSI) MAX	MIN	SHEAR (PLI) MAX	MIN	SECTION (PLI) MAX	MIN
MT20	618	354	1667	822	2284	1656

PLATE PLACEMENT TOL. = 0.250 inches

PLATE ROTATION TOL. = 5.0 Deg.

JSI GRIP= 0.89 (18) (INPUT = 0.90)
JSI METAL= 0.69 (20) (INPUT = 1.00)

JOB NAME	TRUSS NAME	QUANTITY	PLY	JOB DESC.	DRWG NO.
PT0317-060	**T51**	**1**	**1**	TRUSS DESC. LECCO RIDGE-BLOCK 332	

ENG JOB: PT0317-060

KOTT , Stouffville, ON, CGC

Version 8.100 S Feb 9 2017 MiTek Industries, Inc. Mon Mar 13 13:24:51 2017 Page 1

ID:gtheX5EqOVSIkwpr5Eyn2TyGKTI-Tvk3b1uo?T?gYNNlYOkAvsrMPqUvDDB9XGVVCWzbLkQ

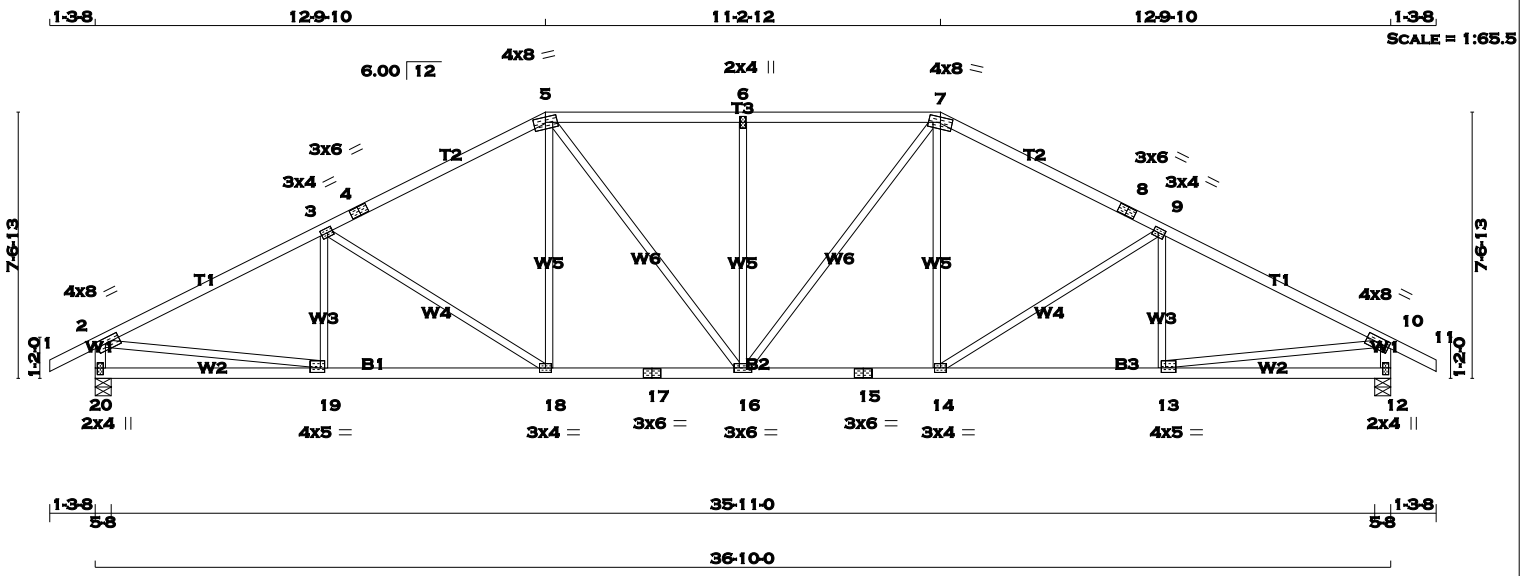

TOTAL WEIGHT = 152 lb

[M][F]

LUMBER

N. L. G. A. RULES

CHORDS	SIZE		LUMBER	DESCR.
1 - 4	2x4	DRY	No.2	SPF
4 - 5	2x4	DRY	No.2	SPF
5 - 7	2x4	DRY	No.2	SPF
7 - 8	2x4	DRY	No.2	SPF
8 - 11	2x4	DRY	No.2	SPF
20 - 2	2x4	DRY	No.2	SPF
12 - 10	2x4	DRY	No.2	SPF
20 - 17	2x4	DRY	No.2	SPF
17 - 15	2x4	DRY	No.2	SPF
15 - 12	2x4	DRY	No.2	SPF
ALL WEBS EXCEPT	2x3	DRY	No.2	SPF

DRY: SEASONED LUMBER.

PLATES (table is in inches)

JT	TYPE	PLATES	W	LEN	Y	X
2	TMVW-t	MT20	4.0	8.0	1.75	3.00
3	TMWW-t	MT20	3.0	4.0	1.50	1.75
4	TS-t	MT20	3.0	6.0		
5	TTWW-m	MT20	4.0	8.0	1.75	4.00
6	TMW+w	MT20	2.0	4.0		
7	TTWW-m	MT20	4.0	8.0	1.75	4.00
8	TS-t	MT20	3.0	6.0		
9	TMWW-t	MT20	3.0	4.0	1.50	1.75
10	TMVW-t	MT20	4.0	8.0	1.75	3.00
12	BMV1+p	MT20	2.0	4.0	2.25	1.00
13	BMWW-t	MT20	4.0	5.0	1.50	1.50
14	BMWW-t	MT20	3.0	4.0		
15	BS-t	MT20	3.0	6.0		
16	BMWWW-t	MT20	3.0	6.0		
17	BS-t	MT20	3.0	6.0		
18	BMWW-t	MT20	3.0	4.0		
19	BMWW-t	MT20	4.0	5.0	1.50	1.50
20	BMV1+p	MT20	2.0	4.0	2.25	1.00

A SIZE FOR SIZE SUBSTITUTION OF MITEK MII20 WITH TEE-LOK TL20 PLATES IS ALLOWED.

DIMENSIONS, SUPPORTS AND LOADINGS SPECIFIED BY FABRICATOR TO BE VERIFIED BY BUILDING DESIGNER

BEARINGS

JT	FACTORED GROSS REACTION VERT	HORZ	MAXIMUM FACTORED GROSS REACTION DOWN	HORZ	UPLIFT	INPUT BRG IN-SX	REQRD BRG IN-SX
20	1852	0	1852	0	0	5-8	5-8
12	1852	0	1852	0	0	5-8	5-8

UNFACTORED REACTIONS

JT	1ST LCASE COMBINED	MAX./MIN. COMPONENT REACTIONS SNOW	LIVE	PERM.LIVE	WIND	DEAD	SOIL
20	1297	921 / 0	0 / 0	0 / 0	0 / 0	376 / 0	0 / 0
12	1297	921 / 0	0 / 0	0 / 0	0 / 0	376 / 0	0 / 0

BEARING MATERIAL TO BE SPF NO.2 OR BETTER AT JOINT(S) 20, 12

BRACING

TOP CHORD TO BE SHEATHED OR MAX. PURLIN SPACING = 3.75 FT.
MAX. UNBRACED BOTTOM CHORD LENGTH = 10.00 FT. OR RIGID CEILING DIRECTLY APPLIED.

ALL PITCH BREAKS AND PERIMETER CORNER JOINTS MUST BE LATERALLY RESTRAINED.

LOADING

TOTAL LOAD CASES: (4)

CHORDS

MEMB. FR-TO	MAX. FACTORED FORCE (LBS)	FACTORED VERT. LOAD (PLF) FROM	TO	LC1 MAX CSI (LC)	MAX. UNBRAC LENGTH
1- 2	0 / 23	-77.3	-77.3	0.10 (1)	10.00
2- 3	-2635 / 0	-77.3	-77.3	0.58 (1)	3.75
3- 4	-2275 / 0	-77.3	-77.3	0.51 (1)	4.05
4- 5	-2275 / 0	-77.3	-77.3	0.51 (1)	4.05
5- 6	-2255 / 0	-77.3	-77.3	0.38 (1)	4.19
6- 7	-2255 / 0	-77.3	-77.3	0.38 (1)	4.19
7- 8	-2275 / 0	-77.3	-77.3	0.51 (1)	4.05
8- 9	-2275 / 0	-77.3	-77.3	0.51 (1)	4.05
9-10	-2635 / 0	-77.3	-77.3	0.58 (1)	3.75
10-11	0 / 23	-77.3	-77.3	0.10 (1)	10.00
20- 2	-1803 / 0	0.0	0.0	0.18 (1)	6.23
12-10	-1803 / 0	0.0	0.0	0.18 (1)	6.23
20-19	0 / 0	-17.5	-17.5	0.17 (4)	10.00
19-18	0 / 2380	-17.5	-17.5	0.45 (1)	10.00
18-17	0 / 2015	-17.5	-17.5	0.39 (1)	10.00
17-16	0 / 2015	-17.5	-17.5	0.39 (1)	10.00
16-15	0 / 2015	-17.5	-17.5	0.39 (1)	10.00
15-14	0 / 2015	-17.5	-17.5	0.39 (1)	10.00
14-13	0 / 2380	-17.5	-17.5	0.45 (1)	10.00
13-12	0 / 0	-17.5	-17.5	0.17 (4)	10.00

WEBS

MEMB. FR-TO	MAX. FACTORED FORCE (LBS)	MAX CSI (LC)
19- 3	-193 / 51	0.06 (1)
3-18	-439 / 0	0.51 (1)
18- 5	0 / 345	0.08 (1)
5-16	0 / 392	0.09 (1)
16- 6	-531 / 0	0.55 (1)
16- 7	0 / 392	0.09 (1)
14- 7	0 / 345	0.08 (1)
14- 9	-439 / 0	0.51 (1)
13- 9	-193 / 51	0.06 (1)
2-19	0 / 2401	0.54 (1)
13-10	0 / 2401	0.54 (1)

DESIGN CRITERIA

SPECIFIED LOADS:

TOP CH.	LL	=	23.3	PSF
	DL	=	3.0	PSF
BOT CH.	LL	=	0.0	PSF
	DL	=	7.0	PSF
TOTAL LOAD		=	33.3	PSF

SPACING = 24.0 IN. C/C

LOADING IN FLAT SECTION BASED ON A SLOPE OF 6.00/12

THIS TRUSS IS DESIGNED FOR RESIDENTIAL OR SMALL BUILDING REQUIREMENTS OF PART 9, NBCC 2010

THIS DESIGN COMPLIES WITH:
- PART 9 OF OBC 2012 , BCBC 2012 , ABC 2014
- CSA 086-09
- TPIC 2011

(55 % OF 27.2 P.S.F. G.S.L. PLUS 8.4 P.S.F. RAIN LOAD) EQUALS 23.3 P.S.F. SPECIFIED ROOF LIVE LOAD

ALLOWABLE DEFL.(LL)= L/360 (1.23")
CALCULATED VERT. DEFL.(LL) = L/ 999 (0.15")
ALLOWABLE DEFL.(TL)= L/360 (1.23")
CALCULATED VERT. DEFL.(TL) = L/ 999 (0.27")

CSI: TC=0.58 (2-3:1) , BC=0.45 (18-19:1) , WB=0.55 (6-16:1) , SSI=0.22 (2-3:1)

DOL LUMBER=1.00 NAIL=1.00 LS BEND=1.10 COMP=1.10 SHEAR=1.10 TENS= 1.10

COMPANION LIVE LOAD FACTOR = 0.50

TRUSS PLATE MANUFACTURER IS NOT RESPONSIBLE FOR QUALITY CONTROL IN THE TRUSS MANUFACTURING PLANT .

NAIL VALUES

PLATE	GRIP(DRY) (PSI) MAX	MIN	SHEAR (PLI) MAX	MIN	SECTION (PLI) MAX	MIN
MT20	618	354	1667	822	2284	1656

PLATE PLACEMENT TOL. = 0.250 inches

PLATE ROTATION TOL. = 5.0 Deg.

JSI GRIP= 0.87 (13) (INPUT = 0.90)
JSI METAL= 0.71 (19) (INPUT = 1.00)

LICENSED PROFESSIONAL ENGINEER
P.M. TREVISAN
100136551
March 13th, 2017
PROVINCE OF ONTARIO

RECEIVED
TOWN OF MILTON
MAR 29, 2017
17-5052
BUILDING DIVISION

READ ALL NOTES ON THIS PAGE AND ON THE ENGINEERING NOTE PAGE ENP-1. THE NOTE PAGE IS AN INTEGRAL PART OF THIS DRAWING AS IT CONTAINS SPECIFICATIONS AND CRITERIA USED IN THE DESIGN OF THIS COMPONENT.

KOTT

JOB NAME	TRUSS NAME	QUANTITY	PLY	JOB DESC.	DRWG NO.
PT0317-060	**T52**	**1**	**1**	TRUSS DESC. LECCO RIDGE-BLOCK 332	

KOTT , Stouffville, ON, CGC

Version 8.100 S Feb 9 2017 MiTek Industries, Inc. Mon Mar 13 13:24:51 2017 Page 1
ID:gtheX5EqOVSIkwpr5Eyn2TyGKTI-Tvk3b1uo?T?gYNNlYOkAvsrKpqUoDDT9XGVVCWzbLkQ

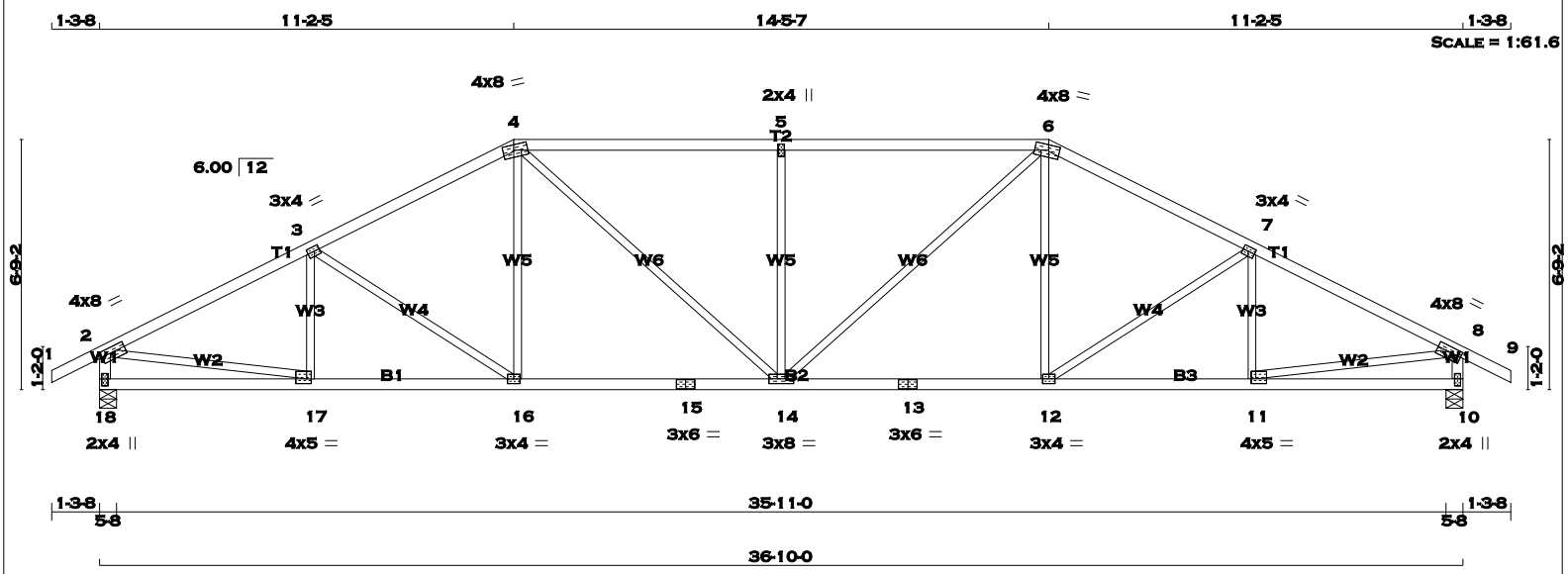

TOTAL WEIGHT = 147 lb
[M][F]

LUMBER
N. L. G. A. RULES

CHORDS	SIZE		LUMBER	DESCR.
1 - 4	2x4	DRY	No.2	SPF
4 - 6	2x4	DRY	No.2	SPF
6 - 9	2x4	DRY	No.2	SPF
18 - 2	2x4	DRY	No.2	SPF
10 - 8	2x4	DRY	No.2	SPF
18 - 15	2x4	DRY	No.2	SPF
15 - 13	2x4	DRY	No.2	SPF
13 - 10	2x4	DRY	No.2	SPF
ALL WEBS EXCEPT	2x3	DRY	No.2	SPF

DRY: SEASONED LUMBER.

PLATES (table is in inches)

JT	TYPE	PLATES	W	LEN	Y	X
2	TMVW-t	MT20	4.0	8.0	1.75	3.00
3	TMWW-t	MT20	3.0	4.0	1.50	1.75
4	TTWW-m	MT20	4.0	8.0	1.75	3.50
5	TMW+w	MT20	2.0	4.0		
6	TTWW-m	MT20	4.0	8.0	1.75	3.50
7	TMWW-t	MT20	3.0	4.0	1.50	1.75
8	TMVW-t	MT20	4.0	8.0	1.75	3.00
10	BMV1+p	MT20	2.0	4.0	2.25	1.00
11	BMWW-t	MT20	4.0	5.0	1.50	1.50
12	BMWW-t	MT20	3.0	4.0		
13	BS-t	MT20	3.0	6.0		
14	BMWWW-t	MT20	3.0	8.0		
15	BS-t	MT20	3.0	6.0		
16	BMWW-t	MT20	3.0	4.0		
17	BMWW-t	MT20	4.0	5.0	1.50	1.50
18	BMV1+p	MT20	2.0	4.0	2.25	1.00

A SIZE FOR SIZE SUBSTITUTION OF MITEK MII20 WITH TEE-LOK TL20 PLATES IS ALLOWED.

DIMENSIONS, SUPPORTS AND LOADINGS SPECIFIED BY FABRICATOR TO BE VERIFIED BY BUILDING DESIGNER

BEARINGS

JT	FACTORED GROSS REACTION VERT	HORZ	MAXIMUM FACTORED GROSS REACTION DOWN	HORZ	UPLIFT	INPUT BRG IN-SX	REQRD BRG IN-SX
18	1852	0	1852	0	0	5-8	5-8
10	1852	0	1852	0	0	5-8	5-8

UNFACTORED REACTIONS

JT	1ST LCASE COMBINED	MAX./MIN. COMPONENT REACTIONS SNOW	LIVE	PERM.LIVE	WIND	DEAD	SOIL
18	1297	921 / 0	0 / 0	0 / 0	0 / 0	376 / 0	0 / 0
10	1297	921 / 0	0 / 0	0 / 0	0 / 0	376 / 0	0 / 0

BEARING MATERIAL TO BE SPF NO.2 OR BETTER AT JOINT(S) 18, 10

BRACING
TOP CHORD TO BE SHEATHED OR MAX. PURLIN SPACING = 3.60 FT.
MAX. UNBRACED BOTTOM CHORD LENGTH = 10.00 FT. OR RIGID CEILING DIRECTLY APPLIED.

ALL PITCH BREAKS AND PERIMETER CORNER JOINTS MUST BE LATERALLY RESTRAINED.

LOADING
TOTAL LOAD CASES: (4)

CHORDS

MEMB. FR-TO	MAX. FACTORED FORCE (LBS)	FACTORED VERT. LOAD (PLF) FROM	TO	LC1 CSI (LC)	MAX UNBRAC LENGTH
1- 2	0 / 23	-77.3	-77.3	0.10 (1)	10.00
2- 3	-2608 / 0	-77.3	-77.3	0.43 (1)	3.92
3- 4	-2386 / 0	-77.3	-77.3	0.39 (1)	4.10
4- 5	-2572 / 0	-77.3	-77.3	0.68 (1)	3.60
5- 6	-2572 / 0	-77.3	-77.3	0.68 (1)	3.60
6- 7	-2386 / 0	-77.3	-77.3	0.39 (1)	4.10
7- 8	-2608 / 0	-77.3	-77.3	0.43 (1)	3.92
8- 9	0 / 23	-77.3	-77.3	0.10 (1)	10.00
18- 2	-1807 / 0	0.0	0.0	0.18 (1)	6.22
10- 8	-1807 / 0	0.0	0.0	0.18 (1)	6.22
18-17	0 / 0	-17.5	-17.5	0.11 (4)	10.00
17-16	0 / 2352	-17.5	-17.5	0.46 (1)	10.00
16-15	0 / 2117	-17.5	-17.5	0.43 (1)	10.00
15-14	0 / 2117	-17.5	-17.5	0.43 (1)	10.00
14-13	0 / 2117	-17.5	-17.5	0.43 (1)	10.00
13-12	0 / 2117	-17.5	-17.5	0.43 (1)	10.00
12-11	0 / 2352	-17.5	-17.5	0.46 (1)	10.00
11-10	0 / 0	-17.5	-17.5	0.11 (4)	10.00

WEBS

MEMB. FR-TO	MAX. FACTORED FORCE (LBS)	MAX CSI (LC)
17- 3	-257 / 14	0.06 (1)
3-16	-288 / 0	0.24 (1)
16- 4	0 / 276	0.06 (1)
4-14	0 / 611	0.14 (1)
14- 5	-688 / 0	0.53 (1)
14- 6	0 / 611	0.14 (1)
12- 6	0 / 276	0.06 (1)
12- 7	-288 / 0	0.24 (1)
11- 7	-257 / 14	0.06 (1)
2-17	0 / 2378	0.54 (1)
11- 8	0 / 2378	0.54 (1)

DESIGN CRITERIA

SPECIFIED LOADS:

TOP CH.	LL	=	23.3	PSF
	DL	=	3.0	PSF
BOT CH.	LL	=	0.0	PSF
	DL	=	7.0	PSF
TOTAL LOAD		=	33.3	PSF

SPACING = 24.0 IN. C/C

LOADING IN FLAT SECTION BASED ON A SLOPE OF 6.00/12

THIS TRUSS IS DESIGNED FOR RESIDENTIAL OR SMALL BUILDING REQUIREMENTS OF PART 9, NBCC 2010

THIS DESIGN COMPLIES WITH:
- PART 9 OF OBC 2012 , BCBC 2012 , ABC 2014
- CSA 086-09
- TPIC 2011

(55 % OF 27.2 P.S.F. G.S.L. PLUS 8.4 P.S.F. RAIN LOAD) EQUALS 23.3 P.S.F. SPECIFIED ROOF LIVE LOAD

ALLOWABLE DEFL.(LL)= L/360 (1.23")
CALCULATED VERT. DEFL.(LL) = L/ 999 (0.16")
ALLOWABLE DEFL.(TL)= L/360 (1.23")
CALCULATED VERT. DEFL.(TL) = L/ 999 (0.30")

CSI: TC=0.68 (4-5:1) , BC=0.46 (11-12:1) , WB=0.54 (8-11:1) , SSI=0.27 (4-5:1)

DOL LUMBER=1.00 NAIL=1.00 LS BEND=1.10 COMP=1.10 SHEAR=1.10 TENS= 1.10

COMPANION LIVE LOAD FACTOR = 0.50

TRUSS PLATE MANUFACTURER IS NOT RESPONSIBLE FOR QUALITY CONTROL IN THE TRUSS MANUFACTURING PLANT .

NAIL VALUES

PLATE	GRIP(DRY) (PSI) MAX	MIN	SHEAR (PLI) MAX	MIN	SECTION (PLI) MAX	MIN
MT20	618	354	1667	822	2284	1656

PLATE PLACEMENT TOL. = 0.250 inches

PLATE ROTATION TOL. = 5.0 Deg.

JSI GRIP= 0.89 (4) (INPUT = 0.90)
JSI METAL= 0.71 (11) (INPUT = 1.00)

LICENSED PROFESSIONAL ENGINEER
P.M. TREVISAN
100136551
March 13th, 2017
PROVINCE OF ONTARIO

RECEIVED
TOWN OF MILTON
MAR 29, 2017
17-5052
BUILDING DIVISION

READ ALL NOTES ON THIS PAGE AND ON THE ENGINEERING NOTE PAGE ENP-1. THE NOTE PAGE IS AN INTEGRAL PART OF THIS DRAWING AS IT CONTAINS SPECIFICATIONS AND CRITERIA USED IN THE DESIGN OF THIS COMPONENT.

KOTT

JOB NAME	TRUSS NAME	QUANTITY	PLY	JOB DESC.	DRWG NO.
PT0317-060	**T53**	**1**	**1**	TRUSS DESC. LECCO RIDGE-BLOCK 332	

ENG JOB: PT0317-060

KOTT , Stouffville, ON, CGC

Version 8.100 S Feb 9 2017 MiTek Industries, Inc. Mon Mar 13 13:24:51 2017 Page 1

ID:gtheX5EqOVSIkwpr5Eyn2TyGKTI-Tvk3b1uo?T?gYNNlYOkAvsrIzqT7DDl9XGVVCWzbLkQ

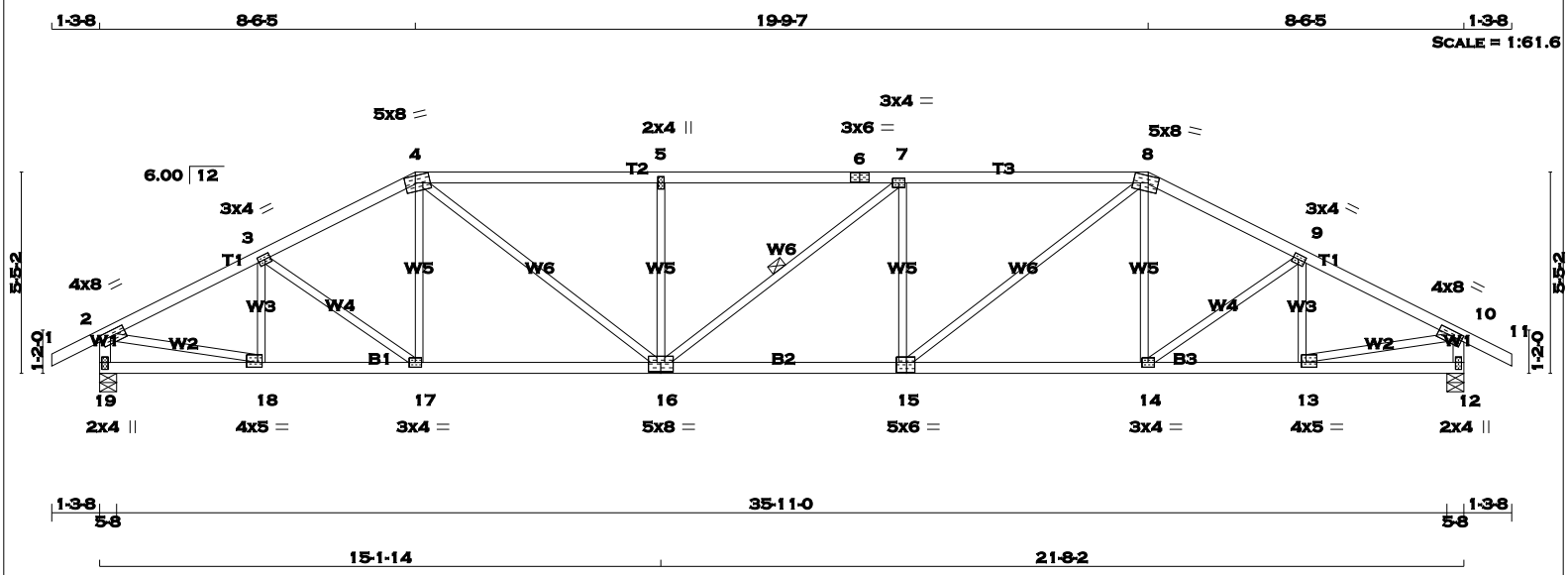

TOTAL WEIGHT = 146 lb

LUMBER

N. L. G. A. RULES

CHORDS	SIZE		LUMBER	DESCR.
1 - 4	2x4	DRY	No.2	SPF
4 - 6	2x4	DRY	No.2	SPF
6 - 8	2x4	DRY	No.2	SPF
8 - 11	2x4	DRY	No.2	SPF
19 - 2	2x4	DRY	No.2	SPF
12 - 10	2x4	DRY	No.2	SPF
19 - 16	2x4	DRY	No.2	SPF
16 - 15	2x4	DRY	No.2	SPF
15 - 12	2x4	DRY	No.2	SPF
ALL WEBS EXCEPT	2x3	DRY	No.2	SPF

DRY: SEASONED LUMBER.

PLATES (table is in inches)

JT	TYPE	PLATES	W	LEN	Y	X
2	TMVW-t	MT20	4.0	8.0	1.75	3.00
3	TMWW-t	MT20	3.0	4.0	1.50	1.75
4	TTWW-m	MT20	5.0	8.0	2.25	3.25
5	TMW+w	MT20	2.0	4.0		
6	TS-t	MT20	3.0	6.0		
7	TMWW-t	MT20	3.0	4.0		
8	TTWW-m	MT20	5.0	8.0	2.25	3.25
9	TMWW-t	MT20	3.0	4.0	1.50	1.75
10	TMVW-t	MT20	4.0	8.0	1.75	3.00
12	BMV1+p	MT20	2.0	4.0	2.25	1.00
13	BMWW-t	MT20	4.0	5.0	1.50	1.50
14	BMWW-t	MT20	3.0	4.0		
15	BSWW-l	MT20	5.0	6.0	3.25	2.75
16	BSWWW-l	MT20	5.0	8.0	3.00	4.00
17	BMWW-t	MT20	3.0	4.0		
18	BMWW-t	MT20	4.0	5.0	1.50	1.50
19	BMV1+p	MT20	2.0	4.0	2.25	1.00

A SIZE FOR SIZE SUBSTITUTION OF MITEK MII20 WITH TEE-LOK TL20 PLATES IS ALLOWED.

DIMENSIONS, SUPPORTS AND LOADINGS SPECIFIED BY FABRICATOR TO BE VERIFIED BY BUILDING DESIGNER

BEARINGS

JT	FACTORED GROSS REACTION VERT	HORZ	MAXIMUM FACTORED GROSS REACTION DOWN	HORZ	UPLIFT	INPUT BRG IN-SX	REQRD BRG IN-SX
19	1852	0	1852	0	0	5-8	5-8
12	1852	0	1852	0	0	5-8	5-8

UNFACTORED REACTIONS

JT	1ST LCASE COMBINED	MAX./MIN. COMPONENT REACTIONS SNOW	LIVE	PERM.LIVE	WIND	DEAD	SOIL
19	1297	921 / 0	0 / 0	0 / 0	0 / 0	376 / 0	0 / 0
12	1297	921 / 0	0 / 0	0 / 0	0 / 0	376 / 0	0 / 0

BEARING MATERIAL TO BE SPF NO.2 OR BETTER AT JOINT(S) 19, 12

BRACING

TOP CHORD TO BE SHEATHED OR MAX. PURLIN SPACING = 3.30 FT.
MAX. UNBRACED BOTTOM CHORD LENGTH = 10.00 FT. OR RIGID CEILING DIRECTLY APPLIED.

ALL PITCH BREAKS AND PERIMETER CORNER JOINTS MUST BE LATERALLY RESTRAINED.

1 - 2x3 SPF No.2 LATERAL BRACE(S) AT 1/ 2 LENGTH OF 7-16. DBS = 20-0-0 . CBF = 0 LBS.

DBS = DIAGONAL BRACE SPACING (MAX). CBF = CUMULATIVE BRACING FORCE. FASTEN LATERAL BRACE(S) USING (0.122"X3") SPIRAL NAILS : 1 NAIL FOR 2x3 BRACE(S), 2 FOR 1x4, 2x4, 2x5, 3 FOR 2x6, 4 FOR 2x8, 5 FOR 2x10, AND 6 FOR 2x12.

END VERTICAL(S) MUST BE SHEATHED OR HAVE BRACES AS INDICATED IN THE MAX. UNBRACED LENGTH COLUMN OF THE TABLE BELOW

LOADING

TOTAL LOAD CASES: (4)

CHORDS MEMB. FR-TO	MAX. FACTORED FORCE (LBS)	FACTORED VERT. LOAD LC1 (PLF) FROM	TO	MAX CSI (LC)	MAX. UNBRAC LENGTH
1- 2	0 / 23	-77.3	-77.3	0.10 (1)	10.00
2- 3	-2510 / 0	-77.3	-77.3	0.31 (1)	4.08
3- 4	-2523 / 0	-77.3	-77.3	0.31 (1)	4.08
4- 5	-3104 / 0	-77.3	-77.3	0.79 (1)	3.31
5- 6	-3104 / 0	-77.3	-77.3	0.78 (1)	3.30
6- 7	-3104 / 0	-77.3	-77.3	0.78 (1)	3.30
7- 8	-3105 / 0	-77.3	-77.3	0.80 (1)	3.30
8- 9	-2523 / 0	-77.3	-77.3	0.31 (1)	4.08
9-10	-2510 / 0	-77.3	-77.3	0.31 (1)	4.08
10-11	0 / 23	-77.3	-77.3	0.10 (1)	10.00
19- 2	-1813 / 0	0.0	0.0	0.18 (1)	6.21
12-10	-1813 / 0	0.0	0.0	0.18 (1)	6.21
19-18	0 / 0	-17.5	-17.5	0.07 (4)	10.00
18-17	0 / 2258	-17.5	-17.5	0.43 (1)	10.00
17-16	0 / 2243	-17.5	-17.5	0.43 (1)	10.00
16-15	0 / 3105	-17.5	-17.5	0.57 (1)	10.00
15-14	0 / 2243	-17.5	-17.5	0.43 (1)	10.00
14-13	0 / 2259	-17.5	-17.5	0.43 (1)	10.00
13-12	0 / 0	-17.5	-17.5	0.07 (4)	10.00

WEBS MEMB. FR-TO	MAX. FACTORED FORCE (LBS)	MAX CSI (LC)
18- 3	-382 / 0	0.08 (1)
3-17	-22 / 5	0.01 (1)
17- 4	0 / 121	0.04 (4)
4-16	0 / 1089	0.25 (1)
16- 5	-552 / 0	0.24 (1)
16- 7	-1 / 0	0.00 (1)
15- 7	-553 / 0	0.24 (1)
15- 8	0 / 1091	0.25 (1)
14- 8	0 / 120	0.04 (4)
14- 9	-22 / 5	0.01 (1)
13- 9	-381 / 0	0.08 (1)
2-18	0 / 2302	0.52 (1)
13-10	0 / 2302	0.52 (1)

DESIGN CRITERIA

SPECIFIED LOADS:

TOP CH.	LL	=	23.3	PSF
	DL	=	3.0	PSF
BOT CH.	LL	=	0.0	PSF
	DL	=	7.0	PSF
TOTAL LOAD		=	33.3	PSF

SPACING = 24.0 IN. C/C

LOADING IN FLAT SECTION BASED ON A SLOPE OF 6.00/12

THIS TRUSS IS DESIGNED FOR RESIDENTIAL OR SMALL BUILDING REQUIREMENTS OF PART 9, NBCC 2010

THIS DESIGN COMPLIES WITH:
- PART 9 OF OBC 2012 , BCBC 2012 , ABC 2014
- CSA 086-09
- TPIC 2011

(55 % OF 27.2 P.S.F. G.S.L. PLUS 8.4 P.S.F. RAIN LOAD) EQUALS 23.3 P.S.F. SPECIFIED ROOF LIVE LOAD

ALLOWABLE DEFL.(LL)= L/360 (1.23")
CALCULATED VERT. DEFL.(LL) = L/ 999 (0.21")
ALLOWABLE DEFL.(TL)= L/360 (1.23")
CALCULATED VERT. DEFL.(TL) = L/ 999 (0.38")

CSI: TC=0.80 (7-8:1) , BC=0.57 (15-16:1) , WB=0.52 (10-13:1) , SSI=0.24 (7-8:1)

DOL LUMBER=1.00 NAIL=1.00 LS BEND=1.10 COMP=1.10 SHEAR=1.10 TENS= 1.10

COMPANION LIVE LOAD FACTOR = 0.50

TRUSS PLATE MANUFACTURER IS NOT RESPONSIBLE FOR QUALITY CONTROL IN THE TRUSS MANUFACTURING PLANT .

NAIL VALUES

PLATE	GRIP(DRY) (PSI) MAX	MIN	SHEAR (PLI) MAX	MIN	SECTION (PLI) MAX	MIN
MT20	618	354	1667	822	2284	1656

PLATE PLACEMENT TOL. = 0.250 inches

PLATE ROTATION TOL. = 5.0 Deg.

JSI GRIP= 0.89 (13) (INPUT = 0.90)
JSI METAL= 0.68 (13) (INPUT = 1.00)

LICENSED PROFESSIONAL ENGINEER
P.M. TREVISAN
100136551
March 13th, 2017
PROVINCE OF ONTARIO

RECEIVED
TOWN OF MILTON
MAR 29, 2017
17-5052
BUILDING DIVISION

READ ALL NOTES ON THIS PAGE AND ON THE ENGINEERING NOTE PAGE ENP-1. THE NOTE PAGE IS AN INTEGRAL PART OF THIS DRAWING AS IT CONTAINS SPECIFICATIONS AND CRITERIA USED IN THE DESIGN OF THIS COMPONENT.

KOTT

JOB NAME	TRUSS NAME	QUANTITY	PLY	JOB DESC.	DRWG NO.
PT0317-060	T54	1	1	TRUSS DESC. LECCO RIDGE-BLOCK 332	

KOTT , Stouffville, ON, CGC

Version 8.100 S Feb 9 2017 MiTek Industries, Inc. Mon Mar 13 13:24:52 2017 Page 1
ID:gtheX5EqOVSIkwpr5Eyn2TyGKTI-y5IRoNuQmm7XAXyx65FPS3NXvEoIybfImwE2lzzbLkP

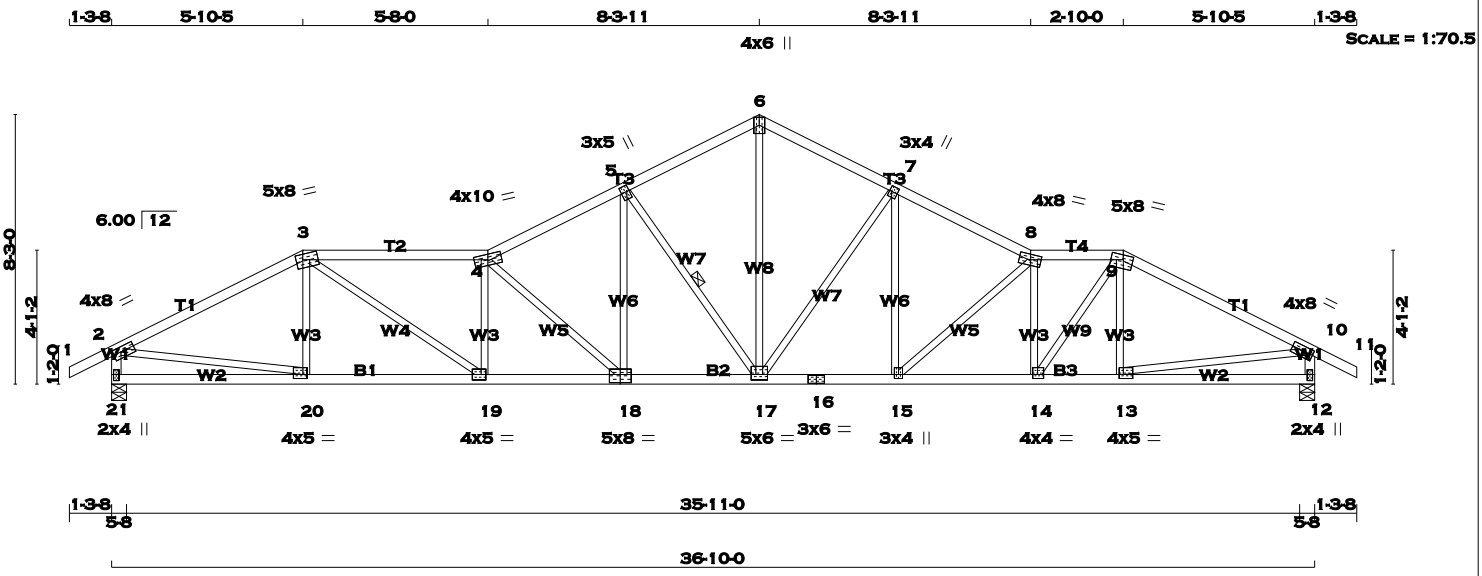

LUMBER
N. L. G. A. RULES

CHORDS	SIZE		LUMBER	DESCR.
1 - 3	2x4	DRY	No.2	SPF
3 - 4	2x4	DRY	No.2	SPF
4 - 6	2x4	DRY	No.2	SPF
6 - 8	2x4	DRY	No.2	SPF
8 - 9	2x4	DRY	No.2	SPF
9 - 11	2x4	DRY	No.2	SPF
21 - 2	2x4	DRY	No.2	SPF
12 - 10	2x4	DRY	No.2	SPF
21 - 18	2x4	DRY	No.2	SPF
18 - 16	2x4	DRY	No.2	SPF
16 - 12	2x4	DRY	No.2	SPF
ALL WEBS EXCEPT	2x3	DRY	No.2	SPF

DRY: SEASONED LUMBER.

PLATES (table is in inches)

JT	TYPE	PLATES	W	LEN	Y	X
2	TMVW-t	MT20	4.0	8.0	1.75	3.00
3	TTWW-m	MT20	5.0	8.0	2.00	2.50
4	TTWW-m	MT20	4.0	10.0		
5	TMWW+t	MT20	3.0	5.0	2.25	0.75
6	TTW+p	MT20	4.0	6.0	Edge	
7	TMWW+t	MT20	3.0	4.0	2.00	0.75
8	TTWW-m	MT20	4.0	8.0	2.00	3.75
9	TTWW-m	MT20	5.0	8.0	1.75	3.50
10	TMVW-t	MT20	4.0	8.0	1.75	3.00
12	BMV1+p	MT20	2.0	4.0	2.25	1.00
13	BMWW-t	MT20	4.0	5.0	1.50	1.50
14	BMWW-t	MT20	4.0	4.0	1.50	1.75
15	BMWW+t	MT20	3.0	4.0	1.50	1.50
16	BS-t	MT20	3.0	6.0		
17	BMWWW-t	MT20	5.0	6.0	2.00	3.00
18	BSWW-l	MT20	5.0	8.0	3.00	4.00
19	BMWW-t	MT20	4.0	5.0	2.00	1.75
20	BMWW-t	MT20	4.0	5.0	1.50	1.50
21	BMV1+p	MT20	2.0	4.0	2.25	1.00

Edge - INDICATES REFERENCE CORNER OF PLATE TOUCHES EDGE OF CHORD.

A SIZE FOR SIZE SUBSTITUTION OF MITEK MII20 WITH TEE-LOK TL20 PLATES IS ALLOWED.

DIMENSIONS, SUPPORTS AND LOADINGS SPECIFIED BY FABRICATOR TO BE VERIFIED BY BUILDING DESIGNER

BEARINGS

JT	FACTORED GROSS REACTION VERT	HORZ	MAXIMUM GROSS REACTION DOWN	HORZ	FACTORED UPLIFT	INPUT BRG IN-SX	REQRD BRG IN-SX
21	1852	0	1852	0	0	5-8	5-8
12	1852	0	1852	0	0	5-8	5-8

UNFACTORED REACTIONS

JT	1ST LCASE COMBINED	MAX./MIN. COMPONENT REACTIONS SNOW	LIVE	PERM.LIVE	WIND	DEAD	SOIL
21	1297	921 / 0	0 / 0	0 / 0	0 / 0	376 / 0	0 / 0
12	1297	921 / 0	0 / 0	0 / 0	0 / 0	376 / 0	0 / 0

BEARING MATERIAL TO BE SPF NO.2 OR BETTER AT JOINT(S) 21, 12

BRACING
TOP CHORD TO BE SHEATHED OR MAX. PURLIN SPACING = 3.27 FT.
MAX. UNBRACED BOTTOM CHORD LENGTH = 10.00 FT. OR RIGID CEILING DIRECTLY APPLIED.

ALL PITCH BREAKS AND PERIMETER CORNER JOINTS MUST BE LATERALLY RESTRAINED.

1 - 2x3 SPF No.2 LATERAL BRACE(S) AT 1/ 2 LENGTH OF 5-17. DBS = 12-0-0 . CBF = 89 LBS.

DBS = DIAGONAL BRACE SPACING (MAX). CBF = CUMULATIVE BRACING FORCE. FASTEN LATERAL BRACE(S) USING (0.122"X3") SPIRAL NAILS : 1 NAIL FOR 2x3 BRACE(S), 2 FOR 1x4, 2x4, 2x5, 3 FOR 2x6, 4 FOR 2x8, 5 FOR 2x10, AND 6 FOR 2x12.

END VERTICAL(S) MUST BE SHEATHED OR HAVE BRACES AS INDICATED IN THE MAX. UNBRACED LENGTH COLUMN OF THE TABLE BELOW

LOADING
TOTAL LOAD CASES: (4)

CHORDS MEMB. FR-TO	MAX. FACTORED FORCE (LBS)	FACTORED VERT. LOAD (PLF) FROM	TO	LC1 MAX CSI (LC)	MAX. UNBRAC LENGTH	WEBS MEMB. FR-TO	MAX. FACTORED FORCE (LBS)	MAX CSI (LC)
1- 2	0 / 23	-77.3	-77.3	0.10 (1)	10.00	20- 3	-210 / 33	0.05 (1)
2- 3	-2561 / 0	-77.3	-77.3	0.47 (1)	3.90	3-19	0 / 1618	0.36 (1)
3- 4	-3621 / 0	-77.3	-77.3	0.53 (1)	3.27	19- 4	-839 / 0	0.21 (1)
4- 5	-3010 / 0	-77.3	-77.3	0.27 (1)	3.83	4-18	-1267 / 0	0.69 (1)
5- 6	-2272 / 0	-77.3	-77.3	0.22 (1)	4.36	18- 5	0 / 921	0.21 (1)
6- 7	-2272 / 0	-77.3	-77.3	0.22 (1)	4.36	5-17	-1193 / 0	0.42 (1)
7- 8	-2798 / 0	-77.3	-77.3	0.26 (1)	3.97	17- 6	0 / 1767	0.40 (1)
8- 9	-3024 / 0	-77.3	-77.3	0.18 (1)	3.89	17- 7	-866 / 0	0.86 (1)
9-10	-2557 / 0	-77.3	-77.3	0.47 (1)	3.91	15- 7	0 / 560	0.13 (1)
10-11	0 / 23	-77.3	-77.3	0.10 (1)	10.00	15- 8	-722 / 0	0.39 (1)
21- 2	-1809 / 0	0.0	0.0	0.18 (1)	6.22	14- 8	-1003 / 0	0.26 (1)
12-10	-1807 / 0	0.0	0.0	0.18 (1)	6.22	14- 9	0 / 1275	0.29 (1)
						13- 9	-225 / 16	0.06 (1)
21-20	0 / 0	-17.5	-17.5	0.15 (4)	10.00	2-20	0 / 2313	0.52 (1)
20-19	0 / 2284	-17.5	-17.5	0.44 (1)	10.00	13-10	0 / 2309	0.52 (1)
19-18	0 / 3644	-17.5	-17.5	0.64 (1)	10.00			
18-17	0 / 2708	-17.5	-17.5	0.49 (1)	10.00			
17-16	0 / 2519	-17.5	-17.5	0.46 (1)	10.00			
16-15	0 / 2519	-17.5	-17.5	0.46 (1)	10.00			
15-14	0 / 3052	-17.5	-17.5	0.55 (1)	10.00			
14-13	0 / 2280	-17.5	-17.5	0.42 (1)	10.00			
13-12	0 / 0	-17.5	-17.5	0.13 (4)	10.00			

RECEIVED
TOWN OF MILTON
MAR 29, 2017
17-5052
BUILDING DIVISION

READ ALL NOTES ON THIS PAGE AND ON THE ENGINEERING NOTE PAGE ENP-1. THE NOTE PAGE IS AN INTEGRAL PART OF THIS DRAWING AS IT CONTAINS SPECIFICATIONS AND CRITERIA USED IN THE DESIGN OF THIS COMPONENT.

[M][F]

DESIGN CRITERIA

SPECIFIED LOADS:

TOP CH.	LL	=	23.3	PSF
	DL	=	3.0	PSF
BOT CH.	LL	=	0.0	PSF
	DL	=	7.0	PSF
TOTAL LOAD		=	33.3	PSF

SPACING = 24.0 IN. C/C

LOADING IN ALL FLAT SECTIONS BASED ON A SLOPE OF 6.00/12

THIS TRUSS IS DESIGNED FOR RESIDENTIAL OR SMALL BUILDING REQUIREMENTS OF PART 9, NBCC 2010

THIS DESIGN COMPLIES WITH:
- PART 9 OF OBC 2012 , BCBC 2012 , ABC 2014
- CSA 086-09
- TPIC 2011

(55 % OF 27.2 P.S.F. G.S.L. PLUS 8.4 P.S.F. RAIN LOAD) EQUALS 23.3 P.S.F. SPECIFIED ROOF LIVE LOAD

ALLOWABLE DEFL.(LL)= L/360 (1.23")
CALCULATED VERT. DEFL.(LL) = L/ 999 (0.26")
ALLOWABLE DEFL.(TL)= L/360 (1.23")
CALCULATED VERT. DEFL.(TL) = L/ 975 (0.45")

CSI: TC=0.53 (3-4:1) , BC=0.64 (18-19:1) , WB=0.86 (7-17:1) , SSI=0.17 (3-4:1)

DOL LUMBER=1.00 NAIL=1.00 LS BEND=1.10 COMP=1.10 SHEAR=1.10 TENS= 1.10

COMPANION LIVE LOAD FACTOR = 0.50

TRUSS PLATE MANUFACTURER IS NOT RESPONSIBLE FOR QUALITY CONTROL IN THE TRUSS MANUFACTURING PLANT .

NAIL VALUES

PLATE	GRIP(DRY) (PSI) MAX	MIN	SHEAR (PLI) MAX	MIN	SECTION (PLI) MAX	MIN
MT20	618	354	1667	822	2284	1656

PLATE PLACEMENT TOL. = 0.250 inches

PLATE ROTATION TOL. = 5.0 Deg.

JSI GRIP= 0.89 (4) (INPUT = 0.90)
JSI METAL= 0.69 (18) (INPUT = 1.00)

KOTT

JOB NAME	TRUSS NAME	QUANTITY	PLY	JOB DESC.	DRWG NO.
PT0317-060	T55	1	1	TRUSS DESC. LECCO RIDGE-BLOCK 332	

KOTT , Stouffville, ON, CGC

Version 8.100 S Feb 9 2017 MiTek Industries, Inc. Mon Mar 13 13:24:53 2017 Page 1
ID:gtheX5EqOVSIkwpr5Eyn2TyGKTI-QHsp0jv2X4FOngX7gpme_HwgMd43h5FS?a_cHPzbLkO

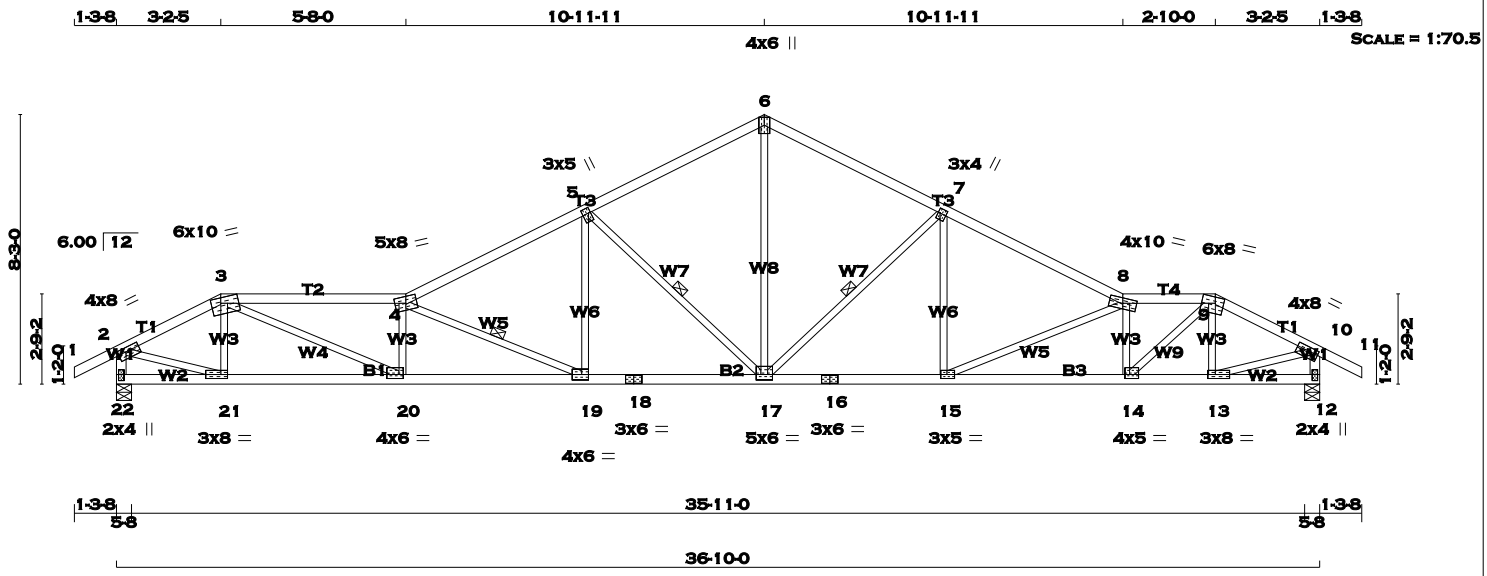

TOTAL WEIGHT = 148 lb

[M][F]

LUMBER

N. L. G. A. RULES

CHORDS	SIZE		LUMBER	DESCR.
1 - 3	2x4	DRY	No.2	SPF
3 - 4	2x4	DRY	No.2	SPF
4 - 6	2x4	DRY	No.2	SPF
6 - 8	2x4	DRY	No.2	SPF
8 - 9	2x4	DRY	No.2	SPF
9 - 11	2x4	DRY	No.2	SPF
22 - 2	2x4	DRY	No.2	SPF
12 - 10	2x4	DRY	No.2	SPF
22 - 18	2x4	DRY	No.2	SPF
18 - 16	2x4	DRY	No.2	SPF
16 - 12	2x4	DRY	No.2	SPF
ALL WEBS EXCEPT	2x3	DRY	No.2	SPF

DRY: SEASONED LUMBER.

PLATES (table is in inches)

JT	TYPE	PLATES	W	LEN	Y	X
2	TMVW-t	MT20	4.0	8.0	1.50	3.00
3	TTWW-m	MT20	6.0	10.0	2.00	3.50
4	TTWW-m	MT20	5.0	8.0		
5	TMWW+t	MT20	3.0	5.0	2.00	0.75
6	TTW+p	MT20	4.0	6.0	Edge	
7	TMWW+t	MT20	3.0	4.0	1.75	0.75
8	TTWW-m	MT20	4.0	10.0		
9	TTWW-m	MT20	6.0	8.0	2.25	3.00
10	TMVW-t	MT20	4.0	8.0	1.50	3.00
12	BMV1+p	MT20	2.0	4.0	2.25	1.00
13	BMWW-t	MT20	3.0	8.0	1.50	2.75
14	BMWW-t	MT20	4.0	5.0	1.50	1.75
15	BMWW-t	MT20	3.0	5.0	1.50	2.25
16	BS-t	MT20	3.0	6.0		
17	BMWWW-t	MT20	5.0	6.0	2.00	3.00
18	BS-t	MT20	3.0	6.0		
19	BMWW-t	MT20	4.0	6.0	2.00	2.50
20	BMWW-t	MT20	4.0	6.0	1.50	1.50
21	BMWW-t	MT20	3.0	8.0	1.50	2.50
22	BMV1+p	MT20	2.0	4.0	2.25	1.00

Edge - INDICATES REFERENCE CORNER OF PLATE TOUCHES EDGE OF CHORD.

A SIZE FOR SIZE SUBSTITUTION OF MITEK MII20 WITH TEE-LOK TL20 PLATES IS ALLOWED.

DIMENSIONS, SUPPORTS AND LOADINGS SPECIFIED BY FABRICATOR TO BE VERIFIED BY BUILDING DESIGNER

BEARINGS

JT	FACTORED GROSS REACTION VERT	HORZ	MAXIMUM FACTORED GROSS REACTION DOWN	HORZ	UPLIFT	INPUT BRG IN-SX	REQRD BRG IN-SX
22	1852	0	1852	0	0	5-8	5-8
12	1852	0	1852	0	0	5-8	5-8

UNFACTORED REACTIONS

JT	1ST LCASE COMBINED	MAX./MIN. COMPONENT REACTIONS SNOW	LIVE	PERM.LIVE	WIND	DEAD	SOIL
22	1297	921 / 0	0 / 0	0 / 0	0 / 0	376 / 0	0 / 0
12	1297	921 / 0	0 / 0	0 / 0	0 / 0	376 / 0	0 / 0

BEARING MATERIAL TO BE SPF NO.2 OR BETTER AT JOINT(S) 22, 12

BRACING

TOP CHORD TO BE SHEATHED OR MAX. PURLIN SPACING = 2.75 FT.
MAX. UNBRACED BOTTOM CHORD LENGTH = 10.00 FT. OR RIGID CEILING DIRECTLY APPLIED.

ALL PITCH BREAKS AND PERIMETER CORNER JOINTS MUST BE LATERALLY RESTRAINED.

1 - 2x3 SPF No.2 LATERAL BRACE(S) AT 1/ 2 LENGTH OF 4-19. DBS = 6-0-0 . CBF = 72 LBS.
1 - 2x3 SPF No.2 LATERAL BRACE(S) AT 1/ 2 LENGTH OF 5-17. DBS = 10-0-0 . CBF = 85 LBS.
1 - 2x3 SPF No.2 LATERAL BRACE(S) AT 1/ 2 LENGTH OF 7-17. DBS = 14-0-0 . CBF = 85 LBS.

DBS = DIAGONAL BRACE SPACING (MAX). CBF = CUMULATIVE BRACING FORCE. FASTEN LATERAL BRACE(S) USING (0.122"X3") SPIRAL NAILS : 1 NAIL FOR 2x3 BRACE(S), 2 FOR 1x4, 2x4, 2x5, 3 FOR 2x6, 4 FOR 2x8, 5 FOR 2x10, AND 6 FOR 2x12.

END VERTICAL(S) MUST BE SHEATHED OR HAVE BRACES AS INDICATED IN THE MAX. UNBRACED LENGTH COLUMN OF THE TABLE BELOW

LOADING

TOTAL LOAD CASES: (4)

CHORDS

MEMB. FR-TO	MAX. FACTORED FORCE (LBS)	FACTORED VERT. LOAD LC1 (PLF) FROM	TO	MAX CSI (LC)	MAX. UNBRAC LENGTH
1- 2	0 / 23	-77.3	-77.3	0.10 (1)	10.00
2- 3	-2364 / 0	-77.3	-77.3	0.16 (1)	4.35
3- 4	-4712 / 0	-77.3	-77.3	0.67 (1)	2.75
4- 5	-3335 / 0	-77.3	-77.3	0.49 (1)	3.47
5- 6	-2280 / 0	-77.3	-77.3	0.38 (1)	4.19
6- 7	-2280 / 0	-77.3	-77.3	0.38 (1)	4.19
7- 8	-3017 / 0	-77.3	-77.3	0.45 (1)	3.66
8- 9	-3513 / 0	-77.3	-77.3	0.21 (1)	3.61
9-10	-2343 / 0	-77.3	-77.3	0.16 (1)	4.36
10-11	0 / 23	-77.3	-77.3	0.10 (1)	10.00
22- 2	-1840 / 0	0.0	0.0	0.19 (1)	6.17
12-10	-1826 / 0	0.0	0.0	0.18 (1)	6.20
22-21	0 / 0	-17.5	-17.5	0.09 (4)	10.00
21-20	0 / 2093	-17.5	-17.5	0.42 (1)	10.00
20-19	0 / 4758	-17.5	-17.5	0.86 (1)	10.00
19-18	0 / 3005	-17.5	-17.5	0.54 (1)	10.00
18-17	0 / 3005	-17.5	-17.5	0.54 (1)	10.00
17-16	0 / 2720	-17.5	-17.5	0.50 (1)	10.00
16-15	0 / 2720	-17.5	-17.5	0.50 (1)	10.00
15-14	0 / 3566	-17.5	-17.5	0.65 (1)	10.00
14-13	0 / 2073	-17.5	-17.5	0.36 (1)	10.00
13-12	0 / 0	-17.5	-17.5	0.04 (4)	10.00

WEBS

MEMB. FR-TO	MAX. FACTORED FORCE (LBS)	MAX CSI (LC)
21- 3	-440 / 0	0.07 (1)
3-20	0 / 2864	0.64 (1)
20- 4	-1094 / 0	0.18 (1)
4-19	-1922 / 0	0.51 (1)
19- 5	0 / 897	0.20 (1)
5-17	-1358 / 0	0.52 (1)
17- 6	0 / 1694	0.38 (1)
17- 7	-966 / 0	0.37 (1)
15- 7	0 / 487	0.11 (1)
15- 8	-927 / 0	0.61 (1)
14- 8	-1250 / 0	0.21 (1)
14- 9	0 / 1940	0.44 (1)
13- 9	-480 / 0	0.08 (1)
2-21	0 / 2182	0.49 (1)
13-10	0 / 2163	0.49 (1)

RECEIVED
TOWN OF MILTON
MAR 29, 2017
17-5052
BUILDING DIVISION

READ ALL NOTES ON THIS PAGE AND ON THE ENGINEERING NOTE PAGE ENP-1. THE NOTE PAGE IS AN INTEGRAL PART OF THIS DRAWING AS IT CONTAINS SPECIFICATIONS AND CRITERIA USED IN THE DESIGN OF THIS COMPONENT.

DESIGN CRITERIA

SPECIFIED LOADS:

TOP	CH.	LL	=	23.3	PSF
		DL	=	3.0	PSF
BOT	CH.	LL	=	0.0	PSF
		DL	=	7.0	PSF
TOTAL	LOAD		=	33.3	PSF

SPACING = 24.0 IN. C/C

LOADING IN ALL FLAT SECTIONS BASED ON A SLOPE OF 6.00/12

THIS TRUSS IS DESIGNED FOR RESIDENTIAL OR SMALL BUILDING REQUIREMENTS OF PART 9, NBCC 2010

THIS DESIGN COMPLIES WITH:
- PART 9 OF OBC 2012 , BCBC 2012 , ABC 2014
- CSA 086-09
- TPIC 2011

(55 % OF 27.2 P.S.F. G.S.L. PLUS 8.4 P.S.F. RAIN LOAD) EQUALS 23.3 P.S.F. SPECIFIED ROOF LIVE LOAD

ALLOWABLE DEFL.(LL)= L/360 (1.23")
CALCULATED VERT. DEFL.(LL) = L/ 999 (0.34")
ALLOWABLE DEFL.(TL)= L/360 (1.23")
CALCULATED VERT. DEFL.(TL) = L/ 729 (0.61")

CSI: TC=0.67 (3-4:1) , BC=0.86 (19-20:1) , WB=0.64 (3-20:1) , SSI=0.18 (4-5:1)

DOL LUMBER=1.00 NAIL=1.00 LS BEND=1.10 COMP=1.10 SHEAR=1.10 TENS= 1.10

COMPANION LIVE LOAD FACTOR = 0.50

TRUSS PLATE MANUFACTURER IS NOT RESPONSIBLE FOR QUALITY CONTROL IN THE TRUSS MANUFACTURING PLANT .

NAIL VALUES

PLATE	GRIP(DRY) (PSI) MAX	MIN	SHEAR (PLI) MAX	MIN	SECTION (PLI) MAX	MIN
MT20	618	354	1667	822	2284	1656

PLATE PLACEMENT TOL. = 0.250 inches

PLATE ROTATION TOL. = 5.0 Deg.

JSI GRIP= 0.90 (14) (INPUT = 0.90)
JSI METAL= 0.76 (18) (INPUT = 1.00)

KOTT

CONTINUED ON PAGE 2

JOB NAME	TRUSS NAME	QUANTITY	PLY	JOB DESC.	DRWG NO.
PT0317-060	T56	1	1	TRUSS DESC. LECCO RIDGE-BLOCK 332	

KOTT , Stouffville, ON, CGC

Version 8.100 S Feb 9 2017 MiTek Industries, Inc. Mon Mar 13 13:24:53 2017 Page 1
ID:gtheX5EqOVSIkwpr5Eyn2TyGKTI-QHsp0jv2X4FOngX7gpme_Hwh3d4lh2eS?a_cHPzbLkO

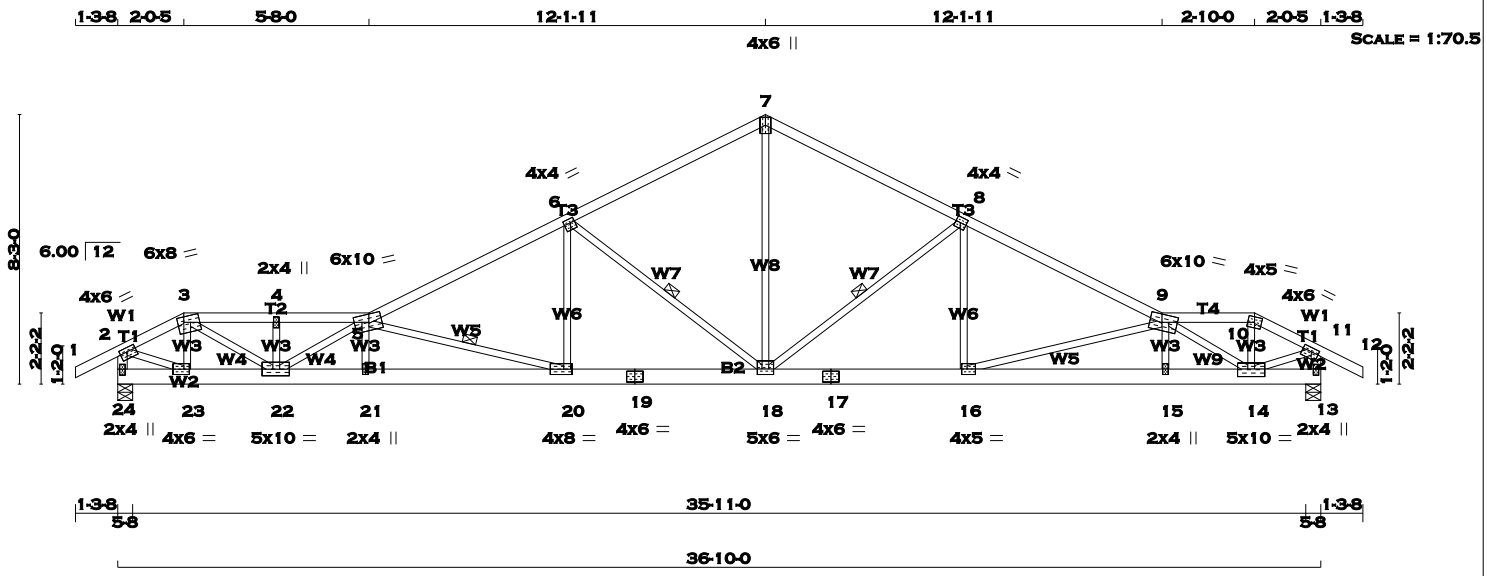

TOTAL WEIGHT = 168 lb

[M][F]

LUMBER

N. L. G. A. RULES

CHORDS	SIZE		LUMBER	DESCR.
1 - 3	2x4	DRY	No.2	SPF
3 - 5	2x4	DRY	No.2	SPF
5 - 7	2x4	DRY	No.2	SPF
7 - 9	2x4	DRY	No.2	SPF
9 - 10	2x4	DRY	No.2	SPF
10 - 12	2x4	DRY	No.2	SPF
24 - 2	2x4	DRY	No.2	SPF
13 - 11	2x4	DRY	No.2	SPF
24 - 19	2x6	DRY	No.2	SPF
19 - 17	2x6	DRY	No.2	SPF
17 - 13	2x6	DRY	No.2	SPF
ALL WEBS EXCEPT	2x3	DRY	No.2	SPF

DRY: SEASONED LUMBER.

PLATES (table is in inches)

JT	TYPE	PLATES	W	LEN	Y	X
2	TMVW-t	MT20	4.0	6.0	1.50	2.75
3	TTWW-m	MT20	6.0	8.0	2.00	2.25
4	TMW+w	MT20	2.0	4.0		
5	TTWWW-m	MT20	6.0	10.0	3.00	4.75
6	TMWW-t	MT20	4.0	4.0	1.50	1.50
7	TTW+p	MT20	4.0	6.0	Edge	
8	TMWW-t	MT20	4.0	4.0	2.00	1.75
9	TTWWW-m	MT20	6.0	10.0	3.00	4.50
10	TTW-m	MT20	4.0	5.0		
11	TMVW-t	MT20	4.0	6.0	1.50	2.75
13	BMV1+p	MT20	2.0	4.0	2.25	1.00
14	BMWWW-t	MT20	5.0	10.0	2.75	5.00
15	BMW+w	MT20	2.0	4.0		
16	BMWW-t	MT20	4.0	5.0	2.00	2.00
17	BS-t	MT20	4.0	6.0		
18	BMWWW-t	MT20	5.0	6.0	2.00	3.00
19	BS-t	MT20	4.0	6.0		
20	BMWW-t	MT20	4.0	8.0	2.00	3.00
21	BMW+w	MT20	2.0	4.0		
22	BMWWW-t	MT20	5.0	10.0	2.50	4.00
23	BMWW-t	MT20	4.0	6.0	2.00	2.00
24	BMV1+p	MT20	2.0	4.0	2.25	1.00

Edge - INDICATES REFERENCE CORNER OF PLATE TOUCHES EDGE OF CHORD.

A SIZE FOR SIZE SUBSTITUTION OF MITEK MII20 WITH TEE-LOK TL20 PLATES IS ALLOWED.

DIMENSIONS, SUPPORTS AND LOADINGS SPECIFIED BY FABRICATOR TO BE VERIFIED BY BUILDING DESIGNER

BEARINGS

JT	FACTORED GROSS REACTION VERT	HORZ	MAXIMUM FACTORED GROSS REACTION DOWN	HORZ	UPLIFT	INPUT BRG IN-SX	REQRD BRG IN-SX
24	1852	0	1852	0	0	5-8	5-8
13	1852	0	1852	0	0	5-8	5-8

UNFACTORED REACTIONS

JT	1ST LCASE COMBINED	MAX./MIN. COMPONENT REACTIONS SNOW	LIVE	PERM.LIVE	WIND	DEAD	SOIL
24	1297	921 / 0	0 / 0	0 / 0	0 / 0	376 / 0	0 / 0
13	1297	921 / 0	0 / 0	0 / 0	0 / 0	376 / 0	0 / 0

BEARING MATERIAL TO BE SPF NO.2 OR BETTER AT JOINT(S) 24, 13

BRACING

TOP CHORD TO BE SHEATHED OR MAX. PURLIN SPACING = 3.25 FT.
MAX. UNBRACED BOTTOM CHORD LENGTH = 10.00 FT. OR RIGID CEILING DIRECTLY APPLIED.

ALL PITCH BREAKS AND PERIMETER CORNER JOINTS MUST BE LATERALLY RESTRAINED.

1 - 2x3 SPF No.2 LATERAL BRACE(S) AT 1/ 2 LENGTH OF 5-20. DBS = 4-0-0 . CBF = 66 LBS.
1 - 2x3 SPF No.2 LATERAL BRACE(S) AT 1/ 2 LENGTH OF 6-18. DBS = 10-0-0 . CBF = 93 LBS.
1 - 2x3 SPF No.2 LATERAL BRACE(S) AT 1/ 2 LENGTH OF 8-18. DBS = 14-0-0 . CBF = 92 LBS.

DBS = DIAGONAL BRACE SPACING (MAX). CBF = CUMULATIVE BRACING FORCE. FASTEN LATERAL BRACE(S) USING (0.122"X3") SPIRAL NAILS : 1 NAIL FOR 2x3 BRACE(S), 2 FOR 1x4, 2x4, 2x5, 3 FOR 2x6, 4 FOR 2x8, 5 FOR 2x10, AND 6 FOR 2x12.

END VERTICAL(S) MUST BE SHEATHED OR HAVE BRACES AS INDICATED IN THE MAX. UNBRACED LENGTH COLUMN OF THE TABLE BELOW

LOADING

TOTAL LOAD CASES: (4)

CHORDS

MEMB. FR-TO	MAX. FACTORED FORCE (LBS)	VERT. LOAD (PLF) FROM	TO	MAX CSI (LC)	MAX. UNBRAC LENGTH
1- 2	0 / 23	-77.3	-77.3	0.10 (1)	10.00
2- 3	-2157 / 0	-77.3	-77.3	0.09 (1)	4.58
3- 4	-4020 / 0	-77.3	-77.3	0.25 (1)	3.36
4- 5	-4020 / 0	-77.3	-77.3	0.25 (1)	3.36
5- 6	-3562 / 0	-77.3	-77.3	0.63 (1)	3.25
6- 7	-2306 / 0	-77.3	-77.3	0.47 (1)	4.07
7- 8	-2306 / 0	-77.3	-77.3	0.47 (1)	4.08
8- 9	-3179 / 0	-77.3	-77.3	0.57 (1)	3.47
9-10	-1954 / 0	-77.3	-77.3	0.12 (1)	4.74
10-11	-2138 / 0	-77.3	-77.3	0.09 (1)	4.60
11-12	0 / 23	-77.3	-77.3	0.10 (1)	10.00
24- 2	-1856 / 0	0.0	0.0	0.19 (1)	6.15
13-11	-1840 / 0	0.0	0.0	0.18 (1)	6.17
24-23	0 / 0	-17.5	-17.5	0.03 (1)	10.00
23-22	0 / 1893	-17.5	-17.5	0.32 (1)	10.00
22-21	0 / 5753	-17.5	-17.5	0.88 (1)	10.00
21-20	0 / 5755	-17.5	-17.5	0.88 (1)	10.00
20-19	0 / 3211	-17.5	-17.5	0.43 (1)	10.00
19-18	0 / 3211	-17.5	-17.5	0.43 (1)	10.00
18-17	0 / 2867	-17.5	-17.5	0.38 (1)	10.00
17-16	0 / 2867	-17.5	-17.5	0.38 (1)	10.00
16-15	0 / 3989	-17.5	-17.5	0.61 (1)	10.00
15-14	0 / 3986	-17.5	-17.5	0.61 (1)	10.00
14-13	0 / 0	-17.5	-17.5	0.01 (1)	10.00

WEBS

MEMB. FR-TO	MAX. FACTORED FORCE (LBS)	MAX CSI (LC)
23- 3	-569 / 0	0.08 (1)
3-22	0 / 2517	0.57 (1)
22- 4	-211 / 0	0.03 (1)
22- 5	-2052 / 0	0.42 (1)
21- 5	-42 / 58	0.02 (4)
5-20	-2654 / 0	0.77 (1)
20- 6	0 / 929	0.21 (1)
6-18	-1495 / 0	0.60 (1)
18- 7	0 / 1683	0.38 (1)
18- 8	-1057 / 0	0.42 (1)
16- 8	0 / 485	0.11 (1)
16- 9	-1169 / 0	0.88 (1)
15- 9	-50 / 57	0.02 (4)
9-14	-2432 / 0	0.48 (1)
14-10	0 / 776	0.17 (1)
2-23	0 / 2050	0.46 (1)
14-11	0 / 2031	0.46 (1)

RECEIVED
TOWN OF MILTON
MAR 29, 2017
17-5052
BUILDING DIVISION

READ ALL NOTES ON THIS PAGE AND ON THE ENGINEERING NOTE PAGE ENP-1. THE NOTE PAGE IS AN INTEGRAL PART OF THIS DRAWING AS IT CONTAINS SPECIFICATIONS AND CRITERIA USED IN THE DESIGN OF THIS COMPONENT.

DESIGN CRITERIA

SPECIFIED LOADS:

TOP	CH.	LL	=	23.3	PSF
		DL	=	3.0	PSF
BOT	CH.	LL	=	0.0	PSF
		DL	=	7.0	PSF
TOTAL	LOAD		=	33.3	PSF

SPACING = 24.0 IN. C/C

LOADING IN ALL FLAT SECTIONS BASED ON A SLOPE OF 6.00/12

THIS TRUSS IS DESIGNED FOR RESIDENTIAL OR SMALL BUILDING REQUIREMENTS OF PART 9, NBCC 2010

THIS DESIGN COMPLIES WITH:
- PART 9 OF OBC 2012 , BCBC 2012 , ABC 2014
- CSA 086-09
- TPIC 2011

(55 % OF 27.2 P.S.F. G.S.L. PLUS 8.4 P.S.F. RAIN LOAD) EQUALS 23.3 P.S.F. SPECIFIED ROOF LIVE LOAD

ALLOWABLE DEFL.(LL)= L/360 (1.23")
CALCULATED VERT. DEFL.(LL) = L/ 999 (0.34")
ALLOWABLE DEFL.(TL)= L/360 (1.23")
CALCULATED VERT. DEFL.(TL) = L/ 733 (0.60")

CSI: TC=0.63 (5-6:1) , BC=0.88 (20-21:1) , WB=0.88 (9-16:1) , SSI=0.20 (5-6:1)

DOL LUMBER=1.00 NAIL=1.00 LS BEND=1.10 COMP=1.10 SHEAR=1.10 TENS= 1.10

COMPANION LIVE LOAD FACTOR = 0.50

TRUSS PLATE MANUFACTURER IS NOT RESPONSIBLE FOR QUALITY CONTROL IN THE TRUSS MANUFACTURING PLANT .

NAIL VALUES

PLATE	GRIP(DRY) (PSI) MAX	MIN	SHEAR (PLI) MAX	MIN	SECTION (PLI) MAX	MIN
MT20	618	354	1667	822	2284	1656

PLATE PLACEMENT TOL. = 0.250 inches

PLATE ROTATION TOL. = 5.0 Deg.

JSI GRIP= 0.90 (14) (INPUT = 0.90)
JSI METAL= 0.96 (5) (INPUT = 1.00)

KOTT

CONTINUED ON PAGE 2

JOB NAME	TRUSS NAME	QUANTITY	PLY	JOB DESC.	DRWG NO.
PT0317-060	T57	1	1	TRUSS DESC. LECCO RIDGE-BLOCK 332	ENG JOB: PT0317-060

KOTT , Stouffville, ON, CGC

Version 8.100 S Feb 9 2017 MiTek Industries, Inc. Mon Mar 13 13:24:54 2017 Page 1

ID:gtheX5EqOVSIkwpr5Eyn2TyGKTI-uUPBD3whHONFPq6KEWHtXUT_G1dCQi5bDEj9przbLkN

SCALE = 1:18.0

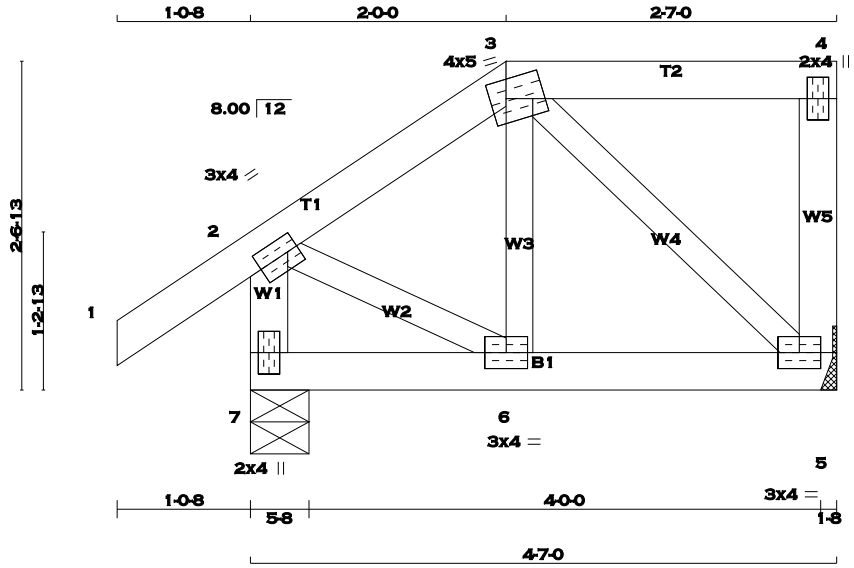

TOTAL WEIGHT = 21 lb [M]

LUMBER

N. L. G. A. RULES

CHORDS	SIZE		LUMBER	DESCR.
1 - 3	2x4	DRY	No.2	SPF
3 - 4	2x4	DRY	No.2	SPF
5 - 4	2x4	DRY	No.2	SPF
7 - 2	2x4	DRY	No.2	SPF
7 - 5	2x4	DRY	No.2	SPF
ALL WEBS EXCEPT	2x3	DRY	No.2	SPF

DRY: SEASONED LUMBER.

PLATES (table is in inches)

JT	TYPE	PLATES	W	LEN	Y	X
2	TMVW-t	MT20	3.0	4.0	1.50	1.00
3	TTWW-m	MT20	4.0	5.0	1.75	1.50
4	TMV+p	MT20	2.0	4.0		
5	BMVW1-t	MT20	3.0	4.0		
6	BMWW-t	MT20	3.0	4.0		
7	BMV1+p	MT20	2.0	4.0		

A SIZE FOR SIZE SUBSTITUTION OF MITEK MII20 WITH TEE-LOK TL20 PLATES IS ALLOWED.

DIMENSIONS, SUPPORTS AND LOADINGS SPECIFIED BY FABRICATOR TO BE VERIFIED BY BUILDING DESIGNER

BEARINGS

JT	FACTORED GROSS REACTION VERT	HORZ	MAXIMUM FACTORED GROSS REACTION DOWN	HORZ	UPLIFT	INPUT BRG IN-SX	REQRD BRG IN-SX
5	217	0	217	0	0	HANGER BY OTHERS MIN. SEAT SIZE: 1-8	
7	304	0	304	0	0	5-8	5-8

UNFACTORED REACTIONS

JT	1ST LCASE COMBINED	MAX./MIN. COMPONENT REACTIONS SNOW	LIVE	PERM.LIVE	WIND	DEAD	SOIL
5	153	107 / 0	0 / 0	0 / 0	0 / 0	46 / 0	0 / 0
7	212	159 / 0	0 / 0	0 / 0	0 / 0	53 / 0	0 / 0

BEARING MATERIAL TO BE SPF NO.2 OR BETTER AT JOINT(S) 7

BRACING

TOP CHORD TO BE SHEATHED OR MAX. PURLIN SPACING = 6.25 FT.
MAX. UNBRACED BOTTOM CHORD LENGTH = 10.00 FT. OR RIGID CEILING DIRECTLY APPLIED.

ALL PITCH BREAKS AND PERIMETER CORNER JOINTS MUST BE LATERALLY RESTRAINED.

LOADING

TOTAL LOAD CASES: (4)

CHORDS

MEMB. FR-TO	MAX. FACTORED FORCE (LBS)	VERT. LOAD (PLF) FROM	TO	LC1 MAX CSI (LC)	MAX. UNBRAC LENGTH
1- 2	0 / 24	-77.3	-77.3	0.07 (1)	10.00
2- 3	-136 / 0	-77.3	-77.3	0.05 (1)	6.25
3- 4	0 / 0	-77.3	-77.3	0.09 (1)	10.00
5- 4	-100 / 0	0.0	0.0	0.01 (1)	7.81
7- 2	-289 / 0	0.0	0.0	0.03 (1)	7.81
7- 6	0 / 0	-17.5	-17.5	0.02 (4)	10.00
6- 5	0 / 112	-17.5	-17.5	0.03 (4)	10.00

WEBS

MEMB. FR-TO	MAX. FACTORED FORCE (LBS)	MAX CSI (LC)
6- 3	-3 / 39	0.01 (4)
3- 5	-150 / 0	0.03 (1)
2- 6	0 / 123	0.03 (1)

DESIGN CRITERIA

SPECIFIED LOADS:

TOP	CH.	LL	=	23.3	PSF
		DL	=	3.0	PSF
BOT	CH.	LL	=	0.0	PSF
		DL	=	7.0	PSF
TOTAL	LOAD		=	33.3	PSF

SPACING = 24.0 IN. C/C

LOADING IN FLAT SECTION BASED ON A SLOPE OF 6.00/12

THIS TRUSS IS DESIGNED FOR RESIDENTIAL OR SMALL BUILDING REQUIREMENTS OF PART 9, NBCC 2010

THIS DESIGN COMPLIES WITH:
- PART 9 OF OBC 2012 , BCBC 2012 , ABC 2014
- CSA 086-09
- TPIC 2011

(55 % OF 27.2 P.S.F. G.S.L. PLUS 8.4 P.S.F. RAIN LOAD) EQUALS 23.3 P.S.F. SPECIFIED ROOF LIVE LOAD

ALLOWABLE DEFL.(LL)= L/360 (0.19")
CALCULATED VERT. DEFL.(LL) = L/ 999 (0.00")
ALLOWABLE DEFL.(TL)= L/360 (0.19")
CALCULATED VERT. DEFL.(TL) = L/ 999 (0.00")

CSI: TC=0.09 (3-4:1) , BC=0.03 (5-6:4) , WB=0.03 (3-5:1) , SSI=0.08 (3-4:1)

DOL LUMBER=1.00 NAIL=1.00 LS BEND=1.10 COMP=1.10 SHEAR=1.10 TENS= 1.10

COMPANION LIVE LOAD FACTOR = 0.50

TRUSS PLATE MANUFACTURER IS NOT RESPONSIBLE FOR QUALITY CONTROL IN THE TRUSS MANUFACTURING PLANT .

NAIL VALUES

PLATE	GRIP(DRY) (PSI) MAX	MIN	SHEAR (PLI) MAX	MIN	SECTION (PLI) MAX	MIN
MT20	618	354	1667	822	2284	1656

PLATE PLACEMENT TOL. = 0.250 inches

PLATE ROTATION TOL. = 5.0 Deg.

JSI GRIP= 0.40 (2) (INPUT = 0.90)
JSI METAL= 0.09 (2) (INPUT = 1.00)

LICENSED PROFESSIONAL ENGINEER
P.M. TREVISAN
100136551
March 13th, 2017
PROVINCE OF ONTARIO

RECEIVED
TOWN OF MILTON
MAR 29, 2017
17-5052
BUILDING DIVISION

READ ALL NOTES ON THIS PAGE AND ON THE ENGINEERING NOTE PAGE ENP-1. THE NOTE PAGE IS AN INTEGRAL PART OF THIS DRAWING AS IT CONTAINS SPECIFICATIONS AND CRITERIA USED IN THE DESIGN OF THIS COMPONENT.

KOTT

BEARING ANCHORAGE BY TOE-NAILS FOR LATERAL CAPACITY

B37579H1

NAIL TYPE	LENGTH (IN)	DIAMETER (IN)	NAIL LATERAL CAPACITY (LB)	
			S-P-F	D. FIR
COMMON WIRE	3.00	0.144	132	147
	3.25	0.144	132	147
	3.50	0.160	159	177
COMMON SPIRAL	3.00	0.122	97	108
	3.25	0.122	97	108
	3.50	0.152	145	162

NOTES:

1. Rafter and ceiling members may be anchored to top and bottom chords of girder truss by toe-nailing rafter and ceiling members to girder chords provided the reaction does not exceed the lateral capacities in the table. Hangers (specified by others) are required for reactions higher than the maximum toe-nail capacity. Reactions are based on factored loads.

2. Toe nail capacities shown in the table are for **one** toe-nail. For additional toe-nails multiply values in table by the number of toe-nails used. Toe-nail capacities take into account toe-nailing factor J_A in CSA O86-09, section 10.9.4.1.

3. For 9- 3/4 gauge 3.25" common wire gun nails (diameter = 0.120") use 3" common spiral nail values.

4. Maximum number of toe-nails allowed depends on the lumber size & species to be toe-nailed to supporting member and nail diameter, as shown in tables below.

5. Nail values in table are based on the following relative lumber densities: G = 0.42 (SPF), G = 0.49 (D. Fir).

6. Toe-nails shall be driven at approximately 1/3 the nail length from the edge of the joist/truss chord and driven at an angle of 30º to the grain of the member (See next page for nailing on bearing plate).

7. For loads due to **wind** the nail lateral capacity in this table may be multiplied by 1.15 (K_D factor).

8. Lumber must be dry (< 19% moisture content) at the time of nail installation.

9. Nail values in this table comply with CSA O86-09, section 10.9.4

10. This design is not valid after April 30, 2017.

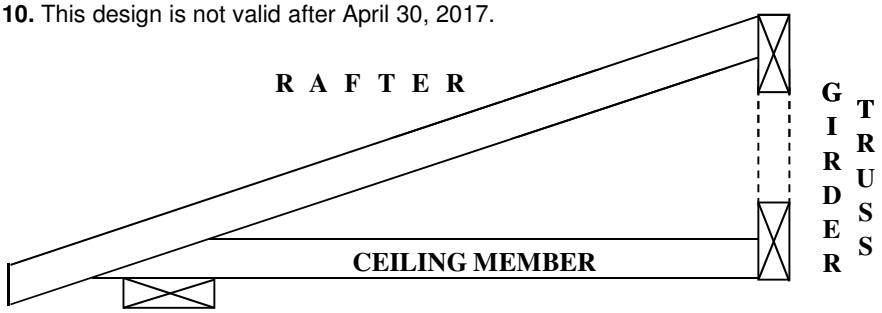

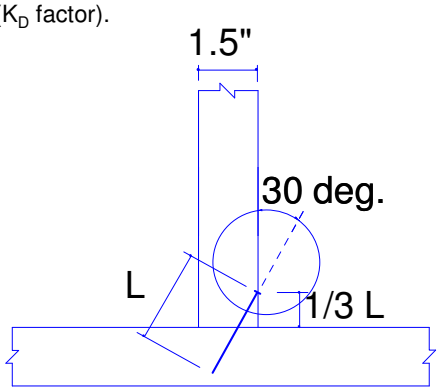

TOE-NAIL INSTALLATION

Nail type	Common wire	Common spiral	Common wire	Common spiral
Nail dia. (in)	0.160	0.152	0.144	0.122
	(3.5" nail)		(3" and 3.25" nail)	
LUMBER SIZE	**MAXIMUM NUMBER OF TOE-NAILS**			
2X4 SPF	2	2	3	3
2X4 D. Fir	2	2	2	2
2X6 SPF	4	4	4	5
2X6 D. Fir	3	3	3	4

MiTek Canada Inc
100 Industrial Rd.
Bradford, Ontario L3Z 3G7

RECEIVED
TOWN OF MILTON
MAR 29, 2017
17-5052
BUILDING DIVISION

PEO
Certificate No. 10889485

LICENSED PROFESSIONAL ENGINEER
C. Cordogiannis
90553736
PROVINCE OF ONTARIO

April 24, 2015

BEARING ANCHORAGE BY TOE-NAILS FOR WIND LOADING B37579H2

NAIL TYPE	LENGTH (IN)	DIAMETER (IN)	NAIL WITHDRAWAL CAPACITY (LB)	
			S-P-F	D. FIR
COMMON WIRE	3.00	0.144	30	42
	3.25	0.144	32	45
	3.50	0.160	38	52
COMMON SPIRAL	3.00	0.122	26	36
	3.25	0.122	28	40
	3.50	0.152	36	50

Note: If using truss with D. Fir lumber and S-P-F bearing plate, use values in table for S-P-F.

NOTES:

1. Truss chord, rafter, or ceiling members may be anchored to bearing plate by toe-nails, provided that the actual factored uplift force due to **wind** or **earthquake** load does not exceed the withdrawal capacities in the table. Hangers (specified by others) are required for uplift forces that are higher than the maximum toe-nail withdrawal capacity.
2. Toe nail capacities shown in the table are for **one** toe-nail. For additional toe-nails multiply values in table by the number of toe-nails used. Toe-nail capacities take into account toe-nailing factor J_A in CSA O86-09, section 10.9.5.2.
3. For 9- 3/4 gauge 3.25" common wire gun nails (diameter = 0.120") use 3" common spiral nail values.
4. Maximum number of toe-nails allowed depends on the lumber size & species to be toe-nailed to supporting member and nail diameter, as shown in table above.
5. Nail values in table are based on the following relative lumber densities: G = 0.42(SPF), G = 0.49(D. Fir).
6. Toe-nails shall be driven at approximately 1/3 the nail length from the edge of the joist/truss chord and driven at an angle of 30° to the grain of the member (See drawing on detail B37579H1).
7. Lumber must be dry (< 19% moisture content) at the time of nail installation.
8. Nail values in this table comply with CSA O86-09, section 10.9.5
9. This design is not valid after April 30, 2017

Toe-nailing on 2x6 Bearing Plate

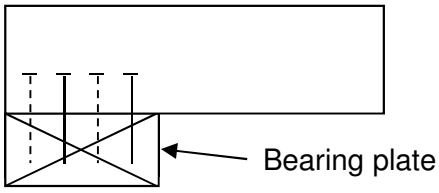

Elevation view

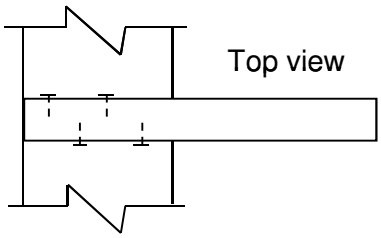

Top view

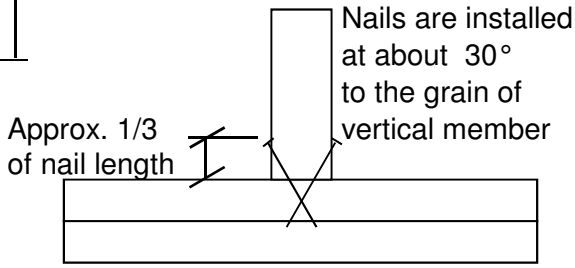

Toe-nailing viewed from end of joist or truss

Toe-nailing on 2x4 Bearing Plate

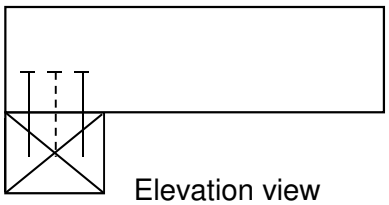

Elevation view

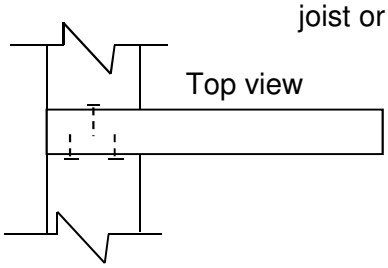

Top view

MiTek Canada Inc
100 Industrial Rd.
Bradford, Ontario L3Z 3G7

RECEIVED
TOWN OF MILTON
MAR 29, 2017
17-5052
BUILDING DIVISION

PEO
Certificate No. 10889485

LICENSED PROFESSIONAL ENGINEER
C. Cordogiannis
90553736
PROVINCE OF ONTARIO

April 24, 2015

JOB NAME	JOB DESC.	DRAWING NO.
DETAILS	HIP END FRAMING — LEGACY RIDGE-BLOCK 332	B37579J

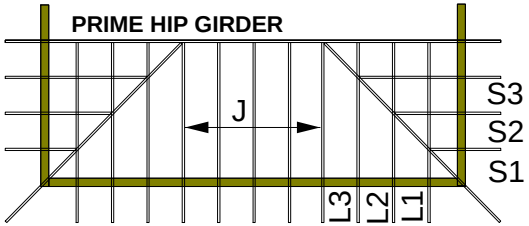

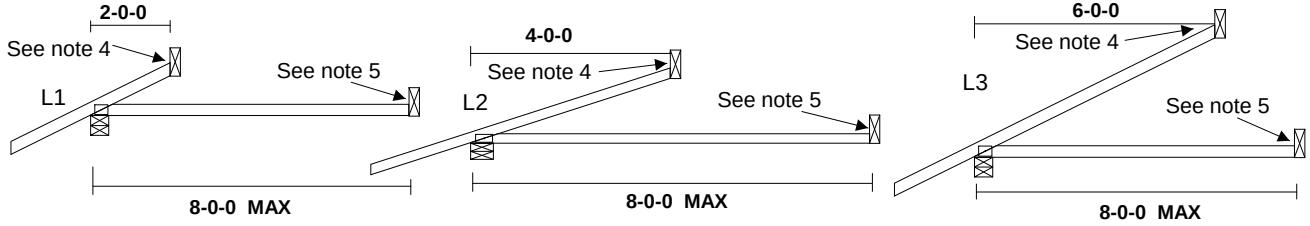

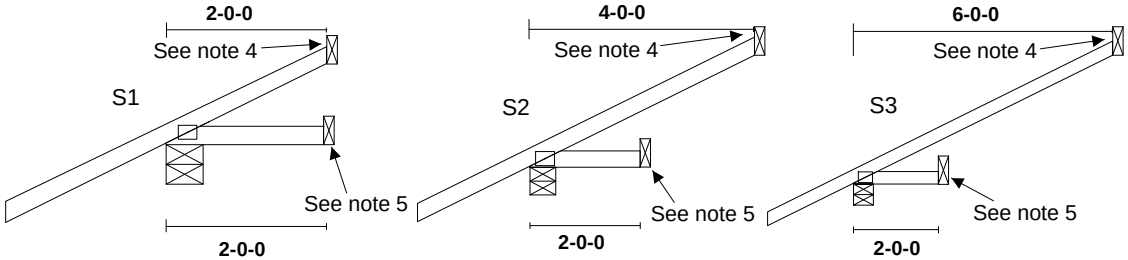

DETAIL "A"

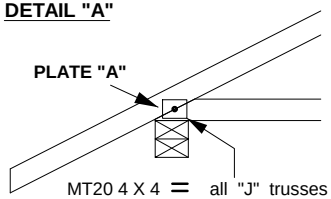

MT20 4 X 4 = all "J" trusses
MT20 3 X 4 = all other trusses

DETAIL "B"

RAISED HEEL

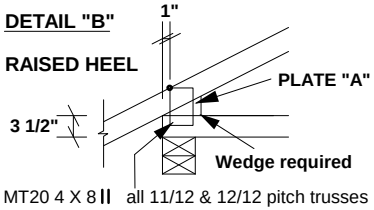

MT20 4 X 8 II all 11/12 & 12/12 pitch trusses
MT20 4 X 7 II all other trusses

DETAIL "C"

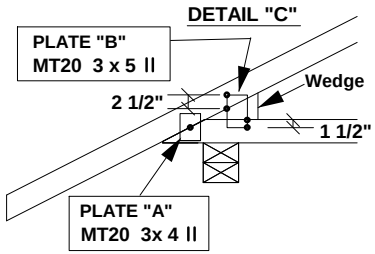

CANTILEVER DETAIL "C"

SLOPE	MAX CANTILEVER	PLATE "B"	WEDGE SIZE
3/12	17"	3 X 5	2 X 3
4/12	14"	3 X 5	2 X 3
5/12	12"	3 X 5	2 X 4
6/12	10"	3 X 5	2 X 4
7/12	9"	3 X 5	2 X 6
8/12	8.5"	3 X 5	2 X 6
9/12	8"	3 X 5	2 X 6
10/12	7.5"	3 X 5	2 X 6

"J"

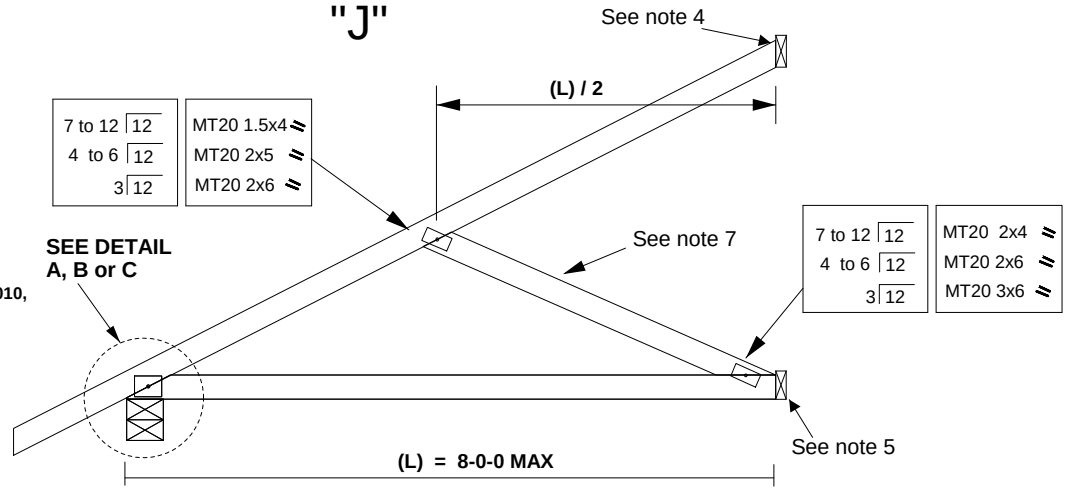

NOTES:

1. ALL LUMBER SHALL BE 2x4 SPF OR D. Fir No. 2 DRY OR BETTER.
2. THIS TRUSS IS DESIGNED FOR HOUSING AND SMALL BUILDING REQUIREMENTS OF PART 9 NBCC 2010, WHERE GROUND SNOW LOAD IS 60.0 PSF OR LESS AND RAIN LOAD DOES NOT EXCEED 12.53 PSF; TOP CHORD DEAD LOAD IS 6 PSF OR LESS; BC LIVE LOAD IS 0 PSF AND BC DEAD LOAD IS 7 PSF.
3. HIP RAFTER DESIGN SHALL CONFORM TO SECTION 9.23.14.6 OF NBCC 2010.
4. FASTEN HIGH END OF RAFTERS USING MITEK CANADA INC. "BEARING ANCHORAGE BY TOE-NAILS FOR LATERAL CAPACITY" STANDARD DETAIL B37579H1.
5. FASTEN RIGHT END OF CEILING USING MITEK CANADA INC. "BEARING ANCHORAGE BY TOE-NAILS FOR LATERAL CAPACITY" STANDARD DETAIL B37579H1.
6. OVERHANG LENGTH SHALL NOT EXCEED 2 FT.
7. WHEN SETBACK IS 6 FT OR LESS, DIAGONAL WEB MAY BE OMITTED AND HIGH END OF TOP CHORD SHALL BE CONNECTED AS PER NOTE 4.
8. ALL PLATES SPECIFIED ARE PRESSED INTO BOTH FACES OF THE TRUSS.
9. MITEK REFERENCE PAGE MII-7473C FORMS AN INTEGRAL PART OF THIS DETAIL.
10. THIS DETAIL IS NOT VALID AFTER APRIL 30, 2017

MiTek Canada, Inc.
100 Industrial Rd.
Bradford, Ontario, L3Z 3G7

PEO
Certificate No. 10889485

LICENSED PROFESSIONAL ENGINEER
C. Cordogiannis
90553736
PROVINCE OF ONTARIO

RECEIVED
TOWN OF MILTON
MAR 29, 2017
17-5052
BUILDING DIVISION

April 24, 2015

STANDARD GABLE END DETAIL

LECCO RIDGE-BLOCK 332

DRAWING NO.: ENG JOB: P703-17-060 B37579K

MINIMUM ROOF PITCH: 2/12

MAXIMUM ROOF PITCH: 12/12

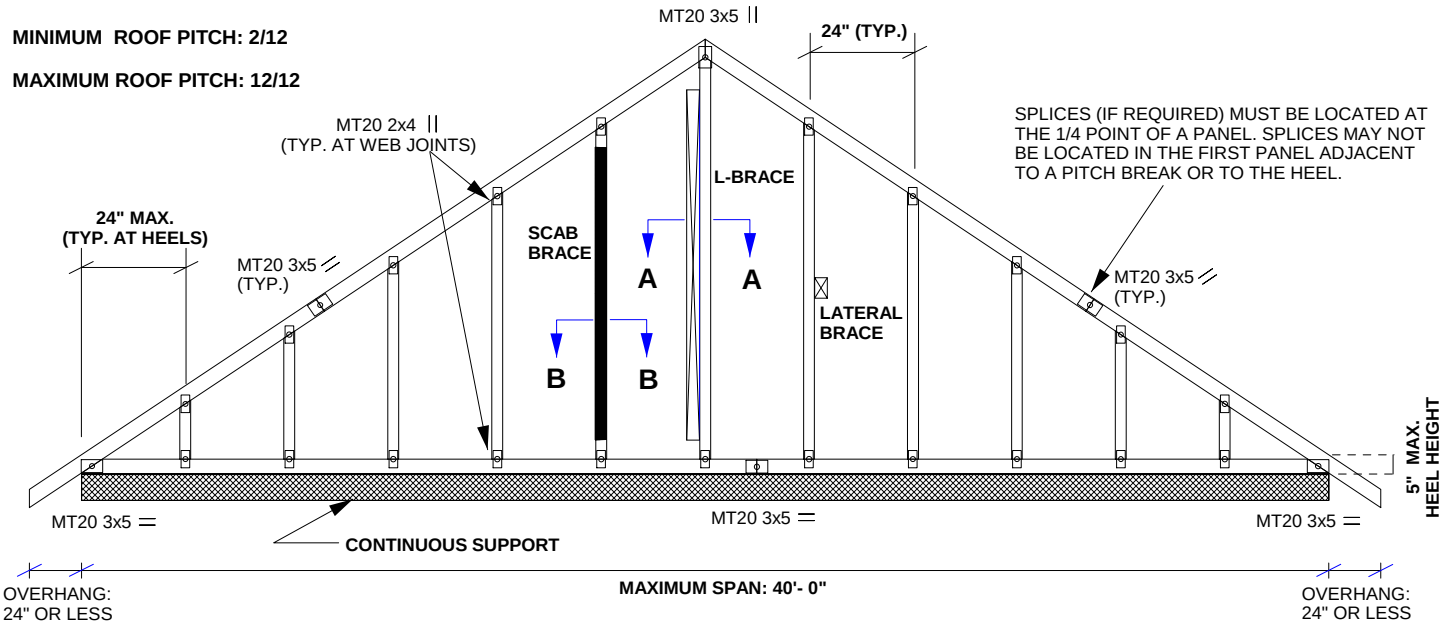

LUMBER

TOP CHORD:	**2 X 4 No. 2 DRY SPF or D- Fir**
BOTTOM CHORD:	**2 X 3 or 2 X 4 No. 2 DRY SPF or D- Fir**
GABLE WEB:	**2 X 3 or 2 X 4 No. 2 DRY SPF or D- Fir**

PLATES

JOINT	PLATES
HEELS	MT20 3 X 5
PEAK	MT20 3 X 5
TC SPLICES	MT20 3 X 5
BC SPLICES	MT20 3 X 5
WEB JOINTS	MT20 2 X 4

DESIGN CRITERIA

TOP CHORD LL = 60.0 PSF OR LESS
TOP CHORD DL = 6.0 PSF OR LESS
BOTTOM CHORD LL = 0 PSF
BOTTOM CHORD DL = 7.0 PSF

TOTAL LOAD = 73.0 PSF OR LESS

BRACING

TOP CHORD TO BE SHEATHED OR MAX. PURLIN SPACING = 2 FT.
MAX. UNBRACED BOTTOM CHORD LENGTH = 10 FT. OR RIGID CEILING DIRECTLY APPLIED.
WEBS MUST BE LATERALLY BRACED, SCAB BRACED OR L-BRACED AS INDICATED IN TABLE BELOW:

WEB LENGTH (L)	SCAB BRACE	L-BRACE	LATERAL BRACE
L < 6 FT.	NOT REQUIRED	NOT REQUIRED	NOT REQUIRED
6 FT. < L < 12 FT.	REQUIRED	2x4 L-BRACE	1 LATERAL AT 1/2 LENGTH OF WEB

SCAB BRACE DETAIL

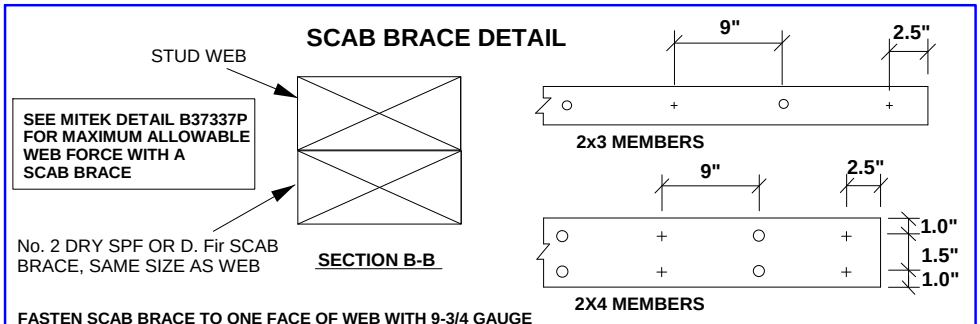

FASTEN SCAB BRACE TO ONE FACE OF WEB WITH 9-3/4 GAUGE 0.122" X 3" COMMON SPIRAL NAILS SPACED @ 9" C/C (MAX) WITH 2.5" MINIMUM END DISTANCE. SCAB BRACE MUST COVER 90% OF WEB LENGTH. DRIVE NAILS ALTERNATELY FROM FRONT AND BACK FACES.

+ NAIL FROM FRONT FACE
o NAIL FROM BACK FACE

CANTILEVER DETAIL

Note: Gable end may be cantilevered up to 6 inches past end wall as shown. Gable end to be continuously supported by 2x4 SPF No.2 (DRY) members at 12" o.c. along the bottom chord. Roof design loads shall not exceed the loading shown above.

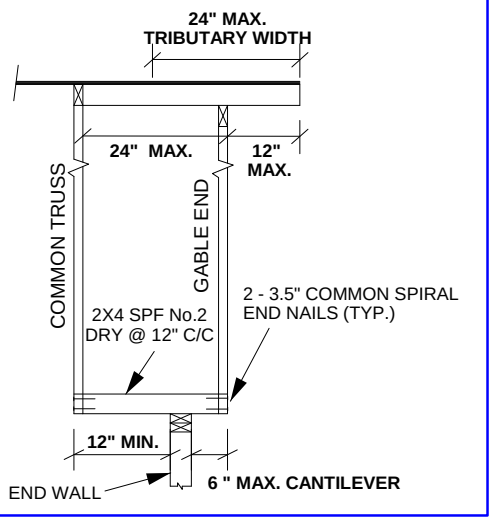

L-BRACE DETAIL

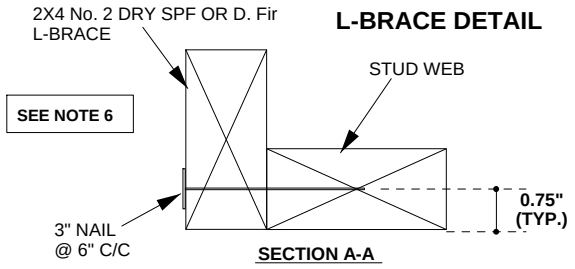

FASTEN L-BRACE TO NARROW EDGE OF WEB WITH ONE ROW OF 9-3/4 GAUGE 0.122" X 3" COMMON SPIRAL NAILS SPACED AT 6" C/C WITH 3" MINIMUM END DISTANCE. BRACE MUST COVER 90% OF WEB LENGTH.

PEO
Certificate No. 10889485

LICENSED PROFESSIONAL ENGINEER
C. Cordogiannis
90553736
PROVINCE OF ONTARIO

RECEIVED
TOWN OF MILTON
MAR 29, 2017
17-5052
BUILDING DIVISION

April 24, 2015

NOTES:

1. **Gable studs are spaced at 24" C/C (max.) with a max. length of 12 ft.**
2. **All plates specified are MiTek MT20, centered at each joint, and pressed into both faces of truss.**
3. **Truss spacing is 24" C/C, maximum.**
4. **Gable truss is designed for continuous support. Bearing material must be of the same species as chord member and of grade No. 2 or better.**
5. **This truss requires rigid sheathing attached to exposed face.**
6. **2x3 or 2x4 T-braces shown for gable webs in the MiTek engineering drawings may be replaced by a 2x4 L-brace as shown above.**
7. **This truss is designed for residential or small building requirements, conforming to Part 9, NBCC 2010.**
8. **This detail is not valid after April 30, 2017.**

MiTek Canada, Inc.
100 Industrial Rd.
Bradford, Ontario, L3Z 3G7