TOWN OF MILTON
PLANNING AND DEVELOPMENT
BUILDING PERMIT: 17-4990
BUILDING: REVIEWED
SCOTT SHERRIFFS APR 19, 2017
PLANS EXAMINER DATE
Neither the issuance of a permit nor carrying out of inspections by the Town of Milton relives the owner from full responsibility for compliance with the provisions of the Ontario Building Code Act and the Ontario Building Code, both as amended, as well as other applicable statutes and regulations of the Province on Ontario, By-laws of the Region of Halton and Town of Milton

RECEIVED
TOWN OF MILTON
MAR 29, 2017
17-4990
BUILDING DIVISION

TRUSSES BY KOTT

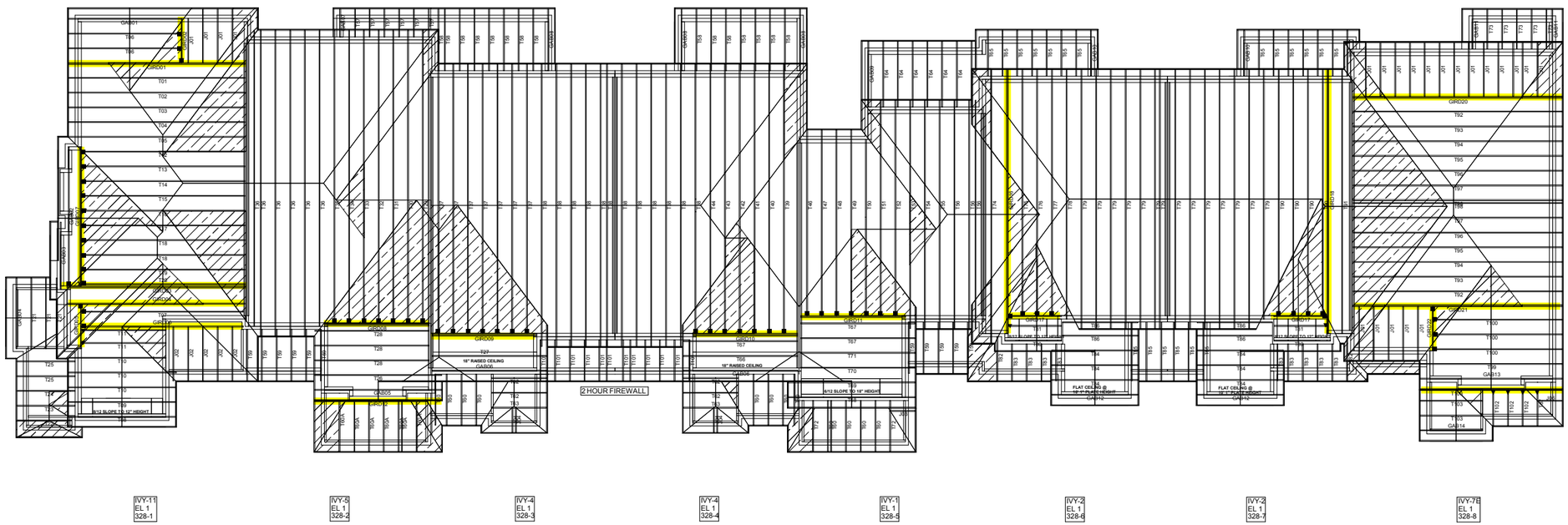

TOP OF ALL PORCH BEAMS AT 8' 7 1/4 A.F.F.

UNDERSIDE OF SOFFIT FOR PORCHES AT 8' 6" A.F.F.

GARAGE WALL PLATES AT 9' 1 2/16" A.F.F.

PARTY WALLS TO BE FRAMED ON SITE A.P.P.

HANGER LEGEND:

▼ LUS24 ■ LJS26DS
● HGUS26 ╳ HGUS26-2

ALL LOWER ROOFS BOTTOM OF FASCIA LEVEL WITH TOP OF BEAM/PLATE

CONVENTIONAL FRAMING BY OTHERS

SIZE AND LOCATION OF CONVENTIONAL FRAMING IS APPROXIMATE. ALL AREAS MAY NOT BE SHOWN. REFER TO ARCHITECTURAL PLANS FOR DETAILS.

ALL CONVENTIONAL FRAMING TO CONFORM WITH PART 9 OF THE O.B.C
ROOF RAFTERS THAT CROSS MEET OVER TRUSSES TO BE 2x4 S.P.F. @ 24"O/C WITH A 2x4 VERTICAL POST TO THE TRUSS UNDERNEATH EACH CROSS POINT. VERTICAL POST LONGER THAN 6' TO HAVE LATERAL BRACING SO THAT THE DISTANCE BETWEEN END POINT AND BETWEEN ROWS OF BRACING DOES NOT EXCEED 6'.

Model: **BLOCK 328**
Customer: GREENPARK
Project: LECCO RIDGE
Location: MILTON
Date: 3/10/2017 Drawn by: BB

ENGINEERING NOTE PAGE (ENP-1)
PLEASE READ PRIOR TO INSTALLATION

RESPONSIBILITIES

THIS DESIGN IS FOR AN INDIVIDUAL BUILDING COMPONENT AND HAS BEEN BASED ON INFORMATION PROVIDED BY THE DESIGN OFFICE OF KOTT LUMBER. THE UNDERSIGNED ENGINEER DISCLAIMS ANY RESPONSIBILITY FOR DAMAGES AS A RESULT OF FAULTY OR INCORRECT INFORMATION, SPECIFICATION AND/OR DESIGNS FURNISHED TO THE ENGINEER. THE UNDERSIGNED ENGINEER IS ONLY RESPONSIBLE FOR THE STRUCTURAL INTEGRITY OF THIS BUILDING COMPONENT FOR THE CONDITIONS AND LOADS SHOWN ON THIS DRAWING. THE STRUCTURAL INTEGRITY OF THE BUILDING AND THE VERIFICATION OF THE DIMENSIONS AND THE DESIGN LOADS USED ARE THE RESPONSIBILITY OF THE BUILDING DESIGNER.

TRUSSES ARE DESIGNED IN CONFORMANCE WITH THE RELEVANT SECTIONS OF THE NATIONAL BUILDING CODE OF CANADA OR THE CANADIAN CODE FOR FARM BUILDINGS, WHICHEVER APPLIES TO THE BUILDING TYPE INDICATED ON THE DRAWING

IT IS THE RESPONSIBILITY OF KOTT LUMBER TO ENSURE THAT TRUSSES ARE MANUFACTURED IN CONFORMANCE WITH THESE DESIGNS AND WITH THE SPECIFICATIONS OUTLINED BELOW. THE UNDERSIGNED ENGINEER IS NOT RESPONSIBLE FOR QUALITY CONTROL IN THE TRUSS MANUFACTURING PLANT.

USE AND OCCUPANCY

- The building is of the type indicated on the drawing

LOADING

- The truss loading intensity and distribution as well as load transfer mechanism is that indicated on the drawing
- No buildings, trees, parapets or other projections higher than the roof for which the trusses are used are located within a distance less than ten (10) times the difference in height, or five metres (16 ft) whichever is greater, unless the drawing indicates that the snow drifting has been taken into account

HANDLING, INSTALLATION AND BRACING

- The trusses must be handled and installed by a qualified professional as per the supplied document titled *Information for Truss Installers* and the BCSI-B1 and BCSI-B3 Summary Sheets
- The compression chords are laterally braced by continuous rigid diaphragm sheathing or as specified on the drawing
- Temporary and permanent bracing must be installed as indicated on the truss drawing and according to the BCSI-B1 and BCSI-B3 Summary Sheets. Bracing for the lateral stability of the truss is to be provided by the building designer
- **It is recommended that a Professional Engineer's advice be obtained for the bracing of trusses spanning more than 12.37m (40'-7")**

SUPPORTS

- The trusses are to be supported at the bearing points indicated and anchored to the supports where considered necessary by the designer of the overall structure
- Bearing sizes shown are the minimum required to prevent crushing of the truss members and do not necessarily take into account stability of the overall building structure
- Elevation of bearings must be carefully checked and shimmed to alignment for solid bearings
- Adequate wood truss bearing is the responsibility of the building designer.

DIMENSIONS

- Geometry of the truss and dimensions indicated on the drawing are identical to those of the installed truss.

RECEIVED
TOWN OF MILTON
MAR 29, 2017
17-4990
BUILDING DIVISION

JOB NAME	TRUSS NAME	QUANTITY	PLY	JOB DESC.	DRWG NO.
PT0317-054	**GAB01**	**1**	**1**	TRUSS DESC. LECCO RIDGE-BLOCK 328	

ENG JOB: PT0317-054

Kott Lumber Uxbridge, Stouffville, ON, CGC

Version 8.100 S Feb 9 2017 MiTek Industries, Inc. Mon Mar 13 09:56:43 2017 Page 1
ID:pF8Cn?9h9uHzAm5tCmlVl5yJJCp-7Q94dylWxXeaLEif_hhhnOdMIqT5GOl1wNQhvLzbOnY

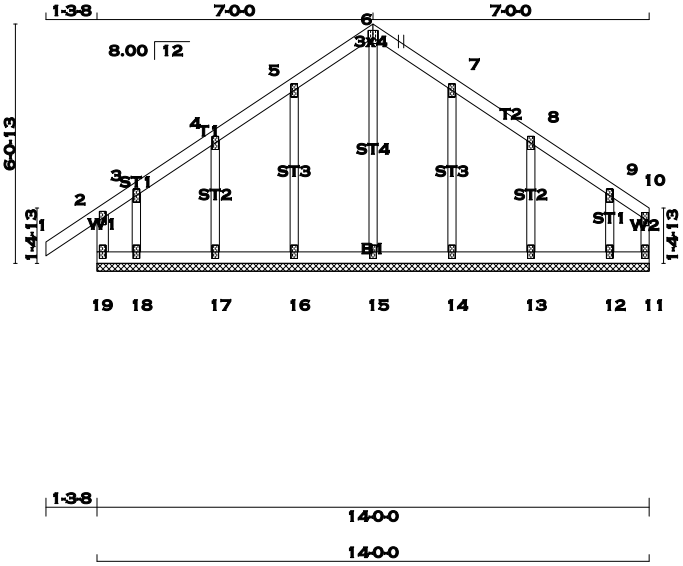

SCALE = 1:58.4

TOTAL WEIGHT = 57 lb [M]

LUMBER
N. L. G. A. RULES

CHORDS	SIZE		LUMBER	DESCR.
19 - 2	2x4	DRY	No.2	SPF
1 - 6	2x4	DRY	No.2	SPF
6 - 10	2x4	DRY	No.2	SPF
11 - 10	2x3	DRY	No.2	SPF
19 - 11	2x4	DRY	No.2	SPF
ALL WEBS	2x3	DRY	No.2	SPF
ALL GABLE WEBS	2x3	DRY	No.2	SPF

DRY: SEASONED LUMBER.

GABLE STUDS SPACED AT 2-0-0 OC.

PLATES (table is in inches)

JT	TYPE	PLATES	W	LEN	Y	X
2	TMV+p	MT20	2.0	4.0		
3, 4, 5, 7, 8, 9						
3	TMW+w	MT20	2.0	4.0		
6	TTW+p	MT20	3.0	4.0	2.25	1.50
10	TMV+p	MT20	2.0	4.0		
11	BMV1+p	MT20	2.0	4.0		
12, 13, 14, 15, 16, 17, 18						
12	BMW1+w	MT20	2.0	4.0		
19	BMV1+p	MT20	2.0	4.0		

A SIZE FOR SIZE SUBSTITUTION OF MITEK MII20 WITH TEE-LOK TL20 PLATES IS ALLOWED.

DIMENSIONS, SUPPORTS AND LOADINGS SPECIFIED BY FABRICATOR TO BE VERIFIED BY BUILDING DESIGNER

BEARINGS

THIS TRUSS DESIGNED FOR CONTINUOUS BEARINGS.

THIS TRUSS REQUIRES RIGID SHEATHING ON EXPOSED FACE.

BEARING MATERIAL TO BE SPF NO.2 OR BETTER AT JOINT(S)

BRACING
TOP CHORD TO BE SHEATHED OR MAX. PURLIN SPACING = 6.25 FT.
MAX. UNBRACED BOTTOM CHORD LENGTH = 6.25 FT. OR RIGID CEILING DIRECTLY APPLIED.

ALL PITCH BREAKS AND PERIMETER CORNER JOINTS MUST BE LATERALLY RESTRAINED.

LOADING
TOTAL LOAD CASES: (3)

CHORDS

MEMB. FR-TO	MAX. FACTORED FORCE (LBS)	FACTORED VERT. LOAD (PLF) FROM	TO	LC1	MAX CSI (LC)	MAX. UNBRAC LENGTH
19- 2	-191 / 0	0.0	0.0	0.02 (1)	7.81	
1- 2	0 / 29	-77.3	-77.3	0.10 (1)	10.00	
2- 3	-27 / 0	-77.3	-77.3	0.08 (1)	6.25	
3- 4	0 / 8	-77.3	-77.3	0.04 (1)	10.00	
4- 5	0 / 9	-77.3	-77.3	0.04 (1)	10.00	
5- 6	0 / 12	-77.3	-77.3	0.04 (1)	10.00	
6- 7	0 / 12	-77.3	-77.3	0.04 (1)	10.00	
7- 8	0 / 9	-77.3	-77.3	0.04 (1)	10.00	
8- 9	0 / 6	-77.3	-77.3	0.04 (1)	10.00	
9-10	0 / 7	-77.3	-77.3	0.03 (1)	10.00	
11-10	-19 / 0	0.0	0.0	0.00 (1)	7.81	
19-18	0 / 0	-17.5	-17.5	0.02 (1)	10.00	
18-17	-3 / 0	-17.5	-17.5	0.01 (3)	10.00	
17-16	-8 / 0	-17.5	-17.5	0.01 (3)	10.00	
16-15	-10 / 0	-17.5	-17.5	0.01 (3)	6.25	
15-14	-10 / 0	-17.5	-17.5	0.01 (3)	6.25	
14-13	-8 / 0	-17.5	-17.5	0.01 (3)	10.00	
13-12	-3 / 0	-17.5	-17.5	0.01 (3)	10.00	
12-11	0 / 3	-17.5	-17.5	0.01 (3)	10.00	

WEBS

MEMB. FR-TO	MAX. FACTORED FORCE (LBS)	MAX CSI (LC)
15- 6	-174 / 0	0.10 (1)
16- 5	-155 / 0	0.05 (1)
17- 4	-161 / 0	0.03 (1)
18- 3	-53 / 0	0.01 (1)
14- 7	-156 / 0	0.05 (1)
13- 8	-156 / 0	0.03 (1)
12- 9	-124 / 0	0.02 (1)

DESIGN CRITERIA

SPECIFIED LOADS:

TOP	CH.	LL	=	23.3	PSF
		DL	=	3.0	PSF
BOT	CH.	LL	=	0.0	PSF
		DL	=	7.0	PSF
TOTAL	LOAD		=	33.3	PSF

SPACING = 24.0 IN. C/C

THIS TRUSS IS DESIGNED FOR RESIDENTIAL OR SMALL BUILDING REQUIREMENTS OF PART 9, NBCC 2010

THIS DESIGN COMPLIES WITH:
- PART 9 OF OBC 2012 , BCBC 2012 , ABC 2014
- CSA 086-09
- TPIC 2011

DESIGN ASSUMPTIONS
-OVERHANG NOT TO BE ALTERED OR CUT OFF.

(55 % OF 27.2 P.S.F. G.S.L. PLUS 8.4 P.S.F. RAIN LOAD) EQUALS 23.3 P.S.F. SPECIFIED ROOF LIVE LOAD

CSI: TC=0.10 (1-2:1) , BC=0.02 (18-19:1) , WB=0.10 (6-15:1) , SSI=0.07 (1-2:1)

DOL LUMBER=1.00 NAIL=1.00 LS BEND=1.10 COMP=1.10 SHEAR=1.10 TENS= 1.10

COMPANION LIVE LOAD FACTOR = 0.50

TRUSS PLATE MANUFACTURER IS NOT RESPONSIBLE FOR QUALITY CONTROL IN THE TRUSS MANUFACTURING PLANT .

NAIL VALUES

PLATE	GRIP(DRY) (PSI) MAX	MIN	SHEAR (PLI) MAX	MIN	SECTION (PLI) MAX	MIN
MT20	618	354	1667	822	2284	1656

PLATE PLACEMENT TOL. = 0.250 inches

PLATE ROTATION TOL. = 5.0 Deg.

JSI GRIP= 0.12 (2) (INPUT = 0.90)
JSI METAL= 0.06 (6) (INPUT = 1.00)

LICENSED PROFESSIONAL ENGINEER
R.M. TREVISAN
100136551
March 13th, 2017
PROVINCE OF ONTARIO

RECEIVED
TOWN OF MILTON
MAR 29, 2017
17-4990
BUILDING DIVISION

READ ALL NOTES ON THIS PAGE AND ON THE ENGINEERING NOTE PAGE ENP-1. THE NOTE PAGE IS AN INTEGRAL PART OF THIS DRAWING AS IT CONTAINS SPECIFICATIONS AND CRITERIA USED IN THE DESIGN OF THIS COMPONENT.

KOTT

JOB NAME	TRUSS NAME	QUANTITY	PLY	JOB DESC.	DRWG NO.
PT0317-054	GAB02	1	1	TRUSS DESC. LECCO RIDGE-BLOCK 328	ENG JOB: PT0317-054

Kott Lumber Uxbridge, Stouffville, ON, CGC

Version 8.100 S Feb 9 2017 MiTek Industries, Inc. Mon Mar 13 09:56:44 2017 Page 1

ID:pF8Cn?9h9uHzAm5tCmlVl5yJJCp-bcjSrIm8iqmRzOHrYOCwJcAVuEnu?plA91AFRnzbOnX

SCALE = 1:57.7

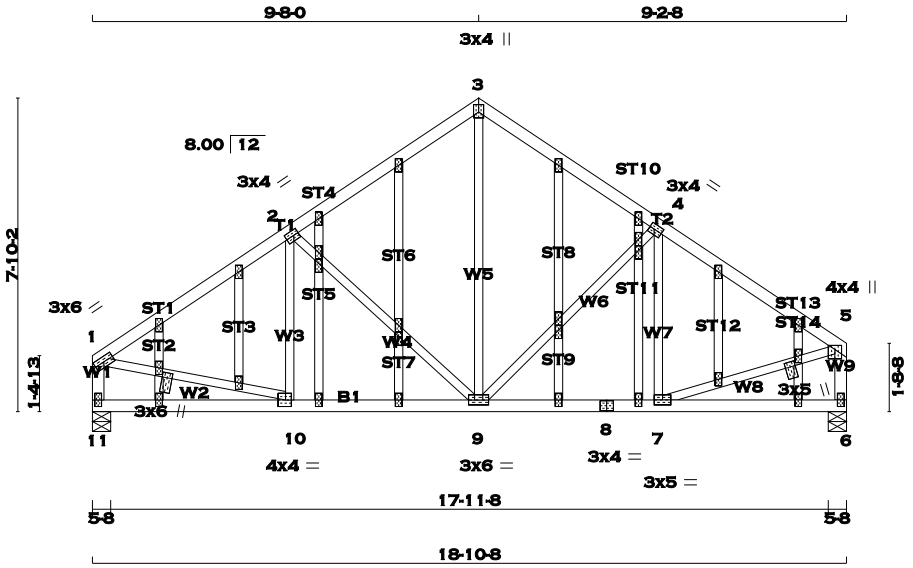

TOTAL WEIGHT = 105 lb

[M][F]

LUMBER

N. L. G. A. RULES

CHORDS	SIZE		LUMBER	DESCR.
1 - 3	2x4	DRY	No.2	SPF
3 - 5	2x4	DRY	No.2	SPF
11 - 1	2x4	DRY	No.2	SPF
6 - 5	2x4	DRY	No.2	SPF
11 - 8	2x4	DRY	No.2	SPF
8 - 6	2x4	DRY	No.2	SPF
ALL WEBS EXCEPT	2x3	DRY	No.2	SPF
ALL GABLE WEBS	2x3	DRY	No.2	SPF

DRY: SEASONED LUMBER.

GABLE STUDS SPACED AT 2-0-0 OC.

PLATES (table is in inches)

JT	TYPE	PLATES	W	LEN	Y	X
1	TMVW-t	MT20	3.0	6.0		
2	TMWW-t	MT20	3.0	4.0	1.50	1.50
3	TTW+p	MT20	3.0	4.0	2.25	1.50
4	TMWW-t	MT20	3.0	4.0	1.50	1.50
5	TMVW+p	MT20	4.0	4.0	1.25	2.00
6	BMV1+p	MT20	2.0	4.0		
7	BMWW-t	MT20	3.0	5.0		
8	BS-t	MT20	3.0	4.0		
9	BMWWW-t	MT20	3.0	6.0		
10	BMWW-t	MT20	4.0	4.0	2.00	1.75
11	BMV1+p	MT20	2.0	4.0		
12, 15, 25, 28						
12	NP+w	MT20	2.0	4.0	1.50	1.00
12, 13, 14, 15, 16, 17, 18, 19, 20, 21, 22, 23, 24, 25, 26, 27, 28, 29, 30, 31, 32, 33						
12	NP+w	MT20	2.0	4.0		
20	NP+t	MT20	3.0	6.0	1.50	0.25
33	NP+t	MT20	3.0	5.0	1.50	0.25

A SIZE FOR SIZE SUBSTITUTION OF MITEK MII20 WITH TEE-LOK TL20 PLATES IS ALLOWED.

DIMENSIONS, SUPPORTS AND LOADINGS SPECIFIED BY FABRICATOR TO BE VERIFIED BY BUILDING DESIGNER

BEARINGS

JT	FACTORED GROSS REACTION VERT	HORZ	MAXIMUM FACTORED GROSS REACTION DOWN	HORZ	UPLIFT	INPUT BRG IN-SX	REQRD BRG IN-SX
11	895	0	895	0	0	5-8	5-8
6	895	0	895	0	0	5-8	5-8

UNFACTORED REACTIONS

JT	1ST LCASE COMBINED	MAX./MIN. COMPONENT REACTIONS SNOW	LIVE	PERM.LIVE	WIND	DEAD	SOIL
11	628	439 / 0	0 / 0	0 / 0	0 / 0	189 / 0	0 / 0
6	628	439 / 0	0 / 0	0 / 0	0 / 0	189 / 0	0 / 0

BEARING MATERIAL TO BE SPF NO.2 OR BETTER AT JOINT(S) 11, 6

BRACING

TOP CHORD TO BE SHEATHED OR MAX. PURLIN SPACING = 6.10 FT.
MAX. UNBRACED BOTTOM CHORD LENGTH = 10.00 FT. OR RIGID CEILING DIRECTLY APPLIED.

ALL PITCH BREAKS AND PERIMETER CORNER JOINTS MUST BE LATERALLY RESTRAINED.

LOADING

TOTAL LOAD CASES: (3)

CHORDS

MEMB. FR-TO	MAX. FACTORED FORCE (LBS)	FACTORED VERT. LOAD (PLF) FROM	TO	LC1 MAX CSI (LC)	MAX. UNBRAC LENGTH
1- 2	-942 / 0	-77.3	-77.3	0.24 (1)	6.10
2- 3	-704 / 0	-77.3	-77.3	0.23 (1)	6.25
3- 4	-703 / 0	-77.3	-77.3	0.21 (1)	6.25
4- 5	-877 / 0	-77.3	-77.3	0.22 (1)	6.25
11- 1	-859 / 0	0.0	0.0	0.09 (1)	7.81
6- 5	-860 / 0	0.0	0.0	0.09 (1)	7.81
11-10	0 / 0	-17.5	-17.5	0.10 (3)	10.00
10- 9	0 / 804	-17.5	-17.5	0.18 (1)	10.00
9- 8	0 / 749	-17.5	-17.5	0.16 (1)	10.00
8- 7	0 / 749	-17.5	-17.5	0.16 (1)	10.00
7- 6	0 / 0	-17.5	-17.5	0.09 (3)	10.00

WEBS

MEMB. FR-TO	MAX. FACTORED FORCE (LBS)	MAX CSI (LC)
10- 2	-83 / 56	0.03 (1)
2- 9	-326 / 0	0.24 (1)
9- 3	0 / 485	0.11 (1)
9- 4	-262 / 0	0.19 (1)
7- 4	-133 / 37	0.05 (1)
1-10	0 / 823	0.19 (1)
7- 5	0 / 781	0.18 (1)

DESIGN CRITERIA

SPECIFIED LOADS:

TOP CH.	LL	=	23.3	PSF
	DL	=	3.0	PSF
BOT CH.	LL	=	0.0	PSF
	DL	=	7.0	PSF
TOTAL LOAD		=	33.3	PSF

SPACING = 24.0 IN. C/C

THIS TRUSS IS DESIGNED FOR RESIDENTIAL OR SMALL BUILDING REQUIREMENTS OF PART 9, NBCC 2010

THIS DESIGN COMPLIES WITH:
- PART 9 OF OBC 2012 , BCBC 2012 , ABC 2014
- CSA 086-09
- TPIC 2011

(55 % OF 27.2 P.S.F. G.S.L. PLUS 8.4 P.S.F. RAIN LOAD) EQUALS 23.3 P.S.F. SPECIFIED ROOF LIVE LOAD

ALLOWABLE DEFL.(LL)= L/360 (0.63")
CALCULATED VERT. DEFL.(LL) = L/ 999 (0.02")
ALLOWABLE DEFL.(TL)= L/360 (0.63")
CALCULATED VERT. DEFL.(TL) = L/ 999 (0.04")

CSI: TC=0.24 (1-2:1) , BC=0.18 (9-10:1) , WB=0.24 (2-9:1) , SSI=0.15 (1-2:1)

DOL LUMBER=1.00 NAIL=1.00 LS BEND=1.10 COMP=1.10 SHEAR=1.10 TENS= 1.10

COMPANION LIVE LOAD FACTOR = 0.50

TRUSS PLATE MANUFACTURER IS NOT RESPONSIBLE FOR QUALITY CONTROL IN THE TRUSS MANUFACTURING PLANT .

NAIL VALUES

PLATE	GRIP(DRY) (PSI) MAX	MIN	SHEAR (PLI) MAX	MIN	SECTION (PLI) MAX	MIN
MT20	618	354	1667	822	2284	1656

PLATE PLACEMENT TOL. = 0.250 inches

PLATE ROTATION TOL. = 5.0 Deg.

JSI GRIP= 0.88 (9) (INPUT = 0.90)
JSI METAL= 0.30 (10) (INPUT = 1.00)

LICENSED PROFESSIONAL ENGINEER
R.M. TREVISAN
100136551
March 13th, 2017
PROVINCE OF ONTARIO

RECEIVED
TOWN OF MILTON
MAR 29, 2017
17-4990
BUILDING DIVISION

READ ALL NOTES ON THIS PAGE AND ON THE ENGINEERING NOTE PAGE ENP-1. THE NOTE PAGE IS AN INTEGRAL PART OF THIS DRAWING AS IT CONTAINS SPECIFICATIONS AND CRITERIA USED IN THE DESIGN OF THIS COMPONENT.

KOTT

SCALE = 1:30.9

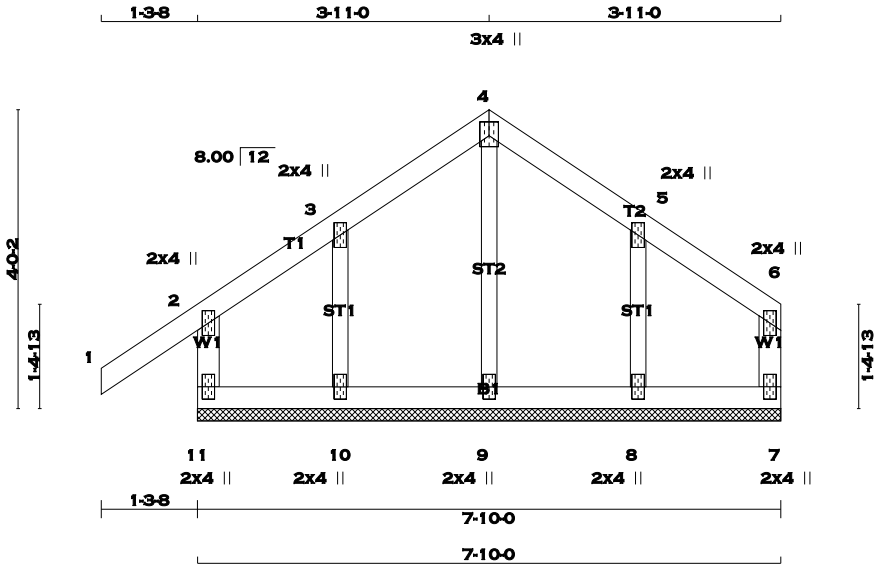

TOTAL WEIGHT = 30 lb [M]

LUMBER

N. L. G. A. RULES

CHORDS	SIZE		LUMBER	DESCR.
11 - 2	2x4	DRY	No.2	SPF
1 - 4	2x4	DRY	No.2	SPF
4 - 6	2x4	DRY	No.2	SPF
7 - 6	2x4	DRY	No.2	SPF
11 - 7	2x4	DRY	No.2	SPF
ALL WEBS	2x3	DRY	No.2	SPF
ALL GABLE WEBS	2x3	DRY	No.2	SPF

DRY: SEASONED LUMBER.

GABLE STUDS SPACED AT 2-0-0 OC.

PLATES (table is in inches)

JT	TYPE	PLATES	W	LEN	Y	X
2	TMV+p	MT20	2.0	4.0		
3	TMW+w	MT20	2.0	4.0		
4	TTW+p	MT20	3.0	4.0	2.25	1.50
5	TMW+w	MT20	2.0	4.0		
6	TMV+p	MT20	2.0	4.0		
7	BMV1+p	MT20	2.0	4.0		
8, 9, 10						
8	BMW1+w	MT20	2.0	4.0		
11	BMV1+p	MT20	2.0	4.0		

A SIZE FOR SIZE SUBSTITUTION OF MITEK MII20 WITH TEE-LOK TL20 PLATES IS ALLOWED.

DIMENSIONS, SUPPORTS AND LOADINGS SPECIFIED BY FABRICATOR TO BE VERIFIED BY BUILDING DESIGNER

BEARINGS

THIS TRUSS DESIGNED FOR CONTINUOUS BEARINGS.

THIS TRUSS REQUIRES RIGID SHEATHING ON EXPOSED FACE.

BEARING MATERIAL TO BE SPF NO.2 OR BETTER AT JOINT(S)

BRACING

TOP CHORD TO BE SHEATHED OR MAX. PURLIN SPACING = 6.25 FT.
MAX. UNBRACED BOTTOM CHORD LENGTH = 10.00 FT. OR RIGID CEILING DIRECTLY APPLIED.

ALL PITCH BREAKS AND PERIMETER CORNER JOINTS MUST BE LATERALLY RESTRAINED.

LOADING

TOTAL LOAD CASES: (3)

CHORDS

MEMB. FR-TO	MAX. FORCE (LBS)	FACTORED VERT. LOAD (PLF) FROM	TO	LC1	MAX CSI (LC)	MAX. UNBRAC LENGTH
11- 2	-199 / 0	0.0	0.0	0.02 (1)	7.81	
1- 2	0 / 29	-77.3	-77.3	0.10 (1)	10.00	
2- 3	-12 / 0	-77.3	-77.3	0.08 (1)	6.25	
3- 4	-3 / 8	-77.3	-77.3	0.04 (1)	10.00	
4- 5	-3 / 5	-77.3	-77.3	0.04 (1)	10.00	
5- 6	-3 / 5	-77.3	-77.3	0.04 (1)	10.00	
7- 6	-60 / 0	0.0	0.0	0.01 (1)	7.81	
11-10	0 / 3	-17.5	-17.5	0.02 (1)	10.00	
10- 9	-4 / 2	-17.5	-17.5	0.01 (3)	10.00	
9- 8	-4 / 2	-17.5	-17.5	0.02 (3)	10.00	
8- 7	0 / 3	-17.5	-17.5	0.02 (3)	10.00	

WEBS

MEMB. FR-TO	MAX. FORCE (LBS)	MAX CSI (LC)
9- 4	-172 / 0	0.04 (1)
10- 3	-121 / 0	0.02 (1)
8- 5	-160 / 0	0.03 (1)

DESIGN CRITERIA

SPECIFIED LOADS:

TOP	CH.	LL	=	23.3	PSF
		DL	=	3.0	PSF
BOT	CH.	LL	=	0.0	PSF
		DL	=	7.0	PSF
TOTAL	LOAD		=	33.3	PSF

SPACING = 24.0 IN. C/C

THIS TRUSS IS DESIGNED FOR RESIDENTIAL OR SMALL BUILDING REQUIREMENTS OF PART 9, NBCC 2010

THIS DESIGN COMPLIES WITH:
- PART 9 OF OBC 2012 , BCBC 2012 , ABC 2014
- CSA 086-09
- TPIC 2011

DESIGN ASSUMPTIONS
-OVERHANG NOT TO BE ALTERED OR CUT OFF.

(55 % OF 27.2 P.S.F. G.S.L. PLUS 8.4 P.S.F. RAIN LOAD) EQUALS 23.3 P.S.F. SPECIFIED ROOF LIVE LOAD

CSI: TC=0.10 (1-2:1) , BC=0.02 (10-11:1) , WB=0.04 (4-9:1) , SSI=0.07 (1-2:1)

DOL LUMBER=1.00 NAIL=1.00 LS BEND=1.10 COMP=1.10 SHEAR=1.10 TENS= 1.10

COMPANION LIVE LOAD FACTOR = 0.50

TRUSS PLATE MANUFACTURER IS NOT RESPONSIBLE FOR QUALITY CONTROL IN THE TRUSS MANUFACTURING PLANT .

NAIL VALUES

PLATE	GRIP(DRY) (PSI) MAX	MIN	SHEAR (PLI) MAX	MIN	SECTION (PLI) MAX	MIN
MT20	618	354	1667	822	2284	1656

PLATE PLACEMENT TOL. = 0.250 inches

PLATE ROTATION TOL. = 5.0 Deg.

JSI GRIP= 0.13 (2) (INPUT = 0.90)
JSI METAL= 0.07 (4) (INPUT = 1.00)

LICENSED PROFESSIONAL ENGINEER
P.M. TREVISAN
100136551
March 13th, 2017
PROVINCE OF ONTARIO

RECEIVED
TOWN OF MILTON
MAR 29, 2017
17-4990
BUILDING DIVISION

READ ALL NOTES ON THIS PAGE AND ON THE ENGINEERING NOTE PAGE ENP-1. THE NOTE PAGE IS AN INTEGRAL PART OF THIS DRAWING AS IT CONTAINS SPECIFICATIONS AND CRITERIA USED IN THE DESIGN OF THIS COMPONENT.

KOTT

SCALE = 1:26.0

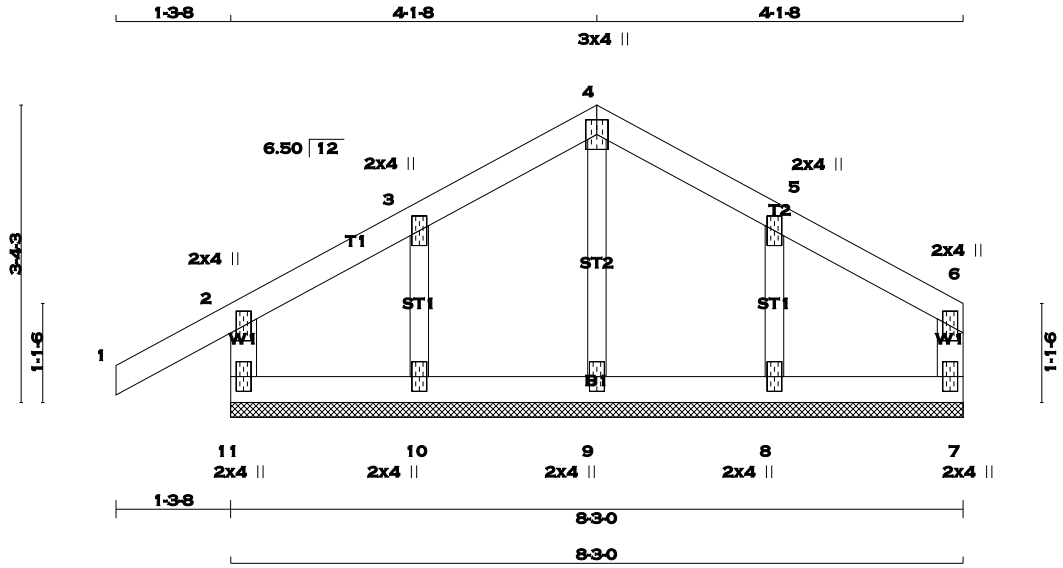

TOTAL WEIGHT = 29 lb [M]

LUMBER

N. L. G. A. RULES

CHORDS	SIZE		LUMBER	DESCR.
11 - 2	2x4	DRY	No.2	SPF
1 - 4	2x4	DRY	No.2	SPF
4 - 6	2x4	DRY	No.2	SPF
7 - 6	2x4	DRY	No.2	SPF
11 - 7	2x4	DRY	No.2	SPF
ALL WEBS	2x3	DRY	No.2	SPF
ALL GABLE WEBS	2x3	DRY	No.2	SPF

DRY: SEASONED LUMBER.

GABLE STUDS SPACED AT 2-0-0 OC.

PLATES (table is in inches)

JT	TYPE	PLATES	W	LEN	Y	X
2	TMV+p	MT20	2.0	4.0		
3	TMW+w	MT20	2.0	4.0		
4	TTW+p	MT20	3.0	4.0		
5	TMW+w	MT20	2.0	4.0		
6	TMV+p	MT20	2.0	4.0		
7	BMV1+p	MT20	2.0	4.0		
8, 9, 10						
8	BMW1+w	MT20	2.0	4.0		
11	BMV1+p	MT20	2.0	4.0		

A SIZE FOR SIZE SUBSTITUTION OF MITEK MII20 WITH TEE-LOK TL20 PLATES IS ALLOWED.

DIMENSIONS, SUPPORTS AND LOADINGS SPECIFIED BY FABRICATOR TO BE VERIFIED BY BUILDING DESIGNER

BEARINGS

THIS TRUSS DESIGNED FOR CONTINUOUS BEARINGS.

THIS TRUSS REQUIRES RIGID SHEATHING ON EXPOSED FACE.

BEARING MATERIAL TO BE SPF NO.2 OR BETTER AT JOINT(S)

BRACING

TOP CHORD TO BE SHEATHED OR MAX. PURLIN SPACING = 6.25 FT.
MAX. UNBRACED BOTTOM CHORD LENGTH = 10.00 FT. OR RIGID CEILING DIRECTLY APPLIED.

ALL PITCH BREAKS AND PERIMETER CORNER JOINTS MUST BE LATERALLY RESTRAINED.

LOADING

TOTAL LOAD CASES: (3)

CHORDS

MEMB. FR-TO	MAX. FACTORED FORCE (LBS)	FACTORED VERT. LOAD (PLF) FROM	TO	LC1 MAX CSI (LC)	MAX. UNBRAC LENGTH
11- 2	-201 / 0	0.0	0.0	0.02 (1)	7.81
1- 2	0 / 25	-77.3	-77.3	0.10 (1)	10.00
2- 3	-33 / 0	-77.3	-77.3	0.04 (1)	6.25
3- 4	-26 / 0	-77.3	-77.3	0.04 (1)	6.25
4- 5	-27 / 0	-77.3	-77.3	0.04 (1)	6.25
5- 6	-30 / 0	-77.3	-77.3	0.04 (1)	6.25
7- 6	-90 / 0	0.0	0.0	0.03 (1)	7.81
11-10	0 / 29	-17.5	-17.5	0.02 (3)	10.00
10- 9	0 / 23	-17.5	-17.5	0.02 (3)	10.00
9- 8	0 / 23	-17.5	-17.5	0.02 (3)	10.00
8- 7	0 / 29	-17.5	-17.5	0.02 (3)	10.00

WEBS

MEMB. FR-TO	MAX. FACTORED FORCE (LBS)	MAX CSI (LC)
9- 4	-134 / 0	0.03 (1)
10- 3	-156 / 0	0.02 (1)
8- 5	-163 / 0	0.02 (1)

DESIGN CRITERIA

SPECIFIED LOADS:

TOP	CH.	LL	=	23.3	PSF
		DL	=	3.0	PSF
BOT	CH.	LL	=	0.0	PSF
		DL	=	7.0	PSF
TOTAL	LOAD		=	33.3	PSF

SPACING = 24.0 IN. C/C

THIS TRUSS IS DESIGNED FOR RESIDENTIAL OR SMALL BUILDING REQUIREMENTS OF PART 9, NBCC 2010

THIS DESIGN COMPLIES WITH:
- PART 9 OF OBC 2012 , BCBC 2012 , ABC 2014
- CSA 086-09
- TPIC 2011

DESIGN ASSUMPTIONS
-OVERHANG NOT TO BE ALTERED OR CUT OFF.

(55 % OF 27.2 P.S.F. G.S.L. PLUS 8.4 P.S.F. RAIN LOAD) EQUALS 23.3 P.S.F. SPECIFIED ROOF LIVE LOAD

CSI: TC=0.10 (1-2:1) , BC=0.02 (7-8:3) , WB=0.03 (4-9:1) , SSI=0.07 (1-2:1)

DOL LUMBER=1.00 NAIL=1.00 LS BEND=1.10 COMP=1.10 SHEAR=1.10 TENS= 1.10

COMPANION LIVE LOAD FACTOR = 0.50

TRUSS PLATE MANUFACTURER IS NOT RESPONSIBLE FOR QUALITY CONTROL IN THE TRUSS MANUFACTURING PLANT .

NAIL VALUES

PLATE	GRIP(DRY) (PSI) MAX	MIN	SHEAR (PLI) MAX	MIN	SECTION (PLI) MAX	MIN
MT20	618	354	1667	822	2284	1656

PLATE PLACEMENT TOL. = 0.250 inches

PLATE ROTATION TOL. = 5.0 Deg.

JSI GRIP= 0.14 (6) (INPUT = 0.90)
JSI METAL= 0.06 (6) (INPUT = 1.00)

LICENSED PROFESSIONAL ENGINEER
P.M. TREVISAN
100136551
March 13th, 2017
PROVINCE OF ONTARIO

RECEIVED
TOWN OF MILTON
MAR 29, 2017
17-4990
BUILDING DIVISION

READ ALL NOTES ON THIS PAGE AND ON THE ENGINEERING NOTE PAGE ENP-1. THE NOTE PAGE IS AN INTEGRAL PART OF THIS DRAWING AS IT CONTAINS SPECIFICATIONS AND CRITERIA USED IN THE DESIGN OF THIS COMPONENT.

KOTT

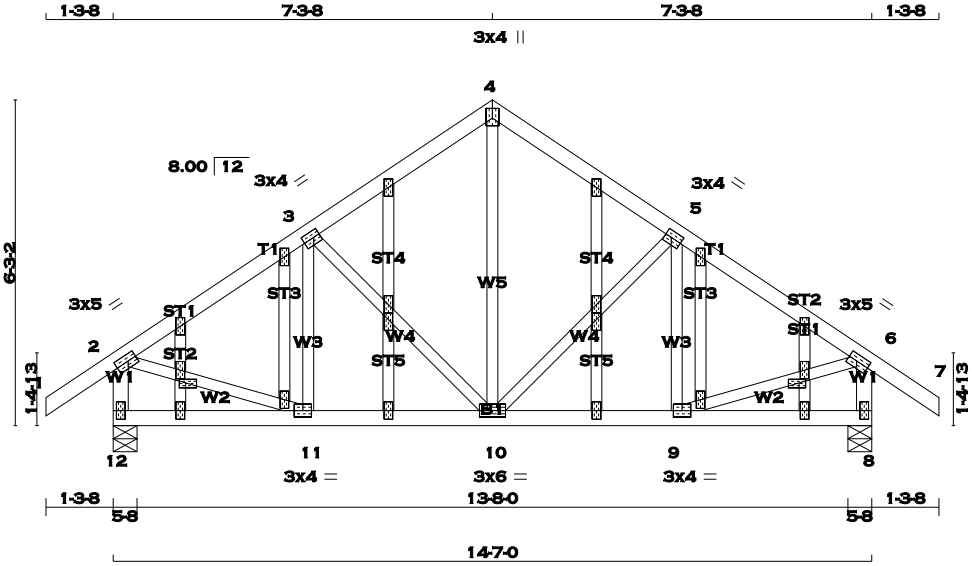

TOTAL WEIGHT = 80 lb

[M][F]

LUMBER

N. L. G. A. RULES

CHORDS	SIZE		LUMBER	DESCR.
1 - 4	2x4	DRY	No.2	SPF
4 - 7	2x4	DRY	No.2	SPF
12 - 2	2x4	DRY	No.2	SPF
8 - 6	2x4	DRY	No.2	SPF
12 - 8	2x4	DRY	No.2	SPF
ALL WEBS	2x3	DRY	No.2	SPF

EXCEPT

ALL GABLE WEBS

	2x3	DRY	No.2	SPF

DRY: SEASONED LUMBER.

GABLE STUDS SPACED AT 2-0-0 OC.

PLATES (table is in inches)

JT	TYPE	PLATES	W	LEN	Y	X
2	TMVW-t	MT20	3.0	5.0	1.50	2.00
3	TMWW-t	MT20	3.0	4.0	1.50	1.50
4	TTW+p	MT20	3.0	4.0	2.25	1.50
5	TMWW-t	MT20	3.0	4.0	1.50	1.50
6	TMVW-t	MT20	3.0	5.0	1.50	2.00
8	BMV1+p	MT20	2.0	4.0		
9	BMWW-t	MT20	3.0	4.0		
9, 11, 13, 14, 15, 16, 17, 18, 19, 20, 21, 22, 23, 24, 25, 26						
9	NP+w	MT20	2.0	4.0		
10	BMWWW-t	MT20	3.0	6.0		
11	BMWW-t	MT20	3.0	4.0		
12	BMV1+p	MT20	2.0	4.0		
13	NP+w	MT20	2.0	4.0	1.50	1.00
17	NP-p	MT20	2.0	4.0	0.75	1.50
22	NP+w	MT20	2.0	4.0	1.50	1.00
26	NP-p	MT20	2.0	4.0	0.75	1.50

A SIZE FOR SIZE SUBSTITUTION OF MITEK MII20 WITH TEE-LOK TL20 PLATES IS ALLOWED.

DIMENSIONS, SUPPORTS AND LOADINGS SPECIFIED BY FABRICATOR TO BE VERIFIED BY BUILDING DESIGNER

BEARINGS

JT	FACTORED GROSS REACTION VERT	HORZ	MAXIMUM GROSS REACTION DOWN	HORZ	FACTORED UPLIFT	INPUT BRG IN-SX	REQRD BRG IN-SX
12	798	0	798	0	0	5-8	5-8
8	798	0	798	0	0	5-8	5-8

UNFACTORED REACTIONS

JT	1ST LCASE COMBINED	MAX./MIN. COMPONENT REACTIONS SNOW	LIVE	PERM.LIVE	WIND	DEAD	SOIL
12	558	403 / 0	0 / 0	0 / 0	0 / 0	154 / 0	0 / 0
8	558	403 / 0	0 / 0	0 / 0	0 / 0	154 / 0	0 / 0

BEARING MATERIAL TO BE SPF NO.2 OR BETTER AT JOINT(S) 12, 8

BRACING

TOP CHORD TO BE SHEATHED OR MAX. PURLIN SPACING = 6.25 FT.
MAX. UNBRACED BOTTOM CHORD LENGTH = 10.00 FT. OR RIGID CEILING DIRECTLY APPLIED.

ALL PITCH BREAKS AND PERIMETER CORNER JOINTS MUST BE LATERALLY RESTRAINED.

LOADING

TOTAL LOAD CASES: (3)

CHORDS

MEMB. FR-TO	MAX. FACTORED FORCE (LBS)	FACTORED VERT. LOAD (PLF) FROM	TO	LC1 MAX CSI (LC)	MAX. UNBRAC LENGTH
1- 2	0 / 29	-77.3	-77.3	0.10 (1)	10.00
2- 3	-675 / 0	-77.3	-77.3	0.13 (1)	6.25
3- 4	-532 / 0	-77.3	-77.3	0.13 (1)	6.25
4- 5	-532 / 0	-77.3	-77.3	0.13 (1)	6.25
5- 6	-675 / 0	-77.3	-77.3	0.13 (1)	6.25
6- 7	0 / 29	-77.3	-77.3	0.10 (1)	10.00
12- 2	-769 / 0	0.0	0.0	0.08 (1)	7.81
8- 6	-769 / 0	0.0	0.0	0.08 (1)	7.81
12-11	0 / 0	-17.5	-17.5	0.05 (3)	10.00
11-10	0 / 576	-17.5	-17.5	0.11 (1)	10.00
10- 9	0 / 576	-17.5	-17.5	0.11 (1)	10.00
9- 8	0 / 0	-17.5	-17.5	0.05 (3)	10.00

WEBS

MEMB. FR-TO	MAX. FACTORED FORCE (LBS)	MAX CSI (LC)
10- 4	0 / 363	0.08 (1)
10- 5	-212 / 0	0.09 (1)
9- 5	-98 / 32	0.02 (1)
3-10	-212 / 0	0.09 (1)
11- 3	-98 / 32	0.02 (1)
2-11	0 / 599	0.13 (1)
9- 6	0 / 599	0.13 (1)

DESIGN CRITERIA

SPECIFIED LOADS:

TOP	CH.	LL	=	23.3	PSF
		DL	=	3.0	PSF
BOT	CH.	LL	=	0.0	PSF
		DL	=	7.0	PSF
TOTAL	LOAD		=	33.3	PSF

SPACING = 24.0 IN. C/C

THIS TRUSS IS DESIGNED FOR RESIDENTIAL OR SMALL BUILDING REQUIREMENTS OF PART 9, NBCC 2010

THIS DESIGN COMPLIES WITH:
- PART 9 OF OBC 2012 , BCBC 2012 , ABC 2014
- CSA 086-09
- TPIC 2011

(55 % OF 27.2 P.S.F. G.S.L. PLUS 8.4 P.S.F. RAIN LOAD) EQUALS 23.3 P.S.F. SPECIFIED ROOF LIVE LOAD

ALLOWABLE DEFL.(LL)= L/360 (0.49")
CALCULATED VERT. DEFL.(LL) = L/ 999 (0.01")
ALLOWABLE DEFL.(TL)= L/360 (0.49")
CALCULATED VERT. DEFL.(TL) = L/ 999 (0.02")

CSI: TC=0.13 (2-3:1) , BC=0.11 (10-11:1) , WB=0.13 (2-11:1) , SSI=0.11 (2-3:1)

DOL LUMBER=1.00 NAIL=1.00 LS BEND=1.10 COMP=1.10 SHEAR=1.10 TENS= 1.10

COMPANION LIVE LOAD FACTOR = 0.50

TRUSS PLATE MANUFACTURER IS NOT RESPONSIBLE FOR QUALITY CONTROL IN THE TRUSS MANUFACTURING PLANT .

NAIL VALUES

PLATE	GRIP(DRY) (PSI) MAX	MIN	SHEAR (PLI) MAX	MIN	SECTION (PLI) MAX	MIN
MT20	618	354	1667	822	2284	1656

PLATE PLACEMENT TOL. = 0.250 inches

PLATE ROTATION TOL. = 5.0 Deg.

JSI GRIP= 0.89 (9) (INPUT = 0.90)
JSI METAL= 0.24 (2) (INPUT = 1.00)

LICENSED PROFESSIONAL ENGINEER
P.M. TREVISAN
100136551
March 13th, 2017
PROVINCE OF ONTARIO

RECEIVED
TOWN OF MILTON
MAR 29, 2017
17-4990
BUILDING DIVISION

READ ALL NOTES ON THIS PAGE AND ON THE ENGINEERING NOTE PAGE ENP-1. THE NOTE PAGE IS AN INTEGRAL PART OF THIS DRAWING AS IT CONTAINS SPECIFICATIONS AND CRITERIA USED IN THE DESIGN OF THIS COMPONENT.

KOTT

JOB NAME	TRUSS NAME	QUANTITY	PLY	JOB DESC.	DRWG NO.
PT0317-054	GAB06	2	1	TRUSS DESC. LECCO RIDGE-BLOCK 328	ENG JOB: PT0317-054

Kott Lumber Uxbridge, Stouffville, ON, CGC

Version 8.100 S Feb 9 2017 MiTek Industries, Inc. Mon Mar 13 09:56:45 2017 Page 1

ID:pF8Cn?9h9uHzAm5tCmlVl5yJJCp-3oHq2enmT8uIbYs166j9spiioe8ckG2KOhvozEzbOnW

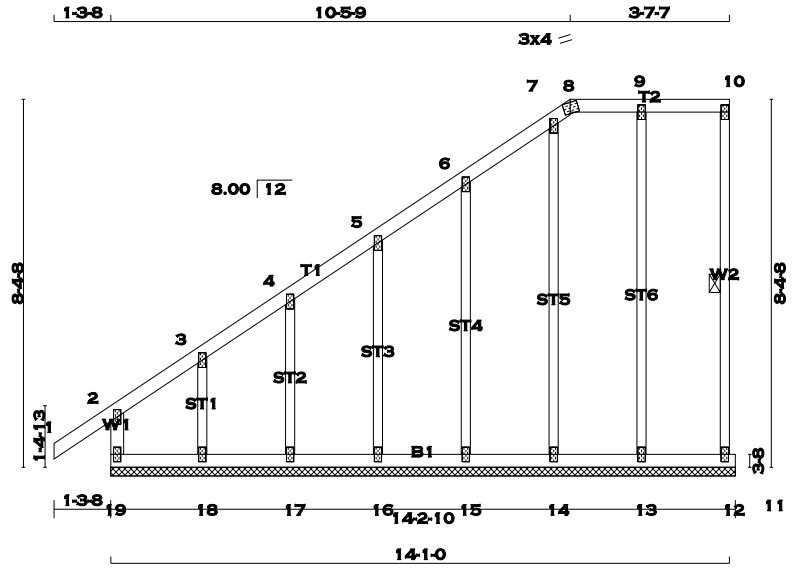

TOTAL WEIGHT = 2 X 70 = 141 lb [M]

LUMBER

N. L. G. A. RULES

CHORDS	SIZE		LUMBER	DESCR.
19 - 2	2x4	DRY	No.2	SPF
1 - 8	2x4	DRY	No.2	SPF
8 - 10	2x4	DRY	No.2	SPF
12 - 10	2x3	DRY	No.2	SPF
19 - 11	2x4	DRY	No.2	SPF
ALL WEBS	2x3	DRY	No.2	SPF
ALL GABLE WEBS	2x3	DRY	No.2	SPF

DRY: SEASONED LUMBER.

GABLE STUDS SPACED AT 2-0-0 OC.

PLATES (table is in inches)

JT	TYPE	PLATES	W	LEN	Y	X
2	TMV+p	MT20	2.0	4.0		
3, 4, 5, 6, 7, 9						
3	TMW+w	MT20	2.0	4.0		
8	TT-m	MT20	3.0	4.0	Edge	
10	TMV+p	MT20	2.0	4.0		
12	BMV1+p	MT20	2.0	4.0		
13, 14, 15, 16, 17, 18						
13	BMW1+w	MT20	2.0	4.0		
19	BMV1+p	MT20	2.0	4.0		

Edge - INDICATES REFERENCE CORNER OF PLATE TOUCHES EDGE OF CHORD.

A SIZE FOR SIZE SUBSTITUTION OF MITEK MII20 WITH TEE-LOK TL20 PLATES IS ALLOWED.

DIMENSIONS, SUPPORTS AND LOADINGS SPECIFIED BY FABRICATOR TO BE VERIFIED BY BUILDING DESIGNER

BEARINGS

THIS TRUSS DESIGNED FOR CONTINUOUS BEARINGS.

THIS TRUSS REQUIRES RIGID SHEATHING ON EXPOSED FACE.

BEARING MATERIAL TO BE SPF NO.2 OR BETTER AT JOINT(S)

BRACING

TOP CHORD TO BE SHEATHED OR MAX. PURLIN SPACING = 6.25 FT.
MAX. UNBRACED BOTTOM CHORD LENGTH = 10.00 FT. OR RIGID CEILING DIRECTLY APPLIED.

ALL PITCH BREAKS AND PERIMETER CORNER JOINTS MUST BE LATERALLY RESTRAINED.

1 - 2x3 SPF No.2 LATERAL BRACE(S) AT 1/ 2 LENGTH OF 10-12. DBS = 20-0-0 . CBF = 8 LBS.

DBS = DIAGONAL BRACE SPACING (MAX). CBF = CUMULATIVE BRACING FORCE. FASTEN LATERAL BRACE(S) USING (0.122"X3") SPIRAL NAILS : 1 NAIL FOR 2x3 BRACE(S), 2 FOR 1x4, 2x4, 2x5, 3 FOR 2x6, 4 FOR 2x8, 5 FOR 2x10, AND 6 FOR 2x12.

END VERTICAL(S) MUST BE SHEATHED OR HAVE BRACES AS INDICATED IN THE MAX. UNBRACED LENGTH COLUMN OF THE TABLE BELOW

LOADING

TOTAL LOAD CASES: (3)

CHORDS

MEMB. FR-TO	MAX. FORCE (LBS)	FACTORED VERT. LOAD (PLF)	LC1 FROM	LC1 TO	MAX CSI (LC)	MAX. UNBRAC LENGTH
19- 2	-195 / 0	0.0	0.0	0.01 (1)	7.81	
1- 2	0 / 29	-77.3	-77.3	0.10 (1)	10.00	
2- 3	-19 / 0	-77.3	-77.3	0.04 (1)	6.25	
3- 4	-12 / 0	-77.3	-77.3	0.04 (1)	6.25	
4- 5	-8 / 0	-77.3	-77.3	0.04 (1)	10.00	
5- 6	-5 / 0	-77.3	-77.3	0.04 (1)	10.00	
6- 7	-3 / 0	-77.3	-77.3	0.04 (1)	10.00	
7- 8	-36 / 0	-77.3	-77.3	0.03 (1)	6.25	
8- 9	0 / 0	-77.3	-77.3	0.04 (1)	10.00	
9-10	0 / 0	-77.3	-77.3	0.04 (1)	10.00	
12-10	-65 / 0	0.0	0.0	0.01 (1)	6.25	
19-18	0 / 15	-17.5	-17.5	0.02 (3)	10.00	
18-17	0 / 10	-17.5	-17.5	0.02 (3)	10.00	
17-16	0 / 7	-17.5	-17.5	0.01 (3)	10.00	
16-15	0 / 4	-17.5	-17.5	0.01 (3)	10.00	
15-14	0 / 2	-17.5	-17.5	0.01 (3)	10.00	
14-13	0 / 0	-17.5	-17.5	0.01 (3)	10.00	
13-12	0 / 0	-17.5	-17.5	0.01 (3)	10.00	
12-11	0 / 0	-25.0	-25.0	0.00 (3)	10.00	

WEBS

MEMB. FR-TO	MAX. FORCE (LBS)	MAX CSI (LC)
13- 9	-172 / 0	0.24 (1)
14- 7	-155 / 0	0.20 (1)
15- 6	-154 / 0	0.12 (1)
16- 5	-153 / 0	0.07 (1)
17- 4	-153 / 0	0.04 (1)
18- 3	-150 / 0	0.03 (1)

DESIGN CRITERIA

SPECIFIED LOADS:

TOP	CH.	LL	=	23.3	PSF
		DL	=	3.0	PSF
BOT	CH.	LL	=	0.0	PSF
		DL	=	7.0	PSF
TOTAL	LOAD		=	33.3	PSF

SPACING = 24.0 IN. C/C

LOADING IN FLAT SECTION BASED ON A SLOPE OF 6.00/12

THIS TRUSS IS DESIGNED FOR RESIDENTIAL OR SMALL BUILDING REQUIREMENTS OF PART 9, NBCC 2010

THIS DESIGN COMPLIES WITH:
- PART 9 OF OBC 2012 , BCBC 2012 , ABC 2014
- CSA 086-09
- TPIC 2011

DESIGN ASSUMPTIONS
-OVERHANG NOT TO BE ALTERED OR CUT OFF.

(55 % OF 27.2 P.S.F. G.S.L. PLUS 8.4 P.S.F. RAIN LOAD) EQUALS 23.3 P.S.F. SPECIFIED ROOF LIVE LOAD

CSI: TC=0.10 (1-2:1) , BC=0.02 (18-19:3) , WB=0.24 (9-13:1) , SSI=0.07 (9-10:1)

DOL LUMBER=1.00 NAIL=1.00 LS BEND=1.10 COMP=1.10 SHEAR=1.10 TENS= 1.10

COMPANION LIVE LOAD FACTOR = 0.50

TRUSS PLATE MANUFACTURER IS NOT RESPONSIBLE FOR QUALITY CONTROL IN THE TRUSS MANUFACTURING PLANT .

NAIL VALUES

PLATE	GRIP(DRY) (PSI) MAX	MIN	SHEAR (PLI) MAX	MIN	SECTION (PLI) MAX	MIN
MT20	618	354	1667	822	2284	1656

PLATE PLACEMENT TOL. = 0.250 inches

PLATE ROTATION TOL. = 5.0 Deg.

JSI GRIP= 0.14 (2) (INPUT = 0.90)
JSI METAL= 0.05 (2) (INPUT = 1.00)

LICENSED PROFESSIONAL ENGINEER
P.M. TREVISAN
100136551
March 13th, 2017
PROVINCE OF ONTARIO

RECEIVED
TOWN OF MILTON
MAR 29, 2017
17-4990
BUILDING DIVISION

READ ALL NOTES ON THIS PAGE AND ON THE ENGINEERING NOTE PAGE ENP-1. THE NOTE PAGE IS AN INTEGRAL PART OF THIS DRAWING AS IT CONTAINS SPECIFICATIONS AND CRITERIA USED IN THE DESIGN OF THIS COMPONENT.

KOTT

JOB NAME	TRUSS NAME	QUANTITY	PLY	JOB DESC.	DRWG NO.
PT0317-054	GAB07	1	1	TRUSS DESC. LECCO RIDGE-BLOCK 328	ENG JOB: PT0317-054

Kott Lumber Uxbridge, Stouffville, ON, CGC

Version 8.100 S Feb 9 2017 MiTek Industries, Inc. Mon Mar 13 09:56:45 2017 Page 1

ID:pF8Cn?9h9uHzAm5tCmlVl5yJJCp-3oHq2enmT8uIbYs166j9spiire8XkJQKOhvozEzbOnW

SCALE = 1:17.3

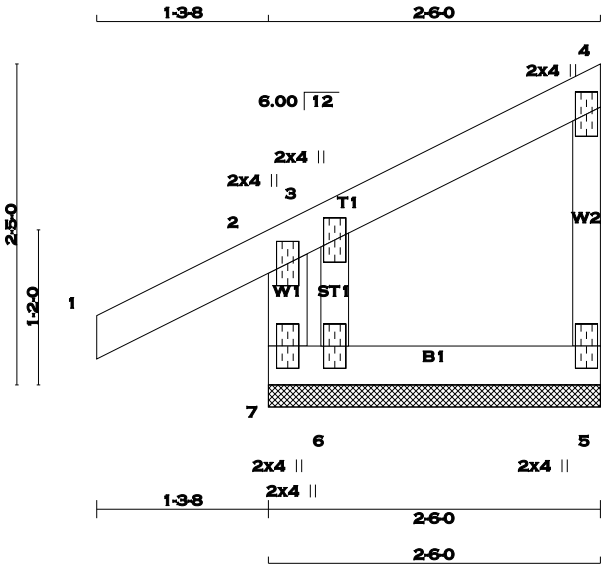

TOTAL WEIGHT = 11 lb [M]

LUMBER

N. L. G. A. RULES

CHORDS	SIZE		LUMBER	DESCR.
7 - 2	2x4	DRY	No.2	SPF
1 - 4	2x4	DRY	No.2	SPF
5 - 4	2x3	DRY	No.2	SPF
7 - 5	2x4	DRY	No.2	SPF
ALL WEBS	2x3	DRY	No.2	SPF
ALL GABLE WEBS	2x3	DRY	No.2	SPF

DRY: SEASONED LUMBER.

GABLE STUDS SPACED AT 2-0-0 OC.

PLATES (table is in inches)

JT	TYPE	PLATES	W	LEN	Y	X
2	TMV+p	MT20	2.0	4.0		
3	TMW+w	MT20	2.0	4.0		
4	TMV+p	MT20	2.0	4.0		
5	BMV1+p	MT20	2.0	4.0		
6	BMW1+w	MT20	2.0	4.0		
7	BMV1+p	MT20	2.0	4.0		

A SIZE FOR SIZE SUBSTITUTION OF MITEK MII20 WITH TEE-LOK TL20 PLATES IS ALLOWED.

DIMENSIONS, SUPPORTS AND LOADINGS SPECIFIED BY FABRICATOR TO BE VERIFIED BY BUILDING DESIGNER

BEARINGS

THIS TRUSS DESIGNED FOR CONTINUOUS BEARINGS.

THIS TRUSS REQUIRES RIGID SHEATHING ON EXPOSED FACE.

PROVIDE ANCHORAGE AT BEARING JOINT 6 FOR 150 LBS FACTORED UPLIFT
BEARING MATERIAL TO BE SPF NO.2 OR BETTER AT JOINT(S)

BRACING

TOP CHORD TO BE SHEATHED OR MAX. PURLIN SPACING = 6.25 FT.
MAX. UNBRACED BOTTOM CHORD LENGTH = 10.00 FT. OR RIGID CEILING DIRECTLY APPLIED.

ALL PITCH BREAKS AND PERIMETER CORNER JOINTS MUST BE LATERALLY RESTRAINED.

LOADING

TOTAL LOAD CASES: (4)

CHORDS MEMB. FR-TO	MAX. FACTORED FORCE (LBS)	FACTORED VERT. LOAD (PLF) FROM	TO	LC1 MAX CSI (LC)	MAX. UNBRAC LENGTH	WEBS MEMB. FR-TO	MAX. FACTORED FORCE (LBS)	MAX CSI (LC)
7- 2	-220 / 0	0.0	0.0	0.02 (4)	7.81	6- 3	-27 / 105	0.02 (4)
1- 2	0 / 23	-77.3	-77.3	0.10 (1)	10.00			
2- 3	-44 / 0	-77.3	-77.3	0.08 (1)	6.25			
3- 4	-10 / 0	-77.3	-77.3	0.04 (1)	10.00			
5- 4	-68 / 0	0.0	0.0	0.02 (1)	7.81			
7- 6	-7 / 7	-17.5	-17.5	0.02 (1)	10.00			
6- 5	0 / 5	-17.5	-17.5	0.02 (3)	10.00			

CANTILEVER ANALYSIS HAS BEEN CONSIDERED IN THIS DESIGN

DESIGN CRITERIA

SPECIFIED LOADS:

TOP CH.	LL	=	23.3	PSF
	DL	=	3.0	PSF
BOT CH.	LL	=	0.0	PSF
	DL	=	7.0	PSF
TOTAL LOAD		=	33.3	PSF

SPACING = 24.0 IN. C/C

THIS TRUSS IS DESIGNED FOR RESIDENTIAL OR SMALL BUILDING REQUIREMENTS OF PART 9, NBCC 2010

THIS DESIGN COMPLIES WITH:
- PART 9 OF OBC 2012 , BCBC 2012 , ABC 2014
- CSA 086-09
- TPIC 2011

DESIGN ASSUMPTIONS
-OVERHANG NOT TO BE ALTERED OR CUT OFF.

(55 % OF 27.2 P.S.F. G.S.L. PLUS 8.4 P.S.F. RAIN LOAD) EQUALS 23.3 P.S.F. SPECIFIED ROOF LIVE LOAD

CSI: TC=0.10 (1-2:1) , BC=0.02 (6-7:1) , WB=0.02 (3-6:4) , SSI=0.08 (2-3:4)

DOL LUMBER=1.00 NAIL=1.00 LS BEND=1.10 COMP=1.10 SHEAR=1.10 TENS= 1.10

COMPANION LIVE LOAD FACTOR = 0.50

TRUSS PLATE MANUFACTURER IS NOT RESPONSIBLE FOR QUALITY CONTROL IN THE TRUSS MANUFACTURING PLANT .

NAIL VALUES

PLATE	GRIP(DRY) (PSI) MAX	MIN	SHEAR (PLI) MAX	MIN	SECTION (PLI) MAX	MIN
MT20	618	354	1667	822	2284	1656

PLATE PLACEMENT TOL. = 0.250 inches

PLATE ROTATION TOL. = 5.0 Deg.

JSI GRIP= 0.13 (2) (INPUT = 0.90)
JSI METAL= 0.05 (2) (INPUT = 1.00)

LICENSED PROFESSIONAL ENGINEER
P.M. TREVISAN
100136551
March 13th, 2017
PROVINCE OF ONTARIO

RECEIVED
TOWN OF MILTON
MAR 29, 2017
17-4990
BUILDING DIVISION

READ ALL NOTES ON THIS PAGE AND ON THE ENGINEERING NOTE PAGE ENP-1. THE NOTE PAGE IS AN INTEGRAL PART OF THIS DRAWING AS IT CONTAINS SPECIFICATIONS AND CRITERIA USED IN THE DESIGN OF THIS COMPONENT.

KOTT

JOB NAME	TRUSS NAME	QUANTITY	PLY	JOB DESC.	DRWG NO.
PT0317-054	GAB08	3	1	TRUSS DESC. LECCO RIDGE-BLOCK 328	

Kott Lumber Uxbridge, Stouffville, ON, CGC

Version 8.100 S Feb 9 2017 MiTek Industries, Inc. Mon Mar 13 09:56:45 2017 Page 1
ID:pF8Cn?9h9uHzAm5tCmlVl5yJJCp-3oHq2enmT8uIbYs166j9spiiwe8MkJNKOhvozEzbOnW

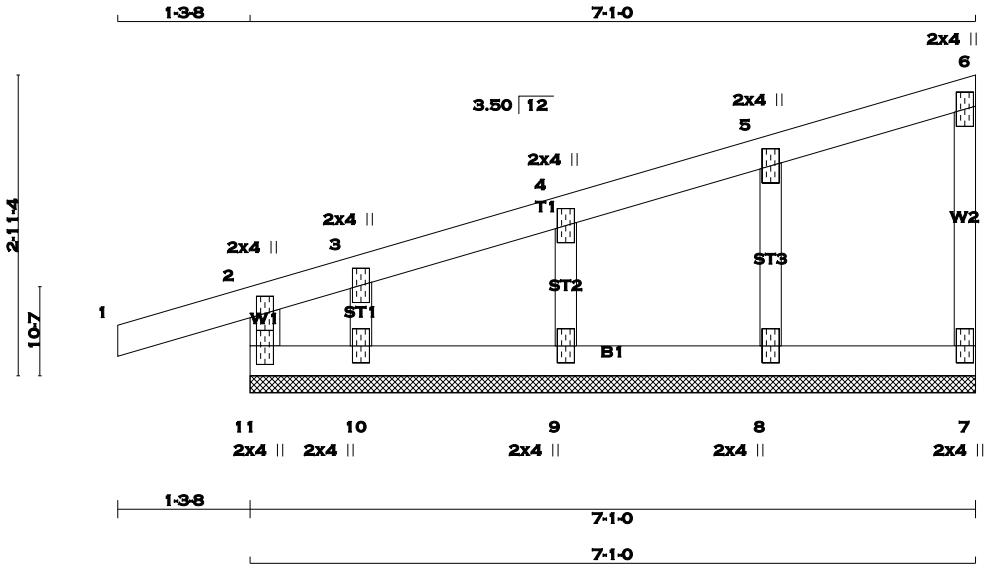

TOTAL WEIGHT = 3 X 23 = 70 lb
[M]

LUMBER
N. L. G. A. RULES

CHORDS	SIZE		LUMBER	DESCR.
11 - 2	2x4	DRY	No.2	SPF
1 - 6	2x4	DRY	No.2	SPF
7 - 6	2x3	DRY	No.2	SPF
11 - 7	2x4	DRY	No.2	SPF
ALL WEBS	2x3	DRY	No.2	SPF
ALL GABLE WEBS	2x3	DRY	No.2	SPF

DRY: SEASONED LUMBER.

GABLE STUDS SPACED AT 2-0-0 OC.

PLATES (table is in inches)

JT	TYPE	PLATES	W	LEN	Y	X
2	TMV+p	MT20	2.0	4.0		
3, 4, 5						
3	TMW+w	MT20	2.0	4.0		
6	TMV+p	MT20	2.0	4.0		
7	BMV1+p	MT20	2.0	4.0		
8, 9, 10						
8	BMW1+w	MT20	2.0	4.0		
11	BMV1+p	MT20	2.0	4.0	2.25	1.00

A SIZE FOR SIZE SUBSTITUTION OF MITEK MII20 WITH TEE-LOK TL20 PLATES IS ALLOWED.

DIMENSIONS, SUPPORTS AND LOADINGS SPECIFIED BY FABRICATOR TO BE VERIFIED BY BUILDING DESIGNER

BEARINGS

THIS TRUSS DESIGNED FOR CONTINUOUS BEARINGS.

THIS TRUSS REQUIRES RIGID SHEATHING ON EXPOSED FACE.

BEARING MATERIAL TO BE SPF NO.2 OR BETTER AT JOINT(S)

BRACING
TOP CHORD TO BE SHEATHED OR MAX. PURLIN SPACING = 6.25 FT.
MAX. UNBRACED BOTTOM CHORD LENGTH = 10.00 FT. OR RIGID CEILING DIRECTLY APPLIED.

ALL PITCH BREAKS AND PERIMETER CORNER JOINTS MUST BE LATERALLY RESTRAINED.

LOADING
TOTAL LOAD CASES: (3)

CHORDS

MEMB. FR-TO	MAX. FACTORED FORCE (LBS)	FACTORED VERT. LOAD (PLF) FROM	TO	LC1 MAX CSI (LC)	MAX. UNBRAC LENGTH
11- 2	-189 / 0	0.0	0.0	0.03 (1)	7.81
1- 2	0 / 14	-77.3	-77.3	0.10 (1)	10.00
2- 3	-26 / 0	-77.3	-77.3	0.07 (1)	6.25
3- 4	-9 / 0	-77.3	-77.3	0.04 (1)	10.00
4- 5	-7 / 0	-77.3	-77.3	0.04 (1)	10.00
5- 6	-7 / 0	-77.3	-77.3	0.04 (1)	10.00
7- 6	-66 / 0	0.0	0.0	0.02 (1)	7.81
11-10	0 / 14	-17.5	-17.5	0.03 (1)	10.00
10- 9	0 / 11	-17.5	-17.5	0.01 (3)	10.00
9- 8	0 / 7	-17.5	-17.5	0.02 (3)	10.00
8- 7	0 / 3	-17.5	-17.5	0.02 (3)	10.00

WEBS

MEMB. FR-TO	MAX. FACTORED FORCE (LBS)	MAX CSI (LC)
8- 5	-168 / 0	0.03 (1)
9- 4	-161 / 0	0.02 (1)
10- 3	-67 / 0	0.01 (1)

DESIGN CRITERIA

SPECIFIED LOADS:

TOP	CH.	LL	=	23.3	PSF
		DL	=	3.0	PSF
BOT	CH.	LL	=	0.0	PSF
		DL	=	7.0	PSF
TOTAL	LOAD		=	33.3	PSF

SPACING = 24.0 IN. C/C

THIS TRUSS IS DESIGNED FOR RESIDENTIAL OR SMALL BUILDING REQUIREMENTS OF PART 9, NBCC 2010

THIS DESIGN COMPLIES WITH:
- PART 9 OF OBC 2012 , BCBC 2012 , ABC 2014
- CSA 086-09
- TPIC 2011

DESIGN ASSUMPTIONS
-OVERHANG NOT TO BE ALTERED OR CUT OFF.

(55 % OF 27.2 P.S.F. G.S.L. PLUS 8.4 P.S.F. RAIN LOAD) EQUALS 23.3 P.S.F. SPECIFIED ROOF LIVE LOAD

CSI: TC=0.10 (1-2:1) , BC=0.03 (10-11:1) , WB=0.03 (5-8:1) , SSI=0.08 (1-2:1)

DOL LUMBER=1.00 NAIL=1.00 LS BEND=1.10 COMP=1.10 SHEAR=1.10 TENS= 1.10

COMPANION LIVE LOAD FACTOR = 0.50

TRUSS PLATE MANUFACTURER IS NOT RESPONSIBLE FOR QUALITY CONTROL IN THE TRUSS MANUFACTURING PLANT .

NAIL VALUES

PLATE	GRIP(DRY) (PSI) MAX	MIN	SHEAR (PLI) MAX	MIN	SECTION (PLI) MAX	MIN
MT20	618	354	1667	822	2284	1656

PLATE PLACEMENT TOL. = 0.250 inches

PLATE ROTATION TOL. = 5.0 Deg.

JSI GRIP= 0.10 (2) (INPUT = 0.90)
JSI METAL= 0.04 (2) (INPUT = 1.00)

LICENSED PROFESSIONAL ENGINEER
P.M. TREVISAN
100136551
March 13th, 2017
PROVINCE OF ONTARIO

RECEIVED
TOWN OF MILTON
MAR 29, 2017
17-4990
BUILDING DIVISION

READ ALL NOTES ON THIS PAGE AND ON THE ENGINEERING NOTE PAGE ENP-1. THE NOTE PAGE IS AN INTEGRAL PART OF THIS DRAWING AS IT CONTAINS SPECIFICATIONS AND CRITERIA USED IN THE DESIGN OF THIS COMPONENT.

KOTT

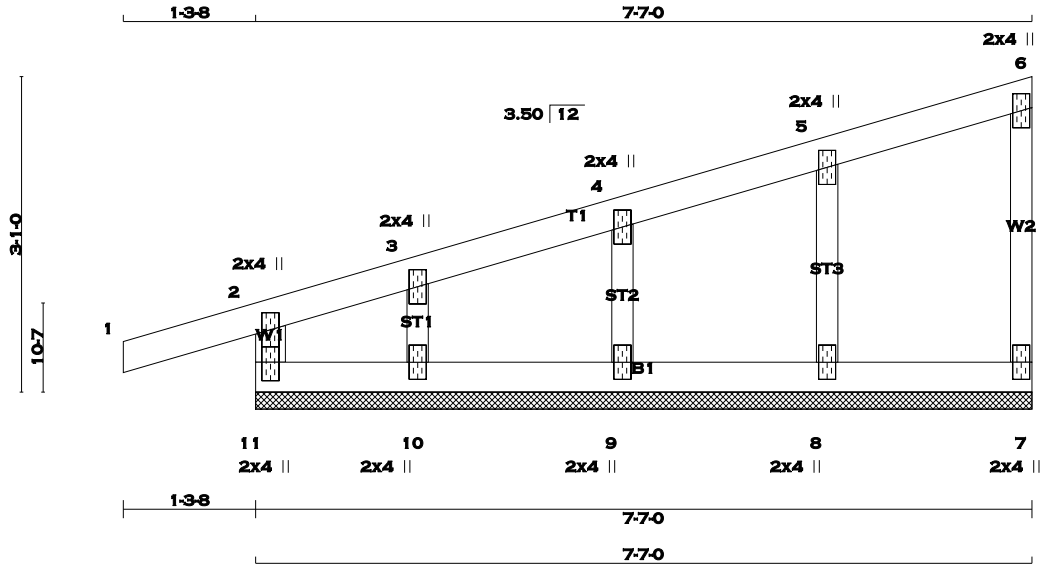

TOTAL WEIGHT = 25 lb [M]

LUMBER

N. L. G. A. RULES

CHORDS	SIZE		LUMBER	DESCR.
11 - 2	2x4	DRY	No.2	SPF
1 - 6	2x4	DRY	No.2	SPF
7 - 6	2x3	DRY	No.2	SPF
11 - 7	2x4	DRY	No.2	SPF
ALL WEBS	2x3	DRY	No.2	SPF
ALL GABLE WEBS	2x3	DRY	No.2	SPF

DRY: SEASONED LUMBER.

GABLE STUDS SPACED AT 2-0-0 OC.

PLATES (table is in inches)

JT	TYPE	PLATES	W	LEN	Y	X
2	TMV+p	MT20	2.0	4.0		
3, 4, 5						
3	TMW+w	MT20	2.0	4.0		
6	TMV+p	MT20	2.0	4.0		
7	BMV1+p	MT20	2.0	4.0		
8, 9, 10						
8	BMW1+w	MT20	2.0	4.0		
11	BMV1+p	MT20	2.0	4.0	2.25	1.00

A SIZE FOR SIZE SUBSTITUTION OF MITEK MII20 WITH TEE-LOK TL20 PLATES IS ALLOWED.

DIMENSIONS, SUPPORTS AND LOADINGS SPECIFIED BY FABRICATOR TO BE VERIFIED BY BUILDING DESIGNER

BEARINGS

THIS TRUSS DESIGNED FOR CONTINUOUS BEARINGS.

THIS TRUSS REQUIRES RIGID SHEATHING ON EXPOSED FACE.

BEARING MATERIAL TO BE SPF NO.2 OR BETTER AT JOINT(S)

BRACING

TOP CHORD TO BE SHEATHED OR MAX. PURLIN SPACING = 6.25 FT.
MAX. UNBRACED BOTTOM CHORD LENGTH = 10.00 FT. OR RIGID CEILING DIRECTLY APPLIED.

ALL PITCH BREAKS AND PERIMETER CORNER JOINTS MUST BE LATERALLY RESTRAINED.

LOADING

TOTAL LOAD CASES: (3)

CHORDS

MEMB. FR-TO	MAX. FACTORED FORCE (LBS)	FACTORED VERT. LOAD (PLF) FROM	TO	LC1 MAX CSI (LC)	MAX. UNBRAC LENGTH
11- 2	-194 / 0	0.0	0.0	0.03 (1)	7.81
1- 2	0 / 14	-77.3	-77.3	0.10 (1)	10.00
2- 3	-22 / 0	-77.3	-77.3	0.07 (1)	6.25
3- 4	-8 / 0	-77.3	-77.3	0.04 (1)	10.00
4- 5	-6 / 0	-77.3	-77.3	0.04 (1)	10.00
5- 6	-6 / 0	-77.3	-77.3	0.04 (1)	10.00
7- 6	-66 / 0	0.0	0.0	0.02 (1)	7.81
11-10	0 / 14	-17.5	-17.5	0.03 (1)	10.00
10- 9	0 / 10	-17.5	-17.5	0.01 (3)	10.00
9- 8	0 / 6	-17.5	-17.5	0.02 (3)	10.00
8- 7	0 / 3	-17.5	-17.5	0.02 (3)	10.00

WEBS

MEMB. FR-TO	MAX. FACTORED FORCE (LBS)	MAX CSI (LC)
8- 5	-168 / 0	0.03 (1)
9- 4	-160 / 0	0.02 (1)
10- 3	-101 / 0	0.01 (1)

DESIGN CRITERIA

SPECIFIED LOADS:

TOP	CH.	LL	=	23.3	PSF
		DL	=	3.0	PSF
BOT	CH.	LL	=	0.0	PSF
		DL	=	7.0	PSF
TOTAL	LOAD		=	33.3	PSF

SPACING = 24.0 IN. C/C

THIS TRUSS IS DESIGNED FOR RESIDENTIAL OR SMALL BUILDING REQUIREMENTS OF PART 9, NBCC 2010

THIS DESIGN COMPLIES WITH:
- PART 9 OF OBC 2012 , BCBC 2012 , ABC 2014
- CSA 086-09
- TPIC 2011

DESIGN ASSUMPTIONS
-OVERHANG NOT TO BE ALTERED OR CUT OFF.

(55 % OF 27.2 P.S.F. G.S.L. PLUS 8.4 P.S.F. RAIN LOAD) EQUALS 23.3 P.S.F. SPECIFIED ROOF LIVE LOAD

CSI: TC=0.10 (1-2:1) , BC=0.03 (10-11:1) , WB=0.03 (5-8:1) , SSI=0.08 (1-2:1)

DOL LUMBER=1.00 NAIL=1.00 LS BEND=1.10 COMP=1.10 SHEAR=1.10 TENS= 1.10

COMPANION LIVE LOAD FACTOR = 0.50

TRUSS PLATE MANUFACTURER IS NOT RESPONSIBLE FOR QUALITY CONTROL IN THE TRUSS MANUFACTURING PLANT .

NAIL VALUES

PLATE	GRIP(DRY) (PSI) MAX	MIN	SHEAR (PLI) MAX	MIN	SECTION (PLI) MAX	MIN
MT20	618	354	1667	822	2284	1656

PLATE PLACEMENT TOL. = 0.250 inches

PLATE ROTATION TOL. = 0.5 Deg.

JSI GRIP= 0.10 (2) (INPUT = 0.90)
JSI METAL= 0.04 (2) (INPUT = 1.00)

LICENSED PROFESSIONAL ENGINEER
P.M. TREVISAN
100136551
March 13th, 2017
PROVINCE OF ONTARIO

RECEIVED
TOWN OF MILTON
MAR 29, 2017
17-4990
BUILDING DIVISION

READ ALL NOTES ON THIS PAGE AND ON THE ENGINEERING NOTE PAGE ENP-1. THE NOTE PAGE IS AN INTEGRAL PART OF THIS DRAWING AS IT CONTAINS SPECIFICATIONS AND CRITERIA USED IN THE DESIGN OF THIS COMPONENT.

KOTT

JOB NAME	TRUSS NAME	QUANTITY	PLY	JOB DESC.	DRWG NO.
PT0317-054	GAB10	2	1	TRUSS DESC. LECCO RIDGE-BLOCK 328	

Kott Lumber Uxbridge, Stouffville, ON, CGC

Version 8.100 S Feb 9 2017 MiTek Industries, Inc. Mon Mar 13 09:56:46 2017 Page 1
ID:pF8Cn?9h9uHzAm5tCmlVl5yJJCp-X?rCG_oOES09ChQEgpEOP1Ftf2UeTmdTcLfLVgzbOnV

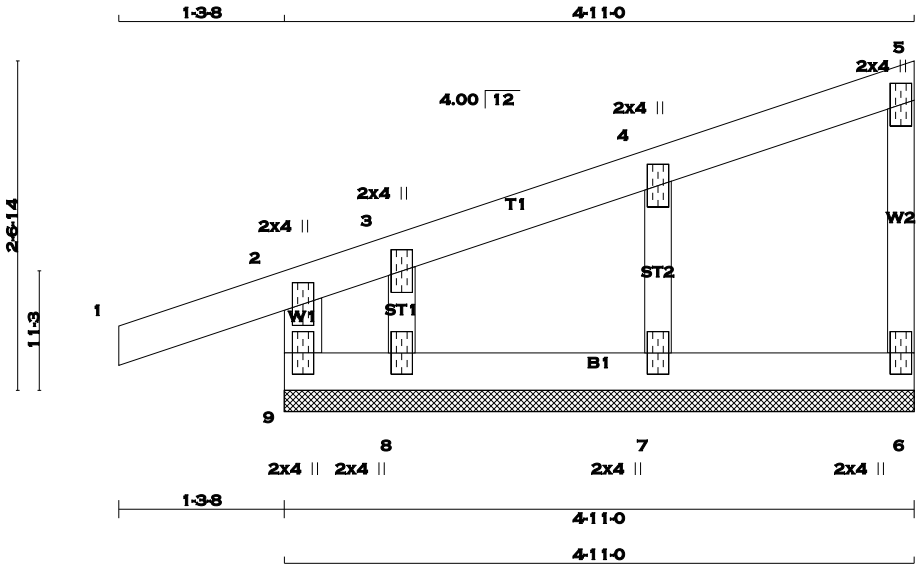

TOTAL WEIGHT = 2 X 17 = 34 lb [M]

LUMBER
N. L. G. A. RULES

CHORDS	SIZE		LUMBER	DESCR.
9 - 2	2x4	DRY	No.2	SPF
1 - 5	2x4	DRY	No.2	SPF
6 - 5	2x3	DRY	No.2	SPF
9 - 6	2x4	DRY	No.2	SPF
ALL WEBS	2x3	DRY	No.2	SPF
ALL GABLE WEBS	2x3	DRY	No.2	SPF

DRY: SEASONED LUMBER.

GABLE STUDS SPACED AT 2-0-0 OC.

PLATES (table is in inches)

JT	TYPE	PLATES	W	LEN	Y	X
2	TMV+p	MT20	2.0	4.0		
3	TMW+w	MT20	2.0	4.0		
4	TMW+w	MT20	2.0	4.0		
5	TMV+p	MT20	2.0	4.0		
6	BMV1+p	MT20	2.0	4.0		
7	BMW1+w	MT20	2.0	4.0		
8	BMW1+w	MT20	2.0	4.0		
9	BMV1+p	MT20	2.0	4.0		

A SIZE FOR SIZE SUBSTITUTION OF MITEK MII20 WITH TEE-LOK TL20 PLATES IS ALLOWED.

DIMENSIONS, SUPPORTS AND LOADINGS SPECIFIED BY FABRICATOR TO BE VERIFIED BY BUILDING DESIGNER

BEARINGS

THIS TRUSS DESIGNED FOR CONTINUOUS BEARINGS.

THIS TRUSS REQUIRES RIGID SHEATHING ON EXPOSED FACE.

BEARING MATERIAL TO BE SPF NO.2 OR BETTER AT JOINT(S)

BRACING
TOP CHORD TO BE SHEATHED OR MAX. PURLIN SPACING = 6.25 FT.
MAX. UNBRACED BOTTOM CHORD LENGTH = 10.00 FT. OR RIGID CEILING DIRECTLY APPLIED.

ALL PITCH BREAKS AND PERIMETER CORNER JOINTS MUST BE LATERALLY RESTRAINED.

LOADING
TOTAL LOAD CASES: (3)

CHORDS

MEMB. FR-TO	MAX. FACTORED FORCE (LBS)	FACTORED VERT. LOAD (PLF) FROM	TO	LC1 MAX CSI (LC)	MAX. UNBRAC LENGTH
9- 2	-193 / 0	0.0	0.0	0.03 (1)	7.81
1- 2	0 / 16	-77.3	-77.3	0.10 (1)	10.00
2- 3	-28 / 0	-77.3	-77.3	0.08 (1)	6.25
3- 4	-5 / 0	-77.3	-77.3	0.05 (1)	10.00
4- 5	-8 / 0	-77.3	-77.3	0.05 (1)	10.00
6- 5	-64 / 0	0.0	0.0	0.02 (1)	7.81
9- 8	0 / 11	-17.5	-17.5	0.03 (1)	10.00
8- 7	0 / 9	-17.5	-17.5	0.02 (3)	10.00
7- 6	0 / 4	-17.5	-17.5	0.02 (3)	10.00

WEBS

MEMB. FR-TO	MAX. FACTORED FORCE (LBS)	MAX CSI (LC)
7- 4	-181 / 0	0.03 (1)
8- 3	-46 / 0	0.01 (1)

DESIGN CRITERIA

SPECIFIED LOADS:

TOP	CH.	LL	=	23.3	PSF
		DL	=	3.0	PSF
BOT	CH.	LL	=	0.0	PSF
		DL	=	7.0	PSF
TOTAL	LOAD		=	33.3	PSF

SPACING = 24.0 IN. C/C

THIS TRUSS IS DESIGNED FOR RESIDENTIAL OR SMALL BUILDING REQUIREMENTS OF PART 9, NBCC 2010

THIS DESIGN COMPLIES WITH:
- PART 9 OF OBC 2012 , BCBC 2012 , ABC 2014
- CSA 086-09
- TPIC 2011

DESIGN ASSUMPTIONS
-OVERHANG NOT TO BE ALTERED OR CUT OFF.

(55 % OF 27.2 P.S.F. G.S.L. PLUS 8.4 P.S.F. RAIN LOAD) EQUALS 23.3 P.S.F. SPECIFIED ROOF LIVE LOAD

CSI: TC=0.10 (1-2:1) , BC=0.03 (8-9:1) , WB=0.03 (4-7:1) , SSI=0.08 (1-2:1)

DOL LUMBER=1.00 NAIL=1.00 LS BEND=1.10 COMP=1.10 SHEAR=1.10 TENS= 1.10

COMPANION LIVE LOAD FACTOR = 0.50

TRUSS PLATE MANUFACTURER IS NOT RESPONSIBLE FOR QUALITY CONTROL IN THE TRUSS MANUFACTURING PLANT .

NAIL VALUES

PLATE	GRIP(DRY) (PSI) MAX	MIN	SHEAR (PLI) MAX	MIN	SECTION (PLI) MAX	MIN
MT20	618	354	1667	822	2284	1656

PLATE PLACEMENT TOL. = 0.250 inches

PLATE ROTATION TOL. = 0.5 Deg.

JSI GRIP= 0.11 (2) (INPUT = 0.90)
JSI METAL= 0.04 (2) (INPUT = 1.00)

LICENSED PROFESSIONAL ENGINEER
P.M. TREVISAN
100136551
March 13th, 2017
PROVINCE OF ONTARIO

RECEIVED
TOWN OF MILTON
MAR 29, 2017
17-4990
BUILDING DIVISION

READ ALL NOTES ON THIS PAGE AND ON THE ENGINEERING NOTE PAGE ENP-1. THE NOTE PAGE IS AN INTEGRAL PART OF THIS DRAWING AS IT CONTAINS SPECIFICATIONS AND CRITERIA USED IN THE DESIGN OF THIS COMPONENT.

KOTT

JOB NAME	TRUSS NAME	QUANTITY	PLY	JOB DESC.	DRWG NO.
PT0317-054	GAB11	2	1	TRUSS DESC. LECCO RIDGE-BLOCK 328	

Kott Lumber Uxbridge, Stouffville, ON, CGC

Version 8.100 S Feb 9 2017 MiTek Industries, Inc. Mon Mar 13 09:56:47 2017 Page 1
ID:pF8Cn?9h9uHzAm5tCmlVl5yJJCp-?BPbTKo0?l80qr?QDXldxEo2OSq2CDvdr?Ov26zbOnU

SCALE = 1:16.4

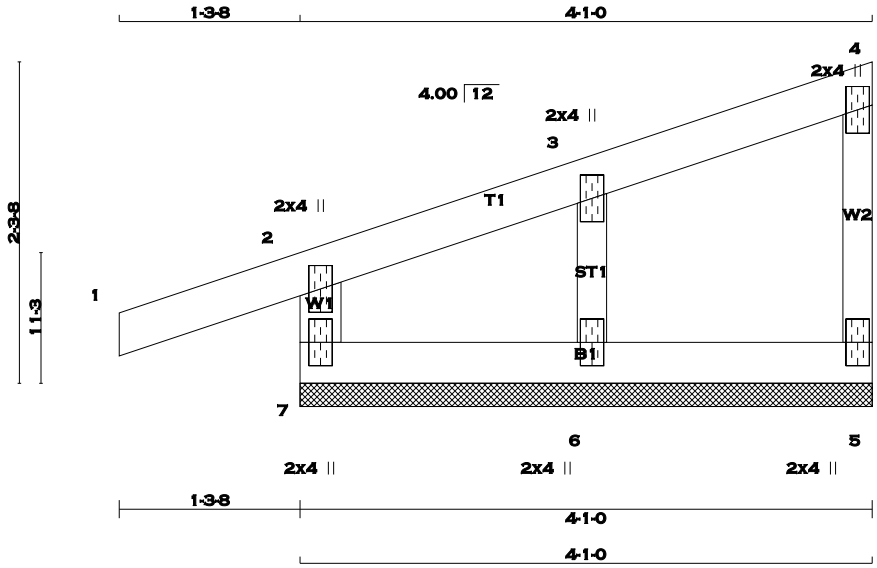

TOTAL WEIGHT = 2 X 14 = 28 lb [M]

LUMBER
N. L. G. A. RULES

CHORDS	SIZE		LUMBER	DESCR.
7 - 2	2x4	DRY	No.2	SPF
1 - 4	2x4	DRY	No.2	SPF
5 - 4	2x3	DRY	No.2	SPF
7 - 5	2x4	DRY	No.2	SPF
ALL WEBS	2x3	DRY	No.2	SPF
ALL GABLE WEBS	2x3	DRY	No.2	SPF

DRY: SEASONED LUMBER.

GABLE STUDS SPACED AT 2-0-0 OC.

PLATES (table is in inches)

JT	TYPE	PLATES	W	LEN	Y	X
2	TMV+p	MT20	2.0	4.0		
3	TMW+w	MT20	2.0	4.0		
4	TMV+p	MT20	2.0	4.0		
5	BMV1+p	MT20	2.0	4.0		
6	BMW1+w	MT20	2.0	4.0		
7	BMV1+p	MT20	2.0	4.0		

A SIZE FOR SIZE SUBSTITUTION OF MITEK MII20 WITH TEE-LOK TL20 PLATES IS ALLOWED.

DIMENSIONS, SUPPORTS AND LOADINGS SPECIFIED BY FABRICATOR TO BE VERIFIED BY BUILDING DESIGNER

BEARINGS

THIS TRUSS DESIGNED FOR CONTINUOUS BEARINGS.

THIS TRUSS REQUIRES RIGID SHEATHING ON EXPOSED FACE.

BEARING MATERIAL TO BE SPF NO.2 OR BETTER AT JOINT(S)

BRACING
TOP CHORD TO BE SHEATHED OR MAX. PURLIN SPACING = 6.25 FT.
MAX. UNBRACED BOTTOM CHORD LENGTH = 10.00 FT. OR RIGID CEILING DIRECTLY APPLIED.

ALL PITCH BREAKS AND PERIMETER CORNER JOINTS MUST BE LATERALLY RESTRAINED.

LOADING
TOTAL LOAD CASES: (3)

CHORDS

MEMB. FR-TO	MAX. FACTORED FORCE (LBS)	FACTORED VERT. LOAD (PLF) FROM	TO	LC1 MAX CSI (LC)	MAX. UNBRAC LENGTH
7- 2	-184 / 0	0.0	0.0	0.01 (3)	7.81
1- 2	0 / 16	-77.3	-77.3	0.10 (1)	10.00
2- 3	-12 / 0	-77.3	-77.3	0.04 (1)	6.25
3- 4	-10 / 0	-77.3	-77.3	0.04 (1)	6.25
5- 4	-66 / 0	0.0	0.0	0.02 (1)	7.81
7- 6	0 / 13	-17.5	-17.5	0.02 (3)	10.00
6- 5	0 / 7	-17.5	-17.5	0.02 (3)	10.00

WEBS

MEMB. FR-TO	MAX. FACTORED FORCE (LBS)	MAX CSI (LC)
6- 3	-170 / 0	0.02 (1)

DESIGN CRITERIA

SPECIFIED LOADS:

TOP	CH.	LL	=	23.3	PSF
		DL	=	3.0	PSF
BOT	CH.	LL	=	0.0	PSF
		DL	=	7.0	PSF
TOTAL	LOAD		=	33.3	PSF

SPACING = 24.0 IN. C/C

THIS TRUSS IS DESIGNED FOR RESIDENTIAL OR SMALL BUILDING REQUIREMENTS OF PART 9, NBCC 2010

THIS DESIGN COMPLIES WITH:
- PART 9 OF OBC 2012 , BCBC 2012 , ABC 2014
- CSA 086-09
- TPIC 2011

DESIGN ASSUMPTIONS
-OVERHANG NOT TO BE ALTERED OR CUT OFF.

(55 % OF 27.2 P.S.F. G.S.L. PLUS 8.4 P.S.F. RAIN LOAD) EQUALS 23.3 P.S.F. SPECIFIED ROOF LIVE LOAD

CSI: TC=0.10 (1-2:1) , BC=0.02 (6-7:3) , WB=0.02 (3-6:1) , SSI=0.08 (1-2:1)

DOL LUMBER=1.00 NAIL=1.00 LS BEND=1.10 COMP=1.10 SHEAR=1.10 TENS= 1.10

COMPANION LIVE LOAD FACTOR = 0.50

TRUSS PLATE MANUFACTURER IS NOT RESPONSIBLE FOR QUALITY CONTROL IN THE TRUSS MANUFACTURING PLANT .

NAIL VALUES

PLATE	GRIP(DRY) (PSI) MAX	MIN	SHEAR (PLI) MAX	MIN	SECTION (PLI) MAX	MIN
MT20	618	354	1667	822	2284	1656

PLATE PLACEMENT TOL. = 0.250 inches

PLATE ROTATION TOL. = 5.0 Deg.

JSI GRIP= 0.10 (2) (INPUT = 0.90)
JSI METAL= 0.04 (2) (INPUT = 1.00)

LICENSED PROFESSIONAL ENGINEER
P.M. TREVISAN
100136551
March 13th, 2017
PROVINCE OF ONTARIO

RECEIVED
TOWN OF MILTON
MAR 29, 2017
17-4990
BUILDING DIVISION

READ ALL NOTES ON THIS PAGE AND ON THE ENGINEERING NOTE PAGE ENP-1. THE NOTE PAGE IS AN INTEGRAL PART OF THIS DRAWING AS IT CONTAINS SPECIFICATIONS AND CRITERIA USED IN THE DESIGN OF THIS COMPONENT.

KOTT

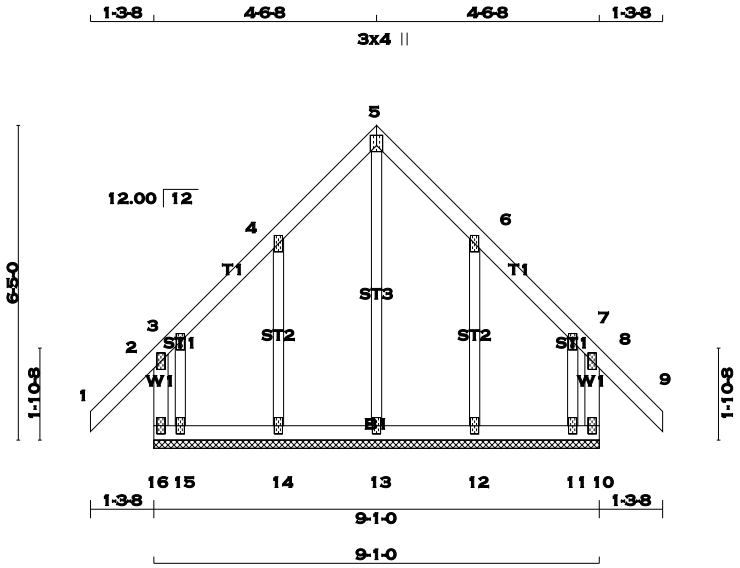

TOTAL WEIGHT = 2 X 47 = 94 lb [M]

LUMBER

N. L. G. A. RULES

CHORDS	SIZE		LUMBER	DESCR.
16 - 2	2x4	DRY	No.2	SPF
1 - 5	2x4	DRY	No.2	SPF
5 - 9	2x4	DRY	No.2	SPF
10 - 8	2x4	DRY	No.2	SPF
16 - 10	2x4	DRY	No.2	SPF
ALL WEBS	2x3	DRY	No.2	SPF
ALL GABLE WEBS	2x3	DRY	No.2	SPF

DRY: SEASONED LUMBER.

GABLE STUDS SPACED AT 2-0-0 OC.

PLATES (table is in inches)

JT	TYPE	PLATES	W	LEN	Y	X
2	TMV+p	MT20	2.0	4.0		
3, 4, 6, 7						
3	TMW+w	MT20	2.0	4.0		
5	TTW+p	MT20	3.0	4.0	Edge	
8	TMV+p	MT20	2.0	4.0		
10	BMV1+p	MT20	2.0	4.0		
11, 12, 13, 14, 15						
11	BMW1+w	MT20	2.0	4.0		
16	BMV1+p	MT20	2.0	4.0		

Edge - INDICATES REFERENCE CORNER OF PLATE TOUCHES EDGE OF CHORD.

A SIZE FOR SIZE SUBSTITUTION OF MITEK MII20 WITH TEE-LOK TL20 PLATES IS ALLOWED.

DIMENSIONS, SUPPORTS AND LOADINGS SPECIFIED BY FABRICATOR TO BE VERIFIED BY BUILDING DESIGNER

BEARINGS

THIS TRUSS DESIGNED FOR CONTINUOUS BEARINGS.

THIS TRUSS REQUIRES RIGID SHEATHING ON EXPOSED FACE.

BEARING MATERIAL TO BE SPF NO.2 OR BETTER AT JOINT(S)

BRACING

TOP CHORD TO BE SHEATHED OR MAX. PURLIN SPACING = 6.25 FT.
MAX. UNBRACED BOTTOM CHORD LENGTH = 6.25 FT. OR RIGID CEILING DIRECTLY APPLIED.

ALL PITCH BREAKS AND PERIMETER CORNER JOINTS MUST BE LATERALLY RESTRAINED.

LOADING

TOTAL LOAD CASES: (3)

CHORDS

MEMB. FR-TO	MAX. FACTORED FORCE (LBS)	FACTORED VERT. LOAD (PLF) FROM	TO	LC1	MAX CSI (LC)	MAX. UNBRAC LENGTH
16- 2	-197 / 0	0.0	0.0	0.03	(1)	7.81
1- 2	0 / 38	-77.3	-77.3	0.11	(1)	10.00
2- 3	-44 / 0	-77.3	-77.3	0.08	(1)	6.25
3- 4	0 / 18	-77.3	-77.3	0.04	(1)	10.00
4- 5	0 / 20	-77.3	-77.3	0.04	(1)	10.00
5- 6	0 / 20	-77.3	-77.3	0.04	(1)	10.00
6- 7	0 / 18	-77.3	-77.3	0.04	(1)	10.00
7- 8	-44 / 0	-77.3	-77.3	0.08	(1)	6.25
8- 9	0 / 38	-77.3	-77.3	0.11	(1)	10.00
10- 8	-197 / 0	0.0	0.0	0.03	(1)	7.81
16-15	-10 / 0	-17.5	-17.5	0.01	(3)	6.25
15-14	-11 / 0	-17.5	-17.5	0.01	(3)	6.25
14-13	-15 / 0	-17.5	-17.5	0.01	(3)	6.25
13-12	-15 / 0	-17.5	-17.5	0.01	(3)	6.25
12-11	-11 / 0	-17.5	-17.5	0.01	(3)	6.25
11-10	-10 / 0	-17.5	-17.5	0.01	(3)	6.25

WEBS

MEMB. FR-TO	MAX. FACTORED FORCE (LBS)	MAX CSI (LC)
13- 5	-189 / 0	0.12 (1)
14- 4	-160 / 0	0.05 (1)
15- 3	-7 / 0	0.00 (1)
12- 6	-160 / 0	0.05 (1)
11- 7	-7 / 0	0.00 (1)

DESIGN CRITERIA

SPECIFIED LOADS:

TOP	CH.	LL	=	23.3	PSF
		DL	=	3.0	PSF
BOT	CH.	LL	=	0.0	PSF
		DL	=	7.0	PSF
TOTAL	LOAD		=	33.3	PSF

SPACING = 24.0 IN. C/C

THIS TRUSS IS DESIGNED FOR RESIDENTIAL OR SMALL BUILDING REQUIREMENTS OF PART 9, NBCC 2010

THIS DESIGN COMPLIES WITH:
- PART 9 OF OBC 2012 , BCBC 2012 , ABC 2014
- CSA 086-09
- TPIC 2011

DESIGN ASSUMPTIONS
-OVERHANG NOT TO BE ALTERED OR CUT OFF.

(55 % OF 27.2 P.S.F. G.S.L. PLUS 8.4 P.S.F. RAIN LOAD) EQUALS 23.3 P.S.F. SPECIFIED ROOF LIVE LOAD

CSI: TC=0.11 (8-9:1) , BC=0.01 (13-14:3) , WB=0.12 (5-13:1) , SSI=0.06 (8-9:1)

DOL LUMBER=1.00 NAIL=1.00 LS BEND=1.10 COMP=1.10 SHEAR=1.10 TENS= 1.10

COMPANION LIVE LOAD FACTOR = 0.50

TRUSS PLATE MANUFACTURER IS NOT RESPONSIBLE FOR QUALITY CONTROL IN THE TRUSS MANUFACTURING PLANT .

NAIL VALUES

PLATE	GRIP(DRY) (PSI) MAX	MIN	SHEAR (PLI) MAX	MIN	SECTION (PLI) MAX	MIN
MT20	618	354	1667	822	2284	1656

PLATE PLACEMENT TOL. = 0.250 inches

PLATE ROTATION TOL. = 0.5 Deg.

JSI GRIP= 0.30 (5) (INPUT = 0.90)
JSI METAL= 0.06 (5) (INPUT = 1.00)

LICENSED PROFESSIONAL ENGINEER
P.M. TREVISAN
100136551
March 13th, 2017
PROVINCE OF ONTARIO

RECEIVED
TOWN OF MILTON
MAR 29, 2017
17-4990
BUILDING DIVISION

READ ALL NOTES ON THIS PAGE AND ON THE ENGINEERING NOTE PAGE ENP-1. THE NOTE PAGE IS AN INTEGRAL PART OF THIS DRAWING AS IT CONTAINS SPECIFICATIONS AND CRITERIA USED IN THE DESIGN OF THIS COMPONENT.

KOTT

JOB NAME	TRUSS NAME	QUANTITY	PLY	JOB DESC.	DRWG NO.
PT0317-054	GAB13	1	1	TRUSS DESC. LECCO RIDGE-BLOCK 328	ENG JOB: PT0317-054

Kott Lumber Uxbridge, Stouffville, ON, CGC

Version 8.100 S Feb 9 2017 MiTek Industries, Inc. Mon Mar 13 09:56:47 2017 Page 1

ID:pF8Cn?9h9uHzAm5tCmlVl5yJJCp-?BPbTKo0?l80qr?QDXldxEo1ASo7CBodr?Ov26zbOnU

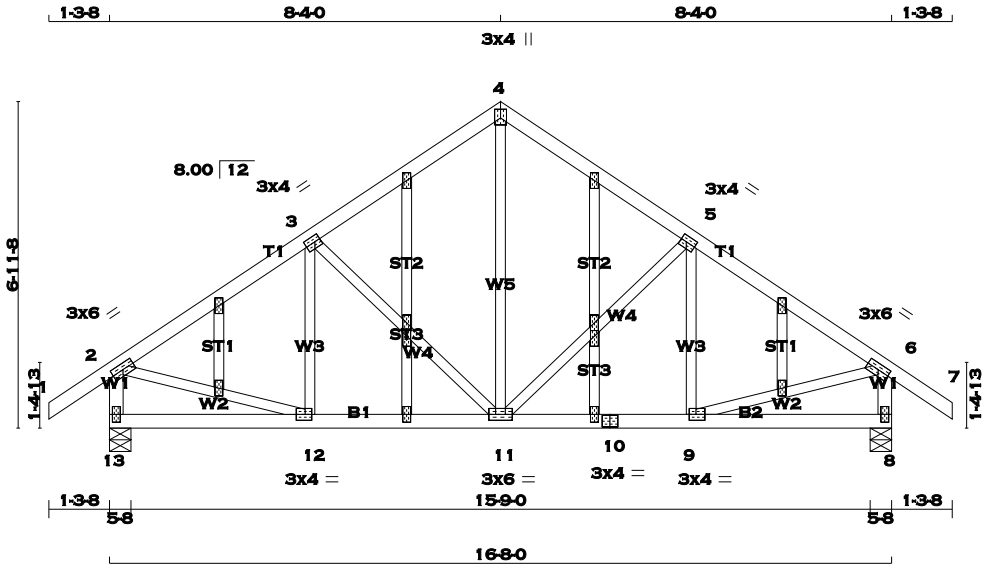

TOTAL WEIGHT = 85 lb

[M][F]

LUMBER

N. L. G. A. RULES

CHORDS	SIZE		LUMBER	DESCR.
1 - 4	2x4	DRY	No.2	SPF
4 - 7	2x4	DRY	No.2	SPF
13 - 2	2x4	DRY	No.2	SPF
8 - 6	2x4	DRY	No.2	SPF
13 - 10	2x4	DRY	No.2	SPF
10 - 8	2x4	DRY	No.2	SPF
ALL WEBS EXCEPT	2x3	DRY	No.2	SPF
ALL GABLE WEBS	2x3	DRY	No.2	SPF

DRY: SEASONED LUMBER.

GABLE STUDS SPACED AT 2-0-0 OC.

PLATES (table is in inches)

JT	TYPE	PLATES	W	LEN	Y	X
2	TMVW-t	MT20	3.0	6.0		
3	TMWW-t	MT20	3.0	4.0	1.50	1.50
4	TTW+p	MT20	3.0	4.0	2.25	1.50
5	TMWW-t	MT20	3.0	4.0	1.50	1.50
6	TMVW-t	MT20	3.0	6.0		
8	BMV1+p	MT20	2.0	4.0		
9	BMWW-t	MT20	3.0	4.0	1.50	1.75
10	BS-t	MT20	3.0	4.0		
11	BMWWW-t	MT20	3.0	6.0		
12	BMWW-t	MT20	3.0	4.0	1.50	1.75
13	BMV1+p	MT20	2.0	4.0		
14	NP+w	MT20	2.0	4.0	1.50	1.00
14, 15, 16, 17, 18, 19, 20, 21, 22, 23						
14	NP+w	MT20	2.0	4.0		
21	NP+w	MT20	2.0	4.0	1.50	1.00

A SIZE FOR SIZE SUBSTITUTION OF MITEK MII20 WITH TEE-LOK TL20 PLATES IS ALLOWED.

DIMENSIONS, SUPPORTS AND LOADINGS SPECIFIED BY FABRICATOR TO BE VERIFIED BY BUILDING DESIGNER

BEARINGS

JT	FACTORED GROSS REACTION VERT	HORZ	MAXIMUM FACTORED GROSS REACTION DOWN	HORZ	UPLIFT	INPUT BRG IN-SX	REQRD BRG IN-SX
13	897	0	897	0	0	5-8	5-8
8	897	0	897	0	0	5-8	5-8

UNFACTORED REACTIONS

JT	1ST LCASE COMBINED	MAX./MIN. COMPONENT REACTIONS SNOW	LIVE	PERM.LIVE	WIND	DEAD	SOIL
13	627	452 / 0	0 / 0	0 / 0	0 / 0	175 / 0	0 / 0
8	627	452 / 0	0 / 0	0 / 0	0 / 0	175 / 0	0 / 0

BEARING MATERIAL TO BE SPF NO.2 OR BETTER AT JOINT(S) 13, 8

BRACING

TOP CHORD TO BE SHEATHED OR MAX. PURLIN SPACING = 6.25 FT.
MAX. UNBRACED BOTTOM CHORD LENGTH = 10.00 FT. OR RIGID CEILING DIRECTLY APPLIED.

ALL PITCH BREAKS AND PERIMETER CORNER JOINTS MUST BE LATERALLY RESTRAINED.

LOADING

TOTAL LOAD CASES: (3)

CHORDS

MEMB. FR-TO	MAX. FACTORED FORCE (LBS)	FACTORED VERT. LOAD (PLF) FROM	TO	LC1 MAX CSI (LC)	MAX. UNBRAC LENGTH
1- 2	0 / 29	-77.3	-77.3	0.10 (1)	10.00
2- 3	-803 / 0	-77.3	-77.3	0.17 (1)	6.25
3- 4	-622 / 0	-77.3	-77.3	0.17 (1)	6.25
4- 5	-622 / 0	-77.3	-77.3	0.17 (1)	6.25
5- 6	-803 / 0	-77.3	-77.3	0.17 (1)	6.25
6- 7	0 / 29	-77.3	-77.3	0.10 (1)	10.00
13- 2	-865 / 0	0.0	0.0	0.09 (1)	7.81
8- 6	-865 / 0	0.0	0.0	0.09 (1)	7.81
13-12	0 / 0	-17.5	-17.5	0.07 (3)	10.00
12-11	0 / 685	-17.5	-17.5	0.14 (1)	10.00
11-10	0 / 685	-17.5	-17.5	0.14 (1)	10.00
10- 9	0 / 685	-17.5	-17.5	0.14 (1)	10.00
9- 8	0 / 0	-17.5	-17.5	0.07 (3)	10.00

WEBS

MEMB. FR-TO	MAX. FACTORED FORCE (LBS)	MAX CSI (LC)
11- 4	0 / 430	0.10 (1)
11- 5	-259 / 0	0.14 (1)
9- 5	-95 / 41	0.03 (1)
3-11	-259 / 0	0.14 (1)
12- 3	-95 / 41	0.03 (1)
2-12	0 / 707	0.16 (1)
9- 6	0 / 707	0.16 (1)

DESIGN CRITERIA

SPECIFIED LOADS:

TOP CH.	LL	=	23.3	PSF
	DL	=	3.0	PSF
BOT CH.	LL	=	0.0	PSF
	DL	=	7.0	PSF
TOTAL LOAD		=	33.3	PSF

SPACING = 24.0 IN. C/C

THIS TRUSS IS DESIGNED FOR RESIDENTIAL OR SMALL BUILDING REQUIREMENTS OF PART 9, NBCC 2010

THIS DESIGN COMPLIES WITH:
- PART 9 OF OBC 2012 , BCBC 2012 , ABC 2014
- CSA 086-09
- TPIC 2011

(55 % OF 27.2 P.S.F. G.S.L. PLUS 8.4 P.S.F. RAIN LOAD) EQUALS 23.3 P.S.F. SPECIFIED ROOF LIVE LOAD

ALLOWABLE DEFL.(LL)= L/360 (0.56")
CALCULATED VERT. DEFL.(LL) = L/ 999 (0.02")
ALLOWABLE DEFL.(TL)= L/360 (0.56")
CALCULATED VERT. DEFL.(TL) = L/ 999 (0.03")

CSI: TC=0.17 (2-3:1) , BC=0.14 (11-12:1) , WB=0.16 (2-12:1) , SSI=0.13 (2-3:1)

DOL LUMBER=1.00 NAIL=1.00 LS BEND=1.10 COMP=1.10 SHEAR=1.10 TENS= 1.10

COMPANION LIVE LOAD FACTOR = 0.50

TRUSS PLATE MANUFACTURER IS NOT RESPONSIBLE FOR QUALITY CONTROL IN THE TRUSS MANUFACTURING PLANT .

NAIL VALUES

PLATE	GRIP(DRY) (PSI) MAX	MIN	SHEAR (PLI) MAX	MIN	SECTION (PLI) MAX	MIN
MT20	618	354	1667	822	2284	1656

PLATE PLACEMENT TOL. = 0.250 inches

PLATE ROTATION TOL. = 5.0 Deg.

JSI GRIP= 0.90 (9) (INPUT = 0.90)
JSI METAL= 0.26 (12) (INPUT = 1.00)

LICENSED PROFESSIONAL ENGINEER
P.M. TREVISAN
100136551
March 13th, 2017
PROVINCE OF ONTARIO

RECEIVED
TOWN OF MILTON
MAR 29, 2017
17-4990
BUILDING DIVISION

READ ALL NOTES ON THIS PAGE AND ON THE ENGINEERING NOTE PAGE ENP-1. THE NOTE PAGE IS AN INTEGRAL PART OF THIS DRAWING AS IT CONTAINS SPECIFICATIONS AND CRITERIA USED IN THE DESIGN OF THIS COMPONENT.

KOTT

JOB NAME	TRUSS NAME	QUANTITY	PLY	JOB DESC.	DRWG NO.
PT0317-054	GAB14	1	1	TRUSS DESC. LECCO RIDGE-BLOCK 328	ENG JOB: PT0317-054

Kott Lumber Uxbridge, Stouffville, ON, CGC

Version 8.100 S Feb 9 2017 MiTek Industries, Inc. Mon Mar 13 09:56:48 2017 Page 1

ID:pF8Cn?9h9uHzAm5tCmlVl5yJJCp-TNyzhgpfm3GtS?acnEHsUSKC4rAExg3m4f8SaZzbOnT

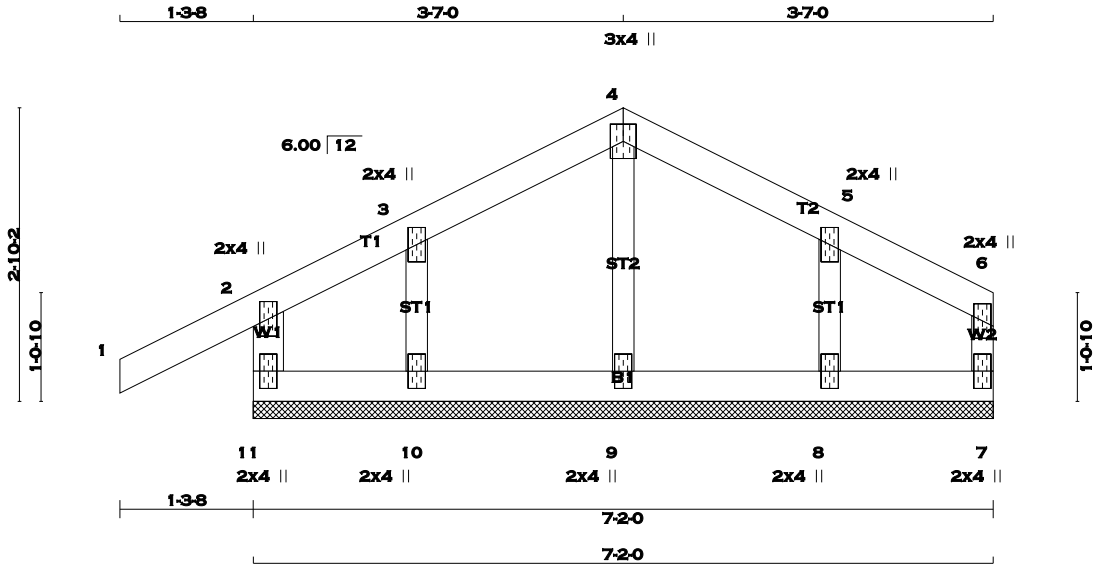

TOTAL WEIGHT = 24 lb

[M]

LUMBER

N. L. G. A. RULES

CHORDS	SIZE		LUMBER	DESCR.
11 - 2	2x4	DRY	No.2	SPF
1 - 4	2x4	DRY	No.2	SPF
4 - 6	2x4	DRY	No.2	SPF
7 - 6	2x3	DRY	No.2	SPF
11 - 7	2x4	DRY	No.2	SPF
ALL WEBS	2x3	DRY	No.2	SPF
ALL GABLE WEBS	2x3	DRY	No.2	SPF

DRY: SEASONED LUMBER.

GABLE STUDS SPACED AT 2-0-0 OC.

PLATES (table is in inches)

JT	TYPE	PLATES	W	LEN	Y	X
2	TMV+p	MT20	2.0	4.0		
3	TMW+w	MT20	2.0	4.0		
4	TTW+p	MT20	3.0	4.0		
5	TMW+w	MT20	2.0	4.0		
6	TMV+p	MT20	2.0	4.0		
7	BMV1+p	MT20	2.0	4.0		
8, 9, 10						
8	BMW1+w	MT20	2.0	4.0		
11	BMV1+p	MT20	2.0	4.0		

A SIZE FOR SIZE SUBSTITUTION OF MITEK MII20 WITH TEE-LOK TL20 PLATES IS ALLOWED.

DIMENSIONS, SUPPORTS AND LOADINGS SPECIFIED BY FABRICATOR TO BE VERIFIED BY BUILDING DESIGNER

BEARINGS

THIS TRUSS DESIGNED FOR CONTINUOUS BEARINGS.

THIS TRUSS REQUIRES RIGID SHEATHING ON EXPOSED FACE.

BEARING MATERIAL TO BE SPF NO.2 OR BETTER AT JOINT(S)

BRACING

TOP CHORD TO BE SHEATHED OR MAX. PURLIN SPACING = 10.00 FT.
MAX. UNBRACED BOTTOM CHORD LENGTH = 6.25 FT. OR RIGID CEILING DIRECTLY APPLIED.

ALL PITCH BREAKS AND PERIMETER CORNER JOINTS MUST BE LATERALLY RESTRAINED.

LOADING

TOTAL LOAD CASES: (3)

CHORDS

MEMB. FR-TO	MAX. FACTORED FORCE (LBS)	FACTORED VERT. LOAD (PLF) FROM	TO	LC1 MAX CSI (LC)	MAX. UNBRAC LENGTH
11- 2	-184 / 0	0.0	0.0	0.03 (1)	7.81
1- 2	0 / 23	-77.3	-77.3	0.10 (1)	10.00
2- 3	-3 / 0	-77.3	-77.3	0.07 (1)	10.00
3- 4	0 / 16	-77.3	-77.3	0.04 (1)	10.00
4- 5	0 / 14	-77.3	-77.3	0.04 (1)	10.00
5- 6	0 / 13	-77.3	-77.3	0.04 (1)	10.00
7- 6	-40 / 0	0.0	0.0	0.01 (1)	7.81
11-10	-7 / 1	-17.5	-17.5	0.02 (1)	10.00
10- 9	-11 / 0	-17.5	-17.5	0.01 (3)	6.25
9- 8	-11 / 0	-17.5	-17.5	0.01 (3)	6.25
8- 7	-5 / 1	-17.5	-17.5	0.01 (3)	10.00

WEBS

MEMB. FR-TO	MAX. FACTORED FORCE (LBS)	MAX CSI (LC)
9- 4	-181 / 0	0.03 (1)
10- 3	-105 / 0	0.02 (1)
8- 5	-149 / 0	0.02 (1)

DESIGN CRITERIA

SPECIFIED LOADS:

TOP	CH.	LL	=	23.3	PSF
		DL	=	3.0	PSF
BOT	CH.	LL	=	0.0	PSF
		DL	=	7.0	PSF
TOTAL	LOAD		=	33.3	PSF

SPACING = 24.0 IN. C/C

THIS TRUSS IS DESIGNED FOR RESIDENTIAL OR SMALL BUILDING REQUIREMENTS OF PART 9, NBCC 2010

THIS DESIGN COMPLIES WITH:
- PART 9 OF OBC 2012 , BCBC 2012 , ABC 2014
- CSA 086-09
- TPIC 2011

DESIGN ASSUMPTIONS
-OVERHANG NOT TO BE ALTERED OR CUT OFF.

(55 % OF 27.2 P.S.F. G.S.L. PLUS 8.4 P.S.F. RAIN LOAD) EQUALS 23.3 P.S.F. SPECIFIED ROOF LIVE LOAD

CSI: TC=0.10 (1-2:1) , BC=0.02 (10-11:1) , WB=0.03 (4-9:1) , SSI=0.07 (1-2:1)

DOL LUMBER=1.00 NAIL=1.00 LS BEND=1.10 COMP=1.10 SHEAR=1.10 TENS= 1.10

COMPANION LIVE LOAD FACTOR = 0.50

TRUSS PLATE MANUFACTURER IS NOT RESPONSIBLE FOR QUALITY CONTROL IN THE TRUSS MANUFACTURING PLANT .

NAIL VALUES

PLATE	GRIP(DRY) (PSI) MAX	MIN	SHEAR (PLI) MAX	MIN	SECTION (PLI) MAX	MIN
MT20	618	354	1667	822	2284	1656

PLATE PLACEMENT TOL. = 0.250 inches

PLATE ROTATION TOL. = 5.0 Deg.

JSI GRIP= 0.11 (2) (INPUT = 0.90)
JSI METAL= 0.07 (4) (INPUT = 1.00)

LICENSED PROFESSIONAL ENGINEER
P.M. TREVISAN
100136551
March 13th, 2017
PROVINCE OF ONTARIO

RECEIVED
TOWN OF MILTON
MAR 29, 2017
17-4990
BUILDING DIVISION

READ ALL NOTES ON THIS PAGE AND ON THE ENGINEERING NOTE PAGE ENP-1. THE NOTE PAGE IS AN INTEGRAL PART OF THIS DRAWING AS IT CONTAINS SPECIFICATIONS AND CRITERIA USED IN THE DESIGN OF THIS COMPONENT.

KOTT

JOB NAME	TRUSS NAME	QUANTITY	PLY	JOB DESC.	DRWG NO.
PT0317-054	GIRD01	1	2	TRUSS DESC. LECCO RIDGE-BLOCK 328	

Kott Lumber Uxbridge, Stouffville, ON, CGC

Version 8.100 S Feb 9 2017 MiTek Industries, Inc. Mon Mar 13 09:56:48 2017 Page 1
ID:pF8Cn?9h9uHzAm5tCmlVl5yJJCp-TNyzhgpfm3GtS?acnEHsUSK9fr65xckm4f8SaZzbOnT

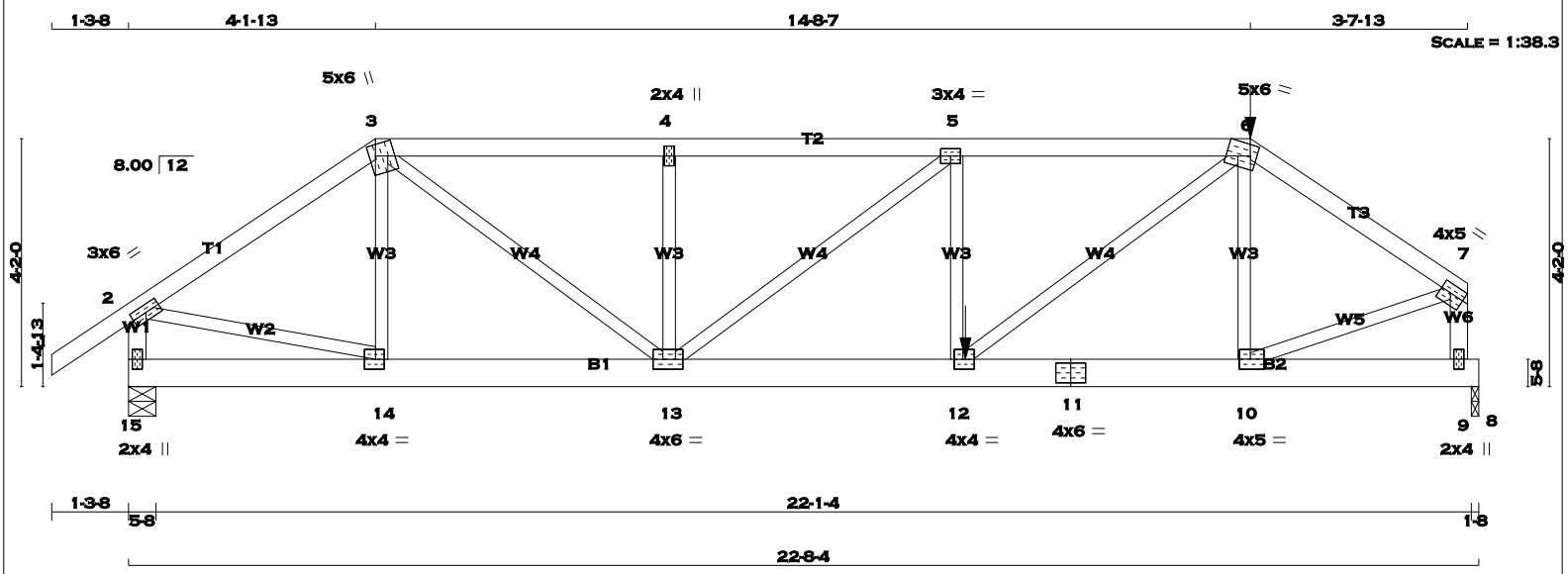

TOTAL WEIGHT = 2 X 104 = 208 lb [M]

LUMBER

N. L. G. A. RULES

CHORDS	SIZE		LUMBER	DESCR.
1 - 3	2x4	DRY	No.2	SPF
3 - 6	2x4	DRY	No.2	SPF
6 - 7	2x4	DRY	No.2	SPF
15 - 2	2x4	DRY	No.2	SPF
9 - 7	2x4	DRY	No.2	SPF
15 - 11	2x6	DRY	No.2	SPF
11 - 8	2x6	DRY	No.2	SPF
ALL WEBS EXCEPT	2x3	DRY	No.2	SPF

DRY: SEASONED LUMBER.

DESIGN CONSISTS OF 2 TRUSSES BUILT SEPARATELY THEN FASTENED TOGETHER AS FOLLOWS:

CHORDS	#ROWS	SURFACE SPACING (IN)	LOAD(PLF)
TOP CHORDS : (0.122"X3") SPIRAL NAILS			
1- 3	1	12	TOP
3- 6	1	12	SIDE(34.2)
6- 7	1	12	SIDE(0.0)
15- 2	1	12	TOP
9- 7	1	12	TOP
BOTTOM CHORDS : (0.122"X3") SPIRAL NAILS			
15- 11	2	12	SIDE(8.7)
11- 8	2	12	SIDE(8.7)
WEBS : (0.122"X3") SPIRAL NAILS			
2x3	1	6	

NAILS TO BE DRIVEN FROM ONE SIDE ONLY.

GIRDER NAILING ASSUMES NAILED HANGERS ARE FASTENED WITH MIN. 3-0 INCH NAILS.

TOP - COMPONENTS ARE LOADED FROM THE TOP AND MUST BE PLACED ON TOP EDGE OF ALL PLIES FOR THE LOAD TO BE TRANSFERRED TO EACH PLY.

SIDE - PLF SHOWN IS THE EQUIVALENT UDL APPLIED TO ONE SIDE THAT THE CORRESPONDING NAILING PATTERN SHALL BE CAPABLE OF TRANSFERING. REMAINING PLF MUST BE APPLIED ON THE OPPOSITE SIDE OR ON THE TOP.

PLATES (table is in inches)

JT	TYPE	PLATES	W	LEN	Y	X
2	TMVW-t	MT20	3.0	6.0		
3	TTWW+m	MT20	5.0	6.0	2.25	1.25
4	TMW+w	MT20	2.0	4.0		

DIMENSIONS, SUPPORTS AND LOADINGS SPECIFIED BY FABRICATOR TO BE VERIFIED BY BUILDING DESIGNER

BEARINGS

JT	FACTORED GROSS REACTION VERT	HORZ	MAXIMUM FACTORED GROSS REACTION DOWN	HORZ	UPLIFT	INPUT BRG IN-SX	REQRD BRG IN-SX
15	1767	0	1767	0	0	5-8	5-8
8	2276	0	2276	0	0	1-8	1-8

UNFACTORED REACTIONS

JT	1ST LCASE COMBINED	MAX./MIN. COMPONENT REACTIONS SNOW	LIVE	PERM.LIVE	WIND	DEAD	SOIL
15	1237	881 / 0	0 / 0	0 / 0	0 / 0	356 / 0	0 / 0
8	1599	1109 / 0	0 / 0	0 / 0	0 / 0	490 / 0	0 / 0

BEARING MATERIAL TO BE SPF NO.2 OR BETTER AT JOINT(S) 15, 8

BRACING

TOP CHORD TO BE SHEATHED OR MAX. PURLIN SPACING = 4.57 FT.
MAX. UNBRACED BOTTOM CHORD LENGTH = 10.00 FT. OR RIGID CEILING DIRECTLY APPLIED.

ALL PITCH BREAKS AND PERIMETER CORNER JOINTS MUST BE LATERALLY RESTRAINED.

LOADING

TOTAL LOAD CASES: (3)

CHORDS MEMB. FR-TO	MAX. FACTORED FORCE (LBS)	FACTORED VERT. LOAD (PLF) FROM	TO	LC1 MAX CSI (LC)	MAX. UNBRAC LENGTH	WEBS MEMB. FR-TO	MAX. FACTORED FORCE (LBS)	MAX CSI (LC)
1- 2	0 / 29	-77.3	-77.3	0.06 (1)	10.00	14- 3	-283 / 0	0.04 (1)
2- 3	-1958 / 0	-77.3	-77.3	0.15 (1)	6.11	3-13	0 / 1713	0.21 (1)
3- 4	-2979 / 0	-77.3	-77.3	0.17 (1)	5.18	13- 4	-372 / 0	0.05 (1)
4- 5	-2979 / 0	-77.3	-77.3	0.25 (1)	5.08	13- 5	-936 / 0	0.31 (1)
5- 6	-3715 / 0	-145.8	-145.8	0.32 (1)	4.57	12- 5	-38 / 102	0.02 (3)
6- 7	-2615 / 0	-77.3	-77.3	0.13 (1)	5.50	12- 6	0 / 1957	0.24 (1)
15- 2	-1738 / 0	0.0	0.0	0.10 (1)	7.81	10- 6	-411 / 12	0.05 (1)
9- 7	-2367 / 0	0.0	0.0	0.14 (1)	7.31	2-14	0 / 1670	0.21 (1)
						10- 7	0 / 2304	0.29 (1)
15-14	0 / 0	-17.5	-17.5	0.02 (3)	10.00			
14-13	0 / 1618	-17.5	-17.5	0.12 (1)	10.00			
13-12	0 / 3715	-17.5	-17.5	0.29 (1)	10.00			
12-11	0 / 2160	-33.0	-33.0	0.20 (1)	10.00			
11-10	0 / 2160	-33.0	-33.0	0.20 (1)	10.00			
10- 9	0 / 0	-33.0	-33.0	0.16 (1)	10.00			
9- 8	0 / 0	-33.0	-33.0	0.16 (1)	10.00			

FACTORED CONCENTRATED LOADS (LBS)

JT	LOC.	LC1	MAX-	MAX+	FACE	DIR.	TYPE
6	18-10-3	-220	-220	---	FRONT	VERT	TOTAL
12	14-0-12	-1106	-1106	---	FRONT	VERT	TOTAL

RECEIVED
TOWN OF MILTON
MAR 29, 2017
17-4990
BUILDING DIVISION

READ ALL NOTES ON THIS PAGE AND ON THE ENGINEERING NOTE PAGE ENP-1. THE NOTE PAGE IS AN INTEGRAL PART OF THIS DRAWING AS IT CONTAINS SPECIFICATIONS AND CRITERIA USED IN THE DESIGN OF THIS COMPONENT.

DESIGN CRITERIA

*** SPECIAL LOADS ANALYSIS ***
GEOMETRY AND/OR BASIC LOADS CHANGED BY USER.
LOADS WERE DERIVED FROM USER INPUT
NO FURTHER MODIFICATIONS WERE MADE

SPECIFIED LOADS:

TOP	CH.	LL	=	23.3	PSF
		DL	=	3.0	PSF
BOT	CH.	LL	=	0.0	PSF
		DL	=	7.0	PSF
TOTAL	LOAD		=	33.3	PSF

SPACING = 24.0 IN. C/C

LOADING IN FLAT SECTION BASED ON A SLOPE OF 6.00/12

GIRDER TYPE: CPrimeHip
LEFT SETBACK = 4-1-13
RIGHT SETBACK = 3-9-7
END SETBACK = 6-0-0
END WALL WIDTH = 5-8
CORNER FRAMING TYPE: CONVENTIONAL
END JACK TYPE: CONVENTIONAL
APPLIED TO FRONT SIDE
- ADDT'L LOADS BASED ON 55 % OF GSL.
LOADS APPLIED TO FIRST 8-6-14 OF SPAN MEASURED FROM THE RIGHT.

*** NON STANDARD GIRDER ***
ADDT'L USER-DEFINED LOADS APPLIED TO ALL LOAD CASES.

THIS TRUSS IS DESIGNED FOR RESIDENTIAL OR SMALL BUILDING REQUIREMENTS OF PART 9, NBCC 2010

THIS DESIGN COMPLIES WITH:
- PART 9 OF OBC 2012 , BCBC 2012 , ABC 2014
- CSA 086-09
- TPIC 2011

(55 % OF 27.2 P.S.F. G.S.L. PLUS 8.4 P.S.F. RAIN LOAD) EQUALS 23.3 P.S.F. SPECIFIED ROOF LIVE LOAD

ALLOWABLE DEFL.(LL)= L/360 (0.76")
CALCULATED VERT. DEFL.(LL) = L/ 999 (0.06")
ALLOWABLE DEFL.(TL)= L/360 (0.76")
CALCULATED VERT. DEFL.(TL) = L/ 999 (0.10")

CSI: TC=0.32 (5-6:1) , BC=0.29 (12-13:1) , WB=0.31 (5-13:1) , SSI=0.75 (8-9:1)

DOL LUMBER=1.00 NAIL=1.00 LS BEND=1.00 COMP=1.00 SHEAR=1.00 TENS= 1.00

COMPANION LIVE LOAD FACTOR = 0.50

TRUSS PLATE MANUFACTURER IS NOT RESPONSIBLE FOR QUALITY CONTROL IN THE TRUSS MANUFACTURING PLANT .

NAIL VALUES

PLATE	GRIP(DRY) (PSI) MAX	MIN	SHEAR (PLI) MAX	MIN	SECTION (PLI) MAX	MIN
MT20	618	354	1667	822	2284	1656

PLATE PLACEMENT TOL. = 0.250 inches

PLATE ROTATION TOL. = 30 Deg.

CONTINUED ON PAGE 2

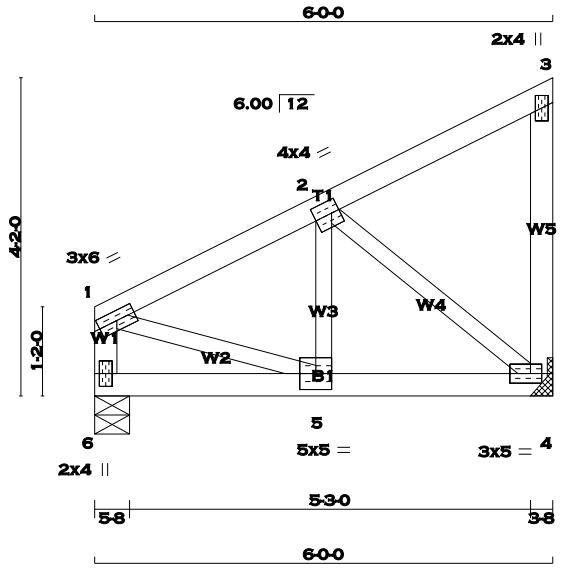

SCALE = 1:30.2

TOTAL WEIGHT = 26 lb [M]

LUMBER

N. L. G. A. RULES

CHORDS	SIZE		LUMBER	DESCR.
1 - 3	2x4	DRY	No.2	SPF
4 - 3	2x4	DRY	No.2	SPF
6 - 1	2x4	DRY	No.2	SPF
6 - 4	2x4	DRY	No.2	SPF
ALL WEBS EXCEPT	2x3	DRY	No.2	SPF

DRY: SEASONED LUMBER.

PLATES (table is in inches)

JT	TYPE	PLATES	W	LEN	Y	X
1	TMVW-t	MT20	3.0	6.0		
2	TMWW-t	MT20	4.0	4.0	2.00	1.25
3	TMV+p	MT20	2.0	4.0		
4	BMVW1-t	MT20	3.0	5.0	1.50	1.75
5	BMWW-t	MT20	5.0	5.0		
6	BMV1+p	MT20	2.0	4.0		

A SIZE FOR SIZE SUBSTITUTION OF MITEK MII20 WITH TEE-LOK TL20 PLATES IS ALLOWED.

DIMENSIONS, SUPPORTS AND LOADINGS SPECIFIED BY FABRICATOR TO BE VERIFIED BY BUILDING DESIGNER

BEARINGS

JT	FACTORED GROSS REACTION VERT	HORZ	MAXIMUM FACTORED GROSS REACTION DOWN	HORZ	UPLIFT	INPUT BRG IN-SX	REQRD BRG IN-SX
4	1106	0	1106	0	0	HANGER BY OTHERS MIN. SEAT SIZE: 3-8	
6	1106	0	1106	0	0	5-8	5-8

UNFACTORED REACTIONS

JT	1ST LCASE COMBINED	MAX./MIN. COMPONENT REACTIONS SNOW	LIVE	PERM.LIVE	WIND	DEAD	SOIL
4	776	543 / 0	0 / 0	0 / 0	0 / 0	233 / 0	0 / 0
6	776	543 / 0	0 / 0	0 / 0	0 / 0	233 / 0	0 / 0

BEARING MATERIAL TO BE SPF NO.2 OR BETTER AT JOINT(S) 6

BRACING

TOP CHORD TO BE SHEATHED OR MAX. PURLIN SPACING = 6.22 FT.
MAX. UNBRACED BOTTOM CHORD LENGTH = 10.00 FT. OR RIGID CEILING DIRECTLY APPLIED.

ALL PITCH BREAKS AND PERIMETER CORNER JOINTS MUST BE LATERALLY RESTRAINED.

LOADING

TOTAL LOAD CASES: (3)

CHORDS

MEMB. FR-TO	MAX. FACTORED FORCE (LBS)	VERT. LOAD (PLF) FROM	TO	MAX CSI (LC)	MAX. UNBRAC LENGTH
1- 2	-948 / 0	-77.3	-77.3	0.11 (1)	6.22
2- 3	-10 / 0	-77.3	-77.3	0.10 (1)	10.00
4- 3	-94 / 0	0.0	0.0	0.03 (1)	7.81
6- 1	-767 / 0	0.0	0.0	0.09 (1)	7.81
6- 5	0 / 0	-291.2	-291.2	0.44 (1)	10.00
5- 4	0 / 857	-291.2	-291.2	0.59 (1)	10.00

WEBS

MEMB. FR-TO	MAX. FACTORED FORCE (LBS)	MAX CSI (LC)
5- 2	0 / 825	0.20 (1)
2- 4	-1090 / 0	0.28 (1)
1- 5	0 / 891	0.22 (1)

DESIGN CRITERIA

SPECIFIED LOADS:

TOP CH.	LL =	23.3	PSF
	DL =	3.0	PSF
BOT CH.	LL =	0.0	PSF
	DL =	7.0	PSF
TOTAL LOAD	=	33.3	PSF

SPACING = 24.0 IN. C/C

GIRDER TYPE: CStdGirder
START DISTANCE = 0-0
START SPAN CARRIED = 14-0-0
END DISTANCE = 6-0-0
END SPAN CARRIED = 14-0-0
END WALL WIDTH = 5-8
APPLIED TO FRONT SIDE OF BOTTOM CHORD.
- ADDT'L LOADS BASED ON 55 % OF GSL.

THIS TRUSS IS DESIGNED FOR RESIDENTIAL OR SMALL BUILDING REQUIREMENTS OF PART 9, NBCC 2010

THIS DESIGN COMPLIES WITH:
- PART 9 OF OBC 2012 , BCBC 2012 , ABC 2014
- CSA 086-09
- TPIC 2011

(55 % OF 27.2 P.S.F. G.S.L. PLUS 8.4 P.S.F. RAIN LOAD) EQUALS 23.3 P.S.F. SPECIFIED ROOF LIVE LOAD

ALLOWABLE DEFL.(LL)= L/360 (0.20")
CALCULATED VERT. DEFL.(LL) = L/ 999 (0.02")
ALLOWABLE DEFL.(TL)= L/360 (0.20")
CALCULATED VERT. DEFL.(TL) = L/ 999 (0.04")

CSI: TC=0.11 (1-2:1) , BC=0.59 (4-5:1) , WB=0.28 (2-4:1) , SSI=0.46 (5-6:1)

DOL LUMBER=1.00 NAIL=1.00 LS BEND=1.00 COMP=1.00 SHEAR=1.00 TENS= 1.00

COMPANION LIVE LOAD FACTOR = 0.50

TRUSS PLATE MANUFACTURER IS NOT RESPONSIBLE FOR QUALITY CONTROL IN THE TRUSS MANUFACTURING PLANT .

NAIL VALUES

PLATE	GRIP(DRY) (PSI) MAX	MIN	SHEAR (PLI) MAX	MIN	SECTION (PLI) MAX	MIN
MT20	618	354	1667	822	2284	1656

PLATE PLACEMENT TOL. = 0.250 inches

PLATE ROTATION TOL. = 5.0 Deg.

JSI GRIP= 0.90 (4) (INPUT = 0.90)
JSI METAL= 0.31 (2) (INPUT = 1.00)

LICENSED PROFESSIONAL ENGINEER
R.M. TREVISAN
100136551
March 13th, 2017
PROVINCE OF ONTARIO

RECEIVED
TOWN OF MILTON
MAR 29, 2017
17-4990
BUILDING DIVISION

READ ALL NOTES ON THIS PAGE AND ON THE ENGINEERING NOTE PAGE ENP-1. THE NOTE PAGE IS AN INTEGRAL PART OF THIS DRAWING AS IT CONTAINS SPECIFICATIONS AND CRITERIA USED IN THE DESIGN OF THIS COMPONENT.

KOTT

JOB NAME	TRUSS NAME	QUANTITY	PLY	JOB DESC.	DRWG NO.
PT0317-054	GIRD03	1	2	TRUSS DESC. LECCO RIDGE-BLOCK 328	

Kott Lumber Uxbridge, Stouffville, ON, CGC

Version 8.100 S Feb 9 2017 MiTek Industries, Inc. Mon Mar 13 09:56:48 2017 Page 1
ID:pF8Cn?9h9uHzAm5tCmlVl5yJJCp-TNyzhgpfm3GtS?acnEHsUSKACr2ZxVWm4f8SaZzbOnT

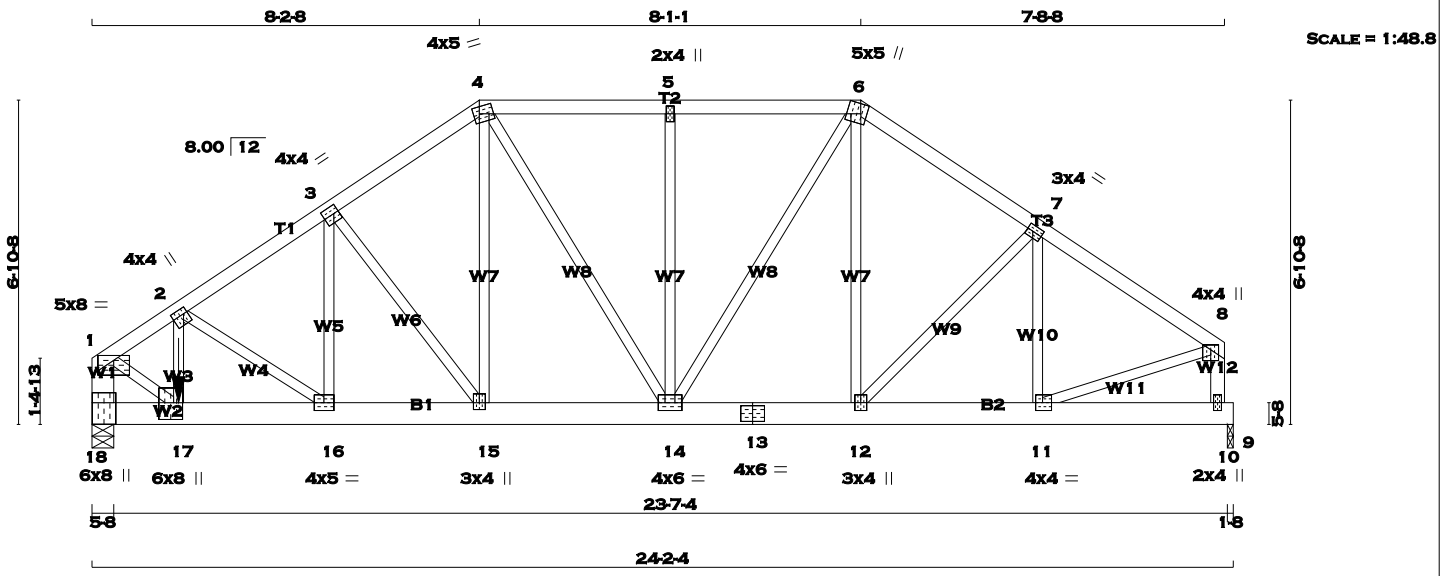

TOTAL WEIGHT = 2 X 128 = 255 lb
[M]

LUMBER
N. L. G. A. RULES

CHORDS	SIZE		LUMBER	DESCR.
1 - 4	2x4	DRY	No.2	SPF
4 - 6	2x4	DRY	No.2	SPF
6 - 8	2x4	DRY	No.2	SPF
18 - 1	2x6	DRY	No.2	SPF
10 - 8	2x4	DRY	No.2	SPF
18 - 13	2x6	DRY	No.2	SPF
13 - 9	2x6	DRY	No.2	SPF
ALL WEBS EXCEPT	2x3	DRY	No.2	SPF

DRY: SEASONED LUMBER.

DESIGN CONSISTS OF 2 TRUSSES BUILT SEPARATELY THEN FASTENED TOGETHER AS FOLLOWS:

CHORDS #ROWS	SURFACE SPACING (IN)		LOAD(PLF)
TOP CHORDS : (0.122"X3") SPIRAL NAILS			
1- 4	1	12	TOP
4- 6	1	12	TOP
6- 8	1	12	TOP
10- 8	1	12	TOP
18- 1	2	12	TOP
BOTTOM CHORDS : (0.122"X3") SPIRAL NAILS			
18- 13	2	12	SIDE(194.6)
13- 9	2	12	TOP
WEBS : (0.122"X3") SPIRAL NAILS			
2x3	1	6	

NAILS TO BE DRIVEN FROM ONE SIDE ONLY.

GIRDER NAILING ASSUMES NAILED HANGERS ARE FASTENED WITH MIN. 3-0 INCH NAILS.

TOP - COMPONENTS ARE LOADED FROM THE TOP AND MUST BE PLACED ON TOP EDGE OF ALL PLIES FOR THE LOAD TO BE TRANSFERRED TO EACH PLY.

SIDE - PLF SHOWN IS THE EQUIVALENT UDL APPLIED TO ONE SIDE THAT THE CORRESPONDING NAILING PATTERN SHALL BE CAPABLE OF TRANSFERING. REMAINING PLF MUST BE APPLIED ON THE OPPOSITE SIDE OR ON THE TOP.

PLATES (table is in inches)

JT	TYPE	PLATES	W	LEN	Y	X
1	TMVW-p	MT20	5.0	8.0	1.25	4.00
2	TMWW+t	MT20	4.0	4.0	1.50	1.00
3	TMWW-t	MT20	4.0	4.0	2.00	1.25

DIMENSIONS, SUPPORTS AND LOADINGS SPECIFIED BY FABRICATOR TO BE VERIFIED BY BUILDING DESIGNER

BEARINGS

JT	FACTORED GROSS REACTION VERT	HORZ	MAXIMUM FACTORED GROSS REACTION DOWN	HORZ	UPLIFT	INPUT BRG IN-SX	REQRD BRG IN-SX
18	6807	0	6807	0	0	5-8	5-8
9	1568	0	1568	0	0	1-8	1-8

UNFACTORED REACTIONS

JT	1ST LCASE COMBINED	MAX./MIN. COMPONENT REACTIONS SNOW	LIVE	PERM.LIVE	WIND	DEAD	SOIL
18	4778	3342 / 0	0 / 0	0 / 0	0 / 0	1435 / 0	0 / 0
9	1100	768 / 0	0 / 0	0 / 0	0 / 0	332 / 0	0 / 0

BEARING MATERIAL TO BE SPF NO.2 OR BETTER AT JOINT(S) 18, 9

BRACING
TOP CHORD TO BE SHEATHED OR MAX. PURLIN SPACING = 3.87 FT.
MAX. UNBRACED BOTTOM CHORD LENGTH = 10.00 FT. OR RIGID CEILING DIRECTLY APPLIED.

ALL PITCH BREAKS AND PERIMETER CORNER JOINTS MUST BE LATERALLY RESTRAINED.

LOADING
TOTAL LOAD CASES: (3)

CHORDS

MEMB. FR-TO	MAX. FACTORED FORCE (LBS)	FACTORED VERT. LOAD (PLF) FROM	TO	LC1 CSI (LC)	MAX UNBRAC LENGTH
1- 2	-6032 / 0	-77.3	-77.3	0.16 (1)	3.87
2- 3	-3582 / 0	-77.3	-77.3	0.12 (1)	4.88
3- 4	-2436 / 0	-77.3	-77.3	0.09 (1)	5.69
4- 5	-1892 / 0	-77.3	-77.3	0.12 (1)	6.21
5- 6	-1892 / 0	-77.3	-77.3	0.12 (1)	6.21
6- 7	-1791 / 0	-77.3	-77.3	0.11 (1)	6.25
7- 8	-1772 / 0	-77.3	-77.3	0.11 (1)	6.25
18- 1	-6157 / 0	0.0	0.0	0.22 (1)	5.97
10- 8	-1615 / 0	0.0	0.0	0.09 (1)	7.81
18-17	0 / 0	-406.8	-406.8	0.19 (1)	10.00
17-16	0 / 5007	-17.5	-17.5	0.51 (1)	10.00
16-15	0 / 3000	-17.5	-17.5	0.21 (1)	10.00
15-14	0 / 2031	-17.5	-17.5	0.14 (1)	10.00
14-13	0 / 1473	-17.5	-17.5	0.10 (1)	10.00
13-12	0 / 1473	-17.5	-17.5	0.10 (1)	10.00
12-11	0 / 1490	-17.5	-17.5	0.11 (1)	10.00
11-10	0 / 0	-17.5	-17.5	0.11 (1)	10.00
10- 9	0 / 0	-17.5	-17.5	0.11 (1)	10.00

WEBS

MEMB. FR-TO	MAX. FACTORED FORCE (LBS)	MAX CSI (LC)
17- 2	0 / 2611	0.32 (1)
2-16	-2445 / 0	0.33 (1)
16- 3	0 / 1641	0.20 (1)
3-15	-1641 / 0	0.41 (1)
15- 4	0 / 1349	0.17 (1)
4-14	-263 / 0	0.15 (1)
14- 5	-370 / 0	0.14 (1)
14- 6	0 / 792	0.10 (1)
12- 6	0 / 77	0.01 (3)
12- 7	-26 / 0	0.01 (1)
11- 7	-340 / 0	0.05 (1)
1-17	0 / 5699	0.71 (1)
11- 8	0 / 1572	0.19 (1)

FACTORED CONCENTRATED LOADS (LBS)

JT	LOC.	LC1	MAX-	MAX+	FACE	DIR.	TYPE
17	1-10-0	-5382	-5382	---	FRONT	VERT	TOTAL

RECEIVED
TOWN OF MILTON
MAR 29, 2017
17-4990
BUILDING DIVISION

READ ALL NOTES ON THIS PAGE AND ON THE ENGINEERING NOTE PAGE ENP-1. THE NOTE PAGE IS AN INTEGRAL PART OF THIS DRAWING AS IT CONTAINS SPECIFICATIONS AND CRITERIA USED IN THE DESIGN OF THIS COMPONENT.

DESIGN CRITERIA

*** SPECIAL LOADS ANALYSIS ***
GEOMETRY AND/OR BASIC LOADS CHANGED BY USER.
LOADS WERE DERIVED FROM USER INPUT
NO FURTHER MODIFICATIONS WERE MADE

SPECIFIED LOADS:

TOP	CH.	LL	=	23.3	PSF
		DL	=	3.0	PSF
BOT	CH.	LL	=	0.0	PSF
		DL	=	7.0	PSF
TOTAL	LOAD		=	33.3	PSF

SPACING = 24.0 IN. C/C

LOADING IN FLAT SECTION BASED ON A SLOPE OF 6.00/12

GIRDER TYPE: CStdGirder
START DISTANCE = 0-0
START SPAN CARRIED = 18-10-8
END DISTANCE = 1-10-0
END SPAN CARRIED = 18-10-8
END WALL WIDTH = 5-8
APPLIED TO FRONT SIDE OF BOTTOM CHORD.
- ADDT'L LOADS BASED ON 55 % OF GSL.

*** NON STANDARD GIRDER ***
ADDT'L USER-DEFINED LOADS APPLIED TO ALL LOAD CASES.

THIS TRUSS IS DESIGNED FOR RESIDENTIAL OR SMALL BUILDING REQUIREMENTS OF PART 9, NBCC 2010

THIS DESIGN COMPLIES WITH:
- PART 9 OF OBC 2012 , BCBC 2012 , ABC 2014
- CSA 086-09
- TPIC 2011

(55 % OF 27.2 P.S.F. G.S.L. PLUS 8.4 P.S.F. RAIN LOAD) EQUALS 23.3 P.S.F. SPECIFIED ROOF LIVE LOAD

ALLOWABLE DEFL.(LL)= L/360 (0.81")
CALCULATED VERT. DEFL.(LL) = L/ 999 (0.04")
ALLOWABLE DEFL.(TL)= L/360 (0.81")
CALCULATED VERT. DEFL.(TL) = L/ 999 (0.07")

CSI: TC=0.22 (1-18:1) , BC=0.51 (16-17:1) , WB=0.71 (1-17:1) , SSI=0.52 (9-10:1)

DOL LUMBER=1.00 NAIL=1.00 LS BEND=1.00 COMP=1.00 SHEAR=1.00 TENS= 1.00

COMPANION LIVE LOAD FACTOR = 0.50

TRUSS PLATE MANUFACTURER IS NOT RESPONSIBLE FOR QUALITY CONTROL IN THE TRUSS MANUFACTURING PLANT .

NAIL VALUES

PLATE	GRIP(DRY) (PSI) MAX	MIN	SHEAR (PLI) MAX	MIN	SECTION (PLI) MAX	MIN
MT20	618	354	1667	822	2284	1656

PLATE PLACEMENT TOL. = 0.250 inches

PLATE ROTATION TOL. = 5.0 Deg.

JSI GRIP= 0.90 (INPUT = 90)
JSI METAL= 0.74 (INPUT = 100)

CONTINUED ON PAGE 2

JOB NAME	TRUSS NAME	QUANTITY	PLY	JOB DESC.	DRWG NO.
PT0317-054	GIRD04	1	1	TRUSS DESC. LECCO RIDGE-BLOCK 328	ENG JOB: PT0317-054

Kott Lumber Uxbridge, Stouffville, ON, CGC

Version 8.100 S Feb 9 2017 MiTek Industries, Inc. Mon Mar 13 09:56:49 2017 Page 1

ID:pF8Cn?9h9uHzAm5tCmlVl5yJJCp-xaWLu?qHXNOk399pLyo50ftKnFQBg_CvIJt06?zbOnS

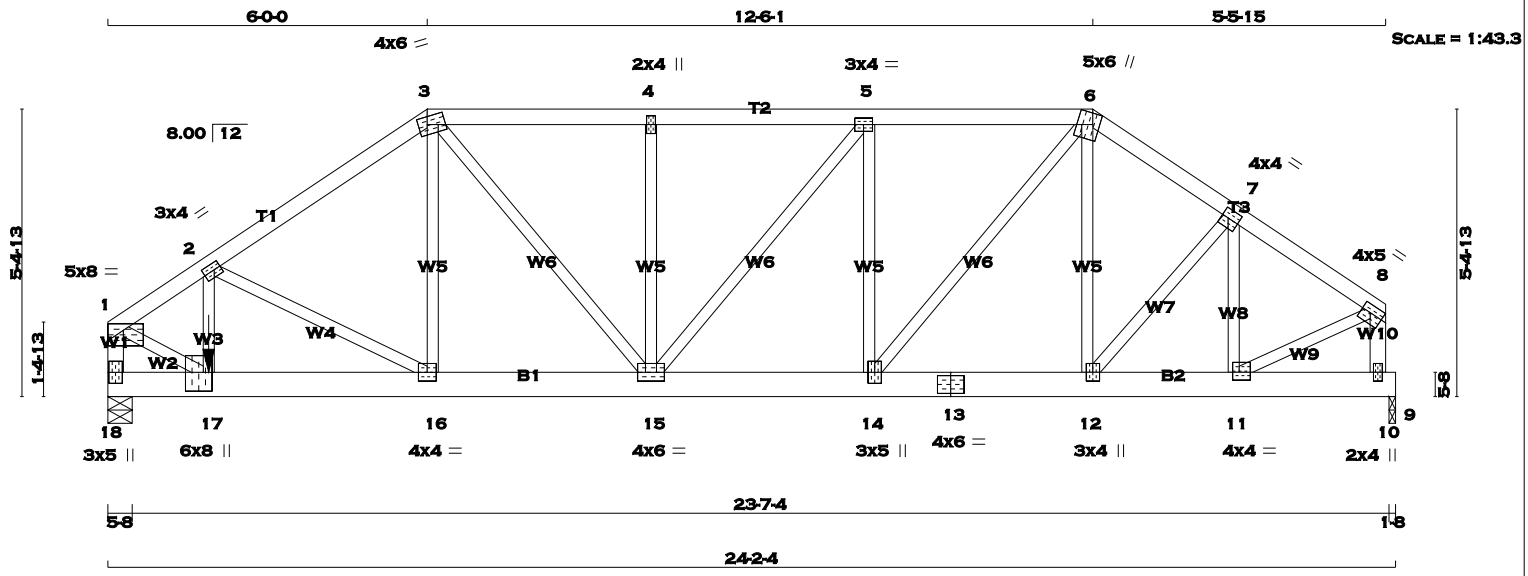

TOTAL WEIGHT = 120 lb

LUMBER

N. L. G. A. RULES

CHORDS	SIZE		LUMBER	DESCR.
1 - 3	2x4	DRY	No.2	SPF
3 - 6	2x4	DRY	No.2	SPF
6 - 8	2x4	DRY	No.2	SPF
18 - 1	2x4	DRY	No.2	SPF
10 - 8	2x4	DRY	No.2	SPF
18 - 13	2x6	DRY	No.2	SPF
13 - 9	2x6	DRY	No.2	SPF
ALL WEBS EXCEPT	2x3	DRY	No.2	SPF

DRY: SEASONED LUMBER.

PLATES (table is in inches)

JT	TYPE	PLATES	W	LEN	Y	X
1	TMVW-p	MT20	5.0	8.0	1.50	Edge
2	TMWW-t	MT20	3.0	4.0	1.50	1.50
3	TTWW-m	MT20	4.0	6.0	1.75	2.00
4	TMW+w	MT20	2.0	4.0		
5	TMWW-t	MT20	3.0	4.0		
6	TTWW+m	MT20	5.0	6.0	2.50	1.50
7	TMWW-t	MT20	4.0	4.0	2.00	1.50
8	TMVW-t	MT20	4.0	5.0	1.75	Edge
10	BMV+p	MT20	2.0	4.0		
11	BMWW-t	MT20	4.0	4.0	1.75	1.50
12	BMWW+t	MT20	3.0	4.0		
13	BS-t	MT20	4.0	6.0		
14	BMWW+t	MT20	3.0	5.0		
15	BMWWW-t	MT20	4.0	6.0		
16	BMWW-t	MT20	4.0	4.0		
17	BMWW+t	MT20	6.0	8.0	4.25	2.00
18	BMV1+p	MT20	3.0	5.0		

Edge - INDICATES REFERENCE CORNER OF PLATE TOUCHES EDGE OF CHORD.

A SIZE FOR SIZE SUBSTITUTION OF MITEK MII20 WITH TEE-LOK TL20 PLATES IS ALLOWED.

HANGERS NOTES

1) SPECIAL HANGER(S) OR CONNECTION(S) REQUIRED TO SUPPORT CONCENTRATED LOAD(S) 1751.2 lbs FACTORED DOWN AT 1-10-12 ON BOTTOM CHORD. DESIGN FOR UNSPECIFIED CONNECTION(S) IS DELEGATED TO THE BUILDING DESIGNER.

DIMENSIONS, SUPPORTS AND LOADINGS SPECIFIED BY FABRICATOR TO BE VERIFIED BY BUILDING DESIGNER

BEARINGS

JT	FACTORED GROSS REACTION VERT	HORZ	MAXIMUM FACTORED GROSS REACTION DOWN	HORZ	UPLIFT	INPUT BRG IN-SX	REQRD BRG IN-SX
18	2761	0	2761	0	0	5-8	5-8
9	1270	0	1270	0	0	1-8	1-8

UNFACTORED REACTIONS

JT	1ST LCASE COMBINED	MAX./MIN. COMPONENT REACTIONS SNOW	LIVE	PERM.LIVE	WIND	DEAD	SOIL
18	1938	1355 / 0	0 / 0	0 / 0	0 / 0	582 / 0	0 / 0
9	892	622 / 0	0 / 0	0 / 0	0 / 0	270 / 0	0 / 0

BEARING MATERIAL TO BE SPF NO.2 OR BETTER AT JOINT(S) 18, 9

BRACING

TOP CHORD TO BE SHEATHED OR MAX. PURLIN SPACING = 4.05 FT.
MAX. UNBRACED BOTTOM CHORD LENGTH = 10.00 FT. OR RIGID CEILING DIRECTLY APPLIED.

ALL PITCH BREAKS AND PERIMETER CORNER JOINTS MUST BE LATERALLY RESTRAINED.

LOADING

TOTAL LOAD CASES: (3)

CHORDS

MEMB. FR-TO	MAX. FACTORED FORCE (LBS)	FACTORED VERT. LOAD (PLF) FROM	TO	LC1	MAX CSI (LC)	MAX. UNBRAC LENGTH
1- 2	-2613 / 0	-77.3	-77.3	0.22	(1)	4.05
2- 3	-1861 / 0	-77.3	-77.3	0.26	(1)	4.64
3- 4	-1747 / 0	-77.3	-77.3	0.24	(1)	4.78
4- 5	-1747 / 0	-77.3	-77.3	0.24	(1)	4.77
5- 6	-1631 / 0	-77.3	-77.3	0.24	(1)	4.91
6- 7	-1406 / 0	-77.3	-77.3	0.12	(1)	5.35
7- 8	-1307 / 0	-77.3	-77.3	0.12	(1)	5.51
18- 1	-2645 / 0	0.0	0.0	0.30	(1)	5.22
10- 8	-1333 / 0	0.0	0.0	0.15	(1)	6.97
18-17	0 / 0	-17.5	-17.5	0.14	(1)	10.00
17-16	0 / 2196	-17.5	-17.5	0.42	(1)	10.00
16-15	0 / 1546	-17.5	-17.5	0.25	(1)	10.00
15-14	0 / 1631	-17.5	-17.5	0.25	(1)	10.00
14-13	0 / 1156	-17.5	-17.5	0.17	(1)	10.00
13-12	0 / 1156	-17.5	-17.5	0.17	(1)	10.00
12-11	0 / 1098	-17.5	-17.5	0.16	(1)	10.00
11-10	0 / 0	-17.5	-17.5	0.17	(1)	10.00
10- 9	0 / 0	-17.5	-17.5	0.17	(1)	10.00

WEBS

MEMB. FR-TO	MAX. FACTORED FORCE (LBS)	MAX CSI (LC)
17- 2	0 / 489	0.12 (1)
2-16	-749 / 0	0.29 (1)
16- 3	0 / 513	0.13 (1)
3-15	0 / 312	0.08 (1)
15- 4	-343 / 0	0.14 (1)
15- 5	0 / 184	0.05 (1)
14- 5	-489 / 0	0.21 (1)
14- 6	0 / 740	0.18 (1)
12- 6	-7 / 43	0.02 (3)
12- 7	0 / 90	0.02 (1)
11- 7	-370 / 0	0.08 (1)
1-17	0 / 2480	0.61 (1)
11- 8	0 / 1211	0.30 (1)

FACTORED CONCENTRATED LOADS (LBS)

JT	LOC.	LC1	MAX-	MAX+	FACE	DIR.	TYPE
17	1-10-12	-1751	-1751	---	FRONT	VERT	TOTAL

RECEIVED
TOWN OF MILTON
MAR 29, 2017
17-4990
BUILDING DIVISION

READ ALL NOTES ON THIS PAGE AND ON THE ENGINEERING NOTE PAGE ENP-1. THE NOTE PAGE IS AN INTEGRAL PART OF THIS DRAWING AS IT CONTAINS SPECIFICATIONS AND CRITERIA USED IN THE DESIGN OF THIS COMPONENT.

DESIGN CRITERIA

*** SPECIAL LOADS ANALYSIS ***
GEOMETRY AND/OR BASIC LOADS CHANGED BY USER.
LOADS WERE DERIVED FROM USER INPUT
NO FURTHER MODIFICATIONS WERE MADE

SPECIFIED LOADS:

TOP	CH.	LL	=	23.3	PSF
		DL	=	3.0	PSF
BOT	CH.	LL	=	0.0	PSF
		DL	=	7.0	PSF
TOTAL	LOAD		=	33.3	PSF

SPACING = 24.0 IN. C/C

LOADING IN FLAT SECTION BASED ON A SLOPE OF 6.00/12

*** NON STANDARD GIRDER ***
ADDT'L USER-DEFINED LOADS APPLIED TO ALL LOAD CASES.

THIS TRUSS IS DESIGNED FOR RESIDENTIAL OR SMALL BUILDING REQUIREMENTS OF PART 9, NBCC 2010

THIS DESIGN COMPLIES WITH:
- PART 9 OF OBC 2012 , BCBC 2012 , ABC 2014
- CSA 086-09
- TPIC 2011

(55 % OF 27.2 P.S.F. G.S.L. PLUS 8.4 P.S.F. RAIN LOAD) EQUALS 23.3 P.S.F. SPECIFIED ROOF LIVE LOAD

ALLOWABLE DEFL.(LL)= L/360 (0.81")
CALCULATED VERT. DEFL.(LL) = L/ 999 (0.05")
ALLOWABLE DEFL.(TL)= L/360 (0.81")
CALCULATED VERT. DEFL.(TL) = L/ 999 (0.10")

CSI: TC=0.30 (1-18:1) , BC=0.42 (16-17:1) , WB=0.61 (1-17:1) , SSI=0.84 (9-10:1)

DOL LUMBER=1.00 NAIL=1.00 LS BEND=1.00 COMP=1.00 SHEAR=1.00 TENS= 1.00

COMPANION LIVE LOAD FACTOR = 0.50

TRUSS PLATE MANUFACTURER IS NOT RESPONSIBLE FOR QUALITY CONTROL IN THE TRUSS MANUFACTURING PLANT .

NAIL VALUES

PLATE	GRIP(DRY) (PSI) MAX	MIN	SHEAR (PLI) MAX	MIN	SECTION (PLI) MAX	MIN
MT20	618	354	1667	822	2284	1656

PLATE PLACEMENT TOL. = 0.250 inches

PLATE ROTATION TOL. = 5.0 Deg.

JSI GRIP= 0.89 (8) (INPUT = 0.90)
JSI METAL= 0.48 (17) (INPUT = 1.00)

KOTT

JOB NAME	TRUSS NAME	QUANTITY	PLY	JOB DESC.	DRWG NO.
PT0317-054	GIRD05	1	1	TRUSS DESC. LECCO RIDGE-BLOCK 328	

Kott Lumber Uxbridge, Stouffville, ON, CGC

Version 8.100 S Feb 9 2017 MiTek Industries, Inc. Mon Mar 13 09:56:49 2017 Page 1
ID:pF8Cn?9h9uHzAm5tCmlVl5yJJCp-xaWLu?qHXNOk399pLyo50ftLTFKPg0CvIJt06?zbOnS

SCALE = 1:20.6

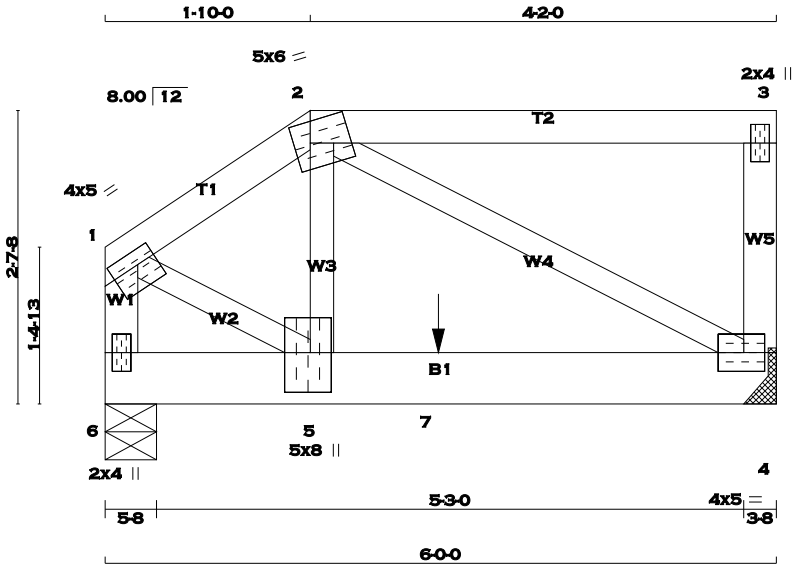

TOTAL WEIGHT = 28 lb [M]

LUMBER
N. L. G. A. RULES

CHORDS	SIZE		LUMBER	DESCR.
1 - 2	2x4	DRY	No.2	SPF
2 - 3	2x4	DRY	No.2	SPF
4 - 3	2x4	DRY	No.2	SPF
6 - 1	2x4	DRY	No.2	SPF
6 - 4	2x6	DRY	No.2	SPF
ALL WEBS EXCEPT	2x3	DRY	No.2	SPF

DRY: SEASONED LUMBER.

PLATES (table is in inches)

JT	TYPE	PLATES	W	LEN	Y	X
1	TMVW-t	MT20	4.0	5.0	1.50	2.00
2	TTWW-m	MT20	5.0	6.0	2.25	1.75
3	TMV+p	MT20	2.0	4.0		
4	BMVW1-t	MT20	4.0	5.0	2.00	2.25
5	BMWW+t	MT20	5.0	8.0	4.25	2.25
6	BMV1+p	MT20	2.0	4.0		

A SIZE FOR SIZE SUBSTITUTION OF MITEK MII20 WITH TEE-LOK TL20 PLATES IS ALLOWED.

HANGERS NOTES
1) SPECIAL HANGER(S) OR CONNECTION(S) REQUIRED TO SUPPORT CONCENTRATED LOAD(S) 495.9 lbs FACTORED DOWN AT 2-11-12 ON BOTTOM CHORD. DESIGN FOR UNSPECIFIED CONNECTION(S) IS DELEGATED TO THE BUILDING DESIGNER.

DIMENSIONS, SUPPORTS AND LOADINGS SPECIFIED BY FABRICATOR TO BE VERIFIED BY BUILDING DESIGNER

BEARINGS

JT	FACTORED GROSS REACTION VERT	HORZ	MAXIMUM GROSS REACTION DOWN	HORZ	UPLIFT	INPUT BRG IN-SX	REQRD BRG IN-SX
4	1752	0	1752	0	0	HANGER BY OTHERS MIN. SEAT SIZE: 3-8	
6	1370	0	1370	0	0	5-8	5-8

UNFACTORED REACTIONS

JT	1ST LCASE COMBINED	SNOW	LIVE	PERM.LIVE	WIND	DEAD	SOIL
		MAX./MIN. COMPONENT REACTIONS					
4	1229	860 / 0	0 / 0	0 / 0	0 / 0	369 / 0	0 / 0
6	961	672 / 0	0 / 0	0 / 0	0 / 0	289 / 0	0 / 0

BEARING MATERIAL TO BE SPF NO.2 OR BETTER AT JOINT(S) 6

BRACING
TOP CHORD TO BE SHEATHED OR MAX. PURLIN SPACING = 5.33 FT.
MAX. UNBRACED BOTTOM CHORD LENGTH = 10.00 FT. OR RIGID CEILING DIRECTLY APPLIED.

ALL PITCH BREAKS AND PERIMETER CORNER JOINTS MUST BE LATERALLY RESTRAINED.

LOADING
TOTAL LOAD CASES: (3)

CHORDS

MEMB. FR-TO	MAX. FACTORED FORCE (LBS)	FROM	FACTORED VERT. LOAD LC1 (PLF) TO	MAX CSI (LC)	MAX. UNBRAC LENGTH
1- 2	-1453 / 0	-77.3	-77.3	0.08 (1)	5.33
2- 3	0 / 0	-77.3	-77.3	0.25 (1)	10.00
4- 3	-161 / 0	0.0	0.0	0.02 (1)	7.81
6- 1	-1503 / 0	0.0	0.0	0.17 (1)	6.65
6- 5	0 / 0	-230.9	-230.9	0.51 (1)	10.00
5- 7	0 / 1263	-230.9	-230.9	0.79 (1)	10.00
7- 4	0 / 1263	-487.8	-487.8	0.79 (1)	10.00

WEBS

MEMB. FR-TO	MAX. FACTORED FORCE (LBS)	MAX CSI (LC)
5- 2	0 / 1259	0.31 (1)
2- 4	-1433 / 0	0.49 (1)
1- 5	0 / 1355	0.34 (1)

FACTORED CONCENTRATED LOADS (LBS)

JT	LOC.	LC1	MAX-	MAX+	FACE	DIR.	TYPE
7	2-11-12	-496	-496	---	FRONT	VERT	TOTAL

DESIGN CRITERIA

*** SPECIAL LOADS ANALYSIS ***
GEOMETRY AND/OR BASIC LOADS CHANGED BY USER.
LOADS WERE DERIVED FROM USER INPUT
NO FURTHER MODIFICATIONS WERE MADE

SPECIFIED LOADS:

TOP	CH.	LL =	23.3	PSF
		DL =	3.0	PSF
BOT	CH.	LL =	0.0	PSF
		DL =	7.0	PSF
TOTAL	LOAD	=	33.3	PSF

SPACING = 24.0 IN. C/C

LOADING IN FLAT SECTION BASED ON A SLOPE OF 6.00/12

GIRDER TYPE: CStdGirder
START DISTANCE = 0-0
START SPAN CARRIED = 11-5-8
END DISTANCE = 2-11-12
END SPAN CARRIED = 11-5-8
END WALL WIDTH = 5-8
APPLIED TO FRONT SIDE OF BOTTOM CHORD.
- ADDT'L LOADS BASED ON 55 % OF GSL.

GIRDER TYPE: CStdGirder
START DISTANCE = 2-11-12
START SPAN CARRIED = 21-11-8
END DISTANCE = 6-0-0
END SPAN CARRIED = 21-11-8
END WALL WIDTH = 1-8
APPLIED TO FRONT SIDE OF BOTTOM CHORD.
- ADDT'L LOADS BASED ON 55 % OF GSL.

*** NON STANDARD GIRDER ***
ADDT'L USER-DEFINED LOADS APPLIED TO ALL LOAD CASES.

THIS TRUSS IS DESIGNED FOR RESIDENTIAL OR SMALL BUILDING REQUIREMENTS OF PART 9, NBCC 2010

THIS DESIGN COMPLIES WITH:
- PART 9 OF OBC 2012 , BCBC 2012 , ABC 2014
- CSA 086-09
- TPIC 2011

(55 % OF 27.2 P.S.F. G.S.L. PLUS 8.4 P.S.F. RAIN LOAD) EQUALS 23.3 P.S.F. SPECIFIED ROOF LIVE LOAD

ALLOWABLE DEFL.(LL)= L/360 (0.20")
CALCULATED VERT. DEFL.(LL) = L/ 999 (0.05")
ALLOWABLE DEFL.(TL)= L/360 (0.20")
CALCULATED VERT. DEFL.(TL) = L/ 863 (0.08")

CSI: TC=0.25 (2-3:1) , BC=0.79 (4-5:1) , WB=0.49 (2-4:1) , SSI=0.86 (4-5:1)

DOL LUMBER=1.00 NAIL=1.00 LS BEND=1.00 COMP=1.00 SHEAR=1.00 TENS= 1.00

COMPANION LIVE LOAD FACTOR = 0.50

TRUSS PLATE MANUFACTURER IS NOT RESPONSIBLE FOR QUALITY CONTROL IN THE TRUSS MANUFACTURING PLANT .

LICENSED PROFESSIONAL ENGINEER
P.M. TREVISAN
100136551
March 13th, 2017
PROVINCE OF ONTARIO

RECEIVED
TOWN OF MILTON
MAR 29, 2017
17-4990
BUILDING DIVISION

READ ALL NOTES ON THIS PAGE AND ON THE ENGINEERING NOTE PAGE ENP-1. THE NOTE PAGE IS AN INTEGRAL PART OF THIS DRAWING AS IT CONTAINS SPECIFICATIONS AND CRITERIA USED IN THE DESIGN OF THIS COMPONENT.

KOTT

CONTINUED ON PAGE 2

JOB NAME	TRUSS NAME	QUANTITY	PLY	JOB DESC.	DRWG NO.
PT0317-054	GIRD06	1	1	TRUSS DESC. LECCO RIDGE-BLOCK 328	ENG JOB: PT0317-054

Kott Lumber Uxbridge, Stouffville, ON, CGC

Version 8.100 S Feb 9 2017 MiTek Industries, Inc. Mon Mar 13 09:56:50 2017 Page 1

ID:pF8Cn?9h9uHzAm5tCmlVl5yJJCp-Qm4j5LrvHgXbhJk?vfJKZtQXNfqtPSb3XzdZeRzbOnR

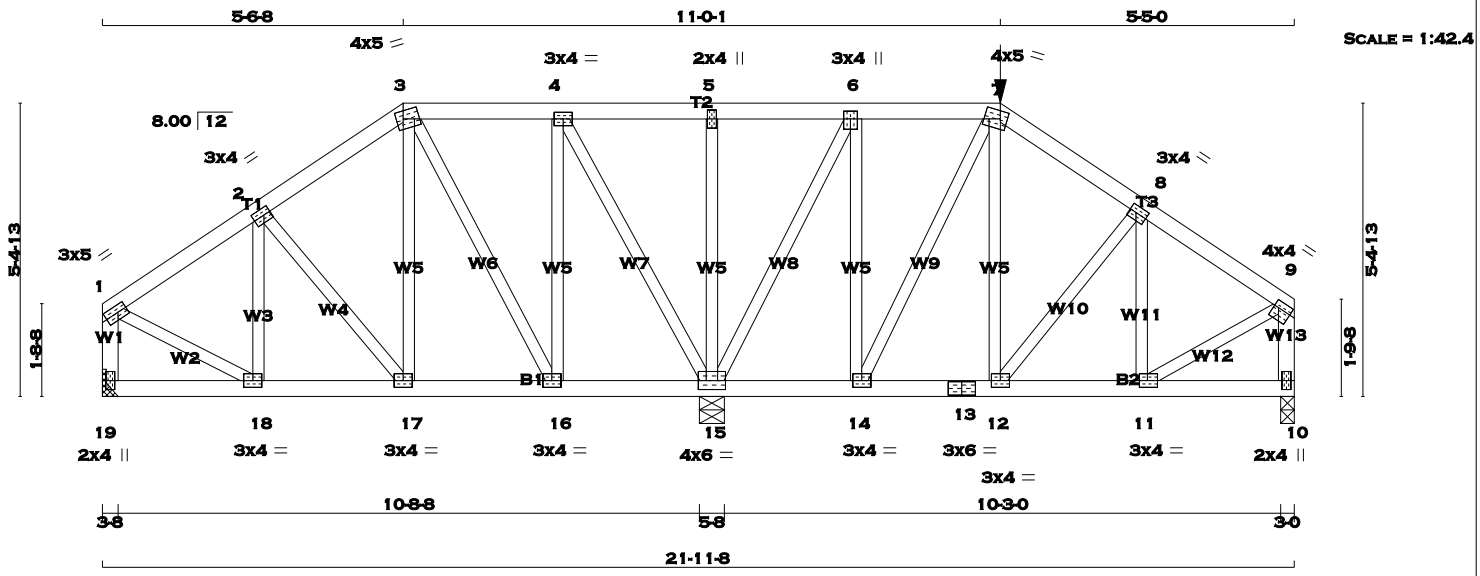

TOTAL WEIGHT = 109 lb [M]

LUMBER

N. L. G. A. RULES

CHORDS	SIZE		LUMBER	DESCR.
1 - 3	2x4	DRY	No.2	SPF
3 - 7	2x4	DRY	No.2	SPF
7 - 9	2x4	DRY	No.2	SPF
19 - 1	2x4	DRY	No.2	SPF
10 - 9	2x4	DRY	No.2	SPF
19 - 13	2x4	DRY	No.2	SPF
13 - 10	2x4	DRY	No.2	SPF
ALL WEBS EXCEPT	2x3	DRY	No.2	SPF

DRY: SEASONED LUMBER.

PLATES (table is in inches)

JT	TYPE	PLATES	W	LEN	Y	X
1	TMVW-t	MT20	3.0	5.0	1.50	2.00
2	TMWW-t	MT20	3.0	4.0	1.50	1.50
3	TTWW-m	MT20	4.0	5.0	1.75	1.50
4	TMWW-t	MT20	3.0	4.0		
5	TMW+w	MT20	2.0	4.0		
6	TMWW+t	MT20	3.0	4.0	1.75	1.50
7	TTWW-m	MT20	4.0	5.0	1.75	1.50
8	TMWW-t	MT20	3.0	4.0	1.50	1.50
9	TMVW-t	MT20	4.0	4.0	1.50	1.00
10	BMV1+p	MT20	2.0	4.0		
11	BMWW-t	MT20	3.0	4.0	1.50	1.75
12, 14, 16, 17, 18						
12	BMWW-t	MT20	3.0	4.0		
13	BS-t	MT20	3.0	6.0		
15	BMWWW1-t	MT20	4.0	6.0		
19	BMV1+p	MT20	2.0	4.0		

A SIZE FOR SIZE SUBSTITUTION OF MITEK MII20 WITH TEE-LOK TL20 PLATES IS ALLOWED.

HANGERS NOTES

1) SPECIAL HANGER(S) OR CONNECTION(S) REQUIRED TO SUPPORT CONCENTRATED LOAD(S) 314.2 lbs FACTORED DOWN AT 16-6-9 ON TOP CHORD. DESIGN FOR UNSPECIFIED CONNECTION(S) IS DELEGATED TO THE BUILDING DESIGNER.

DIMENSIONS, SUPPORTS AND LOADINGS SPECIFIED BY FABRICATOR TO BE VERIFIED BY BUILDING DESIGNER

BEARINGS

JT	FACTORED GROSS REACTION VERT	HORZ	MAXIMUM FACTORED GROSS REACTION DOWN	HORZ	UPLIFT	INPUT BRG	REQRD BRG
19	494	0	494	0	0	HANGER BY OTHERS MIN. SEAT SIZE: 3-8	
15	1657	0	1657	0	0	5-8	5-8
10	808	0	808	0	0	3-0	3-0

UNFACTORED REACTIONS

JT	1ST LCASE COMBINED	MAX./MIN. COMPONENT REACTIONS SNOW	LIVE	PERM.LIVE	WIND	DEAD	SOIL
19	348	238 / 0	0 / 0	0 / 0	0 / 0	110 / 0	0 / 0
15	1159	830 / 0	0 / 0	0 / 0	0 / 0	329 / 0	0 / 0
10	571	376 / 0	0 / 0	0 / 0	0 / 0	195 / 0	0 / 0

BEARING MATERIAL TO BE SPF NO.2 OR BETTER AT JOINT(S) 10

BRACING

TOP CHORD TO BE SHEATHED OR MAX. PURLIN SPACING = 6.25 FT.
MAX. UNBRACED BOTTOM CHORD LENGTH = 10.00 FT. OR RIGID CEILING DIRECTLY APPLIED.

ALL PITCH BREAKS AND PERIMETER CORNER JOINTS MUST BE LATERALLY RESTRAINED.

LOADING

TOTAL LOAD CASES: (3)

CHORDS

MEMB. FR-TO	MAX. FACTORED FORCE (LBS)	FACTORED VERT. LOAD (PLF) FROM	TO	LC1	MAX CSI (LC)	MAX. UNBRAC LENGTH
1- 2	-389 / 0	-77.3	-77.3	0.10 (1)	6.25	
2- 3	-316 / 0	-77.3	-77.3	0.10 (1)	6.25	
3- 4	-169 / 0	-77.3	-77.3	0.09 (1)	6.25	
4- 5	-1 / 60	-77.3	-77.3	0.12 (1)	10.00	
5- 6	-1 / 60	-149.9	-149.9	0.18 (1)	10.00	
6- 7	-375 / 0	-149.9	-149.9	0.17 (1)	6.25	
7- 8	-663 / 0	-77.3	-77.3	0.10 (1)	6.25	
8- 9	-675 / 0	-77.3	-77.3	0.10 (1)	6.25	
19- 1	-472 / 0	0.0	0.0	0.06 (1)	7.81	
10- 9	-767 / 0	0.0	0.0	0.09 (1)	7.81	
19-18	0 / 0	-17.5	-17.5	0.03 (3)	10.00	
18-17	0 / 335	-17.5	-17.5	0.07 (1)	10.00	
17-16	0 / 254	-17.5	-17.5	0.06 (1)	10.00	
16-15	0 / 169	-17.5	-17.5	0.10 (1)	10.00	
15-14	0 / 375	-33.9	-33.9	0.14 (1)	10.00	
14-13	0 / 542	-33.9	-33.9	0.13 (1)	10.00	
13-12	0 / 542	-33.9	-33.9	0.13 (1)	10.00	
12-11	0 / 572	-33.9	-33.9	0.13 (1)	10.00	
11-10	0 / 0	-33.9	-33.9	0.06 (3)	10.00	

WEBS

MEMB. FR-TO	MAX. FACTORED FORCE (LBS)	MAX CSI (LC)
18- 2	-109 / 11	0.02 (1)
2-17	-130 / 0	0.04 (1)
17- 3	0 / 152	0.04 (1)
3-16	-173 / 0	0.10 (1)
16- 4	0 / 178	0.04 (1)
4-15	-473 / 0	0.28 (1)
15- 5	-301 / 0	0.14 (1)
15- 6	-944 / 0	0.54 (1)
14- 6	0 / 386	0.10 (1)
14- 7	-360 / 0	0.20 (1)
12- 7	0 / 132	0.05 (3)
12- 8	-52 / 0	0.02 (1)
11- 8	-196 / 22	0.05 (1)
1-18	0 / 372	0.09 (1)
11- 9	0 / 646	0.16 (1)

FACTORED CONCENTRATED LOADS (LBS)

JT	LOC.	LC1	MAX-	MAX+	FACE	DIR.	TYPE
7	16-6-9	-314	-314	---	FRONT	VERT	TOTAL

DESIGN CRITERIA

SPECIFIED LOADS:

TOP	CH.	LL	=	23.3	PSF
		DL	=	3.0	PSF
BOT	CH.	LL	=	0.0	PSF
		DL	=	7.0	PSF
TOTAL	LOAD		=	33.3	PSF

SPACING = 24.0 IN. C/C

LOADING IN FLAT SECTION BASED ON A SLOPE OF 6.00/12

GIRDER TYPE: CPrimeHip
LEFT SETBACK = 5-6-8
RIGHT SETBACK = 5-5-0
END SETBACK = 6-0-0
END WALL WIDTH = 3-0
CORNER FRAMING TYPE: CONVENTIONAL
END JACK TYPE: CONVENTIONAL
APPLIED TO FRONT SIDE
- ADDT'L LOADS BASED ON 55 % OF GSL.
LOADS APPLIED TO FIRST 10-6-0 OF SPAN MEASURED FROM THE RIGHT.

THIS TRUSS IS DESIGNED FOR RESIDENTIAL OR SMALL BUILDING REQUIREMENTS OF PART 9, NBCC 2010

THIS DESIGN COMPLIES WITH:
- PART 9 OF OBC 2012 , BCBC 2012 , ABC 2014
- CSA 086-09
- TPIC 2011

(55 % OF 27.2 P.S.F. G.S.L. PLUS 8.4 P.S.F. RAIN LOAD) EQUALS 23.3 P.S.F. SPECIFIED ROOF LIVE LOAD

ALLOWABLE DEFL.(LL)= L/360 (0.36")
CALCULATED VERT. DEFL.(LL) = L/ 999 (0.01")
ALLOWABLE DEFL.(TL)= L/360 (0.36")
CALCULATED VERT. DEFL.(TL) = L/ 999 (0.02")

CSI: TC=0.18 (5-6:1) , BC=0.14 (14-15:1) , WB=0.54 (6-15:1) , SSI=0.21 (6-7:1)

DOL LUMBER=1.00 NAIL=1.00 LS BEND=1.00 COMP=1.00 SHEAR=1.00 TENS= 1.00

COMPANION LIVE LOAD FACTOR = 0.50

TRUSS PLATE MANUFACTURER IS NOT RESPONSIBLE FOR QUALITY CONTROL IN THE TRUSS MANUFACTURING PLANT .

NAIL VALUES

PLATE	GRIP(DRY) (PSI) MAX	MIN	SHEAR (PLI) MAX	MIN	SECTION (PLI) MAX	MIN
MT20	618	354	1667	822	2284	1656

PLATE PLACEMENT TOL. = 0.250 inches

PLATE ROTATION TOL. = 5.0 Deg.

JSI GRIP= 0.90 (11) (INPUT = 0.90)
JSI METAL= 0.28 (9) (INPUT = 1.00)

LICENSED PROFESSIONAL ENGINEER
P.M. TREVISAN
100136551
March 13th, 2017
PROVINCE OF ONTARIO

RECEIVED
TOWN OF MILTON
MAR 29, 2017
17-4990
BUILDING DIVISION

READ ALL NOTES ON THIS PAGE AND ON THE ENGINEERING NOTE PAGE ENP-1. THE NOTE PAGE IS AN INTEGRAL PART OF THIS DRAWING AS IT CONTAINS SPECIFICATIONS AND CRITERIA USED IN THE DESIGN OF THIS COMPONENT.

KOTT

JOB NAME	TRUSS NAME	QUANTITY	PLY	JOB DESC.	DRWG NO.
PT0317-054	GIRD07	1	2	TRUSS DESC. LECCO RIDGE-BLOCK 328	

Kott Lumber Uxbridge, Stouffville, ON, CGC

Version 8.100 S Feb 9 2017 MiTek Industries, Inc. Mon Mar 13 09:56:50 2017 Page 1
ID:pF8Cn?9h9uHzAm5tCmlVl5yJJCp-Qm4j5LrvHgXbhJk?vfJKZtQVBfiSPQr3XzdZeRzbOnR

SCALE = 1:57.7

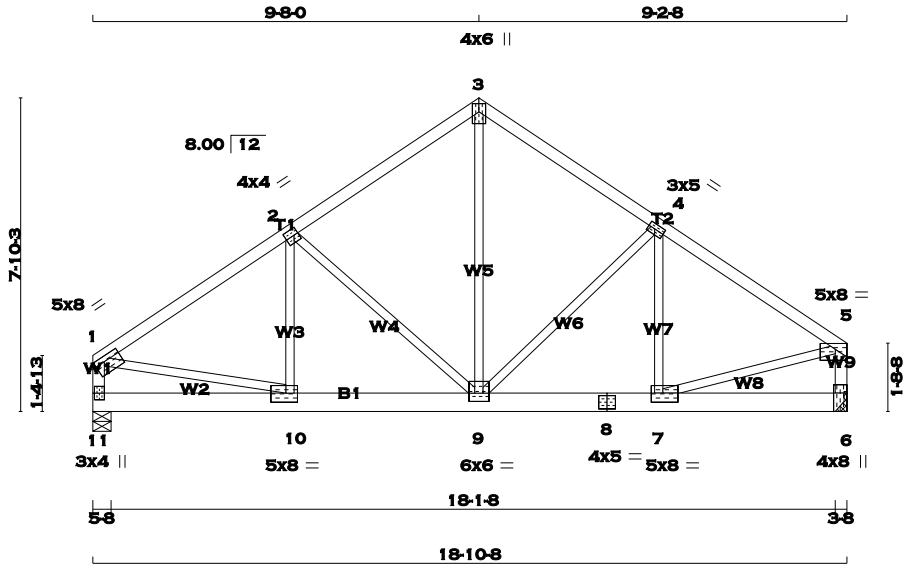

TOTAL WEIGHT = 2 X 92 = 183 lb [M]

LUMBER
N. L. G. A. RULES

CHORDS	SIZE		LUMBER	DESCR.
1 - 3	2x4	DRY	No.2	SPF
3 - 5	2x4	DRY	No.2	SPF
11 - 1	2x4	DRY	No.2	SPF
6 - 5	2x4	DRY	No.2	SPF
11 - 8	2x6	DRY	No.2	SPF
8 - 6	2x6	DRY	No.2	SPF
ALL WEBS EXCEPT	2x3	DRY	No.2	SPF

DRY: SEASONED LUMBER.

DESIGN CONSISTS OF 2 TRUSSES BUILT SEPARATELY THEN FASTENED TOGETHER AS FOLLOWS:

CHORDS	#ROWS	SURFACE SPACING (IN)	LOAD(PLF)
TOP CHORDS : (0.122"X3") SPIRAL NAILS			
1- 3	1	12	TOP
3- 5	1	12	TOP
11- 1	1	12	TOP
6- 5	1	12	TOP
BOTTOM CHORDS : (0.122"X3") SPIRAL NAILS			
11- 8	2	9	SIDE(237.7)
8- 6	2	9	SIDE(237.7)
WEBS : (0.122"X3") SPIRAL NAILS			
2x3	1	6	

NAILS TO BE DRIVEN FROM ONE SIDE ONLY.

TOP - COMPONENTS ARE LOADED FROM THE TOP AND MUST BE PLACED ON TOP EDGE OF ALL PLIES FOR THE LOAD TO BE TRANSFERRED TO EACH PLY.

SIDE - PLF SHOWN IS THE EQUIVALENT UDL APPLIED TO ONE SIDE THAT THE CORRESPONDING NAILING PATTERN SHALL BE CAPABLE OF TRANSFERING. REMAINING PLF MUST BE APPLIED ON THE OPPOSITE SIDE OR ON THE TOP.

PLATES (table is in inches)

JT	TYPE	PLATES	W	LEN	Y	X
1	TMVW-t	MT20	5.0	8.0	1.50	3.00
2	TMWW-t	MT20	4.0	4.0	2.00	1.25
3	TTW+p	MT20	4.0	6.0	2.50	2.00
4	TMWW-t	MT20	3.0	5.0	1.50	2.00
5	TMVW-p	MT20	5.0	8.0	1.75	Edge
6	BMV1+t	MT20	4.0	8.0	Edge	0.50
7	BMWW-t	MT20	5.0	8.0	2.75	3.50
8	BS-t	MT20	4.0	5.0		

DIMENSIONS, SUPPORTS AND LOADINGS SPECIFIED BY FABRICATOR TO BE VERIFIED BY BUILDING DESIGNER

BEARINGS

JT	FACTORED GROSS REACTION VERT	HORZ	MAXIMUM FACTORED GROSS REACTION DOWN	HORZ	UPLIFT	INPUT BRG	REQRD BRG
11	5382	0	5382	0	0	5-8	5-8
6	5382	0	5382	0	0	HANGER BY OTHERS	
						MIN. SEAT SIZE: 3-8	

UNFACTORED REACTIONS

JT	1ST LCASE COMBINED	SNOW	LIVE	PERM.LIVE	WIND	DEAD	SOIL
		MAX./MIN. COMPONENT REACTIONS					
11	3777	2642 / 0	0 / 0	0 / 0	0 / 0	1135 / 0	0 / 0
6	3777	2642 / 0	0 / 0	0 / 0	0 / 0	1135 / 0	0 / 0

BEARING MATERIAL TO BE SPF NO.2 OR BETTER AT JOINT(S) 11

BRACING
TOP CHORD TO BE SHEATHED OR MAX. PURLIN SPACING = 3.85 FT.
MAX. UNBRACED BOTTOM CHORD LENGTH = 10.00 FT. OR RIGID CEILING DIRECTLY APPLIED.

ALL PITCH BREAKS AND PERIMETER CORNER JOINTS MUST BE LATERALLY RESTRAINED.

LOADING
TOTAL LOAD CASES: (3)

CHORDS

MEMB. FR-TO	MAX. FACTORED FORCE (LBS)	FACTORED VERT. LOAD (PLF) FROM	TO	MAX CSI (LC)	MAX. UNBRAC LENGTH
1- 2	-5803 / 0	-77.3	-77.3	0.32 (1)	3.85
2- 3	-4246 / 0	-77.3	-77.3	0.22 (1)	4.47
3- 4	-4244 / 0	-77.3	-77.3	0.20 (1)	4.49
4- 5	-5405 / 0	-77.3	-77.3	0.27 (1)	4.00
11- 1	-4365 / 0	0.0	0.0	0.24 (1)	5.70
6- 5	-4408 / 0	0.0	0.0	0.25 (1)	5.68
11-10	0 / 0	-493.0	-493.0	0.39 (1)	10.00
10- 9	0 / 4844	-493.0	-493.0	0.68 (1)	10.00
9- 8	0 / 4511	-493.0	-493.0	0.62 (1)	10.00
8- 7	0 / 4511	-493.0	-493.0	0.62 (1)	10.00
7- 6	0 / 0	-493.0	-493.0	0.35 (1)	10.00

WEBS

MEMB. FR-TO	MAX. FACTORED FORCE (LBS)	MAX CSI (LC)
10- 2	0 / 1646	0.20 (1)
2- 9	-1792 / 0	0.65 (1)
9- 3	0 / 4399	0.54 (1)
9- 4	-1398 / 0	0.50 (1)
7- 4	0 / 1227	0.15 (1)
1-10	0 / 4942	0.61 (1)
7- 5	0 / 4681	0.58 (1)

RECEIVED
TOWN OF MILTON
MAR 29, 2017
17-4990
BUILDING DIVISION

READ ALL NOTES ON THIS PAGE AND ON THE ENGINEERING NOTE PAGE ENP-1. THE NOTE PAGE IS AN INTEGRAL PART OF THIS DRAWING AS IT CONTAINS SPECIFICATIONS AND CRITERIA USED IN THE DESIGN OF THIS COMPONENT.

DESIGN CRITERIA

SPECIFIED LOADS:

TOP CH.	LL	=	23.3	PSF
	DL	=	3.0	PSF
BOT CH.	LL	=	0.0	PSF
	DL	=	7.0	PSF
TOTAL LOAD		=	33.3	PSF

SPACING = 24.0 IN. C/C

GIRDER TYPE: CStdGirder
START DISTANCE = 0-0
START SPAN CARRIED = 22-2-2
END DISTANCE = 18-10-8
END SPAN CARRIED = 22-2-2
END WALL WIDTH = 1-8
APPLIED TO FRONT SIDE OF BOTTOM CHORD.
- ADDT'L LOADS BASED ON 55 % OF GSL.

THIS TRUSS IS DESIGNED FOR RESIDENTIAL OR SMALL BUILDING REQUIREMENTS OF PART 9, NBCC 2010

THIS DESIGN COMPLIES WITH:
- PART 9 OF OBC 2012 , BCBC 2012 , ABC 2014
- CSA 086-09
- TPIC 2011

(55 % OF 27.2 P.S.F. G.S.L. PLUS 8.4 P.S.F. RAIN LOAD) EQUALS 23.3 P.S.F. SPECIFIED ROOF LIVE LOAD

ALLOWABLE DEFL.(LL)= L/360 (0.63")
CALCULATED VERT. DEFL.(LL) = L/ 999 (0.08")
ALLOWABLE DEFL.(TL)= L/360 (0.63")
CALCULATED VERT. DEFL.(TL) = L/ 999 (0.14")

CSI: TC=0.32 (1-2:1) , BC=0.68 (9-10:1) , WB=0.65 (2-9:1) , SSI=0.47 (10-11:1)

DOL LUMBER=1.00 NAIL=1.00 LS BEND=1.00 COMP=1.00 SHEAR=1.00 TENS= 1.00

COMPANION LIVE LOAD FACTOR = 0.50

TRUSS PLATE MANUFACTURER IS NOT RESPONSIBLE FOR QUALITY CONTROL IN THE TRUSS MANUFACTURING PLANT .

NAIL VALUES

PLATE	GRIP(DRY) (PSI) MAX	MIN	SHEAR (PLI) MAX	MIN	SECTION (PLI) MAX	MIN
MT20	618	354	1667	822	2284	1656

PLATE PLACEMENT TOL. = 0.250 inches

PLATE ROTATION TOL. = 5.0 Deg.

JSI GRIP= 0.90 (1) (INPUT = 0.90)
JSI METAL= 0.57 (1) (INPUT = 1.00)

KOTT

CONTINUED ON PAGE 2

JOB NAME	TRUSS NAME	QUANTITY	PLY	JOB DESC.	DRWG NO.
PT0317-054	GIRD08	1	3	TRUSS DESC. LECCO RIDGE-BLOCK 328	ENG JOB: PT0317-054

Kott Lumber Uxbridge, Stouffville, ON, CGC

Version 8.100 S Feb 9 2017 MiTek Industries, Inc. Mon Mar 13 09:56:50 2017 Page 1

ID:pF8Cn?9h9uHzAm5tCmlVl5yJJCp-Qm4j5LrvHgXbhJk?vfJKZtQXTfomPML3XzdZeRzbOnR

SCALE = 1:71.4

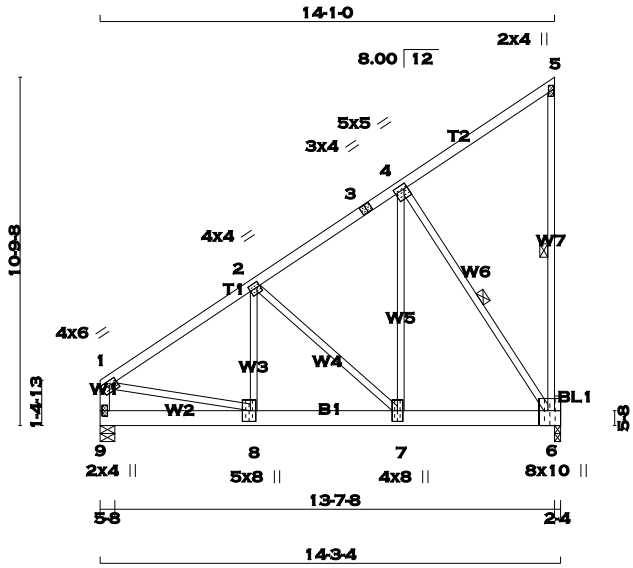

TOTAL WEIGHT = 3 X 78 = 235 lb

LUMBER

N. L. G. A. RULES

CHORDS	SIZE		LUMBER	DESCR.
1 - 3	2x4	DRY	No.2	SPF
3 - 5	2x4	DRY	No.2	SPF
6 - 5	2x3	DRY	No.2	SPF
9 - 1	2x4	DRY	No.2	SPF
9 - 6	2x6	DRY	2100F 1.8E	SPF

BEARING BLOCKS

BL1	2x6	DRY	No.2	SPF
ALL WEBS EXCEPT	2x3	DRY	No.2	SPF

DRY: SEASONED LUMBER.

DESIGN CONSISTS OF 3 TRUSSES BUILT SEPARATELY THEN FASTENED TOGETHER AS FOLLOWS:

CHORDS	#ROWS	SURFACE SPACING (IN)	LOAD(PLF)
TOP CHORDS : (0.122"X3") SPIRAL NAILS			
1- 3	1	12	TOP
3- 5	1	12	TOP
9- 1	1	12	TOP
5- 6	1	12	TOP
BOTTOM CHORDS : (0.122"X3") SPIRAL NAILS			
9- 6	2	5	SIDE(567.8)
WEBS : (0.122"X3") SPIRAL NAILS			
2x3	1	6	

STAGGER NAILS BY HALF THE SURFACE SPACING IN ADJACENT PLIES.

TOP - COMPONENTS ARE LOADED FROM THE TOP AND MUST BE PLACED ON TOP EDGE OF ALL PLIES FOR THE LOAD TO BE TRANSFERRED TO EACH PLY.

SIDE - PLF SHOWN IS THE EQUIVALENT UDL APPLIED TO ONE SIDE THAT THE CORRESPONDING NAILING PATTERN SHALL BE CAPABLE OF TRANSFERING. REMAINING PLF MUST BE APPLIED ON THE OPPOSITE SIDE OR ON THE TOP.

PLATES (table is in inches)

JT	TYPE	PLATES	W	LEN	Y	X
1	TMVW-t	MT20	4.0	6.0	1.50	3.00
2	TMWW-t	MT20	4.0	4.0	1.75	1.00
3	TS-t	MT20	3.0	4.0		
4	TMWW-t	MT20	5.0	5.0	1.75	1.25

DIMENSIONS, SUPPORTS AND LOADINGS SPECIFIED BY FABRICATOR TO BE VERIFIED BY BUILDING DESIGNER

BEARINGS

JT	FACTORED GROSS REACTION VERT	HORZ	MAXIMUM FACTORED GROSS REACTION DOWN	HORZ	UPLIFT	INPUT BRG IN-SX	REQRD BRG IN-SX
6	6624	0	6624	0	0	2-4	2-4 + FLUSH PLATE
9	6616	0	6616	0	0	5-8	5-8

UNFACTORED REACTIONS

JT	1ST LCASE COMBINED	MAX./MIN. COMPONENT REACTIONS SNOW	LIVE	PERM.LIVE	WIND	DEAD	SOIL
6	4648	3253 / 0	0 / 0	0 / 0	0 / 0	1396 / 0	0 / 0
9	4643	3248 / 0	0 / 0	0 / 0	0 / 0	1395 / 0	0 / 0

BEARING MATERIAL TO BE SPF NO.2 OR BETTER AT JOINT(S) 6, 9

BRACING

TOP CHORD TO BE SHEATHED OR MAX. PURLIN SPACING = 4.54 FT.
MAX. UNBRACED BOTTOM CHORD LENGTH = 10.00 FT. OR RIGID CEILING DIRECTLY APPLIED.

ALL PITCH BREAKS AND PERIMETER CORNER JOINTS MUST BE LATERALLY RESTRAINED.

1 - 2x3 SPF No.2 LATERAL BRACE(S) AT 1/ 2 LENGTH OF 5-6. DBS = 20-0-0 . CBF = 18 LBS.
1 - 2x4 SPF No.2 LATERAL BRACE(S) AT 1/ 2 LENGTH OF 4-6. DBS = 4-0-0 . CBF = 142 LBS.

DBS = DIAGONAL BRACE SPACING (MAX). CBF = CUMULATIVE BRACING FORCE. FASTEN LATERAL BRACE(S) TO EACH PLY USING (0.122"X3") SPIRAL NAILS : 1 NAIL FOR 2x3 BRACE(S), 2 FOR 1x4, 2x4, 2x5, 3 FOR 2x6, 4 FOR 2x8, 5 FOR 2x10, AND 6 FOR 2x12.

END VERTICAL(S) MUST BE SHEATHED OR HAVE BRACES AS INDICATED IN THE MAX. UNBRACED LENGTH COLUMN OF THE TABLE BELOW

LOADING

TOTAL LOAD CASES: (3)

CHORDS MEMB. FR-TO	MAX. FACTORED FORCE (LBS)	FACTORED VERT. LOAD (PLF) FROM	TO	LC1 MAX CSI (LC)	MAX. UNBRAC LENGTH	WEBS MEMB. FR-TO	MAX. FACTORED FORCE (LBS)	MAX CSI (LC)
1- 2	-6439 / 0	-77.3	-77.3	0.17 (1)	4.54	8- 2	0 / 3243	0.24 (1)
2- 3	-3703 / 0	-77.3	-77.3	0.11 (1)	5.68	2- 7	-3086 / 0	0.67 (1)
3- 4	-3703 / 0	-77.3	-77.3	0.11 (1)	5.68	7- 4	0 / 6426	0.48 (1)
4- 5	-19 / 0	-77.3	-77.3	0.08 (1)	6.25	4- 6	-5696 / 0	0.94 (1)
6- 5	-148 / 0	0.0	0.0	0.04 (1)	6.25	1- 8	0 / 5482	0.41 (1)
9- 1	-4866 / 0	0.0	0.0	0.16 (1)	6.50			
9- 8	0 / 0	-869.2	-869.2	0.21 (1)	10.00			
8- 7	0 / 5366	-869.2	-869.2	0.27 (1)	10.00			
7- 6	0 / 3090	-869.2	-869.2	0.25 (1)	10.00			

RECEIVED
TOWN OF MILTON
MAR 29, 2017
17-4990
BUILDING DIVISION

READ ALL NOTES ON THIS PAGE AND ON THE ENGINEERING NOTE PAGE ENP-1. THE NOTE PAGE IS AN INTEGRAL PART OF THIS DRAWING AS IT CONTAINS SPECIFICATIONS AND CRITERIA USED IN THE DESIGN OF THIS COMPONENT.

[M]

DESIGN CRITERIA

SPECIFIED LOADS:

TOP	CH.	LL	=	23.3	PSF
		DL	=	3.0	PSF
BOT	CH.	LL	=	0.0	PSF
		DL	=	7.0	PSF
TOTAL	LOAD		=	33.3	PSF

SPACING = 24.0 IN. C/C

GIRDER TYPE: CStdGirder
START DISTANCE = 0-0
START SPAN CARRIED = 38-4-8
END DISTANCE = 14-3-4
END SPAN CARRIED = 38-4-8
END WALL WIDTH = 5-8
APPLIED TO FRONT SIDE OF BOTTOM CHORD.
- ADDT'L LOADS BASED ON 55 % OF GSL.

THIS TRUSS IS DESIGNED FOR RESIDENTIAL OR SMALL BUILDING REQUIREMENTS OF PART 9, NBCC 2010

THIS DESIGN COMPLIES WITH:
- PART 9 OF OBC 2012 , BCBC 2012 , ABC 2014
- CSA 086-09
- TPIC 2011

(55 % OF 27.2 P.S.F. G.S.L. PLUS 8.4 P.S.F. RAIN LOAD) EQUALS 23.3 P.S.F. SPECIFIED ROOF LIVE LOAD

ALLOWABLE DEFL.(LL)= L/360 (0.47")
CALCULATED VERT. DEFL.(LL) = L/ 999 (0.05")
ALLOWABLE DEFL.(TL)= L/360 (0.47")
CALCULATED VERT. DEFL.(TL) = L/ 999 (0.10")

CSI: TC=0.17 (1-2:1) , BC=0.27 (7-8:1) , WB=0.94 (4-6:1) , SSI=0.48 (8-9:1)

DOL LUMBER=1.00 NAIL=1.00 LS BEND=1.10 COMP=1.10 SHEAR=1.10 TENS= 1.10

COMPANION LIVE LOAD FACTOR = 0.50

TRUSS PLATE MANUFACTURER IS NOT RESPONSIBLE FOR QUALITY CONTROL IN THE TRUSS MANUFACTURING PLANT .

NAIL VALUES

PLATE	GRIP(DRY) (PSI) MAX	MIN	SHEAR (PLI) MAX	MIN	SECTION (PLI) MAX	MIN
MT20	618	354	1667	822	2284	1656

PLATE PLACEMENT TOL. = 0.250 inches

PLATE ROTATION TOL. = 5.0 Deg.

JSI GRIP= 0.88 (8) (INPUT = 0.90)
JSI METAL= 0.54 (1) (INPUT = 1.00)

KOTT

CONTINUED ON PAGE 2

JOB NAME	TRUSS NAME	QUANTITY	PLY	JOB DESC.	DRWG NO.
T-BLOCK328	GIRD09	1	3	LECCO RIDGE-BLOCK 328	ENG JOB: PT0317-054
				TRUSS DESC.	

KOTT , Stouffville, ON, Alan Attwater

Version 8.100 S Feb 9 2017 MiTek Industries, Inc. Mon Mar 13 11:06:17 2017 Page 1

ID:pF8Cn?9h9uHzAm5tCmlVl5yJJCp-OVppEwv2wmOvof1pDCUmDMVdEP?TE2RPkmXZPPzbNmK

Scale = 1:80.5

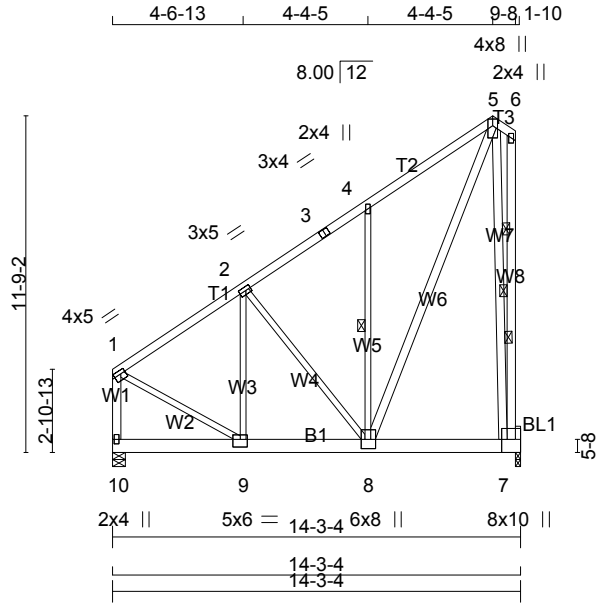

TOTAL WEIGHT = 3 X 106 = 319 lb

[M]

LUMBER

N. L. G. A. RULES

CHORDS	SIZE		LUMBER	DESCR.
1 - 3	2x4	DRY	No.2	SPF
3 - 5	2x4	DRY	No.2	SPF
5 - 6	2x4	DRY	No.2	SPF
10 - 1	2x4	DRY	No.2	SPF
7 - 6	2x4	DRY	No.2	SPF
10 - 7	2x6	DRY	2100F 1.8E	SPF
BEARING BLOCKS				
BL1	2x6	DRY	No.2	SPF
ALL WEBS	2x3	DRY	No.2	SPF
EXCEPT				
8 - 5	2x4	DRY	No.2	SPF
5 - 7	2x4	DRY	No.2	SPF

DRY: SEASONED LUMBER.

DESIGN CONSISTS OF 3 TRUSSES BUILT SEPARATELY THEN FASTENED TOGETHER AS FOLLOWS:

CHORDS	#ROWS	SURFACE SPACING (IN)	LOAD(PLF)
TOP CHORDS : (0.122"X3") SPIRAL NAILS			
1- 3	1	12	TOP
3- 5	1	12	TOP
5- 6	1	12	TOP
10- 1	1	12	TOP
7- 6	1	12	TOP
BOTTOM CHORDS : (0.122"X3") SPIRAL NAILS			
10- 7	2	5	SIDE(517.7)
WEBS : (0.122"X3") SPIRAL NAILS			
2x3	1	6	
2x4	1	6	

STAGGER NAILS BY HALF THE SURFACE SPACING IN ADJACENT PLIES.

TOP - COMPONENTS ARE LOADED FROM THE TOP AND MUST BE PLACED ON TOP EDGE OF ALL PLIES FOR THE LOAD TO BE TRANSFERRED TO EACH PLY.

SIDE - PLF SHOWN IS THE EQUIVALENT UDL APPLIED TO ONE SIDE THAT THE CORRESPONDING NAILING PATTERN SHALL BE CAPABLE OF TRANSFERING. REMAINING PLF MUST BE APPLIED ON THE OPPOSITE SIDE OR ON THE TOP.

PLATES (table is in inches)

JT	TYPE	PLATES	W	LEN	Y	X
1	TMVW-t	MT20	4.0	5.0	1.50	2.00
2	TMWW-t	MT20	3.0	5.0	1.50	2.00
3						
4						
5						
6						
7						
8						
9						
10						

DIMENSIONS, SUPPORTS AND LOADINGS SPECIFIED BY FABRICATOR TO BE VERIFIED BY BUILDING DESIGNER

BEARINGS

JT	FACTORED GROSS REACTION VERT	HORZ	MAXIMUM FACTORED GROSS REACTION DOWN	HORZ	UPLIFT	INPUT BRG	REQRD BRG
10	5947	0	5947	0	0	IN-SX	IN-SX
7	5982	0	5982	0	0	2-4	2-4

UNFACTORED REACTIONS

JT	1ST LCASE COMBINED	MAX./MIN. COMPONENT REACTIONS SNOW	LIVE	PERM.LIVE	WIND	DEAD	SOIL
10	4174	2920 / 0	0 / 0	0 / 0	0 / 0	1254 / 0	0 / 0
7	4197	2940 / 0	0 / 0	0 / 0	0 / 0	1257 / 0	0 / 0

BEARING MATERIAL TO BE SPF NO.2 OR BETTER AT JOINT(S) 10, 7

BRACING

TOP CHORD TO BE SHEATHED OR MAX. PURLIN SPACING = 5.41 FT.
MAX. UNBRACED BOTTOM CHORD LENGTH = 10.00 FT. OR RIGID CEILING DIRECTLY APPLIED.

ALL PITCH BREAKS AND PERIMETER CORNER JOINTS MUST BE LATERALLY RESTRAINED.

1 - 1x4 LATERAL BRACE(S) AT 1/ 2 LENGTH OF 4-8, 6-7. DBS = 20-0-0 . CBF = 43 LBS.
2 - 1x4 LATERAL BRACE(S) AT 1/ 3 LENGTH OF 5-7. DBS = 6-0-0 . CBF = 164 LBS.

DBS = DIAGONAL BRACE SPACING (MAX). CBF = CUMULATIVE BRACING FORCE. FASTEN LATERAL BRACE(S) TO EACH PLY USING (0.122"X3") SPIRAL NAILS : 1 NAIL FOR 2x3 BRACE(S), 2 FOR 1x4, 2x4, 2x5, 3 FOR 2x6, 4 FOR 2x8, 5 FOR 2x10, AND 6 FOR 2x12.

END VERTICAL(S) MUST BE SHEATHED OR HAVE BRACES AS INDICATED IN THE MAX. UNBRACED LENGTH COLUMN OF THE TABLE BELOW

LOADING

TOTAL LOAD CASES: (4)

CHORDS

MEMB. FR-TO	MAX. FACTORED FORCE (LBS)	FACTORED VERT. LOAD (PLF) FROM	TO	LC1 MAX CSI (LC)	MAX. UNBRAC LENGTH
1- 2	-4224 / 0	-77.3	-77.3	0.10 (1)	5.41
2- 3	-2827 / 0	-77.3	-77.3	0.08 (1)	6.25
3- 4	-2827 / 0	-77.3	-77.3	0.08 (1)	6.25
4- 5	-2829 / 0	-77.3	-77.3	0.08 (1)	6.25
5- 6	0 / 1	-77.3	-77.3	0.00 (1)	10.00
10- 1	-4426 / 0	0.0	0.0	0.21 (1)	6.74
7- 6	-30 / 0	0.0	0.0	0.01 (1)	6.25
10- 9	0 / 0	-794.1	-794.1	0.18 (1)	10.00
9- 8	0 / 3528	-794.1	-794.1	0.22 (1)	10.00
8- 7	0 / 137	-794.1	-794.1	0.19 (1)	10.00

WEBS

MEMB. FR-TO	MAX. FACTORED FORCE (LBS)	MAX CSI (LC)
9- 2	0 / 1906	0.14 (1)
8- 2	-1910 / 0	0.59 (1)
8- 4	-347 / 0	0.06 (1)
8- 5	0 / 6157	0.33 (1)
1- 9	0 / 4020	0.30 (1)
5- 7	-4369 / 0	0.43 (1)

DESIGN CRITERIA

SPECIFIED LOADS:

TOP CH.	LL	=	23.3	PSF
	DL	=	3.0	PSF
BOT CH.	LL	=	0.0	PSF
	DL	=	7.0	PSF
TOTAL LOAD		=	33.3	PSF

SPACING = 24.0 IN. C/C

GIRDER TYPE: CStdGirder
START DISTANCE = 0-0
START SPAN CARRIED = 35-2-8
END DISTANCE = 14-3-4
END SPAN CARRIED = 35-2-8
END WALL WIDTH = 5-8
APPLIED TO FRONT SIDE OF BOTTOM CHORD.
- ADDT'L LOADS BASED ON 55 % OF GSL.

THIS TRUSS IS DESIGNED FOR RESIDENTIAL OR SMALL BUILDING REQUIREMENTS OF PART 9, NBCC 2010

THIS DESIGN COMPLIES WITH:
- PART 9 OF OBC 2012 , BCBC 2012 , ABC 2014
- CSA 086-09
- TPIC 2011

(55 % OF 27.2 P.S.F. G.S.L. PLUS 8.4 P.S.F. RAIN LOAD) EQUALS 23.3 P.S.F. SPECIFIED ROOF LIVE LOAD

ALLOWABLE DEFL.(LL)= L/360 (0.46")
CALCULATED VERT. DEFL.(LL) = L/ 999 (0.04")
ALLOWABLE DEFL.(TL)= L/360 (0.46")
CALCULATED VERT. DEFL.(TL) = L/ 999 (0.08")

CSI: TC=0.21 (1-10:1) , BC=0.22 (8-9:1) , WB=0.59 (2-8:1) , SSI=0.43 (7-8:1)

DOL LUMBER=1.00 NAIL=1.00 LS BEND=1.10 COMP=1.10 SHEAR=1.10 TENS= 1.10

COMPANION LIVE LOAD FACTOR = 0.50

TRUSS PLATE MANUFACTURER IS NOT RESPONSIBLE FOR QUALITY CONTROL IN THE TRUSS MANUFACTURING PLANT .

NAIL VALUES

PLATE	GRIP(DRY) (PSI) MAX	MIN	SHEAR (PLI) MAX	MIN	SECTION (PLI) MAX	MIN
MT20	618	354	1667	822	2284	1656

PLATE PLACEMENT TOL. = 0.250 inches

PLATE ROTATION TOL. = 5.0 Deg.

JSI GRIP= 0.90 (9) (INPUT = 0.90)
JSI METAL= 0.43 (1) (INPUT = 1.00)

CONTINUED ON PAGE 2

LICENSED PROFESSIONAL ENGINEER
P.M. TREVISAN
100136551
March 13th, 2017
PROVINCE OF ONTARIO

RECEIVED
TOWN OF MILTON
MAR 29, 2017
17-4990
BUILDING DIVISION

READ ALL NOTES ON THIS PAGE AND ON THE ENGINEERING NOTE PAGE ENP-1. THE NOTE PAGE IS AN INTEGRAL PART OF THIS DRAWING AS IT CONTAINS SPECIFICATIONS AND CRITERIA USED IN THE DESIGN OF THIS COMPONENT.

KOTT LUMBER ...ON YOUR SITE
KOTT

JOB NAME	TRUSS NAME	QUANTITY	PLY	JOB DESC.	DRWG NO.
PT0317-054	GIRD10	1	3	TRUSS DESC. LECCO RIDGE-BLOCK 328	ENG JOB: PT0317-054

Kott Lumber Uxbridge, Stouffville, ON, CGC

Version 8.100 S Feb 9 2017 MiTek Industries, Inc. Mon Mar 13 09:56:51 2017 Page 1

ID:pF8Cn?9h9uHzAm5tCmlVl5yJJCp-uye5JhrX2_fRJTJBSMqZ64yhX39W8rWCmdM6BtzbOnQ

SCALE = 1:81.2

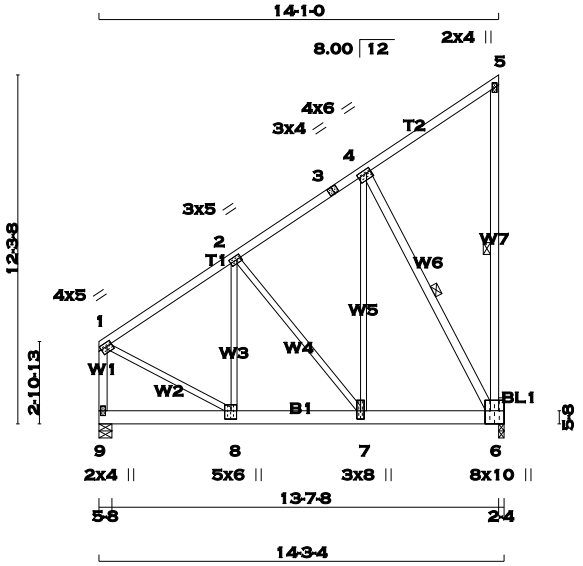

TOTAL WEIGHT = 3 X 93 = 278 lb

[M]

LUMBER

N. L. G. A. RULES

CHORDS	SIZE		LUMBER	DESCR.
1 - 3	2x4	DRY	No.2	SPF
3 - 5	2x4	DRY	No.2	SPF
6 - 5	2x4	DRY	No.2	SPF
9 - 1	2x4	DRY	No.2	SPF
9 - 6	2x6	DRY	2100F 1.8E	SPF
BEARING BLOCKS				
BL1	2x6	DRY	No.2	SPF
ALL WEBS EXCEPT	2x3	DRY	No.2	SPF
4 - 6	2x4	DRY	No.2	SPF

DRY: SEASONED LUMBER.

DESIGN CONSISTS OF 3 TRUSSES BUILT SEPARATELY THEN FASTENED TOGETHER AS FOLLOWS:

CHORDS #ROWS	SURFACE SPACING (IN)		LOAD(PLF)
TOP CHORDS : (0.122"X3") SPIRAL NAILS			
1- 3	1	12	TOP
3- 5	1	12	TOP
5- 6	1	12	TOP
9- 1	1	12	TOP
BOTTOM CHORDS : (0.122"X3") SPIRAL NAILS			
9- 6	2	5	SIDE(517.7)
WEBS : (0.122"X3") SPIRAL NAILS			
2x3	1	6	
2x4	1	6	

STAGGER NAILS BY HALF THE SURFACE SPACING IN ADJACENT PLIES.

TOP - COMPONENTS ARE LOADED FROM THE TOP AND MUST BE PLACED ON TOP EDGE OF ALL PLIES FOR THE LOAD TO BE TRANSFERRED TO EACH PLY.

SIDE - PLF SHOWN IS THE EQUIVALENT UDL APPLIED TO ONE SIDE THAT THE CORRESPONDING NAILING PATTERN SHALL BE CAPABLE OF TRANSFERING. REMAINING PLF MUST BE APPLIED ON THE OPPOSITE SIDE OR ON THE TOP.

PLATES (table is in inches)

JT	TYPE	PLATES	W	LEN	Y	X
1	TMVW-t	MT20	4.0	5.0	1.50	2.00
2	TMWW-t	MT20	3.0	5.0	1.50	1.75
3	TS-t	MT20	3.0	4.0		
4	TMWW-t	MT20	4.0	6.0	1.50	2.00

DIMENSIONS, SUPPORTS AND LOADINGS SPECIFIED BY FABRICATOR TO BE VERIFIED BY BUILDING DESIGNER

BEARINGS

JT	FACTORED GROSS REACTION VERT	HORZ	MAXIMUM FACTORED GROSS REACTION DOWN	HORZ	UPLIFT	INPUT BRG IN-SX	REQRD BRG IN-SX
6	6084	0	6084	0	0	2-4	2-4
9	6073	0	6073	0	0	5-8	5-8

UNFACTORED REACTIONS

JT	1ST LCASE COMBINED	MAX./MIN. COMPONENT REACTIONS SNOW	LIVE	PERM.LIVE	WIND	DEAD	SOIL
6	4270	2988 / 0	0 / 0	0 / 0	0 / 0	1281 / 0	0 / 0
9	4262	2981 / 0	0 / 0	0 / 0	0 / 0	1281 / 0	0 / 0

BEARING MATERIAL TO BE SPF NO.2 OR BETTER AT JOINT(S) 6, 9

BRACING

TOP CHORD TO BE SHEATHED OR MAX. PURLIN SPACING = 5.33 FT.
MAX. UNBRACED BOTTOM CHORD LENGTH = 10.00 FT. OR RIGID CEILING DIRECTLY APPLIED.

ALL PITCH BREAKS AND PERIMETER CORNER JOINTS MUST BE LATERALLY RESTRAINED.

1 - 2x3 SPF No.2 LATERAL BRACE(S) AT 1/ 2 LENGTH OF 5-6. DBS = 20-0-0 . CBF = 18 LBS.
1 - 2x4 SPF No.2 LATERAL BRACE(S) AT 1/ 2 LENGTH OF 4-6. DBS = 6-0-0 . CBF = 187 LBS.

DBS = DIAGONAL BRACE SPACING (MAX). CBF = CUMULATIVE BRACING FORCE. FASTEN LATERAL BRACE(S) TO EACH PLY USING (0.122"X3") SPIRAL NAILS : 1 NAIL FOR 2x3 BRACE(S), 2 FOR 1x4, 2x4, 2x5, 3 FOR 2x6, 4 FOR 2x8, 5 FOR 2x10, AND 6 FOR 2x12.

END VERTICAL(S) MUST BE SHEATHED OR HAVE BRACES AS INDICATED IN THE MAX. UNBRACED LENGTH COLUMN OF THE TABLE BELOW

LOADING

TOTAL LOAD CASES: (3)

CHORDS

MEMB. FR-TO	MAX. FACTORED FORCE (LBS)	FACTORED VERT. LOAD (PLF) FROM	TO	LC1 MAX CSI (LC)	MAX. UNBRAC LENGTH
1- 2	-4363 / 0	-77.3	-77.3	0.12 (1)	5.33
2- 3	-2796 / 0	-77.3	-77.3	0.10 (1)	6.25
3- 4	-2796 / 0	-77.3	-77.3	0.10 (1)	6.25
4- 5	-20 / 0	-77.3	-77.3	0.08 (1)	6.25
6- 5	-146 / 0	0.0	0.0	0.04 (1)	6.25
9- 1	-4497 / 0	0.0	0.0	0.22 (1)	6.70
9- 8	0 / 0	-794.1	-794.1	0.19 (1)	10.00
8- 7	0 / 3641	-794.1	-794.1	0.24 (1)	10.00
7- 6	0 / 2335	-794.1	-794.1	0.22 (1)	10.00

WEBS

MEMB. FR-TO	MAX. FACTORED FORCE (LBS)	MAX CSI (LC)
8- 2	0 / 2132	0.16 (1)
2- 7	-2085 / 0	0.70 (1)
7- 4	0 / 5547	0.42 (1)
4- 6	-4988 / 0	0.82 (1)
1- 8	0 / 4110	0.31 (1)

RECEIVED
TOWN OF MILTON
MAR 29, 2017
17-4990
BUILDING DIVISION

READ ALL NOTES ON THIS PAGE AND ON THE ENGINEERING NOTE PAGE ENP-1. THE NOTE PAGE IS AN INTEGRAL PART OF THIS DRAWING AS IT CONTAINS SPECIFICATIONS AND CRITERIA USED IN THE DESIGN OF THIS COMPONENT.

DESIGN CRITERIA

SPECIFIED LOADS:

TOP CH.	LL	=	23.3	PSF
	DL	=	3.0	PSF
BOT CH.	LL	=	0.0	PSF
	DL	=	7.0	PSF
TOTAL LOAD		=	33.3	PSF

SPACING = 24.0 IN. C/C

GIRDER TYPE: CStdGirder
START DISTANCE = 0-0
START SPAN CARRIED = 35-2-8
END DISTANCE = 14-3-4
END SPAN CARRIED = 35-2-8
END WALL WIDTH = 5-8
APPLIED TO FRONT SIDE OF BOTTOM CHORD.
- ADDT'L LOADS BASED ON 55 % OF GSL.

THIS TRUSS IS DESIGNED FOR RESIDENTIAL OR SMALL BUILDING REQUIREMENTS OF PART 9, NBCC 2010

THIS DESIGN COMPLIES WITH:
- PART 9 OF OBC 2012 , BCBC 2012 , ABC 2014
- CSA 086-09
- TPIC 2011

(55 % OF 27.2 P.S.F. G.S.L. PLUS 8.4 P.S.F. RAIN LOAD) EQUALS 23.3 P.S.F. SPECIFIED ROOF LIVE LOAD

ALLOWABLE DEFL.(LL)= L/360 (0.46")
CALCULATED VERT. DEFL.(LL) = L/ 999 (0.04")
ALLOWABLE DEFL.(TL)= L/360 (0.46")
CALCULATED VERT. DEFL.(TL) = L/ 999 (0.07")

CSI: TC=0.22 (1-9:1) , BC=0.24 (7-8:1) , WB=0.82 (4-6:1) , SSI=0.44 (8-9:1)

DOL LUMBER=1.00 NAIL=1.00 LS BEND=1.10 COMP=1.10 SHEAR=1.10 TENS= 1.10

COMPANION LIVE LOAD FACTOR = 0.50

TRUSS PLATE MANUFACTURER IS NOT RESPONSIBLE FOR QUALITY CONTROL IN THE TRUSS MANUFACTURING PLANT .

NAIL VALUES

PLATE	GRIP(DRY) (PSI) MAX	MIN	SHEAR (PLI) MAX	MIN	SECTION (PLI) MAX	MIN
MT20	618	354	1667	822	2284	1656

PLATE PLACEMENT TOL. = 0.250 inches

PLATE ROTATION TOL. = 5.0 Deg.

JSI GRIP= 0.89 (4) (INPUT = 0.90)
JSI METAL= 0.45 (1) (INPUT = 1.00)

KOTT

CONTINUED ON PAGE 2

JOB NAME	TRUSS NAME	QUANTITY	PLY	JOB DESC.	DRWG NO.
PT0317-054	GIRD11	1	2	TRUSS DESC. LECCO RIDGE-BLOCK 328	ENG JOB: PT0317-054

Kott Lumber Uxbridge, Stouffville, ON, CGC

Version 8.100 S Feb 9 2017 MiTek Industries, Inc. Mon Mar 13 09:56:51 2017 Page 1

ID:pF8Cn?9h9uHzAm5tCmlVl5yJJCp-uye5JhrX2_fRJTJBSMqZ64yh034S8pzCmdM6BtzbOnQ

SCALE = 1:81.2

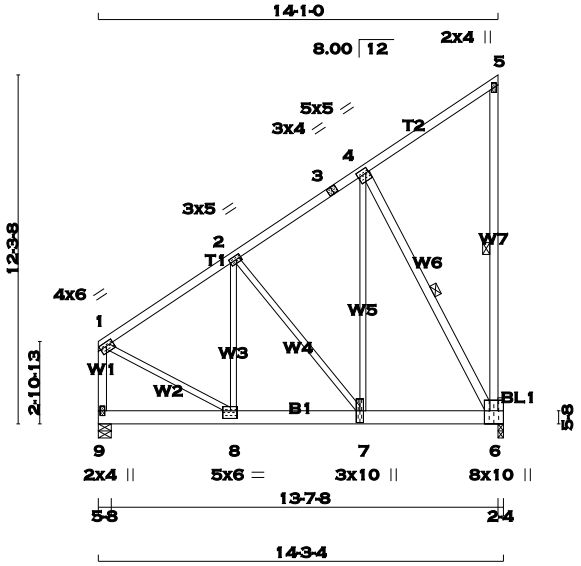

TOTAL WEIGHT = 2 X 93 = 185 lb

LUMBER

N. L. G. A. RULES

CHORDS	SIZE		LUMBER	DESCR.
1 - 3	2x4	DRY	No.2	SPF
3 - 5	2x4	DRY	No.2	SPF
6 - 5	2x4	DRY	No.2	SPF
9 - 1	2x4	DRY	No.2	SPF
9 - 6	2x6	DRY	No.2	SPF
BEARING BLOCKS				
BL1	2x6	DRY	No.2	SPF
ALL WEBS EXCEPT	2x3	DRY	No.2	SPF
4 - 6	2x4	DRY	No.2	SPF

DRY: SEASONED LUMBER.

DESIGN CONSISTS OF 2 TRUSSES BUILT SEPARATELY THEN FASTENED TOGETHER AS FOLLOWS:

CHORDS	#ROWS	SURFACE SPACING (IN)	LOAD(PLF)
TOP CHORDS : (0.122"X3") SPIRAL NAILS			
1- 3	1	12	TOP
3- 5	1	12	TOP
5- 6	1	12	TOP
9- 1	1	12	TOP
BOTTOM CHORDS : (0.122"X3") SPIRAL NAILS			
9- 6	2	8	SIDE(301.3)
WEBS : (0.122"X3") SPIRAL NAILS			
2x3	1	6	
2x4	1	6	

NAILS TO BE DRIVEN FROM ONE SIDE ONLY.

TOP - COMPONENTS ARE LOADED FROM THE TOP AND MUST BE PLACED ON TOP EDGE OF ALL PLIES FOR THE LOAD TO BE TRANSFERRED TO EACH PLY.

SIDE - PLF SHOWN IS THE EQUIVALENT UDL APPLIED TO ONE SIDE THAT THE CORRESPONDING NAILING PATTERN SHALL BE CAPABLE OF TRANSFERING. REMAINING PLF MUST BE APPLIED ON THE OPPOSITE SIDE OR ON THE TOP.

PLATES (table is in inches)

JT	TYPE	PLATES	W	LEN	Y	X
1	TMVW-t	MT20	4.0	6.0	1.50	3.00
2	TMWW-t	MT20	3.0	5.0	1.50	2.00
3	TS-t	MT20	3.0	4.0		

DIMENSIONS, SUPPORTS AND LOADINGS SPECIFIED BY FABRICATOR TO BE VERIFIED BY BUILDING DESIGNER

BEARINGS

JT	FACTORED GROSS REACTION VERT	HORZ	MAXIMUM FACTORED GROSS REACTION DOWN	HORZ	UPLIFT	INPUT BRG IN-SX	REQRD BRG IN-SX
6	4577	0	4577	0	0	2-4	2-4 + FLUSH PLATE
9	4272	0	4272	0	0	5-8	5-8

UNFACTORED REACTIONS

JT	1ST LCASE COMBINED	MAX./MIN. COMPONENT REACTIONS SNOW	LIVE	PERM.LIVE	WIND	DEAD	SOIL
6	3212	2248 / 0	0 / 0	0 / 0	0 / 0	964 / 0	0 / 0
9	2998	2098 / 0	0 / 0	0 / 0	0 / 0	901 / 0	0 / 0

BEARING MATERIAL TO BE SPF NO.2 OR BETTER AT JOINT(S) 6, 9

BRACING

TOP CHORD TO BE SHEATHED OR MAX. PURLIN SPACING = 5.11 FT.
MAX. UNBRACED BOTTOM CHORD LENGTH = 10.00 FT. OR RIGID CEILING DIRECTLY APPLIED.

ALL PITCH BREAKS AND PERIMETER CORNER JOINTS MUST BE LATERALLY RESTRAINED.

1 - 2x3 SPF No.2 LATERAL BRACE(S) AT 1/ 2 LENGTH OF 5-6. DBS = 20-0-0 . CBF = 18 LBS.
1 - 2x3 SPF No.2 LATERAL BRACE(S) AT 1/ 2 LENGTH OF 4-6. DBS = 4-0-0 . CBF = 91 LBS.

DBS = DIAGONAL BRACE SPACING (MAX). CBF = CUMULATIVE BRACING FORCE. FASTEN LATERAL BRACE(S) TO EACH PLY USING (0.122"X3") SPIRAL NAILS : 1 NAIL FOR 2x3 BRACE(S), 2 FOR 1x4, 2x4, 2x5, 3 FOR 2x6, 4 FOR 2x8, 5 FOR 2x10, AND 6 FOR 2x12.

END VERTICAL(S) MUST BE SHEATHED OR HAVE BRACES AS INDICATED IN THE MAX. UNBRACED LENGTH COLUMN OF THE TABLE BELOW

LOADING

TOTAL LOAD CASES: (3)

CHORDS

MEMB. FR-TO	MAX. FACTORED FORCE (LBS)	FACTORED VERT. LOAD (PLF) FROM	TO	LC1	MAX CSI (LC)	MAX. UNBRAC LENGTH
1- 2	-3087 / 0	-77.3	-77.3	0.18 (1)		5.11
2- 3	-2050 / 0	-77.3	-77.3	0.16 (1)		5.99
3- 4	-2050 / 0	-77.3	-77.3	0.16 (1)		5.99
4- 5	-19 / 0	-77.3	-77.3	0.14 (1)		6.25
6- 5	-147 / 0	0.0	0.0	0.06 (1)		6.25
9- 1	-3231 / 0	0.0	0.0	0.25 (1)		6.46
9- 8	0 / 0	-525.3	-525.3	0.38 (1)		10.00
8- 7	0 / 2581	-525.3	-525.3	0.56 (1)		10.00
7- 6	0 / 1711	-620.2	-620.2	0.54 (1)		10.00

WEBS

MEMB. FR-TO	MAX. FACTORED FORCE (LBS)	MAX CSI (LC)
8- 2	0 / 1288	0.16 (1)
2- 7	-1388 / 0	0.71 (1)
7- 4	0 / 3962	0.49 (1)
4- 6	-3657 / 0	0.92 (1)
1- 8	0 / 2913	0.36 (1)

RECEIVED
TOWN OF MILTON
MAR 29, 2017
17-4990
BUILDING DIVISION

READ ALL NOTES ON THIS PAGE AND ON THE ENGINEERING NOTE PAGE ENP-1. THE NOTE PAGE IS AN INTEGRAL PART OF THIS DRAWING AS IT CONTAINS SPECIFICATIONS AND CRITERIA USED IN THE DESIGN OF THIS COMPONENT.

[M]

DESIGN CRITERIA

SPECIFIED LOADS:

TOP	CH.	LL	=	23.3	PSF
		DL	=	3.0	PSF
BOT	CH.	LL	=	0.0	PSF
		DL	=	7.0	PSF
TOTAL	LOAD		=	33.3	PSF

SPACING = 24.0 IN. C/C

GIRDER TYPE: CStdGirder
START DISTANCE = 0-0
START SPAN CARRIED = 23-10-8
END DISTANCE = 9-7-2
END SPAN CARRIED = 23-10-8
END WALL WIDTH = 5-8
APPLIED TO FRONT SIDE OF BOTTOM CHORD.
- ADDT'L LOADS BASED ON 55 % OF GSL.

GIRDER TYPE: CStdGirder
START DISTANCE = 9-7-2
START SPAN CARRIED = 27-10-8
END DISTANCE = 14-2-10
END SPAN CARRIED = 27-10-8
END WALL WIDTH = 5-8
APPLIED TO FRONT SIDE OF BOTTOM CHORD.
- ADDT'L LOADS BASED ON 55 % OF GSL.

THIS TRUSS IS DESIGNED FOR RESIDENTIAL OR SMALL BUILDING REQUIREMENTS OF PART 9, NBCC 2010

THIS DESIGN COMPLIES WITH:
- PART 9 OF OBC 2012 , BCBC 2012 , ABC 2014
- CSA 086-09
- TPIC 2011

(55 % OF 27.2 P.S.F. G.S.L. PLUS 8.4 P.S.F. RAIN LOAD) EQUALS 23.3 P.S.F. SPECIFIED ROOF LIVE LOAD

ALLOWABLE DEFL.(LL)= L/360 (0.46")
CALCULATED VERT. DEFL.(LL) = L/ 999 (0.05")
ALLOWABLE DEFL.(TL)= L/360 (0.46")
CALCULATED VERT. DEFL.(TL) = L/ 999 (0.09")

CSI: TC=0.25 (1-9:1) , BC=0.56 (7-8:1) , WB=0.92 (4-6:1) , SSI=0.55 (6-7:1)

DOL LUMBER=1.00 NAIL=1.00 LS BEND=1.00 COMP=1.00 SHEAR=1.00 TENS= 1.00

COMPANION LIVE LOAD FACTOR = 0.50

TRUSS PLATE MANUFACTURER IS NOT RESPONSIBLE FOR QUALITY CONTROL IN THE TRUSS MANUFACTURING PLANT .

NAIL VALUES

PLATE	GRIP(DRY) (PSI) MAX	MIN	SHEAR (PLI) MAX	MIN	SECTION (PLI) MAX	MIN
MT20	618	354	1667	822	2284	1656

PLATE PLACEMENT TOL. = 0.250 inches

PLATE ROTATION TOL. = 5.0 Deg.

JSI GRIP= 0.89 (8) (INPUT = 0.90)
JSI METAL= 0.40 (1) (INPUT = 1.00)

KOTT

CONTINUED ON PAGE 2

JOB NAME	TRUSS NAME	QUANTITY	PLY	JOB DESC.	DRWG NO.
PT0317-054	GIRD12	1	1	TRUSS DESC. LECCO RIDGE-BLOCK 328	ENG JOB: PT0317-054

Kott Lumber Uxbridge, Stouffville, ON, CGC

Version 8.100 S Feb 9 2017 MiTek Industries, Inc. Mon Mar 13 09:56:51 2017 Page 1

ID:pF8Cn?9h9uHzAm5tCmlVl5yJJCp-uye5JhrX2_fRJTJBSMqZ64yc638_8zSCmdM6BtzbOnQ

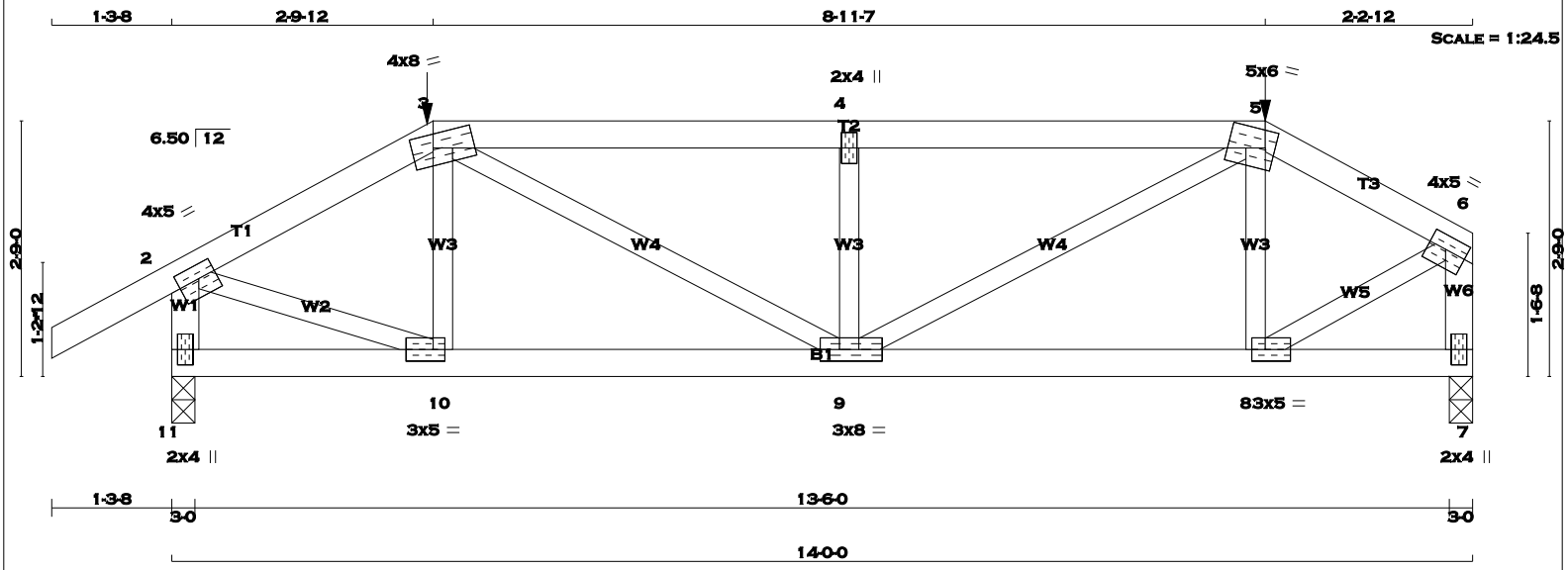

TOTAL WEIGHT = 54 lb [M]

LUMBER

N. L. G. A. RULES

CHORDS	SIZE		LUMBER	DESCR.
1 - 3	2x4	DRY	No.2	SPF
3 - 5	2x4	DRY	No.2	SPF
5 - 6	2x4	DRY	No.2	SPF
11 - 2	2x4	DRY	No.2	SPF
7 - 6	2x4	DRY	No.2	SPF
11 - 7	2x4	DRY	No.2	SPF
ALL WEBS EXCEPT	2x3	DRY	No.2	SPF

DRY: SEASONED LUMBER.

PLATES (table is in inches)

JT	TYPE	PLATES	W	LEN	Y	X
2	TMVW-t	MT20	4.0	5.0	1.75	2.25
3	TTWW-m	MT20	4.0	8.0	1.75	2.75
4	TMW+w	MT20	2.0	4.0		
5	TTWW-m	MT20	5.0	6.0	2.25	1.25
6	TMVW-t	MT20	4.0	5.0	1.75	2.25
7	BMV1+p	MT20	2.0	4.0		
8	BMWW-t	MT20	3.0	5.0	1.50	1.75
9	BMWWW-t	MT20	3.0	8.0	1.50	2.50
10	BMWW-t	MT20	3.0	5.0	1.50	1.50
11	BMV1+p	MT20	2.0	4.0		

A SIZE FOR SIZE SUBSTITUTION OF MITEK MII20 WITH TEE-LOK TL20 PLATES IS ALLOWED.

HANGERS NOTES

1) SPECIAL HANGER(S) OR CONNECTION(S) REQUIRED TO SUPPORT CONCENTRATED LOAD(S) 113.7 lbs FACTORED DOWN AT 11-9-4, AND 143.5 lbs FACTORED DOWN AT 2-9-12 ON TOP CHORD. DESIGN FOR UNSPECIFIED CONNECTION(S) IS DELEGATED TO THE BUILDING DESIGNER.

DIMENSIONS, SUPPORTS AND LOADINGS SPECIFIED BY FABRICATOR TO BE VERIFIED BY BUILDING DESIGNER

BEARINGS

JT	FACTORED GROSS REACTION VERT	HORZ	MAXIMUM FACTORED GROSS REACTION DOWN	HORZ	UPLIFT	INPUT BRG IN-SX	REQRD BRG IN-SX
11	1266	0	1266	0	0	3-0	3-0
7	1176	0	1176	0	0	3-0	3-0

UNFACTORED REACTIONS

JT	1ST LCASE COMBINED	MAX./MIN. COMPONENT REACTIONS SNOW	LIVE	PERM.LIVE	WIND	DEAD	SOIL
11	887	630 / 0	0 / 0	0 / 0	0 / 0	258 / 0	0 / 0
7	826	575 / 0	0 / 0	0 / 0	0 / 0	251 / 0	0 / 0

BEARING MATERIAL TO BE SPF NO.2 OR BETTER AT JOINT(S) 11, 7

BRACING

TOP CHORD TO BE SHEATHED OR MAX. PURLIN SPACING = 4.13 FT.
MAX. UNBRACED BOTTOM CHORD LENGTH = 10.00 FT. OR RIGID CEILING DIRECTLY APPLIED.

ALL PITCH BREAKS AND PERIMETER CORNER JOINTS MUST BE LATERALLY RESTRAINED.

LOADING

TOTAL LOAD CASES: (3)

CHORDS MEMB. FR-TO	MAX. FACTORED FORCE (LBS)	FACTORED VERT. LOAD (PLF) FROM	TO	LC1 MAX CSI (LC)	MAX. UNBRAC LENGTH	WEBS MEMB. FR-TO	MAX. FACTORED FORCE (LBS)	MAX CSI (LC)
1- 2	0 / 25	-77.3	-77.3	0.11 (1)	10.00	10- 3	-239 / 33	0.04 (1)
2- 3	-1353 / 0	-77.3	-77.3	0.14 (1)	5.40	3- 9	0 / 809	0.20 (1)
3- 4	-1888 / 0	-139.4	-139.4	0.56 (1)	4.13	9- 4	-757 / 0	0.14 (1)
4- 5	-1888 / 0	-139.4	-139.4	0.56 (1)	4.13	9- 5	0 / 1033	0.26 (1)
5- 6	-1138 / 0	-77.3	-77.3	0.09 (1)	5.84	8- 5	-396 / 0	0.07 (1)
11- 2	-1235 / 0	0.0	0.0	0.14 (1)	7.19	2-10	0 / 1245	0.31 (1)
7- 6	-1159 / 0	0.0	0.0	0.13 (1)	7.37	8- 6	0 / 1129	0.28 (1)
11-10	0 / 0	-31.5	-31.5	0.11 (3)	10.00			
10- 9	0 / 1178	-31.5	-31.5	0.27 (1)	10.00			
9- 8	0 / 982	-31.5	-31.5	0.24 (1)	10.00			
8- 7	0 / 0	-31.5	-31.5	0.10 (3)	10.00			

FACTORED CONCENTRATED LOADS (LBS)

JT	LOC.	LC1	MAX-	MAX+	FACE	DIR.	TYPE
3	2-9-12	-144	-144	---	FRONT	VERT	TOTAL
5	11-9-4	-114	-114	---	FRONT	VERT	TOTAL

DESIGN CRITERIA

SPECIFIED LOADS:

TOP CH.	LL	=	23.3	PSF
	DL	=	3.0	PSF
BOT CH.	LL	=	0.0	PSF
	DL	=	7.0	PSF
TOTAL LOAD		=	33.3	PSF

SPACING = 24.0 IN. C/C

LOADING IN FLAT SECTION BASED ON A SLOPE OF 6.00/12

GIRDER TYPE: CPrimeHip
LEFT SETBACK = 2-9-12
RIGHT SETBACK = 2-2-12
END SETBACK = 5-5-8
END WALL WIDTH = 3-0
CORNER FRAMING TYPE: CONVENTIONAL
END JACK TYPE: CONVENTIONAL
APPLIED TO FRONT SIDE
- ADDT'L LOADS BASED ON 55 % OF GSL.

THIS TRUSS IS DESIGNED FOR RESIDENTIAL OR SMALL BUILDING REQUIREMENTS OF PART 9, NBCC 2010

THIS DESIGN COMPLIES WITH:
- PART 9 OF OBC 2012 , BCBC 2012 , ABC 2014
- CSA 086-09
- TPIC 2011

(55 % OF 27.2 P.S.F. G.S.L. PLUS 8.4 P.S.F. RAIN LOAD) EQUALS 23.3 P.S.F. SPECIFIED ROOF LIVE LOAD

ALLOWABLE DEFL.(LL)= L/360 (0.47")
CALCULATED VERT. DEFL.(LL) = L/ 999 (0.04")
ALLOWABLE DEFL.(TL)= L/360 (0.47")
CALCULATED VERT. DEFL.(TL) = L/ 999 (0.08")

CSI: TC=0.56 (4-5:1) , BC=0.27 (9-10:1) , WB=0.31 (2-10:1) , SSI=0.33 (4-5:1)

DOL LUMBER=1.00 NAIL=1.00 LS BEND=1.00 COMP=1.00 SHEAR=1.00 TENS= 1.00

COMPANION LIVE LOAD FACTOR = 0.50

TRUSS PLATE MANUFACTURER IS NOT RESPONSIBLE FOR QUALITY CONTROL IN THE TRUSS MANUFACTURING PLANT .

NAIL VALUES

PLATE	GRIP(DRY) (PSI) MAX	MIN	SHEAR (PLI) MAX	MIN	SECTION (PLI) MAX	MIN
MT20	618	354	1667	822	2284	1656

PLATE PLACEMENT TOL. = 0.250 inches

PLATE ROTATION TOL. = 0.5 Deg.

JSI GRIP= 0.89 (3) (INPUT = 0.90)
JSI METAL= 0.44 (2) (INPUT = 1.00)

LICENSED PROFESSIONAL ENGINEER
P.M. TREVISAN
100136551
March 13th, 2017
PROVINCE OF ONTARIO

RECEIVED
TOWN OF MILTON
MAR 29, 2017
17-4990
BUILDING DIVISION

READ ALL NOTES ON THIS PAGE AND ON THE ENGINEERING NOTE PAGE ENP-1. THE NOTE PAGE IS AN INTEGRAL PART OF THIS DRAWING AS IT CONTAINS SPECIFICATIONS AND CRITERIA USED IN THE DESIGN OF THIS COMPONENT.

KOTT

JOB NAME	TRUSS NAME	QUANTITY	PLY	JOB DESC.	DRWG NO.
PT0317-054	GIRD16	1	2	TRUSS DESC. LECCO RIDGE-BLOCK 328	

Kott Lumber Uxbridge, Stouffville, ON, CGC

Version 8.100 S Feb 9 2017 MiTek Industries, Inc. Mon Mar 13 09:56:52 2017 Page 1
ID:pF8Cn?9h9uHzAm5tCmlVl5yJJCp-M8CUW1s9pInIwcuO04LoeIVr2TQrtKNM?H6gjKzbOnP

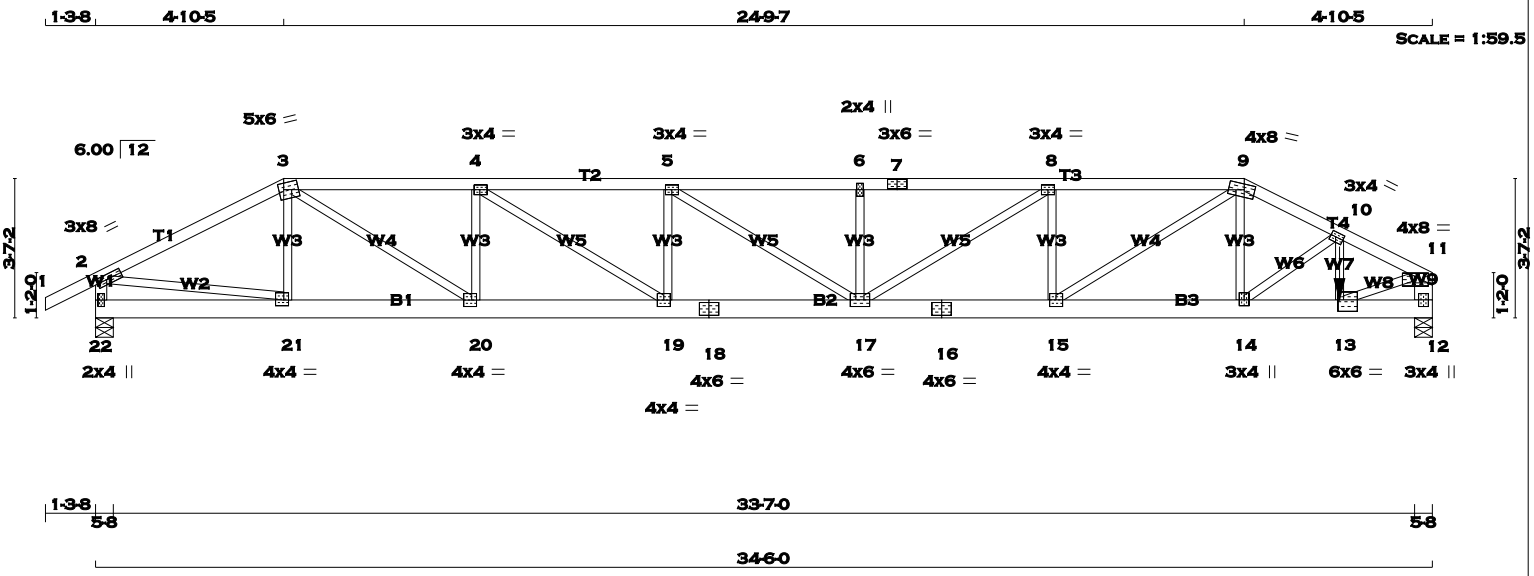

TOTAL WEIGHT = 2 X 151 = 303 lb [M]

LUMBER
N. L. G. A. RULES

CHORDS	SIZE		LUMBER	DESCR.
1 - 3	2x4	DRY	No.2	SPF
3 - 7	2x4	DRY	No.2	SPF
7 - 9	2x4	DRY	No.2	SPF
9 - 11	2x4	DRY	No.2	SPF
22 - 2	2x4	DRY	No.2	SPF
12 - 11	2x6	DRY	No.2	SPF
22 - 18	2x6	DRY	No.2	SPF
18 - 16	2x6	DRY	No.2	SPF
16 - 12	2x6	DRY	No.2	SPF
ALL WEBS EXCEPT	2x3	DRY	No.2	SPF

DRY: SEASONED LUMBER.

DESIGN CONSISTS OF 2 TRUSSES BUILT SEPARATELY THEN FASTENED TOGETHER AS FOLLOWS:

CHORDS #ROWS		SURFACE SPACING (IN)	LOAD(PLF)
TOP CHORDS : (0.122"X3") SPIRAL NAILS			
1- 3	1	12	TOP
3- 7	1	12	TOP
7- 9	1	12	TOP
9- 11	1	12	TOP
22- 2	1	12	TOP
12- 11	2	12	TOP
BOTTOM CHORDS : (0.122"X3") SPIRAL NAILS			
22- 18	2	12	TOP
18- 16	2	12	TOP
16- 12	2	12	SIDE(56.3)
WEBS : (0.122"X3") SPIRAL NAILS			
2x3	1	6	

NAILS TO BE DRIVEN FROM ONE SIDE ONLY.

GIRDER NAILING ASSUMES NAILED HANGERS ARE FASTENED WITH MIN. 3-0 INCH NAILS.

TOP - COMPONENTS ARE LOADED FROM THE TOP AND MUST BE PLACED ON TOP EDGE OF ALL PLIES FOR THE LOAD TO BE TRANSFERRED TO EACH PLY.

SIDE - PLF SHOWN IS THE EQUIVALENT UDL APPLIED TO ONE SIDE THAT THE CORRESPONDING NAILING PATTERN SHALL BE CAPABLE OF TRANSFERING. REMAINING PLF MUST BE APPLIED ON THE OPPOSITE SIDE OR ON THE TOP.

LICENSED PROFESSIONAL ENGINEER
P.M. TREVISAN
100136551
March 13th, 2017
PROVINCE OF ONTARIO

DIMENSIONS, SUPPORTS AND LOADINGS SPECIFIED BY FABRICATOR TO BE VERIFIED BY BUILDING DESIGNER

BEARINGS

JT	FACTORED GROSS REACTION VERT	HORZ	MAXIMUM FACTORED GROSS REACTION DOWN	HORZ	UPLIFT	INPUT BRG IN-SX	REQRD BRG IN-SX
22	1950	0	1950	0	0	5-8	5-8
12	4567	0	4567	0	0	5-8	5-8

UNFACTORED REACTIONS

JT	1ST LCASE COMBINED	MAX./MIN. COMPONENT REACTIONS SNOW	LIVE	PERM.LIVE	WIND	DEAD	SOIL
22	1366	969 / 0	0 / 0	0 / 0	0 / 0	397 / 0	0 / 0
12	3205	2242 / 0	0 / 0	0 / 0	0 / 0	963 / 0	0 / 0

BEARING MATERIAL TO BE SPF NO.2 OR BETTER AT JOINT(S) 22, 12

BRACING
TOP CHORD TO BE SHEATHED OR MAX. PURLIN SPACING = 3.92 FT.
MAX. UNBRACED BOTTOM CHORD LENGTH = 10.00 FT. OR RIGID CEILING DIRECTLY APPLIED.

ALL PITCH BREAKS AND PERIMETER CORNER JOINTS MUST BE LATERALLY RESTRAINED.

LOADING
TOTAL LOAD CASES: (3)

CHORDS

MEMB. FR-TO	MAX. FACTORED FORCE (LBS)	FACTORED VERT. LOAD (PLF) FROM	TO	LC1	MAX CSI (LC)	MAX. UNBRAC LENGTH
1- 2	0 / 23	-77.3	-77.3	0.06 (1)	10.00	
2- 3	-2749 / 0	-77.3	-77.3	0.22 (1)	5.29	
3- 4	-4244 / 0	-77.3	-77.3	0.23 (1)	4.46	
4- 5	-5274 / 0	-77.3	-77.3	0.28 (1)	4.03	
5- 6	-5579 / 0	-77.3	-77.3	0.26 (1)	3.96	
6- 7	-5579 / 0	-77.3	-77.3	0.29 (1)	3.92	
7- 8	-5579 / 0	-77.3	-77.3	0.29 (1)	3.92	
8- 9	-5199 / 0	-77.3	-77.3	0.27 (1)	4.06	
9-10	-4531 / 0	-77.3	-77.3	0.13 (1)	4.41	
10-11	-5591 / 0	-77.3	-77.3	0.16 (1)	4.00	
22- 2	-1909 / 0	0.0	0.0	0.11 (1)	7.81	
12-11	-4223 / 0	0.0	0.0	0.15 (1)	6.96	
22-21	0 / 0	-17.5	-17.5	0.02 (3)	10.00	
21-20	0 / 2447	-17.5	-17.5	0.19 (1)	10.00	
20-19	0 / 4244	-17.5	-17.5	0.31 (1)	10.00	
19-18	0 / 5274	-17.5	-17.5	0.39 (1)	10.00	
18-17	0 / 5274	-17.5	-17.5	0.39 (1)	10.00	
17-16	0 / 5199	-17.5	-17.5	0.39 (1)	10.00	
16-15	0 / 5199	-17.5	-17.5	0.39 (1)	10.00	
15-14	0 / 4089	-17.5	-17.5	0.31 (1)	10.00	
14-13	0 / 4993	-17.5	-17.5	0.49 (1)	10.00	
13-12	0 / 0	-130.1	-130.1	0.17 (1)	10.00	

WEBS

MEMB. FR-TO	MAX. FACTORED FORCE (LBS)	MAX CSI (LC)
21- 3	-283 / 0	0.03 (1)
20- 4	-1090 / 0	0.12 (1)
4-19	0 / 1228	0.15 (1)
19- 5	-575 / 0	0.06 (1)
5-17	0 / 364	0.05 (1)
17- 6	-370 / 0	0.04 (1)
17- 8	0 / 453	0.06 (1)
15- 8	-667 / 0	0.07 (1)
15- 9	0 / 1323	0.16 (1)
14- 9	0 / 1043	0.13 (1)
14-10	-1182 / 0	0.13 (1)
13-10	0 / 1027	0.13 (1)
2-21	0 / 2486	0.31 (1)
13-11	0 / 5247	0.65 (1)

FACTORED CONCENTRATED LOADS (LBS)

JT	LOC.	LC1	MAX-	MAX+	FACE	DIR.	TYPE
13	32-1-4	-2870	-2870	---	FRONT	VERT	TOTAL

RECEIVED
TOWN OF MILTON
MAR 29, 2017
17-4990
BUILDING DIVISION

READ ALL NOTES ON THIS PAGE AND ON THE ENGINEERING NOTE PAGE ENP-1. THE NOTE PAGE IS AN INTEGRAL PART OF THIS DRAWING AS IT CONTAINS SPECIFICATIONS AND CRITERIA USED IN THE DESIGN OF THIS COMPONENT.

DESIGN CRITERIA

*** SPECIAL LOADS ANALYSIS ***
GEOMETRY AND/OR BASIC LOADS CHANGED BY USER.
LOADS WERE DERIVED FROM USER INPUT
NO FURTHER MODIFICATIONS WERE MADE

SPECIFIED LOADS:

TOP	CH.	LL	=	23.3	PSF
		DL	=	3.0	PSF
BOT	CH.	LL	=	0.0	PSF
		DL	=	7.0	PSF
TOTAL	LOAD		=	33.3	PSF

SPACING = 24.0 IN. C/C

LOADING IN FLAT SECTION BASED ON A SLOPE OF 6.00/12

GIRDER TYPE: CStdGirder
START DISTANCE = 32-1-4
START SPAN CARRIED = 7-2-8
END DISTANCE = 34-6-0
END SPAN CARRIED = 7-2-8
END WALL WIDTH = 5-8
APPLIED TO FRONT SIDE OF BOTTOM CHORD.
- ADDT'L LOADS BASED ON 55 % OF GSL.

*** NON STANDARD GIRDER ***
ADDT'L USER-DEFINED LOADS APPLIED TO ALL LOAD CASES.

THIS TRUSS IS DESIGNED FOR RESIDENTIAL OR SMALL BUILDING REQUIREMENTS OF PART 9, NBCC 2010

THIS DESIGN COMPLIES WITH:
- PART 9 OF OBC 2012 , BCBC 2012 , ABC 2014
- CSA 086-09
- TPIC 2011

(55 % OF 27.2 P.S.F. G.S.L. PLUS 8.4 P.S.F. RAIN LOAD) EQUALS 23.3 P.S.F. SPECIFIED ROOF LIVE LOAD

ALLOWABLE DEFL.(LL)= L/360 (1.15")
CALCULATED VERT. DEFL.(LL) = L/ 999 (0.19")
ALLOWABLE DEFL.(TL)= L/360 (1.15")
CALCULATED VERT. DEFL.(TL) = L/ 999 (0.34")

CSI: TC=0.29 (6-8:1) , BC=0.49 (13-14:1) , WB=0.65 (11-13:1) , SSI=0.11 (12-13:1)

DOL LUMBER=1.00 NAIL=1.00 LS BEND=1.00 COMP=1.00 SHEAR=1.00 TENS= 1.00

COMPANION LIVE LOAD FACTOR = 0.50

TRUSS PLATE MANUFACTURER IS NOT RESPONSIBLE FOR QUALITY CONTROL IN THE TRUSS MANUFACTURING PLANT .

NAIL VALUES

PLATE	GRIP(DRY) (PSI) MAX	MIN	SHEAR (PLI) MAX	MIN	SECTION (PLI) MAX	MIN
MT20	618	354	1667	822	2284	1656

PLATE PLACEMENT TOL. = 0.250 inches

PLATE ROTATION TOL. = 5.0 Deg.

JSI GRIP= 0.90 (INPUT = 90)
JSI METAL= 0.72 (INPUT = 100)

KOTT

CONTINUED ON PAGE 2

JOB NAME	TRUSS NAME	QUANTITY	PLY	JOB DESC.	DRWG NO.
PT0317-054	GIRD17	2	1	TRUSS DESC. LECCO RIDGE-BLOCK 328	

Kott Lumber Uxbridge, Stouffville, ON, CGC

Version 8.100 S Feb 9 2017 MiTek Industries, Inc. Mon Mar 13 09:56:52 2017 Page 1
ID:pF8Cn?9h9uHzAm5tCmlVl5yJJCp-M8CUW1s9pInIwcuO04LoeIVsvTTCtO4M?H6gjKzbOnP

SCALE = 1:50.5

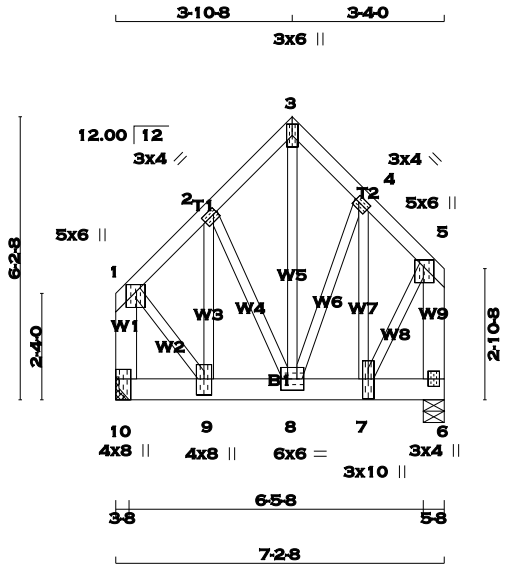

TOTAL WEIGHT = 2 X 54 = 109 lb
[M]

LUMBER
N. L. G. A. RULES

CHORDS	SIZE		LUMBER	DESCR.
1 - 3	2x4	DRY	No.2	SPF
3 - 5	2x4	DRY	No.2	SPF
10 - 1	2x6	DRY	No.2	SPF
6 - 5	2x6	DRY	No.2	SPF
10 - 6	2x6	DRY	No.2	SPF
ALL WEBS EXCEPT	2x3	DRY	No.2	SPF

DRY: SEASONED LUMBER.

PLATES (table is in inches)

JT	TYPE	PLATES	W	LEN	Y	X
1	TMVW+p	MT20	5.0	6.0	1.75	2.75
2	TMWW-t	MT20	3.0	4.0	1.50	1.00
3	TTW+p	MT20	3.0	6.0		
4	TMWW-t	MT20	3.0	4.0	1.50	1.00
5	TMVW+p	MT20	5.0	6.0	1.75	2.75
6	BMV1+p	MT20	3.0	4.0		
7	BMWW+t	MT20	3.0	10.0	5.25	1.50
8	BMWWW-t	MT20	6.0	6.0		
9	BMWW+t	MT20	4.0	8.0	4.25	2.00
10	BMV1+t	MT20	4.0	8.0	5.50	

A SIZE FOR SIZE SUBSTITUTION OF MITEK MII20 WITH TEE-LOK TL20 PLATES IS ALLOWED.

DIMENSIONS, SUPPORTS AND LOADINGS SPECIFIED BY FABRICATOR TO BE VERIFIED BY BUILDING DESIGNER

BEARINGS

JT	FACTORED GROSS REACTION VERT	HORZ	MAXIMUM FACTORED GROSS REACTION DOWN	HORZ	UPLIFT	INPUT BRG IN-SX	REQRD BRG IN-SX
10	2870	0	2870	0	0	HANGER BY OTHERS MIN. SEAT SIZE: 3-8	
6	2870	0	2870	0	0	5-8	5-8

UNFACTORED REACTIONS

JT	1ST LCASE COMBINED	MAX./MIN. COMPONENT REACTIONS SNOW	LIVE	PERM.LIVE	WIND	DEAD	SOIL
10	2014	1409 / 0	0 / 0	0 / 0	0 / 0	605 / 0	0 / 0
6	2014	1409 / 0	0 / 0	0 / 0	0 / 0	605 / 0	0 / 0

BEARING MATERIAL TO BE SPF NO.2 OR BETTER AT JOINT(S) 6

BRACING
TOP CHORD TO BE SHEATHED OR MAX. PURLIN SPACING = 5.17 FT.
MAX. UNBRACED BOTTOM CHORD LENGTH = 10.00 FT. OR RIGID CEILING DIRECTLY APPLIED.

ALL PITCH BREAKS AND PERIMETER CORNER JOINTS MUST BE LATERALLY RESTRAINED.

LOADING
TOTAL LOAD CASES: (3)

CHORDS

MEMB. FR-TO	MAX. FACTORED FORCE (LBS)	FACTORED VERT. LOAD LC1 (PLF) FROM	TO	MAX CSI (LC)	MAX. UNBRAC LENGTH
1- 2	-1553 / 0	-77.3	-77.3	0.10 (1)	5.17
2- 3	-1285 / 0	-77.3	-77.3	0.08 (1)	5.59
3- 4	-1275 / 0	-77.3	-77.3	0.08 (1)	5.60
4- 5	-1316 / 0	-77.3	-77.3	0.09 (1)	5.52
10- 1	-2197 / 0	0.0	0.0	0.19 (1)	6.85
6- 5	-2278 / 0	0.0	0.0	0.24 (1)	6.75
10- 9	0 / 0	-719.0	-719.0	0.23 (1)	10.00
9- 8	0 / 1095	-719.0	-719.0	0.28 (1)	10.00
8- 7	0 / 922	-719.0	-719.0	0.21 (1)	10.00
7- 6	0 / 0	-719.0	-719.0	0.18 (1)	10.00

WEBS

MEMB. FR-TO	MAX. FACTORED FORCE (LBS)	MAX CSI (LC)
9- 2	0 / 440	0.11 (1)
2- 8	-436 / 0	0.14 (1)
8- 3	0 / 1666	0.41 (1)
8- 4	-31 / 0	0.01 (1)
7- 4	-52 / 8	0.02 (1)
1- 9	0 / 1495	0.37 (1)
7- 5	0 / 1570	0.39 (1)

DESIGN CRITERIA

SPECIFIED LOADS:

TOP	CH.	LL	=	23.3	PSF
		DL	=	3.0	PSF
BOT	CH.	LL	=	0.0	PSF
		DL	=	7.0	PSF
TOTAL	LOAD		=	33.3	PSF

SPACING = 24.0 IN. C/C

GIRDER TYPE: CStdGirder
START DISTANCE = 0-0
START SPAN CARRIED = 32-0-8
END DISTANCE = 7-2-8
END SPAN CARRIED = 32-0-8
END WALL WIDTH = 5-8
APPLIED TO FRONT SIDE OF BOTTOM CHORD.
- ADDT'L LOADS BASED ON 55 % OF GSL.

THIS TRUSS IS DESIGNED FOR RESIDENTIAL OR SMALL BUILDING REQUIREMENTS OF PART 9, NBCC 2010

THIS DESIGN COMPLIES WITH:
- PART 9 OF OBC 2012 , BCBC 2012 , ABC 2014
- CSA 086-09
- TPIC 2011

(55 % OF 27.2 P.S.F. G.S.L. PLUS 8.4 P.S.F. RAIN LOAD) EQUALS 23.3 P.S.F. SPECIFIED ROOF LIVE LOAD

ALLOWABLE DEFL.(LL)= L/360 (0.24")
CALCULATED VERT. DEFL.(LL) = L/ 999 (0.02")
ALLOWABLE DEFL.(TL)= L/360 (0.24")
CALCULATED VERT. DEFL.(TL) = L/ 999 (0.03")

CSI: TC=0.24 (5-6:1) , BC=0.28 (8-9:1) , WB=0.41 (3-8:1) , SSI=0.53 (9-10:1)

DOL LUMBER=1.00 NAIL=1.00 LS BEND=1.00 COMP=1.00 SHEAR=1.00 TENS= 1.00

COMPANION LIVE LOAD FACTOR = 0.50

TRUSS PLATE MANUFACTURER IS NOT RESPONSIBLE FOR QUALITY CONTROL IN THE TRUSS MANUFACTURING PLANT .

NAIL VALUES

PLATE	GRIP(DRY) (PSI) MAX	MIN	SHEAR (PLI) MAX	MIN	SECTION (PLI) MAX	MIN
MT20	618	354	1667	822	2284	1656

PLATE PLACEMENT TOL. = 0.250 inches

PLATE ROTATION TOL. = 0.5 Deg.

JSI GRIP= 0.90 (7) (INPUT = 0.90)
JSI METAL= 0.41 (8) (INPUT = 1.00)

LICENSED PROFESSIONAL ENGINEER
R.M. TREVISAN
100136551
March 13th, 2017
PROVINCE OF ONTARIO

RECEIVED
TOWN OF MILTON
MAR 29, 2017
17-4990
BUILDING DIVISION

READ ALL NOTES ON THIS PAGE AND ON THE ENGINEERING NOTE PAGE ENP-1. THE NOTE PAGE IS AN INTEGRAL PART OF THIS DRAWING AS IT CONTAINS SPECIFICATIONS AND CRITERIA USED IN THE DESIGN OF THIS COMPONENT.

KOTT

JOB NAME	TRUSS NAME	QUANTITY	PLY	JOB DESC.	DRWG NO.
PT0317-054	GIRD18	1	2	TRUSS DESC. LECCO RIDGE-BLOCK 328	ENG JOB: PT0317-054

Kott Lumber Uxbridge, Stouffville, ON, CGC

Version 8.100 S Feb 9 2017 MiTek Industries, Inc. Mon Mar 13 09:56:52 2017 Page 1

ID:pF8Cn?9h9uHzAm5tCmlVl5yJJCp-M8CUW1s9pInIwcuO04LoeIVreTQAtKGM?H6gjKzbOnP

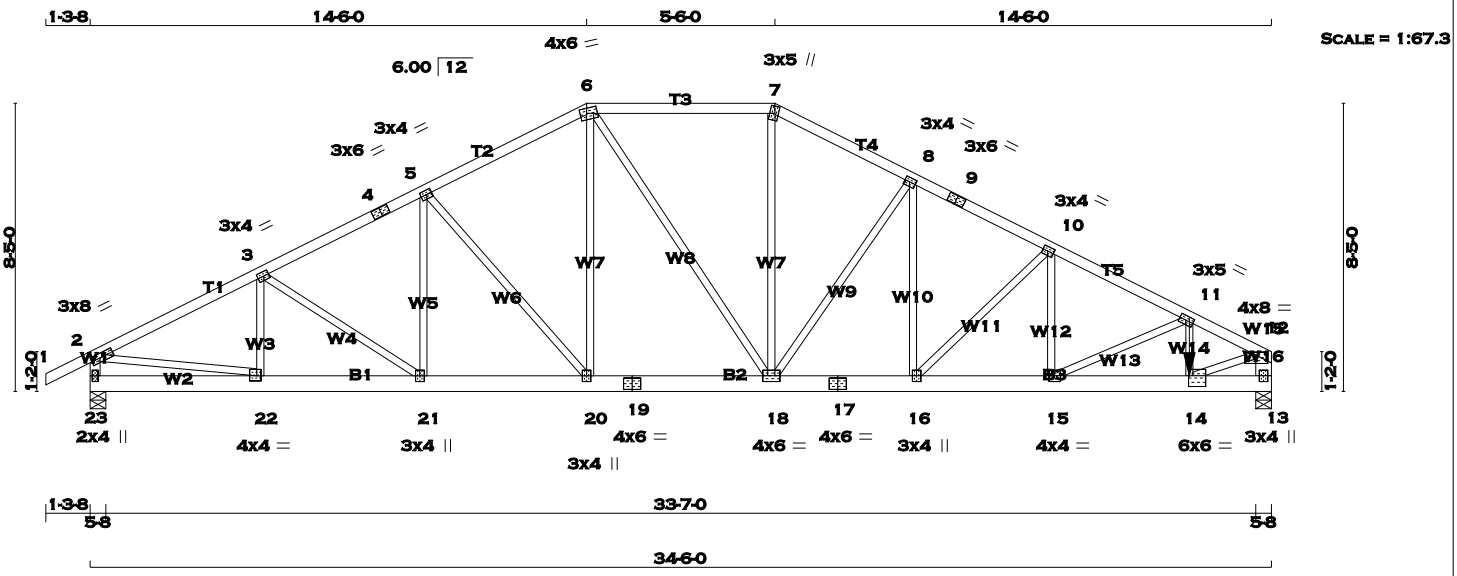

TOTAL WEIGHT = 2 X 173 = 346 lb [M]

LUMBER

N. L. G. A. RULES

CHORDS	SIZE		LUMBER	DESCR.
1 - 4	2x4	DRY	No.2	SPF
4 - 6	2x4	DRY	No.2	SPF
6 - 7	2x4	DRY	No.2	SPF
7 - 9	2x4	DRY	No.2	SPF
9 - 12	2x4	DRY	No.2	SPF
23 - 2	2x4	DRY	No.2	SPF
13 - 12	2x6	DRY	No.2	SPF
23 - 19	2x6	DRY	No.2	SPF
19 - 17	2x6	DRY	No.2	SPF
17 - 13	2x6	DRY	No.2	SPF
ALL WEBS EXCEPT	2x3	DRY	No.2	SPF

DRY: SEASONED LUMBER.

DESIGN CONSISTS OF 2 TRUSSES BUILT SEPARATELY THEN FASTENED TOGETHER AS FOLLOWS:

CHORDS #ROWS	SURFACE SPACING (IN)		LOAD(PLF)
TOP CHORDS : (0.122"X3") SPIRAL NAILS			
1- 4	1	12	TOP
4- 6	1	12	TOP
6- 7	1	12	TOP
7- 9	1	12	TOP
9- 12	1	12	TOP
23- 2	1	12	TOP
13- 12	2	12	TOP
BOTTOM CHORDS : (0.122"X3") SPIRAL NAILS			
23- 19	2	12	TOP
19- 17	2	12	TOP
17- 13	2	12	SIDE(56.3)
WEBS : (0.122"X3") SPIRAL NAILS			
2x3	1	6	

NAILS TO BE DRIVEN FROM ONE SIDE ONLY.

GIRDER NAILING ASSUMES NAILED HANGERS ARE FASTENED WITH MIN. 3-0 INCH NAILS.

TOP - COMPONENTS ARE LOADED FROM THE TOP AND MUST BE PLACED ON TOP EDGE OF ALL PLIES FOR THE LOAD TO BE TRANSFERRED TO EACH PLY.

SIDE - PLF SHOWN IS THE EQUIVALENT UDL APPLIED TO ONE SIDE THAT THE CORRESPONDING NAILING PATTERN SHALL BE CAPABLE OF TRANSFERING. REMAINING PLF MUST BE APPLIED ON THE OPPOSITE SIDE OR ON THE TOP.

LICENSED PROFESSIONAL ENGINEER
P.M. TREVISAN
100136551
March 13th, 2017
PROVINCE OF ONTARIO

DIMENSIONS, SUPPORTS AND LOADINGS SPECIFIED BY FABRICATOR TO BE VERIFIED BY BUILDING DESIGNER

BEARINGS

JT	FACTORED GROSS REACTION VERT	HORZ	MAXIMUM FACTORED GROSS REACTION DOWN	HORZ	UPLIFT	INPUT BRG IN-SX	REQRD BRG IN-SX
23	1950	0	1950	0	0	5-8	5-8
13	4567	0	4567	0	0	5-8	5-8

UNFACTORED REACTIONS

JT	1ST LCASE COMBINED	MAX./MIN. COMPONENT REACTIONS SNOW	LIVE	PERM.LIVE	WIND	DEAD	SOIL
23	1366	969 / 0	0 / 0	0 / 0	0 / 0	397 / 0	0 / 0
13	3205	2242 / 0	0 / 0	0 / 0	0 / 0	963 / 0	0 / 0

BEARING MATERIAL TO BE SPF NO.2 OR BETTER AT JOINT(S) 23, 13

BRACING

TOP CHORD TO BE SHEATHED OR MAX. PURLIN SPACING = 4.00 FT.
MAX. UNBRACED BOTTOM CHORD LENGTH = 10.00 FT. OR RIGID CEILING DIRECTLY APPLIED.

ALL PITCH BREAKS AND PERIMETER CORNER JOINTS MUST BE LATERALLY RESTRAINED.

LOADING

TOTAL LOAD CASES: (3)

CHORDS

MEMB. FR-TO	MAX. FACTORED FORCE (LBS)	FACTORED VERT. LOAD (PLF) FROM	TO	LC1	MAX CSI (LC)	MAX. UNBRAC LENGTH
1- 2	0 / 23	-77.3	-77.3	0.06 (1)	10.00	
2- 3	-2763 / 0	-77.3	-77.3	0.17 (1)	5.35	
3- 4	-2702 / 0	-77.3	-77.3	0.17 (1)	5.39	
4- 5	-2702 / 0	-77.3	-77.3	0.17 (1)	5.39	
5- 6	-2350 / 0	-77.3	-77.3	0.16 (1)	5.69	
6- 7	-2237 / 0	-77.3	-77.3	0.26 (1)	5.66	
7- 8	-2505 / 0	-77.3	-77.3	0.12 (1)	5.60	
8- 9	-3165 / 0	-77.3	-77.3	0.13 (1)	5.11	
9-10	-3165 / 0	-77.3	-77.3	0.13 (1)	5.11	
10-11	-4072 / 0	-77.3	-77.3	0.16 (1)	4.60	
11-12	-5645 / 0	-77.3	-77.3	0.15 (1)	4.00	
23- 2	-1894 / 0	0.0	0.0	0.10 (1)	7.81	
13-12	-4251 / 0	0.0	0.0	0.15 (1)	6.94	
23-22	0 / 0	-17.5	-17.5	0.03 (1)	10.00	
22-21	0 / 2485	-17.5	-17.5	0.19 (1)	10.00	
21-20	0 / 2417	-17.5	-17.5	0.17 (1)	10.00	
20-19	0 / 2092	-17.5	-17.5	0.16 (1)	10.00	
19-18	0 / 2092	-17.5	-17.5	0.16 (1)	10.00	
18-17	0 / 2831	-17.5	-17.5	0.21 (1)	10.00	
17-16	0 / 2831	-17.5	-17.5	0.21 (1)	10.00	
16-15	0 / 3654	-17.5	-17.5	0.26 (1)	10.00	
15-14	0 / 5048	-17.5	-17.5	0.47 (1)	10.00	
14-13	0 / 0	-130.1	-130.1	0.14 (1)	10.00	

WEBS

MEMB. FR-TO	MAX. FACTORED FORCE (LBS)	MAX CSI (LC)
22- 3	-328 / 0	0.04 (1)
3-21	-82 / 0	0.02 (1)
21- 5	0 / 141	0.02 (3)
5-20	-507 / 0	0.28 (1)
20- 6	0 / 469	0.06 (1)
6-18	0 / 260	0.03 (1)
18- 7	0 / 779	0.10 (1)
18- 8	-1065 / 0	0.54 (1)
16- 8	0 / 832	0.10 (1)
16-10	-1157 / 0	0.32 (1)
15-10	0 / 886	0.11 (1)
15-11	-1552 / 0	0.27 (1)
14-11	0 / 1161	0.14 (1)
2-22	0 / 2515	0.31 (1)
14-12	0 / 5306	0.66 (1)

FACTORED CONCENTRATED LOADS (LBS)

JT	LOC.	LC1	MAX-	MAX+	FACE	DIR.	TYPE
14	32-1-4	-2870	-2870	---	FRONT	VERT	TOTAL

RECEIVED
TOWN OF MILTON
MAR 29, 2017
17-4990
BUILDING DIVISION

READ ALL NOTES ON THIS PAGE AND ON THE ENGINEERING NOTE PAGE ENP-1. THE NOTE PAGE IS AN INTEGRAL PART OF THIS DRAWING AS IT CONTAINS SPECIFICATIONS AND CRITERIA USED IN THE DESIGN OF THIS COMPONENT.

DESIGN CRITERIA

*** SPECIAL LOADS ANALYSIS ***
GEOMETRY AND/OR BASIC LOADS CHANGED BY USER.
LOADS WERE DERIVED FROM USER INPUT
NO FURTHER MODIFICATIONS WERE MADE

SPECIFIED LOADS:

TOP	CH.	LL	=	23.3	PSF
		DL	=	3.0	PSF
BOT	CH.	LL	=	0.0	PSF
		DL	=	7.0	PSF
TOTAL	LOAD		=	33.3	PSF

SPACING = 24.0 IN. C/C

LOADING IN FLAT SECTION BASED ON A SLOPE OF 6.00/12

GIRDER TYPE: CStdGirder
START DISTANCE = 32-1-4
START SPAN CARRIED = 7-2-8
END DISTANCE = 34-6-0
END SPAN CARRIED = 7-2-8
END WALL WIDTH = 5-8
APPLIED TO FRONT SIDE OF BOTTOM CHORD.
- ADDT'L LOADS BASED ON 55 % OF GSL.

*** NON STANDARD GIRDER ***
ADDT'L USER-DEFINED LOADS APPLIED TO ALL LOAD CASES.

THIS TRUSS IS DESIGNED FOR RESIDENTIAL OR SMALL BUILDING REQUIREMENTS OF PART 9, NBCC 2010

THIS DESIGN COMPLIES WITH:
- PART 9 OF OBC 2012 , BCBC 2012 , ABC 2014
- CSA 086-09
- TPIC 2011

(55 % OF 27.2 P.S.F. G.S.L. PLUS 8.4 P.S.F. RAIN LOAD) EQUALS 23.3 P.S.F. SPECIFIED ROOF LIVE LOAD

ALLOWABLE DEFL.(LL)= L/360 (1.15")
CALCULATED VERT. DEFL.(LL) = L/ 999 (0.07")
ALLOWABLE DEFL.(TL)= L/360 (1.15")
CALCULATED VERT. DEFL.(TL) = L/ 999 (0.13")

CSI: TC=0.26 (6-7:1) , BC=0.47 (14-15:1) , WB=0.66 (12-14:1) , SSI=0.10 (13-14:1)

DOL LUMBER=1.00 NAIL=1.00 LS BEND=1.00 COMP=1.00 SHEAR=1.00 TENS= 1.00

COMPANION LIVE LOAD FACTOR = 0.50

TRUSS PLATE MANUFACTURER IS NOT RESPONSIBLE FOR QUALITY CONTROL IN THE TRUSS MANUFACTURING PLANT .

NAIL VALUES

PLATE	GRIP(DRY) (PSI) MAX	MIN	SHEAR (PLI) MAX	MIN	SECTION (PLI) MAX	MIN
MT20	618	354	1667	822	2284	1656

PLATE PLACEMENT TOL. = 0.250 inches

PLATE ROTATION TOL. = 5.0 Deg.

JSI GRIP= 0.89 (LL) (INPUT = 90)
JSI METAL= 0.73 (LL) (INPUT = 100)

KOTT

CONTINUED ON PAGE 2

JOB NAME	TRUSS NAME	QUANTITY	PLY	JOB DESC.	DRWG NO.
PT0317-054	GIRD19	1	1	TRUSS DESC. LECCO RIDGE-BLOCK 328	ENG JOB: PT0317-054

Kott Lumber Uxbridge, Stouffville, ON, CGC

Version 8.100 S Feb 9 2017 MiTek Industries, Inc. Mon Mar 13 09:56:53 2017 Page 1

ID:pF8Cn?9h9uHzAm5tCmlVl5yJJCp-qLmskNtnabv9YmTaans1BV21kssrcuaVDxrDFmzbOnO

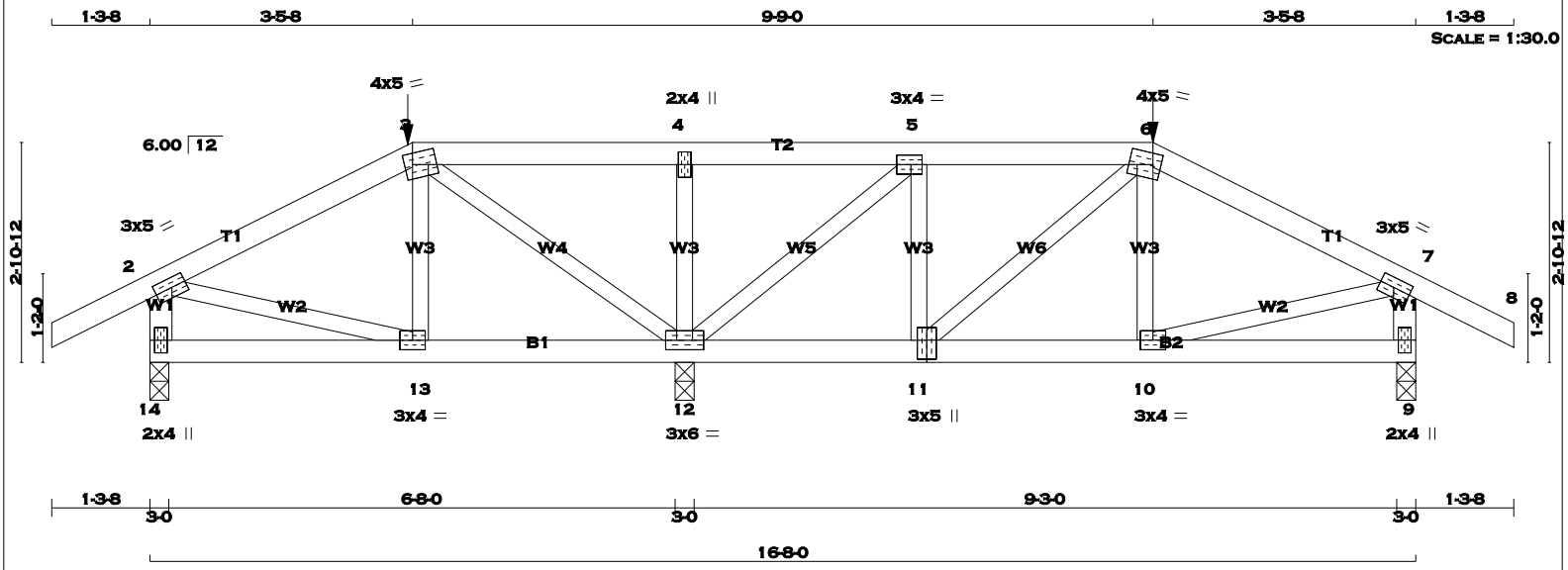

TOTAL WEIGHT = 66 lb [M]

LUMBER

N. L. G. A. RULES

CHORDS	SIZE		LUMBER	DESCR.
1 - 3	2x4	DRY	No.2	SPF
3 - 6	2x4	DRY	No.2	SPF
6 - 8	2x4	DRY	No.2	SPF
14 - 2	2x4	DRY	No.2	SPF
9 - 7	2x4	DRY	No.2	SPF
14 - 11	2x4	DRY	No.2	SPF
11 - 9	2x4	DRY	No.2	SPF
ALL WEBS EXCEPT	2x3	DRY	No.2	SPF

DRY: SEASONED LUMBER.

PLATES (table is in inches)

JT	TYPE	PLATES	W	LEN	Y	X
2	TMVW-t	MT20	3.0	5.0	1.50	2.25
3	TTWW-m	MT20	4.0	5.0	1.75	1.25
4	TMW+w	MT20	2.0	4.0		
5	TMWW-t	MT20	3.0	4.0	1.50	1.75
6	TTWW-m	MT20	4.0	5.0	1.75	1.25
7	TMVW-t	MT20	3.0	5.0	1.50	2.25
9	BMV1+p	MT20	2.0	4.0		
10	BMWW-t	MT20	3.0	4.0		
11	BSWW+l	MT20	3.0	5.0	3.00	1.50
12	BMWWW1-t	MT20	3.0	6.0		
13	BMWW-t	MT20	3.0	4.0		
14	BMV1+p	MT20	2.0	4.0		

A SIZE FOR SIZE SUBSTITUTION OF MITEK MII20 WITH TEE-LOK TL20 PLATES IS ALLOWED.

HANGERS NOTES

1) SPECIAL HANGER(S) OR CONNECTION(S) REQUIRED TO SUPPORT CONCENTRATED LOAD(S) 87.3 lbs FACTORED DOWN AT 13-2-8, AND 87.3 lbs FACTORED DOWN AT 3-5-8 ON TOP CHORD. DESIGN FOR UNSPECIFIED CONNECTION(S) IS DELEGATED TO THE BUILDING DESIGNER.

DIMENSIONS, SUPPORTS AND LOADINGS SPECIFIED BY FABRICATOR TO BE VERIFIED BY BUILDING DESIGNER

BEARINGS

JT	FACTORED GROSS REACTION VERT	HORZ	MAXIMUM GROSS REACTION DOWN	FACTORED HORZ	UPLIFT	INPUT BRG IN-SX	REQRD BRG IN-SX
14	427	0	427	0	0	3-0	3-0
12	1235	0	1235	0	0	3-0	3-0
9	619	0	619	0	0	3-0	3-0

UNFACTORED REACTIONS

JT	1ST LCASE COMBINED	MAX./MIN. COMPONENT REACTIONS SNOW	LIVE	PERM.LIVE	WIND	DEAD	SOIL
14	298	217 / 0	0 / 0	0 / 0	0 / 0	81 / 0	0 / 0
12	865	615 / 0	0 / 0	0 / 0	0 / 0	250 / 0	0 / 0
9	432	313 / 0	0 / 0	0 / 0	0 / 0	120 / 0	0 / 0

BEARING MATERIAL TO BE SPF NO.2 OR BETTER AT JOINT(S) 14, 12, 9

BRACING

TOP CHORD TO BE SHEATHED OR MAX. PURLIN SPACING = 6.25 FT.
MAX. UNBRACED BOTTOM CHORD LENGTH = 10.00 FT. OR RIGID CEILING DIRECTLY APPLIED.

ALL PITCH BREAKS AND PERIMETER CORNER JOINTS MUST BE LATERALLY RESTRAINED.

LOADING

TOTAL LOAD CASES: (3)

CHORDS

MEMB. FR-TO	MAX. FACTORED FORCE (LBS)	FACTORED VERT. LOAD (PLF) FROM	TO	LC1 MAX CSI (LC)	MAX. UNBRAC LENGTH
1- 2	0 / 23	-77.3	-77.3	0.11 (1)	10.00
2- 3	-230 / 0	-77.3	-77.3	0.17 (1)	6.25
3- 4	0 / 193	-100.7	-100.7	0.23 (1)	10.00
4- 5	0 / 193	-100.7	-100.7	0.23 (1)	10.00
5- 6	-353 / 0	-100.7	-100.7	0.13 (1)	6.25
6- 7	-520 / 0	-77.3	-77.3	0.18 (1)	6.25
7- 8	0 / 23	-77.3	-77.3	0.11 (1)	10.00
14- 2	-392 / 0	0.0	0.0	0.04 (1)	7.81
9- 7	-584 / 0	0.0	0.0	0.06 (1)	7.81
14-13	0 / 0	-22.8	-22.8	0.07 (3)	10.00
13-12	0 / 207	-22.8	-22.8	0.10 (1)	10.00
12-11	0 / 353	-22.8	-22.8	0.12 (1)	10.00
11-10	0 / 464	-22.8	-22.8	0.11 (1)	10.00
10- 9	0 / 0	-22.8	-22.8	0.07 (3)	10.00

WEBS

MEMB. FR-TO	MAX. FACTORED FORCE (LBS)	MAX CSI (LC)
13- 3	0 / 82	0.03 (3)
3-12	-493 / 0	0.16 (1)
12- 4	-391 / 0	0.07 (1)
12- 5	-715 / 0	0.20 (1)
11- 5	0 / 143	0.04 (3)
11- 6	-145 / 0	0.04 (1)
10- 6	-25 / 63	0.02 (3)
2-13	0 / 212	0.05 (1)
10- 7	0 / 478	0.12 (1)

FACTORED CONCENTRATED LOADS (LBS)

JT	LOC.	LC1	MAX-	MAX+	FACE	DIR.	TYPE
3	3-5-8	-87	-87	---	FRONT	VERT	TOTAL
6	13-2-8	-87	-87	---	FRONT	VERT	TOTAL

DESIGN CRITERIA

SPECIFIED LOADS:

TOP	CH.	LL	=	23.3	PSF
		DL	=	3.0	PSF
BOT	CH.	LL	=	0.0	PSF
		DL	=	7.0	PSF
TOTAL	LOAD		=	33.3	PSF

SPACING = 24.0 IN. C/C

LOADING IN FLAT SECTION BASED ON A SLOPE OF 6.00/12

GIRDER TYPE: CPrimeHip
SIDE SETBACK = 3-5-8
END SETBACK = 3-5-8
END WALL WIDTH = 3-0
CORNER FRAMING TYPE: CONVENTIONAL
END JACK TYPE: CONVENTIONAL
APPLIED TO FRONT SIDE
- ADDT'L LOADS BASED ON 55 % OF GSL.

THIS TRUSS IS DESIGNED FOR RESIDENTIAL OR SMALL BUILDING REQUIREMENTS OF PART 9, NBCC 2010

THIS DESIGN COMPLIES WITH:
- PART 9 OF OBC 2012 , BCBC 2012 , ABC 2014
- CSA 086-09
- TPIC 2011

(55 % OF 27.2 P.S.F. G.S.L. PLUS 8.4 P.S.F. RAIN LOAD) EQUALS 23.3 P.S.F. SPECIFIED ROOF LIVE LOAD

ALLOWABLE DEFL.(LL)= L/360 (0.32")
CALCULATED VERT. DEFL.(LL) = L/ 999 (0.01")
ALLOWABLE DEFL.(TL)= L/360 (0.32")
CALCULATED VERT. DEFL.(TL) = L/ 999 (0.02")

CSI: TC=0.23 (3-4:1) , BC=0.12 (11-12:1) , WB=0.20 (5-12:1) , SSI=0.19 (3-4:1)

DOL LUMBER=1.00 NAIL=1.00 LS BEND=1.00 COMP=1.00 SHEAR=1.00 TENS= 1.00

COMPANION LIVE LOAD FACTOR = 0.50

TRUSS PLATE MANUFACTURER IS NOT RESPONSIBLE FOR QUALITY CONTROL IN THE TRUSS MANUFACTURING PLANT .

NAIL VALUES

PLATE	GRIP(DRY) (PSI) MAX	MIN	SHEAR (PLI) MAX	MIN	SECTION (PLI) MAX	MIN
MT20	618	354	1667	822	2284	1656

PLATE PLACEMENT TOL. = 0.250 inches

PLATE ROTATION TOL. = 0.5 Deg.

JSI GRIP= 0.90 (5) (INPUT = 0.90)
JSI METAL= 0.20 (5) (INPUT = 1.00)

LICENSED PROFESSIONAL ENGINEER
P.M. TREVISAN
100136551
March 13th, 2017
PROVINCE OF ONTARIO

RECEIVED
TOWN OF MILTON
MAR 29, 2017
17-4990
BUILDING DIVISION

READ ALL NOTES ON THIS PAGE AND ON THE ENGINEERING NOTE PAGE ENP-1. THE NOTE PAGE IS AN INTEGRAL PART OF THIS DRAWING AS IT CONTAINS SPECIFICATIONS AND CRITERIA USED IN THE DESIGN OF THIS COMPONENT.

KOTT

JOB NAME	TRUSS NAME	QUANTITY	PLY	JOB DESC.	DRWG NO.
PT0317-054	GIRD20	1	2	TRUSS DESC. LECCO RIDGE-BLOCK 328	ENG JOB: PT0317-054

Kott Lumber Uxbridge, Stouffville, ON, CGC

Version 8.100 S Feb 9 2017 MiTek Industries, Inc. Mon Mar 13 09:56:53 2017 Page 1

ID:pF8Cn?9h9uHzAm5tCmlVl5yJJCp-qLmskNtnabv9YmTaans1BV2?0spuctoVDxrDFmzbOnO

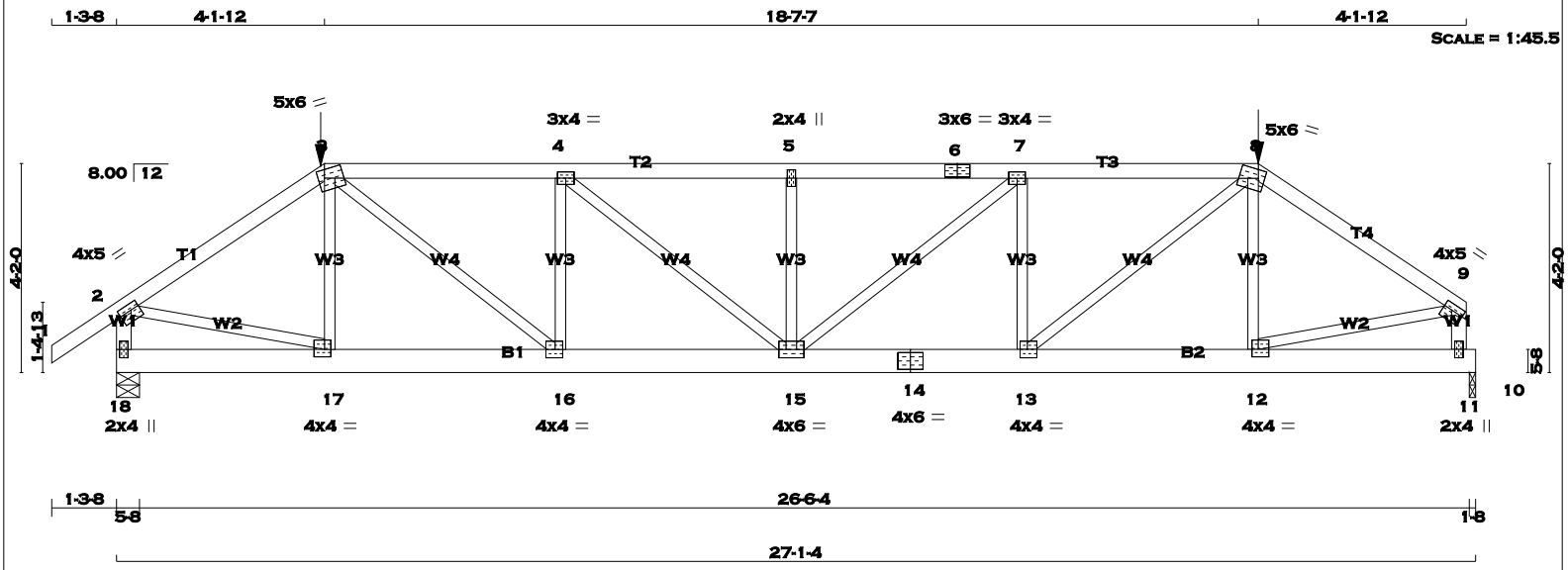

TOTAL WEIGHT = 2 X 124 = 247 lb [M]

LUMBER

N. L. G. A. RULES

CHORDS	SIZE		LUMBER	DESCR.
1 - 3	2x4	DRY	No.2	SPF
3 - 6	2x4	DRY	No.2	SPF
6 - 8	2x4	DRY	No.2	SPF
8 - 9	2x4	DRY	No.2	SPF
18 - 2	2x4	DRY	No.2	SPF
11 - 9	2x4	DRY	No.2	SPF
18 - 14	2x6	DRY	No.2	SPF
14 - 10	2x6	DRY	No.2	SPF
ALL WEBS EXCEPT	2x3	DRY	No.2	SPF

DRY: SEASONED LUMBER.

DESIGN CONSISTS OF 2 TRUSSES BUILT SEPARATELY THEN FASTENED TOGETHER AS FOLLOWS:

CHORDS #ROWS	SURFACE SPACING (IN)		LOAD(PLF)
TOP CHORDS : (0.122"X3") SPIRAL NAILS			
1- 3	1	12	SIDE(0.0)
3- 6	1	12	SIDE(34.2)
6- 8	1	12	SIDE(34.2)
8- 9	1	12	SIDE(0.0)
18- 2	1	12	TOP
11- 9	1	12	TOP
BOTTOM CHORDS : (0.122"X3") SPIRAL NAILS			
18- 14	2	12	SIDE(8.7)
14- 10	2	12	SIDE(8.7)
WEBS : (0.122"X3") SPIRAL NAILS			
2x3	1	6	

NAILS TO BE DRIVEN FROM ONE SIDE ONLY.

GIRDER NAILING ASSUMES NAILED HANGERS ARE FASTENED WITH MIN. 3-0 INCH NAILS.

TOP - COMPONENTS ARE LOADED FROM THE TOP AND MUST BE PLACED ON TOP EDGE OF ALL PLIES FOR THE LOAD TO BE TRANSFERRED TO EACH PLY.

SIDE - PLF SHOWN IS THE EQUIVALENT UDL APPLIED TO ONE SIDE THAT THE CORRESPONDING NAILING PATTERN SHALL BE CAPABLE OF TRANSFERING. REMAINING PLF MUST BE APPLIED ON THE OPPOSITE SIDE OR ON THE TOP.

PLATES (table is in inches)

JT	TYPE	PLATES	W	LEN	Y	X
2	TMVW-t	MT20	4.0	5.0	1.50	2.00

DIMENSIONS, SUPPORTS AND LOADINGS SPECIFIED BY FABRICATOR TO BE VERIFIED BY BUILDING DESIGNER

BEARINGS

JT	FACTORED GROSS REACTION VERT	HORZ	MAXIMUM FACTORED GROSS REACTION DOWN	HORZ	UPLIFT	INPUT BRG IN-SX	REQRD BRG IN-SX
18	2487	0	2487	0	0	5-8	5-8
10	2362	0	2362	0	0	1-8	1-8

UNFACTORED REACTIONS

JT	1ST LCASE COMBINED	MAX./MIN. COMPONENT REACTIONS SNOW	LIVE	PERM.LIVE	WIND	DEAD	SOIL
18	1744	1228 / 0	0 / 0	0 / 0	0 / 0	516 / 0	0 / 0
10	1659	1153 / 0	0 / 0	0 / 0	0 / 0	506 / 0	0 / 0

BEARING MATERIAL TO BE SPF NO.2 OR BETTER AT JOINT(S) 18, 10

BRACING

TOP CHORD TO BE SHEATHED OR MAX. PURLIN SPACING = 4.20 FT.
MAX. UNBRACED BOTTOM CHORD LENGTH = 10.00 FT. OR RIGID CEILING DIRECTLY APPLIED.

ALL PITCH BREAKS AND PERIMETER CORNER JOINTS MUST BE LATERALLY RESTRAINED.

LOADING

TOTAL LOAD CASES: (3)

CHORDS

MEMB. FR-TO	MAX. FACTORED FORCE (LBS)	FACTORED VERT. LOAD (PLF) FROM	TO	LC1 CSI (LC)	MAX UNBRAC LENGTH
1- 2	0 / 29	-77.3	-77.3	0.06 (1)	10.00
2- 3	-2877 / 0	-77.3	-77.3	0.17 (1)	5.26
3- 4	-4002 / 0	-145.8	-145.8	0.33 (1)	4.42
4- 5	-4480 / 0	-145.8	-145.8	0.34 (1)	4.20
5- 6	-4480 / 0	-145.8	-145.8	0.34 (1)	4.20
6- 7	-4480 / 0	-145.8	-145.8	0.34 (1)	4.20
7- 8	-4039 / 0	-145.8	-145.8	0.33 (1)	4.40
8- 9	-3013 / 0	-77.3	-77.3	0.17 (1)	5.16
18- 2	-2428 / 0	0.0	0.0	0.14 (1)	7.23
11- 9	-2425 / 0	0.0	0.0	0.14 (1)	7.23
18-17	0 / 0	-33.0	-33.0	0.04 (3)	10.00
17-16	0 / 2379	-33.0	-33.0	0.18 (1)	10.00
16-15	0 / 4002	-33.0	-33.0	0.30 (1)	10.00
15-14	0 / 4039	-33.0	-33.0	0.31 (1)	10.00
14-13	0 / 4039	-33.0	-33.0	0.31 (1)	10.00
13-12	0 / 2496	-33.0	-33.0	0.22 (1)	10.00
12-11	0 / 0	-33.0	-33.0	0.16 (1)	10.00
11-10	0 / 0	-33.0	-33.0	0.16 (1)	10.00

WEBS

MEMB. FR-TO	MAX. FACTORED FORCE (LBS)	MAX CSI (LC)
17- 3	-390 / 21	0.05 (1)
3-16	0 / 2081	0.26 (1)
16- 4	-1156 / 0	0.15 (1)
4-15	0 / 619	0.08 (1)
15- 5	-616 / 0	0.08 (1)
15- 7	0 / 571	0.07 (1)
13- 7	-1124 / 0	0.15 (1)
13- 8	0 / 1979	0.24 (1)
12- 8	-261 / 59	0.03 (1)
2-17	0 / 2455	0.30 (1)
12- 9	0 / 2571	0.32 (1)

FACTORED CONCENTRATED LOADS (LBS)

JT	LOC.	LC1	MAX-	MAX+	FACE	DIR.	TYPE
3	4-1-12	-241	-241	---	FRONT	VERT	TOTAL
8	22-9-4	-251	-251	---	FRONT	VERT	TOTAL

RECEIVED
TOWN OF MILTON
MAR 29, 2017
17-4990
BUILDING DIVISION

READ ALL NOTES ON THIS PAGE AND ON THE ENGINEERING NOTE PAGE ENP-1. THE NOTE PAGE IS AN INTEGRAL PART OF THIS DRAWING AS IT CONTAINS SPECIFICATIONS AND CRITERIA USED IN THE DESIGN OF THIS COMPONENT.

DESIGN CRITERIA

SPECIFIED LOADS:

TOP CH.	LL	=	23.3	PSF
	DL	=	3.0	PSF
BOT CH.	LL	=	0.0	PSF
	DL	=	7.0	PSF
TOTAL LOAD		=	33.3	PSF

SPACING = 24.0 IN. C/C

LOADING IN FLAT SECTION BASED ON A SLOPE OF 6.00/12

GIRDER TYPE: CPrimeHip
LEFT SETBACK = 4-1-12
RIGHT SETBACK = 4-4-0
END SETBACK = 6-0-0
END WALL WIDTH = 5-8
CORNER FRAMING TYPE: CONVENTIONAL
END JACK TYPE: CONVENTIONAL
APPLIED TO FRONT SIDE
- ADDT'L LOADS BASED ON 55 % OF GSL.

THIS TRUSS IS DESIGNED FOR RESIDENTIAL OR SMALL BUILDING REQUIREMENTS OF PART 9, NBCC 2010

THIS DESIGN COMPLIES WITH:
- PART 9 OF OBC 2012 , BCBC 2012 , ABC 2014
- CSA 086-09
- TPIC 2011

(55 % OF 27.2 P.S.F. G.S.L. PLUS 8.4 P.S.F. RAIN LOAD) EQUALS 23.3 P.S.F. SPECIFIED ROOF LIVE LOAD

ALLOWABLE DEFL.(LL)= L/360 (0.90")
CALCULATED VERT. DEFL.(LL) = L/ 999 (0.10")
ALLOWABLE DEFL.(TL)= L/360 (0.90")
CALCULATED VERT. DEFL.(TL) = L/ 999 (0.17")

CSI: TC=0.34 (5-7:1) , BC=0.31 (13-15:1) , WB=0.32 (9-12:1) , SSI=0.78 (10-11:1)

DOL LUMBER=1.00 NAIL=1.00 LS BEND=1.00 COMP=1.00 SHEAR=1.00 TENS= 1.00

COMPANION LIVE LOAD FACTOR = 0.50

TRUSS PLATE MANUFACTURER IS NOT RESPONSIBLE FOR QUALITY CONTROL IN THE TRUSS MANUFACTURING PLANT .

NAIL VALUES

PLATE	GRIP(DRY) (PSI) MAX	MIN	SHEAR (PLI) MAX	MIN	SECTION (PLI) MAX	MIN
MT20	618	354	1667	822	2284	1656

PLATE PLACEMENT TOL. = 0.250 inches

PLATE ROTATION TOL. = 5.0 Deg.

JSI GRIP= 0.89 (12) (INPUT = 0.90)
JSI METAL= 0.47 (12) (INPUT = 1.00)

KOTT

CONTINUED ON PAGE 2

JOB NAME	TRUSS NAME	QUANTITY	PLY	JOB DESC.	DRWG NO.
PT0317-054	GIRD21	1	2	TRUSS DESC. LECCO RIDGE-BLOCK 328	ENG JOB: PT0317-054

Kott Lumber Uxbridge, Stouffville, ON, CGC

Version 8.100 S Feb 9 2017 MiTek Industries, Inc. Mon Mar 13 09:56:54 2017 Page 1

ID:pF8Cn?9h9uHzAm5tCmlVl5yJJCp-IXKExjuPLv10Aw2m8VNGjjaCuG8LLJIeSbbmoCzbOnN

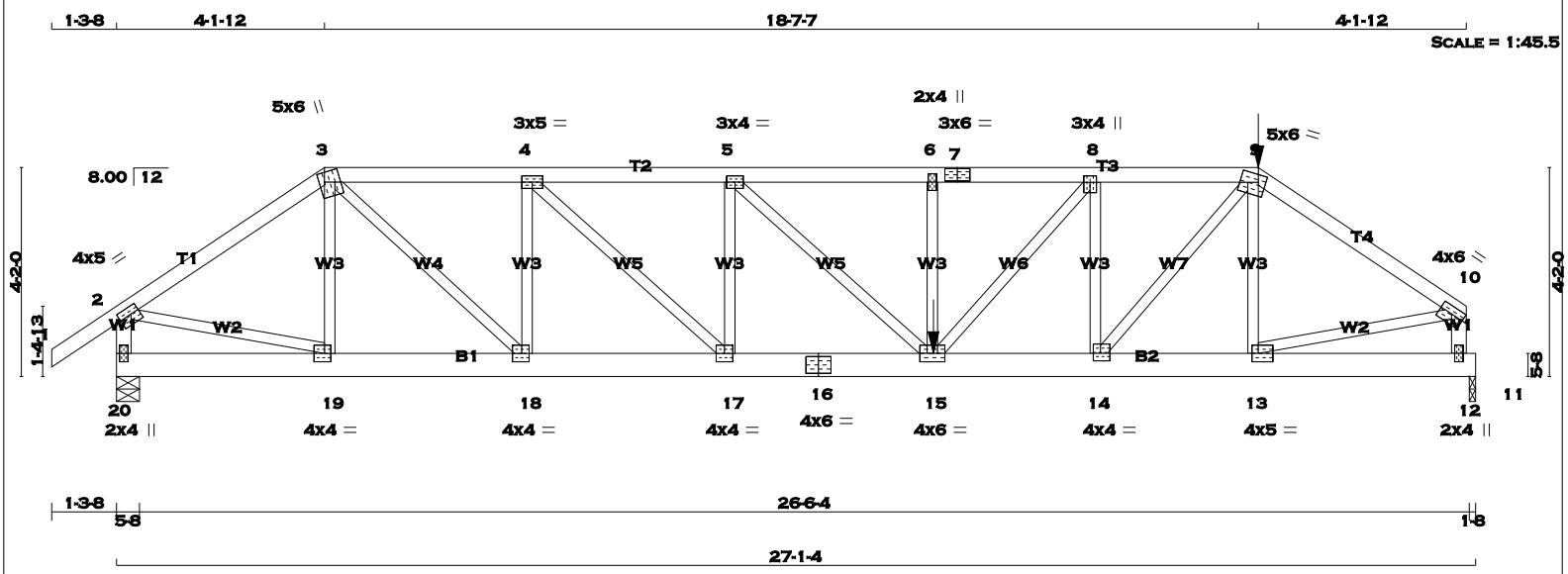

TOTAL WEIGHT = 2 X 128 = 256 lb [M]

LUMBER

N. L. G. A. RULES

CHORDS	SIZE		LUMBER	DESCR.
1 - 3	2x4	DRY	No.2	SPF
3 - 7	2x4	DRY	No.2	SPF
7 - 9	2x4	DRY	No.2	SPF
9 - 10	2x4	DRY	No.2	SPF
20 - 2	2x4	DRY	No.2	SPF
12 - 10	2x4	DRY	No.2	SPF
20 - 16	2x6	DRY	No.2	SPF
16 - 11	2x6	DRY	No.2	SPF
ALL WEBS EXCEPT	2x3	DRY	No.2	SPF

DRY: SEASONED LUMBER.

DESIGN CONSISTS OF 2 TRUSSES BUILT SEPARATELY THEN FASTENED TOGETHER AS FOLLOWS:

CHORDS #ROWS	SURFACE SPACING (IN)		LOAD(PLF)
TOP CHORDS : (0.122"X3") SPIRAL NAILS			
1- 3	1	12	TOP
3- 7	1	12	SIDE(34.2)
7- 9	1	12	SIDE(34.2)
9- 10	1	12	SIDE(0.0)
20- 2	1	12	TOP
12- 10	1	12	TOP
BOTTOM CHORDS : (0.122"X3") SPIRAL NAILS			
20- 16	2	12	TOP
16- 11	2	12	SIDE(8.7)
WEBS : (0.122"X3") SPIRAL NAILS			
2x3	1	6	

NAILS TO BE DRIVEN FROM ONE SIDE ONLY.

GIRDER NAILING ASSUMES NAILED HANGERS ARE FASTENED WITH MIN. 3-0 INCH NAILS.

TOP - COMPONENTS ARE LOADED FROM THE TOP AND MUST BE PLACED ON TOP EDGE OF ALL PLIES FOR THE LOAD TO BE TRANSFERRED TO EACH PLY.

SIDE - PLF SHOWN IS THE EQUIVALENT UDL APPLIED TO ONE SIDE THAT THE CORRESPONDING NAILING PATTERN SHALL BE CAPABLE OF TRANSFERING. REMAINING PLF MUST BE APPLIED ON THE OPPOSITE SIDE OR ON THE TOP.

PLATES (table is in inches)

JT	TYPE	PLATES	W	LEN	Y	X
2	TMVW-t	MT20	4.0	5.0	1.75	2.00

DIMENSIONS, SUPPORTS AND LOADINGS SPECIFIED BY FABRICATOR TO BE VERIFIED BY BUILDING DESIGNER

BEARINGS

JT	FACTORED GROSS REACTION VERT	HORZ	MAXIMUM FACTORED GROSS REACTION DOWN	HORZ	UPLIFT	INPUT BRG IN-SX	REQRD BRG IN-SX
20	2094	0	2094	0	0	5-8	5-8
11	2692	0	2692	0	0	1-8	1-8

UNFACTORED REACTIONS

JT	1ST LCASE COMBINED	MAX./MIN. COMPONENT REACTIONS SNOW	LIVE	PERM.LIVE	WIND	DEAD	SOIL
20	1467	1042 / 0	0 / 0	0 / 0	0 / 0	425 / 0	0 / 0
11	1891	1313 / 0	0 / 0	0 / 0	0 / 0	578 / 0	0 / 0

BEARING MATERIAL TO BE SPF NO.2 OR BETTER AT JOINT(S) 20, 11

BRACING

TOP CHORD TO BE SHEATHED OR MAX. PURLIN SPACING = 4.09 FT.
MAX. UNBRACED BOTTOM CHORD LENGTH = 10.00 FT. OR RIGID CEILING DIRECTLY APPLIED.

ALL PITCH BREAKS AND PERIMETER CORNER JOINTS MUST BE LATERALLY RESTRAINED.

LOADING

TOTAL LOAD CASES: (3)

CHORDS

MEMB. FR-TO	MAX. FACTORED FORCE (LBS)	FACTORED VERT. LOAD (PLF) FROM	TO	LC1 MAX CSI (LC)
1- 2	0 / 29	-77.3	-77.3	0.06 (1)
2- 3	-2390 / 0	-77.3	-77.3	0.16 (1)
3- 4	-3476 / 0	-77.3	-77.3	0.14 (1)
4- 5	-4559 / 0	-77.3	-77.3	0.17 (1)
5- 6	-5190 / 0	-77.3	-77.3	0.17 (1)
6- 7	-5190 / 0	-145.8	-145.8	0.21 (1)
7- 8	-5190 / 0	-145.8	-145.8	0.21 (1)
8- 9	-4297 / 0	-145.8	-145.8	0.18 (1)
9-10	-3473 / 0	-77.3	-77.3	0.18 (1)
20- 2	-2062 / 0	0.0	0.0	0.12 (1)
12-10	-2771 / 0	0.0	0.0	0.15 (1)
20-19	0 / 0	-17.5	-17.5	0.02 (3)
19-18	0 / 1975	-17.5	-17.5	0.14 (1)
18-17	0 / 3476	-17.5	-17.5	0.25 (1)
17-16	0 / 4559	-17.5	-17.5	0.36 (1)
16-15	0 / 4559	-17.5	-17.5	0.36 (1)
15-14	0 / 4297	-33.0	-33.0	0.34 (1)
14-13	0 / 2876	-33.0	-33.0	0.24 (1)
13-12	0 / 0	-33.0	-33.0	0.19 (1)
12-11	0 / 0	-33.0	-33.0	0.19 (1)

WEBS

MEMB. FR-TO	MAX. FACTORED FORCE (LBS)	MAX UNBRAC LENGTH	MEMB. FR-TO	MAX. FACTORED FORCE (LBS)	MAX CSI (LC)
19- 3	-374 / 0	10.00			
18- 4	-1352 / 0	4.91			
17- 5	-902 / 0	4.37			
15-15	0 / 866	4.09			
15- 6	-366 / 0	4.09			
15- 8	0 / 1373	4.46			
14- 8	-1562 / 0	4.86			
14- 9	0 / 2179	7.70			
13- 9	-340 / 20	6.87			
2-19	0 / 2039				
13-10	0 / 2963				

FACTORED CONCENTRATED LOADS (LBS)

JT	LOC.	LC1	MAX-	MAX+	FACE	DIR.	TYPE
9	22-9-4	-248	-248	---	FRONT	VERT	TOTAL
15	16-3-8	-1262	-1262	---	FRONT	VERT	TOTAL

RECEIVED
TOWN OF MILTON
MAR 29, 2017
17-4990
BUILDING DIVISION

READ ALL NOTES ON THIS PAGE AND ON THE ENGINEERING NOTE PAGE ENP-1. THE NOTE PAGE IS AN INTEGRAL PART OF THIS DRAWING AS IT CONTAINS SPECIFICATIONS AND CRITERIA USED IN THE DESIGN OF THIS COMPONENT.

DESIGN CRITERIA

*** SPECIAL LOADS ANALYSIS ***
GEOMETRY AND/OR BASIC LOADS CHANGED BY USER.
LOADS WERE DERIVED FROM USER INPUT
NO FURTHER MODIFICATIONS WERE MADE

SPECIFIED LOADS:

TOP	CH.	LL	=	23.3	PSF
		DL	=	3.0	PSF
BOT	CH.	LL	=	0.0	PSF
		DL	=	7.0	PSF
TOTAL	LOAD		=	33.3	PSF

SPACING = 24.0 IN. C/C

LOADING IN FLAT SECTION BASED ON A SLOPE OF 6.00/12

GIRDER TYPE: CPrimeHip
LEFT SETBACK = 4-1-12
RIGHT SETBACK = 4-3-6
END SETBACK = 6-0-0
END WALL WIDTH = 5-8
CORNER FRAMING TYPE: CONVENTIONAL
END JACK TYPE: CONVENTIONAL
APPLIED TO FRONT SIDE
- ADDT'L LOADS BASED ON 55 % OF GSL.
LOADS APPLIED TO FIRST 10-9-6 OF SPAN MEASURED FROM THE RIGHT.

*** NON STANDARD GIRDER ***
ADDT'L USER-DEFINED LOADS APPLIED TO ALL LOAD CASES.

THIS TRUSS IS DESIGNED FOR RESIDENTIAL OR SMALL BUILDING REQUIREMENTS OF PART 9, NBCC 2010

THIS DESIGN COMPLIES WITH:
- PART 9 OF OBC 2012 , BCBC 2012 , ABC 2014
- CSA 086-09
- TPIC 2011

(55 % OF 27.2 P.S.F. G.S.L. PLUS 8.4 P.S.F. RAIN LOAD) EQUALS 23.3 P.S.F. SPECIFIED ROOF LIVE LOAD

ALLOWABLE DEFL.(LL)= L/360 (0.90")
CALCULATED VERT. DEFL.(LL) = L/ 999 (0.10")
ALLOWABLE DEFL.(TL)= L/360 (0.90")
CALCULATED VERT. DEFL.(TL) = L/ 999 (0.18")

CSI: TC=0.21 (6-8:1) , BC=0.36 (15-17:1) , WB=0.37 (10-13:1) , SSI=0.89 (11-12:1)

DOL LUMBER=1.00 NAIL=1.00 LS BEND=1.00 COMP=1.00 SHEAR=1.00 TENS= 1.00

COMPANION LIVE LOAD FACTOR = 0.50

TRUSS PLATE MANUFACTURER IS NOT RESPONSIBLE FOR QUALITY CONTROL IN THE TRUSS MANUFACTURING PLANT .

NAIL VALUES

PLATE	GRIP(DRY) (PSI) MAX	MIN	SHEAR (PLI) MAX	MIN	SECTION (PLI) MAX	MIN
MT20	618	354	1667	822	2284	1656

PLATE PLACEMENT TOL. = 0.250 inches

PLATE ROTATION TOL. = 30 Deg

CONTINUED ON PAGE 2

SCALE = 1:30.2

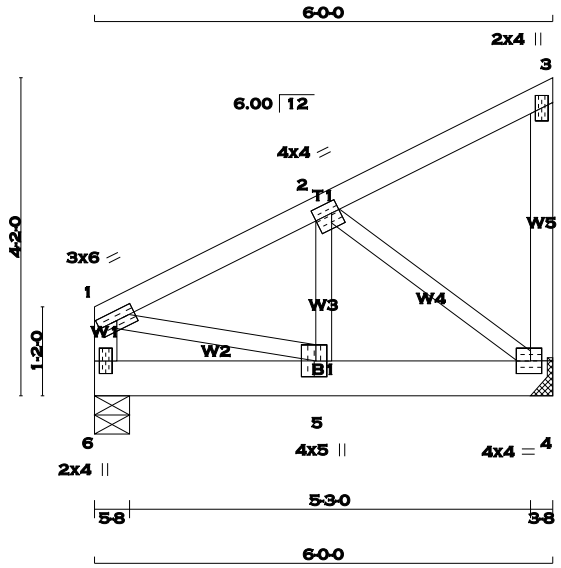

TOTAL WEIGHT = 29 lb

[M]

LUMBER

N. L. G. A. RULES

CHORDS	SIZE		LUMBER	DESCR.
1 - 3	2x4	DRY	No.2	SPF
4 - 3	2x4	DRY	No.2	SPF
6 - 1	2x4	DRY	No.2	SPF
6 - 4	2x6	DRY	No.2	SPF
ALL WEBS EXCEPT	2x3	DRY	No.2	SPF

DRY: SEASONED LUMBER.

PLATES (table is in inches)

JT	TYPE	PLATES	W	LEN	Y	X
1	TMVW-t	MT20	3.0	6.0		
2	TMWW-t	MT20	4.0	4.0	1.75	1.25
3	TMV+p	MT20	2.0	4.0		
4	BMVW1-t	MT20	4.0	4.0	2.00	1.75
5	BMWW+t	MT20	4.0	5.0	2.50	1.75
6	BMV1+p	MT20	2.0	4.0		

A SIZE FOR SIZE SUBSTITUTION OF MITEK MII20 WITH TEE-LOK TL20 PLATES IS ALLOWED.

DIMENSIONS, SUPPORTS AND LOADINGS SPECIFIED BY FABRICATOR TO BE VERIFIED BY BUILDING DESIGNER

BEARINGS

JT	FACTORED GROSS REACTION VERT	HORZ	MAXIMUM FACTORED GROSS REACTION DOWN	HORZ	UPLIFT	INPUT BRG IN-SX	REQRD BRG IN-SX
4	1263	0	1263	0	0	HANGER BY OTHERS MIN. SEAT SIZE: 3-8	
6	1263	0	1263	0	0	5-8	5-8

UNFACTORED REACTIONS

JT	1ST LCASE COMBINED	SNOW	LIVE	PERM.LIVE	WIND	DEAD	SOIL
	MAX./MIN. COMPONENT REACTIONS						
4	886	620 / 0	0 / 0	0 / 0	0 / 0	266 / 0	0 / 0
6	886	620 / 0	0 / 0	0 / 0	0 / 0	266 / 0	0 / 0

BEARING MATERIAL TO BE SPF NO.2 OR BETTER AT JOINT(S) 6

BRACING

TOP CHORD TO BE SHEATHED OR MAX. PURLIN SPACING = 5.93 FT.
MAX. UNBRACED BOTTOM CHORD LENGTH = 10.00 FT. OR RIGID CEILING DIRECTLY APPLIED.

ALL PITCH BREAKS AND PERIMETER CORNER JOINTS MUST BE LATERALLY RESTRAINED.

LOADING

TOTAL LOAD CASES: (3)

CHORDS

MEMB. FR-TO	MAX. FACTORED FORCE (LBS)	VERT. LOAD LC1 (PLF) FROM	TO	MAX CSI (LC)	MAX. UNBRAC LENGTH
1- 2	-1076 / 0	-77.3	-77.3	0.11 (1)	5.93
2- 3	-10 / 0	-77.3	-77.3	0.10 (1)	10.00
4- 3	-95 / 0	0.0	0.0	0.02 (1)	7.81
6- 1	-830 / 0	0.0	0.0	0.09 (1)	7.81
6- 5	0 / 0	-343.5	-343.5	0.20 (1)	10.00
5- 4	0 / 971	-343.5	-343.5	0.33 (1)	10.00

WEBS

MEMB. FR-TO	MAX. FACTORED FORCE (LBS)	MAX CSI (LC)
5- 2	0 / 946	0.23 (1)
2- 4	-1218 / 0	0.30 (1)
1- 5	0 / 1002	0.25 (1)

DESIGN CRITERIA

SPECIFIED LOADS:

TOP CH.	LL	=	23.3	PSF
	DL	=	3.0	PSF
BOT CH.	LL	=	0.0	PSF
	DL	=	7.0	PSF
TOTAL LOAD		=	33.3	PSF

SPACING = 24.0 IN. C/C

GIRDER TYPE: CStdGirder
START DISTANCE = 0-0
START SPAN CARRIED = 16-2-8
END DISTANCE = 6-0-0
END SPAN CARRIED = 16-2-8
END WALL WIDTH = 5-8
APPLIED TO FRONT SIDE OF BOTTOM CHORD.
- ADDT'L LOADS BASED ON 55 % OF GSL.

THIS TRUSS IS DESIGNED FOR RESIDENTIAL OR SMALL BUILDING REQUIREMENTS OF PART 9, NBCC 2010

THIS DESIGN COMPLIES WITH:
- PART 9 OF OBC 2012 , BCBC 2012 , ABC 2014
- CSA 086-09
- TPIC 2011

(55 % OF 27.2 P.S.F. G.S.L. PLUS 8.4 P.S.F. RAIN LOAD) EQUALS 23.3 P.S.F. SPECIFIED ROOF LIVE LOAD

ALLOWABLE DEFL.(LL)= L/360 (0.20")
CALCULATED VERT. DEFL.(LL) = L/ 999 (0.01")
ALLOWABLE DEFL.(TL)= L/360 (0.20")
CALCULATED VERT. DEFL.(TL) = L/ 999 (0.02")

CSI: TC=0.11 (1-2:1) , BC=0.33 (4-5:1) , WB=0.30 (2-4:1) , SSI=0.40 (5-6:1)

DOL LUMBER=1.00 NAIL=1.00 LS BEND=1.00 COMP=1.00 SHEAR=1.00 TENS= 1.00

COMPANION LIVE LOAD FACTOR = 0.50

TRUSS PLATE MANUFACTURER IS NOT RESPONSIBLE FOR QUALITY CONTROL IN THE TRUSS MANUFACTURING PLANT .

NAIL VALUES

PLATE	GRIP(DRY) (PSI) MAX	MIN	SHEAR (PLI) MAX	MIN	SECTION (PLI) MAX	MIN
MT20	618	354	1667	822	2284	1656

PLATE PLACEMENT TOL. = 0.250 inches

PLATE ROTATION TOL. = 5.0 Deg.

JSI GRIP= 0.90 (4) (INPUT = 0.90)
JSI METAL= 0.36 (4) (INPUT = 1.00)

LICENSED PROFESSIONAL ENGINEER
R.M. TREVISAN
100136551
March 13th, 2017
PROVINCE OF ONTARIO

RECEIVED
TOWN OF MILTON
MAR 29, 2017
17-4990
BUILDING DIVISION

READ ALL NOTES ON THIS PAGE AND ON THE ENGINEERING NOTE PAGE ENP-1. THE NOTE PAGE IS AN INTEGRAL PART OF THIS DRAWING AS IT CONTAINS SPECIFICATIONS AND CRITERIA USED IN THE DESIGN OF THIS COMPONENT.

KOTT

JOB NAME	TRUSS NAME	QUANTITY	PLY	JOB DESC.	DRWG NO.
PT0317-054	J01	22	1	TRUSS DESC. LECCO RIDGE-BLOCK 328	ENG JOB: PT0317-054

Kott Lumber Uxbridge, Stouffville, ON, CGC

Version 8.100 S Feb 9 2017 MiTek Industries, Inc. Mon Mar 13 09:56:54 2017 Page 1

ID:pF8Cn?9h9uHzAm5tCmlVl5yJJCp-IXKExjuPLv10Aw2m8VNGjja8jGByLO0eSbbmoCzbOnN

SCALE = 1:28.8

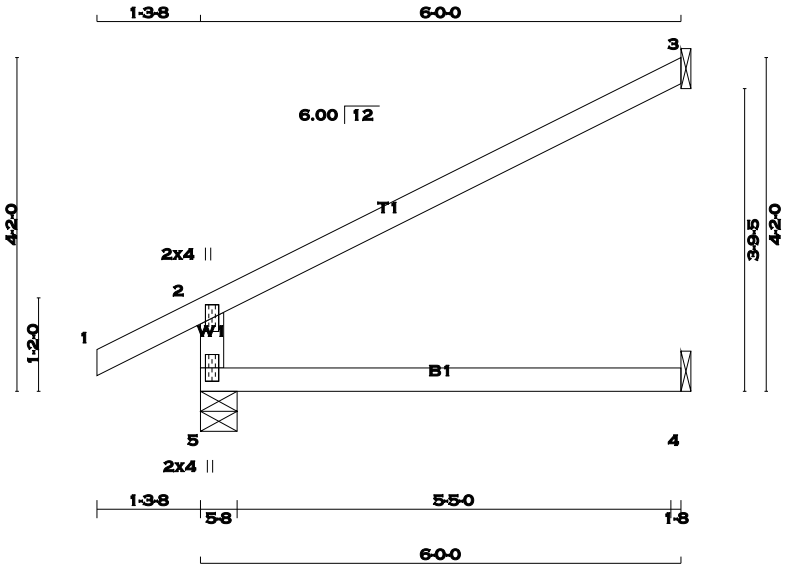

TOTAL WEIGHT = 22 X 17 = 376 lb [M]

LUMBER

N. L. G. A. RULES

CHORDS	SIZE		LUMBER	DESCR.
5 - 2	2x4	DRY	No.2	SPF
1 - 3	2x4	DRY	No.2	SPF
5 - 4	2x4	DRY	No.2	SPF

DRY: SEASONED LUMBER.

PLATES (table is in inches)

JT	TYPE	PLATES	W	LEN	Y	X
2	TMV+p	MT20	2.0	4.0		
5	BMV1+p	MT20	2.0	4.0		

A SIZE FOR SIZE SUBSTITUTION OF MITEK MII20 WITH TEE-LOK TL20 PLATES IS ALLOWED.

DIMENSIONS, SUPPORTS AND LOADINGS SPECIFIED BY FABRICATOR TO BE VERIFIED BY BUILDING DESIGNER

BEARINGS

JT	FACTORED GROSS REACTION VERT	HORZ	MAXIMUM FACTORED GROSS REACTION DOWN	HORZ	UPLIFT	INPUT BRG IN-SX	REQRD BRG IN-SX
5	457	0	457	0	0	5-8	5-8
3	174	0	174	0	0	1-8	1-8
4	43	0	49	0	0	1-8	1-8

SEE MITEK STANDARD DETAIL B37579H FOR CONNECTION TO JOINT(S) 3 , 4

UNFACTORED REACTIONS

JT	1ST LCASE COMBINED	MAX./MIN. COMPONENT REACTIONS SNOW	LIVE	PERM.LIVE	WIND	DEAD	SOIL
5	318	238 / 0	0 / 0	0 / 0	0 / 0	80 / 0	0 / 0
3	118	105 / 0	0 / 0	0 / 0	0 / 0	14 / 0	0 / 0
4	35	0 / 0	0 / 0	0 / 0	0 / 0	35 / 0	0 / 0

BEARING MATERIAL TO BE SPF NO.2 OR BETTER AT JOINT(S) 5

BRACING

TOP CHORD TO BE SHEATHED OR MAX. PURLIN SPACING = 6.25 FT.
MAX. UNBRACED BOTTOM CHORD LENGTH = 10.00 FT. OR RIGID CEILING DIRECTLY APPLIED.

ALL PITCH BREAKS AND PERIMETER CORNER JOINTS MUST BE LATERALLY RESTRAINED.

LOADING

TOTAL LOAD CASES: (3)

CHORDS MEMB. FR-TO	MAX. FACTORED FORCE (LBS)	FACTORED VERT. LOAD (PLF) FROM	TO	LC1 MAX CSI (LC)	MAX. UNBRAC LENGTH	WEBS MEMB. FR-TO	MAX. FACTORED FORCE (LBS)	MAX CSI (LC)
5- 2	-395 / 0	0.0	0.0	0.13 (3)	7.81			
1- 2	0 / 23	-77.3	-77.3	0.10 (1)	10.00			
2- 3	-26 / 0	-77.3	-77.3	0.47 (1)	6.25			
5- 4	0 / 0	-17.5	-17.5	0.13 (3)	10.00			

DESIGN CRITERIA

SPECIFIED LOADS:

TOP CH.	LL	=	23.3	PSF
	DL	=	3.0	PSF
BOT CH.	LL	=	0.0	PSF
	DL	=	7.0	PSF
TOTAL LOAD		=	33.3	PSF

SPACING = 24.0 IN. C/C

THIS TRUSS IS DESIGNED FOR RESIDENTIAL OR SMALL BUILDING REQUIREMENTS OF PART 9, NBCC 2010

THIS DESIGN COMPLIES WITH:
- PART 9 OF OBC 2012 , BCBC 2012 , ABC 2014
- CSA 086-09
- TPIC 2011

DESIGN ASSUMPTIONS
-OVERHANG NOT TO BE ALTERED OR CUT OFF.

(55 % OF 27.2 P.S.F. G.S.L. PLUS 8.4 P.S.F. RAIN LOAD) EQUALS 23.3 P.S.F. SPECIFIED ROOF LIVE LOAD

ALLOWABLE DEFL.(LL)= L/360 (0.20")
CALCULATED VERT. DEFL.(LL) = L/ 999 (0.00")
ALLOWABLE DEFL.(TL)= L/360 (0.20")
CALCULATED VERT. DEFL.(TL) = L/ 999 (0.03")

CSI: TC=0.47 (2-3:1) , BC=0.13 (4-5:3) , WB=0.00 (n/a:0) , SSI=0.20 (2-3:1)

DOL LUMBER=1.00 NAIL=1.00 LS BEND=1.10 COMP=1.10 SHEAR=1.10 TENS= 1.10

COMPANION LIVE LOAD FACTOR = 0.50

TRUSS PLATE MANUFACTURER IS NOT RESPONSIBLE FOR QUALITY CONTROL IN THE TRUSS MANUFACTURING PLANT .

NAIL VALUES

PLATE	GRIP(DRY) (PSI) MAX	MIN	SHEAR (PLI) MAX	MIN	SECTION (PLI) MAX	MIN
MT20	618	354	1667	822	2284	1656

PLATE PLACEMENT TOL. = 0.250 inches

PLATE ROTATION TOL. = 0.5 Deg.

JSI GRIP= 0.23 (2) (INPUT = 0.90)
JSI METAL= 0.09 (2) (INPUT = 1.00)

LICENSED PROFESSIONAL ENGINEER
R.M. TREVISAN
100136551
March 13th, 2017
PROVINCE OF ONTARIO

RECEIVED
TOWN OF MILTON
MAR 29, 2017
17-4990
BUILDING DIVISION

READ ALL NOTES ON THIS PAGE AND ON THE ENGINEERING NOTE PAGE ENP-1. THE NOTE PAGE IS AN INTEGRAL PART OF THIS DRAWING AS IT CONTAINS SPECIFICATIONS AND CRITERIA USED IN THE DESIGN OF THIS COMPONENT.

KOTT

JOB NAME	TRUSS NAME	QUANTITY	PLY	JOB DESC.	DRWG NO.
PT0317-054	J02	5	1	TRUSS DESC. LECCO RIDGE-BLOCK 328	

Kott Lumber Uxbridge, Stouffville, ON, CGC

Version 8.100 S Feb 9 2017 MiTek Industries, Inc. Mon Mar 13 09:56:54 2017 Page 1
ID:pF8Cn?9h9uHzAm5tCmlVl5yJJCp-IXKExjuPLv10Aw2m8VNGjjaARGByLO0eSbbmoCzbOnN

SCALE = 1:35.9

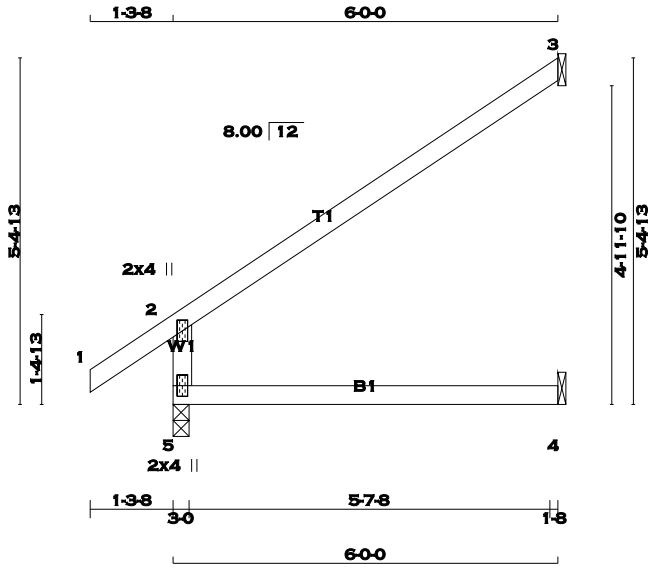

TOTAL WEIGHT = 5 X 18 = 91 lb

LUMBER
N. L. G. A. RULES

CHORDS	SIZE		LUMBER	DESCR.
5 - 2	2x4	DRY	No.2	SPF
1 - 3	2x4	DRY	No.2	SPF
5 - 4	2x4	DRY	No.2	SPF

DRY: SEASONED LUMBER.

PLATES (table is in inches)

JT	TYPE	PLATES	W	LEN	Y	X
2	TMV+p	MT20	2.0	4.0		
5	BMV1+p	MT20	2.0	4.0		

A SIZE FOR SIZE SUBSTITUTION OF MITEK MII20 WITH TEE-LOK TL20 PLATES IS ALLOWED.

DIMENSIONS, SUPPORTS AND LOADINGS SPECIFIED BY FABRICATOR TO BE VERIFIED BY BUILDING DESIGNER

BEARINGS

JT	FACTORED GROSS REACTION VERT	HORZ	MAXIMUM FACTORED GROSS REACTION DOWN	HORZ	UPLIFT	INPUT BRG IN-SX	REQRD BRG IN-SX
5	457	0	457	0	0	3-0	3-0
3	174	0	174	0	0	1-8	1-8
4	44	0	49	0	0	1-8	1-8

SEE MITEK STANDARD DETAIL B37579H FOR CONNECTION TO JOINT(S) 3 , 4

UNFACTORED REACTIONS

JT	1ST LCASE COMBINED	MAX./MIN. COMPONENT REACTIONS SNOW	LIVE	PERM.LIVE	WIND	DEAD	SOIL
5	318	239 / 0	0 / 0	0 / 0	0 / 0	80 / 0	0 / 0
3	118	105 / 0	0 / 0	0 / 0	0 / 0	14 / 0	0 / 0
4	35	0 / 0	0 / 0	0 / 0	0 / 0	35 / 0	0 / 0

BEARING MATERIAL TO BE SPF NO.2 OR BETTER AT JOINT(S) 5

BRACING
TOP CHORD TO BE SHEATHED OR MAX. PURLIN SPACING = 6.25 FT.
MAX. UNBRACED BOTTOM CHORD LENGTH = 10.00 FT. OR RIGID CEILING DIRECTLY APPLIED.

ALL PITCH BREAKS AND PERIMETER CORNER JOINTS MUST BE LATERALLY RESTRAINED.

LOADING
TOTAL LOAD CASES: (3)

CHORDS

MEMB. FR-TO	MAX. FACTORED FORCE (LBS)	FACTORED VERT. LOAD (PLF) FROM	TO	LC1 MAX CSI (LC)	MAX. UNBRAC LENGTH
5- 2	-396 / 0	0.0	0.0	0.10 (3)	7.81
1- 2	0 / 29	-77.3	-77.3	0.10 (1)	10.00
2- 3	-32 / 0	-77.3	-77.3	0.36 (1)	6.25
5- 4	0 / 0	-17.5	-17.5	0.13 (3)	10.00

WEBS

MEMB. FR-TO	MAX. FACTORED FORCE (LBS)	MAX CSI (LC)

DESIGN CRITERIA

SPECIFIED LOADS:

TOP CH.	LL	=	23.3	PSF
	DL	=	3.0	PSF
BOT CH.	LL	=	0.0	PSF
	DL	=	7.0	PSF
TOTAL LOAD		=	33.3	PSF

SPACING = 24.0 IN. C/C

THIS TRUSS IS DESIGNED FOR RESIDENTIAL OR SMALL BUILDING REQUIREMENTS OF PART 9, NBCC 2010

THIS DESIGN COMPLIES WITH:
- PART 9 OF OBC 2012 , BCBC 2012 , ABC 2014
- CSA 086-09
- TPIC 2011

DESIGN ASSUMPTIONS
-OVERHANG NOT TO BE ALTERED OR CUT OFF.

(55 % OF 27.2 P.S.F. G.S.L. PLUS 8.4 P.S.F. RAIN LOAD) EQUALS 23.3 P.S.F. SPECIFIED ROOF LIVE LOAD

ALLOWABLE DEFL.(TL)= L/360 (0.20")
CALCULATED VERT. DEFL.(TL) = L/ 999 (0.03")

CSI: TC=0.36 (2-3:1) , BC=0.13 (4-5:3) , WB=0.00 (n/a:0) , SSI=0.19 (2-3:1)

DOL LUMBER=1.00 NAIL=1.00 LS BEND=1.10 COMP=1.10 SHEAR=1.10 TENS= 1.10

COMPANION LIVE LOAD FACTOR = 0.50

TRUSS PLATE MANUFACTURER IS NOT RESPONSIBLE FOR QUALITY CONTROL IN THE TRUSS MANUFACTURING PLANT .

NAIL VALUES

PLATE	GRIP(DRY) (PSI) MAX	MIN	SHEAR (PLI) MAX	MIN	SECTION (PLI) MAX	MIN
MT20	618	354	1667	822	2284	1656

PLATE PLACEMENT TOL. = 0.250 inches

PLATE ROTATION TOL. = 5.0 Deg.

JSI GRIP= 0.25 (2) (INPUT = 0.90)
JSI METAL= 0.10 (2) (INPUT = 1.00)

LICENSED PROFESSIONAL ENGINEER
P.M. TREVISAN
100136551
March 13th, 2017
PROVINCE OF ONTARIO

RECEIVED
TOWN OF MILTON
MAR 29, 2017
17-4990
BUILDING DIVISION

READ ALL NOTES ON THIS PAGE AND ON THE ENGINEERING NOTE PAGE ENP-1. THE NOTE PAGE IS AN INTEGRAL PART OF THIS DRAWING AS IT CONTAINS SPECIFICATIONS AND CRITERIA USED IN THE DESIGN OF THIS COMPONENT.

KOTT

JOB NAME	TRUSS NAME	QUANTITY	PLY	JOB DESC.	DRWG NO.
PT0317-054	J03	1	1	TRUSS DESC. LECCO RIDGE-BLOCK 328	ENG JOB: PT0317-054

Kott Lumber Uxbridge, Stouffville, ON, CGC

Version 8.100 S Feb 9 2017 MiTek Industries, Inc. Mon Mar 13 09:56:54 2017 Page 1

ID:pF8Cn?9h9uHzAm5tCmlVl5yJJCp-IXKExjuPLv10Aw2m8VNGjjaEYGDjLO0eSbbmoCzbOnN

SCALE: 3/4"=1'

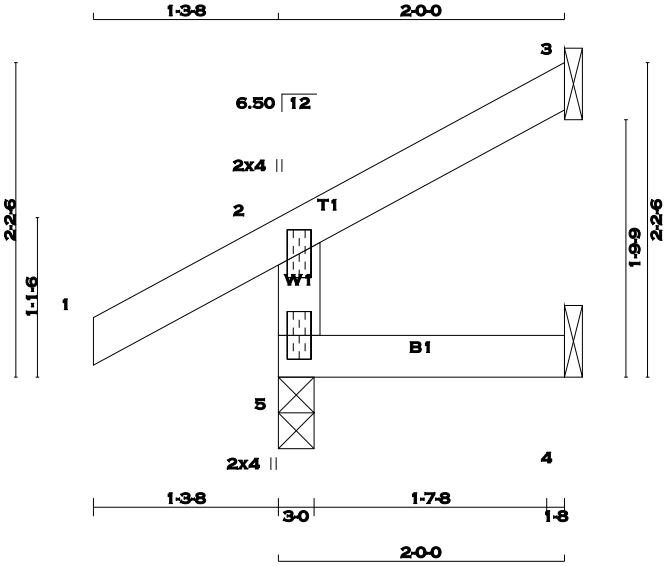

TOTAL WEIGHT = 7 lb [M]

LUMBER

N. L. G. A. RULES

CHORDS	SIZE		LUMBER	DESCR.
5 - 2	2x4	DRY	No.2	SPF
1 - 3	2x4	DRY	No.2	SPF
5 - 4	2x4	DRY	No.2	SPF

DRY: SEASONED LUMBER.

PLATES (table is in inches)

JT	TYPE	PLATES	W	LEN	Y	X
2	TMV+p	MT20	2.0	4.0		
5	BMV1+p	MT20	2.0	4.0		

A SIZE FOR SIZE SUBSTITUTION OF MITEK MII20 WITH TEE-LOK TL20 PLATES IS ALLOWED.

DIMENSIONS, SUPPORTS AND LOADINGS SPECIFIED BY FABRICATOR TO BE VERIFIED BY BUILDING DESIGNER

BEARINGS

JT	FACTORED GROSS REACTION VERT	HORZ	MAXIMUM FACTORED GROSS REACTION DOWN	HORZ	UPLIFT	INPUT BRG IN-SX	REQRD BRG IN-SX
5	221	0	221	0	0	3-0	3-0
3	58	0	58	0	0	1-8	1-8
4	16	0	17	0	0	1-8	1-8

SEE MITEK STANDARD DETAIL B37579H FOR CONNECTION TO JOINT(S) 3 , 4

UNFACTORED REACTIONS

JT	1ST LCASE COMBINED	MAX./MIN. COMPONENT REACTIONS SNOW	LIVE	PERM.LIVE	WIND	DEAD	SOIL
5	153	121 / 0	0 / 0	0 / 0	0 / 0	31 / 0	0 / 0
3	40	35 / 0	0 / 0	0 / 0	0 / 0	5 / 0	0 / 0
4	12	0 / 0	0 / 0	0 / 0	0 / 0	12 / 0	0 / 0

BEARING MATERIAL TO BE SPF NO.2 OR BETTER AT JOINT(S) 5

BRACING

TOP CHORD TO BE SHEATHED OR MAX. PURLIN SPACING = 10.00 FT.
MAX. UNBRACED BOTTOM CHORD LENGTH = 10.00 FT. OR RIGID CEILING DIRECTLY APPLIED.

ALL PITCH BREAKS AND PERIMETER CORNER JOINTS MUST BE LATERALLY RESTRAINED.

LOADING

TOTAL LOAD CASES: (4)

CHORDS MEMB. FR-TO	MAX. FACTORED FORCE (LBS)	FACTORED VERT. LOAD (PLF) FROM	TO	LC1 MAX CSI (LC)	MAX. UNBRAC LENGTH
5- 2	-202 / 0	0.0	0.0	0.01 (3)	7.81
1- 2	0 / 25	-77.3	-77.3	0.10 (1)	10.00
2- 3	-9 / 0	-77.3	-77.3	0.05 (1)	10.00
5- 4	0 / 0	-17.5	-17.5	0.02 (3)	10.00

WEBS MEMB. FR-TO	MAX. FACTORED FORCE (LBS)	MAX CSI (LC)

CANTILEVER ANALYSIS HAS BEEN CONSIDERED IN THIS DESIGN

DESIGN CRITERIA

SPECIFIED LOADS:

TOP CH.	LL	=	23.3	PSF
	DL	=	3.0	PSF
BOT CH.	LL	=	0.0	PSF
	DL	=	7.0	PSF
TOTAL LOAD		=	33.3	PSF

SPACING = 24.0 IN. C/C

THIS TRUSS IS DESIGNED FOR RESIDENTIAL OR SMALL BUILDING REQUIREMENTS OF PART 9, NBCC 2010

THIS DESIGN COMPLIES WITH:
- PART 9 OF OBC 2012 , BCBC 2012 , ABC 2014
- CSA 086-09
- TPIC 2011

DESIGN ASSUMPTIONS
-OVERHANG NOT TO BE ALTERED OR CUT OFF.

(55 % OF 27.2 P.S.F. G.S.L. PLUS 8.4 P.S.F. RAIN LOAD) EQUALS 23.3 P.S.F. SPECIFIED ROOF LIVE LOAD

ALLOWABLE DEFL.(LL)= L/360 (0.19")
CALCULATED VERT. DEFL.(LL) = L/ 999 (0.00")
ALLOWABLE DEFL.(TL)= L/360 (0.19")
CALCULATED VERT. DEFL.(TL) = L/ 999 (0.00")

CSI: TC=0.10 (1-2:1) , BC=0.02 (4-5:3) , WB=0.00 (n/a:0) , SSI=0.07 (1-2:1)

DOL LUMBER=1.00 NAIL=1.00 LS BEND=1.10 COMP=1.10 SHEAR=1.10 TENS= 1.10

COMPANION LIVE LOAD FACTOR = 0.50

TRUSS PLATE MANUFACTURER IS NOT RESPONSIBLE FOR QUALITY CONTROL IN THE TRUSS MANUFACTURING PLANT .

NAIL VALUES

PLATE	GRIP(DRY) (PSI) MAX	MIN	SHEAR (PLI) MAX	MIN	SECTION (PLI) MAX	MIN
MT20	618	354	1667	822	2284	1656

PLATE PLACEMENT TOL. = 0.250 inches

PLATE ROTATION TOL. = 0.5 Deg.

JSI GRIP= 0.12 (2) (INPUT = 0.90)
JSI METAL= 0.05 (2) (INPUT = 1.00)

LICENSED PROFESSIONAL ENGINEER
R.M. TREVISAN
100136551
March 13th, 2017
PROVINCE OF ONTARIO

RECEIVED
TOWN OF MILTON
MAR 29, 2017
17-4990
BUILDING DIVISION

READ ALL NOTES ON THIS PAGE AND ON THE ENGINEERING NOTE PAGE ENP-1. THE NOTE PAGE IS AN INTEGRAL PART OF THIS DRAWING AS IT CONTAINS SPECIFICATIONS AND CRITERIA USED IN THE DESIGN OF THIS COMPONENT.

KOTT

JOB NAME	TRUSS NAME	QUANTITY	PLY	JOB DESC.	DRWG NO.
PT0317-054	**J04**	**4**	**1**	TRUSS DESC. LECCO RIDGE-BLOCK 328	ENG JOB: PT0317-054

Kott Lumber Uxbridge, Stouffville, ON, CGC

Version 8.100 S Feb 9 2017 MiTek Industries, Inc. Mon Mar 13 09:56:55 2017 Page 1

ID:pF8Cn?9h9uHzAm5tCmlVl5yJJCp-mjuc93v26D9to4cyhCvVGw7PGgZy4rGohEKKKfzbOnM

SCALE = 1:18.6

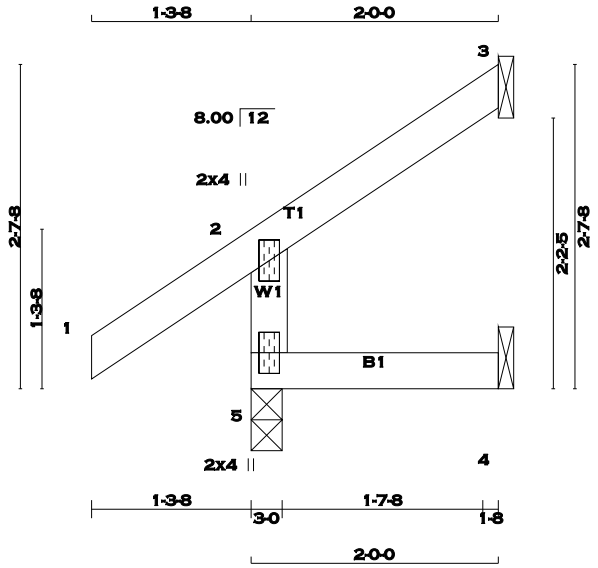

TOTAL WEIGHT = 4 X 8 = 32 lb [M]

LUMBER

N. L. G. A. RULES

CHORDS	SIZE		LUMBER	DESCR.
5 - 2	2x4	DRY	No.2	SPF
1 - 3	2x4	DRY	No.2	SPF
5 - 4	2x4	DRY	No.2	SPF

DRY: SEASONED LUMBER.

PLATES (table is in inches)

JT	TYPE	PLATES	W	LEN	Y	X
2	TMV+p	MT20	2.0	4.0		
5	BMV1+p	MT20	2.0	4.0		

A SIZE FOR SIZE SUBSTITUTION OF MITEK MII20 WITH TEE-LOK TL20 PLATES IS ALLOWED.

DIMENSIONS, SUPPORTS AND LOADINGS SPECIFIED BY FABRICATOR TO BE VERIFIED BY BUILDING DESIGNER

BEARINGS

JT	FACTORED GROSS REACTION VERT	HORZ	MAXIMUM GROSS REACTION DOWN	HORZ	FACTORED UPLIFT	INPUT BRG IN-SX	REQRD BRG IN-SX
5	222	0	222	0	0	3-0	3-0
3	58	0	58	0	0	1-8	1-8
4	16	0	18	0	0	1-8	1-8

SEE MITEK STANDARD DETAIL B37579H FOR CONNECTION TO JOINT(S) 3 , 4

UNFACTORED REACTIONS

JT	1ST LCASE COMBINED	MAX./MIN. COMPONENT REACTIONS SNOW	LIVE	PERM.LIVE	WIND	DEAD	SOIL
5	153	122 / 0	0 / 0	0 / 0	0 / 0	31 / 0	0 / 0
3	40	35 / 0	0 / 0	0 / 0	0 / 0	5 / 0	0 / 0
4	13	0 / 0	0 / 0	0 / 0	0 / 0	13 / 0	0 / 0

BEARING MATERIAL TO BE SPF NO.2 OR BETTER AT JOINT(S) 5

BRACING

TOP CHORD TO BE SHEATHED OR MAX. PURLIN SPACING = 6.25 FT.
MAX. UNBRACED BOTTOM CHORD LENGTH = 10.00 FT. OR RIGID CEILING DIRECTLY APPLIED.

ALL PITCH BREAKS AND PERIMETER CORNER JOINTS MUST BE LATERALLY RESTRAINED.

LOADING

TOTAL LOAD CASES: (4)

CHORDS MEMB. FR-TO	MAX. FACTORED FORCE (LBS)	FACTORED VERT. LOAD (PLF) FROM	TO	LC1 MAX CSI (LC)	MAX. UNBRAC LENGTH	WEBS MEMB. FR-TO	MAX. FACTORED FORCE (LBS)	MAX CSI (LC)
5- 2	-202 / 0	0.0	0.0	0.01 (3)	7.81			
1- 2	0 / 29	-77.3	-77.3	0.10 (1)	10.00			
2- 3	-10 / 0	-77.3	-77.3	0.05 (1)	6.25			
5- 4	0 / 0	-17.5	-17.5	0.02 (3)	10.00			

CANTILEVER ANALYSIS HAS BEEN CONSIDERED IN THIS DESIGN

DESIGN CRITERIA

SPECIFIED LOADS:

TOP CH.	LL	=	23.3	PSF
	DL	=	3.0	PSF
BOT CH.	LL	=	0.0	PSF
	DL	=	7.0	PSF
TOTAL LOAD		=	33.3	PSF

SPACING = 24.0 IN. C/C

THIS TRUSS IS DESIGNED FOR RESIDENTIAL OR SMALL BUILDING REQUIREMENTS OF PART 9, NBCC 2010

THIS DESIGN COMPLIES WITH:
- PART 9 OF OBC 2012 , BCBC 2012 , ABC 2014
- CSA 086-09
- TPIC 2011

DESIGN ASSUMPTIONS
-OVERHANG NOT TO BE ALTERED OR CUT OFF.

(55 % OF 27.2 P.S.F. G.S.L. PLUS 8.4 P.S.F. RAIN LOAD) EQUALS 23.3 P.S.F. SPECIFIED ROOF LIVE LOAD

ALLOWABLE DEFL.(LL)= L/360 (0.19")
CALCULATED VERT. DEFL.(LL) = L/ 999 (0.00")
ALLOWABLE DEFL.(TL)= L/360 (0.19")
CALCULATED VERT. DEFL.(TL) = L/ 999 (0.00")

CSI: TC=0.10 (1-2:1) , BC=0.02 (4-5:3) , WB=0.00 (n/a:0) , SSI=0.07 (1-2:1)

DOL LUMBER=1.00 NAIL=1.00 LS BEND=1.10 COMP=1.10 SHEAR=1.10 TENS= 1.10

COMPANION LIVE LOAD FACTOR = 0.50

TRUSS PLATE MANUFACTURER IS NOT RESPONSIBLE FOR QUALITY CONTROL IN THE TRUSS MANUFACTURING PLANT .

NAIL VALUES

PLATE	GRIP(DRY) (PSI) MAX	MIN	SHEAR (PLI) MAX	MIN	SECTION (PLI) MAX	MIN
MT20	618	354	1667	822	2284	1656

PLATE PLACEMENT TOL. = 0.250 inches

PLATE ROTATION TOL. = 0.5 Deg.

JSI GRIP= 0.13 (2) (INPUT = 0.90)
JSI METAL= 0.05 (2) (INPUT = 1.00)

LICENSED PROFESSIONAL ENGINEER
R.M. TREVISAN
100136551
March 13th, 2017
PROVINCE OF ONTARIO

RECEIVED
TOWN OF MILTON
MAR 29, 2017
17-4990
BUILDING DIVISION

READ ALL NOTES ON THIS PAGE AND ON THE ENGINEERING NOTE PAGE ENP-1. THE NOTE PAGE IS AN INTEGRAL PART OF THIS DRAWING AS IT CONTAINS SPECIFICATIONS AND CRITERIA USED IN THE DESIGN OF THIS COMPONENT.

KOTT

JOB NAME	TRUSS NAME	QUANTITY	PLY	JOB DESC.	DRWG NO.
PT0317-054	J06	1	1	TRUSS DESC. LECCO RIDGE-BLOCK 328	ENG JOB: PT0317-054

Kott Lumber Uxbridge, Stouffville, ON, CGC

Version 8.100 S Feb 9 2017 MiTek Industries, Inc. Mon Mar 13 09:56:55 2017 Page 1

ID:pF8Cn?9h9uHzAm5tCmlVl5yJJCp-mjuc93v26D9to4cyhCvVGw7PJgZz4rGohEKKKfzbOnM

SCALE = 1:15.2

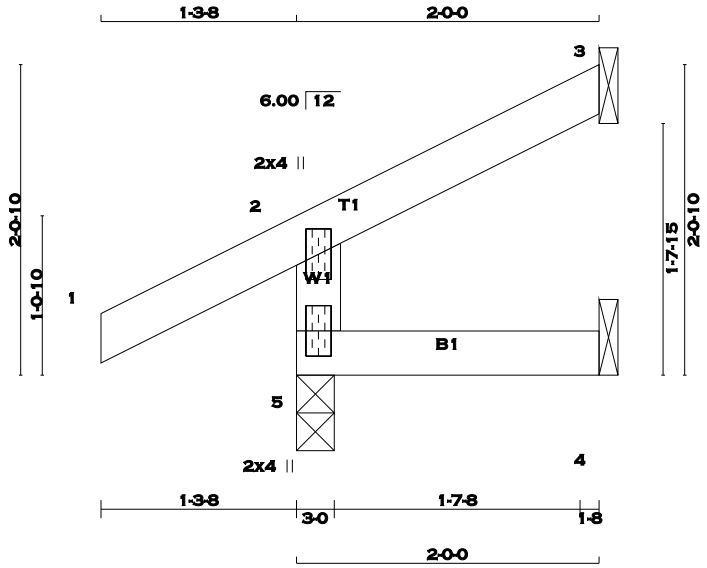

TOTAL WEIGHT = 7 lb [M]

LUMBER

N. L. G. A. RULES

CHORDS	SIZE		LUMBER	DESCR.
5 - 2	2x4	DRY	No.2	SPF
1 - 3	2x4	DRY	No.2	SPF
5 - 4	2x4	DRY	No.2	SPF

DRY: SEASONED LUMBER.

PLATES (table is in inches)

JT	TYPE	PLATES	W	LEN	Y	X
2	TMV+p	MT20	2.0	4.0		
5	BMV1+p	MT20	2.0	4.0		

A SIZE FOR SIZE SUBSTITUTION OF MITEK MII20 WITH TEE-LOK TL20 PLATES IS ALLOWED.

DIMENSIONS, SUPPORTS AND LOADINGS SPECIFIED BY FABRICATOR TO BE VERIFIED BY BUILDING DESIGNER

BEARINGS

JT	FACTORED GROSS REACTION VERT	HORZ	MAXIMUM FACTORED GROSS REACTION DOWN	HORZ	UPLIFT	INPUT BRG IN-SX	REQRD BRG IN-SX
5	221	0	221	0	0	3-0	3-0
3	58	0	58	0	0	1-8	1-8
4	15	0	17	0	0	1-8	1-8

SEE MITEK STANDARD DETAIL B37579H FOR CONNECTION TO JOINT(S) 3 , 4

UNFACTORED REACTIONS

JT	1ST LCASE COMBINED	MAX./MIN. COMPONENT REACTIONS SNOW	LIVE	PERM.LIVE	WIND	DEAD	SOIL
5	152	121 / 0	0 / 0	0 / 0	0 / 0	31 / 0	0 / 0
3	40	35 / 0	0 / 0	0 / 0	0 / 0	5 / 0	0 / 0
4	12	0 / 0	0 / 0	0 / 0	0 / 0	12 / 0	0 / 0

BEARING MATERIAL TO BE SPF NO.2 OR BETTER AT JOINT(S) 5

BRACING

TOP CHORD TO BE SHEATHED OR MAX. PURLIN SPACING = 10.00 FT.
MAX. UNBRACED BOTTOM CHORD LENGTH = 10.00 FT. OR RIGID CEILING DIRECTLY APPLIED.

ALL PITCH BREAKS AND PERIMETER CORNER JOINTS MUST BE LATERALLY RESTRAINED.

LOADING

TOTAL LOAD CASES: (4)

CHORDS MEMB. FR-TO	MAX. FACTORED FORCE (LBS)	FACTORED VERT. LOAD (PLF) FROM	TO	LC1 MAX CSI (LC)	MAX. UNBRAC LENGTH	WEBS MEMB. FR-TO	MAX. FACTORED FORCE (LBS)	MAX CSI (LC)
5- 2	-201 / 0	0.0	0.0	0.01 (3)	7.81			
1- 2	0 / 23	-77.3	-77.3	0.10 (1)	10.00			
2- 3	-8 / 0	-77.3	-77.3	0.05 (1)	10.00			
5- 4	0 / 0	-17.5	-17.5	0.02 (3)	10.00			

CANTILEVER ANALYSIS HAS BEEN CONSIDERED IN THIS DESIGN

DESIGN CRITERIA

SPECIFIED LOADS:

TOP CH.	LL	=	23.3	PSF
	DL	=	3.0	PSF
BOT CH.	LL	=	0.0	PSF
	DL	=	7.0	PSF
TOTAL LOAD		=	33.3	PSF

SPACING = 24.0 IN. C/C

THIS TRUSS IS DESIGNED FOR RESIDENTIAL OR SMALL BUILDING REQUIREMENTS OF PART 9, NBCC 2010

THIS DESIGN COMPLIES WITH:
- PART 9 OF OBC 2012 , BCBC 2012 , ABC 2014
- CSA 086-09
- TPIC 2011

DESIGN ASSUMPTIONS
-OVERHANG NOT TO BE ALTERED OR CUT OFF.

(55 % OF 27.2 P.S.F. G.S.L. PLUS 8.4 P.S.F. RAIN LOAD) EQUALS 23.3 P.S.F. SPECIFIED ROOF LIVE LOAD

ALLOWABLE DEFL.(LL)= L/360 (0.19")
CALCULATED VERT. DEFL.(LL) = L/ 999 (0.00")
ALLOWABLE DEFL.(TL)= L/360 (0.19")
CALCULATED VERT. DEFL.(TL) = L/ 999 (0.00")

CSI: TC=0.10 (1-2:1) , BC=0.02 (4-5:3) , WB=0.00 (n/a:0) , SSI=0.07 (1-2:1)

DOL LUMBER=1.00 NAIL=1.00 LS BEND=1.10 COMP=1.10 SHEAR=1.10 TENS= 1.10

COMPANION LIVE LOAD FACTOR = 0.50

TRUSS PLATE MANUFACTURER IS NOT RESPONSIBLE FOR QUALITY CONTROL IN THE TRUSS MANUFACTURING PLANT .

NAIL VALUES

PLATE	GRIP(DRY) (PSI) MAX	MIN	SHEAR (PLI) MAX	MIN	SECTION (PLI) MAX	MIN
MT20	618	354	1667	822	2284	1656

PLATE PLACEMENT TOL. = 0.250 inches

PLATE ROTATION TOL. = 0.5 Deg.

JSI GRIP= 0.12 (2) (INPUT = 0.90)
JSI METAL= 0.04 (2) (INPUT = 1.00)

LICENSED PROFESSIONAL ENGINEER
P.M. TREVISAN
100136551
March 13th, 2017
PROVINCE OF ONTARIO

RECEIVED
TOWN OF MILTON
MAR 29, 2017
17-4990
BUILDING DIVISION

READ ALL NOTES ON THIS PAGE AND ON THE ENGINEERING NOTE PAGE ENP-1. THE NOTE PAGE IS AN INTEGRAL PART OF THIS DRAWING AS IT CONTAINS SPECIFICATIONS AND CRITERIA USED IN THE DESIGN OF THIS COMPONENT.

KOTT

JOB NAME	TRUSS NAME	QUANTITY	PLY	JOB DESC.	DRWG NO.
PT0317-054	T01	1	1	TRUSS DESC. LECCO RIDGE-BLOCK 328	ENG JOB: PT0317-054

Kott Lumber Uxbridge, Stouffville, ON, CGC

Version 8.100 S Feb 9 2017 MiTek Industries, Inc. Mon Mar 13 09:56:55 2017 Page 1

ID:pF8Cn?9h9uHzAm5tCmlVl5yJJCp-mjuc93v26D9to4cyhCvVGw7J4gWc4osohEKKKfzbOnM

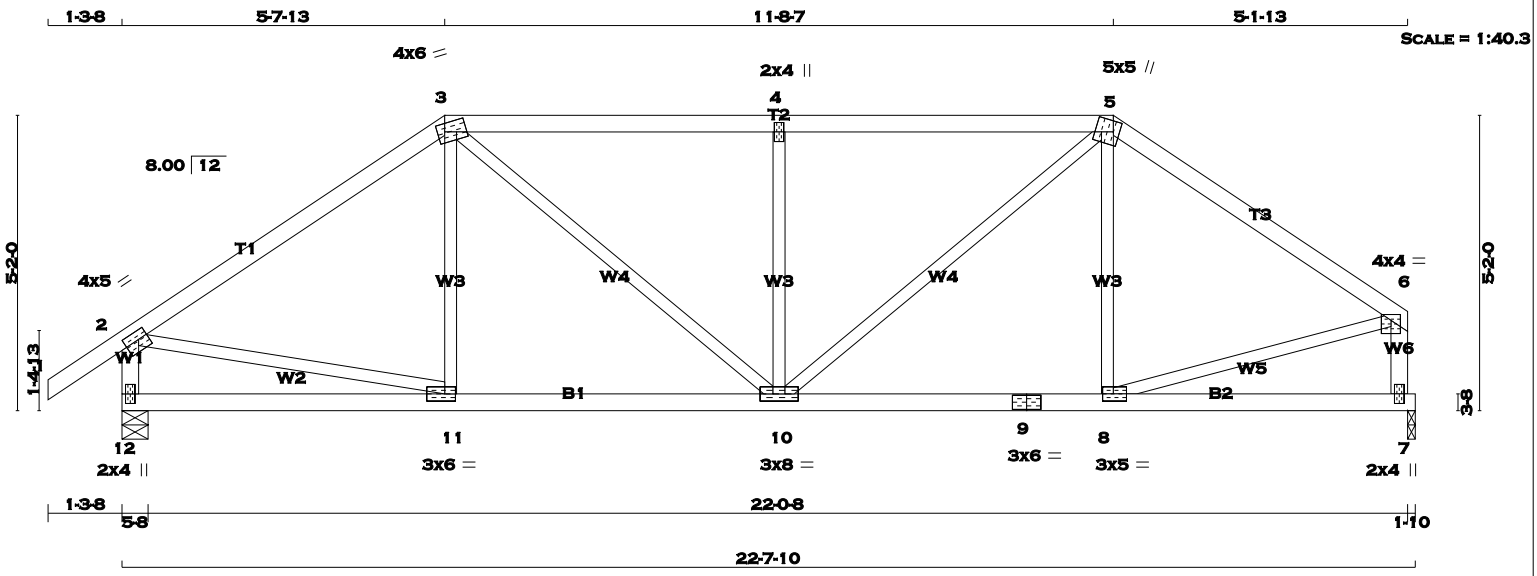

TOTAL WEIGHT = 90 lb

[M]

LUMBER

N. L. G. A. RULES

CHORDS	SIZE		LUMBER	DESCR.
1 - 3	2x4	DRY	No.2	SPF
3 - 5	2x4	DRY	No.2	SPF
5 - 6	2x4	DRY	No.2	SPF
12 - 2	2x4	DRY	No.2	SPF
7 - 6	2x4	DRY	No.2	SPF
12 - 9	2x4	DRY	No.2	SPF
9 - 7	2x4	DRY	No.2	SPF
ALL WEBS EXCEPT	2x3	DRY	No.2	SPF

DRY: SEASONED LUMBER.

PLATES (table is in inches)

JT	TYPE	PLATES	W	LEN	Y	X
2	TMVW-t	MT20	4.0	5.0	1.75	2.00
3	TTWW-m	MT20	4.0	6.0	1.75	1.50
4	TMW+w	MT20	2.0	4.0		
5	TTWW+m	MT20	5.0	5.0	2.25	1.25
6	TMVW-p	MT20	4.0	4.0	1.25	2.00
7	BMV1+p	MT20	2.0	4.0		
8	BMWW-t	MT20	3.0	5.0	1.50	2.25
9	BS-t	MT20	3.0	6.0		
10	BMWWW-t	MT20	3.0	8.0		
11	BMWW-t	MT20	3.0	6.0	1.50	2.25
12	BMV1+p	MT20	2.0	4.0		

A SIZE FOR SIZE SUBSTITUTION OF MITEK MII20 WITH TEE-LOK TL20 PLATES IS ALLOWED.

DIMENSIONS, SUPPORTS AND LOADINGS SPECIFIED BY FABRICATOR TO BE VERIFIED BY BUILDING DESIGNER

BEARINGS

JT	FACTORED GROSS REACTION VERT	HORZ	MAXIMUM FACTORED GROSS REACTION DOWN	HORZ	UPLIFT	INPUT BRG IN-SX	REQRD BRG IN-SX
12	1173	0	1173	0	0	5-8	5-8
7	1067	0	1067	0	0	1-10	1-10

UNFACTORED REACTIONS

JT	1ST LCASE COMBINED	MAX./MIN. COMPONENT REACTIONS SNOW	LIVE	PERM.LIVE	WIND	DEAD	SOIL
12	821	588 / 0	0 / 0	0 / 0	0 / 0	233 / 0	0 / 0
7	749	524 / 0	0 / 0	0 / 0	0 / 0	225 / 0	0 / 0

BEARING MATERIAL TO BE SPF NO.2 OR BETTER AT JOINT(S) 12, 7

BRACING

TOP CHORD TO BE SHEATHED OR MAX. PURLIN SPACING = 4.99 FT.
MAX. UNBRACED BOTTOM CHORD LENGTH = 10.00 FT. OR RIGID CEILING DIRECTLY APPLIED.

ALL PITCH BREAKS AND PERIMETER CORNER JOINTS MUST BE LATERALLY RESTRAINED.

LOADING

TOTAL LOAD CASES: (3)

CHORDS

MEMB. FR-TO	MAX. FACTORED FORCE (LBS)	FACTORED VERT. LOAD (PLF) FROM	TO	LC1 MAX CSI (LC)	MAX. UNBRAC LENGTH
1- 2	0 / 29	-77.3	-77.3	0.10 (1)	10.00
2- 3	-1135 / 0	-77.3	-77.3	0.49 (1)	5.30
3- 4	-1302 / 0	-77.3	-77.3	0.50 (1)	4.99
4- 5	-1302 / 0	-77.3	-77.3	0.50 (1)	4.99
5- 6	-1067 / 0	-77.3	-77.3	0.40 (1)	5.57
12- 2	-1133 / 0	0.0	0.0	0.12 (1)	7.46
7- 6	-1031 / 0	0.0	0.0	0.11 (1)	7.73
12-11	0 / 0	-17.5	-17.5	0.14 (3)	10.00
11-10	0 / 942	-17.5	-17.5	0.23 (1)	10.00
10- 9	0 / 884	-17.5	-17.5	0.21 (1)	10.00
9- 8	0 / 884	-17.5	-17.5	0.21 (1)	10.00
8- 7	0 / 0	-17.5	-17.5	0.13 (3)	10.00

WEBS

MEMB. FR-TO	MAX. FACTORED FORCE (LBS)	MAX CSI (LC)
11- 3	-62 / 74	0.03 (3)
3-10	0 / 469	0.11 (1)
10- 4	-555 / 0	0.22 (1)
10- 5	0 / 544	0.12 (1)
8- 5	-129 / 49	0.05 (1)
2-11	0 / 960	0.22 (1)
8- 6	0 / 918	0.21 (1)

DESIGN CRITERIA

SPECIFIED LOADS:

TOP CH.	LL	=	23.3	PSF
	DL	=	3.0	PSF
BOT CH.	LL	=	0.0	PSF
	DL	=	7.0	PSF
TOTAL LOAD		=	33.3	PSF

SPACING = 24.0 IN. C/C

LOADING IN FLAT SECTION BASED ON A SLOPE OF 6.00/12

THIS TRUSS IS DESIGNED FOR RESIDENTIAL OR SMALL BUILDING REQUIREMENTS OF PART 9, NBCC 2010

THIS DESIGN COMPLIES WITH:
- PART 9 OF OBC 2012 , BCBC 2012 , ABC 2014
- CSA 086-09
- TPIC 2011

(55 % OF 27.2 P.S.F. G.S.L. PLUS 8.4 P.S.F. RAIN LOAD) EQUALS 23.3 P.S.F. SPECIFIED ROOF LIVE LOAD

ALLOWABLE DEFL.(LL)= L/360 (0.75")
CALCULATED VERT. DEFL.(LL) = L/ 999 (0.04")
ALLOWABLE DEFL.(TL)= L/360 (0.75")
CALCULATED VERT. DEFL.(TL) = L/ 999 (0.08")

CSI: TC=0.50 (4-5:1) , BC=0.23 (10-11:1) , WB=0.22 (4-10:1) , SSI=0.22 (3-4:1)

DOL LUMBER=1.00 NAIL=1.00 LS BEND=1.10 COMP=1.10 SHEAR=1.10 TENS= 1.10

COMPANION LIVE LOAD FACTOR = 0.50

TRUSS PLATE MANUFACTURER IS NOT RESPONSIBLE FOR QUALITY CONTROL IN THE TRUSS MANUFACTURING PLANT .

NAIL VALUES

PLATE	GRIP(DRY) (PSI) MAX	MIN	SHEAR (PLI) MAX	MIN	SECTION (PLI) MAX	MIN
MT20	618	354	1667	822	2284	1656

PLATE PLACEMENT TOL. = 0.250 inches

PLATE ROTATION TOL. = 0.5 Deg.

JSI GRIP= 0.89 (6) (INPUT = 0.90)
JSI METAL= 0.39 (2) (INPUT = 1.00)

LICENSED PROFESSIONAL ENGINEER
P.M. TREVISAN
100136551
March 13th, 2017
PROVINCE OF ONTARIO

RECEIVED
TOWN OF MILTON
MAR 29, 2017
17-4990
BUILDING DIVISION

READ ALL NOTES ON THIS PAGE AND ON THE ENGINEERING NOTE PAGE ENP-1. THE NOTE PAGE IS AN INTEGRAL PART OF THIS DRAWING AS IT CONTAINS SPECIFICATIONS AND CRITERIA USED IN THE DESIGN OF THIS COMPONENT.

KOTT

JOB NAME	TRUSS NAME	QUANTITY	PLY	JOB DESC.	DRWG NO.
PT0317-054	T02	1	1	TRUSS DESC. LECCO RIDGE-BLOCK 328	

Kott Lumber Uxbridge, Stouffville, ON, CGC

Version 8.100 S Feb 9 2017 MiTek Industries, Inc. Mon Mar 13 09:56:55 2017 Page 1
ID:pF8Cn?9h9uHzAm5tCmlVl5yJJCp-mjuc93v26D9to4cyhCvVGw7OvgU34jEohEKKKfzbOnM

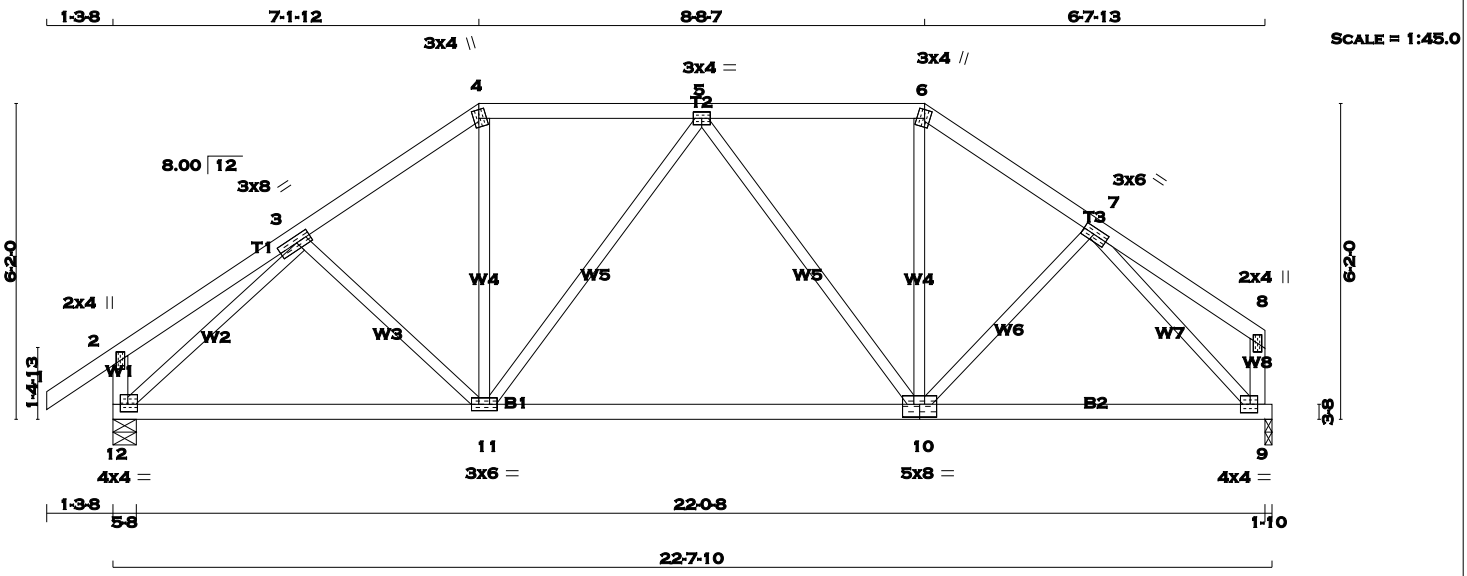

TOTAL WEIGHT = 95 lb
[M][F]

LUMBER
N. L. G. A. RULES

CHORDS	SIZE		LUMBER	DESCR.
1 - 4	2x4	DRY	No.2	SPF
4 - 6	2x4	DRY	No.2	SPF
6 - 8	2x4	DRY	No.2	SPF
12 - 2	2x4	DRY	No.2	SPF
9 - 8	2x4	DRY	No.2	SPF
12 - 10	2x4	DRY	No.2	SPF
10 - 9	2x4	DRY	No.2	SPF
ALL WEBS EXCEPT	2x3	DRY	No.2	SPF

DRY: SEASONED LUMBER.

PLATES (table is in inches)

JT	TYPE	PLATES	W	LEN	Y	X
2	TMV+p	MT20	2.0	4.0		
3	TMWW-t	MT20	3.0	8.0	1.50	3.50
4	TTW+m	MT20	3.0	4.0	2.00	1.25
5	TMWW-t	MT20	3.0	4.0		
6	TTW+m	MT20	3.0	4.0	2.00	1.25
7	TMWW-t	MT20	3.0	6.0	1.50	2.75
8	TMV+p	MT20	2.0	4.0		
9	BMVW1-t	MT20	4.0	4.0	2.00	1.75
10	BSWWW-l	MT20	5.0	8.0	3.00	4.00
11	BMWWW-t	MT20	3.0	6.0		
12	BMVW1-t	MT20	4.0	4.0	1.75	1.75

A SIZE FOR SIZE SUBSTITUTION OF MITEK MII20 WITH TEE-LOK TL20 PLATES IS ALLOWED.

DIMENSIONS, SUPPORTS AND LOADINGS SPECIFIED BY FABRICATOR TO BE VERIFIED BY BUILDING DESIGNER

BEARINGS

JT	FACTORED GROSS REACTION VERT	HORZ	MAXIMUM FACTORED GROSS REACTION DOWN	HORZ	UPLIFT	INPUT BRG IN-SX	REQRD BRG IN-SX
12	1173	0	1173	0	0	5-8	5-8
9	1067	0	1067	0	0	1-10	1-10

UNFACTORED REACTIONS

JT	1ST LCASE COMBINED	MAX./MIN. COMPONENT REACTIONS SNOW	LIVE	PERM.LIVE	WIND	DEAD	SOIL
12	821	588 / 0	0 / 0	0 / 0	0 / 0	233 / 0	0 / 0
9	749	524 / 0	0 / 0	0 / 0	0 / 0	225 / 0	0 / 0

BEARING MATERIAL TO BE SPF NO.2 OR BETTER AT JOINT(S) 12, 9

BRACING
TOP CHORD TO BE SHEATHED OR MAX. PURLIN SPACING = 5.90 FT.
MAX. UNBRACED BOTTOM CHORD LENGTH = 10.00 FT. OR RIGID CEILING DIRECTLY APPLIED.

ALL PITCH BREAKS AND PERIMETER CORNER JOINTS MUST BE LATERALLY RESTRAINED.

LOADING
TOTAL LOAD CASES: (3)

CHORDS

MEMB. FR-TO	MAX. FACTORED FORCE (LBS)	FACTORED VERT. LOAD (PLF) FROM	TO	LC1 CSI (LC)	MAX UNBRAC LENGTH
1- 2	0 / 29	-77.3	-77.3	0.10 (1)	10.00
2- 3	0 / 16	-77.3	-77.3	0.15 (1)	10.00
3- 4	-1105 / 0	-77.3	-77.3	0.13 (1)	5.90
4- 5	-910 / 0	-77.3	-77.3	0.19 (1)	6.24
5- 6	-874 / 0	-77.3	-77.3	0.19 (1)	6.25
6- 7	-1061 / 0	-77.3	-77.3	0.11 (1)	6.01
7- 8	0 / 15	-77.3	-77.3	0.12 (1)	10.00
12- 2	-214 / 0	0.0	0.0	0.02 (1)	7.81
9- 8	-102 / 0	0.0	0.0	0.01 (1)	7.81
12-11	0 / 938	-17.5	-17.5	0.32 (3)	10.00
11-10	0 / 1041	-17.5	-17.5	0.33 (3)	10.00
10- 9	0 / 843	-17.5	-17.5	0.29 (3)	10.00

WEBS

MEMB. FR-TO	MAX. FACTORED FORCE (LBS)	MAX CSI (LC)
3-11	-47 / 36	0.02 (1)
11- 4	0 / 366	0.08 (1)
11- 5	-222 / 0	0.23 (1)
5-10	-284 / 0	0.29 (1)
10- 6	0 / 350	0.08 (1)
10- 7	0 / 55	0.02 (3)
12- 3	-1307 / 0	0.51 (1)
7- 9	-1248 / 0	0.48 (1)

DESIGN CRITERIA

SPECIFIED LOADS:

TOP CH.	LL	=	23.3	PSF
	DL	=	3.0	PSF
BOT CH.	LL	=	0.0	PSF
	DL	=	7.0	PSF
TOTAL LOAD		=	33.3	PSF

SPACING = 24.0 IN. C/C

LOADING IN FLAT SECTION BASED ON A SLOPE OF 6.00/12

THIS TRUSS IS DESIGNED FOR RESIDENTIAL OR SMALL BUILDING REQUIREMENTS OF PART 9, NBCC 2010

THIS DESIGN COMPLIES WITH:
- PART 9 OF OBC 2012 , BCBC 2012 , ABC 2014
- CSA 086-09
- TPIC 2011

(55 % OF 27.2 P.S.F. G.S.L. PLUS 8.4 P.S.F. RAIN LOAD) EQUALS 23.3 P.S.F. SPECIFIED ROOF LIVE LOAD

ALLOWABLE DEFL.(LL)= L/360 (0.75")
CALCULATED VERT. DEFL.(LL) = L/ 999 (0.04")
ALLOWABLE DEFL.(TL)= L/360 (0.75")
CALCULATED VERT. DEFL.(TL) = L/ 999 (0.11")

CSI: TC=0.19 (4-5:1) , BC=0.33 (10-11:3) , WB=0.51 (3-12:1) , SSI=0.16 (4-5:1)

DOL LUMBER=1.00 NAIL=1.00 LS BEND=1.10 COMP=1.10 SHEAR=1.10 TENS= 1.10

COMPANION LIVE LOAD FACTOR = 0.50

TRUSS PLATE MANUFACTURER IS NOT RESPONSIBLE FOR QUALITY CONTROL IN THE TRUSS MANUFACTURING PLANT .

NAIL VALUES

PLATE	GRIP(DRY) (PSI) MAX	MIN	SHEAR (PLI) MAX	MIN	SECTION (PLI) MAX	MIN
MT20	618	354	1667	822	2284	1656

PLATE PLACEMENT TOL. = 0.250 inches

PLATE ROTATION TOL. = 5.0 Deg.

JSI GRIP= 0.90 (3) (INPUT = 0.90)
JSI METAL= 0.35 (12) (INPUT = 1.00)

LICENSED PROFESSIONAL ENGINEER
R.M. TREVISAN
100136551
March 13th, 2017
PROVINCE OF ONTARIO

RECEIVED
TOWN OF MILTON
MAR 29, 2017
17-4990
BUILDING DIVISION

READ ALL NOTES ON THIS PAGE AND ON THE ENGINEERING NOTE PAGE ENP-1. THE NOTE PAGE IS AN INTEGRAL PART OF THIS DRAWING AS IT CONTAINS SPECIFICATIONS AND CRITERIA USED IN THE DESIGN OF THIS COMPONENT.

KOTT

JOB NAME	TRUSS NAME	QUANTITY	PLY	JOB DESC.	DRWG NO.
PT0317-054	T03	1	1	TRUSS DESC. LECCO RIDGE-BLOCK 328	

Kott Lumber Uxbridge, Stouffville, ON, CGC

Version 8.100 S Feb 9 2017 MiTek Industries, Inc. Mon Mar 13 09:56:56 2017 Page 1
ID:pF8Cn?9h9uHzAm5tCmlVl5yJJCp-EwR_MPvgtWHkPEB9FwQkp8fWS4sCpFxxvu4ts5zbOnL

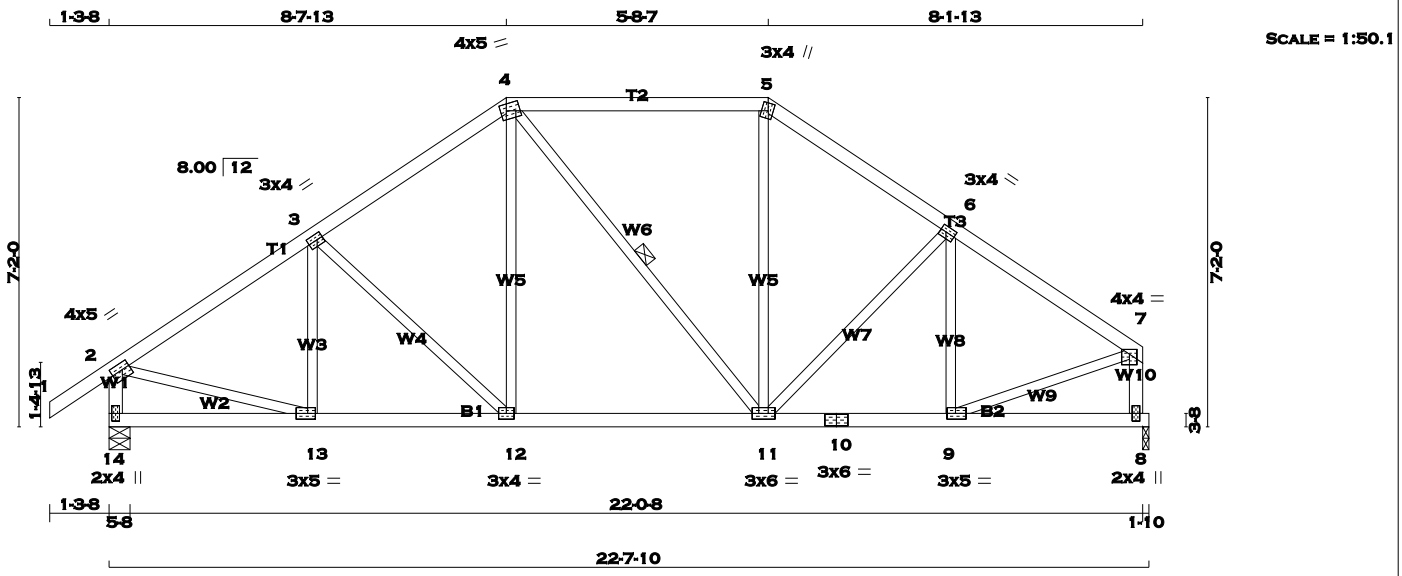

TOTAL WEIGHT = 100 lb
[M][F]

LUMBER
N. L. G. A. RULES

CHORDS	SIZE		LUMBER	DESCR.
1 - 4	2x4	DRY	No.2	SPF
4 - 5	2x4	DRY	No.2	SPF
5 - 7	2x4	DRY	No.2	SPF
14 - 2	2x4	DRY	No.2	SPF
8 - 7	2x4	DRY	No.2	SPF
14 - 10	2x4	DRY	No.2	SPF
10 - 8	2x4	DRY	No.2	SPF
ALL WEBS EXCEPT	2x3	DRY	No.2	SPF

DRY: SEASONED LUMBER.

PLATES (table is in inches)

JT	TYPE	PLATES	W	LEN	Y	X
2	TMVW-t	MT20	4.0	5.0	1.75	2.00
3	TMWW-t	MT20	3.0	4.0	1.50	1.50
4	TTWW-m	MT20	4.0	5.0	1.75	1.50
5	TTW+m	MT20	3.0	4.0	2.00	1.25
6	TMWW-t	MT20	3.0	4.0	1.50	1.50
7	TMVW-p	MT20	4.0	4.0	1.25	2.00
8	BMV1+p	MT20	2.0	4.0		
9	BMWW-t	MT20	3.0	5.0	1.50	2.25
10	BS-t	MT20	3.0	6.0		
11	BMWWW-t	MT20	3.0	6.0		
12	BMWW-t	MT20	3.0	4.0		
13	BMWW-t	MT20	3.0	5.0	1.50	2.00
14	BMV1+p	MT20	2.0	4.0		

A SIZE FOR SIZE SUBSTITUTION OF MITEK MII20 WITH TEE-LOK TL20 PLATES IS ALLOWED.

DIMENSIONS, SUPPORTS AND LOADINGS SPECIFIED BY FABRICATOR TO BE VERIFIED BY BUILDING DESIGNER

BEARINGS

JT	FACTORED GROSS REACTION VERT	HORZ	MAXIMUM FACTORED GROSS REACTION DOWN	HORZ	UPLIFT	INPUT BRG IN-SX	REQRD BRG IN-SX
14	1173	0	1173	0	0	5-8	5-8
8	1067	0	1067	0	0	1-10	1-10

UNFACTORED REACTIONS

JT	1ST LCASE COMBINED	MAX./MIN. COMPONENT REACTIONS SNOW	LIVE	PERM.LIVE	WIND	DEAD	SOIL
14	821	588 / 0	0 / 0	0 / 0	0 / 0	233 / 0	0 / 0
8	749	524 / 0	0 / 0	0 / 0	0 / 0	225 / 0	0 / 0

BEARING MATERIAL TO BE SPF NO.2 OR BETTER AT JOINT(S) 14, 8

BRACING
TOP CHORD TO BE SHEATHED OR MAX. PURLIN SPACING = 5.69 FT.
MAX. UNBRACED BOTTOM CHORD LENGTH = 10.00 FT. OR RIGID CEILING DIRECTLY APPLIED.

ALL PITCH BREAKS AND PERIMETER CORNER JOINTS MUST BE LATERALLY RESTRAINED.

1 - 2x3 SPF No.2 LATERAL BRACE(S) AT 1/ 2 LENGTH OF 4-11. DBS = 20-0-0 . CBF = 4 LBS.

DBS = DIAGONAL BRACE SPACING (MAX). CBF = CUMULATIVE BRACING FORCE. FASTEN LATERAL BRACE(S) USING (0.122"X3") SPIRAL NAILS : 1 NAIL FOR 2x3 BRACE(S), 2 FOR 1x4, 2x4, 2x5, 3 FOR 2x6, 4 FOR 2x8, 5 FOR 2x10, AND 6 FOR 2x12.

END VERTICAL(S) MUST BE SHEATHED OR HAVE BRACES AS INDICATED IN THE MAX. UNBRACED LENGTH COLUMN OF THE TABLE BELOW

LOADING
TOTAL LOAD CASES: (3)

CHORDS

MEMB. FR-TO	MAX. FACTORED FORCE (LBS)	FACTORED VERT. LOAD (PLF) FROM	TO	LC1 MAX CSI (LC)	MAX. UNBRAC LENGTH
1- 2	0 / 29	-77.3	-77.3	0.10 (1)	10.00
2- 3	-1167 / 0	-77.3	-77.3	0.20 (1)	5.69
3- 4	-1022 / 0	-77.3	-77.3	0.19 (1)	5.98
4- 5	-815 / 0	-77.3	-77.3	0.33 (1)	6.25
5- 6	-998 / 0	-77.3	-77.3	0.17 (1)	6.06
6- 7	-1067 / 0	-77.3	-77.3	0.17 (1)	5.91
14- 2	-1139 / 0	0.0	0.0	0.12 (1)	7.45
8- 7	-1035 / 0	0.0	0.0	0.11 (1)	7.72
14-13	0 / 0	-17.5	-17.5	0.07 (3)	10.00
13-12	0 / 988	-17.5	-17.5	0.21 (1)	10.00
12-11	0 / 834	-17.5	-17.5	0.18 (1)	10.00
11-10	0 / 905	-17.5	-17.5	0.20 (1)	10.00
10- 9	0 / 905	-17.5	-17.5	0.20 (1)	10.00
9- 8	0 / 0	-17.5	-17.5	0.06 (3)	10.00

WEBS

MEMB. FR-TO	MAX. FACTORED FORCE (LBS)	MAX CSI (LC)
13- 3	-163 / 21	0.05 (1)
3-12	-216 / 0	0.13 (1)
12- 4	0 / 236	0.05 (1)
4-11	-30 / 0	0.02 (1)
11- 5	0 / 208	0.05 (1)
11- 6	-134 / 0	0.08 (1)
9- 6	-234 / 0	0.07 (1)
2-13	0 / 1017	0.23 (1)
9- 7	0 / 955	0.21 (1)

DESIGN CRITERIA

SPECIFIED LOADS:

TOP CH.	LL	=	23.3	PSF
	DL	=	3.0	PSF
BOT CH.	LL	=	0.0	PSF
	DL	=	7.0	PSF
TOTAL LOAD		=	33.3	PSF

SPACING = 24.0 IN. C/C

LOADING IN FLAT SECTION BASED ON A SLOPE OF 6.00/12

THIS TRUSS IS DESIGNED FOR RESIDENTIAL OR SMALL BUILDING REQUIREMENTS OF PART 9, NBCC 2010

THIS DESIGN COMPLIES WITH:
- PART 9 OF OBC 2012 , BCBC 2012 , ABC 2014
- CSA 086-09
- TPIC 2011

(55 % OF 27.2 P.S.F. G.S.L. PLUS 8.4 P.S.F. RAIN LOAD) EQUALS 23.3 P.S.F. SPECIFIED ROOF LIVE LOAD

ALLOWABLE DEFL.(LL)= L/360 (0.75")
CALCULATED VERT. DEFL.(LL) = L/ 999 (0.03")
ALLOWABLE DEFL.(TL)= L/360 (0.75")
CALCULATED VERT. DEFL.(TL) = L/ 999 (0.06")

CSI: TC=0.33 (4-5:1) , BC=0.21 (12-13:1) , WB=0.23 (2-13:1) , SSI=0.17 (4-5:1)

DOL LUMBER=1.00 NAIL=1.00 LS BEND=1.10 COMP=1.10 SHEAR=1.10 TENS= 1.10

COMPANION LIVE LOAD FACTOR = 0.50

TRUSS PLATE MANUFACTURER IS NOT RESPONSIBLE FOR QUALITY CONTROL IN THE TRUSS MANUFACTURING PLANT .

NAIL VALUES

PLATE	GRIP(DRY) (PSI) MAX	MIN	SHEAR (PLI) MAX	MIN	SECTION (PLI) MAX	MIN
MT20	618	354	1667	822	2284	1656

PLATE PLACEMENT TOL. = 0.250 inches

PLATE ROTATION TOL. = 5.0 Deg.

JSI GRIP= 0.88 (9) (INPUT = 0.90)
JSI METAL= 0.40 (2) (INPUT = 1.00)

LICENSED PROFESSIONAL ENGINEER
P.M. TREVISAN
100136551
March 13th, 2017
PROVINCE OF ONTARIO

RECEIVED
TOWN OF MILTON
MAR 29, 2017
17-4990
BUILDING DIVISION

READ ALL NOTES ON THIS PAGE AND ON THE ENGINEERING NOTE PAGE ENP-1. THE NOTE PAGE IS AN INTEGRAL PART OF THIS DRAWING AS IT CONTAINS SPECIFICATIONS AND CRITERIA USED IN THE DESIGN OF THIS COMPONENT.

KOTT

JOB NAME	TRUSS NAME	QUANTITY	PLY	JOB DESC.	DRWG NO.
PT0317-054	T04	1	1	TRUSS DESC. LECCO RIDGE-BLOCK 328	ENG JOB: PT0317-054

Kott Lumber Uxbridge, Stouffville, ON, CGC

Version 8.100 S Feb 9 2017 MiTek Industries, Inc. Mon Mar 13 09:56:56 2017 Page 1

ID:pF8Cn?9h9uHzAm5tCmlVl5yJJCp-EwR_MPvgtWHkPEB9FwQkp8fXK4s3pE5xvu4ts5zbOnL

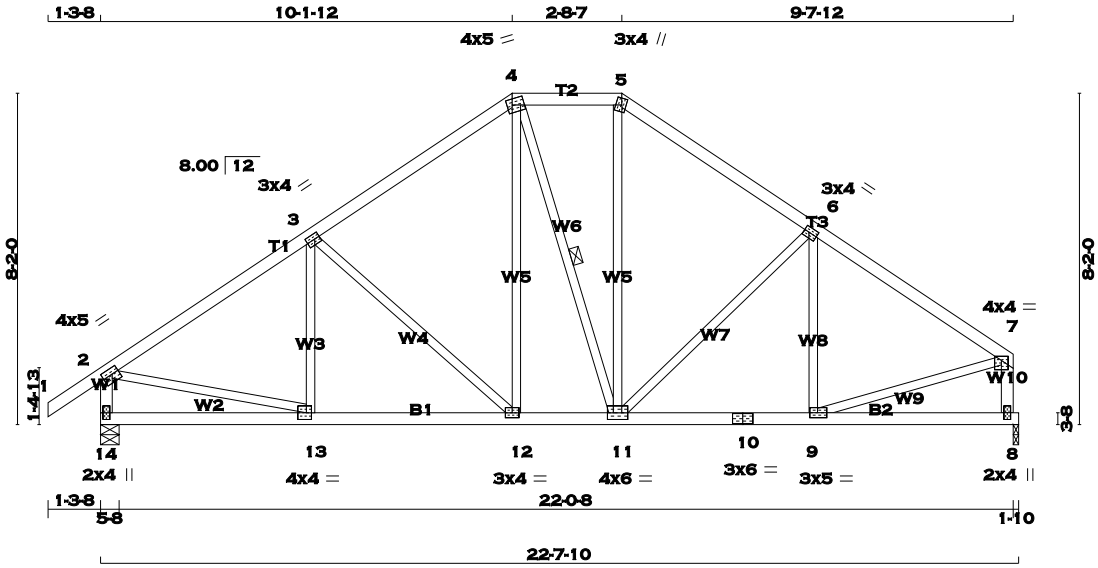

TOTAL WEIGHT = 105 lb

[M][F]

LUMBER

N. L. G. A. RULES

CHORDS	SIZE		LUMBER	DESCR.
1 - 4	2x4	DRY	No.2	SPF
4 - 5	2x4	DRY	No.2	SPF
5 - 7	2x4	DRY	No.2	SPF
14 - 2	2x4	DRY	No.2	SPF
8 - 7	2x4	DRY	No.2	SPF
14 - 10	2x4	DRY	No.2	SPF
10 - 8	2x4	DRY	No.2	SPF
ALL WEBS EXCEPT	2x3	DRY	No.2	SPF

DRY: SEASONED LUMBER.

PLATES (table is in inches)

JT	TYPE	PLATES	W	LEN	Y	X
2	TMVW-t	MT20	4.0	5.0	1.75	2.00
3	TMWW-t	MT20	3.0	4.0	1.50	1.50
4	TTWW-m	MT20	4.0	5.0	1.75	1.50
5	TTW+m	MT20	3.0	4.0	2.00	1.25
6	TMWW-t	MT20	3.0	4.0	1.50	1.50
7	TMVW-p	MT20	4.0	4.0	1.25	2.00
8	BMV1+p	MT20	2.0	4.0		
9	BMWW-t	MT20	3.0	5.0	1.50	2.25
10	BS-t	MT20	3.0	6.0		
11	BMWWW-t	MT20	4.0	6.0		
12	BMWW-t	MT20	3.0	4.0		
13	BMWW-t	MT20	4.0	4.0	2.00	1.50
14	BMV1+p	MT20	2.0	4.0		

A SIZE FOR SIZE SUBSTITUTION OF MITEK MII20 WITH TEE-LOK TL20 PLATES IS ALLOWED.

DIMENSIONS, SUPPORTS AND LOADINGS SPECIFIED BY FABRICATOR TO BE VERIFIED BY BUILDING DESIGNER

BEARINGS

JT	FACTORED GROSS REACTION VERT	HORZ	MAXIMUM FACTORED GROSS REACTION DOWN	HORZ	UPLIFT	INPUT BRG IN-SX	REQRD BRG IN-SX
14	1173	0	1173	0	0	5-8	5-8
8	1067	0	1067	0	0	1-10	1-10

UNFACTORED REACTIONS

JT	1ST LCASE COMBINED	MAX./MIN. COMPONENT REACTIONS SNOW	LIVE	PERM.LIVE	WIND	DEAD	SOIL
14	821	588 / 0	0 / 0	0 / 0	0 / 0	233 / 0	0 / 0
8	749	524 / 0	0 / 0	0 / 0	0 / 0	225 / 0	0 / 0

BEARING MATERIAL TO BE SPF NO.2 OR BETTER AT JOINT(S) 14, 8

BRACING

TOP CHORD TO BE SHEATHED OR MAX. PURLIN SPACING = 5.57 FT.
MAX. UNBRACED BOTTOM CHORD LENGTH = 10.00 FT. OR RIGID CEILING DIRECTLY APPLIED.

ALL PITCH BREAKS AND PERIMETER CORNER JOINTS MUST BE LATERALLY RESTRAINED.

1 - 2x3 SPF No.2 LATERAL BRACE(S) AT 1/ 2 LENGTH OF 4-11. DBS = 20-0-0 . CBF = 3 LBS.

DBS = DIAGONAL BRACE SPACING (MAX). CBF = CUMULATIVE BRACING FORCE. FASTEN LATERAL BRACE(S) USING (0.122"X3") SPIRAL NAILS : 1 NAIL FOR 2x3 BRACE(S), 2 FOR 1x4, 2x4, 2x5, 3 FOR 2x6, 4 FOR 2x8, 5 FOR 2x10, AND 6 FOR 2x12.

END VERTICAL(S) MUST BE SHEATHED OR HAVE BRACES AS INDICATED IN THE MAX. UNBRACED LENGTH COLUMN OF THE TABLE BELOW

LOADING

TOTAL LOAD CASES: (3)

CHORDS

MEMB. FR-TO	MAX. FACTORED FORCE (LBS)	FACTORED VERT. LOAD (PLF) FROM	TO	LC1 MAX CSI (LC)	MAX. UNBRAC LENGTH
1- 2	0 / 29	-77.3	-77.3	0.10 (1)	10.00
2- 3	-1177 / 0	-77.3	-77.3	0.28 (1)	5.57
3- 4	-936 / 0	-77.3	-77.3	0.26 (1)	6.08
4- 5	-752 / 0	-77.3	-77.3	0.08 (1)	6.25
5- 6	-926 / 0	-77.3	-77.3	0.24 (1)	6.14
6- 7	-1090 / 0	-77.3	-77.3	0.25 (1)	5.77
14- 2	-1136 / 0	0.0	0.0	0.12 (1)	7.45
8- 7	-1031 / 0	0.0	0.0	0.11 (1)	7.73
14-13	0 / 0	-17.5	-17.5	0.12 (3)	10.00
13-12	0 / 1000	-17.5	-17.5	0.22 (1)	10.00
12-11	0 / 759	-17.5	-17.5	0.15 (1)	10.00
11-10	0 / 927	-17.5	-17.5	0.20 (1)	10.00
10- 9	0 / 927	-17.5	-17.5	0.20 (1)	10.00
9- 8	0 / 0	-17.5	-17.5	0.10 (3)	10.00

WEBS

MEMB. FR-TO	MAX. FACTORED FORCE (LBS)	MAX CSI (LC)
13- 3	-106 / 56	0.04 (1)
3-12	-329 / 0	0.28 (1)
12- 4	0 / 278	0.06 (1)
4-11	-22 / 0	0.01 (1)
11- 5	0 / 260	0.06 (1)
11- 6	-250 / 0	0.21 (1)
9- 6	-171 / 32	0.06 (1)
2-13	0 / 1022	0.23 (1)
9- 7	0 / 965	0.22 (1)

DESIGN CRITERIA

SPECIFIED LOADS:

TOP	CH.	LL	=	23.3	PSF
		DL	=	3.0	PSF
BOT	CH.	LL	=	0.0	PSF
		DL	=	7.0	PSF
TOTAL	LOAD		=	33.3	PSF

SPACING = 24.0 IN. C/C

LOADING IN FLAT SECTION BASED ON A SLOPE OF 6.00/12

THIS TRUSS IS DESIGNED FOR RESIDENTIAL OR SMALL BUILDING REQUIREMENTS OF PART 9, NBCC 2010

THIS DESIGN COMPLIES WITH:
- PART 9 OF OBC 2012 , BCBC 2012 , ABC 2014
- CSA 086-09
- TPIC 2011

(55 % OF 27.2 P.S.F. G.S.L. PLUS 8.4 P.S.F. RAIN LOAD) EQUALS 23.3 P.S.F. SPECIFIED ROOF LIVE LOAD

ALLOWABLE DEFL.(LL)= L/360 (0.75")
CALCULATED VERT. DEFL.(LL) = L/ 999 (0.03")
ALLOWABLE DEFL.(TL)= L/360 (0.75")
CALCULATED VERT. DEFL.(TL) = L/ 999 (0.06")

CSI: TC=0.28 (2-3:1) , BC=0.22 (12-13:1) , WB=0.28 (3-12:1) , SSI=0.16 (2-3:1)

DOL LUMBER=1.00 NAIL=1.00 LS BEND=1.10 COMP=1.10 SHEAR=1.10 TENS= 1.10

COMPANION LIVE LOAD FACTOR = 0.50

TRUSS PLATE MANUFACTURER IS NOT RESPONSIBLE FOR QUALITY CONTROL IN THE TRUSS MANUFACTURING PLANT .

NAIL VALUES

PLATE	GRIP(DRY) (PSI) MAX	MIN	SHEAR (PLI) MAX	MIN	SECTION (PLI) MAX	MIN
MT20	618	354	1667	822	2284	1656

PLATE PLACEMENT TOL. = 0.250 inches

PLATE ROTATION TOL. = 5.0 Deg.

JSI GRIP= 0.90 (7) (INPUT = 0.90)
JSI METAL= 0.40 (2) (INPUT = 1.00)

LICENSED PROFESSIONAL ENGINEER
P.M. TREVISAN
100136551
March 13th, 2017
PROVINCE OF ONTARIO

RECEIVED
TOWN OF MILTON
MAR 29, 2017
17-4990
BUILDING DIVISION

READ ALL NOTES ON THIS PAGE AND ON THE ENGINEERING NOTE PAGE ENP-1. THE NOTE PAGE IS AN INTEGRAL PART OF THIS DRAWING AS IT CONTAINS SPECIFICATIONS AND CRITERIA USED IN THE DESIGN OF THIS COMPONENT.

KOTT

JOB NAME	TRUSS NAME	QUANTITY	PLY	JOB DESC.	DRWG NO.
PT0317-054	T05	1	1	TRUSS DESC. LECCO RIDGE-BLOCK 328	ENG JOB: PT0317-054

Kott Lumber Uxbridge, Stouffville, ON, CGC

Version 8.100 S Feb 9 2017 MiTek Industries, Inc. Mon Mar 13 09:56:56 2017 Page 1

ID:pF8Cn?9h9uHzAm5tCmlVl5yJJCp-EwR_MPvgtWHkPEB9FwQkp8fW?4srpBCxvu4ts5zbOnL

SCALE = 1:67.4

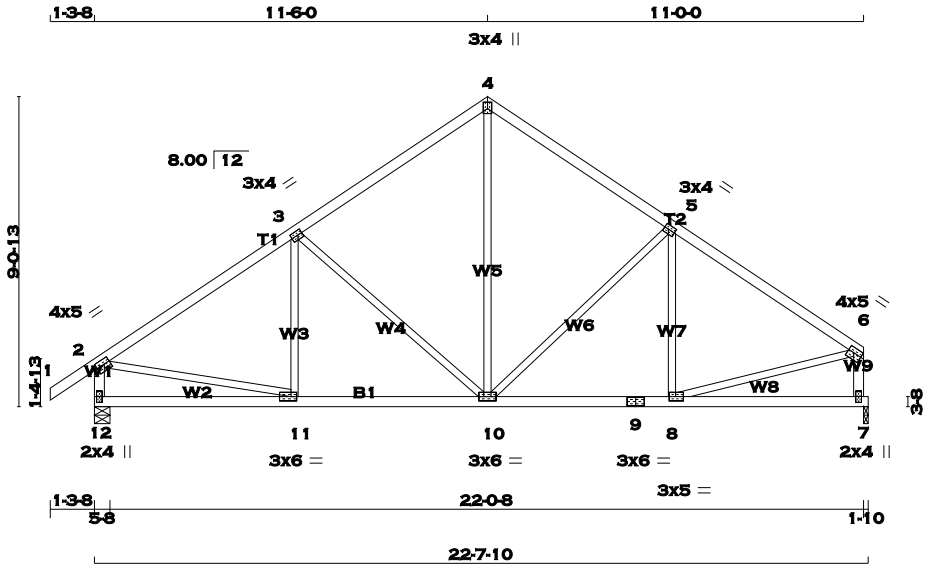

TOTAL WEIGHT = 97 lb

[M][F]

LUMBER

N. L. G. A. RULES

CHORDS	SIZE		LUMBER	DESCR.
1 - 4	2x4	DRY	No.2	SPF
4 - 6	2x4	DRY	No.2	SPF
12 - 2	2x4	DRY	No.2	SPF
7 - 6	2x4	DRY	No.2	SPF
12 - 9	2x4	DRY	No.2	SPF
9 - 7	2x4	DRY	No.2	SPF
ALL WEBS EXCEPT	2x3	DRY	No.2	SPF

DRY: SEASONED LUMBER.

PLATES (table is in inches)

JT	TYPE	PLATES	W	LEN	Y	X
2	TMVW-t	MT20	4.0	5.0	1.75	2.00
3	TMWW-t	MT20	3.0	4.0	1.50	1.50
4	TTW+p	MT20	3.0	4.0	2.25	1.50
5	TMWW-t	MT20	3.0	4.0	1.50	1.50
6	TMVW-t	MT20	4.0	5.0	1.75	Edge
7	BMV1+p	MT20	2.0	4.0		
8	BMWW-t	MT20	3.0	5.0	1.50	2.25
9	BS-t	MT20	3.0	6.0		
10	BMWWW-t	MT20	3.0	6.0		
11	BMWW-t	MT20	3.0	6.0	1.50	2.00
12	BMV1+p	MT20	2.0	4.0		

Edge - INDICATES REFERENCE CORNER OF PLATE TOUCHES EDGE OF CHORD.

A SIZE FOR SIZE SUBSTITUTION OF MITEK MII20 WITH TEE-LOK TL20 PLATES IS ALLOWED.

DIMENSIONS, SUPPORTS AND LOADINGS SPECIFIED BY FABRICATOR TO BE VERIFIED BY BUILDING DESIGNER

BEARINGS

JT	FACTORED GROSS REACTION VERT	HORZ	MAXIMUM FACTORED GROSS REACTION DOWN	HORZ	UPLIFT	INPUT BRG IN-SX	REQRD BRG IN-SX
12	1173	0	1173	0	0	5-8	5-8
7	1067	0	1067	0	0	1-10	1-10

UNFACTORED REACTIONS

JT	1ST LCASE COMBINED	MAX./MIN. COMPONENT REACTIONS SNOW	LIVE	PERM.LIVE	WIND	DEAD	SOIL
12	821	588 / 0	0 / 0	0 / 0	0 / 0	233 / 0	0 / 0
7	749	524 / 0	0 / 0	0 / 0	0 / 0	225 / 0	0 / 0

BEARING MATERIAL TO BE SPF NO.2 OR BETTER AT JOINT(S) 12, 7

BRACING

TOP CHORD TO BE SHEATHED OR MAX. PURLIN SPACING = 5.46 FT.
MAX. UNBRACED BOTTOM CHORD LENGTH = 10.00 FT. OR RIGID CEILING DIRECTLY APPLIED.

ALL PITCH BREAKS AND PERIMETER CORNER JOINTS MUST BE LATERALLY RESTRAINED.

LOADING

TOTAL LOAD CASES: (3)

CHORDS

MEMB. FR-TO	MAX. FACTORED FORCE (LBS)	FACTORED VERT. LOAD (PLF) FROM	TO	LC1 MAX CSI (LC)	MAX. UNBRAC LENGTH
1- 2	0 / 29	-77.3	-77.3	0.10 (1)	10.00
2- 3	-1172 / 0	-77.3	-77.3	0.36 (1)	5.46
3- 4	-860 / 0	-77.3	-77.3	0.34 (1)	6.15
4- 5	-859 / 0	-77.3	-77.3	0.31 (1)	6.21
5- 6	-1097 / 0	-77.3	-77.3	0.32 (1)	5.65
12- 2	-1131 / 0	0.0	0.0	0.12 (1)	7.46
7- 6	-1026 / 0	0.0	0.0	0.11 (1)	7.74
12-11	0 / 0	-17.5	-17.5	0.14 (3)	10.00
11-10	0 / 1000	-17.5	-17.5	0.23 (1)	10.00
10- 9	0 / 936	-17.5	-17.5	0.21 (1)	10.00
9- 8	0 / 936	-17.5	-17.5	0.21 (1)	10.00
8- 7	0 / 0	-17.5	-17.5	0.13 (3)	10.00

WEBS

MEMB. FR-TO	MAX. FACTORED FORCE (LBS)	MAX CSI (LC)
11- 3	-73 / 74	0.03 (1)
3-10	-413 / 0	0.47 (1)
10- 4	0 / 600	0.14 (1)
10- 5	-340 / 0	0.37 (1)
8- 5	-130 / 53	0.06 (1)
2-11	0 / 1017	0.23 (1)
8- 6	0 / 965	0.22 (1)

DESIGN CRITERIA

SPECIFIED LOADS:

TOP	CH.	LL	=	23.3	PSF
		DL	=	3.0	PSF
BOT	CH.	LL	=	0.0	PSF
		DL	=	7.0	PSF
TOTAL	LOAD		=	33.3	PSF

SPACING = 24.0 IN. C/C

THIS TRUSS IS DESIGNED FOR RESIDENTIAL OR SMALL BUILDING REQUIREMENTS OF PART 9, NBCC 2010

THIS DESIGN COMPLIES WITH:
- PART 9 OF OBC 2012 , BCBC 2012 , ABC 2014
- CSA 086-09
- TPIC 2011

(55 % OF 27.2 P.S.F. G.S.L. PLUS 8.4 P.S.F. RAIN LOAD) EQUALS 23.3 P.S.F. SPECIFIED ROOF LIVE LOAD

ALLOWABLE DEFL.(LL)= L/360 (0.75")
CALCULATED VERT. DEFL.(LL) = L/ 999 (0.03")
ALLOWABLE DEFL.(TL)= L/360 (0.75")
CALCULATED VERT. DEFL.(TL) = L/ 999 (0.07")

CSI: TC=0.36 (2-3:1) , BC=0.23 (10-11:1) , WB=0.47 (3-10:1) , SSI=0.18 (2-3:1)

DOL LUMBER=1.00 NAIL=1.00 LS BEND=1.10 COMP=1.10 SHEAR=1.10 TENS= 1.10

COMPANION LIVE LOAD FACTOR = 0.50

TRUSS PLATE MANUFACTURER IS NOT RESPONSIBLE FOR QUALITY CONTROL IN THE TRUSS MANUFACTURING PLANT .

NAIL VALUES

PLATE	GRIP(DRY) (PSI) MAX	MIN	SHEAR (PLI) MAX	MIN	SECTION (PLI) MAX	MIN
MT20	618	354	1667	822	2284	1656

PLATE PLACEMENT TOL. = 0.250 inches

PLATE ROTATION TOL. = 5.0 Deg.

JSI GRIP= 0.90 (8) (INPUT = 0.90)
JSI METAL= 0.41 (2) (INPUT = 1.00)

LICENSED PROFESSIONAL ENGINEER
P.M. TREVISAN
100136551
March 13th, 2017
PROVINCE OF ONTARIO

RECEIVED
TOWN OF MILTON
MAR 29, 2017
17-4990
BUILDING DIVISION

READ ALL NOTES ON THIS PAGE AND ON THE ENGINEERING NOTE PAGE ENP-1. THE NOTE PAGE IS AN INTEGRAL PART OF THIS DRAWING AS IT CONTAINS SPECIFICATIONS AND CRITERIA USED IN THE DESIGN OF THIS COMPONENT.

KOTT

JOB NAME	TRUSS NAME	QUANTITY	PLY	JOB DESC.	DRWG NO.
PT0317-054	T06	2	1	TRUSS DESC. LECCO RIDGE-BLOCK 328	ENG JOB: PT0317-054

Kott Lumber Uxbridge, Stouffville, ON, CGC

Version 8.100 S Feb 9 2017 MiTek Industries, Inc. Mon Mar 13 09:56:57 2017 Page 1

ID:pF8Cn?9h9uHzAm5tCmlVl5yJJCp-i6?NZlwIeqPb1OmLpdxzLLCk4UBIYhQ58YpROXzbOnK

SCALE = 1:43.6

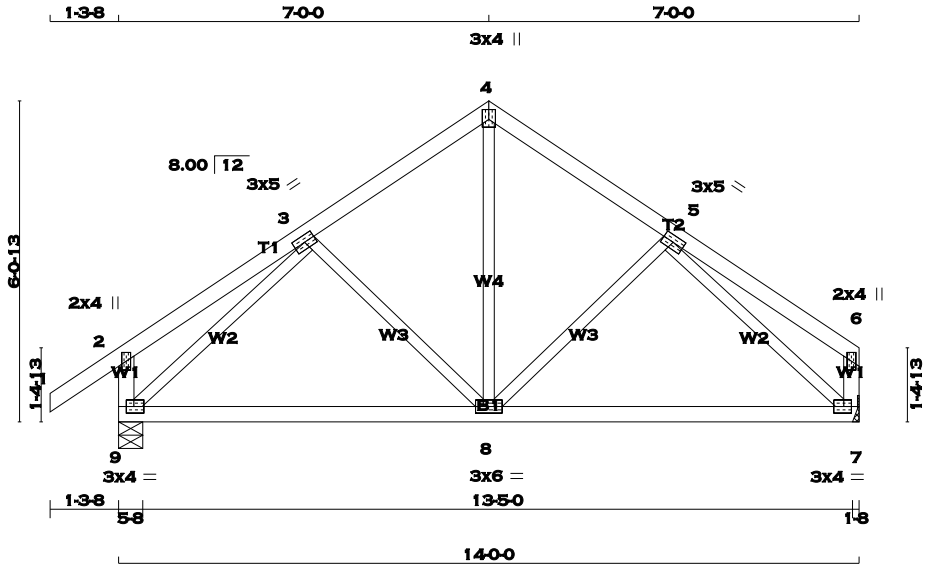

TOTAL WEIGHT = 2 X 59 = 117 lb

[M][F]

LUMBER

N. L. G. A. RULES

CHORDS	SIZE		LUMBER	DESCR.
1 - 4	2x4	DRY	No.2	SPF
4 - 6	2x4	DRY	No.2	SPF
9 - 2	2x4	DRY	No.2	SPF
7 - 6	2x4	DRY	No.2	SPF
9 - 7	2x4	DRY	No.2	SPF
ALL WEBS EXCEPT	2x3	DRY	No.2	SPF

DRY: SEASONED LUMBER.

PLATES (table is in inches)

JT	TYPE	PLATES	W	LEN	Y	X
2	TMV+p	MT20	2.0	4.0		
3	TMWW-t	MT20	3.0	5.0		
4	TTW+p	MT20	3.0	4.0	2.25	1.50
5	TMWW-t	MT20	3.0	5.0		
6	TMV+p	MT20	2.0	4.0		
7	BMVW1-t	MT20	3.0	4.0	1.50	1.75
8	BMWWW-t	MT20	3.0	6.0		
9	BMVW1-t	MT20	3.0	4.0	1.50	1.75

A SIZE FOR SIZE SUBSTITUTION OF MITEK MII20 WITH TEE-LOK TL20 PLATES IS ALLOWED.

DIMENSIONS, SUPPORTS AND LOADINGS SPECIFIED BY FABRICATOR TO BE VERIFIED BY BUILDING DESIGNER

BEARINGS

JT	FACTORED GROSS REACTION VERT	HORZ		MAXIMUM FACTORED GROSS REACTION DOWN	HORZ	UPLIFT	INPUT BRG IN-SX	REQRD BRG IN-SX
9	770	0		770	0	0	5-8	5-8
7	664	0		664	0	0	HANGER BY OTHERS MIN. SEAT SIZE: 1-8	

UNFACTORED REACTIONS

JT	1ST LCASE COMBINED	MAX./MIN. COMPONENT REACTIONS SNOW	LIVE	PERM.LIVE	WIND	DEAD	SOIL
9	538	390 / 0	0 / 0	0 / 0	0 / 0	148 / 0	0 / 0
7	466	326 / 0	0 / 0	0 / 0	0 / 0	140 / 0	0 / 0

BEARING MATERIAL TO BE SPF NO.2 OR BETTER AT JOINT(S) 9

BRACING

TOP CHORD TO BE SHEATHED OR MAX. PURLIN SPACING = 6.25 FT.
MAX. UNBRACED BOTTOM CHORD LENGTH = 10.00 FT. OR RIGID CEILING DIRECTLY APPLIED.

ALL PITCH BREAKS AND PERIMETER CORNER JOINTS MUST BE LATERALLY RESTRAINED.

LOADING

TOTAL LOAD CASES: (3)

CHORDS

MEMB. FR-TO	MAX. FACTORED FORCE (LBS)	VERT. LOAD (PLF) FROM	TO	LC1 MAX CSI (LC)	MAX. UNBRAC LENGTH
1- 2	0 / 29	-77.3	-77.3	0.10 (1)	10.00
2- 3	0 / 17	-77.3	-77.3	0.15 (1)	10.00
3- 4	-524 / 0	-77.3	-77.3	0.12 (1)	6.25
4- 5	-524 / 0	-77.3	-77.3	0.11 (1)	6.25
5- 6	0 / 17	-77.3	-77.3	0.15 (1)	10.00
9- 2	-211 / 0	0.0	0.0	0.02 (1)	7.81
7- 6	-104 / 0	0.0	0.0	0.01 (1)	7.81
9- 8	0 / 525	-17.5	-17.5	0.28 (3)	10.00
8- 7	0 / 525	-17.5	-17.5	0.28 (3)	10.00

WEBS

MEMB. FR-TO	MAX. FACTORED FORCE (LBS)	MAX CSI (LC)
8- 4	0 / 352	0.08 (1)
8- 5	-144 / 6	0.06 (1)
3- 8	-144 / 6	0.06 (1)
9- 3	-734 / 0	0.28 (1)
5- 7	-734 / 0	0.28 (1)

DESIGN CRITERIA

SPECIFIED LOADS:

TOP	CH.	LL	=	23.3	PSF
		DL	=	3.0	PSF
BOT	CH.	LL	=	0.0	PSF
		DL	=	7.0	PSF
TOTAL	LOAD		=	33.3	PSF

SPACING = 24.0 IN. C/C

THIS TRUSS IS DESIGNED FOR RESIDENTIAL OR SMALL BUILDING REQUIREMENTS OF PART 9, NBCC 2010

THIS DESIGN COMPLIES WITH:
- PART 9 OF OBC 2012 , BCBC 2012 , ABC 2014
- CSA 086-09
- TPIC 2011

(55 % OF 27.2 P.S.F. G.S.L. PLUS 8.4 P.S.F. RAIN LOAD) EQUALS 23.3 P.S.F. SPECIFIED ROOF LIVE LOAD

ALLOWABLE DEFL.(LL)= L/360 (0.47")
CALCULATED VERT. DEFL.(LL) = L/ 999 (0.01")
ALLOWABLE DEFL.(TL)= L/360 (0.47")
CALCULATED VERT. DEFL.(TL) = L/ 999 (0.06")

CSI: TC=0.15 (2-3:1) , BC=0.28 (8-9:3) , WB=0.28 (3-9:1) , SSI=0.11 (3-4:1)

DOL LUMBER=1.00 NAIL=1.00 LS BEND=1.10 COMP=1.10 SHEAR=1.10 TENS= 1.10

COMPANION LIVE LOAD FACTOR = 0.50

TRUSS PLATE MANUFACTURER IS NOT RESPONSIBLE FOR QUALITY CONTROL IN THE TRUSS MANUFACTURING PLANT .

NAIL VALUES

PLATE	GRIP(DRY) (PSI) MAX	MIN	SHEAR (PLI) MAX	MIN	SECTION (PLI) MAX	MIN
MT20	618	354	1667	822	2284	1656

PLATE PLACEMENT TOL. = 0.250 inches

PLATE ROTATION TOL. = 5.0 Deg.

JSI GRIP= 0.81 (3) (INPUT = 0.90)
JSI METAL= 0.21 (5) (INPUT = 1.00)

LICENSED PROFESSIONAL ENGINEER
P.M. TREVISAN
100136551
March 13th, 2017
PROVINCE OF ONTARIO

RECEIVED
TOWN OF MILTON
MAR 29, 2017
17-4990
BUILDING DIVISION

READ ALL NOTES ON THIS PAGE AND ON THE ENGINEERING NOTE PAGE ENP-1. THE NOTE PAGE IS AN INTEGRAL PART OF THIS DRAWING AS IT CONTAINS SPECIFICATIONS AND CRITERIA USED IN THE DESIGN OF THIS COMPONENT.

KOTT

JOB NAME	TRUSS NAME	QUANTITY	PLY	JOB DESC.	DRWG NO.
PT0317-054	**T07**	**1**	**1**	TRUSS DESC. LECCO RIDGE-BLOCK 328	

ENG JOB: PT0317-054

Kott Lumber Uxbridge, Stouffville, ON, CGC

Version 8.100 S Feb 9 2017 MiTek Industries, Inc. Mon Mar 13 09:56:57 2017 Page 1

ID:pF8Cn?9h9uHzAm5tCmlVl5yJJCp-i6?NZlwIeqPb1OmLpdxzLLCkkUBHYdo58YpROXzbOnK

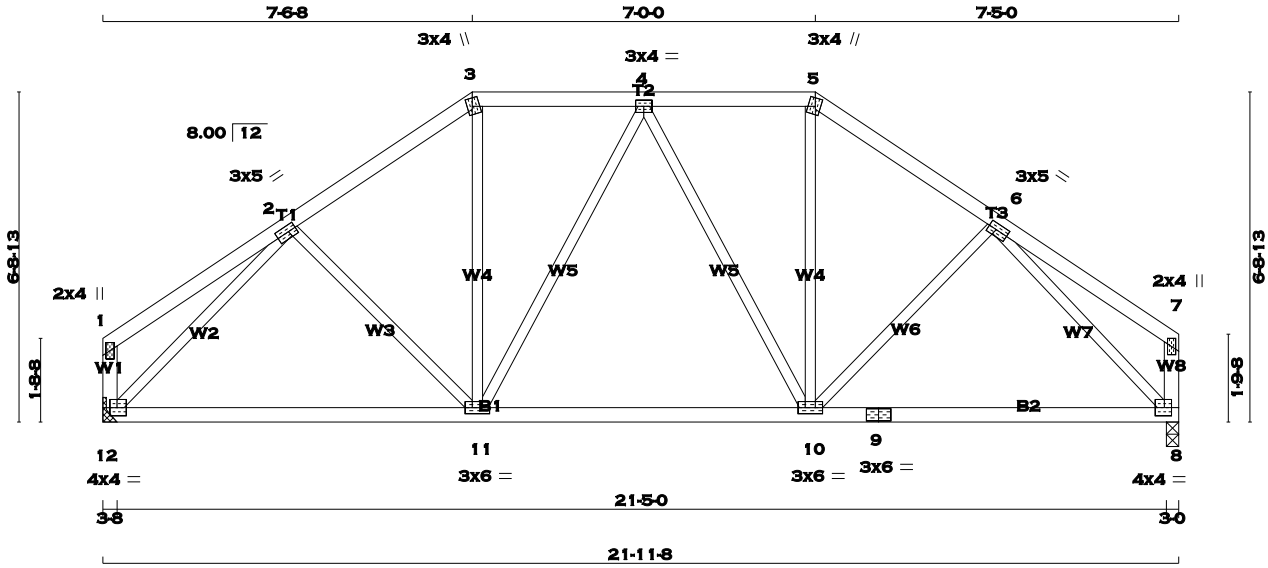

TOTAL WEIGHT = 95 lb

[M][F]

LUMBER

N. L. G. A. RULES

CHORDS	SIZE		LUMBER	DESCR.
1 - 3	2x4	DRY	No.2	SPF
3 - 5	2x4	DRY	No.2	SPF
5 - 7	2x4	DRY	No.2	SPF
12 - 1	2x4	DRY	No.2	SPF
8 - 7	2x4	DRY	No.2	SPF
12 - 9	2x4	DRY	No.2	SPF
9 - 8	2x4	DRY	No.2	SPF
ALL WEBS EXCEPT	2x3	DRY	No.2	SPF

DRY: SEASONED LUMBER.

PLATES (table is in inches)

JT	TYPE	PLATES	W	LEN	Y	X
1	TMV+p	MT20	2.0	4.0		
2	TMWW-t	MT20	3.0	5.0	1.50	2.00
3	TTW+m	MT20	3.0	4.0	2.00	1.25
4	TMWW-t	MT20	3.0	4.0		
5	TTW+m	MT20	3.0	4.0	2.00	1.25
6	TMWW-t	MT20	3.0	5.0	1.50	2.00
7	TMV+p	MT20	2.0	4.0		
8	BMVW1-t	MT20	4.0	4.0	2.00	1.75
9	BS-t	MT20	3.0	6.0		
10	BMWWW-t	MT20	3.0	6.0		
11	BMWWW-t	MT20	3.0	6.0		
12	BMVW1-t	MT20	4.0	4.0	2.00	1.75

A SIZE FOR SIZE SUBSTITUTION OF MITEK MII20 WITH TEE-LOK TL20 PLATES IS ALLOWED.

DIMENSIONS, SUPPORTS AND LOADINGS SPECIFIED BY FABRICATOR TO BE VERIFIED BY BUILDING DESIGNER

BEARINGS

JT	FACTORED GROSS REACTION VERT	HORZ	MAXIMUM FACTORED GROSS REACTION DOWN	HORZ	UPLIFT	INPUT BRG IN-SX	REQRD BRG IN-SX
12	1041	0	1041	0	0	HANGER BY OTHERS MIN. SEAT SIZE: 3-8	
8	1041	0	1041	0	0	3-0	3-0

UNFACTORED REACTIONS

JT	1ST LCASE COMBINED	SNOW	LIVE	PERM.LIVE	WIND	DEAD	SOIL
		MAX./MIN. COMPONENT REACTIONS					
12	731	511 / 0	0 / 0	0 / 0	0 / 0	220 / 0	0 / 0
8	731	511 / 0	0 / 0	0 / 0	0 / 0	220 / 0	0 / 0

BEARING MATERIAL TO BE SPF NO.2 OR BETTER AT JOINT(S) 8

BRACING

TOP CHORD TO BE SHEATHED OR MAX. PURLIN SPACING = 6.10 FT.
MAX. UNBRACED BOTTOM CHORD LENGTH = 10.00 FT. OR RIGID CEILING DIRECTLY APPLIED.

ALL PITCH BREAKS AND PERIMETER CORNER JOINTS MUST BE LATERALLY RESTRAINED.

LOADING

TOTAL LOAD CASES: (3)

CHORDS

MEMB. FR-TO	MAX. FORCE (LBS)	FACTORED VERT. LOAD (PLF) FROM	TO	LC1 MAX CSI (LC)	MAX. UNBRAC LENGTH
1- 2	0 / 18	-77.3	-77.3	0.17 (1)	10.00
2- 3	-998 / 0	-77.3	-77.3	0.14 (1)	6.10
3- 4	-819 / 0	-77.3	-77.3	0.12 (1)	6.25
4- 5	-812 / 0	-77.3	-77.3	0.12 (1)	6.25
5- 6	-990 / 0	-77.3	-77.3	0.14 (1)	6.13
6- 7	0 / 18	-77.3	-77.3	0.16 (1)	10.00
12- 1	-113 / 0	0.0	0.0	0.01 (1)	7.81
8- 7	-112 / 0	0.0	0.0	0.01 (1)	7.81
12-11	0 / 844	-17.5	-17.5	0.27 (3)	10.00
11-10	0 / 902	-17.5	-17.5	0.28 (3)	10.00
10- 9	0 / 823	-17.5	-17.5	0.26 (3)	10.00
9- 8	0 / 823	-17.5	-17.5	0.26 (3)	10.00

WEBS

MEMB. FR-TO	MAX. FORCE (LBS)	MAX CSI (LC)
2-11	-42 / 38	0.02 (1)
11- 3	0 / 324	0.07 (1)
11- 4	-176 / 0	0.18 (1)
4-10	-191 / 0	0.20 (1)
10- 5	0 / 322	0.07 (1)
10- 6	-23 / 42	0.01 (3)
12- 2	-1214 / 0	0.57 (1)
6- 8	-1202 / 0	0.56 (1)

DESIGN CRITERIA

SPECIFIED LOADS:

TOP	CH.	LL	=	23.3	PSF
		DL	=	3.0	PSF
BOT	CH.	LL	=	0.0	PSF
		DL	=	7.0	PSF
TOTAL	LOAD		=	33.3	PSF

SPACING = 24.0 IN. C/C

LOADING IN FLAT SECTION BASED ON A SLOPE OF 6.00/12

THIS TRUSS IS DESIGNED FOR RESIDENTIAL OR SMALL BUILDING REQUIREMENTS OF PART 9, NBCC 2010

THIS DESIGN COMPLIES WITH:
- PART 9 OF OBC 2012 , BCBC 2012 , ABC 2014
- CSA 086-09
- TPIC 2011

(55 % OF 27.2 P.S.F. G.S.L. PLUS 8.4 P.S.F. RAIN LOAD) EQUALS 23.3 P.S.F. SPECIFIED ROOF LIVE LOAD

ALLOWABLE DEFL.(LL)= L/360 (0.73")
CALCULATED VERT. DEFL.(LL) = L/ 999 (0.03")
ALLOWABLE DEFL.(TL)= L/360 (0.73")
CALCULATED VERT. DEFL.(TL) = L/ 999 (0.11")

CSI: TC=0.17 (1-2:1) , BC=0.28 (10-11:3) , WB=0.57 (2-12:1) , SSI=0.13 (3-4:1)

DOL LUMBER=1.00 NAIL=1.00 LS BEND=1.10 COMP=1.10 SHEAR=1.10 TENS= 1.10

COMPANION LIVE LOAD FACTOR = 0.50

TRUSS PLATE MANUFACTURER IS NOT RESPONSIBLE FOR QUALITY CONTROL IN THE TRUSS MANUFACTURING PLANT .

NAIL VALUES

PLATE	GRIP(DRY) (PSI) MAX	MIN	SHEAR (PLI) MAX	MIN	SECTION (PLI) MAX	MIN
MT20	618	354	1667	822	2284	1656

PLATE PLACEMENT TOL. = 0.250 inches

PLATE ROTATION TOL. = 5.0 Deg.

JSI GRIP= 0.90 (2) (INPUT = 0.90)
JSI METAL= 0.35 (2) (INPUT = 1.00)

LICENSED PROFESSIONAL ENGINEER
R.M. TREVISAN
100136551
March 13th, 2017
PROVINCE OF ONTARIO

RECEIVED
TOWN OF MILTON
MAR 29, 2017
17-4990
BUILDING DIVISION

READ ALL NOTES ON THIS PAGE AND ON THE ENGINEERING NOTE PAGE ENP-1. THE NOTE PAGE IS AN INTEGRAL PART OF THIS DRAWING AS IT CONTAINS SPECIFICATIONS AND CRITERIA USED IN THE DESIGN OF THIS COMPONENT.

KOTT

JOB NAME	TRUSS NAME	QUANTITY	PLY	JOB DESC.	DRWG NO.
PT0317-054	T08	1	1	TRUSS DESC. LECCO RIDGE-BLOCK 328	ENG JOB: PT0317-054

Kott Lumber Uxbridge, Stouffville, ON, CGC

Version 8.100 S Feb 9 2017 MiTek Industries, Inc. Mon Mar 13 09:56:57 2017 Page 1

ID:pF8Cn?9h9uHzAm5tCmlVl5yJJCp-i6?NZlwIeqPb1OmLpdxzLLCkCUDAYjB58YpROXzbOnK

SCALE = 1:40.9

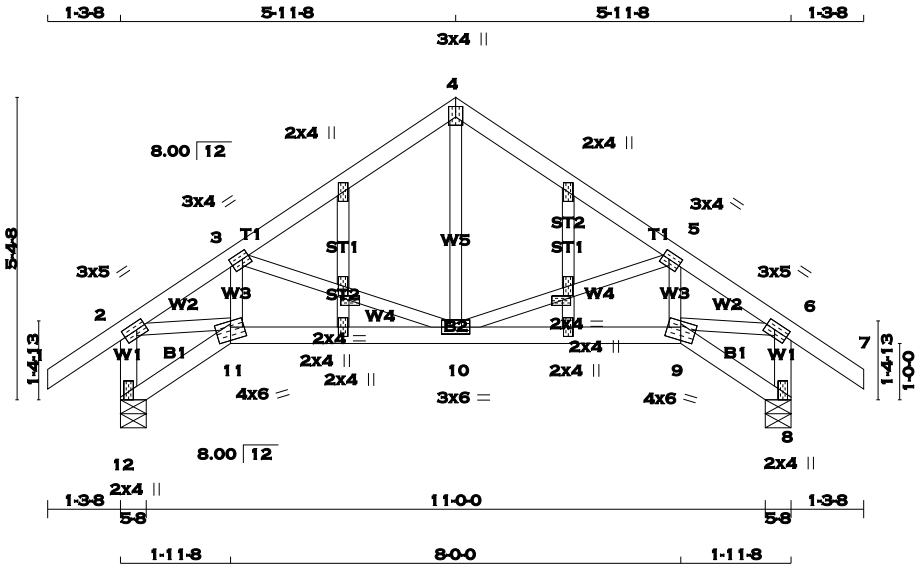

TOTAL WEIGHT = 55 lb

[M][F]

LUMBER

N. L. G. A. RULES

CHORDS	SIZE		LUMBER	DESCR.
12 - 2	2x4	DRY	No.2	SPF
1 - 4	2x4	DRY	No.2	SPF
4 - 7	2x4	DRY	No.2	SPF
8 - 6	2x4	DRY	No.2	SPF
12 - 11	2x4	DRY	No.2	SPF
11 - 9	2x4	DRY	No.2	SPF
9 - 8	2x4	DRY	No.2	SPF
ALL WEBS	2x3	DRY	No.2	SPF
ALL GABLE WEBS	2x3	DRY	No.2	SPF

DRY: SEASONED LUMBER.

GABLE STUDS SPACED AT 2-0-0 OC.

PLATES (table is in inches)

JT	TYPE	PLATES	W	LEN	Y	X
2	TMVW-t	MT20	3.0	5.0	1.50	2.00
3	TMWW-t	MT20	3.0	4.0	1.50	1.50
4	TTW+p	MT20	3.0	4.0	2.25	1.50
5	TMWW-t	MT20	3.0	4.0	1.50	1.50
6	TMVW-t	MT20	3.0	5.0	1.50	2.00
8	BMV1+p	MT20	2.0	4.0	Edge	
9	BBWW-m	MT20	4.0	6.0	2.75	2.75
10	BMWWW-t	MT20	3.0	6.0		
11	BBWW-m	MT20	4.0	6.0	2.75	2.75
12	BMV1+p	MT20	4.0	2.0	Edge	
13	NP-p	MT20	2.0	4.0	1.00	1.75
13, 14, 15, 16, 17, 18						
13	NP+w	MT20	2.0	4.0		
18	NP-p	MT20	2.0	4.0	1.00	1.75

Edge - INDICATES REFERENCE CORNER OF PLATE TOUCHES EDGE OF CHORD.

A SIZE FOR SIZE SUBSTITUTION OF MITEK MII20 WITH TEE-LOK TL20 PLATES IS ALLOWED.

DIMENSIONS, SUPPORTS AND LOADINGS SPECIFIED BY FABRICATOR TO BE VERIFIED BY BUILDING DESIGNER

BEARINGS

JT	FACTORED GROSS REACTION VERT	HORZ		MAXIMUM FACTORED GROSS REACTION DOWN	HORZ	UPLIFT	INPUT BRG IN-SX	REQRD BRG IN-SX
12	671	0		671	0	0	5-8	5-8
8	671	0		671	0	0	5-8	5-8

UNFACTORED REACTIONS

JT	1ST LCASE COMBINED	MAX./MIN. COMPONENT REACTIONS SNOW	LIVE	PERM.LIVE	WIND	DEAD	SOIL
12	469	341 / 0	0 / 0	0 / 0	0 / 0	127 / 0	0 / 0
8	469	341 / 0	0 / 0	0 / 0	0 / 0	127 / 0	0 / 0

BEARING MATERIAL TO BE SPF NO.2 OR BETTER AT JOINT(S) 12, 8

BRACING

TOP CHORD TO BE SHEATHED OR MAX. PURLIN SPACING = 6.25 FT.
MAX. UNBRACED BOTTOM CHORD LENGTH = 10.00 FT. OR RIGID CEILING DIRECTLY APPLIED.

ALL PITCH BREAKS AND PERIMETER CORNER JOINTS MUST BE LATERALLY RESTRAINED.

LOADING

TOTAL LOAD CASES: (3)

CHORDS MEMB. FR-TO	MAX. FACTORED FORCE (LBS)	FACTORED VERT. LOAD (PLF) FROM	TO	LC1 MAX CSI (LC)	MAX. UNBRAC LENGTH	WEBS MEMB. FR-TO	MAX. FACTORED FORCE (LBS)	MAX CSI (LC)
12- 2	-654 / 0	0.0	0.0	0.07 (1)	7.81	10- 4	0 / 309	0.07 (1)
1- 2	0 / 29	-77.3	-77.3	0.10 (1)	10.00	10- 5	-327 / 0	0.10 (1)
2- 3	-855 / 0	-77.3	-77.3	0.10 (1)	6.25	9- 5	0 / 43	0.01 (3)
3- 4	-522 / 0	-77.3	-77.3	0.14 (1)	6.25	9- 6	0 / 732	0.16 (1)
4- 5	-522 / 0	-77.3	-77.3	0.14 (1)	6.25	3-10	-327 / 0	0.10 (1)
5- 6	-855 / 0	-77.3	-77.3	0.10 (1)	6.25	11- 3	0 / 43	0.01 (3)
6- 7	0 / 29	-77.3	-77.3	0.10 (1)	10.00	2-11	0 / 732	0.16 (1)
8- 6	-654 / 0	0.0	0.0	0.07 (1)	7.81			
12-11	0 / 0	-17.5	-17.5	0.02 (3)	10.00			
11-10	0 / 730	-17.5	-17.5	0.16 (1)	10.00			
10- 9	0 / 730	-17.5	-17.5	0.16 (1)	10.00			
9- 8	0 / 0	-17.5	-17.5	0.02 (3)	10.00			

DESIGN CRITERIA

SPECIFIED LOADS:

TOP	CH.	LL	=	23.3	PSF
		DL	=	3.0	PSF
BOT	CH.	LL	=	0.0	PSF
		DL	=	7.0	PSF
TOTAL	LOAD		=	33.3	PSF

SPACING = 24.0 IN. C/C

THIS TRUSS IS DESIGNED FOR RESIDENTIAL OR SMALL BUILDING REQUIREMENTS OF PART 9, NBCC 2010

THIS DESIGN COMPLIES WITH:
- PART 9 OF OBC 2012 , BCBC 2012 , ABC 2014
- CSA 086-09
- TPIC 2011

(55 % OF 27.2 P.S.F. G.S.L. PLUS 8.4 P.S.F. RAIN LOAD) EQUALS 23.3 P.S.F. SPECIFIED ROOF LIVE LOAD

ALLOWABLE DEFL.(LL)= L/360 (0.40")
CALCULATED VERT. DEFL.(LL) = L/ 999 (0.01")
ALLOWABLE DEFL.(TL)= L/360 (0.40")
CALCULATED VERT. DEFL.(TL) = L/ 999 (0.03")

CSI: TC=0.14 (4-5:1) , BC=0.16 (10-11:1) , WB=0.16 (6-9:1) , SSI=0.11 (4-5:1)

DOL LUMBER=1.00 NAIL=1.00 LS BEND=1.10 COMP=1.10 SHEAR=1.10 TENS= 1.10

COMPANION LIVE LOAD FACTOR = 0.50

TRUSS PLATE MANUFACTURER IS NOT RESPONSIBLE FOR QUALITY CONTROL IN THE TRUSS MANUFACTURING PLANT .

NAIL VALUES

PLATE	GRIP(DRY) (PSI) MAX	MIN	SHEAR (PLI) MAX	MIN	SECTION (PLI) MAX	MIN
MT20	618	354	1667	822	2284	1656

PLATE PLACEMENT TOL. = 0.250 inches

PLATE ROTATION TOL. = 5.0 Deg.

JSI GRIP= 0.89 (11) (INPUT = 0.90)
JSI METAL= 0.29 (6) (INPUT = 1.00)

LICENSED PROFESSIONAL ENGINEER
P.M. TREVISAN
100136551
March 13th, 2017
PROVINCE OF ONTARIO

RECEIVED
TOWN OF MILTON
MAR 29, 2017
17-4990
BUILDING DIVISION

READ ALL NOTES ON THIS PAGE AND ON THE ENGINEERING NOTE PAGE ENP-1. THE NOTE PAGE IS AN INTEGRAL PART OF THIS DRAWING AS IT CONTAINS SPECIFICATIONS AND CRITERIA USED IN THE DESIGN OF THIS COMPONENT.

KOTT

JOB NAME	TRUSS NAME	QUANTITY	PLY	JOB DESC.	DRWG NO.
PT0317-054	T09	1	1	TRUSS DESC. LECCO RIDGE-BLOCK 328	ENG JOB: PT0317-054

Kott Lumber Uxbridge, Stouffville, ON, CGC

Version 8.100 S Feb 9 2017 MiTek Industries, Inc. Mon Mar 13 09:56:58 2017 Page 1

ID:pF8Cn?9h9uHzAm5tCmlVl5yJJCp-BIZln4xwP8XSfXLXNLSCuZlvytYPHARENCZ_xzzbOnJ

SCALE = 1:40.9

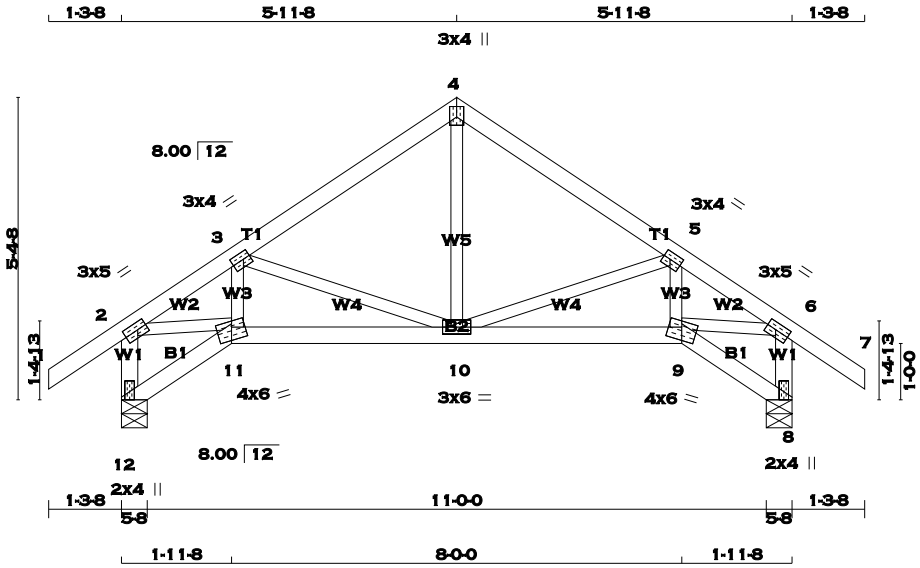

TOTAL WEIGHT = 52 lb

[M][F]

LUMBER

N. L. G. A. RULES

CHORDS	SIZE		LUMBER	DESCR.
12 - 2	2x4	DRY	No.2	SPF
1 - 4	2x4	DRY	No.2	SPF
4 - 7	2x4	DRY	No.2	SPF
8 - 6	2x4	DRY	No.2	SPF
12 - 11	2x4	DRY	No.2	SPF
11 - 9	2x4	DRY	No.2	SPF
9 - 8	2x4	DRY	No.2	SPF
ALL WEBS	2x3	DRY	No.2	SPF

DRY: SEASONED LUMBER.

PLATES (table is in inches)

JT	TYPE	PLATES	W	LEN	Y	X
2	TMVW-t	MT20	3.0	5.0	1.50	2.00
3	TMWW-t	MT20	3.0	4.0	1.50	1.50
4	TTW+p	MT20	3.0	4.0	2.25	1.50
5	TMWW-t	MT20	3.0	4.0	1.50	1.50
6	TMVW-t	MT20	3.0	5.0	1.50	2.00
8	BMV1+p	MT20	2.0	4.0	Edge	
9	BBWW-m	MT20	4.0	6.0	2.75	2.75
10	BMWWW-t	MT20	3.0	6.0		
11	BBWW-m	MT20	4.0	6.0	2.75	2.75
12	BMV1+p	MT20	2.0	4.0	Edge	

Edge - INDICATES REFERENCE CORNER OF PLATE TOUCHES EDGE OF CHORD.

A SIZE FOR SIZE SUBSTITUTION OF MITEK MII20 WITH TEE-LOK TL20 PLATES IS ALLOWED.

DIMENSIONS, SUPPORTS AND LOADINGS SPECIFIED BY FABRICATOR TO BE VERIFIED BY BUILDING DESIGNER

BEARINGS

JT	FACTORED GROSS REACTION VERT	HORZ	MAXIMUM FACTORED GROSS REACTION DOWN	HORZ	UPLIFT	INPUT BRG IN-SX	REQRD BRG IN-SX
12	671	0	671	0	0	5-8	5-8
8	671	0	671	0	0	5-8	5-8

UNFACTORED REACTIONS

JT	1ST LCASE COMBINED	MAX./MIN. COMPONENT REACTIONS SNOW	LIVE	PERM.LIVE	WIND	DEAD	SOIL
12	469	341 / 0	0 / 0	0 / 0	0 / 0	127 / 0	0 / 0
8	469	341 / 0	0 / 0	0 / 0	0 / 0	127 / 0	0 / 0

BEARING MATERIAL TO BE SPF NO.2 OR BETTER AT JOINT(S) 12, 8

BRACING

TOP CHORD TO BE SHEATHED OR MAX. PURLIN SPACING = 6.25 FT.
MAX. UNBRACED BOTTOM CHORD LENGTH = 10.00 FT. OR RIGID CEILING DIRECTLY APPLIED.

ALL PITCH BREAKS AND PERIMETER CORNER JOINTS MUST BE LATERALLY RESTRAINED.

LOADING

TOTAL LOAD CASES: (3)

CHORDS

MEMB. FR-TO	MAX. FACTORED FORCE (LBS)	FACTORED VERT. LOAD (PLF) FROM	TO	LC1	MAX CSI (LC)	MAX. UNBRAC LENGTH
12- 2	-654 / 0	0.0	0.0		0.07 (1)	7.81
1- 2	0 / 29	-77.3	-77.3		0.10 (1)	10.00
2- 3	-855 / 0	-77.3	-77.3		0.10 (1)	6.25
3- 4	-522 / 0	-77.3	-77.3		0.14 (1)	6.25
4- 5	-522 / 0	-77.3	-77.3		0.14 (1)	6.25
5- 6	-855 / 0	-77.3	-77.3		0.10 (1)	6.25
6- 7	0 / 29	-77.3	-77.3		0.10 (1)	10.00
8- 6	-654 / 0	0.0	0.0		0.07 (1)	7.81
12-11	0 / 0	-17.5	-17.5		0.02 (3)	10.00
11-10	0 / 730	-17.5	-17.5		0.16 (1)	10.00
10- 9	0 / 730	-17.5	-17.5		0.16 (1)	10.00
9- 8	0 / 0	-17.5	-17.5		0.02 (3)	10.00

WEBS

MEMB. FR-TO	MAX. FACTORED FORCE (LBS)	MAX CSI (LC)
10- 4	0 / 309	0.07 (1)
10- 5	-327 / 0	0.10 (1)
9- 5	0 / 43	0.01 (3)
9- 6	0 / 732	0.16 (1)
3-10	-327 / 0	0.10 (1)
11- 3	0 / 43	0.01 (3)
2-11	0 / 732	0.16 (1)

DESIGN CRITERIA

SPECIFIED LOADS:

TOP	CH.	LL	=	23.3	PSF
		DL	=	3.0	PSF
BOT	CH.	LL	=	0.0	PSF
		DL	=	7.0	PSF
TOTAL	LOAD		=	33.3	PSF

SPACING = 24.0 IN. C/C

THIS TRUSS IS DESIGNED FOR RESIDENTIAL OR SMALL BUILDING REQUIREMENTS OF PART 9, NBCC 2010

THIS DESIGN COMPLIES WITH:
- PART 9 OF OBC 2012 , BCBC 2012 , ABC 2014
- CSA 086-09
- TPIC 2011

(55 % OF 27.2 P.S.F. G.S.L. PLUS 8.4 P.S.F. RAIN LOAD) EQUALS 23.3 P.S.F. SPECIFIED ROOF LIVE LOAD

ALLOWABLE DEFL.(LL)= L/360 (0.40")
CALCULATED VERT. DEFL.(LL) = L/ 999 (0.01")
ALLOWABLE DEFL.(TL)= L/360 (0.40")
CALCULATED VERT. DEFL.(TL) = L/ 999 (0.03")

CSI: TC=0.14 (4-5:1) , BC=0.16 (10-11:1) , WB=0.16 (6-9:1) , SSI=0.11 (4-5:1)

DOL LUMBER=1.00 NAIL=1.00 LS BEND=1.10 COMP=1.10 SHEAR=1.10 TENS= 1.10

COMPANION LIVE LOAD FACTOR = 0.50

TRUSS PLATE MANUFACTURER IS NOT RESPONSIBLE FOR QUALITY CONTROL IN THE TRUSS MANUFACTURING PLANT .

NAIL VALUES

PLATE	GRIP(DRY) (PSI) MAX	MIN	SHEAR (PLI) MAX	MIN	SECTION (PLI) MAX	MIN
MT20	618	354	1667	822	2284	1656

PLATE PLACEMENT TOL. = 0.250 inches

PLATE ROTATION TOL. = 5.0 Deg.

JSI GRIP= 0.89 (11) (INPUT = 0.90)
JSI METAL= 0.29 (2) (INPUT = 1.00)

LICENSED PROFESSIONAL ENGINEER
P.M. TREVISAN
100136551
March 13th, 2017
PROVINCE OF ONTARIO

RECEIVED
TOWN OF MILTON
MAR 29, 2017
17-4990
BUILDING DIVISION

READ ALL NOTES ON THIS PAGE AND ON THE ENGINEERING NOTE PAGE ENP-1. THE NOTE PAGE IS AN INTEGRAL PART OF THIS DRAWING AS IT CONTAINS SPECIFICATIONS AND CRITERIA USED IN THE DESIGN OF THIS COMPONENT.

KOTT

JOB NAME	TRUSS NAME	QUANTITY	PLY	JOB DESC.	DRWG NO.
PT0317-054	T10	3	1	TRUSS DESC. LECCO RIDGE-BLOCK 328	ENG JOB: PT0317-054

Kott Lumber Uxbridge, Stouffville, ON, CGC

Version 8.100 S Feb 9 2017 MiTek Industries, Inc. Mon Mar 13 09:56:58 2017 Page 1

ID:pF8Cn?9h9uHzAm5tCmlVl5yJJCp-BIZln4xwP8XSfXLXNLSCuZlsbtY8HBmENCZ_xzzbOnJ

SCALE = 1:39.4

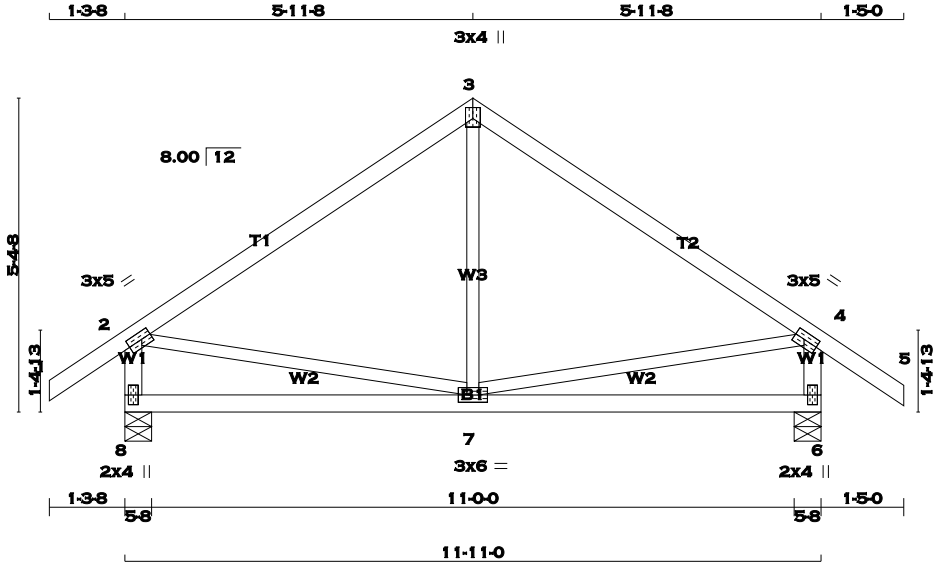

TOTAL WEIGHT = 3 X 49 = 148 lb

[M][F]

LUMBER

N. L. G. A. RULES

CHORDS	SIZE		LUMBER	DESCR.
1 - 3	2x4	DRY	No.2	SPF
3 - 5	2x4	DRY	No.2	SPF
8 - 2	2x4	DRY	No.2	SPF
6 - 4	2x4	DRY	No.2	SPF
8 - 6	2x4	DRY	No.2	SPF
ALL WEBS EXCEPT	2x3	DRY	No.2	SPF

DRY: SEASONED LUMBER.

PLATES (table is in inches)

JT	TYPE	PLATES	W	LEN	Y	X
2	TMVW-t	MT20	3.0	5.0	1.50	2.00
3	TTW+p	MT20	3.0	4.0	2.25	1.50
4	TMVW-t	MT20	3.0	5.0	1.50	2.00
6	BMV1+p	MT20	2.0	4.0		
7	BMWWW-t	MT20	3.0	6.0		
8	BMV1+p	MT20	2.0	4.0		

A SIZE FOR SIZE SUBSTITUTION OF MITEK MII20 WITH TEE-LOK TL20 PLATES IS ALLOWED.

DIMENSIONS, SUPPORTS AND LOADINGS SPECIFIED BY FABRICATOR TO BE VERIFIED BY BUILDING DESIGNER

BEARINGS

JT	FACTORED GROSS REACTION VERT	HORZ	MAXIMUM FACTORED GROSS REACTION DOWN	HORZ	UPLIFT	INPUT BRG IN-SX	REQRD BRG IN-SX
8	671	0	671	0	0	5-8	5-8
6	681	0	681	0	0	5-8	5-8

UNFACTORED REACTIONS

JT	1ST LCASE COMBINED	MAX./MIN. COMPONENT REACTIONS SNOW	LIVE	PERM.LIVE	WIND	DEAD	SOIL
8	469	341 / 0	0 / 0	0 / 0	0 / 0	127 / 0	0 / 0
6	475	347 / 0	0 / 0	0 / 0	0 / 0	128 / 0	0 / 0

BEARING MATERIAL TO BE SPF NO.2 OR BETTER AT JOINT(S) 8, 6

BRACING

TOP CHORD TO BE SHEATHED OR MAX. PURLIN SPACING = 6.25 FT.
MAX. UNBRACED BOTTOM CHORD LENGTH = 10.00 FT. OR RIGID CEILING DIRECTLY APPLIED.

ALL PITCH BREAKS AND PERIMETER CORNER JOINTS MUST BE LATERALLY RESTRAINED.

LOADING

TOTAL LOAD CASES: (3)

CHORDS

MEMB. FR-TO	MAX. FACTORED FORCE (LBS)	FACTORED VERT. LOAD (PLF) FROM	TO	LC1 MAX CSI (LC)	MAX. UNBRAC LENGTH
1- 2	0 / 29	-77.3	-77.3	0.10 (1)	10.00
2- 3	-418 / 0	-77.3	-77.3	0.35 (1)	6.25
3- 4	-418 / 0	-77.3	-77.3	0.35 (1)	6.25
4- 5	0 / 32	-77.3	-77.3	0.12 (1)	10.00
8- 2	-631 / 0	0.0	0.0	0.07 (1)	7.81
6- 4	-641 / 0	0.0	0.0	0.07 (1)	7.81
8- 7	0 / 0	-17.5	-17.5	0.18 (3)	10.00
7- 6	0 / 0	-17.5	-17.5	0.18 (3)	10.00

WEBS

MEMB. FR-TO	MAX. FACTORED FORCE (LBS)	MAX CSI (LC)
7- 3	0 / 104	0.04 (3)
2- 7	0 / 353	0.08 (1)
7- 4	0 / 353	0.08 (1)

DESIGN CRITERIA

SPECIFIED LOADS:

TOP	CH.	LL	=	23.3	PSF
		DL	=	3.0	PSF
BOT	CH.	LL	=	0.0	PSF
		DL	=	7.0	PSF
TOTAL	LOAD		=	33.3	PSF

SPACING = 24.0 IN. C/C

THIS TRUSS IS DESIGNED FOR RESIDENTIAL OR SMALL BUILDING REQUIREMENTS OF PART 9, NBCC 2010

THIS DESIGN COMPLIES WITH:
- PART 9 OF OBC 2012 , BCBC 2012 , ABC 2014
- CSA 086-09
- TPIC 2011

(55 % OF 27.2 P.S.F. G.S.L. PLUS 8.4 P.S.F. RAIN LOAD) EQUALS 23.3 P.S.F. SPECIFIED ROOF LIVE LOAD

ALLOWABLE DEFL.(LL)= L/360 (0.40")
CALCULATED VERT. DEFL.(LL) = L/ 999 (0.01")
ALLOWABLE DEFL.(TL)= L/360 (0.40")
CALCULATED VERT. DEFL.(TL) = L/ 999 (0.03")

CSI: TC=0.35 (3-4:1) , BC=0.18 (6-7:3) , WB=0.08 (2-7:1) , SSI=0.15 (3-4:1)

DOL LUMBER=1.00 NAIL=1.00 LS BEND=1.10 COMP=1.10 SHEAR=1.10 TENS= 1.10

COMPANION LIVE LOAD FACTOR = 0.50

TRUSS PLATE MANUFACTURER IS NOT RESPONSIBLE FOR QUALITY CONTROL IN THE TRUSS MANUFACTURING PLANT .

NAIL VALUES

PLATE	GRIP(DRY) (PSI) MAX	MIN	SHEAR (PLI) MAX	MIN	SECTION (PLI) MAX	MIN
MT20	618	354	1667	822	2284	1656

PLATE PLACEMENT TOL. = 0.250 inches

PLATE ROTATION TOL. = 5.0 Deg.

JSI GRIP= 0.76 (7) (INPUT = 0.90)
JSI METAL= 0.18 (4) (INPUT = 1.00)

LICENSED PROFESSIONAL ENGINEER
P.M. TREVISAN
100136551
March 13th, 2017
PROVINCE OF ONTARIO

RECEIVED
TOWN OF MILTON
MAR 29, 2017
17-4990
BUILDING DIVISION

READ ALL NOTES ON THIS PAGE AND ON THE ENGINEERING NOTE PAGE ENP-1. THE NOTE PAGE IS AN INTEGRAL PART OF THIS DRAWING AS IT CONTAINS SPECIFICATIONS AND CRITERIA USED IN THE DESIGN OF THIS COMPONENT.

KOTT

JOB NAME	TRUSS NAME	QUANTITY	PLY	JOB DESC.	DRWG NO.
PT0317-054	**T11**	**2**	**1**	TRUSS DESC. LECCO RIDGE-BLOCK 328	

Kott Lumber Uxbridge, Stouffville, ON, CGC

Version 8.100 S Feb 9 2017 MiTek Industries, Inc. Mon Mar 13 09:56:58 2017 Page 1
ID:pF8Cn?9h9uHzAm5tCmlVl5yJJCp-BIZln4xwP8XSfXLXNLSCuZlsctYIHBrENCZ_xzzbOnJ

SCALE = 1:39.4

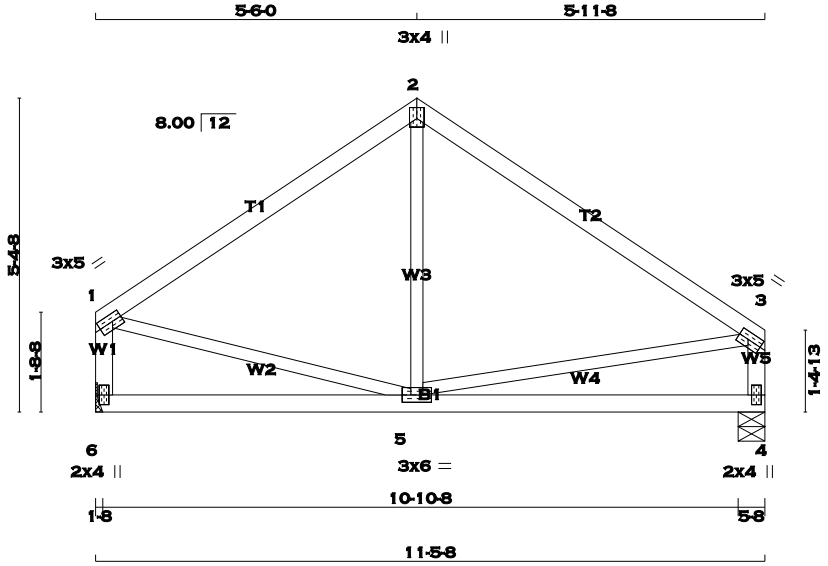

TOTAL WEIGHT = 2 X 44 = 89 lb
[M][F]

LUMBER
N. L. G. A. RULES

CHORDS	SIZE		LUMBER	DESCR.
1 - 2	2x4	DRY	No.2	SPF
2 - 3	2x4	DRY	No.2	SPF
6 - 1	2x4	DRY	No.2	SPF
4 - 3	2x4	DRY	No.2	SPF
6 - 4	2x4	DRY	No.2	SPF
ALL WEBS EXCEPT	2x3	DRY	No.2	SPF

DRY: SEASONED LUMBER.

PLATES (table is in inches)

JT	TYPE	PLATES	W	LEN	Y	X
1	TMVW-t	MT20	3.0	5.0	1.50	2.00
2	TTW+p	MT20	3.0	4.0	2.25	1.50
3	TMVW-t	MT20	3.0	5.0	1.50	2.00
4	BMV1+p	MT20	2.0	4.0		
5	BMWWW-t	MT20	3.0	6.0		
6	BMV1+p	MT20	2.0	4.0		

A SIZE FOR SIZE SUBSTITUTION OF MITEK MII20 WITH TEE-LOK TL20 PLATES IS ALLOWED.

DIMENSIONS, SUPPORTS AND LOADINGS SPECIFIED BY FABRICATOR TO BE VERIFIED BY BUILDING DESIGNER

BEARINGS

JT	FACTORED GROSS REACTION VERT	HORZ	MAXIMUM FACTORED GROSS REACTION DOWN	HORZ	UPLIFT	INPUT BRG IN-SX	REQRD BRG IN-SX
6	543	0	543	0	0	HANGER BY OTHERS MIN. SEAT SIZE: 1-8	
4	543	0	543	0	0	5-8	5-8

UNFACTORED REACTIONS

JT	1ST LCASE COMBINED	MAX./MIN. COMPONENT REACTIONS SNOW	LIVE	PERM.LIVE	WIND	DEAD	SOIL
6	381	267 / 0	0 / 0	0 / 0	0 / 0	115 / 0	0 / 0
4	381	267 / 0	0 / 0	0 / 0	0 / 0	115 / 0	0 / 0

BEARING MATERIAL TO BE SPF NO.2 OR BETTER AT JOINT(S) 4

BRACING
TOP CHORD TO BE SHEATHED OR MAX. PURLIN SPACING = 6.25 FT.
MAX. UNBRACED BOTTOM CHORD LENGTH = 10.00 FT. OR RIGID CEILING DIRECTLY APPLIED.

ALL PITCH BREAKS AND PERIMETER CORNER JOINTS MUST BE LATERALLY RESTRAINED.

LOADING
TOTAL LOAD CASES: (3)

CHORDS

MEMB. FR-TO	MAX. FACTORED FORCE (LBS)	VERT. LOAD (PLF) FROM	TO	MAX CSI (LC)	MAX. UNBRAC LENGTH
1- 2	-385 / 0	-77.3	-77.3	0.30 (1)	6.25
2- 3	-386 / 0	-77.3	-77.3	0.35 (1)	6.25
6- 1	-510 / 0	0.0	0.0	0.05 (1)	7.81
4- 3	-500 / 0	0.0	0.0	0.05 (1)	7.81
6- 5	0 / 0	-17.5	-17.5	0.17 (3)	10.00
5- 4	0 / 0	-17.5	-17.5	0.17 (3)	10.00

WEBS

MEMB. FR-TO	MAX. FACTORED FORCE (LBS)	MAX CSI (LC)
5- 2	-16 / 94	0.03 (3)
1- 5	0 / 331	0.07 (1)
5- 3	0 / 326	0.07 (1)

DESIGN CRITERIA

SPECIFIED LOADS:

TOP	CH.	LL	=	23.3	PSF
		DL	=	3.0	PSF
BOT	CH.	LL	=	0.0	PSF
		DL	=	7.0	PSF
TOTAL	LOAD		=	33.3	PSF

SPACING = 24.0 IN. C/C

THIS TRUSS IS DESIGNED FOR RESIDENTIAL OR SMALL BUILDING REQUIREMENTS OF PART 9, NBCC 2010

THIS DESIGN COMPLIES WITH:
- PART 9 OF OBC 2012 , BCBC 2012 , ABC 2014
- CSA 086-09
- TPIC 2011

(55 % OF 27.2 P.S.F. G.S.L. PLUS 8.4 P.S.F. RAIN LOAD) EQUALS 23.3 P.S.F. SPECIFIED ROOF LIVE LOAD

ALLOWABLE DEFL.(LL)= L/360 (0.38")
CALCULATED VERT. DEFL.(LL) = L/ 999 (0.01")
ALLOWABLE DEFL.(TL)= L/360 (0.38")
CALCULATED VERT. DEFL.(TL) = L/ 999 (0.04")

CSI: TC=0.35 (2-3:1) , BC=0.17 (5-6:3) , WB=0.07 (1-5:1) , SSI=0.15 (2-3:1)

DOL LUMBER=1.00 NAIL=1.00 LS BEND=1.10 COMP=1.10 SHEAR=1.10 TENS= 1.10

COMPANION LIVE LOAD FACTOR = 0.50

TRUSS PLATE MANUFACTURER IS NOT RESPONSIBLE FOR QUALITY CONTROL IN THE TRUSS MANUFACTURING PLANT .

NAIL VALUES

PLATE	GRIP(DRY) (PSI) MAX	MIN	SHEAR (PLI) MAX	MIN	SECTION (PLI) MAX	MIN
MT20	618	354	1667	822	2284	1656

PLATE PLACEMENT TOL. = 0.250 inches

PLATE ROTATION TOL. = 5.0 Deg.

JSI GRIP= 0.70 (5) (INPUT = 0.90)
JSI METAL= 0.15 (3) (INPUT = 1.00)

LICENSED PROFESSIONAL ENGINEER
P.M. TREVISAN
100136551
March 13th, 2017
PROVINCE OF ONTARIO

RECEIVED
TOWN OF MILTON
MAR 29, 2017
17-4990
BUILDING DIVISION

READ ALL NOTES ON THIS PAGE AND ON THE ENGINEERING NOTE PAGE ENP-1. THE NOTE PAGE IS AN INTEGRAL PART OF THIS DRAWING AS IT CONTAINS SPECIFICATIONS AND CRITERIA USED IN THE DESIGN OF THIS COMPONENT.

KOTT

JOB NAME	TRUSS NAME	QUANTITY	PLY	JOB DESC.	DRWG NO.
PT0317-054	T12	1	1	TRUSS DESC. LECCO RIDGE-BLOCK 328	ENG JOB: PT0317-054

Kott Lumber Uxbridge, Stouffville, ON, CGC

Version 8.100 S Feb 9 2017 MiTek Industries, Inc. Mon Mar 13 09:56:58 2017 Page 1

ID:pF8Cn?9h9uHzAm5tCmlVl5yJJCp-BIZln4xwP8XSfXLXNLSCuZlr9tXiH7?ENCZ_xzzbOnJ

SCALE: 3/16"=1'

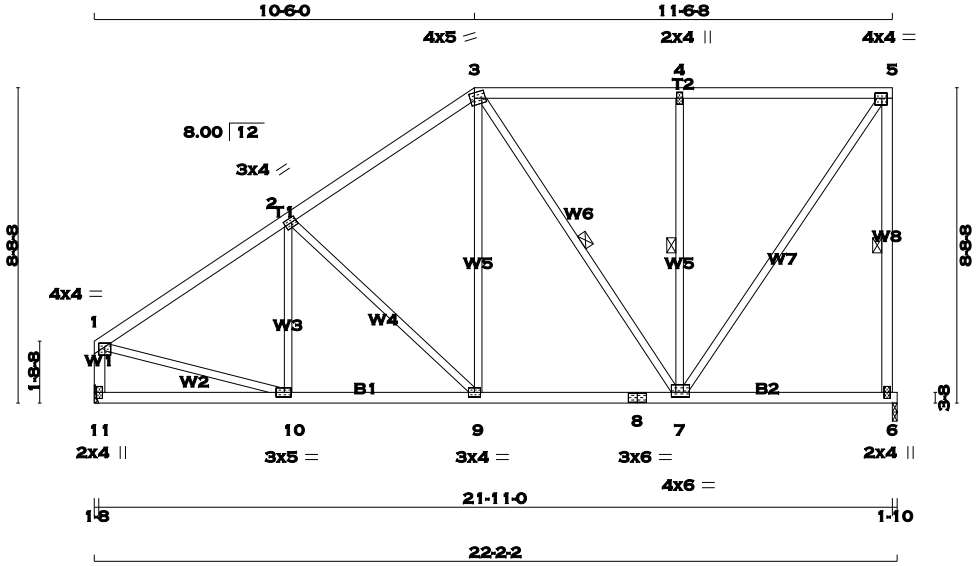

TOTAL WEIGHT = 107 lb

[M]

LUMBER

N. L. G. A. RULES

CHORDS	SIZE		LUMBER	DESCR.
1 - 3	2x4	DRY	No.2	SPF
3 - 5	2x4	DRY	No.2	SPF
6 - 5	2x4	DRY	No.2	SPF
11 - 1	2x4	DRY	No.2	SPF
11 - 8	2x4	DRY	No.2	SPF
8 - 6	2x4	DRY	No.2	SPF
ALL WEBS EXCEPT	2x3	DRY	No.2	SPF

DRY: SEASONED LUMBER.

PLATES (table is in inches)

JT	TYPE	PLATES	W	LEN	Y	X
1	TMVW-p	MT20	4.0	4.0	1.25	2.00
2	TMWW-t	MT20	3.0	4.0	1.50	1.50
3	TTWW-m	MT20	4.0	5.0	1.75	1.50
4	TMW+w	MT20	2.0	4.0		
5	TMVW-t	MT20	4.0	4.0	1.75	1.75
6	BMV1+p	MT20	2.0	4.0		
7	BMWWW-t	MT20	4.0	6.0	1.50	1.50
8	BS-t	MT20	3.0	6.0		
9	BMWW-t	MT20	3.0	4.0		
10	BMWW-t	MT20	3.0	5.0	1.50	2.25
11	BMV1+p	MT20	2.0	4.0		

A SIZE FOR SIZE SUBSTITUTION OF MITEK MII20 WITH TEE-LOK TL20 PLATES IS ALLOWED.

DIMENSIONS, SUPPORTS AND LOADINGS SPECIFIED BY FABRICATOR TO BE VERIFIED BY BUILDING DESIGNER

BEARINGS

JT	FACTORED GROSS REACTION VERT	HORZ	MAXIMUM FACTORED GROSS REACTION DOWN	HORZ	UPLIFT	INPUT BRG IN-SX	REQRD BRG IN-SX
6	1045	0	1045	0	0	1-10	1-10
11	1045	0	1045	0	0	HANGER BY OTHERS	
						MIN. SEAT SIZE: 1-8	

UNFACTORED REACTIONS

JT	1ST LCASE COMBINED	MAX./MIN. COMPONENT REACTIONS SNOW	LIVE	PERM.LIVE	WIND	DEAD	SOIL
6	734	513 / 0	0 / 0	0 / 0	0 / 0	220 / 0	0 / 0
11	734	513 / 0	0 / 0	0 / 0	0 / 0	220 / 0	0 / 0

BEARING MATERIAL TO BE SPF NO.2 OR BETTER AT JOINT(S) 6

BRACING

TOP CHORD TO BE SHEATHED OR MAX. PURLIN SPACING = 5.55 FT.
MAX. UNBRACED BOTTOM CHORD LENGTH = 10.00 FT. OR RIGID CEILING DIRECTLY APPLIED.

ALL PITCH BREAKS AND PERIMETER CORNER JOINTS MUST BE LATERALLY RESTRAINED.

1 - 2x3 SPF No.2 LATERAL BRACE(S) AT 1/ 2 LENGTH OF 5-6. DBS = 14-0-0 . CBF = 88 LBS.
1 - 2x3 SPF No.2 LATERAL BRACE(S) AT 1/ 2 LENGTH OF 3-7, 4-7. DBS = 20-0-0 . CBF = 69 LBS.

DBS = DIAGONAL BRACE SPACING (MAX). CBF = CUMULATIVE BRACING FORCE. FASTEN LATERAL BRACE(S) USING (0.122"X3") SPIRAL NAILS : 1 NAIL FOR 2x3 BRACE(S), 2 FOR 1x4, 2x4, 2x5, 3 FOR 2x6, 4 FOR 2x8, 5 FOR 2x10, AND 6 FOR 2x12.

END VERTICAL(S) MUST BE SHEATHED OR HAVE BRACES AS INDICATED IN THE MAX. UNBRACED LENGTH COLUMN OF THE TABLE BELOW

LOADING

TOTAL LOAD CASES: (3)

CHORDS

MEMB. FR-TO	MAX. FACTORED FORCE (LBS)	FACTORED VERT. LOAD LC1 (PLF) FROM	TO	MAX CSI (LC)	MAX. UNBRAC LENGTH
1- 2	-1074 / 0	-77.3	-77.3	0.40 (1)	5.55
2- 3	-852 / 0	-77.3	-77.3	0.39 (1)	6.07
3- 4	-579 / 0	-77.3	-77.3	0.45 (1)	6.25
4- 5	-579 / 0	-77.3	-77.3	0.45 (1)	6.25
6- 5	-1003 / 0	0.0	0.0	0.35 (1)	6.24
11- 1	-1006 / 0	0.0	0.0	0.11 (1)	7.80
11-10	0 / 0	-17.5	-17.5	0.12 (3)	10.00
10- 9	0 / 916	-17.5	-17.5	0.21 (1)	10.00
9- 8	0 / 689	-17.5	-17.5	0.20 (3)	10.00
8- 7	0 / 689	-17.5	-17.5	0.20 (3)	10.00
7- 6	0 / 0	-17.5	-17.5	0.14 (3)	10.00

WEBS

MEMB. FR-TO	MAX. FACTORED FORCE (LBS)	MAX CSI (LC)
10- 2	-134 / 48	0.06 (1)
2- 9	-317 / 0	0.32 (1)
9- 3	0 / 307	0.07 (1)
3- 7	-197 / 0	0.14 (1)
7- 4	-553 / 0	0.27 (1)
7- 5	0 / 1011	0.23 (1)
1-10	0 / 946	0.21 (1)

DESIGN CRITERIA

SPECIFIED LOADS:

TOP	CH.	LL	=	23.3	PSF
		DL	=	3.0	PSF
BOT	CH.	LL	=	0.0	PSF
		DL	=	7.0	PSF
TOTAL	LOAD		=	33.3	PSF

SPACING = 24.0 IN. C/C

LOADING IN FLAT SECTION BASED ON A SLOPE OF 6.00/12

THIS TRUSS IS DESIGNED FOR RESIDENTIAL OR SMALL BUILDING REQUIREMENTS OF PART 9, NBCC 2010

THIS DESIGN COMPLIES WITH:
- PART 9 OF OBC 2012 , BCBC 2012 , ABC 2014
- CSA 086-09
- TPIC 2011

(55 % OF 27.2 P.S.F. G.S.L. PLUS 8.4 P.S.F. RAIN LOAD) EQUALS 23.3 P.S.F. SPECIFIED ROOF LIVE LOAD

ALLOWABLE DEFL.(LL)= L/360 (0.73")
CALCULATED VERT. DEFL.(LL) = L/ 999 (0.03")
ALLOWABLE DEFL.(TL)= L/360 (0.73")
CALCULATED VERT. DEFL.(TL) = L/ 999 (0.06")

CSI: TC=0.45 (4-5:1) , BC=0.21 (9-10:1) , WB=0.32 (2-9:1) , SSI=0.22 (4-5:1)

DOL LUMBER=1.00 NAIL=1.00 LS BEND=1.10 COMP=1.10 SHEAR=1.10 TENS= 1.10

COMPANION LIVE LOAD FACTOR = 0.50

TRUSS PLATE MANUFACTURER IS NOT RESPONSIBLE FOR QUALITY CONTROL IN THE TRUSS MANUFACTURING PLANT .

NAIL VALUES

PLATE	GRIP(DRY) (PSI) MAX	MIN	SHEAR (PLI) MAX	MIN	SECTION (PLI) MAX	MIN
MT20	618	354	1667	822	2284	1656

PLATE PLACEMENT TOL. = 0.250 inches

PLATE ROTATION TOL. = 5.0 Deg.

JSI GRIP= 0.89 (1) (INPUT = 0.90)
JSI METAL= 0.32 (1) (INPUT = 1.00)

LICENSED PROFESSIONAL ENGINEER
P.M. TREVISAN
100136551
March 13th, 2017
PROVINCE OF ONTARIO

RECEIVED
TOWN OF MILTON
MAR 29, 2017
17-4990
BUILDING DIVISION

READ ALL NOTES ON THIS PAGE AND ON THE ENGINEERING NOTE PAGE ENP-1. THE NOTE PAGE IS AN INTEGRAL PART OF THIS DRAWING AS IT CONTAINS SPECIFICATIONS AND CRITERIA USED IN THE DESIGN OF THIS COMPONENT.

KOTT

JOB NAME	TRUSS NAME	QUANTITY	PLY	JOB DESC.	DRWG NO.
PT0317-054	**T13**	**1**	**1**	TRUSS DESC. LECCO RIDGE-BLOCK 328	

ENG JOB: PT0317-054

Kott Lumber Uxbridge, Stouffville, ON, CGC

Version 8.100 S Feb 9 2017 MiTek Industries, Inc. Mon Mar 13 09:56:59 2017 Page 1
ID:pF8Cn?9h9uHzAm5tCmlVl5yJJCp-fV77_QyYARfJGhwkw2zRQmH?nHtX0W6OcsIXTQzbOnI

SCALE = 1:70.8

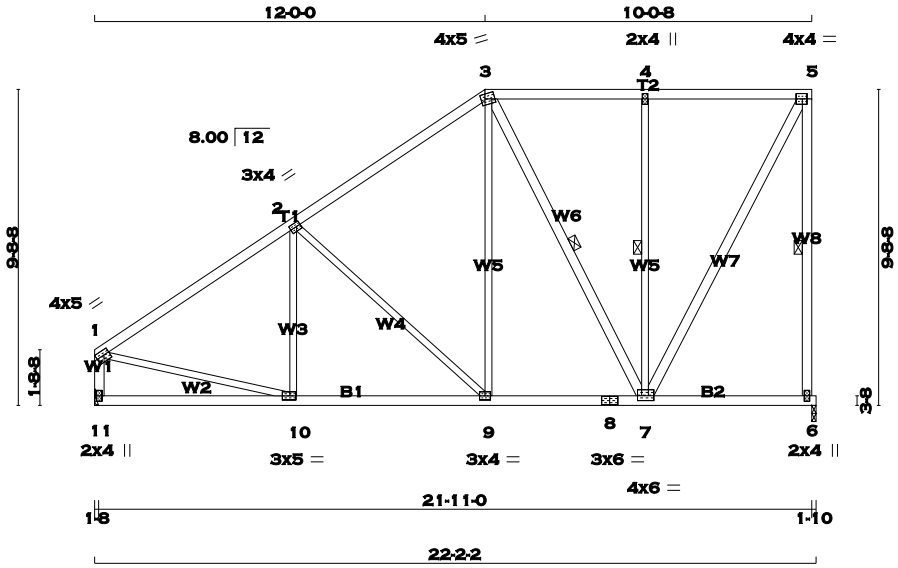

TOTAL WEIGHT = 119 lb

LUMBER
N. L. G. A. RULES

CHORDS	SIZE		LUMBER	DESCR.
1 - 3	2x4	DRY	No.2	SPF
3 - 5	2x4	DRY	No.2	SPF
6 - 5	2x4	DRY	No.2	SPF
11 - 1	2x4	DRY	No.2	SPF
11 - 8	2x4	DRY	No.2	SPF
8 - 6	2x4	DRY	No.2	SPF
ALL WEBS EXCEPT	2x3	DRY	No.2	SPF
3 - 7	2x4	DRY	No.2	SPF
7 - 5	2x4	DRY	No.2	SPF

DRY: SEASONED LUMBER.

PLATES (table is in inches)

JT	TYPE	PLATES	W	LEN	Y	X
1	TMVW-t	MT20	4.0	5.0	1.75	Edge
2	TMWW-t	MT20	3.0	4.0	1.50	1.50
3	TTWW-m	MT20	4.0	5.0	1.75	1.50
4	TMW+w	MT20	2.0	4.0		
5	TMVW-t	MT20	4.0	4.0	2.00	1.75
6	BMV1+p	MT20	2.0	4.0		
7	BMWWW-t	MT20	4.0	6.0	1.75	1.50
8	BS-t	MT20	3.0	6.0		
9	BMWW-t	MT20	3.0	4.0		
10	BMWW-t	MT20	3.0	5.0	1.50	2.25
11	BMV1+p	MT20	2.0	4.0		

Edge - INDICATES REFERENCE CORNER OF PLATE TOUCHES EDGE OF CHORD.

A SIZE FOR SIZE SUBSTITUTION OF MITEK MII20 WITH TEE-LOK TL20 PLATES IS ALLOWED.

DIMENSIONS, SUPPORTS AND LOADINGS SPECIFIED BY FABRICATOR TO BE VERIFIED BY BUILDING DESIGNER

BEARINGS

JT	FACTORED GROSS REACTION VERT	HORZ	MAXIMUM FACTORED GROSS REACTION DOWN	HORZ	UPLIFT	INPUT BRG IN-SX	REQRD BRG IN-SX
6	1045	0	1045	0	0	1-10	1-10
11	1045	0	1045	0	0	HANGER BY OTHERS	
						MIN. SEAT SIZE: 1-8	

UNFACTORED REACTIONS

JT	1ST LCASE COMBINED	MAX./MIN. COMPONENT REACTIONS SNOW	LIVE	PERM.LIVE	WIND	DEAD	SOIL
6	734	513 / 0	0 / 0	0 / 0	0 / 0	220 / 0	0 / 0
11	734	513 / 0	0 / 0	0 / 0	0 / 0	220 / 0	0 / 0

BEARING MATERIAL TO BE SPF NO.2 OR BETTER AT JOINT(S) 6

BRACING
TOP CHORD TO BE SHEATHED OR MAX. PURLIN SPACING = 5.60 FT.
MAX. UNBRACED BOTTOM CHORD LENGTH = 10.00 FT. OR RIGID CEILING DIRECTLY APPLIED.

ALL PITCH BREAKS AND PERIMETER CORNER JOINTS MUST BE LATERALLY RESTRAINED.

1 - 2x3 SPF No.2 LATERAL BRACE(S) AT 1/ 2 LENGTH OF 5-6. DBS = 14-0-0 . CBF = 88 LBS.
1 - 2x3 SPF No.2 LATERAL BRACE(S) AT 1/ 2 LENGTH OF 3-7, 4-7. DBS = 20-0-0 . CBF = 60 LBS.

DBS = DIAGONAL BRACE SPACING (MAX). CBF = CUMULATIVE BRACING FORCE. FASTEN LATERAL BRACE(S) USING (0.122"X3") SPIRAL NAILS : 1 NAIL FOR 2x3 BRACE(S), 2 FOR 1x4, 2x4, 2x5, 3 FOR 2x6, 4 FOR 2x8, 5 FOR 2x10, AND 6 FOR 2x12.

END VERTICAL(S) MUST BE SHEATHED OR HAVE BRACES AS INDICATED IN THE MAX. UNBRACED LENGTH COLUMN OF THE TABLE BELOW

LOADING
TOTAL LOAD CASES: (3)

CHORDS

MEMB. FR-TO	MAX. FACTORED FORCE (LBS)	VERT. LOAD LC1 (PLF) FROM	TO	MAX CSI (LC)	MAX. UNBRAC LENGTH
1- 2	-1074 / 0	-77.3	-77.3	0.39 (1)	5.60
2- 3	-763 / 0	-77.3	-77.3	0.37 (1)	6.25
3- 4	-465 / 0	-77.3	-77.3	0.25 (1)	6.25
4- 5	-466 / 0	-77.3	-77.3	0.25 (1)	6.25
6- 5	-1008 / 0	0.0	0.0	0.45 (1)	6.24
11- 1	-1002 / 0	0.0	0.0	0.11 (1)	7.81
11-10	0 / 0	-17.5	-17.5	0.16 (3)	10.00
10- 9	0 / 919	-17.5	-17.5	0.23 (1)	10.00
9- 8	0 / 612	-17.5	-17.5	0.15 (1)	10.00
8- 7	0 / 612	-17.5	-17.5	0.15 (1)	10.00
7- 6	0 / 0	-17.5	-17.5	0.10 (3)	10.00

WEBS

MEMB. FR-TO	MAX. FACTORED FORCE (LBS)	MAX CSI (LC)
10- 2	-88 / 76	0.05 (1)
2- 9	-421 / 0	0.59 (1)
9- 3	0 / 372	0.08 (1)
3- 7	-316 / 0	0.19 (1)
7- 4	-480 / 0	0.30 (1)
7- 5	0 / 974	0.16 (1)
1-10	0 / 943	0.21 (1)

DESIGN CRITERIA

SPECIFIED LOADS:

TOP CH.	LL	=	23.3	PSF
	DL	=	3.0	PSF
BOT CH.	LL	=	0.0	PSF
	DL	=	7.0	PSF
TOTAL LOAD		=	33.3	PSF

SPACING = 24.0 IN. C/C

LOADING IN FLAT SECTION BASED ON A SLOPE OF 6.00/12

THIS TRUSS IS DESIGNED FOR RESIDENTIAL OR SMALL BUILDING REQUIREMENTS OF PART 9, NBCC 2010

THIS DESIGN COMPLIES WITH:
- PART 9 OF OBC 2012 , BCBC 2012 , ABC 2014
- CSA 086-09
- TPIC 2011

(55 % OF 27.2 P.S.F. G.S.L. PLUS 8.4 P.S.F. RAIN LOAD) EQUALS 23.3 P.S.F. SPECIFIED ROOF LIVE LOAD

ALLOWABLE DEFL.(LL)= L/360 (0.73")
CALCULATED VERT. DEFL.(LL) = L/ 999 (0.03")
ALLOWABLE DEFL.(TL)= L/360 (0.73")
CALCULATED VERT. DEFL.(TL) = L/ 999 (0.07")

CSI: TC=0.45 (5-6:1) , BC=0.23 (9-10:1) , WB=0.59 (2-9:1) , SSI=0.19 (4-5:1)

DOL LUMBER=1.00 NAIL=1.00 LS BEND=1.10 COMP=1.10 SHEAR=1.10 TENS= 1.10

COMPANION LIVE LOAD FACTOR = 0.50

TRUSS PLATE MANUFACTURER IS NOT RESPONSIBLE FOR QUALITY CONTROL IN THE TRUSS MANUFACTURING PLANT .

NAIL VALUES

PLATE	GRIP(DRY) (PSI) MAX	MIN	SHEAR (PLI) MAX	MIN	SECTION (PLI) MAX	MIN
MT20	618	354	1667	822	2284	1656

PLATE PLACEMENT TOL. = 0.250 inches

PLATE ROTATION TOL. = 5.0 Deg.

JSI GRIP= 0.89 (5) (INPUT = 0.90)
JSI METAL= 0.36 (1) (INPUT = 1.00)

LICENSED PROFESSIONAL ENGINEER
P.M. TREVISAN
100136551
March 13th, 2017
PROVINCE OF ONTARIO

RECEIVED
TOWN OF MILTON
MAR 29, 2017
17-4990
BUILDING DIVISION

READ ALL NOTES ON THIS PAGE AND ON THE ENGINEERING NOTE PAGE ENP-1. THE NOTE PAGE IS AN INTEGRAL PART OF THIS DRAWING AS IT CONTAINS SPECIFICATIONS AND CRITERIA USED IN THE DESIGN OF THIS COMPONENT.

KOTT

JOB NAME	TRUSS NAME	QUANTITY	PLY	JOB DESC.	DRWG NO.
PT0317-054	T14	1	1	TRUSS DESC. LECCO RIDGE-BLOCK 328	

Kott Lumber Uxbridge, Stouffville, ON, CGC

Version 8.100 S Feb 9 2017 MiTek Industries, Inc. Mon Mar 13 09:56:59 2017 Page 1
ID:pF8Cn?9h9uHzAm5tCmlVl5yJJCp-fV77_QyYARfJGhwkw2zRQmHzjHss0bgOcsIXTQzbOnl

SCALE = 1:77.0

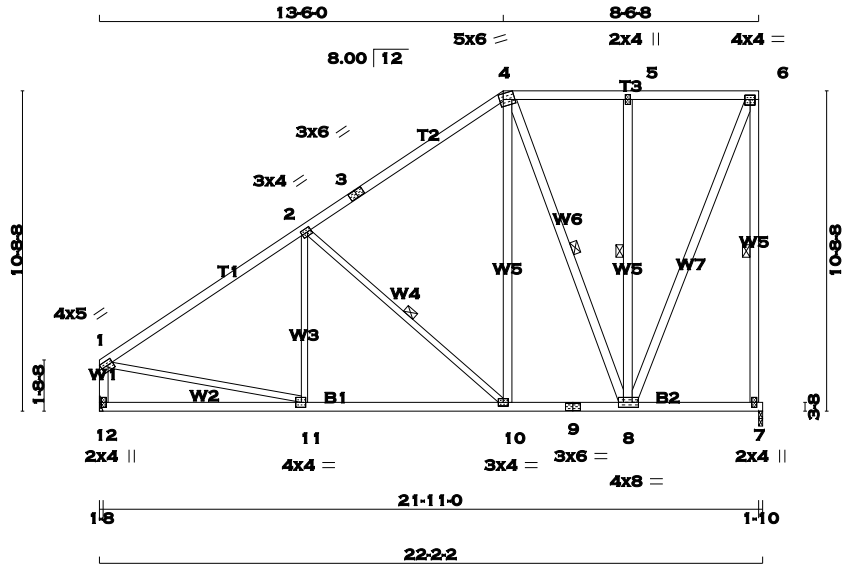

TOTAL WEIGHT = 132 lb
[M][F]

LUMBER
N. L. G. A. RULES

CHORDS	SIZE		LUMBER	DESCR.
1 - 3	2x4	DRY	No.2	SPF
3 - 4	2x4	DRY	No.2	SPF
4 - 6	2x4	DRY	No.2	SPF
7 - 6	2x4	DRY	No.2	SPF
12 - 1	2x4	DRY	No.2	SPF
12 - 9	2x4	DRY	No.2	SPF
9 - 7	2x4	DRY	No.2	SPF
ALL WEBS EXCEPT	2x4	DRY	No.2	SPF
11 - 2	2x3	DRY	No.2	SPF
2 - 10	2x3	DRY	No.2	SPF
1 - 11	2x3	DRY	No.2	SPF

DRY: SEASONED LUMBER.

PLATES (table is in inches)

JT	TYPE	PLATES	W	LEN	Y	X
1	TMVW-t	MT20	4.0	5.0	1.75	Edge
2	TMWW-t	MT20	3.0	4.0	1.50	1.50
3	TS-t	MT20	3.0	6.0		
4	TTWW-m	MT20	5.0	6.0	2.25	1.50
5	TMW+w	MT20	2.0	4.0		
6	TMVW-t	MT20	4.0	4.0	1.75	2.00
7	BMV1+p	MT20	2.0	4.0		
8	BMWWW-t	MT20	4.0	8.0	2.00	2.00
9	BS-t	MT20	3.0	6.0		
10	BMWW-t	MT20	3.0	4.0		
11	BMWW-t	MT20	4.0	4.0	2.00	1.75
12	BMV1+p	MT20	2.0	4.0		

Edge - INDICATES REFERENCE CORNER OF PLATE TOUCHES EDGE OF CHORD.

A SIZE FOR SIZE SUBSTITUTION OF MITEK MII20 WITH TEE-LOK TL20 PLATES IS ALLOWED.

DIMENSIONS, SUPPORTS AND LOADINGS SPECIFIED BY FABRICATOR TO BE VERIFIED BY BUILDING DESIGNER

BEARINGS

JT	FACTORED GROSS REACTION VERT	HORZ	MAXIMUM FACTORED GROSS REACTION DOWN	HORZ	UPLIFT	INPUT BRG IN-SX	REQRD BRG IN-SX
7	1045	0	1045	0	0	1-10	1-10
12	1045	0	1045	0	0	HANGER BY OTHERS	
						MIN. SEAT SIZE: 1-8	

UNFACTORED REACTIONS

JT	1ST LCASE COMBINED	MAX./MIN. COMPONENT REACTIONS SNOW	LIVE	PERM.LIVE	WIND	DEAD	SOIL
7	734	513 / 0	0 / 0	0 / 0	0 / 0	220 / 0	0 / 0
12	734	513 / 0	0 / 0	0 / 0	0 / 0	220 / 0	0 / 0

BEARING MATERIAL TO BE SPF NO.2 OR BETTER AT JOINT(S) 7

BRACING
TOP CHORD TO BE SHEATHED OR MAX. PURLIN SPACING = 5.42 FT.
MAX. UNBRACED BOTTOM CHORD LENGTH = 10.00 FT. OR RIGID CEILING DIRECTLY APPLIED.

ALL PITCH BREAKS AND PERIMETER CORNER JOINTS MUST BE LATERALLY RESTRAINED.

1 - 2x3 SPF No.2 LATERAL BRACE(S) AT 1/ 2 LENGTH OF 6-7. DBS = 14-0-0 . CBF = 89 LBS.
1 - 2x3 SPF No.2 LATERAL BRACE(S) AT 1/ 2 LENGTH OF 2-10, 4-8, 5-8. DBS = 20-0-0 . CBF = 65 LBS.

DBS = DIAGONAL BRACE SPACING (MAX). CBF = CUMULATIVE BRACING FORCE. FASTEN LATERAL BRACE(S) USING (0.122"X3") SPIRAL NAILS : 1 NAIL FOR 2x3 BRACE(S), 2 FOR 1x4, 2x4, 2x5, 3 FOR 2x6, 4 FOR 2x8, 5 FOR 2x10, AND 6 FOR 2x12.

END VERTICAL(S) MUST BE SHEATHED OR HAVE BRACES AS INDICATED IN THE MAX. UNBRACED LENGTH COLUMN OF THE TABLE BELOW

LOADING
TOTAL LOAD CASES: (3)

CHORDS

MEMB. FR-TO	MAX. FACTORED FORCE (LBS)	FACTORED VERT. LOAD LC1 (PLF) FROM	TO	MAX CSI (LC)	MAX. UNBRAC LENGTH
1- 2	-1065 / 0	-77.3	-77.3	0.51 (1)	5.42
2- 3	-667 / 0	-77.3	-77.3	0.47 (1)	6.25
3- 4	-667 / 0	-77.3	-77.3	0.47 (1)	6.25
4- 5	-370 / 0	-77.3	-77.3	0.18 (1)	6.25
5- 6	-370 / 0	-77.3	-77.3	0.18 (1)	6.25
7- 6	-1012 / 0	0.0	0.0	0.59 (1)	6.23
12- 1	-997 / 0	0.0	0.0	0.11 (1)	7.81
12-11	0 / 0	-17.5	-17.5	0.21 (3)	10.00
11-10	0 / 916	-17.5	-17.5	0.27 (3)	10.00
10- 9	0 / 530	-17.5	-17.5	0.14 (1)	10.00
9- 8	0 / 530	-17.5	-17.5	0.14 (1)	10.00
8- 7	0 / 0	-17.5	-17.5	0.07 (3)	10.00

WEBS

MEMB. FR-TO	MAX. FACTORED FORCE (LBS)	MAX CSI (LC)
11- 2	-48 / 102	0.04 (3)
2-10	-521 / 0	0.29 (1)
10- 4	0 / 437	0.07 (1)
4- 8	-431 / 0	0.29 (1)
8- 5	-407 / 0	0.24 (1)
8- 6	0 / 956	0.15 (1)
1-11	0 / 934	0.21 (1)

DESIGN CRITERIA

SPECIFIED LOADS:

TOP CH.	LL	=	23.3	PSF
	DL	=	3.0	PSF
BOT CH.	LL	=	0.0	PSF
	DL	=	7.0	PSF
TOTAL LOAD		=	33.3	PSF

SPACING = 24.0 IN. C/C

LOADING IN FLAT SECTION BASED ON A SLOPE OF 6.00/12

THIS TRUSS IS DESIGNED FOR RESIDENTIAL OR SMALL BUILDING REQUIREMENTS OF PART 9, NBCC 2010

THIS DESIGN COMPLIES WITH:
- PART 9 OF OBC 2012 , BCBC 2012 , ABC 2014
- CSA 086-09
- TPIC 2011

(55 % OF 27.2 P.S.F. G.S.L. PLUS 8.4 P.S.F. RAIN LOAD) EQUALS 23.3 P.S.F. SPECIFIED ROOF LIVE LOAD

ALLOWABLE DEFL.(LL)= L/360 (0.73")
CALCULATED VERT. DEFL.(LL) = L/ 999 (0.03")
ALLOWABLE DEFL.(TL)= L/360 (0.73")
CALCULATED VERT. DEFL.(TL) = L/ 999 (0.08")

CSI: TC=0.59 (6-7:1) , BC=0.27 (10-11:3) , WB=0.29 (4-8:1) , SSI=0.21 (1-2:1)

DOL LUMBER=1.00 NAIL=1.00 LS BEND=1.10 COMP=1.10 SHEAR=1.10 TENS= 1.10

COMPANION LIVE LOAD FACTOR = 0.50

TRUSS PLATE MANUFACTURER IS NOT RESPONSIBLE FOR QUALITY CONTROL IN THE TRUSS MANUFACTURING PLANT .

NAIL VALUES

PLATE	GRIP(DRY) (PSI) MAX	MIN	SHEAR (PLI) MAX	MIN	SECTION (PLI) MAX	MIN
MT20	618	354	1667	822	2284	1656

PLATE PLACEMENT TOL. = 0.250 inches

PLATE ROTATION TOL. = 5.0 Deg.

JSI GRIP= 0.89 (11) (INPUT = 0.90)
JSI METAL= 0.36 (1) (INPUT = 1.00)

LICENSED PROFESSIONAL ENGINEER
R.M. TREVISAN
100136551
March 13th, 2017
PROVINCE OF ONTARIO

RECEIVED
TOWN OF MILTON
MAR 29, 2017
17-4990
BUILDING DIVISION

READ ALL NOTES ON THIS PAGE AND ON THE ENGINEERING NOTE PAGE ENP-1. THE NOTE PAGE IS AN INTEGRAL PART OF THIS DRAWING AS IT CONTAINS SPECIFICATIONS AND CRITERIA USED IN THE DESIGN OF THIS COMPONENT.

KOTT

JOB NAME	TRUSS NAME	QUANTITY	PLY	JOB DESC.	DRWG NO.
PT0317-054	T15	1	1	TRUSS DESC. LECCO RIDGE-BLOCK 328	ENG JOB: PT0317-054

Kott Lumber Uxbridge, Stouffville, ON, CGC

Version 8.100 S Feb 9 2017 MiTek Industries, Inc. Mon Mar 13 09:56:59 2017 Page 1

ID:pF8Cn?9h9uHzAm5tCmlVl5yJJCp-fV77_QyYARfJGhwkw2zRQmH?GHtP0bOOcsIXTQzbOnI

SCALE = 1:72.8

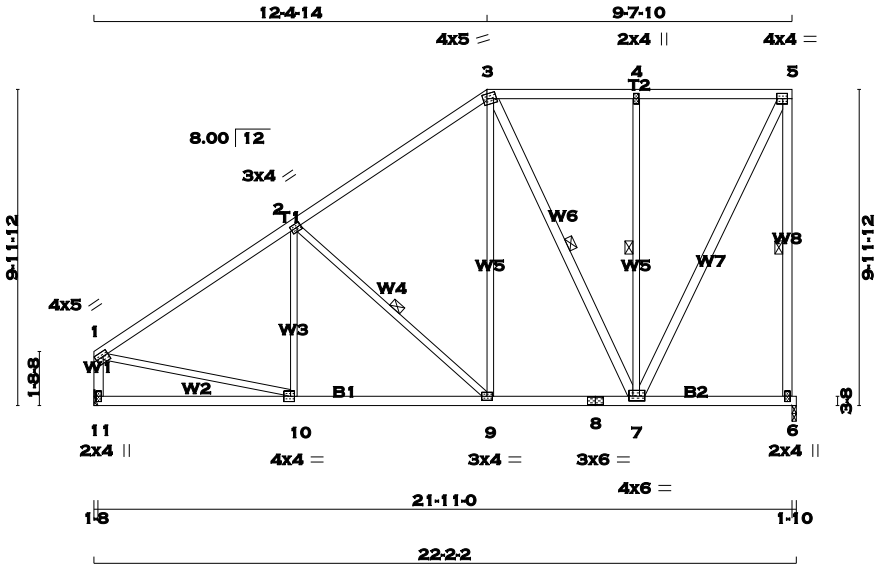

TOTAL WEIGHT = 120 lb

[M][F]

LUMBER

N. L. G. A. RULES

CHORDS	SIZE		LUMBER	DESCR.
1 - 3	2x4	DRY	No.2	SPF
3 - 5	2x4	DRY	No.2	SPF
6 - 5	2x4	DRY	No.2	SPF
11 - 1	2x4	DRY	No.2	SPF
11 - 8	2x4	DRY	No.2	SPF
8 - 6	2x4	DRY	No.2	SPF
ALL WEBS	2x3	DRY	No.2	SPF
EXCEPT				
3 - 7	2x4	DRY	No.2	SPF
7 - 5	2x4	DRY	No.2	SPF

DRY: SEASONED LUMBER.

PLATES (table is in inches)

JT	TYPE	PLATES	W	LEN	Y	X
1	TMVW-t	MT20	4.0	5.0	1.75	Edge
2	TMWW-t	MT20	3.0	4.0	1.50	1.50
3	TTWW-m	MT20	4.0	5.0	1.75	1.50
4	TMW+w	MT20	2.0	4.0		
5	TMVW-t	MT20	4.0	4.0	2.00	1.75
6	BMV1+p	MT20	2.0	4.0		
7	BMWWW-t	MT20	4.0	6.0	1.75	1.50
8	BS-t	MT20	3.0	6.0		
9	BMWW-t	MT20	3.0	4.0		
10	BMWW-t	MT20	4.0	4.0	2.00	1.50
11	BMV1+p	MT20	2.0	4.0		

Edge - INDICATES REFERENCE CORNER OF PLATE TOUCHES EDGE OF CHORD.

A SIZE FOR SIZE SUBSTITUTION OF MITEK MII20 WITH TEE-LOK TL20 PLATES IS ALLOWED.

DIMENSIONS, SUPPORTS AND LOADINGS SPECIFIED BY FABRICATOR TO BE VERIFIED BY BUILDING DESIGNER

BEARINGS

JT	FACTORED GROSS REACTION VERT	HORZ	MAXIMUM FACTORED GROSS REACTION DOWN	HORZ	UPLIFT	INPUT BRG IN-SX	REQRD BRG IN-SX
6	1045	0	1045	0	0	1-10	1-10
11	1045	0	1045	0	0	HANGER BY OTHERS	
						MIN. SEAT SIZE: 1-8	

UNFACTORED REACTIONS

JT	1ST LCASE COMBINED	SNOW	MAX./MIN. COMPONENT REACTIONS LIVE	PERM.LIVE	WIND	DEAD	SOIL
6	734	513 / 0	0 / 0	0 / 0	0 / 0	220 / 0	0 / 0
11	734	513 / 0	0 / 0	0 / 0	0 / 0	220 / 0	0 / 0

BEARING MATERIAL TO BE SPF NO.2 OR BETTER AT JOINT(S) 6

BRACING

TOP CHORD TO BE SHEATHED OR MAX. PURLIN SPACING = 5.55 FT.
MAX. UNBRACED BOTTOM CHORD LENGTH = 10.00 FT. OR RIGID CEILING DIRECTLY APPLIED.

ALL PITCH BREAKS AND PERIMETER CORNER JOINTS MUST BE LATERALLY RESTRAINED.

1 - 2x3 SPF No.2 LATERAL BRACE(S) AT 1/ 2 LENGTH OF 5-6. DBS = 14-0-0 . CBF = 88 LBS.
1 - 2x3 SPF No.2 LATERAL BRACE(S) AT 1/ 2 LENGTH OF 2-9, 3-7, 4-7. DBS = 20-0-0 . CBF = 58 LBS.

DBS = DIAGONAL BRACE SPACING (MAX). CBF = CUMULATIVE BRACING FORCE. FASTEN LATERAL BRACE(S) USING (0.122"X3") SPIRAL NAILS : 1 NAIL FOR 2x3 BRACE(S), 2 FOR 1x4, 2x4, 2x5, 3 FOR 2x6, 4 FOR 2x8, 5 FOR 2x10, AND 6 FOR 2x12.

END VERTICAL(S) MUST BE SHEATHED OR HAVE BRACES AS INDICATED IN THE MAX. UNBRACED LENGTH COLUMN OF THE TABLE BELOW

LOADING

TOTAL LOAD CASES: (3)

CHORDS

MEMB. FR-TO	MAX. FACTORED FORCE (LBS)	FACTORED VERT. LOAD (PLF) FROM	TO	LC1 MAX CSI (LC)	MAX. UNBRAC LENGTH
1- 2	-1072 / 0	-77.3	-77.3	0.42 (1)	5.55
2- 3	-738 / 0	-77.3	-77.3	0.39 (1)	6.25
3- 4	-438 / 0	-77.3	-77.3	0.23 (1)	6.25
4- 5	-438 / 0	-77.3	-77.3	0.23 (1)	6.25
6- 5	-1009 / 0	0.0	0.0	0.49 (1)	6.23
11- 1	-1001 / 0	0.0	0.0	0.11 (1)	7.81
11-10	0 / 0	-17.5	-17.5	0.17 (3)	10.00
10- 9	0 / 919	-17.5	-17.5	0.24 (3)	10.00
9- 8	0 / 590	-17.5	-17.5	0.14 (1)	10.00
8- 7	0 / 590	-17.5	-17.5	0.14 (1)	10.00
7- 6	0 / 0	-17.5	-17.5	0.09 (3)	10.00

WEBS

MEMB. FR-TO	MAX. FACTORED FORCE (LBS)	MAX CSI (LC)
10- 2	-77 / 83	0.04 (1)
2- 9	-448 / 0	0.21 (1)
9- 3	0 / 390	0.09 (1)
3- 7	-347 / 0	0.21 (1)
7- 4	-460 / 0	0.31 (1)
7- 5	0 / 968	0.16 (1)
1-10	0 / 941	0.21 (1)

DESIGN CRITERIA

SPECIFIED LOADS:

TOP CH.	LL	=	23.3	PSF
	DL	=	3.0	PSF
BOT CH.	LL	=	0.0	PSF
	DL	=	7.0	PSF
TOTAL LOAD		=	33.3	PSF

SPACING = 24.0 IN. C/C

LOADING IN FLAT SECTION BASED ON A SLOPE OF 6.00/12

THIS TRUSS IS DESIGNED FOR RESIDENTIAL OR SMALL BUILDING REQUIREMENTS OF PART 9, NBCC 2010

THIS DESIGN COMPLIES WITH:
- PART 9 OF OBC 2012 , BCBC 2012 , ABC 2014
- CSA 086-09
- TPIC 2011

(55 % OF 27.2 P.S.F. G.S.L. PLUS 8.4 P.S.F. RAIN LOAD) EQUALS 23.3 P.S.F. SPECIFIED ROOF LIVE LOAD

ALLOWABLE DEFL.(LL)= L/360 (0.73")
CALCULATED VERT. DEFL.(LL) = L/ 999 (0.03")
ALLOWABLE DEFL.(TL)= L/360 (0.73")
CALCULATED VERT. DEFL.(TL) = L/ 999 (0.07")

CSI: TC=0.49 (5-6:1) , BC=0.24 (9-10:3) , WB=0.31 (4-7:1) , SSI=0.20 (1-2:1)

DOL LUMBER=1.00 NAIL=1.00 LS BEND=1.10 COMP=1.10 SHEAR=1.10 TENS= 1.10

COMPANION LIVE LOAD FACTOR = 0.50

TRUSS PLATE MANUFACTURER IS NOT RESPONSIBLE FOR QUALITY CONTROL IN THE TRUSS MANUFACTURING PLANT .

NAIL VALUES

PLATE	GRIP(DRY) (PSI) MAX	MIN	SHEAR (PLI) MAX	MIN	SECTION (PLI) MAX	MIN
MT20	618	354	1667	822	2284	1656

PLATE PLACEMENT TOL. = 0.250 inches

PLATE ROTATION TOL. = 0.5 Deg.

JSI GRIP= 0.90 (5) (INPUT = 0.90)
JSI METAL= 0.36 (1) (INPUT = 1.00)

LICENSED PROFESSIONAL ENGINEER
P.M. TREVISAN
100136551
March 13th, 2017
PROVINCE OF ONTARIO

RECEIVED
TOWN OF MILTON
MAR 29, 2017
17-4990
BUILDING DIVISION

READ ALL NOTES ON THIS PAGE AND ON THE ENGINEERING NOTE PAGE ENP-1. THE NOTE PAGE IS AN INTEGRAL PART OF THIS DRAWING AS IT CONTAINS SPECIFICATIONS AND CRITERIA USED IN THE DESIGN OF THIS COMPONENT.

KOTT

JOB NAME	TRUSS NAME	QUANTITY	PLY	JOB DESC.	DRWG NO.
PT0317-054	T16	1	1	TRUSS DESC. LECCO RIDGE-BLOCK 328	

Kott Lumber Uxbridge, Stouffville, ON, CGC

Version 8.100 S Feb 9 2017 MiTek Industries, Inc. Mon Mar 13 09:56:59 2017 Page 1
ID:pF8Cn?9h9uHzAm5tCmlVl5yJJCp-fV77_QyYARfJGhwkw2zRQmH00Htq0aIOcsIXTQzbOnI

SCALE = 1:64.7

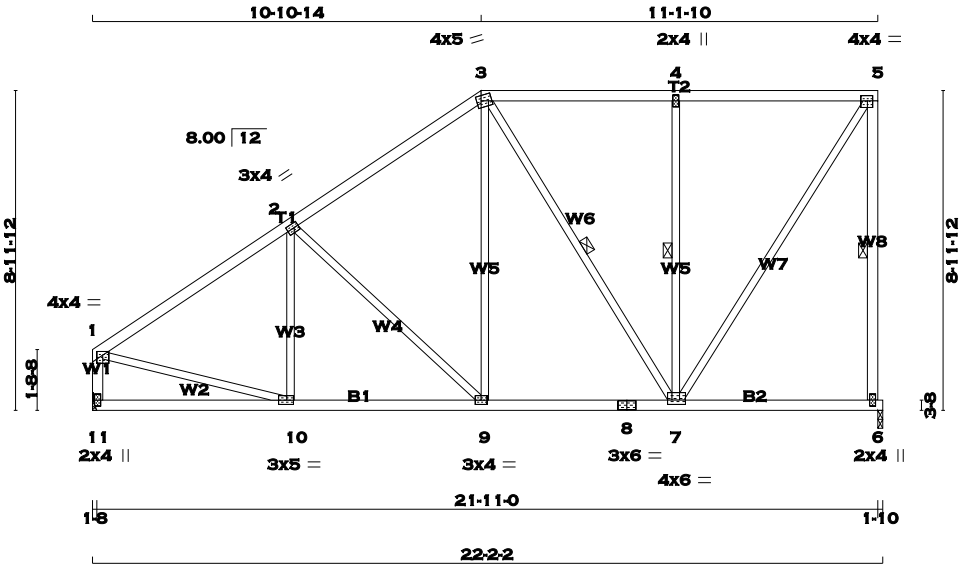

TOTAL WEIGHT = 108 lb
[M]

LUMBER
N. L. G. A. RULES

CHORDS	SIZE		LUMBER	DESCR.
1 - 3	2x4	DRY	No.2	SPF
3 - 5	2x4	DRY	No.2	SPF
6 - 5	2x4	DRY	No.2	SPF
11 - 1	2x4	DRY	No.2	SPF
11 - 8	2x4	DRY	No.2	SPF
8 - 6	2x4	DRY	No.2	SPF
ALL WEBS EXCEPT	2x3	DRY	No.2	SPF

DRY: SEASONED LUMBER.

PLATES (table is in inches)

JT	TYPE	PLATES	W	LEN	Y	X
1	TMVW-p	MT20	4.0	4.0	1.25	2.00
2	TMWW-t	MT20	3.0	4.0	1.50	1.50
3	TTWW-m	MT20	4.0	5.0	1.75	1.50
4	TMW+w	MT20	2.0	4.0		
5	TMVW-t	MT20	4.0	4.0	1.75	1.75
6	BMV1+p	MT20	2.0	4.0		
7	BMWWW-t	MT20	4.0	6.0	1.50	1.50
8	BS-t	MT20	3.0	6.0		
9	BMWW-t	MT20	3.0	4.0		
10	BMWW-t	MT20	3.0	5.0	1.50	2.25
11	BMV1+p	MT20	2.0	4.0		

A SIZE FOR SIZE SUBSTITUTION OF MITEK MII20 WITH TEE-LOK TL20 PLATES IS ALLOWED.

DIMENSIONS, SUPPORTS AND LOADINGS SPECIFIED BY FABRICATOR TO BE VERIFIED BY BUILDING DESIGNER

BEARINGS

JT	FACTORED GROSS REACTION VERT	HORZ	MAXIMUM FACTORED GROSS REACTION DOWN	HORZ	UPLIFT	INPUT BRG IN-SX	REQRD BRG IN-SX
6	1045	0	1045	0	0	1-10	1-10
11	1045	0	1045	0	0	HANGER BY OTHERS	
						MIN. SEAT SIZE: 1-8	

UNFACTORED REACTIONS

JT	1ST LCASE COMBINED	MAX./MIN. COMPONENT REACTIONS SNOW	LIVE	PERM.LIVE	WIND	DEAD	SOIL
6	734	513 / 0	0 / 0	0 / 0	0 / 0	220 / 0	0 / 0
11	734	513 / 0	0 / 0	0 / 0	0 / 0	220 / 0	0 / 0

BEARING MATERIAL TO BE SPF NO.2 OR BETTER AT JOINT(S) 6

BRACING
TOP CHORD TO BE SHEATHED OR MAX. PURLIN SPACING = 5.50 FT.
MAX. UNBRACED BOTTOM CHORD LENGTH = 10.00 FT. OR RIGID CEILING DIRECTLY APPLIED.

ALL PITCH BREAKS AND PERIMETER CORNER JOINTS MUST BE LATERALLY RESTRAINED.

1 - 2x3 SPF No.2 LATERAL BRACE(S) AT 1/ 2 LENGTH OF 5-6. DBS = 14-0-0 . CBF = 88 LBS.
1 - 2x3 SPF No.2 LATERAL BRACE(S) AT 1/ 2 LENGTH OF 3-7, 4-7. DBS = 20-0-0 . CBF = 67 LBS.

DBS = DIAGONAL BRACE SPACING (MAX). CBF = CUMULATIVE BRACING FORCE. FASTEN LATERAL BRACE(S) USING (0.122"X3") SPIRAL NAILS : 1 NAIL FOR 2x3 BRACE(S), 2 FOR 1x4, 2x4, 2x5, 3 FOR 2x6, 4 FOR 2x8, 5 FOR 2x10, AND 6 FOR 2x12.

END VERTICAL(S) MUST BE SHEATHED OR HAVE BRACES AS INDICATED IN THE MAX. UNBRACED LENGTH COLUMN OF THE TABLE BELOW

LOADING
TOTAL LOAD CASES: (3)

CHORDS

MEMB. FR-TO	MAX. FACTORED FORCE (LBS)	FACTORED VERT. LOAD LC1 (PLF) FROM	TO	MAX CSI (LC)	MAX. UNBRAC LENGTH
1- 2	-1075 / 0	-77.3	-77.3	0.44 (1)	5.50
2- 3	-829 / 0	-77.3	-77.3	0.42 (1)	6.07
3- 4	-546 / 0	-77.3	-77.3	0.41 (1)	6.25
4- 5	-546 / 0	-77.3	-77.3	0.41 (1)	6.25
6- 5	-1005 / 0	0.0	0.0	0.37 (1)	6.24
11- 1	-1005 / 0	0.0	0.0	0.11 (1)	7.80
11-10	0 / 0	-17.5	-17.5	0.13 (3)	10.00
10- 9	0 / 918	-17.5	-17.5	0.21 (1)	10.00
9- 8	0 / 669	-17.5	-17.5	0.18 (3)	10.00
8- 7	0 / 669	-17.5	-17.5	0.18 (3)	10.00
7- 6	0 / 0	-17.5	-17.5	0.13 (3)	10.00

WEBS

MEMB. FR-TO	MAX. FACTORED FORCE (LBS)	MAX CSI (LC)
10- 2	-121 / 56	0.05 (1)
2- 9	-346 / 0	0.38 (1)
9- 3	0 / 325	0.07 (1)
3- 7	-230 / 0	0.17 (1)
7- 4	-533 / 0	0.28 (1)
7- 5	0 / 999	0.22 (1)
1-10	0 / 946	0.21 (1)

DESIGN CRITERIA

SPECIFIED LOADS:

TOP CH.	LL	=	23.3	PSF
	DL	=	3.0	PSF
BOT CH.	LL	=	0.0	PSF
	DL	=	7.0	PSF
TOTAL LOAD		=	33.3	PSF

SPACING = 24.0 IN. C/C

LOADING IN FLAT SECTION BASED ON A SLOPE OF 6.00/12

THIS TRUSS IS DESIGNED FOR RESIDENTIAL OR SMALL BUILDING REQUIREMENTS OF PART 9, NBCC 2010

THIS DESIGN COMPLIES WITH:
- PART 9 OF OBC 2012 , BCBC 2012 , ABC 2014
- CSA 086-09
- TPIC 2011

(55 % OF 27.2 P.S.F. G.S.L. PLUS 8.4 P.S.F. RAIN LOAD) EQUALS 23.3 P.S.F. SPECIFIED ROOF LIVE LOAD

ALLOWABLE DEFL.(LL)= L/360 (0.73")
CALCULATED VERT. DEFL.(LL) = L/ 999 (0.03")
ALLOWABLE DEFL.(TL)= L/360 (0.73")
CALCULATED VERT. DEFL.(TL) = L/ 999 (0.06")

CSI: TC=0.44 (1-2:1) , BC=0.21 (9-10:1) , WB=0.38 (2-9:1) , SSI=0.21 (4-5:1)

DOL LUMBER=1.00 NAIL=1.00 LS BEND=1.10 COMP=1.10 SHEAR=1.10 TENS= 1.10

COMPANION LIVE LOAD FACTOR = 0.50

TRUSS PLATE MANUFACTURER IS NOT RESPONSIBLE FOR QUALITY CONTROL IN THE TRUSS MANUFACTURING PLANT .

NAIL VALUES

PLATE	GRIP(DRY) (PSI) MAX	MIN	SHEAR (PLI) MAX	MIN	SECTION (PLI) MAX	MIN
MT20	618	354	1667	822	2284	1656

PLATE PLACEMENT TOL. = 0.250 inches

PLATE ROTATION TOL. = 5.0 Deg.

JSI GRIP= 0.90 (1) (INPUT = 0.90)
JSI METAL= 0.32 (1) (INPUT = 1.00)

LICENSED PROFESSIONAL ENGINEER
R.M. TREVISAN
100136551
March 13th, 2017
PROVINCE OF ONTARIO

RECEIVED
TOWN OF MILTON
MAR 29, 2017
17-4990
BUILDING DIVISION

READ ALL NOTES ON THIS PAGE AND ON THE ENGINEERING NOTE PAGE ENP-1. THE NOTE PAGE IS AN INTEGRAL PART OF THIS DRAWING AS IT CONTAINS SPECIFICATIONS AND CRITERIA USED IN THE DESIGN OF THIS COMPONENT.

KOTT

JOB NAME	TRUSS NAME	QUANTITY	PLY	JOB DESC.	DRWG NO.
PT0317-054	T17	1	1	TRUSS DESC. LECCO RIDGE-BLOCK 328	ENG JOB: PT0317-054

Kott Lumber Uxbridge, Stouffville, ON, CGC

Version 8.100 S Feb 9 2017 MiTek Industries, Inc. Mon Mar 13 09:57:00 2017 Page 1

ID:pF8Cn?9h9uHzAm5tCmlVl5yJJCp-7hhVCmyAxlnAurVwUlUgz_q93hDmlw1XqW25?szbOnH

SCALE = 1:55.5

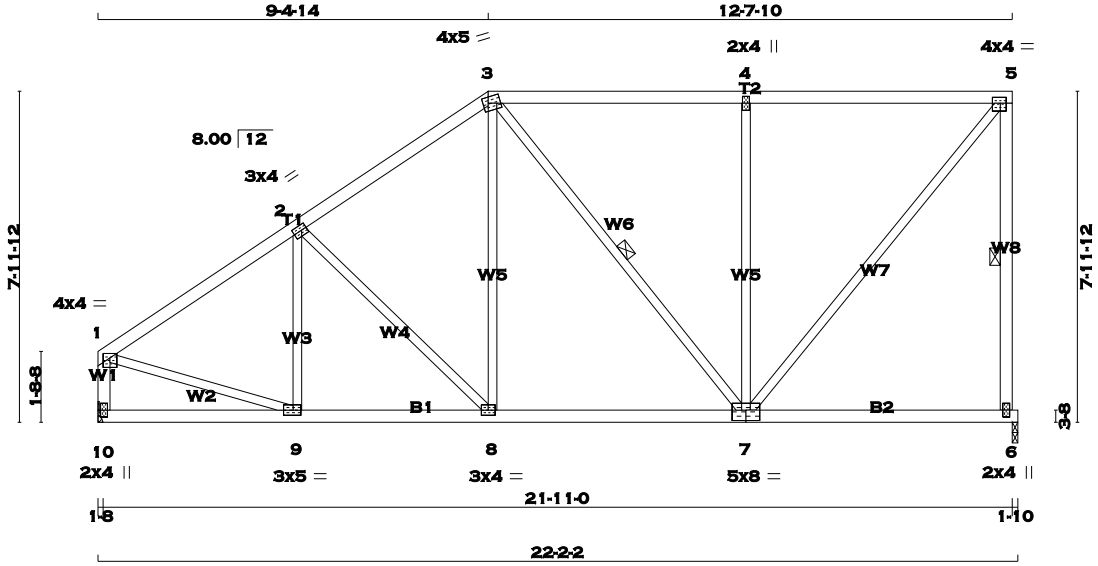

TOTAL WEIGHT = 103 lb [M]

LUMBER

N. L. G. A. RULES

CHORDS	SIZE		LUMBER	DESCR.
1 - 3	2x4	DRY	No.2	SPF
3 - 5	2x4	DRY	No.2	SPF
6 - 5	2x4	DRY	No.2	SPF
10 - 1	2x4	DRY	No.2	SPF
10 - 7	2x4	DRY	No.2	SPF
7 - 6	2x4	DRY	No.2	SPF
ALL WEBS EXCEPT	2x3	DRY	No.2	SPF

DRY: SEASONED LUMBER.

PLATES (table is in inches)

JT	TYPE	PLATES	W	LEN	Y	X
1	TMVW-p	MT20	4.0	4.0	1.25	2.00
2	TMWW-t	MT20	3.0	4.0	1.50	1.50
3	TTWW-m	MT20	4.0	5.0	1.75	1.50
4	TMW+w	MT20	2.0	4.0		
5	TMVW-t	MT20	4.0	4.0	1.75	1.75
6	BMV1+p	MT20	2.0	4.0		
7	BSWWW-l	MT20	5.0	8.0	3.00	4.00
8	BMWW-t	MT20	3.0	4.0		
9	BMWW-t	MT20	3.0	5.0	1.50	2.25
10	BMV1+p	MT20	2.0	4.0		

A SIZE FOR SIZE SUBSTITUTION OF MITEK MII20 WITH TEE-LOK TL20 PLATES IS ALLOWED.

DIMENSIONS, SUPPORTS AND LOADINGS SPECIFIED BY FABRICATOR TO BE VERIFIED BY BUILDING DESIGNER

BEARINGS

JT	FACTORED GROSS REACTION VERT	HORZ	MAXIMUM FACTORED GROSS REACTION DOWN	HORZ	UPLIFT	INPUT BRG IN-SX	REQRD BRG IN-SX
6	1045	0	1045	0	0	1-10	1-10
10	1045	0	1045	0	0	HANGER BY OTHERS	
						MIN. SEAT SIZE: 1-8	

UNFACTORED REACTIONS

JT	1ST LCASE COMBINED	SNOW	MAX./MIN. COMPONENT REACTIONS LIVE	PERM.LIVE	WIND	DEAD	SOIL
6	734	513 / 0	0 / 0	0 / 0	0 / 0	220 / 0	0 / 0
10	734	513 / 0	0 / 0	0 / 0	0 / 0	220 / 0	0 / 0

BEARING MATERIAL TO BE SPF NO.2 OR BETTER AT JOINT(S) 6

BRACING

TOP CHORD TO BE SHEATHED OR MAX. PURLIN SPACING = 5.70 FT.
MAX. UNBRACED BOTTOM CHORD LENGTH = 10.00 FT. OR RIGID CEILING DIRECTLY APPLIED.

ALL PITCH BREAKS AND PERIMETER CORNER JOINTS MUST BE LATERALLY RESTRAINED.

1 - 2x3 SPF No.2 LATERAL BRACE(S) AT 1/ 2 LENGTH OF 5-6. DBS = 14-0-0 . CBF = 87 LBS.
1 - 2x3 SPF No.2 LATERAL BRACE(S) AT 1/ 2 LENGTH OF 3-7. DBS = 20-0-0 . CBF = 13 LBS.

DBS = DIAGONAL BRACE SPACING (MAX). CBF = CUMULATIVE BRACING FORCE. FASTEN LATERAL BRACE(S) USING (0.122"X3") SPIRAL NAILS : 1 NAIL FOR 2x3 BRACE(S), 2 FOR 1x4, 2x4, 2x5, 3 FOR 2x6, 4 FOR 2x8, 5 FOR 2x10, AND 6 FOR 2x12.

END VERTICAL(S) MUST BE SHEATHED OR HAVE BRACES AS INDICATED IN THE MAX. UNBRACED LENGTH COLUMN OF THE TABLE BELOW

LOADING

TOTAL LOAD CASES: (3)

CHORDS

MEMB. FR-TO	MAX. FACTORED FORCE (LBS)	FACTORED VERT. LOAD LC1 (PLF) FROM	TO	MAX CSI (LC)	MAX. UNBRAC LENGTH
1- 2	-1067 / 0	-77.3	-77.3	0.32 (1)	5.70
2- 3	-911 / 0	-77.3	-77.3	0.31 (1)	6.05
3- 4	-677 / 0	-77.3	-77.3	0.55 (1)	6.24
4- 5	-677 / 0	-77.3	-77.3	0.55 (1)	6.24
6- 5	-1000 / 0	0.0	0.0	0.29 (1)	6.25
10- 1	-1009 / 0	0.0	0.0	0.11 (1)	7.79
10- 9	0 / 0	-17.5	-17.5	0.09 (3)	10.00
9- 8	0 / 907	-17.5	-17.5	0.20 (1)	10.00
8- 7	0 / 740	-17.5	-17.5	0.23 (3)	10.00
7- 6	0 / 0	-17.5	-17.5	0.18 (3)	10.00

WEBS

MEMB. FR-TO	MAX. FACTORED FORCE (LBS)	MAX CSI (LC)
9- 2	-173 / 26	0.06 (1)
2- 8	-238 / 0	0.19 (1)
8- 3	0 / 257	0.06 (1)
3- 7	-101 / 0	0.07 (1)
7- 4	-606 / 0	0.73 (1)
7- 5	0 / 1056	0.24 (1)
1- 9	0 / 944	0.21 (1)

DESIGN CRITERIA

SPECIFIED LOADS:

TOP	CH.	LL	=	23.3	PSF
		DL	=	3.0	PSF
BOT	CH.	LL	=	0.0	PSF
		DL	=	7.0	PSF
TOTAL	LOAD		=	33.3	PSF

SPACING = 24.0 IN. C/C

LOADING IN FLAT SECTION BASED ON A SLOPE OF 6.00/12

THIS TRUSS IS DESIGNED FOR RESIDENTIAL OR SMALL BUILDING REQUIREMENTS OF PART 9, NBCC 2010

THIS DESIGN COMPLIES WITH:
- PART 9 OF OBC 2012 , BCBC 2012 , ABC 2014
- CSA 086-09
- TPIC 2011

(55 % OF 27.2 P.S.F. G.S.L. PLUS 8.4 P.S.F. RAIN LOAD) EQUALS 23.3 P.S.F. SPECIFIED ROOF LIVE LOAD

ALLOWABLE DEFL.(LL)= L/360 (0.73")
CALCULATED VERT. DEFL.(LL) = L/ 999 (0.03")
ALLOWABLE DEFL.(TL)= L/360 (0.73")
CALCULATED VERT. DEFL.(TL) = L/ 999 (0.06")

CSI: TC=0.55 (4-5:1) , BC=0.23 (7-8:3) , WB=0.73 (4-7:1) , SSI=0.24 (4-5:1)

DOL LUMBER=1.00 NAIL=1.00 LS BEND=1.10 COMP=1.10 SHEAR=1.10 TENS= 1.10

COMPANION LIVE LOAD FACTOR = 0.50

TRUSS PLATE MANUFACTURER IS NOT RESPONSIBLE FOR QUALITY CONTROL IN THE TRUSS MANUFACTURING PLANT .

NAIL VALUES

PLATE	GRIP(DRY) (PSI) MAX	MIN	SHEAR (PLI) MAX	MIN	SECTION (PLI) MAX	MIN
MT20	618	354	1667	822	2284	1656

PLATE PLACEMENT TOL. = 0.250 inches

PLATE ROTATION TOL. = 5.0 Deg.

JSI GRIP= 0.88 (1) (INPUT = 0.90)
JSI METAL= 0.31 (1) (INPUT = 1.00)

LICENSED PROFESSIONAL ENGINEER
P.M. TREVISAN
100136551
March 13th, 2017
PROVINCE OF ONTARIO

RECEIVED
TOWN OF MILTON
MAR 29, 2017
17-4990
BUILDING DIVISION

READ ALL NOTES ON THIS PAGE AND ON THE ENGINEERING NOTE PAGE ENP-1. THE NOTE PAGE IS AN INTEGRAL PART OF THIS DRAWING AS IT CONTAINS SPECIFICATIONS AND CRITERIA USED IN THE DESIGN OF THIS COMPONENT.

KOTT

JOB NAME	TRUSS NAME	QUANTITY	PLY	JOB DESC.	DRWG NO.
PT0317-054	T18	2	1	TRUSS DESC. LECCO RIDGE-BLOCK 328	ENG JOB: PT0317-054

Kott Lumber Uxbridge, Stouffville, ON, CGC

Version 8.100 S Feb 9 2017 MiTek Industries, Inc. Mon Mar 13 09:57:00 2017 Page 1

ID:pF8Cn?9h9uHzAm5tCmlVl5yJJCp-7hhVCmyAxlnAurVwUlUgz_qCphDtlzUXqW25?szbOnH

SCALE = 1:71.1

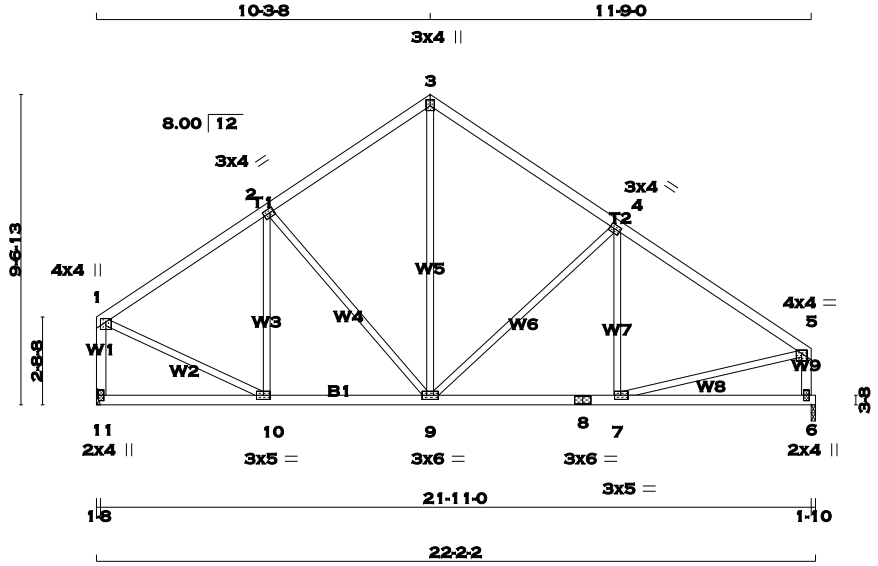

TOTAL WEIGHT = 2 X 97 = 195 lb

[M][F]

LUMBER

N. L. G. A. RULES

CHORDS	SIZE		LUMBER	DESCR.
1 - 3	2x4	DRY	No.2	SPF
3 - 5	2x4	DRY	No.2	SPF
11 - 1	2x4	DRY	No.2	SPF
6 - 5	2x4	DRY	No.2	SPF
11 - 8	2x4	DRY	No.2	SPF
8 - 6	2x4	DRY	No.2	SPF
ALL WEBS EXCEPT	2x3	DRY	No.2	SPF

DRY: SEASONED LUMBER.

PLATES (table is in inches)

JT	TYPE	PLATES	W	LEN	Y	X
1	TMVW+p	MT20	4.0	4.0	1.25	2.00
2	TMWW-t	MT20	3.0	4.0	1.50	1.50
3	TTW+p	MT20	3.0	4.0	2.25	1.50
4	TMWW-t	MT20	3.0	4.0	1.50	1.50
5	TMVW-p	MT20	4.0	4.0	1.25	2.00
6	BMV1+p	MT20	2.0	4.0		
7	BMWW-t	MT20	3.0	5.0	1.50	2.25
8	BS-t	MT20	3.0	6.0		
9	BMWWW-t	MT20	3.0	6.0		
10	BMWW-t	MT20	3.0	5.0		
11	BMV1+p	MT20	2.0	4.0		

A SIZE FOR SIZE SUBSTITUTION OF MITEK MII20 WITH TEE-LOK TL20 PLATES IS ALLOWED.

DIMENSIONS, SUPPORTS AND LOADINGS SPECIFIED BY FABRICATOR TO BE VERIFIED BY BUILDING DESIGNER

BEARINGS

JT	FACTORED GROSS REACTION VERT	HORZ	MAXIMUM FACTORED GROSS REACTION DOWN	HORZ	UPLIFT	INPUT BRG IN-SX	REQRD BRG IN-SX
11	1045	0	1045	0	0	HANGER BY OTHERS MIN. SEAT SIZE: 1-8	
6	1045	0	1045	0	0	1-10	1-10

UNFACTORED REACTIONS

JT	1ST LCASE COMBINED	MAX./MIN. COMPONENT REACTIONS SNOW	LIVE	PERM.LIVE	WIND	DEAD	SOIL
11	734	513 / 0	0 / 0	0 / 0	0 / 0	220 / 0	0 / 0
6	734	513 / 0	0 / 0	0 / 0	0 / 0	220 / 0	0 / 0

BEARING MATERIAL TO BE SPF NO.2 OR BETTER AT JOINT(S) 6

BRACING

TOP CHORD TO BE SHEATHED OR MAX. PURLIN SPACING = 5.64 FT.
MAX. UNBRACED BOTTOM CHORD LENGTH = 10.00 FT. OR RIGID CEILING DIRECTLY APPLIED.

ALL PITCH BREAKS AND PERIMETER CORNER JOINTS MUST BE LATERALLY RESTRAINED.

LOADING

TOTAL LOAD CASES: (3)

CHORDS

MEMB. FR-TO	MAX. FORCE (LBS)	FACTORED VERT. LOAD (PLF) FROM	TO	MAX CSI (LC)	MAX. UNBRAC LENGTH
1- 2	-887 / 0	-77.3	-77.3	0.27 (1)	6.19
2- 3	-777 / 0	-77.3	-77.3	0.27 (1)	6.25
3- 4	-781 / 0	-77.3	-77.3	0.35 (1)	6.25
4- 5	-1068 / 0	-77.3	-77.3	0.37 (1)	5.64
11- 1	-1007 / 0	0.0	0.0	0.14 (1)	7.80
6- 5	-1003 / 0	0.0	0.0	0.11 (1)	7.81
11-10	0 / 0	-17.5	-17.5	0.11 (3)	10.00
10- 9	0 / 760	-17.5	-17.5	0.18 (1)	10.00
9- 8	0 / 914	-17.5	-17.5	0.22 (1)	10.00
8- 7	0 / 914	-17.5	-17.5	0.22 (1)	10.00
7- 6	0 / 0	-17.5	-17.5	0.15 (3)	10.00

WEBS

MEMB. FR-TO	MAX. FORCE (LBS)	MAX CSI (LC)
10- 2	-246 / 12	0.15 (1)
2- 9	-208 / 0	0.25 (1)
9- 3	0 / 519	0.12 (1)
9- 4	-397 / 0	0.51 (1)
7- 4	-100 / 69	0.05 (1)
1-10	0 / 834	0.19 (1)
7- 5	0 / 939	0.21 (1)

DESIGN CRITERIA

SPECIFIED LOADS:

TOP	CH.	LL	=	23.3	PSF
		DL	=	3.0	PSF
BOT	CH.	LL	=	0.0	PSF
		DL	=	7.0	PSF
TOTAL	LOAD		=	33.3	PSF

SPACING = 24.0 IN. C/C

THIS TRUSS IS DESIGNED FOR RESIDENTIAL OR SMALL BUILDING REQUIREMENTS OF PART 9, NBCC 2010

THIS DESIGN COMPLIES WITH:
- PART 9 OF OBC 2012 , BCBC 2012 , ABC 2014
- CSA 086-09
- TPIC 2011

(55 % OF 27.2 P.S.F. G.S.L. PLUS 8.4 P.S.F. RAIN LOAD) EQUALS 23.3 P.S.F. SPECIFIED ROOF LIVE LOAD

ALLOWABLE DEFL.(LL)= L/360 (0.73")
CALCULATED VERT. DEFL.(LL) = L/ 999 (0.03")
ALLOWABLE DEFL.(TL)= L/360 (0.73")
CALCULATED VERT. DEFL.(TL) = L/ 999 (0.06")

CSI: TC=0.37 (4-5:1) , BC=0.22 (7-9:1) , WB=0.51 (4-9:1) , SSI=0.19 (4-5:1)

DOL LUMBER=1.00 NAIL=1.00 LS BEND=1.10 COMP=1.10 SHEAR=1.10 TENS= 1.10

COMPANION LIVE LOAD FACTOR = 0.50

TRUSS PLATE MANUFACTURER IS NOT RESPONSIBLE FOR QUALITY CONTROL IN THE TRUSS MANUFACTURING PLANT .

NAIL VALUES

PLATE	GRIP(DRY) (PSI) MAX	MIN	SHEAR (PLI) MAX	MIN	SECTION (PLI) MAX	MIN
MT20	618	354	1667	822	2284	1656

PLATE PLACEMENT TOL. = 0.250 inches

PLATE ROTATION TOL. = 5.0 Deg.

JSI GRIP= 0.90 (5) (INPUT = 0.90)
JSI METAL= 0.32 (5) (INPUT = 1.00)

LICENSED PROFESSIONAL ENGINEER
P.M. TREVISAN
100136551
March 13th, 2017
PROVINCE OF ONTARIO

RECEIVED
TOWN OF MILTON
MAR 29, 2017
17-4990
BUILDING DIVISION

READ ALL NOTES ON THIS PAGE AND ON THE ENGINEERING NOTE PAGE ENP-1. THE NOTE PAGE IS AN INTEGRAL PART OF THIS DRAWING AS IT CONTAINS SPECIFICATIONS AND CRITERIA USED IN THE DESIGN OF THIS COMPONENT.

KOTT

JOB NAME	TRUSS NAME	QUANTITY	PLY	JOB DESC.	DRWG NO.
PT0317-054	**T19**	**1**	**1**	TRUSS DESC. LECCO RIDGE-BLOCK 328	

ENG JOB: PT0317-054

Kott Lumber Uxbridge, Stouffville, ON, CGC

Version 8.100 S Feb 9 2017 MiTek Industries, Inc. Mon Mar 13 09:57:00 2017 Page 1
ID:pF8Cn?9h9uHzAm5tCmlVl5yJJCp-7hhVCmyAxlnAurVwUlUgz_qDPhDEl1HXqW25?szbOnH

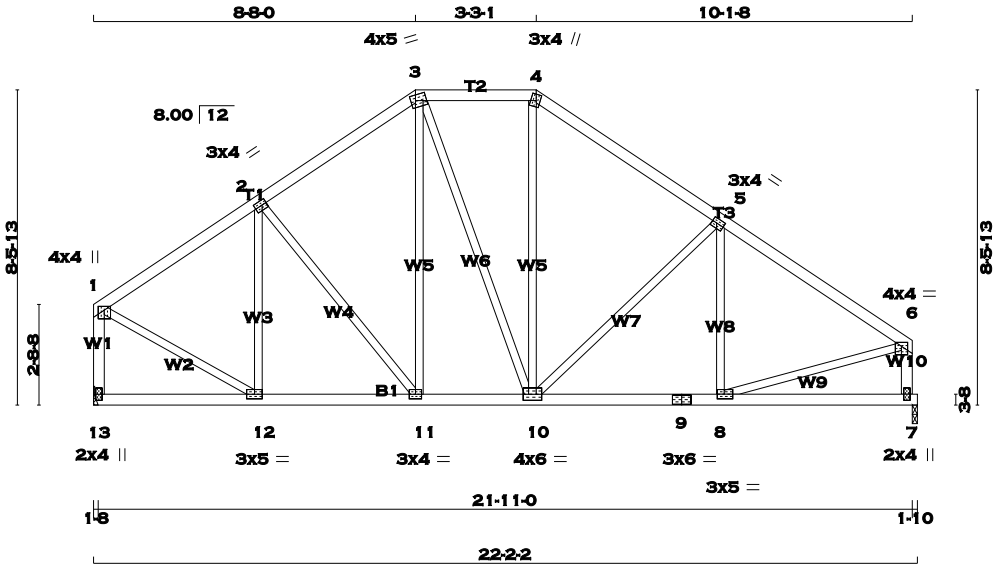

TOTAL WEIGHT = 105 lb

LUMBER
N. L. G. A. RULES

CHORDS	SIZE		LUMBER	DESCR.
1 - 3	2x4	DRY	No.2	SPF
3 - 4	2x4	DRY	No.2	SPF
4 - 6	2x4	DRY	No.2	SPF
13 - 1	2x4	DRY	No.2	SPF
7 - 6	2x4	DRY	No.2	SPF
13 - 9	2x4	DRY	No.2	SPF
9 - 7	2x4	DRY	No.2	SPF
ALL WEBS EXCEPT	2x3	DRY	No.2	SPF

DRY: SEASONED LUMBER.

PLATES (table is in inches)

JT	TYPE	PLATES	W	LEN	Y	X
1	TMVW+p	MT20	4.0	4.0	1.25	2.00
2	TMWW-t	MT20	3.0	4.0	1.50	1.50
3	TTWW-m	MT20	4.0	5.0	1.75	1.50
4	TTW+m	MT20	3.0	4.0	2.00	1.25
5	TMWW-t	MT20	3.0	4.0	1.50	1.50
6	TMVW-p	MT20	4.0	4.0	1.25	2.00
7	BMV1+p	MT20	2.0	4.0		
8	BMWW-t	MT20	3.0	5.0	1.50	2.25
9	BS-t	MT20	3.0	6.0		
10	BMWWW-t	MT20	4.0	6.0		
11	BMWW-t	MT20	3.0	4.0		
12	BMWW-t	MT20	3.0	5.0		
13	BMV1+p	MT20	2.0	4.0		

A SIZE FOR SIZE SUBSTITUTION OF MITEK MII20 WITH TEE-LOK TL20 PLATES IS ALLOWED.

DIMENSIONS, SUPPORTS AND LOADINGS SPECIFIED BY FABRICATOR TO BE VERIFIED BY BUILDING DESIGNER

BEARINGS

JT	FACTORED GROSS REACTION VERT	HORZ	MAXIMUM FACTORED GROSS REACTION DOWN	HORZ	UPLIFT	INPUT BRG	REQRD BRG
13	1045	0	1045	0	0	HANGER BY OTHERS MIN. SEAT SIZE: 1-8	
7	1045	0	1045	0	0	1-10	1-10

UNFACTORED REACTIONS

JT	1ST LCASE COMBINED	SNOW	MAX./MIN. COMPONENT REACTIONS LIVE	PERM.LIVE	WIND	DEAD	SOIL
13	734	513 / 0	0 / 0	0 / 0	0 / 0	220 / 0	0 / 0
7	734	513 / 0	0 / 0	0 / 0	0 / 0	220 / 0	0 / 0

BEARING MATERIAL TO BE SPF NO.2 OR BETTER AT JOINT(S) 7

BRACING
TOP CHORD TO BE SHEATHED OR MAX. PURLIN SPACING = 5.79 FT.
MAX. UNBRACED BOTTOM CHORD LENGTH = 10.00 FT. OR RIGID CEILING DIRECTLY APPLIED.

ALL PITCH BREAKS AND PERIMETER CORNER JOINTS MUST BE LATERALLY RESTRAINED.

LOADING
TOTAL LOAD CASES: (3)

CHORDS

MEMB. FR-TO	MAX. FACTORED FORCE (LBS)	VERT. LOAD LC1 (PLF) FROM	TO	MAX CSI (LC)	MAX. UNBRAC LENGTH
1- 2	-858 / 0	-77.3	-77.3	0.19 (1)	6.25
2- 3	-833 / 0	-77.3	-77.3	0.19 (1)	6.25
3- 4	-702 / 0	-77.3	-77.3	0.11 (1)	6.25
4- 5	-869 / 0	-77.3	-77.3	0.26 (1)	6.25
5- 6	-1066 / 0	-77.3	-77.3	0.27 (1)	5.79
13- 1	-1014 / 0	0.0	0.0	0.14 (1)	7.78
7- 6	-1008 / 0	0.0	0.0	0.11 (1)	7.80
13-12	0 / 0	-17.5	-17.5	0.08 (3)	10.00
12-11	0 / 732	-17.5	-17.5	0.16 (1)	10.00
11-10	0 / 674	-17.5	-17.5	0.14 (1)	10.00
10- 9	0 / 908	-17.5	-17.5	0.20 (1)	10.00
9- 8	0 / 908	-17.5	-17.5	0.20 (1)	10.00
8- 7	0 / 0	-17.5	-17.5	0.11 (3)	10.00

WEBS

MEMB. FR-TO	FORCE (LBS)	MAX CSI (LC)
12- 2	-305 / 0	0.15 (1)
2-11	-94 / 0	0.08 (1)
11- 3	0 / 130	0.03 (1)
3-10	0 / 78	0.02 (1)
10- 4	0 / 199	0.04 (1)
10- 5	-289 / 0	0.27 (1)
8- 5	-148 / 43	0.06 (1)
1-12	0 / 831	0.19 (1)
8- 6	0 / 942	0.21 (1)

DESIGN CRITERIA

SPECIFIED LOADS:

TOP CH.	LL	=	23.3	PSF
	DL	=	3.0	PSF
BOT CH.	LL	=	0.0	PSF
	DL	=	7.0	PSF
TOTAL LOAD		=	33.3	PSF

SPACING = 24.0 IN. C/C

LOADING IN FLAT SECTION BASED ON A SLOPE OF 6.00/12

THIS TRUSS IS DESIGNED FOR RESIDENTIAL OR SMALL BUILDING REQUIREMENTS OF PART 9, NBCC 2010

THIS DESIGN COMPLIES WITH:
- PART 9 OF OBC 2012 , BCBC 2012 , ABC 2014
- CSA 086-09
- TPIC 2011

(55 % OF 27.2 P.S.F. G.S.L. PLUS 8.4 P.S.F. RAIN LOAD) EQUALS 23.3 P.S.F. SPECIFIED ROOF LIVE LOAD

ALLOWABLE DEFL.(LL)= L/360 (0.73")
CALCULATED VERT. DEFL.(LL) = L/ 999 (0.02")
ALLOWABLE DEFL.(TL)= L/360 (0.73")
CALCULATED VERT. DEFL.(TL) = L/ 999 (0.05")

CSI: TC=0.27 (5-6:1) , BC=0.20 (8-10:1) , WB=0.27 (5-10:1) , SSI=0.16 (5-6:1)

DOL LUMBER=1.00 NAIL=1.00 LS BEND=1.10 COMP=1.10 SHEAR=1.10 TENS= 1.10

COMPANION LIVE LOAD FACTOR = 0.50

TRUSS PLATE MANUFACTURER IS NOT RESPONSIBLE FOR QUALITY CONTROL IN THE TRUSS MANUFACTURING PLANT .

NAIL VALUES

PLATE	GRIP(DRY) (PSI) MAX	MIN	SHEAR (PLI) MAX	MIN	SECTION (PLI) MAX	MIN
MT20	618	354	1667	822	2284	1656

PLATE PLACEMENT TOL. = 0.250 inches

PLATE ROTATION TOL. = 5.0 Deg.

JSI GRIP= 0.88 (6) (INPUT = 0.90)
JSI METAL= 0.31 (6) (INPUT = 1.00)

LICENSED PROFESSIONAL ENGINEER
R.M. TREVISAN
100136551
March 13th, 2017
PROVINCE OF ONTARIO

RECEIVED
TOWN OF MILTON
MAR 29, 2017
17-4990
BUILDING DIVISION

READ ALL NOTES ON THIS PAGE AND ON THE ENGINEERING NOTE PAGE ENP-1. THE NOTE PAGE IS AN INTEGRAL PART OF THIS DRAWING AS IT CONTAINS SPECIFICATIONS AND CRITERIA USED IN THE DESIGN OF THIS COMPONENT.

KOTT

JOB NAME	TRUSS NAME	QUANTITY	PLY	JOB DESC.	DRWG NO.
PT0317-054	T20	1	1	TRUSS DESC. LECCO RIDGE-BLOCK 328	ENG JOB: PT0317-054

Kott Lumber Uxbridge, Stouffville, ON, CGC

Version 8.100 S Feb 9 2017 MiTek Industries, Inc. Mon Mar 13 09:57:01 2017 Page 1

ID:pF8Cn?9h9uHzAm5tCmlVl5yJJCp-btFtP6zpi3v1W?462T?vVBNPE5XcUOIg3AneXIzbOnG

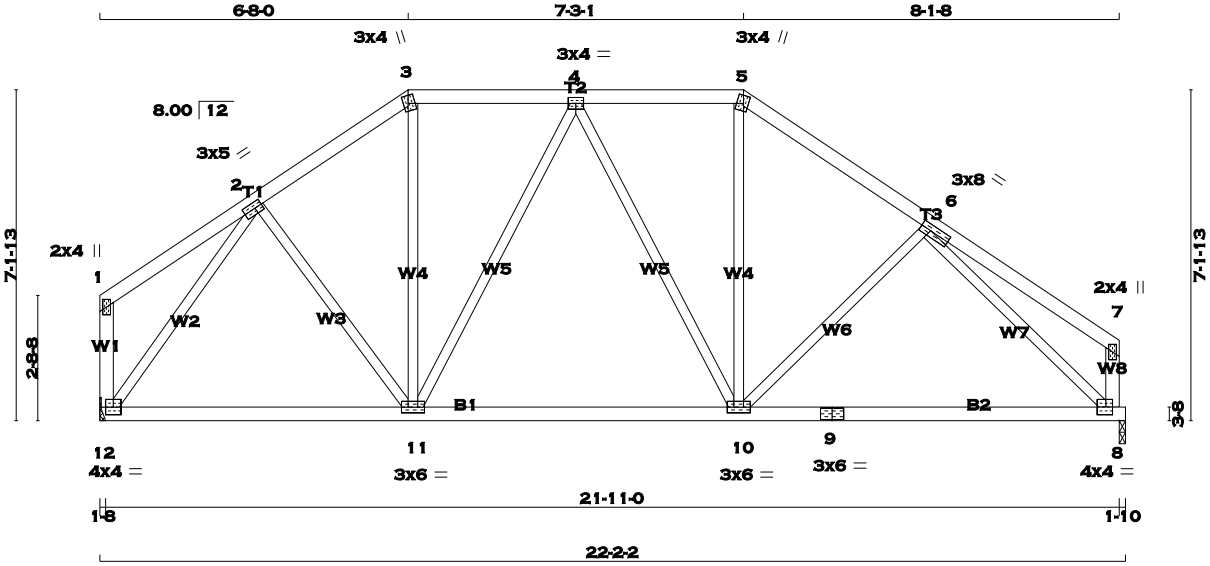

TOTAL WEIGHT = 99 lb

[M][F]

LUMBER

N. L. G. A. RULES

CHORDS	SIZE		LUMBER	DESCR.
1 - 3	2x4	DRY	No.2	SPF
3 - 5	2x4	DRY	No.2	SPF
5 - 7	2x4	DRY	No.2	SPF
12 - 1	2x4	DRY	No.2	SPF
8 - 7	2x4	DRY	No.2	SPF
12 - 9	2x4	DRY	No.2	SPF
9 - 8	2x4	DRY	No.2	SPF
ALL WEBS EXCEPT	2x3	DRY	No.2	SPF

DRY: SEASONED LUMBER.

PLATES (table is in inches)

JT	TYPE	PLATES	W	LEN	Y	X
1	TMV+p	MT20	2.0	4.0		
2	TMWW-t	MT20	3.0	5.0	1.50	2.00
3	TTW+m	MT20	3.0	4.0	2.00	1.25
4	TMWW-t	MT20	3.0	4.0		
5	TTW+m	MT20	3.0	4.0	2.00	1.25
6	TMWW-t	MT20	3.0	8.0	1.50	2.75
7	TMV+p	MT20	2.0	4.0		
8	BMVW1-t	MT20	4.0	4.0	2.00	1.75
9	BS-t	MT20	3.0	6.0		
10	BMWWW-t	MT20	3.0	6.0		
11	BMWWW-t	MT20	3.0	6.0		
12	BMVW1-t	MT20	4.0	4.0		

A SIZE FOR SIZE SUBSTITUTION OF MITEK MII20 WITH TEE-LOK TL20 PLATES IS ALLOWED.

DIMENSIONS, SUPPORTS AND LOADINGS SPECIFIED BY FABRICATOR TO BE VERIFIED BY BUILDING DESIGNER

BEARINGS

JT	FACTORED GROSS REACTION VERT	HORZ	MAXIMUM FACTORED GROSS REACTION DOWN	HORZ	UPLIFT	INPUT BRG	REQRD BRG
12	1045	0	1045	0	0	HANGER BY OTHERS MIN. SEAT SIZE: 1-8	
8	1045	0	1045	0	0	1-10	1-10

UNFACTORED REACTIONS

JT	1ST LCASE COMBINED	MAX./MIN. COMPONENT REACTIONS SNOW	LIVE	PERM.LIVE	WIND	DEAD	SOIL
12	734	513 / 0	0 / 0	0 / 0	0 / 0	220 / 0	0 / 0
8	734	513 / 0	0 / 0	0 / 0	0 / 0	220 / 0	0 / 0

BEARING MATERIAL TO BE SPF NO.2 OR BETTER AT JOINT(S) 8

BRACING

TOP CHORD TO BE SHEATHED OR MAX. PURLIN SPACING = 6.12 FT.
MAX. UNBRACED BOTTOM CHORD LENGTH = 10.00 FT. OR RIGID CEILING DIRECTLY APPLIED.

ALL PITCH BREAKS AND PERIMETER CORNER JOINTS MUST BE LATERALLY RESTRAINED.

LOADING

TOTAL LOAD CASES: (3)

CHORDS

MEMB. FR-TO	MAX. FACTORED FORCE (LBS)	VERT. LOAD LC1 (PLF) FROM	TO	MAX CSI (LC)	MAX. UNBRAC LENGTH
1- 2	0 / 16	-77.3	-77.3	0.13 (1)	10.00
2- 3	-884 / 0	-77.3	-77.3	0.11 (1)	6.25
3- 4	-725 / 0	-77.3	-77.3	0.13 (1)	6.25
4- 5	-801 / 0	-77.3	-77.3	0.13 (1)	6.25
5- 6	-979 / 0	-77.3	-77.3	0.16 (1)	6.12
6- 7	0 / 20	-77.3	-77.3	0.20 (1)	10.00
12- 1	-102 / 0	0.0	0.0	0.01 (1)	7.81
8- 7	-121 / 0	0.0	0.0	0.01 (1)	7.81
12-11	0 / 649	-17.5	-17.5	0.22 (3)	10.00
11-10	0 / 850	-17.5	-17.5	0.32 (3)	10.00
10- 9	0 / 852	-17.5	-17.5	0.32 (3)	10.00
9- 8	0 / 852	-17.5	-17.5	0.32 (3)	10.00

WEBS

MEMB. FR-TO	MAX. FACTORED FORCE (LBS)	MAX CSI (LC)
2-11	0 / 121	0.03 (1)
11- 3	0 / 273	0.06 (1)
11- 4	-274 / 0	0.33 (1)
4-10	-107 / 10	0.13 (1)
10- 5	0 / 301	0.07 (1)
10- 6	-77 / 32	0.05 (1)
12- 2	-1106 / 0	0.58 (1)
6- 8	-1214 / 0	0.67 (1)

DESIGN CRITERIA

SPECIFIED LOADS:

TOP	CH.	LL	=	23.3	PSF
		DL	=	3.0	PSF
BOT	CH.	LL	=	0.0	PSF
		DL	=	7.0	PSF
TOTAL	LOAD		=	33.3	PSF

SPACING = 24.0 IN. C/C

LOADING IN FLAT SECTION BASED ON A SLOPE OF 6.00/12

THIS TRUSS IS DESIGNED FOR RESIDENTIAL OR SMALL BUILDING REQUIREMENTS OF PART 9, NBCC 2010

THIS DESIGN COMPLIES WITH:
- PART 9 OF OBC 2012 , BCBC 2012 , ABC 2014
- CSA 086-09
- TPIC 2011

(55 % OF 27.2 P.S.F. G.S.L. PLUS 8.4 P.S.F. RAIN LOAD) EQUALS 23.3 P.S.F. SPECIFIED ROOF LIVE LOAD

ALLOWABLE DEFL.(LL)= L/360 (0.73")
CALCULATED VERT. DEFL.(LL) = L/ 999 (0.03")
ALLOWABLE DEFL.(TL)= L/360 (0.73")
CALCULATED VERT. DEFL.(TL) = L/ 999 (0.14")

CSI: TC=0.20 (6-7:1) , BC=0.32 (10-11:3) , WB=0.67 (6-8:1) , SSI=0.13 (3-4:1)

DOL LUMBER=1.00 NAIL=1.00 LS BEND=1.10 COMP=1.10 SHEAR=1.10 TENS= 1.10

COMPANION LIVE LOAD FACTOR = 0.50

TRUSS PLATE MANUFACTURER IS NOT RESPONSIBLE FOR QUALITY CONTROL IN THE TRUSS MANUFACTURING PLANT .

NAIL VALUES

PLATE	GRIP(DRY) (PSI) MAX	MIN	SHEAR (PLI) MAX	MIN	SECTION (PLI) MAX	MIN
MT20	618	354	1667	822	2284	1656

PLATE PLACEMENT TOL. = 0.250 inches

PLATE ROTATION TOL. = 5.0 Deg.

JSI GRIP= 0.89 (6) (INPUT = 0.90)
JSI METAL= 0.32 (8) (INPUT = 1.00)

LICENSED PROFESSIONAL ENGINEER
R.M. TREVISAN
100136551
March 13th, 2017
PROVINCE OF ONTARIO

RECEIVED
TOWN OF MILTON
MAR 29, 2017
17-4990
BUILDING DIVISION

READ ALL NOTES ON THIS PAGE AND ON THE ENGINEERING NOTE PAGE ENP-1. THE NOTE PAGE IS AN INTEGRAL PART OF THIS DRAWING AS IT CONTAINS SPECIFICATIONS AND CRITERIA USED IN THE DESIGN OF THIS COMPONENT.

KOTT

JOB NAME	TRUSS NAME	QUANTITY	PLY	JOB DESC.	DRWG NO.
PT0317-054	T21	3	1	TRUSS DESC. LECCO RIDGE-BLOCK 328	

Kott Lumber Uxbridge, Stouffville, ON, CGC

Version 8.100 S Feb 9 2017 MiTek Industries, Inc. Mon Mar 13 09:57:01 2017 Page 1
ID:pF8Cn?9h9uHzAm5tCmlVl5yJJCp-btFtP6zpi3v1W?462T?vVBNQj5bKUYmg3AneXIzbOnG

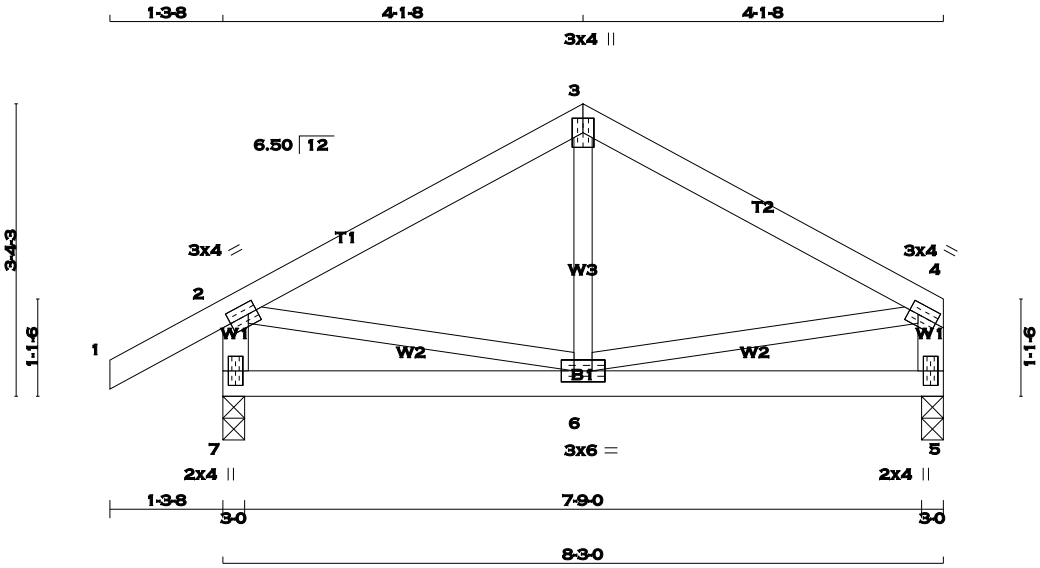

TOTAL WEIGHT = 3 X 32 = 96 lb
[M][F]

LUMBER
N. L. G. A. RULES

CHORDS	SIZE		LUMBER	DESCR.
1 - 3	2x4	DRY	No.2	SPF
3 - 4	2x4	DRY	No.2	SPF
7 - 2	2x4	DRY	No.2	SPF
5 - 4	2x4	DRY	No.2	SPF
7 - 5	2x4	DRY	No.2	SPF
ALL WEBS EXCEPT	2x3	DRY	No.2	SPF

DRY: SEASONED LUMBER.

PLATES (table is in inches)

JT	TYPE	PLATES	W	LEN	Y	X
2	TMVW-t	MT20	3.0	4.0	1.50	1.25
3	TTW+p	MT20	3.0	4.0		
4	TMVW-t	MT20	3.0	4.0	1.50	1.25
5	BMV1+p	MT20	2.0	4.0		
6	BMWWW-t	MT20	3.0	6.0		
7	BMV1+p	MT20	2.0	4.0		

A SIZE FOR SIZE SUBSTITUTION OF MITEK MII20 WITH TEE-LOK TL20 PLATES IS ALLOWED.

DIMENSIONS, SUPPORTS AND LOADINGS SPECIFIED BY FABRICATOR TO BE VERIFIED BY BUILDING DESIGNER

BEARINGS

JT	FACTORED GROSS REACTION VERT	HORZ	MAXIMUM FACTORED GROSS REACTION DOWN	HORZ	UPLIFT	INPUT BRG IN-SX	REQRD BRG IN-SX
7	497	0	497	0	0	3-0	3-0
5	391	0	391	0	0	3-0	3-0

UNFACTORED REACTIONS

JT	1ST LCASE COMBINED	MAX./MIN. COMPONENT REACTIONS SNOW	LIVE	PERM.LIVE	WIND	DEAD	SOIL
7	346	255 / 0	0 / 0	0 / 0	0 / 0	91 / 0	0 / 0
5	275	192 / 0	0 / 0	0 / 0	0 / 0	83 / 0	0 / 0

BEARING MATERIAL TO BE SPF NO.2 OR BETTER AT JOINT(S) 7, 5

BRACING
TOP CHORD TO BE SHEATHED OR MAX. PURLIN SPACING = 6.25 FT.
MAX. UNBRACED BOTTOM CHORD LENGTH = 10.00 FT. OR RIGID CEILING DIRECTLY APPLIED.

ALL PITCH BREAKS AND PERIMETER CORNER JOINTS MUST BE LATERALLY RESTRAINED.

LOADING
TOTAL LOAD CASES: (3)

CHORDS

MEMB. FR-TO	MAX. FACTORED FORCE (LBS)	FACTORED VERT. LOAD (PLF) FROM	TO	LC1 MAX CSI (LC)	MAX. UNBRAC LENGTH
1- 2	0 / 25	-77.3	-77.3	0.10 (1)	10.00
2- 3	-314 / 0	-77.3	-77.3	0.17 (1)	6.25
3- 4	-314 / 0	-77.3	-77.3	0.17 (1)	6.25
7- 2	-468 / 0	0.0	0.0	0.05 (1)	7.81
5- 4	-363 / 0	0.0	0.0	0.04 (1)	7.81
7- 6	0 / 0	-17.5	-17.5	0.08 (3)	10.00
6- 5	0 / 0	-17.5	-17.5	0.08 (3)	10.00

WEBS

MEMB. FR-TO	MAX. FACTORED FORCE (LBS)	MAX CSI (LC)
6- 3	-20 / 64	0.02 (3)
2- 6	0 / 281	0.06 (1)
6- 4	0 / 281	0.06 (1)

DESIGN CRITERIA

SPECIFIED LOADS:

TOP	CH.	LL	=	23.3	PSF
		DL	=	3.0	PSF
BOT	CH.	LL	=	0.0	PSF
		DL	=	7.0	PSF
TOTAL	LOAD		=	33.3	PSF

SPACING = 24.0 IN. C/C

THIS TRUSS IS DESIGNED FOR RESIDENTIAL OR SMALL BUILDING REQUIREMENTS OF PART 9, NBCC 2010

THIS DESIGN COMPLIES WITH:
- PART 9 OF OBC 2012 , BCBC 2012 , ABC 2014
- CSA 086-09
- TPIC 2011

(55 % OF 27.2 P.S.F. G.S.L. PLUS 8.4 P.S.F. RAIN LOAD) EQUALS 23.3 P.S.F. SPECIFIED ROOF LIVE LOAD

ALLOWABLE DEFL.(LL)= L/360 (0.28")
CALCULATED VERT. DEFL.(LL) = L/ 999 (0.00")
ALLOWABLE DEFL.(TL)= L/360 (0.28")
CALCULATED VERT. DEFL.(TL) = L/ 999 (0.01")

CSI: TC=0.17 (3-4:1) , BC=0.08 (6-7:3) , WB=0.06 (2-6:1) , SSI=0.11 (3-4:1)

DOL LUMBER=1.00 NAIL=1.00 LS BEND=1.10 COMP=1.10 SHEAR=1.10 TENS= 1.10

COMPANION LIVE LOAD FACTOR = 0.50

TRUSS PLATE MANUFACTURER IS NOT RESPONSIBLE FOR QUALITY CONTROL IN THE TRUSS MANUFACTURING PLANT .

NAIL VALUES

PLATE	GRIP(DRY) (PSI) MAX	MIN	SHEAR (PLI) MAX	MIN	SECTION (PLI) MAX	MIN
MT20	618	354	1667	822	2284	1656

PLATE PLACEMENT TOL. = 0.250 inches

PLATE ROTATION TOL. = 5.0 Deg.

JSI GRIP= 0.68 (2) (INPUT = 0.90)
JSI METAL= 0.16 (2) (INPUT = 1.00)

LICENSED PROFESSIONAL ENGINEER
P.M. TREVISAN
100136551
March 13th, 2017
PROVINCE OF ONTARIO

RECEIVED
TOWN OF MILTON
MAR 29, 2017
17-4990
BUILDING DIVISION

READ ALL NOTES ON THIS PAGE AND ON THE ENGINEERING NOTE PAGE ENP-1. THE NOTE PAGE IS AN INTEGRAL PART OF THIS DRAWING AS IT CONTAINS SPECIFICATIONS AND CRITERIA USED IN THE DESIGN OF THIS COMPONENT.

KOTT

JOB NAME	TRUSS NAME	QUANTITY	PLY	JOB DESC.	DRWG NO.
PT0317-054	T22	1	1	TRUSS DESC. LECCO RIDGE-BLOCK 328	ENG JOB: PT0317-054

Kott Lumber Uxbridge, Stouffville, ON, CGC

Version 8.100 S Feb 9 2017 MiTek Industries, Inc. Mon Mar 13 09:57:01 2017 Page 1

ID:pF8Cn?9h9uHzAm5tCmlVl5yJJCp-btFtP6zpi3v1W?462T?vVBNRs5c_UXig3AneXIzbOnG

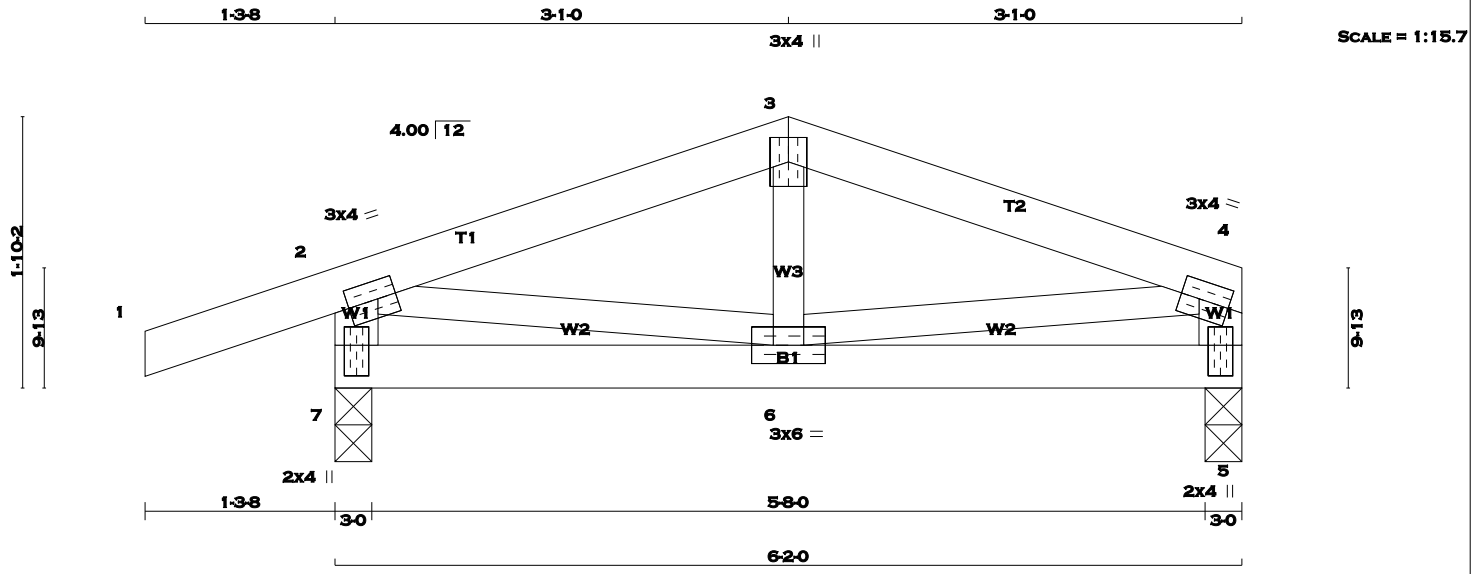

TOTAL WEIGHT = 22 lb

[M][F]

LUMBER

N. L. G. A. RULES

CHORDS	SIZE		LUMBER	DESCR.
1 - 3	2x4	DRY	No.2	SPF
3 - 4	2x4	DRY	No.2	SPF
7 - 2	2x4	DRY	No.2	SPF
5 - 4	2x4	DRY	No.2	SPF
7 - 5	2x4	DRY	No.2	SPF
ALL WEBS EXCEPT	2x3	DRY	No.2	SPF

DRY: SEASONED LUMBER.

PLATES (table is in inches)

JT	TYPE	PLATES	W	LEN	Y	X
2	TMVW-t	MT20	3.0	4.0	1.50	1.50
3	TTW+p	MT20	3.0	4.0		
4	TMVW-t	MT20	3.0	4.0	1.50	1.50
5	BMV1+p	MT20	2.0	4.0	2.50	1.00
6	BMWWW-t	MT20	3.0	6.0		
7	BMV1+p	MT20	2.0	4.0	2.50	1.00

A SIZE FOR SIZE SUBSTITUTION OF MITEK MII20 WITH TEE-LOK TL20 PLATES IS ALLOWED.

DIMENSIONS, SUPPORTS AND LOADINGS SPECIFIED BY FABRICATOR TO BE VERIFIED BY BUILDING DESIGNER

BEARINGS

JT	FACTORED GROSS REACTION VERT	HORZ	MAXIMUM FACTORED GROSS REACTION DOWN	HORZ	UPLIFT	INPUT BRG IN-SX	REQRD BRG IN-SX
7	396	0	396	0	0	3-0	3-0
5	292	0	292	0	0	3-0	3-0

UNFACTORED REACTIONS

JT	1ST LCASE COMBINED	MAX./MIN. COMPONENT REACTIONS SNOW	LIVE	PERM.LIVE	WIND	DEAD	SOIL
7	276	206 / 0	0 / 0	0 / 0	0 / 0	70 / 0	0 / 0
5	205	144 / 0	0 / 0	0 / 0	0 / 0	62 / 0	0 / 0

BEARING MATERIAL TO BE SPF NO.2 OR BETTER AT JOINT(S) 7, 5

BRACING

TOP CHORD TO BE SHEATHED OR MAX. PURLIN SPACING = 6.25 FT.
MAX. UNBRACED BOTTOM CHORD LENGTH = 10.00 FT. OR RIGID CEILING DIRECTLY APPLIED.

ALL PITCH BREAKS AND PERIMETER CORNER JOINTS MUST BE LATERALLY RESTRAINED.

LOADING

TOTAL LOAD CASES: (3)

CHORDS

MEMB. FR-TO	MAX. FACTORED FORCE (LBS)	FACTORED VERT. LOAD (PLF) FROM	TO	LC1 MAX CSI (LC)	MAX. UNBRAC LENGTH
1- 2	0 / 16	-77.3	-77.3	0.10 (1)	10.00
2- 3	-314 / 0	-77.3	-77.3	0.09 (1)	6.25
3- 4	-314 / 0	-77.3	-77.3	0.09 (1)	6.25
7- 2	-372 / 0	0.0	0.0	0.04 (1)	7.81
5- 4	-269 / 0	0.0	0.0	0.03 (1)	7.81
7- 6	0 / 0	-17.5	-17.5	0.04 (3)	10.00
6- 5	0 / 0	-17.5	-17.5	0.04 (3)	10.00

WEBS

MEMB. FR-TO	MAX. FACTORED FORCE (LBS)	MAX CSI (LC)
6- 3	-40 / 40	0.01 (3)
2- 6	0 / 302	0.07 (1)
6- 4	0 / 302	0.07 (1)

DESIGN CRITERIA

SPECIFIED LOADS:

TOP	CH.	LL	=	23.3	PSF
		DL	=	3.0	PSF
BOT	CH.	LL	=	0.0	PSF
		DL	=	7.0	PSF
TOTAL	LOAD		=	33.3	PSF

SPACING = 24.0 IN. C/C

THIS TRUSS IS DESIGNED FOR RESIDENTIAL OR SMALL BUILDING REQUIREMENTS OF PART 9, NBCC 2010

THIS DESIGN COMPLIES WITH:
- PART 9 OF OBC 2012 , BCBC 2012 , ABC 2014
- CSA 086-09
- TPIC 2011

(55 % OF 27.2 P.S.F. G.S.L. PLUS 8.4 P.S.F. RAIN LOAD) EQUALS 23.3 P.S.F. SPECIFIED ROOF LIVE LOAD

ALLOWABLE DEFL.(LL)= L/360 (0.21")
CALCULATED VERT. DEFL.(LL) = L/ 999 (0.00")
ALLOWABLE DEFL.(TL)= L/360 (0.21")
CALCULATED VERT. DEFL.(TL) = L/ 999 (0.01")

CSI: TC=0.10 (1-2:1) , BC=0.04 (6-7:3) , WB=0.07 (4-6:1) , SSI=0.09 (2-3:1)

DOL LUMBER=1.00 NAIL=1.00 LS BEND=1.10 COMP=1.10 SHEAR=1.10 TENS= 1.10

COMPANION LIVE LOAD FACTOR = 0.50

TRUSS PLATE MANUFACTURER IS NOT RESPONSIBLE FOR QUALITY CONTROL IN THE TRUSS MANUFACTURING PLANT .

NAIL VALUES

PLATE	GRIP(DRY) (PSI) MAX	MIN	SHEAR (PLI) MAX	MIN	SECTION (PLI) MAX	MIN
MT20	618	354	1667	822	2284	1656

PLATE PLACEMENT TOL. = 0.250 inches

PLATE ROTATION TOL. = 0.5 Deg.

JSI GRIP= 0.60 (2) (INPUT = 0.90)
JSI METAL= 0.14 (2) (INPUT = 1.00)

LICENSED PROFESSIONAL ENGINEER
P.M. TREVISAN
100136551
March 13th, 2017
PROVINCE OF ONTARIO

RECEIVED
TOWN OF MILTON
MAR 29, 2017
17-4990
BUILDING DIVISION

READ ALL NOTES ON THIS PAGE AND ON THE ENGINEERING NOTE PAGE ENP-1. THE NOTE PAGE IS AN INTEGRAL PART OF THIS DRAWING AS IT CONTAINS SPECIFICATIONS AND CRITERIA USED IN THE DESIGN OF THIS COMPONENT.

KOTT

JOB NAME	TRUSS NAME	QUANTITY	PLY	JOB DESC.	DRWG NO.
PT0317-054	T23	1	1	TRUSS DESC. LECCO RIDGE-BLOCK 328	ENG JOB: PT0317-054

Kott Lumber Uxbridge, Stouffville, ON, CGC

Version 8.100 S Feb 9 2017 MiTek Industries, Inc. Mon Mar 13 09:57:01 2017 Page 1

ID:pF8Cn?9h9uHzAm5tCmlVl5yJJCp-btFtP6zpi3v1W?462T?vVBNQn5XpUX5g3AneXIzbOnG

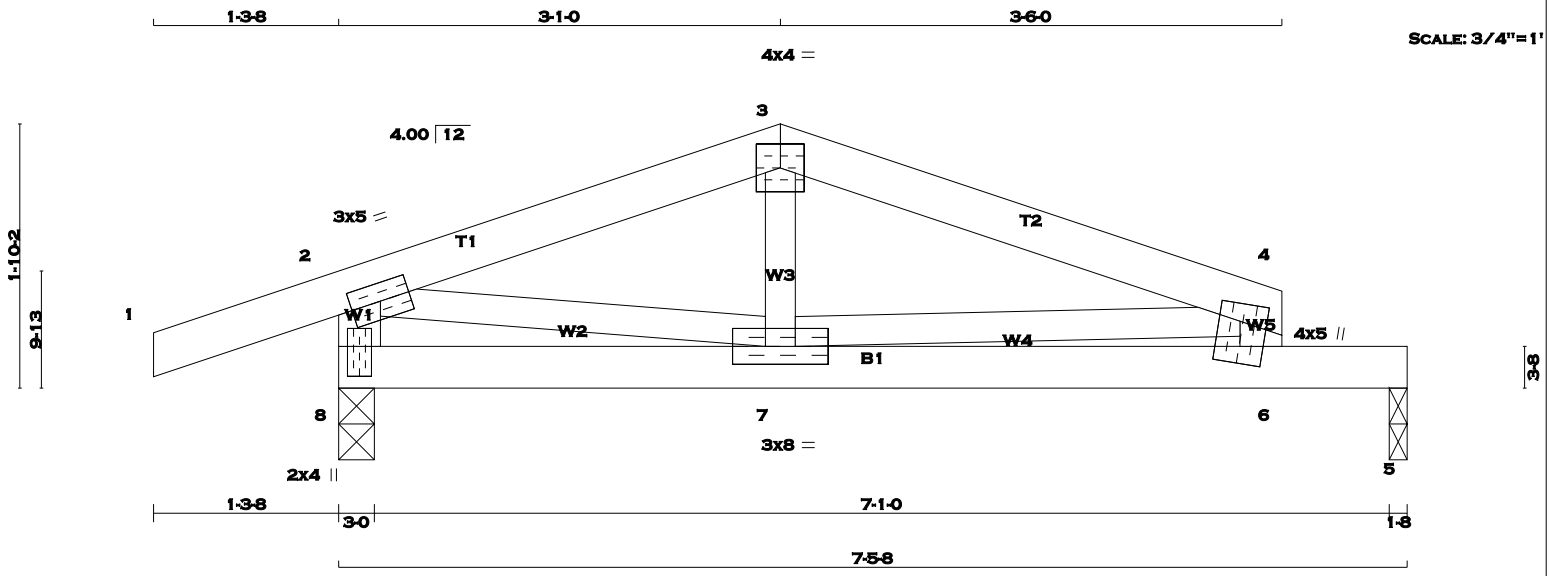

TOTAL WEIGHT = 24 lb [M]

LUMBER

N. L. G. A. RULES

CHORDS	SIZE		LUMBER	DESCR.
1 - 3	2x4	DRY	No.2	SPF
3 - 4	2x4	DRY	No.2	SPF
8 - 2	2x4	DRY	No.2	SPF
6 - 4	2x4	DRY	No.2	SPF
8 - 5	2x4	DRY	No.2	SPF
ALL WEBS EXCEPT	2x3	DRY	No.2	SPF

DRY: SEASONED LUMBER.

PLATES (table is in inches)

JT	TYPE	PLATES	W	LEN	Y	X
2	TMVW-t	MT20	3.0	5.0		
3	TTW-p	MT20	4.0	4.0		
4						
6						
6	TMBMVW*+m	MT20	4.0	5.0	1.50	1.75
7	BMWWW-t	MT20	3.0	8.0		
8	BMV1+p	MT20	2.0	4.0	2.50	1.00

A SIZE FOR SIZE SUBSTITUTION OF MITEK MII20 WITH TEE-LOK TL20 PLATES IS ALLOWED.

DIMENSIONS, SUPPORTS AND LOADINGS SPECIFIED BY FABRICATOR TO BE VERIFIED BY BUILDING DESIGNER

BEARINGS

JT	FACTORED GROSS REACTION VERT	HORZ	MAXIMUM FACTORED GROSS REACTION DOWN	HORZ	UPLIFT	INPUT BRG IN-SX	REQRD BRG IN-SX
8	457	0	457	0	0	3-0	3-0
5	354	0	354	0	0	1-8	1-8

UNFACTORED REACTIONS

JT	1ST LCASE COMBINED	MAX./MIN. COMPONENT REACTIONS SNOW	LIVE	PERM.LIVE	WIND	DEAD	SOIL
8	319	236 / 0	0 / 0	0 / 0	0 / 0	83 / 0	0 / 0
5	248	174 / 0	0 / 0	0 / 0	0 / 0	75 / 0	0 / 0

BEARING MATERIAL TO BE SPF NO.2 OR BETTER AT JOINT(S) 8, 5

BRACING

TOP CHORD TO BE SHEATHED OR MAX. PURLIN SPACING = 6.25 FT.
MAX. UNBRACED BOTTOM CHORD LENGTH = 10.00 FT. OR RIGID CEILING DIRECTLY APPLIED.

ALL PITCH BREAKS AND PERIMETER CORNER JOINTS MUST BE LATERALLY RESTRAINED.

LOADING

TOTAL LOAD CASES: (3)

CHORDS

MEMB. FR-TO	MAX. FACTORED FORCE (LBS)	FACTORED VERT. LOAD (PLF) FROM	TO	LC1 MAX CSI (LC)	MAX. UNBRAC LENGTH
1- 2	0 / 16	-77.3	-77.3	0.10 (1)	10.00
2- 3	-491 / 0	-77.3	-77.3	0.13 (1)	6.25
3- 4	-491 / 0	-77.3	-77.3	0.17 (1)	6.25
8- 2	-456 / 0	0.0	0.0	0.05 (1)	7.81
6- 4	-341 / 0	0.0	0.0	0.03 (1)	7.81
8- 7	0 / 0	-17.5	-17.5	0.11 (1)	10.00
7- 6	0 / 0	-17.5	-17.5	0.37 (1)	10.00
6- 5	0 / 0	-94.8	-94.8	0.37 (1)	10.00

WEBS

MEMB. FR-TO	MAX. FACTORED FORCE (LBS)	MAX CSI (LC)
7- 3	0 / 72	0.03 (3)
2- 7	0 / 472	0.11 (1)
7- 4	0 / 468	0.11 (1)

DESIGN CRITERIA

SPECIFIED LOADS:

TOP CH.	LL	=	23.3	PSF
	DL	=	3.0	PSF
BOT CH.	LL	=	0.0	PSF
	DL	=	7.0	PSF
TOTAL LOAD		=	33.3	PSF

SPACING = 24.0 IN. C/C

THIS TRUSS IS DESIGNED FOR RESIDENTIAL OR SMALL BUILDING REQUIREMENTS OF PART 9, NBCC 2010

THIS DESIGN COMPLIES WITH:
- PART 9 OF OBC 2012 , BCBC 2012 , ABC 2014
- CSA 086-09
- TPIC 2011

(55 % OF 27.2 P.S.F. G.S.L. PLUS 8.4 P.S.F. RAIN LOAD) EQUALS 23.3 P.S.F. SPECIFIED ROOF LIVE LOAD

ALLOWABLE DEFL.(LL)= L/360 (0.25")
CALCULATED VERT. DEFL.(LL) = L/ 999 (0.05")
ALLOWABLE DEFL.(TL)= L/360 (0.25")
CALCULATED VERT. DEFL.(TL) = L/ 953 (0.09")

CSI: TC=0.17 (3-4:1) , BC=0.37 (5-6:1) , WB=0.11 (2-7:1) , SSI=0.28 (5-6:1)

DOL LUMBER=1.00 NAIL=1.00 LS BEND=1.10 COMP=1.10 SHEAR=1.10 TENS= 1.10

COMPANION LIVE LOAD FACTOR = 0.50

TRUSS PLATE MANUFACTURER IS NOT RESPONSIBLE FOR QUALITY CONTROL IN THE TRUSS MANUFACTURING PLANT .

NAIL VALUES

PLATE	GRIP(DRY) (PSI) MAX	MIN	SHEAR (PLI) MAX	MIN	SECTION (PLI) MAX	MIN
MT20	618	354	1667	822	2284	1656

PLATE PLACEMENT TOL. = 0.250 inches

PLATE ROTATION TOL. = 5.0 Deg.

JSI GRIP= 0.85 (6) (INPUT = 0.90)
JSI METAL= 0.19 (6) (INPUT = 1.00)

LICENSED PROFESSIONAL ENGINEER
P.M. TREVISAN
100136551
March 13th, 2017
PROVINCE OF ONTARIO

RECEIVED
TOWN OF MILTON
MAR 29, 2017
17-4990
BUILDING DIVISION

READ ALL NOTES ON THIS PAGE AND ON THE ENGINEERING NOTE PAGE ENP-1. THE NOTE PAGE IS AN INTEGRAL PART OF THIS DRAWING AS IT CONTAINS SPECIFICATIONS AND CRITERIA USED IN THE DESIGN OF THIS COMPONENT.

KOTT

JOB NAME	TRUSS NAME	QUANTITY	PLY	JOB DESC.	DRWG NO.
PT0317-054	T24	1	1	TRUSS DESC. LECCO RIDGE-BLOCK 328	ENG JOB: PT0317-054

Kott Lumber Uxbridge, Stouffville, ON, CGC

Version 8.100 S Feb 9 2017 MiTek Industries, Inc. Mon Mar 13 09:57:02 2017 Page 1

ID:pF8Cn?9h9uHzAm5tCmlVl5yJJCp-34pGdS_RTM1u79fJcAX82PvccVrmDzyqIqXC4lzbOnF

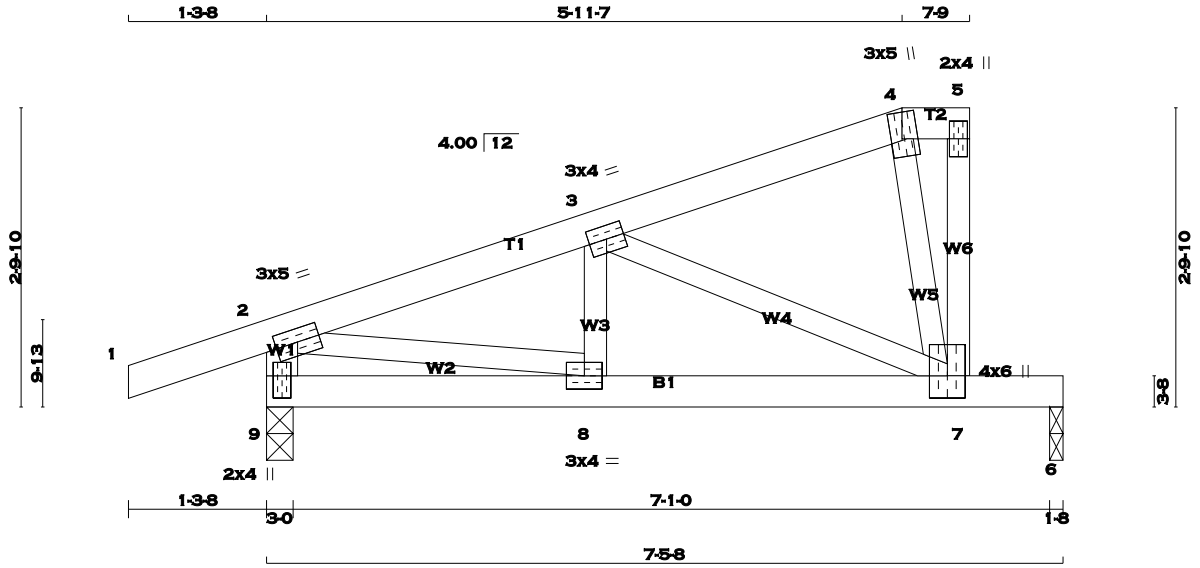

TOTAL WEIGHT = 28 lb [M]

LUMBER

N. L. G. A. RULES

CHORDS	SIZE		LUMBER	DESCR.
1 - 4	2x4	DRY	No.2	SPF
4 - 5	2x4	DRY	No.2	SPF
7 - 5	2x3	DRY	No.2	SPF
9 - 2	2x4	DRY	No.2	SPF
9 - 6	2x4	DRY	No.2	SPF
ALL WEBS EXCEPT	2x3	DRY	No.2	SPF

DRY: SEASONED LUMBER.

PLATES (table is in inches)

JT	TYPE	PLATES	W	LEN	Y	X
2	TMVW-t	MT20	3.0	5.0		
3	TMWW-t	MT20	3.0	4.0		
4	TTW+m	MT20	3.0	5.0	1.25	1.50
5	TMV+p	MT20	2.0	4.0		
7	BMVWW+p	MT20	4.0	6.0	2.50	2.00
8	BMWW-t	MT20	3.0	4.0		
9	BMV1+p	MT20	2.0	4.0	2.50	1.00

A SIZE FOR SIZE SUBSTITUTION OF MITEK MII20 WITH TEE-LOK TL20 PLATES IS ALLOWED.

DIMENSIONS, SUPPORTS AND LOADINGS SPECIFIED BY FABRICATOR TO BE VERIFIED BY BUILDING DESIGNER

BEARINGS

JT	FACTORED GROSS REACTION VERT	HORZ	MAXIMUM FACTORED GROSS REACTION DOWN	HORZ	UPLIFT	INPUT BRG IN-SX	REQRD BRG IN-SX
9	457	0	457	0	0	3-0	3-0
6	354	0	354	0	0	1-8	1-8

UNFACTORED REACTIONS

JT	1ST LCASE COMBINED	MAX./MIN. COMPONENT REACTIONS SNOW	LIVE	PERM.LIVE	WIND	DEAD	SOIL
9	319	236 / 0	0 / 0	0 / 0	0 / 0	83 / 0	0 / 0
6	248	174 / 0	0 / 0	0 / 0	0 / 0	75 / 0	0 / 0

BEARING MATERIAL TO BE SPF NO.2 OR BETTER AT JOINT(S) 9, 6

BRACING

TOP CHORD TO BE SHEATHED OR MAX. PURLIN SPACING = 6.25 FT.
MAX. UNBRACED BOTTOM CHORD LENGTH = 10.00 FT. OR RIGID CEILING DIRECTLY APPLIED.

ALL PITCH BREAKS AND PERIMETER CORNER JOINTS MUST BE LATERALLY RESTRAINED.

LOADING

TOTAL LOAD CASES: (3)

CHORDS

MEMB. FR-TO	MAX. FACTORED FORCE (LBS)	FACTORED VERT. LOAD (PLF) FROM	TO	LC1 MAX CSI (LC)	MAX. UNBRAC LENGTH
1- 2	0 / 16	-77.3	-77.3	0.10 (1)	10.00
2- 3	-528 / 0	-77.3	-77.3	0.09 (1)	6.25
3- 4	-35 / 0	-77.3	-77.3	0.09 (1)	6.25
4- 5	0 / 0	-77.3	-77.3	0.01 (1)	10.00
7- 5	-24 / 0	0.0	0.0	0.00 (1)	7.81
9- 2	-455 / 0	0.0	0.0	0.05 (1)	7.81
9- 8	0 / 0	-17.5	-17.5	0.11 (1)	10.00
8- 7	0 / 507	-17.5	-17.5	0.45 (1)	10.00
7- 6	0 / 0	-94.8	-94.8	0.37 (1)	10.00

WEBS

MEMB. FR-TO	MAX. FACTORED FORCE (LBS)	MAX CSI (LC)
8- 3	0 / 97	0.03 (3)
3- 7	-526 / 0	0.13 (1)
4- 7	-107 / 0	0.02 (1)
2- 8	0 / 514	0.12 (1)

DESIGN CRITERIA

SPECIFIED LOADS:

TOP	CH.	LL	=	23.3	PSF
		DL	=	3.0	PSF
BOT	CH.	LL	=	0.0	PSF
		DL	=	7.0	PSF
TOTAL	LOAD		=	33.3	PSF

SPACING = 24.0 IN. C/C

LOADING IN FLAT SECTION BASED ON A SLOPE OF 6.00/12

THIS TRUSS IS DESIGNED FOR RESIDENTIAL OR SMALL BUILDING REQUIREMENTS OF PART 9, NBCC 2010

THIS DESIGN COMPLIES WITH:
- PART 9 OF OBC 2012 , BCBC 2012 , ABC 2014
- CSA 086-09
- TPIC 2011

(55 % OF 27.2 P.S.F. G.S.L. PLUS 8.4 P.S.F. RAIN LOAD) EQUALS 23.3 P.S.F. SPECIFIED ROOF LIVE LOAD

ALLOWABLE DEFL.(LL)= L/360 (0.25")
CALCULATED VERT. DEFL.(LL) = L/ 999 (0.05")
ALLOWABLE DEFL.(TL)= L/360 (0.25")
CALCULATED VERT. DEFL.(TL) = L/ 940 (0.10")

CSI: TC=0.10 (1-2:1) , BC=0.45 (7-8:1) , WB=0.13 (3-7:1) , SSI=0.28 (6-7:1)

DOL LUMBER=1.00 NAIL=1.00 LS BEND=1.10 COMP=1.10 SHEAR=1.10 TENS= 1.10

COMPANION LIVE LOAD FACTOR = 0.50

TRUSS PLATE MANUFACTURER IS NOT RESPONSIBLE FOR QUALITY CONTROL IN THE TRUSS MANUFACTURING PLANT .

NAIL VALUES

PLATE	GRIP(DRY) (PSI) MAX	MIN	SHEAR (PLI) MAX	MIN	SECTION (PLI) MAX	MIN
MT20	618	354	1667	822	2284	1656

PLATE PLACEMENT TOL. = 0.250 inches

PLATE ROTATION TOL. = 5.0 Deg.

JSI GRIP= 0.82 (8) (INPUT = 0.90)
JSI METAL= 0.19 (8) (INPUT = 1.00)

LICENSED PROFESSIONAL ENGINEER
P.M. TREVISAN
100136551
March 13th, 2017
PROVINCE OF ONTARIO

RECEIVED
TOWN OF MILTON
MAR 29, 2017
17-4990
BUILDING DIVISION

READ ALL NOTES ON THIS PAGE AND ON THE ENGINEERING NOTE PAGE ENP-1. THE NOTE PAGE IS AN INTEGRAL PART OF THIS DRAWING AS IT CONTAINS SPECIFICATIONS AND CRITERIA USED IN THE DESIGN OF THIS COMPONENT.

KOTT

JOB NAME	TRUSS NAME	QUANTITY	PLY	JOB DESC.	DRWG NO.
PT0317-054	T25	2	1	TRUSS DESC. LECCO RIDGE-BLOCK 328	ENG JOB: PT0317-054

Kott Lumber Uxbridge, Stouffville, ON, CGC

Version 8.100 S Feb 9 2017 MiTek Industries, Inc. Mon Mar 13 09:57:02 2017 Page 1

ID:pF8Cn?9h9uHzAm5tCmlVl5yJJCp-34pGdS_RTM1u79fJcAX82PvccVsMD_?qIqXC4lzbOnF

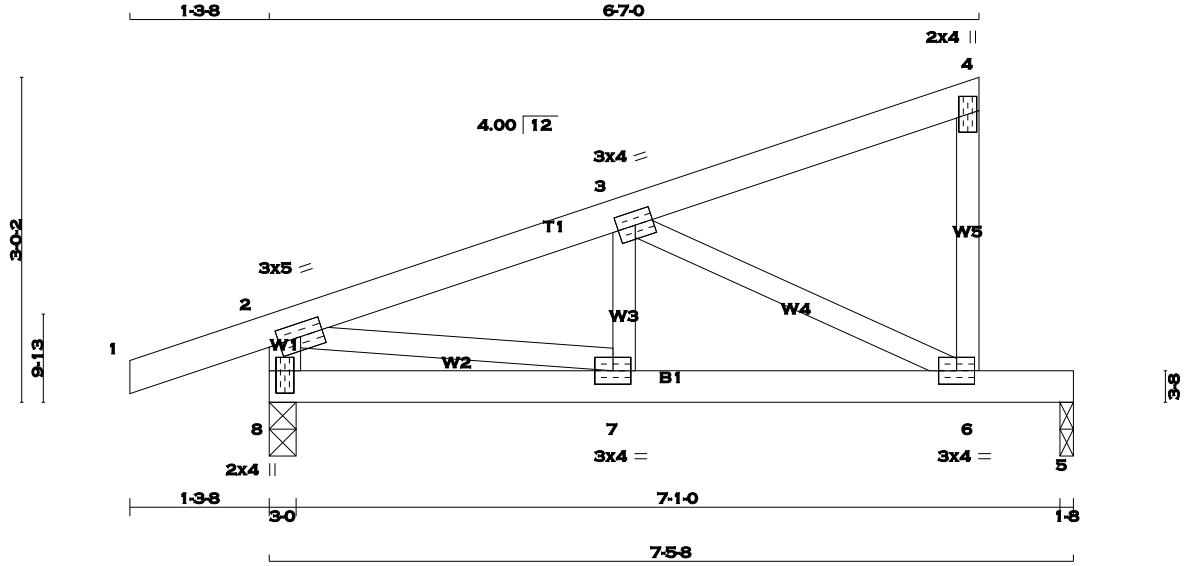

TOTAL WEIGHT = 2 X 27 = 53 lb

[M][F]

LUMBER

N. L. G. A. RULES

CHORDS	SIZE		LUMBER	DESCR.
1 - 4	2x4	DRY	No.2	SPF
6 - 4	2x3	DRY	No.2	SPF
8 - 2	2x4	DRY	No.2	SPF
8 - 5	2x4	DRY	No.2	SPF
ALL WEBS EXCEPT	2x3	DRY	No.2	SPF

DRY: SEASONED LUMBER.

PLATES (table is in inches)

JT	TYPE	PLATES	W	LEN	Y	X
2	TMVW-t	MT20	3.0	5.0		
3	TMWW-t	MT20	3.0	4.0		
4	TMV+p	MT20	2.0	4.0		
6	BMVW-t	MT20	3.0	4.0		
7	BMWW-t	MT20	3.0	4.0		
8	BMV1+p	MT20	2.0	4.0	2.50	1.00

A SIZE FOR SIZE SUBSTITUTION OF MITEK MII20 WITH TEE-LOK TL20 PLATES IS ALLOWED.

DIMENSIONS, SUPPORTS AND LOADINGS SPECIFIED BY FABRICATOR TO BE VERIFIED BY BUILDING DESIGNER

BEARINGS

JT	FACTORED GROSS REACTION VERT	HORZ	MAXIMUM FACTORED GROSS REACTION DOWN	HORZ	UPLIFT	INPUT BRG IN-SX	REQRD BRG IN-SX
8	453	0	453	0	0	3-0	3-0
5	290	0	290	0	0	1-8	1-8

UNFACTORED REACTIONS

JT	1ST LCASE COMBINED	MAX./MIN. COMPONENT REACTIONS SNOW	LIVE	PERM.LIVE	WIND	DEAD	SOIL
8	316	234 / 0	0 / 0	0 / 0	0 / 0	82 / 0	0 / 0
5	205	135 / 0	0 / 0	0 / 0	0 / 0	70 / 0	0 / 0

BEARING MATERIAL TO BE SPF NO.2 OR BETTER AT JOINT(S) 8, 5

BRACING

TOP CHORD TO BE SHEATHED OR MAX. PURLIN SPACING = 6.25 FT.
MAX. UNBRACED BOTTOM CHORD LENGTH = 10.00 FT. OR RIGID CEILING DIRECTLY APPLIED.

ALL PITCH BREAKS AND PERIMETER CORNER JOINTS MUST BE LATERALLY RESTRAINED.

LOADING

TOTAL LOAD CASES: (3)

CHORDS

MEMB. FR-TO	MAX. FACTORED FORCE (LBS)	FACTORED VERT. LOAD (PLF) FROM	TO	LC1 MAX CSI (LC)	MAX. UNBRAC LENGTH
1- 2	0 / 16	-77.3	-77.3	0.10 (1)	10.00
2- 3	-509 / 0	-77.3	-77.3	0.10 (1)	6.25
3- 4	-9 / 0	-77.3	-77.3	0.09 (1)	10.00
6- 4	-100 / 0	0.0	0.0	0.02 (1)	7.81
8- 2	-445 / 0	0.0	0.0	0.04 (1)	7.81
8- 7	0 / 0	-17.5	-17.5	0.09 (1)	10.00
7- 6	0 / 491	-17.5	-17.5	0.42 (1)	10.00
6- 5	0 / 0	-17.5	-17.5	0.34 (1)	10.00

WEBS

MEMB. FR-TO	MAX. FACTORED FORCE (LBS)	MAX CSI (LC)
7- 3	0 / 96	0.03 (3)
3- 6	-547 / 0	0.13 (1)
2- 7	0 / 497	0.11 (1)

DESIGN CRITERIA

SPECIFIED LOADS:

TOP	CH.	LL	=	23.3	PSF
		DL	=	3.0	PSF
BOT	CH.	LL	=	0.0	PSF
		DL	=	7.0	PSF
TOTAL	LOAD		=	33.3	PSF

SPACING = 24.0 IN. C/C

THIS TRUSS IS DESIGNED FOR RESIDENTIAL OR SMALL BUILDING REQUIREMENTS OF PART 9, NBCC 2010

THIS DESIGN COMPLIES WITH:
- PART 9 OF OBC 2012 , BCBC 2012 , ABC 2014
- CSA 086-09
- TPIC 2011

(55 % OF 27.2 P.S.F. G.S.L. PLUS 8.4 P.S.F. RAIN LOAD) EQUALS 23.3 P.S.F. SPECIFIED ROOF LIVE LOAD

ALLOWABLE DEFL.(LL)= L/360 (0.25")
CALCULATED VERT. DEFL.(LL) = L/ 999 (0.04")
ALLOWABLE DEFL.(TL)= L/360 (0.25")
CALCULATED VERT. DEFL.(TL) = L/ 999 (0.08")

CSI: TC=0.10 (1-2:1) , BC=0.42 (6-7:1) , WB=0.13 (3-6:1) , SSI=0.23 (5-6:1)

DOL LUMBER=1.00 NAIL=1.00 LS BEND=1.10 COMP=1.10 SHEAR=1.10 TENS= 1.10

COMPANION LIVE LOAD FACTOR = 0.50

TRUSS PLATE MANUFACTURER IS NOT RESPONSIBLE FOR QUALITY CONTROL IN THE TRUSS MANUFACTURING PLANT .

NAIL VALUES

PLATE	GRIP(DRY) (PSI) MAX	MIN	SHEAR (PLI) MAX	MIN	SECTION (PLI) MAX	MIN
MT20	618	354	1667	822	2284	1656

PLATE PLACEMENT TOL. = 0.250 inches

PLATE ROTATION TOL. = 5.0 Deg.

JSI GRIP= 0.79 (7) (INPUT = 0.90)
JSI METAL= 0.18 (6) (INPUT = 1.00)

LICENSED PROFESSIONAL ENGINEER
P.M. TREVISAN
100136551
March 13th, 2017
PROVINCE OF ONTARIO

RECEIVED
TOWN OF MILTON
MAR 29, 2017
17-4990
BUILDING DIVISION

READ ALL NOTES ON THIS PAGE AND ON THE ENGINEERING NOTE PAGE ENP-1. THE NOTE PAGE IS AN INTEGRAL PART OF THIS DRAWING AS IT CONTAINS SPECIFICATIONS AND CRITERIA USED IN THE DESIGN OF THIS COMPONENT.

KOTT

JOB NAME	TRUSS NAME	QUANTITY	PLY	JOB DESC.	DRWG NO.
PT0317-054	T26	1	1	TRUSS DESC. LECCO RIDGE-BLOCK 328	ENG JOB: PT0317-054

Kott Lumber Uxbridge, Stouffville, ON, CGC

Version 8.100 S Feb 9 2017 MiTek Industries, Inc. Mon Mar 13 09:57:02 2017 Page 1

ID:pF8Cn?9h9uHzAm5tCmlVl5yJJCp-34pGdS_RTM1u79fJcAX82PvbbVu6Dx4qIqXC4lzbOnF

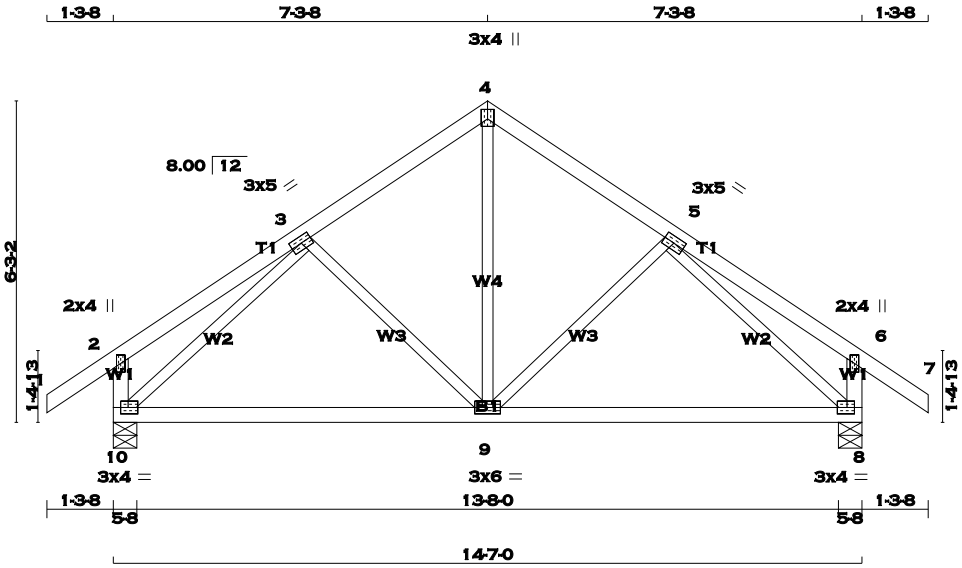

TOTAL WEIGHT = 63 lb

[M][F]

LUMBER

N. L. G. A. RULES

CHORDS	SIZE		LUMBER	DESCR.
1 - 4	2x4	DRY	No.2	SPF
4 - 7	2x4	DRY	No.2	SPF
10 - 2	2x4	DRY	No.2	SPF
8 - 6	2x4	DRY	No.2	SPF
10 - 8	2x4	DRY	No.2	SPF
ALL WEBS EXCEPT	2x3	DRY	No.2	SPF

DRY: SEASONED LUMBER.

PLATES (table is in inches)

JT	TYPE	PLATES	W	LEN	Y	X
2	TMV+p	MT20	2.0	4.0		
3	TMWW-t	MT20	3.0	5.0		
4	TTW+p	MT20	3.0	4.0	2.25	1.50
5	TMWW-t	MT20	3.0	5.0		
6	TMV+p	MT20	2.0	4.0		
8	BMVW1-t	MT20	3.0	4.0	1.50	1.75
9	BMWWW-t	MT20	3.0	6.0		
10	BMVW1-t	MT20	3.0	4.0	1.50	1.75

A SIZE FOR SIZE SUBSTITUTION OF MITEK MII20 WITH TEE-LOK TL20 PLATES IS ALLOWED.

DIMENSIONS, SUPPORTS AND LOADINGS SPECIFIED BY FABRICATOR TO BE VERIFIED BY BUILDING DESIGNER

BEARINGS

JT	FACTORED GROSS REACTION VERT	HORZ	MAXIMUM FACTORED GROSS REACTION DOWN	HORZ	UPLIFT	INPUT BRG IN-SX	REQRD BRG IN-SX
10	798	0	798	0	0	5-8	5-8
8	798	0	798	0	0	5-8	5-8

UNFACTORED REACTIONS

JT	1ST LCASE COMBINED	MAX./MIN. COMPONENT REACTIONS SNOW	LIVE	PERM.LIVE	WIND	DEAD	SOIL
10	558	403 / 0	0 / 0	0 / 0	0 / 0	154 / 0	0 / 0
8	558	403 / 0	0 / 0	0 / 0	0 / 0	154 / 0	0 / 0

BEARING MATERIAL TO BE SPF NO.2 OR BETTER AT JOINT(S) 10, 8

BRACING

TOP CHORD TO BE SHEATHED OR MAX. PURLIN SPACING = 6.25 FT.
MAX. UNBRACED BOTTOM CHORD LENGTH = 10.00 FT. OR RIGID CEILING DIRECTLY APPLIED.

ALL PITCH BREAKS AND PERIMETER CORNER JOINTS MUST BE LATERALLY RESTRAINED.

LOADING

TOTAL LOAD CASES: (3)

CHORDS

MEMB. FR-TO	MAX. FACTORED FORCE (LBS)	FACTORED VERT. LOAD (PLF) FROM	TO	LC1 MAX CSI (LC)	MAX. UNBRAC LENGTH
1- 2	0 / 29	-77.3	-77.3	0.10 (1)	10.00
2- 3	0 / 18	-77.3	-77.3	0.16 (1)	10.00
3- 4	-550 / 0	-77.3	-77.3	0.13 (1)	6.25
4- 5	-550 / 0	-77.3	-77.3	0.13 (1)	6.25
5- 6	0 / 18	-77.3	-77.3	0.16 (1)	10.00
6- 7	0 / 29	-77.3	-77.3	0.10 (1)	10.00
10- 2	-215 / 0	0.0	0.0	0.02 (1)	7.81
8- 6	-215 / 0	0.0	0.0	0.02 (1)	7.81
10- 9	0 / 554	-17.5	-17.5	0.30 (3)	10.00
9- 8	0 / 554	-17.5	-17.5	0.30 (3)	10.00

WEBS

MEMB. FR-TO	MAX. FACTORED FORCE (LBS)	MAX CSI (LC)
9- 4	0 / 371	0.08 (1)
9- 5	-155 / 5	0.07 (1)
3- 9	-155 / 5	0.07 (1)
10- 3	-770 / 0	0.31 (1)
5- 8	-770 / 0	0.31 (1)

DESIGN CRITERIA

SPECIFIED LOADS:

TOP CH.	LL	=	23.3	PSF
	DL	=	3.0	PSF
BOT CH.	LL	=	0.0	PSF
	DL	=	7.0	PSF
TOTAL LOAD		=	33.3	PSF

SPACING = 24.0 IN. C/C

THIS TRUSS IS DESIGNED FOR RESIDENTIAL OR SMALL BUILDING REQUIREMENTS OF PART 9, NBCC 2010

THIS DESIGN COMPLIES WITH:
- PART 9 OF OBC 2012 , BCBC 2012 , ABC 2014
- CSA 086-09
- TPIC 2011

(55 % OF 27.2 P.S.F. G.S.L. PLUS 8.4 P.S.F. RAIN LOAD) EQUALS 23.3 P.S.F. SPECIFIED ROOF LIVE LOAD

ALLOWABLE DEFL.(LL)= L/360 (0.49")
CALCULATED VERT. DEFL.(LL) = L/ 999 (0.01")
ALLOWABLE DEFL.(TL)= L/360 (0.49")
CALCULATED VERT. DEFL.(TL) = L/ 999 (0.07")

CSI: TC=0.16 (5-6:1) , BC=0.30 (9-10:3) , WB=0.31 (3-10:1) , SSI=0.11 (4-5:1)

DOL LUMBER=1.00 NAIL=1.00 LS BEND=1.10 COMP=1.10 SHEAR=1.10 TENS= 1.10

COMPANION LIVE LOAD FACTOR = 0.50

TRUSS PLATE MANUFACTURER IS NOT RESPONSIBLE FOR QUALITY CONTROL IN THE TRUSS MANUFACTURING PLANT .

NAIL VALUES

PLATE	GRIP(DRY) (PSI) MAX	MIN	SHEAR (PLI) MAX	MIN	SECTION (PLI) MAX	MIN
MT20	618	354	1667	822	2284	1656

PLATE PLACEMENT TOL. = 0.250 inches

PLATE ROTATION TOL. = 5.0 Deg.

JSI GRIP= 0.85 (8) (INPUT = 0.90)
JSI METAL= 0.22 (3) (INPUT = 1.00)

LICENSED PROFESSIONAL ENGINEER
P.M. TREVISAN
100136551
March 13th, 2017
PROVINCE OF ONTARIO

RECEIVED
TOWN OF MILTON
MAR 29, 2017
17-4990
BUILDING DIVISION

READ ALL NOTES ON THIS PAGE AND ON THE ENGINEERING NOTE PAGE ENP-1. THE NOTE PAGE IS AN INTEGRAL PART OF THIS DRAWING AS IT CONTAINS SPECIFICATIONS AND CRITERIA USED IN THE DESIGN OF THIS COMPONENT.

KOTT

JOB NAME	TRUSS NAME	QUANTITY	PLY	JOB DESC.	DRWG NO.
PT0317-054	T27	1	1	TRUSS DESC. LECCO RIDGE-BLOCK 328	ENG JOB: PT0317-054

Kott Lumber Uxbridge, Stouffville, ON, CGC

Version 8.100 S Feb 9 2017 MiTek Industries, Inc. Mon Mar 13 09:57:02 2017 Page 1

ID:pF8Cn?9h9uHzAm5tCmlVl5yJJCp-34pGdS_RTM1u79fJcAX82PvWyVvxDvXqIqXC4lzbOnF

SCALE = 1:72.1

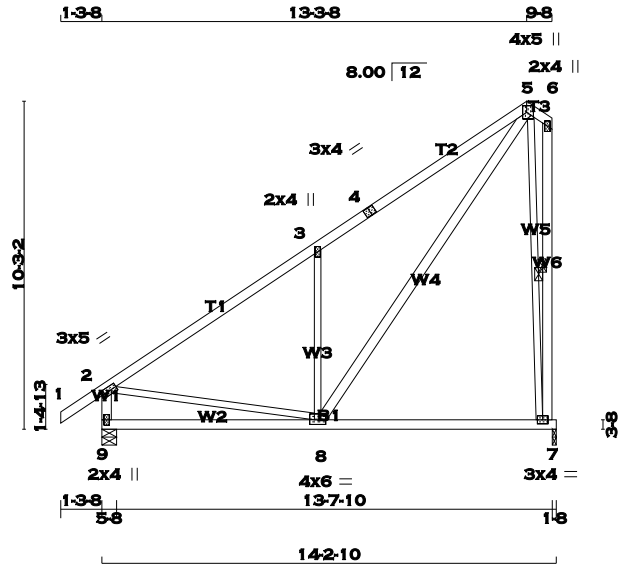

TOTAL WEIGHT = 80 lb

[M][F]

LUMBER

N. L. G. A. RULES

CHORDS	SIZE		LUMBER	DESCR.
1 - 4	2x4	DRY	No.2	SPF
4 - 5	2x4	DRY	No.2	SPF
5 - 6	2x4	DRY	No.2	SPF
9 - 2	2x4	DRY	No.2	SPF
7 - 6	2x4	DRY	No.2	SPF
9 - 7	2x4	DRY	No.2	SPF
ALL WEBS	2x3	DRY	No.2	SPF
EXCEPT				
8 - 5	2x4	DRY	No.2	SPF

DRY: SEASONED LUMBER.

PLATES (table is in inches)

JT	TYPE	PLATES	W	LEN	Y	X
2	TMVW-t	MT20	3.0	5.0	1.50	2.00
3	TMW+w	MT20	2.0	4.0		
4	TS-t	MT20	3.0	4.0		
5	TTWW+p	MT20	4.0	5.0	Edge	2.50
6	TMV+p	MT20	2.0	4.0		
7	BMVW1-t	MT20	3.0	4.0		
8	BMWWW-t	MT20	4.0	6.0	1.75	3.00
9	BMV1+p	MT20	2.0	4.0		

Edge - INDICATES REFERENCE CORNER OF PLATE TOUCHES EDGE OF CHORD.

A SIZE FOR SIZE SUBSTITUTION OF MITEK MII20 WITH TEE-LOK TL20 PLATES IS ALLOWED.

DIMENSIONS, SUPPORTS AND LOADINGS SPECIFIED BY FABRICATOR TO BE VERIFIED BY BUILDING DESIGNER

BEARINGS

JT	FACTORED GROSS REACTION VERT	HORZ	MAXIMUM FACTORED GROSS REACTION DOWN	HORZ	UPLIFT	INPUT BRG IN-SX	REQRD BRG IN-SX
9	774	0	774	0	0	5-8	5-8
7	668	0	668	0	0	1-8	1-8

UNFACTORED REACTIONS

JT	1ST LCASE COMBINED	MAX./MIN. COMPONENT REACTIONS SNOW	LIVE	PERM.LIVE	WIND	DEAD	SOIL
9	541	392 / 0	0 / 0	0 / 0	0 / 0	149 / 0	0 / 0
7	469	328 / 0	0 / 0	0 / 0	0 / 0	141 / 0	0 / 0

BEARING MATERIAL TO BE SPF NO.2 OR BETTER AT JOINT(S) 9, 7

BRACING

TOP CHORD TO BE SHEATHED OR MAX. PURLIN SPACING = 6.25 FT.
MAX. UNBRACED BOTTOM CHORD LENGTH = 10.00 FT. OR RIGID CEILING DIRECTLY APPLIED.

ALL PITCH BREAKS AND PERIMETER CORNER JOINTS MUST BE LATERALLY RESTRAINED.

1 - 2x3 SPF No.2 LATERAL BRACE(S) AT 1/ 2 LENGTH OF 6-7, 5-7. DBS = 20-0-0 . CBF = 74 LBS.

DBS = DIAGONAL BRACE SPACING (MAX). CBF = CUMULATIVE BRACING FORCE. FASTEN LATERAL BRACE(S) USING (0.122"X3") SPIRAL NAILS : 1 NAIL FOR 2x3 BRACE(S), 2 FOR 1x4, 2x4, 2x5, 3 FOR 2x6, 4 FOR 2x8, 5 FOR 2x10, AND 6 FOR 2x12.

END VERTICAL(S) MUST BE SHEATHED OR HAVE BRACES AS INDICATED IN THE MAX. UNBRACED LENGTH COLUMN OF THE TABLE BELOW

LOADING

TOTAL LOAD CASES: (3)

CHORDS

MEMB. FR-TO	MAX. FACTORED FORCE (LBS)	FACTORED VERT. LOAD LC1 (PLF) FROM	TO	MAX CSI (LC)	MAX. UNBRAC LENGTH
1- 2	0 / 29	-77.3	-77.3	0.10 (1)	10.00
2- 3	-588 / 0	-77.3	-77.3	0.46 (1)	6.25
3- 4	-634 / 0	-77.3	-77.3	0.46 (1)	6.25
4- 5	-634 / 0	-77.3	-77.3	0.46 (1)	6.25
5- 6	0 / 0	-77.3	-77.3	0.01 (1)	10.00
9- 2	-729 / 0	0.0	0.0	0.08 (1)	7.81
7- 6	-31 / 0	0.0	0.0	0.01 (1)	6.25
9- 8	0 / 0	-17.5	-17.5	0.25 (3)	10.00
8- 7	0 / 47	-17.5	-17.5	0.25 (3)	10.00

WEBS

MEMB. FR-TO	MAX. FACTORED FORCE (LBS)	MAX CSI (LC)
8- 3	-627 / 0	0.34 (1)
8- 5	0 / 830	0.13 (1)
2- 8	0 / 524	0.12 (1)
5- 7	-589 / 0	0.41 (1)

DESIGN CRITERIA

SPECIFIED LOADS:

TOP	CH.	LL	=	23.3	PSF
		DL	=	3.0	PSF
BOT	CH.	LL	=	0.0	PSF
		DL	=	7.0	PSF
TOTAL	LOAD		=	33.3	PSF

SPACING = 24.0 IN. C/C

THIS TRUSS IS DESIGNED FOR RESIDENTIAL OR SMALL BUILDING REQUIREMENTS OF PART 9, NBCC 2010

THIS DESIGN COMPLIES WITH:
- PART 9 OF OBC 2012 , BCBC 2012 , ABC 2014
- CSA 086-09
- TPIC 2011

(55 % OF 27.2 P.S.F. G.S.L. PLUS 8.4 P.S.F. RAIN LOAD) EQUALS 23.3 P.S.F. SPECIFIED ROOF LIVE LOAD

ALLOWABLE DEFL.(LL)= L/360 (0.47")
CALCULATED VERT. DEFL.(LL) = L/ 999 (0.02")
ALLOWABLE DEFL.(TL)= L/360 (0.47")
CALCULATED VERT. DEFL.(TL) = L/ 999 (0.08")

CSI: TC=0.46 (2-3:1) , BC=0.25 (7-8:3) , WB=0.41 (5-7:1) , SSI=0.21 (2-3:1)

DOL LUMBER=1.00 NAIL=1.00 LS BEND=1.10 COMP=1.10 SHEAR=1.10 TENS= 1.10

COMPANION LIVE LOAD FACTOR = 0.50

TRUSS PLATE MANUFACTURER IS NOT RESPONSIBLE FOR QUALITY CONTROL IN THE TRUSS MANUFACTURING PLANT .

NAIL VALUES

PLATE	GRIP(DRY) (PSI) MAX	MIN	SHEAR (PLI) MAX	MIN	SECTION (PLI) MAX	MIN
MT20	618	354	1667	822	2284	1656

PLATE PLACEMENT TOL. = 0.250 inches

PLATE ROTATION TOL. = 5.0 Deg.

JSI GRIP= 0.88 (8) (INPUT = 0.90)
JSI METAL= 0.24 (2) (INPUT = 1.00)

LICENSED PROFESSIONAL ENGINEER
R.M. TREVISAN
100136551
March 13th, 2017
PROVINCE OF ONTARIO

RECEIVED
TOWN OF MILTON
MAR 29, 2017
17-4990
BUILDING DIVISION

READ ALL NOTES ON THIS PAGE AND ON THE ENGINEERING NOTE PAGE ENP-1. THE NOTE PAGE IS AN INTEGRAL PART OF THIS DRAWING AS IT CONTAINS SPECIFICATIONS AND CRITERIA USED IN THE DESIGN OF THIS COMPONENT.

KOTT

JOB NAME	TRUSS NAME	QUANTITY	PLY	JOB DESC.	DRWG NO.
PT0317-054	**T28**	**3**	**1**	TRUSS DESC. LECCO RIDGE-BLOCK 328	

Kott Lumber Uxbridge, Stouffville, ON, CGC

Version 8.100 S Feb 9 2017 MiTek Industries, Inc. Mon Mar 13 09:57:02 2017 Page 1
ID:pF8Cn?9h9uHzAm5tCmlVl5yJJCp-34pGdS_RTM1u79fJcAX82PvVyVuNDwHqIqXC4lzbOnF

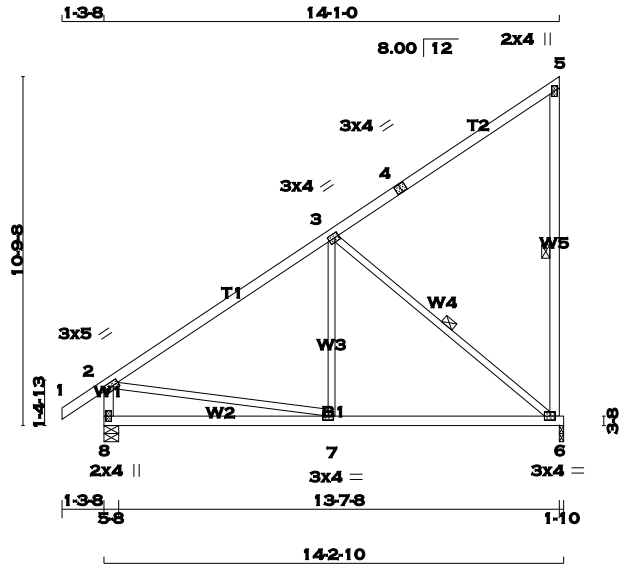

TOTAL WEIGHT = 3 X 67 = 202 lb
[M][F]

LUMBER
N. L. G. A. RULES

CHORDS	SIZE		LUMBER	DESCR.
1 - 4	2x4	DRY	No.2	SPF
4 - 5	2x4	DRY	No.2	SPF
6 - 5	2x4	DRY	No.2	SPF
8 - 2	2x4	DRY	No.2	SPF
8 - 6	2x4	DRY	No.2	SPF
ALL WEBS EXCEPT	2x3	DRY	No.2	SPF

DRY: SEASONED LUMBER.

PLATES (table is in inches)

JT	TYPE	PLATES	W	LEN	Y	X
2	TMVW-t	MT20	3.0	5.0	1.50	2.00
3	TMWW-t	MT20	3.0	4.0	1.50	1.50
4	TS-t	MT20	3.0	4.0		
5	TMV+p	MT20	2.0	4.0		
6	BMVW1-t	MT20	3.0	4.0		
7	BMWW-t	MT20	3.0	4.0		
8	BMV1+p	MT20	2.0	4.0		

A SIZE FOR SIZE SUBSTITUTION OF MITEK MII20 WITH TEE-LOK TL20 PLATES IS ALLOWED.

DIMENSIONS, SUPPORTS AND LOADINGS SPECIFIED BY FABRICATOR TO BE VERIFIED BY BUILDING DESIGNER

BEARINGS

JT	FACTORED GROSS REACTION VERT	HORZ	MAXIMUM FACTORED GROSS REACTION DOWN	HORZ	UPLIFT	INPUT BRG IN-SX	REQRD BRG IN-SX
6	668	0	668	0	0	1-10	1-10
8	774	0	774	0	0	5-8	5-8

UNFACTORED REACTIONS

JT	1ST LCASE COMBINED	MAX./MIN. COMPONENT REACTIONS SNOW	LIVE	PERM.LIVE	WIND	DEAD	SOIL
6	469	328 / 0	0 / 0	0 / 0	0 / 0	141 / 0	0 / 0
8	541	392 / 0	0 / 0	0 / 0	0 / 0	149 / 0	0 / 0

BEARING MATERIAL TO BE SPF NO.2 OR BETTER AT JOINT(S) 6, 8

BRACING
TOP CHORD TO BE SHEATHED OR MAX. PURLIN SPACING = 6.25 FT.
MAX. UNBRACED BOTTOM CHORD LENGTH = 10.00 FT. OR RIGID CEILING DIRECTLY APPLIED.

ALL PITCH BREAKS AND PERIMETER CORNER JOINTS MUST BE LATERALLY RESTRAINED.

1 - 2x3 SPF No.2 LATERAL BRACE(S) AT 1/ 2 LENGTH OF 5-6, 3-6. DBS = 20-0-0 . CBF = 82 LBS.

DBS = DIAGONAL BRACE SPACING (MAX). CBF = CUMULATIVE BRACING FORCE. FASTEN LATERAL BRACE(S) USING (0.122"X3") SPIRAL NAILS : 1 NAIL FOR 2x3 BRACE(S), 2 FOR 1x4, 2x4, 2x5, 3 FOR 2x6, 4 FOR 2x8, 5 FOR 2x10, AND 6 FOR 2x12.

END VERTICAL(S) MUST BE SHEATHED OR HAVE BRACES AS INDICATED IN THE MAX. UNBRACED LENGTH COLUMN OF THE TABLE BELOW

LOADING
TOTAL LOAD CASES: (3)

CHORDS

MEMB. FR-TO	MAX. FACTORED FORCE (LBS)	FACTORED VERT. LOAD (PLF) FROM	TO	LC1 MAX CSI (LC)	MAX. UNBRAC LENGTH
1- 2	0 / 29	-77.3	-77.3	0.10 (1)	10.00
2- 3	-572 / 0	-77.3	-77.3	0.52 (1)	6.25
3- 4	-37 / 0	-77.3	-77.3	0.51 (1)	6.25
4- 5	-37 / 0	-77.3	-77.3	0.51 (1)	6.25
6- 5	-205 / 0	0.0	0.0	0.12 (1)	6.25
8- 2	-727 / 0	0.0	0.0	0.07 (1)	7.81
8- 7	0 / 0	-17.5	-17.5	0.25 (3)	10.00
7- 6	0 / 507	-17.5	-17.5	0.29 (3)	10.00

WEBS

MEMB. FR-TO	MAX. FACTORED FORCE (LBS)	MAX CSI (LC)
7- 3	0 / 149	0.05 (3)
3- 6	-656 / 0	0.37 (1)
2- 7	0 / 513	0.12 (1)

DESIGN CRITERIA

SPECIFIED LOADS:

TOP CH.	LL	=	23.3	PSF
	DL	=	3.0	PSF
BOT CH.	LL	=	0.0	PSF
	DL	=	7.0	PSF
TOTAL LOAD		=	33.3	PSF

SPACING = 24.0 IN. C/C

THIS TRUSS IS DESIGNED FOR RESIDENTIAL OR SMALL BUILDING REQUIREMENTS OF PART 9, NBCC 2010

THIS DESIGN COMPLIES WITH:
- PART 9 OF OBC 2012 , BCBC 2012 , ABC 2014
- CSA 086-09
- TPIC 2011

(55 % OF 27.2 P.S.F. G.S.L. PLUS 8.4 P.S.F. RAIN LOAD) EQUALS 23.3 P.S.F. SPECIFIED ROOF LIVE LOAD

ALLOWABLE DEFL.(LL)= L/360 (0.47")
CALCULATED VERT. DEFL.(LL) = L/ 999 (0.01")
ALLOWABLE DEFL.(TL)= L/360 (0.47")
CALCULATED VERT. DEFL.(TL) = L/ 999 (0.06")

CSI: TC=0.52 (2-3:1) , BC=0.29 (6-7:3) , WB=0.37 (3-6:1) , SSI=0.22 (3-5:1)

DOL LUMBER=1.00 NAIL=1.00 LS BEND=1.10 COMP=1.10 SHEAR=1.10 TENS= 1.10

COMPANION LIVE LOAD FACTOR = 0.50

TRUSS PLATE MANUFACTURER IS NOT RESPONSIBLE FOR QUALITY CONTROL IN THE TRUSS MANUFACTURING PLANT .

NAIL VALUES

PLATE	GRIP(DRY) (PSI) MAX	MIN	SHEAR (PLI) MAX	MIN	SECTION (PLI) MAX	MIN
MT20	618	354	1667	822	2284	1656

PLATE PLACEMENT TOL. = 0.250 inches

PLATE ROTATION TOL. = 0.5 Deg.

JSI GRIP= 0.87 (7) (INPUT = 0.90)
JSI METAL= 0.23 (2) (INPUT = 1.00)

LICENSED PROFESSIONAL ENGINEER
R.M. TREVISAN
100136551
March 13th, 2017
PROVINCE OF ONTARIO

RECEIVED
TOWN OF MILTON
MAR 29, 2017
17-4990
BUILDING DIVISION

READ ALL NOTES ON THIS PAGE AND ON THE ENGINEERING NOTE PAGE ENP-1. THE NOTE PAGE IS AN INTEGRAL PART OF THIS DRAWING AS IT CONTAINS SPECIFICATIONS AND CRITERIA USED IN THE DESIGN OF THIS COMPONENT.

KOTT

JOB NAME	TRUSS NAME	QUANTITY	PLY	JOB DESC.	DRWG NO.
PT0317-054	T29	1	1	TRUSS DESC. LECCO RIDGE-BLOCK 328	ENG JOB: PT0317-054

Kott Lumber Uxbridge, Stouffville, ON, CGC

Version 8.100 S Feb 9 2017 MiTek Industries, Inc. Mon Mar 13 09:57:03 2017 Page 1

ID:pF8Cn?9h9uHzAm5tCmlVl5yJJCp-XGMeqo?3Dg9lIJEV9u2NbcSf3u5ryD2zWUGlcBzbOnE

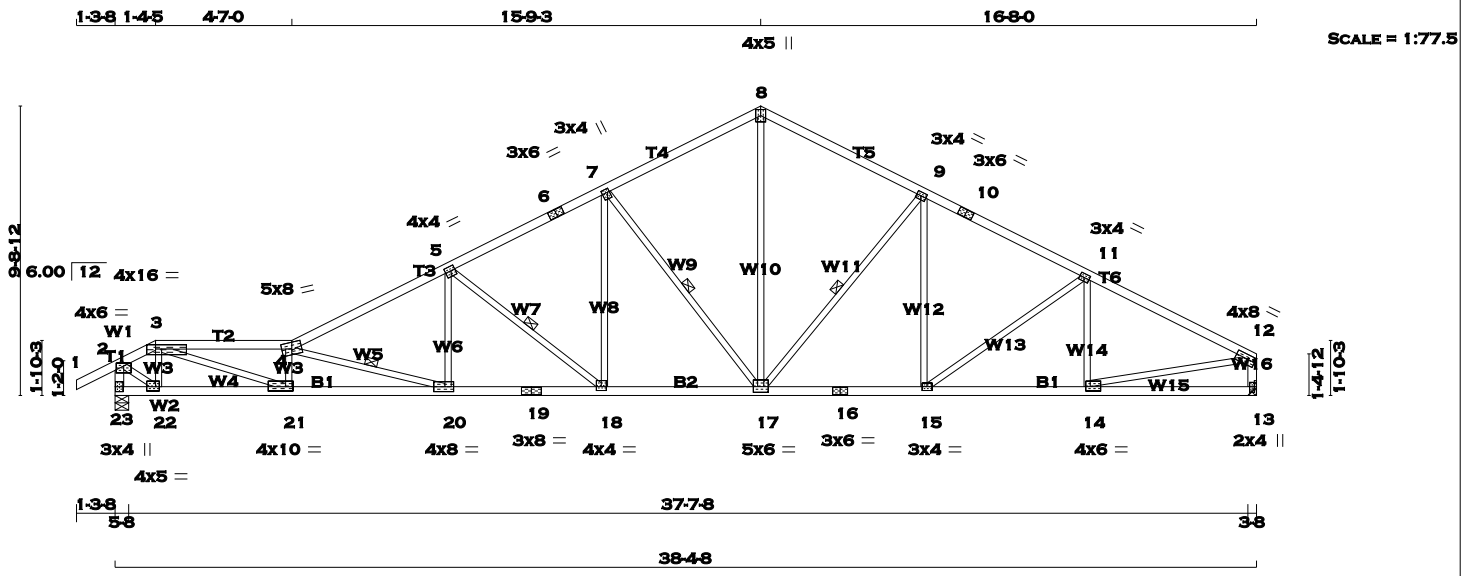

TOTAL WEIGHT = 159 lb

[M][F]

LUMBER

N. L. G. A. RULES

CHORDS	SIZE		LUMBER	DESCR.
1 - 3	2x4	DRY	No.2	SPF
3 - 4	2x4	DRY	No.2	SPF
4 - 6	2x4	DRY	No.2	SPF
6 - 8	2x4	DRY	No.2	SPF
8 - 10	2x4	DRY	No.2	SPF
10 - 12	2x4	DRY	No.2	SPF
23 - 2	2x4	DRY	No.2	SPF
13 - 12	2x4	DRY	No.2	SPF
23 - 19	2x4	DRY	1650F 1.5E	SPF
19 - 16	2x4	DRY	1650F 1.5E	SPF
16 - 13	2x4	DRY	1650F 1.5E	SPF
ALL WEBS EXCEPT	2x3	DRY	No.2	SPF

DRY: SEASONED LUMBER.

PLATES (table is in inches)

JT	TYPE	PLATES	W	LEN	Y	X
2	TMVW-p	MT20	4.0	6.0	1.25	3.00
3	TTWW-l	MT20	4.0	16.0	1.75	12.50
4	TTWW-m	MT20	5.0	8.0	2.75	4.00
5	TMWW-t	MT20	4.0	4.0	1.75	1.50
6	TS-t	MT20	3.0	6.0		
7	TMWW+t	MT20	3.0	4.0	1.50	0.75
8	TTW+p	MT20	4.0	5.0		
9	TMWW-t	MT20	3.0	4.0	1.50	1.75
10	TS-t	MT20	3.0	6.0		
11	TMWW-t	MT20	3.0	4.0	1.50	1.75
12	TMVW-t	MT20	4.0	8.0	1.75	Edge
13	BMV1+p	MT20	2.0	4.0	2.25	1.00
14	BMWW-t	MT20	4.0	6.0	1.75	1.75
15	BMWW-t	MT20	3.0	4.0		
16	BS-t	MT20	3.0	6.0		
17	BMWWW-t	MT20	5.0	6.0	2.25	3.00
18	BMWW-t	MT20	4.0	4.0	1.50	2.00
19	BS-t	MT20	3.0	8.0		
20	BMWW-t	MT20	4.0	8.0	2.00	3.50
21	BMWW-t	MT20	4.0	10.0	1.75	3.00
22	BMWW-t	MT20	4.0	5.0	1.75	1.50
23	BMV1+p	MT20	3.0	4.0		

Edge - INDICATES REFERENCE CORNER OF PLATE TOUCHES EDGE OF CHORD.

A SIZE FOR SIZE SUBSTITUTION OF MITEK MII20 WITH TEE-LOK TL20 PLATES IS ALLOWED.

DIMENSIONS, SUPPORTS AND LOADINGS SPECIFIED BY FABRICATOR TO BE VERIFIED BY BUILDING DESIGNER

BEARINGS

JT	FACTORED GROSS REACTION VERT	HORZ	MAXIMUM FACTORED GROSS REACTION DOWN	HORZ	UPLIFT	INPUT BRG IN-SX	REQRD BRG IN-SX
23	1927	0	1927	0	0	5-8	5-8
13	1818	0	1818	0	0	HANGER BY OTHERS	
						MIN. SEAT SIZE: 3-8	

UNFACTORED REACTIONS

JT	1ST LCASE COMBINED	SNOW	MAX./MIN. COMPONENT REACTIONS LIVE	PERM.LIVE	WIND	DEAD	SOIL
23	1350	958 / 0	0 / 0	0 / 0	0 / 0	392 / 0	0 / 0
13	1276	892 / 0	0 / 0	0 / 0	0 / 0	384 / 0	0 / 0

BEARING MATERIAL TO BE SPF NO.2 OR BETTER AT JOINT(S) 23

BRACING

TOP CHORD TO BE SHEATHED OR MAX. PURLIN SPACING = 2.50 FT.
MAX. UNBRACED BOTTOM CHORD LENGTH = 10.00 FT. OR RIGID CEILING DIRECTLY APPLIED.

ALL PITCH BREAKS AND PERIMETER CORNER JOINTS MUST BE LATERALLY RESTRAINED.

1 - 2x3 SPF No.2 LATERAL BRACE(S) AT 1/ 2 LENGTH OF 4-20. DBS = 6-0-0 . CBF = 88 LBS.
1 - 2x3 SPF No.2 LATERAL BRACE(S) AT 1/ 2 LENGTH OF 5-18, 7-17. DBS = 12-0-0 . CBF = 93 LBS.
1 - 2x3 SPF No.2 LATERAL BRACE(S) AT 1/ 2 LENGTH OF 9-17. DBS = 20-0-0 . CBF = 73 LBS.

DBS = DIAGONAL BRACE SPACING (MAX). CBF = CUMULATIVE BRACING FORCE. FASTEN LATERAL BRACE(S) USING (0.122"X3") SPIRAL NAILS : 1 NAIL FOR 2x3 BRACE(S), 2 FOR 1x4, 2x4, 2x5, 3 FOR 2x6, 4 FOR 2x8, 5 FOR 2x10, AND 6 FOR 2x12.

END VERTICAL(S) MUST BE SHEATHED OR HAVE BRACES AS INDICATED IN THE MAX. UNBRACED LENGTH COLUMN OF THE TABLE BELOW

LOADING

TOTAL LOAD CASES: (3)

CHORDS MEMB. FR-TO	MAX. FACTORED FORCE (LBS)	FACTORED VERT. LOAD (PLF) FROM	TO	LC1 MAX CSI (LC)	MAX. UNBRAC LENGTH	WEBS MEMB. FR-TO	MAX. FACTORED FORCE (LBS)	MAX CSI (LC)
1- 2	0 / 23	-77.3	-77.3	0.10 (1)	10.00	22- 3	-758 / 0	0.11 (1)
2- 3	-1865 / 0	-77.3	-77.3	0.11 (1)	4.83	3-21	0 / 4321	0.97 (1)
3- 4	-5675 / 0	-77.3	-77.3	0.63 (1)	2.50	21- 4	-1435 / 0	0.21 (1)
4- 5	-3913 / 0	-77.3	-77.3	0.51 (1)	3.23	4-20	-2350 / 0	0.55 (1)
5- 6	-2844 / 0	-77.3	-77.3	0.36 (1)	3.86	20- 5	0 / 809	0.18 (1)
6- 7	-2844 / 0	-77.3	-77.3	0.36 (1)	3.86	5-18	-1242 / 0	0.38 (1)
7- 8	-2056 / 0	-77.3	-77.3	0.31 (1)	4.46	18- 7	0 / 845	0.19 (1)
8- 9	-2057 / 0	-77.3	-77.3	0.34 (1)	4.43	7-17	-1177 / 0	0.59 (1)
9-10	-2453 / 0	-77.3	-77.3	0.35 (1)	4.12	17- 8	0 / 1487	0.33 (1)
10-11	-2453 / 0	-77.3	-77.3	0.35 (1)	4.12	17- 9	-583 / 0	0.30 (1)
11-12	-2561 / 0	-77.3	-77.3	0.42 (1)	3.97	15- 9	0 / 172	0.04 (3)
23- 2	-2003 / 0	0.0	0.0	0.20 (1)	5.97	15-11	-139 / 0	0.12 (1)
13-12	-1774 / 0	0.0	0.0	0.18 (1)	6.26	14-11	-336 / 0	0.09 (1)
						2-22	0 / 1903	0.43 (1)
23-22	0 / 0	-17.5	-17.5	0.15 (1)	10.00	14-12	0 / 2349	0.53 (1)
22-21	0 / 1591	-17.5	-17.5	0.36 (1)	10.00			
21-20	0 / 5772	-17.5	-17.5	0.85 (1)	10.00			
20-19	0 / 3517	-17.5	-17.5	0.49 (1)	10.00			
19-18	0 / 3517	-17.5	-17.5	0.49 (1)	10.00			
18-17	0 / 2544	-17.5	-17.5	0.36 (1)	10.00			
17-16	0 / 2194	-17.5	-17.5	0.32 (1)	10.00			
16-15	0 / 2194	-17.5	-17.5	0.32 (1)	10.00			
15-14	0 / 2307	-17.5	-17.5	0.31 (1)	10.00			
14-13	0 / 0	-17.5	-17.5	0.10 (3)	10.00			

RECEIVED
TOWN OF MILTON
MAR 29, 2017
17-4990
BUILDING DIVISION

READ ALL NOTES ON THIS PAGE AND ON THE ENGINEERING NOTE PAGE ENP-1. THE NOTE PAGE IS AN INTEGRAL PART OF THIS DRAWING AS IT CONTAINS SPECIFICATIONS AND CRITERIA USED IN THE DESIGN OF THIS COMPONENT.

DESIGN CRITERIA

SPECIFIED LOADS:

TOP CH.	LL	=	23.3	PSF
	DL	=	3.0	PSF
BOT CH.	LL	=	0.0	PSF
	DL	=	7.0	PSF
TOTAL LOAD		=	33.3	PSF

SPACING = 24.0 IN. C/C

LOADING IN ALL FLAT SECTIONS BASED ON A SLOPE OF 6.00/12

THIS TRUSS IS DESIGNED FOR RESIDENTIAL OR SMALL BUILDING REQUIREMENTS OF PART 9, NBCC 2010

THIS DESIGN COMPLIES WITH:
- PART 9 OF OBC 2012 , BCBC 2012 , ABC 2014
- CSA 086-09
- TPIC 2011

DESIGN ASSUMPTIONS
-OVERHANG NOT TO BE ALTERED OR CUT OFF.

(55 % OF 27.2 P.S.F. G.S.L. PLUS 8.4 P.S.F. RAIN LOAD) EQUALS 23.3 P.S.F. SPECIFIED ROOF LIVE LOAD

ALLOWABLE DEFL.(LL)= L/360 (1.28")
CALCULATED VERT. DEFL.(LL) = L/ 999 (0.38")
ALLOWABLE DEFL.(TL)= L/360 (1.28")
CALCULATED VERT. DEFL.(TL) = L/ 682 (0.67")

CSI: TC=0.63 (3-4:1) , BC=0.85 (20-21:1) , WB=0.97 (3-21:1) , SSI=0.18 (11-12:1)

DOL LUMBER=1.00 NAIL=1.00 LS BEND=1.10 COMP=1.10 SHEAR=1.10 TENS= 1.10

COMPANION LIVE LOAD FACTOR = 0.50

TRUSS PLATE MANUFACTURER IS NOT RESPONSIBLE FOR QUALITY CONTROL IN THE TRUSS MANUFACTURING PLANT .

NAIL VALUES

PLATE	GRIP(DRY) (PSI) MAX	MIN	SHEAR (PLI) MAX	MIN	SECTION (PLI) MAX	MIN
MT20	618	354	1667	822	2284	1656

PLATE PLACEMENT TOL. = 0.250 inches

PLATE ROTATION TOL. = 5.0 Deg.

JSI GRIP= 0.90 (21) (INPUT = 0.90)
JSI METAL= 0.91 (19) (INPUT = 1.00)

KOTT

CONTINUED ON PAGE 2

JOB NAME	TRUSS NAME	QUANTITY	PLY	JOB DESC.	DRWG NO.
PT0317-054	T30	1	1	TRUSS DESC. LECCO RIDGE-BLOCK 328	ENG JOB: PT0317-054

Kott Lumber Uxbridge, Stouffville, ON, CGC

Version 8.100 S Feb 9 2017 MiTek Industries, Inc. Mon Mar 13 09:57:03 2017 Page 1

ID:pF8Cn?9h9uHzAm5tCmlVl5yJJCp-XGMeqo?3Dg9lIJEV9u2NbcSi5u7TyFJzWUGlcBzbOnE

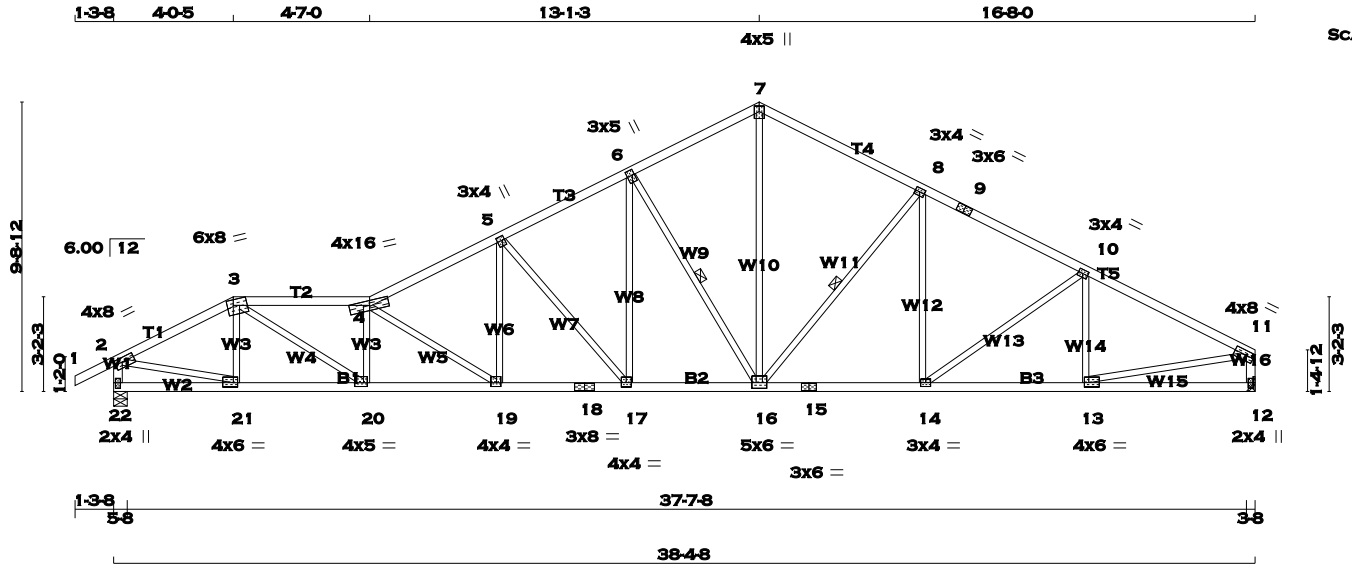

TOTAL WEIGHT = 165 lb

[M][F]

LUMBER

N. L. G. A. RULES

CHORDS	SIZE		LUMBER	DESCR.
1 - 3	2x4	DRY	No.2	SPF
3 - 4	2x4	DRY	No.2	SPF
4 - 7	2x4	DRY	No.2	SPF
7 - 9	2x4	DRY	No.2	SPF
9 - 11	2x4	DRY	No.2	SPF
22 - 2	2x4	DRY	No.2	SPF
12 - 11	2x4	DRY	No.2	SPF
22 - 18	2x4	DRY	No.2	SPF
18 - 15	2x4	DRY	No.2	SPF
15 - 12	2x4	DRY	No.2	SPF
ALL WEBS EXCEPT	2x3	DRY	No.2	SPF

DRY: SEASONED LUMBER.

PLATES (table is in inches)

JT	TYPE	PLATES	W	LEN	Y	X
2	TMVW-t	MT20	4.0	8.0	1.75	3.00
3	TTWW-m	MT20	6.0	8.0	2.25	2.50
4	TTWW-m	MT20	4.0	16.0	2.00	7.75
5	TMWW+t	MT20	3.0	4.0	1.75	0.75
6	TMWW+t	MT20	3.0	5.0	2.25	0.75
7	TTW+p	MT20	4.0	5.0	2.25	2.00
8	TMWW-t	MT20	3.0	4.0	1.50	1.75
9	TS-t	MT20	3.0	6.0		
10	TMWW-t	MT20	3.0	4.0	1.50	1.75
11	TMVW-t	MT20	4.0	8.0	1.75	Edge
12	BMV1+p	MT20	2.0	4.0	2.25	1.00
13	BMWW-t	MT20	4.0	6.0	1.75	1.75
14	BMWW-t	MT20	3.0	4.0		
15	BS-t	MT20	3.0	6.0		
16	BMWWW-t	MT20	5.0	6.0	2.25	3.00
17	BMWW-t	MT20	4.0	4.0	1.75	2.00
18	BS-t	MT20	3.0	8.0		
19	BMWW-t	MT20	4.0	4.0	1.50	1.75
20	BMWW-t	MT20	4.0	5.0	1.50	1.50
21	BMWW-t	MT20	4.0	6.0	1.75	1.75
22	BMV1+p	MT20	2.0	4.0	2.25	1.00

Edge - INDICATES REFERENCE CORNER OF PLATE TOUCHES EDGE OF CHORD.

A SIZE FOR SIZE SUBSTITUTION OF MITEK MII20 WITH TEE-LOK TL20 PLATES IS ALLOWED.

DIMENSIONS, SUPPORTS AND LOADINGS SPECIFIED BY FABRICATOR TO BE VERIFIED BY BUILDING DESIGNER

BEARINGS

JT	FACTORED GROSS REACTION VERT	HORZ	MAXIMUM FACTORED GROSS REACTION DOWN	HORZ	UPLIFT	INPUT BRG IN-SX	REQRD BRG IN-SX
22	1925	0	1925	0	0	5-8	5-8
12	1820	0	1820	0	0	HANGER BY OTHERS	
						MIN. SEAT SIZE: 3-8	

UNFACTORED REACTIONS

JT	1ST LCASE COMBINED	SNOW	MAX./MIN. COMPONENT REACTIONS LIVE	PERM.LIVE	WIND	DEAD	SOIL
22	1349	957 / 0	0 / 0	0 / 0	0 / 0	392 / 0	0 / 0
12	1277	893 / 0	0 / 0	0 / 0	0 / 0	384 / 0	0 / 0

BEARING MATERIAL TO BE SPF NO.2 OR BETTER AT JOINT(S) 22

BRACING

TOP CHORD TO BE SHEATHED OR MAX. PURLIN SPACING = 3.14 FT.
MAX. UNBRACED BOTTOM CHORD LENGTH = 10.00 FT. OR RIGID CEILING DIRECTLY APPLIED.

ALL PITCH BREAKS AND PERIMETER CORNER JOINTS MUST BE LATERALLY RESTRAINED.

1 - 2x3 SPF No.2 LATERAL BRACE(S) AT 1/ 2 LENGTH OF 6-16. DBS = 12-0-0 . CBF = 85 LBS.
1 - 2x3 SPF No.2 LATERAL BRACE(S) AT 1/ 2 LENGTH OF 8-16. DBS = 20-0-0 . CBF = 73 LBS.

DBS = DIAGONAL BRACE SPACING (MAX). CBF = CUMULATIVE BRACING FORCE. FASTEN LATERAL BRACE(S) USING (0.122"X3") SPIRAL NAILS : 1 NAIL FOR 2x3 BRACE(S), 2 FOR 1x4, 2x4, 2x5, 3 FOR 2x6, 4 FOR 2x8, 5 FOR 2x10, AND 6 FOR 2x12.

END VERTICAL(S) MUST BE SHEATHED OR HAVE BRACES AS INDICATED IN THE MAX. UNBRACED LENGTH COLUMN OF THE TABLE BELOW

LOADING

TOTAL LOAD CASES: (3)

CHORDS

MEMB. FR-TO	MAX. FACTORED FORCE (LBS)	FACTORED VERT. LOAD LC1 (PLF) FROM	TO	MAX CSI (LC)	MAX. UNBRAC LENGTH
1- 2	0 / 23	-77.3	-77.3	0.10 (1)	10.00
2- 3	-2579 / 0	-77.3	-77.3	0.25 (1)	4.11
3- 4	-4168 / 0	-77.3	-77.3	0.43 (1)	3.14
4- 5	-3475 / 0	-77.3	-77.3	0.33 (1)	3.55
5- 6	-2694 / 0	-77.3	-77.3	0.24 (1)	4.05
6- 7	-2056 / 0	-77.3	-77.3	0.22 (1)	4.55
7- 8	-2060 / 0	-77.3	-77.3	0.34 (1)	4.42
8- 9	-2457 / 0	-77.3	-77.3	0.35 (1)	4.11
9-10	-2457 / 0	-77.3	-77.3	0.35 (1)	4.11
10-11	-2565 / 0	-77.3	-77.3	0.42 (1)	3.97
22- 2	-1897 / 0	0.0	0.0	0.19 (1)	6.10
12-11	-1776 / 0	0.0	0.0	0.18 (1)	6.26
22-21	0 / 0	-17.5	-17.5	0.08 (3)	10.00
21-20	0 / 2291	-17.5	-17.5	0.43 (1)	10.00
20-19	0 / 4210	-17.5	-17.5	0.74 (1)	10.00
19-18	0 / 3123	-17.5	-17.5	0.54 (1)	10.00
18-17	0 / 3123	-17.5	-17.5	0.54 (1)	10.00
17-16	0 / 2410	-17.5	-17.5	0.45 (1)	10.00
16-15	0 / 2197	-17.5	-17.5	0.42 (1)	10.00
15-14	0 / 2197	-17.5	-17.5	0.42 (1)	10.00
14-13	0 / 2310	-17.5	-17.5	0.42 (1)	10.00
13-12	0 / 0	-17.5	-17.5	0.12 (3)	10.00

WEBS

MEMB. FR-TO	MAX. FACTORED FORCE (LBS)	MAX CSI (LC)
21- 3	-383 / 0	0.07 (1)
3-20	0 / 2232	0.50 (1)
20- 4	-1155 / 0	0.21 (1)
4-19	-1302 / 0	0.61 (1)
19- 5	0 / 808	0.18 (1)
5-17	-1091 / 0	0.89 (1)
17- 6	0 / 890	0.20 (1)
6-16	-1130 / 0	0.55 (1)
16- 7	0 / 1516	0.34 (1)
16- 8	-584 / 0	0.30 (1)
14- 8	0 / 173	0.04 (3)
14-10	-139 / 0	0.12 (1)
13-10	-336 / 0	0.09 (1)
2-21	0 / 2354	0.53 (1)
13-11	0 / 2351	0.53 (1)

RECEIVED
TOWN OF MILTON
MAR 29, 2017
17-4990
BUILDING DIVISION

READ ALL NOTES ON THIS PAGE AND ON THE ENGINEERING NOTE PAGE ENP-1. THE NOTE PAGE IS AN INTEGRAL PART OF THIS DRAWING AS IT CONTAINS SPECIFICATIONS AND CRITERIA USED IN THE DESIGN OF THIS COMPONENT.

DESIGN CRITERIA

SPECIFIED LOADS:

TOP	CH.	LL	=	23.3	PSF
		DL	=	3.0	PSF
BOT	CH.	LL	=	0.0	PSF
		DL	=	7.0	PSF
TOTAL	LOAD		=	33.3	PSF

SPACING = 24.0 IN. C/C

LOADING IN ALL FLAT SECTIONS BASED ON A SLOPE OF 6.00/12

THIS TRUSS IS DESIGNED FOR RESIDENTIAL OR SMALL BUILDING REQUIREMENTS OF PART 9, NBCC 2010

THIS DESIGN COMPLIES WITH:
- PART 9 OF OBC 2012 , BCBC 2012 , ABC 2014
- CSA 086-09
- TPIC 2011

(55 % OF 27.2 P.S.F. G.S.L. PLUS 8.4 P.S.F. RAIN LOAD) EQUALS 23.3 P.S.F. SPECIFIED ROOF LIVE LOAD

ALLOWABLE DEFL.(LL)= L/360 (1.28")
CALCULATED VERT. DEFL.(LL) = L/ 999 (0.26")
ALLOWABLE DEFL.(TL)= L/360 (1.28")
CALCULATED VERT. DEFL.(TL) = L/ 995 (0.46")

CSI: TC=0.43 (3-4:1) , BC=0.74 (19-20:1) , WB=0.89 (5-17:1) , SSI=0.18 (10-11:1)

DOL LUMBER=1.00 NAIL=1.00 LS BEND=1.10 COMP=1.10 SHEAR=1.10 TENS= 1.10

COMPANION LIVE LOAD FACTOR = 0.50

TRUSS PLATE MANUFACTURER IS NOT RESPONSIBLE FOR QUALITY CONTROL IN THE TRUSS MANUFACTURING PLANT .

NAIL VALUES

PLATE	GRIP(DRY) (PSI) MAX	MIN	SHEAR (PLI) MAX	MIN	SECTION (PLI) MAX	MIN
MT20	618	354	1667	822	2284	1656

PLATE PLACEMENT TOL. = 0.250 inches

PLATE ROTATION TOL. = 5.0 Deg.

JSI GRIP= 0.90 (2) (INPUT = 0.90)
JSI METAL= 0.82 (18) (INPUT = 1.00)

KOTT

CONTINUED ON PAGE 2

JOB NAME	TRUSS NAME	QUANTITY	PLY	JOB DESC.	DRWG NO.
PT0317-054	T31	1	1	TRUSS DESC. LECCO RIDGE-BLOCK 328	

Kott Lumber Uxbridge, Stouffville, ON, CGC

Version 8.100 S Feb 9 2017 MiTek Industries, Inc. Mon Mar 13 09:57:04 2017 Page 1
ID:pF8Cn?9h9uHzAm5tCmlVl5yJJCp-?Sw0180h__HbNSohjbZc7q?s5IUkhgT7l80I8dzbOnD

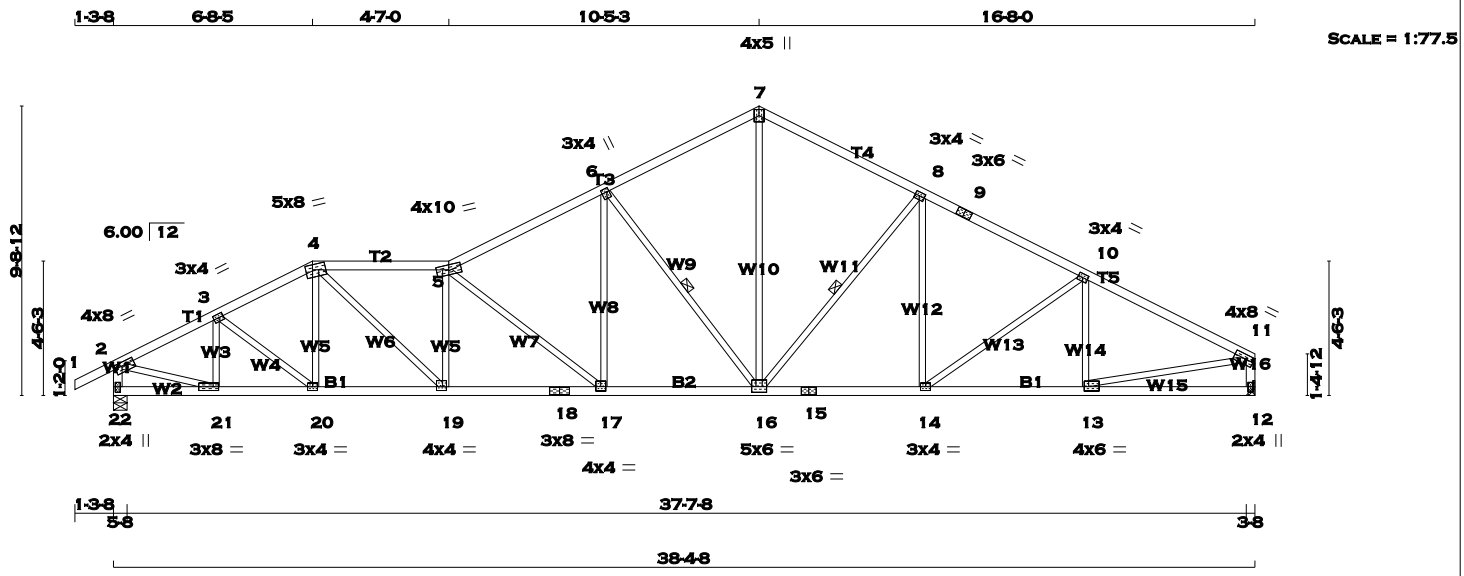

TOTAL WEIGHT = 164 lb
[M][F]

LUMBER
N. L. G. A. RULES

CHORDS	SIZE		LUMBER	DESCR.
1 - 4	2x4	DRY	No.2	SPF
4 - 5	2x4	DRY	No.2	SPF
5 - 7	2x4	DRY	No.2	SPF
7 - 9	2x4	DRY	No.2	SPF
9 - 11	2x4	DRY	No.2	SPF
22 - 2	2x4	DRY	No.2	SPF
12 - 11	2x4	DRY	No.2	SPF
22 - 18	2x4	DRY	No.2	SPF
18 - 15	2x4	DRY	No.2	SPF
15 - 12	2x4	DRY	No.2	SPF
ALL WEBS EXCEPT	2x3	DRY	No.2	SPF

DRY: SEASONED LUMBER.

PLATES (table is in inches)

JT	TYPE	PLATES	W	LEN	Y	X
2 3, 8, 10	TMVW-t	MT20	4.0	8.0	1.50	3.00
3	TMWW-t	MT20	3.0	4.0	1.50	1.75
4	TTWW-m	MT20	5.0	8.0	2.00	2.75
5	TTWW-m	MT20	4.0	10.0		
6	TMWW+t	MT20	3.0	4.0	1.50	0.75
7	TTW+p	MT20	4.0	5.0		
9	TS-t	MT20	3.0	6.0		
11	TMVW-t	MT20	4.0	8.0	1.75	Edge
12	BMV1+p	MT20	2.0	4.0	2.25	1.00
13	BMWW-t	MT20	4.0	6.0	1.75	1.75
14	BMWW-t	MT20	3.0	4.0		
15	BS-t	MT20	3.0	6.0		
16	BMWWW-t	MT20	5.0	6.0	2.25	3.00
17	BMWW-t	MT20	4.0	4.0	1.75	2.00
18	BS-t	MT20	3.0	8.0		
19	BMWW-t	MT20	4.0	4.0	1.50	1.50
20	BMWW-t	MT20	3.0	4.0		
21	BMWW-t	MT20	3.0	8.0	1.50	2.25
22	BMV1+p	MT20	2.0	4.0	2.25	1.00

Edge - INDICATES REFERENCE CORNER OF PLATE TOUCHES EDGE OF CHORD.

A SIZE FOR SIZE SUBSTITUTION OF MITEK MII20 WITH TEE-LOK TL20 PLATES IS ALLOWED.

DIMENSIONS, SUPPORTS AND LOADINGS SPECIFIED BY FABRICATOR TO BE VERIFIED BY BUILDING DESIGNER

BEARINGS

JT	FACTORED GROSS REACTION VERT	HORZ	MAXIMUM FACTORED GROSS REACTION DOWN	HORZ	UPLIFT	INPUT BRG IN-SX	REQRD BRG IN-SX
22	1925	0	1925	0	0	5-8	5-8
12	1820	0	1820	0	0	HANGER BY OTHERS	
						MIN. SEAT SIZE: 3-8	

UNFACTORED REACTIONS

JT	1ST LCASE COMBINED	SNOW	MAX./MIN. COMPONENT REACTIONS LIVE	PERM.LIVE	WIND	DEAD	SOIL
22	1349	957 / 0	0 / 0	0 / 0	0 / 0	392 / 0	0 / 0
12	1277	893 / 0	0 / 0	0 / 0	0 / 0	384 / 0	0 / 0

BEARING MATERIAL TO BE SPF NO.2 OR BETTER AT JOINT(S) 22

BRACING
TOP CHORD TO BE SHEATHED OR MAX. PURLIN SPACING = 3.52 FT.
MAX. UNBRACED BOTTOM CHORD LENGTH = 10.00 FT. OR RIGID CEILING DIRECTLY APPLIED.

ALL PITCH BREAKS AND PERIMETER CORNER JOINTS MUST BE LATERALLY RESTRAINED.

1 - 2x3 SPF No.2 LATERAL BRACE(S) AT 1/ 2 LENGTH OF 6-16. DBS = 12-0-0 . CBF = 90 LBS.
1 - 2x3 SPF No.2 LATERAL BRACE(S) AT 1/ 2 LENGTH OF 8-16. DBS = 20-0-0 . CBF = 73 LBS.

DBS = DIAGONAL BRACE SPACING (MAX). CBF = CUMULATIVE BRACING FORCE. FASTEN LATERAL BRACE(S) USING (0.122"X3") SPIRAL NAILS : 1 NAIL FOR 2x3 BRACE(S), 2 FOR 1x4, 2x4, 2x5, 3 FOR 2x6, 4 FOR 2x8, 5 FOR 2x10, AND 6 FOR 2x12.

END VERTICAL(S) MUST BE SHEATHED OR HAVE BRACES AS INDICATED IN THE MAX. UNBRACED LENGTH COLUMN OF THE TABLE BELOW

LOADING
TOTAL LOAD CASES: (3)

CHORDS

MEMB. FR-TO	MAX. FORCE (LBS)	FACTORED VERT. LOAD LC1 (PLF) FROM	TO	MAX CSI (LC)	MAX. UNBRAC LENGTH
1- 2	0 / 23	-77.3	-77.3	0.10 (1)	10.00
2- 3	-2490 / 0	-77.3	-77.3	0.17 (1)	4.24
3- 4	-2693 / 0	-77.3	-77.3	0.17 (1)	4.11
4- 5	-3418 / 0	-77.3	-77.3	0.36 (1)	3.52
5- 6	-2831 / 0	-77.3	-77.3	0.39 (1)	3.82
6- 7	-2063 / 0	-77.3	-77.3	0.33 (1)	4.42
7- 8	-2060 / 0	-77.3	-77.3	0.34 (1)	4.42
8- 9	-2457 / 0	-77.3	-77.3	0.35 (1)	4.11
9-10	-2457 / 0	-77.3	-77.3	0.35 (1)	4.11
10-11	-2565 / 0	-77.3	-77.3	0.42 (1)	3.97
22- 2	-1890 / 0	0.0	0.0	0.19 (1)	6.10
12-11	-1776 / 0	0.0	0.0	0.18 (1)	6.26
22-21	0 / 0	-17.5	-17.5	0.05 (3)	10.00
21-20	0 / 2236	-17.5	-17.5	0.40 (1)	10.00
20-19	0 / 2395	-17.5	-17.5	0.43 (1)	10.00
19-18	0 / 3440	-17.5	-17.5	0.61 (1)	10.00
18-17	0 / 3440	-17.5	-17.5	0.61 (1)	10.00
17-16	0 / 2553	-17.5	-17.5	0.48 (1)	10.00
16-15	0 / 2197	-17.5	-17.5	0.42 (1)	10.00
15-14	0 / 2197	-17.5	-17.5	0.42 (1)	10.00
14-13	0 / 2310	-17.5	-17.5	0.42 (1)	10.00
13-12	0 / 0	-17.5	-17.5	0.12 (3)	10.00

WEBS

MEMB. FR-TO	MAX. FORCE (LBS)	MAX CSI (LC)
21- 3	-514 / 0	0.09 (1)
3-20	0 / 202	0.05 (1)
20- 4	-37 / 38	0.01 (3)
4-19	0 / 1404	0.32 (1)
19- 5	-887 / 0	0.27 (1)
5-17	-1141 / 0	0.96 (1)
17- 6	0 / 809	0.18 (1)
6-16	-1195 / 0	0.60 (1)
16- 7	0 / 1500	0.34 (1)
16- 8	-584 / 0	0.30 (1)
14- 8	0 / 173	0.04 (3)
14-10	-139 / 0	0.12 (1)
13-10	-336 / 0	0.09 (1)
2-21	0 / 2304	0.52 (1)
13-11	0 / 2351	0.53 (1)

DESIGN CRITERIA

SPECIFIED LOADS:

TOP CH.	LL	=	23.3	PSF
	DL	=	3.0	PSF
BOT CH.	LL	=	0.0	PSF
	DL	=	7.0	PSF
TOTAL LOAD		=	33.3	PSF

SPACING = 24.0 IN. C/C

LOADING IN ALL FLAT SECTIONS BASED ON A SLOPE OF 6.00/12

THIS TRUSS IS DESIGNED FOR RESIDENTIAL OR SMALL BUILDING REQUIREMENTS OF PART 9, NBCC 2010

THIS DESIGN COMPLIES WITH:
- PART 9 OF OBC 2012 , BCBC 2012 , ABC 2014
- CSA 086-09
- TPIC 2011

(55 % OF 27.2 P.S.F. G.S.L. PLUS 8.4 P.S.F. RAIN LOAD) EQUALS 23.3 P.S.F. SPECIFIED ROOF LIVE LOAD

ALLOWABLE DEFL.(LL)= L/360 (1.28")
CALCULATED VERT. DEFL.(LL) = L/ 999 (0.22")
ALLOWABLE DEFL.(TL)= L/360 (1.28")
CALCULATED VERT. DEFL.(TL) = L/ 999 (0.39")

CSI: TC=0.42 (10-11:1) , BC=0.61 (17-19:1) , WB=0.96 (5-17:1) , SSI=0.18 (10-11:1)

DOL LUMBER=1.00 NAIL=1.00 LS BEND=1.10 COMP=1.10 SHEAR=1.10 TENS= 1.10

COMPANION LIVE LOAD FACTOR = 0.50

TRUSS PLATE MANUFACTURER IS NOT RESPONSIBLE FOR QUALITY CONTROL IN THE TRUSS MANUFACTURING PLANT .

NAIL VALUES

PLATE	GRIP(DRY) (PSI) MAX	MIN	SHEAR (PLI) MAX	MIN	SECTION (PLI) MAX	MIN
MT20	618	354	1667	822	2284	1656

PLATE PLACEMENT TOL. = 0.250 inches

PLATE ROTATION TOL. = 5.0 Deg.

JSI GRIP= 0.90 (7) (INPUT = 0.90)
JSI METAL= 0.91 (18) (INPUT = 1.00)

LICENSED PROFESSIONAL ENGINEER
R.M. TREVISAN
100136551
March 13th, 2017
PROVINCE OF ONTARIO

RECEIVED
TOWN OF MILTON
MAR 29, 2017
17-4990
BUILDING DIVISION

READ ALL NOTES ON THIS PAGE AND ON THE ENGINEERING NOTE PAGE ENP-1. THE NOTE PAGE IS AN INTEGRAL PART OF THIS DRAWING AS IT CONTAINS SPECIFICATIONS AND CRITERIA USED IN THE DESIGN OF THIS COMPONENT.

KOTT

JOB NAME	TRUSS NAME	QUANTITY	PLY	JOB DESC.	DRWG NO.
PT0317-054	T32	1	1	TRUSS DESC. LECCO RIDGE-BLOCK 328	ENG JOB: PT0317-054

Kott Lumber Uxbridge, Stouffville, ON, CGC

Version 8.100 S Feb 9 2017 MiTek Industries, Inc. Mon Mar 13 09:57:04 2017 Page 1

ID:pF8Cn?9h9uHzAm5tCmlVl5yJJCp-?Sw0180h__HbNSohjbZc7q?s5IVJhiA7l80I8dzbOnD

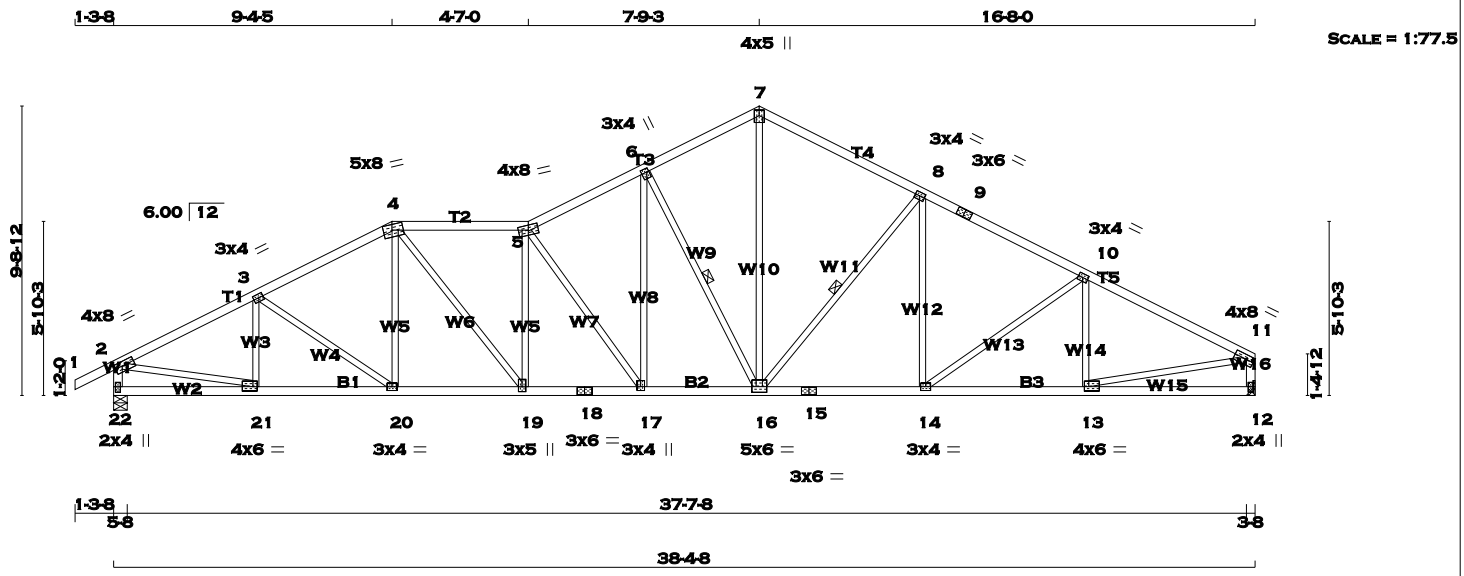

TOTAL WEIGHT = 170 lb

[M][F]

LUMBER

N. L. G. A. RULES

CHORDS	SIZE		LUMBER	DESCR.
1 - 4	2x4	DRY	No.2	SPF
4 - 5	2x4	DRY	No.2	SPF
5 - 7	2x4	DRY	No.2	SPF
7 - 9	2x4	DRY	No.2	SPF
9 - 11	2x4	DRY	No.2	SPF
22 - 2	2x4	DRY	No.2	SPF
12 - 11	2x4	DRY	No.2	SPF
22 - 18	2x4	DRY	No.2	SPF
18 - 15	2x4	DRY	No.2	SPF
15 - 12	2x4	DRY	No.2	SPF
ALL WEBS EXCEPT	2x3	DRY	No.2	SPF

DRY: SEASONED LUMBER.

PLATES (table is in inches)

JT	TYPE	PLATES	W	LEN	Y	X
2 3, 8, 10	TMVW-t	MT20	4.0	8.0	1.75	3.00
3	TMWW-t	MT20	3.0	4.0	1.50	1.75
4	TTWW-m	MT20	5.0	8.0	2.25	3.50
5	TTWW-m	MT20	4.0	8.0		
6	TMWW+t	MT20	3.0	4.0	1.50	0.75
7	TTW+p	MT20	4.0	5.0	2.25	2.00
9	TS-t	MT20	3.0	6.0		
11	TMVW-t	MT20	4.0	8.0	1.75	Edge
12	BMV1+p	MT20	2.0	4.0	2.25	1.00
13	BMWW-t	MT20	4.0	6.0	1.75	1.75
14	BMWW-t	MT20	3.0	4.0		
15	BS-t	MT20	3.0	6.0		
16	BMWWW-t	MT20	5.0	6.0	2.25	3.00
17	BMWW+t	MT20	3.0	4.0	1.50	1.50
18	BS-t	MT20	3.0	6.0		
19	BMWW+t	MT20	3.0	5.0	2.00	1.50
20	BMWW-t	MT20	3.0	4.0		
21	BMWW-t	MT20	4.0	6.0	1.75	1.75
22	BMV1+p	MT20	2.0	4.0	2.25	1.00

Edge - INDICATES REFERENCE CORNER OF PLATE TOUCHES EDGE OF CHORD.

A SIZE FOR SIZE SUBSTITUTION OF MITEK MII20 WITH TEE-LOK TL20 PLATES IS ALLOWED.

DIMENSIONS, SUPPORTS AND LOADINGS SPECIFIED BY FABRICATOR TO BE VERIFIED BY BUILDING DESIGNER

BEARINGS

JT	FACTORED GROSS REACTION VERT	HORZ	MAXIMUM FACTORED GROSS REACTION DOWN	HORZ	UPLIFT	INPUT BRG IN-SX	REQRD BRG IN-SX
22	1925	0	1925	0	0	5-8	5-8
12	1820	0	1820	0	0	HANGER BY OTHERS MIN. SEAT SIZE: 3-8	

UNFACTORED REACTIONS

JT	1ST LCASE COMBINED	SNOW	MAX./MIN. COMPONENT REACTIONS LIVE	PERM.LIVE	WIND	DEAD	SOIL
22	1349	957 / 0	0 / 0	0 / 0	0 / 0	392 / 0	0 / 0
12	1277	893 / 0	0 / 0	0 / 0	0 / 0	384 / 0	0 / 0

BEARING MATERIAL TO BE SPF NO.2 OR BETTER AT JOINT(S) 22

BRACING

TOP CHORD TO BE SHEATHED OR MAX. PURLIN SPACING = 3.83 FT.
MAX. UNBRACED BOTTOM CHORD LENGTH = 10.00 FT. OR RIGID CEILING DIRECTLY APPLIED.

ALL PITCH BREAKS AND PERIMETER CORNER JOINTS MUST BE LATERALLY RESTRAINED.

1 - 2x3 SPF No.2 LATERAL BRACE(S) AT 1/ 2 LENGTH OF 6-16. DBS = 12-0-0 . CBF = 83 LBS.
1 - 2x3 SPF No.2 LATERAL BRACE(S) AT 1/ 2 LENGTH OF 8-16. DBS = 20-0-0 . CBF = 73 LBS.

DBS = DIAGONAL BRACE SPACING (MAX). CBF = CUMULATIVE BRACING FORCE. FASTEN LATERAL BRACE(S) USING (0.122"X3") SPIRAL NAILS : 1 NAIL FOR 2x3 BRACE(S), 2 FOR 1x4, 2x4, 2x5, 3 FOR 2x6, 4 FOR 2x8, 5 FOR 2x10, AND 6 FOR 2x12.

END VERTICAL(S) MUST BE SHEATHED OR HAVE BRACES AS INDICATED IN THE MAX. UNBRACED LENGTH COLUMN OF THE TABLE BELOW

LOADING

TOTAL LOAD CASES: (3)

CHORDS

MEMB. FR-TO	MAX. FORCE (LBS)	FACTORED VERT. LOAD LC1 (PLF) FROM	TO	MAX CSI (LC)	MAX. UNBRAC LENGTH
1- 2	0 / 23	-77.3	-77.3	0.10 (1)	10.00
2- 3	-2671 / 0	-77.3	-77.3	0.30 (1)	4.00
3- 4	-2621 / 0	-77.3	-77.3	0.29 (1)	4.05
4- 5	-2901 / 0	-77.3	-77.3	0.32 (1)	3.83
5- 6	-2598 / 0	-77.3	-77.3	0.22 (1)	4.13
6- 7	-2057 / 0	-77.3	-77.3	0.19 (1)	4.58
7- 8	-2060 / 0	-77.3	-77.3	0.34 (1)	4.42
8- 9	-2457 / 0	-77.3	-77.3	0.35 (1)	4.11
9-10	-2457 / 0	-77.3	-77.3	0.35 (1)	4.11
10-11	-2565 / 0	-77.3	-77.3	0.42 (1)	3.97
22- 2	-1885 / 0	0.0	0.0	0.19 (1)	6.11
12-11	-1776 / 0	0.0	0.0	0.18 (1)	6.26
22-21	0 / 0	-17.5	-17.5	0.08 (3)	10.00
21-20	0 / 2405	-17.5	-17.5	0.43 (1)	10.00
20-19	0 / 2329	-17.5	-17.5	0.42 (1)	10.00
19-18	0 / 2913	-17.5	-17.5	0.51 (1)	10.00
18-17	0 / 2913	-17.5	-17.5	0.51 (1)	10.00
17-16	0 / 2339	-17.5	-17.5	0.44 (1)	10.00
16-15	0 / 2197	-17.5	-17.5	0.42 (1)	10.00
15-14	0 / 2197	-17.5	-17.5	0.42 (1)	10.00
14-13	0 / 2310	-17.5	-17.5	0.42 (1)	10.00
13-12	0 / 0	-17.5	-17.5	0.12 (3)	10.00

WEBS

MEMB. FR-TO	MAX. FORCE (LBS)	MAX CSI (LC)
21- 3	-351 / 0	0.07 (1)
3-20	-95 / 0	0.05 (1)
20- 4	0 / 145	0.04 (3)
4-19	0 / 911	0.21 (1)
19- 5	-638 / 0	0.34 (1)
5-17	-1002 / 0	0.85 (1)
17- 6	0 / 873	0.20 (1)
6-16	-1112 / 0	0.54 (1)
16- 7	0 / 1537	0.35 (1)
16- 8	-584 / 0	0.30 (1)
14- 8	0 / 173	0.04 (3)
14-10	-139 / 0	0.12 (1)
13-10	-336 / 0	0.09 (1)
2-21	0 / 2443	0.55 (1)
13-11	0 / 2351	0.53 (1)

RECEIVED
TOWN OF MILTON
MAR 29, 2017
17-4990
BUILDING DIVISION

READ ALL NOTES ON THIS PAGE AND ON THE ENGINEERING NOTE PAGE ENP-1. THE NOTE PAGE IS AN INTEGRAL PART OF THIS DRAWING AS IT CONTAINS SPECIFICATIONS AND CRITERIA USED IN THE DESIGN OF THIS COMPONENT.

DESIGN CRITERIA

SPECIFIED LOADS:

TOP	CH.	LL	=	23.3	PSF
		DL	=	3.0	PSF
BOT	CH.	LL	=	0.0	PSF
		DL	=	7.0	PSF
TOTAL	LOAD		=	33.3	PSF

SPACING = 24.0 IN. C/C

LOADING IN ALL FLAT SECTIONS BASED ON A SLOPE OF 6.00/12

THIS TRUSS IS DESIGNED FOR RESIDENTIAL OR SMALL BUILDING REQUIREMENTS OF PART 9, NBCC 2010

THIS DESIGN COMPLIES WITH:
- PART 9 OF OBC 2012 , BCBC 2012 , ABC 2014
- CSA 086-09
- TPIC 2011

(55 % OF 27.2 P.S.F. G.S.L. PLUS 8.4 P.S.F. RAIN LOAD) EQUALS 23.3 P.S.F. SPECIFIED ROOF LIVE LOAD

ALLOWABLE DEFL.(LL)= L/360 (1.28")
CALCULATED VERT. DEFL.(LL) = L/ 999 (0.20")
ALLOWABLE DEFL.(TL)= L/360 (1.28")
CALCULATED VERT. DEFL.(TL) = L/ 999 (0.36")

CSI: TC=0.42 (10-11:1) , BC=0.51 (17-19:1) , WB=0.85 (5-17:1) , SSI=0.18 (10-11:1)

DOL LUMBER=1.00 NAIL=1.00 LS BEND=1.10 COMP=1.10 SHEAR=1.10 TENS= 1.10

COMPANION LIVE LOAD FACTOR = 0.50

TRUSS PLATE MANUFACTURER IS NOT RESPONSIBLE FOR QUALITY CONTROL IN THE TRUSS MANUFACTURING PLANT .

NAIL VALUES

PLATE	GRIP(DRY) (PSI) MAX	MIN	SHEAR (PLI) MAX	MIN	SECTION (PLI) MAX	MIN
MT20	618	354	1667	822	2284	1656

PLATE PLACEMENT TOL. = 0.250 inches

PLATE ROTATION TOL. = 5.0 Deg.

JSI GRIP= 0.90 (17) (INPUT = 0.90)
JSI METAL= 0.79 (18) (INPUT = 1.00)

KOTT

JOB NAME	TRUSS NAME	QUANTITY	PLY	JOB DESC.	DRWG NO.
PT0317-054	T33	1	1	TRUSS DESC. LECCO RIDGE-BLOCK 328	

Kott Lumber Uxbridge, Stouffville, ON, CGC

Version 8.100 S Feb 9 2017 MiTek Industries, Inc. Mon Mar 13 09:57:05 2017 Page 1
ID:pF8Cn?9h9uHzAm5tCmlVl5yJJCp-TfUOFU0JlHQS_cNtHJ4rg1Xy8iswQDrG_olsg3zbOnC

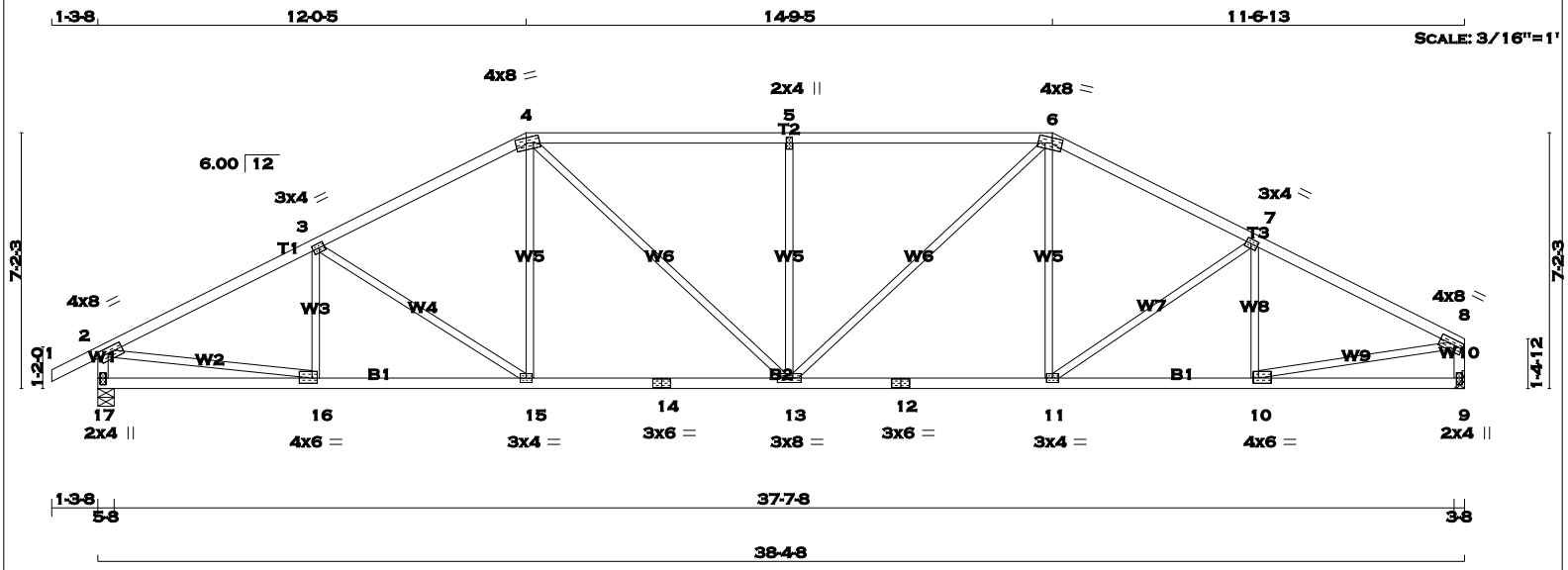

TOTAL WEIGHT = 153 lb
[M][F]

LUMBER
N. L. G. A. RULES

CHORDS	SIZE		LUMBER	DESCR.
1 - 4	2x4	DRY	No.2	SPF
4 - 6	2x4	DRY	No.2	SPF
6 - 8	2x4	DRY	No.2	SPF
17 - 2	2x4	DRY	No.2	SPF
9 - 8	2x4	DRY	No.2	SPF
17 - 14	2x4	DRY	No.2	SPF
14 - 12	2x4	DRY	No.2	SPF
12 - 9	2x4	DRY	No.2	SPF
ALL WEBS EXCEPT	2x3	DRY	No.2	SPF

DRY: SEASONED LUMBER.

PLATES (table is in inches)

JT	TYPE	PLATES	W	LEN	Y	X
2	TMVW-t	MT20	4.0	8.0	1.75	3.00
3	TMWW-t	MT20	3.0	4.0	1.50	1.75
4	TTWW-m	MT20	4.0	8.0	1.75	3.50
5	TMW+w	MT20	2.0	4.0		
6	TTWW-m	MT20	4.0	8.0	1.75	3.25
7	TMWW-t	MT20	3.0	4.0	1.50	1.75
8	TMVW-t	MT20	4.0	8.0	1.75	Edge
9	BMV1+p	MT20	2.0	4.0	2.25	1.00
10	BMWW-t	MT20	4.0	6.0	1.75	1.75
11	BMWW-t	MT20	3.0	4.0		
12	BS-t	MT20	3.0	6.0		
13	BMWWW-t	MT20	3.0	8.0		
14	BS-t	MT20	3.0	6.0		
15	BMWW-t	MT20	3.0	4.0		
16	BMWW-t	MT20	4.0	6.0	1.75	1.75
17	BMV1+p	MT20	2.0	4.0	2.25	1.00

Edge - INDICATES REFERENCE CORNER OF PLATE TOUCHES EDGE OF CHORD.

A SIZE FOR SIZE SUBSTITUTION OF MITEK MII20 WITH TEE-LOK TL20 PLATES IS ALLOWED.

DIMENSIONS, SUPPORTS AND LOADINGS SPECIFIED BY FABRICATOR TO BE VERIFIED BY BUILDING DESIGNER

BEARINGS

JT	FACTORED GROSS REACTION VERT	HORZ	MAXIMUM FACTORED GROSS REACTION DOWN	HORZ	UPLIFT	INPUT BRG IN-SX	REQRD BRG IN-SX
17	1925	0	1925	0	0	5-8	5-8
9	1820	0	1820	0	0	HANGER BY OTHERS	
						MIN. SEAT SIZE: 3-8	

UNFACTORED REACTIONS

JT	1ST LCASE COMBINED	SNOW	LIVE	PERM.LIVE	WIND	DEAD	SOIL
		MAX./MIN. COMPONENT REACTIONS					
17	1349	957 / 0	0 / 0	0 / 0	0 / 0	392 / 0	0 / 0
9	1277	893 / 0	0 / 0	0 / 0	0 / 0	384 / 0	0 / 0

BEARING MATERIAL TO BE SPF NO.2 OR BETTER AT JOINT(S) 17

BRACING
TOP CHORD TO BE SHEATHED OR MAX. PURLIN SPACING = 3.52 FT.
MAX. UNBRACED BOTTOM CHORD LENGTH = 10.00 FT. OR RIGID CEILING DIRECTLY APPLIED.

ALL PITCH BREAKS AND PERIMETER CORNER JOINTS MUST BE LATERALLY RESTRAINED.

LOADING
TOTAL LOAD CASES: (3)

CHORDS

MEMB. FR-TO	MAX. FORCE (LBS)	FACTORED VERT. LOAD (PLF) FROM	TO	LC1	MAX CSI (LC)	MAX. UNBRAC LENGTH
1- 2	0 / 23	-77.3	-77.3	0.10 (1)	10.00	
2- 3	-2751 / 0	-77.3	-77.3	0.51 (1)	3.75	
3- 4	-2475 / 0	-77.3	-77.3	0.46 (1)	3.97	
4- 5	-2619 / 0	-77.3	-77.3	0.72 (1)	3.52	
5- 6	-2619 / 0	-77.3	-77.3	0.72 (1)	3.52	
6- 7	-2422 / 0	-77.3	-77.3	0.43 (1)	4.04	
7- 8	-2586 / 0	-77.3	-77.3	0.46 (1)	3.91	
17- 2	-1877 / 0	0.0	0.0	0.19 (1)	6.13	
9- 8	-1774 / 0	0.0	0.0	0.18 (1)	6.27	
17-16	0 / 0	-17.5	-17.5	0.14 (3)	10.00	
16-15	0 / 2482	-17.5	-17.5	0.49 (1)	10.00	
15-14	0 / 2195	-17.5	-17.5	0.45 (1)	10.00	
14-13	0 / 2195	-17.5	-17.5	0.45 (1)	10.00	
13-12	0 / 2148	-17.5	-17.5	0.44 (1)	10.00	
12-11	0 / 2148	-17.5	-17.5	0.44 (1)	10.00	
11-10	0 / 2333	-17.5	-17.5	0.46 (1)	10.00	
10- 9	0 / 0	-17.5	-17.5	0.12 (3)	10.00	

WEBS

MEMB. FR-TO	MAX. FORCE (LBS)	MAX CSI (LC)
16- 3	-241 / 26	0.06 (1)
3-15	-348 / 0	0.35 (1)
15- 4	0 / 310	0.07 (1)
4-13	0 / 579	0.13 (1)
13- 5	-704 / 0	0.63 (1)
13- 6	0 / 643	0.14 (1)
11- 6	0 / 251	0.06 (1)
11- 7	-231 / 0	0.22 (1)
10- 7	-328 / 0	0.09 (1)
2-16	0 / 2506	0.56 (1)
10- 8	0 / 2373	0.53 (1)

DESIGN CRITERIA

SPECIFIED LOADS:

TOP CH.	LL	=	23.3	PSF
	DL	=	3.0	PSF
BOT CH.	LL	=	0.0	PSF
	DL	=	7.0	PSF
TOTAL LOAD		=	33.3	PSF

SPACING = 24.0 IN. C/C

LOADING IN FLAT SECTION BASED ON A SLOPE OF 6.00/12

THIS TRUSS IS DESIGNED FOR RESIDENTIAL OR SMALL BUILDING REQUIREMENTS OF PART 9, NBCC 2010

THIS DESIGN COMPLIES WITH:
- PART 9 OF OBC 2012 , BCBC 2012 , ABC 2014
- CSA 086-09
- TPIC 2011

(55 % OF 27.2 P.S.F. G.S.L. PLUS 8.4 P.S.F. RAIN LOAD) EQUALS 23.3 P.S.F. SPECIFIED ROOF LIVE LOAD

ALLOWABLE DEFL.(LL)= L/360 (1.28")
CALCULATED VERT. DEFL.(LL) = L/ 999 (0.17")
ALLOWABLE DEFL.(TL)= L/360 (1.28")
CALCULATED VERT. DEFL.(TL) = L/ 999 (0.32")

CSI: TC=0.72 (4-5:1) , BC=0.49 (15-16:1) , WB=0.63 (5-13:1) , SSI=0.28 (4-5:1)

DOL LUMBER=1.00 NAIL=1.00 LS BEND=1.10 COMP=1.10 SHEAR=1.10 TENS= 1.10

COMPANION LIVE LOAD FACTOR = 0.50

TRUSS PLATE MANUFACTURER IS NOT RESPONSIBLE FOR QUALITY CONTROL IN THE TRUSS MANUFACTURING PLANT .

NAIL VALUES

PLATE	GRIP(DRY) (PSI) MAX	MIN	SHEAR (PLI) MAX	MIN	SECTION (PLI) MAX	MIN
MT20	618	354	1667	822	2284	1656

PLATE PLACEMENT TOL. = 0.250 inches

PLATE ROTATION TOL. = 5.0 Deg.

JSI GRIP= 0.90 (6) (INPUT = 0.90)
JSI METAL= 0.65 (14) (INPUT = 1.00)

LICENSED PROFESSIONAL ENGINEER
P.M. TREVISAN
100136551
March 13th, 2017
PROVINCE OF ONTARIO

RECEIVED
TOWN OF MILTON
MAR 29, 2017
17-4990
BUILDING DIVISION

READ ALL NOTES ON THIS PAGE AND ON THE ENGINEERING NOTE PAGE ENP-1. THE NOTE PAGE IS AN INTEGRAL PART OF THIS DRAWING AS IT CONTAINS SPECIFICATIONS AND CRITERIA USED IN THE DESIGN OF THIS COMPONENT.

KOTT

JOB NAME	TRUSS NAME	QUANTITY	PLY	JOB DESC.	DRWG NO.
PT0317-054	**T34**	**1**	**1**	TRUSS DESC. LECCO RIDGE-BLOCK 328	

Kott Lumber Uxbridge, Stouffville, ON, CGC

Version 8.100 S Feb 9 2017 MiTek Industries, Inc. Mon Mar 13 09:57:05 2017 Page 1
ID:pF8Cn?9h9uHzAm5tCmlVl5yJJCp-TfUOFU0JlHQS_cNtHJ4rg1XxYir_QEsG_olsg3zbOnC

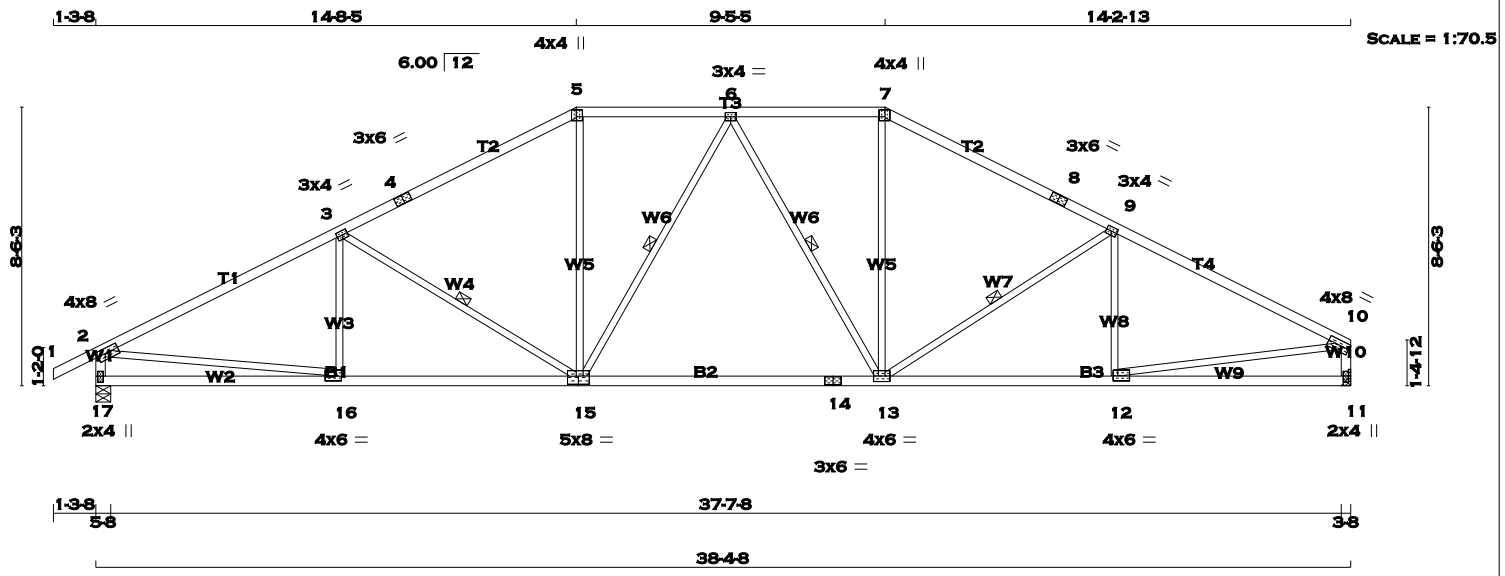

TOTAL WEIGHT = 155 lb

LUMBER
N. L. G. A. RULES

CHORDS	SIZE		LUMBER	DESCR.
1 - 4	2x4	DRY	No.2	SPF
4 - 5	2x4	DRY	No.2	SPF
5 - 7	2x4	DRY	No.2	SPF
7 - 8	2x4	DRY	No.2	SPF
8 - 10	2x4	DRY	No.2	SPF
17 - 2	2x4	DRY	No.2	SPF
11 - 10	2x4	DRY	No.2	SPF
17 - 15	2x4	DRY	No.2	SPF
15 - 14	2x4	DRY	No.2	SPF
14 - 11	2x4	DRY	No.2	SPF
ALL WEBS EXCEPT	2x3	DRY	No.2	SPF

DRY: SEASONED LUMBER.

PLATES (table is in inches)

JT	TYPE	PLATES	W	LEN	Y	X
2	TMVW-t	MT20	4.0	8.0	1.75	3.00
3	TMWW-t	MT20	3.0	4.0	1.50	1.75
4	TS-t	MT20	3.0	6.0		
5	TTW+p	MT20	4.0	4.0	2.50	2.25
6	TMWW-t	MT20	3.0	4.0		
7	TTW+p	MT20	4.0	4.0	2.50	2.25
8	TS-t	MT20	3.0	6.0		
9	TMWW-t	MT20	3.0	4.0	1.50	1.75
10	TMVW-t	MT20	4.0	8.0	1.75	Edge
11	BMV1+p	MT20	2.0	4.0	2.25	1.00
12	BMWW-t	MT20	4.0	6.0	1.75	1.75
13	BMWWW-t	MT20	4.0	6.0		
14	BS-t	MT20	3.0	6.0		
15	BSWWW-l	MT20	5.0	8.0	3.00	4.00
16	BMWW-t	MT20	4.0	6.0	1.75	2.00
17	BMV1+p	MT20	2.0	4.0	2.25	1.00

Edge - INDICATES REFERENCE CORNER OF PLATE TOUCHES EDGE OF CHORD.

A SIZE FOR SIZE SUBSTITUTION OF MITEK MII20 WITH TEE-LOK TL20 PLATES IS ALLOWED.

DIMENSIONS, SUPPORTS AND LOADINGS SPECIFIED BY FABRICATOR TO BE VERIFIED BY BUILDING DESIGNER

BEARINGS

JT	FACTORED GROSS REACTION VERT	HORZ	MAXIMUM FACTORED GROSS REACTION DOWN	HORZ	UPLIFT	INPUT BRG IN-SX	REQRD BRG IN-SX
17	1925	0	1925	0	0	5-8	5-8
11	1820	0	1820	0	0	HANGER BY OTHERS	
						MIN. SEAT SIZE: 3-8	

UNFACTORED REACTIONS

JT	1ST LCASE COMBINED	SNOW	MAX./MIN. COMPONENT REACTIONS LIVE	PERM.LIVE	WIND	DEAD	SOIL
17	1349	957 / 0	0 / 0	0 / 0	0 / 0	392 / 0	0 / 0
11	1277	893 / 0	0 / 0	0 / 0	0 / 0	384 / 0	0 / 0

BEARING MATERIAL TO BE SPF NO.2 OR BETTER AT JOINT(S) 17

BRACING
TOP CHORD TO BE SHEATHED OR MAX. PURLIN SPACING = 3.39 FT.
MAX. UNBRACED BOTTOM CHORD LENGTH = 10.00 FT. OR RIGID CEILING DIRECTLY APPLIED.

ALL PITCH BREAKS AND PERIMETER CORNER JOINTS MUST BE LATERALLY RESTRAINED.

1 - 2x3 SPF No.2 LATERAL BRACE(S) AT 1/ 2 LENGTH OF 3-15, 6-15, 6-13, 9-13. DBS = 20-0-0 . CBF = 72 LBS.

DBS = DIAGONAL BRACE SPACING (MAX). CBF = CUMULATIVE BRACING FORCE. FASTEN LATERAL BRACE(S) USING (0.122"X3") SPIRAL NAILS : 1 NAIL FOR 2x3 BRACE(S), 2 FOR 1x4, 2x4, 2x5, 3 FOR 2x6, 4 FOR 2x8, 5 FOR 2x10, AND 6 FOR 2x12.

END VERTICAL(S) MUST BE SHEATHED OR HAVE BRACES AS INDICATED IN THE MAX. UNBRACED LENGTH COLUMN OF THE TABLE BELOW

LOADING
TOTAL LOAD CASES: (3)

CHORDS

MEMB. FR-TO	MAX. FACTORED FORCE (LBS)	FACTORED VERT. LOAD LC1 (PLF) FROM	TO	MAX CSI (LC)	MAX. UNBRAC LENGTH
1- 2	0 / 23	-77.3	-77.3	0.10 (1)	10.00
2- 3	-2774 / 0	-77.3	-77.3	0.82 (1)	3.39
3- 4	-2289 / 0	-77.3	-77.3	0.71 (1)	3.78
4- 5	-2289 / 0	-77.3	-77.3	0.71 (1)	3.78
5- 6	-2024 / 0	-77.3	-77.3	0.26 (1)	4.52
6- 7	-2001 / 0	-77.3	-77.3	0.26 (1)	4.54
7- 8	-2259 / 0	-77.3	-77.3	0.65 (1)	3.88
8- 9	-2259 / 0	-77.3	-77.3	0.65 (1)	3.88
9-10	-2637 / 0	-77.3	-77.3	0.74 (1)	3.56
17- 2	-1869 / 0	0.0	0.0	0.19 (1)	6.13
11-10	-1766 / 0	0.0	0.0	0.18 (1)	6.28
17-16	0 / 0	-17.5	-17.5	0.20 (3)	10.00
16-15	0 / 2508	-17.5	-17.5	0.55 (1)	10.00
15-14	0 / 2137	-17.5	-17.5	0.49 (1)	10.00
14-13	0 / 2137	-17.5	-17.5	0.49 (1)	10.00
13-12	0 / 2385	-17.5	-17.5	0.53 (1)	10.00
12-11	0 / 0	-17.5	-17.5	0.19 (3)	10.00

WEBS

MEMB. FR-TO	MAX. FACTORED FORCE (LBS)	MAX CSI (LC)
16- 3	-156 / 70	0.06 (1)
3-15	-577 / 0	0.30 (1)
15- 5	0 / 657	0.15 (1)
15- 6	-229 / 0	0.14 (1)
6-13	-278 / 0	0.18 (1)
13- 7	0 / 651	0.15 (1)
13- 9	-470 / 0	0.23 (1)
12- 9	-230 / 44	0.09 (1)
2-16	0 / 2525	0.57 (1)
12-10	0 / 2412	0.54 (1)

RECEIVED
TOWN OF MILTON
MAR 29, 2017
17-4990
BUILDING DIVISION

READ ALL NOTES ON THIS PAGE AND ON THE ENGINEERING NOTE PAGE ENP-1. THE NOTE PAGE IS AN INTEGRAL PART OF THIS DRAWING AS IT CONTAINS SPECIFICATIONS AND CRITERIA USED IN THE DESIGN OF THIS COMPONENT.

DESIGN CRITERIA

SPECIFIED LOADS:

TOP	CH.	LL	=	23.3	PSF
		DL	=	3.0	PSF
BOT	CH.	LL	=	0.0	PSF
		DL	=	7.0	PSF
TOTAL	LOAD		=	33.3	PSF

SPACING = 24.0 IN. C/C

LOADING IN FLAT SECTION BASED ON A SLOPE OF 6.00/12

THIS TRUSS IS DESIGNED FOR RESIDENTIAL OR SMALL BUILDING REQUIREMENTS OF PART 9, NBCC 2010

THIS DESIGN COMPLIES WITH:
- PART 9 OF OBC 2012 , BCBC 2012 , ABC 2014
- CSA 086-09
- TPIC 2011

(55 % OF 27.2 P.S.F. G.S.L. PLUS 8.4 P.S.F. RAIN LOAD) EQUALS 23.3 P.S.F. SPECIFIED ROOF LIVE LOAD

ALLOWABLE DEFL.(LL)= L/360 (1.28")
CALCULATED VERT. DEFL.(LL) = L/ 999 (0.15")
ALLOWABLE DEFL.(TL)= L/360 (1.28")
CALCULATED VERT. DEFL.(TL) = L/ 999 (0.37")

CSI: TC=0.82 (2-3:1) , BC=0.55 (15-16:1) , WB=0.57 (2-16:1) , SSI=0.25 (2-3:1)

DOL LUMBER=1.00 NAIL=1.00 LS BEND=1.10 COMP=1.10 SHEAR=1.10 TENS= 1.10

COMPANION LIVE LOAD FACTOR = 0.50

TRUSS PLATE MANUFACTURER IS NOT RESPONSIBLE FOR QUALITY CONTROL IN THE TRUSS MANUFACTURING PLANT .

NAIL VALUES

PLATE	GRIP(DRY) (PSI) MAX	MIN	SHEAR (PLI) MAX	MIN	SECTION (PLI) MAX	MIN
MT20	618	354	1667	822	2284	1656

PLATE PLACEMENT TOL. = 0.250 inches

PLATE ROTATION TOL. = 5.0 Deg.

JSI GRIP= 0.90 (5) (INPUT = 0.90)
JSI METAL= 0.63 (16) (INPUT = 1.00)

KOTT

JOB NAME	TRUSS NAME	QUANTITY	PLY	JOB DESC.	DRWG NO.
PT0317-054	T35	1	1	TRUSS DESC. LECCO RIDGE-BLOCK 328	

Kott Lumber Uxbridge, Stouffville, ON, CGC

Version 8.100 S Feb 9 2017 MiTek Industries, Inc. Mon Mar 13 09:57:05 2017 Page 1
ID:pF8Cn?9h9uHzAm5tCmlVl5yJJCp-TfUOFU0JIHQS_cNtHJ4rg1X0zisSQE?G_olsg3zbOnC

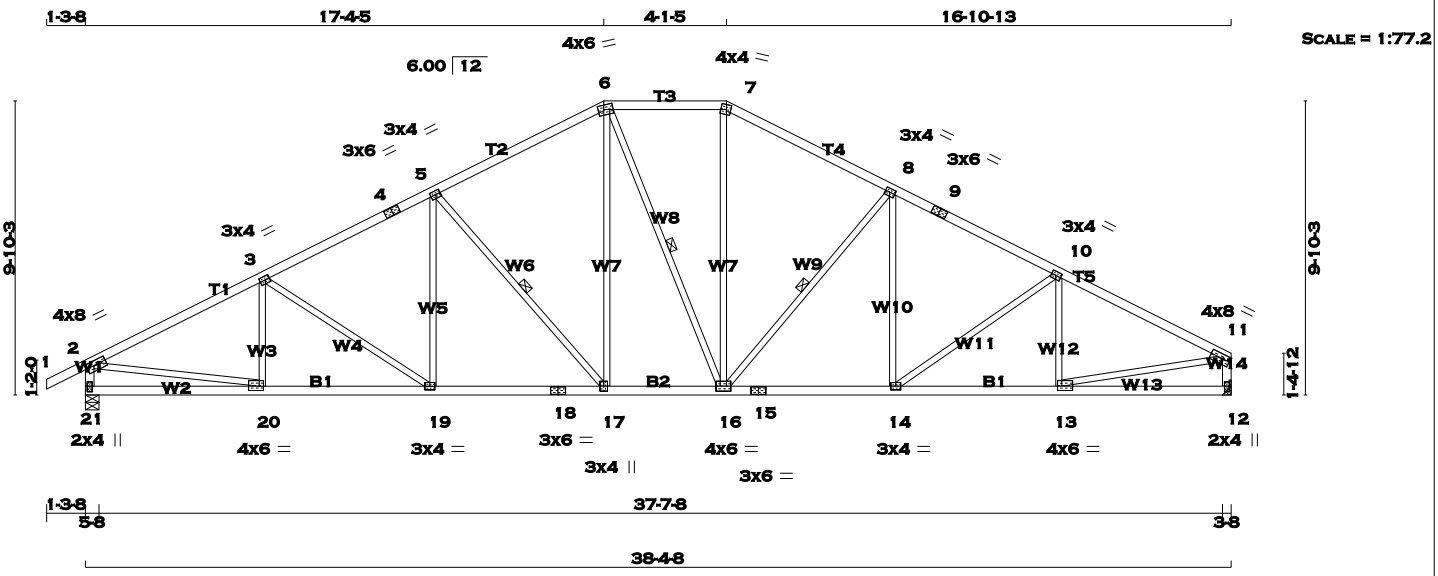

TOTAL WEIGHT = 169 lb

LUMBER
N. L. G. A. RULES

CHORDS	SIZE		LUMBER	DESCR.
1 - 4	2x4	DRY	No.2	SPF
4 - 6	2x4	DRY	No.2	SPF
6 - 7	2x4	DRY	No.2	SPF
7 - 9	2x4	DRY	No.2	SPF
9 - 11	2x4	DRY	No.2	SPF
21 - 2	2x4	DRY	No.2	SPF
12 - 11	2x4	DRY	No.2	SPF
21 - 18	2x4	DRY	No.2	SPF
18 - 15	2x4	DRY	No.2	SPF
15 - 12	2x4	DRY	No.2	SPF
ALL WEBS EXCEPT	2x3	DRY	No.2	SPF

DRY: SEASONED LUMBER.

PLATES (table is in inches)

JT	TYPE	PLATES	W	LEN	Y	X
2	TMVW-t	MT20	4.0	8.0	1.75	3.00
3, 5, 8, 10						
3	TMWW-t	MT20	3.0	4.0	1.50	1.75
4	TS-t	MT20	3.0	6.0		
6	TTWW-m	MT20	4.0	6.0	1.75	2.25
7	TTW-m	MT20	4.0	4.0	2.00	1.75
9	TS-t	MT20	3.0	6.0		
11	TMVW-t	MT20	4.0	8.0	1.75	Edge
12	BMV1+p	MT20	2.0	4.0	2.25	1.00
13	BMWW-t	MT20	4.0	6.0	1.75	1.75
14	BMWW-t	MT20	3.0	4.0		
15	BS-t	MT20	3.0	6.0		
16	BMWWW-t	MT20	4.0	6.0		
17	BMWW+t	MT20	3.0	4.0		
18	BS-t	MT20	3.0	6.0		
19	BMWW-t	MT20	3.0	4.0		
20	BMWW-t	MT20	4.0	6.0	1.75	1.75
21	BMV1+p	MT20	2.0	4.0	2.25	1.00

Edge - INDICATES REFERENCE CORNER OF PLATE TOUCHES EDGE OF CHORD.

A SIZE FOR SIZE SUBSTITUTION OF MITEK MII20 WITH TEE-LOK TL20 PLATES IS ALLOWED.

DIMENSIONS, SUPPORTS AND LOADINGS SPECIFIED BY FABRICATOR TO BE VERIFIED BY BUILDING DESIGNER

BEARINGS

JT	FACTORED GROSS REACTION VERT	HORZ	MAXIMUM FACTORED GROSS REACTION DOWN	HORZ	UPLIFT	INPUT BRG IN-SX	REQRD BRG IN-SX
21	1925	0	1925	0	0	5-8	5-8
12	1820	0	1820	0	0	HANGER BY OTHERS	
						MIN. SEAT SIZE: 3-8	

UNFACTORED REACTIONS

JT	1ST LCASE COMBINED	SNOW	MAX./MIN. COMPONENT REACTIONS LIVE	PERM.LIVE	WIND	DEAD	SOIL
21	1349	957 / 0	0 / 0	0 / 0	0 / 0	392 / 0	0 / 0
12	1277	893 / 0	0 / 0	0 / 0	0 / 0	384 / 0	0 / 0

BEARING MATERIAL TO BE SPF NO.2 OR BETTER AT JOINT(S) 21

BRACING
TOP CHORD TO BE SHEATHED OR MAX. PURLIN SPACING = 3.81 FT.
MAX. UNBRACED BOTTOM CHORD LENGTH = 10.00 FT. OR RIGID CEILING DIRECTLY APPLIED.

ALL PITCH BREAKS AND PERIMETER CORNER JOINTS MUST BE LATERALLY RESTRAINED.

1 - 2x3 SPF No.2 LATERAL BRACE(S) AT 1/ 2 LENGTH OF 5-17, 6-16, 8-16. DBS = 20-0-0 . CBF = 84 LBS.

DBS = DIAGONAL BRACE SPACING (MAX). CBF = CUMULATIVE BRACING FORCE. FASTEN LATERAL BRACE(S) USING (0.122"X3") SPIRAL NAILS : 1 NAIL FOR 2x3 BRACE(S), 2 FOR 1x4, 2x4, 2x5, 3 FOR 2x6, 4 FOR 2x8, 5 FOR 2x10, AND 6 FOR 2x12.

END VERTICAL(S) MUST BE SHEATHED OR HAVE BRACES AS INDICATED IN THE MAX. UNBRACED LENGTH COLUMN OF THE TABLE BELOW

LOADING
TOTAL LOAD CASES: (3)

CHORDS

MEMB. FR-TO	MAX. FORCE (LBS)	FACTORED VERT. LOAD LC1 (PLF) FROM	TO	MAX CSI (LC)	MAX. UNBRAC LENGTH
1- 2	0 / 23	-77.3	-77.3	0.10 (1)	10.00
2- 3	-2732 / 0	-77.3	-77.3	0.47 (1)	3.81
3- 4	-2519 / 0	-77.3	-77.3	0.39 (1)	4.05
4- 5	-2519 / 0	-77.3	-77.3	0.39 (1)	4.05
5- 6	-2043 / 0	-77.3	-77.3	0.37 (1)	4.41
6- 7	-1808 / 0	-77.3	-77.3	0.21 (1)	4.79
7- 8	-2034 / 0	-77.3	-77.3	0.35 (1)	4.44
8- 9	-2450 / 0	-77.3	-77.3	0.36 (1)	4.11
9-10	-2450 / 0	-77.3	-77.3	0.36 (1)	4.11
10-11	-2569 / 0	-77.3	-77.3	0.43 (1)	3.96
21- 2	-1879 / 0	0.0	0.0	0.19 (1)	6.12
12-11	-1776 / 0	0.0	0.0	0.18 (1)	6.26
21-20	0 / 0	-17.5	-17.5	0.13 (3)	10.00
20-19	0 / 2460	-17.5	-17.5	0.45 (1)	10.00
19-18	0 / 2253	-17.5	-17.5	0.42 (1)	10.00
18-17	0 / 2253	-17.5	-17.5	0.42 (1)	10.00
17-16	0 / 1816	-17.5	-17.5	0.35 (1)	10.00
16-15	0 / 2191	-17.5	-17.5	0.41 (1)	10.00
15-14	0 / 2191	-17.5	-17.5	0.41 (1)	10.00
14-13	0 / 2314	-17.5	-17.5	0.42 (1)	10.00
13-12	0 / 0	-17.5	-17.5	0.12 (3)	10.00

WEBS

MEMB. FR-TO	MAX. FORCE (LBS)	MAX CSI (LC)
20- 3	-249 / 21	0.06 (1)
3-19	-249 / 0	0.22 (1)
19- 5	0 / 243	0.05 (1)
5-17	-675 / 0	0.37 (1)
17- 6	0 / 589	0.13 (1)
6-16	-21 / 0	0.02 (1)
16- 7	0 / 571	0.13 (1)
16- 8	-607 / 0	0.32 (1)
14- 8	0 / 185	0.05 (3)
14-10	-151 / 0	0.13 (1)
13-10	-330 / 0	0.09 (1)
2-20	0 / 2485	0.56 (1)
13-11	0 / 2355	0.53 (1)

RECEIVED
TOWN OF MILTON
MAR 29, 2017
17-4990
BUILDING DIVISION

READ ALL NOTES ON THIS PAGE AND ON THE ENGINEERING NOTE PAGE ENP-1. THE NOTE PAGE IS AN INTEGRAL PART OF THIS DRAWING AS IT CONTAINS SPECIFICATIONS AND CRITERIA USED IN THE DESIGN OF THIS COMPONENT.

DESIGN CRITERIA

SPECIFIED LOADS:

TOP	CH.	LL	=	23.3	PSF
		DL	=	3.0	PSF
BOT	CH.	LL	=	0.0	PSF
		DL	=	7.0	PSF
TOTAL	LOAD		=	33.3	PSF

SPACING = 24.0 IN. C/C

LOADING IN FLAT SECTION BASED ON A SLOPE OF 6.00/12

THIS TRUSS IS DESIGNED FOR RESIDENTIAL OR SMALL BUILDING REQUIREMENTS OF PART 9, NBCC 2010

THIS DESIGN COMPLIES WITH:
- PART 9 OF OBC 2012 , BCBC 2012 , ABC 2014
- CSA 086-09
- TPIC 2011

(55 % OF 27.2 P.S.F. G.S.L. PLUS 8.4 P.S.F. RAIN LOAD) EQUALS 23.3 P.S.F. SPECIFIED ROOF LIVE LOAD

ALLOWABLE DEFL.(LL)= L/360 (1.28")
CALCULATED VERT. DEFL.(LL) = L/ 999 (0.15")
ALLOWABLE DEFL.(TL)= L/360 (1.28")
CALCULATED VERT. DEFL.(TL) = L/ 999 (0.28")

CSI: TC=0.47 (2-3:1) , BC=0.45 (19-20:1) , WB=0.56 (2-20:1) , SSI=0.19 (2-3:1)

DOL LUMBER=1.00 NAIL=1.00 LS BEND=1.10 COMP=1.10 SHEAR=1.10 TENS= 1.10

COMPANION LIVE LOAD FACTOR = 0.50

TRUSS PLATE MANUFACTURER IS NOT RESPONSIBLE FOR QUALITY CONTROL IN THE TRUSS MANUFACTURING PLANT .

NAIL VALUES

PLATE	GRIP(DRY) (PSI) MAX	MIN	SHEAR (PLI) MAX	MIN	SECTION (PLI) MAX	MIN
MT20	618	354	1667	822	2284	1656

PLATE PLACEMENT TOL. = 0.250 inches

PLATE ROTATION TOL. = 5.0 Deg.

JSI GRIP= 0.89 (7) (INPUT = 0.90)
JSI METAL= 0.62 (18) (INPUT = 1.00)

KOTT

JOB NAME	TRUSS NAME	QUANTITY	PLY	JOB DESC.	DRWG NO.
PT0317-054	T36	6	1	TRUSS DESC. LECCO RIDGE-BLOCK 328	ENG JOB: PT0317-054

Kott Lumber Uxbridge, Stouffville, ON, CGC

Version 8.100 S Feb 9 2017 MiTek Industries, Inc. Mon Mar 13 09:57:06 2017 Page 1

ID:pF8Cn?9h9uHzAm5tCmlVl5yJJCp-yr2mSp1xWbYJcmy4r0b4CE49e6CJ9h4QDSVPDWzbOnB

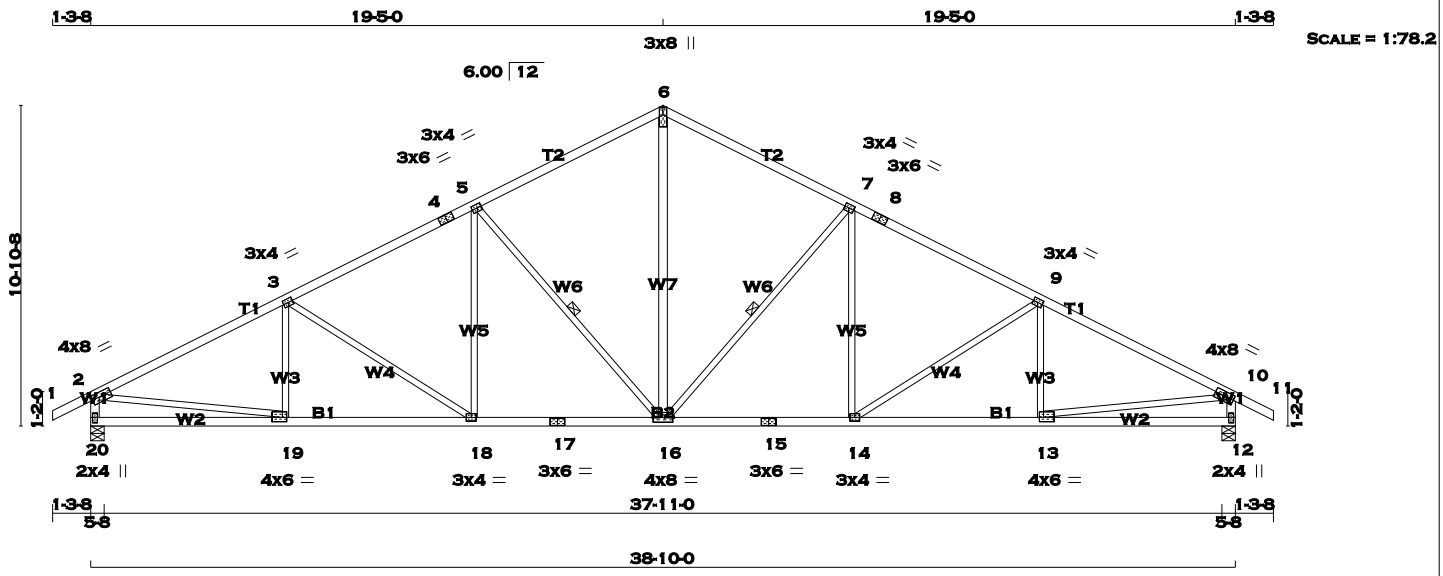

TOTAL WEIGHT = 6 X 166 = 996 lb

[M][F]

LUMBER

N. L. G. A. RULES

CHORDS	SIZE		LUMBER	DESCR.
1 - 4	2x4	DRY	No.2	SPF
4 - 6	2x4	DRY	No.2	SPF
6 - 8	2x4	DRY	No.2	SPF
8 - 11	2x4	DRY	No.2	SPF
20 - 2	2x4	DRY	No.2	SPF
12 - 10	2x4	DRY	No.2	SPF
20 - 17	2x4	DRY	No.2	SPF
17 - 15	2x4	DRY	No.2	SPF
15 - 12	2x4	DRY	No.2	SPF
ALL WEBS	2x3	DRY	No.2	SPF
EXCEPT				
16 - 6	2x4	DRY	No.2	SPF

DRY: SEASONED LUMBER.

PLATES (table is in inches)

JT	TYPE	PLATES	W	LEN	Y	X
2	TMVW-t	MT20	4.0	8.0	1.75	3.00
3, 5, 7, 9						
3	TMWW-t	MT20	3.0	4.0	1.50	1.75
4	TS-t	MT20	3.0	6.0		
6	TTW+p	MT20	3.0	8.0	Edge	
8	TS-t	MT20	3.0	6.0		
10	TMVW-t	MT20	4.0	8.0	1.75	3.00
12	BMV1+p	MT20	2.0	4.0	2.25	1.00
13	BMWW-t	MT20	4.0	6.0	1.75	1.75
14	BMWW-t	MT20	3.0	4.0		
15	BS-t	MT20	3.0	6.0		
16	BMWWW-t	MT20	4.0	8.0		
17	BS-t	MT20	3.0	6.0		
18	BMWW-t	MT20	3.0	4.0		
19	BMWW-t	MT20	4.0	6.0	1.75	1.75
20	BMV1+p	MT20	2.0	4.0	2.25	1.00

Edge - INDICATES REFERENCE CORNER OF PLATE TOUCHES EDGE OF CHORD.

A SIZE FOR SIZE SUBSTITUTION OF MITEK MII20 WITH TEE-LOK TL20 PLATES IS ALLOWED.

DIMENSIONS, SUPPORTS AND LOADINGS SPECIFIED BY FABRICATOR TO BE VERIFIED BY BUILDING DESIGNER

BEARINGS

JT	FACTORED GROSS REACTION VERT	HORZ	MAXIMUM FACTORED GROSS REACTION DOWN	HORZ	UPLIFT	INPUT BRG IN-SX	REQRD BRG IN-SX
20	1947	0	1947	0	0	5-8	5-8
12	1947	0	1947	0	0	5-8	5-8

UNFACTORED REACTIONS

JT	1ST LCASE COMBINED	MAX./MIN. COMPONENT REACTIONS SNOW	LIVE	PERM.LIVE	WIND	DEAD	SOIL
20	1364	967 / 0	0 / 0	0 / 0	0 / 0	396 / 0	0 / 0
12	1364	967 / 0	0 / 0	0 / 0	0 / 0	396 / 0	0 / 0

BEARING MATERIAL TO BE SPF NO.2 OR BETTER AT JOINT(S) 20, 12

BRACING

TOP CHORD TO BE SHEATHED OR MAX. PURLIN SPACING = 3.66 FT.
MAX. UNBRACED BOTTOM CHORD LENGTH = 10.00 FT. OR RIGID CEILING DIRECTLY APPLIED.

ALL PITCH BREAKS AND PERIMETER CORNER JOINTS MUST BE LATERALLY RESTRAINED.

1 - 2x3 SPF No.2 LATERAL BRACE(S) AT 1/ 2 LENGTH OF 7-16, 5-16. DBS = 18-0-0 . CBF = 88 LBS.

DBS = DIAGONAL BRACE SPACING (MAX). CBF = CUMULATIVE BRACING FORCE. FASTEN LATERAL BRACE(S) USING (0.122"X3") SPIRAL NAILS : 1 NAIL FOR 2x3 BRACE(S), 2 FOR 1x4, 2x4, 2x5, 3 FOR 2x6, 4 FOR 2x8, 5 FOR 2x10, AND 6 FOR 2x12.

END VERTICAL(S) MUST BE SHEATHED OR HAVE BRACES AS INDICATED IN THE MAX. UNBRACED LENGTH COLUMN OF THE TABLE BELOW

LOADING

TOTAL LOAD CASES: (3)

CHORDS MEMB. FR-TO	MAX. FACTORED FORCE (LBS)	FACTORED VERT. LOAD (PLF) FROM	TO	LC1 CSI (LC)	MAX UNBRAC LENGTH	WEBS MEMB. FR-TO	MAX. FACTORED FORCE (LBS)	MAX CSI (LC)
1- 2	0 / 23	-77.3	-77.3	0.10 (1)	10.00	16- 6	0 / 1299	0.21 (1)
2- 3	-2790 / 0	-77.3	-77.3	0.61 (1)	3.66	16- 7	-783 / 0	0.53 (1)
3- 4	-2473 / 0	-77.3	-77.3	0.48 (1)	3.99	14- 7	0 / 305	0.07 (1)
4- 5	-2473 / 0	-77.3	-77.3	0.48 (1)	3.99	14- 9	-360 / 0	0.43 (1)
5- 6	-1920 / 0	-77.3	-77.3	0.46 (1)	4.41	13- 9	-203 / 47	0.06 (1)
6- 7	-1920 / 0	-77.3	-77.3	0.46 (1)	4.41	5-16	-783 / 0	0.53 (1)
7- 8	-2473 / 0	-77.3	-77.3	0.48 (1)	3.99	18- 5	0 / 305	0.07 (1)
8- 9	-2473 / 0	-77.3	-77.3	0.48 (1)	3.99	3-18	-360 / 0	0.43 (1)
9-10	-2790 / 0	-77.3	-77.3	0.61 (1)	3.66	19- 3	-203 / 47	0.06 (1)
10-11	0 / 23	-77.3	-77.3	0.10 (1)	10.00	2-19	0 / 2535	0.57 (1)
20- 2	-1897 / 0	0.0	0.0	0.19 (1)	6.10	13-10	0 / 2535	0.57 (1)
12-10	-1897 / 0	0.0	0.0	0.19 (1)	6.10			
20-19	0 / 0	-17.5	-17.5	0.17 (3)	10.00			
19-18	0 / 2514	-17.5	-17.5	0.48 (1)	10.00			
18-17	0 / 2212	-17.5	-17.5	0.44 (1)	10.00			
17-16	0 / 2212	-17.5	-17.5	0.44 (1)	10.00			
16-15	0 / 2212	-17.5	-17.5	0.44 (1)	10.00			
15-14	0 / 2212	-17.5	-17.5	0.44 (1)	10.00			
14-13	0 / 2514	-17.5	-17.5	0.48 (1)	10.00			
13-12	0 / 0	-17.5	-17.5	0.17 (3)	10.00			

DESIGN CRITERIA

SPECIFIED LOADS:

TOP	CH.	LL	=	23.3	PSF
		DL	=	3.0	PSF
BOT	CH.	LL	=	0.0	PSF
		DL	=	7.0	PSF
TOTAL	LOAD		=	33.3	PSF

SPACING = 24.0 IN. C/C

THIS TRUSS IS DESIGNED FOR RESIDENTIAL OR SMALL BUILDING REQUIREMENTS OF PART 9, NBCC 2010

THIS DESIGN COMPLIES WITH:
- PART 9 OF OBC 2012 , BCBC 2012 , ABC 2014
- CSA 086-09
- TPIC 2011

(55 % OF 27.2 P.S.F. G.S.L. PLUS 8.4 P.S.F. RAIN LOAD) EQUALS 23.3 P.S.F. SPECIFIED ROOF LIVE LOAD

ALLOWABLE DEFL.(LL)= L/360 (1.29")
CALCULATED VERT. DEFL.(LL) = L/ 999 (0.16")
ALLOWABLE DEFL.(TL)= L/360 (1.29")
CALCULATED VERT. DEFL.(TL) = L/ 999 (0.30")

CSI: TC=0.61 (9-10:1) , BC=0.48 (13-14:1) , WB=0.57 (2-19:1) , SSI=0.21 (9-10:1)

DOL LUMBER=1.00 NAIL=1.00 LS BEND=1.10 COMP=1.10 SHEAR=1.10 TENS= 1.10

COMPANION LIVE LOAD FACTOR = 0.50

TRUSS PLATE MANUFACTURER IS NOT RESPONSIBLE FOR QUALITY CONTROL IN THE TRUSS MANUFACTURING PLANT .

NAIL VALUES

PLATE	GRIP(DRY) (PSI) MAX	MIN	SHEAR (PLI) MAX	MIN	SECTION (PLI) MAX	MIN
MT20	618	354	1667	822	2284	1656

PLATE PLACEMENT TOL. = 0.250 inches

PLATE ROTATION TOL. = 5.0 Deg.

JSI GRIP= 0.90 (6) (INPUT = 0.90)
JSI METAL= 0.63 (19) (INPUT = 1.00)

LICENSED PROFESSIONAL ENGINEER
R.M. TREVISAN
100136551
March 13th, 2017
PROVINCE OF ONTARIO

RECEIVED
TOWN OF MILTON
MAR 29, 2017
17-4990
BUILDING DIVISION

READ ALL NOTES ON THIS PAGE AND ON THE ENGINEERING NOTE PAGE ENP-1. THE NOTE PAGE IS AN INTEGRAL PART OF THIS DRAWING AS IT CONTAINS SPECIFICATIONS AND CRITERIA USED IN THE DESIGN OF THIS COMPONENT.

KOTT

JOB NAME	TRUSS NAME	QUANTITY	PLY	JOB DESC.	DRWG NO.
PT0317-054	T37	7	1	TRUSS DESC. LECCO RIDGE-BLOCK 328	ENG JOB: PT0317-054

Kott Lumber Uxbridge, Stouffville, ON, CGC

Version 8.100 S Feb 9 2017 MiTek Industries, Inc. Mon Mar 13 09:57:06 2017 Page 1

ID:pF8Cn?9h9uHzAm5tCmlVl5yJJCp-yr2mSp1xWbYJcmy4r0b4CE4Bo6DG9i3QDSVPDWzbOnB

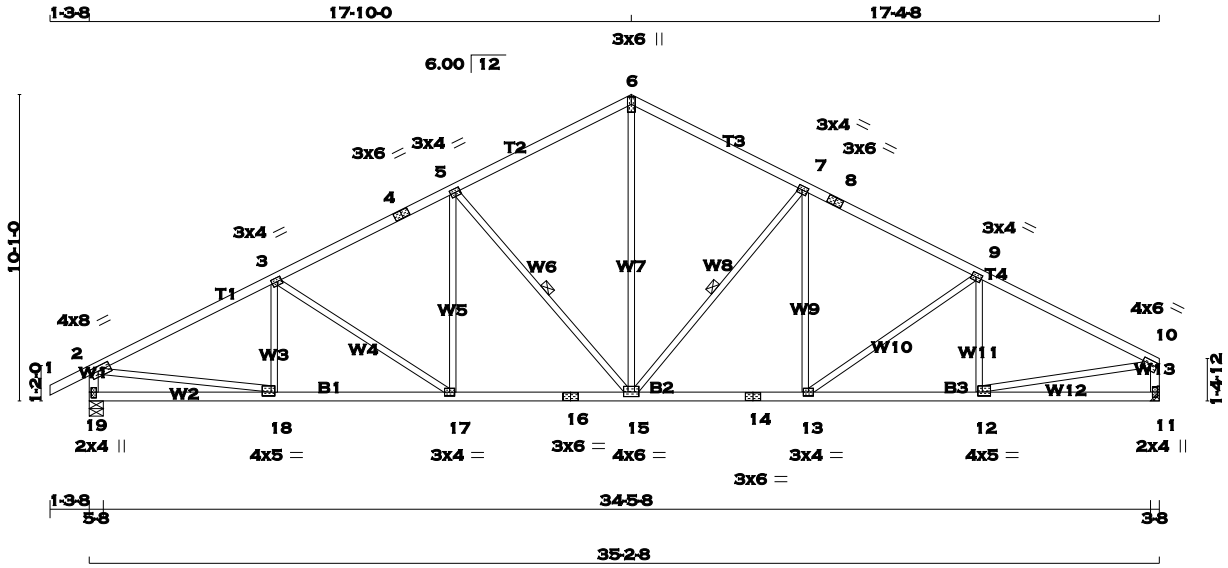

TOTAL WEIGHT = 7 X 148 = 1034 lb

[M][F]

LUMBER

N. L. G. A. RULES

CHORDS	SIZE		LUMBER	DESCR.
1 - 4	2x4	DRY	No.2	SPF
4 - 6	2x4	DRY	No.2	SPF
6 - 8	2x4	DRY	No.2	SPF
8 - 10	2x4	DRY	No.2	SPF
19 - 2	2x4	DRY	No.2	SPF
11 - 10	2x4	DRY	No.2	SPF
19 - 16	2x4	DRY	No.2	SPF
16 - 14	2x4	DRY	No.2	SPF
14 - 11	2x4	DRY	No.2	SPF
ALL WEBS EXCEPT	2x3	DRY	No.2	SPF

DRY: SEASONED LUMBER.

PLATES (table is in inches)

JT	TYPE	PLATES	W	LEN	Y	X
2 3, 5, 7, 9	TMVW-t	MT20	4.0	8.0	1.75	3.00
3	TMWW-t	MT20	3.0	4.0	1.50	1.75
4	TS-t	MT20	3.0	6.0		
6	TTW+p	MT20	3.0	6.0		
8	TS-t	MT20	3.0	6.0		
10	TMVW-t	MT20	4.0	6.0	1.50	2.75
11	BMV1+p	MT20	2.0	4.0		
12	BMWW-t	MT20	4.0	5.0	1.50	1.75
13	BMWW-t	MT20	3.0	4.0		
14	BS-t	MT20	3.0	6.0		
15	BMWWW-t	MT20	4.0	6.0	1.75	3.00
16	BS-t	MT20	3.0	6.0		
17	BMWW-t	MT20	3.0	4.0		
18	BMWW-t	MT20	4.0	5.0	1.50	1.50
19	BMV1+p	MT20	2.0	4.0	2.25	1.00

A SIZE FOR SIZE SUBSTITUTION OF MITEK MII20 WITH TEE-LOK TL20 PLATES IS ALLOWED.

DIMENSIONS, SUPPORTS AND LOADINGS SPECIFIED BY FABRICATOR TO BE VERIFIED BY BUILDING DESIGNER

BEARINGS

JT	FACTORED GROSS REACTION VERT	HORZ	MAXIMUM FACTORED GROSS REACTION DOWN	HORZ	UPLIFT	INPUT BRG IN-SX	REQRD BRG IN-SX
19	1775	0	1775	0	0	5-8	5-8
11	1670	0	1670	0	0	HANGER BY OTHERS MIN. SEAT SIZE: 3-8	

UNFACTORED REACTIONS

JT	1ST LCASE COMBINED	SNOW	MAX./MIN. COMPONENT REACTIONS LIVE	PERM.LIVE	WIND	DEAD	SOIL
19	1243	883 / 0	0 / 0	0 / 0	0 / 0	360 / 0	0 / 0
11	1172	820 / 0	0 / 0	0 / 0	0 / 0	352 / 0	0 / 0

BEARING MATERIAL TO BE SPF NO.2 OR BETTER AT JOINT(S) 19

BRACING

TOP CHORD TO BE SHEATHED OR MAX. PURLIN SPACING = 3.98 FT.
MAX. UNBRACED BOTTOM CHORD LENGTH = 10.00 FT. OR RIGID CEILING DIRECTLY APPLIED.

ALL PITCH BREAKS AND PERIMETER CORNER JOINTS MUST BE LATERALLY RESTRAINED.

1 - 2x3 SPF No.2 LATERAL BRACE(S) AT 1/ 2 LENGTH OF 5-15, 7-15. DBS = 20-0-0 . CBF = 89 LBS.

DBS = DIAGONAL BRACE SPACING (MAX). CBF = CUMULATIVE BRACING FORCE. FASTEN LATERAL BRACE(S) USING (0.122"X3") SPIRAL NAILS : 1 NAIL FOR 2x3 BRACE(S), 2 FOR 1x4, 2x4, 2x5, 3 FOR 2x6, 4 FOR 2x8, 5 FOR 2x10, AND 6 FOR 2x12.

END VERTICAL(S) MUST BE SHEATHED OR HAVE BRACES AS INDICATED IN THE MAX. UNBRACED LENGTH COLUMN OF THE TABLE BELOW

LOADING

TOTAL LOAD CASES: (3)

CHORDS MEMB. FR-TO	MAX. FACTORED FORCE (LBS)	FACTORED VERT. LOAD LC1 (PLF) FROM	TO	MAX CSI (LC)	MAX. UNBRAC LENGTH	WEBS MEMB. FR-TO	MAX. FACTORED FORCE (LBS)	MAX CSI (LC)
1- 2	0 / 23	-77.3	-77.3	0.10 (1)	10.00	18- 3	-202 / 38	0.05 (1)
2- 3	-2477 / 0	-77.3	-77.3	0.47 (1)	3.98	3-17	-313 / 0	0.30 (1)
3- 4	-2205 / 0	-77.3	-77.3	0.38 (1)	4.28	17- 5	0 / 273	0.06 (1)
4- 5	-2205 / 0	-77.3	-77.3	0.38 (1)	4.28	5-15	-710 / 0	0.40 (1)
5- 6	-1706 / 0	-77.3	-77.3	0.37 (1)	4.74	15- 6	0 / 1146	0.26 (1)
6- 7	-1706 / 0	-77.3	-77.3	0.35 (1)	4.76	15- 7	-650 / 0	0.36 (1)
7- 8	-2151 / 0	-77.3	-77.3	0.35 (1)	4.34	13- 7	0 / 224	0.05 (3)
8- 9	-2151 / 0	-77.3	-77.3	0.35 (1)	4.34	13- 9	-222 / 0	0.21 (1)
9-10	-2334 / 0	-77.3	-77.3	0.43 (1)	4.12	12- 9	-275 / 15	0.08 (1)
19- 2	-1729 / 0	0.0	0.0	0.17 (1)	6.33	2-18	0 / 2255	0.51 (1)
11-10	-1625 / 0	0.0	0.0	0.17 (1)	6.49	12-10	0 / 2139	0.48 (1)
19-18	0 / 0	-17.5	-17.5	0.14 (3)	10.00			
18-17	0 / 2233	-17.5	-17.5	0.42 (1)	10.00			
17-16	0 / 1972	-17.5	-17.5	0.39 (1)	10.00			
16-15	0 / 1972	-17.5	-17.5	0.39 (1)	10.00			
15-14	0 / 1923	-17.5	-17.5	0.38 (1)	10.00			
14-13	0 / 1923	-17.5	-17.5	0.38 (1)	10.00			
13-12	0 / 2104	-17.5	-17.5	0.40 (1)	10.00			
12-11	0 / 0	-17.5	-17.5	0.14 (3)	10.00			

RECEIVED
TOWN OF MILTON
MAR 29, 2017
17-4990
BUILDING DIVISION

READ ALL NOTES ON THIS PAGE AND ON THE ENGINEERING NOTE PAGE ENP-1. THE NOTE PAGE IS AN INTEGRAL PART OF THIS DRAWING AS IT CONTAINS SPECIFICATIONS AND CRITERIA USED IN THE DESIGN OF THIS COMPONENT.

DESIGN CRITERIA

SPECIFIED LOADS:

TOP	CH.	LL	=	23.3	PSF
		DL	=	3.0	PSF
BOT	CH.	LL	=	0.0	PSF
		DL	=	7.0	PSF
TOTAL	LOAD		=	33.3	PSF

SPACING = 24.0 IN. C/C

THIS TRUSS IS DESIGNED FOR RESIDENTIAL OR SMALL BUILDING REQUIREMENTS OF PART 9, NBCC 2010

THIS DESIGN COMPLIES WITH:
- PART 9 OF OBC 2012 , BCBC 2012 , ABC 2014
- CSA 086-09
- TPIC 2011

(55 % OF 27.2 P.S.F. G.S.L. PLUS 8.4 P.S.F. RAIN LOAD) EQUALS 23.3 P.S.F. SPECIFIED ROOF LIVE LOAD

ALLOWABLE DEFL.(LL)= L/360 (1.17")
CALCULATED VERT. DEFL.(LL) = L/ 999 (0.13")
ALLOWABLE DEFL.(TL)= L/360 (1.17")
CALCULATED VERT. DEFL.(TL) = L/ 999 (0.24")

CSI: TC=0.47 (2-3:1) , BC=0.42 (17-18:1) , WB=0.51 (2-18:1) , SSI=0.19 (2-3:1)

DOL LUMBER=1.00 NAIL=1.00 LS BEND=1.10 COMP=1.10 SHEAR=1.10 TENS= 1.10

COMPANION LIVE LOAD FACTOR = 0.50

TRUSS PLATE MANUFACTURER IS NOT RESPONSIBLE FOR QUALITY CONTROL IN THE TRUSS MANUFACTURING PLANT .

NAIL VALUES

PLATE	GRIP(DRY) (PSI) MAX	MIN	SHEAR (PLI) MAX	MIN	SECTION (PLI) MAX	MIN
MT20	618	354	1667	822	2284	1656

PLATE PLACEMENT TOL. = 0.250 inches

PLATE ROTATION TOL. = 5.0 Deg.

JSI GRIP= 0.90 (12) (INPUT = 0.90)
JSI METAL= 0.67 (18) (INPUT = 1.00)

KOTT

JOB NAME	TRUSS NAME	QUANTITY	PLY	JOB DESC.	DRWG NO.
PT0317-054	T38	12	1	TRUSS DESC. LECCO RIDGE-BLOCK 328	

Kott Lumber Uxbridge, Stouffville, ON, CGC

Version 8.100 S Feb 9 2017 MiTek Industries, Inc. Mon Mar 13 09:57:07 2017 Page 1
ID:pF8Cn?9h9uHzAm5tCmlVl5yJJCp-Q1c9g92ZHvgAEwXGOj6JlSdMSWZPu8BZR6EylyzbOnA

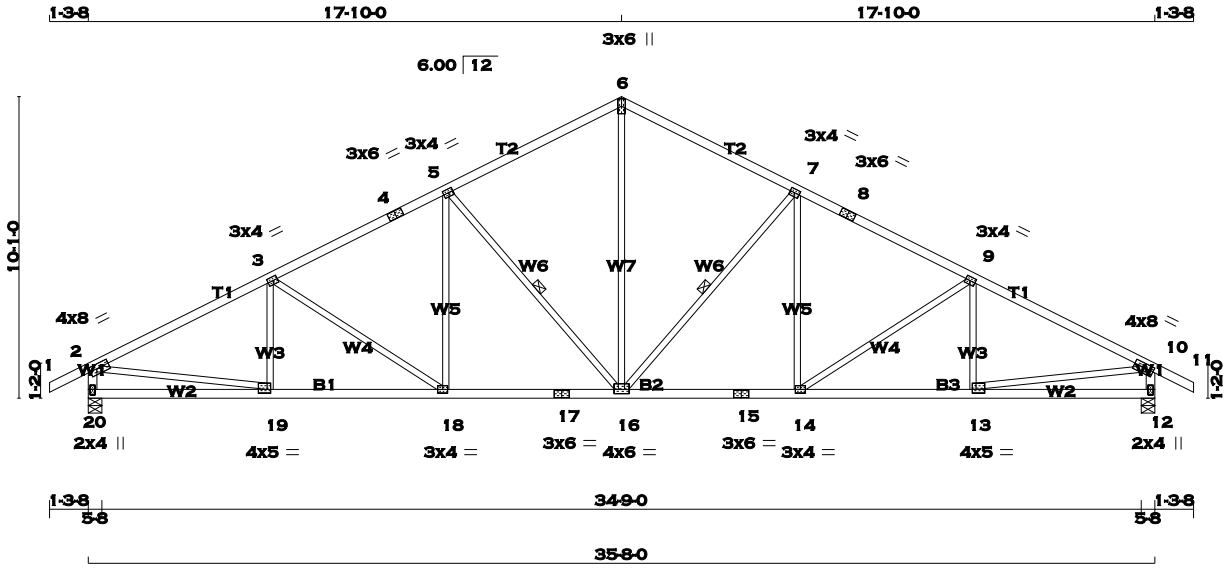

TOTAL WEIGHT = 12 X 150 = 1802 lb
[M][F]

LUMBER
N. L. G. A. RULES

CHORDS	SIZE		LUMBER	DESCR.
1 - 4	2x4	DRY	No.2	SPF
4 - 6	2x4	DRY	No.2	SPF
6 - 8	2x4	DRY	No.2	SPF
8 - 11	2x4	DRY	No.2	SPF
20 - 2	2x4	DRY	No.2	SPF
12 - 10	2x4	DRY	No.2	SPF
20 - 17	2x4	DRY	No.2	SPF
17 - 15	2x4	DRY	No.2	SPF
15 - 12	2x4	DRY	No.2	SPF
ALL WEBS EXCEPT	2x3	DRY	No.2	SPF

DRY: SEASONED LUMBER.

PLATES (table is in inches)

JT	TYPE	PLATES	W	LEN	Y	X
2 3, 5, 7, 9	TMVW-t	MT20	4.0	8.0	1.75	3.00
3	TMWW-t	MT20	3.0	4.0	1.50	1.75
4	TS-t	MT20	3.0	6.0		
6	TTW+p	MT20	3.0	6.0		
8	TS-t	MT20	3.0	6.0		
10	TMVW-t	MT20	4.0	8.0	1.75	3.00
12	BMV1+p	MT20	2.0	4.0	2.25	1.00
13	BMWW-t	MT20	4.0	5.0	1.50	1.50
14	BMWW-t	MT20	3.0	4.0		
15	BS-t	MT20	3.0	6.0		
16	BMWWW-t	MT20	4.0	6.0	1.75	3.00
17	BS-t	MT20	3.0	6.0		
18	BMWW-t	MT20	3.0	4.0		
19	BMWW-t	MT20	4.0	5.0	1.50	1.50
20	BMV1+p	MT20	2.0	4.0	2.25	1.00

A SIZE FOR SIZE SUBSTITUTION OF MITEK MII20 WITH TEE-LOK TL20 PLATES IS ALLOWED.

DIMENSIONS, SUPPORTS AND LOADINGS SPECIFIED BY FABRICATOR TO BE VERIFIED BY BUILDING DESIGNER

BEARINGS

JT	FACTORED GROSS REACTION VERT	HORZ	MAXIMUM FACTORED GROSS REACTION DOWN	HORZ	UPLIFT	INPUT BRG IN-SX	REQRD BRG IN-SX
20	1796	0	1796	0	0	5-8	5-8
12	1796	0	1796	0	0	5-8	5-8

UNFACTORED REACTIONS

JT	1ST LCASE COMBINED	MAX./MIN. COMPONENT REACTIONS SNOW	LIVE	PERM.LIVE	WIND	DEAD	SOIL
20	1258	894 / 0	0 / 0	0 / 0	0 / 0	365 / 0	0 / 0
12	1258	894 / 0	0 / 0	0 / 0	0 / 0	365 / 0	0 / 0

BEARING MATERIAL TO BE SPF NO.2 OR BETTER AT JOINT(S) 20, 12

BRACING
TOP CHORD TO BE SHEATHED OR MAX. PURLIN SPACING = 3.95 FT.
MAX. UNBRACED BOTTOM CHORD LENGTH = 10.00 FT. OR RIGID CEILING DIRECTLY APPLIED.

ALL PITCH BREAKS AND PERIMETER CORNER JOINTS MUST BE LATERALLY RESTRAINED.

1 - 2x3 SPF No.2 LATERAL BRACE(S) AT 1/ 2 LENGTH OF 7-16, 5-16. DBS = 20-0-0 . CBF = 88 LBS.

DBS = DIAGONAL BRACE SPACING (MAX). CBF = CUMULATIVE BRACING FORCE. FASTEN LATERAL BRACE(S) USING (0.122"X3") SPIRAL NAILS : 1 NAIL FOR 2x3 BRACE(S), 2 FOR 1x4, 2x4, 2x5, 3 FOR 2x6, 4 FOR 2x8, 5 FOR 2x10, AND 6 FOR 2x12.

END VERTICAL(S) MUST BE SHEATHED OR HAVE BRACES AS INDICATED IN THE MAX. UNBRACED LENGTH COLUMN OF THE TABLE BELOW

LOADING
TOTAL LOAD CASES: (3)

CHORDS MEMB. FR-TO	MAX. FACTORED FORCE (LBS)	FACTORED VERT. LOAD LC1 (PLF) FROM	TO	MAX CSI (LC)	MAX. UNBRAC LENGTH
1- 2	0 / 23	-77.3	-77.3	0.10 (1)	10.00
2- 3	-2515 / 0	-77.3	-77.3	0.47 (1)	3.95
3- 4	-2247 / 0	-77.3	-77.3	0.38 (1)	4.24
4- 5	-2247 / 0	-77.3	-77.3	0.38 (1)	4.24
5- 6	-1751 / 0	-77.3	-77.3	0.37 (1)	4.68
6- 7	-1751 / 0	-77.3	-77.3	0.37 (1)	4.68
7- 8	-2247 / 0	-77.3	-77.3	0.38 (1)	4.24
8- 9	-2247 / 0	-77.3	-77.3	0.38 (1)	4.24
9-10	-2515 / 0	-77.3	-77.3	0.47 (1)	3.95
10-11	0 / 23	-77.3	-77.3	0.10 (1)	10.00
20- 2	-1750 / 0	0.0	0.0	0.18 (1)	6.30
12-10	-1750 / 0	0.0	0.0	0.18 (1)	6.30
20-19	0 / 0	-17.5	-17.5	0.14 (3)	10.00
19-18	0 / 2266	-17.5	-17.5	0.42 (1)	10.00
18-17	0 / 2010	-17.5	-17.5	0.40 (1)	10.00
17-16	0 / 2010	-17.5	-17.5	0.40 (1)	10.00
16-15	0 / 2010	-17.5	-17.5	0.40 (1)	10.00
15-14	0 / 2010	-17.5	-17.5	0.40 (1)	10.00
14-13	0 / 2266	-17.5	-17.5	0.42 (1)	10.00
13-12	0 / 0	-17.5	-17.5	0.14 (3)	10.00

WEBS MEMB. FR-TO	MAX. FACTORED FORCE (LBS)	MAX CSI (LC)
16- 6	0 / 1181	0.27 (1)
16- 7	-708 / 0	0.40 (1)
14- 7	0 / 270	0.06 (1)
14- 9	-308 / 0	0.29 (1)
13- 9	-207 / 37	0.06 (1)
5-16	-708 / 0	0.40 (1)
18- 5	0 / 270	0.06 (1)
3-18	-308 / 0	0.29 (1)
19- 3	-207 / 37	0.06 (1)
2-19	0 / 2289	0.52 (1)
13-10	0 / 2289	0.52 (1)

DESIGN CRITERIA

SPECIFIED LOADS:

TOP	CH.	LL	=	23.3	PSF
		DL	=	3.0	PSF
BOT	CH.	LL	=	0.0	PSF
		DL	=	7.0	PSF
TOTAL	LOAD		=	33.3	PSF

SPACING = 24.0 IN. C/C

THIS TRUSS IS DESIGNED FOR RESIDENTIAL OR SMALL BUILDING REQUIREMENTS OF PART 9, NBCC 2010

THIS DESIGN COMPLIES WITH:
- PART 9 OF OBC 2012 , BCBC 2012 , ABC 2014
- CSA 086-09
- TPIC 2011

(55 % OF 27.2 P.S.F. G.S.L. PLUS 8.4 P.S.F. RAIN LOAD) EQUALS 23.3 P.S.F. SPECIFIED ROOF LIVE LOAD

ALLOWABLE DEFL.(LL)= L/360 (1.19")
CALCULATED VERT. DEFL.(LL) = L/ 999 (0.14")
ALLOWABLE DEFL.(TL)= L/360 (1.19")
CALCULATED VERT. DEFL.(TL) = L/ 999 (0.25")

CSI: TC=0.47 (2-3:1) , BC=0.42 (13-14:1) , WB=0.52 (10-13:1) , SSI=0.19 (2-3:1)

DOL LUMBER=1.00 NAIL=1.00 LS BEND=1.10 COMP=1.10 SHEAR=1.10 TENS= 1.10

COMPANION LIVE LOAD FACTOR = 0.50

TRUSS PLATE MANUFACTURER IS NOT RESPONSIBLE FOR QUALITY CONTROL IN THE TRUSS MANUFACTURING PLANT .

NAIL VALUES

PLATE	GRIP(DRY) (PSI) MAX	MIN	SHEAR (PLI) MAX	MIN	SECTION (PLI) MAX	MIN
MT20	618	354	1667	822	2284	1656

PLATE PLACEMENT TOL. = 0.250 inches

PLATE ROTATION TOL. = 5.0 Deg.

JSI GRIP= 0.88 (16) (INPUT = 0.90)
JSI METAL= 0.68 (13) (INPUT = 1.00)

LICENSED PROFESSIONAL ENGINEER
P.M. TREVISAN
100136551
March 13th, 2017
PROVINCE OF ONTARIO

RECEIVED
TOWN OF MILTON
MAR 29, 2017
17-4990
BUILDING DIVISION

READ ALL NOTES ON THIS PAGE AND ON THE ENGINEERING NOTE PAGE ENP-1. THE NOTE PAGE IS AN INTEGRAL PART OF THIS DRAWING AS IT CONTAINS SPECIFICATIONS AND CRITERIA USED IN THE DESIGN OF THIS COMPONENT.

KOTT

JOB NAME	TRUSS NAME	QUANTITY	PLY	JOB DESC.	DRWG NO.
PT0317-054	T39	1	1	TRUSS DESC. LECCO RIDGE-BLOCK 328	ENG JOB: PT0317-054

Kott Lumber Uxbridge, Stouffville, ON, CGC

Version 8.100 S Feb 9 2017 MiTek Industries, Inc. Mon Mar 13 09:57:07 2017 Page 1

ID:pF8Cn?9h9uHzAm5tCmlVl5yJJCp-Q1c9g92ZHvgAEwXGOj6JlSdEKWRxu2dZR6EylyzbOnA

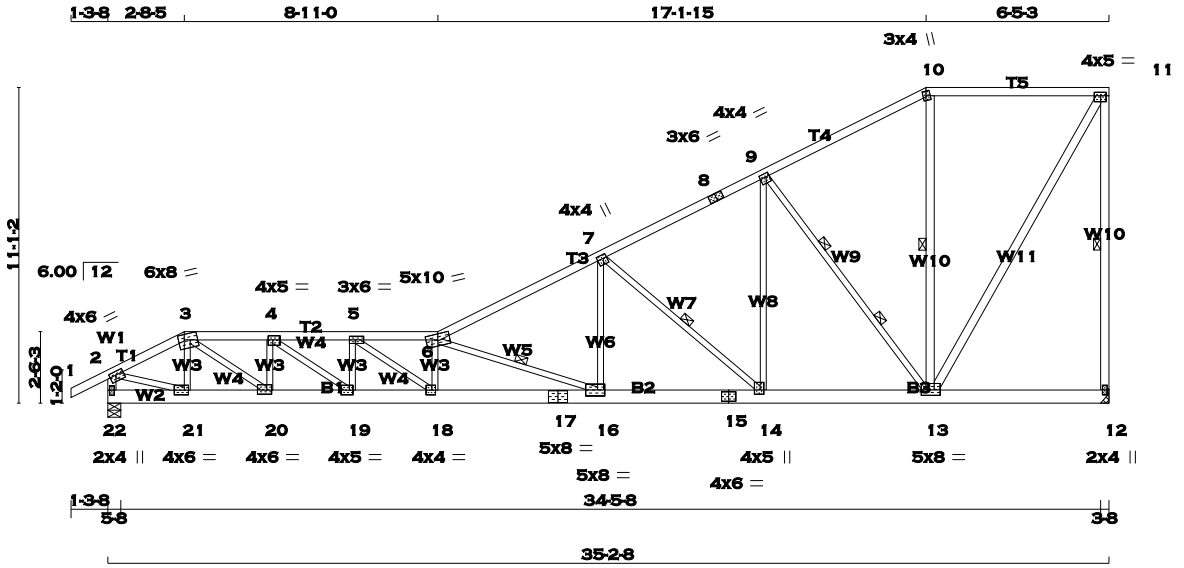

TOTAL WEIGHT = 189 lb

[M][F]

LUMBER

N. L. G. A. RULES

CHORDS	SIZE		LUMBER	DESCR.
1 - 3	2x4	DRY	No.2	SPF
3 - 6	2x4	DRY	No.2	SPF
6 - 8	2x4	DRY	No.2	SPF
8 - 10	2x4	DRY	No.2	SPF
10 - 11	2x4	DRY	No.2	SPF
12 - 11	2x4	DRY	No.2	SPF
22 - 2	2x4	DRY	No.2	SPF
22 - 17	2x6	DRY	No.2	SPF
17 - 15	2x6	DRY	No.2	SPF
15 - 12	2x6	DRY	No.2	SPF
ALL WEBS	2x3	DRY	No.2	SPF
EXCEPT				
13 - 10	2x4	DRY	No.2	SPF
13 - 11	2x4	DRY	No.2	SPF

DRY: SEASONED LUMBER.

PLATES (table is in inches)

JT	TYPE	PLATES	W	LEN	Y	X
2	TMVW-t	MT20	4.0	6.0	1.50	2.75
3	TTWW-m	MT20	6.0	8.0	2.25	2.50
4	TMWW-t	MT20	4.0	5.0	1.75	2.00
5	TMWW-t	MT20	3.0	6.0	1.50	2.50
6	TTWW-m	MT20	5.0	10.0		
7	TMWW+t	MT20	4.0	4.0	1.50	1.25
8	TS-t	MT20	3.0	6.0		
9	TMWW-t	MT20	4.0	4.0	1.50	1.25
10	TTW+m	MT20	3.0	4.0	2.00	1.25
11	TMVW-t	MT20	4.0	5.0	1.50	2.25
12	BMV1+p	MT20	2.0	4.0		
13	BMWWW-t	MT20	5.0	8.0	2.25	2.00
14	BMWW+t	MT20	4.0	5.0	1.75	1.50
15	BS-t	MT20	4.0	6.0		
16	BMWW-t	MT20	5.0	8.0	2.50	3.00
17	BS-t	MT20	5.0	8.0		
18	BMWW-t	MT20	4.0	4.0	2.00	1.50
19	BMWW-t	MT20	4.0	5.0	2.00	1.50
20	BMWW-t	MT20	4.0	6.0	1.75	2.00
21	BMWW-t	MT20	4.0	6.0	2.00	1.75
22	BMV1+p	MT20	2.0	4.0	2.25	1.00

A SIZE FOR SIZE SUBSTITUTION OF MITEK MII20 WITH TEE-LOK TL20 PLATES IS ALLOWED.

DIMENSIONS, SUPPORTS AND LOADINGS SPECIFIED BY FABRICATOR TO BE VERIFIED BY BUILDING DESIGNER

BEARINGS

JT	FACTORED GROSS REACTION VERT	HORZ	MAXIMUM GROSS REACTION DOWN	HORZ	FACTORED UPLIFT	INPUT BRG IN-SX	REQRD BRG IN-SX
12	1670	0	1670	0	0	HANGER BY OTHERS MIN. SEAT SIZE: 3-8	
22	1775	0	1775	0	0	5-8	5-8

UNFACTORED REACTIONS

JT	1ST LCASE COMBINED	SNOW	MAX./MIN. COMPONENT REACTIONS LIVE	PERM.LIVE	WIND	DEAD	SOIL
12	1172	820 / 0	0 / 0	0 / 0	0 / 0	352 / 0	0 / 0
22	1243	883 / 0	0 / 0	0 / 0	0 / 0	360 / 0	0 / 0

BEARING MATERIAL TO BE SPF NO.2 OR BETTER AT JOINT(S) 22

BRACING

TOP CHORD TO BE SHEATHED OR MAX. PURLIN SPACING = 2.56 FT.
MAX. UNBRACED BOTTOM CHORD LENGTH = 10.00 FT. OR RIGID CEILING DIRECTLY APPLIED.

ALL PITCH BREAKS AND PERIMETER CORNER JOINTS MUST BE LATERALLY RESTRAINED.

1 - 2x3 SPF No.2 LATERAL BRACE(S) AT 1/ 2 LENGTH OF 11-12, 7-14. DBS = 8-0-0 . CBF = 85 LBS.
1 - 2x3 SPF No.2 LATERAL BRACE(S) AT 1/ 2 LENGTH OF 6-16. DBS = 4-0-0 . CBF = 79 LBS.
2 - 2x3 SPF No.2 LATERAL BRACE(S) AT 1/ 3 LENGTH OF 9-13. DBS = 8-0-0 . CBF = 77 LBS.
1 - 2x3 SPF No.2 LATERAL BRACE(S) AT 1/ 2 LENGTH OF 10-13. DBS = 20-0-0 . CBF = 7 LBS.

DBS = DIAGONAL BRACE SPACING (MAX). CBF = CUMULATIVE BRACING FORCE. FASTEN LATERAL BRACE(S) USING (0.122"X3") SPIRAL NAILS : 1 NAIL FOR 2x3 BRACE(S), 2 FOR 1x4, 2x4, 2x5, 3 FOR 2x6, 4 FOR 2x8, 5 FOR 2x10, AND 6 FOR 2x12.

END VERTICAL(S) MUST BE SHEATHED OR HAVE BRACES AS INDICATED IN THE MAX. UNBRACED LENGTH COLUMN OF THE TABLE BELOW

LOADING

TOTAL LOAD CASES: (3)

CHORDS

MEMB. FR-TO	MAX. FACTORED FORCE (LBS)	FACTORED VERT. LOAD (PLF) FROM	TO	LC1 MAX CSI (LC)	MAX. UNBRAC LENGTH
1- 2	0 / 23	-77.3	-77.3	0.10 (1)	10.00
2- 3	-2217 / 0	-77.3	-77.3	0.12 (1)	4.50
3- 4	-3705 / 0	-77.3	-77.3	0.23 (1)	3.51
4- 5	-5053 / 0	-77.3	-77.3	0.33 (1)	2.93
5- 6	-5927 / 0	-77.3	-77.3	0.47 (1)	2.56
6- 7	-3349 / 0	-77.3	-77.3	0.52 (1)	3.47
7- 8	-1929 / 0	-77.3	-77.3	0.34 (1)	4.55
8- 9	-1929 / 0	-77.3	-77.3	0.34 (1)	4.55
9-10	-924 / 0	-77.3	-77.3	0.30 (1)	6.05
10-11	-808 / 0	-77.3	-77.3	0.42 (1)	6.15
12-11	-1626 / 0	0.0	0.0	0.99 (1)	5.19
22- 2	-1754 / 0	0.0	0.0	0.18 (1)	6.29
22-21	0 / 0	-17.5	-17.5	0.01 (3)	10.00
21-20	0 / 1958	-17.5	-17.5	0.30 (1)	10.00
20-19	0 / 3705	-17.5	-17.5	0.51 (1)	10.00
19-18	0 / 5053	-17.5	-17.5	0.79 (1)	10.00
18-17	0 / 5962	-17.5	-17.5	0.90 (1)	10.00
17-16	0 / 5962	-17.5	-17.5	0.90 (1)	10.00
16-15	0 / 3014	-17.5	-17.5	0.41 (1)	10.00
15-14	0 / 3014	-17.5	-17.5	0.41 (1)	10.00
14-13	0 / 1726	-17.5	-17.5	0.25 (1)	10.00
13-12	0 / 0	-17.5	-17.5	0.08 (3)	10.00

WEBS

MEMB. FR-TO	MAX. FACTORED FORCE (LBS)	MAX CSI (LC)
21- 3	-459 / 0	0.07 (1)
3-20	0 / 2141	0.48 (1)
20- 4	-1231 / 0	0.19 (1)
4-19	0 / 1675	0.38 (1)
19- 5	-859 / 0	0.13 (1)
5-18	0 / 1086	0.24 (1)
18- 6	-709 / 0	0.11 (1)
6-16	-3145 / 0	0.85 (1)
16- 7	0 / 1278	0.29 (1)
7-14	-1708 / 0	0.65 (1)
14- 9	0 / 1196	0.27 (1)
9-13	-1532 / 0	0.94 (1)
13-10	-22 / 76	0.02 (3)
13-11	0 / 1597	0.26 (1)
2-21	0 / 2055	0.46 (1)

RECEIVED
TOWN OF MILTON
MAR 29, 2017
17-4990
BUILDING DIVISION

READ ALL NOTES ON THIS PAGE AND ON THE ENGINEERING NOTE PAGE ENP-1. THE NOTE PAGE IS AN INTEGRAL PART OF THIS DRAWING AS IT CONTAINS SPECIFICATIONS AND CRITERIA USED IN THE DESIGN OF THIS COMPONENT.

DESIGN CRITERIA

SPECIFIED LOADS:

TOP	CH.	LL	=	23.3	PSF
		DL	=	3.0	PSF
BOT	CH.	LL	=	0.0	PSF
		DL	=	7.0	PSF
TOTAL	LOAD		=	33.3	PSF

SPACING = 24.0 IN. C/C

LOADING IN ALL FLAT SECTIONS BASED ON A SLOPE OF 6.00/12

THIS TRUSS IS DESIGNED FOR RESIDENTIAL OR SMALL BUILDING REQUIREMENTS OF PART 9, NBCC 2010

THIS DESIGN COMPLIES WITH:
- PART 9 OF OBC 2012 , BCBC 2012 , ABC 2014
- CSA 086-09
- TPIC 2011

(55 % OF 27.2 P.S.F. G.S.L. PLUS 8.4 P.S.F. RAIN LOAD) EQUALS 23.3 P.S.F. SPECIFIED ROOF LIVE LOAD

ALLOWABLE DEFL.(LL)= L/360 (1.17")
CALCULATED VERT. DEFL.(LL) = L/ 999 (0.39")
ALLOWABLE DEFL.(TL)= L/360 (1.17")
CALCULATED VERT. DEFL.(TL) = L/ 612 (0.69")

CSI: TC=0.99 (11-12:1) , BC=0.90 (16-18:1) , WB=0.94 (9-13:1) , SSI=0.19 (10-11:1)

DOL LUMBER=1.00 NAIL=1.00 LS BEND=1.10 COMP=1.10 SHEAR=1.10 TENS= 1.10

COMPANION LIVE LOAD FACTOR = 0.50

TRUSS PLATE MANUFACTURER IS NOT RESPONSIBLE FOR QUALITY CONTROL IN THE TRUSS MANUFACTURING PLANT .

NAIL VALUES

PLATE	GRIP(DRY) (PSI) MAX	MIN	SHEAR (PLI) MAX	MIN	SECTION (PLI) MAX	MIN
MT20	618	354	1667	822	2284	1656

PLATE PLACEMENT TOL. = 0.250 inches

PLATE ROTATION TOL. = 5.0 Deg.

JSI GRIP= 0.90 (9) (INPUT = 0.90)
JSI METAL= 0.94 (17) (INPUT = 1.00)

KOTT

JOB NAME	TRUSS NAME	QUANTITY	PLY	JOB DESC.	DRWG NO.
PT0317-054	T40	1	1	TRUSS DESC. LECCO RIDGE-BLOCK 328	ENG JOB: PT0317-054

Kott Lumber Uxbridge, Stouffville, ON, CGC

Version 8.100 S Feb 9 2017 MiTek Industries, Inc. Mon Mar 13 09:57:08 2017 Page 1

ID:pF8Cn?9h9uHzAm5tCmlVl5yJJCp-uDAXtV3C2Co1r46SyRdYIf9Twvq3dWwigm_WHOzbOn9

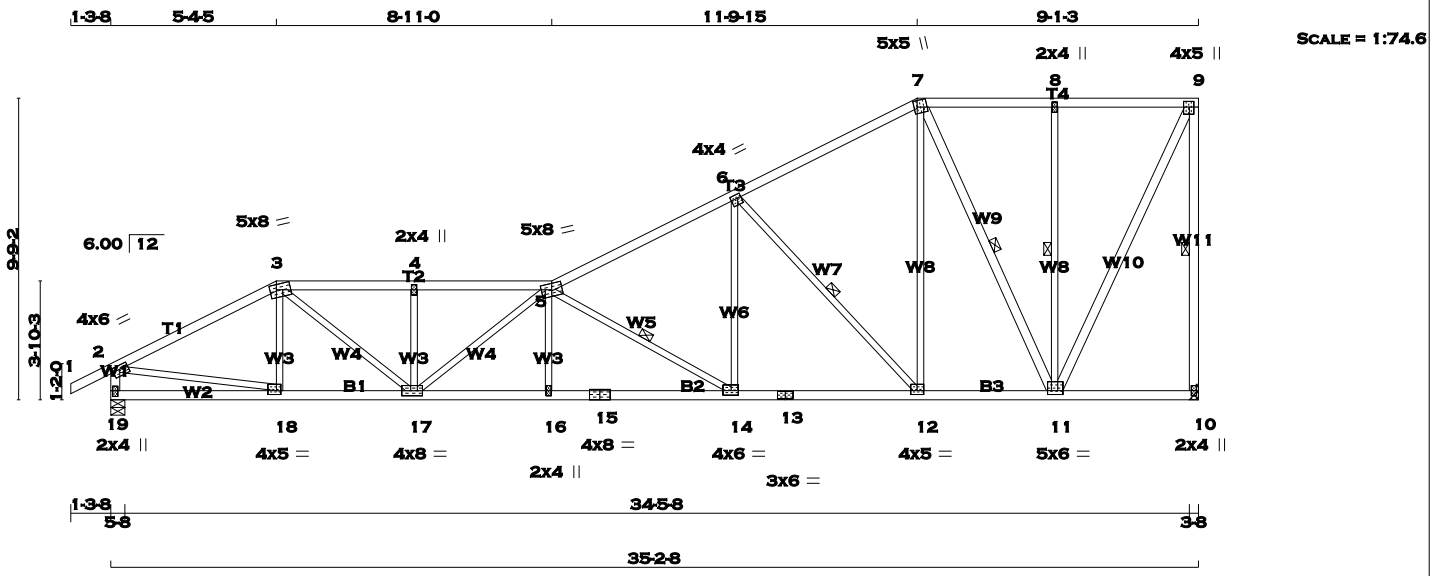

TOTAL WEIGHT = 172 lb

[M]

LUMBER

N. L. G. A. RULES

CHORDS	SIZE		LUMBER	DESCR.
1 - 3	2x4	DRY	No.2	SPF
3 - 5	2x4	DRY	No.2	SPF
5 - 7	2x4	DRY	No.2	SPF
7 - 9	2x4	DRY	No.2	SPF
10 - 9	2x4	DRY	No.2	SPF
19 - 2	2x4	DRY	No.2	SPF
19 - 15	2x4	DRY	No.2	SPF
15 - 13	2x4	DRY	No.2	SPF
13 - 10	2x4	DRY	No.2	SPF
ALL WEBS	2x3	DRY	No.2	SPF
EXCEPT				
7 - 11	2x4	DRY	No.2	SPF
11 - 9	2x4	DRY	No.2	SPF

DRY: SEASONED LUMBER.

PLATES (table is in inches)

JT	TYPE	PLATES	W	LEN	Y	X
2	TMVW-t	MT20	4.0	6.0	1.50	2.75
3	TTWW-m	MT20	5.0	8.0	2.00	2.50
4	TMW+w	MT20	2.0	4.0		
5	TTWWW-m	MT20	5.0	8.0		
6	TMWW-t	MT20	4.0	4.0	1.50	1.25
7	TTWW+m	MT20	5.0	5.0	2.50	1.25
8	TMW+w	MT20	2.0	4.0		
9	TMVW+p	MT20	4.0	5.0	2.25	1.75
10	BMV1+p	MT20	2.0	4.0		
11	BMWWW-t	MT20	5.0	6.0	1.50	1.50
12	BMWW-t	MT20	4.0	5.0	1.50	2.50
13	BS-t	MT20	3.0	6.0		
14	BMWW-t	MT20	4.0	6.0	1.75	2.75
15	BS-t	MT20	4.0	8.0		
16	BMW+w	MT20	2.0	4.0		
17	BMWWW-t	MT20	4.0	8.0	2.00	3.50
18	BMWW-t	MT20	4.0	5.0	1.50	1.75
19	BMV1+p	MT20	2.0	4.0	2.25	1.00

A SIZE FOR SIZE SUBSTITUTION OF MITEK MII20 WITH TEE-LOK TL20 PLATES IS ALLOWED.

DIMENSIONS, SUPPORTS AND LOADINGS SPECIFIED BY FABRICATOR TO BE VERIFIED BY BUILDING DESIGNER

BEARINGS

JT	FACTORED GROSS REACTION VERT	HORZ	MAXIMUM FACTORED GROSS REACTION DOWN	HORZ	UPLIFT	INPUT BRG IN-SX	REQRD BRG IN-SX
10	1670	0	1670	0	0	HANGER BY OTHERS MIN. SEAT SIZE: 3-8	
19	1775	0	1775	0	0	5-8	5-8

UNFACTORED REACTIONS

JT	1ST LCASE COMBINED	SNOW	MAX./MIN. COMPONENT REACTIONS LIVE	PERM.LIVE	WIND	DEAD	SOIL
10	1172	820 / 0	0 / 0	0 / 0	0 / 0	352 / 0	0 / 0
19	1243	883 / 0	0 / 0	0 / 0	0 / 0	360 / 0	0 / 0

BEARING MATERIAL TO BE SPF NO.2 OR BETTER AT JOINT(S) 19

BRACING

TOP CHORD TO BE SHEATHED OR MAX. PURLIN SPACING = 3.49 FT.
MAX. UNBRACED BOTTOM CHORD LENGTH = 10.00 FT. OR RIGID CEILING DIRECTLY APPLIED.

ALL PITCH BREAKS AND PERIMETER CORNER JOINTS MUST BE LATERALLY RESTRAINED.

1 - 2x3 SPF No.2 LATERAL BRACE(S) AT 1/ 2 LENGTH OF 9-10, 6-12. DBS = 8-0-0 . CBF = 82 LBS.
1 - 2x3 SPF No.2 LATERAL BRACE(S) AT 1/ 2 LENGTH OF 5-14. DBS = 6-0-0 . CBF = 75 LBS.
1 - 2x3 SPF No.2 LATERAL BRACE(S) AT 1/ 2 LENGTH OF 7-11. DBS = 12-0-0 . CBF = 81 LBS.
1 - 2x3 SPF No.2 LATERAL BRACE(S) AT 1/ 2 LENGTH OF 8-11. DBS = 20-0-0 . CBF = 54 LBS.

DBS = DIAGONAL BRACE SPACING (MAX). CBF = CUMULATIVE BRACING FORCE. FASTEN LATERAL BRACE(S) USING (0.122"X3") SPIRAL NAILS : 1 NAIL FOR 2x3 BRACE(S), 2 FOR 1x4, 2x4, 2x5, 3 FOR 2x6, 4 FOR 2x8, 5 FOR 2x10, AND 6 FOR 2x12.

END VERTICAL(S) MUST BE SHEATHED OR HAVE BRACES AS INDICATED IN THE MAX. UNBRACED LENGTH COLUMN OF THE TABLE BELOW

LOADING

TOTAL LOAD CASES: (3)

CHORDS

MEMB. FR-TO	MAX. FACTORED FORCE (LBS)	FACTORED VERT. LOAD LC1 (PLF) FROM	TO	MAX CSI (LC)	MAX. UNBRAC LENGTH
1- 2	0 / 23	-77.3	-77.3	0.10 (1)	10.00
2- 3	-2415 / 0	-77.3	-77.3	0.55 (1)	3.89
3- 4	-3373 / 0	-77.3	-77.3	0.40 (1)	3.49
4- 5	-3373 / 0	-77.3	-77.3	0.40 (1)	3.49
5- 6	-2514 / 0	-77.3	-77.3	0.69 (1)	3.69
6- 7	-1346 / 0	-77.3	-77.3	0.54 (1)	4.90
7- 8	-736 / 0	-77.3	-77.3	0.27 (1)	6.25
8- 9	-736 / 0	-77.3	-77.3	0.27 (1)	6.25
10- 9	-1636 / 0	0.0	0.0	0.75 (1)	5.18
19- 2	-1734 / 0	0.0	0.0	0.18 (1)	6.32
19-18	0 / 0	-17.5	-17.5	0.11 (3)	10.00
18-17	0 / 2152	-17.5	-17.5	0.40 (1)	10.00
17-16	0 / 3998	-17.5	-17.5	0.69 (1)	10.00
16-15	0 / 3996	-17.5	-17.5	0.72 (1)	10.00
15-14	0 / 3996	-17.5	-17.5	0.72 (1)	10.00
14-13	0 / 2272	-17.5	-17.5	0.44 (1)	10.00
13-12	0 / 2272	-17.5	-17.5	0.44 (1)	10.00
12-11	0 / 1195	-17.5	-17.5	0.24 (1)	10.00
11-10	0 / 0	-17.5	-17.5	0.08 (3)	10.00

WEBS

MEMB. FR-TO	MAX. FACTORED FORCE (LBS)	MAX CSI (LC)
18- 3	-238 / 12	0.06 (1)
3-17	0 / 1561	0.35 (1)
17- 4	-406 / 0	0.09 (1)
17- 5	-799 / 0	0.42 (1)
16- 5	0 / 101	0.03 (3)
5-14	-2009 / 0	0.66 (1)
14- 6	0 / 1151	0.26 (1)
6-12	-1606 / 0	0.87 (1)
12- 7	0 / 1264	0.28 (1)
7-11	-1079 / 0	0.62 (1)
11- 8	-434 / 0	0.28 (1)
11- 9	0 / 1668	0.27 (1)
2-18	0 / 2185	0.49 (1)

DESIGN CRITERIA

SPECIFIED LOADS:

TOP	CH.	LL	=	23.3	PSF
		DL	=	3.0	PSF
BOT	CH.	LL	=	0.0	PSF
		DL	=	7.0	PSF
TOTAL	LOAD		=	33.3	PSF

SPACING = 24.0 IN. C/C

LOADING IN ALL FLAT SECTIONS BASED ON A SLOPE OF 6.00/12

THIS TRUSS IS DESIGNED FOR RESIDENTIAL OR SMALL BUILDING REQUIREMENTS OF PART 9, NBCC 2010

THIS DESIGN COMPLIES WITH:
- PART 9 OF OBC 2012 , BCBC 2012 , ABC 2014
- CSA 086-09
- TPIC 2011

(55 % OF 27.2 P.S.F. G.S.L. PLUS 8.4 P.S.F. RAIN LOAD) EQUALS 23.3 P.S.F. SPECIFIED ROOF LIVE LOAD

ALLOWABLE DEFL.(LL)= L/360 (1.17")
CALCULATED VERT. DEFL.(LL) = L/ 999 (0.27")
ALLOWABLE DEFL.(TL)= L/360 (1.17")
CALCULATED VERT. DEFL.(TL) = L/ 873 (0.48")

CSI: TC=0.75 (9-10:1) , BC=0.72 (14-16:1) , WB=0.87 (6-12:1) , SSI=0.20 (5-6:1)

DOL LUMBER=1.00 NAIL=1.00 LS BEND=1.10 COMP=1.10 SHEAR=1.10 TENS= 1.10

COMPANION LIVE LOAD FACTOR = 0.50

TRUSS PLATE MANUFACTURER IS NOT RESPONSIBLE FOR QUALITY CONTROL IN THE TRUSS MANUFACTURING PLANT .

NAIL VALUES

PLATE	GRIP(DRY) (PSI) MAX	MIN	SHEAR (PLI) MAX	MIN	SECTION (PLI) MAX	MIN
MT20	618	354	1667	822	2284	1656

PLATE PLACEMENT TOL. = 0.250 inches

PLATE ROTATION TOL. = 5.0 Deg.

JSI GRIP= 0.90 (2) (INPUT = 0.90)
JSI METAL= 0.80 (15) (INPUT = 1.00)

LICENSED PROFESSIONAL ENGINEER
P.M. TREVISAN
100136551
March 13th, 2017
PROVINCE OF ONTARIO

RECEIVED
TOWN OF MILTON
MAR 29, 2017
17-4990
BUILDING DIVISION

READ ALL NOTES ON THIS PAGE AND ON THE ENGINEERING NOTE PAGE ENP-1. THE NOTE PAGE IS AN INTEGRAL PART OF THIS DRAWING AS IT CONTAINS SPECIFICATIONS AND CRITERIA USED IN THE DESIGN OF THIS COMPONENT.

KOTT

JOB NAME	TRUSS NAME	QUANTITY	PLY	JOB DESC.	DRWG NO.
PT0317-054	**T41**	**1**	**1**	TRUSS DESC. LECCO RIDGE-BLOCK 328	

ENG JOB: PT0317-054

Kott Lumber Uxbridge, Stouffville, ON, CGC

Version 8.100 S Feb 9 2017 MiTek Industries, Inc. Mon Mar 13 09:57:08 2017 Page 1
ID:pF8Cn?9h9uHzAm5tCmlVl5yJJCp-uDAXtV3C2Co1r46SyRdYIf9TrvtWdXoigm_WHOzbOn9

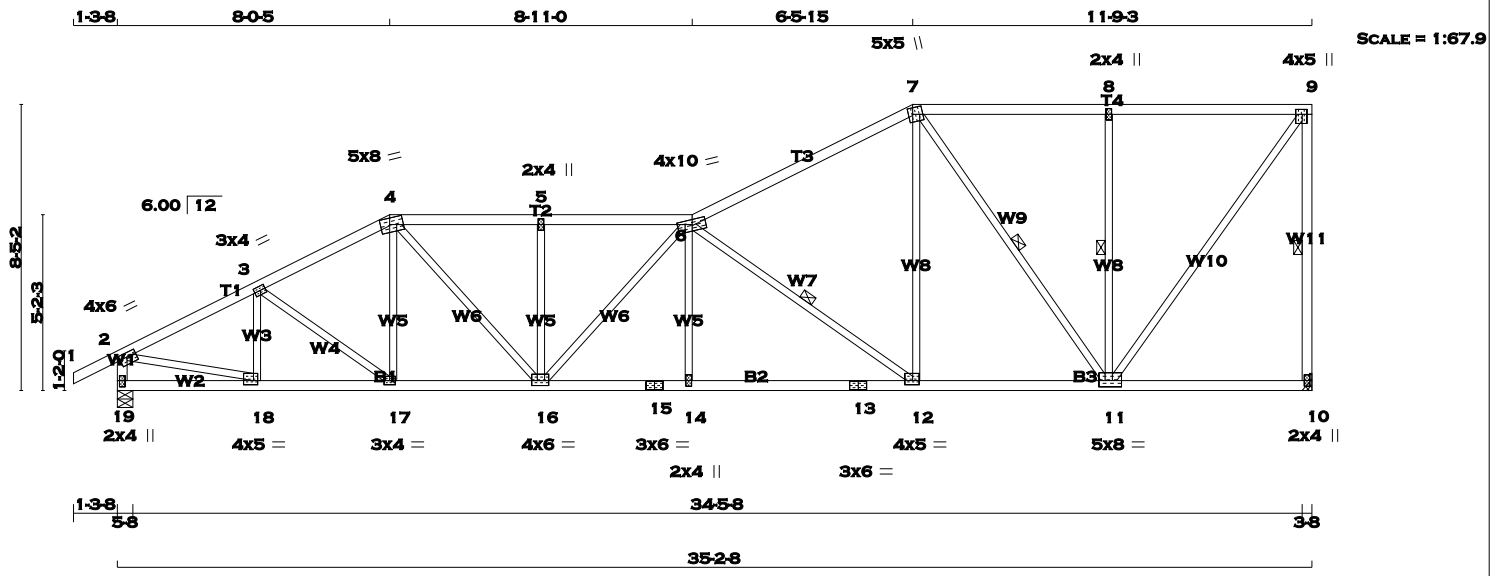

TOTAL WEIGHT = 159 lb
[M]

LUMBER
N. L. G. A. RULES

CHORDS	SIZE		LUMBER	DESCR.
1 - 4	2x4	DRY	No.2	SPF
4 - 6	2x4	DRY	No.2	SPF
6 - 7	2x4	DRY	No.2	SPF
7 - 9	2x4	DRY	No.2	SPF
10 - 9	2x4	DRY	No.2	SPF
19 - 2	2x4	DRY	No.2	SPF
19 - 15	2x4	DRY	No.2	SPF
15 - 13	2x4	DRY	No.2	SPF
13 - 10	2x4	DRY	No.2	SPF
ALL WEBS EXCEPT	2x3	DRY	No.2	SPF

DRY: SEASONED LUMBER.

PLATES (table is in inches)

JT	TYPE	PLATES	W	LEN	Y	X
2	TMVW-t	MT20	4.0	6.0	1.50	2.75
3	TMWW-t	MT20	3.0	4.0	1.50	1.75
4	TTWW-m	MT20	5.0	8.0	2.25	3.25
5	TMW+w	MT20	2.0	4.0		
6	TTWWW-m	MT20	4.0	10.0	1.75	4.75
7	TTWW+m	MT20	5.0	5.0	2.25	1.50
8	TMW+w	MT20	2.0	4.0		
9	TMVW+p	MT20	4.0	5.0	1.75	1.75
10	BMV1+p	MT20	2.0	4.0		
11	BMWWW-t	MT20	5.0	8.0	2.25	2.25
12	BMWW-t	MT20	4.0	5.0	1.50	2.25
13	BS-t	MT20	3.0	6.0		
14	BMW+w	MT20	2.0	4.0		
15	BS-t	MT20	3.0	6.0		
16	BMWWW-t	MT20	4.0	6.0	1.75	2.00
17	BMWW-t	MT20	3.0	4.0		
18	BMWW-t	MT20	4.0	5.0	1.50	1.50
19	BMV1+p	MT20	2.0	4.0	2.25	1.00

A SIZE FOR SIZE SUBSTITUTION OF MITEK MII20 WITH TEE-LOK TL20 PLATES IS ALLOWED.

DIMENSIONS, SUPPORTS AND LOADINGS SPECIFIED BY FABRICATOR TO BE VERIFIED BY BUILDING DESIGNER

BEARINGS

JT	FACTORED GROSS REACTION VERT	HORZ	MAXIMUM FACTORED GROSS REACTION DOWN	HORZ	UPLIFT	INPUT BRG	REQRD BRG
10	1670	0	1670	0	0	HANGER BY OTHERS MIN. SEAT SIZE: 3-8	
19	1775	0	1775	0	0	5-8	5-8

UNFACTORED REACTIONS

JT	1ST LCASE COMBINED	SNOW	MAX./MIN. COMPONENT REACTIONS LIVE	PERM.LIVE	WIND	DEAD	SOIL
10	1172	820 / 0	0 / 0	0 / 0	0 / 0	352 / 0	0 / 0
19	1243	883 / 0	0 / 0	0 / 0	0 / 0	360 / 0	0 / 0

BEARING MATERIAL TO BE SPF NO.2 OR BETTER AT JOINT(S) 19

BRACING
TOP CHORD TO BE SHEATHED OR MAX. PURLIN SPACING = 3.83 FT.
MAX. UNBRACED BOTTOM CHORD LENGTH = 10.00 FT. OR RIGID CEILING DIRECTLY APPLIED.

ALL PITCH BREAKS AND PERIMETER CORNER JOINTS MUST BE LATERALLY RESTRAINED.

1 - 2x3 SPF No.2 LATERAL BRACE(S) AT 1/ 2 LENGTH OF 9-10, 6-12. DBS = 8-0-0 . CBF = 88 LBS.
1 - 2x3 SPF No.2 LATERAL BRACE(S) AT 1/ 2 LENGTH OF 7-11. DBS = 14-0-0 . CBF = 83 LBS.
1 - 2x3 SPF No.2 LATERAL BRACE(S) AT 1/ 2 LENGTH OF 8-11. DBS = 20-0-0 . CBF = 70 LBS.

DBS = DIAGONAL BRACE SPACING (MAX). CBF = CUMULATIVE BRACING FORCE. FASTEN LATERAL BRACE(S) USING (0.122"X3") SPIRAL NAILS : 1 NAIL FOR 2x3 BRACE(S), 2 FOR 1x4, 2x4, 2x5, 3 FOR 2x6, 4 FOR 2x8, 5 FOR 2x10, AND 6 FOR 2x12.

END VERTICAL(S) MUST BE SHEATHED OR HAVE BRACES AS INDICATED IN THE MAX. UNBRACED LENGTH COLUMN OF THE TABLE BELOW

LOADING
TOTAL LOAD CASES: (3)

CHORDS

MEMB. FR-TO	MAX. FACTORED FORCE (LBS)	FACTORED VERT. LOAD (PLF) FROM	TO	LC1 MAX CSI (LC)	MAX. UNBRAC LENGTH
1- 2	0 / 23	-77.3	-77.3	0.10 (1)	10.00
2- 3	-2362 / 0	-77.3	-77.3	0.27 (1)	4.24
3- 4	-2394 / 0	-77.3	-77.3	0.26 (1)	4.21
4- 5	-2789 / 0	-77.3	-77.3	0.36 (1)	3.83
5- 6	-2789 / 0	-77.3	-77.3	0.36 (1)	3.83
6- 7	-1791 / 0	-77.3	-77.3	0.75 (1)	4.09
7- 8	-1066 / 0	-77.3	-77.3	0.49 (1)	5.39
8- 9	-1066 / 0	-77.3	-77.3	0.49 (1)	5.39
10- 9	-1626 / 0	0.0	0.0	0.53 (1)	5.19
19- 2	-1738 / 0	0.0	0.0	0.18 (1)	6.32
19-18	0 / 0	-17.5	-17.5	0.06 (3)	10.00
18-17	0 / 2125	-17.5	-17.5	0.38 (1)	10.00
17-16	0 / 2128	-17.5	-17.5	0.38 (1)	10.00
16-15	0 / 3015	-17.5	-17.5	0.53 (1)	10.00
15-14	0 / 3015	-17.5	-17.5	0.53 (1)	10.00
14-13	0 / 3013	-17.5	-17.5	0.56 (1)	10.00
13-12	0 / 3013	-17.5	-17.5	0.56 (1)	10.00
12-11	0 / 1617	-17.5	-17.5	0.33 (1)	10.00
11-10	0 / 0	-17.5	-17.5	0.14 (3)	10.00

WEBS

MEMB. FR-TO	MAX. FACTORED FORCE (LBS)	MAX CSI (LC)
18- 3	-380 / 0	0.07 (1)
3-17	0 / 7	0.00 (3)
17- 4	0 / 86	0.03 (3)
4-16	0 / 981	0.22 (1)
16- 5	-412 / 0	0.16 (1)
16- 6	-334 / 0	0.26 (1)
14- 6	0 / 114	0.04 (3)
6-12	-1755 / 0	0.81 (1)
12- 7	0 / 1155	0.26 (1)
7-11	-950 / 0	0.67 (1)
11- 8	-564 / 0	0.25 (1)
11- 9	0 / 1799	0.40 (1)
2-18	0 / 2171	0.49 (1)

RECEIVED
TOWN OF MILTON
MAR 29, 2017
17-4990
BUILDING DIVISION

READ ALL NOTES ON THIS PAGE AND ON THE ENGINEERING NOTE PAGE ENP-1. THE NOTE PAGE IS AN INTEGRAL PART OF THIS DRAWING AS IT CONTAINS SPECIFICATIONS AND CRITERIA USED IN THE DESIGN OF THIS COMPONENT.

DESIGN CRITERIA

SPECIFIED LOADS:

TOP	CH.	LL	=	23.3	PSF
		DL	=	3.0	PSF
BOT	CH.	LL	=	0.0	PSF
		DL	=	7.0	PSF
TOTAL	LOAD		=	33.3	PSF

SPACING = 24.0 IN. C/C

LOADING IN ALL FLAT SECTIONS BASED ON A SLOPE OF 6.00/12

THIS TRUSS IS DESIGNED FOR RESIDENTIAL OR SMALL BUILDING REQUIREMENTS OF PART 9, NBCC 2010

THIS DESIGN COMPLIES WITH:
- PART 9 OF OBC 2012 , BCBC 2012 , ABC 2014
- CSA 086-09
- TPIC 2011

(55 % OF 27.2 P.S.F. G.S.L. PLUS 8.4 P.S.F. RAIN LOAD) EQUALS 23.3 P.S.F. SPECIFIED ROOF LIVE LOAD

ALLOWABLE DEFL.(LL)= L/360 (1.17")
CALCULATED VERT. DEFL.(LL) = L/ 999 (0.19")
ALLOWABLE DEFL.(TL)= L/360 (1.17")
CALCULATED VERT. DEFL.(TL) = L/ 999 (0.35")

CSI: TC=0.75 (6-7:1) , BC=0.56 (12-14:1) , WB=0.81 (6-12:1) , SSI=0.22 (8-9:1)

DOL LUMBER=1.00 NAIL=1.00 LS BEND=1.10 COMP=1.10 SHEAR=1.10 TENS= 1.10

COMPANION LIVE LOAD FACTOR = 0.50

TRUSS PLATE MANUFACTURER IS NOT RESPONSIBLE FOR QUALITY CONTROL IN THE TRUSS MANUFACTURING PLANT .

NAIL VALUES

PLATE	GRIP(DRY) (PSI) MAX	MIN	SHEAR (PLI) MAX	MIN	SECTION (PLI) MAX	MIN
MT20	618	354	1667	822	2284	1656

PLATE PLACEMENT TOL. = 0.250 inches

PLATE ROTATION TOL. = 5.0 Deg.

JSI GRIP= 0.90 (11) (INPUT = 0.90)
JSI METAL= 0.80 (13) (INPUT = 1.00)

KOTT

JOB NAME	TRUSS NAME	QUANTITY	PLY	JOB DESC.	DRWG NO.
PT0317-054	T42	1	1	TRUSS DESC. LECCO RIDGE-BLOCK 328	ENG JOB: PT0317-054

Kott Lumber Uxbridge, Stouffville, ON, CGC

Version 8.100 S Feb 9 2017 MiTek Industries, Inc. Mon Mar 13 09:57:08 2017 Page 1

ID:pF8Cn?9h9uHzAm5tCmlVl5yJJCp-uDAXtV3C2Co1r46SyRdYIf9RQvu3dV6igm_WHOzbOn9

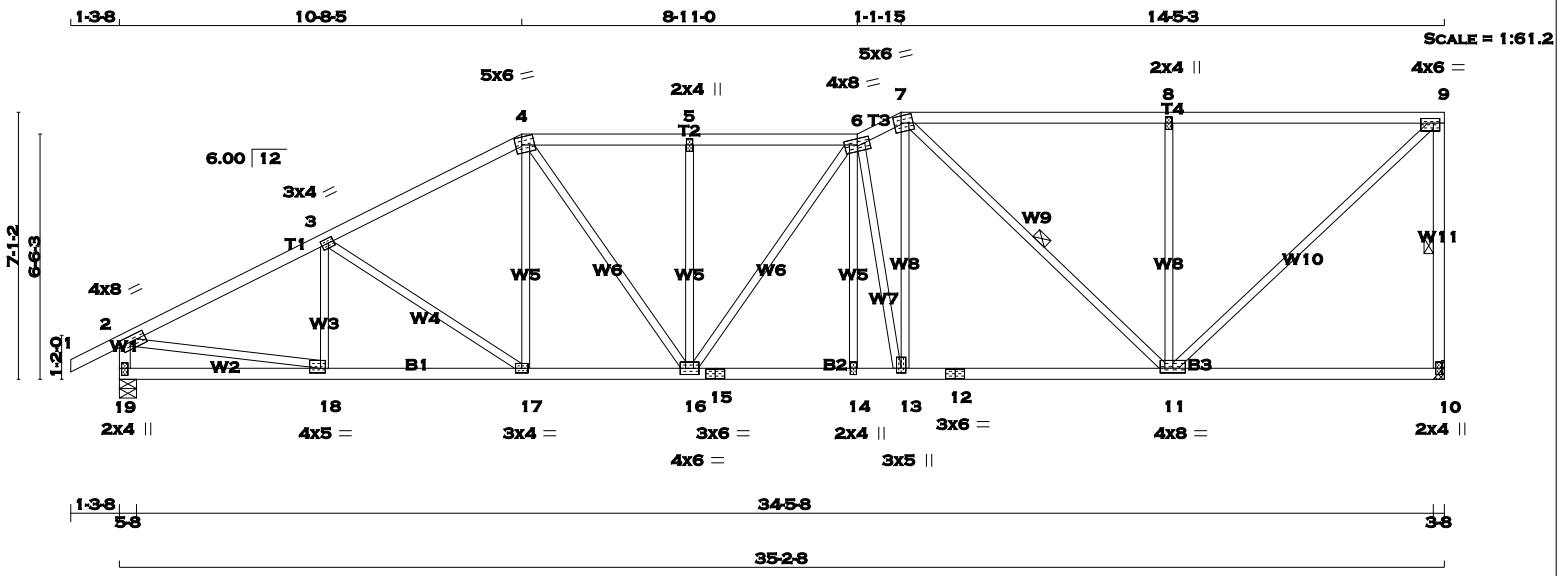

TOTAL WEIGHT = 161 lb

LUMBER

N. L. G. A. RULES

CHORDS	SIZE		LUMBER	DESCR.
1 - 4	2x4	DRY	No.2	SPF
4 - 6	2x4	DRY	No.2	SPF
6 - 7	2x4	DRY	No.2	SPF
7 - 9	2x4	DRY	No.2	SPF
10 - 9	2x4	DRY	No.2	SPF
19 - 2	2x4	DRY	No.2	SPF
19 - 15	2x4	DRY	No.2	SPF
15 - 12	2x4	DRY	No.2	SPF
12 - 10	2x4	DRY	No.2	SPF
ALL WEBS EXCEPT	2x3	DRY	No.2	SPF

DRY: SEASONED LUMBER.

PLATES (table is in inches)

JT	TYPE	PLATES	W	LEN	Y	X
2	TMVW-t	MT20	4.0	8.0	1.75	3.00
3	TMWW-t	MT20	3.0	4.0	1.50	1.75
4	TTWW-m	MT20	5.0	6.0	2.50	2.00
5	TMW+w	MT20	2.0	4.0		
6	TTWWW-m	MT20	4.0	8.0		
7	TTWW-m	MT20	5.0	6.0	2.25	2.25
8	TMW+w	MT20	2.0	4.0		
9	TMVW-t	MT20	4.0	6.0	1.50	2.00
10	BMV1+p	MT20	2.0	4.0		
11	BMWWW-t	MT20	4.0	8.0	1.50	1.50
12	BS-t	MT20	3.0	6.0		
13	BMWW+t	MT20	3.0	5.0	1.50	1.50
14	BMW+w	MT20	2.0	4.0		
15	BS-t	MT20	3.0	6.0		
16	BMWWW-t	MT20	4.0	6.0		
17	BMWW-t	MT20	3.0	4.0		
18	BMWW-t	MT20	4.0	5.0	1.50	1.50
19	BMV1+p	MT20	2.0	4.0	2.25	1.00

A SIZE FOR SIZE SUBSTITUTION OF MITEK MII20 WITH TEE-LOK TL20 PLATES IS ALLOWED.

DIMENSIONS, SUPPORTS AND LOADINGS SPECIFIED BY FABRICATOR TO BE VERIFIED BY BUILDING DESIGNER

BEARINGS

JT	FACTORED GROSS REACTION VERT	HORZ	MAXIMUM FACTORED GROSS REACTION DOWN	HORZ	UPLIFT	INPUT BRG IN-SX	REQRD BRG IN-SX
10	1670	0	1670	0	0	HANGER BY OTHERS MIN. SEAT SIZE: 3-8	
19	1775	0	1775	0	0	5-8	5-8

UNFACTORED REACTIONS

JT	1ST LCASE COMBINED	SNOW	MAX./MIN. COMPONENT REACTIONS LIVE	PERM.LIVE	WIND	DEAD	SOIL
10	1172	820 / 0	0 / 0	0 / 0	0 / 0	352 / 0	0 / 0
19	1243	883 / 0	0 / 0	0 / 0	0 / 0	360 / 0	0 / 0

BEARING MATERIAL TO BE SPF NO.2 OR BETTER AT JOINT(S) 19

BRACING

TOP CHORD TO BE SHEATHED OR MAX. PURLIN SPACING = 3.91 FT.
MAX. UNBRACED BOTTOM CHORD LENGTH = 10.00 FT. OR RIGID CEILING DIRECTLY APPLIED.

ALL PITCH BREAKS AND PERIMETER CORNER JOINTS MUST BE LATERALLY RESTRAINED.

1 - 2x3 SPF No.2 LATERAL BRACE(S) AT 1/ 2 LENGTH OF 9-10. DBS = 8-0-0 . CBF = 81 LBS.
1 - 2x3 SPF No.2 LATERAL BRACE(S) AT 1/ 2 LENGTH OF 7-11. DBS = 18-0-0 . CBF = 92 LBS.

DBS = DIAGONAL BRACE SPACING (MAX). CBF = CUMULATIVE BRACING FORCE. FASTEN LATERAL BRACE(S) USING (0.122"X3") SPIRAL NAILS : 1 NAIL FOR 2x3 BRACE(S), 2 FOR 1x4, 2x4, 2x5, 3 FOR 2x6, 4 FOR 2x8, 5 FOR 2x10, AND 6 FOR 2x12.

END VERTICAL(S) MUST BE SHEATHED OR HAVE BRACES AS INDICATED IN THE MAX. UNBRACED LENGTH COLUMN OF THE TABLE BELOW

LOADING

TOTAL LOAD CASES: (3)

CHORDS MEMB. FR-TO	MAX. FACTORED FORCE (LBS)	FACTORED VERT. LOAD LC1 (PLF) FROM	TO	MAX CSI (LC)	MAX. UNBRAC LENGTH	WEBS MEMB. FR-TO	MAX. FACTORED FORCE (LBS)	MAX CSI (LC)
1- 2	0 / 23	-77.3	-77.3	0.10 (1)	10.00	18- 3	-251 / 16	0.06 (1)
2- 3	-2467 / 0	-77.3	-77.3	0.52 (1)	3.91	3-17	-267 / 0	0.20 (1)
3- 4	-2262 / 0	-77.3	-77.3	0.49 (1)	4.07	17- 4	0 / 236	0.05 (1)
4- 5	-2349 / 0	-77.3	-77.3	0.33 (1)	4.16	4-16	0 / 586	0.13 (1)
5- 6	-2349 / 0	-77.3	-77.3	0.33 (1)	4.16	16- 5	-415 / 0	0.29 (1)
6- 7	-2326 / 0	-77.3	-77.3	0.07 (1)	4.46	16- 6	0 / 30	0.01 (1)
7- 8	-1508 / 0	-77.3	-77.3	0.83 (1)	4.10	14- 6	-16 / 14	0.01 (1)
8- 9	-1509 / 0	-77.3	-77.3	0.84 (1)	4.10	6-13	-1256 / 0	0.92 (1)
10- 9	-1618 / 0	0.0	0.0	0.37 (1)	5.20	13- 7	0 / 1354	0.30 (1)
19- 2	-1732 / 0	0.0	0.0	0.18 (1)	6.32	7-11	-820 / 0	0.56 (1)
						11- 8	-693 / 0	0.60 (1)
19-18	0 / 0	-17.5	-17.5	0.11 (3)	10.00	11- 9	0 / 2059	0.46 (1)
18-17	0 / 2225	-17.5	-17.5	0.40 (1)	10.00	2-18	0 / 2252	0.51 (1)
17-16	0 / 2007	-17.5	-17.5	0.37 (1)	10.00			
16-15	0 / 2331	-17.5	-17.5	0.43 (1)	10.00			
15-14	0 / 2331	-17.5	-17.5	0.43 (1)	10.00			
14-13	0 / 2332	-17.5	-17.5	0.45 (1)	10.00			
13-12	0 / 2101	-17.5	-17.5	0.46 (1)	10.00			
12-11	0 / 2101	-17.5	-17.5	0.46 (1)	10.00			
11-10	0 / 0	-17.5	-17.5	0.23 (3)	10.00			

DESIGN CRITERIA

SPECIFIED LOADS:

TOP	CH.	LL	=	23.3	PSF
		DL	=	3.0	PSF
BOT	CH.	LL	=	0.0	PSF
		DL	=	7.0	PSF
TOTAL	LOAD		=	33.3	PSF

SPACING = 24.0 IN. C/C

LOADING IN ALL FLAT SECTIONS BASED ON A SLOPE OF 6.00/12

THIS TRUSS IS DESIGNED FOR RESIDENTIAL OR SMALL BUILDING REQUIREMENTS OF PART 9, NBCC 2010

THIS DESIGN COMPLIES WITH:
- PART 9 OF OBC 2012 , BCBC 2012 , ABC 2014
- CSA 086-09
- TPIC 2011

(55 % OF 27.2 P.S.F. G.S.L. PLUS 8.4 P.S.F. RAIN LOAD) EQUALS 23.3 P.S.F. SPECIFIED ROOF LIVE LOAD

ALLOWABLE DEFL.(LL)= L/360 (1.17")
CALCULATED VERT. DEFL.(LL) = L/ 999 (0.16")
ALLOWABLE DEFL.(TL)= L/360 (1.17")
CALCULATED VERT. DEFL.(TL) = L/ 999 (0.29")

CSI: TC=0.84 (8-9:1) , BC=0.46 (11-13:1) , WB=0.92 (6-13:1) , SSI=0.27 (8-9:1)

DOL LUMBER=1.00 NAIL=1.00 LS BEND=1.10 COMP=1.10 SHEAR=1.10 TENS= 1.10

COMPANION LIVE LOAD FACTOR = 0.50

TRUSS PLATE MANUFACTURER IS NOT RESPONSIBLE FOR QUALITY CONTROL IN THE TRUSS MANUFACTURING PLANT .

NAIL VALUES

PLATE	GRIP(DRY) (PSI) MAX	MIN	SHEAR (PLI) MAX	MIN	SECTION (PLI) MAX	MIN
MT20	618	354	1667	822	2284	1656

PLATE PLACEMENT TOL. = 0.250 inches

PLATE ROTATION TOL. = 5.0 Deg.

JSI GRIP= 0.90 (9) (INPUT = 0.90)
JSI METAL= 0.67 (18) (INPUT = 1.00)

LICENSED PROFESSIONAL ENGINEER
R.M. TREVISAN
100136551
March 13th, 2017
PROVINCE OF ONTARIO

RECEIVED
TOWN OF MILTON
MAR 29, 2017
17-4990
BUILDING DIVISION

READ ALL NOTES ON THIS PAGE AND ON THE ENGINEERING NOTE PAGE ENP-1. THE NOTE PAGE IS AN INTEGRAL PART OF THIS DRAWING AS IT CONTAINS SPECIFICATIONS AND CRITERIA USED IN THE DESIGN OF THIS COMPONENT.

KOTT

JOB NAME	TRUSS NAME	QUANTITY	PLY	JOB DESC.	DRWG NO.
PT0317-054	**T43**	**1**	**1**	TRUSS DESC. LECCO RIDGE-BLOCK 328	

Kott Lumber Uxbridge, Stouffville, ON, CGC

Version 8.100 S Feb 9 2017 MiTek Industries, Inc. Mon Mar 13 09:57:09 2017 Page 1

ID:pF8Cn?9h9uHzAm5tCmlVl5yJJCp-MQkv5r3qpWwuTEhfW89nqtigkJEpM0dsvQj3przbOn8

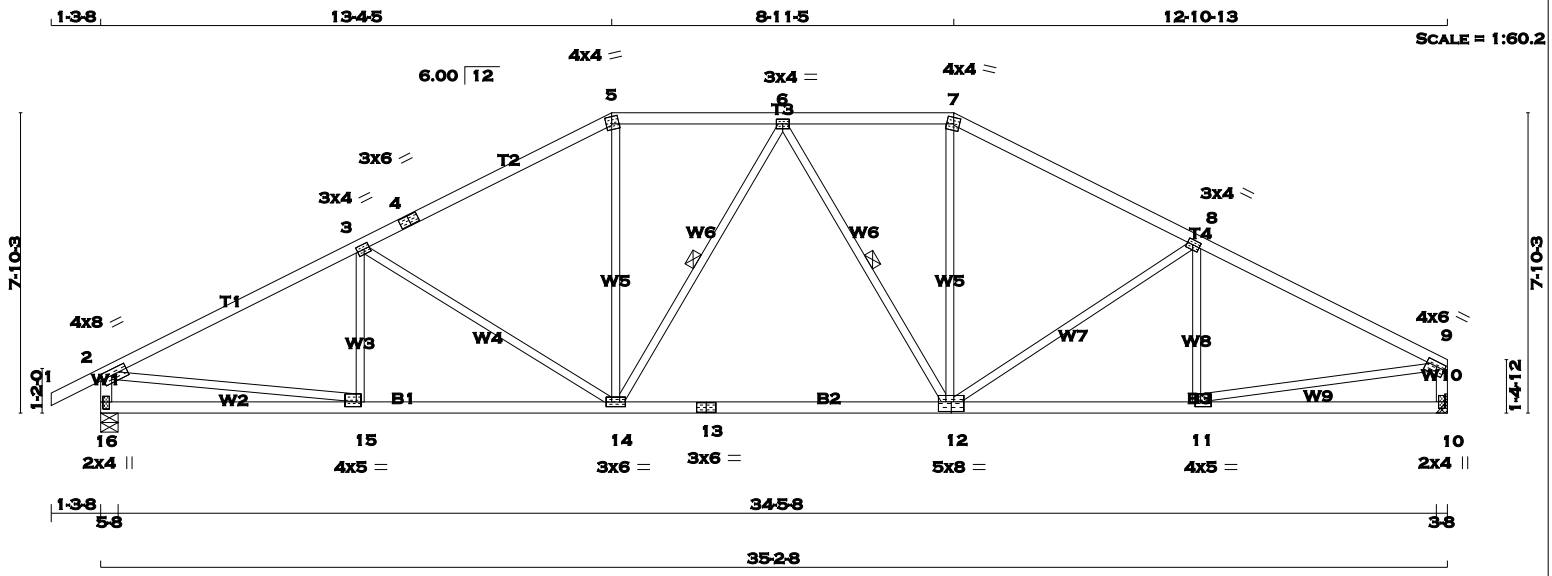

TOTAL WEIGHT = 142 lb

[M][F]

LUMBER

N. L. G. A. RULES

CHORDS	SIZE		LUMBER	DESCR.
1 - 4	2x4	DRY	No.2	SPF
4 - 5	2x4	DRY	No.2	SPF
5 - 7	2x4	DRY	No.2	SPF
7 - 9	2x4	DRY	No.2	SPF
16 - 2	2x4	DRY	No.2	SPF
10 - 9	2x4	DRY	No.2	SPF
16 - 13	2x4	DRY	No.2	SPF
13 - 12	2x4	DRY	No.2	SPF
12 - 10	2x4	DRY	No.2	SPF
ALL WEBS EXCEPT	2x3	DRY	No.2	SPF

DRY: SEASONED LUMBER.

PLATES (table is in inches)

JT	TYPE	PLATES	W	LEN	Y	X
2	TMVW-t	MT20	4.0	8.0	1.75	3.00
3	TMWW-t	MT20	3.0	4.0	1.50	1.75
4	TS-t	MT20	3.0	6.0		
5	TTW-m	MT20	4.0	4.0	2.25	1.75
6	TMWW-t	MT20	3.0	4.0		
7	TTW-m	MT20	4.0	4.0	2.00	1.75
8	TMWW-t	MT20	3.0	4.0	1.50	1.75
9	TMVW-t	MT20	4.0	6.0	1.50	2.75
10	BMV1+p	MT20	2.0	4.0		
11	BMWW-t	MT20	4.0	5.0	1.50	1.75
12	BSWWW-l	MT20	5.0	8.0	3.00	4.00
13	BS-t	MT20	3.0	6.0		
14	BMWWW-t	MT20	3.0	6.0		
15	BMWW-t	MT20	4.0	5.0	1.50	1.50
16	BMV1+p	MT20	2.0	4.0	2.25	1.00

A SIZE FOR SIZE SUBSTITUTION OF MITEK MII20 WITH TEE-LOK TL20 PLATES IS ALLOWED.

DIMENSIONS, SUPPORTS AND LOADINGS SPECIFIED BY FABRICATOR TO BE VERIFIED BY BUILDING DESIGNER

BEARINGS

JT	FACTORED GROSS REACTION VERT	HORZ	MAXIMUM FACTORED GROSS REACTION DOWN	HORZ	UPLIFT	INPUT BRG IN-SX	REQRD BRG IN-SX
16	1775	0	1775	0	0	5-8	5-8
10	1670	0	1670	0	0	HANGER BY OTHERS	
						MIN. SEAT SIZE: 3-8	

UNFACTORED REACTIONS

JT	1ST LCASE COMBINED	SNOW	MAX./MIN. COMPONENT REACTIONS LIVE	PERM.LIVE	WIND	DEAD	SOIL
16	1243	883 / 0	0 / 0	0 / 0	0 / 0	360 / 0	0 / 0
10	1172	820 / 0	0 / 0	0 / 0	0 / 0	352 / 0	0 / 0

BEARING MATERIAL TO BE SPF NO.2 OR BETTER AT JOINT(S) 16

BRACING

TOP CHORD TO BE SHEATHED OR MAX. PURLIN SPACING = 3.78 FT.
MAX. UNBRACED BOTTOM CHORD LENGTH = 10.00 FT. OR RIGID CEILING DIRECTLY APPLIED.

ALL PITCH BREAKS AND PERIMETER CORNER JOINTS MUST BE LATERALLY RESTRAINED.

1 - 2x3 SPF No.2 LATERAL BRACE(S) AT 1/ 2 LENGTH OF 6-14, 6-12. DBS = 20-0-0 . CBF = 33 LBS.

DBS = DIAGONAL BRACE SPACING (MAX). CBF = CUMULATIVE BRACING FORCE. FASTEN LATERAL BRACE(S) USING (0.122"X3") SPIRAL NAILS : 1 NAIL FOR 2x3 BRACE(S), 2 FOR 1x4, 2x4, 2x5, 3 FOR 2x6, 4 FOR 2x8, 5 FOR 2x10, AND 6 FOR 2x12.

END VERTICAL(S) MUST BE SHEATHED OR HAVE BRACES AS INDICATED IN THE MAX. UNBRACED LENGTH COLUMN OF THE TABLE BELOW

LOADING

TOTAL LOAD CASES: (3)

CHORDS

MEMB. FR-TO	MAX. FACTORED FORCE (LBS)	FACTORED VERT. LOAD LC1 (PLF) FROM	TO	MAX CSI (LC)	MAX. UNBRAC LENGTH
1- 2	0 / 23	-77.3	-77.3	0.10 (1)	10.00
2- 3	-2500 / 0	-77.3	-77.3	0.62 (1)	3.78
3- 4	-2089 / 0	-77.3	-77.3	0.54 (1)	4.14
4- 5	-2089 / 0	-77.3	-77.3	0.54 (1)	4.14
5- 6	-1850 / 0	-77.3	-77.3	0.23 (1)	4.72
6- 7	-1823 / 0	-77.3	-77.3	0.23 (1)	4.75
7- 8	-2061 / 0	-77.3	-77.3	0.50 (1)	4.22
8- 9	-2366 / 0	-77.3	-77.3	0.55 (1)	3.94
16- 2	-1723 / 0	0.0	0.0	0.17 (1)	6.34
10- 9	-1620 / 0	0.0	0.0	0.17 (1)	6.50
16-15	0 / 0	-17.5	-17.5	0.16 (3)	10.00
15-14	0 / 2261	-17.5	-17.5	0.49 (1)	10.00
14-13	0 / 1958	-17.5	-17.5	0.44 (1)	10.00
13-12	0 / 1958	-17.5	-17.5	0.44 (1)	10.00
12-11	0 / 2139	-17.5	-17.5	0.47 (1)	10.00
11-10	0 / 0	-17.5	-17.5	0.15 (3)	10.00

WEBS

MEMB. FR-TO	MAX. FACTORED FORCE (LBS)	MAX CSI (LC)
15- 3	-167 / 55	0.05 (1)
3-14	-496 / 0	0.65 (1)
14- 5	0 / 595	0.13 (1)
14- 6	-216 / 0	0.11 (1)
6-12	-268 / 0	0.14 (1)
12- 7	0 / 589	0.13 (1)
12- 8	-388 / 0	0.48 (1)
11- 8	-241 / 29	0.08 (1)
2-15	0 / 2279	0.51 (1)
11- 9	0 / 2168	0.49 (1)

DESIGN CRITERIA

SPECIFIED LOADS:

TOP CH.	LL	=	23.3	PSF
	DL	=	3.0	PSF
BOT CH.	LL	=	0.0	PSF
	DL	=	7.0	PSF
TOTAL LOAD		=	33.3	PSF

SPACING = 24.0 IN. C/C

LOADING IN FLAT SECTION BASED ON A SLOPE OF 6.00/12

THIS TRUSS IS DESIGNED FOR RESIDENTIAL OR SMALL BUILDING REQUIREMENTS OF PART 9, NBCC 2010

THIS DESIGN COMPLIES WITH:
- PART 9 OF OBC 2012 , BCBC 2012 , ABC 2014
- CSA 086-09
- TPIC 2011

(55 % OF 27.2 P.S.F. G.S.L. PLUS 8.4 P.S.F. RAIN LOAD) EQUALS 23.3 P.S.F. SPECIFIED ROOF LIVE LOAD

ALLOWABLE DEFL.(LL)= L/360 (1.17")
CALCULATED VERT. DEFL.(LL) = L/ 999 (0.12")
ALLOWABLE DEFL.(TL)= L/360 (1.17")
CALCULATED VERT. DEFL.(TL) = L/ 999 (0.30")

CSI: TC=0.62 (2-3:1) , BC=0.49 (14-15:1) , WB=0.65 (3-14:1) , SSI=0.23 (2-3:1)

DOL LUMBER=1.00 NAIL=1.00 LS BEND=1.10 COMP=1.10 SHEAR=1.10 TENS= 1.10

COMPANION LIVE LOAD FACTOR = 0.50

TRUSS PLATE MANUFACTURER IS NOT RESPONSIBLE FOR QUALITY CONTROL IN THE TRUSS MANUFACTURING PLANT .

NAIL VALUES

PLATE	GRIP(DRY) (PSI) MAX	MIN	SHEAR (PLI) MAX	MIN	SECTION (PLI) MAX	MIN
MT20	618	354	1667	822	2284	1656

PLATE PLACEMENT TOL. = 0.250 inches

PLATE ROTATION TOL. = 5.0 Deg.

JSI GRIP= 0.90 (11) (INPUT = 0.90)
JSI METAL= 0.68 (15) (INPUT = 1.00)

LICENSED PROFESSIONAL ENGINEER
P.M. TREVISAN
100136551
March 13th, 2017
PROVINCE OF ONTARIO

RECEIVED
TOWN OF MILTON
MAR 29, 2017
17-4990
BUILDING DIVISION

READ ALL NOTES ON THIS PAGE AND ON THE ENGINEERING NOTE PAGE ENP-1. THE NOTE PAGE IS AN INTEGRAL PART OF THIS DRAWING AS IT CONTAINS SPECIFICATIONS AND CRITERIA USED IN THE DESIGN OF THIS COMPONENT.

KOTT

JOB NAME	TRUSS NAME	QUANTITY	PLY	JOB DESC.	DRWG NO.
PT0317-054	T44	1	1	TRUSS DESC. LECCO RIDGE-BLOCK 328	ENG JOB: PT0317-054

Kott Lumber Uxbridge, Stouffville, ON, CGC

Version 8.100 S Feb 9 2017 MiTek Industries, Inc. Mon Mar 13 09:57:09 2017 Page 1

ID:pF8Cn?9h9uHzAm5tCmlVl5yJJCp-MQkv5r3qpWwuTEhfW89nqtikRJF9M3ssvQj3przbOn8

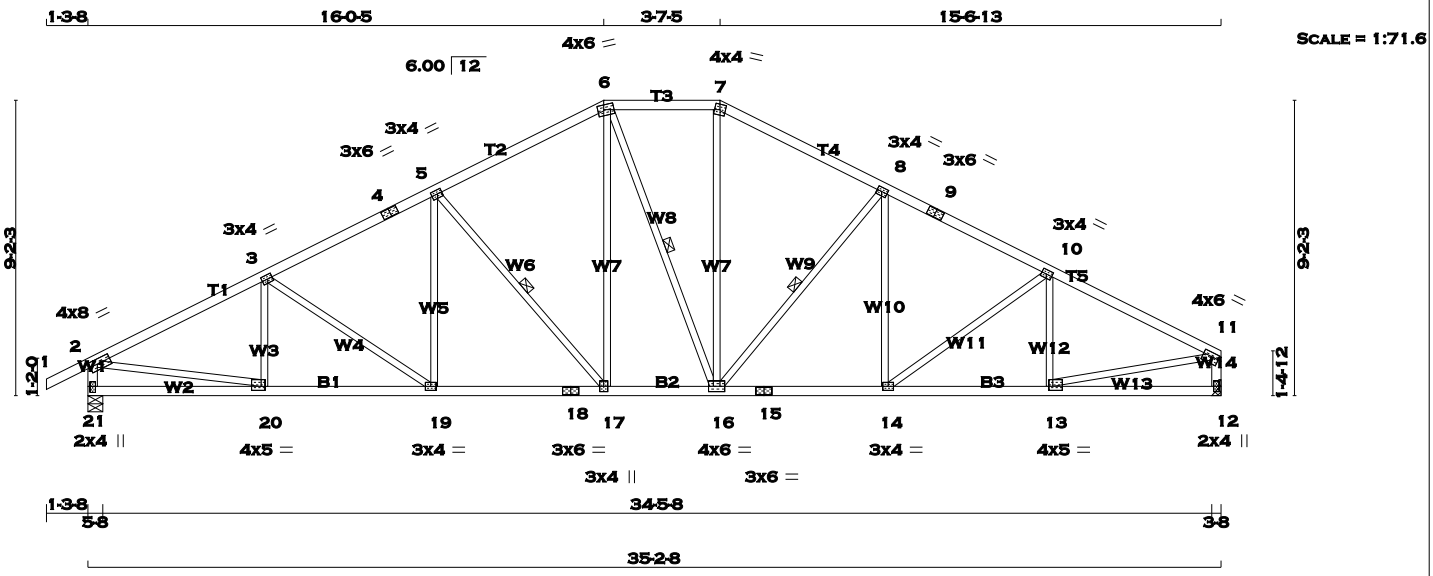

TOTAL WEIGHT = 156 lb

[M][F]

LUMBER

N. L. G. A. RULES

CHORDS	SIZE		LUMBER	DESCR.
1 - 4	2x4	DRY	No.2	SPF
4 - 6	2x4	DRY	No.2	SPF
6 - 7	2x4	DRY	No.2	SPF
7 - 9	2x4	DRY	No.2	SPF
9 - 11	2x4	DRY	No.2	SPF
21 - 2	2x4	DRY	No.2	SPF
12 - 11	2x4	DRY	No.2	SPF
21 - 18	2x4	DRY	No.2	SPF
18 - 15	2x4	DRY	No.2	SPF
15 - 12	2x4	DRY	No.2	SPF
ALL WEBS EXCEPT	2x3	DRY	No.2	SPF

DRY: SEASONED LUMBER.

PLATES (table is in inches)

JT	TYPE	PLATES	W	LEN	Y	X
2	TMVW-t	MT20	4.0	8.0	1.75	3.00
3, 5, 8, 10						
3	TMWW-t	MT20	3.0	4.0	1.50	1.75
4	TS-t	MT20	3.0	6.0		
6	TTWW-m	MT20	4.0	6.0	1.75	2.25
7	TTW-m	MT20	4.0	4.0		
9	TS-t	MT20	3.0	6.0		
11	TMVW-t	MT20	4.0	6.0	1.50	2.75
12	BMV1+p	MT20	2.0	4.0		
13	BMWW-t	MT20	4.0	5.0	1.50	1.50
14	BMWW-t	MT20	3.0	4.0		
15	BS-t	MT20	3.0	6.0		
16	BMWWW-t	MT20	4.0	6.0		
17	BMWW+t	MT20	3.0	4.0		
18	BS-t	MT20	3.0	6.0		
19	BMWW-t	MT20	3.0	4.0		
20	BMWW-t	MT20	4.0	5.0	1.50	1.50
21	BMV1+p	MT20	2.0	4.0	2.25	1.00

A SIZE FOR SIZE SUBSTITUTION OF MITEK MII20 WITH TEE-LOK TL20 PLATES IS ALLOWED.

DIMENSIONS, SUPPORTS AND LOADINGS SPECIFIED BY FABRICATOR TO BE VERIFIED BY BUILDING DESIGNER

BEARINGS

JT	FACTORED GROSS REACTION VERT	HORZ	MAXIMUM FACTORED GROSS REACTION DOWN	HORZ	UPLIFT	INPUT BRG IN-SX	REQRD BRG IN-SX
21	1775	0	1775	0	0	5-8	5-8
12	1670	0	1670	0	0	HANGER BY OTHERS	
						MIN. SEAT SIZE: 3-8	

UNFACTORED REACTIONS

JT	1ST LCASE COMBINED	SNOW	MAX./MIN. COMPONENT REACTIONS LIVE	PERM.LIVE	WIND	DEAD	SOIL
21	1243	883 / 0	0 / 0	0 / 0	0 / 0	360 / 0	0 / 0
12	1172	820 / 0	0 / 0	0 / 0	0 / 0	352 / 0	0 / 0

BEARING MATERIAL TO BE SPF NO.2 OR BETTER AT JOINT(S) 21

BRACING

TOP CHORD TO BE SHEATHED OR MAX. PURLIN SPACING = 4.08 FT.
MAX. UNBRACED BOTTOM CHORD LENGTH = 10.00 FT. OR RIGID CEILING DIRECTLY APPLIED.

ALL PITCH BREAKS AND PERIMETER CORNER JOINTS MUST BE LATERALLY RESTRAINED.

1 - 2x3 SPF No.2 LATERAL BRACE(S) AT 1/ 2 LENGTH OF 5-17, 6-16, 8-16. DBS = 20-0-0 . CBF = 77 LBS.

DBS = DIAGONAL BRACE SPACING (MAX). CBF = CUMULATIVE BRACING FORCE. FASTEN LATERAL BRACE(S) USING (0.122"X3") SPIRAL NAILS : 1 NAIL FOR 2x3 BRACE(S), 2 FOR 1x4, 2x4, 2x5, 3 FOR 2x6, 4 FOR 2x8, 5 FOR 2x10, AND 6 FOR 2x12.

END VERTICAL(S) MUST BE SHEATHED OR HAVE BRACES AS INDICATED IN THE MAX. UNBRACED LENGTH COLUMN OF THE TABLE BELOW

LOADING

TOTAL LOAD CASES: (3)

CHORDS

MEMB. FR-TO	MAX. FACTORED FORCE (LBS)	FROM	FACTORED VERT. LOAD LC1 (PLF) TO	MAX CSI (LC)	MAX. UNBRAC LENGTH
1- 2	0 / 23	-77.3	-77.3	0.10 (1)	10.00
2- 3	-2457 / 0	-77.3	-77.3	0.38 (1)	4.08
3- 4	-2280 / 0	-77.3	-77.3	0.31 (1)	4.28
4- 5	-2280 / 0	-77.3	-77.3	0.31 (1)	4.28
5- 6	-1851 / 0	-77.3	-77.3	0.30 (1)	4.66
6- 7	-1637 / 0	-77.3	-77.3	0.16 (1)	5.04
7- 8	-1842 / 0	-77.3	-77.3	0.28 (1)	4.69
8- 9	-2213 / 0	-77.3	-77.3	0.29 (1)	4.35
9-10	-2213 / 0	-77.3	-77.3	0.29 (1)	4.35
10-11	-2301 / 0	-77.3	-77.3	0.34 (1)	4.22
21- 2	-1732 / 0	0.0	0.0	0.18 (1)	6.33
12-11	-1629 / 0	0.0	0.0	0.17 (1)	6.48
21-20	0 / 0	-17.5	-17.5	0.11 (3)	10.00
20-19	0 / 2212	-17.5	-17.5	0.41 (1)	10.00
19-18	0 / 2039	-17.5	-17.5	0.38 (1)	10.00
18-17	0 / 2039	-17.5	-17.5	0.38 (1)	10.00
17-16	0 / 1645	-17.5	-17.5	0.31 (1)	10.00
16-15	0 / 1979	-17.5	-17.5	0.37 (1)	10.00
15-14	0 / 1979	-17.5	-17.5	0.37 (1)	10.00
14-13	0 / 2073	-17.5	-17.5	0.37 (1)	10.00
13-12	0 / 0	-17.5	-17.5	0.10 (3)	10.00

WEBS

MEMB. FR-TO	MAX. FACTORED FORCE (LBS)	MAX CSI (LC)
20- 3	-249 / 14	0.06 (1)
3-19	-209 / 0	0.15 (1)
19- 5	0 / 215	0.05 (3)
5-17	-614 / 0	0.28 (1)
17- 6	0 / 536	0.12 (1)
6-16	-20 / 0	0.01 (1)
16- 7	0 / 519	0.12 (1)
16- 8	-546 / 0	0.25 (1)
8-14	0 / 158	0.04 (3)
14-10	-116 / 0	0.08 (1)
13-10	-326 / 0	0.08 (1)
2-20	0 / 2239	0.50 (1)
13-11	0 / 2115	0.48 (1)

DESIGN CRITERIA

SPECIFIED LOADS:

TOP CH.	LL	=	23.3	PSF
	DL	=	3.0	PSF
BOT CH.	LL	=	0.0	PSF
	DL	=	7.0	PSF
TOTAL LOAD		=	33.3	PSF

SPACING = 24.0 IN. C/C

LOADING IN FLAT SECTION BASED ON A SLOPE OF 6.00/12

THIS TRUSS IS DESIGNED FOR RESIDENTIAL OR SMALL BUILDING REQUIREMENTS OF PART 9, NBCC 2010

THIS DESIGN COMPLIES WITH:
- PART 9 OF OBC 2012 , BCBC 2012 , ABC 2014
- CSA 086-09
- TPIC 2011

(55 % OF 27.2 P.S.F. G.S.L. PLUS 8.4 P.S.F. RAIN LOAD) EQUALS 23.3 P.S.F. SPECIFIED ROOF LIVE LOAD

ALLOWABLE DEFL.(LL)= L/360 (1.17")
CALCULATED VERT. DEFL.(LL) = L/ 999 (0.12")
ALLOWABLE DEFL.(TL)= L/360 (1.17")
CALCULATED VERT. DEFL.(TL) = L/ 999 (0.23")

CSI: TC=0.38 (2-3:1) , BC=0.41 (19-20:1) , WB=0.50 (2-20:1) , SSI=0.17 (2-3:1)

DOL LUMBER=1.00 NAIL=1.00 LS BEND=1.10 COMP=1.10 SHEAR=1.10 TENS= 1.10

COMPANION LIVE LOAD FACTOR = 0.50

TRUSS PLATE MANUFACTURER IS NOT RESPONSIBLE FOR QUALITY CONTROL IN THE TRUSS MANUFACTURING PLANT .

NAIL VALUES

PLATE	GRIP(DRY) (PSI) MAX	MIN	SHEAR (PLI) MAX	MIN	SECTION (PLI) MAX	MIN
MT20	618	354	1667	822	2284	1656

PLATE PLACEMENT TOL. = 0.250 inches

PLATE ROTATION TOL. = 5.0 Deg.

JSI GRIP= 0.88 (11) (INPUT = 0.90)
JSI METAL= 0.66 (20) (INPUT = 1.00)

LICENSED PROFESSIONAL ENGINEER
P.M. TREVISAN
100136551
March 13th, 2017
PROVINCE OF ONTARIO

RECEIVED
TOWN OF MILTON
MAR 29, 2017
17-4990
BUILDING DIVISION

READ ALL NOTES ON THIS PAGE AND ON THE ENGINEERING NOTE PAGE ENP-1. THE NOTE PAGE IS AN INTEGRAL PART OF THIS DRAWING AS IT CONTAINS SPECIFICATIONS AND CRITERIA USED IN THE DESIGN OF THIS COMPONENT.

KOTT

JOB NAME	TRUSS NAME	QUANTITY	PLY	JOB DESC.	DRWG NO.
PT0317-054	T46	1	1	TRUSS DESC. LECCO RIDGE-BLOCK 328	ENG JOB: PT0317-054

Kott Lumber Uxbridge, Stouffville, ON, CGC

Version 8.100 S Feb 9 2017 MiTek Industries, Inc. Mon Mar 13 09:57:09 2017 Page 1

ID:pF8Cn?9h9uHzAm5tCmlVI5yJJCp-MQkv5r3qpWwuTEhfW89nqtihmJGPM_xsvQj3przbOn8

SCALE = 1:83.9

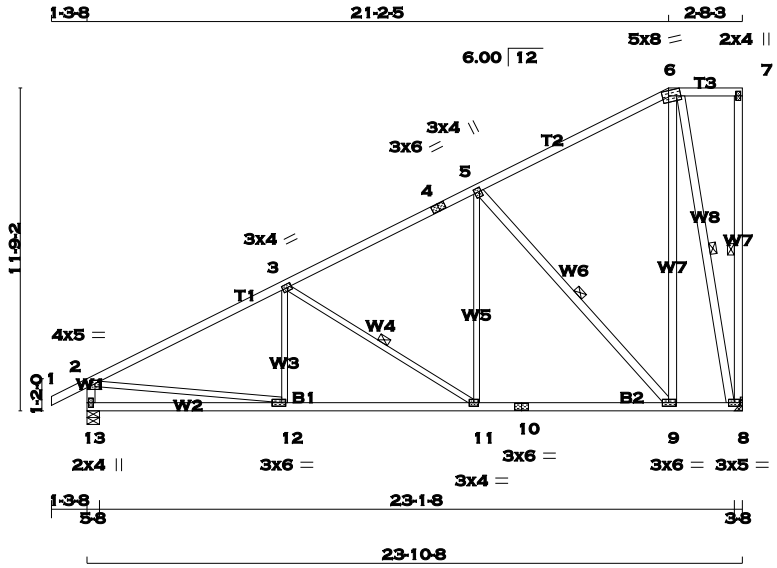

TOTAL WEIGHT = 132 lb

[M][F]

LUMBER

N. L. G. A. RULES

CHORDS	SIZE		LUMBER	DESCR.
1 - 4	2x4	DRY	No.2	SPF
4 - 6	2x4	DRY	No.2	SPF
6 - 7	2x4	DRY	No.2	SPF
8 - 7	2x4	DRY	No.2	SPF
13 - 2	2x4	DRY	No.2	SPF
13 - 10	2x4	DRY	No.2	SPF
10 - 8	2x4	DRY	No.2	SPF
ALL WEBS	2x3	DRY	No.2	SPF
EXCEPT				
5 - 9	2x4	DRY	No.2	SPF
9 - 6	2x4	DRY	No.2	SPF
6 - 8	2x4	DRY	No.2	SPF

DRY: SEASONED LUMBER.

PLATES (table is in inches)

JT	TYPE	PLATES	W	LEN	Y	X
2	TMVW-p	MT20	4.0	5.0	1.50	2.25
3	TMWW-t	MT20	3.0	4.0	1.50	1.75
4	TS-t	MT20	3.0	6.0		
5	TMWW+t	MT20	3.0	4.0	1.75	0.75
6	TTWW-m	MT20	5.0	8.0	2.25	2.75
7	TMV+p	MT20	2.0	4.0		
8	BMVW1-t	MT20	3.0	5.0		
9	BMWW-t	MT20	3.0	6.0	1.50	2.75
10	BS-t	MT20	3.0	6.0		
11	BMWW-t	MT20	3.0	4.0		
12	BMWW-t	MT20	3.0	6.0	1.50	1.75
13	BMV1+p	MT20	2.0	4.0		

A SIZE FOR SIZE SUBSTITUTION OF MITEK MII20 WITH TEE-LOK TL20 PLATES IS ALLOWED.

DIMENSIONS, SUPPORTS AND LOADINGS SPECIFIED BY FABRICATOR TO BE VERIFIED BY BUILDING DESIGNER

BEARINGS

JT	FACTORED GROSS REACTION VERT	HORZ	MAXIMUM FACTORED GROSS REACTION DOWN	HORZ	UPLIFT	INPUT BRG IN-SX	REQRD BRG IN-SX
8	1132	0	1132	0	0	HANGER BY OTHERS MIN. SEAT SIZE: 3-8	
13	1237	0	1237	0	0	5-8	5-8

UNFACTORED REACTIONS

JT	1ST LCASE COMBINED	SNOW	MAX./MIN. COMPONENT REACTIONS LIVE	PERM.LIVE	WIND	DEAD	SOIL
8	795	556 / 0	0 / 0	0 / 0	0 / 0	239 / 0	0 / 0
13	866	619 / 0	0 / 0	0 / 0	0 / 0	247 / 0	0 / 0

BEARING MATERIAL TO BE SPF NO.2 OR BETTER AT JOINT(S) 13

BRACING

TOP CHORD TO BE SHEATHED OR MAX. PURLIN SPACING = 4.69 FT.
MAX. UNBRACED BOTTOM CHORD LENGTH = 10.00 FT. OR RIGID CEILING DIRECTLY APPLIED.

ALL PITCH BREAKS AND PERIMETER CORNER JOINTS MUST BE LATERALLY RESTRAINED.

1 - 2x3 SPF No.2 LATERAL BRACE(S) AT 1/ 2 LENGTH OF 7-8, 3-11. DBS = 20-0-0 . CBF = 75 LBS.
1 - 2x3 SPF No.2 LATERAL BRACE(S) AT 1/ 2 LENGTH OF 5-9, 6-8. DBS = 14-0-0 . CBF = 92 LBS.

DBS = DIAGONAL BRACE SPACING (MAX). CBF = CUMULATIVE BRACING FORCE. FASTEN LATERAL BRACE(S) USING (0.122"X3") SPIRAL NAILS : 1 NAIL FOR 2x3 BRACE(S), 2 FOR 1x4, 2x4, 2x5, 3 FOR 2x6, 4 FOR 2x8, 5 FOR 2x10, AND 6 FOR 2x12.

END VERTICAL(S) MUST BE SHEATHED OR HAVE BRACES AS INDICATED IN THE MAX. UNBRACED LENGTH COLUMN OF THE TABLE BELOW

LOADING

TOTAL LOAD CASES: (3)

CHORDS

MEMB. FR-TO	MAX. FACTORED FORCE (LBS)	FACTORED VERT. LOAD LC1 (PLF) FROM	TO	MAX CSI (LC)	MAX. UNBRAC LENGTH
1- 2	0 / 23	-77.3	-77.3	0.10 (1)	10.00
2- 3	-1519 / 0	-77.3	-77.3	0.55 (1)	4.69
3- 4	-979 / 0	-77.3	-77.3	0.43 (1)	5.74
4- 5	-979 / 0	-77.3	-77.3	0.43 (1)	5.74
5- 6	-280 / 0	-77.3	-77.3	0.45 (1)	6.25
6- 7	0 / 0	-77.3	-77.3	0.09 (1)	10.00
8- 7	-104 / 0	0.0	0.0	0.08 (1)	6.25
13- 2	-1185 / 0	0.0	0.0	0.12 (1)	7.34
13-12	0 / 0	-17.5	-17.5	0.21 (3)	10.00
12-11	0 / 1380	-17.5	-17.5	0.33 (1)	10.00
11-10	0 / 875	-17.5	-17.5	0.24 (1)	10.00
10- 9	0 / 875	-17.5	-17.5	0.24 (1)	10.00
9- 8	0 / 240	-17.5	-17.5	0.15 (3)	10.00

WEBS

MEMB. FR-TO	MAX. FACTORED FORCE (LBS)	MAX CSI (LC)
12- 3	-29 / 107	0.04 (3)
3-11	-598 / 0	0.28 (1)
11- 5	0 / 449	0.10 (1)
5- 9	-967 / 0	0.59 (1)
9- 6	0 / 817	0.13 (1)
6- 8	-1051 / 0	0.82 (1)
2-12	0 / 1390	0.31 (1)

DESIGN CRITERIA

SPECIFIED LOADS:

TOP CH.	LL	=	23.3	PSF
	DL	=	3.0	PSF
BOT CH.	LL	=	0.0	PSF
	DL	=	7.0	PSF
TOTAL LOAD		=	33.3	PSF

SPACING = 24.0 IN. C/C

LOADING IN FLAT SECTION BASED ON A SLOPE OF 6.00/12

THIS TRUSS IS DESIGNED FOR RESIDENTIAL OR SMALL BUILDING REQUIREMENTS OF PART 9, NBCC 2010

THIS DESIGN COMPLIES WITH:
- PART 9 OF OBC 2012 , BCBC 2012 , ABC 2014
- CSA 086-09
- TPIC 2011

(55 % OF 27.2 P.S.F. G.S.L. PLUS 8.4 P.S.F. RAIN LOAD) EQUALS 23.3 P.S.F. SPECIFIED ROOF LIVE LOAD

ALLOWABLE DEFL.(LL)= L/360 (0.80")
CALCULATED VERT. DEFL.(LL) = L/ 999 (0.06")
ALLOWABLE DEFL.(TL)= L/360 (0.80")
CALCULATED VERT. DEFL.(TL) = L/ 999 (0.12")

CSI: TC=0.55 (2-3:1) , BC=0.33 (11-12:1) , WB=0.82 (6-8:1) , SSI=0.23 (2-3:1)

DOL LUMBER=1.00 NAIL=1.00 LS BEND=1.10 COMP=1.10 SHEAR=1.10 TENS= 1.10

COMPANION LIVE LOAD FACTOR = 0.50

TRUSS PLATE MANUFACTURER IS NOT RESPONSIBLE FOR QUALITY CONTROL IN THE TRUSS MANUFACTURING PLANT .

NAIL VALUES

PLATE	GRIP(DRY) (PSI) MAX	MIN	SHEAR (PLI) MAX	MIN	SECTION (PLI) MAX	MIN
MT20	618	354	1667	822	2284	1656

PLATE PLACEMENT TOL. = 0.250 inches

PLATE ROTATION TOL. = 5.0 Deg.

JSI GRIP= 0.90 (12) (INPUT = 0.90)
JSI METAL= 0.40 (2) (INPUT = 1.00)

LICENSED PROFESSIONAL ENGINEER
P.M. TREVISAN
100136551
March 13th, 2017
PROVINCE OF ONTARIO

RECEIVED
TOWN OF MILTON
MAR 29, 2017
17-4990
BUILDING DIVISION

READ ALL NOTES ON THIS PAGE AND ON THE ENGINEERING NOTE PAGE ENP-1. THE NOTE PAGE IS AN INTEGRAL PART OF THIS DRAWING AS IT CONTAINS SPECIFICATIONS AND CRITERIA USED IN THE DESIGN OF THIS COMPONENT.

KOTT

JOB NAME	TRUSS NAME	QUANTITY	PLY	JOB DESC.	DRWG NO.
PT0317-054	T47	1	1	TRUSS DESC. LECCO RIDGE-BLOCK 328	

Kott Lumber Uxbridge, Stouffville, ON, CGC

Version 8.100 S Feb 9 2017 MiTek Industries, Inc. Mon Mar 13 09:57:10 2017 Page 1
ID:pF8Cn?9h9uHzAm5tCmlVl5yJJCp-qcIHIB4Saq2l5NGr4sg0N4Fufjd15Sp?84TdMHzbOn7

SCALE = 1:71.4

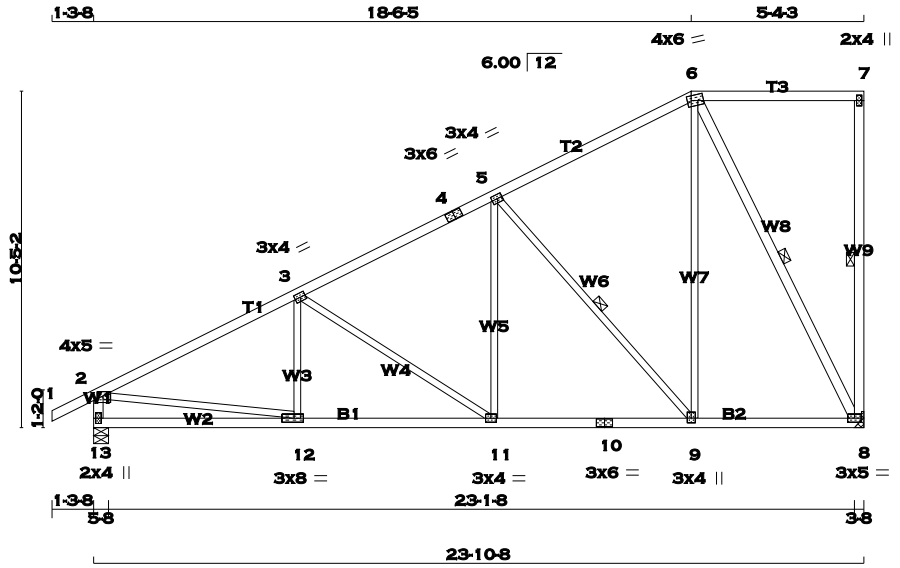

TOTAL WEIGHT = 118 lb

LUMBER
N. L. G. A. RULES

CHORDS	SIZE		LUMBER	DESCR.
1 - 4	2x4	DRY	No.2	SPF
4 - 6	2x4	DRY	No.2	SPF
6 - 7	2x4	DRY	No.2	SPF
8 - 7	2x4	DRY	No.2	SPF
13 - 2	2x4	DRY	No.2	SPF
13 - 10	2x4	DRY	No.2	SPF
10 - 8	2x4	DRY	No.2	SPF
ALL WEBS EXCEPT	2x3	DRY	No.2	SPF
6 - 8	2x4	DRY	No.2	SPF

DRY: SEASONED LUMBER.

PLATES (table is in inches)

JT	TYPE	PLATES	W	LEN	Y	X
2	TMVW-p	MT20	4.0	5.0	1.50	2.25
3	TMWW-t	MT20	3.0	4.0	1.50	1.75
4	TS-t	MT20	3.0	6.0		
5	TMWW-t	MT20	3.0	4.0	1.50	1.75
6	TTWW-m	MT20	4.0	6.0	1.75	1.50
7	TMV+p	MT20	2.0	4.0		
8	BMVW1-t	MT20	3.0	5.0		
9	BMWW+t	MT20	3.0	4.0	1.75	1.50
10	BS-t	MT20	3.0	6.0		
11	BMWW-t	MT20	3.0	4.0		
12	BMWW-t	MT20	3.0	8.0	1.50	3.50
13	BMV1+p	MT20	2.0	4.0		

A SIZE FOR SIZE SUBSTITUTION OF MITEK MII20 WITH TEE-LOK TL20 PLATES IS ALLOWED.

DIMENSIONS, SUPPORTS AND LOADINGS SPECIFIED BY FABRICATOR TO BE VERIFIED BY BUILDING DESIGNER

BEARINGS

JT	FACTORED GROSS REACTION VERT	HORZ	MAXIMUM FACTORED GROSS REACTION DOWN	HORZ	UPLIFT	INPUT BRG	REQRD BRG
8	1132	0	1132	0	0	IN-SX HANGER BY OTHERS MIN. SEAT SIZE: 3-8	IN-SX
13	1237	0	1237	0	0	5-8	5-8

UNFACTORED REACTIONS

JT	1ST LCASE COMBINED	SNOW	MAX./MIN. COMPONENT REACTIONS LIVE	PERM.LIVE	WIND	DEAD	SOIL
8	795	556 / 0	0 / 0	0 / 0	0 / 0	239 / 0	0 / 0
13	866	619 / 0	0 / 0	0 / 0	0 / 0	247 / 0	0 / 0

BEARING MATERIAL TO BE SPF NO.2 OR BETTER AT JOINT(S) 13

BRACING
TOP CHORD TO BE SHEATHED OR MAX. PURLIN SPACING = 4.86 FT.
MAX. UNBRACED BOTTOM CHORD LENGTH = 10.00 FT. OR RIGID CEILING DIRECTLY APPLIED.

ALL PITCH BREAKS AND PERIMETER CORNER JOINTS MUST BE LATERALLY RESTRAINED.

1 - 2x3 SPF No.2 LATERAL BRACE(S) AT 1/ 2 LENGTH OF 7-8. DBS = 20-0-0 . CBF = 26 LBS.
1 - 2x3 SPF No.2 LATERAL BRACE(S) AT 1/ 2 LENGTH OF 5-9. DBS = 18-0-0 . CBF = 92 LBS.
1 - 2x3 SPF No.2 LATERAL BRACE(S) AT 1/ 2 LENGTH OF 6-8. DBS = 14-0-0 . CBF = 88 LBS.

DBS = DIAGONAL BRACE SPACING (MAX). CBF = CUMULATIVE BRACING FORCE. FASTEN LATERAL BRACE(S) USING (0.122"X3") SPIRAL NAILS : 1 NAIL FOR 2x3 BRACE(S), 2 FOR 1x4, 2x4, 2x5, 3 FOR 2x6, 4 FOR 2x8, 5 FOR 2x10, AND 6 FOR 2x12.

END VERTICAL(S) MUST BE SHEATHED OR HAVE BRACES AS INDICATED IN THE MAX. UNBRACED LENGTH COLUMN OF THE TABLE BELOW

LOADING
TOTAL LOAD CASES: (3)

CHORDS MEMB. FR-TO	MAX. FACTORED FORCE (LBS)	FACTORED VERT. LOAD (PLF) FROM	TO	LC1 MAX CSI (LC)	MAX. UNBRAC LENGTH	WEBS MEMB. FR-TO	MAX. FACTORED FORCE (LBS)	MAX CSI (LC)
1- 2	0 / 23	-77.3	-77.3	0.10 (1)	10.00	12- 3	-71 / 81	0.03 (3)
2- 3	-1540 / 0	-77.3	-77.3	0.41 (1)	4.86	3-11	-472 / 0	0.49 (1)
3- 4	-1120 / 0	-77.3	-77.3	0.33 (1)	5.60	11- 5	0 / 365	0.08 (1)
4- 5	-1120 / 0	-77.3	-77.3	0.33 (1)	5.60	5- 9	-816 / 0	0.51 (1)
5- 6	-538 / 0	-77.3	-77.3	0.34 (1)	6.25	9- 6	0 / 725	0.16 (1)
6- 7	0 / 0	-77.3	-77.3	0.38 (1)	10.00	6- 8	-1006 / 0	0.71 (1)
8- 7	-207 / 0	0.0	0.0	0.11 (1)	6.25	2-12	0 / 1408	0.32 (1)
13- 2	-1191 / 0	0.0	0.0	0.12 (1)	7.32			
13-12	0 / 0	-17.5	-17.5	0.16 (3)	10.00			
12-11	0 / 1396	-17.5	-17.5	0.30 (1)	10.00			
11-10	0 / 1001	-17.5	-17.5	0.23 (1)	10.00			
10- 9	0 / 1001	-17.5	-17.5	0.23 (1)	10.00			
9- 8	0 / 470	-17.5	-17.5	0.17 (3)	10.00			

DESIGN CRITERIA

SPECIFIED LOADS:

TOP CH.	LL	=	23.3	PSF
	DL	=	3.0	PSF
BOT CH.	LL	=	0.0	PSF
	DL	=	7.0	PSF
TOTAL LOAD		=	33.3	PSF

SPACING = 24.0 IN. C/C

LOADING IN FLAT SECTION BASED ON A SLOPE OF 6.00/12

THIS TRUSS IS DESIGNED FOR RESIDENTIAL OR SMALL BUILDING REQUIREMENTS OF PART 9, NBCC 2010

THIS DESIGN COMPLIES WITH:
- PART 9 OF OBC 2012 , BCBC 2012 , ABC 2014
- CSA 086-09
- TPIC 2011

(55 % OF 27.2 P.S.F. G.S.L. PLUS 8.4 P.S.F. RAIN LOAD) EQUALS 23.3 P.S.F. SPECIFIED ROOF LIVE LOAD

ALLOWABLE DEFL.(LL)= L/360 (0.80")
CALCULATED VERT. DEFL.(LL) = L/ 999 (0.06")
ALLOWABLE DEFL.(TL)= L/360 (0.80")
CALCULATED VERT. DEFL.(TL) = L/ 999 (0.11")

CSI: TC=0.41 (2-3:1) , BC=0.30 (11-12:1) , WB=0.71 (6-8:1) , SSI=0.20 (2-3:1)

DOL LUMBER=1.00 NAIL=1.00 LS BEND=1.10 COMP=1.10 SHEAR=1.10 TENS= 1.10

COMPANION LIVE LOAD FACTOR = 0.50

TRUSS PLATE MANUFACTURER IS NOT RESPONSIBLE FOR QUALITY CONTROL IN THE TRUSS MANUFACTURING PLANT .

NAIL VALUES

PLATE	GRIP(DRY) (PSI) MAX	MIN	SHEAR (PLI) MAX	MIN	SECTION (PLI) MAX	MIN
MT20	618	354	1667	822	2284	1656

PLATE PLACEMENT TOL. = 0.250 inches

PLATE ROTATION TOL. = 5.0 Deg.

JSI GRIP= 0.90 (8) (INPUT = 0.90)
JSI METAL= 0.40 (2) (INPUT = 1.00)

LICENSED PROFESSIONAL ENGINEER
P.M. TREVISAN
100136551
March 13th, 2017
PROVINCE OF ONTARIO

RECEIVED
TOWN OF MILTON
MAR 29, 2017
17-4990
BUILDING DIVISION

READ ALL NOTES ON THIS PAGE AND ON THE ENGINEERING NOTE PAGE ENP-1. THE NOTE PAGE IS AN INTEGRAL PART OF THIS DRAWING AS IT CONTAINS SPECIFICATIONS AND CRITERIA USED IN THE DESIGN OF THIS COMPONENT.

KOTT

JOB NAME	TRUSS NAME	QUANTITY	PLY	JOB DESC.	DRWG NO.
PT0317-054	T48	1	1	TRUSS DESC. LECCO RIDGE-BLOCK 328	ENG JOB: PT0317-054

Kott Lumber Uxbridge, Stouffville, ON, CGC

Version 8.100 S Feb 9 2017 MiTek Industries, Inc. Mon Mar 13 09:57:10 2017 Page 1

ID:pF8Cn?9h9uHzAm5tCmlVl5yJJCp-qcIHIB4Saq2l5NGr4sg0N4FpIjbj5WA?84TdMHzbOn7

SCALE = 1:62.7

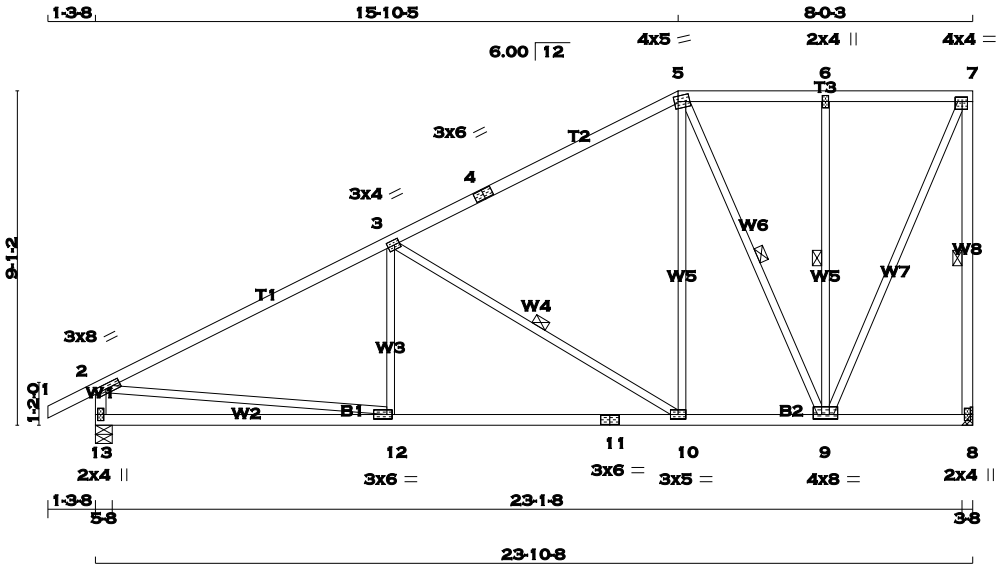

TOTAL WEIGHT = 115 lb

[M][F]

LUMBER

N. L. G. A. RULES

CHORDS	SIZE		LUMBER	DESCR.
1 - 4	2x4	DRY	No.2	SPF
4 - 5	2x4	DRY	No.2	SPF
5 - 7	2x4	DRY	No.2	SPF
8 - 7	2x4	DRY	No.2	SPF
13 - 2	2x4	DRY	No.2	SPF
13 - 11	2x4	DRY	No.2	SPF
11 - 8	2x4	DRY	No.2	SPF
ALL WEBS EXCEPT	2x3	DRY	No.2	SPF

DRY: SEASONED LUMBER.

PLATES (table is in inches)

JT	TYPE	PLATES	W	LEN	Y	X
2	TMVW-t	MT20	3.0	8.0	1.50	3.25
3	TMWW-t	MT20	3.0	4.0	1.50	1.75
4	TS-t	MT20	3.0	6.0		
5	TTWW-m	MT20	4.0	5.0	1.75	1.25
6	TMW+w	MT20	2.0	4.0		
7	TMVW-t	MT20	4.0	4.0	1.50	1.75
8	BMV1+p	MT20	2.0	4.0		
9	BMWWW-t	MT20	4.0	8.0	1.50	4.00
10	BMWW-t	MT20	3.0	5.0		
11	BS-t	MT20	3.0	6.0		
12	BMWW-t	MT20	3.0	6.0	1.50	1.75
13	BMV1+p	MT20	2.0	4.0		

A SIZE FOR SIZE SUBSTITUTION OF MITEK MII20 WITH TEE-LOK TL20 PLATES IS ALLOWED.

DIMENSIONS, SUPPORTS AND LOADINGS SPECIFIED BY FABRICATOR TO BE VERIFIED BY BUILDING DESIGNER

BEARINGS

JT	FACTORED GROSS REACTION VERT	HORZ	MAXIMUM FACTORED GROSS REACTION DOWN	HORZ	UPLIFT	INPUT BRG IN-SX	REQRD BRG IN-SX
8	1132	0	1132	0	0	HANGER BY OTHERS MIN. SEAT SIZE: 3-8	
13	1237	0	1237	0	0	5-8	5-8

UNFACTORED REACTIONS

JT	1ST LCASE COMBINED	SNOW	MAX./MIN. COMPONENT REACTIONS LIVE	PERM.LIVE	WIND	DEAD	SOIL
8	795	556 / 0	0 / 0	0 / 0	0 / 0	239 / 0	0 / 0
13	866	619 / 0	0 / 0	0 / 0	0 / 0	247 / 0	0 / 0

BEARING MATERIAL TO BE SPF NO.2 OR BETTER AT JOINT(S) 13

BRACING

TOP CHORD TO BE SHEATHED OR MAX. PURLIN SPACING = 4.30 FT.
MAX. UNBRACED BOTTOM CHORD LENGTH = 10.00 FT. OR RIGID CEILING DIRECTLY APPLIED.

ALL PITCH BREAKS AND PERIMETER CORNER JOINTS MUST BE LATERALLY RESTRAINED.

1 - 2x3 SPF No.2 LATERAL BRACE(S) AT 1/ 2 LENGTH OF 7-8. DBS = 12-0-0 . CBF = 83 LBS.
1 - 2x3 SPF No.2 LATERAL BRACE(S) AT 1/ 2 LENGTH OF 3-10. DBS = 18-0-0 . CBF = 92 LBS.
1 - 2x3 SPF No.2 LATERAL BRACE(S) AT 1/ 2 LENGTH OF 5-9, 6-9. DBS = 20-0-0 . CBF = 74 LBS.

DBS = DIAGONAL BRACE SPACING (MAX). CBF = CUMULATIVE BRACING FORCE. FASTEN LATERAL BRACE(S) USING (0.122"X3") SPIRAL NAILS : 1 NAIL FOR 2x3 BRACE(S), 2 FOR 1x4, 2x4, 2x5, 3 FOR 2x6, 4 FOR 2x8, 5 FOR 2x10, AND 6 FOR 2x12.

END VERTICAL(S) MUST BE SHEATHED OR HAVE BRACES AS INDICATED IN THE MAX. UNBRACED LENGTH COLUMN OF THE TABLE BELOW

LOADING

TOTAL LOAD CASES: (3)

CHORDS

MEMB. FR-TO	MAX. FACTORED FORCE (LBS)	FACTORED VERT. LOAD LC1 (PLF) FROM	TO	MAX CSI (LC)	MAX. UNBRAC LENGTH
1- 2	0 / 23	-77.3	-77.3	0.10 (1)	10.00
2- 3	-1513 / 0	-77.3	-77.3	0.76 (1)	4.30
3- 4	-801 / 0	-77.3	-77.3	0.67 (1)	5.62
4- 5	-801 / 0	-77.3	-77.3	0.67 (1)	5.62
5- 6	-447 / 0	-77.3	-77.3	0.15 (1)	6.25
6- 7	-447 / 0	-77.3	-77.3	0.15 (1)	6.25
8- 7	-1100 / 0	0.0	0.0	0.42 (1)	6.03
13- 2	-1181 / 0	0.0	0.0	0.12 (1)	7.35
13-12	0 / 0	-17.5	-17.5	0.28 (3)	10.00
12-11	0 / 1383	-17.5	-17.5	0.38 (3)	10.00
11-10	0 / 1383	-17.5	-17.5	0.38 (3)	10.00
10- 9	0 / 693	-17.5	-17.5	0.19 (1)	10.00
9- 8	0 / 0	-17.5	-17.5	0.06 (3)	10.00

WEBS

MEMB. FR-TO	MAX. FACTORED FORCE (LBS)	MAX CSI (LC)
12- 3	0 / 139	0.05 (3)
3-10	-818 / 0	0.50 (1)
10- 5	0 / 536	0.12 (1)
5- 9	-593 / 0	0.39 (1)
9- 6	-381 / 0	0.20 (1)
9- 7	0 / 1078	0.24 (1)
2-12	0 / 1391	0.31 (1)

DESIGN CRITERIA

SPECIFIED LOADS:

TOP CH.	LL	=	23.3	PSF
	DL	=	3.0	PSF
BOT CH.	LL	=	0.0	PSF
	DL	=	7.0	PSF
TOTAL LOAD		=	33.3	PSF

SPACING = 24.0 IN. C/C

LOADING IN FLAT SECTION BASED ON A SLOPE OF 6.00/12

THIS TRUSS IS DESIGNED FOR RESIDENTIAL OR SMALL BUILDING REQUIREMENTS OF PART 9, NBCC 2010

THIS DESIGN COMPLIES WITH:
- PART 9 OF OBC 2012 , BCBC 2012 , ABC 2014
- CSA 086-09
- TPIC 2011

(55 % OF 27.2 P.S.F. G.S.L. PLUS 8.4 P.S.F. RAIN LOAD) EQUALS 23.3 P.S.F. SPECIFIED ROOF LIVE LOAD

ALLOWABLE DEFL.(LL)= L/360 (0.80")
CALCULATED VERT. DEFL.(LL) = L/ 999 (0.06")
ALLOWABLE DEFL.(TL)= L/360 (0.80")
CALCULATED VERT. DEFL.(TL) = L/ 999 (0.15")

CSI: TC=0.76 (2-3:1) , BC=0.38 (10-12:3) , WB=0.50 (3-10:1) , SSI=0.27 (2-3:1)

DOL LUMBER=1.00 NAIL=1.00 LS BEND=1.10 COMP=1.10 SHEAR=1.10 TENS= 1.10

COMPANION LIVE LOAD FACTOR = 0.50

TRUSS PLATE MANUFACTURER IS NOT RESPONSIBLE FOR QUALITY CONTROL IN THE TRUSS MANUFACTURING PLANT .

NAIL VALUES

PLATE	GRIP(DRY) (PSI) MAX	MIN	SHEAR (PLI) MAX	MIN	SECTION (PLI) MAX	MIN
MT20	618	354	1667	822	2284	1656

PLATE PLACEMENT TOL. = 0.250 inches

PLATE ROTATION TOL. = 5.0 Deg.

JSI GRIP= 0.90 (7) (INPUT = 0.90)
JSI METAL= 0.42 (11) (INPUT = 1.00)

LICENSED PROFESSIONAL ENGINEER
P.M. TREVISAN
100136551
March 13th, 2017
PROVINCE OF ONTARIO

RECEIVED
TOWN OF MILTON
MAR 29, 2017
17-4990
BUILDING DIVISION

READ ALL NOTES ON THIS PAGE AND ON THE ENGINEERING NOTE PAGE ENP-1. THE NOTE PAGE IS AN INTEGRAL PART OF THIS DRAWING AS IT CONTAINS SPECIFICATIONS AND CRITERIA USED IN THE DESIGN OF THIS COMPONENT.

KOTT

JOB NAME	TRUSS NAME	QUANTITY	PLY	JOB DESC.	DRWG NO.
PT0317-054	T49	1	1	TRUSS DESC. LECCO RIDGE-BLOCK 328	ENG JOB: PT0317-054

Kott Lumber Uxbridge, Stouffville, ON, CGC

Version 8.100 S Feb 9 2017 MiTek Industries, Inc. Mon Mar 13 09:57:10 2017 Page 1
ID:pF8Cn?9h9uHzAm5tCmlVl5yJJCp-qcIHIB4Saq2l5NGr4sg0N4FtIjcj5Rz?84TdMHzbOn7

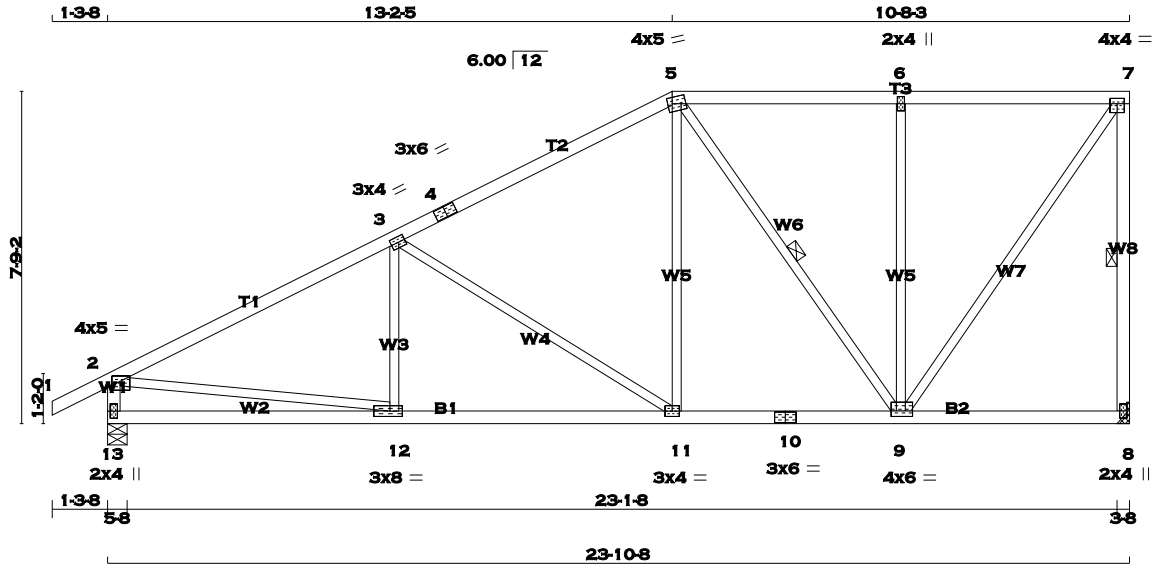

TOTAL WEIGHT = 107 lb

LUMBER

N. L. G. A. RULES

CHORDS	SIZE		LUMBER	DESCR.
1 - 4	2x4	DRY	No.2	SPF
4 - 5	2x4	DRY	No.2	SPF
5 - 7	2x4	DRY	No.2	SPF
8 - 7	2x4	DRY	No.2	SPF
13 - 2	2x4	DRY	No.2	SPF
13 - 10	2x4	DRY	No.2	SPF
10 - 8	2x4	DRY	No.2	SPF
ALL WEBS EXCEPT	2x3	DRY	No.2	SPF

DRY: SEASONED LUMBER.

PLATES (table is in inches)

JT	TYPE	PLATES	W	LEN	Y	X
2	TMVW-p	MT20	4.0	5.0	1.50	2.25
3	TMWW-t	MT20	3.0	4.0	1.50	1.75
4	TS-t	MT20	3.0	6.0		
5	TTWW-m	MT20	4.0	5.0	1.75	1.25
6	TMW+w	MT20	2.0	4.0		
7	TMVW-t	MT20	4.0	4.0	1.50	2.00
8	BMV1+p	MT20	2.0	4.0		
9	BMWWW-t	MT20	4.0	6.0	1.50	1.50
10	BS-t	MT20	3.0	6.0		
11	BMWW-t	MT20	3.0	4.0		
12	BMWW-t	MT20	3.0	8.0	1.50	3.50
13	BMV1+p	MT20	2.0	4.0		

A SIZE FOR SIZE SUBSTITUTION OF MITEK MII20 WITH TEE-LOK TL20 PLATES IS ALLOWED.

DIMENSIONS, SUPPORTS AND LOADINGS SPECIFIED BY FABRICATOR TO BE VERIFIED BY BUILDING DESIGNER

BEARINGS

JT	FACTORED GROSS REACTION VERT	HORZ	UPLIFT	MAXIMUM FACTORED GROSS REACTION DOWN	HORZ	UPLIFT	INPUT BRG	REQRD BRG
8	1132	0		1132	0	0	HANGER BY OTHERS	
							MIN. SEAT SIZE: 3-8	
13	1237	0		1237	0	0	5-8	5-8

UNFACTORED REACTIONS

JT	1ST LCASE COMBINED	MAX./MIN. COMPONENT REACTIONS SNOW	LIVE	PERM.LIVE	WIND	DEAD	SOIL
8	795	556 / 0	0 / 0	0 / 0	0 / 0	239 / 0	0 / 0
13	866	619 / 0	0 / 0	0 / 0	0 / 0	247 / 0	0 / 0

BEARING MATERIAL TO BE SPF NO.2 OR BETTER AT JOINT(S) 13

BRACING

TOP CHORD TO BE SHEATHED OR MAX. PURLIN SPACING = 4.72 FT.
MAX. UNBRACED BOTTOM CHORD LENGTH = 10.00 FT. OR RIGID CEILING DIRECTLY APPLIED.

ALL PITCH BREAKS AND PERIMETER CORNER JOINTS MUST BE LATERALLY RESTRAINED.

1 - 2x3 SPF No.2 LATERAL BRACE(S) AT 1/ 2 LENGTH OF 7-8. DBS = 12-0-0 . CBF = 82 LBS.
1 - 2x3 SPF No.2 LATERAL BRACE(S) AT 1/ 2 LENGTH OF 5-9. DBS = 20-0-0 . CBF = 50 LBS.

DBS = DIAGONAL BRACE SPACING (MAX). CBF = CUMULATIVE BRACING FORCE. FASTEN LATERAL BRACE(S) USING (0.122"X3") SPIRAL NAILS : 1 NAIL FOR 2x3 BRACE(S), 2 FOR 1x4, 2x4, 2x5, 3 FOR 2x6, 4 FOR 2x8, 5 FOR 2x10, AND 6 FOR 2x12.

END VERTICAL(S) MUST BE SHEATHED OR HAVE BRACES AS INDICATED IN THE MAX. UNBRACED LENGTH COLUMN OF THE TABLE BELOW

LOADING

TOTAL LOAD CASES: (3)

CHORDS

MEMB. FR-TO	MAX. FACTORED FORCE (LBS)	FACTORED VERT. LOAD (PLF) FROM	TO	LC1 MAX CSI (LC)	MAX. UNBRAC LENGTH
1- 2	0 / 23	-77.3	-77.3	0.10 (1)	10.00
2- 3	-1549 / 0	-77.3	-77.3	0.50 (1)	4.72
3- 4	-1031 / 0	-77.3	-77.3	0.45 (1)	5.58
4- 5	-1031 / 0	-77.3	-77.3	0.45 (1)	5.58
5- 6	-670 / 0	-77.3	-77.3	0.28 (1)	6.25
6- 7	-670 / 0	-77.3	-77.3	0.28 (1)	6.25
8- 7	-1093 / 0	0.0	0.0	0.30 (1)	6.05
13- 2	-1189 / 0	0.0	0.0	0.12 (1)	7.32
13-12	0 / 0	-17.5	-17.5	0.19 (3)	10.00
12-11	0 / 1410	-17.5	-17.5	0.32 (1)	10.00
11-10	0 / 902	-17.5	-17.5	0.21 (1)	10.00
10- 9	0 / 902	-17.5	-17.5	0.21 (1)	10.00
9- 8	0 / 0	-17.5	-17.5	0.11 (3)	10.00

WEBS

MEMB. FR-TO	MAX. FACTORED FORCE (LBS)	MAX CSI (LC)
12- 3	-50 / 97	0.03 (3)
3-11	-609 / 0	0.77 (1)
11- 5	0 / 428	0.10 (1)
5- 9	-400 / 0	0.23 (1)
9- 6	-512 / 0	0.57 (1)
9- 7	0 / 1151	0.26 (1)
2-12	0 / 1421	0.32 (1)

DESIGN CRITERIA

SPECIFIED LOADS:

TOP CH.	LL	=	23.3	PSF
	DL	=	3.0	PSF
BOT CH.	LL	=	0.0	PSF
	DL	=	7.0	PSF
TOTAL LOAD		=	33.3	PSF

SPACING = 24.0 IN. C/C

LOADING IN FLAT SECTION BASED ON A SLOPE OF 6.00/12

THIS TRUSS IS DESIGNED FOR RESIDENTIAL OR SMALL BUILDING REQUIREMENTS OF PART 9, NBCC 2010

THIS DESIGN COMPLIES WITH:
- PART 9 OF OBC 2012 , BCBC 2012 , ABC 2014
- CSA 086-09
- TPIC 2011

(55 % OF 27.2 P.S.F. G.S.L. PLUS 8.4 P.S.F. RAIN LOAD) EQUALS 23.3 P.S.F. SPECIFIED ROOF LIVE LOAD

ALLOWABLE DEFL.(LL)= L/360 (0.80")
CALCULATED VERT. DEFL.(LL) = L/ 999 (0.06")
ALLOWABLE DEFL.(TL)= L/360 (0.80")
CALCULATED VERT. DEFL.(TL) = L/ 999 (0.11")

CSI: TC=0.50 (2-3:1) , BC=0.32 (11-12:1) , WB=0.77 (3-11:1) , SSI=0.22 (2-3:1)

DOL LUMBER=1.00 NAIL=1.00 LS BEND=1.10 COMP=1.10 SHEAR=1.10 TENS= 1.10

COMPANION LIVE LOAD FACTOR = 0.50

TRUSS PLATE MANUFACTURER IS NOT RESPONSIBLE FOR QUALITY CONTROL IN THE TRUSS MANUFACTURING PLANT .

NAIL VALUES

PLATE	GRIP(DRY) (PSI) MAX	MIN	SHEAR (PLI) MAX	MIN	SECTION (PLI) MAX	MIN
MT20	618	354	1667	822	2284	1656

PLATE PLACEMENT TOL. = 0.250 inches

PLATE ROTATION TOL. = 5.0 Deg.

JSI GRIP= 0.89 (7) (INPUT = 0.90)
JSI METAL= 0.40 (2) (INPUT = 1.00)

LICENSED PROFESSIONAL ENGINEER
P.M. TREVISAN
100136551
March 13th, 2017
PROVINCE OF ONTARIO

RECEIVED
TOWN OF MILTON
MAR 29, 2017
17-4990
BUILDING DIVISION

READ ALL NOTES ON THIS PAGE AND ON THE ENGINEERING NOTE PAGE ENP-1. THE NOTE PAGE IS AN INTEGRAL PART OF THIS DRAWING AS IT CONTAINS SPECIFICATIONS AND CRITERIA USED IN THE DESIGN OF THIS COMPONENT.

KOTT

JOB NAME	TRUSS NAME	QUANTITY	PLY	JOB DESC.	DRWG NO.
PT0317-054	T50	1	1	TRUSS DESC. LECCO RIDGE-BLOCK 328	

Kott Lumber Uxbridge, Stouffville, ON, CGC

Version 8.100 S Feb 9 2017 MiTek Industries, Inc. Mon Mar 13 09:57:11 2017 Page 1
ID:pF8Cn?9h9uHzAm5tCmlVl5yJJCp-IorfVX54L7AciXr1dZBFvInxe7yRq_X9MkCAujzbOn6

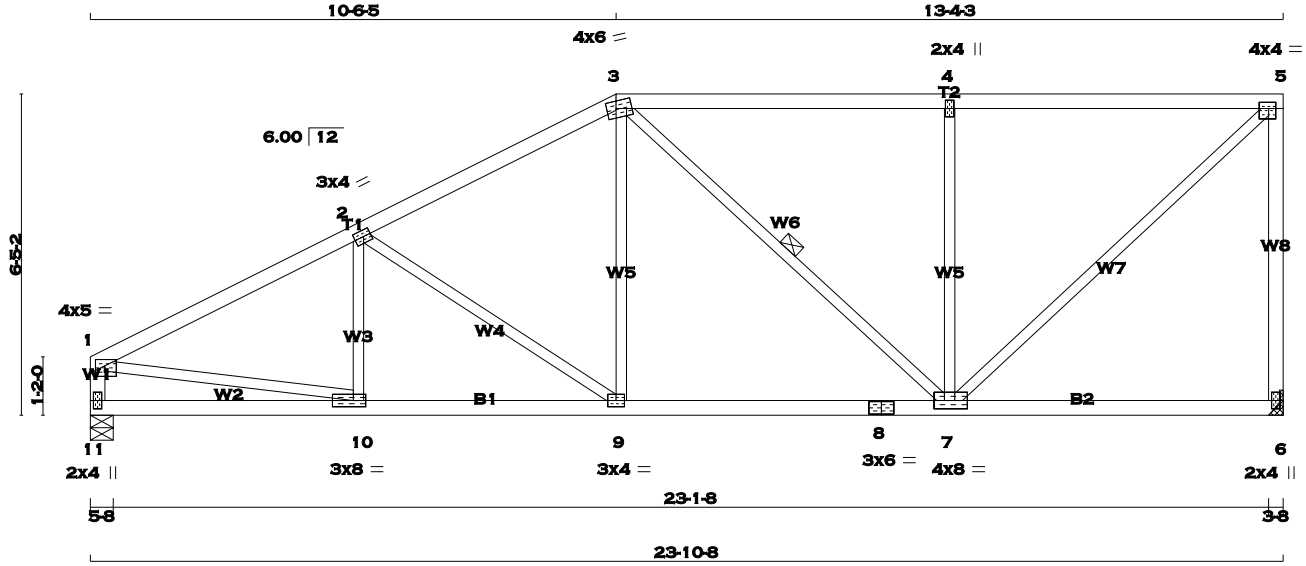

TOTAL WEIGHT = 99 lb
[M]

LUMBER
N. L. G. A. RULES

CHORDS	SIZE		LUMBER	DESCR.
1 - 3	2x4	DRY	No.2	SPF
3 - 5	2x4	DRY	No.2	SPF
6 - 5	2x4	DRY	No.2	SPF
11 - 1	2x4	DRY	No.2	SPF
11 - 8	2x4	DRY	No.2	SPF
8 - 6	2x4	DRY	No.2	SPF
ALL WEBS EXCEPT	2x3	DRY	No.2	SPF

DRY: SEASONED LUMBER.

PLATES (table is in inches)

JT	TYPE	PLATES	W	LEN	Y	X
1	TMVW-p	MT20	4.0	5.0	1.50	2.25
2	TMWW-t	MT20	3.0	4.0	1.50	1.75
3	TTWW-m	MT20	4.0	6.0	1.75	2.25
4	TMW+w	MT20	2.0	4.0		
5	TMVW-t	MT20	4.0	4.0	1.50	1.75
6	BMV1+p	MT20	2.0	4.0		
7	BMWWW-t	MT20	4.0	8.0	2.00	2.50
8	BS-t	MT20	3.0	6.0		
9	BMWW-t	MT20	3.0	4.0		
10	BMWW-t	MT20	3.0	8.0	1.50	3.00
11	BMV1+p	MT20	2.0	4.0		

A SIZE FOR SIZE SUBSTITUTION OF MITEK MII20 WITH TEE-LOK TL20 PLATES IS ALLOWED.

DIMENSIONS, SUPPORTS AND LOADINGS SPECIFIED BY FABRICATOR TO BE VERIFIED BY BUILDING DESIGNER

BEARINGS

JT	FACTORED GROSS REACTION VERT	HORZ	MAXIMUM FACTORED GROSS REACTION DOWN	HORZ	UPLIFT	INPUT BRG	REQRD BRG
6	1132	0	1132	0	0	HANGER BY OTHERS MIN. SEAT SIZE: 3-8	
11	1132	0	1132	0	0	5-8	5-8

UNFACTORED REACTIONS

JT	1ST LCASE COMBINED	SNOW	MAX./MIN. COMPONENT REACTIONS LIVE	PERM.LIVE	WIND	DEAD	SOIL
6	795	556 / 0	0 / 0	0 / 0	0 / 0	239 / 0	0 / 0
11	795	556 / 0	0 / 0	0 / 0	0 / 0	239 / 0	0 / 0

BEARING MATERIAL TO BE SPF NO.2 OR BETTER AT JOINT(S) 11

BRACING
TOP CHORD TO BE SHEATHED OR MAX. PURLIN SPACING = 4.80 FT.
MAX. UNBRACED BOTTOM CHORD LENGTH = 10.00 FT. OR RIGID CEILING DIRECTLY APPLIED.

ALL PITCH BREAKS AND PERIMETER CORNER JOINTS MUST BE LATERALLY RESTRAINED.

1 - 2x3 SPF No.2 LATERAL BRACE(S) AT 1/ 2 LENGTH OF 3-7. DBS = 20-0-0 . CBF = 22 LBS.

DBS = DIAGONAL BRACE SPACING (MAX). CBF = CUMULATIVE BRACING FORCE. FASTEN LATERAL BRACE(S) USING (0.122"X3") SPIRAL NAILS : 1 NAIL FOR 2x3 BRACE(S), 2 FOR 1x4, 2x4, 2x5, 3 FOR 2x6, 4 FOR 2x8, 5 FOR 2x10, AND 6 FOR 2x12.

END VERTICAL(S) MUST BE SHEATHED OR HAVE BRACES AS INDICATED IN THE MAX. UNBRACED LENGTH COLUMN OF THE TABLE BELOW

LOADING
TOTAL LOAD CASES: (3)

CHORDS

MEMB. FR-TO	MAX. FACTORED FORCE (LBS)	FACTORED VERT. LOAD (PLF) FROM	TO	LC1	MAX CSI (LC)	MAX. UNBRAC LENGTH
1- 2	-1556 / 0	-77.3	-77.3	0.42	(1)	4.80
2- 3	-1242 / 0	-77.3	-77.3	0.39	(1)	5.26
3- 4	-968 / 0	-77.3	-77.3	0.64	(1)	5.28
4- 5	-968 / 0	-77.3	-77.3	0.64	(1)	5.28
6- 5	-1085 / 0	0.0	0.0	0.91	(1)	7.58
11- 1	-1091 / 0	0.0	0.0	0.11	(1)	7.57
11-10	0 / 0	-17.5	-17.5	0.11	(3)	10.00
10- 9	0 / 1410	-17.5	-17.5	0.29	(1)	10.00
9- 8	0 / 1096	-17.5	-17.5	0.28	(1)	10.00
8- 7	0 / 1096	-17.5	-17.5	0.28	(1)	10.00
7- 6	0 / 0	-17.5	-17.5	0.19	(3)	10.00

WEBS

MEMB. FR-TO	MAX. FACTORED FORCE (LBS)	MAX CSI (LC)
10- 2	-129 / 48	0.03 (1)
2- 9	-385 / 0	0.28 (1)
9- 3	0 / 317	0.07 (1)
3- 7	-174 / 0	0.10 (1)
7- 4	-641 / 0	0.43 (1)
7- 5	0 / 1315	0.30 (1)
1-10	0 / 1428	0.32 (1)

DESIGN CRITERIA

SPECIFIED LOADS:

TOP	CH.	LL	=	23.3	PSF
		DL	=	3.0	PSF
BOT	CH.	LL	=	0.0	PSF
		DL	=	7.0	PSF
TOTAL	LOAD		=	33.3	PSF

SPACING = 24.0 IN. C/C

LOADING IN FLAT SECTION BASED ON A SLOPE OF 6.00/12

THIS TRUSS IS DESIGNED FOR RESIDENTIAL OR SMALL BUILDING REQUIREMENTS OF PART 9, NBCC 2010

THIS DESIGN COMPLIES WITH:
- PART 9 OF OBC 2012 , BCBC 2012 , ABC 2014
- CSA 086-09
- TPIC 2011

(55 % OF 27.2 P.S.F. G.S.L. PLUS 8.4 P.S.F. RAIN LOAD) EQUALS 23.3 P.S.F. SPECIFIED ROOF LIVE LOAD

ALLOWABLE DEFL.(LL)= L/360 (0.80")
CALCULATED VERT. DEFL.(LL) = L/ 999 (0.05")
ALLOWABLE DEFL.(TL)= L/360 (0.80")
CALCULATED VERT. DEFL.(TL) = L/ 999 (0.10")

CSI: TC=0.91 (5-6:1) , BC=0.29 (9-10:1) , WB=0.43 (4-7:1) , SSI=0.25 (4-5:1)

DOL LUMBER=1.00 NAIL=1.00 LS BEND=1.10 COMP=1.10 SHEAR=1.10 TENS= 1.10

COMPANION LIVE LOAD FACTOR = 0.50

TRUSS PLATE MANUFACTURER IS NOT RESPONSIBLE FOR QUALITY CONTROL IN THE TRUSS MANUFACTURING PLANT .

NAIL VALUES

PLATE	GRIP(DRY) (PSI) MAX	MIN	SHEAR (PLI) MAX	MIN	SECTION (PLI) MAX	MIN
MT20	618	354	1667	822	2284	1656

PLATE PLACEMENT TOL. = 0.250 inches

PLATE ROTATION TOL. = 5.0 Deg.

JSI GRIP= 0.89 (10) (INPUT = 0.90)
JSI METAL= 0.39 (1) (INPUT = 1.00)

LICENSED PROFESSIONAL ENGINEER
P.M. TREVISAN
100136551
March 13th, 2017
PROVINCE OF ONTARIO

RECEIVED
TOWN OF MILTON
MAR 29, 2017
17-4990
BUILDING DIVISION

READ ALL NOTES ON THIS PAGE AND ON THE ENGINEERING NOTE PAGE ENP-1. THE NOTE PAGE IS AN INTEGRAL PART OF THIS DRAWING AS IT CONTAINS SPECIFICATIONS AND CRITERIA USED IN THE DESIGN OF THIS COMPONENT.

KOTT

JOB NAME	TRUSS NAME	QUANTITY	PLY	JOB DESC.	DRWG NO.
PT0317-054	T51	1	1	TRUSS DESC. LECCO RIDGE-BLOCK 328	ENG JOB: PT0317-054

Kott Lumber Uxbridge, Stouffville, ON, CGC

Version 8.100 S Feb 9 2017 MiTek Industries, Inc. Mon Mar 13 09:57:11 2017 Page 1

ID:pF8Cn?9h9uHzAm5tCmlVl5yJJCp-IorfVX54L7AciXr1dZBFvIn3e7tHqt09MkCAujzbOn6

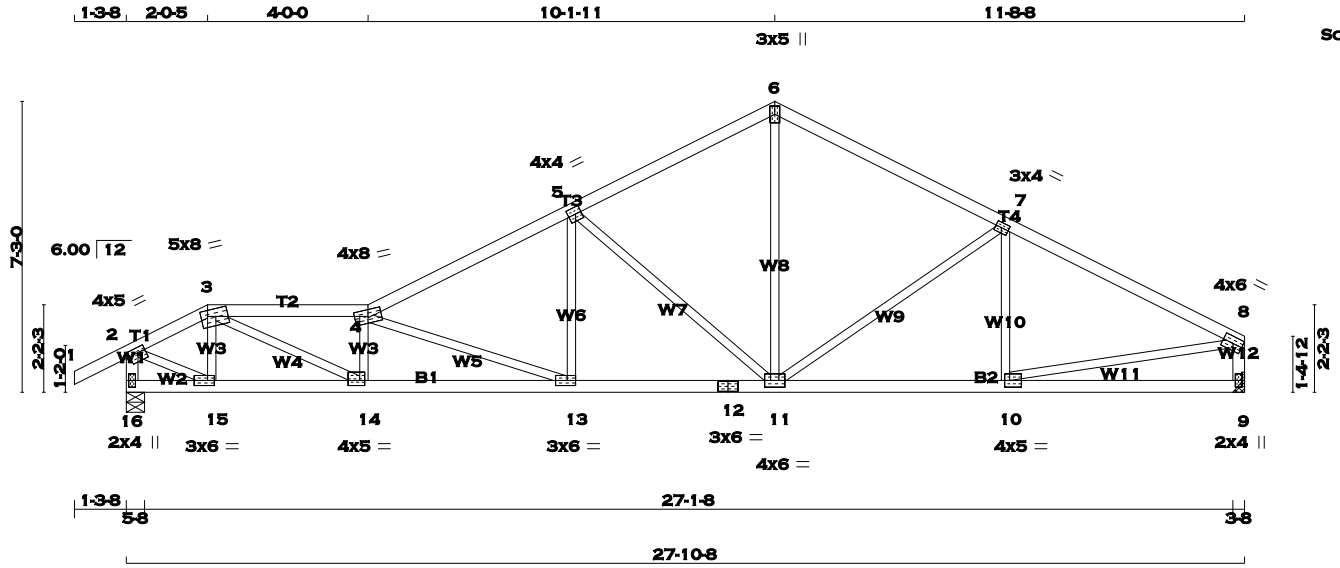

TOTAL WEIGHT = 109 lb

[M][F]

LUMBER

N. L. G. A. RULES

CHORDS	SIZE		LUMBER	DESCR.
1 - 3	2x4	DRY	No.2	SPF
3 - 4	2x4	DRY	No.2	SPF
4 - 6	2x4	DRY	No.2	SPF
6 - 8	2x4	DRY	No.2	SPF
16 - 2	2x4	DRY	No.2	SPF
9 - 8	2x4	DRY	No.2	SPF
16 - 12	2x4	DRY	No.2	SPF
12 - 9	2x4	DRY	No.2	SPF
ALL WEBS EXCEPT	2x3	DRY	No.2	SPF

DRY: SEASONED LUMBER.

PLATES (table is in inches)

JT	TYPE	PLATES	W	LEN	Y	X
2	TMVW-t	MT20	4.0	5.0	1.50	2.25
3	TTWW-m	MT20	5.0	8.0	1.75	2.00
4	TTWW-m	MT20	4.0	8.0		
5	TMWW-t	MT20	4.0	4.0	2.00	1.75
6	TTW+p	MT20	3.0	5.0		
7	TMWW-t	MT20	3.0	4.0	1.50	1.75
8	TMVW-t	MT20	4.0	6.0		Edge
9	BMV1+p	MT20	2.0	4.0		
10	BMWW-t	MT20	4.0	5.0	2.00	1.50
11	BMWWW-t	MT20	4.0	6.0		
12	BS-t	MT20	3.0	6.0		
13	BMWW-t	MT20	3.0	6.0	1.50	2.50
14	BMWW-t	MT20	4.0	5.0	1.50	1.50
15	BMWW-t	MT20	3.0	6.0	1.50	2.00
16	BMV1+p	MT20	2.0	4.0		

Edge - INDICATES REFERENCE CORNER OF PLATE TOUCHES EDGE OF CHORD.

A SIZE FOR SIZE SUBSTITUTION OF MITEK MII20 WITH TEE-LOK TL20 PLATES IS ALLOWED.

DIMENSIONS, SUPPORTS AND LOADINGS SPECIFIED BY FABRICATOR TO BE VERIFIED BY BUILDING DESIGNER

BEARINGS

JT	FACTORED GROSS REACTION VERT	HORZ	MAXIMUM FACTORED GROSS REACTION DOWN	HORZ	UPLIFT	INPUT BRG IN-SX	REQRD BRG IN-SX
16	1427	0	1427	0	0	5-8	5-8
9	1322	0	1322	0	0	HANGER BY OTHERS	
						MIN. SEAT SIZE: 3-8	

UNFACTORED REACTIONS

JT	1ST LCASE COMBINED	MAX./MIN. COMPONENT REACTIONS SNOW	LIVE	PERM.LIVE	WIND	DEAD	SOIL
16	999	712 / 0	0 / 0	0 / 0	0 / 0	287 / 0	0 / 0
9	928	649 / 0	0 / 0	0 / 0	0 / 0	279 / 0	0 / 0

BEARING MATERIAL TO BE SPF NO.2 OR BETTER AT JOINT(S) 16

BRACING

TOP CHORD TO BE SHEATHED OR MAX. PURLIN SPACING = 3.67 FT.
MAX. UNBRACED BOTTOM CHORD LENGTH = 10.00 FT. OR RIGID CEILING DIRECTLY APPLIED.

ALL PITCH BREAKS AND PERIMETER CORNER JOINTS MUST BE LATERALLY RESTRAINED.

LOADING

TOTAL LOAD CASES: (3)

CHORDS

MEMB. FR-TO	MAX. FACTORED FORCE (LBS)	VERT. LOAD LC1 (PLF) FROM	TO	MAX CSI (LC)	MAX. UNBRAC LENGTH
1- 2	0 / 23	-77.3	-77.3	0.10 (1)	10.00
2- 3	-1535 / 0	-77.3	-77.3	0.06 (1)	5.27
3- 4	-3249 / 0	-77.3	-77.3	0.28 (1)	3.67
4- 5	-2288 / 0	-77.3	-77.3	0.33 (1)	4.24
5- 6	-1473 / 0	-77.3	-77.3	0.28 (1)	5.11
6- 7	-1477 / 0	-77.3	-77.3	0.37 (1)	4.99
7- 8	-1778 / 0	-77.3	-77.3	0.40 (1)	4.61
16- 2	-1426 / 0	0.0	0.0	0.14 (1)	6.84
9- 8	-1278 / 0	0.0	0.0	0.13 (1)	7.13
16-15	0 / 0	-17.5	-17.5	0.05 (1)	10.00
15-14	0 / 1345	-17.5	-17.5	0.28 (1)	10.00
14-13	0 / 3298	-17.5	-17.5	0.62 (1)	10.00
13-12	0 / 2067	-17.5	-17.5	0.39 (1)	10.00
12-11	0 / 2067	-17.5	-17.5	0.39 (1)	10.00
11-10	0 / 1611	-17.5	-17.5	0.32 (1)	10.00
10- 9	0 / 0	-17.5	-17.5	0.14 (3)	10.00

WEBS

MEMB. FR-TO	MAX. FACTORED FORCE (LBS)	MAX CSI (LC)
15- 3	-461 / 0	0.07 (1)
3-14	0 / 2114	0.48 (1)
14- 4	-879 / 0	0.13 (1)
4-13	-1313 / 0	0.67 (1)
13- 5	0 / 563	0.13 (1)
5-11	-1017 / 0	0.85 (1)
11- 6	0 / 981	0.22 (1)
11- 7	-383 / 0	0.36 (1)
10- 7	-182 / 44	0.05 (1)
2-15	0 / 1478	0.33 (1)
10- 8	0 / 1638	0.37 (1)

DESIGN CRITERIA

SPECIFIED LOADS:

TOP CH.	LL	=	23.3	PSF
	DL	=	3.0	PSF
BOT CH.	LL	=	0.0	PSF
	DL	=	7.0	PSF
TOTAL LOAD		=	33.3	PSF

SPACING = 24.0 IN. C/C

LOADING IN ALL FLAT SECTIONS BASED ON A SLOPE OF 6.00/12

THIS TRUSS IS DESIGNED FOR RESIDENTIAL OR SMALL BUILDING REQUIREMENTS OF PART 9, NBCC 2010

THIS DESIGN COMPLIES WITH:
- PART 9 OF OBC 2012 , BCBC 2012 , ABC 2014
- CSA 086-09
- TPIC 2011

(55 % OF 27.2 P.S.F. G.S.L. PLUS 8.4 P.S.F. RAIN LOAD) EQUALS 23.3 P.S.F. SPECIFIED ROOF LIVE LOAD

ALLOWABLE DEFL.(LL)= L/360 (0.93")
CALCULATED VERT. DEFL.(LL) = L/ 999 (0.16")
ALLOWABLE DEFL.(TL)= L/360 (0.93")
CALCULATED VERT. DEFL.(TL) = L/ 999 (0.29")

CSI: TC=0.40 (7-8:1) , BC=0.62 (13-14:1) , WB=0.85 (5-11:1) , SSI=0.20 (7-8:1)

DOL LUMBER=1.00 NAIL=1.00 LS BEND=1.10 COMP=1.10 SHEAR=1.10 TENS= 1.10

COMPANION LIVE LOAD FACTOR = 0.50

TRUSS PLATE MANUFACTURER IS NOT RESPONSIBLE FOR QUALITY CONTROL IN THE TRUSS MANUFACTURING PLANT .

NAIL VALUES

PLATE	GRIP(DRY) (PSI) MAX	MIN	SHEAR (PLI) MAX	MIN	SECTION (PLI) MAX	MIN
MT20	618	354	1667	822	2284	1656

PLATE PLACEMENT TOL. = 0.250 inches

PLATE ROTATION TOL. = 5.0 Deg.

JSI GRIP= 0.89 (10) (INPUT = 0.90)
JSI METAL= 0.59 (14) (INPUT = 1.00)

LICENSED PROFESSIONAL ENGINEER
R.M. TREVISAN
100136551
March 13th, 2017
PROVINCE OF ONTARIO

RECEIVED
TOWN OF MILTON
MAR 29, 2017
17-4990
BUILDING DIVISION

READ ALL NOTES ON THIS PAGE AND ON THE ENGINEERING NOTE PAGE ENP-1. THE NOTE PAGE IS AN INTEGRAL PART OF THIS DRAWING AS IT CONTAINS SPECIFICATIONS AND CRITERIA USED IN THE DESIGN OF THIS COMPONENT.

KOTT

JOB NAME	TRUSS NAME	QUANTITY	PLY	JOB DESC.	DRWG NO.
PT0317-054	T52	1	1	TRUSS DESC. LECCO RIDGE-BLOCK 328	

Kott Lumber Uxbridge, Stouffville, ON, CGC

Version 8.100 S Feb 9 2017 MiTek Industries, Inc. Mon Mar 13 09:57:11 2017 Page 1
ID:pF8Cn?9h9uHzAm5tCmlVl5yJJCp-IorfVX54L7AciXr1dZBFvIn3e7w4qxb9MkCAujzbOn6

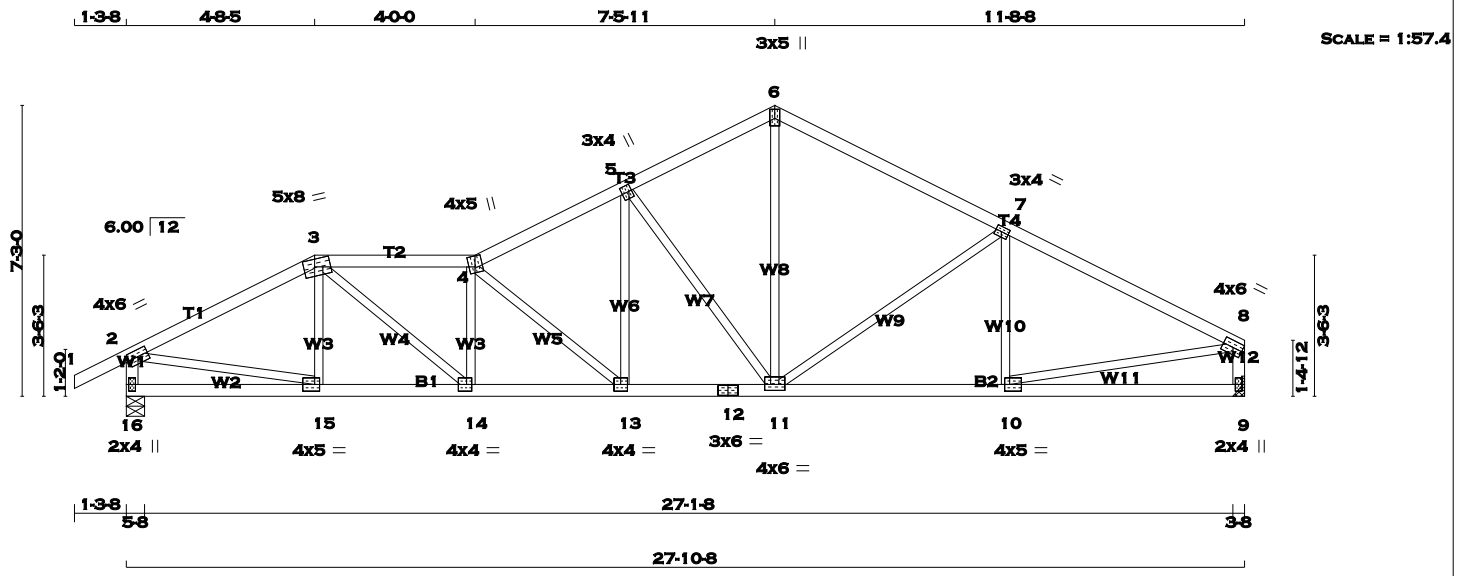

TOTAL WEIGHT = 114 lb

LUMBER
N. L. G. A. RULES

CHORDS	SIZE		LUMBER	DESCR.
1 - 3	2x4	DRY	No.2	SPF
3 - 4	2x4	DRY	No.2	SPF
4 - 6	2x4	DRY	No.2	SPF
6 - 8	2x4	DRY	No.2	SPF
16 - 2	2x4	DRY	No.2	SPF
9 - 8	2x4	DRY	No.2	SPF
16 - 12	2x4	DRY	No.2	SPF
12 - 9	2x4	DRY	No.2	SPF
ALL WEBS EXCEPT	2x3	DRY	No.2	SPF

DRY: SEASONED LUMBER.

PLATES (table is in inches)

JT	TYPE	PLATES	W	LEN	Y	X
2	TMVW-t	MT20	4.0	6.0	2.00	3.00
3	TTWW-m	MT20	5.0	8.0	2.25	3.25
4	TTWW+m	MT20	4.0	5.0	3.25	1.75
5	TMWW+t	MT20	3.0	4.0	2.00	0.75
6	TTW+p	MT20	3.0	5.0	2.75	1.50
7	TMWW-t	MT20	3.0	4.0	1.50	1.75
8	TMVW-t	MT20	4.0	6.0		Edge
9	BMV1+p	MT20	2.0	4.0		
10	BMWW-t	MT20	4.0	5.0	2.00	1.50
11	BMWWW-t	MT20	4.0	6.0	1.75	3.00
12	BS-t	MT20	3.0	6.0		
13	BMWW-t	MT20	4.0	4.0		
14	BMWW-t	MT20	4.0	4.0	2.00	1.50
15	BMWW-t	MT20	4.0	5.0	2.00	1.50
16	BMV1+p	MT20	2.0	4.0		

Edge - INDICATES REFERENCE CORNER OF PLATE TOUCHES EDGE OF CHORD.

A SIZE FOR SIZE SUBSTITUTION OF MITEK MII20 WITH TEE-LOK TL20 PLATES IS ALLOWED.

DIMENSIONS, SUPPORTS AND LOADINGS SPECIFIED BY FABRICATOR TO BE VERIFIED BY BUILDING DESIGNER

BEARINGS

JT	FACTORED GROSS REACTION VERT	HORZ	MAXIMUM FACTORED GROSS REACTION DOWN	HORZ	UPLIFT	INPUT BRG IN-SX	REQRD BRG IN-SX
16	1427	0	1427	0	0	5-8	5-8
9	1322	0	1322	0	0	HANGER BY OTHERS	
						MIN. SEAT SIZE: 3-8	

UNFACTORED REACTIONS

JT	1ST LCASE COMBINED	SNOW	MAX./MIN. COMPONENT REACTIONS LIVE	PERM.LIVE	WIND	DEAD	SOIL
16	999	712 / 0	0 / 0	0 / 0	0 / 0	287 / 0	0 / 0
9	928	649 / 0	0 / 0	0 / 0	0 / 0	279 / 0	0 / 0

BEARING MATERIAL TO BE SPF NO.2 OR BETTER AT JOINT(S) 16

BRACING
TOP CHORD TO BE SHEATHED OR MAX. PURLIN SPACING = 4.22 FT.
MAX. UNBRACED BOTTOM CHORD LENGTH = 10.00 FT. OR RIGID CEILING DIRECTLY APPLIED.

ALL PITCH BREAKS AND PERIMETER CORNER JOINTS MUST BE LATERALLY RESTRAINED.

LOADING
TOTAL LOAD CASES: (3)

CHORDS

MEMB. FR-TO	MAX. FORCE (LBS)	FACTORED VERT. LOAD LC1 (PLF) FROM	TO	MAX CSI (LC)	MAX. UNBRAC LENGTH
1- 2	0 / 23	-77.3	-77.3	0.10 (1)	10.00
2- 3	-1816 / 0	-77.3	-77.3	0.27 (1)	4.72
3- 4	-2438 / 0	-77.3	-77.3	0.23 (1)	4.22
4- 5	-2018 / 0	-77.3	-77.3	0.18 (1)	4.63
5- 6	-1467 / 0	-77.3	-77.3	0.15 (1)	5.27
6- 7	-1477 / 0	-77.3	-77.3	0.37 (1)	4.99
7- 8	-1778 / 0	-77.3	-77.3	0.40 (1)	4.61
16- 2	-1391 / 0	0.0	0.0	0.14 (1)	6.90
9- 8	-1278 / 0	0.0	0.0	0.13 (1)	7.13
16-15	0 / 0	-17.5	-17.5	0.08 (3)	10.00
15-14	0 / 1617	-17.5	-17.5	0.30 (1)	10.00
14-13	0 / 2458	-17.5	-17.5	0.44 (1)	10.00
13-12	0 / 1819	-17.5	-17.5	0.35 (1)	10.00
12-11	0 / 1819	-17.5	-17.5	0.35 (1)	10.00
11-10	0 / 1611	-17.5	-17.5	0.32 (1)	10.00
10- 9	0 / 0	-17.5	-17.5	0.14 (3)	10.00

WEBS

MEMB. FR-TO	MAX. FORCE (LBS)	MAX CSI (LC)
15- 3	-199 / 12	0.04 (1)
3-14	0 / 1064	0.24 (1)
14- 4	-623 / 0	0.13 (1)
4-13	-842 / 0	0.34 (1)
13- 5	0 / 609	0.14 (1)
5-11	-877 / 0	0.62 (1)
11- 6	0 / 1019	0.23 (1)
11- 7	-383 / 0	0.36 (1)
10- 7	-182 / 45	0.05 (1)
2-15	0 / 1649	0.37 (1)
10- 8	0 / 1638	0.37 (1)

DESIGN CRITERIA

SPECIFIED LOADS:

TOP CH.	LL	=	23.3	PSF
	DL	=	3.0	PSF
BOT CH.	LL	=	0.0	PSF
	DL	=	7.0	PSF
TOTAL LOAD		=	33.3	PSF

SPACING = 24.0 IN. C/C

LOADING IN ALL FLAT SECTIONS BASED ON A SLOPE OF 6.00/12

THIS TRUSS IS DESIGNED FOR RESIDENTIAL OR SMALL BUILDING REQUIREMENTS OF PART 9, NBCC 2010

THIS DESIGN COMPLIES WITH:
- PART 9 OF OBC 2012 , BCBC 2012 , ABC 2014
- CSA 086-09
- TPIC 2011

(55 % OF 27.2 P.S.F. G.S.L. PLUS 8.4 P.S.F. RAIN LOAD) EQUALS 23.3 P.S.F. SPECIFIED ROOF LIVE LOAD

ALLOWABLE DEFL.(LL)= L/360 (0.93")
CALCULATED VERT. DEFL.(LL) = L/ 999 (0.12")
ALLOWABLE DEFL.(TL)= L/360 (0.93")
CALCULATED VERT. DEFL.(TL) = L/ 999 (0.21")

CSI: TC=0.40 (7-8:1) , BC=0.44 (13-14:1) , WB=0.62 (5-11:1) , SSI=0.20 (7-8:1)

DOL LUMBER=1.00 NAIL=1.00 LS BEND=1.10 COMP=1.10 SHEAR=1.10 TENS= 1.10

COMPANION LIVE LOAD FACTOR = 0.50

TRUSS PLATE MANUFACTURER IS NOT RESPONSIBLE FOR QUALITY CONTROL IN THE TRUSS MANUFACTURING PLANT .

NAIL VALUES

PLATE	GRIP(DRY) (PSI) MAX	MIN	SHEAR (PLI) MAX	MIN	SECTION (PLI) MAX	MIN
MT20	618	354	1667	822	2284	1656

PLATE PLACEMENT TOL. = 0.250 inches

PLATE ROTATION TOL. = 5.0 Deg.

JSI GRIP= 0.89 (10) (INPUT = 0.90)
JSI METAL= 0.49 (2) (INPUT = 1.00)

LICENSED PROFESSIONAL ENGINEER
P.M. TREVISAN
100136551
March 13th, 2017
PROVINCE OF ONTARIO

RECEIVED
TOWN OF MILTON
MAR 29, 2017
17-4990
BUILDING DIVISION

READ ALL NOTES ON THIS PAGE AND ON THE ENGINEERING NOTE PAGE ENP-1. THE NOTE PAGE IS AN INTEGRAL PART OF THIS DRAWING AS IT CONTAINS SPECIFICATIONS AND CRITERIA USED IN THE DESIGN OF THIS COMPONENT.

KOTT

JOB NAME	TRUSS NAME	QUANTITY	PLY	JOB DESC.	DRWG NO.
PT0317-054	T53	1	1	TRUSS DESC. LECCO RIDGE-BLOCK 328	ENG JOB: PT0317-054

Kott Lumber Uxbridge, Stouffville, ON, CGC

Version 8.100 S Feb 9 2017 MiTek Industries, Inc. Mon Mar 13 09:57:12 2017 Page 1

ID:pF8Cn?9h9uHzAm5tCmlVl5yJJCp-m?P2jt6i6RITKhQEBHiUSVKCzXG9ZNwIbOyjQAzbOn5

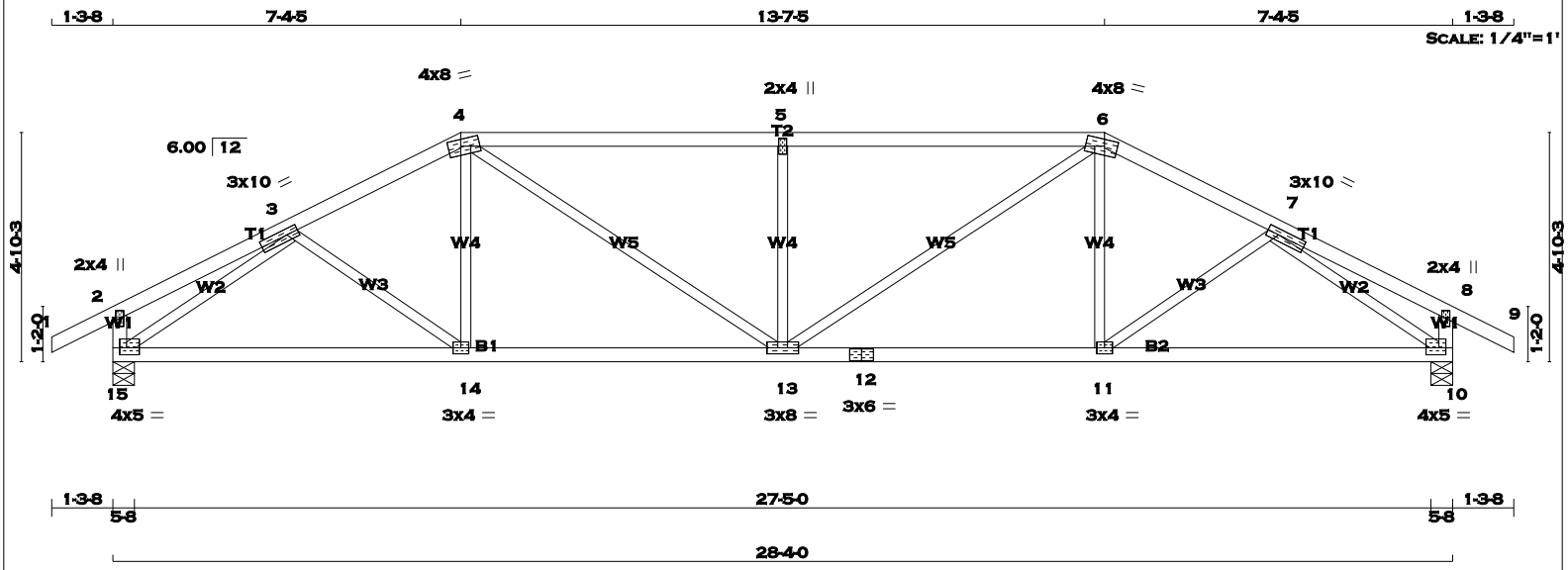

TOTAL WEIGHT = 109 lb

[M][F]

LUMBER

N. L. G. A. RULES

CHORDS	SIZE		LUMBER	DESCR.
1 - 4	2x4	DRY	No.2	SPF
4 - 6	2x4	DRY	No.2	SPF
6 - 9	2x4	DRY	No.2	SPF
15 - 2	2x4	DRY	No.2	SPF
10 - 8	2x4	DRY	No.2	SPF
15 - 12	2x4	DRY	No.2	SPF
12 - 10	2x4	DRY	No.2	SPF
ALL WEBS EXCEPT	2x3	DRY	No.2	SPF

DRY: SEASONED LUMBER.

PLATES (table is in inches)

JT	TYPE	PLATES	W	LEN	Y	X
2	TMV+p	MT20	2.0	4.0		
3	TMWW-t	MT20	3.0	10.0	1.50	3.00
4	TTWW-m	MT20	4.0	8.0	1.75	3.25
5	TMV+w	MT20	2.0	4.0		
6	TTWW-m	MT20	4.0	8.0	1.75	3.25
7	TMWW-t	MT20	3.0	10.0	1.50	3.00
8	TMV+p	MT20	2.0	4.0		
10	BMVW1-t	MT20	4.0	5.0	1.75	1.75
11	BMWW-t	MT20	3.0	4.0		
12	BS-t	MT20	3.0	6.0		
13	BMWWW-t	MT20	3.0	8.0		
14	BMWW-t	MT20	3.0	4.0		
15	BMVW1-t	MT20	4.0	5.0	1.75	1.75

A SIZE FOR SIZE SUBSTITUTION OF MITEK MII20 WITH TEE-LOK TL20 PLATES IS ALLOWED.

DIMENSIONS, SUPPORTS AND LOADINGS SPECIFIED BY FABRICATOR TO BE VERIFIED BY BUILDING DESIGNER

BEARINGS

JT	FACTORED GROSS REACTION VERT	HORZ	MAXIMUM FACTORED GROSS REACTION DOWN	HORZ	UPLIFT	INPUT BRG IN-SX	REQRD BRG IN-SX
15	1449	0	1449	0	0	5-8	5-8
10	1449	0	1449	0	0	5-8	5-8

UNFACTORED REACTIONS

JT	1ST LCASE COMBINED	MAX./MIN. COMPONENT REACTIONS SNOW	LIVE	PERM.LIVE	WIND	DEAD	SOIL
15	1014	723 / 0	0 / 0	0 / 0	0 / 0	291 / 0	0 / 0
10	1014	723 / 0	0 / 0	0 / 0	0 / 0	291 / 0	0 / 0

BEARING MATERIAL TO BE SPF NO.2 OR BETTER AT JOINT(S) 15, 10

BRACING

TOP CHORD TO BE SHEATHED OR MAX. PURLIN SPACING = 4.02 FT.
MAX. UNBRACED BOTTOM CHORD LENGTH = 10.00 FT. OR RIGID CEILING DIRECTLY APPLIED.

ALL PITCH BREAKS AND PERIMETER CORNER JOINTS MUST BE LATERALLY RESTRAINED.

LOADING

TOTAL LOAD CASES: (3)

CHORDS

MEMB. FR-TO	MAX. FACTORED FORCE (LBS)	FACTORED VERT. LOAD (PLF) FROM	TO	LC1 CSI (LC)	MAX UNBRAC LENGTH
1- 2	0 / 23	-77.3	-77.3	0.10 (1)	10.00
2- 3	0 / 12	-77.3	-77.3	0.14 (1)	10.00
3- 4	-1835 / 0	-77.3	-77.3	0.15 (1)	4.83
4- 5	-2191 / 0	-77.3	-77.3	0.55 (1)	4.02
5- 6	-2191 / 0	-77.3	-77.3	0.55 (1)	4.02
6- 7	-1835 / 0	-77.3	-77.3	0.15 (1)	4.83
7- 8	0 / 12	-77.3	-77.3	0.14 (1)	10.00
8- 9	0 / 23	-77.3	-77.3	0.10 (1)	10.00
15- 2	-220 / 0	0.0	0.0	0.02 (1)	7.81
10- 8	-220 / 0	0.0	0.0	0.02 (1)	7.81
15-14	0 / 1605	-17.5	-17.5	0.38 (1)	10.00
14-13	0 / 1632	-17.5	-17.5	0.39 (1)	10.00
13-12	0 / 1632	-17.5	-17.5	0.39 (1)	10.00
12-11	0 / 1632	-17.5	-17.5	0.39 (1)	10.00
11-10	0 / 1605	-17.5	-17.5	0.38 (1)	10.00

WEBS

MEMB. FR-TO	MAX. FACTORED FORCE (LBS)	MAX CSI (LC)
3-14	0 / 68	0.02 (3)
14- 4	0 / 127	0.04 (3)
4-13	0 / 673	0.15 (1)
13- 5	-647 / 0	0.22 (1)
13- 6	0 / 673	0.15 (1)
11- 6	0 / 127	0.04 (3)
11- 7	0 / 68	0.02 (3)
15- 3	-1989 / 0	0.68 (1)
7-10	-1989 / 0	0.68 (1)

DESIGN CRITERIA

SPECIFIED LOADS:

TOP CH.	LL	=	23.3	PSF
	DL	=	3.0	PSF
BOT CH.	LL	=	0.0	PSF
	DL	=	7.0	PSF
TOTAL LOAD		=	33.3	PSF

SPACING = 24.0 IN. C/C

LOADING IN FLAT SECTION BASED ON A SLOPE OF 6.00/12

THIS TRUSS IS DESIGNED FOR RESIDENTIAL OR SMALL BUILDING REQUIREMENTS OF PART 9, NBCC 2010

THIS DESIGN COMPLIES WITH:
- PART 9 OF OBC 2012 , BCBC 2012 , ABC 2014
- CSA 086-09
- TPIC 2011

(55 % OF 27.2 P.S.F. G.S.L. PLUS 8.4 P.S.F. RAIN LOAD) EQUALS 23.3 P.S.F. SPECIFIED ROOF LIVE LOAD

ALLOWABLE DEFL.(LL)= L/360 (0.94")
CALCULATED VERT. DEFL.(LL) = L/ 999 (0.11")
ALLOWABLE DEFL.(TL)= L/360 (0.94")
CALCULATED VERT. DEFL.(TL) = L/ 999 (0.19")

CSI: TC=0.55 (4-5:1) , BC=0.39 (11-13:1) , WB=0.68 (7-10:1) , SSI=0.25 (4-5:1)

DOL LUMBER=1.00 NAIL=1.00 LS BEND=1.10 COMP=1.10 SHEAR=1.10 TENS= 1.10

COMPANION LIVE LOAD FACTOR = 0.50

TRUSS PLATE MANUFACTURER IS NOT RESPONSIBLE FOR QUALITY CONTROL IN THE TRUSS MANUFACTURING PLANT .

NAIL VALUES

PLATE	GRIP(DRY) (PSI) MAX	MIN	SHEAR (PLI) MAX	MIN	SECTION (PLI) MAX	MIN
MT20	618	354	1667	822	2284	1656

PLATE PLACEMENT TOL. = 0.250 inches

PLATE ROTATION TOL. = 5.0 Deg.

JSI GRIP= 0.90 (7) (INPUT = 0.90)
JSI METAL= 0.48 (15) (INPUT = 1.00)

LICENSED PROFESSIONAL ENGINEER
P.M. TREVISAN
100136551
March 13th, 2017
PROVINCE OF ONTARIO

RECEIVED
TOWN OF MILTON
MAR 29, 2017
17-4990
BUILDING DIVISION

READ ALL NOTES ON THIS PAGE AND ON THE ENGINEERING NOTE PAGE ENP-1. THE NOTE PAGE IS AN INTEGRAL PART OF THIS DRAWING AS IT CONTAINS SPECIFICATIONS AND CRITERIA USED IN THE DESIGN OF THIS COMPONENT.

KOTT

JOB NAME	TRUSS NAME	QUANTITY	PLY	JOB DESC.	DRWG NO.
PT0317-054	T54	1	1	TRUSS DESC. LECCO RIDGE-BLOCK 328	

Kott Lumber Uxbridge, Stouffville, ON, CGC

Version 8.100 S Feb 9 2017 MiTek Industries, Inc. Mon Mar 13 09:57:12 2017 Page 1
ID:pF8Cn?9h9uHzAm5tCmlVl5yJJCp-m?P2jt6i6RITKhQEBHiUSVKG1XHFZRLIbOyjQAzbOn5

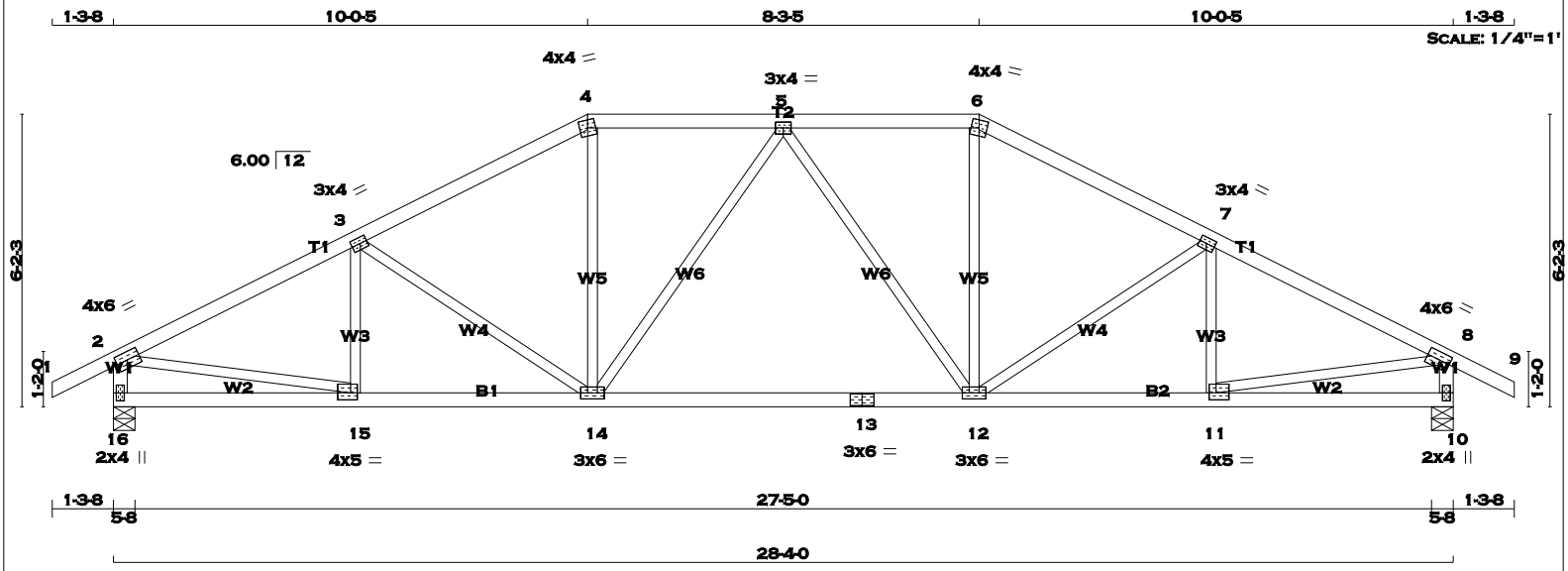

TOTAL WEIGHT = 115 lb

[M][F]

LUMBER

N. L. G. A. RULES

CHORDS	SIZE		LUMBER	DESCR.
1 - 4	2x4	DRY	No.2	SPF
4 - 6	2x4	DRY	No.2	SPF
6 - 9	2x4	DRY	No.2	SPF
16 - 2	2x4	DRY	No.2	SPF
10 - 8	2x4	DRY	No.2	SPF
16 - 13	2x4	DRY	No.2	SPF
13 - 10	2x4	DRY	No.2	SPF
ALL WEBS EXCEPT	2x3	DRY	No.2	SPF

DRY: SEASONED LUMBER.

PLATES (table is in inches)

JT	TYPE	PLATES	W	LEN	Y	X
2	TMVW-t	MT20	4.0	6.0	2.00	2.75
3	TMWW-t	MT20	3.0	4.0	1.50	1.75
4	TTW-m	MT20	4.0	4.0		
5	TMWW-t	MT20	3.0	4.0		
6	TTW-m	MT20	4.0	4.0		
7	TMWW-t	MT20	3.0	4.0	1.50	1.75
8	TMVW-t	MT20	4.0	6.0	2.00	2.75
10	BMV1+p	MT20	2.0	4.0		
11	BMWW-t	MT20	4.0	5.0	1.75	1.75
12	BMWWW-t	MT20	3.0	6.0		
13	BS-t	MT20	3.0	6.0		
14	BMWWW-t	MT20	3.0	6.0		
15	BMWW-t	MT20	4.0	5.0	1.75	1.75
16	BMV1+p	MT20	2.0	4.0		

A SIZE FOR SIZE SUBSTITUTION OF MITEK MII20 WITH TEE-LOK TL20 PLATES IS ALLOWED.

DIMENSIONS, SUPPORTS AND LOADINGS SPECIFIED BY FABRICATOR TO BE VERIFIED BY BUILDING DESIGNER

BEARINGS

JT	FACTORED GROSS REACTION VERT	HORZ	MAXIMUM FACTORED GROSS REACTION DOWN	HORZ	UPLIFT	INPUT BRG IN-SX	REQRD BRG IN-SX
16	1449	0	1449	0	0	5-8	5-8
10	1449	0	1449	0	0	5-8	5-8

UNFACTORED REACTIONS

JT	1ST LCASE COMBINED	MAX./MIN. COMPONENT REACTIONS SNOW	LIVE	PERM.LIVE	WIND	DEAD	SOIL
16	1014	723 / 0	0 / 0	0 / 0	0 / 0	291 / 0	0 / 0
10	1014	723 / 0	0 / 0	0 / 0	0 / 0	291 / 0	0 / 0

BEARING MATERIAL TO BE SPF NO.2 OR BETTER AT JOINT(S) 16, 10

BRACING

TOP CHORD TO BE SHEATHED OR MAX. PURLIN SPACING = 4.61 FT.
MAX. UNBRACED BOTTOM CHORD LENGTH = 10.00 FT. OR RIGID CEILING DIRECTLY APPLIED.

ALL PITCH BREAKS AND PERIMETER CORNER JOINTS MUST BE LATERALLY RESTRAINED.

LOADING

TOTAL LOAD CASES: (3)

CHORDS

MEMB. FR-TO	MAX. FACTORED FORCE (LBS)	FACTORED VERT. LOAD (PLF) FROM	TO	LC1 MAX CSI (LC)	MAX. UNBRAC LENGTH
1- 2	0 / 23	-77.3	-77.3	0.10 (1)	10.00
2- 3	-1902 / 0	-77.3	-77.3	0.29 (1)	4.61
3- 4	-1687 / 0	-77.3	-77.3	0.28 (1)	4.85
4- 5	-1498 / 0	-77.3	-77.3	0.19 (1)	5.18
5- 6	-1498 / 0	-77.3	-77.3	0.19 (1)	5.18
6- 7	-1687 / 0	-77.3	-77.3	0.28 (1)	4.85
7- 8	-1902 / 0	-77.3	-77.3	0.29 (1)	4.61
8- 9	0 / 23	-77.3	-77.3	0.10 (1)	10.00
16- 2	-1407 / 0	0.0	0.0	0.14 (1)	6.87
10- 8	-1407 / 0	0.0	0.0	0.14 (1)	6.87
16-15	0 / 0	-17.5	-17.5	0.10 (3)	10.00
15-14	0 / 1718	-17.5	-17.5	0.38 (1)	10.00
14-13	0 / 1631	-17.5	-17.5	0.37 (1)	10.00
13-12	0 / 1631	-17.5	-17.5	0.37 (1)	10.00
12-11	0 / 1718	-17.5	-17.5	0.38 (1)	10.00
11-10	0 / 0	-17.5	-17.5	0.10 (3)	10.00

WEBS

MEMB. FR-TO	MAX. FACTORED FORCE (LBS)	MAX CSI (LC)
15- 3	-209 / 11	0.05 (1)
3-14	-277 / 0	0.18 (1)
14- 4	0 / 476	0.11 (1)
14- 5	-235 / 0	0.23 (1)
5-12	-235 / 0	0.23 (1)
12- 6	0 / 476	0.11 (1)
12- 7	-277 / 0	0.18 (1)
2-15	0 / 1742	0.39 (1)
11- 8	0 / 1742	0.39 (1)

DESIGN CRITERIA

SPECIFIED LOADS:

TOP CH.	LL	=	23.3	PSF
	DL	=	3.0	PSF
BOT CH.	LL	=	0.0	PSF
	DL	=	7.0	PSF
TOTAL LOAD		=	33.3	PSF

SPACING = 24.0 IN. C/C

LOADING IN FLAT SECTION BASED ON A SLOPE OF 6.00/12

THIS TRUSS IS DESIGNED FOR RESIDENTIAL OR SMALL BUILDING REQUIREMENTS OF PART 9, NBCC 2010

THIS DESIGN COMPLIES WITH:
- PART 9 OF OBC 2012 , BCBC 2012 , ABC 2014
- CSA 086-09
- TPIC 2011

(55 % OF 27.2 P.S.F. G.S.L. PLUS 8.4 P.S.F. RAIN LOAD) EQUALS 23.3 P.S.F. SPECIFIED ROOF LIVE LOAD

ALLOWABLE DEFL.(LL)= L/360 (0.94")
CALCULATED VERT. DEFL.(LL) = L/ 999 (0.08")
ALLOWABLE DEFL.(TL)= L/360 (0.94")
CALCULATED VERT. DEFL.(TL) = L/ 999 (0.20")

CSI: TC=0.29 (7-8:1) , BC=0.38 (11-12:1) , WB=0.39 (8-11:1) , SSI=0.17 (7-8:1)

DOL LUMBER=1.00 NAIL=1.00 LS BEND=1.10 COMP=1.10 SHEAR=1.10 TENS= 1.10

COMPANION LIVE LOAD FACTOR = 0.50

TRUSS PLATE MANUFACTURER IS NOT RESPONSIBLE FOR QUALITY CONTROL IN THE TRUSS MANUFACTURING PLANT .

NAIL VALUES

PLATE	GRIP(DRY) (PSI) MAX	MIN	SHEAR (PLI) MAX	MIN	SECTION (PLI) MAX	MIN
MT20	618	354	1667	822	2284	1656

PLATE PLACEMENT TOL. = 0.250 inches

PLATE ROTATION TOL. = 5.0 Deg.

JSI GRIP= 0.89 (8) (INPUT = 0.90)
JSI METAL= 0.52 (15) (INPUT = 1.00)

LICENSED PROFESSIONAL ENGINEER
P.M. TREVISAN
100136551
March 13th, 2017
PROVINCE OF ONTARIO

RECEIVED
TOWN OF MILTON
MAR 29, 2017
17-4990
BUILDING DIVISION

READ ALL NOTES ON THIS PAGE AND ON THE ENGINEERING NOTE PAGE ENP-1. THE NOTE PAGE IS AN INTEGRAL PART OF THIS DRAWING AS IT CONTAINS SPECIFICATIONS AND CRITERIA USED IN THE DESIGN OF THIS COMPONENT.

KOTT

JOB NAME	TRUSS NAME	QUANTITY	PLY	JOB DESC.	DRWG NO.
PT0317-054	**T55**	**1**	**1**	TRUSS DESC. LECCO RIDGE-BLOCK 328	

ENG JOB: PT0317-054

Kott Lumber Uxbridge, Stouffville, ON, CGC

Version 8.100 S Feb 9 2017 MiTek Industries, Inc. Mon Mar 13 09:57:12 2017 Page 1

ID:pF8Cn?9h9uHzAm5tCmlVl5yJJCp-m?P2jt6i6RITKhQEBHiUSVKDzXHUZO7IbOyjQAzbOn5

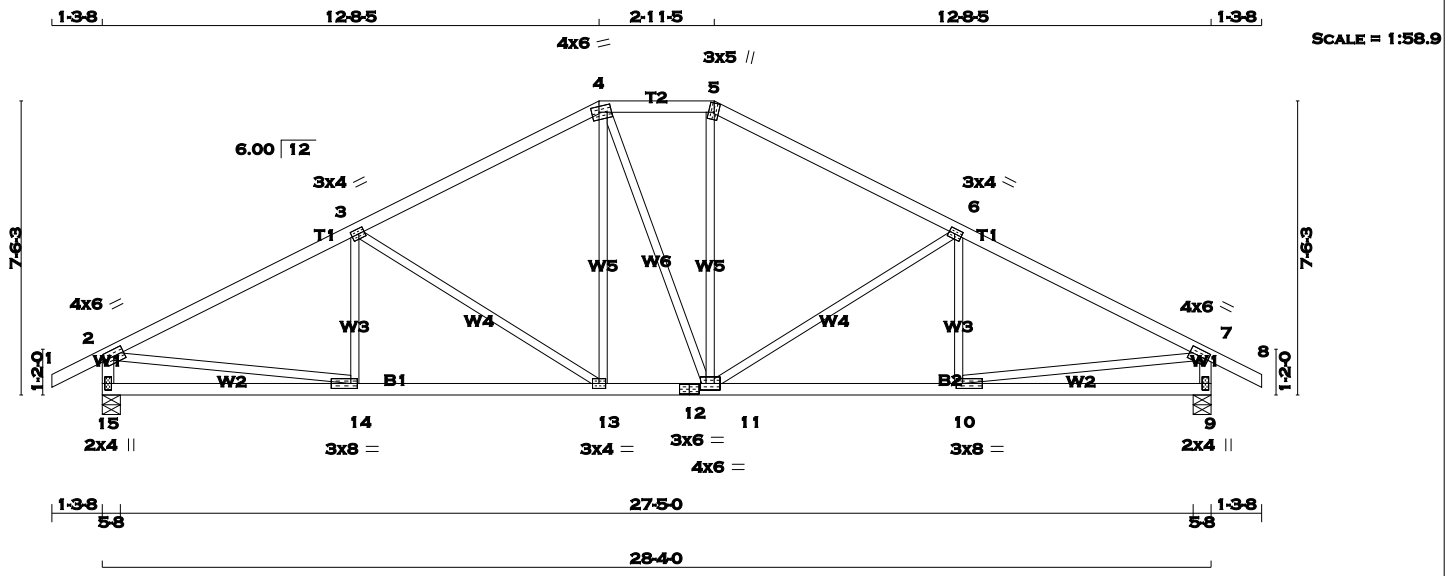

TOTAL WEIGHT = 118 lb

[M][F]

LUMBER

N. L. G. A. RULES

CHORDS	SIZE		LUMBER	DESCR.
1 - 4	2x4	DRY	No.2	SPF
4 - 5	2x4	DRY	No.2	SPF
5 - 8	2x4	DRY	No.2	SPF
15 - 2	2x4	DRY	No.2	SPF
9 - 7	2x4	DRY	No.2	SPF
15 - 12	2x4	DRY	No.2	SPF
12 - 9	2x4	DRY	No.2	SPF
ALL WEBS EXCEPT	2x3	DRY	No.2	SPF

DRY: SEASONED LUMBER.

PLATES (table is in inches)

JT	TYPE	PLATES	W	LEN	Y	X
2	TMVW-t	MT20	4.0	6.0	2.00	2.75
3	TMWW-t	MT20	3.0	4.0	1.50	1.75
4	TTWW-m	MT20	4.0	6.0	1.75	2.25
5	TTW+m	MT20	3.0	5.0	2.75	1.25
6	TMWW-t	MT20	3.0	4.0	1.50	1.75
7	TMVW-t	MT20	4.0	6.0	2.00	2.75
9	BMV1+p	MT20	2.0	4.0		
10	BMWW-t	MT20	3.0	8.0	1.50	2.00
11	BMWWW-t	MT20	4.0	6.0		
12	BS-t	MT20	3.0	6.0		
13	BMWW-t	MT20	3.0	4.0		
14	BMWW-t	MT20	3.0	8.0	1.50	2.00
15	BMV1+p	MT20	2.0	4.0		

A SIZE FOR SIZE SUBSTITUTION OF MITEK MII20 WITH TEE-LOK TL20 PLATES IS ALLOWED.

DIMENSIONS, SUPPORTS AND LOADINGS SPECIFIED BY FABRICATOR TO BE VERIFIED BY BUILDING DESIGNER

BEARINGS

JT	FACTORED GROSS REACTION VERT	HORZ	MAXIMUM FACTORED GROSS REACTION DOWN	HORZ	UPLIFT	INPUT BRG IN-SX	REQRD BRG IN-SX
15	1449	0	1449	0	0	5-8	5-8
9	1449	0	1449	0	0	5-8	5-8

UNFACTORED REACTIONS

JT	1ST LCASE COMBINED	MAX./MIN. COMPONENT REACTIONS SNOW	LIVE	PERM.LIVE	WIND	DEAD	SOIL
15	1014	723 / 0	0 / 0	0 / 0	0 / 0	291 / 0	0 / 0
9	1014	723 / 0	0 / 0	0 / 0	0 / 0	291 / 0	0 / 0

BEARING MATERIAL TO BE SPF NO.2 OR BETTER AT JOINT(S) 15, 9

BRACING

TOP CHORD TO BE SHEATHED OR MAX. PURLIN SPACING = 4.36 FT.
MAX. UNBRACED BOTTOM CHORD LENGTH = 10.00 FT. OR RIGID CEILING DIRECTLY APPLIED.

ALL PITCH BREAKS AND PERIMETER CORNER JOINTS MUST BE LATERALLY RESTRAINED.

LOADING

TOTAL LOAD CASES: (3)

CHORDS

MEMB. FR-TO	MAX. FACTORED FORCE (LBS)	FACTORED VERT. LOAD (PLF) FROM	TO	LC1 MAX CSI (LC)	MAX. UNBRAC LENGTH
1- 2	0 / 23	-77.3	-77.3	0.10 (1)	10.00
2- 3	-1926 / 0	-77.3	-77.3	0.49 (1)	4.36
3- 4	-1486 / 0	-77.3	-77.3	0.44 (1)	4.88
4- 5	-1311 / 0	-77.3	-77.3	0.10 (1)	5.55
5- 6	-1488 / 0	-77.3	-77.3	0.44 (1)	4.88
6- 7	-1925 / 0	-77.3	-77.3	0.49 (1)	4.36
7- 8	0 / 23	-77.3	-77.3	0.10 (1)	10.00
15- 2	-1402 / 0	0.0	0.0	0.14 (1)	6.88
9- 7	-1401 / 0	0.0	0.0	0.14 (1)	6.88
15-14	0 / 0	-17.5	-17.5	0.18 (3)	10.00
14-13	0 / 1745	-17.5	-17.5	0.36 (1)	10.00
13-12	0 / 1310	-17.5	-17.5	0.27 (1)	10.00
12-11	0 / 1310	-17.5	-17.5	0.27 (1)	10.00
11-10	0 / 1745	-17.5	-17.5	0.36 (1)	10.00
10- 9	0 / 0	-17.5	-17.5	0.18 (3)	10.00

WEBS

MEMB. FR-TO	MAX. FACTORED FORCE (LBS)	MAX CSI (LC)
14- 3	-106 / 78	0.03 (1)
3-13	-524 / 0	0.60 (1)
13- 4	0 / 355	0.08 (1)
4-11	0 / 3	0.00 (1)
11- 5	0 / 359	0.08 (1)
11- 6	-522 / 0	0.60 (1)
10- 6	-108 / 77	0.03 (1)
2-14	0 / 1761	0.40 (1)
10- 7	0 / 1760	0.40 (1)

DESIGN CRITERIA

SPECIFIED LOADS:

TOP CH.	LL	=	23.3	PSF
	DL	=	3.0	PSF
BOT CH.	LL	=	0.0	PSF
	DL	=	7.0	PSF
TOTAL LOAD		=	33.3	PSF

SPACING = 24.0 IN. C/C

LOADING IN FLAT SECTION BASED ON A SLOPE OF 6.00/12

THIS TRUSS IS DESIGNED FOR RESIDENTIAL OR SMALL BUILDING REQUIREMENTS OF PART 9, NBCC 2010

THIS DESIGN COMPLIES WITH:
- PART 9 OF OBC 2012 , BCBC 2012 , ABC 2014
- CSA 086-09
- TPIC 2011

(55 % OF 27.2 P.S.F. G.S.L. PLUS 8.4 P.S.F. RAIN LOAD) EQUALS 23.3 P.S.F. SPECIFIED ROOF LIVE LOAD

ALLOWABLE DEFL.(LL)= L/360 (0.94")
CALCULATED VERT. DEFL.(LL) = L/ 999 (0.08")
ALLOWABLE DEFL.(TL)= L/360 (0.94")
CALCULATED VERT. DEFL.(TL) = L/ 999 (0.16")

CSI: TC=0.49 (2-3:1) , BC=0.36 (13-14:1) , WB=0.60 (3-13:1) , SSI=0.21 (6-7:1)

DOL LUMBER=1.00 NAIL=1.00 LS BEND=1.10 COMP=1.10 SHEAR=1.10 TENS= 1.10

COMPANION LIVE LOAD FACTOR = 0.50

TRUSS PLATE MANUFACTURER IS NOT RESPONSIBLE FOR QUALITY CONTROL IN THE TRUSS MANUFACTURING PLANT .

NAIL VALUES

PLATE	GRIP(DRY) (PSI) MAX	MIN	SHEAR (PLI) MAX	MIN	SECTION (PLI) MAX	MIN
MT20	618	354	1667	822	2284	1656

PLATE PLACEMENT TOL. = 0.250 inches

PLATE ROTATION TOL. = 5.0 Deg.

JSI GRIP= 0.88 (2) (INPUT = 0.90)
JSI METAL= 0.52 (2) (INPUT = 1.00)

LICENSED PROFESSIONAL ENGINEER
P.M. TREVISAN
100136551
March 13th, 2017
PROVINCE OF ONTARIO

RECEIVED
TOWN OF MILTON
MAR 29, 2017
17-4990
BUILDING DIVISION

READ ALL NOTES ON THIS PAGE AND ON THE ENGINEERING NOTE PAGE ENP-1. THE NOTE PAGE IS AN INTEGRAL PART OF THIS DRAWING AS IT CONTAINS SPECIFICATIONS AND CRITERIA USED IN THE DESIGN OF THIS COMPONENT.

KOTT

JOB NAME	TRUSS NAME	QUANTITY	PLY	JOB DESC.	DRWG NO.
PT0317-054	T56	3	1	TRUSS DESC. LECCO RIDGE-BLOCK 328	

Kott Lumber Uxbridge, Stouffville, ON, CGC

Version 8.100 S Feb 9 2017 MiTek Industries, Inc. Mon Mar 13 09:57:13 2017 Page 1
ID:pF8Cn?9h9uHzAm5tCmlVl5yJJCp-EBzQwD7KtlQKyr?Ql_Dj?jtMbwdSluZRq2hHzczbOn4

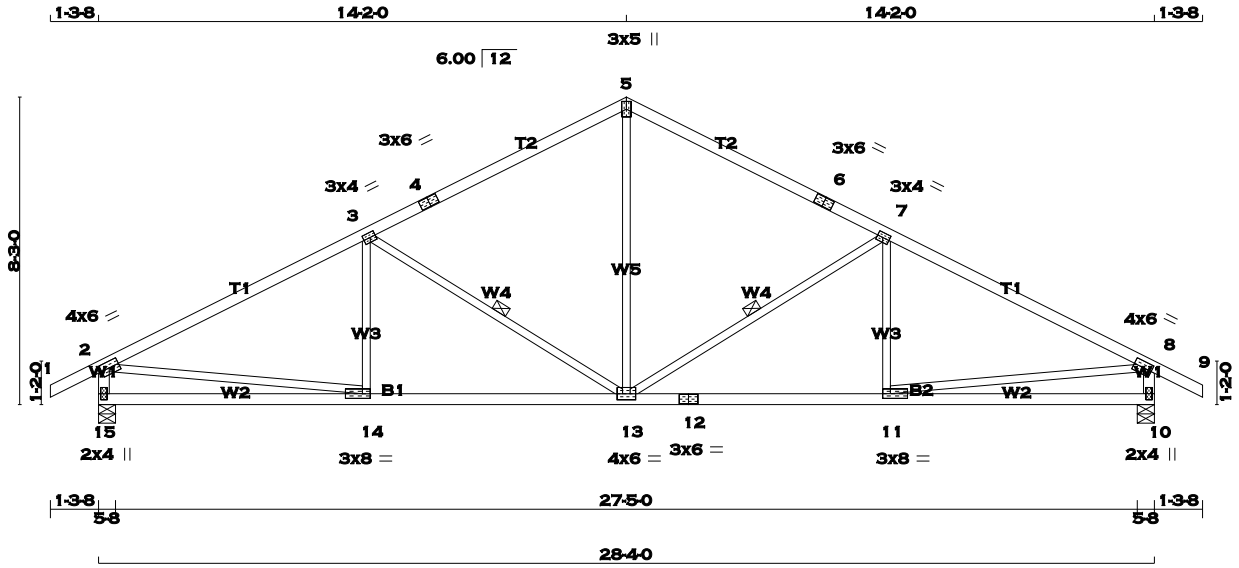

TOTAL WEIGHT = 3 X 111 = 332 lb

LUMBER

N. L. G. A. RULES

CHORDS	SIZE		LUMBER	DESCR.
1 - 4	2x4	DRY	No.2	SPF
4 - 5	2x4	DRY	No.2	SPF
5 - 6	2x4	DRY	No.2	SPF
6 - 9	2x4	DRY	No.2	SPF
15 - 2	2x4	DRY	No.2	SPF
10 - 8	2x4	DRY	No.2	SPF
15 - 12	2x4	DRY	No.2	SPF
12 - 10	2x4	DRY	No.2	SPF
ALL WEBS EXCEPT	2x3	DRY	No.2	SPF

DRY: SEASONED LUMBER.

PLATES (table is in inches)

JT	TYPE	PLATES	W	LEN	Y	X
2	TMVW-t	MT20	4.0	6.0	2.00	2.75
3	TMWW-t	MT20	3.0	4.0	1.50	1.75
4	TS-t	MT20	3.0	6.0		
5	TTW+p	MT20	3.0	5.0		
6	TS-t	MT20	3.0	6.0		
7	TMWW-t	MT20	3.0	4.0	1.50	1.75
8	TMVW-t	MT20	4.0	6.0	2.00	2.75
10	BMV1+p	MT20	2.0	4.0		
11	BMWW-t	MT20	3.0	8.0	1.50	2.50
12	BS-t	MT20	3.0	6.0		
13	BMWWW-t	MT20	4.0	6.0		
14	BMWW-t	MT20	3.0	8.0	1.50	2.50
15	BMV1+p	MT20	2.0	4.0		

A SIZE FOR SIZE SUBSTITUTION OF MITEK MII20 WITH TEE-LOK TL20 PLATES IS ALLOWED.

DIMENSIONS, SUPPORTS AND LOADINGS SPECIFIED BY FABRICATOR TO BE VERIFIED BY BUILDING DESIGNER

BEARINGS

JT	FACTORED GROSS REACTION VERT	HORZ	MAXIMUM FACTORED GROSS REACTION DOWN	HORZ	UPLIFT	INPUT BRG IN-SX	REQRD BRG IN-SX
15	1449	0	1449	0	0	5-8	5-8
10	1449	0	1449	0	0	5-8	5-8

UNFACTORED REACTIONS

JT	1ST LCASE COMBINED	MAX./MIN. COMPONENT REACTIONS SNOW	LIVE	PERM.LIVE	WIND	DEAD	SOIL
15	1014	723 / 0	0 / 0	0 / 0	0 / 0	291 / 0	0 / 0
10	1014	723 / 0	0 / 0	0 / 0	0 / 0	291 / 0	0 / 0

BEARING MATERIAL TO BE SPF NO.2 OR BETTER AT JOINT(S) 15, 10

BRACING

TOP CHORD TO BE SHEATHED OR MAX. PURLIN SPACING = 4.17 FT.
MAX. UNBRACED BOTTOM CHORD LENGTH = 10.00 FT. OR RIGID CEILING DIRECTLY APPLIED.

ALL PITCH BREAKS AND PERIMETER CORNER JOINTS MUST BE LATERALLY RESTRAINED.

1 - 2x3 SPF No.2 LATERAL BRACE(S) AT 1/ 2 LENGTH OF 7-13, 3-13. DBS = 20-0-0 . CBF = 79 LBS.

DBS = DIAGONAL BRACE SPACING (MAX). CBF = CUMULATIVE BRACING FORCE. FASTEN LATERAL BRACE(S) USING (0.122"X3") SPIRAL NAILS : 1 NAIL FOR 2x3 BRACE(S), 2 FOR 1x4, 2x4, 2x5, 3 FOR 2x6, 4 FOR 2x8, 5 FOR 2x10, AND 6 FOR 2x12.

END VERTICAL(S) MUST BE SHEATHED OR HAVE BRACES AS INDICATED IN THE MAX. UNBRACED LENGTH COLUMN OF THE TABLE BELOW

LOADING

TOTAL LOAD CASES: (3)

CHORDS

MEMB. FR-TO	MAX. FACTORED FORCE (LBS)	FACTORED VERT. LOAD (PLF) FROM	TO	LC1 MAX CSI (LC)	MAX. UNBRAC LENGTH
1- 2	0 / 23	-77.3	-77.3	0.10 (1)	10.00
2- 3	-1917 / 0	-77.3	-77.3	0.62 (1)	4.17
3- 4	-1379 / 0	-77.3	-77.3	0.55 (1)	4.84
4- 5	-1379 / 0	-77.3	-77.3	0.55 (1)	4.84
5- 6	-1379 / 0	-77.3	-77.3	0.55 (1)	4.84
6- 7	-1379 / 0	-77.3	-77.3	0.55 (1)	4.84
7- 8	-1917 / 0	-77.3	-77.3	0.62 (1)	4.17
8- 9	0 / 23	-77.3	-77.3	0.10 (1)	10.00
15- 2	-1396 / 0	0.0	0.0	0.14 (1)	6.89
10- 8	-1396 / 0	0.0	0.0	0.14 (1)	6.89
15-14	0 / 0	-17.5	-17.5	0.21 (3)	10.00
14-13	0 / 1741	-17.5	-17.5	0.38 (1)	10.00
13-12	0 / 1741	-17.5	-17.5	0.38 (1)	10.00
12-11	0 / 1741	-17.5	-17.5	0.38 (1)	10.00
11-10	0 / 0	-17.5	-17.5	0.21 (3)	10.00

WEBS

MEMB. FR-TO	MAX. FACTORED FORCE (LBS)	MAX CSI (LC)
13- 5	0 / 801	0.18 (1)
13- 7	-633 / 0	0.30 (1)
11- 7	-72 / 96	0.03 (3)
3-13	-633 / 0	0.30 (1)
14- 3	-72 / 96	0.03 (3)
2-14	0 / 1753	0.39 (1)
11- 8	0 / 1753	0.39 (1)

DESIGN CRITERIA

SPECIFIED LOADS:

TOP	CH.	LL	=	23.3	PSF
		DL	=	3.0	PSF
BOT	CH.	LL	=	0.0	PSF
		DL	=	7.0	PSF
TOTAL	LOAD		=	33.3	PSF

SPACING = 24.0 IN. C/C

THIS TRUSS IS DESIGNED FOR RESIDENTIAL OR SMALL BUILDING REQUIREMENTS OF PART 9, NBCC 2010

THIS DESIGN COMPLIES WITH:
- PART 9 OF OBC 2012 , BCBC 2012 , ABC 2014
- CSA 086-09
- TPIC 2011

(55 % OF 27.2 P.S.F. G.S.L. PLUS 8.4 P.S.F. RAIN LOAD) EQUALS 23.3 P.S.F. SPECIFIED ROOF LIVE LOAD

ALLOWABLE DEFL.(LL)= L/360 (0.94")
CALCULATED VERT. DEFL.(LL) = L/ 999 (0.09")
ALLOWABLE DEFL.(TL)= L/360 (0.94")
CALCULATED VERT. DEFL.(TL) = L/ 999 (0.17")

CSI: TC=0.62 (2-3:1) , BC=0.38 (11-13:1) , WB=0.39 (2-14:1) , SSI=0.24 (7-8:1)

DOL LUMBER=1.00 NAIL=1.00 LS BEND=1.10 COMP=1.10 SHEAR=1.10 TENS= 1.10

COMPANION LIVE LOAD FACTOR = 0.50

TRUSS PLATE MANUFACTURER IS NOT RESPONSIBLE FOR QUALITY CONTROL IN THE TRUSS MANUFACTURING PLANT .

NAIL VALUES

PLATE	GRIP(DRY) (PSI) MAX	MIN	SHEAR (PLI) MAX	MIN	SECTION (PLI) MAX	MIN
MT20	618	354	1667	822	2284	1656

PLATE PLACEMENT TOL. = 0.250 inches

PLATE ROTATION TOL. = 5.0 Deg.

JSI GRIP= 0.90 (14) (INPUT = 0.90)
JSI METAL= 0.52 (2) (INPUT = 1.00)

LICENSED PROFESSIONAL ENGINEER
P.M. TREVISAN
100136551
March 13th, 2017
PROVINCE OF ONTARIO

RECEIVED
TOWN OF MILTON
MAR 29, 2017
17-4990
BUILDING DIVISION

READ ALL NOTES ON THIS PAGE AND ON THE ENGINEERING NOTE PAGE ENP-1. THE NOTE PAGE IS AN INTEGRAL PART OF THIS DRAWING AS IT CONTAINS SPECIFICATIONS AND CRITERIA USED IN THE DESIGN OF THIS COMPONENT.

KOTT

JOB NAME	TRUSS NAME	QUANTITY	PLY	JOB DESC.	DRWG NO.
PT0317-054	T57	6	1	TRUSS DESC. LECCO RIDGE-BLOCK 328	

Kott Lumber Uxbridge, Stouffville, ON, CGC

Version 8.100 S Feb 9 2017 MiTek Industries, Inc. Mon Mar 13 09:57:13 2017 Page 1
ID:pF8Cn?9h9uHzAm5tCmlVl5yJJCp-EBzQwD7KtlQKyr?Ql_Dj?jtUnwhgI_jRq2hHzczbOn4

SCALE = 1:17.3

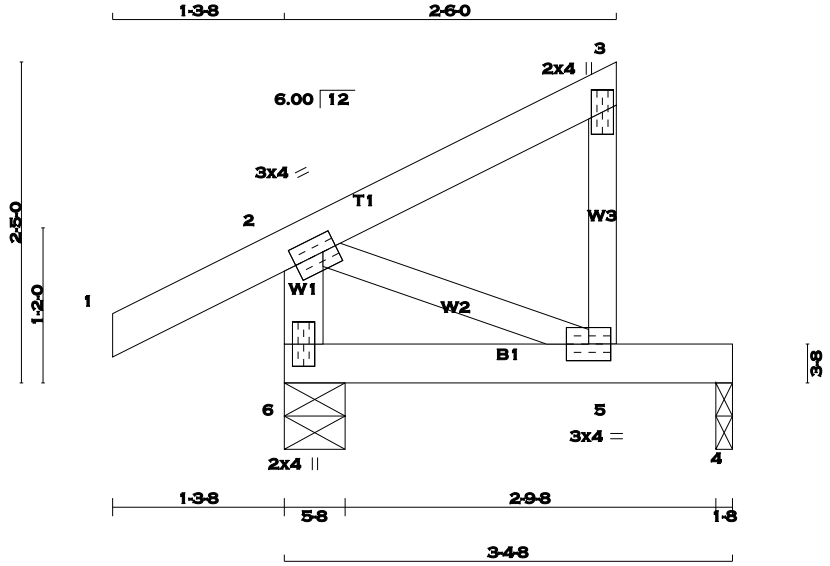

TOTAL WEIGHT = 6 X 13 = 77 lb [M]

LUMBER
N. L. G. A. RULES

CHORDS	SIZE		LUMBER	DESCR.
1 - 3	2x4	DRY	No.2	SPF
5 - 3	2x3	DRY	No.2	SPF
6 - 2	2x4	DRY	No.2	SPF
6 - 4	2x4	DRY	No.2	SPF
ALL WEBS	2x3	DRY	No.2	SPF

DRY: SEASONED LUMBER.

PLATES (table is in inches)

JT	TYPE	PLATES	W	LEN	Y	X
2	TMVW-t	MT20	3.0	4.0	1.50	1.25
3	TMV+p	MT20	2.0	4.0		
5	BMVW-t	MT20	3.0	4.0		
6	BMV1+p	MT20	2.0	4.0		

A SIZE FOR SIZE SUBSTITUTION OF MITEK MII20 WITH TEE-LOK TL20 PLATES IS ALLOWED.

DIMENSIONS, SUPPORTS AND LOADINGS SPECIFIED BY FABRICATOR TO BE VERIFIED BY BUILDING DESIGNER

BEARINGS

JT	FACTORED GROSS REACTION VERT	HORZ	MAXIMUM FACTORED GROSS REACTION DOWN	HORZ	UPLIFT	INPUT BRG IN-SX	REQRD BRG IN-SX
6	256	0	256	0	0	5-8	5-8
4	101	0	101	0	0	1-8	1-8

UNFACTORED REACTIONS

JT	1ST LCASE COMBINED	MAX./MIN. COMPONENT REACTIONS SNOW	LIVE	PERM.LIVE	WIND	DEAD	SOIL
6	178	136 / 0	0 / 0	0 / 0	0 / 0	41 / 0	0 / 0
4	72	43 / 0	0 / 0	0 / 0	0 / 0	29 / 0	0 / 0

BEARING MATERIAL TO BE SPF NO.2 OR BETTER AT JOINT(S) 6, 4

BRACING
TOP CHORD TO BE SHEATHED OR MAX. PURLIN SPACING = 10.00 FT.
MAX. UNBRACED BOTTOM CHORD LENGTH = 10.00 FT. OR RIGID CEILING DIRECTLY APPLIED.

ALL PITCH BREAKS AND PERIMETER CORNER JOINTS MUST BE LATERALLY RESTRAINED.

LOADING
TOTAL LOAD CASES: (4)

CHORDS

MEMB. FR-TO	MAX. FACTORED FORCE (LBS)	FACTORED VERT. LOAD (PLF) FROM	TO	LC1 MAX CSI (LC)	MAX. UNBRAC LENGTH
1- 2	0 / 23	-77.3	-77.3	0.10 (1)	10.00
2- 3	0 / 0	-77.3	-77.3	0.08 (1)	10.00
5- 3	-97 / 0	0.0	0.0	0.02 (1)	7.81
6- 2	-202 / 0	0.0	0.0	0.02 (1)	7.81
6- 5	0 / 0	-17.5	-17.5	0.11 (1)	10.00
5- 4	0 / 0	-17.5	-17.5	0.11 (1)	10.00

WEBS

MEMB. FR-TO	MAX. FACTORED FORCE (LBS)	MAX CSI (LC)
2- 5	0 / 0	0.00 (1)

CANTILEVER ANALYSIS HAS BEEN CONSIDERED IN THIS DESIGN

DESIGN CRITERIA

SPECIFIED LOADS:

TOP	CH.	LL	=	23.3	PSF
		DL	=	3.0	PSF
BOT	CH.	LL	=	0.0	PSF
		DL	=	7.0	PSF
TOTAL	LOAD		=	33.3	PSF

SPACING = 24.0 IN. C/C

THIS TRUSS IS DESIGNED FOR RESIDENTIAL OR SMALL BUILDING REQUIREMENTS OF PART 9, NBCC 2010

THIS DESIGN COMPLIES WITH:
- PART 9 OF OBC 2012 , BCBC 2012 , ABC 2014
- CSA 086-09
- TPIC 2011

(55 % OF 27.2 P.S.F. G.S.L. PLUS 8.4 P.S.F. RAIN LOAD) EQUALS 23.3 P.S.F. SPECIFIED ROOF LIVE LOAD

ALLOWABLE DEFL.(LL)= L/360 (0.19")
CALCULATED VERT. DEFL.(LL) = L/ 999 (0.01")
ALLOWABLE DEFL.(TL)= L/360 (0.19")
CALCULATED VERT. DEFL.(TL) = L/ 999 (0.02")

CSI: TC=0.10 (1-2:1) , BC=0.11 (5-6:1) , WB=0.00 (2-5:1) , SSI=0.08 (4-5:1)

DOL LUMBER=1.00 NAIL=1.00 LS BEND=1.10 COMP=1.10 SHEAR=1.10 TENS= 1.10

COMPANION LIVE LOAD FACTOR = 0.50

TRUSS PLATE MANUFACTURER IS NOT RESPONSIBLE FOR QUALITY CONTROL IN THE TRUSS MANUFACTURING PLANT .

NAIL VALUES

PLATE	GRIP(DRY) (PSI) MAX	MIN	SHEAR (PLI) MAX	MIN	SECTION (PLI) MAX	MIN
MT20	618	354	1667	822	2284	1656

PLATE PLACEMENT TOL. = 0.250 inches

PLATE ROTATION TOL. = 5.0 Deg.

JSI GRIP= 0.18 (2) (INPUT = 0.90)
JSI METAL= 0.04 (6) (INPUT = 1.00)

LICENSED PROFESSIONAL ENGINEER
P.M. TREVISAN
100136551
March 13th, 2017
PROVINCE OF ONTARIO

RECEIVED
TOWN OF MILTON
MAR 29, 2017
17-4990
BUILDING DIVISION

READ ALL NOTES ON THIS PAGE AND ON THE ENGINEERING NOTE PAGE ENP-1. THE NOTE PAGE IS AN INTEGRAL PART OF THIS DRAWING AS IT CONTAINS SPECIFICATIONS AND CRITERIA USED IN THE DESIGN OF THIS COMPONENT.

KOTT

JOB NAME	TRUSS NAME	QUANTITY	PLY	JOB DESC.	DRWG NO.
PT0317-054	T58	15	1	TRUSS DESC. LECCO RIDGE-BLOCK 328	

Kott Lumber Uxbridge, Stouffville, ON, CGC

Version 8.100 S Feb 9 2017 MiTek Industries, Inc. Mon Mar 13 09:57:13 2017 Page 1
ID:pF8Cn?9h9uHzAm5tCmlVl5yJJCp-EBzQwD7KtlQKyr?Ql_Dj?jtUcwbJlyMRq2hHzczbOn4

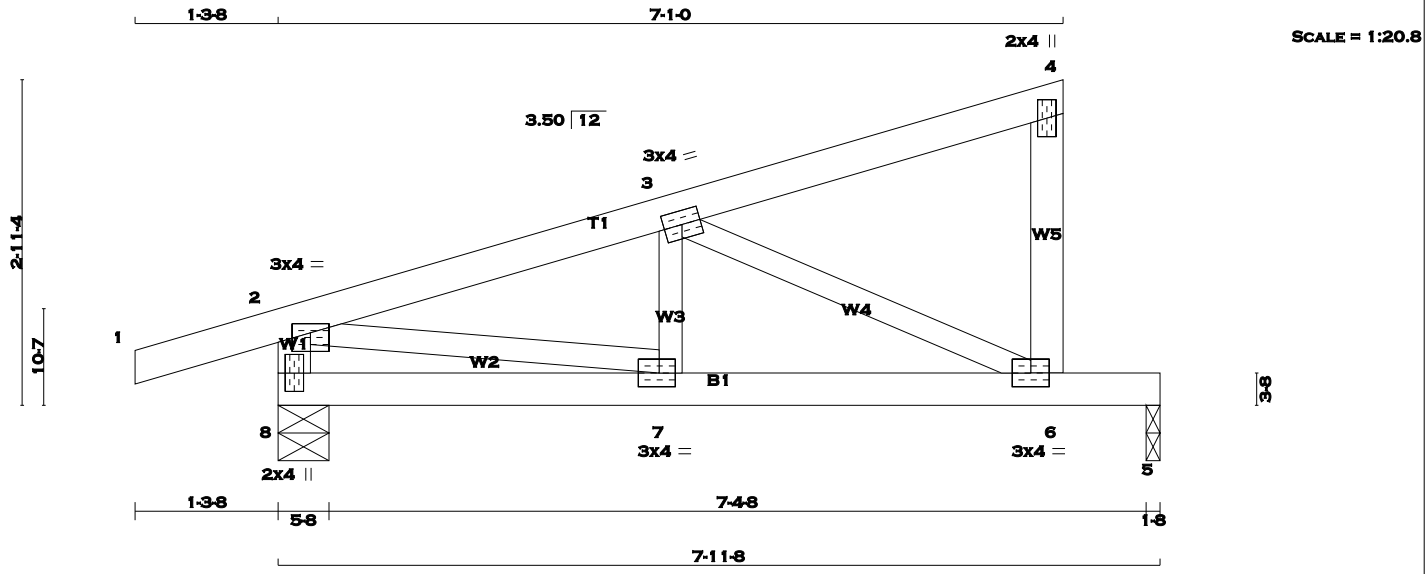

TOTAL WEIGHT = 15 X 29 = 430 lb

[M][F]

LUMBER

N. L. G. A. RULES

CHORDS	SIZE		LUMBER	DESCR.
1 - 4	2x4	DRY	No.2	SPF
6 - 4	2x4	DRY	No.2	SPF
8 - 2	2x4	DRY	No.2	SPF
8 - 5	2x4	DRY	No.2	SPF
ALL WEBS EXCEPT	2x3	DRY	No.2	SPF

DRY: SEASONED LUMBER.

PLATES (table is in inches)

JT	TYPE	PLATES	W	LEN	Y	X
2	TMVW-p	MT20	3.0	4.0	1.00	2.00
3	TMWW-t	MT20	3.0	4.0		
4	TMV+p	MT20	2.0	4.0		
6	BMVW-t	MT20	3.0	4.0		
7	BMWW-t	MT20	3.0	4.0	1.50	1.75
8	BMV1+p	MT20	2.0	4.0		

A SIZE FOR SIZE SUBSTITUTION OF MITEK MII20 WITH TEE-LOK TL20 PLATES IS ALLOWED.

DIMENSIONS, SUPPORTS AND LOADINGS SPECIFIED BY FABRICATOR TO BE VERIFIED BY BUILDING DESIGNER

BEARINGS

JT	FACTORED GROSS REACTION VERT	HORZ	MAXIMUM FACTORED GROSS REACTION DOWN	HORZ	UPLIFT	INPUT BRG IN-SX	REQRD BRG IN-SX
8	477	0	477	0	0	5-8	5-8
5	313	0	313	0	0	1-8	1-8

UNFACTORED REACTIONS

JT	1ST LCASE COMBINED	MAX./MIN. COMPONENT REACTIONS SNOW	LIVE	PERM.LIVE	WIND	DEAD	SOIL
8	332	245 / 0	0 / 0	0 / 0	0 / 0	87 / 0	0 / 0
5	221	147 / 0	0 / 0	0 / 0	0 / 0	75 / 0	0 / 0

BEARING MATERIAL TO BE SPF NO.2 OR BETTER AT JOINT(S) 8, 5

BRACING

TOP CHORD TO BE SHEATHED OR MAX. PURLIN SPACING = 6.25 FT.
MAX. UNBRACED BOTTOM CHORD LENGTH = 10.00 FT. OR RIGID CEILING DIRECTLY APPLIED.

ALL PITCH BREAKS AND PERIMETER CORNER JOINTS MUST BE LATERALLY RESTRAINED.

LOADING

TOTAL LOAD CASES: (3)

CHORDS

MEMB. FR-TO	MAX. FACTORED FORCE (LBS)	FACTORED VERT. LOAD (PLF) FROM	TO	LC1 MAX CSI (LC)	MAX. UNBRAC LENGTH
1- 2	0 / 14	-77.3	-77.3	0.10 (1)	10.00
2- 3	-579 / 0	-77.3	-77.3	0.11 (1)	6.25
3- 4	-8 / 0	-77.3	-77.3	0.11 (1)	10.00
6- 4	-108 / 0	0.0	0.0	0.02 (1)	7.81
8- 2	-467 / 0	0.0	0.0	0.05 (1)	7.81
8- 7	0 / 0	-17.5	-17.5	0.10 (1)	10.00
7- 6	0 / 563	-17.5	-17.5	0.45 (1)	10.00
6- 5	0 / 0	-17.5	-17.5	0.36 (1)	10.00

WEBS

MEMB. FR-TO	MAX. FACTORED FORCE (LBS)	MAX CSI (LC)
7- 3	0 / 91	0.03 (3)
3- 6	-618 / 0	0.15 (1)
2- 7	0 / 571	0.13 (1)

DESIGN CRITERIA

SPECIFIED LOADS:

TOP	CH.	LL	=	23.3	PSF
		DL	=	3.0	PSF
BOT	CH.	LL	=	0.0	PSF
		DL	=	7.0	PSF
TOTAL	LOAD		=	33.3	PSF

SPACING = 24.0 IN. C/C

THIS TRUSS IS DESIGNED FOR RESIDENTIAL OR SMALL BUILDING REQUIREMENTS OF PART 9, NBCC 2010

THIS DESIGN COMPLIES WITH:
- PART 9 OF OBC 2012 , BCBC 2012 , ABC 2014
- CSA 086-09
- TPIC 2011

(55 % OF 27.2 P.S.F. G.S.L. PLUS 8.4 P.S.F. RAIN LOAD) EQUALS 23.3 P.S.F. SPECIFIED ROOF LIVE LOAD

ALLOWABLE DEFL.(LL)= L/360 (0.27")
CALCULATED VERT. DEFL.(LL) = L/ 999 (0.05")
ALLOWABLE DEFL.(TL)= L/360 (0.27")
CALCULATED VERT. DEFL.(TL) = L/ 973 (0.10")

CSI: TC=0.11 (2-3:1) , BC=0.45 (6-7:1) , WB=0.15 (3-6:1) , SSI=0.24 (5-6:1)

DOL LUMBER=1.00 NAIL=1.00 LS BEND=1.10 COMP=1.10 SHEAR=1.10 TENS= 1.10

COMPANION LIVE LOAD FACTOR = 0.50

TRUSS PLATE MANUFACTURER IS NOT RESPONSIBLE FOR QUALITY CONTROL IN THE TRUSS MANUFACTURING PLANT .

NAIL VALUES

PLATE	GRIP(DRY) (PSI) MAX	MIN	SHEAR (PLI) MAX	MIN	SECTION (PLI) MAX	MIN
MT20	618	354	1667	822	2284	1656

PLATE PLACEMENT TOL. = 0.250 inches

PLATE ROTATION TOL. = 5.0 Deg.

JSI GRIP= 0.85 (6) (INPUT = 0.90)
JSI METAL= 0.21 (2) (INPUT = 1.00)

LICENSED PROFESSIONAL ENGINEER
R.M. TREVISAN
100136551
March 13th, 2017
PROVINCE OF ONTARIO

RECEIVED
TOWN OF MILTON
MAR 29, 2017
17-4990
BUILDING DIVISION

READ ALL NOTES ON THIS PAGE AND ON THE ENGINEERING NOTE PAGE ENP-1. THE NOTE PAGE IS AN INTEGRAL PART OF THIS DRAWING AS IT CONTAINS SPECIFICATIONS AND CRITERIA USED IN THE DESIGN OF THIS COMPONENT.

KOTT

JOB NAME	TRUSS NAME	QUANTITY	PLY	JOB DESC.	DRWG NO.
PT0317-054	T59	11	1	TRUSS DESC. LECCO RIDGE-BLOCK 328	

Kott Lumber Uxbridge, Stouffville, ON, CGC

Version 8.100 S Feb 9 2017 MiTek Industries, Inc. Mon Mar 13 09:57:13 2017 Page 1
ID:pF8Cn?9h9uHzAm5tCmlVl5yJJCp-EBzQwD7KtlQKyr?QI_Dj?jtUrwdXIz?Rq2hHzczbOn4

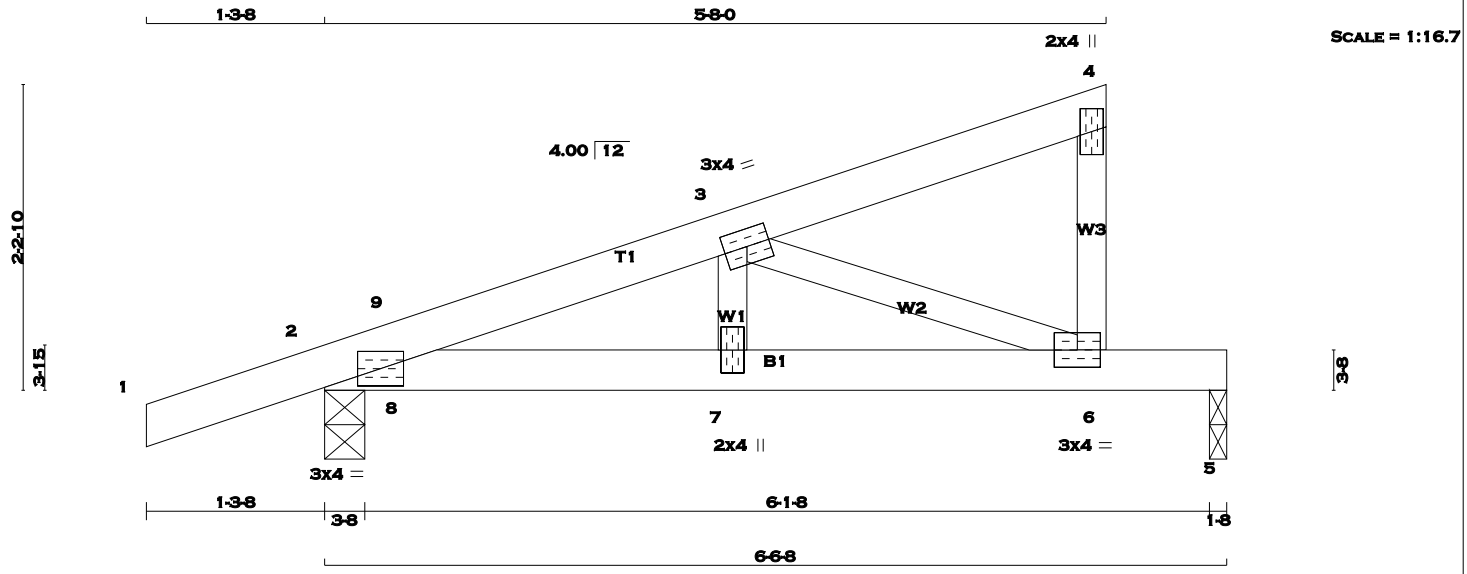

TOTAL WEIGHT = 11 X 20 = 219 lb
[M][F]

LUMBER
N. L. G. A. RULES

CHORDS	SIZE		LUMBER	DESCR.
1 - 4	2x4	DRY	No.2	SPF
6 - 4	2x3	DRY	No.2	SPF
2 - 5	2x4	DRY	No.2	SPF
ALL WEBS	2x3	DRY	No.2	SPF

DRY: SEASONED LUMBER.

PLATES (table is in inches)

JT	TYPE	PLATES	W	LEN	Y	X
2	TMB1-l	MT20	3.0	4.0		
3	TMWW-t	MT20	3.0	4.0		
4	TMV+p	MT20	2.0	4.0		
6	BMVW-t	MT20	3.0	4.0		
7	BMW+w	MT20	2.0	4.0		

A SIZE FOR SIZE SUBSTITUTION OF MITEK MII20 WITH TEE-LOK TL20 PLATES IS ALLOWED.

DIMENSIONS, SUPPORTS AND LOADINGS SPECIFIED BY FABRICATOR TO BE VERIFIED BY BUILDING DESIGNER

BEARINGS

JT	FACTORED GROSS REACTION VERT	HORZ	MAXIMUM FACTORED GROSS REACTION DOWN	HORZ	UPLIFT	INPUT BRG IN-SX	REQRD BRG IN-SX
2	409	0	409	0	0	3-8	3-8
5	247	0	247	0	0	1-8	1-8

UNFACTORED REACTIONS

JT	1ST LCASE COMBINED	MAX./MIN. COMPONENT REACTIONS SNOW	LIVE	PERM.LIVE	WIND	DEAD	SOIL
2	285	212 / 0	0 / 0	0 / 0	0 / 0	73 / 0	0 / 0
5	175	114 / 0	0 / 0	0 / 0	0 / 0	61 / 0	0 / 0

BEARING MATERIAL TO BE SPF NO.2 OR BETTER AT JOINT(S) 2, 5

BRACING
TOP CHORD TO BE SHEATHED OR MAX. PURLIN SPACING = 6.25 FT.
MAX. UNBRACED BOTTOM CHORD LENGTH = 10.00 FT. OR RIGID CEILING DIRECTLY APPLIED.

ALL PITCH BREAKS AND PERIMETER CORNER JOINTS MUST BE LATERALLY RESTRAINED.

LOADING
TOTAL LOAD CASES: (3)

CHORDS

MEMB. FR-TO	MAX. FACTORED FORCE (LBS)	FACTORED VERT. LOAD (PLF) FROM	TO	LC1 MAX CSI (LC)	MAX. UNBRAC LENGTH
1- 2	0 / 15	-77.3	-77.3	0.10 (1)	10.00
2- 9	-607 / 0	-77.3	-77.3	0.01 (1)	6.25
9- 3	-593 / 0	-77.3	-77.3	0.05 (1)	6.25
3- 4	-4 / 0	-77.3	-77.3	0.06 (1)	10.00
6- 4	-91 / 0	0.0	0.0	0.01 (1)	7.81
2- 8	0 / 568	-17.5	-17.5	0.14 (1)	10.00
8- 7	0 / 568	-17.5	-17.5	0.16 (1)	10.00
7- 6	0 / 568	-17.5	-17.5	0.38 (1)	10.00
6- 5	0 / 0	-17.5	-17.5	0.29 (1)	10.00

WEBS

MEMB. FR-TO	MAX. FACTORED FORCE (LBS)	MAX CSI (LC)
3- 6	-606 / 0	0.11 (1)
7- 3	0 / 178	0.04 (1)
8- 9	-74 / 2	0.00 (1)

DESIGN CRITERIA

SPECIFIED LOADS:

TOP	CH.	LL	=	23.3	PSF
		DL	=	3.0	PSF
BOT	CH.	LL	=	0.0	PSF
		DL	=	7.0	PSF
TOTAL	LOAD		=	33.3	PSF

SPACING = 24.0 IN. C/C

THIS TRUSS IS DESIGNED FOR RESIDENTIAL OR SMALL BUILDING REQUIREMENTS OF PART 9, NBCC 2010

THIS DESIGN COMPLIES WITH:
- PART 9 OF OBC 2012 , BCBC 2012 , ABC 2014
- CSA 086-09
- TPIC 2011

(55 % OF 27.2 P.S.F. G.S.L. PLUS 8.4 P.S.F. RAIN LOAD) EQUALS 23.3 P.S.F. SPECIFIED ROOF LIVE LOAD

ALLOWABLE DEFL.(LL)= L/360 (0.22")
CALCULATED VERT. DEFL.(LL) = L/ 999 (0.03")
ALLOWABLE DEFL.(TL)= L/360 (0.22")
CALCULATED VERT. DEFL.(TL) = L/ 999 (0.06")

CSI: TC=0.10 (1-2:1) , BC=0.38 (6-7:1) , WB=0.11 (3-6:1) , SSI=0.19 (5-6:1)

DOL LUMBER=1.00 NAIL=1.00 LS BEND=1.10 COMP=1.10 SHEAR=1.10 TENS= 1.10

COMPANION LIVE LOAD FACTOR = 0.50

TRUSS PLATE MANUFACTURER IS NOT RESPONSIBLE FOR QUALITY CONTROL IN THE TRUSS MANUFACTURING PLANT .

NAIL VALUES

PLATE	GRIP(DRY) (PSI) MAX	MIN	SHEAR (PLI) MAX	MIN	SECTION (PLI) MAX	MIN
MT20	618	354	1667	822	2284	1656

PLATE PLACEMENT TOL. = 0.250 inches

PLATE ROTATION TOL. = 5.0 Deg.

JSI GRIP= 0.86 (6) (INPUT = 0.90)
JSI METAL= 0.21 (6) (INPUT = 1.00)

LICENSED PROFESSIONAL ENGINEER
P.M. TREVISAN
100136551
March 13th, 2017
PROVINCE OF ONTARIO

RECEIVED
TOWN OF MILTON
MAR 29, 2017
17-4990
BUILDING DIVISION

READ ALL NOTES ON THIS PAGE AND ON THE ENGINEERING NOTE PAGE ENP-1. THE NOTE PAGE IS AN INTEGRAL PART OF THIS DRAWING AS IT CONTAINS SPECIFICATIONS AND CRITERIA USED IN THE DESIGN OF THIS COMPONENT.

KOTT

JOB NAME	TRUSS NAME	QUANTITY	PLY	JOB DESC.	DRWG NO.
PT0317-054	T60	13	1	TRUSS DESC. LECCO RIDGE-BLOCK 328	

Kott Lumber Uxbridge, Stouffville, ON, CGC

Version 8.100 S Feb 9 2017 MiTek Industries, Inc. Mon Mar 13 09:57:14 2017 Page 1
ID:pF8Cn?9h9uHzAm5tCmlVl5yJJCp-jNXo8Z7ye2YBZ?ZcJikyXwPagK?81Rzb2iRqV2zbOn3

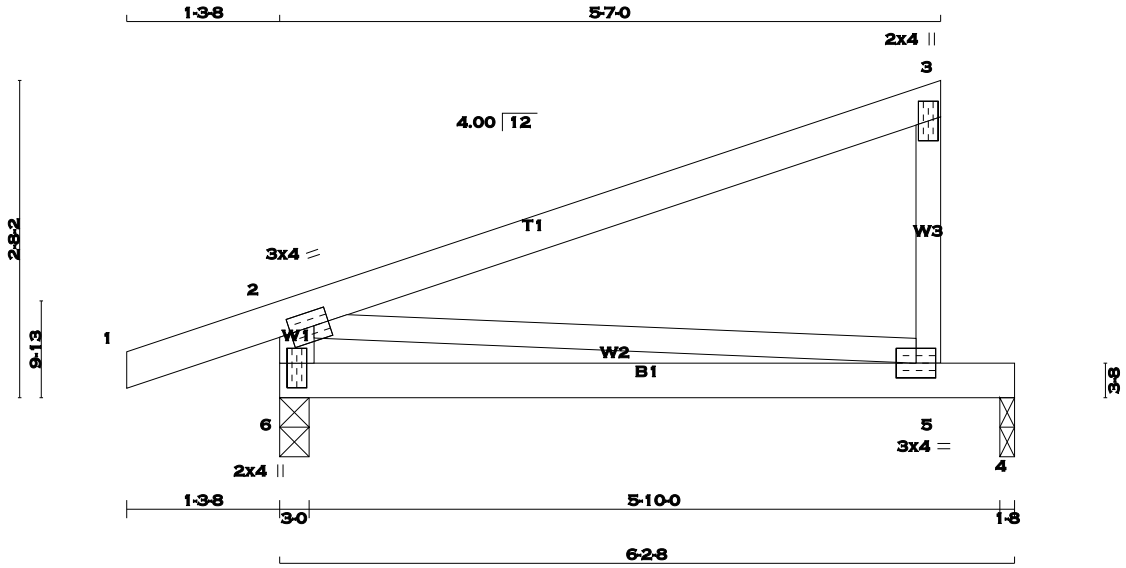

SCALE = 1:19.5

TOTAL WEIGHT = 13 X 22 = 282 lb

LUMBER
N. L. G. A. RULES

CHORDS	SIZE		LUMBER	DESCR.
1 - 3	2x4	DRY	No.2	SPF
5 - 3	2x3	DRY	No.2	SPF
6 - 2	2x4	DRY	No.2	SPF
6 - 4	2x4	DRY	No.2	SPF
ALL WEBS	2x3	DRY	No.2	SPF

DRY: SEASONED LUMBER.

PLATES (table is in inches)

JT	TYPE	PLATES	W	LEN	Y	X
2	TMVW-t	MT20	3.0	4.0	1.50	1.50
3	TMV+p	MT20	2.0	4.0		
5	BMVW-t	MT20	3.0	4.0		
6	BMV1+p	MT20	2.0	4.0	2.50	1.00

A SIZE FOR SIZE SUBSTITUTION OF MITEK MII20 WITH TEE-LOK TL20 PLATES IS ALLOWED.

DIMENSIONS, SUPPORTS AND LOADINGS SPECIFIED BY FABRICATOR TO BE VERIFIED BY BUILDING DESIGNER

BEARINGS

JT	FACTORED GROSS REACTION VERT	HORZ	MAXIMUM FACTORED GROSS REACTION DOWN	HORZ	UPLIFT	INPUT BRG IN-SX	REQRD BRG IN-SX
6	395	0	395	0	0	3-0	3-0
4	249	0	249	0	0	1-8	1-8

UNFACTORED REACTIONS

JT	1ST LCASE COMBINED	MAX./MIN. COMPONENT REACTIONS SNOW	LIVE	PERM.LIVE	WIND	DEAD	SOIL
6	275	205 / 0	0 / 0	0 / 0	0 / 0	70 / 0	0 / 0
4	175	117 / 0	0 / 0	0 / 0	0 / 0	59 / 0	0 / 0

BEARING MATERIAL TO BE SPF NO.2 OR BETTER AT JOINT(S) 6, 4

BRACING
TOP CHORD TO BE SHEATHED OR MAX. PURLIN SPACING = 10.00 FT.
MAX. UNBRACED BOTTOM CHORD LENGTH = 10.00 FT. OR RIGID CEILING DIRECTLY APPLIED.

ALL PITCH BREAKS AND PERIMETER CORNER JOINTS MUST BE LATERALLY RESTRAINED.

LOADING
TOTAL LOAD CASES: (3)

CHORDS

MEMB. FR-TO	MAX. FACTORED FORCE (LBS)	FACTORED VERT. LOAD (PLF) FROM	TO	LC1 MAX CSI (LC)	MAX. UNBRAC LENGTH
1- 2	0 / 16	-77.3	-77.3	0.10 (1)	10.00
2- 3	0 / 0	-77.3	-77.3	0.41 (1)	10.00
5- 3	-216 / 0	0.0	0.0	0.04 (1)	7.81
6- 2	-319 / 0	0.0	0.0	0.03 (1)	7.81
6- 5	0 / 0	-17.5	-17.5	0.22 (1)	10.00
5- 4	0 / 0	-17.5	-17.5	0.21 (1)	10.00

WEBS

MEMB. FR-TO	MAX. FACTORED FORCE (LBS)	MAX CSI (LC)
2- 5	0 / 0	0.00 (1)

DESIGN CRITERIA

SPECIFIED LOADS:

TOP CH.	LL =	23.3	PSF
	DL =	3.0	PSF
BOT CH.	LL =	0.0	PSF
	DL =	7.0	PSF
TOTAL LOAD	=	33.3	PSF

SPACING = 24.0 IN. C/C

THIS TRUSS IS DESIGNED FOR RESIDENTIAL OR SMALL BUILDING REQUIREMENTS OF PART 9, NBCC 2010

THIS DESIGN COMPLIES WITH:
- PART 9 OF OBC 2012 , BCBC 2012 , ABC 2014
- CSA 086-09
- TPIC 2011

(55 % OF 27.2 P.S.F. G.S.L. PLUS 8.4 P.S.F. RAIN LOAD) EQUALS 23.3 P.S.F. SPECIFIED ROOF LIVE LOAD

ALLOWABLE DEFL.(LL)= L/360 (0.21")
CALCULATED VERT. DEFL.(LL) = L/ 999 (0.05")
ALLOWABLE DEFL.(TL)= L/360 (0.21")
CALCULATED VERT. DEFL.(TL) = L/ 572 (0.13")

CSI: TC=0.41 (2-3:1) , BC=0.22 (5-6:1) , WB=0.00 (2-5:1) , SSI=0.19 (4-5:1)

DOL LUMBER=1.00 NAIL=1.00 LS BEND=1.10 COMP=1.10 SHEAR=1.10 TENS= 1.10

COMPANION LIVE LOAD FACTOR = 0.50

TRUSS PLATE MANUFACTURER IS NOT RESPONSIBLE FOR QUALITY CONTROL IN THE TRUSS MANUFACTURING PLANT .

NAIL VALUES

PLATE	GRIP(DRY) (PSI) MAX	MIN	SHEAR (PLI) MAX	MIN	SECTION (PLI) MAX	MIN
MT20	618	354	1667	822	2284	1656

PLATE PLACEMENT TOL. = 0.250 inches

PLATE ROTATION TOL. = 5.0 Deg.

JSI GRIP= 0.29 (2) (INPUT = 0.90)
JSI METAL= 0.06 (6) (INPUT = 1.00)

LICENSED PROFESSIONAL ENGINEER
R.M. TREVISAN
100136551
March 13th, 2017
PROVINCE OF ONTARIO

RECEIVED
TOWN OF MILTON
MAR 29, 2017
17-4990
BUILDING DIVISION

READ ALL NOTES ON THIS PAGE AND ON THE ENGINEERING NOTE PAGE ENP-1. THE NOTE PAGE IS AN INTEGRAL PART OF THIS DRAWING AS IT CONTAINS SPECIFICATIONS AND CRITERIA USED IN THE DESIGN OF THIS COMPONENT.

KOTT

JOB NAME	TRUSS NAME	QUANTITY	PLY	JOB DESC.	DRWG NO.
PT0317-054	T60A	7	1	TRUSS DESC. LECCO RIDGE-BLOCK 328	

Kott Lumber Uxbridge, Stouffville, ON, CGC

Version 8.100 S Feb 9 2017 MiTek Industries, Inc. Mon Mar 13 09:57:14 2017 Page 1
ID:pF8Cn?9h9uHzAm5tCmlVl5yJJCp-jNXo8Z7ye2YBZ?ZcJikyXwPagK1o1Rzb2iRqV2zbOn3

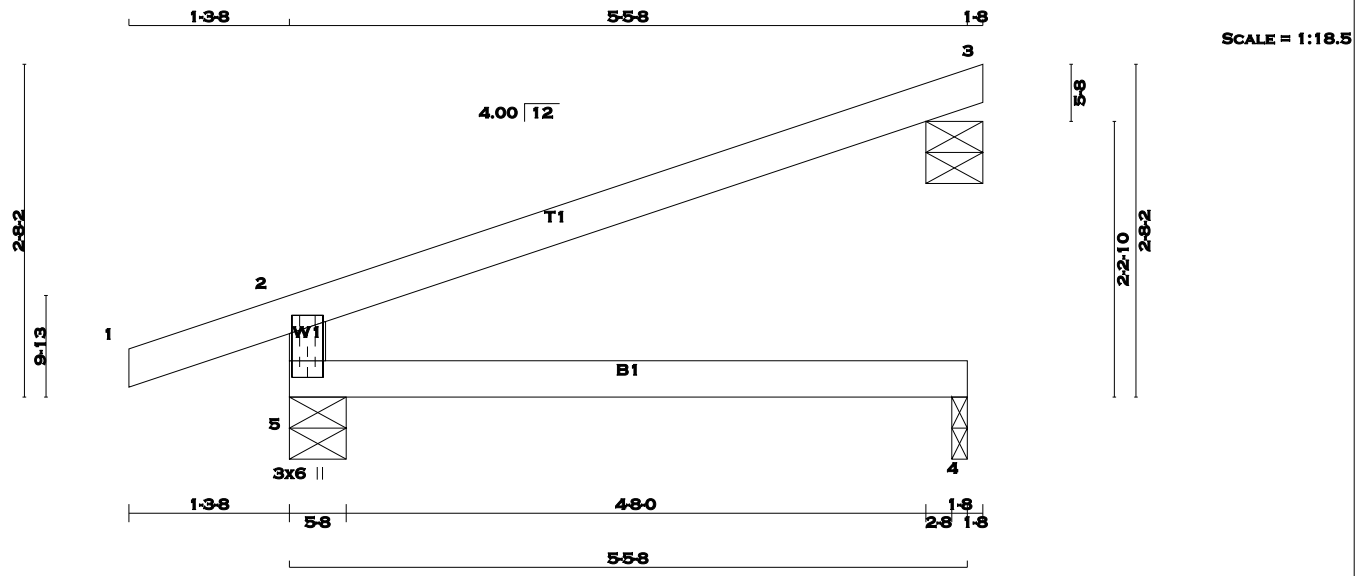

TOTAL WEIGHT = 7 X 15 = 105 lb [M]

LUMBER
N. L. G. A. RULES

CHORDS	SIZE		LUMBER	DESCR.
1 - 3	2x4	DRY	No.2	SPF
5 - 2	2x4	DRY	No.2	SPF
5 - 4	2x4	DRY	No.2	SPF

DRY: SEASONED LUMBER.

PLATES (table is in inches)

JT	TYPE	PLATES	W	LEN	Y	X
2						
5						
5	TMBMV1+p	MT20	3.0	6.0	3.50	1.50

A SIZE FOR SIZE SUBSTITUTION OF MITEK MII20 WITH TEE-LOK TL20 PLATES IS ALLOWED.

DIMENSIONS, SUPPORTS AND LOADINGS SPECIFIED BY FABRICATOR TO BE VERIFIED BY BUILDING DESIGNER

BEARINGS

JT	FACTORED GROSS REACTION VERT	HORZ	MAXIMUM FACTORED GROSS REACTION DOWN	HORZ	UPLIFT	INPUT BRG IN-SX	REQRD BRG IN-SX
5	430	0	430	0	0	5-8	5-8
4	38	0	43	0	0	1-8	1-8
3	162	0	162	0	0	5-8	5-8

BEVELED PLATE OR SHIM REQUIRED TO PROVIDE FULL BEARING SURFACE WITH TRUSS CHORD AT JT(S): 3

UNFACTORED REACTIONS

JT	1ST LCASE COMBINED	MAX./MIN. COMPONENT REACTIONS SNOW	LIVE	PERM.LIVE	WIND	DEAD	SOIL
5	299	225 / 0	0 / 0	0 / 0	0 / 0	75 / 0	0 / 0
4	31	0 / 0	0 / 0	0 / 0	0 / 0	31 / 0	0 / 0
3	110	98 / 0	0 / 0	0 / 0	0 / 0	13 / 0	0 / 0

BEARING MATERIAL TO BE SPF NO.2 OR BETTER AT JOINT(S) 5, 4, 3

BRACING
TOP CHORD TO BE SHEATHED OR MAX. PURLIN SPACING = 6.25 FT.
MAX. UNBRACED BOTTOM CHORD LENGTH = 10.00 FT. OR RIGID CEILING DIRECTLY APPLIED.

ALL PITCH BREAKS AND PERIMETER CORNER JOINTS MUST BE LATERALLY RESTRAINED.

LOADING
TOTAL LOAD CASES: (3)

CHORDS

MEMB. FR-TO	MAX. FACTORED FORCE (LBS)	FACTORED VERT. LOAD (PLF) FROM	TO	LC1 MAX CSI (LC)	MAX. UNBRAC LENGTH
1- 2	0 / 16	-77.3	-77.3	0.10 (1)	10.00
2- 3	-17 / 0	-77.3	-77.3	0.41 (1)	6.25
5- 2	-373 / 0	0.0	0.0	0.12 (3)	7.81
5- 4	0 / 0	-17.5	-17.5	0.12 (3)	10.00

WEBS

MEMB. FR-TO	MAX. FACTORED FORCE (LBS)	MAX CSI (LC)

DESIGN CRITERIA

SPECIFIED LOADS:

TOP CH.	LL	=	23.3	PSF
	DL	=	3.0	PSF
BOT CH.	LL	=	0.0	PSF
	DL	=	7.0	PSF
TOTAL LOAD		=	33.3	PSF

SPACING = 24.0 IN. C/C

THIS TRUSS IS DESIGNED FOR RESIDENTIAL OR SMALL BUILDING REQUIREMENTS OF PART 9, NBCC 2010

THIS DESIGN COMPLIES WITH:
- PART 9 OF OBC 2012 , BCBC 2012 , ABC 2014
- CSA 086-09
- TPIC 2011

DESIGN ASSUMPTIONS
-OVERHANG NOT TO BE ALTERED OR CUT OFF.

(55 % OF 27.2 P.S.F. G.S.L. PLUS 8.4 P.S.F. RAIN LOAD) EQUALS 23.3 P.S.F. SPECIFIED ROOF LIVE LOAD

ALLOWABLE DEFL.(LL)= L/360 (0.19")
CALCULATED VERT. DEFL.(LL) = L/ 999 (0.00")
ALLOWABLE DEFL.(TL)= L/360 (0.19")
CALCULATED VERT. DEFL.(TL) = L/ 999 (0.02")

CSI: TC=0.41 (2-3:1) , BC=0.12 (4-5:3) , WB=0.00 (n/a:0) , SSI=0.20 (2-3:1)

DOL LUMBER=1.00 NAIL=1.00 LS BEND=1.10 COMP=1.10 SHEAR=1.10 TENS= 1.10

COMPANION LIVE LOAD FACTOR = 0.50

TRUSS PLATE MANUFACTURER IS NOT RESPONSIBLE FOR QUALITY CONTROL IN THE TRUSS MANUFACTURING PLANT .

NAIL VALUES

PLATE	GRIP(DRY) (PSI) MAX	MIN	SHEAR (PLI) MAX	MIN	SECTION (PLI) MAX	MIN
MT20	618	354	1667	822	2284	1656

PLATE PLACEMENT TOL. = 0.250 inches

PLATE ROTATION TOL. = 5.0 Deg.

JSI GRIP= 0.32 (5) (INPUT = 0.90)
JSI METAL= 0.05 (5) (INPUT = 1.00)

LICENSED PROFESSIONAL ENGINEER
P.M. TREVISAN
100136551
March 13th, 2017
PROVINCE OF ONTARIO

RECEIVED
TOWN OF MILTON
MAR 29, 2017
17-4990
BUILDING DIVISION

READ ALL NOTES ON THIS PAGE AND ON THE ENGINEERING NOTE PAGE ENP-1. THE NOTE PAGE IS AN INTEGRAL PART OF THIS DRAWING AS IT CONTAINS SPECIFICATIONS AND CRITERIA USED IN THE DESIGN OF THIS COMPONENT.

KOTT

JOB NAME	TRUSS NAME	QUANTITY	PLY	JOB DESC.	DRWG NO.
PT0317-054	T62	4	1	TRUSS DESC. LECCO RIDGE-BLOCK 328	

Kott Lumber Uxbridge, Stouffville, ON, CGC

Version 8.100 S Feb 9 2017 MiTek Industries, Inc. Mon Mar 13 09:57:14 2017 Page 1
ID:pF8Cn?9h9uHzAm5tCmlVl5yJJCp-jNXo8Z7ye2YBZ?ZcJikyXwPfVK2y1RIb2iRqV2zbOn3

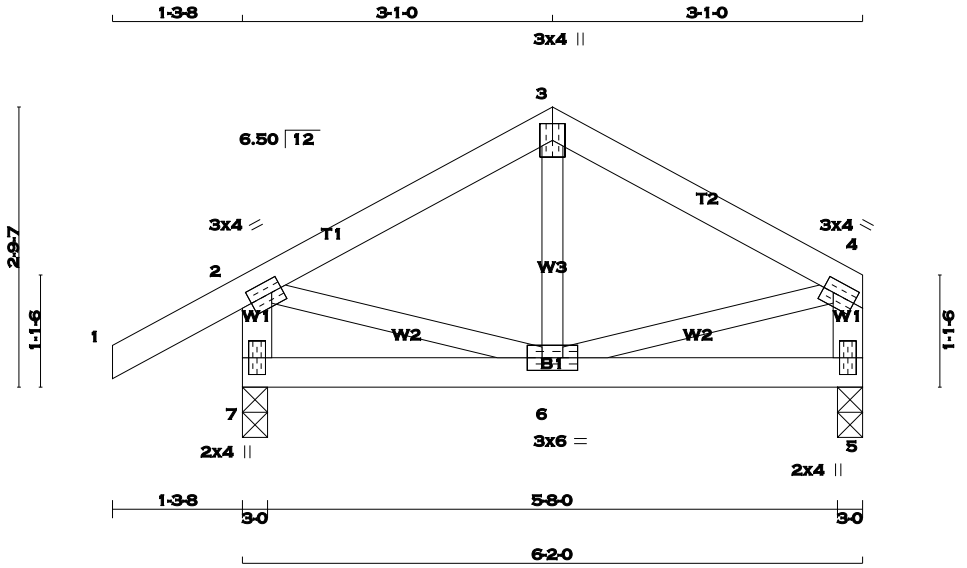

TOTAL WEIGHT = 4 X 25 = 99 lb
[M][F]

LUMBER
N. L. G. A. RULES

CHORDS	SIZE		LUMBER	DESCR.
1 - 3	2x4	DRY	No.2	SPF
3 - 4	2x4	DRY	No.2	SPF
7 - 2	2x4	DRY	No.2	SPF
5 - 4	2x4	DRY	No.2	SPF
7 - 5	2x4	DRY	No.2	SPF
ALL WEBS EXCEPT	2x3	DRY	No.2	SPF

DRY: SEASONED LUMBER.

PLATES (table is in inches)

JT	TYPE	PLATES	W	LEN	Y	X
2	TMVW-t	MT20	3.0	4.0	1.50	1.25
3	TTW+p	MT20	3.0	4.0		
4	TMVW-t	MT20	3.0	4.0	1.50	1.25
5	BMV1+p	MT20	2.0	4.0		
6	BMWWW-t	MT20	3.0	6.0		
7	BMV1+p	MT20	2.0	4.0		

A SIZE FOR SIZE SUBSTITUTION OF MITEK MII20 WITH TEE-LOK TL20 PLATES IS ALLOWED.

DIMENSIONS, SUPPORTS AND LOADINGS SPECIFIED BY FABRICATOR TO BE VERIFIED BY BUILDING DESIGNER

BEARINGS

JT	FACTORED GROSS REACTION VERT	HORZ	MAXIMUM FACTORED GROSS REACTION DOWN	HORZ	UPLIFT	INPUT BRG IN-SX	REQRD BRG IN-SX
7	398	0	398	0	0	3-0	3-0
5	292	0	292	0	0	3-0	3-0

UNFACTORED REACTIONS

JT	1ST LCASE COMBINED	MAX./MIN. COMPONENT REACTIONS SNOW	LIVE	PERM.LIVE	WIND	DEAD	SOIL
7	277	207 / 0	0 / 0	0 / 0	0 / 0	70 / 0	0 / 0
5	205	144 / 0	0 / 0	0 / 0	0 / 0	62 / 0	0 / 0

BEARING MATERIAL TO BE SPF NO.2 OR BETTER AT JOINT(S) 7, 5

BRACING
TOP CHORD TO BE SHEATHED OR MAX. PURLIN SPACING = 6.25 FT.
MAX. UNBRACED BOTTOM CHORD LENGTH = 10.00 FT. OR RIGID CEILING DIRECTLY APPLIED.

ALL PITCH BREAKS AND PERIMETER CORNER JOINTS MUST BE LATERALLY RESTRAINED.

LOADING
TOTAL LOAD CASES: (3)

CHORDS

MEMB. FR-TO	MAX. FACTORED FORCE (LBS)	FACTORED VERT. LOAD (PLF) FROM	TO	LC1 MAX CSI (LC)	MAX. UNBRAC LENGTH
1- 2	0 / 25	-77.3	-77.3	0.10 (1)	10.00
2- 3	-214 / 0	-77.3	-77.3	0.09 (1)	6.25
3- 4	-214 / 0	-77.3	-77.3	0.09 (1)	6.25
7- 2	-376 / 0	0.0	0.0	0.04 (1)	7.81
5- 4	-270 / 0	0.0	0.0	0.03 (1)	7.81
7- 6	0 / 0	-17.5	-17.5	0.04 (3)	10.00
6- 5	0 / 0	-17.5	-17.5	0.04 (3)	10.00

WEBS

MEMB. FR-TO	MAX. FACTORED FORCE (LBS)	MAX CSI (LC)
6- 3	-34 / 42	0.01 (3)
2- 6	0 / 195	0.04 (1)
6- 4	0 / 195	0.04 (1)

DESIGN CRITERIA

SPECIFIED LOADS:

TOP	CH.	LL	=	23.3	PSF
		DL	=	3.0	PSF
BOT	CH.	LL	=	0.0	PSF
		DL	=	7.0	PSF
TOTAL	LOAD		=	33.3	PSF

SPACING = 24.0 IN. C/C

THIS TRUSS IS DESIGNED FOR RESIDENTIAL OR SMALL BUILDING REQUIREMENTS OF PART 9, NBCC 2010

THIS DESIGN COMPLIES WITH:
- PART 9 OF OBC 2012 , BCBC 2012 , ABC 2014
- CSA 086-09
- TPIC 2011

(55 % OF 27.2 P.S.F. G.S.L. PLUS 8.4 P.S.F. RAIN LOAD) EQUALS 23.3 P.S.F. SPECIFIED ROOF LIVE LOAD

ALLOWABLE DEFL.(LL)= L/360 (0.21")
CALCULATED VERT. DEFL.(LL) = L/ 999 (0.00")
ALLOWABLE DEFL.(TL)= L/360 (0.21")
CALCULATED VERT. DEFL.(TL) = L/ 999 (0.00")

CSI: TC=0.10 (1-2:1) , BC=0.04 (6-7:3) , WB=0.04 (2-6:1) , SSI=0.08 (3-4:1)

DOL LUMBER=1.00 NAIL=1.00 LS BEND=1.10 COMP=1.10 SHEAR=1.10 TENS= 1.10

COMPANION LIVE LOAD FACTOR = 0.50

TRUSS PLATE MANUFACTURER IS NOT RESPONSIBLE FOR QUALITY CONTROL IN THE TRUSS MANUFACTURING PLANT .

NAIL VALUES

PLATE	GRIP(DRY) (PSI) MAX	MIN	SHEAR (PLI) MAX	MIN	SECTION (PLI) MAX	MIN
MT20	618	354	1667	822	2284	1656

PLATE PLACEMENT TOL. = 0.250 inches

PLATE ROTATION TOL. = 5.0 Deg.

JSI GRIP= 0.48 (2) (INPUT = 0.90)
JSI METAL= 0.12 (4) (INPUT = 1.00)

LICENSED PROFESSIONAL ENGINEER
P.M. TREVISAN
100136551
March 13th, 2017
PROVINCE OF ONTARIO

RECEIVED
TOWN OF MILTON
MAR 29, 2017
17-4990
BUILDING DIVISION

READ ALL NOTES ON THIS PAGE AND ON THE ENGINEERING NOTE PAGE ENP-1. THE NOTE PAGE IS AN INTEGRAL PART OF THIS DRAWING AS IT CONTAINS SPECIFICATIONS AND CRITERIA USED IN THE DESIGN OF THIS COMPONENT.

KOTT

JOB NAME	TRUSS NAME	QUANTITY	PLY	JOB DESC.	DRWG NO.
PT0317-054	T63	2	1	TRUSS DESC. LECCO RIDGE-BLOCK 328	

Kott Lumber Uxbridge, Stouffville, ON, CGC

Version 8.100 S Feb 9 2017 MiTek Industries, Inc. Mon Mar 13 09:57:14 2017 Page 1
ID:pF8Cn?9h9uHzAm5tCmlVl5yJJCp-jNXo8Z7ye2YBZ?ZcJikyXwPfVK2?1RGb2iRqV2zbOn3

SCALE = 1:21.3

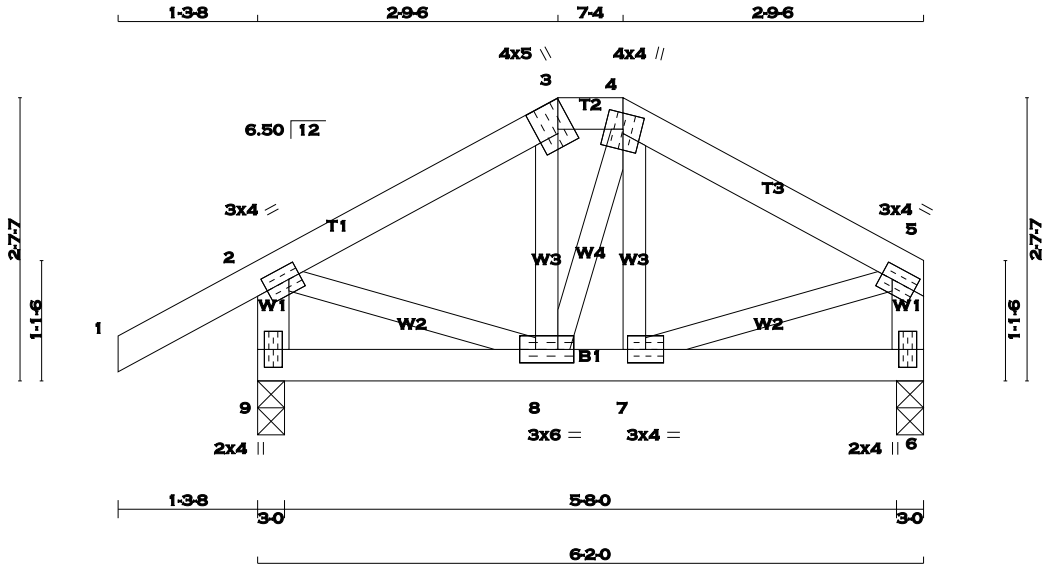

TOTAL WEIGHT = 2 X 27 = 55 lb
[M][F]

LUMBER

N. L. G. A. RULES

CHORDS	SIZE		LUMBER	DESCR.
1 - 3	2x4	DRY	No.2	SPF
3 - 4	2x4	DRY	No.2	SPF
4 - 5	2x4	DRY	No.2	SPF
9 - 2	2x4	DRY	No.2	SPF
6 - 5	2x4	DRY	No.2	SPF
9 - 6	2x4	DRY	No.2	SPF
ALL WEBS EXCEPT	2x3	DRY	No.2	SPF

DRY: SEASONED LUMBER.

PLATES (table is in inches)

JT	TYPE	PLATES	W	LEN	Y	X
2	TMVW-t	MT20	3.0	4.0	1.50	1.25
3	TTW+h	MT20	4.0	5.0	3.00	1.50
4	TTWW+m	MT20	4.0	4.0	1.75	2.00
5	TMVW-t	MT20	3.0	4.0	1.50	1.25
6	BMV1+p	MT20	2.0	4.0		
7	BMWW-t	MT20	3.0	4.0		
8	BMWWW-t	MT20	3.0	6.0		
9	BMV1+p	MT20	2.0	4.0		

A SIZE FOR SIZE SUBSTITUTION OF MITEK MII20 WITH TEE-LOK TL20 PLATES IS ALLOWED.

DIMENSIONS, SUPPORTS AND LOADINGS SPECIFIED BY FABRICATOR TO BE VERIFIED BY BUILDING DESIGNER

BEARINGS

JT	FACTORED GROSS REACTION VERT	HORZ	MAXIMUM FACTORED GROSS REACTION DOWN	HORZ	UPLIFT	INPUT BRG IN-SX	REQRD BRG IN-SX
9	398	0	398	0	0	3-0	3-0
6	292	0	292	0	0	3-0	3-0

UNFACTORED REACTIONS

JT	1ST LCASE COMBINED	MAX./MIN. COMPONENT REACTIONS SNOW	LIVE	PERM.LIVE	WIND	DEAD	SOIL
9	277	207 / 0	0 / 0	0 / 0	0 / 0	70 / 0	0 / 0
6	205	144 / 0	0 / 0	0 / 0	0 / 0	62 / 0	0 / 0

BEARING MATERIAL TO BE SPF NO.2 OR BETTER AT JOINT(S) 9, 6

BRACING

TOP CHORD TO BE SHEATHED OR MAX. PURLIN SPACING = 6.25 FT.
MAX. UNBRACED BOTTOM CHORD LENGTH = 10.00 FT. OR RIGID CEILING DIRECTLY APPLIED.

ALL PITCH BREAKS AND PERIMETER CORNER JOINTS MUST BE LATERALLY RESTRAINED.

LOADING

TOTAL LOAD CASES: (3)

CHORDS

MEMB. FR-TO	MAX. FACTORED FORCE (LBS)	FACTORED VERT. LOAD (PLF) FROM	TO	LC1 MAX CSI (LC)	MAX. UNBRAC LENGTH
1- 2	0 / 25	-77.3	-77.3	0.10 (1)	10.00
2- 3	-220 / 0	-77.3	-77.3	0.08 (1)	6.25
3- 4	-195 / 0	-77.3	-77.3	0.00 (1)	6.25
4- 5	-221 / 0	-77.3	-77.3	0.08 (1)	6.25
9- 2	-376 / 0	0.0	0.0	0.04 (1)	7.81
6- 5	-272 / 0	0.0	0.0	0.03 (1)	7.81
9- 8	0 / 0	-17.5	-17.5	0.03 (3)	10.00
8- 7	0 / 195	-17.5	-17.5	0.04 (1)	10.00
7- 6	0 / 0	-17.5	-17.5	0.03 (3)	10.00

WEBS

MEMB. FR-TO	MAX. FACTORED FORCE (LBS)	MAX CSI (LC)
8- 3	-25 / 20	0.01 (3)
8- 4	-2 / 1	0.00 (3)
7- 4	-23 / 18	0.01 (3)
2- 8	0 / 202	0.05 (1)
7- 5	0 / 203	0.05 (1)

DESIGN CRITERIA

SPECIFIED LOADS:

TOP CH.	LL	=	23.3	PSF
	DL	=	3.0	PSF
BOT CH.	LL	=	0.0	PSF
	DL	=	7.0	PSF
TOTAL LOAD		=	33.3	PSF

SPACING = 24.0 IN. C/C

LOADING IN FLAT SECTION BASED ON A SLOPE OF 6.00/12

THIS TRUSS IS DESIGNED FOR RESIDENTIAL OR SMALL BUILDING REQUIREMENTS OF PART 9, NBCC 2010

THIS DESIGN COMPLIES WITH:
- PART 9 OF OBC 2012 , BCBC 2012 , ABC 2014
- CSA 086-09
- TPIC 2011

(55 % OF 27.2 P.S.F. G.S.L. PLUS 8.4 P.S.F. RAIN LOAD) EQUALS 23.3 P.S.F. SPECIFIED ROOF LIVE LOAD

ALLOWABLE DEFL.(LL)= L/360 (0.21")
CALCULATED VERT. DEFL.(LL) = L/ 999 (0.00")
ALLOWABLE DEFL.(TL)= L/360 (0.21")
CALCULATED VERT. DEFL.(TL) = L/ 999 (0.00")

CSI: TC=0.10 (1-2:1) , BC=0.04 (7-8:1) , WB=0.05 (5-7:1) , SSI=0.07 (4-5:1)

DOL LUMBER=1.00 NAIL=1.00 LS BEND=1.10 COMP=1.10 SHEAR=1.10 TENS= 1.10

COMPANION LIVE LOAD FACTOR = 0.50

TRUSS PLATE MANUFACTURER IS NOT RESPONSIBLE FOR QUALITY CONTROL IN THE TRUSS MANUFACTURING PLANT .

NAIL VALUES

PLATE	GRIP(DRY) (PSI) MAX	MIN	SHEAR (PLI) MAX	MIN	SECTION (PLI) MAX	MIN
MT20	618	354	1667	822	2284	1656

PLATE PLACEMENT TOL. = 0.250 inches

PLATE ROTATION TOL. = 5.0 Deg.

JSI GRIP= 0.51 (5) (INPUT = 0.90)
JSI METAL= 0.12 (2) (INPUT = 1.00)

LICENSED PROFESSIONAL ENGINEER
P.M. TREVISAN
100136551
March 13th, 2017
PROVINCE OF ONTARIO

RECEIVED
TOWN OF MILTON
MAR 29, 2017
17-4990
BUILDING DIVISION

READ ALL NOTES ON THIS PAGE AND ON THE ENGINEERING NOTE PAGE ENP-1. THE NOTE PAGE IS AN INTEGRAL PART OF THIS DRAWING AS IT CONTAINS SPECIFICATIONS AND CRITERIA USED IN THE DESIGN OF THIS COMPONENT.

KOTT

JOB NAME	TRUSS NAME	QUANTITY	PLY	JOB DESC.	DRWG NO.
PT0317-054	T64	7	1	TRUSS DESC. LECCO RIDGE-BLOCK 328	

Kott Lumber Uxbridge, Stouffville, ON, CGC

Version 8.100 S Feb 9 2017 MiTek Industries, Inc. Mon Mar 13 09:57:15 2017 Page 1
ID:pF8Cn?9h9uHzAm5tCmlVl5yJJCp-Ba5ALu8bPMg2B98osPGB48ypokHDmsHkHMAO1UzbOn2

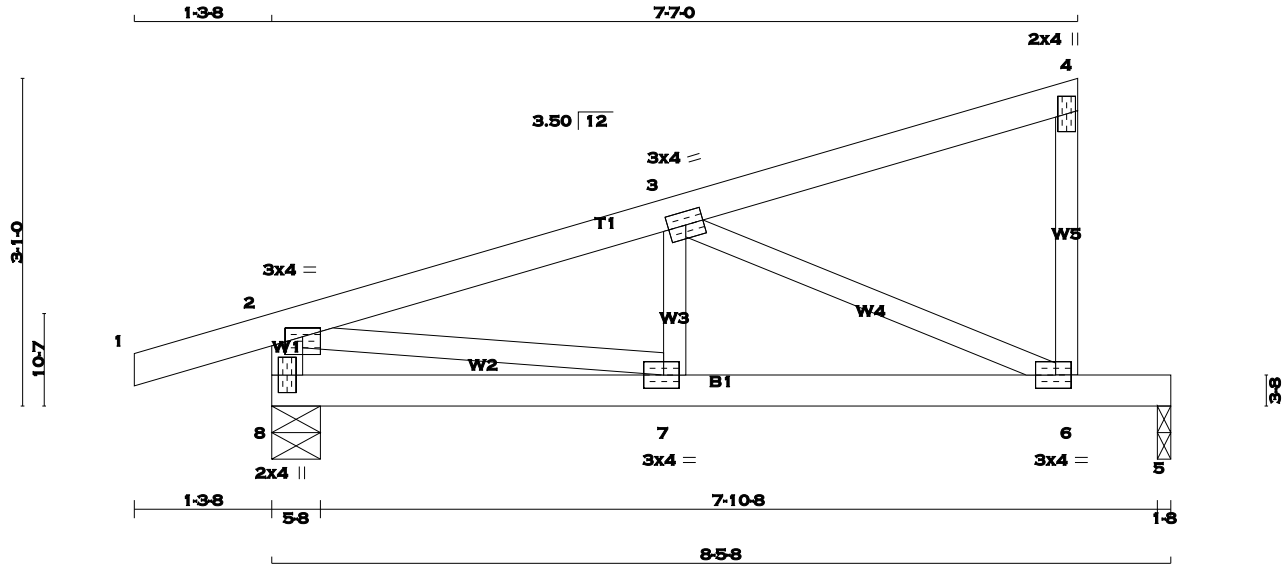

TOTAL WEIGHT = 7 X 30 = 208 lb
[M][F]

LUMBER
N. L. G. A. RULES

CHORDS	SIZE		LUMBER	DESCR.
1 - 4	2x4	DRY	No.2	SPF
6 - 4	2x3	DRY	No.2	SPF
8 - 2	2x4	DRY	No.2	SPF
8 - 5	2x4	DRY	No.2	SPF
ALL WEBS EXCEPT	2x3	DRY	No.2	SPF

DRY: SEASONED LUMBER.

PLATES (table is in inches)

JT	TYPE	PLATES	W	LEN	Y	X
2	TMVW-p	MT20	3.0	4.0	1.00	2.00
3	TMWW-t	MT20	3.0	4.0		
4	TMV+p	MT20	2.0	4.0		
6	BMVW-t	MT20	3.0	4.0	1.50	1.75
7	BMWW-t	MT20	3.0	4.0	1.50	1.75
8	BMV1+p	MT20	2.0	4.0		

A SIZE FOR SIZE SUBSTITUTION OF MITEK MII20 WITH TEE-LOK TL20 PLATES IS ALLOWED.

DIMENSIONS, SUPPORTS AND LOADINGS SPECIFIED BY FABRICATOR TO BE VERIFIED BY BUILDING DESIGNER

BEARINGS

JT	FACTORED GROSS REACTION VERT	HORZ	MAXIMUM FACTORED GROSS REACTION DOWN	HORZ	UPLIFT	INPUT BRG IN-SX	REQRD BRG IN-SX
8	501	0	501	0	0	5-8	5-8
5	337	0	337	0	0	1-8	1-8

UNFACTORED REACTIONS

JT	1ST LCASE COMBINED	MAX./MIN. COMPONENT REACTIONS SNOW	LIVE	PERM.LIVE	WIND	DEAD	SOIL
8	349	257 / 0	0 / 0	0 / 0	0 / 0	92 / 0	0 / 0
5	238	158 / 0	0 / 0	0 / 0	0 / 0	80 / 0	0 / 0

BEARING MATERIAL TO BE SPF NO.2 OR BETTER AT JOINT(S) 8, 5

BRACING
TOP CHORD TO BE SHEATHED OR MAX. PURLIN SPACING = 6.25 FT.
MAX. UNBRACED BOTTOM CHORD LENGTH = 10.00 FT. OR RIGID CEILING DIRECTLY APPLIED.

ALL PITCH BREAKS AND PERIMETER CORNER JOINTS MUST BE LATERALLY RESTRAINED.

LOADING
TOTAL LOAD CASES: (3)

CHORDS

MEMB. FR-TO	MAX. FACTORED FORCE (LBS)	FACTORED VERT. LOAD (PLF) FROM	TO	LC1 MAX CSI (LC)	MAX. UNBRAC LENGTH
1- 2	0 / 14	-77.3	-77.3	0.10 (1)	10.00
2- 3	-629 / 0	-77.3	-77.3	0.13 (1)	6.25
3- 4	-9 / 0	-77.3	-77.3	0.13 (1)	10.00
6- 4	-115 / 0	0.0	0.0	0.03 (1)	7.81
8- 2	-489 / 0	0.0	0.0	0.05 (1)	7.81
8- 7	0 / 0	-17.5	-17.5	0.11 (1)	10.00
7- 6	0 / 612	-17.5	-17.5	0.49 (1)	10.00
6- 5	0 / 0	-17.5	-17.5	0.39 (1)	10.00

WEBS

MEMB. FR-TO	MAX. FACTORED FORCE (LBS)	MAX CSI (LC)
7- 3	0 / 97	0.03 (3)
3- 6	-670 / 0	0.19 (1)
2- 7	0 / 619	0.14 (1)

DESIGN CRITERIA

SPECIFIED LOADS:

TOP CH.	LL	=	23.3	PSF
	DL	=	3.0	PSF
BOT CH.	LL	=	0.0	PSF
	DL	=	7.0	PSF
TOTAL LOAD		=	33.3	PSF

SPACING = 24.0 IN. C/C

THIS TRUSS IS DESIGNED FOR RESIDENTIAL OR SMALL BUILDING REQUIREMENTS OF PART 9, NBCC 2010

THIS DESIGN COMPLIES WITH:
- PART 9 OF OBC 2012 , BCBC 2012 , ABC 2014
- CSA 086-09
- TPIC 2011

(55 % OF 27.2 P.S.F. G.S.L. PLUS 8.4 P.S.F. RAIN LOAD) EQUALS 23.3 P.S.F. SPECIFIED ROOF LIVE LOAD

ALLOWABLE DEFL.(LL)= L/360 (0.28")
CALCULATED VERT. DEFL.(LL) = L/ 999 (0.06")
ALLOWABLE DEFL.(TL)= L/360 (0.28")
CALCULATED VERT. DEFL.(TL) = L/ 873 (0.12")

CSI: TC=0.13 (2-3:1) , BC=0.49 (6-7:1) , WB=0.19 (3-6:1) , SSI=0.26 (5-6:1)

DOL LUMBER=1.00 NAIL=1.00 LS BEND=1.10 COMP=1.10 SHEAR=1.10 TENS= 1.10

COMPANION LIVE LOAD FACTOR = 0.50

TRUSS PLATE MANUFACTURER IS NOT RESPONSIBLE FOR QUALITY CONTROL IN THE TRUSS MANUFACTURING PLANT .

NAIL VALUES

PLATE	GRIP(DRY) (PSI) MAX	MIN	SHEAR (PLI) MAX	MIN	SECTION (PLI) MAX	MIN
MT20	618	354	1667	822	2284	1656

PLATE PLACEMENT TOL. = 0.250 inches

PLATE ROTATION TOL. = 5.0 Deg.

JSI GRIP= 0.83 (7) (INPUT = 0.90)
JSI METAL= 0.23 (7) (INPUT = 1.00)

LICENSED PROFESSIONAL ENGINEER
P.M. TREVISAN
100136551
March 13th, 2017
PROVINCE OF ONTARIO

RECEIVED
TOWN OF MILTON
MAR 29, 2017
17-4990
BUILDING DIVISION

READ ALL NOTES ON THIS PAGE AND ON THE ENGINEERING NOTE PAGE ENP-1. THE NOTE PAGE IS AN INTEGRAL PART OF THIS DRAWING AS IT CONTAINS SPECIFICATIONS AND CRITERIA USED IN THE DESIGN OF THIS COMPONENT.

KOTT

JOB NAME	TRUSS NAME	QUANTITY	PLY	JOB DESC.	DRWG NO.
PT0317-054	T65	14	1	TRUSS DESC. LECCO RIDGE-BLOCK 328	

Kott Lumber Uxbridge, Stouffville, ON, CGC

Version 8.100 S Feb 9 2017 MiTek Industries, Inc. Mon Mar 13 09:57:15 2017 Page 1
ID:pF8Cn?9h9uHzAm5tCmlVl5yJJCp-Ba5ALu8bPMg2B98osPGB48yntkL2muCkHMAO1UzbOn2

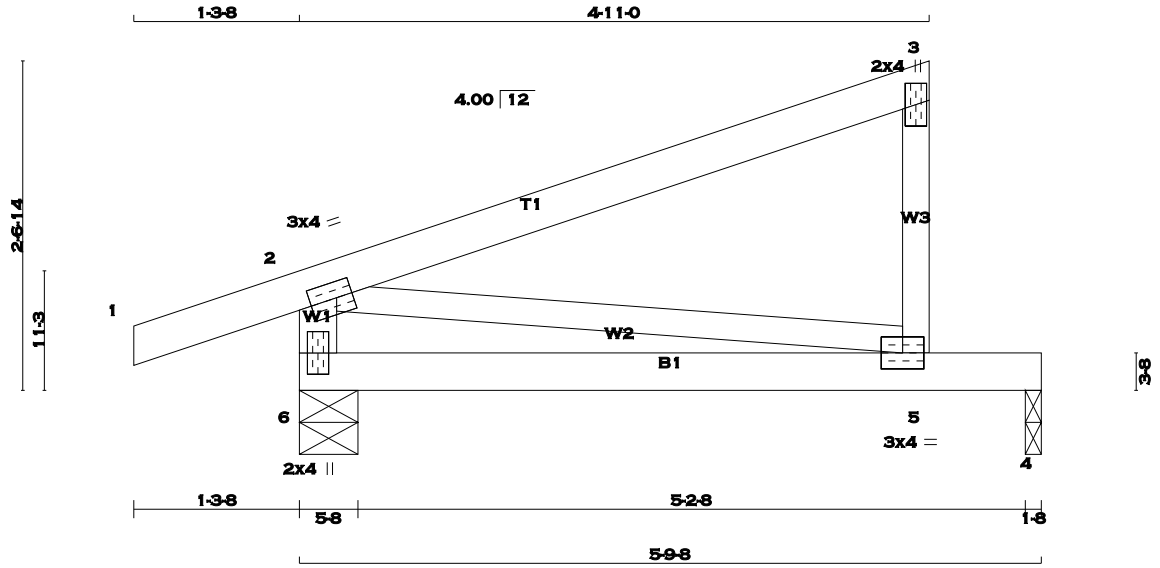

TOTAL WEIGHT = 14 X 20 = 278 lb [M]

LUMBER
N. L. G. A. RULES

CHORDS	SIZE		LUMBER	DESCR.
1 - 3	2x4	DRY	No.2	SPF
5 - 3	2x3	DRY	No.2	SPF
6 - 2	2x4	DRY	No.2	SPF
6 - 4	2x4	DRY	No.2	SPF
ALL WEBS	2x3	DRY	No.2	SPF

DRY: SEASONED LUMBER.

PLATES (table is in inches)

JT	TYPE	PLATES	W	LEN	Y	X
2	TMVW-t	MT20	3.0	4.0	1.50	1.50
3	TMV+p	MT20	2.0	4.0		
5	BMVW-t	MT20	3.0	4.0		
6	BMV1+p	MT20	2.0	4.0		

A SIZE FOR SIZE SUBSTITUTION OF MITEK MII20 WITH TEE-LOK TL20 PLATES IS ALLOWED.

DIMENSIONS, SUPPORTS AND LOADINGS SPECIFIED BY FABRICATOR TO BE VERIFIED BY BUILDING DESIGNER

BEARINGS

JT	FACTORED GROSS REACTION VERT	HORZ	MAXIMUM FACTORED GROSS REACTION DOWN	HORZ	UPLIFT	INPUT BRG IN-SX	REQRD BRG IN-SX
6	373	0	373	0	0	5-8	5-8
4	212	0	212	0	0	1-8	1-8

UNFACTORED REACTIONS

JT	1ST LCASE COMBINED	MAX./MIN. COMPONENT REACTIONS SNOW	LIVE	PERM.LIVE	WIND	DEAD	SOIL
6	260	194 / 0	0 / 0	0 / 0	0 / 0	66 / 0	0 / 0
4	150	97 / 0	0 / 0	0 / 0	0 / 0	53 / 0	0 / 0

BEARING MATERIAL TO BE SPF NO.2 OR BETTER AT JOINT(S) 6, 4

BRACING
TOP CHORD TO BE SHEATHED OR MAX. PURLIN SPACING = 10.00 FT.
MAX. UNBRACED BOTTOM CHORD LENGTH = 10.00 FT. OR RIGID CEILING DIRECTLY APPLIED.

ALL PITCH BREAKS AND PERIMETER CORNER JOINTS MUST BE LATERALLY RESTRAINED.

LOADING
TOTAL LOAD CASES: (3)

CHORDS

MEMB. FR-TO	MAX. FACTORED FORCE (LBS)	FACTORED VERT. LOAD (PLF) FROM	TO	LC1 MAX CSI (LC)	MAX. UNBRAC LENGTH
1- 2	0 / 16	-77.3	-77.3	0.10 (1)	10.00
2- 3	0 / 0	-77.3	-77.3	0.32 (1)	10.00
5- 3	-190 / 0	0.0	0.0	0.03 (1)	7.81
6- 2	-294 / 0	0.0	0.0	0.03 (1)	7.81
6- 5	0 / 0	-17.5	-17.5	0.25 (1)	10.00
5- 4	0 / 0	-17.5	-17.5	0.24 (1)	10.00

WEBS

MEMB. FR-TO	MAX. FACTORED FORCE (LBS)	MAX CSI (LC)
2- 5	0 / 0	0.00 (1)

DESIGN CRITERIA

SPECIFIED LOADS:

TOP CH.	LL =	23.3	PSF
	DL =	3.0	PSF
BOT CH.	LL =	0.0	PSF
	DL =	7.0	PSF
TOTAL LOAD	=	33.3	PSF

SPACING = 24.0 IN. C/C

THIS TRUSS IS DESIGNED FOR RESIDENTIAL OR SMALL BUILDING REQUIREMENTS OF PART 9, NBCC 2010

THIS DESIGN COMPLIES WITH:
- PART 9 OF OBC 2012 , BCBC 2012 , ABC 2014
- CSA 086-09
- TPIC 2011

(55 % OF 27.2 P.S.F. G.S.L. PLUS 8.4 P.S.F. RAIN LOAD) EQUALS 23.3 P.S.F. SPECIFIED ROOF LIVE LOAD

ALLOWABLE DEFL.(LL)= L/360 (0.19")
CALCULATED VERT. DEFL.(LL) = L/ 999 (0.05")
ALLOWABLE DEFL.(TL)= L/360 (0.19")
CALCULATED VERT. DEFL.(TL) = L/ 586 (0.12")

CSI: TC=0.32 (2-3:1) , BC=0.25 (5-6:1) , WB=0.00 (2-5:1) , SSI=0.17 (4-5:1)

DOL LUMBER=1.00 NAIL=1.00 LS BEND=1.10 COMP=1.10 SHEAR=1.10 TENS= 1.10

COMPANION LIVE LOAD FACTOR = 0.50

TRUSS PLATE MANUFACTURER IS NOT RESPONSIBLE FOR QUALITY CONTROL IN THE TRUSS MANUFACTURING PLANT .

NAIL VALUES

PLATE	GRIP(DRY) (PSI) MAX	MIN	SHEAR (PLI) MAX	MIN	SECTION (PLI) MAX	MIN
MT20	618	354	1667	822	2284	1656

PLATE PLACEMENT TOL. = 0.250 inches

PLATE ROTATION TOL. = 5.0 Deg.

JSI GRIP= 0.27 (2) (INPUT = 0.90)
JSI METAL= 0.05 (6) (INPUT = 1.00)

LICENSED PROFESSIONAL ENGINEER
R.M. TREVISAN
100136551
March 13th, 2017
PROVINCE OF ONTARIO

RECEIVED
TOWN OF MILTON
MAR 29, 2017
17-4990
BUILDING DIVISION

READ ALL NOTES ON THIS PAGE AND ON THE ENGINEERING NOTE PAGE ENP-1. THE NOTE PAGE IS AN INTEGRAL PART OF THIS DRAWING AS IT CONTAINS SPECIFICATIONS AND CRITERIA USED IN THE DESIGN OF THIS COMPONENT.

KOTT

JOB NAME	TRUSS NAME	QUANTITY	PLY	JOB DESC.	DRWG NO.
PT0317-054	T66	1	1	TRUSS DESC. LECCO RIDGE-BLOCK 328	

Kott Lumber Uxbridge, Stouffville, ON, CGC

Version 8.100 S Feb 9 2017 MiTek Industries, Inc. Mon Mar 13 09:57:15 2017 Page 1
ID:pF8Cn?9h9uHzAm5tCmlVl5yJJCp-Ba5ALu8bPMg2B98osPGB48ykLkKOmpVkHMAO1UzbOn2

SCALE = 1:74.7

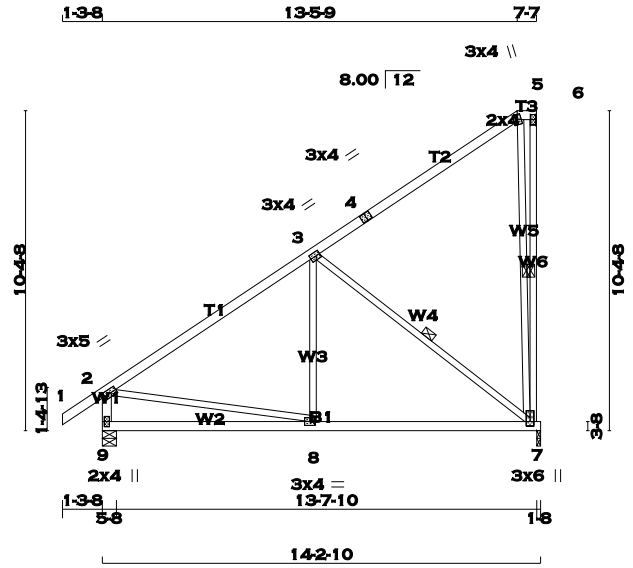

TOTAL WEIGHT = 71 lb

LUMBER
N. L. G. A. RULES

CHORDS	SIZE		LUMBER	DESCR.
1 - 4	2x4	DRY	No.2	SPF
4 - 5	2x4	DRY	No.2	SPF
5 - 6	2x4	DRY	No.2	SPF
7 - 6	2x3	DRY	No.2	SPF
9 - 2	2x4	DRY	No.2	SPF
9 - 7	2x4	DRY	No.2	SPF
ALL WEBS EXCEPT	2x3	DRY	No.2	SPF

DRY: SEASONED LUMBER.

PLATES (table is in inches)

JT	TYPE	PLATES	W	LEN	Y	X
2	TMVW-t	MT20	3.0	5.0	1.50	2.00
3	TMWW-t	MT20	3.0	4.0	1.50	1.50
4	TS-t	MT20	3.0	4.0		
5	TTW+m	MT20	3.0	4.0		
6	TMV+p	MT20	2.0	4.0		
7	BMVWW1+p	MT20	3.0	6.0	1.75	1.50
8	BMWW-t	MT20	3.0	4.0		
9	BMV1+p	MT20	2.0	4.0		

A SIZE FOR SIZE SUBSTITUTION OF MITEK MII20 WITH TEE-LOK TL20 PLATES IS ALLOWED.

DIMENSIONS, SUPPORTS AND LOADINGS SPECIFIED BY FABRICATOR TO BE VERIFIED BY BUILDING DESIGNER

BEARINGS

JT	FACTORED GROSS REACTION VERT	HORZ	MAXIMUM FACTORED GROSS REACTION DOWN	HORZ	UPLIFT	INPUT BRG IN-SX	REQRD BRG IN-SX
7	668	0	668	0	0	1-8	1-8
9	774	0	774	0	0	5-8	5-8

UNFACTORED REACTIONS

JT	1ST LCASE COMBINED	MAX./MIN. COMPONENT REACTIONS SNOW	LIVE	PERM.LIVE	WIND	DEAD	SOIL
7	469	328 / 0	0 / 0	0 / 0	0 / 0	141 / 0	0 / 0
9	541	392 / 0	0 / 0	0 / 0	0 / 0	149 / 0	0 / 0

BEARING MATERIAL TO BE SPF NO.2 OR BETTER AT JOINT(S) 7, 9

BRACING
TOP CHORD TO BE SHEATHED OR MAX. PURLIN SPACING = 6.25 FT.
MAX. UNBRACED BOTTOM CHORD LENGTH = 10.00 FT. OR RIGID CEILING DIRECTLY APPLIED.

ALL PITCH BREAKS AND PERIMETER CORNER JOINTS MUST BE LATERALLY RESTRAINED.

1 - 2x3 SPF No.2 LATERAL BRACE(S) AT 1/ 2 LENGTH OF 6-7, 3-7, 5-7. DBS = 20-0-0 . CBF = 79 LBS.

DBS = DIAGONAL BRACE SPACING (MAX). CBF = CUMULATIVE BRACING FORCE. FASTEN LATERAL BRACE(S) USING (0.122"X3") SPIRAL NAILS : 1 NAIL FOR 2x3 BRACE(S), 2 FOR 1x4, 2x4, 2x5, 3 FOR 2x6, 4 FOR 2x8, 5 FOR 2x10, AND 6 FOR 2x12.

END VERTICAL(S) MUST BE SHEATHED OR HAVE BRACES AS INDICATED IN THE MAX. UNBRACED LENGTH COLUMN OF THE TABLE BELOW

LOADING
TOTAL LOAD CASES: (3)

CHORDS

MEMB. FR-TO	MAX. FACTORED FORCE (LBS)	FACTORED VERT. LOAD (PLF) FROM	TO	LC1 MAX CSI (LC)	MAX. UNBRAC LENGTH
1- 2	0 / 29	-77.3	-77.3	0.10 (1)	10.00
2- 3	-580 / 0	-77.3	-77.3	0.48 (1)	6.25
3- 4	-51 / 0	-77.3	-77.3	0.46 (1)	6.25
4- 5	-51 / 0	-77.3	-77.3	0.46 (1)	6.25
5- 6	0 / 0	-77.3	-77.3	0.01 (1)	10.00
7- 6	-24 / 0	0.0	0.0	0.02 (1)	6.25
9- 2	-729 / 0	0.0	0.0	0.08 (1)	7.81
9- 8	0 / 0	-17.5	-17.5	0.25 (3)	10.00
8- 7	0 / 512	-17.5	-17.5	0.29 (3)	10.00

WEBS

MEMB. FR-TO	MAX. FACTORED FORCE (LBS)	MAX CSI (LC)
8- 3	0 / 148	0.05 (3)
3- 7	-632 / 0	0.37 (1)
5- 7	-207 / 0	0.15 (1)
2- 8	0 / 518	0.12 (1)

DESIGN CRITERIA

SPECIFIED LOADS:

TOP CH.	LL	=	23.3	PSF
	DL	=	3.0	PSF
BOT CH.	LL	=	0.0	PSF
	DL	=	7.0	PSF
TOTAL LOAD		=	33.3	PSF

SPACING = 24.0 IN. C/C

LOADING IN FLAT SECTION BASED ON A SLOPE OF 6.00/12

THIS TRUSS IS DESIGNED FOR RESIDENTIAL OR SMALL BUILDING REQUIREMENTS OF PART 9, NBCC 2010

THIS DESIGN COMPLIES WITH:
- PART 9 OF OBC 2012 , BCBC 2012 , ABC 2014
- CSA 086-09
- TPIC 2011

(55 % OF 27.2 P.S.F. G.S.L. PLUS 8.4 P.S.F. RAIN LOAD) EQUALS 23.3 P.S.F. SPECIFIED ROOF LIVE LOAD

ALLOWABLE DEFL.(LL)= L/360 (0.47")
CALCULATED VERT. DEFL.(LL) = L/ 999 (0.01")
ALLOWABLE DEFL.(TL)= L/360 (0.47")
CALCULATED VERT. DEFL.(TL) = L/ 999 (0.07")

CSI: TC=0.48 (2-3:1) , BC=0.29 (7-8:3) , WB=0.37 (3-7:1) , SSI=0.21 (2-3:1)

DOL LUMBER=1.00 NAIL=1.00 LS BEND=1.10 COMP=1.10 SHEAR=1.10 TENS= 1.10

COMPANION LIVE LOAD FACTOR = 0.50

TRUSS PLATE MANUFACTURER IS NOT RESPONSIBLE FOR QUALITY CONTROL IN THE TRUSS MANUFACTURING PLANT .

NAIL VALUES

PLATE	GRIP(DRY) (PSI) MAX	MIN	SHEAR (PLI) MAX	MIN	SECTION (PLI) MAX	MIN
MT20	618	354	1667	822	2284	1656

PLATE PLACEMENT TOL. = 0.250 inches

PLATE ROTATION TOL. = 5.0 Deg.

JSI GRIP= 0.89 (8) (INPUT = 0.90)
JSI METAL= 0.24 (2) (INPUT = 1.00)

LICENSED PROFESSIONAL ENGINEER
P.M. TREVISAN
100136551
March 13th, 2017
PROVINCE OF ONTARIO

RECEIVED
TOWN OF MILTON
MAR 29, 2017
17-4990
BUILDING DIVISION

READ ALL NOTES ON THIS PAGE AND ON THE ENGINEERING NOTE PAGE ENP-1. THE NOTE PAGE IS AN INTEGRAL PART OF THIS DRAWING AS IT CONTAINS SPECIFICATIONS AND CRITERIA USED IN THE DESIGN OF THIS COMPONENT.

KOTT

JOB NAME	TRUSS NAME	QUANTITY	PLY	JOB DESC.	DRWG NO.
PT0317-054	T67	3	1	TRUSS DESC. LECCO RIDGE-BLOCK 328	

Kott Lumber Uxbridge, Stouffville, ON, CGC

Version 8.100 S Feb 9 2017 MiTek Industries, Inc. Mon Mar 13 09:57:15 2017 Page 1
ID:pF8Cn?9h9uHzAm5tCmlVl5yJJCp-Ba5ALu8bPMg2B98osPGB48yjjkKWmofkHMAO1UzbOn2

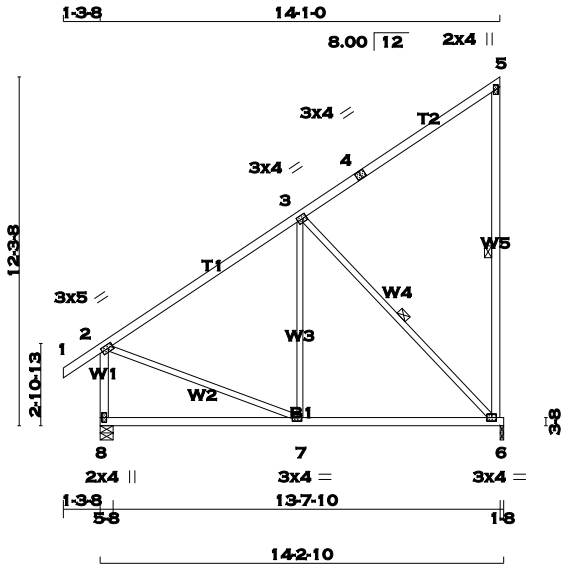

TOTAL WEIGHT = 3 X 73 = 219 lb
[M][F]

LUMBER
N. L. G. A. RULES

CHORDS	SIZE		LUMBER	DESCR.
1 - 4	2x4	DRY	No.2	SPF
4 - 5	2x4	DRY	No.2	SPF
6 - 5	2x4	DRY	No.2	SPF
8 - 2	2x4	DRY	No.2	SPF
8 - 6	2x4	DRY	No.2	SPF
ALL WEBS EXCEPT	2x3	DRY	No.2	SPF

DRY: SEASONED LUMBER.

PLATES (table is in inches)

JT	TYPE	PLATES	W	LEN	Y	X
2	TMVW-t	MT20	3.0	5.0	1.50	2.00
3	TMWW-t	MT20	3.0	4.0	1.50	1.50
4	TS-t	MT20	3.0	4.0		
5	TMV+p	MT20	2.0	4.0		
6	BMVW1-t	MT20	3.0	4.0		
7	BMWW-t	MT20	3.0	4.0		
8	BMV1+p	MT20	2.0	4.0		

A SIZE FOR SIZE SUBSTITUTION OF MITEK MII20 WITH TEE-LOK TL20 PLATES IS ALLOWED.

DIMENSIONS, SUPPORTS AND LOADINGS SPECIFIED BY FABRICATOR TO BE VERIFIED BY BUILDING DESIGNER

BEARINGS

JT	FACTORED GROSS REACTION VERT	HORZ	MAXIMUM FACTORED GROSS REACTION DOWN	HORZ	UPLIFT	INPUT BRG IN-SX	REQRD BRG IN-SX
6	668	0	668	0	0	1-8	1-8
8	774	0	774	0	0	5-8	5-8

UNFACTORED REACTIONS

JT	1ST LCASE COMBINED	MAX./MIN. COMPONENT REACTIONS SNOW	LIVE	PERM.LIVE	WIND	DEAD	SOIL
6	469	328 / 0	0 / 0	0 / 0	0 / 0	141 / 0	0 / 0
8	541	392 / 0	0 / 0	0 / 0	0 / 0	149 / 0	0 / 0

BEARING MATERIAL TO BE SPF NO.2 OR BETTER AT JOINT(S) 6, 8

BRACING
TOP CHORD TO BE SHEATHED OR MAX. PURLIN SPACING = 6.25 FT.
MAX. UNBRACED BOTTOM CHORD LENGTH = 10.00 FT. OR RIGID CEILING DIRECTLY APPLIED.

ALL PITCH BREAKS AND PERIMETER CORNER JOINTS MUST BE LATERALLY RESTRAINED.

1 - 2x3 SPF No.2 LATERAL BRACE(S) AT 1/ 2 LENGTH OF 5-6, 3-6. DBS = 20-0-0 . CBF = 72 LBS.

DBS = DIAGONAL BRACE SPACING (MAX). CBF = CUMULATIVE BRACING FORCE. FASTEN LATERAL BRACE(S) USING (0.122"X3") SPIRAL NAILS : 1 NAIL FOR 2x3 BRACE(S), 2 FOR 1x4, 2x4, 2x5, 3 FOR 2x6, 4 FOR 2x8, 5 FOR 2x10, AND 6 FOR 2x12.

END VERTICAL(S) MUST BE SHEATHED OR HAVE BRACES AS INDICATED IN THE MAX. UNBRACED LENGTH COLUMN OF THE TABLE BELOW

LOADING
TOTAL LOAD CASES: (3)

CHORDS

MEMB. FR-TO	MAX. FACTORED FORCE (LBS)	FACTORED VERT. LOAD (PLF) FROM	TO	LC1 MAX CSI (LC)	MAX. UNBRAC LENGTH
1- 2	0 / 29	-77.3	-77.3	0.10 (1)	10.00
2- 3	-447 / 0	-77.3	-77.3	0.52 (1)	6.25
3- 4	-38 / 0	-77.3	-77.3	0.51 (1)	6.25
4- 5	-38 / 0	-77.3	-77.3	0.51 (1)	6.25
6- 5	-205 / 0	0.0	0.0	0.17 (1)	6.25
8- 2	-727 / 0	0.0	0.0	0.11 (1)	7.81
8- 7	0 / 0	-17.5	-17.5	0.25 (3)	10.00
7- 6	0 / 403	-17.5	-17.5	0.28 (3)	10.00

WEBS

MEMB. FR-TO	MAX. FACTORED FORCE (LBS)	MAX CSI (LC)
7- 3	0 / 128	0.04 (3)
3- 6	-579 / 0	0.42 (1)
2- 7	0 / 429	0.10 (1)

DESIGN CRITERIA

SPECIFIED LOADS:

TOP CH.	LL	=	23.3	PSF
	DL	=	3.0	PSF
BOT CH.	LL	=	0.0	PSF
	DL	=	7.0	PSF
TOTAL LOAD		=	33.3	PSF

SPACING = 24.0 IN. C/C

THIS TRUSS IS DESIGNED FOR RESIDENTIAL OR SMALL BUILDING REQUIREMENTS OF PART 9, NBCC 2010

THIS DESIGN COMPLIES WITH:
- PART 9 OF OBC 2012 , BCBC 2012 , ABC 2014
- CSA 086-09
- TPIC 2011

(55 % OF 27.2 P.S.F. G.S.L. PLUS 8.4 P.S.F. RAIN LOAD) EQUALS 23.3 P.S.F. SPECIFIED ROOF LIVE LOAD

ALLOWABLE DEFL.(LL)= L/360 (0.47")
CALCULATED VERT. DEFL.(LL) = L/ 999 (0.01")
ALLOWABLE DEFL.(TL)= L/360 (0.47")
CALCULATED VERT. DEFL.(TL) = L/ 999 (0.05")

CSI: TC=0.52 (2-3:1) , BC=0.28 (6-7:3) , WB=0.42 (3-6:1) , SSI=0.22 (2-3:1)

DOL LUMBER=1.00 NAIL=1.00 LS BEND=1.10 COMP=1.10 SHEAR=1.10 TENS= 1.10

COMPANION LIVE LOAD FACTOR = 0.50

TRUSS PLATE MANUFACTURER IS NOT RESPONSIBLE FOR QUALITY CONTROL IN THE TRUSS MANUFACTURING PLANT .

NAIL VALUES

PLATE	GRIP(DRY) (PSI) MAX	MIN	SHEAR (PLI) MAX	MIN	SECTION (PLI) MAX	MIN
MT20	618	354	1667	822	2284	1656

PLATE PLACEMENT TOL. = 0.250 inches

PLATE ROTATION TOL. = 0.5 Deg.

JSI GRIP= 0.75 (4) (INPUT = 0.90)
JSI METAL= 0.20 (2) (INPUT = 1.00)

LICENSED PROFESSIONAL ENGINEER
R.M. TREVISAN
100136551
March 13th, 2017
PROVINCE OF ONTARIO

RECEIVED
TOWN OF MILTON
MAR 29, 2017
17-4990
BUILDING DIVISION

READ ALL NOTES ON THIS PAGE AND ON THE ENGINEERING NOTE PAGE ENP-1. THE NOTE PAGE IS AN INTEGRAL PART OF THIS DRAWING AS IT CONTAINS SPECIFICATIONS AND CRITERIA USED IN THE DESIGN OF THIS COMPONENT.

KOTT

JOB NAME	TRUSS NAME	QUANTITY	PLY	JOB DESC.	DRWG NO.
PT0317-054	T68	1	1	TRUSS DESC. LECCO RIDGE-BLOCK 328	

Kott Lumber Uxbridge, Stouffville, ON, CGC

Version 8.100 S Feb 9 2017 MiTek Industries, Inc. Mon Mar 13 09:57:16 2017 Page 1
ID:pF8Cn?9h9uHzAm5tCmlVl5yJJCp-fmfYZE9DAgouplj?Q6nQcLV_Y8i4VJMuW0wxZxzbOn1

SCALE = 1:50.0

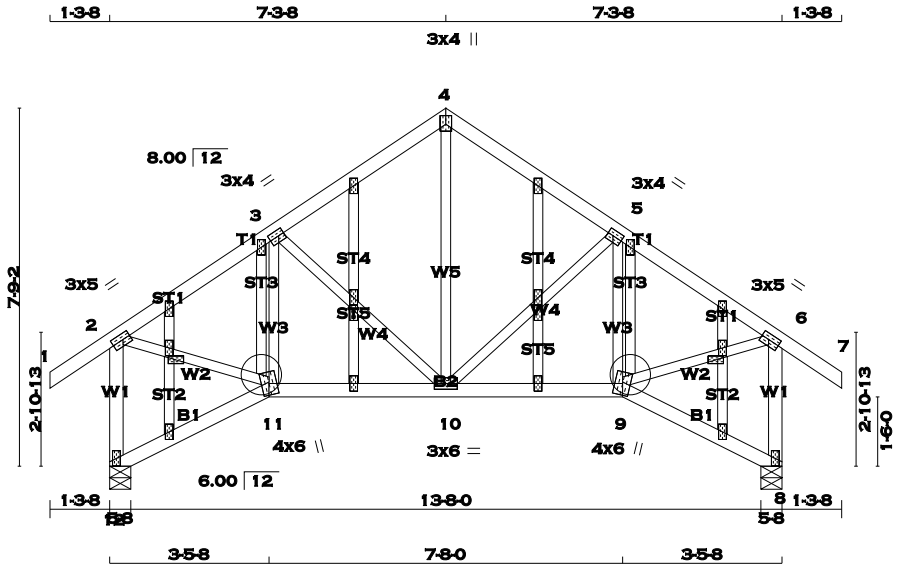

TOTAL WEIGHT = 86 lb

LUMBER
N. L. G. A. RULES

CHORDS	SIZE		LUMBER	DESCR.
1 - 4	2x4	DRY	No.2	SPF
4 - 7	2x4	DRY	No.2	SPF
12 - 2	2x4	DRY	No.2	SPF
8 - 6	2x4	DRY	No.2	SPF
12 - 11	2x4	DRY	No.2	SPF
11 - 9	2x4	DRY	No.2	SPF
9 - 8	2x4	DRY	No.2	SPF
ALL WEBS EXCEPT	2x3	DRY	No.2	SPF
ALL GABLE WEBS	2x3	DRY	No.2	SPF

DRY: SEASONED LUMBER.

GABLE STUDS SPACED AT 2-0-0 OC.

PLATES (table is in inches)

JT	TYPE	PLATES	W	LEN	Y	X
2	TMVW-t	MT20	3.0	5.0	1.50	2.00
3	TMWW-t	MT20	3.0	4.0	1.50	1.50
4	TTW+p	MT20	3.0	4.0	2.25	1.50
5	TMWW-t	MT20	3.0	4.0	1.50	1.50
6	TMVW-t	MT20	3.0	5.0	1.50	2.00
8	BMV1+p	MT20	2.0	4.0		
9	BBWW+m	MT20	4.0	6.0		
9						
10	BMWWW-t	MT20	3.0	6.0		
11	BBWW+m	MT20	4.0	6.0		
11						
12	BMV1+p	MT20	2.0	4.0		
13	NP+w	MT20	2.0	4.0	1.50	1.00
13, 14, 15, 16, 17, 18, 19, 20, 21, 22, 23, 24, 25, 26						
13	NP+w	MT20	2.0	4.0		
17	NP-p	MT20	2.0	4.0	0.75	1.50
22	NP+w	MT20	2.0	4.0	1.50	1.00
26	NP-p	MT20	2.0	4.0	0.75	1.50

A SIZE FOR SIZE SUBSTITUTION OF MITEK MII20 WITH TEE-LOK TL20 PLATES IS ALLOWED.

PLATES MISSING OR UNABLE TO PLATE AT JT 11,9

DIMENSIONS, SUPPORTS AND LOADINGS SPECIFIED BY FABRICATOR TO BE VERIFIED BY BUILDING DESIGNER

BEARINGS

JT	FACTORED GROSS REACTION VERT	HORZ		MAXIMUM FACTORED GROSS REACTION DOWN	HORZ	UPLIFT	INPUT BRG IN-SX	REQRD BRG IN-SX
12	798	0		798	0	0	5-8	5-8
8	798	0		798	0	0	5-8	5-8

UNFACTORED REACTIONS

JT	1ST LCASE COMBINED	MAX./MIN. COMPONENT REACTIONS SNOW	LIVE	PERM.LIVE	WIND	DEAD	SOIL
12	558	403 / 0	0 / 0	0 / 0	0 / 0	154 / 0	0 / 0
8	558	403 / 0	0 / 0	0 / 0	0 / 0	154 / 0	0 / 0

BEARING MATERIAL TO BE SPF NO.2 OR BETTER AT JOINT(S) 12, 8

BRACING
TOP CHORD TO BE SHEATHED OR MAX. PURLIN SPACING = 6.25 FT.
MAX. UNBRACED BOTTOM CHORD LENGTH = 10.00 FT. OR RIGID CEILING DIRECTLY APPLIED.

ALL PITCH BREAKS AND PERIMETER CORNER JOINTS MUST BE LATERALLY RESTRAINED.

LOADING
TOTAL LOAD CASES: (3)

CHORDS

MEMB. FR-TO	MAX. FACTORED FORCE (LBS)	FACTORED VERT. LOAD (PLF) FROM	TO	LC1 MAX CSI (LC)	MAX. UNBRAC LENGTH
1- 2	0 / 29	-77.3	-77.3	0.10 (1)	10.00
2- 3	-667 / 0	-77.3	-77.3	0.13 (1)	6.25
3- 4	-534 / 0	-77.3	-77.3	0.13 (1)	6.25
4- 5	-534 / 0	-77.3	-77.3	0.13 (1)	6.25
5- 6	-667 / 0	-77.3	-77.3	0.13 (1)	6.25
6- 7	0 / 29	-77.3	-77.3	0.10 (1)	10.00
12- 2	-768 / 0	0.0	0.0	0.13 (1)	7.81
8- 6	-767 / 0	0.0	0.0	0.13 (1)	7.81
12-11	0 / 0	-17.5	-17.5	0.06 (3)	10.00
11-10	0 / 574	-17.5	-17.5	0.13 (1)	10.00
10- 9	0 / 574	-17.5	-17.5	0.13 (1)	10.00
9- 8	0 / 0	-17.5	-17.5	0.06 (3)	10.00

WEBS

MEMB. FR-TO	MAX. FACTORED FORCE (LBS)	MAX CSI (LC)
10- 4	0 / 348	0.08 (1)
10- 5	-198 / 0	0.08 (1)
9- 5	-119 / 12	0.03 (1)
3-10	-198 / 0	0.08 (1)
11- 3	-119 / 12	0.03 (1)
2-11	0 / 597	0.13 (1)
9- 6	0 / 597	0.13 (1)

[M][F]

DESIGN CRITERIA

SPECIFIED LOADS:

TOP CH.	LL	=	23.3	PSF
	DL	=	3.0	PSF
BOT CH.	LL	=	0.0	PSF
	DL	=	7.0	PSF
TOTAL LOAD		=	33.3	PSF

SPACING = 24.0 IN. C/C

THIS TRUSS IS DESIGNED FOR RESIDENTIAL OR SMALL BUILDING REQUIREMENTS OF PART 9, NBCC 2010

THIS DESIGN COMPLIES WITH:
- PART 9 OF OBC 2012 , BCBC 2012 , ABC 2014
- CSA 086-09
- TPIC 2011

(55 % OF 27.2 P.S.F. G.S.L. PLUS 8.4 P.S.F. RAIN LOAD) EQUALS 23.3 P.S.F. SPECIFIED ROOF LIVE LOAD

ALLOWABLE DEFL.(LL)= L/360 (0.49")
CALCULATED VERT. DEFL.(LL) = L/ 999 (0.01")
ALLOWABLE DEFL.(TL)= L/360 (0.49")
CALCULATED VERT. DEFL.(TL) = L/ 999 (0.03")

CSI: TC=0.13 (5-6:1) , BC=0.13 (9-10:1) , WB=0.13 (6-9:1) , SSI=0.11 (4-5:1)

DOL LUMBER=1.00 NAIL=1.00 LS BEND=1.10 COMP=1.10 SHEAR=1.10 TENS= 1.10

COMPANION LIVE LOAD FACTOR = 0.50

AUTOSOLVE HEELS OFF

TRUSS PLATE MANUFACTURER IS NOT RESPONSIBLE FOR QUALITY CONTROL IN THE TRUSS MANUFACTURING PLANT .

NAIL VALUES

PLATE	GRIP(DRY) (PSI) MAX	MIN	SHEAR (PLI) MAX	MIN	SECTION (PLI) MAX	MIN
MT20	618	354	1667	822	2284	1656

PLATE PLACEMENT TOL. = 0.250 inches

PLATE ROTATION TOL. = 5.0 Deg.

JSI GRIP= 0.81 (6) (INPUT = 0.90)
JSI METAL= 0.24 (6) (INPUT = 1.00)

LICENSED PROFESSIONAL ENGINEER
P.M. TREVISAN
100136551
March 13th, 2017
PROVINCE OF ONTARIO

RECEIVED
TOWN OF MILTON
MAR 29, 2017
17-4990
BUILDING DIVISION

READ ALL NOTES ON THIS PAGE AND ON THE ENGINEERING NOTE PAGE ENP-1. THE NOTE PAGE IS AN INTEGRAL PART OF THIS DRAWING AS IT CONTAINS SPECIFICATIONS AND CRITERIA USED IN THE DESIGN OF THIS COMPONENT.

KOTT

JOB NAME	TRUSS NAME	QUANTITY	PLY	JOB DESC.	DRWG NO.
PT0317-054	T69	1	1	TRUSS DESC. LECCO RIDGE-BLOCK 328	

Kott Lumber Uxbridge, Stouffville, ON, CGC

Version 8.100 S Feb 9 2017 MiTek Industries, Inc. Mon Mar 13 09:57:16 2017 Page 1
ID:pF8Cn?9h9uHzAm5tCmlVl5yJJCp-fmfYZE9DAgouplj?Q6nQcLV_Y8i4VJMuW0wxZxzbOn1

SCALE = 1:56.7

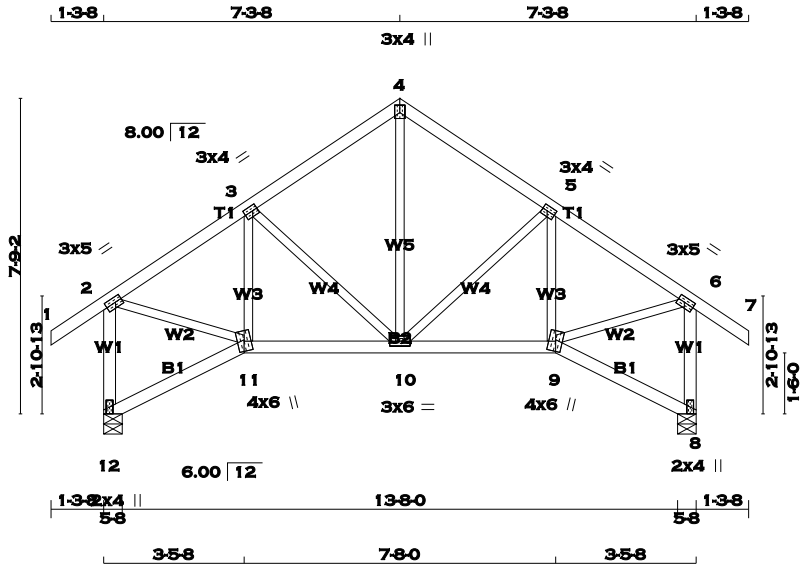

TOTAL WEIGHT = 71 lb

LUMBER

N. L. G. A. RULES

CHORDS	SIZE		LUMBER	DESCR.
1 - 4	2x4	DRY	No.2	SPF
4 - 7	2x4	DRY	No.2	SPF
12 - 2	2x4	DRY	No.2	SPF
8 - 6	2x4	DRY	No.2	SPF
12 - 11	2x4	DRY	No.2	SPF
11 - 9	2x4	DRY	No.2	SPF
9 - 8	2x4	DRY	No.2	SPF
ALL WEBS EXCEPT	2x3	DRY	No.2	SPF

DRY: SEASONED LUMBER.

PLATES (table is in inches)

JT	TYPE	PLATES	W	LEN	Y	X
2	TMVW-t	MT20	3.0	5.0	1.50	2.00
3	TMWW-t	MT20	3.0	4.0	1.50	1.50
4	TTW+p	MT20	3.0	4.0	2.25	1.50
5	TMWW-t	MT20	3.0	4.0	1.50	1.50
6	TMVW-t	MT20	3.0	5.0	1.50	2.00
8	BMV1+p	MT20	2.0	4.0		
9	BBWW+m	MT20	4.0	6.0		
10	BMWWW-t	MT20	3.0	6.0		
11	BBWW+m	MT20	4.0	6.0		
12	BMV1+p	MT20	2.0	4.0		

A SIZE FOR SIZE SUBSTITUTION OF MITEK MII20 WITH TEE-LOK TL20 PLATES IS ALLOWED.

DIMENSIONS, SUPPORTS AND LOADINGS SPECIFIED BY FABRICATOR TO BE VERIFIED BY BUILDING DESIGNER

BEARINGS

JT	FACTORED GROSS REACTION VERT	HORZ	MAXIMUM FACTORED GROSS REACTION DOWN	HORZ	UPLIFT	INPUT BRG IN-SX	REQRD BRG IN-SX
12	798	0	798	0	0	5-8	5-8
8	798	0	798	0	0	5-8	5-8

UNFACTORED REACTIONS

JT	1ST LCASE COMBINED	MAX./MIN. COMPONENT REACTIONS SNOW	LIVE	PERM.LIVE	WIND	DEAD	SOIL
12	558	403 / 0	0 / 0	0 / 0	0 / 0	154 / 0	0 / 0
8	558	403 / 0	0 / 0	0 / 0	0 / 0	154 / 0	0 / 0

BEARING MATERIAL TO BE SPF NO.2 OR BETTER AT JOINT(S) 12, 8

BRACING

TOP CHORD TO BE SHEATHED OR MAX. PURLIN SPACING = 6.25 FT.
MAX. UNBRACED BOTTOM CHORD LENGTH = 10.00 FT. OR RIGID CEILING DIRECTLY APPLIED.

ALL PITCH BREAKS AND PERIMETER CORNER JOINTS MUST BE LATERALLY RESTRAINED.

LOADING

TOTAL LOAD CASES: (3)

CHORDS

MEMB. FR-TO	MAX. FACTORED FORCE (LBS)	FACTORED VERT. LOAD (PLF) FROM	TO	LC1 MAX CSI (LC)	MAX. UNBRAC LENGTH
1- 2	0 / 29	-77.3	-77.3	0.10 (1)	10.00
2- 3	-667 / 0	-77.3	-77.3	0.13 (1)	6.25
3- 4	-534 / 0	-77.3	-77.3	0.13 (1)	6.25
4- 5	-534 / 0	-77.3	-77.3	0.13 (1)	6.25
5- 6	-667 / 0	-77.3	-77.3	0.13 (1)	6.25
6- 7	0 / 29	-77.3	-77.3	0.10 (1)	10.00
12- 2	-768 / 0	0.0	0.0	0.13 (1)	7.81
8- 6	-767 / 0	0.0	0.0	0.13 (1)	7.81
12-11	0 / 0	-17.5	-17.5	0.06 (3)	10.00
11-10	0 / 574	-17.5	-17.5	0.13 (1)	10.00
10- 9	0 / 574	-17.5	-17.5	0.13 (1)	10.00
9- 8	0 / 0	-17.5	-17.5	0.06 (3)	10.00

WEBS

MEMB. FR-TO	MAX. FACTORED FORCE (LBS)	MAX CSI (LC)
10- 4	0 / 348	0.08 (1)
10- 5	-198 / 0	0.08 (1)
9- 5	-119 / 12	0.03 (1)
3-10	-198 / 0	0.08 (1)
11- 3	-119 / 12	0.03 (1)
2-11	0 / 597	0.13 (1)
9- 6	0 / 597	0.13 (1)

DESIGN CRITERIA

SPECIFIED LOADS:

TOP CH.	LL	=	23.3	PSF
	DL	=	3.0	PSF
BOT CH.	LL	=	0.0	PSF
	DL	=	7.0	PSF
TOTAL LOAD		=	33.3	PSF

SPACING = 24.0 IN. C/C

THIS TRUSS IS DESIGNED FOR RESIDENTIAL OR SMALL BUILDING REQUIREMENTS OF PART 9, NBCC 2010

THIS DESIGN COMPLIES WITH:
- PART 9 OF OBC 2012 , BCBC 2012 , ABC 2014
- CSA 086-09
- TPIC 2011

(55 % OF 27.2 P.S.F. G.S.L. PLUS 8.4 P.S.F. RAIN LOAD) EQUALS 23.3 P.S.F. SPECIFIED ROOF LIVE LOAD

ALLOWABLE DEFL.(LL)= L/360 (0.49")
CALCULATED VERT. DEFL.(LL) = L/ 999 (0.01")
ALLOWABLE DEFL.(TL)= L/360 (0.49")
CALCULATED VERT. DEFL.(TL) = L/ 999 (0.03")

CSI: TC=0.13 (5-6:1) , BC=0.13 (9-10:1) , WB=0.13 (6-9:1) , SSI=0.11 (4-5:1)

DOL LUMBER=1.00 NAIL=1.00 LS BEND=1.10 COMP=1.10 SHEAR=1.10 TENS= 1.10

COMPANION LIVE LOAD FACTOR = 0.50

AUTOSOLVE HEELS OFF

TRUSS PLATE MANUFACTURER IS NOT RESPONSIBLE FOR QUALITY CONTROL IN THE TRUSS MANUFACTURING PLANT .

NAIL VALUES

PLATE	GRIP(DRY) (PSI) MAX	MIN	SHEAR (PLI) MAX	MIN	SECTION (PLI) MAX	MIN
MT20	618	354	1667	822	2284	1656

PLATE PLACEMENT TOL. = 0.250 inches

PLATE ROTATION TOL. = 5.0 Deg.

JSI GRIP= 0.81 (6) (INPUT = 0.90)
JSI METAL= 0.24 (6) (INPUT = 1.00)

LICENSED PROFESSIONAL ENGINEER
R.M. TREVISAN
100136551
March 13th, 2017
PROVINCE OF ONTARIO

RECEIVED
TOWN OF MILTON
MAR 29, 2017
17-4990
BUILDING DIVISION

READ ALL NOTES ON THIS PAGE AND ON THE ENGINEERING NOTE PAGE ENP-1. THE NOTE PAGE IS AN INTEGRAL PART OF THIS DRAWING AS IT CONTAINS SPECIFICATIONS AND CRITERIA USED IN THE DESIGN OF THIS COMPONENT.

KOTT

JOB NAME	TRUSS NAME	QUANTITY	PLY	JOB DESC.	DRWG NO.
PT0317-054	T70	1	1	TRUSS DESC. LECCO RIDGE-BLOCK 328	

Kott Lumber Uxbridge, Stouffville, ON, CGC

Version 8.100 S Feb 9 2017 MiTek Industries, Inc. Mon Mar 13 09:57:16 2017 Page 1
ID:pF8Cn?9h9uHzAm5tCmlVl5yJJCp-fmfYZE9DAgouplj?Q6nQcLVxH8iTVJXuW0wxZxzbOn1

SCALE = 1:70.6

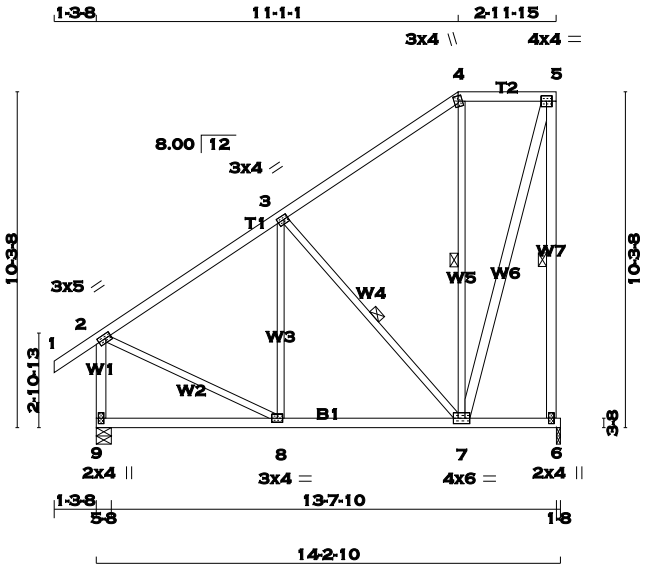

TOTAL WEIGHT = 86 lb

[M][F]

LUMBER

N. L. G. A. RULES

CHORDS	SIZE		LUMBER	DESCR.
1 - 4	2x4	DRY	No.2	SPF
4 - 5	2x4	DRY	No.2	SPF
6 - 5	2x4	DRY	No.2	SPF
9 - 2	2x4	DRY	No.2	SPF
9 - 6	2x4	DRY	No.2	SPF
ALL WEBS	2x3	DRY	No.2	SPF
EXCEPT				
7 - 5	2x4	DRY	No.2	SPF

DRY: SEASONED LUMBER.

PLATES (table is in inches)

JT	TYPE	PLATES	W	LEN	Y	X
2	TMVW-t	MT20	3.0	5.0	1.50	2.00
3	TMWW-t	MT20	3.0	4.0	1.50	1.50
4	TTW+m	MT20	3.0	4.0		
5	TMVW-t	MT20	4.0	4.0		
6	BMV1+p	MT20	2.0	4.0		
7	BMWWW-t	MT20	4.0	6.0		
8	BMWW-t	MT20	3.0	4.0		
9	BMV1+p	MT20	2.0	4.0		

A SIZE FOR SIZE SUBSTITUTION OF MITEK MII20 WITH TEE-LOK TL20 PLATES IS ALLOWED.

DIMENSIONS, SUPPORTS AND LOADINGS SPECIFIED BY FABRICATOR TO BE VERIFIED BY BUILDING DESIGNER

BEARINGS

JT	FACTORED GROSS REACTION VERT	HORZ	MAXIMUM FACTORED GROSS REACTION DOWN	HORZ	UPLIFT	INPUT BRG IN-SX	REQRD BRG IN-SX
6	668	0	668	0	0	1-8	1-8
9	774	0	774	0	0	5-8	5-8

UNFACTORED REACTIONS

JT	1ST LCASE COMBINED	MAX./MIN. COMPONENT REACTIONS SNOW	LIVE	PERM.LIVE	WIND	DEAD	SOIL
6	469	328 / 0	0 / 0	0 / 0	0 / 0	141 / 0	0 / 0
9	541	392 / 0	0 / 0	0 / 0	0 / 0	149 / 0	0 / 0

BEARING MATERIAL TO BE SPF NO.2 OR BETTER AT JOINT(S) 6, 9

BRACING

TOP CHORD TO BE SHEATHED OR MAX. PURLIN SPACING = 6.25 FT.
MAX. UNBRACED BOTTOM CHORD LENGTH = 10.00 FT. OR RIGID CEILING DIRECTLY APPLIED.

ALL PITCH BREAKS AND PERIMETER CORNER JOINTS MUST BE LATERALLY RESTRAINED.

1 - 2x3 SPF No.2 LATERAL BRACE(S) AT 1/ 2 LENGTH OF 5-6, 3-7, 4-7. DBS = 20-0-0 . CBF = 81 LBS.

DBS = DIAGONAL BRACE SPACING (MAX). CBF = CUMULATIVE BRACING FORCE. FASTEN LATERAL BRACE(S) USING (0.122"X3") SPIRAL NAILS : 1 NAIL FOR 2x3 BRACE(S), 2 FOR 1x4, 2x4, 2x5, 3 FOR 2x6, 4 FOR 2x8, 5 FOR 2x10, AND 6 FOR 2x12.

END VERTICAL(S) MUST BE SHEATHED OR HAVE BRACES AS INDICATED IN THE MAX. UNBRACED LENGTH COLUMN OF THE TABLE BELOW

LOADING

TOTAL LOAD CASES: (3)

CHORDS

MEMB. FR-TO	MAX. FACTORED FORCE (LBS)	FACTORED VERT. LOAD (PLF) FROM	TO	LC1 MAX CSI (LC)	MAX. UNBRAC LENGTH
1- 2	0 / 29	-77.3	-77.3	0.10 (1)	10.00
2- 3	-466 / 0	-77.3	-77.3	0.31 (1)	6.25
3- 4	-218 / 0	-77.3	-77.3	0.31 (1)	6.25
4- 5	-155 / 0	-77.3	-77.3	0.09 (1)	6.25
6- 5	-650 / 0	0.0	0.0	0.34 (1)	6.25
9- 2	-735 / 0	0.0	0.0	0.11 (1)	7.81
9- 8	0 / 0	-17.5	-17.5	0.14 (3)	10.00
8- 7	0 / 411	-17.5	-17.5	0.17 (3)	10.00
7- 6	0 / 0	-17.5	-17.5	0.07 (3)	10.00

WEBS

MEMB. FR-TO	MAX. FACTORED FORCE (LBS)	MAX CSI (LC)
8- 3	-73 / 73	0.05 (1)
3- 7	-388 / 0	0.19 (1)
7- 4	-168 / 2	0.12 (1)
7- 5	0 / 557	0.09 (1)
2- 8	0 / 452	0.10 (1)

DESIGN CRITERIA

SPECIFIED LOADS:

TOP CH.	LL	=	23.3	PSF
	DL	=	3.0	PSF
BOT CH.	LL	=	0.0	PSF
	DL	=	7.0	PSF
TOTAL LOAD		=	33.3	PSF

SPACING = 24.0 IN. C/C

LOADING IN FLAT SECTION BASED ON A SLOPE OF 6.00/12

THIS TRUSS IS DESIGNED FOR RESIDENTIAL OR SMALL BUILDING REQUIREMENTS OF PART 9, NBCC 2010

THIS DESIGN COMPLIES WITH:
- PART 9 OF OBC 2012 , BCBC 2012 , ABC 2014
- CSA 086-09
- TPIC 2011

(55 % OF 27.2 P.S.F. G.S.L. PLUS 8.4 P.S.F. RAIN LOAD) EQUALS 23.3 P.S.F. SPECIFIED ROOF LIVE LOAD

ALLOWABLE DEFL.(LL)= L/360 (0.47")
CALCULATED VERT. DEFL.(LL) = L/ 999 (0.01")
ALLOWABLE DEFL.(TL)= L/360 (0.47")
CALCULATED VERT. DEFL.(TL) = L/ 999 (0.03")

CSI: TC=0.34 (5-6:1) , BC=0.17 (7-8:3) , WB=0.19 (3-7:1) , SSI=0.18 (2-3:1)

DOL LUMBER=1.00 NAIL=1.00 LS BEND=1.10 COMP=1.10 SHEAR=1.10 TENS= 1.10

COMPANION LIVE LOAD FACTOR = 0.50

TRUSS PLATE MANUFACTURER IS NOT RESPONSIBLE FOR QUALITY CONTROL IN THE TRUSS MANUFACTURING PLANT .

NAIL VALUES

PLATE	GRIP(DRY) (PSI) MAX	MIN	SHEAR (PLI) MAX	MIN	SECTION (PLI) MAX	MIN
MT20	618	354	1667	822	2284	1656

PLATE PLACEMENT TOL. = 0.250 inches

PLATE ROTATION TOL. = 5.0 Deg.

JSI GRIP= 0.76 (7) (INPUT = 0.90)
JSI METAL= 0.19 (2) (INPUT = 1.00)

LICENSED PROFESSIONAL ENGINEER
P.M. TREVISAN
100136551
March 13th, 2017
PROVINCE OF ONTARIO

RECEIVED
TOWN OF MILTON
MAR 29, 2017
17-4990
BUILDING DIVISION

READ ALL NOTES ON THIS PAGE AND ON THE ENGINEERING NOTE PAGE ENP-1. THE NOTE PAGE IS AN INTEGRAL PART OF THIS DRAWING AS IT CONTAINS SPECIFICATIONS AND CRITERIA USED IN THE DESIGN OF THIS COMPONENT.

KOTT

JOB NAME	TRUSS NAME	QUANTITY	PLY	JOB DESC.	DRWG NO.
PT0317-054	T71	1	1	TRUSS DESC. LECCO RIDGE-BLOCK 328	

Kott Lumber Uxbridge, Stouffville, ON, CGC

Version 8.100 S Feb 9 2017 MiTek Industries, Inc. Mon Mar 13 09:57:16 2017 Page 1
ID:pF8Cn?9h9uHzAm5tCmlVl5yJJCp-fmfYZE9DAgouplj?Q6nQcLVuT8glVFvuW0wxZxzbOn1

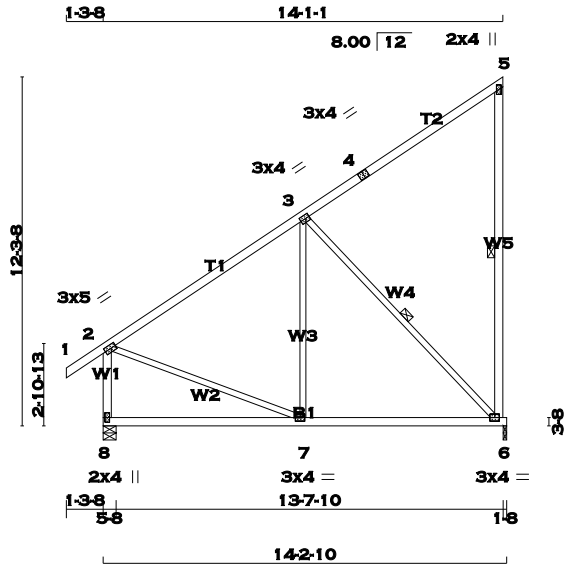

TOTAL WEIGHT = 73 lb

LUMBER
N. L. G. A. RULES

CHORDS	SIZE		LUMBER	DESCR.
1 - 4	2x4	DRY	No.2	SPF
4 - 5	2x4	DRY	No.2	SPF
6 - 5	2x4	DRY	No.2	SPF
8 - 2	2x4	DRY	No.2	SPF
8 - 6	2x4	DRY	No.2	SPF
ALL WEBS EXCEPT	2x3	DRY	No.2	SPF

DRY: SEASONED LUMBER.

PLATES (table is in inches)

JT	TYPE	PLATES	W	LEN	Y	X
2	TMVW-t	MT20	3.0	5.0	1.50	2.00
3	TMWW-t	MT20	3.0	4.0	1.50	1.50
4	TS-t	MT20	3.0	4.0		
5	TMV+p	MT20	2.0	4.0		
6	BMVW1-t	MT20	3.0	4.0		
7	BMWW-t	MT20	3.0	4.0		
8	BMV1+p	MT20	2.0	4.0		

A SIZE FOR SIZE SUBSTITUTION OF MITEK MII20 WITH TEE-LOK TL20 PLATES IS ALLOWED.

DIMENSIONS, SUPPORTS AND LOADINGS SPECIFIED BY FABRICATOR TO BE VERIFIED BY BUILDING DESIGNER

BEARINGS

JT	FACTORED GROSS REACTION VERT	HORZ	MAXIMUM FACTORED GROSS REACTION DOWN	HORZ	UPLIFT	INPUT BRG IN-SX	REQRD BRG IN-SX
6	668	0	668	0	0	1-8	1-8
8	774	0	774	0	0	5-8	5-8

UNFACTORED REACTIONS

JT	1ST LCASE COMBINED	MAX./MIN. COMPONENT REACTIONS SNOW	LIVE	PERM.LIVE	WIND	DEAD	SOIL
6	469	328 / 0	0 / 0	0 / 0	0 / 0	141 / 0	0 / 0
8	541	392 / 0	0 / 0	0 / 0	0 / 0	149 / 0	0 / 0

BEARING MATERIAL TO BE SPF NO.2 OR BETTER AT JOINT(S) 6, 8

BRACING
TOP CHORD TO BE SHEATHED OR MAX. PURLIN SPACING = 6.25 FT.
MAX. UNBRACED BOTTOM CHORD LENGTH = 10.00 FT. OR RIGID CEILING DIRECTLY APPLIED.

ALL PITCH BREAKS AND PERIMETER CORNER JOINTS MUST BE LATERALLY RESTRAINED.

1 - 2x3 SPF No.2 LATERAL BRACE(S) AT 1/ 2 LENGTH OF 5-6, 3-6. DBS = 20-0-0 . CBF = 72 LBS.

DBS = DIAGONAL BRACE SPACING (MAX). CBF = CUMULATIVE BRACING FORCE. FASTEN LATERAL BRACE(S) USING (0.122"X3") SPIRAL NAILS : 1 NAIL FOR 2x3 BRACE(S), 2 FOR 1x4, 2x4, 2x5, 3 FOR 2x6, 4 FOR 2x8, 5 FOR 2x10, AND 6 FOR 2x12.

END VERTICAL(S) MUST BE SHEATHED OR HAVE BRACES AS INDICATED IN THE MAX. UNBRACED LENGTH COLUMN OF THE TABLE BELOW

LOADING
TOTAL LOAD CASES: (3)

CHORDS

MEMB. FR-TO	MAX. FACTORED FORCE (LBS)	FACTORED VERT. LOAD (PLF) FROM	TO	LC1 MAX CSI (LC)	MAX. UNBRAC LENGTH
1- 2	0 / 29	-77.3	-77.3	0.10 (1)	10.00
2- 3	-447 / 0	-77.3	-77.3	0.52 (1)	6.25
3- 4	-38 / 0	-77.3	-77.3	0.51 (1)	6.25
4- 5	-38 / 0	-77.3	-77.3	0.51 (1)	6.25
6- 5	-205 / 0	0.0	0.0	0.17 (1)	6.25
8- 2	-727 / 0	0.0	0.0	0.11 (1)	7.81
8- 7	0 / 0	-17.5	-17.5	0.25 (3)	10.00
7- 6	0 / 403	-17.5	-17.5	0.28 (3)	10.00

WEBS

MEMB. FR-TO	MAX. FACTORED FORCE (LBS)	MAX CSI (LC)
7- 3	0 / 128	0.04 (3)
3- 6	-579 / 0	0.42 (1)
2- 7	0 / 429	0.10 (1)

DESIGN CRITERIA

SPECIFIED LOADS:

TOP	CH.	LL	=	23.3	PSF
		DL	=	3.0	PSF
BOT	CH.	LL	=	0.0	PSF
		DL	=	7.0	PSF
TOTAL	LOAD		=	33.3	PSF

SPACING = 24.0 IN. C/C

THIS TRUSS IS DESIGNED FOR RESIDENTIAL OR SMALL BUILDING REQUIREMENTS OF PART 9, NBCC 2010

THIS DESIGN COMPLIES WITH:
- PART 9 OF OBC 2012 , BCBC 2012 , ABC 2014
- CSA 086-09
- TPIC 2011

(55 % OF 27.2 P.S.F. G.S.L. PLUS 8.4 P.S.F. RAIN LOAD) EQUALS 23.3 P.S.F. SPECIFIED ROOF LIVE LOAD

ALLOWABLE DEFL.(LL)= L/360 (0.47")
CALCULATED VERT. DEFL.(LL) = L/ 999 (0.01")
ALLOWABLE DEFL.(TL)= L/360 (0.47")
CALCULATED VERT. DEFL.(TL) = L/ 999 (0.05")

CSI: TC=0.52 (2-3:1) , BC=0.28 (6-7:3) , WB=0.42 (3-6:1) , SSI=0.22 (2-3:1)

DOL LUMBER=1.00 NAIL=1.00 LS BEND=1.10 COMP=1.10 SHEAR=1.10 TENS= 1.10

COMPANION LIVE LOAD FACTOR = 0.50

TRUSS PLATE MANUFACTURER IS NOT RESPONSIBLE FOR QUALITY CONTROL IN THE TRUSS MANUFACTURING PLANT .

NAIL VALUES

PLATE	GRIP(DRY) (PSI) MAX	MIN	SHEAR (PLI) MAX	MIN	SECTION (PLI) MAX	MIN
MT20	618	354	1667	822	2284	1656

PLATE PLACEMENT TOL. = 0.250 inches

PLATE ROTATION TOL. = 0.5 Deg.

JSI GRIP= 0.75 (4) (INPUT = 0.90)
JSI METAL= 0.20 (2) (INPUT = 1.00)

LICENSED PROFESSIONAL ENGINEER
P.M. TREVISAN
100136551
March 13th, 2017
PROVINCE OF ONTARIO

RECEIVED
TOWN OF MILTON
MAR 29, 2017
17-4990
BUILDING DIVISION

READ ALL NOTES ON THIS PAGE AND ON THE ENGINEERING NOTE PAGE ENP-1. THE NOTE PAGE IS AN INTEGRAL PART OF THIS DRAWING AS IT CONTAINS SPECIFICATIONS AND CRITERIA USED IN THE DESIGN OF THIS COMPONENT.

KOTT

JOB NAME	TRUSS NAME	QUANTITY	PLY	JOB DESC.	DRWG NO.
PT0317-054	T72	2	1	TRUSS DESC. LECCO RIDGE-BLOCK 328	

Kott Lumber Uxbridge, Stouffville, ON, CGC

Version 8.100 S Feb 9 2017 MiTek Industries, Inc. Mon Mar 13 09:57:17 2017 Page 1
ID:pF8Cn?9h9uHzAm5tCmlVl5yJJCp-7yDwmaArwzwlQSIB_qIf9Z18mY_kEnb1IgfU6NzbOn0

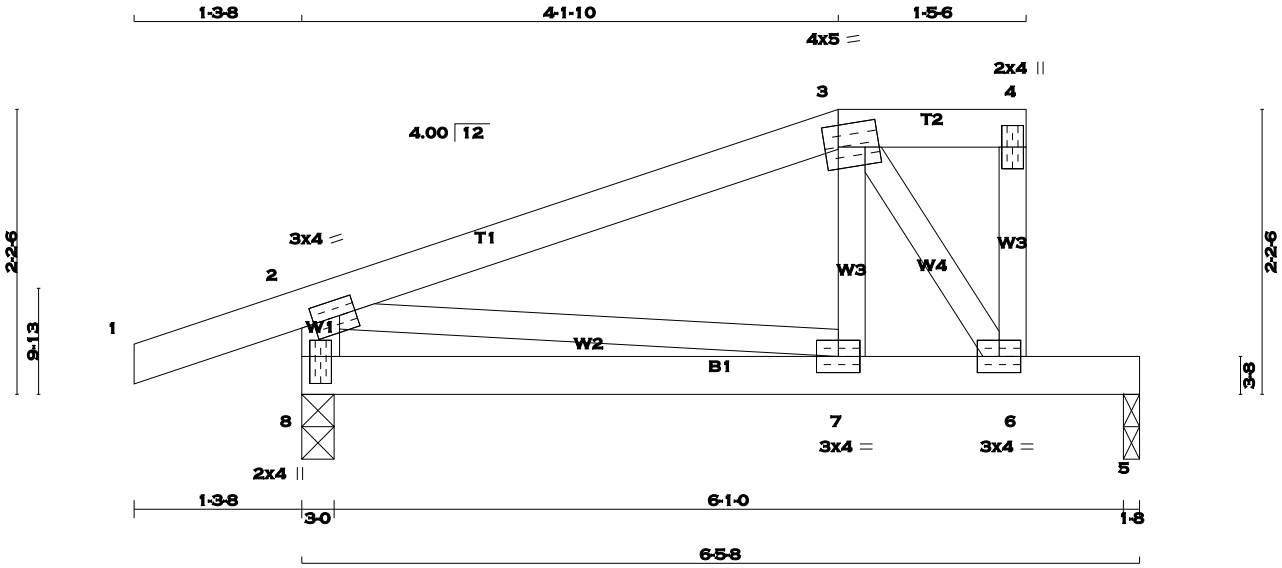

SCALE = 1:17.8

TOTAL WEIGHT = 2 X 23 = 47 lb [M]

LUMBER
N. L. G. A. RULES

CHORDS	SIZE		LUMBER	DESCR.
1 - 3	2x4	DRY	No.2	SPF
3 - 4	2x4	DRY	No.2	SPF
6 - 4	2x3	DRY	No.2	SPF
8 - 2	2x4	DRY	No.2	SPF
8 - 5	2x4	DRY	No.2	SPF
ALL WEBS EXCEPT	2x3	DRY	No.2	SPF

DRY: SEASONED LUMBER.

PLATES (table is in inches)

JT	TYPE	PLATES	W	LEN	Y	X
2	TMVW-t	MT20	3.0	4.0	1.50	1.50
3	TTWW-m	MT20	4.0	5.0	2.00	1.25
4	TMV+p	MT20	2.0	4.0		
6	BMVW-t	MT20	3.0	4.0		
7	BMWW-t	MT20	3.0	4.0		
8	BMV1+p	MT20	2.0	4.0	2.50	1.00

A SIZE FOR SIZE SUBSTITUTION OF MITEK MII20 WITH TEE-LOK TL20 PLATES IS ALLOWED.

DIMENSIONS, SUPPORTS AND LOADINGS SPECIFIED BY FABRICATOR TO BE VERIFIED BY BUILDING DESIGNER

BEARINGS

JT	FACTORED GROSS REACTION VERT	HORZ	MAXIMUM FACTORED GROSS REACTION DOWN	HORZ	UPLIFT	INPUT BRG IN-SX	REQRD BRG IN-SX
8	410	0	410	0	0	3-0	3-0
5	306	0	306	0	0	1-8	1-8

UNFACTORED REACTIONS

JT	1ST LCASE COMBINED	MAX./MIN. COMPONENT REACTIONS SNOW	LIVE	PERM.LIVE	WIND	DEAD	SOIL
8	285	213 / 0	0 / 0	0 / 0	0 / 0	73 / 0	0 / 0
5	215	150 / 0	0 / 0	0 / 0	0 / 0	65 / 0	0 / 0

BEARING MATERIAL TO BE SPF NO.2 OR BETTER AT JOINT(S) 8, 5

BRACING
TOP CHORD TO BE SHEATHED OR MAX. PURLIN SPACING = 6.25 FT.
MAX. UNBRACED BOTTOM CHORD LENGTH = 10.00 FT. OR RIGID CEILING DIRECTLY APPLIED.

ALL PITCH BREAKS AND PERIMETER CORNER JOINTS MUST BE LATERALLY RESTRAINED.

LOADING
TOTAL LOAD CASES: (3)

CHORDS

MEMB. FR-TO	MAX. FACTORED FORCE (LBS)	FACTORED VERT. LOAD (PLF) FROM	TO	LC1 MAX CSI (LC)	MAX. UNBRAC LENGTH
1- 2	0 / 16	-77.3	-77.3	0.10 (1)	10.00
2- 3	-277 / 0	-77.3	-77.3	0.23 (1)	6.25
3- 4	0 / 0	-77.3	-77.3	0.03 (1)	10.00
6- 4	-56 / 0	0.0	0.0	0.01 (1)	7.81
8- 2	-383 / 0	0.0	0.0	0.04 (1)	7.81
8- 7	0 / 0	-17.5	-17.5	0.08 (3)	10.00
7- 6	0 / 275	-17.5	-17.5	0.36 (1)	10.00
6- 5	0 / 0	-94.8	-94.8	0.32 (1)	10.00

WEBS

MEMB. FR-TO	MAX. FACTORED FORCE (LBS)	MAX CSI (LC)
7- 3	0 / 233	0.05 (1)
3- 6	-454 / 0	0.07 (1)
2- 7	0 / 264	0.06 (1)

DESIGN CRITERIA

SPECIFIED LOADS:

TOP	CH.	LL	=	23.3	PSF
		DL	=	3.0	PSF
BOT	CH.	LL	=	0.0	PSF
		DL	=	7.0	PSF
TOTAL	LOAD		=	33.3	PSF

SPACING = 24.0 IN. C/C

LOADING IN FLAT SECTION BASED ON A SLOPE OF 6.00/12

THIS TRUSS IS DESIGNED FOR RESIDENTIAL OR SMALL BUILDING REQUIREMENTS OF PART 9, NBCC 2010

THIS DESIGN COMPLIES WITH:
- PART 9 OF OBC 2012 , BCBC 2012 , ABC 2014
- CSA 086-09
- TPIC 2011

(55 % OF 27.2 P.S.F. G.S.L. PLUS 8.4 P.S.F. RAIN LOAD) EQUALS 23.3 P.S.F. SPECIFIED ROOF LIVE LOAD

ALLOWABLE DEFL.(LL)= L/360 (0.22")
CALCULATED VERT. DEFL.(LL) = L/ 999 (0.02")
ALLOWABLE DEFL.(TL)= L/360 (0.22")
CALCULATED VERT. DEFL.(TL) = L/ 999 (0.03")

CSI: TC=0.23 (2-3:1) , BC=0.36 (6-7:1) , WB=0.07 (3-6:1) , SSI=0.24 (5-6:1)

DOL LUMBER=1.00 NAIL=1.00 LS BEND=1.10 COMP=1.10 SHEAR=1.10 TENS= 1.10

COMPANION LIVE LOAD FACTOR = 0.50

TRUSS PLATE MANUFACTURER IS NOT RESPONSIBLE FOR QUALITY CONTROL IN THE TRUSS MANUFACTURING PLANT .

NAIL VALUES

PLATE	GRIP(DRY) (PSI) MAX	MIN	SHEAR (PLI) MAX	MIN	SECTION (PLI) MAX	MIN
MT20	618	354	1667	822	2284	1656

PLATE PLACEMENT TOL. = 0.250 inches

PLATE ROTATION TOL. = 5.0 Deg.

JSI GRIP= 0.64 (3) (INPUT = 0.90)
JSI METAL= 0.16 (3) (INPUT = 1.00)

LICENSED PROFESSIONAL ENGINEER
R.M. TREVISAN
100136551
March 13th, 2017
PROVINCE OF ONTARIO

RECEIVED
TOWN OF MILTON
MAR 29, 2017
17-4990
BUILDING DIVISION

READ ALL NOTES ON THIS PAGE AND ON THE ENGINEERING NOTE PAGE ENP-1. THE NOTE PAGE IS AN INTEGRAL PART OF THIS DRAWING AS IT CONTAINS SPECIFICATIONS AND CRITERIA USED IN THE DESIGN OF THIS COMPONENT.

KOTT

JOB NAME	TRUSS NAME	QUANTITY	PLY	JOB DESC.	DRWG NO.
PT0317-054	T73	5	1	TRUSS DESC. LECCO RIDGE-BLOCK 328	

Kott Lumber Uxbridge, Stouffville, ON, CGC

Version 8.100 S Feb 9 2017 MiTek Industries, Inc. Mon Mar 13 09:57:17 2017 Page 1
ID:pF8Cn?9h9uHzAm5tCmlVl5yJJCp-7yDwmaArwzwlQSIB_qIf9Z18vY0GEoi1IgfU6NzbOn0

SCALE = 1:16.4

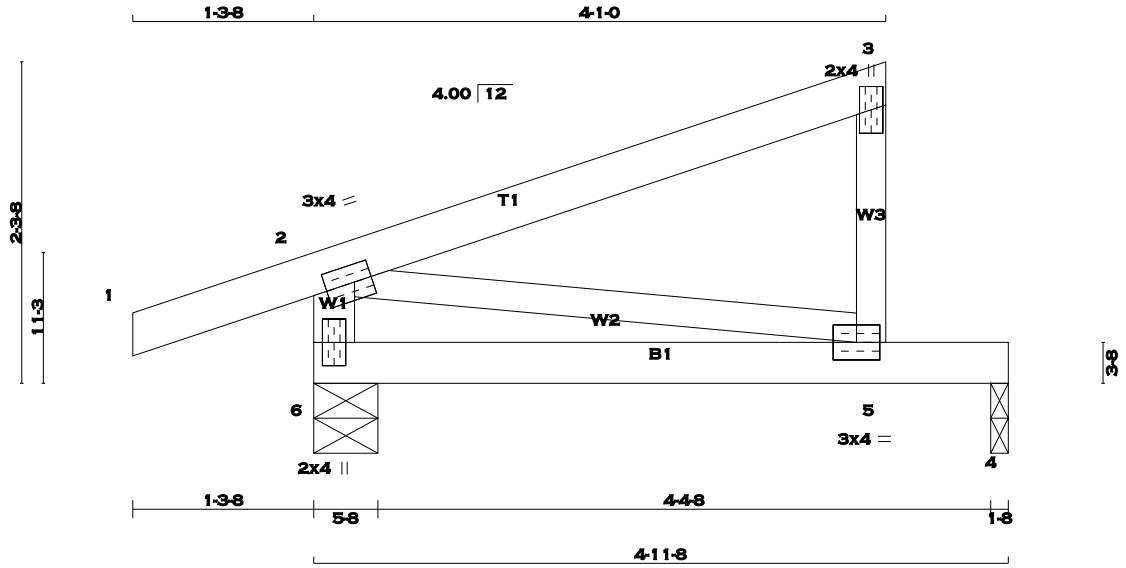

TOTAL WEIGHT = 5 X 17 = 85 lb
[M]

LUMBER
N. L. G. A. RULES

CHORDS	SIZE		LUMBER	DESCR.
1 - 3	2x4	DRY	No.2	SPF
5 - 3	2x3	DRY	No.2	SPF
6 - 2	2x4	DRY	No.2	SPF
6 - 4	2x4	DRY	No.2	SPF
ALL WEBS	2x3	DRY	No.2	SPF

DRY: SEASONED LUMBER.

PLATES (table is in inches)

JT	TYPE	PLATES	W	LEN	Y	X
2	TMVW-t	MT20	3.0	4.0	1.50	1.50
3	TMV+p	MT20	2.0	4.0		
5	BMVW-t	MT20	3.0	4.0		
6	BMV1+p	MT20	2.0	4.0		

A SIZE FOR SIZE SUBSTITUTION OF MITEK MII20 WITH TEE-LOK TL20 PLATES IS ALLOWED.

DIMENSIONS, SUPPORTS AND LOADINGS SPECIFIED BY FABRICATOR TO BE VERIFIED BY BUILDING DESIGNER

BEARINGS

JT	FACTORED GROSS REACTION VERT	HORZ	MAXIMUM FACTORED GROSS REACTION DOWN	HORZ	UPLIFT	INPUT BRG IN-SX	REQRD BRG IN-SX
6	333	0	333	0	0	5-8	5-8
4	173	0	173	0	0	1-8	1-8

UNFACTORED REACTIONS

JT	1ST LCASE COMBINED	MAX./MIN. COMPONENT REACTIONS SNOW	LIVE	PERM.LIVE	WIND	DEAD	SOIL
6	231	174 / 0	0 / 0	0 / 0	0 / 0	57 / 0	0 / 0
4	123	78 / 0	0 / 0	0 / 0	0 / 0	45 / 0	0 / 0

BEARING MATERIAL TO BE SPF NO.2 OR BETTER AT JOINT(S) 6, 4

BRACING
TOP CHORD TO BE SHEATHED OR MAX. PURLIN SPACING = 10.00 FT.
MAX. UNBRACED BOTTOM CHORD LENGTH = 10.00 FT. OR RIGID CEILING DIRECTLY APPLIED.

ALL PITCH BREAKS AND PERIMETER CORNER JOINTS MUST BE LATERALLY RESTRAINED.

LOADING
TOTAL LOAD CASES: (3)

CHORDS

MEMB. FR-TO	MAX. FACTORED FORCE (LBS)	FACTORED VERT. LOAD (PLF) FROM	TO	LC1 MAX CSI (LC)	MAX. UNBRAC LENGTH
1- 2	0 / 16	-77.3	-77.3	0.10 (1)	10.00
2- 3	0 / 0	-77.3	-77.3	0.22 (1)	10.00
5- 3	-158 / 0	0.0	0.0	0.03 (1)	7.81
6- 2	-261 / 0	0.0	0.0	0.03 (1)	7.81
6- 5	0 / 0	-17.5	-17.5	0.20 (1)	10.00
5- 4	0 / 0	-17.5	-17.5	0.20 (1)	10.00

WEBS

MEMB. FR-TO	MAX. FACTORED FORCE (LBS)	MAX CSI (LC)
2- 5	0 / 0	0.00 (1)

DESIGN CRITERIA

SPECIFIED LOADS:

TOP CH.	LL =	23.3	PSF
	DL =	3.0	PSF
BOT CH.	LL =	0.0	PSF
	DL =	7.0	PSF
TOTAL LOAD	=	33.3	PSF

SPACING = 24.0 IN. C/C

THIS TRUSS IS DESIGNED FOR RESIDENTIAL OR SMALL BUILDING REQUIREMENTS OF PART 9, NBCC 2010

THIS DESIGN COMPLIES WITH:
- PART 9 OF OBC 2012 , BCBC 2012 , ABC 2014
- CSA 086-09
- TPIC 2011

(55 % OF 27.2 P.S.F. G.S.L. PLUS 8.4 P.S.F. RAIN LOAD) EQUALS 23.3 P.S.F. SPECIFIED ROOF LIVE LOAD

ALLOWABLE DEFL.(LL)= L/360 (0.19")
CALCULATED VERT. DEFL.(LL) = L/ 999 (0.03")
ALLOWABLE DEFL.(TL)= L/360 (0.19")
CALCULATED VERT. DEFL.(TL) = L/ 872 (0.07")

CSI: TC=0.22 (2-3:1) , BC=0.20 (5-6:1) , WB=0.00 (2-5:1) , SSI=0.14 (4-5:1)

DOL LUMBER=1.00 NAIL=1.00 LS BEND=1.10 COMP=1.10 SHEAR=1.10 TENS= 1.10

COMPANION LIVE LOAD FACTOR = 0.50

TRUSS PLATE MANUFACTURER IS NOT RESPONSIBLE FOR QUALITY CONTROL IN THE TRUSS MANUFACTURING PLANT .

NAIL VALUES

PLATE	GRIP(DRY) (PSI) MAX	MIN	SHEAR (PLI) MAX	MIN	SECTION (PLI) MAX	MIN
MT20	618	354	1667	822	2284	1656

PLATE PLACEMENT TOL. = 0.250 inches

PLATE ROTATION TOL. = 5.0 Deg.

JSI GRIP= 0.24 (2) (INPUT = 0.90)
JSI METAL= 0.05 (6) (INPUT = 1.00)

LICENSED PROFESSIONAL ENGINEER
R.M. TREVISAN
100136551
March 13th, 2017
PROVINCE OF ONTARIO

RECEIVED
TOWN OF MILTON
MAR 29, 2017
17-4990
BUILDING DIVISION

READ ALL NOTES ON THIS PAGE AND ON THE ENGINEERING NOTE PAGE ENP-1. THE NOTE PAGE IS AN INTEGRAL PART OF THIS DRAWING AS IT CONTAINS SPECIFICATIONS AND CRITERIA USED IN THE DESIGN OF THIS COMPONENT.

KOTT

JOB NAME	TRUSS NAME	QUANTITY	PLY	JOB DESC.	DRWG NO.
PT0317-054	T74	1	1	TRUSS DESC. LECCO RIDGE-BLOCK 328	

Kott Lumber Uxbridge, Stouffville, ON, CGC

Version 8.100 S Feb 9 2017 MiTek Industries, Inc. Mon Mar 13 09:57:17 2017 Page 1
ID:pF8Cn?9h9uHzAm5tCmlVl5yJJCp-7yDwmaArwzwlQSIB_qIf9Z13qYrQEaw1IgfU6NzbOn0

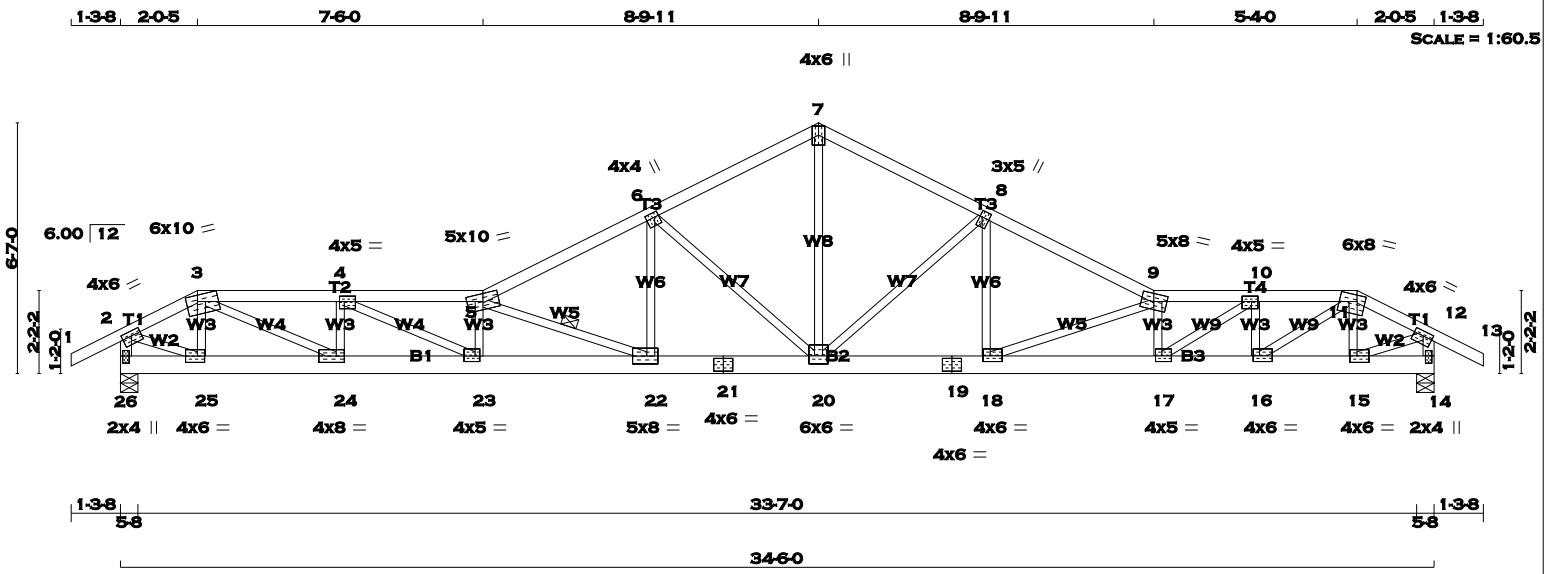

TOTAL WEIGHT = 157 lb

LUMBER
N. L. G. A. RULES

CHORDS	SIZE		LUMBER	DESCR.
1 - 3	2x4	DRY	No.2	SPF
3 - 5	2x4	DRY	No.2	SPF
5 - 7	2x4	DRY	No.2	SPF
7 - 9	2x4	DRY	No.2	SPF
9 - 11	2x4	DRY	No.2	SPF
11 - 13	2x4	DRY	No.2	SPF
26 - 2	2x4	DRY	No.2	SPF
14 - 12	2x4	DRY	No.2	SPF
26 - 21	2x6	DRY	No.2	SPF
21 - 19	2x6	DRY	No.2	SPF
19 - 14	2x6	DRY	No.2	SPF
ALL WEBS EXCEPT	2x3	DRY	No.2	SPF

DRY: SEASONED LUMBER.

PLATES (table is in inches)

JT	TYPE	PLATES	W	LEN	Y	X
2	TMVW-t	MT20	4.0	6.0	1.50	3.00
3	TTWW-m	MT20	6.0	10.0	2.00	3.50
4	TMWW-t	MT20	4.0	5.0	1.75	1.50
5	TTWW-m	MT20	5.0	10.0		
6	TMWW+t	MT20	4.0	4.0	1.50	1.25
7	TTW+p	MT20	4.0	6.0	Edge	
8	TMWW+t	MT20	3.0	5.0	2.00	0.75
9	TTWW-m	MT20	5.0	8.0		
10	TMWW-t	MT20	4.0	5.0	1.75	2.00
11	TTWW-m	MT20	6.0	8.0	2.00	2.50
12	TMVW-t	MT20	4.0	6.0	1.50	3.00
14	BMV1+p	MT20	2.0	4.0	2.25	1.00
15	BMWW-t	MT20	4.0	6.0	2.00	2.25
16	BMWW-t	MT20	4.0	6.0	1.75	2.00
17	BMWW-t	MT20	4.0	5.0	1.75	2.00
18	BMWW-t	MT20	4.0	6.0	1.75	2.25
19	BS-t	MT20	4.0	6.0		
20	BMWWW-t	MT20	6.0	6.0	2.50	3.00
21	BS-t	MT20	4.0	6.0		
22	BMWW-t	MT20	5.0	8.0	2.50	3.50
23	BMWW-t	MT20	4.0	5.0	1.75	1.50
24	BMWW-t	MT20	4.0	8.0	2.00	2.50
25	BMWW-t	MT20	4.0	6.0	2.00	2.25
26	BMV1+p	MT20	2.0	4.0	2.25	1.00

Edge - INDICATES REFERENCE CORNER OF PLATE TOUCHES EDGE OF CHORD.

A SIZE FOR SIZE SUBSTITUTION OF MITEK MII20 WITH TEE-LOK TL20 PLATES IS ALLOWED.

DIMENSIONS, SUPPORTS AND LOADINGS SPECIFIED BY FABRICATOR TO BE VERIFIED BY BUILDING DESIGNER

BEARINGS

JT	FACTORED GROSS REACTION VERT	HORZ	MAXIMUM FACTORED GROSS REACTION DOWN	HORZ	UPLIFT	INPUT BRG IN-SX	REQRD BRG IN-SX
26	1741	0	1741	0	0	5-8	5-8
14	1741	0	1741	0	0	5-8	5-8

UNFACTORED REACTIONS

JT	1ST LCASE COMBINED	MAX./MIN. COMPONENT REACTIONS SNOW	LIVE	PERM.LIVE	WIND	DEAD	SOIL
26	1220	866 / 0	0 / 0	0 / 0	0 / 0	353 / 0	0 / 0
14	1220	866 / 0	0 / 0	0 / 0	0 / 0	353 / 0	0 / 0

BEARING MATERIAL TO BE SPF NO.2 OR BETTER AT JOINT(S) 26, 14

BRACING
TOP CHORD TO BE SHEATHED OR MAX. PURLIN SPACING = 2.47 FT.
MAX. UNBRACED BOTTOM CHORD LENGTH = 10.00 FT. OR RIGID CEILING DIRECTLY APPLIED.

ALL PITCH BREAKS AND PERIMETER CORNER JOINTS MUST BE LATERALLY RESTRAINED.

1 - 2x3 SPF No.2 LATERAL BRACE(S) AT 1/ 2 LENGTH OF 5-22. DBS = 4-0-0 . CBF = 71 LBS.

DBS = DIAGONAL BRACE SPACING (MAX). CBF = CUMULATIVE BRACING FORCE. FASTEN LATERAL BRACE(S) USING (0.122"X3") SPIRAL NAILS : 1 NAIL FOR 2x3 BRACE(S), 2 FOR 1x4, 2x4, 2x5, 3 FOR 2x6, 4 FOR 2x8, 5 FOR 2x10, AND 6 FOR 2x12.

END VERTICAL(S) MUST BE SHEATHED OR HAVE BRACES AS INDICATED IN THE MAX. UNBRACED LENGTH COLUMN OF THE TABLE BELOW

LOADING
TOTAL LOAD CASES: (3)

CHORDS MEMB. FR-TO	MAX. FACTORED FORCE (LBS)	FACTORED VERT. LOAD LC1 (PLF) FROM	TO	MAX CSI (LC)	MAX. UNBRAC LENGTH	WEBS MEMB. FR-TO	MAX. FACTORED FORCE (LBS)	MAX CSI (LC)
1- 2	0 / 23	-77.3	-77.3	0.10 (1)	10.00	25- 3	-521 / 0	0.08 (1)
2- 3	-2036 / 0	-77.3	-77.3	0.08 (1)	4.70	3-24	0 / 2839	0.64 (1)
3- 4	-4348 / 0	-77.3	-77.3	0.34 (1)	3.16	24- 4	-1146 / 0	0.17 (1)
4- 5	-6037 / 0	-77.3	-77.3	0.54 (1)	2.47	4-23	0 / 1885	0.42 (1)
5- 6	-3843 / 0	-77.3	-77.3	0.38 (1)	3.34	23- 5	-918 / 0	0.14 (1)
6- 7	-2562 / 0	-77.3	-77.3	0.27 (1)	4.11	5-22	-2845 / 0	0.57 (1)
7- 8	-2562 / 0	-77.3	-77.3	0.26 (1)	4.11	22- 6	0 / 1234	0.28 (1)
8- 9	-3587 / 0	-77.3	-77.3	0.35 (1)	3.47	6-20	-1590 / 0	0.95 (1)
9-10	-5049 / 0	-77.3	-77.3	0.34 (1)	2.92	20- 7	0 / 2011	0.45 (1)
10-11	-3646 / 0	-77.3	-77.3	0.21 (1)	3.55	20- 8	-1281 / 0	0.76 (1)
11-12	-2002 / 0	-77.3	-77.3	0.08 (1)	4.73	18- 8	0 / 912	0.21 (1)
12-13	0 / 23	-77.3	-77.3	0.10 (1)	10.00	18- 9	-2036 / 0	0.78 (1)
26- 2	-1761 / 0	0.0	0.0	0.18 (1)	6.29	17- 9	-1083 / 0	0.16 (1)
14-12	-1735 / 0	0.0	0.0	0.17 (1)	6.32	17-10	0 / 1715	0.39 (1)
						16-10	-1184 / 0	0.17 (1)
26-25	0 / 0	-17.5	-17.5	0.06 (1)	10.00	16-11	0 / 2279	0.51 (1)
25-24	0 / 1787	-17.5	-17.5	0.28 (1)	10.00	15-11	-556 / 0	0.08 (1)
24-23	0 / 4348	-17.5	-17.5	0.75 (1)	10.00	2-25	0 / 1934	0.44 (1)
23-22	0 / 6090	-17.5	-17.5	0.96 (1)	10.00	15-12	0 / 1902	0.43 (1)
22-21	0 / 3455	-17.5	-17.5	0.43 (1)	10.00			
21-20	0 / 3455	-17.5	-17.5	0.43 (1)	10.00			
20-19	0 / 3226	-17.5	-17.5	0.41 (1)	10.00			
19-18	0 / 3226	-17.5	-17.5	0.41 (1)	10.00			
18-17	0 / 5111	-17.5	-17.5	0.80 (1)	10.00			
17-16	0 / 3646	-17.5	-17.5	0.63 (1)	10.00			
16-15	0 / 1755	-17.5	-17.5	0.26 (1)	10.00			
15-14	0 / 0	-17.5	-17.5	0.02 (1)	10.00			

RECEIVED
TOWN OF MILTON
MAR 29, 2017
17-4990
BUILDING DIVISION

READ ALL NOTES ON THIS PAGE AND ON THE ENGINEERING NOTE PAGE ENP-1. THE NOTE PAGE IS AN INTEGRAL PART OF THIS DRAWING AS IT CONTAINS SPECIFICATIONS AND CRITERIA USED IN THE DESIGN OF THIS COMPONENT.

DESIGN CRITERIA

SPECIFIED LOADS:

TOP CH.	LL	=	23.3	PSF
	DL	=	3.0	PSF
BOT CH.	LL	=	0.0	PSF
	DL	=	7.0	PSF
TOTAL LOAD		=	33.3	PSF

SPACING = 24.0 IN. C/C

LOADING IN ALL FLAT SECTIONS BASED ON A SLOPE OF 6.00/12

THIS TRUSS IS DESIGNED FOR RESIDENTIAL OR SMALL BUILDING REQUIREMENTS OF PART 9, NBCC 2010

THIS DESIGN COMPLIES WITH:
- PART 9 OF OBC 2012 , BCBC 2012 , ABC 2014
- CSA 086-09
- TPIC 2011

(55 % OF 27.2 P.S.F. G.S.L. PLUS 8.4 P.S.F. RAIN LOAD) EQUALS 23.3 P.S.F. SPECIFIED ROOF LIVE LOAD

ALLOWABLE DEFL.(LL)= L/360 (1.15")
CALCULATED VERT. DEFL.(LL) = L/ 959 (0.43")
ALLOWABLE DEFL.(TL)= L/360 (1.15")
CALCULATED VERT. DEFL.(TL) = L/ 542 (0.76")

CSI: TC=0.54 (4-5:1) , BC=0.96 (22-23:1) , WB=0.95 (6-20:1) , SSI=0.15 (5-6:1)

DOL LUMBER=1.00 NAIL=1.00 LS BEND=1.10 COMP=1.10 SHEAR=1.10 TENS= 1.10

COMPANION LIVE LOAD FACTOR = 0.50

TRUSS PLATE MANUFACTURER IS NOT RESPONSIBLE FOR QUALITY CONTROL IN THE TRUSS MANUFACTURING PLANT .

NAIL VALUES

PLATE	GRIP(DRY) (PSI) MAX	MIN	SHEAR (PLI) MAX	MIN	SECTION (PLI) MAX	MIN
MT20	618	354	1667	822	2284	1656

PLATE PLACEMENT TOL. = 0.250 inches

PLATE ROTATION TOL. = 5.0 Deg.

JSI GRIP= 0.90 (25) (INPUT = 0.90)
JSI METAL= 0.65 (21) (INPUT = 1.00)

CONTINUED ON PAGE 2

JOB NAME	TRUSS NAME	QUANTITY	PLY	JOB DESC.	DRWG NO.
PT0317-054	**T75**	**1**	**1**	TRUSS DESC. LECCO RIDGE-BLOCK 328	

ENG JOB: PT0317-054

Kott Lumber Uxbridge, Stouffville, ON, CGC

Version 8.100 S Feb 9 2017 MiTek Industries, Inc. Mon Mar 13 09:57:18 2017 Page 1

ID:pF8Cn?9h9uHzAm5tCmlVl5yJJCp-b9mJzwAThH2c2ctNYXpuimaFKxIBz1pBzJP2epzbOn?

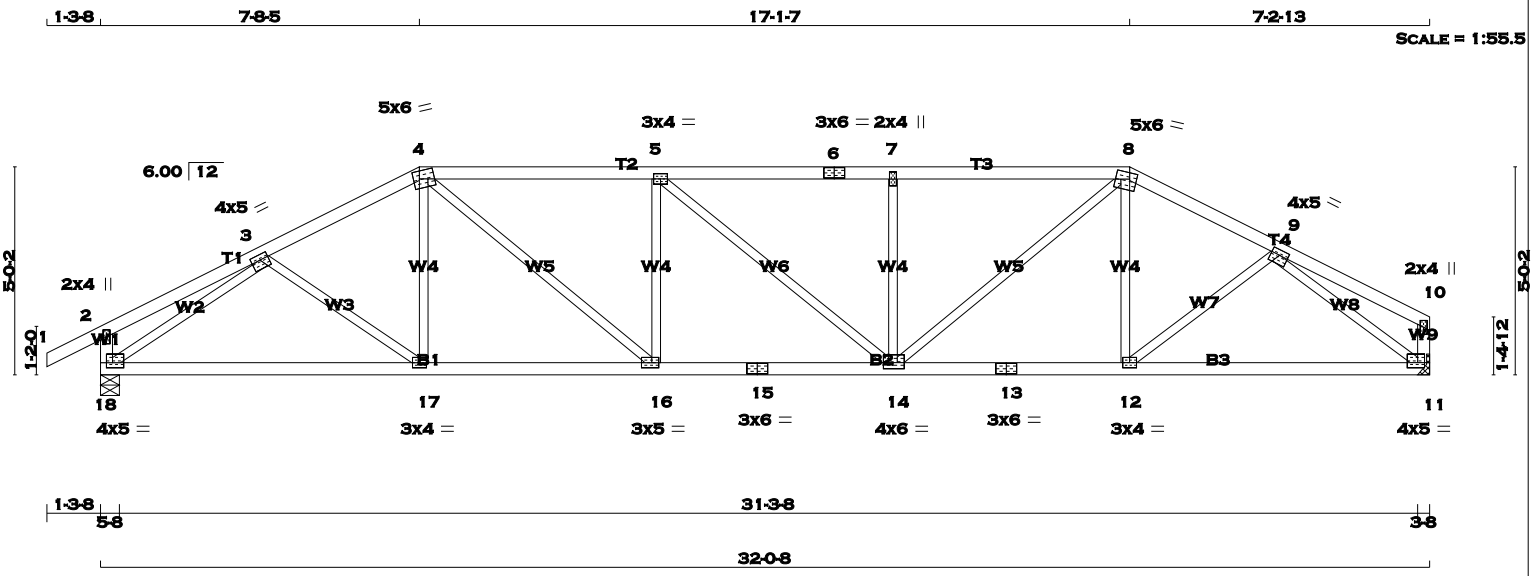

TOTAL WEIGHT = 125 lb

LUMBER

N. L. G. A. RULES

CHORDS	SIZE		LUMBER	DESCR.
1 - 4	2x4	DRY	No.2	SPF
4 - 6	2x4	DRY	No.2	SPF
6 - 8	2x4	DRY	No.2	SPF
8 - 10	2x4	DRY	No.2	SPF
18 - 2	2x4	DRY	No.2	SPF
11 - 10	2x4	DRY	No.2	SPF
18 - 15	2x4	DRY	No.2	SPF
15 - 13	2x4	DRY	No.2	SPF
13 - 11	2x4	DRY	No.2	SPF
ALL WEBS EXCEPT	2x3	DRY	No.2	SPF

DRY: SEASONED LUMBER.

PLATES (table is in inches)

JT	TYPE	PLATES	W	LEN	Y	X
2	TMV+p	MT20	2.0	4.0		
3	TMWW-t	MT20	4.0	5.0	1.50	2.50
4	TTWW-m	MT20	5.0	6.0	2.25	1.75
5	TMWW-t	MT20	3.0	4.0		
6	TS-t	MT20	3.0	6.0		
7	TMW+w	MT20	2.0	4.0		
8	TTWW-m	MT20	5.0	6.0	1.75	2.00
9	TMWW-t	MT20	4.0	5.0	1.50	2.50
10	TMV+p	MT20	2.0	4.0		
11	BMVW1-t	MT20	4.0	5.0	1.50	2.00
12	BMWW-t	MT20	3.0	4.0		
13	BS-t	MT20	3.0	6.0		
14	BMWWW-t	MT20	4.0	6.0	1.75	1.50
15	BS-t	MT20	3.0	6.0		
16	BMWW-t	MT20	3.0	5.0	1.50	2.00
17	BMWW-t	MT20	3.0	4.0		
18	BMVW1-t	MT20	4.0	5.0	1.50	1.75

A SIZE FOR SIZE SUBSTITUTION OF MITEK MII20 WITH TEE-LOK TL20 PLATES IS ALLOWED.

DIMENSIONS, SUPPORTS AND LOADINGS SPECIFIED BY FABRICATOR TO BE VERIFIED BY BUILDING DESIGNER

BEARINGS

JT	FACTORED GROSS REACTION VERT	HORZ	MAXIMUM FACTORED GROSS REACTION DOWN	HORZ	UPLIFT	INPUT BRG IN-SX	REQRD BRG IN-SX
18	1624	0	1624	0	0	5-8	5-8
11	1520	0	1520	0	0	HANGER BY OTHERS	
						MIN. SEAT SIZE: 3-8	

UNFACTORED REACTIONS

JT	1ST LCASE COMBINED	MAX./MIN. COMPONENT REACTIONS SNOW	LIVE	PERM.LIVE	WIND	DEAD	SOIL
18	1138	809 / 0	0 / 0	0 / 0	0 / 0	329 / 0	0 / 0
11	1066	746 / 0	0 / 0	0 / 0	0 / 0	320 / 0	0 / 0

BEARING MATERIAL TO BE SPF NO.2 OR BETTER AT JOINT(S) 18

BRACING

TOP CHORD TO BE SHEATHED OR MAX. PURLIN SPACING = 3.86 FT.
MAX. UNBRACED BOTTOM CHORD LENGTH = 10.00 FT. OR RIGID CEILING DIRECTLY APPLIED.

ALL PITCH BREAKS AND PERIMETER CORNER JOINTS MUST BE LATERALLY RESTRAINED.

LOADING

TOTAL LOAD CASES: (3)

CHORDS

MEMB. FR-TO	MAX. FORCE (LBS)	FACTORED VERT. LOAD (PLF) FROM	TO	LC1 MAX CSI (LC)	MAX. UNBRAC LENGTH
1- 2	0 / 23	-77.3	-77.3	0.10 (1)	10.00
2- 3	0 / 13	-77.3	-77.3	0.15 (1)	10.00
3- 4	-2142 / 0	-77.3	-77.3	0.22 (1)	4.46
4- 5	-2566 / 0	-77.3	-77.3	0.50 (1)	3.86
5- 6	-2539 / 0	-77.3	-77.3	0.49 (1)	3.88
6- 7	-2539 / 0	-77.3	-77.3	0.49 (1)	3.88
7- 8	-2539 / 0	-77.3	-77.3	0.49 (1)	3.88
8- 9	-2053 / 0	-77.3	-77.3	0.19 (1)	4.56
9-10	0 / 12	-77.3	-77.3	0.13 (1)	10.00
18- 2	-225 / 0	0.0	0.0	0.02 (1)	7.81
11-10	-113 / 0	0.0	0.0	0.01 (1)	7.81
18-17	0 / 1858	-17.5	-17.5	0.42 (1)	10.00
17-16	0 / 1905	-17.5	-17.5	0.43 (1)	10.00
16-15	0 / 2566	-17.5	-17.5	0.47 (1)	10.00
15-14	0 / 2566	-17.5	-17.5	0.47 (1)	10.00
14-13	0 / 1824	-17.5	-17.5	0.40 (1)	10.00
13-12	0 / 1824	-17.5	-17.5	0.40 (1)	10.00
12-11	0 / 1692	-17.5	-17.5	0.38 (1)	10.00

WEBS

MEMB. FR-TO	MAX. FORCE (LBS)	FACTORED MAX CSI (LC)
3-17	0 / 78	0.03 (3)
17- 4	0 / 112	0.04 (3)
4-16	0 / 857	0.19 (1)
16- 5	-458 / 0	0.17 (1)
5-14	-35 / 0	0.04 (1)
14- 7	-479 / 0	0.18 (1)
14- 8	0 / 927	0.21 (1)
12- 8	0 / 85	0.03 (3)
12- 9	0 / 167	0.04 (1)
18- 3	-2292 / 0	0.84 (1)
9-11	-2166 / 0	0.75 (1)

DESIGN CRITERIA

SPECIFIED LOADS:

TOP CH.	LL	=	23.3	PSF
	DL	=	3.0	PSF
BOT CH.	LL	=	0.0	PSF
	DL	=	7.0	PSF
TOTAL LOAD		=	33.3	PSF

SPACING = 24.0 IN. C/C

LOADING IN FLAT SECTION BASED ON A SLOPE OF 6.00/12

THIS TRUSS IS DESIGNED FOR RESIDENTIAL OR SMALL BUILDING REQUIREMENTS OF PART 9, NBCC 2010

THIS DESIGN COMPLIES WITH:
- PART 9 OF OBC 2012 , BCBC 2012 , ABC 2014
- CSA 086-09
- TPIC 2011

(55 % OF 27.2 P.S.F. G.S.L. PLUS 8.4 P.S.F. RAIN LOAD) EQUALS 23.3 P.S.F. SPECIFIED ROOF LIVE LOAD

ALLOWABLE DEFL.(LL)= L/360 (1.07")
CALCULATED VERT. DEFL.(LL) = L/ 999 (0.14")
ALLOWABLE DEFL.(TL)= L/360 (1.07")
CALCULATED VERT. DEFL.(TL) = L/ 999 (0.27")

CSI: TC=0.50 (4-5:1) , BC=0.47 (14-16:1) , WB=0.84 (3-18:1) , SSI=0.20 (4-5:1)

DOL LUMBER=1.00 NAIL=1.00 LS BEND=1.10 COMP=1.10 SHEAR=1.10 TENS= 1.10

COMPANION LIVE LOAD FACTOR = 0.50

TRUSS PLATE MANUFACTURER IS NOT RESPONSIBLE FOR QUALITY CONTROL IN THE TRUSS MANUFACTURING PLANT .

NAIL VALUES

PLATE	GRIP(DRY) (PSI) MAX	MIN	SHEAR (PLI) MAX	MIN	SECTION (PLI) MAX	MIN
MT20	618	354	1667	822	2284	1656

PLATE PLACEMENT TOL. = 0.250 inches

PLATE ROTATION TOL. = 5.0 Deg.

JSI GRIP= 0.90 (11) (INPUT = 0.90)
JSI METAL= 0.73 (15) (INPUT = 1.00)

LICENSED PROFESSIONAL ENGINEER
P.M. TREVISAN
100136551
March 13th, 2017
PROVINCE OF ONTARIO

RECEIVED
TOWN OF MILTON
MAR 29, 2017
17-4990
BUILDING DIVISION

READ ALL NOTES ON THIS PAGE AND ON THE ENGINEERING NOTE PAGE ENP-1. THE NOTE PAGE IS AN INTEGRAL PART OF THIS DRAWING AS IT CONTAINS SPECIFICATIONS AND CRITERIA USED IN THE DESIGN OF THIS COMPONENT.

KOTT

JOB NAME	TRUSS NAME	QUANTITY	PLY	JOB DESC.	DRWG NO.
PT0317-054	T76	1	1	TRUSS DESC. LECCO RIDGE-BLOCK 328	

Kott Lumber Uxbridge, Stouffville, ON, CGC

Version 8.100 S Feb 9 2017 MiTek Industries, Inc. Mon Mar 13 09:57:18 2017 Page 1
ID:pF8Cn?9h9uHzAm5tCmlVl5yJJCp-b9mJzwAThH2c2ctNYXpuimaGixKez7tBzJP2epzbOn?

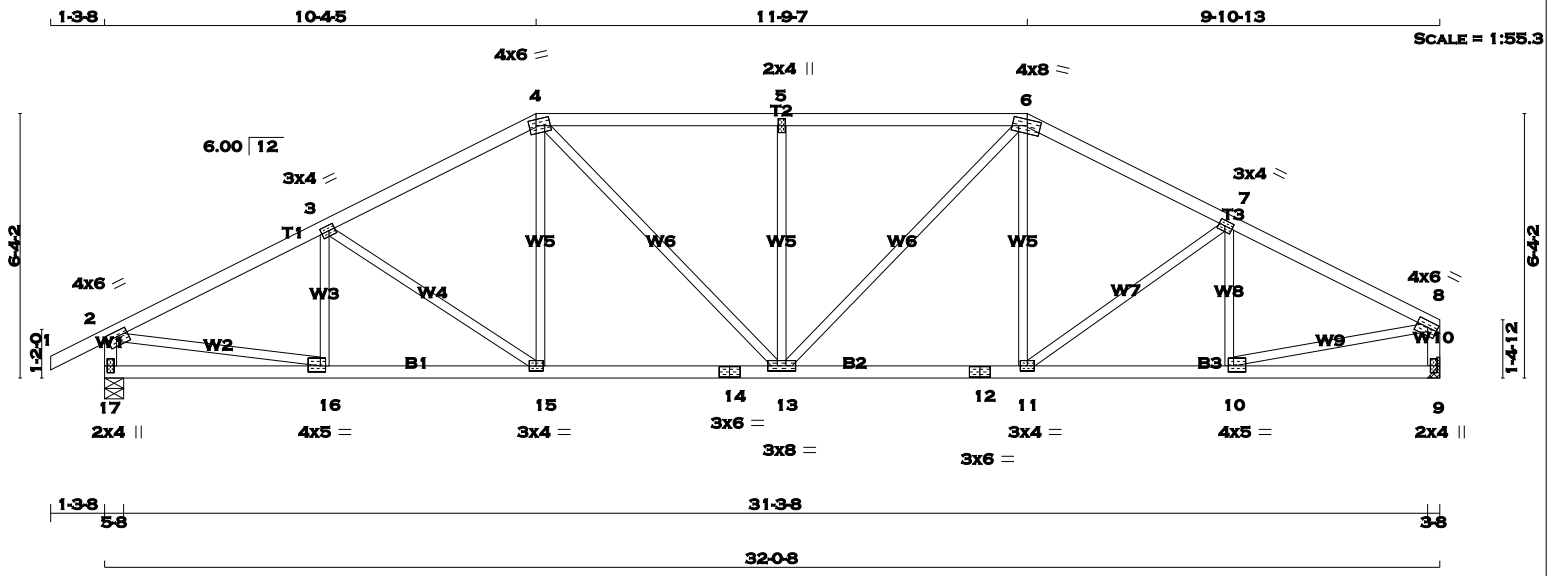

TOTAL WEIGHT = 130 lb

LUMBER
N. L. G. A. RULES

CHORDS	SIZE		LUMBER	DESCR.
1 - 4	2x4	DRY	No.2	SPF
4 - 6	2x4	DRY	No.2	SPF
6 - 8	2x4	DRY	No.2	SPF
17 - 2	2x4	DRY	No.2	SPF
9 - 8	2x4	DRY	No.2	SPF
17 - 14	2x4	DRY	No.2	SPF
14 - 12	2x4	DRY	No.2	SPF
12 - 9	2x4	DRY	No.2	SPF
ALL WEBS EXCEPT	2x3	DRY	No.2	SPF

DRY: SEASONED LUMBER.

PLATES (table is in inches)

JT	TYPE	PLATES	W	LEN	Y	X
2	TMVW-t	MT20	4.0	6.0	1.50	2.75
3	TMWW-t	MT20	3.0	4.0	1.50	1.75
4	TTWW-m	MT20	4.0	6.0	1.75	2.00
5	TMW+w	MT20	2.0	4.0		
6	TTWW-m	MT20	4.0	8.0	1.75	3.75
7	TMWW-t	MT20	3.0	4.0	1.50	1.75
8	TMVW-t	MT20	4.0	6.0	1.75	2.75
9	BMV1+p	MT20	2.0	4.0		
10	BMWW-t	MT20	4.0	5.0	1.75	1.50
11	BMWW-t	MT20	3.0	4.0		
12	BS-t	MT20	3.0	6.0		
13	BMWWW-t	MT20	3.0	8.0		
14	BS-t	MT20	3.0	6.0		
15	BMWW-t	MT20	3.0	4.0		
16	BMWW-t	MT20	4.0	5.0	1.75	1.50
17	BMV1+p	MT20	2.0	4.0		

A SIZE FOR SIZE SUBSTITUTION OF MITEK MII20 WITH TEE-LOK TL20 PLATES IS ALLOWED.

DIMENSIONS, SUPPORTS AND LOADINGS SPECIFIED BY FABRICATOR TO BE VERIFIED BY BUILDING DESIGNER

BEARINGS

JT	FACTORED GROSS REACTION VERT	HORZ	MAXIMUM FACTORED GROSS REACTION DOWN	HORZ	UPLIFT	INPUT BRG IN-SX	REQRD BRG IN-SX
17	1624	0	1624	0	0	5-8	5-8
9	1520	0	1520	0	0	HANGER BY OTHERS	
						MIN. SEAT SIZE: 3-8	

UNFACTORED REACTIONS

JT	1ST LCASE COMBINED	MAX./MIN. COMPONENT REACTIONS SNOW	LIVE	PERM.LIVE	WIND	DEAD	SOIL
17	1138	809 / 0	0 / 0	0 / 0	0 / 0	329 / 0	0 / 0
9	1066	746 / 0	0 / 0	0 / 0	0 / 0	320 / 0	0 / 0

BEARING MATERIAL TO BE SPF NO.2 OR BETTER AT JOINT(S) 17

BRACING
TOP CHORD TO BE SHEATHED OR MAX. PURLIN SPACING = 4.30 FT.
MAX. UNBRACED BOTTOM CHORD LENGTH = 10.00 FT. OR RIGID CEILING DIRECTLY APPLIED.

ALL PITCH BREAKS AND PERIMETER CORNER JOINTS MUST BE LATERALLY RESTRAINED.

LOADING
TOTAL LOAD CASES: (3)

CHORDS

MEMB. FR-TO	MAX. FACTORED FORCE (LBS)	VERT. LOAD LC1 (PLF) FROM	TO	MAX CSI (LC)	MAX. UNBRAC LENGTH
1- 2	0 / 23	-77.3	-77.3	0.10 (1)	10.00
2- 3	-2205 / 0	-77.3	-77.3	0.33 (1)	4.30
3- 4	-1997 / 0	-77.3	-77.3	0.31 (1)	4.50
4- 5	-2070 / 0	-77.3	-77.3	0.41 (1)	4.31
5- 6	-2070 / 0	-77.3	-77.3	0.41 (1)	4.31
6- 7	-1949 / 0	-77.3	-77.3	0.28 (1)	4.57
7- 8	-2056 / 0	-77.3	-77.3	0.30 (1)	4.47
17- 2	-1583 / 0	0.0	0.0	0.16 (1)	6.56
9- 8	-1480 / 0	0.0	0.0	0.15 (1)	6.74
17-16	0 / 0	-17.5	-17.5	0.10 (3)	10.00
16-15	0 / 1990	-17.5	-17.5	0.38 (1)	10.00
15-14	0 / 1770	-17.5	-17.5	0.34 (1)	10.00
14-13	0 / 1770	-17.5	-17.5	0.34 (1)	10.00
13-12	0 / 1728	-17.5	-17.5	0.34 (1)	10.00
12-11	0 / 1728	-17.5	-17.5	0.34 (1)	10.00
11-10	0 / 1856	-17.5	-17.5	0.36 (1)	10.00
10- 9	0 / 0	-17.5	-17.5	0.09 (3)	10.00

WEBS

MEMB. FR-TO	MAX. FACTORED FORCE (LBS)	MAX CSI (LC)
16- 3	-231 / 17	0.05 (1)
3-15	-271 / 0	0.19 (1)
15- 4	0 / 252	0.06 (1)
4-13	0 / 430	0.10 (1)
13- 5	-559 / 0	0.36 (1)
13- 6	0 / 491	0.11 (1)
11- 6	0 / 195	0.04 (3)
11- 7	-163 / 0	0.11 (1)
10- 7	-311 / 0	0.07 (1)
2-16	0 / 2016	0.45 (1)
10- 8	0 / 1898	0.43 (1)

DESIGN CRITERIA

SPECIFIED LOADS:

TOP	CH.	LL	=	23.3	PSF
		DL	=	3.0	PSF
BOT	CH.	LL	=	0.0	PSF
		DL	=	7.0	PSF
TOTAL	LOAD		=	33.3	PSF

SPACING = 24.0 IN. C/C

LOADING IN FLAT SECTION BASED ON A SLOPE OF 6.00/12

THIS TRUSS IS DESIGNED FOR RESIDENTIAL OR SMALL BUILDING REQUIREMENTS OF PART 9, NBCC 2010

THIS DESIGN COMPLIES WITH:
- PART 9 OF OBC 2012 , BCBC 2012 , ABC 2014
- CSA 086-09
- TPIC 2011

(55 % OF 27.2 P.S.F. G.S.L. PLUS 8.4 P.S.F. RAIN LOAD) EQUALS 23.3 P.S.F. SPECIFIED ROOF LIVE LOAD

ALLOWABLE DEFL.(LL)= L/360 (1.07")
CALCULATED VERT. DEFL.(LL) = L/ 999 (0.11")
ALLOWABLE DEFL.(TL)= L/360 (1.07")
CALCULATED VERT. DEFL.(TL) = L/ 999 (0.20")

CSI: TC=0.41 (5-6:1) , BC=0.38 (15-16:1) , WB=0.45 (2-16:1) , SSI=0.22 (5-6:1)

DOL LUMBER=1.00 NAIL=1.00 LS BEND=1.10 COMP=1.10 SHEAR=1.10 TENS= 1.10

COMPANION LIVE LOAD FACTOR = 0.50

TRUSS PLATE MANUFACTURER IS NOT RESPONSIBLE FOR QUALITY CONTROL IN THE TRUSS MANUFACTURING PLANT .

NAIL VALUES

PLATE	GRIP(DRY) (PSI) MAX	MIN	SHEAR (PLI) MAX	MIN	SECTION (PLI) MAX	MIN
MT20	618	354	1667	822	2284	1656

PLATE PLACEMENT TOL. = 0.250 inches

PLATE ROTATION TOL. = 5.0 Deg.

JSI GRIP= 0.89 (10) (INPUT = 0.90)
JSI METAL= 0.60 (16) (INPUT = 1.00)

LICENSED PROFESSIONAL ENGINEER
P.M. TREVISAN
100136551
March 13th, 2017
PROVINCE OF ONTARIO

RECEIVED
TOWN OF MILTON
MAR 29, 2017
17-4990
BUILDING DIVISION

READ ALL NOTES ON THIS PAGE AND ON THE ENGINEERING NOTE PAGE ENP-1. THE NOTE PAGE IS AN INTEGRAL PART OF THIS DRAWING AS IT CONTAINS SPECIFICATIONS AND CRITERIA USED IN THE DESIGN OF THIS COMPONENT.

KOTT

JOB NAME	TRUSS NAME	QUANTITY	PLY	JOB DESC.	DRWG NO.
PT0317-054	T77	1	1	TRUSS DESC. LECCO RIDGE-BLOCK 328	

Kott Lumber Uxbridge, Stouffville, ON, CGC

Version 8.100 S Feb 9 2017 MiTek Industries, Inc. Mon Mar 13 09:57:18 2017 Page 1
ID:pF8Cn?9h9uHzAm5tCmlVl5yJJCp-b9mJzwAThH2c2ctNYXpuimaEVxJGz5GBzJP2epzbOn?

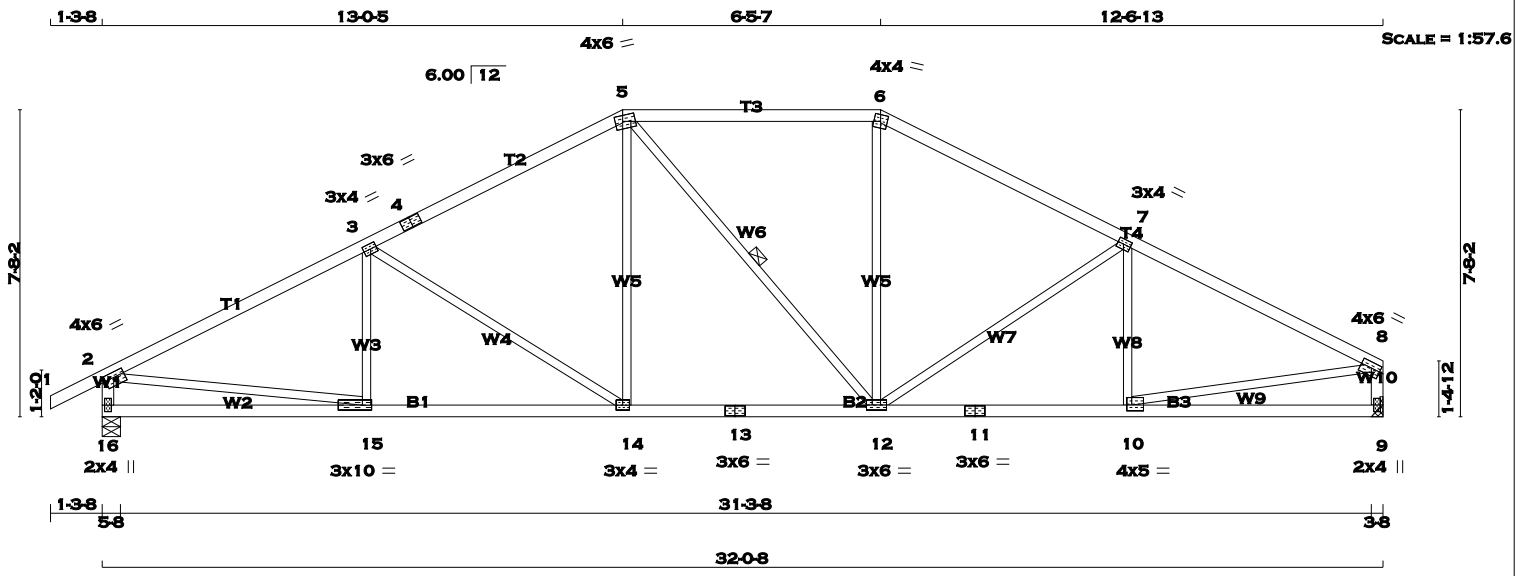

TOTAL WEIGHT = 128 lb

[M][F]

LUMBER

N. L. G. A. RULES

CHORDS	SIZE		LUMBER	DESCR.
1 - 4	2x4	DRY	No.2	SPF
4 - 5	2x4	DRY	No.2	SPF
5 - 6	2x4	DRY	No.2	SPF
6 - 8	2x4	DRY	No.2	SPF
16 - 2	2x4	DRY	No.2	SPF
9 - 8	2x4	DRY	No.2	SPF
16 - 13	2x4	DRY	No.2	SPF
13 - 11	2x4	DRY	No.2	SPF
11 - 9	2x4	DRY	No.2	SPF
ALL WEBS EXCEPT	2x3	DRY	No.2	SPF

DRY: SEASONED LUMBER.

PLATES (table is in inches)

JT	TYPE	PLATES	W	LEN	Y	X
2	TMVW-t	MT20	4.0	6.0	1.50	2.75
3	TMWW-t	MT20	3.0	4.0	1.50	1.75
4	TS-t	MT20	3.0	6.0		
5	TTWW-m	MT20	4.0	6.0	1.75	2.25
6	TTW-m	MT20	4.0	4.0		
7	TMWW-t	MT20	3.0	4.0	1.50	1.75
8	TMVW-t	MT20	4.0	6.0	1.75	2.75
9	BMV1+p	MT20	2.0	4.0		
10	BMWW-t	MT20	4.0	5.0	1.75	1.50
11	BS-t	MT20	3.0	6.0		
12	BMWWW-t	MT20	3.0	6.0		
13	BS-t	MT20	3.0	6.0		
14	BMWW-t	MT20	3.0	4.0		
15	BMWW-t	MT20	3.0	10.0	1.50	2.75
16	BMV1+p	MT20	2.0	4.0		

A SIZE FOR SIZE SUBSTITUTION OF MITEK MII20 WITH TEE-LOK TL20 PLATES IS ALLOWED.

DIMENSIONS, SUPPORTS AND LOADINGS SPECIFIED BY FABRICATOR TO BE VERIFIED BY BUILDING DESIGNER

BEARINGS

JT	FACTORED GROSS REACTION VERT	HORZ	MAXIMUM FACTORED GROSS REACTION DOWN	HORZ	UPLIFT	INPUT BRG IN-SX	REQRD BRG IN-SX
16	1624	0	1624	0	0	5-8	5-8
9	1520	0	1520	0	0	HANGER BY OTHERS	
						MIN. SEAT SIZE: 3-8	

UNFACTORED REACTIONS

JT	1ST LCASE COMBINED	SNOW	LIVE	PERM.LIVE	WIND	DEAD	SOIL
		MAX./MIN. COMPONENT REACTIONS					
16	1138	809 / 0	0 / 0	0 / 0	0 / 0	329 / 0	0 / 0
9	1066	746 / 0	0 / 0	0 / 0	0 / 0	320 / 0	0 / 0

BEARING MATERIAL TO BE SPF NO.2 OR BETTER AT JOINT(S) 16

BRACING

TOP CHORD TO BE SHEATHED OR MAX. PURLIN SPACING = 4.03 FT.
MAX. UNBRACED BOTTOM CHORD LENGTH = 10.00 FT. OR RIGID CEILING DIRECTLY APPLIED.

ALL PITCH BREAKS AND PERIMETER CORNER JOINTS MUST BE LATERALLY RESTRAINED.

1 - 2x3 SPF No.2 LATERAL BRACE(S) AT 1/ 2 LENGTH OF 5-12. DBS = 20-0-0 . CBF = 4 LBS.

DBS = DIAGONAL BRACE SPACING (MAX). CBF = CUMULATIVE BRACING FORCE. FASTEN LATERAL BRACE(S) USING (0.122"X3") SPIRAL NAILS : 1 NAIL FOR 2x3 BRACE(S), 2 FOR 1x4, 2x4, 2x5, 3 FOR 2x6, 4 FOR 2x8, 5 FOR 2x10, AND 6 FOR 2x12.

END VERTICAL(S) MUST BE SHEATHED OR HAVE BRACES AS INDICATED IN THE MAX. UNBRACED LENGTH COLUMN OF THE TABLE BELOW

LOADING

TOTAL LOAD CASES: (3)

CHORDS

MEMB. FR-TO	MAX. FACTORED FORCE (LBS)	FACTORED VERT. LOAD LC1 (PLF) FROM	TO	MAX CSI (LC)	MAX. UNBRAC LENGTH
1- 2	0 / 23	-77.3	-77.3	0.10 (1)	10.00
2- 3	-2235 / 0	-77.3	-77.3	0.55 (1)	4.03
3- 4	-1811 / 0	-77.3	-77.3	0.49 (1)	4.46
4- 5	-1811 / 0	-77.3	-77.3	0.49 (1)	4.46
5- 6	-1581 / 0	-77.3	-77.3	0.46 (1)	4.72
6- 7	-1790 / 0	-77.3	-77.3	0.45 (1)	4.53
7- 8	-2113 / 0	-77.3	-77.3	0.49 (1)	4.19
16- 2	-1575 / 0	0.0	0.0	0.16 (1)	6.57
9- 8	-1472 / 0	0.0	0.0	0.15 (1)	6.74
16-15	0 / 0	-17.5	-17.5	0.17 (3)	10.00
15-14	0 / 2023	-17.5	-17.5	0.40 (1)	10.00
14-13	0 / 1600	-17.5	-17.5	0.33 (1)	10.00
13-12	0 / 1600	-17.5	-17.5	0.33 (1)	10.00
12-11	0 / 1913	-17.5	-17.5	0.38 (1)	10.00
11-10	0 / 1913	-17.5	-17.5	0.38 (1)	10.00
10- 9	0 / 0	-17.5	-17.5	0.16 (3)	10.00

WEBS

MEMB. FR-TO	MAX. FACTORED FORCE (LBS)	MAX CSI (LC)
15- 3	-138 / 68	0.04 (1)
3-14	-508 / 0	0.62 (1)
14- 5	0 / 385	0.09 (1)
5-12	-29 / 0	0.02 (1)
12- 6	0 / 361	0.08 (1)
12- 7	-407 / 0	0.47 (1)
10- 7	-206 / 43	0.06 (1)
2-15	0 / 2040	0.46 (1)
10- 8	0 / 1940	0.44 (1)

DESIGN CRITERIA

SPECIFIED LOADS:

TOP	CH.	LL	=	23.3	PSF
		DL	=	3.0	PSF
BOT	CH.	LL	=	0.0	PSF
		DL	=	7.0	PSF
TOTAL	LOAD		=	33.3	PSF

SPACING = 24.0 IN. C/C

LOADING IN FLAT SECTION BASED ON A SLOPE OF 6.00/12

THIS TRUSS IS DESIGNED FOR RESIDENTIAL OR SMALL BUILDING REQUIREMENTS OF PART 9, NBCC 2010

THIS DESIGN COMPLIES WITH:
- PART 9 OF OBC 2012 , BCBC 2012 , ABC 2014
- CSA 086-09
- TPIC 2011

(55 % OF 27.2 P.S.F. G.S.L. PLUS 8.4 P.S.F. RAIN LOAD) EQUALS 23.3 P.S.F. SPECIFIED ROOF LIVE LOAD

ALLOWABLE DEFL.(LL)= L/360 (1.07")
CALCULATED VERT. DEFL.(LL) = L/ 999 (0.10")
ALLOWABLE DEFL.(TL)= L/360 (1.07")
CALCULATED VERT. DEFL.(TL) = L/ 999 (0.19")

CSI: TC=0.55 (2-3:1) , BC=0.40 (14-15:1) , WB=0.62 (3-14:1) , SSI=0.22 (2-3:1)

DOL LUMBER=1.00 NAIL=1.00 LS BEND=1.10 COMP=1.10 SHEAR=1.10 TENS= 1.10

COMPANION LIVE LOAD FACTOR = 0.50

TRUSS PLATE MANUFACTURER IS NOT RESPONSIBLE FOR QUALITY CONTROL IN THE TRUSS MANUFACTURING PLANT .

NAIL VALUES

PLATE	GRIP(DRY) (PSI) MAX	MIN	SHEAR (PLI) MAX	MIN	SECTION (PLI) MAX	MIN
MT20	618	354	1667	822	2284	1656

PLATE PLACEMENT TOL. = 0.250 inches

PLATE ROTATION TOL. = 5.0 Deg.

JSI GRIP= 0.89 (15) (INPUT = 0.90)
JSI METAL= 0.60 (2) (INPUT = 1.00)

LICENSED PROFESSIONAL ENGINEER
P.M. TREVISAN
100136551
March 13th, 2017
PROVINCE OF ONTARIO

RECEIVED
TOWN OF MILTON
MAR 29, 2017
17-4990
BUILDING DIVISION

READ ALL NOTES ON THIS PAGE AND ON THE ENGINEERING NOTE PAGE ENP-1. THE NOTE PAGE IS AN INTEGRAL PART OF THIS DRAWING AS IT CONTAINS SPECIFICATIONS AND CRITERIA USED IN THE DESIGN OF THIS COMPONENT.

KOTT

JOB NAME	TRUSS NAME	QUANTITY	PLY	JOB DESC.	DRWG NO.
PT0317-054	T78	1	1	TRUSS DESC. LECCO RIDGE-BLOCK 328	

Kott Lumber Uxbridge, Stouffville, ON, CGC

Version 8.100 S Feb 9 2017 MiTek Industries, Inc. Mon Mar 13 09:57:19 2017 Page 1
ID:pF8Cn?9h9uHzAm5tCmlVl5yJJCp-3LKhBGB5SbATgmSa5FK7E_6KRLeUiaxKCz8bAGzbOn_

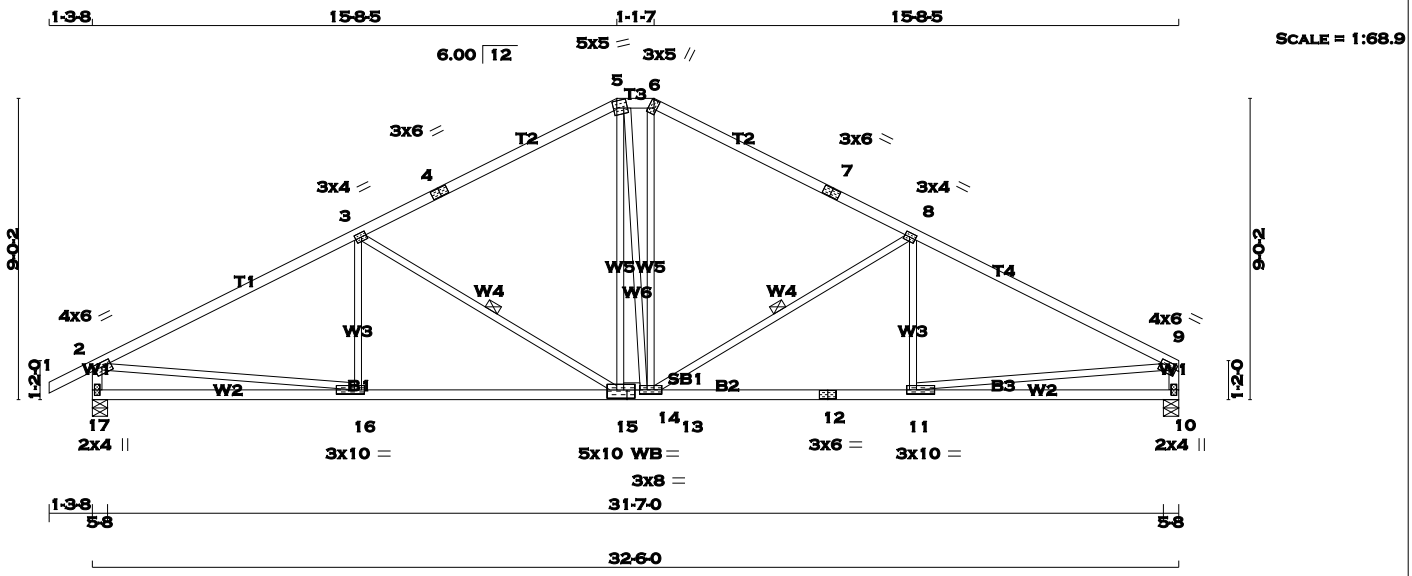

TOTAL WEIGHT = 137 lb

LUMBER
N. L. G. A. RULES

CHORDS	SIZE		LUMBER	DESCR.
1 - 4	2x4	DRY	No.2	SPF
4 - 5	2x4	DRY	No.2	SPF
5 - 6	2x4	DRY	No.2	SPF
6 - 7	2x4	DRY	No.2	SPF
7 - 9	2x4	DRY	No.2	SPF
17 - 2	2x4	DRY	No.2	SPF
10 - 9	2x4	DRY	No.2	SPF
17 - 14	2x4	DRY	No.2	SPF
14 - 12	2x4	DRY	No.2	SPF
12 - 10	2x4	DRY	No.2	SPF
ALL WEBS EXCEPT	2x3	DRY	No.2	SPF

DRY: SEASONED LUMBER.

PLATES (table is in inches)

JT	TYPE	PLATES	W	LEN	Y	X
2	TMVW-t	MT20	4.0	6.0	1.50	2.75
3	TMWW-t	MT20	3.0	4.0	1.50	1.75
4	TS-t	MT20	3.0	6.0		
5	TTWW-m	MT20	5.0	5.0	2.50	1.25
6	TTW+h	MT20	3.0	5.0	2.75	1.00
7	TS-t	MT20	3.0	6.0		
8	TMWW-t	MT20	3.0	4.0	1.50	1.75
9	TMVW-t	MT20	4.0	6.0	1.50	2.75
10	BMV1+p	MT20	2.0	4.0		
11	BMWW-t	MT20	3.0	10.0	1.50	3.50
12	BS-t	MT20	3.0	6.0		
13	BMWWW-t	MT20	3.0	8.0		
14						
15						
15	BBWW-l	MT20	5.0	10.0	3.00	3.50
16	BMWW-t	MT20	3.0	10.0	1.50	3.50
17	BMV1+p	MT20	2.0	4.0		

A SIZE FOR SIZE SUBSTITUTION OF MITEK MII20 WITH TEE-LOK TL20 PLATES IS ALLOWED.

DIMENSIONS, SUPPORTS AND LOADINGS SPECIFIED BY FABRICATOR TO BE VERIFIED BY BUILDING DESIGNER

BEARINGS

JT	FACTORED GROSS REACTION VERT	HORZ	MAXIMUM FACTORED GROSS REACTION DOWN	HORZ	UPLIFT	INPUT BRG IN-SX	REQRD BRG IN-SX
17	1646	0	1646	0	0	5-8	5-8
10	1541	0	1541	0	0	5-8	5-8

UNFACTORED REACTIONS

JT	1ST LCASE COMBINED	MAX./MIN. COMPONENT REACTIONS SNOW	LIVE	PERM.LIVE	WIND	DEAD	SOIL
17	1153	820 / 0	0 / 0	0 / 0	0 / 0	333 / 0	0 / 0
10	1082	757 / 0	0 / 0	0 / 0	0 / 0	325 / 0	0 / 0

BEARING MATERIAL TO BE SPF NO.2 OR BETTER AT JOINT(S) 17, 10

BRACING
TOP CHORD TO BE SHEATHED OR MAX. PURLIN SPACING = 3.58 FT.
MAX. UNBRACED BOTTOM CHORD LENGTH = 10.00 FT. OR RIGID CEILING DIRECTLY APPLIED.

ALL PITCH BREAKS AND PERIMETER CORNER JOINTS MUST BE LATERALLY RESTRAINED.

1 - 2x3 SPF No.2 LATERAL BRACE(S) AT 1/ 2 LENGTH OF 3-15, 8-13. DBS = 20-0-0 . CBF = 91 LBS.

DBS = DIAGONAL BRACE SPACING (MAX). CBF = CUMULATIVE BRACING FORCE. FASTEN LATERAL BRACE(S) USING (0.122"X3") SPIRAL NAILS : 1 NAIL FOR 2x3 BRACE(S), 2 FOR 1x4, 2x4, 2x5, 3 FOR 2x6, 4 FOR 2x8, 5 FOR 2x10, AND 6 FOR 2x12.

END VERTICAL(S) MUST BE SHEATHED OR HAVE BRACES AS INDICATED IN THE MAX. UNBRACED LENGTH COLUMN OF THE TABLE BELOW

LOADING
TOTAL LOAD CASES: (3)

CHORDS

MEMB. FR-TO	MAX. FACTORED FORCE (LBS)	FACTORED VERT. LOAD LC1 (PLF) FROM	TO	MAX CSI (LC)	MAX. UNBRAC LENGTH
1- 2	0 / 23	-77.3	-77.3	0.10 (1)	10.00
2- 3	-2266 / 0	-77.3	-77.3	0.86 (1)	3.58
3- 4	-1640 / 0	-77.3	-77.3	0.73 (1)	4.22
4- 5	-1640 / 0	-77.3	-77.3	0.73 (1)	4.22
5- 6	-1446 / 0	-77.3	-77.3	0.03 (1)	5.43
6- 7	-1644 / 0	-77.3	-77.3	0.73 (1)	4.21
7- 8	-1644 / 0	-77.3	-77.3	0.73 (1)	4.21
8- 9	-2265 / 0	-77.3	-77.3	0.86 (1)	3.58
17- 2	-1590 / 0	0.0	0.0	0.16 (1)	6.55
10- 9	-1484 / 0	0.0	0.0	0.15 (1)	6.73
17-16	0 / 0	-17.5	-17.5	0.27 (3)	10.00
16-15	0 / 2056	-17.5	-17.5	0.47 (1)	10.00
15-14	0 / 1442	-17.5	-17.5	0.35 (1)	10.00
14-13	0 / 1442	-17.5	-17.5	0.35 (1)	10.00
13-12	0 / 2055	-17.5	-17.5	0.46 (1)	10.00
12-11	0 / 2055	-17.5	-17.5	0.46 (1)	10.00
11-10	0 / 0	-17.5	-17.5	0.27 (3)	10.00

WEBS

MEMB. FR-TO	MAX. FACTORED FORCE (LBS)	MAX CSI (LC)
16- 3	-65 / 114	0.04 (3)
3-15	-727 / 0	0.43 (1)
15- 5	0 / 419	0.09 (1)
5-13	0 / 33	0.01 (1)
13- 6	0 / 454	0.10 (1)
13- 8	-722 / 0	0.43 (1)
11- 8	-70 / 112	0.04 (3)
2-16	0 / 2068	0.47 (1)
11- 9	0 / 2066	0.47 (1)

DESIGN CRITERIA

SPECIFIED LOADS:

TOP CH.	LL	=	23.3	PSF
	DL	=	3.0	PSF
BOT CH.	LL	=	0.0	PSF
	DL	=	7.0	PSF
TOTAL LOAD		=	33.3	PSF

SPACING = 24.0 IN. C/C

LOADING IN FLAT SECTION BASED ON A SLOPE OF 6.00/12

THIS TRUSS IS DESIGNED FOR RESIDENTIAL OR SMALL BUILDING REQUIREMENTS OF PART 9, NBCC 2010

THIS DESIGN COMPLIES WITH:
- PART 9 OF OBC 2012 , BCBC 2012 , ABC 2014
- CSA 086-09
- TPIC 2011

(55 % OF 27.2 P.S.F. G.S.L. PLUS 8.4 P.S.F. RAIN LOAD) EQUALS 23.3 P.S.F. SPECIFIED ROOF LIVE LOAD

ALLOWABLE DEFL.(LL)= L/360 (1.08")
CALCULATED VERT. DEFL.(LL) = L/ 999 (0.12")
ALLOWABLE DEFL.(TL)= L/360 (1.08")
CALCULATED VERT. DEFL.(TL) = L/ 999 (0.24")

CSI: TC=0.86 (2-3:1) , BC=0.47 (15-16:1) , WB=0.47 (2-16:1) , SSI=0.27 (2-3:1)

DOL LUMBER=1.00 NAIL=1.00 LS BEND=1.10 COMP=1.10 SHEAR=1.10 TENS= 1.10

COMPANION LIVE LOAD FACTOR = 0.50

TRUSS PLATE MANUFACTURER IS NOT RESPONSIBLE FOR QUALITY CONTROL IN THE TRUSS MANUFACTURING PLANT .

NAIL VALUES

PLATE	GRIP(DRY) (PSI) MAX	MIN	SHEAR (PLI) MAX	MIN	SECTION (PLI) MAX	MIN
MT20	618	354	1667	822	2284	1656

PLATE PLACEMENT TOL. = 0.250 inches

PLATE ROTATION TOL. = 5.0 Deg.

JSI GRIP= 0.89 (16) (INPUT = 0.90)
JSI METAL= 0.61 (2) (INPUT = 1.00)

LICENSED PROFESSIONAL ENGINEER
R.M. TREVISAN
100136551
March 13th, 2017
PROVINCE OF ONTARIO

RECEIVED
TOWN OF MILTON
MAR 29, 2017
17-4990
BUILDING DIVISION

READ ALL NOTES ON THIS PAGE AND ON THE ENGINEERING NOTE PAGE ENP-1. THE NOTE PAGE IS AN INTEGRAL PART OF THIS DRAWING AS IT CONTAINS SPECIFICATIONS AND CRITERIA USED IN THE DESIGN OF THIS COMPONENT.

KOTT

JOB NAME	TRUSS NAME	QUANTITY	PLY	JOB DESC.	DRWG NO.
PT0317-054	T79	14	1	TRUSS DESC. LECCO RIDGE-BLOCK 328	

Kott Lumber Uxbridge, Stouffville, ON, CGC

Version 8.100 S Feb 9 2017 MiTek Industries, Inc. Mon Mar 13 09:57:19 2017 Page 1
ID:pF8Cn?9h9uHzAm5tCmlVl5yJJCp-3LKhBGB5SbATgmSa5FK7E_6S5Lg2ia0KCz8bAGzbOn

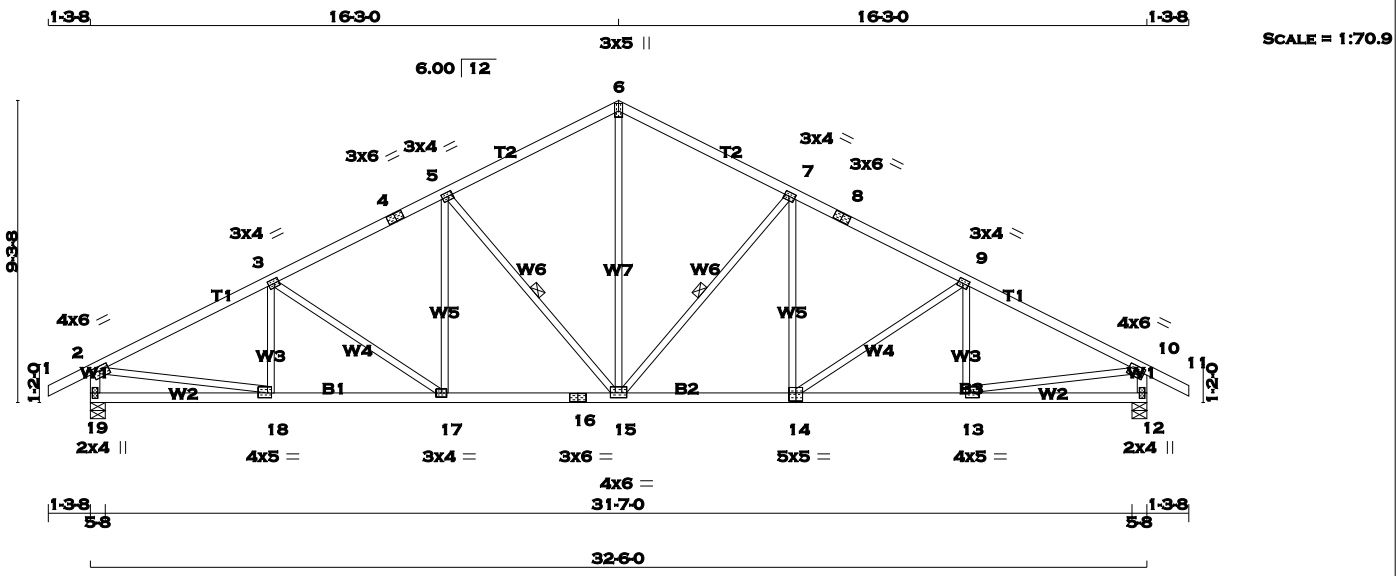

TOTAL WEIGHT = 14 X 138 = 1926 lb

LUMBER

N. L. G. A. RULES

CHORDS	SIZE		LUMBER	DESCR.
1 - 4	2x4	DRY	No.2	SPF
4 - 6	2x4	DRY	No.2	SPF
6 - 8	2x4	DRY	No.2	SPF
8 - 11	2x4	DRY	No.2	SPF
19 - 2	2x4	DRY	No.2	SPF
12 - 10	2x4	DRY	No.2	SPF
19 - 16	2x4	DRY	No.2	SPF
16 - 14	2x4	DRY	No.2	SPF
14 - 12	2x4	DRY	No.2	SPF
ALL WEBS EXCEPT	2x3	DRY	No.2	SPF

DRY: SEASONED LUMBER.

PLATES (table is in inches)

JT	TYPE	PLATES	W	LEN	Y	X
2 3, 5, 7, 9	TMVW-t	MT20	4.0	6.0	1.50	2.75
3	TMWW-t	MT20	3.0	4.0	1.50	1.75
4	TS-t	MT20	3.0	6.0		
6	TTW+p	MT20	3.0	5.0	2.75	1.50
8	TS-t	MT20	3.0	6.0		
10	TMVW-t	MT20	4.0	6.0	1.50	2.75
12	BMV1+p	MT20	2.0	4.0		
13	BMWW-t	MT20	4.0	5.0	1.75	1.50
14	BSWW-l	MT20	5.0	5.0	3.00	2.50
15	BMWWW-t	MT20	4.0	6.0	1.75	3.00
16	BS-t	MT20	3.0	6.0		
17	BMWW-t	MT20	3.0	4.0		
18	BMWW-t	MT20	4.0	5.0	1.75	1.50
19	BMV1+p	MT20	2.0	4.0		

A SIZE FOR SIZE SUBSTITUTION OF MITEK MII20 WITH TEE-LOK TL20 PLATES IS ALLOWED.

DIMENSIONS, SUPPORTS AND LOADINGS SPECIFIED BY FABRICATOR TO BE VERIFIED BY BUILDING DESIGNER

BEARINGS

JT	FACTORED GROSS REACTION VERT	HORZ	MAXIMUM FACTORED GROSS REACTION DOWN	HORZ	UPLIFT	INPUT BRG IN-SX	REQRD BRG IN-SX
19	1646	0	1646	0	0	5-8	5-8
12	1646	0	1646	0	0	5-8	5-8

UNFACTORED REACTIONS

JT	1ST LCASE COMBINED	MAX./MIN. COMPONENT REACTIONS SNOW	LIVE	PERM.LIVE	WIND	DEAD	SOIL
19	1153	820 / 0	0 / 0	0 / 0	0 / 0	333 / 0	0 / 0
12	1153	820 / 0	0 / 0	0 / 0	0 / 0	333 / 0	0 / 0

BEARING MATERIAL TO BE SPF NO.2 OR BETTER AT JOINT(S) 19, 12

BRACING

TOP CHORD TO BE SHEATHED OR MAX. PURLIN SPACING = 4.25 FT.
MAX. UNBRACED BOTTOM CHORD LENGTH = 10.00 FT. OR RIGID CEILING DIRECTLY APPLIED.

ALL PITCH BREAKS AND PERIMETER CORNER JOINTS MUST BE LATERALLY RESTRAINED.

1 - 2x3 SPF No.2 LATERAL BRACE(S) AT 1/ 2 LENGTH OF 7-15, 5-15. DBS = 20-0-0 . CBF = 79 LBS.

DBS = DIAGONAL BRACE SPACING (MAX). CBF = CUMULATIVE BRACING FORCE. FASTEN LATERAL BRACE(S) USING (0.122"X3") SPIRAL NAILS : 1 NAIL FOR 2x3 BRACE(S), 2 FOR 1x4, 2x4, 2x5, 3 FOR 2x6, 4 FOR 2x8, 5 FOR 2x10, AND 6 FOR 2x12.

END VERTICAL(S) MUST BE SHEATHED OR HAVE BRACES AS INDICATED IN THE MAX. UNBRACED LENGTH COLUMN OF THE TABLE BELOW

LOADING

TOTAL LOAD CASES: (3)

CHORDS

MEMB. FR-TO	MAX. FACTORED FORCE (LBS)	FACTORED VERT. LOAD LC1 (PLF) FROM	TO	MAX CSI (LC)	MAX. UNBRAC LENGTH
1- 2	0 / 23	-77.3	-77.3	0.10 (1)	10.00
2- 3	-2242 / 0	-77.3	-77.3	0.37 (1)	4.25
3- 4	-2022 / 0	-77.3	-77.3	0.30 (1)	4.50
4- 5	-2022 / 0	-77.3	-77.3	0.30 (1)	4.50
5- 6	-1582 / 0	-77.3	-77.3	0.29 (1)	4.96
6- 7	-1582 / 0	-77.3	-77.3	0.29 (1)	4.96
7- 8	-2022 / 0	-77.3	-77.3	0.30 (1)	4.50
8- 9	-2022 / 0	-77.3	-77.3	0.30 (1)	4.50
9-10	-2242 / 0	-77.3	-77.3	0.37 (1)	4.25
10-11	0 / 23	-77.3	-77.3	0.10 (1)	10.00
19- 2	-1604 / 0	0.0	0.0	0.16 (1)	6.52
12-10	-1604 / 0	0.0	0.0	0.16 (1)	6.52
19-18	0 / 0	-17.5	-17.5	0.12 (3)	10.00
18-17	0 / 2021	-17.5	-17.5	0.37 (1)	10.00
17-16	0 / 1808	-17.5	-17.5	0.35 (1)	10.00
16-15	0 / 1808	-17.5	-17.5	0.35 (1)	10.00
15-14	0 / 1808	-17.5	-17.5	0.35 (1)	10.00
14-13	0 / 2021	-17.5	-17.5	0.37 (1)	10.00
13-12	0 / 0	-17.5	-17.5	0.12 (3)	10.00

WEBS

MEMB. FR-TO	MAX. FACTORED FORCE (LBS)	MAX CSI (LC)
15- 6	0 / 1064	0.24 (1)
15- 7	-633 / 0	0.29 (1)
14- 7	0 / 235	0.05 (1)
14- 9	-257 / 0	0.19 (1)
13- 9	-210 / 28	0.05 (1)
5-15	-633 / 0	0.29 (1)
17- 5	0 / 235	0.05 (1)
3-17	-257 / 0	0.19 (1)
18- 3	-210 / 28	0.05 (1)
2-18	0 / 2044	0.46 (1)
13-10	0 / 2044	0.46 (1)

DESIGN CRITERIA

SPECIFIED LOADS:

TOP	CH.	LL	=	23.3	PSF
		DL	=	3.0	PSF
BOT	CH.	LL	=	0.0	PSF
		DL	=	7.0	PSF
TOTAL	LOAD		=	33.3	PSF

SPACING = 24.0 IN. C/C

THIS TRUSS IS DESIGNED FOR RESIDENTIAL OR SMALL BUILDING REQUIREMENTS OF PART 9, NBCC 2010

THIS DESIGN COMPLIES WITH:
- PART 9 OF OBC 2012 , BCBC 2012 , ABC 2014
- CSA 086-09
- TPIC 2011

(55 % OF 27.2 P.S.F. G.S.L. PLUS 8.4 P.S.F. RAIN LOAD) EQUALS 23.3 P.S.F. SPECIFIED ROOF LIVE LOAD

ALLOWABLE DEFL.(LL)= L/360 (1.08")
CALCULATED VERT. DEFL.(LL) = L/ 999 (0.11")
ALLOWABLE DEFL.(TL)= L/360 (1.08")
CALCULATED VERT. DEFL.(TL) = L/ 999 (0.20")

CSI: TC=0.37 (2-3:1) , BC=0.37 (17-18:1) , WB=0.46 (2-18:1) , SSI=0.18 (2-3:1)

DOL LUMBER=1.00 NAIL=1.00 LS BEND=1.10 COMP=1.10 SHEAR=1.10 TENS= 1.10

COMPANION LIVE LOAD FACTOR = 0.50

TRUSS PLATE MANUFACTURER IS NOT RESPONSIBLE FOR QUALITY CONTROL IN THE TRUSS MANUFACTURING PLANT .

NAIL VALUES

PLATE	GRIP(DRY) (PSI) MAX	MIN	SHEAR (PLI) MAX	MIN	SECTION (PLI) MAX	MIN
MT20	618	354	1667	822	2284	1656

PLATE PLACEMENT TOL. = 0.250 inches

PLATE ROTATION TOL. = 5.0 Deg.

JSI GRIP= 0.88 (18) (INPUT = 0.90)
JSI METAL= 0.61 (18) (INPUT = 1.00)

LICENSED PROFESSIONAL ENGINEER
R.M. TREVISAN
100136551
March 13th, 2017
PROVINCE OF ONTARIO

RECEIVED
TOWN OF MILTON
MAR 29, 2017
17-4990
BUILDING DIVISION

READ ALL NOTES ON THIS PAGE AND ON THE ENGINEERING NOTE PAGE ENP-1. THE NOTE PAGE IS AN INTEGRAL PART OF THIS DRAWING AS IT CONTAINS SPECIFICATIONS AND CRITERIA USED IN THE DESIGN OF THIS COMPONENT.

KOTT

JOB NAME	TRUSS NAME	QUANTITY	PLY	JOB DESC.	DRWG NO.
PT0317-054	T80	2	1	TRUSS DESC. LECCO RIDGE-BLOCK 328	

Kott Lumber Uxbridge, Stouffville, ON, CGC

Version 8.100 S Feb 9 2017 MiTek Industries, Inc. Mon Mar 13 09:57:19 2017 Page 1
ID:pF8Cn?9h9uHzAm5tCmlVl5yJJCp-3LKhBGB5SbATgmSa5FK7E_6XuLI1ihOKCz8bAGzbOn_

SCALE = 1:50.1

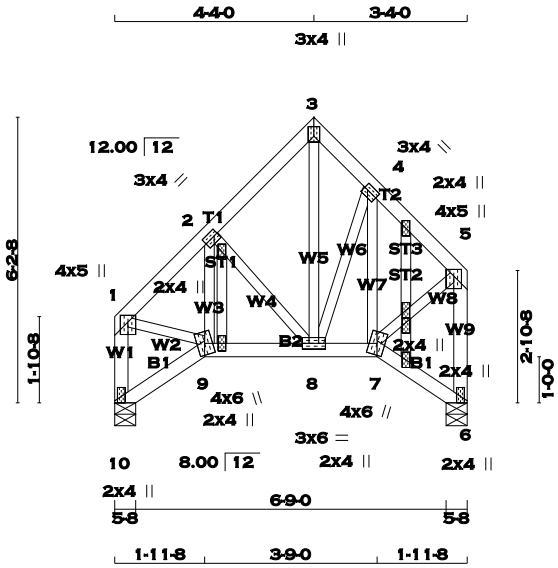

TOTAL WEIGHT = 2 X 49 = 98 lb
[M][F]

LUMBER
N. L. G. A. RULES

CHORDS	SIZE		LUMBER	DESCR.
1 - 3	2x4	DRY	No.2	SPF
3 - 5	2x4	DRY	No.2	SPF
10 - 1	2x4	DRY	No.2	SPF
6 - 5	2x4	DRY	No.2	SPF
10 - 9	2x4	DRY	No.2	SPF
9 - 7	2x4	DRY	No.2	SPF
7 - 6	2x4	DRY	No.2	SPF
ALL WEBS EXCEPT	2x3	DRY	No.2	SPF
ALL GABLE WEBS	2x3	DRY	No.2	SPF

DRY: SEASONED LUMBER.

GABLE STUDS SPACED AT 2-0-0 OC.

PLATES (table is in inches)

JT	TYPE	PLATES	W	LEN	Y	X
1	TMVW+p	MT20	4.0	5.0	1.75	2.00
2	TMWW-t	MT20	3.0	4.0	1.50	1.00
3	TTW+p	MT20	3.0	4.0	Edge	
4	TMWW-t	MT20	3.0	4.0	1.50	1.00
5	TMVW+p	MT20	4.0	5.0	1.75	2.00
6	BMV1+p	MT20	2.0	4.0	Edge	
7	BBWW+m	MT20	4.0	6.0		
8	BMWWW-t	MT20	3.0	6.0		
9	BBWW+m	MT20	4.0	6.0		
10	BMV1+p	MT20	2.0	4.0	Edge	
11, 12, 13, 14, 15						
11	NP+w	MT20	2.0	4.0		
15	NP+w	MT20	2.0	4.0	1.25	1.00

Edge - INDICATES REFERENCE CORNER OF PLATE TOUCHES EDGE OF CHORD.

A SIZE FOR SIZE SUBSTITUTION OF MITEK MII20 WITH TEE-LOK TL20 PLATES IS ALLOWED.

DIMENSIONS, SUPPORTS AND LOADINGS SPECIFIED BY FABRICATOR TO BE VERIFIED BY BUILDING DESIGNER

BEARINGS

JT	FACTORED GROSS REACTION VERT	HORZ	MAXIMUM FACTORED GROSS REACTION DOWN	HORZ	UPLIFT	INPUT BRG IN-SX	REQRD BRG IN-SX
10	364	0	364	0	0	5-8	5-8
6	364	0	364	0	0	5-8	5-8

UNFACTORED REACTIONS

JT	1ST LCASE COMBINED	MAX./MIN. COMPONENT REACTIONS SNOW	LIVE	PERM.LIVE	WIND	DEAD	SOIL
10	255	178 / 0	0 / 0	0 / 0	0 / 0	77 / 0	0 / 0
6	255	178 / 0	0 / 0	0 / 0	0 / 0	77 / 0	0 / 0

BEARING MATERIAL TO BE SPF NO.2 OR BETTER AT JOINT(S) 10, 6

BRACING
TOP CHORD TO BE SHEATHED OR MAX. PURLIN SPACING = 6.25 FT.
MAX. UNBRACED BOTTOM CHORD LENGTH = 10.00 FT. OR RIGID CEILING DIRECTLY APPLIED.

ALL PITCH BREAKS AND PERIMETER CORNER JOINTS MUST BE LATERALLY RESTRAINED.

LOADING
TOTAL LOAD CASES: (3)

CHORDS

MEMB. FR-TO	MAX. FACTORED FORCE (LBS)	FACTORED VERT. LOAD (PLF) FROM	TO	LC1 CSI (LC)	MAX UNBRAC LENGTH
1- 2	-307 / 0	-77.3	-77.3	0.04 (1)	6.25
2- 3	-213 / 0	-77.3	-77.3	0.04 (1)	6.25
3- 4	-214 / 0	-77.3	-77.3	0.02 (1)	6.25
4- 5	-214 / 0	-77.3	-77.3	0.04 (1)	6.25
10- 1	-346 / 0	0.0	0.0	0.04 (1)	7.81
6- 5	-346 / 0	0.0	0.0	0.06 (1)	7.81
10- 9	0 / 0	-17.5	-17.5	0.02 (3)	10.00
9- 8	0 / 228	-17.5	-17.5	0.05 (1)	10.00
8- 7	0 / 160	-17.5	-17.5	0.03 (1)	10.00
7- 6	0 / 0	-17.5	-17.5	0.02 (3)	10.00

WEBS

MEMB. FR-TO	MAX. FACTORED FORCE (LBS)	MAX CSI (LC)
9- 2	-21 / 22	0.01 (3)
2- 8	-130 / 0	0.03 (1)
8- 3	0 / 182	0.04 (1)
8- 4	-53 / 0	0.01 (1)
7- 4	-93 / 0	0.02 (1)
1- 9	0 / 234	0.05 (1)
7- 5	0 / 198	0.04 (1)

DESIGN CRITERIA

SPECIFIED LOADS:

TOP CH.	LL	=	23.3	PSF
	DL	=	3.0	PSF
BOT CH.	LL	=	0.0	PSF
	DL	=	7.0	PSF
TOTAL LOAD		=	33.3	PSF

SPACING = 24.0 IN. C/C

THIS TRUSS IS DESIGNED FOR RESIDENTIAL OR SMALL BUILDING REQUIREMENTS OF PART 9, NBCC 2010

THIS DESIGN COMPLIES WITH:
- PART 9 OF OBC 2012 , BCBC 2012 , ABC 2014
- CSA 086-09
- TPIC 2011

(55 % OF 27.2 P.S.F. G.S.L. PLUS 8.4 P.S.F. RAIN LOAD) EQUALS 23.3 P.S.F. SPECIFIED ROOF LIVE LOAD

ALLOWABLE DEFL.(LL)= L/360 (0.26")
CALCULATED VERT. DEFL.(LL) = L/ 999 (0.00")
ALLOWABLE DEFL.(TL)= L/360 (0.26")
CALCULATED VERT. DEFL.(TL) = L/ 999 (0.01")

CSI: TC=0.06 (5-6:1) , BC=0.05 (8-9:1) , WB=0.05 (1-9:1) , SSI=0.06 (2-3:1)

DOL LUMBER=1.00 NAIL=1.00 LS BEND=1.10 COMP=1.10 SHEAR=1.10 TENS= 1.10

COMPANION LIVE LOAD FACTOR = 0.50

AUTOSOLVE HEELS OFF

TRUSS PLATE MANUFACTURER IS NOT RESPONSIBLE FOR QUALITY CONTROL IN THE TRUSS MANUFACTURING PLANT .

NAIL VALUES

PLATE	GRIP(DRY) (PSI) MAX	MIN	SHEAR (PLI) MAX	MIN	SECTION (PLI) MAX	MIN
MT20	618	354	1667	822	2284	1656

PLATE PLACEMENT TOL. = 0.250 inches

PLATE ROTATION TOL. = 5.0 Deg.

JSI GRIP= 0.58 (3) (INPUT = 0.90)
JSI METAL= 0.08 (10) (INPUT = 1.00)

LICENSED PROFESSIONAL ENGINEER
P.M. TREVISAN
100136551
March 13th, 2017
PROVINCE OF ONTARIO

RECEIVED
TOWN OF MILTON
MAR 29, 2017
17-4990
BUILDING DIVISION

READ ALL NOTES ON THIS PAGE AND ON THE ENGINEERING NOTE PAGE ENP-1. THE NOTE PAGE IS AN INTEGRAL PART OF THIS DRAWING AS IT CONTAINS SPECIFICATIONS AND CRITERIA USED IN THE DESIGN OF THIS COMPONENT.

KOTT

JOB NAME	TRUSS NAME	QUANTITY	PLY	JOB DESC.	DRWG NO.
PT0317-054	**T81**	**2**	**1**	TRUSS DESC. LECCO RIDGE-BLOCK 328	

Kott Lumber Uxbridge, Stouffville, ON, CGC

Version 8.100 S Feb 9 2017 MiTek Industries, Inc. Mon Mar 13 09:57:20 2017 Page 1
ID:pF8Cn?9h9uHzAm5tCmlVl5yJJCp-XXu3OcCjDuIKHw1mfyrMnBfhhl5OR8kTRdu9hizbOmz

SCALE = 1:50.2

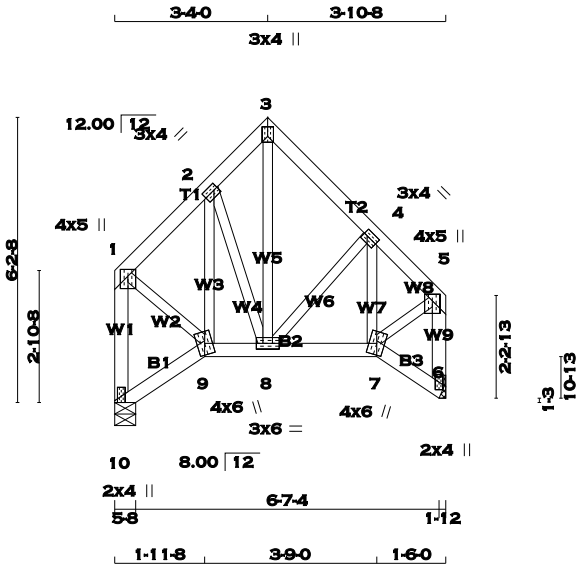

TOTAL WEIGHT = 2 X 43 = 87 lb
[M][F]

LUMBER
N. L. G. A. RULES

CHORDS	SIZE		LUMBER	DESCR.
1 - 3	2x4	DRY	No.2	SPF
3 - 5	2x4	DRY	No.2	SPF
10 - 1	2x4	DRY	No.2	SPF
6 - 5	2x4	DRY	No.2	SPF
10 - 9	2x4	DRY	No.2	SPF
9 - 7	2x4	DRY	No.2	SPF
7 - 6	2x4	DRY	No.2	SPF
ALL WEBS EXCEPT	2x3	DRY	No.2	SPF

DRY: SEASONED LUMBER.

PLATES (table is in inches)

JT	TYPE	PLATES	W	LEN	Y	X
1	TMVW+p	MT20	4.0	5.0	1.75	2.00
2	TMWW-t	MT20	3.0	4.0	1.50	1.00
3	TTW+p	MT20	3.0	4.0	Edge	
4	TMWW-t	MT20	3.0	4.0	1.50	1.00
5	TMVW+p	MT20	4.0	5.0	1.75	2.00
6	BMV1+p	MT20	2.0	4.0		
7	BBWW+m	MT20	4.0	6.0		
8	BMWWW-t	MT20	3.0	6.0		
9	BBWW+m	MT20	4.0	6.0		
10	BMV1+p	MT20	2.0	4.0	Edge	

Edge - INDICATES REFERENCE CORNER OF PLATE TOUCHES EDGE OF CHORD.

A SIZE FOR SIZE SUBSTITUTION OF MITEK MII20 WITH TEE-LOK TL20 PLATES IS ALLOWED.

DIMENSIONS, SUPPORTS AND LOADINGS SPECIFIED BY FABRICATOR TO BE VERIFIED BY BUILDING DESIGNER

BEARINGS

JT	FACTORED GROSS REACTION VERT	HORZ	MAXIMUM GROSS REACTION DOWN	HORZ	FACTORED UPLIFT	INPUT BRG IN-SX	REQRD BRG IN-SX
10	342	0	342	0	0	5-8	5-8
6	342	0	342	0	0	HANGER BY OTHERS	
						MIN. SEAT SIZE: 1-12	

UNFACTORED REACTIONS

JT	1ST LCASE COMBINED	MAX./MIN. COMPONENT REACTIONS SNOW	LIVE	PERM.LIVE	WIND	DEAD	SOIL
10	240	168 / 0	0 / 0	0 / 0	0 / 0	72 / 0	0 / 0
6	240	168 / 0	0 / 0	0 / 0	0 / 0	72 / 0	0 / 0

BEARING MATERIAL TO BE SPF NO.2 OR BETTER AT JOINT(S) 10

BRACING
TOP CHORD TO BE SHEATHED OR MAX. PURLIN SPACING = 6.25 FT.
MAX. UNBRACED BOTTOM CHORD LENGTH = 10.00 FT. OR RIGID CEILING DIRECTLY APPLIED.

ALL PITCH BREAKS AND PERIMETER CORNER JOINTS MUST BE LATERALLY RESTRAINED.

LOADING
TOTAL LOAD CASES: (3)

CHORDS

MEMB. FR-TO	MAX. FORCE (LBS)	FACTORED VERT. LOAD LC1 (PLF) FROM	TO	MAX CSI (LC)	MAX. UNBRAC LENGTH
1- 2	-197 / 0	-77.3	-77.3	0.04 (1)	6.25
2- 3	-193 / 0	-77.3	-77.3	0.03 (1)	6.25
3- 4	-190 / 0	-77.3	-77.3	0.04 (1)	6.25
4- 5	-233 / 0	-77.3	-77.3	0.04 (1)	6.25
10- 1	-325 / 0	0.0	0.0	0.06 (1)	7.81
6- 5	-329 / 0	0.0	0.0	0.04 (1)	7.81
10- 9	0 / 0	-17.5	-17.5	0.02 (3)	10.00
9- 8	0 / 147	-17.5	-17.5	0.03 (1)	10.00
8- 7	0 / 178	-17.5	-17.5	0.04 (1)	10.00
7- 6	0 / 0	-17.5	-17.5	0.01 (3)	10.00

WEBS

MEMB. FR-TO	MAX. FORCE (LBS)	MAX CSI (LC)
9- 2	-84 / 0	0.02 (1)
2- 8	-61 / 0	0.02 (1)
8- 3	0 / 151	0.03 (1)
8- 4	-78 / 0	0.02 (1)
7- 4	-80 / 3	0.01 (1)
1- 9	0 / 183	0.04 (1)
7- 5	0 / 208	0.05 (1)

DESIGN CRITERIA

SPECIFIED LOADS:

TOP CH.	LL	=	23.3	PSF
	DL	=	3.0	PSF
BOT CH.	LL	=	0.0	PSF
	DL	=	7.0	PSF
TOTAL LOAD		=	33.3	PSF

SPACING = 24.0 IN. C/C

THIS TRUSS IS DESIGNED FOR RESIDENTIAL OR SMALL BUILDING REQUIREMENTS OF PART 9, NBCC 2010

THIS DESIGN COMPLIES WITH:
- PART 9 OF OBC 2012 , BCBC 2012 , ABC 2014
- CSA 086-09
- TPIC 2011

(55 % OF 27.2 P.S.F. G.S.L. PLUS 8.4 P.S.F. RAIN LOAD) EQUALS 23.3 P.S.F. SPECIFIED ROOF LIVE LOAD

ALLOWABLE DEFL.(LL)= L/360 (0.24")
CALCULATED VERT. DEFL.(LL) = L/ 999 (0.00")
ALLOWABLE DEFL.(TL)= L/360 (0.24")
CALCULATED VERT. DEFL.(TL) = L/ 999 (0.01")

CSI: TC=0.06 (1-10:1) , BC=0.04 (7-8:1) , WB=0.05 (5-7:1) , SSI=0.06 (3-4:1)

DOL LUMBER=1.00 NAIL=1.00 LS BEND=1.10 COMP=1.10 SHEAR=1.10 TENS= 1.10

COMPANION LIVE LOAD FACTOR = 0.50

AUTOSOLVE HEELS OFF

TRUSS PLATE MANUFACTURER IS NOT RESPONSIBLE FOR QUALITY CONTROL IN THE TRUSS MANUFACTURING PLANT .

NAIL VALUES

PLATE	GRIP(DRY) (PSI) MAX	MIN	SHEAR (PLI) MAX	MIN	SECTION (PLI) MAX	MIN
MT20	618	354	1667	822	2284	1656

PLATE PLACEMENT TOL. = 0.250 inches

PLATE ROTATION TOL. = 5.0 Deg.

JSI GRIP= 0.48 (3) (INPUT = 0.90)
JSI METAL= 0.08 (6) (INPUT = 1.00)

LICENSED PROFESSIONAL ENGINEER
R.M. TREVISAN
100136551
March 13th, 2017
PROVINCE OF ONTARIO

RECEIVED
TOWN OF MILTON
MAR 29, 2017
17-4990
BUILDING DIVISION

READ ALL NOTES ON THIS PAGE AND ON THE ENGINEERING NOTE PAGE ENP-1. THE NOTE PAGE IS AN INTEGRAL PART OF THIS DRAWING AS IT CONTAINS SPECIFICATIONS AND CRITERIA USED IN THE DESIGN OF THIS COMPONENT.

KOTT

JOB NAME	TRUSS NAME	QUANTITY	PLY	JOB DESC.	DRWG NO.
PT0317-054	T82	1	1	TRUSS DESC. LECCO RIDGE-BLOCK 328	

Kott Lumber Uxbridge, Stouffville, ON, CGC

Version 8.100 S Feb 9 2017 MiTek Industries, Inc. Mon Mar 13 09:57:20 2017 Page 1
ID:pF8Cn?9h9uHzAm5tCmlVl5yJJCp-XXu3OcCjDuIKHw1mfyrMnBfefl2IR8STRdu9hizbOmz

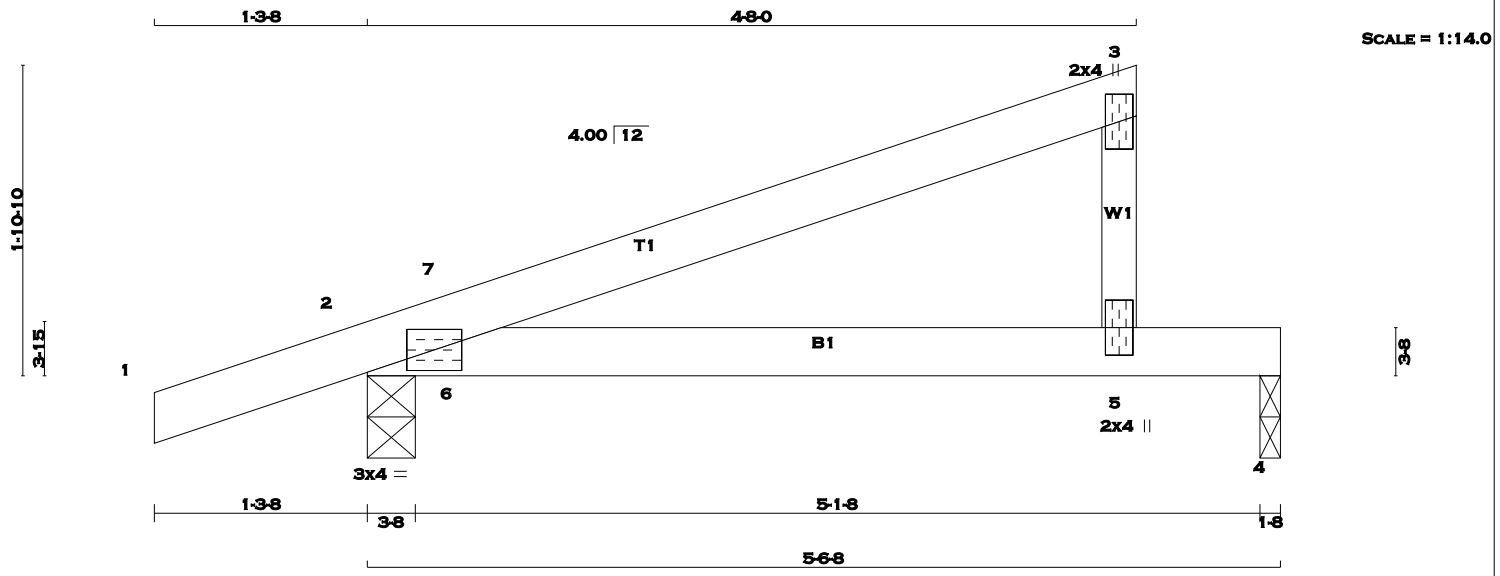

TOTAL WEIGHT = 15 lb [M]

LUMBER
N. L. G. A. RULES

CHORDS	SIZE		LUMBER	DESCR.
1 - 3	2x4	DRY	No.2	SPF
5 - 3	2x3	DRY	No.2	SPF
2 - 4	2x4	DRY	No.2	SPF

DRY: SEASONED LUMBER.

PLATES (table is in inches)

JT	TYPE	PLATES	W	LEN	Y	X
2	TMB1-I	MT20	3.0	4.0		
3	TMV+p	MT20	2.0	4.0		
5	BMV+p	MT20	2.0	4.0		

A SIZE FOR SIZE SUBSTITUTION OF MITEK MII20 WITH TEE-LOK TL20 PLATES IS ALLOWED.

DIMENSIONS, SUPPORTS AND LOADINGS SPECIFIED BY FABRICATOR TO BE VERIFIED BY BUILDING DESIGNER

BEARINGS

JT	FACTORED GROSS REACTION VERT	HORZ	MAXIMUM FACTORED GROSS REACTION DOWN	HORZ	UPLIFT	INPUT BRG IN-SX	REQRD BRG IN-SX
2	361	0	361	0	0	3-8	3-8
4	200	0	200	0	0	1-8	1-8

UNFACTORED REACTIONS

JT	1ST LCASE COMBINED	MAX./MIN. COMPONENT REACTIONS SNOW	LIVE	PERM.LIVE	WIND	DEAD	SOIL
2	251	188 / 0	0 / 0	0 / 0	0 / 0	63 / 0	0 / 0
4	142	91 / 0	0 / 0	0 / 0	0 / 0	51 / 0	0 / 0

BEARING MATERIAL TO BE SPF NO.2 OR BETTER AT JOINT(S) 2, 4

BRACING
TOP CHORD TO BE SHEATHED OR MAX. PURLIN SPACING = 6.25 FT.
MAX. UNBRACED BOTTOM CHORD LENGTH = 10.00 FT. OR RIGID CEILING DIRECTLY APPLIED.

ALL PITCH BREAKS AND PERIMETER CORNER JOINTS MUST BE LATERALLY RESTRAINED.

LOADING
TOTAL LOAD CASES: (3)

CHORDS

MEMB. FR-TO	MAX. FACTORED FORCE (LBS)	FACTORED VERT. LOAD (PLF) FROM	TO	LC1 MAX CSI (LC)	MAX. UNBRAC LENGTH
1- 2	0 / 15	-77.3	-77.3	0.10 (1)	10.00
2- 7	-28 / 0	-77.3	-77.3	0.09 (3)	6.25
7- 3	0 / 4	-77.3	-77.3	0.25 (1)	10.00
5- 3	-169 / 0	0.0	0.0	0.03 (1)	7.81
2- 6	0 / 0	-17.5	-17.5	0.13 (1)	10.00
6- 5	0 / 0	-17.5	-17.5	0.24 (1)	10.00
5- 4	0 / 0	-17.5	-17.5	0.23 (1)	10.00

WEBS

MEMB. FR-TO	MAX. FACTORED FORCE (LBS)	MAX CSI (LC)
6- 7	-91 / 58	0.00 (1)

DESIGN CRITERIA

SPECIFIED LOADS:

TOP	CH.	LL	=	23.3	PSF
		DL	=	3.0	PSF
BOT	CH.	LL	=	0.0	PSF
		DL	=	7.0	PSF
TOTAL	LOAD		=	33.3	PSF

SPACING = 24.0 IN. C/C

THIS TRUSS IS DESIGNED FOR RESIDENTIAL OR SMALL BUILDING REQUIREMENTS OF PART 9, NBCC 2010

THIS DESIGN COMPLIES WITH:
- PART 9 OF OBC 2012 , BCBC 2012 , ABC 2014
- CSA 086-09
- TPIC 2011

(55 % OF 27.2 P.S.F. G.S.L. PLUS 8.4 P.S.F. RAIN LOAD) EQUALS 23.3 P.S.F. SPECIFIED ROOF LIVE LOAD

ALLOWABLE DEFL.(LL)= L/360 (0.19")
CALCULATED VERT. DEFL.(LL) = L/ 999 (0.06")
ALLOWABLE DEFL.(TL)= L/360 (0.19")
CALCULATED VERT. DEFL.(TL) = L/ 556 (0.12")

CSI: TC=0.25 (3-7:1) , BC=0.24 (5-6:1) , WB=0.00 (6-7:1) , SSI=0.16 (4-5:1)

DOL LUMBER=1.00 NAIL=1.00 LS BEND=1.10 COMP=1.10 SHEAR=1.10 TENS= 1.10

COMPANION LIVE LOAD FACTOR = 0.50

TRUSS PLATE MANUFACTURER IS NOT RESPONSIBLE FOR QUALITY CONTROL IN THE TRUSS MANUFACTURING PLANT .

NAIL VALUES

PLATE	GRIP(DRY) (PSI) MAX	MIN	SHEAR (PLI) MAX	MIN	SECTION (PLI) MAX	MIN
MT20	618	354	1667	822	2284	1656

PLATE PLACEMENT TOL. = 0.250 inches

PLATE ROTATION TOL. = 5.0 Deg.

JSI GRIP= 0.18 (2) (INPUT = 0.90)
JSI METAL= 0.05 (2) (INPUT = 1.00)

LICENSED PROFESSIONAL ENGINEER
R.M. TREVISAN
100136551
March 13th, 2017
PROVINCE OF ONTARIO

RECEIVED
TOWN OF MILTON
MAR 29, 2017
17-4990
BUILDING DIVISION

READ ALL NOTES ON THIS PAGE AND ON THE ENGINEERING NOTE PAGE ENP-1. THE NOTE PAGE IS AN INTEGRAL PART OF THIS DRAWING AS IT CONTAINS SPECIFICATIONS AND CRITERIA USED IN THE DESIGN OF THIS COMPONENT.

KOTT

JOB NAME	TRUSS NAME	QUANTITY	PLY	JOB DESC.	DRWG NO.
PT0317-054	T82A	1	1	TRUSS DESC. LECCO RIDGE-BLOCK 328	

Kott Lumber Uxbridge, Stouffville, ON, CGC

Version 8.100 S Feb 9 2017 MiTek Industries, Inc. Mon Mar 13 09:57:20 2017 Page 1
ID:pF8Cn?9h9uHzAm5tCmlVl5yJJCp-XXu3OcCjDuIKHw1mfyrMnBfeil2HR8STRdu9hizbOmz

SCALE = 1:19.9

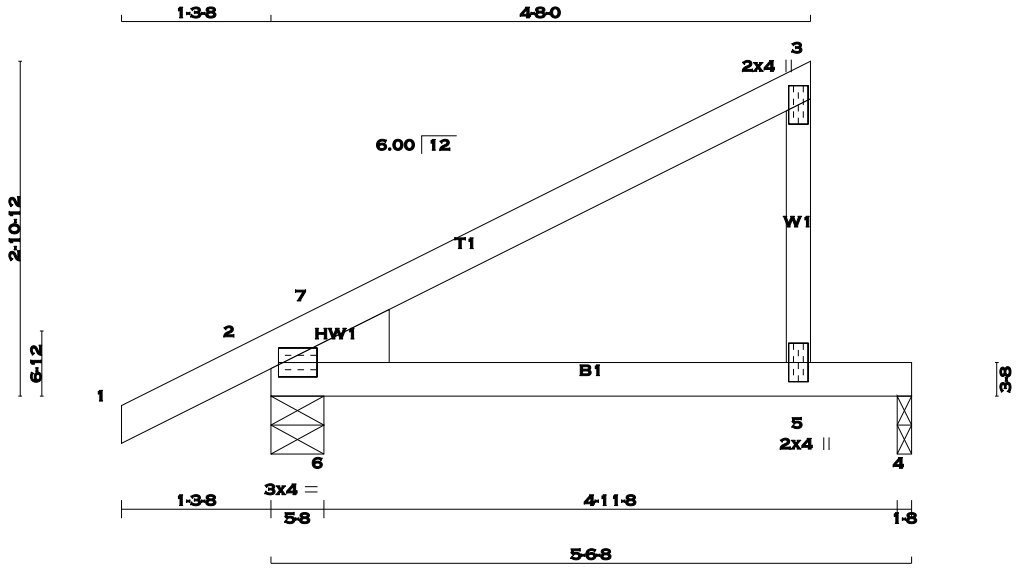

TOTAL WEIGHT = 18 lb

LUMBER
N. L. G. A. RULES

CHORDS	SIZE		LUMBER	DESCR.
1 - 3	2x4	DRY	No.2	SPF
5 - 3	2x3	DRY	No.2	SPF
2 - 4	2x4	DRY	No.2	SPF

DRY: SEASONED LUMBER.

PLATES (table is in inches)

JT	TYPE	PLATES	W	LEN	Y	X
2	TMBH1-I	MT20	3.0	4.0	1.50	0.50
3	TMV+p	MT20	2.0	4.0		
5	BMV+p	MT20	2.0	4.0		

A SIZE FOR SIZE SUBSTITUTION OF MITEK MII20 WITH TEE-LOK TL20 PLATES IS ALLOWED.

DIMENSIONS, SUPPORTS AND LOADINGS SPECIFIED BY FABRICATOR TO BE VERIFIED BY BUILDING DESIGNER

BEARINGS

JT	FACTORED GROSS REACTION VERT	HORZ	MAXIMUM FACTORED GROSS REACTION DOWN	HORZ	UPLIFT	INPUT BRG IN-SX	REQRD BRG IN-SX	HEEL WEDGE
2	362	0	362	0	0	5-8	5-8	2x6 L
4	200	0	200	0	0	1-8	1-8	

UNFACTORED REACTIONS

JT	1ST LCASE COMBINED	MAX./MIN. COMPONENT REACTIONS SNOW	LIVE	PERM.LIVE	WIND	DEAD	SOIL
2	252	189 / 0	0 / 0	0 / 0	0 / 0	63 / 0	0 / 0
4	142	91 / 0	0 / 0	0 / 0	0 / 0	51 / 0	0 / 0

BEARING MATERIAL TO BE SPF NO.2 OR BETTER AT JOINT(S) 2, 4

BRACING
TOP CHORD TO BE SHEATHED OR MAX. PURLIN SPACING = 6.25 FT.
MAX. UNBRACED BOTTOM CHORD LENGTH = 10.00 FT. OR RIGID CEILING DIRECTLY APPLIED.

ALL PITCH BREAKS AND PERIMETER CORNER JOINTS MUST BE LATERALLY RESTRAINED.

LOADING
TOTAL LOAD CASES: (3)

CHORDS

MEMB. FR-TO	MAX. FACTORED FORCE (LBS)	FACTORED VERT. LOAD (PLF) FROM	TO	LC1 MAX CSI (LC)	MAX. UNBRAC LENGTH
1- 2	0 / 16	-77.3	-77.3	0.10 (1)	10.00
2- 7	-50 / 0	-77.3	-77.3	0.08 (3)	6.25
7- 3	0 / 4	-77.3	-77.3	0.25 (1)	10.00
5- 3	-168 / 0	0.0	0.0	0.03 (1)	7.81
2- 6	0 / 0	-17.5	-17.5	0.12 (1)	10.00
6- 5	0 / 0	-17.5	-17.5	0.24 (1)	10.00
5- 4	0 / 0	-17.5	-17.5	0.23 (1)	10.00

WEBS

MEMB. FR-TO	MAX. FACTORED FORCE (LBS)	MAX CSI (LC)
6- 7	-117 / 60	0.00 (1)

DESIGN CRITERIA

SPECIFIED LOADS:

TOP CH.	LL =	23.3	PSF
	DL =	3.0	PSF
BOT CH.	LL =	0.0	PSF
	DL =	7.0	PSF
TOTAL LOAD	=	33.3	PSF

SPACING = 24.0 IN. C/C

THIS TRUSS IS DESIGNED FOR RESIDENTIAL OR SMALL BUILDING REQUIREMENTS OF PART 9, NBCC 2010

THIS DESIGN COMPLIES WITH:
- PART 9 OF OBC 2012 , BCBC 2012 , ABC 2014
- CSA 086-09
- TPIC 2011

(55 % OF 27.2 P.S.F. G.S.L. PLUS 8.4 P.S.F. RAIN LOAD) EQUALS 23.3 P.S.F. SPECIFIED ROOF LIVE LOAD

ALLOWABLE DEFL.(LL)= L/360 (0.19")
CALCULATED VERT. DEFL.(LL) = L/ 999 (0.06")
ALLOWABLE DEFL.(TL)= L/360 (0.19")
CALCULATED VERT. DEFL.(TL) = L/ 549 (0.12")

CSI: TC=0.25 (3-7:1) , BC=0.24 (5-6:1) , WB=0.00 (6-7:1) , SSI=0.16 (4-5:1)

DOL LUMBER=1.00 NAIL=1.00 LS BEND=1.10 COMP=1.10 SHEAR=1.10 TENS= 1.10

COMPANION LIVE LOAD FACTOR = 0.50

TRUSS PLATE MANUFACTURER IS NOT RESPONSIBLE FOR QUALITY CONTROL IN THE TRUSS MANUFACTURING PLANT .

NAIL VALUES

PLATE	GRIP(DRY) (PSI) MAX	MIN	SHEAR (PLI) MAX	MIN	SECTION (PLI) MAX	MIN
MT20	618	354	1667	822	2284	1656

PLATE PLACEMENT TOL. = 0.250 inches

PLATE ROTATION TOL. = 5.0 Deg.

JSI GRIP= 0.87 (2) (INPUT = 0.90)
JSI METAL= 0.06 (2) (INPUT = 1.00)

LICENSED PROFESSIONAL ENGINEER
R.M. TREVISAN
100136551
March 13th, 2017
PROVINCE OF ONTARIO

RECEIVED
TOWN OF MILTON
MAR 29, 2017
17-4990
BUILDING DIVISION

READ ALL NOTES ON THIS PAGE AND ON THE ENGINEERING NOTE PAGE ENP-1. THE NOTE PAGE IS AN INTEGRAL PART OF THIS DRAWING AS IT CONTAINS SPECIFICATIONS AND CRITERIA USED IN THE DESIGN OF THIS COMPONENT.

KOTT

JOB NAME	TRUSS NAME	QUANTITY	PLY	JOB DESC.	DRWG NO.
PT0317-054	T83	4	1	TRUSS DESC. LECCO RIDGE-BLOCK 328	

Kott Lumber Uxbridge, Stouffville, ON, CGC

Version 8.100 S Feb 9 2017 MiTek Industries, Inc. Mon Mar 13 09:57:20 2017 Page 1
ID:pF8Cn?9h9uHzAm5tCmlVl5yJJCp-XXu3OcCjDuIKHw1mfyrMnBff4l3JR8STRdu9hizbOmz

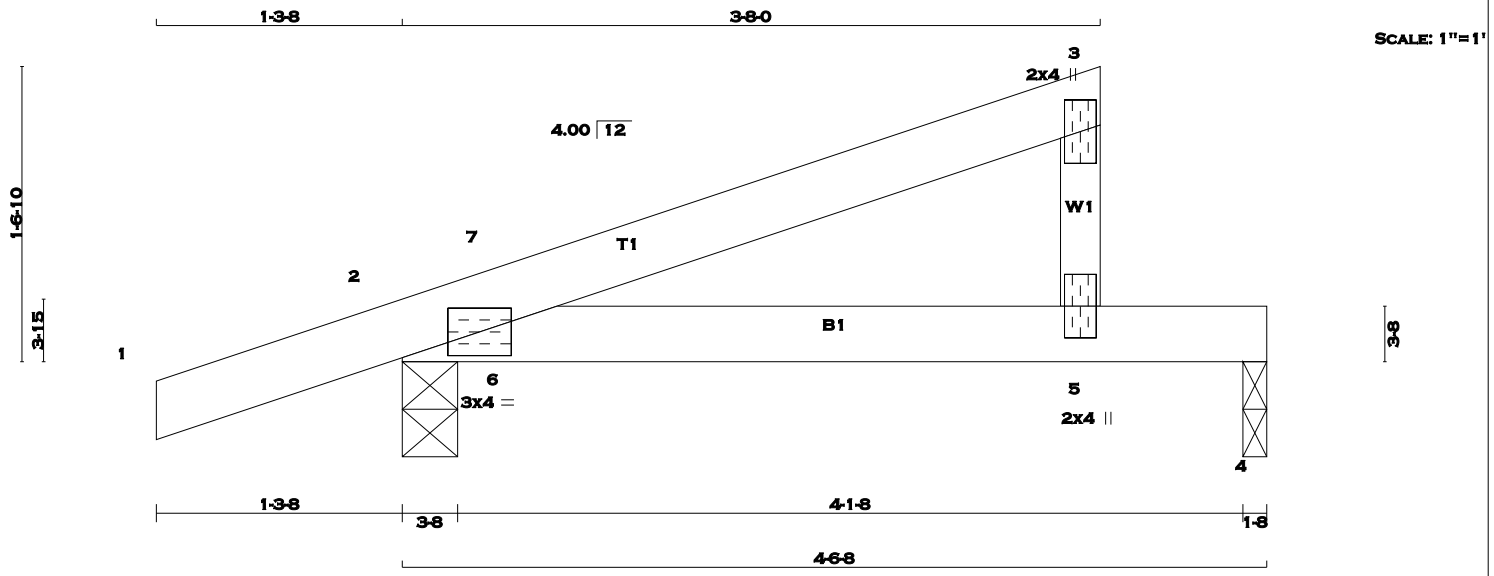

TOTAL WEIGHT = 4 X 12 = 48 lb
[M]

LUMBER
N. L. G. A. RULES

CHORDS	SIZE		LUMBER	DESCR.
1 - 3	2x4	DRY	No.2	SPF
5 - 3	2x3	DRY	No.2	SPF
2 - 4	2x4	DRY	No.2	SPF

DRY: SEASONED LUMBER.

PLATES (table is in inches)

JT	TYPE	PLATES	W	LEN	Y	X
2	TMB1-I	MT20	3.0	4.0		
3	TMV+p	MT20	2.0	4.0		
5	BMV+p	MT20	2.0	4.0		

A SIZE FOR SIZE SUBSTITUTION OF MITEK MII20 WITH TEE-LOK TL20 PLATES IS ALLOWED.

DIMENSIONS, SUPPORTS AND LOADINGS SPECIFIED BY FABRICATOR TO BE VERIFIED BY BUILDING DESIGNER

BEARINGS

JT	FACTORED GROSS REACTION VERT	HORZ	MAXIMUM FACTORED GROSS REACTION DOWN	HORZ	UPLIFT	INPUT BRG IN-SX	REQRD BRG IN-SX
2	312	0	312	0	0	3-8	3-8
4	154	0	154	0	0	1-8	1-8

UNFACTORED REACTIONS

JT	1ST LCASE COMBINED	MAX./MIN. COMPONENT REACTIONS SNOW	LIVE	PERM.LIVE	WIND	DEAD	SOIL
2	217	164 / 0	0 / 0	0 / 0	0 / 0	53 / 0	0 / 0
4	110	69 / 0	0 / 0	0 / 0	0 / 0	41 / 0	0 / 0

BEARING MATERIAL TO BE SPF NO.2 OR BETTER AT JOINT(S) 2, 4

BRACING
TOP CHORD TO BE SHEATHED OR MAX. PURLIN SPACING = 6.25 FT.
MAX. UNBRACED BOTTOM CHORD LENGTH = 10.00 FT. OR RIGID CEILING DIRECTLY APPLIED.

ALL PITCH BREAKS AND PERIMETER CORNER JOINTS MUST BE LATERALLY RESTRAINED.

LOADING
TOTAL LOAD CASES: (3)

CHORDS

MEMB. FR-TO	MAX. FACTORED FORCE (LBS)	FACTORED VERT. LOAD (PLF) FROM	TO	LC1 MAX CSI (LC)	MAX. UNBRAC LENGTH
1- 2	0 / 15	-77.3	-77.3	0.10 (1)	10.00
2- 7	-28 / 0	-77.3	-77.3	0.07 (1)	6.25
7- 3	0 / 5	-77.3	-77.3	0.16 (1)	10.00
5- 3	-134 / 0	0.0	0.0	0.02 (1)	7.81
2- 6	0 / 0	-17.5	-17.5	0.08 (1)	10.00
6- 5	0 / 0	-17.5	-17.5	0.18 (1)	10.00
5- 4	0 / 0	-17.5	-17.5	0.17 (1)	10.00

WEBS

MEMB. FR-TO	MAX. FACTORED FORCE (LBS)	MAX CSI (LC)
6- 7	-46 / 43	0.00 (1)

DESIGN CRITERIA

SPECIFIED LOADS:

TOP	CH.	LL	=	23.3	PSF
		DL	=	3.0	PSF
BOT	CH.	LL	=	0.0	PSF
		DL	=	7.0	PSF
TOTAL	LOAD		=	33.3	PSF

SPACING = 24.0 IN. C/C

THIS TRUSS IS DESIGNED FOR RESIDENTIAL OR SMALL BUILDING REQUIREMENTS OF PART 9, NBCC 2010

THIS DESIGN COMPLIES WITH:
- PART 9 OF OBC 2012 , BCBC 2012 , ABC 2014
- CSA 086-09
- TPIC 2011

(55 % OF 27.2 P.S.F. G.S.L. PLUS 8.4 P.S.F. RAIN LOAD) EQUALS 23.3 P.S.F. SPECIFIED ROOF LIVE LOAD

ALLOWABLE DEFL.(LL)= L/360 (0.19")
CALCULATED VERT. DEFL.(LL) = L/ 999 (0.03")
ALLOWABLE DEFL.(TL)= L/360 (0.19")
CALCULATED VERT. DEFL.(TL) = L/ 978 (0.06")

CSI: TC=0.16 (3-7:1) , BC=0.18 (5-6:1) , WB=0.00 (6-7:1) , SSI=0.12 (4-5:1)

DOL LUMBER=1.00 NAIL=1.00 LS BEND=1.10 COMP=1.10 SHEAR=1.10 TENS= 1.10

COMPANION LIVE LOAD FACTOR = 0.50

TRUSS PLATE MANUFACTURER IS NOT RESPONSIBLE FOR QUALITY CONTROL IN THE TRUSS MANUFACTURING PLANT .

NAIL VALUES

PLATE	GRIP(DRY) (PSI) MAX	MIN	SHEAR (PLI) MAX	MIN	SECTION (PLI) MAX	MIN
MT20	618	354	1667	822	2284	1656

PLATE PLACEMENT TOL. = 0.250 inches

PLATE ROTATION TOL. = 5.0 Deg.

JSI GRIP= 0.15 (2) (INPUT = 0.90)
JSI METAL= 0.05 (2) (INPUT = 1.00)

LICENSED PROFESSIONAL ENGINEER
R.M. TREVISAN
100136551
March 13th, 2017
PROVINCE OF ONTARIO

RECEIVED
TOWN OF MILTON
MAR 29, 2017
17-4990
BUILDING DIVISION

READ ALL NOTES ON THIS PAGE AND ON THE ENGINEERING NOTE PAGE ENP-1. THE NOTE PAGE IS AN INTEGRAL PART OF THIS DRAWING AS IT CONTAINS SPECIFICATIONS AND CRITERIA USED IN THE DESIGN OF THIS COMPONENT.

KOTT

JOB NAME	TRUSS NAME	QUANTITY	PLY	JOB DESC.	DRWG NO.
PT0317-054	T83A	5	1	TRUSS DESC. LECCO RIDGE-BLOCK 328	ENG JOB: PT0317-054

Kott Lumber Uxbridge, Stouffville, ON, CGC

Version 8.100 S Feb 9 2017 MiTek Industries, Inc. Mon Mar 13 09:57:20 2017 Page 1

ID:pF8Cn?9h9uHzAm5tCmlVl5yJJCp-XXu3OcCjDuIKHw1mfyrMnBff7l3JR8STRdu9hizbOmz

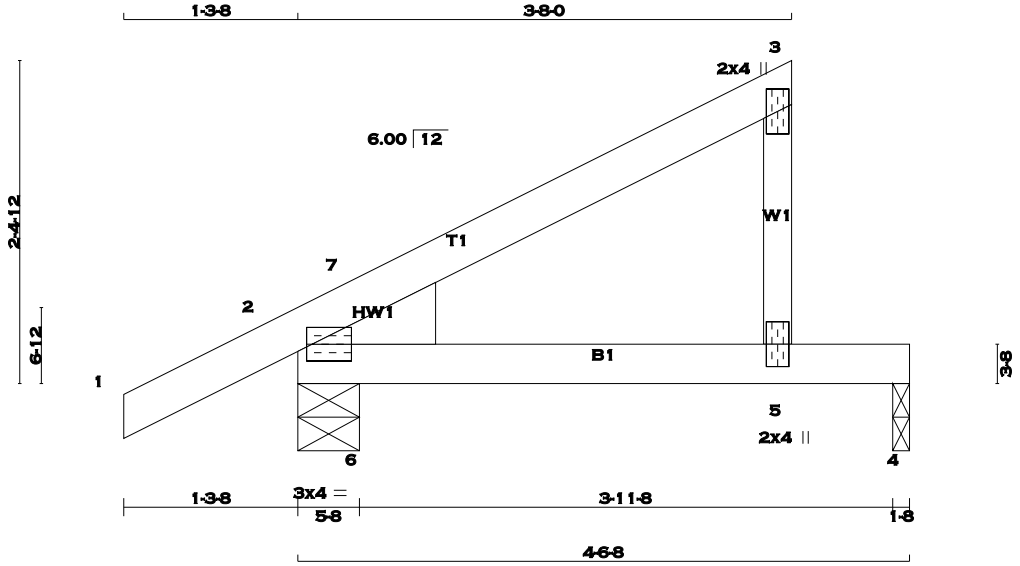

TOTAL WEIGHT = 5 X 15 = 74 lb [M]

LUMBER

N. L. G. A. RULES

CHORDS	SIZE		LUMBER	DESCR.
1 - 3	2x4	DRY	No.2	SPF
5 - 3	2x3	DRY	No.2	SPF
2 - 4	2x4	DRY	No.2	SPF

DRY: SEASONED LUMBER.

PLATES (table is in inches)

JT	TYPE	PLATES	W	LEN	Y	X
2	TMBH1-I	MT20	3.0	4.0	1.50	0.50
3	TMV+p	MT20	2.0	4.0		
5	BMV+p	MT20	2.0	4.0		

A SIZE FOR SIZE SUBSTITUTION OF MITEK MII20 WITH TEE-LOK TL20 PLATES IS ALLOWED.

DIMENSIONS, SUPPORTS AND LOADINGS SPECIFIED BY FABRICATOR TO BE VERIFIED BY BUILDING DESIGNER

BEARINGS

JT	FACTORED GROSS REACTION VERT	HORZ	MAXIMUM FACTORED GROSS REACTION DOWN	HORZ	UPLIFT	INPUT BRG IN-SX	REQRD BRG IN-SX	HEEL WEDGE
2	314	0	314	0	0	5-8	5-8	2x6 L
4	154	0	154	0	0	1-8	1-8	

UNFACTORED REACTIONS

JT	1ST LCASE COMBINED	MAX./MIN. COMPONENT REACTIONS SNOW	LIVE	PERM.LIVE	WIND	DEAD	SOIL
2	218	165 / 0	0 / 0	0 / 0	0 / 0	53 / 0	0 / 0
4	110	69 / 0	0 / 0	0 / 0	0 / 0	41 / 0	0 / 0

BEARING MATERIAL TO BE SPF NO.2 OR BETTER AT JOINT(S) 2, 4

BRACING

TOP CHORD TO BE SHEATHED OR MAX. PURLIN SPACING = 6.25 FT.
MAX. UNBRACED BOTTOM CHORD LENGTH = 10.00 FT. OR RIGID CEILING DIRECTLY APPLIED.

ALL PITCH BREAKS AND PERIMETER CORNER JOINTS MUST BE LATERALLY RESTRAINED.

LOADING

TOTAL LOAD CASES: (3)

CHORDS

MEMB. FR-TO	MAX. FACTORED FORCE (LBS)	FACTORED VERT. LOAD (PLF) FROM	TO	LC1 MAX CSI (LC)	MAX. UNBRAC LENGTH
1- 2	0 / 16	-77.3	-77.3	0.10 (1)	10.00
2- 7	-48 / 0	-77.3	-77.3	0.06 (3)	6.25
7- 3	0 / 5	-77.3	-77.3	0.16 (1)	10.00
5- 3	-133 / 0	0.0	0.0	0.02 (1)	7.81
2- 6	0 / 0	-17.5	-17.5	0.08 (1)	10.00
6- 5	0 / 0	-17.5	-17.5	0.18 (1)	10.00
5- 4	0 / 0	-17.5	-17.5	0.17 (1)	10.00

WEBS

MEMB. FR-TO	MAX. FACTORED FORCE (LBS)	MAX CSI (LC)
6- 7	-63 / 44	0.00 (1)

DESIGN CRITERIA

SPECIFIED LOADS:

TOP CH.	LL	=	23.3	PSF
	DL	=	3.0	PSF
BOT CH.	LL	=	0.0	PSF
	DL	=	7.0	PSF
TOTAL LOAD		=	33.3	PSF

SPACING = 24.0 IN. C/C

THIS TRUSS IS DESIGNED FOR RESIDENTIAL OR SMALL BUILDING REQUIREMENTS OF PART 9, NBCC 2010

THIS DESIGN COMPLIES WITH:
- PART 9 OF OBC 2012 , BCBC 2012 , ABC 2014
- CSA 086-09
- TPIC 2011

(55 % OF 27.2 P.S.F. G.S.L. PLUS 8.4 P.S.F. RAIN LOAD) EQUALS 23.3 P.S.F. SPECIFIED ROOF LIVE LOAD

ALLOWABLE DEFL.(LL)= L/360 (0.19")
CALCULATED VERT. DEFL.(LL) = L/ 999 (0.03")
ALLOWABLE DEFL.(TL)= L/360 (0.19")
CALCULATED VERT. DEFL.(TL) = L/ 963 (0.06")

CSI: TC=0.16 (3-7:1) , BC=0.18 (5-6:1) , WB=0.00 (6-7:1) , SSI=0.12 (4-5:1)

DOL LUMBER=1.00 NAIL=1.00 LS BEND=1.10 COMP=1.10 SHEAR=1.10 TENS= 1.10

COMPANION LIVE LOAD FACTOR = 0.50

TRUSS PLATE MANUFACTURER IS NOT RESPONSIBLE FOR QUALITY CONTROL IN THE TRUSS MANUFACTURING PLANT .

NAIL VALUES

PLATE	GRIP(DRY) (PSI) MAX	MIN	SHEAR (PLI) MAX	MIN	SECTION (PLI) MAX	MIN
MT20	618	354	1667	822	2284	1656

PLATE PLACEMENT TOL. = 0.250 inches

PLATE ROTATION TOL. = 5.0 Deg.

JSI GRIP= 0.73 (2) (INPUT = 0.90)
JSI METAL= 0.05 (2) (INPUT = 1.00)

LICENSED PROFESSIONAL ENGINEER
R.M. TREVISAN
100136551
March 13th, 2017
PROVINCE OF ONTARIO

RECEIVED
TOWN OF MILTON
MAR 29, 2017
17-4990
BUILDING DIVISION

READ ALL NOTES ON THIS PAGE AND ON THE ENGINEERING NOTE PAGE ENP-1. THE NOTE PAGE IS AN INTEGRAL PART OF THIS DRAWING AS IT CONTAINS SPECIFICATIONS AND CRITERIA USED IN THE DESIGN OF THIS COMPONENT.

KOTT

JOB NAME	TRUSS NAME	QUANTITY	PLY	JOB DESC.	DRWG NO.
PT0317-054	T84	6	1	TRUSS DESC. LECCO RIDGE-BLOCK 328	

Kott Lumber Uxbridge, Stouffville, ON, CGC

Version 8.100 S Feb 9 2017 MiTek Industries, Inc. Mon Mar 13 09:57:21 2017 Page 1
ID:pF8Cn?9h9uHzAm5tCmlVl5yJJCp-?kSRcyDL_CRBv4cyDgMbJPCp79QhAb5dfHdiE8zbOmy

SCALE = 1:49.4

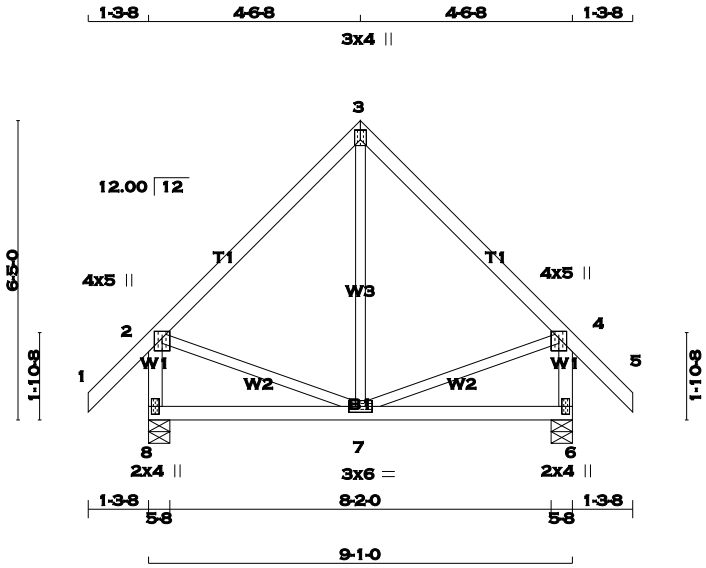

TOTAL WEIGHT = 6 X 45 = 270 lb

LUMBER
N. L. G. A. RULES

CHORDS	SIZE		LUMBER	DESCR.
1 - 3	2x4	DRY	No.2	SPF
3 - 5	2x4	DRY	No.2	SPF
8 - 2	2x4	DRY	No.2	SPF
6 - 4	2x4	DRY	No.2	SPF
8 - 6	2x4	DRY	No.2	SPF
ALL WEBS EXCEPT	2x3	DRY	No.2	SPF

DRY: SEASONED LUMBER.

PLATES (table is in inches)

JT	TYPE	PLATES	W	LEN	Y	X
2	TMVW+p	MT20	4.0	5.0	1.75	2.00
3	TTW+p	MT20	3.0	4.0	Edge	
4	TMVW+p	MT20	4.0	5.0	1.75	2.00
6	BMV1+p	MT20	2.0	4.0		
7	BMWWW-t	MT20	3.0	6.0		
8	BMV1+p	MT20	2.0	4.0		

Edge - INDICATES REFERENCE CORNER OF PLATE TOUCHES EDGE OF CHORD.

A SIZE FOR SIZE SUBSTITUTION OF MITEK MII20 WITH TEE-LOK TL20 PLATES IS ALLOWED.

DIMENSIONS, SUPPORTS AND LOADINGS SPECIFIED BY FABRICATOR TO BE VERIFIED BY BUILDING DESIGNER

BEARINGS

JT	FACTORED GROSS REACTION VERT	HORZ	MAXIMUM FACTORED GROSS REACTION DOWN	HORZ	UPLIFT	INPUT BRG IN-SX	REQRD BRG IN-SX
8	539	0	539	0	0	5-8	5-8
6	539	0	539	0	0	5-8	5-8

UNFACTORED REACTIONS

JT	1ST LCASE COMBINED	MAX./MIN. COMPONENT REACTIONS SNOW	LIVE	PERM.LIVE	WIND	DEAD	SOIL
8	376	276 / 0	0 / 0	0 / 0	0 / 0	99 / 0	0 / 0
6	376	276 / 0	0 / 0	0 / 0	0 / 0	99 / 0	0 / 0

BEARING MATERIAL TO BE SPF NO.2 OR BETTER AT JOINT(S) 8, 6

BRACING
TOP CHORD TO BE SHEATHED OR MAX. PURLIN SPACING = 6.25 FT.
MAX. UNBRACED BOTTOM CHORD LENGTH = 10.00 FT. OR RIGID CEILING DIRECTLY APPLIED.

ALL PITCH BREAKS AND PERIMETER CORNER JOINTS MUST BE LATERALLY RESTRAINED.

LOADING
TOTAL LOAD CASES: (3)

CHORDS

MEMB. FR-TO	MAX. FACTORED FORCE (LBS)	FACTORED VERT. LOAD (PLF) FROM	TO	LC1 MAX CSI (LC)	MAX. UNBRAC LENGTH
1- 2	0 / 38	-77.3	-77.3	0.11 (1)	10.00
2- 3	-238 / 0	-77.3	-77.3	0.20 (1)	6.25
3- 4	-238 / 0	-77.3	-77.3	0.20 (1)	6.25
4- 5	0 / 38	-77.3	-77.3	0.11 (1)	10.00
8- 2	-508 / 0	0.0	0.0	0.06 (1)	7.81
6- 4	-508 / 0	0.0	0.0	0.06 (1)	7.81
8- 7	0 / 0	-17.5	-17.5	0.10 (3)	10.00
7- 6	0 / 0	-17.5	-17.5	0.10 (3)	10.00

WEBS

MEMB. FR-TO	MAX. FACTORED FORCE (LBS)	MAX CSI (LC)
7- 3	-15 / 73	0.03 (3)
2- 7	0 / 177	0.04 (1)
7- 4	0 / 177	0.04 (1)

DESIGN CRITERIA

SPECIFIED LOADS:

TOP	CH.	LL	=	23.3	PSF
		DL	=	3.0	PSF
BOT	CH.	LL	=	0.0	PSF
		DL	=	7.0	PSF
TOTAL	LOAD		=	33.3	PSF

SPACING = 24.0 IN. C/C

THIS TRUSS IS DESIGNED FOR RESIDENTIAL OR SMALL BUILDING REQUIREMENTS OF PART 9, NBCC 2010

THIS DESIGN COMPLIES WITH:
- PART 9 OF OBC 2012 , BCBC 2012 , ABC 2014
- CSA 086-09
- TPIC 2011

(55 % OF 27.2 P.S.F. G.S.L. PLUS 8.4 P.S.F. RAIN LOAD) EQUALS 23.3 P.S.F. SPECIFIED ROOF LIVE LOAD

ALLOWABLE DEFL.(LL)= L/360 (0.30")
CALCULATED VERT. DEFL.(LL) = L/ 999 (0.00")
ALLOWABLE DEFL.(TL)= L/360 (0.30")
CALCULATED VERT. DEFL.(TL) = L/ 999 (0.01")

CSI: TC=0.20 (2-3:1) , BC=0.10 (6-7:3) , WB=0.04 (4-7:1) , SSI=0.10 (2-3:1)

DOL LUMBER=1.00 NAIL=1.00 LS BEND=1.10 COMP=1.10 SHEAR=1.10 TENS= 1.10

COMPANION LIVE LOAD FACTOR = 0.50

TRUSS PLATE MANUFACTURER IS NOT RESPONSIBLE FOR QUALITY CONTROL IN THE TRUSS MANUFACTURING PLANT .

NAIL VALUES

PLATE	GRIP(DRY) (PSI) MAX	MIN	SHEAR (PLI) MAX	MIN	SECTION (PLI) MAX	MIN
MT20	618	354	1667	822	2284	1656

PLATE PLACEMENT TOL. = 0.250 inches

PLATE ROTATION TOL. = 5.0 Deg.

JSI GRIP= 0.36 (3) (INPUT = 0.90)
JSI METAL= 0.09 (6) (INPUT = 1.00)

LICENSED PROFESSIONAL ENGINEER
P.M. TREVISAN
100136551
March 13th, 2017
PROVINCE OF ONTARIO

RECEIVED
TOWN OF MILTON
MAR 29, 2017
17-4990
BUILDING DIVISION

READ ALL NOTES ON THIS PAGE AND ON THE ENGINEERING NOTE PAGE ENP-1. THE NOTE PAGE IS AN INTEGRAL PART OF THIS DRAWING AS IT CONTAINS SPECIFICATIONS AND CRITERIA USED IN THE DESIGN OF THIS COMPONENT.

KOTT

JOB NAME	TRUSS NAME	QUANTITY	PLY	JOB DESC.	DRWG NO.
PT0317-054	T85	6	1	TRUSS DESC. LECCO RIDGE-BLOCK 328	

Kott Lumber Uxbridge, Stouffville, ON, CGC

Version 8.100 S Feb 9 2017 MiTek Industries, Inc. Mon Mar 13 09:57:21 2017 Page 1
ID:pF8Cn?9h9uHzAm5tCmlVl5yJJCp-?kSRcyDL_CRBv4cyDgMbJPCrm9KEAZBdfHdiE8zbOmy

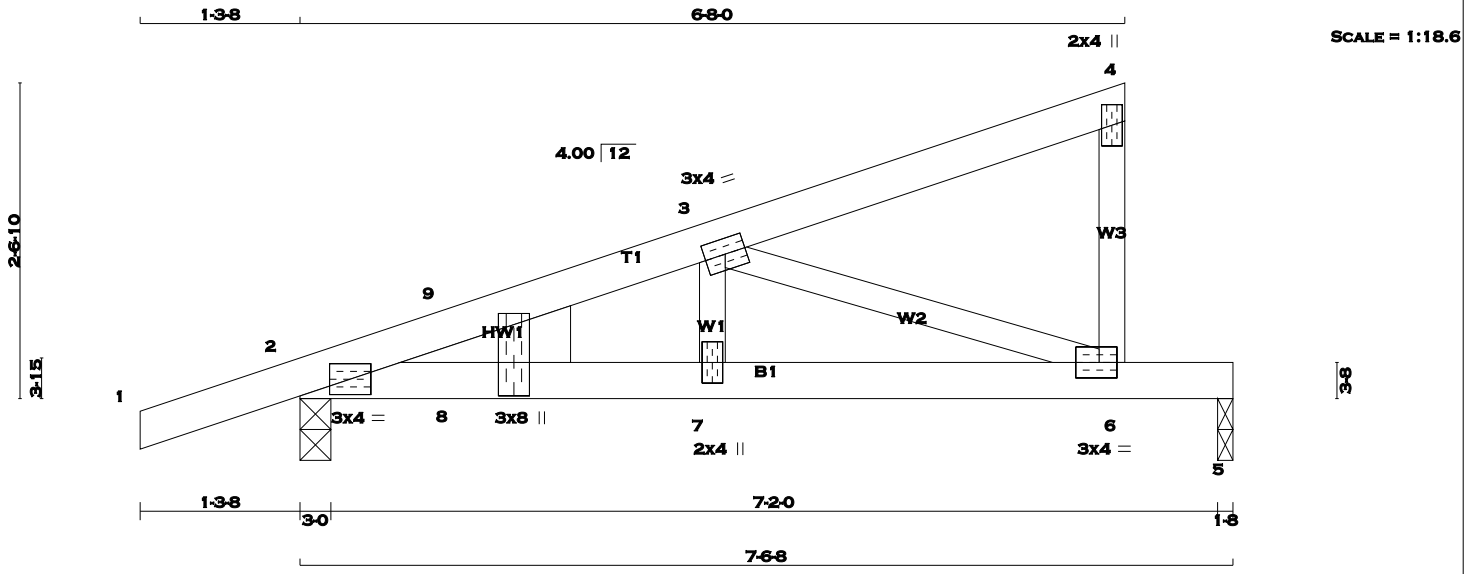

TOTAL WEIGHT = 6 X 26 = 154 lb

[M][F]

LUMBER

N. L. G. A. RULES

CHORDS	SIZE		LUMBER	DESCR.
1 - 4	2x4	DRY	No.2	SPF
6 - 4	2x3	DRY	No.2	SPF
2 - 5	2x4	DRY	No.2	SPF
ALL WEBS	2x3	DRY	No.2	SPF

DRY: SEASONED LUMBER.

PLATES (table is in inches)

JT	TYPE	PLATES	W	LEN	Y	X
2	TMB1-I	MT20	3.0	4.0	0.25	3.00
2	WP+I	MT20	3.0	8.0		19.25
3	TMWW-t	MT20	3.0	4.0		
4	TMV+p	MT20	2.0	4.0		
6	BMVW-t	MT20	3.0	4.0	1.50	1.75
7	BMW+w	MT20	2.0	4.0		

A SIZE FOR SIZE SUBSTITUTION OF MITEK MII20 WITH TEE-LOK TL20 PLATES IS ALLOWED.

DIMENSIONS, SUPPORTS AND LOADINGS SPECIFIED BY FABRICATOR TO BE VERIFIED BY BUILDING DESIGNER

BEARINGS

JT	FACTORED GROSS REACTION VERT	HORZ	MAXIMUM FACTORED GROSS REACTION DOWN	HORZ	UPLIFT	INPUT BRG IN-SX	REQRD BRG IN-SX	HEEL WEDGE
2	457	0	457	0	0	3-0	3-0	2x6 L
5	294	0	294	0	0	1-8	1-8	

UNFACTORED REACTIONS

JT	1ST LCASE COMBINED	MAX./MIN. COMPONENT REACTIONS SNOW	LIVE	PERM.LIVE	WIND	DEAD	SOIL
2	319	236 / 0	0 / 0	0 / 0	0 / 0	83 / 0	0 / 0
5	208	137 / 0	0 / 0	0 / 0	0 / 0	70 / 0	0 / 0

BEARING MATERIAL TO BE SPF NO.2 OR BETTER AT JOINT(S) 2, 5

BRACING

TOP CHORD TO BE SHEATHED OR MAX. PURLIN SPACING = 6.25 FT.
MAX. UNBRACED BOTTOM CHORD LENGTH = 10.00 FT. OR RIGID CEILING DIRECTLY APPLIED.

ALL PITCH BREAKS AND PERIMETER CORNER JOINTS MUST BE LATERALLY RESTRAINED.

LOADING

TOTAL LOAD CASES: (3)

CHORDS

MEMB. FR-TO	MAX. FACTORED FORCE (LBS)	FACTORED VERT. LOAD (PLF) FROM	TO	LC1 MAX CSI (LC)	MAX. UNBRAC LENGTH
1- 2	0 / 15	-77.3	-77.3	0.10 (1)	10.00
2- 9	-734 / 0	-77.3	-77.3	0.03 (1)	6.25
9- 3	-713 / 0	-77.3	-77.3	0.07 (1)	6.25
3- 4	-5 / 0	-77.3	-77.3	0.10 (1)	10.00
6- 4	-112 / 0	0.0	0.0	0.02 (1)	7.81
2- 8	0 / 687	-17.5	-17.5	0.17 (1)	10.00
8- 7	0 / 687	-17.5	-17.5	0.21 (1)	10.00
7- 6	0 / 687	-17.5	-17.5	0.45 (1)	10.00
6- 5	0 / 0	-17.5	-17.5	0.34 (1)	10.00

WEBS

MEMB. FR-TO	MAX. FACTORED FORCE (LBS)	MAX CSI (LC)
7- 3	0 / 202	0.05 (1)
3- 6	-726 / 0	0.16 (1)
8- 9	-65 / 0	0.00 (1)

DESIGN CRITERIA

SPECIFIED LOADS:

TOP	CH.	LL	=	23.3	PSF
		DL	=	3.0	PSF
BOT	CH.	LL	=	0.0	PSF
		DL	=	7.0	PSF
TOTAL	LOAD		=	33.3	PSF

SPACING = 24.0 IN. C/C

THIS TRUSS IS DESIGNED FOR RESIDENTIAL OR SMALL BUILDING REQUIREMENTS OF PART 9, NBCC 2010

THIS DESIGN COMPLIES WITH:
- PART 9 OF OBC 2012 , BCBC 2012 , ABC 2014
- CSA 086-09
- TPIC 2011

(55 % OF 27.2 P.S.F. G.S.L. PLUS 8.4 P.S.F. RAIN LOAD) EQUALS 23.3 P.S.F. SPECIFIED ROOF LIVE LOAD

ALLOWABLE DEFL.(LL)= L/360 (0.25")
CALCULATED VERT. DEFL.(LL) = L/ 999 (0.05")
ALLOWABLE DEFL.(TL)= L/360 (0.25")
CALCULATED VERT. DEFL.(TL) = L/ 999 (0.09")

CSI: TC=0.10 (3-4:1) , BC=0.45 (6-7:1) , WB=0.16 (3-6:1) , SSI=0.23 (5-6:1)

DOL LUMBER=1.00 NAIL=1.00 LS BEND=1.10 COMP=1.10 SHEAR=1.10 TENS= 1.10

COMPANION LIVE LOAD FACTOR = 0.50

TRUSS PLATE MANUFACTURER IS NOT RESPONSIBLE FOR QUALITY CONTROL IN THE TRUSS MANUFACTURING PLANT .

NAIL VALUES

PLATE	GRIP(DRY) (PSI) MAX	MIN	SHEAR (PLI) MAX	MIN	SECTION (PLI) MAX	MIN
MT20	618	354	1667	822	2284	1656

PLATE PLACEMENT TOL. = 0.250 inches

PLATE ROTATION TOL. = 5.0 Deg.

JSI GRIP= 0.87 (6) (INPUT = 0.90)
JSI METAL= 0.26 (6) (INPUT = 1.00)

LICENSED PROFESSIONAL ENGINEER
P.M. TREVISAN
100136551
March 13th, 2017
PROVINCE OF ONTARIO

RECEIVED
TOWN OF MILTON
MAR 29, 2017
17-4990
BUILDING DIVISION

READ ALL NOTES ON THIS PAGE AND ON THE ENGINEERING NOTE PAGE ENP-1. THE NOTE PAGE IS AN INTEGRAL PART OF THIS DRAWING AS IT CONTAINS SPECIFICATIONS AND CRITERIA USED IN THE DESIGN OF THIS COMPONENT.

KOTT

JOB NAME	TRUSS NAME	QUANTITY	PLY	JOB DESC.	DRWG NO.
PT0317-054	T86	4	1	TRUSS DESC. LECCO RIDGE-BLOCK 328	

Kott Lumber Uxbridge, Stouffville, ON, CGC

Version 8.100 S Feb 9 2017 MiTek Industries, Inc. Mon Mar 13 09:57:21 2017 Page 1
ID:pF8Cn?9h9uHzAm5tCmlVl5yJJCp-?kSRcyDL_CRBv4cyDgMbJPCp79QlAb5dfHdiE8zbOmy

SCALE = 1:49.4

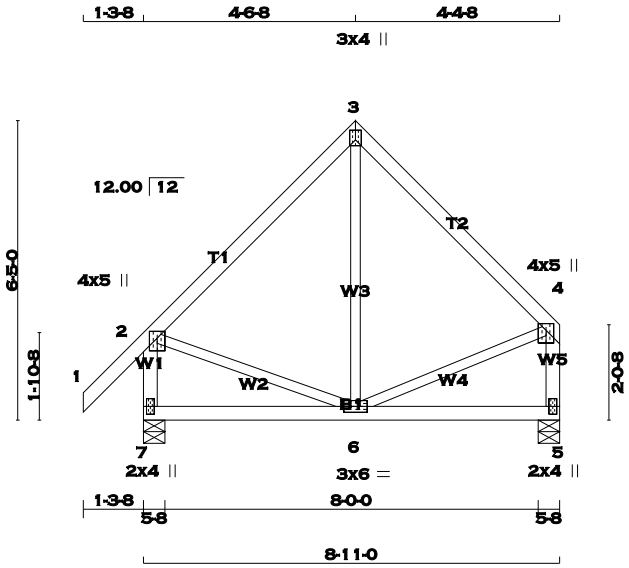

TOTAL WEIGHT = 4 X 43 = 170 lb
[M][F]

LUMBER
N. L. G. A. RULES

CHORDS	SIZE		LUMBER	DESCR.
1 - 3	2x4	DRY	No.2	SPF
3 - 4	2x4	DRY	No.2	SPF
7 - 2	2x4	DRY	No.2	SPF
5 - 4	2x4	DRY	No.2	SPF
7 - 5	2x4	DRY	No.2	SPF
ALL WEBS EXCEPT	2x3	DRY	No.2	SPF

DRY: SEASONED LUMBER.

PLATES (table is in inches)

JT	TYPE	PLATES	W	LEN	Y	X
2	TMVW+p	MT20	4.0	5.0	1.75	2.00
3	TTW+p	MT20	3.0	4.0	Edge	
4	TMVW+p	MT20	4.0	5.0	1.75	2.00
5	BMV1+p	MT20	2.0	4.0		
6	BMWWW-t	MT20	3.0	6.0		
7	BMV1+p	MT20	2.0	4.0		

Edge - INDICATES REFERENCE CORNER OF PLATE TOUCHES EDGE OF CHORD.

A SIZE FOR SIZE SUBSTITUTION OF MITEK MII20 WITH TEE-LOK TL20 PLATES IS ALLOWED.

DIMENSIONS, SUPPORTS AND LOADINGS SPECIFIED BY FABRICATOR TO BE VERIFIED BY BUILDING DESIGNER

BEARINGS

JT	FACTORED GROSS REACTION VERT	HORZ	MAXIMUM FACTORED GROSS REACTION DOWN	HORZ	UPLIFT	INPUT BRG IN-SX	REQRD BRG IN-SX
7	531	0	531	0	0	5-8	5-8
5	423	0	423	0	0	5-8	5-8

UNFACTORED REACTIONS

JT	1ST LCASE COMBINED	MAX./MIN. COMPONENT REACTIONS SNOW	LIVE	PERM.LIVE	WIND	DEAD	SOIL
7	370	273 / 0	0 / 0	0 / 0	0 / 0	98 / 0	0 / 0
5	297	208 / 0	0 / 0	0 / 0	0 / 0	89 / 0	0 / 0

BEARING MATERIAL TO BE SPF NO.2 OR BETTER AT JOINT(S) 7, 5

BRACING
TOP CHORD TO BE SHEATHED OR MAX. PURLIN SPACING = 6.25 FT.
MAX. UNBRACED BOTTOM CHORD LENGTH = 10.00 FT. OR RIGID CEILING DIRECTLY APPLIED.

ALL PITCH BREAKS AND PERIMETER CORNER JOINTS MUST BE LATERALLY RESTRAINED.

LOADING
TOTAL LOAD CASES: (3)

CHORDS

MEMB. FR-TO	MAX. FACTORED FORCE (LBS)	FACTORED VERT. LOAD (PLF) FROM	TO	LC1 CSI (LC)	MAX UNBRAC LENGTH
1- 2	0 / 38	-77.3	-77.3	0.11 (1)	10.00
2- 3	-229 / 0	-77.3	-77.3	0.20 (1)	6.25
3- 4	-229 / 0	-77.3	-77.3	0.19 (1)	6.25
7- 2	-500 / 0	0.0	0.0	0.06 (1)	7.81
5- 4	-394 / 0	0.0	0.0	0.05 (1)	7.81
7- 6	0 / 0	-17.5	-17.5	0.10 (3)	10.00
6- 5	0 / 0	-17.5	-17.5	0.10 (3)	10.00

WEBS

MEMB. FR-TO	MAX. FACTORED FORCE (LBS)	MAX CSI (LC)
6- 3	-21 / 70	0.02 (3)
2- 6	0 / 171	0.04 (1)
6- 4	0 / 174	0.04 (1)

DESIGN CRITERIA

SPECIFIED LOADS:

TOP	CH.	LL	=	23.3	PSF
		DL	=	3.0	PSF
BOT	CH.	LL	=	0.0	PSF
		DL	=	7.0	PSF
TOTAL	LOAD		=	33.3	PSF

SPACING = 24.0 IN. C/C

THIS TRUSS IS DESIGNED FOR RESIDENTIAL OR SMALL BUILDING REQUIREMENTS OF PART 9, NBCC 2010

THIS DESIGN COMPLIES WITH:
- PART 9 OF OBC 2012 , BCBC 2012 , ABC 2014
- CSA 086-09
- TPIC 2011

(55 % OF 27.2 P.S.F. G.S.L. PLUS 8.4 P.S.F. RAIN LOAD) EQUALS 23.3 P.S.F. SPECIFIED ROOF LIVE LOAD

ALLOWABLE DEFL.(LL)= L/360 (0.30")
CALCULATED VERT. DEFL.(LL) = L/ 999 (0.00")
ALLOWABLE DEFL.(TL)= L/360 (0.30")
CALCULATED VERT. DEFL.(TL) = L/ 999 (0.01")

CSI: TC=0.20 (2-3:1) , BC=0.10 (6-7:3) , WB=0.04 (4-6:1) , SSI=0.10 (2-3:1)

DOL LUMBER=1.00 NAIL=1.00 LS BEND=1.10 COMP=1.10 SHEAR=1.10 TENS= 1.10

COMPANION LIVE LOAD FACTOR = 0.50

TRUSS PLATE MANUFACTURER IS NOT RESPONSIBLE FOR QUALITY CONTROL IN THE TRUSS MANUFACTURING PLANT .

NAIL VALUES

PLATE	GRIP(DRY) (PSI) MAX	MIN	SHEAR (PLI) MAX	MIN	SECTION (PLI) MAX	MIN
MT20	618	354	1667	822	2284	1656

PLATE PLACEMENT TOL. = 0.250 inches

PLATE ROTATION TOL. = 5.0 Deg.

JSI GRIP= 0.35 (2) (INPUT = 0.90)
JSI METAL= 0.09 (7) (INPUT = 1.00)

LICENSED PROFESSIONAL ENGINEER
P.M. TREVISAN
100136551
March 13th, 2017
PROVINCE OF ONTARIO

RECEIVED
TOWN OF MILTON
MAR 29, 2017
17-4990
BUILDING DIVISION

READ ALL NOTES ON THIS PAGE AND ON THE ENGINEERING NOTE PAGE ENP-1. THE NOTE PAGE IS AN INTEGRAL PART OF THIS DRAWING AS IT CONTAINS SPECIFICATIONS AND CRITERIA USED IN THE DESIGN OF THIS COMPONENT.

KOTT

JOB NAME	TRUSS NAME	QUANTITY	PLY	JOB DESC.	DRWG NO.
PT0317-054	T87	1	1	TRUSS DESC. LECCO RIDGE-BLOCK 328	

Kott Lumber Uxbridge, Stouffville, ON, CGC

Version 8.100 S Feb 9 2017 MiTek Industries, Inc. Mon Mar 13 09:57:21 2017 Page 1
ID:pF8Cn?9h9uHzAm5tCmlVl5yJJCp-?kSRcyDL_CRBv4cyDgMbJPCrl9R_AbPdfHdiE8zbOmy

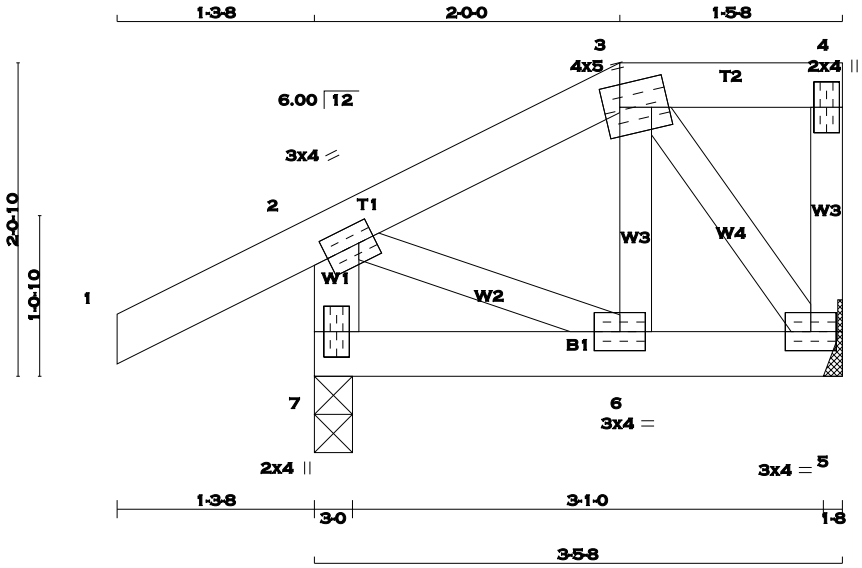

TOTAL WEIGHT = 16 lb [M]

LUMBER
N. L. G. A. RULES

CHORDS	SIZE		LUMBER	DESCR.
1 - 3	2x4	DRY	No.2	SPF
3 - 4	2x4	DRY	No.2	SPF
5 - 4	2x3	DRY	No.2	SPF
7 - 2	2x4	DRY	No.2	SPF
7 - 5	2x4	DRY	No.2	SPF
ALL WEBS EXCEPT	2x3	DRY	No.2	SPF

DRY: SEASONED LUMBER.

PLATES (table is in inches)

JT	TYPE	PLATES	W	LEN	Y	X
2	TMVW-t	MT20	3.0	4.0	1.50	1.25
3	TTWW-m	MT20	4.0	5.0	1.75	1.25
4	TMV+p	MT20	2.0	4.0		
5	BMVW1-t	MT20	3.0	4.0		
6	BMWW-t	MT20	3.0	4.0		
7	BMV1+p	MT20	2.0	4.0		

A SIZE FOR SIZE SUBSTITUTION OF MITEK MII20 WITH TEE-LOK TL20 PLATES IS ALLOWED.

DIMENSIONS, SUPPORTS AND LOADINGS SPECIFIED BY FABRICATOR TO BE VERIFIED BY BUILDING DESIGNER

BEARINGS

JT	FACTORED GROSS REACTION VERT	HORZ	MAXIMUM FACTORED GROSS REACTION DOWN	HORZ	UPLIFT	INPUT BRG IN-SX	REQRD BRG IN-SX
5	164	0	164	0	0	HANGER BY OTHERS MIN. SEAT SIZE: 1-8	
7	269	0	269	0	0	3-0	3-0

UNFACTORED REACTIONS

JT	1ST LCASE COMBINED	MAX./MIN. COMPONENT REACTIONS SNOW	LIVE	PERM.LIVE	WIND	DEAD	SOIL
5	115	81 / 0	0 / 0	0 / 0	0 / 0	35 / 0	0 / 0
7	186	144 / 0	0 / 0	0 / 0	0 / 0	43 / 0	0 / 0

BEARING MATERIAL TO BE SPF NO.2 OR BETTER AT JOINT(S) 7

BRACING
TOP CHORD TO BE SHEATHED OR MAX. PURLIN SPACING = 6.25 FT.
MAX. UNBRACED BOTTOM CHORD LENGTH = 10.00 FT. OR RIGID CEILING DIRECTLY APPLIED.

ALL PITCH BREAKS AND PERIMETER CORNER JOINTS MUST BE LATERALLY RESTRAINED.

LOADING
TOTAL LOAD CASES: (4)

CHORDS

MEMB. FR-TO	MAX. FACTORED FORCE (LBS)	FACTORED VERT. LOAD LC1 (PLF) FROM	TO	MAX CSI (LC)	MAX. UNBRAC LENGTH
1- 2	0 / 23	-77.3	-77.3	0.10 (1)	10.00
2- 3	-91 / 0	-77.3	-77.3	0.05 (1)	6.25
3- 4	0 / 0	-77.3	-77.3	0.03 (1)	10.00
5- 4	-56 / 0	0.0	0.0	0.01 (1)	7.81
7- 2	-252 / 0	0.0	0.0	0.03 (1)	7.81
7- 6	0 / 0	-17.5	-17.5	0.02 (3)	10.00
6- 5	0 / 81	-17.5	-17.5	0.02 (3)	10.00

WEBS

MEMB. FR-TO	MAX. FACTORED FORCE (LBS)	MAX CSI (LC)
6- 3	0 / 32	0.01 (3)
3- 5	-127 / 0	0.02 (1)
2- 6	0 / 86	0.02 (1)

CANTILEVER ANALYSIS HAS BEEN CONSIDERED IN THIS DESIGN

DESIGN CRITERIA

SPECIFIED LOADS:

TOP	CH.	LL	=	23.3	PSF
		DL	=	3.0	PSF
BOT	CH.	LL	=	0.0	PSF
		DL	=	7.0	PSF
TOTAL	LOAD		=	33.3	PSF

SPACING = 24.0 IN. C/C

LOADING IN FLAT SECTION BASED ON A SLOPE OF 6.00/12

THIS TRUSS IS DESIGNED FOR RESIDENTIAL OR SMALL BUILDING REQUIREMENTS OF PART 9, NBCC 2010

THIS DESIGN COMPLIES WITH:
- PART 9 OF OBC 2012 , BCBC 2012 , ABC 2014
- CSA 086-09
- TPIC 2011

(55 % OF 27.2 P.S.F. G.S.L. PLUS 8.4 P.S.F. RAIN LOAD) EQUALS 23.3 P.S.F. SPECIFIED ROOF LIVE LOAD

ALLOWABLE DEFL.(LL)= L/360 (0.19")
CALCULATED VERT. DEFL.(LL) = L/ 999 (0.00")
ALLOWABLE DEFL.(TL)= L/360 (0.19")
CALCULATED VERT. DEFL.(TL) = L/ 999 (0.00")

CSI: TC=0.10 (1-2:1) , BC=0.02 (5-6:3) , WB=0.02 (3-5:1) , SSI=0.07 (1-2:1)

DOL LUMBER=1.00 NAIL=1.00 LS BEND=1.10 COMP=1.10 SHEAR=1.10 TENS= 1.10

COMPANION LIVE LOAD FACTOR = 0.50

TRUSS PLATE MANUFACTURER IS NOT RESPONSIBLE FOR QUALITY CONTROL IN THE TRUSS MANUFACTURING PLANT .

NAIL VALUES

PLATE	GRIP(DRY) (PSI) MAX	MIN	SHEAR (PLI) MAX	MIN	SECTION (PLI) MAX	MIN
MT20	618	354	1667	822	2284	1656

PLATE PLACEMENT TOL. = 0.250 inches

PLATE ROTATION TOL. = 5.0 Deg.

JSI GRIP= 0.23 (2) (INPUT = 0.90)
JSI METAL= 0.06 (2) (INPUT = 1.00)

LICENSED PROFESSIONAL ENGINEER
P.M. TREVISAN
100136551
March 13th, 2017
PROVINCE OF ONTARIO

RECEIVED
TOWN OF MILTON
MAR 29, 2017
17-4990
BUILDING DIVISION

READ ALL NOTES ON THIS PAGE AND ON THE ENGINEERING NOTE PAGE ENP-1. THE NOTE PAGE IS AN INTEGRAL PART OF THIS DRAWING AS IT CONTAINS SPECIFICATIONS AND CRITERIA USED IN THE DESIGN OF THIS COMPONENT.

KOTT

JOB NAME	TRUSS NAME	QUANTITY	PLY	JOB DESC.	DRWG NO.
PT0317-054	T90	4	1	TRUSS DESC. LECCO RIDGE-BLOCK 328	

Kott Lumber Uxbridge, Stouffville, ON, CGC

Version 8.100 S Feb 9 2017 MiTek Industries, Inc. Mon Mar 13 09:57:22 2017 Page 1
ID:pF8Cn?9h9uHzAm5tCmlVl5yJJCp-Uw0ppID_lWZ2XDB9nNuqsckyNZiqvxtmuxNFmazbOmx

SCALE = 1:69.6

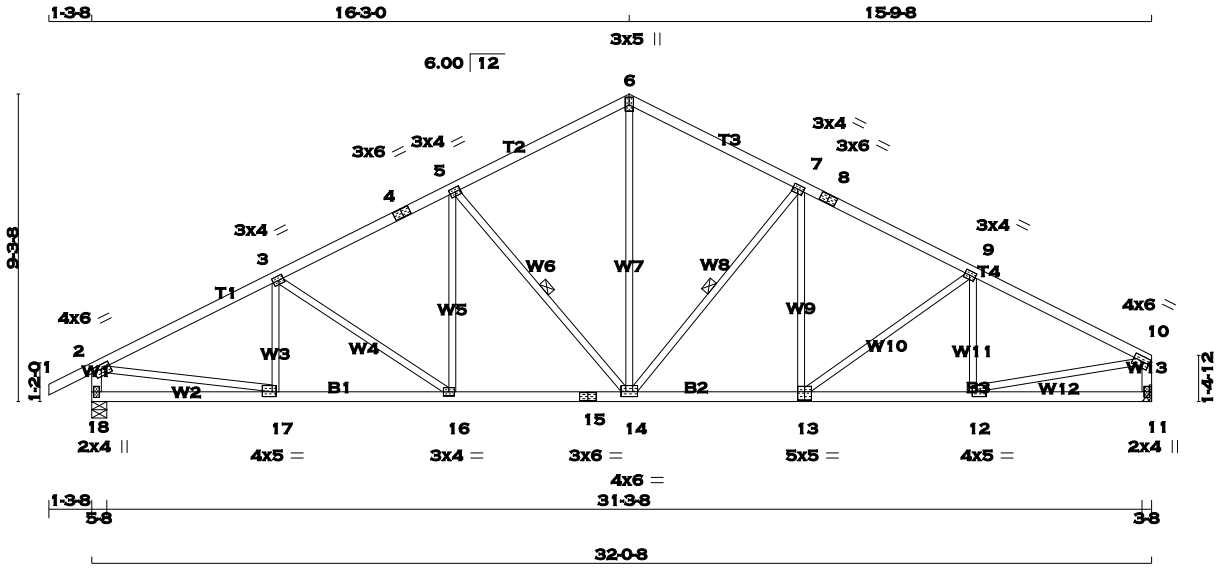

TOTAL WEIGHT = 4 X 135 = 540 lb

[M][F]

LUMBER

N. L. G. A. RULES

CHORDS	SIZE		LUMBER	DESCR.
1 - 4	2x4	DRY	No.2	SPF
4 - 6	2x4	DRY	No.2	SPF
6 - 8	2x4	DRY	No.2	SPF
8 - 10	2x4	DRY	No.2	SPF
18 - 2	2x4	DRY	No.2	SPF
11 - 10	2x4	DRY	No.2	SPF
18 - 15	2x4	DRY	No.2	SPF
15 - 13	2x4	DRY	No.2	SPF
13 - 11	2x4	DRY	No.2	SPF
ALL WEBS EXCEPT	2x3	DRY	No.2	SPF

DRY: SEASONED LUMBER.

PLATES (table is in inches)

JT	TYPE	PLATES	W	LEN	Y	X
2	TMVW-t	MT20	4.0	6.0	1.50	2.75
3, 5, 7, 9						
3	TMWW-t	MT20	3.0	4.0	1.50	1.75
4	TS-t	MT20	3.0	6.0		
6	TTW+p	MT20	3.0	5.0	2.75	1.50
8	TS-t	MT20	3.0	6.0		
10	TMVW-t	MT20	4.0	6.0	1.75	2.75
11	BMV1+p	MT20	2.0	4.0		
12	BMWW-t	MT20	4.0	5.0	1.75	1.50
13	BSWW-l	MT20	5.0	5.0	3.00	2.50
14	BMWWW-t	MT20	4.0	6.0	1.75	3.00
15	BS-t	MT20	3.0	6.0		
16	BMWW-t	MT20	3.0	4.0		
17	BMWW-t	MT20	4.0	5.0	1.75	1.50
18	BMV1+p	MT20	2.0	4.0		

A SIZE FOR SIZE SUBSTITUTION OF MITEK MII20 WITH TEE-LOK TL20 PLATES IS ALLOWED.

DIMENSIONS, SUPPORTS AND LOADINGS SPECIFIED BY FABRICATOR TO BE VERIFIED BY BUILDING DESIGNER

BEARINGS

JT	FACTORED GROSS REACTION VERT	HORZ	MAXIMUM FACTORED GROSS REACTION DOWN	HORZ	UPLIFT	INPUT BRG IN-SX	REQRD BRG IN-SX
18	1624	0	1624	0	0	5-8	5-8
11	1520	0	1520	0	0	HANGER BY OTHERS	
						MIN. SEAT SIZE: 3-8	

UNFACTORED REACTIONS

JT	1ST LCASE COMBINED	SNOW	MAX./MIN. COMPONENT REACTIONS LIVE	PERM.LIVE	WIND	DEAD	SOIL
18	1138	809 / 0	0 / 0	0 / 0	0 / 0	329 / 0	0 / 0
11	1066	746 / 0	0 / 0	0 / 0	0 / 0	320 / 0	0 / 0

BEARING MATERIAL TO BE SPF NO.2 OR BETTER AT JOINT(S) 18

BRACING

TOP CHORD TO BE SHEATHED OR MAX. PURLIN SPACING = 4.28 FT.
MAX. UNBRACED BOTTOM CHORD LENGTH = 10.00 FT. OR RIGID CEILING DIRECTLY APPLIED.

ALL PITCH BREAKS AND PERIMETER CORNER JOINTS MUST BE LATERALLY RESTRAINED.

1 - 2x3 SPF No.2 LATERAL BRACE(S) AT 1/ 2 LENGTH OF 5-14, 7-14. DBS = 20-0-0 . CBF = 79 LBS.

DBS = DIAGONAL BRACE SPACING (MAX). CBF = CUMULATIVE BRACING FORCE. FASTEN LATERAL BRACE(S) USING (0.122"X3") SPIRAL NAILS : 1 NAIL FOR 2x3 BRACE(S), 2 FOR 1x4, 2x4, 2x5, 3 FOR 2x6, 4 FOR 2x8, 5 FOR 2x10, AND 6 FOR 2x12.

END VERTICAL(S) MUST BE SHEATHED OR HAVE BRACES AS INDICATED IN THE MAX. UNBRACED LENGTH COLUMN OF THE TABLE BELOW

LOADING

TOTAL LOAD CASES: (3)

CHORDS

MEMB. FR-TO	MAX. FACTORED FORCE (LBS)	FACTORED VERT. LOAD LC1 (PLF) FROM	TO	MAX CSI (LC)	MAX. UNBRAC LENGTH
1- 2	0 / 23	-77.3	-77.3	0.10 (1)	10.00
2- 3	-2205 / 0	-77.3	-77.3	0.36 (1)	4.28
3- 4	-1980 / 0	-77.3	-77.3	0.30 (1)	4.55
4- 5	-1980 / 0	-77.3	-77.3	0.30 (1)	4.55
5- 6	-1538 / 0	-77.3	-77.3	0.29 (1)	5.02
6- 7	-1537 / 0	-77.3	-77.3	0.27 (1)	5.04
7- 8	-1927 / 0	-77.3	-77.3	0.28 (1)	4.61
8- 9	-1927 / 0	-77.3	-77.3	0.28 (1)	4.61
9-10	-2067 / 0	-77.3	-77.3	0.33 (1)	4.43
18- 2	-1582 / 0	0.0	0.0	0.16 (1)	6.56
11-10	-1478 / 0	0.0	0.0	0.15 (1)	6.74
18-17	0 / 0	-17.5	-17.5	0.12 (3)	10.00
17-16	0 / 1987	-17.5	-17.5	0.36 (1)	10.00
16-15	0 / 1771	-17.5	-17.5	0.35 (1)	10.00
15-14	0 / 1771	-17.5	-17.5	0.35 (1)	10.00
14-13	0 / 1723	-17.5	-17.5	0.34 (1)	10.00
13-12	0 / 1864	-17.5	-17.5	0.35 (1)	10.00
12-11	0 / 0	-17.5	-17.5	0.11 (3)	10.00

WEBS

MEMB. FR-TO	MAX. FACTORED FORCE (LBS)	MAX CSI (LC)
17- 3	-205 / 29	0.05 (1)
3-16	-262 / 0	0.20 (1)
16- 5	0 / 238	0.05 (1)
5-14	-636 / 0	0.29 (1)
14- 6	0 / 1029	0.23 (1)
14- 7	-576 / 0	0.26 (1)
13- 7	0 / 190	0.04 (3)
13- 9	-175 / 0	0.13 (1)
12- 9	-275 / 6	0.07 (1)
2-17	0 / 2011	0.45 (1)
12-10	0 / 1902	0.43 (1)

DESIGN CRITERIA

SPECIFIED LOADS:

TOP	CH.	LL	=	23.3	PSF
		DL	=	3.0	PSF
BOT	CH.	LL	=	0.0	PSF
		DL	=	7.0	PSF
TOTAL	LOAD		=	33.3	PSF

SPACING = 24.0 IN. C/C

THIS TRUSS IS DESIGNED FOR RESIDENTIAL OR SMALL BUILDING REQUIREMENTS OF PART 9, NBCC 2010

THIS DESIGN COMPLIES WITH:
- PART 9 OF OBC 2012 , BCBC 2012 , ABC 2014
- CSA 086-09
- TPIC 2011

(55 % OF 27.2 P.S.F. G.S.L. PLUS 8.4 P.S.F. RAIN LOAD) EQUALS 23.3 P.S.F. SPECIFIED ROOF LIVE LOAD

ALLOWABLE DEFL.(LL)= L/360 (1.07")
CALCULATED VERT. DEFL.(LL) = L/ 999 (0.10")
ALLOWABLE DEFL.(TL)= L/360 (1.07")
CALCULATED VERT. DEFL.(TL) = L/ 999 (0.19")

CSI: TC=0.36 (2-3:1) , BC=0.36 (16-17:1) , WB=0.45 (2-17:1) , SSI=0.18 (2-3:1)

DOL LUMBER=1.00 NAIL=1.00 LS BEND=1.10 COMP=1.10 SHEAR=1.10 TENS= 1.10

COMPANION LIVE LOAD FACTOR = 0.50

TRUSS PLATE MANUFACTURER IS NOT RESPONSIBLE FOR QUALITY CONTROL IN THE TRUSS MANUFACTURING PLANT .

NAIL VALUES

PLATE	GRIP(DRY) (PSI) MAX	MIN	SHEAR (PLI) MAX	MIN	SECTION (PLI) MAX	MIN
MT20	618	354	1667	822	2284	1656

PLATE PLACEMENT TOL. = 0.250 inches

PLATE ROTATION TOL. = 5.0 Deg.

JSI GRIP= 0.88 (12) (INPUT = 0.90)
JSI METAL= 0.60 (17) (INPUT = 1.00)

LICENSED PROFESSIONAL ENGINEER
R.M. TREVISAN
100136551
March 13th, 2017
PROVINCE OF ONTARIO

RECEIVED
TOWN OF MILTON
MAR 29, 2017
17-4990
BUILDING DIVISION

READ ALL NOTES ON THIS PAGE AND ON THE ENGINEERING NOTE PAGE ENP-1. THE NOTE PAGE IS AN INTEGRAL PART OF THIS DRAWING AS IT CONTAINS SPECIFICATIONS AND CRITERIA USED IN THE DESIGN OF THIS COMPONENT.

KOTT

JOB NAME	TRUSS NAME	QUANTITY	PLY	JOB DESC.	DRWG NO.
PT0317-054	T91	1	1	TRUSS DESC. LECCO RIDGE-BLOCK 328	

Kott Lumber Uxbridge, Stouffville, ON, CGC

Version 8.100 S Feb 9 2017 MiTek Industries, Inc. Mon Mar 13 09:57:22 2017 Page 1
ID:pF8Cn?9h9uHzAm5tCmlVl5yJJCp-Uw0ppID_lWZ2XDB9nNuqsckxKZhDvxDmuxNFmazbOmx

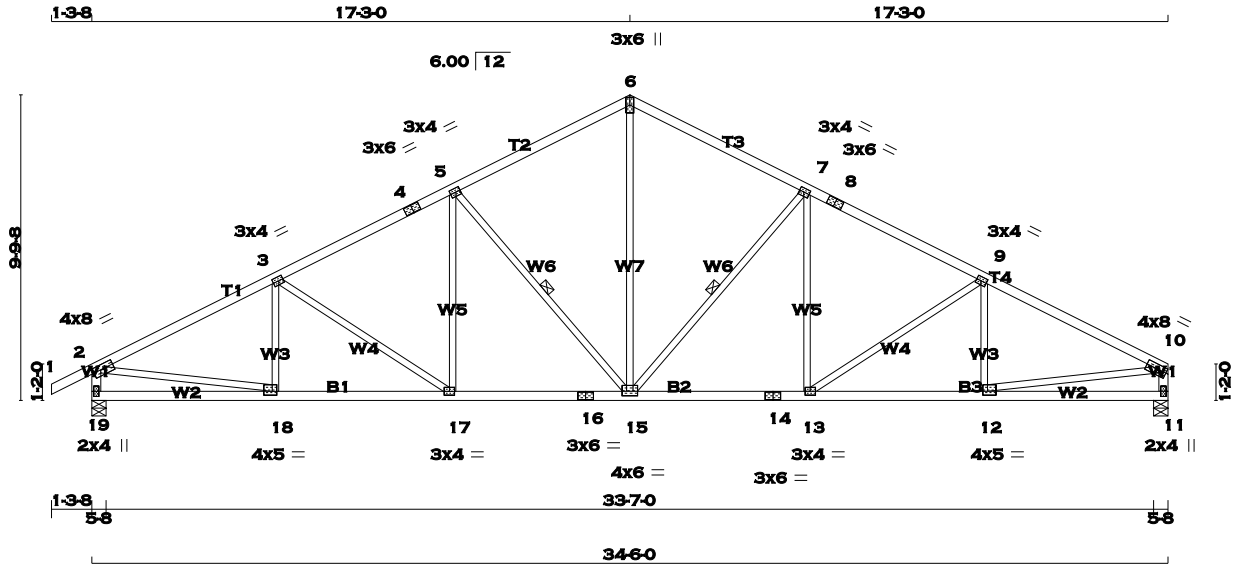

TOTAL WEIGHT = 144 lb

LUMBER
N. L. G. A. RULES

CHORDS	SIZE		LUMBER	DESCR.
1 - 4	2x4	DRY	No.2	SPF
4 - 6	2x4	DRY	No.2	SPF
6 - 8	2x4	DRY	No.2	SPF
8 - 10	2x4	DRY	No.2	SPF
19 - 2	2x4	DRY	No.2	SPF
11 - 10	2x4	DRY	No.2	SPF
19 - 16	2x4	DRY	No.2	SPF
16 - 14	2x4	DRY	No.2	SPF
14 - 11	2x4	DRY	No.2	SPF
ALL WEBS EXCEPT	2x3	DRY	No.2	SPF

DRY: SEASONED LUMBER.

PLATES (table is in inches)

JT	TYPE	PLATES	W	LEN	Y	X
2 3, 5, 7, 9	TMVW-t	MT20	4.0	8.0	1.75	3.00
3	TMWW-t	MT20	3.0	4.0	1.50	1.75
4	TS-t	MT20	3.0	6.0		
6	TTW+p	MT20	3.0	6.0		
8	TS-t	MT20	3.0	6.0		
10	TMVW-t	MT20	4.0	8.0	1.75	Edge
11	BMV1+p	MT20	2.0	4.0		
12	BMWW-t	MT20	4.0	5.0	1.50	1.75
13	BMWW-t	MT20	3.0	4.0		
14	BS-t	MT20	3.0	6.0		
15	BMWWW-t	MT20	4.0	6.0	1.75	3.00
16	BS-t	MT20	3.0	6.0		
17	BMWW-t	MT20	3.0	4.0		
18	BMWW-t	MT20	4.0	5.0	1.50	1.75
19	BMV1+p	MT20	2.0	4.0		

Edge - INDICATES REFERENCE CORNER OF PLATE TOUCHES EDGE OF CHORD.

A SIZE FOR SIZE SUBSTITUTION OF MITEK MII20 WITH TEE-LOK TL20 PLATES IS ALLOWED.

DIMENSIONS, SUPPORTS AND LOADINGS SPECIFIED BY FABRICATOR TO BE VERIFIED BY BUILDING DESIGNER

BEARINGS

JT	FACTORED GROSS REACTION VERT	HORZ	MAXIMUM FACTORED GROSS REACTION DOWN	HORZ	UPLIFT	INPUT BRG IN-SX	REQRD BRG IN-SX
19	1741	0	1741	0	0	5-8	5-8
11	1636	0	1636	0	0	5-8	5-8

UNFACTORED REACTIONS

JT	1ST LCASE COMBINED	MAX./MIN. COMPONENT REACTIONS SNOW	LIVE	PERM.LIVE	WIND	DEAD	SOIL
19	1220	866 / 0	0 / 0	0 / 0	0 / 0	353 / 0	0 / 0
11	1148	803 / 0	0 / 0	0 / 0	0 / 0	345 / 0	0 / 0

BEARING MATERIAL TO BE SPF NO.2 OR BETTER AT JOINT(S) 19, 11

BRACING
TOP CHORD TO BE SHEATHED OR MAX. PURLIN SPACING = 4.06 FT.
MAX. UNBRACED BOTTOM CHORD LENGTH = 10.00 FT. OR RIGID CEILING DIRECTLY APPLIED.

ALL PITCH BREAKS AND PERIMETER CORNER JOINTS MUST BE LATERALLY RESTRAINED.

1 - 2x3 SPF No.2 LATERAL BRACE(S) AT 1/ 2 LENGTH OF 7-15, 5-15. DBS = 20-0-0 . CBF = 85 LBS.

DBS = DIAGONAL BRACE SPACING (MAX). CBF = CUMULATIVE BRACING FORCE. FASTEN LATERAL BRACE(S) USING (0.122"X3") SPIRAL NAILS : 1 NAIL FOR 2x3 BRACE(S), 2 FOR 1x4, 2x4, 2x5, 3 FOR 2x6, 4 FOR 2x8, 5 FOR 2x10, AND 6 FOR 2x12.

END VERTICAL(S) MUST BE SHEATHED OR HAVE BRACES AS INDICATED IN THE MAX. UNBRACED LENGTH COLUMN OF THE TABLE BELOW

LOADING
TOTAL LOAD CASES: (3)

CHORDS MEMB. FR-TO	MAX. FACTORED FORCE (LBS)	FACTORED VERT. LOAD (PLF) FROM	TO	LC1 CSI	MAX (LC)	MAX. UNBRAC LENGTH	WEBS MEMB. FR-TO	MAX. FACTORED FORCE (LBS)	MAX CSI (LC)
1- 2	0 / 23	-77.3	-77.3	0.10	(1)	10.00	15- 6	0 / 1138	0.26 (1)
2- 3	-2414 / 0	-77.3	-77.3	0.43	(1)	4.06	15- 7	-680 / 0	0.36 (1)
3- 4	-2164 / 0	-77.3	-77.3	0.35	(1)	4.33	13- 7	0 / 257	0.06 (1)
4- 5	-2164 / 0	-77.3	-77.3	0.35	(1)	4.33	13- 9	-289 / 0	0.25 (1)
5- 6	-1689 / 0	-77.3	-77.3	0.34	(1)	4.79	12- 9	-208 / 34	0.05 (1)
6- 7	-1689 / 0	-77.3	-77.3	0.34	(1)	4.79	5-15	-680 / 0	0.36 (1)
7- 8	-2164 / 0	-77.3	-77.3	0.35	(1)	4.33	17- 5	0 / 257	0.06 (1)
8- 9	-2164 / 0	-77.3	-77.3	0.35	(1)	4.33	3-17	-289 / 0	0.25 (1)
9-10	-2414 / 0	-77.3	-77.3	0.43	(1)	4.06	18- 3	-208 / 34	0.05 (1)
19- 2	-1696 / 0	0.0	0.0	0.17	(1)	6.38	2-18	0 / 2199	0.49 (1)
11-10	-1591 / 0	0.0	0.0	0.16	(1)	6.55	12-10	0 / 2199	0.49 (1)
19-18	0 / 0	-17.5	-17.5	0.13	(3)	10.00			
18-17	0 / 2176	-17.5	-17.5	0.40	(1)	10.00			
17-16	0 / 1935	-17.5	-17.5	0.38	(1)	10.00			
16-15	0 / 1935	-17.5	-17.5	0.38	(1)	10.00			
15-14	0 / 1935	-17.5	-17.5	0.38	(1)	10.00			
14-13	0 / 1935	-17.5	-17.5	0.38	(1)	10.00			
13-12	0 / 2176	-17.5	-17.5	0.40	(1)	10.00			
12-11	0 / 0	-17.5	-17.5	0.13	(3)	10.00			

DESIGN CRITERIA

SPECIFIED LOADS:

TOP	CH.	LL	=	23.3	PSF
		DL	=	3.0	PSF
BOT	CH.	LL	=	0.0	PSF
		DL	=	7.0	PSF
TOTAL	LOAD		=	33.3	PSF

SPACING = 24.0 IN. C/C

THIS TRUSS IS DESIGNED FOR RESIDENTIAL OR SMALL BUILDING REQUIREMENTS OF PART 9, NBCC 2010

THIS DESIGN COMPLIES WITH:
- PART 9 OF OBC 2012 , BCBC 2012 , ABC 2014
- CSA 086-09
- TPIC 2011

(55 % OF 27.2 P.S.F. G.S.L. PLUS 8.4 P.S.F. RAIN LOAD) EQUALS 23.3 P.S.F. SPECIFIED ROOF LIVE LOAD

ALLOWABLE DEFL.(LL)= L/360 (1.15")
CALCULATED VERT. DEFL.(LL) = L/ 999 (0.13")
ALLOWABLE DEFL.(TL)= L/360 (1.15")
CALCULATED VERT. DEFL.(TL) = L/ 999 (0.23")

CSI: TC=0.43 (9-10:1) , BC=0.40 (12-13:1) , WB=0.49 (10-12:1) , SSI=0.19 (2-3:1)

DOL LUMBER=1.00 NAIL=1.00 LS BEND=1.10 COMP=1.10 SHEAR=1.10 TENS= 1.10

COMPANION LIVE LOAD FACTOR = 0.50

TRUSS PLATE MANUFACTURER IS NOT RESPONSIBLE FOR QUALITY CONTROL IN THE TRUSS MANUFACTURING PLANT .

NAIL VALUES

PLATE	GRIP(DRY) (PSI) MAX	MIN	SHEAR (PLI) MAX	MIN	SECTION (PLI) MAX	MIN
MT20	618	354	1667	822	2284	1656

PLATE PLACEMENT TOL. = 0.250 inches

PLATE ROTATION TOL. = 5.0 Deg.

JSI GRIP= 0.89 (11) (INPUT = 0.90)
JSI METAL= 0.65 (18) (INPUT = 1.00)

LICENSED PROFESSIONAL ENGINEER
R.M. TREVISAN
100136551
March 13th, 2017
PROVINCE OF ONTARIO

RECEIVED
TOWN OF MILTON
MAR 29, 2017
17-4990
BUILDING DIVISION

READ ALL NOTES ON THIS PAGE AND ON THE ENGINEERING NOTE PAGE ENP-1. THE NOTE PAGE IS AN INTEGRAL PART OF THIS DRAWING AS IT CONTAINS SPECIFICATIONS AND CRITERIA USED IN THE DESIGN OF THIS COMPONENT.

KOTT

JOB NAME	TRUSS NAME	QUANTITY	PLY	JOB DESC.	DRWG NO.
PT0317-054	T92	2	1	TRUSS DESC. LECCO RIDGE-BLOCK 328	

Kott Lumber Uxbridge, Stouffville, ON, CGC

Version 8.100 S Feb 9 2017 MiTek Industries, Inc. Mon Mar 13 09:57:22 2017 Page 1
ID:pF8Cn?9h9uHzAm5tCmlVl5yJJCp-Uw0ppID_lWZ2XDB9nNuqsckmwZjtv_MmuxNFmazbOmx

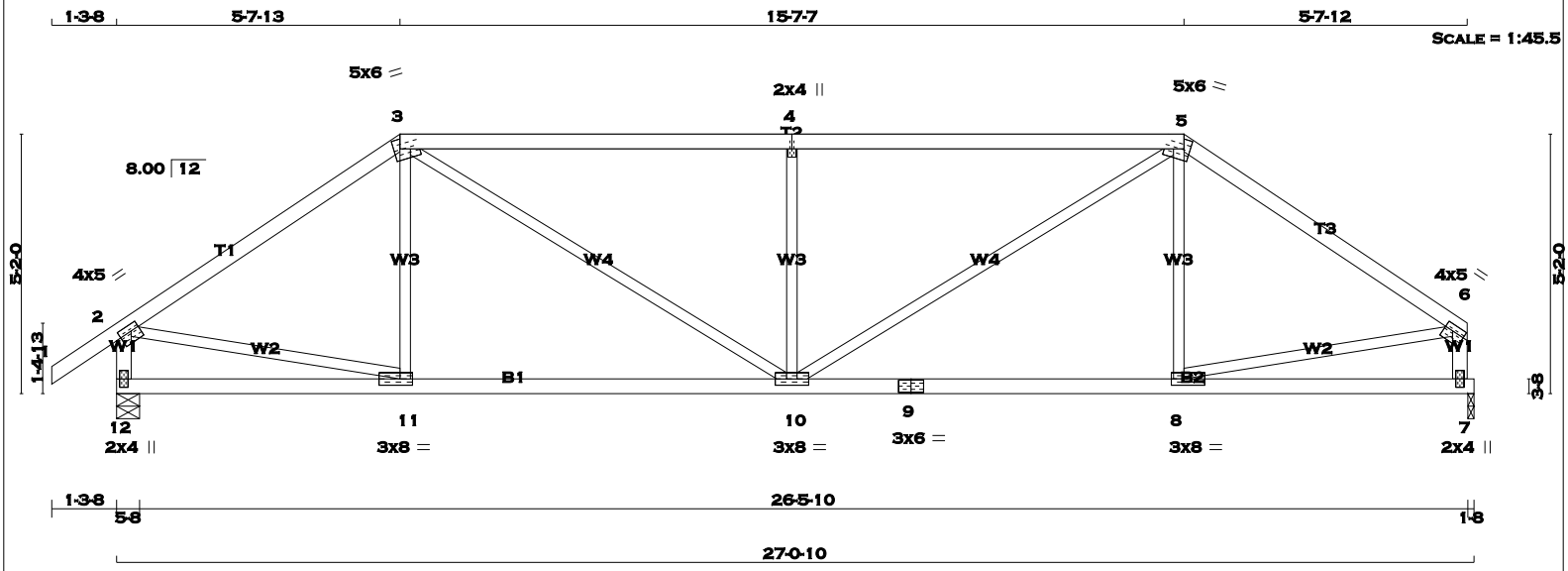

TOTAL WEIGHT = 2 X 103 = 206 lb

LUMBER
N. L. G. A. RULES

CHORDS	SIZE		LUMBER	DESCR.
1 - 3	2x4	DRY	No.2	SPF
3 - 5	2x4	DRY	No.2	SPF
5 - 6	2x4	DRY	No.2	SPF
12 - 2	2x4	DRY	No.2	SPF
7 - 6	2x4	DRY	No.2	SPF
12 - 9	2x4	DRY	No.2	SPF
9 - 7	2x4	DRY	No.2	SPF
ALL WEBS EXCEPT	2x3	DRY	No.2	SPF

DRY: SEASONED LUMBER.

PLATES (table is in inches)

JT	TYPE	PLATES	W	LEN	Y	X
2	TMVW-t	MT20	4.0	5.0	1.50	2.00
3	TTWW-m	MT20	5.0	6.0	2.25	1.50
4	TMW+w	MT20	2.0	4.0		
5	TTWW-m	MT20	5.0	6.0	2.25	1.50
6	TMVW-t	MT20	4.0	5.0	1.50	2.00
7	BMV1+p	MT20	2.0	4.0		
8	BMWW-t	MT20	3.0	8.0	1.50	3.00
9	BS-t	MT20	3.0	6.0		
10	BMWWW-t	MT20	3.0	8.0		
11	BMWW-t	MT20	3.0	8.0	1.50	3.00
12	BMV1+p	MT20	2.0	4.0		

A SIZE FOR SIZE SUBSTITUTION OF MITEK MII20 WITH TEE-LOK TL20 PLATES IS ALLOWED.

CSI FAILURE: 3-4, 4-5

DIMENSIONS, SUPPORTS AND LOADINGS SPECIFIED BY FABRICATOR TO BE VERIFIED BY BUILDING DESIGNER

BEARINGS

JT	FACTORED GROSS REACTION VERT	HORZ	MAXIMUM FACTORED GROSS REACTION DOWN	HORZ	UPLIFT	INPUT BRG IN-SX	REQRD BRG IN-SX
12	1383	0	1383	0	0	5-8	5-8
7	1276	0	1276	0	0	1-8	1-8

UNFACTORED REACTIONS

JT	1ST LCASE COMBINED	MAX./MIN. COMPONENT REACTIONS SNOW	LIVE	PERM.LIVE	WIND	DEAD	SOIL
12	968	691 / 0	0 / 0	0 / 0	0 / 0	277 / 0	0 / 0
7	896	627 / 0	0 / 0	0 / 0	0 / 0	269 / 0	0 / 0

BEARING MATERIAL TO BE SPF NO.2 OR BETTER AT JOINT(S) 12, 7

BRACING
TOP CHORD TO BE SHEATHED OR MAX. PURLIN SPACING = 3.22 FT.
MAX. UNBRACED BOTTOM CHORD LENGTH = 10.00 FT. OR RIGID CEILING DIRECTLY APPLIED.

ALL PITCH BREAKS AND PERIMETER CORNER JOINTS MUST BE LATERALLY RESTRAINED.

LOADING
TOTAL LOAD CASES: (3)

CHORDS

MEMB. FR-TO	MAX. FACTORED FORCE (LBS)	FACTORED VERT. LOAD (PLF) FROM	TO	LC1 MAX CSI (LC)	MAX. UNBRAC LENGTH
1- 2	0 / 29	-77.3	-77.3	0.10 (1)	10.00
2- 3	-1434 / 0	-77.3	-77.3	0.52 (1)	4.82
3- 4	-1895 / 0	-77.3	-77.3	1.10 (1)	3.22
4- 5	-1895 / 0	-77.3	-77.3	1.10 (1)	3.22
5- 6	-1433 / 0	-77.3	-77.3	0.52 (1)	4.82
12- 2	-1346 / 0	0.0	0.0	0.14 (1)	6.99
7- 6	-1240 / 0	0.0	0.0	0.13 (1)	7.21
12-11	0 / 0	-17.5	-17.5	0.18 (3)	10.00
11-10	0 / 1190	-17.5	-17.5	0.30 (1)	10.00
10- 9	0 / 1189	-17.5	-17.5	0.30 (1)	10.00
9- 8	0 / 1189	-17.5	-17.5	0.30 (1)	10.00
8- 7	0 / 0	-17.5	-17.5	0.18 (3)	10.00

WEBS

MEMB. FR-TO	MAX. FACTORED FORCE (LBS)	MAX CSI (LC)
11- 3	-92 / 78	0.04 (1)
3-10	0 / 831	0.19 (1)
10- 4	-744 / 0	0.29 (1)
10- 5	0 / 831	0.19 (1)
8- 5	-93 / 77	0.04 (1)
2-11	0 / 1212	0.27 (1)
8- 6	0 / 1212	0.27 (1)

[M]

DESIGN CRITERIA

SPECIFIED LOADS:

TOP CH.	LL	=	23.3	PSF
	DL	=	3.0	PSF
BOT CH.	LL	=	0.0	PSF
	DL	=	7.0	PSF
TOTAL LOAD		=	33.3	PSF

SPACING = 24.0 IN. C/C

LOADING IN FLAT SECTION BASED ON A SLOPE OF 6.00/12

THIS TRUSS IS DESIGNED FOR RESIDENTIAL OR SMALL BUILDING REQUIREMENTS OF PART 9, NBCC 2010

THIS DESIGN COMPLIES WITH:
- PART 9 OF OBC 2012 , BCBC 2012 , ABC 2014
- CSA 086-09
- TPIC 2011

(55 % OF 27.2 P.S.F. G.S.L. PLUS 8.4 P.S.F. RAIN LOAD) EQUALS 23.3 P.S.F. SPECIFIED ROOF LIVE LOAD

ALLOWABLE DEFL.(LL)= L/360 (0.90")
CALCULATED VERT. DEFL.(LL) = L/ 999 (0.08")
ALLOWABLE DEFL.(TL)= L/360 (0.90")
CALCULATED VERT. DEFL.(TL) = L/ 999 (0.16")

CSI: TC=1.10 (3-4:1) , BC=0.30 (10-11:1) , WB=0.29 (4-10:1) , SSI=0.29 (3-4:1)

DOL LUMBER=1.00 NAIL=1.00 LS BEND=1.10 COMP=1.10 SHEAR=1.10 TENS= 1.10

COMPANION LIVE LOAD FACTOR = 0.50

TRUSS PLATE MANUFACTURER IS NOT RESPONSIBLE FOR QUALITY CONTROL IN THE TRUSS MANUFACTURING PLANT .

NAIL VALUES

PLATE	GRIP(DRY) (PSI) MAX	MIN	SHEAR (PLI) MAX	MIN	SECTION (PLI) MAX	MIN
MT20	618	354	1667	822	2284	1656

PLATE PLACEMENT TOL. = 0.250 inches

PLATE ROTATION TOL. = 5.0 Deg.

JSI GRIP= 0.90 (8) (INPUT = 0.90)
JSI METAL= 0.48 (2) (INPUT = 1.00)

LICENSED PROFESSIONAL ENGINEER
R.M. TREVISAN
100136551
March 13th, 2017
PROVINCE OF ONTARIO

RECEIVED
TOWN OF MILTON
MAR 29, 2017
17-4990
BUILDING DIVISION

READ ALL NOTES ON THIS PAGE AND ON THE ENGINEERING NOTE PAGE ENP-1. THE NOTE PAGE IS AN INTEGRAL PART OF THIS DRAWING AS IT CONTAINS SPECIFICATIONS AND CRITERIA USED IN THE DESIGN OF THIS COMPONENT.

KOTT

JOB NAME	TRUSS NAME	QUANTITY	PLY	JOB DESC.	DRWG NO.
PT0317-054	T93	2	1	TRUSS DESC. LECCO RIDGE-BLOCK 328	ENG JOB: PT0317-054

Kott Lumber Uxbridge, Stouffville, ON, CGC

Version 8.100 S Feb 9 2017 MiTek Industries, Inc. Mon Mar 13 09:57:23 2017 Page 1

ID:pF8Cn?9h9uHzAm5tCmlVl5yJJCp-y6aC1dEcWphv8NlLK5P3PqH62y20eMKw7b7pI1zbOmw

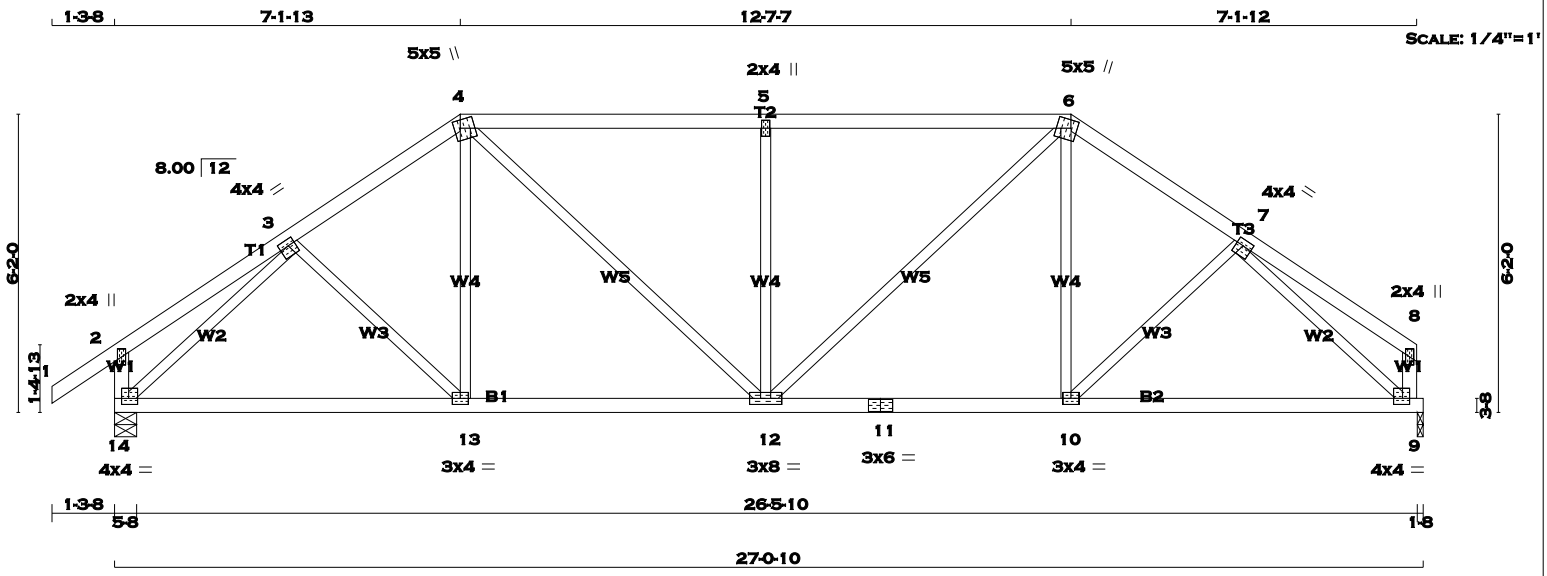

TOTAL WEIGHT = 2 X 111 = 223 lb

[M][F]

LUMBER

N. L. G. A. RULES

CHORDS	SIZE		LUMBER	DESCR.
1 - 4	2x4	DRY	No.2	SPF
4 - 6	2x4	DRY	No.2	SPF
6 - 8	2x4	DRY	No.2	SPF
14 - 2	2x4	DRY	No.2	SPF
9 - 8	2x4	DRY	No.2	SPF
14 - 11	2x4	DRY	No.2	SPF
11 - 9	2x4	DRY	No.2	SPF
ALL WEBS EXCEPT	2x3	DRY	No.2	SPF

DRY: SEASONED LUMBER.

PLATES (table is in inches)

JT	TYPE	PLATES	W	LEN	Y	X
2	TMV+p	MT20	2.0	4.0		
3	TMWW-t	MT20	4.0	4.0	1.50	1.75
4	TTWW+m	MT20	5.0	5.0	2.00	1.50
5	TMW+w	MT20	2.0	4.0		
6	TTWW+m	MT20	5.0	5.0	2.00	1.50
7	TMWW-t	MT20	4.0	4.0	1.50	1.75
8	TMV+p	MT20	2.0	4.0		
9	BMVW1-t	MT20	4.0	4.0	1.50	1.75
10	BMWW-t	MT20	3.0	4.0		
11	BS-t	MT20	3.0	6.0		
12	BMWWW-t	MT20	3.0	8.0		
13	BMWW-t	MT20	3.0	4.0		
14	BMVW1-t	MT20	4.0	4.0	1.50	1.75

A SIZE FOR SIZE SUBSTITUTION OF MITEK MII20 WITH TEE-LOK TL20 PLATES IS ALLOWED.

DIMENSIONS, SUPPORTS AND LOADINGS SPECIFIED BY FABRICATOR TO BE VERIFIED BY BUILDING DESIGNER

BEARINGS

JT	FACTORED GROSS REACTION VERT	HORZ	MAXIMUM FACTORED GROSS REACTION DOWN	HORZ	UPLIFT	INPUT BRG IN-SX	REQRD BRG IN-SX
14	1383	0	1383	0	0	5-8	5-8
9	1276	0	1276	0	0	1-8	1-8

UNFACTORED REACTIONS

JT	1ST LCASE COMBINED	MAX./MIN. COMPONENT REACTIONS SNOW	LIVE	PERM.LIVE	WIND	DEAD	SOIL
14	968	691 / 0	0 / 0	0 / 0	0 / 0	277 / 0	0 / 0
9	896	627 / 0	0 / 0	0 / 0	0 / 0	269 / 0	0 / 0

BEARING MATERIAL TO BE SPF NO.2 OR BETTER AT JOINT(S) 14, 9

BRACING

TOP CHORD TO BE SHEATHED OR MAX. PURLIN SPACING = 4.82 FT.
MAX. UNBRACED BOTTOM CHORD LENGTH = 10.00 FT. OR RIGID CEILING DIRECTLY APPLIED.

ALL PITCH BREAKS AND PERIMETER CORNER JOINTS MUST BE LATERALLY RESTRAINED.

LOADING

TOTAL LOAD CASES: (3)

CHORDS

MEMB. FR-TO	MAX. FACTORED FORCE (LBS)	FACTORED VERT. LOAD (PLF) FROM	TO	LC1 CSI (LC)	MAX UNBRAC LENGTH
1- 2	0 / 29	-77.3	-77.3	0.10 (1)	10.00
2- 3	0 / 16	-77.3	-77.3	0.14 (1)	10.00
3- 4	-1409 / 0	-77.3	-77.3	0.13 (1)	5.37
4- 5	-1531 / 0	-77.3	-77.3	0.43 (1)	4.82
5- 6	-1531 / 0	-77.3	-77.3	0.43 (1)	4.82
6- 7	-1409 / 0	-77.3	-77.3	0.13 (1)	5.37
7- 8	0 / 16	-77.3	-77.3	0.14 (1)	10.00
14- 2	-215 / 0	0.0	0.0	0.02 (1)	7.81
9- 8	-109 / 0	0.0	0.0	0.01 (1)	7.81
14-13	0 / 1151	-17.5	-17.5	0.30 (1)	10.00
13-12	0 / 1159	-17.5	-17.5	0.30 (1)	10.00
12-11	0 / 1159	-17.5	-17.5	0.30 (1)	10.00
11-10	0 / 1159	-17.5	-17.5	0.30 (1)	10.00
10- 9	0 / 1150	-17.5	-17.5	0.30 (1)	10.00

WEBS

MEMB. FR-TO	MAX. FACTORED FORCE (LBS)	MAX CSI (LC)
3-13	0 / 51	0.02 (3)
13- 4	0 / 133	0.04 (3)
4-12	0 / 507	0.11 (1)
12- 5	-599 / 0	0.36 (1)
12- 6	0 / 507	0.11 (1)
10- 6	0 / 133	0.04 (3)
10- 7	0 / 51	0.02 (3)
14- 3	-1603 / 0	0.63 (1)
7- 9	-1603 / 0	0.63 (1)

DESIGN CRITERIA

SPECIFIED LOADS:

TOP CH.	LL	=	23.3	PSF
	DL	=	3.0	PSF
BOT CH.	LL	=	0.0	PSF
	DL	=	7.0	PSF
TOTAL LOAD		=	33.3	PSF

SPACING = 24.0 IN. C/C

LOADING IN FLAT SECTION BASED ON A SLOPE OF 6.00/12

THIS TRUSS IS DESIGNED FOR RESIDENTIAL OR SMALL BUILDING REQUIREMENTS OF PART 9, NBCC 2010

THIS DESIGN COMPLIES WITH:
- PART 9 OF OBC 2012 , BCBC 2012 , ABC 2014
- CSA 086-09
- TPIC 2011

(55 % OF 27.2 P.S.F. G.S.L. PLUS 8.4 P.S.F. RAIN LOAD) EQUALS 23.3 P.S.F. SPECIFIED ROOF LIVE LOAD

ALLOWABLE DEFL.(LL)= L/360 (0.90")
CALCULATED VERT. DEFL.(LL) = L/ 999 (0.06")
ALLOWABLE DEFL.(TL)= L/360 (0.90")
CALCULATED VERT. DEFL.(TL) = L/ 999 (0.11")

CSI: TC=0.43 (4-5:1) , BC=0.30 (12-13:1) , WB=0.63 (3-14:1) , SSI=0.24 (4-5:1)

DOL LUMBER=1.00 NAIL=1.00 LS BEND=1.10 COMP=1.10 SHEAR=1.10 TENS= 1.10

COMPANION LIVE LOAD FACTOR = 0.50

TRUSS PLATE MANUFACTURER IS NOT RESPONSIBLE FOR QUALITY CONTROL IN THE TRUSS MANUFACTURING PLANT .

NAIL VALUES

PLATE	GRIP(DRY) (PSI) MAX	MIN	SHEAR (PLI) MAX	MIN	SECTION (PLI) MAX	MIN
MT20	618	354	1667	822	2284	1656

PLATE PLACEMENT TOL. = 0.250 inches

PLATE ROTATION TOL. = 5.0 Deg.

JSI GRIP= 0.89 (14) (INPUT = 0.90)
JSI METAL= 0.59 (7) (INPUT = 1.00)

LICENSED PROFESSIONAL ENGINEER
P.M. TREVISAN
100136551
March 13th, 2017
PROVINCE OF ONTARIO

RECEIVED
TOWN OF MILTON
MAR 29, 2017
17-4990
BUILDING DIVISION

READ ALL NOTES ON THIS PAGE AND ON THE ENGINEERING NOTE PAGE ENP-1. THE NOTE PAGE IS AN INTEGRAL PART OF THIS DRAWING AS IT CONTAINS SPECIFICATIONS AND CRITERIA USED IN THE DESIGN OF THIS COMPONENT.

KOTT

JOB NAME	TRUSS NAME	QUANTITY	PLY	JOB DESC.	DRWG NO.
PT0317-054	T94	2	1	TRUSS DESC. LECCO RIDGE-BLOCK 328	

Kott Lumber Uxbridge, Stouffville, ON, CGC

Version 8.100 S Feb 9 2017 MiTek Industries, Inc. Mon Mar 13 09:57:23 2017 Page 1
ID:pF8Cn?9h9uHzAm5tCmlVl5yJJCp-y6aC1dEcWphv8NlLK5P3PqH90y34ePtw7b7pI1zbOmw

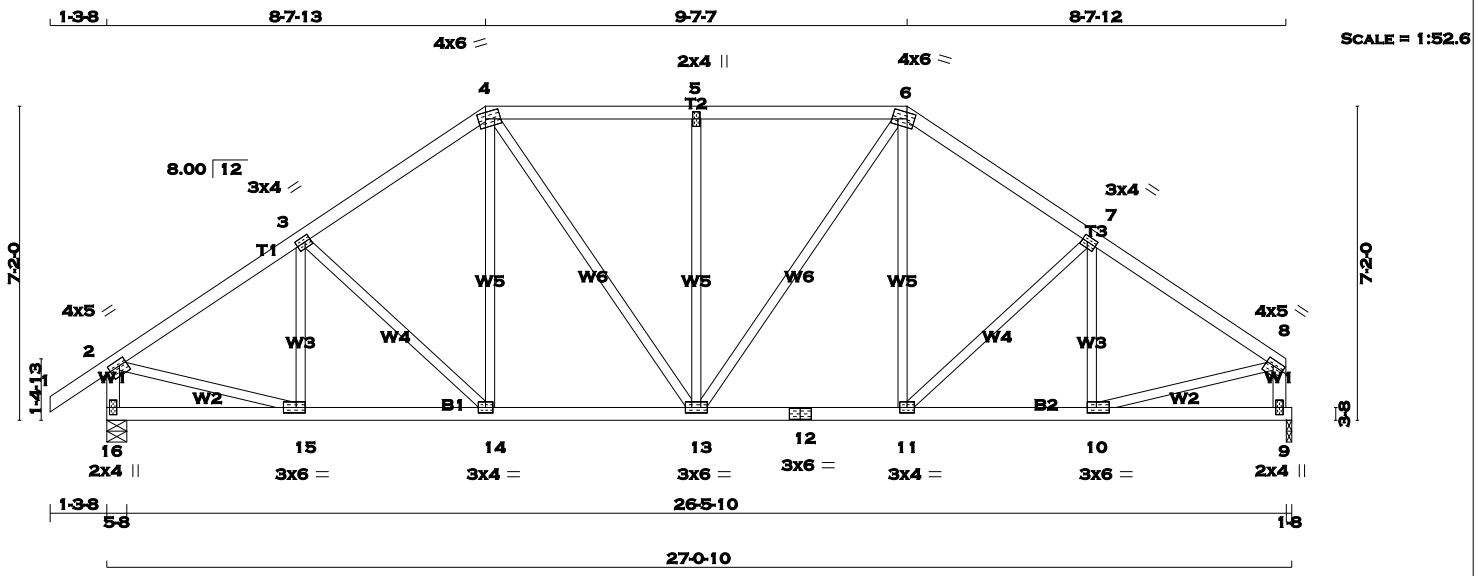

TOTAL WEIGHT = 2 X 121 = 242 lb
[M][F]

LUMBER

N. L. G. A. RULES

CHORDS	SIZE		LUMBER	DESCR.
1 - 4	2x4	DRY	No.2	SPF
4 - 6	2x4	DRY	No.2	SPF
6 - 8	2x4	DRY	No.2	SPF
16 - 2	2x4	DRY	No.2	SPF
9 - 8	2x4	DRY	No.2	SPF
16 - 12	2x4	DRY	No.2	SPF
12 - 9	2x4	DRY	No.2	SPF
ALL WEBS EXCEPT	2x3	DRY	No.2	SPF

DRY: SEASONED LUMBER.

PLATES (table is in inches)

JT	TYPE	PLATES	W	LEN	Y	X
2	TMVW-t	MT20	4.0	5.0	1.50	2.00
3	TMWW-t	MT20	3.0	4.0	1.50	1.50
4	TTWW-m	MT20	4.0	6.0	1.75	2.00
5	TMW+w	MT20	2.0	4.0		
6	TTWW-m	MT20	4.0	6.0	1.75	2.00
7	TMWW-t	MT20	3.0	4.0	1.50	1.50
8	TMVW-t	MT20	4.0	5.0	1.50	2.00
9	BMV1+p	MT20	2.0	4.0		
10	BMWW-t	MT20	3.0	6.0	1.50	2.50
11	BMWW-t	MT20	3.0	4.0		
12	BS-t	MT20	3.0	6.0		
13	BMWWW-t	MT20	3.0	6.0		
14	BMWW-t	MT20	3.0	4.0		
15	BMWW-t	MT20	3.0	6.0	1.50	2.50
16	BMV1+p	MT20	2.0	4.0		

A SIZE FOR SIZE SUBSTITUTION OF MITEK MII20 WITH TEE-LOK TL20 PLATES IS ALLOWED.

DIMENSIONS, SUPPORTS AND LOADINGS SPECIFIED BY FABRICATOR TO BE VERIFIED BY BUILDING DESIGNER

BEARINGS

JT	FACTORED GROSS REACTION VERT	HORZ	MAXIMUM FACTORED GROSS REACTION DOWN	HORZ	UPLIFT	INPUT BRG IN-SX	REQRD BRG IN-SX
16	1383	0	1383	0	0	5-8	5-8
9	1276	0	1276	0	0	1-8	1-8

UNFACTORED REACTIONS

JT	1ST LCASE COMBINED	MAX./MIN. COMPONENT REACTIONS SNOW	LIVE	PERM.LIVE	WIND	DEAD	SOIL
16	968	691 / 0	0 / 0	0 / 0	0 / 0	277 / 0	0 / 0
9	896	627 / 0	0 / 0	0 / 0	0 / 0	269 / 0	0 / 0

BEARING MATERIAL TO BE SPF NO.2 OR BETTER AT JOINT(S) 16, 9

BRACING

TOP CHORD TO BE SHEATHED OR MAX. PURLIN SPACING = 5.24 FT.
MAX. UNBRACED BOTTOM CHORD LENGTH = 10.00 FT. OR RIGID CEILING DIRECTLY APPLIED.

ALL PITCH BREAKS AND PERIMETER CORNER JOINTS MUST BE LATERALLY RESTRAINED.

LOADING

TOTAL LOAD CASES: (3)

CHORDS

MEMB. FR-TO	MAX. FACTORED FORCE (LBS)	FACTORED VERT. LOAD (PLF) FROM	TO	LC1 MAX CSI (LC)	MAX. UNBRAC LENGTH
1- 2	0 / 29	-77.3	-77.3	0.10 (1)	10.00
2- 3	-1443 / 0	-77.3	-77.3	0.21 (1)	5.24
3- 4	-1339 / 0	-77.3	-77.3	0.20 (1)	5.40
4- 5	-1284 / 0	-77.3	-77.3	0.24 (1)	5.43
5- 6	-1284 / 0	-77.3	-77.3	0.24 (1)	5.43
6- 7	-1339 / 0	-77.3	-77.3	0.20 (1)	5.40
7- 8	-1442 / 0	-77.3	-77.3	0.21 (1)	5.24
16- 2	-1348 / 0	0.0	0.0	0.14 (1)	6.98
9- 8	-1242 / 0	0.0	0.0	0.13 (1)	7.20
16-15	0 / 0	-17.5	-17.5	0.07 (3)	10.00
15-14	0 / 1218	-17.5	-17.5	0.24 (1)	10.00
14-13	0 / 1097	-17.5	-17.5	0.22 (1)	10.00
13-12	0 / 1097	-17.5	-17.5	0.22 (1)	10.00
12-11	0 / 1097	-17.5	-17.5	0.22 (1)	10.00
11-10	0 / 1217	-17.5	-17.5	0.24 (1)	10.00
10- 9	0 / 0	-17.5	-17.5	0.07 (3)	10.00

WEBS

MEMB. FR-TO	MAX. FACTORED FORCE (LBS)	MAX CSI (LC)
15- 3	-218 / 7	0.06 (1)
3-14	-169 / 0	0.10 (1)
14- 4	0 / 197	0.04 (1)
4-13	0 / 326	0.07 (1)
13- 5	-452 / 0	0.40 (1)
13- 6	0 / 326	0.07 (1)
11- 6	0 / 197	0.04 (1)
11- 7	-169 / 0	0.10 (1)
10- 7	-218 / 7	0.06 (1)
2-15	0 / 1254	0.28 (1)
10- 8	0 / 1253	0.28 (1)

DESIGN CRITERIA

SPECIFIED LOADS:

TOP CH.	LL	=	23.3	PSF
	DL	=	3.0	PSF
BOT CH.	LL	=	0.0	PSF
	DL	=	7.0	PSF
TOTAL LOAD		=	33.3	PSF

SPACING = 24.0 IN. C/C

LOADING IN FLAT SECTION BASED ON A SLOPE OF 6.00/12

THIS TRUSS IS DESIGNED FOR RESIDENTIAL OR SMALL BUILDING REQUIREMENTS OF PART 9, NBCC 2010

THIS DESIGN COMPLIES WITH:
- PART 9 OF OBC 2012 , BCBC 2012 , ABC 2014
- CSA 086-09
- TPIC 2011

(55 % OF 27.2 P.S.F. G.S.L. PLUS 8.4 P.S.F. RAIN LOAD) EQUALS 23.3 P.S.F. SPECIFIED ROOF LIVE LOAD

ALLOWABLE DEFL.(LL)= L/360 (0.90")
CALCULATED VERT. DEFL.(LL) = L/ 999 (0.05")
ALLOWABLE DEFL.(TL)= L/360 (0.90")
CALCULATED VERT. DEFL.(TL) = L/ 999 (0.09")

CSI: TC=0.24 (4-5:1) , BC=0.24 (14-15:1) , WB=0.40 (5-13:1) , SSI=0.18 (4-5:1)

DOL LUMBER=1.00 NAIL=1.00 LS BEND=1.10 COMP=1.10 SHEAR=1.10 TENS= 1.10

COMPANION LIVE LOAD FACTOR = 0.50

TRUSS PLATE MANUFACTURER IS NOT RESPONSIBLE FOR QUALITY CONTROL IN THE TRUSS MANUFACTURING PLANT .

NAIL VALUES

PLATE	GRIP(DRY) (PSI) MAX	MIN	SHEAR (PLI) MAX	MIN	SECTION (PLI) MAX	MIN
MT20	618	354	1667	822	2284	1656

PLATE PLACEMENT TOL. = 0.250 inches

PLATE ROTATION TOL. = 5.0 Deg.

JSI GRIP= 0.87 (13) (INPUT = 0.90)
JSI METAL= 0.48 (2) (INPUT = 1.00)

LICENSED PROFESSIONAL ENGINEER
P.M. TREVISAN
100136551
March 13th, 2017
PROVINCE OF ONTARIO

RECEIVED
TOWN OF MILTON
MAR 29, 2017
17-4990
BUILDING DIVISION

READ ALL NOTES ON THIS PAGE AND ON THE ENGINEERING NOTE PAGE ENP-1. THE NOTE PAGE IS AN INTEGRAL PART OF THIS DRAWING AS IT CONTAINS SPECIFICATIONS AND CRITERIA USED IN THE DESIGN OF THIS COMPONENT.

KOTT

JOB NAME	TRUSS NAME	QUANTITY	PLY	JOB DESC.	DRWG NO.
PT0317-054	T95	2	1	TRUSS DESC. LECCO RIDGE-BLOCK 328	ENG JOB: PT0317-054

Kott Lumber Uxbridge, Stouffville, ON, CGC

Version 8.100 S Feb 9 2017 MiTek Industries, Inc. Mon Mar 13 09:57:23 2017 Page 1

ID:pF8Cn?9h9uHzAm5tCmlVl5yJJCp-y6aC1dEcWphv8NlLK5P3PqH8Ky2aeRlw7b7pI1zbOmw

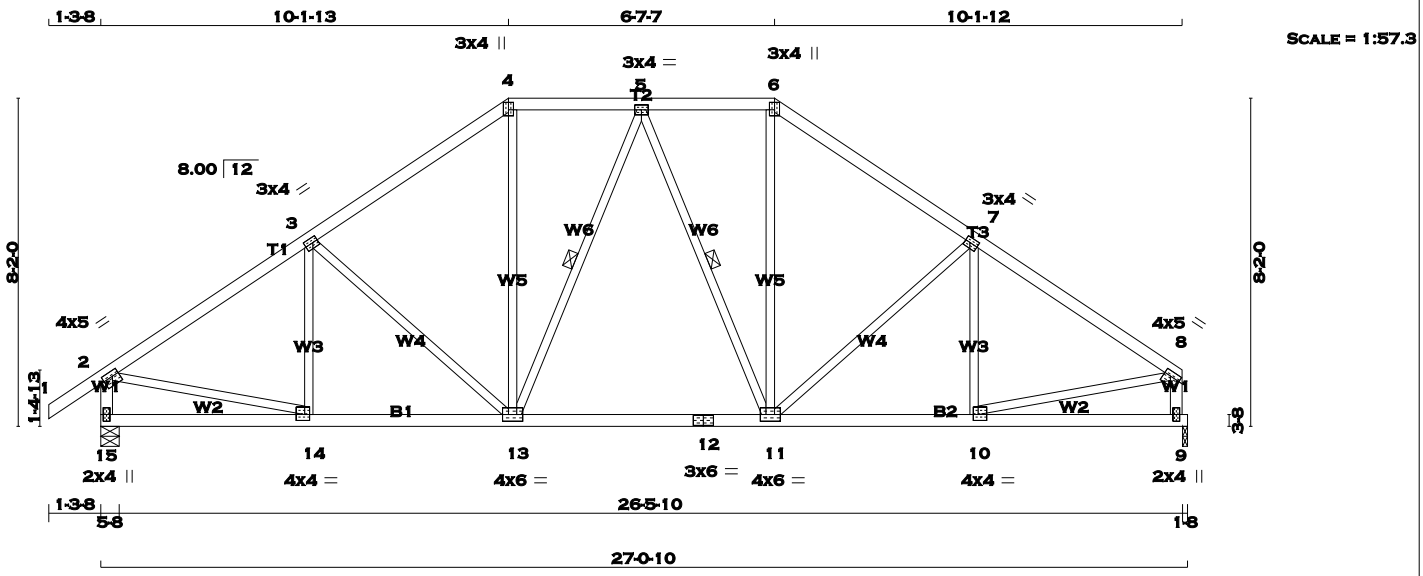

TOTAL WEIGHT = 2 X 122 = 244 lb

[M][F]

LUMBER

N. L. G. A. RULES

CHORDS	SIZE		LUMBER	DESCR.
1 - 4	2x4	DRY	No.2	SPF
4 - 6	2x4	DRY	No.2	SPF
6 - 8	2x4	DRY	No.2	SPF
15 - 2	2x4	DRY	No.2	SPF
9 - 8	2x4	DRY	No.2	SPF
15 - 12	2x4	DRY	No.2	SPF
12 - 9	2x4	DRY	No.2	SPF
ALL WEBS EXCEPT	2x3	DRY	No.2	SPF

DRY: SEASONED LUMBER.

PLATES (table is in inches)

JT	TYPE	PLATES	W	LEN	Y	X
2	TMVW-t	MT20	4.0	5.0	1.50	2.00
3	TMWW-t	MT20	3.0	4.0	1.50	1.50
4	TTW+p	MT20	3.0	4.0	2.25	1.50
5	TMWW-t	MT20	3.0	4.0		
6	TTW+p	MT20	3.0	4.0	2.25	1.50
7	TMWW-t	MT20	3.0	4.0	1.50	1.50
8	TMVW-t	MT20	4.0	5.0	1.50	2.00
9	BMV1+p	MT20	2.0	4.0		
10	BMWW-t	MT20	4.0	4.0	1.75	1.50
11	BMWWW-t	MT20	4.0	6.0		
12	BS-t	MT20	3.0	6.0		
13	BMWWW-t	MT20	4.0	6.0		
14	BMWW-t	MT20	4.0	4.0	1.75	1.50
15	BMV1+p	MT20	2.0	4.0		

A SIZE FOR SIZE SUBSTITUTION OF MITEK MII20 WITH TEE-LOK TL20 PLATES IS ALLOWED.

DIMENSIONS, SUPPORTS AND LOADINGS SPECIFIED BY FABRICATOR TO BE VERIFIED BY BUILDING DESIGNER

BEARINGS

JT	FACTORED GROSS REACTION VERT	HORZ	MAXIMUM FACTORED GROSS REACTION DOWN	HORZ	UPLIFT	INPUT BRG IN-SX	REQRD BRG IN-SX
15	1383	0	1383	0	0	5-8	5-8
9	1276	0	1276	0	0	1-8	1-8

UNFACTORED REACTIONS

JT	1ST LCASE COMBINED	MAX./MIN. COMPONENT REACTIONS SNOW	LIVE	PERM.LIVE	WIND	DEAD	SOIL
15	968	691 / 0	0 / 0	0 / 0	0 / 0	277 / 0	0 / 0
9	896	627 / 0	0 / 0	0 / 0	0 / 0	269 / 0	0 / 0

BEARING MATERIAL TO BE SPF NO.2 OR BETTER AT JOINT(S) 15, 9

BRACING

TOP CHORD TO BE SHEATHED OR MAX. PURLIN SPACING = 5.12 FT.
MAX. UNBRACED BOTTOM CHORD LENGTH = 10.00 FT. OR RIGID CEILING DIRECTLY APPLIED.

ALL PITCH BREAKS AND PERIMETER CORNER JOINTS MUST BE LATERALLY RESTRAINED.

1 - 2x3 SPF No.2 LATERAL BRACE(S) AT 1/ 2 LENGTH OF 5-13, 5-11. DBS = 20-0-0 . CBF = 20 LBS.

DBS = DIAGONAL BRACE SPACING (MAX). CBF = CUMULATIVE BRACING FORCE. FASTEN LATERAL BRACE(S) USING (0.122"X3") SPIRAL NAILS : 1 NAIL FOR 2x3 BRACE(S), 2 FOR 1x4, 2x4, 2x5, 3 FOR 2x6, 4 FOR 2x8, 5 FOR 2x10, AND 6 FOR 2x12.

END VERTICAL(S) MUST BE SHEATHED OR HAVE BRACES AS INDICATED IN THE MAX. UNBRACED LENGTH COLUMN OF THE TABLE BELOW

LOADING

TOTAL LOAD CASES: (3)

CHORDS

MEMB. FR-TO	MAX. FACTORED FORCE (LBS)	FACTORED VERT. LOAD (PLF) FROM	TO	LC1	MAX CSI (LC)	MAX. UNBRAC LENGTH
1- 2	0 / 29	-77.3	-77.3	0.10 (1)		10.00
2- 3	-1461 / 0	-77.3	-77.3	0.29 (1)		5.12
3- 4	-1266 / 0	-77.3	-77.3	0.27 (1)		5.42
4- 5	-1036 / 0	-77.3	-77.3	0.11 (1)		6.06
5- 6	-1036 / 0	-77.3	-77.3	0.11 (1)		6.06
6- 7	-1266 / 0	-77.3	-77.3	0.27 (1)		5.42
7- 8	-1461 / 0	-77.3	-77.3	0.29 (1)		5.12
15- 2	-1343 / 0	0.0	0.0	0.14 (1)		6.99
9- 8	-1237 / 0	0.0	0.0	0.13 (1)		7.22
15-14	0 / 0	-17.5	-17.5	0.10 (3)		10.00
14-13	0 / 1237	-17.5	-17.5	0.27 (1)		10.00
13-12	0 / 1097	-17.5	-17.5	0.24 (1)		10.00
12-11	0 / 1097	-17.5	-17.5	0.24 (1)		10.00
11-10	0 / 1236	-17.5	-17.5	0.27 (1)		10.00
10- 9	0 / 0	-17.5	-17.5	0.10 (3)		10.00

WEBS

MEMB. FR-TO	MAX. FACTORED FORCE (LBS)	MAX CSI (LC)
14- 3	-166 / 31	0.06 (1)
3-13	-277 / 0	0.24 (1)
13- 4	0 / 439	0.10 (1)
13- 5	-162 / 0	0.08 (1)
5-11	-163 / 0	0.08 (1)
11- 6	0 / 439	0.10 (1)
11- 7	-277 / 0	0.24 (1)
10- 7	-166 / 31	0.06 (1)
2-14	0 / 1264	0.28 (1)
10- 8	0 / 1263	0.28 (1)

DESIGN CRITERIA

SPECIFIED LOADS:

TOP CH.	LL	=	23.3	PSF
	DL	=	3.0	PSF
BOT CH.	LL	=	0.0	PSF
	DL	=	7.0	PSF
TOTAL LOAD		=	33.3	PSF

SPACING = 24.0 IN. C/C

LOADING IN FLAT SECTION BASED ON A SLOPE OF 6.00/12

THIS TRUSS IS DESIGNED FOR RESIDENTIAL OR SMALL BUILDING REQUIREMENTS OF PART 9, NBCC 2010

THIS DESIGN COMPLIES WITH:
- PART 9 OF OBC 2012 , BCBC 2012 , ABC 2014
- CSA 086-09
- TPIC 2011

(55 % OF 27.2 P.S.F. G.S.L. PLUS 8.4 P.S.F. RAIN LOAD) EQUALS 23.3 P.S.F. SPECIFIED ROOF LIVE LOAD

ALLOWABLE DEFL.(LL)= L/360 (0.90")
CALCULATED VERT. DEFL.(LL) = L/ 999 (0.05")
ALLOWABLE DEFL.(TL)= L/360 (0.90")
CALCULATED VERT. DEFL.(TL) = L/ 999 (0.11")

CSI: TC=0.29 (2-3:1) , BC=0.27 (13-14:1) , WB=0.28 (2-14:1) , SSI=0.16 (2-3:1)

DOL LUMBER=1.00 NAIL=1.00 LS BEND=1.10 COMP=1.10 SHEAR=1.10 TENS= 1.10

COMPANION LIVE LOAD FACTOR = 0.50

TRUSS PLATE MANUFACTURER IS NOT RESPONSIBLE FOR QUALITY CONTROL IN THE TRUSS MANUFACTURING PLANT .

NAIL VALUES

PLATE	GRIP(DRY) (PSI) MAX	MIN	SHEAR (PLI) MAX	MIN	SECTION (PLI) MAX	MIN
MT20	618	354	1667	822	2284	1656

PLATE PLACEMENT TOL. = 0.250 inches

PLATE ROTATION TOL. = 5.0 Deg.

JSI GRIP= 0.90 (4) (INPUT = 0.90)
JSI METAL= 0.49 (2) (INPUT = 1.00)

LICENSED PROFESSIONAL ENGINEER
P.M. TREVISAN
100136551
March 13th, 2017
PROVINCE OF ONTARIO

RECEIVED
TOWN OF MILTON
MAR 29, 2017
17-4990
BUILDING DIVISION

READ ALL NOTES ON THIS PAGE AND ON THE ENGINEERING NOTE PAGE ENP-1. THE NOTE PAGE IS AN INTEGRAL PART OF THIS DRAWING AS IT CONTAINS SPECIFICATIONS AND CRITERIA USED IN THE DESIGN OF THIS COMPONENT.

KOTT

JOB NAME	TRUSS NAME	QUANTITY	PLY	JOB DESC.	DRWG NO.
PT0317-054	T96	2	1	TRUSS DESC. LECCO RIDGE-BLOCK 328	

Kott Lumber Uxbridge, Stouffville, ON, CGC

Version 8.100 S Feb 9 2017 MiTek Industries, Inc. Mon Mar 13 09:57:24 2017 Page 1
ID:pF8Cn?9h9uHzAm5tCmlVl5yJJCp-QI8aEzFEH7pmmXKXuowIx1qHVMOgNr73MFsMqTzbOmv

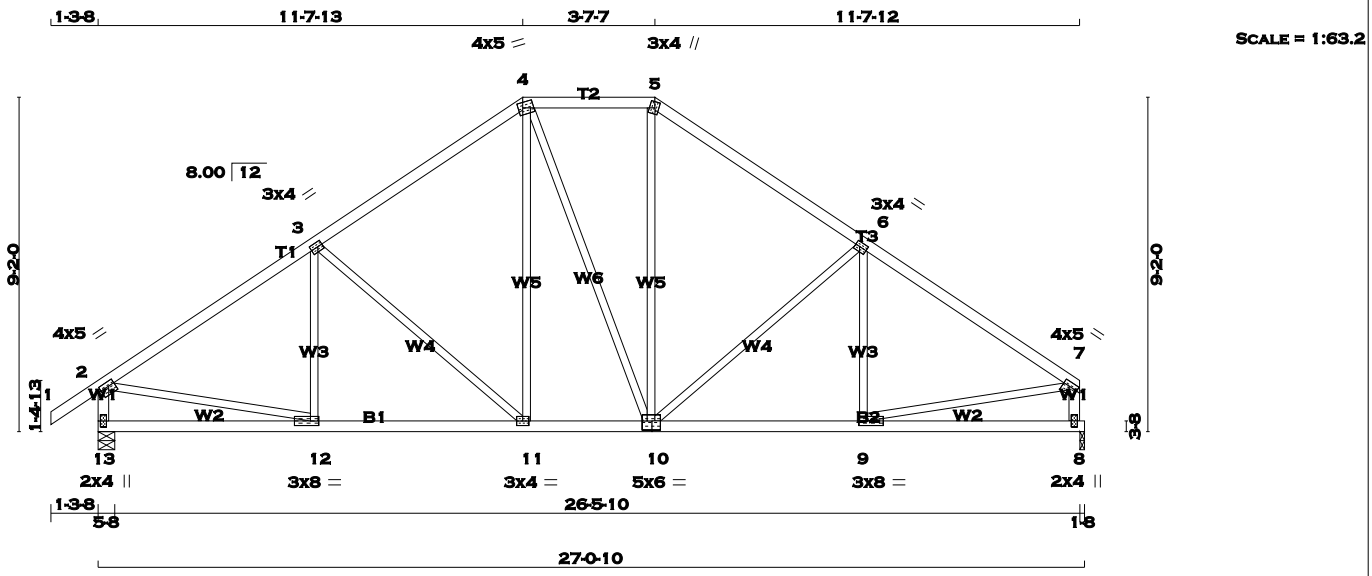

TOTAL WEIGHT = 2 X 122 = 243 lb
[M][F]

LUMBER
N. L. G. A. RULES

CHORDS	SIZE		LUMBER	DESCR.
1 - 4	2x4	DRY	No.2	SPF
4 - 5	2x4	DRY	No.2	SPF
5 - 7	2x4	DRY	No.2	SPF
13 - 2	2x4	DRY	No.2	SPF
8 - 7	2x4	DRY	No.2	SPF
13 - 10	2x4	DRY	No.2	SPF
10 - 8	2x4	DRY	No.2	SPF
ALL WEBS EXCEPT	2x3	DRY	No.2	SPF

DRY: SEASONED LUMBER.

PLATES (table is in inches)

JT	TYPE	PLATES	W	LEN	Y	X
2	TMVW-t	MT20	4.0	5.0	1.50	2.00
3	TMWW-t	MT20	3.0	4.0	1.50	1.50
4	TTWW-m	MT20	4.0	5.0	1.75	1.50
5	TTW+m	MT20	3.0	4.0	2.00	1.25
6	TMWW-t	MT20	3.0	4.0	1.50	1.50
7	TMVW-t	MT20	4.0	5.0	1.50	2.00
8	BMV1+p	MT20	2.0	4.0		
9	BMWW-t	MT20	3.0	8.0	1.50	2.75
10	BSWWW-l	MT20	5.0	6.0	3.00	2.75
11	BMWW-t	MT20	3.0	4.0		
12	BMWW-t	MT20	3.0	8.0	1.50	2.75
13	BMV1+p	MT20	2.0	4.0		

A SIZE FOR SIZE SUBSTITUTION OF MITEK MII20 WITH TEE-LOK TL20 PLATES IS ALLOWED.

DIMENSIONS, SUPPORTS AND LOADINGS SPECIFIED BY FABRICATOR TO BE VERIFIED BY BUILDING DESIGNER

BEARINGS

JT	FACTORED GROSS REACTION VERT	HORZ	MAXIMUM FACTORED GROSS REACTION DOWN	HORZ	UPLIFT	INPUT BRG IN-SX	REQRD BRG IN-SX
13	1383	0	1383	0	0	5-8	5-8
8	1276	0	1276	0	0	1-8	1-8

UNFACTORED REACTIONS

JT	1ST LCASE COMBINED	MAX./MIN. COMPONENT REACTIONS SNOW	LIVE	PERM.LIVE	WIND	DEAD	SOIL
13	968	691 / 0	0 / 0	0 / 0	0 / 0	277 / 0	0 / 0
8	896	627 / 0	0 / 0	0 / 0	0 / 0	269 / 0	0 / 0

BEARING MATERIAL TO BE SPF NO.2 OR BETTER AT JOINT(S) 13, 8

BRACING
TOP CHORD TO BE SHEATHED OR MAX. PURLIN SPACING = 4.99 FT.
MAX. UNBRACED BOTTOM CHORD LENGTH = 10.00 FT. OR RIGID CEILING DIRECTLY APPLIED.

ALL PITCH BREAKS AND PERIMETER CORNER JOINTS MUST BE LATERALLY RESTRAINED.

LOADING
TOTAL LOAD CASES: (3)

CHORDS

MEMB. FR-TO	MAX. FACTORED FORCE (LBS)	FACTORED VERT. LOAD (PLF) FROM	TO	LC1 CSI (LC)	MAX UNBRAC LENGTH
1- 2	0 / 29	-77.3	-77.3	0.10 (1)	10.00
2- 3	-1469 / 0	-77.3	-77.3	0.39 (1)	4.99
3- 4	-1176 / 0	-77.3	-77.3	0.36 (1)	5.46
4- 5	-956 / 0	-77.3	-77.3	0.14 (1)	6.20
5- 6	-1177 / 0	-77.3	-77.3	0.36 (1)	5.45
6- 7	-1468 / 0	-77.3	-77.3	0.39 (1)	4.99
13- 2	-1340 / 0	0.0	0.0	0.14 (1)	7.00
8- 7	-1234 / 0	0.0	0.0	0.13 (1)	7.23
13-12	0 / 0	-17.5	-17.5	0.15 (3)	10.00
12-11	0 / 1247	-17.5	-17.5	0.28 (1)	10.00
11-10	0 / 955	-17.5	-17.5	0.20 (1)	10.00
10- 9	0 / 1246	-17.5	-17.5	0.27 (1)	10.00
9- 8	0 / 0	-17.5	-17.5	0.15 (3)	10.00

WEBS

MEMB. FR-TO	MAX. FACTORED FORCE (LBS)	MAX CSI (LC)
12- 3	-110 / 68	0.05 (1)
3-11	-390 / 0	0.47 (1)
11- 4	0 / 329	0.07 (1)
4-10	0 / 2	0.00 (1)
10- 5	0 / 332	0.07 (1)
10- 6	-388 / 0	0.47 (1)
9- 6	-112 / 66	0.05 (1)
2-12	0 / 1267	0.29 (1)
9- 7	0 / 1266	0.28 (1)

DESIGN CRITERIA

SPECIFIED LOADS:

TOP CH.	LL	=	23.3	PSF
	DL	=	3.0	PSF
BOT CH.	LL	=	0.0	PSF
	DL	=	7.0	PSF
TOTAL LOAD		=	33.3	PSF

SPACING = 24.0 IN. C/C

LOADING IN FLAT SECTION BASED ON A SLOPE OF 6.00/12

THIS TRUSS IS DESIGNED FOR RESIDENTIAL OR SMALL BUILDING REQUIREMENTS OF PART 9, NBCC 2010

THIS DESIGN COMPLIES WITH:
- PART 9 OF OBC 2012 , BCBC 2012 , ABC 2014
- CSA 086-09
- TPIC 2011

(55 % OF 27.2 P.S.F. G.S.L. PLUS 8.4 P.S.F. RAIN LOAD) EQUALS 23.3 P.S.F. SPECIFIED ROOF LIVE LOAD

ALLOWABLE DEFL.(LL)= L/360 (0.90")
CALCULATED VERT. DEFL.(LL) = L/ 999 (0.05")
ALLOWABLE DEFL.(TL)= L/360 (0.90")
CALCULATED VERT. DEFL.(TL) = L/ 999 (0.10")

CSI: TC=0.39 (2-3:1) , BC=0.28 (11-12:1) , WB=0.47 (3-11:1) , SSI=0.18 (2-3:1)

DOL LUMBER=1.00 NAIL=1.00 LS BEND=1.10 COMP=1.10 SHEAR=1.10 TENS= 1.10

COMPANION LIVE LOAD FACTOR = 0.50

TRUSS PLATE MANUFACTURER IS NOT RESPONSIBLE FOR QUALITY CONTROL IN THE TRUSS MANUFACTURING PLANT .

NAIL VALUES

PLATE	GRIP(DRY) (PSI) MAX	MIN	SHEAR (PLI) MAX	MIN	SECTION (PLI) MAX	MIN
MT20	618	354	1667	822	2284	1656

PLATE PLACEMENT TOL. = 0.250 inches

PLATE ROTATION TOL. = 5.0 Deg.

JSI GRIP= 0.90 (9) (INPUT = 0.90)
JSI METAL= 0.50 (2) (INPUT = 1.00)

LICENSED PROFESSIONAL ENGINEER
P.M. TREVISAN
100136551
March 13th, 2017
PROVINCE OF ONTARIO

RECEIVED
TOWN OF MILTON
MAR 29, 2017
17-4990
BUILDING DIVISION

READ ALL NOTES ON THIS PAGE AND ON THE ENGINEERING NOTE PAGE ENP-1. THE NOTE PAGE IS AN INTEGRAL PART OF THIS DRAWING AS IT CONTAINS SPECIFICATIONS AND CRITERIA USED IN THE DESIGN OF THIS COMPONENT.

KOTT

JOB NAME	TRUSS NAME	QUANTITY	PLY	JOB DESC.	DRWG NO.
PT0317-054	T97	2	1	TRUSS DESC. LECCO RIDGE-BLOCK 328	

Kott Lumber Uxbridge, Stouffville, ON, CGC

Version 8.100 S Feb 9 2017 MiTek Industries, Inc. Mon Mar 13 09:57:24 2017 Page 1
ID:pF8Cn?9h9uHzAm5tCmlVl5yJJCp-QI8aEzFEH7pmmXKXuowIx1qGcMOHNu03MFsMqTzbOmv

SCALE = 1:73.7

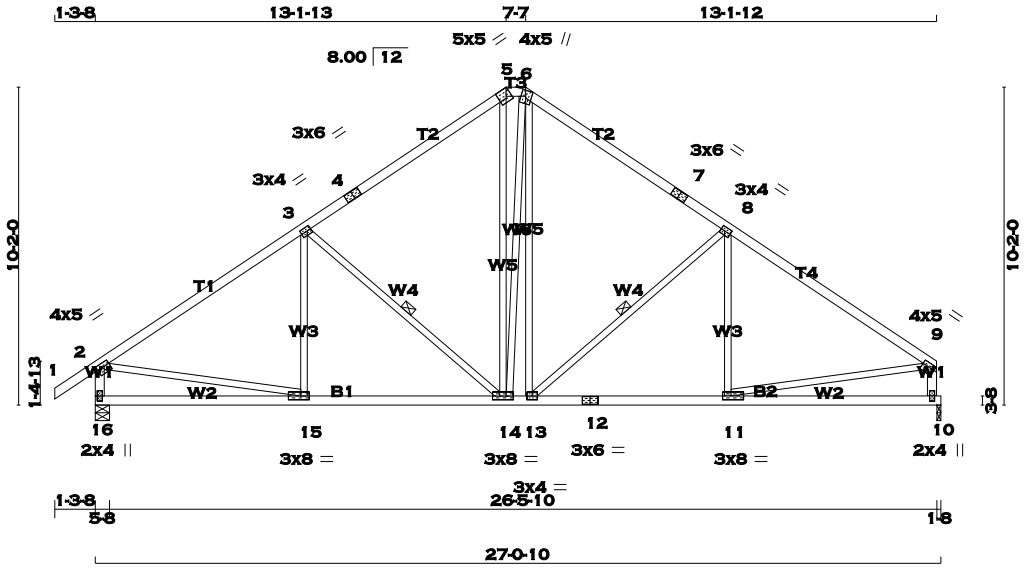

TOTAL WEIGHT = 2 X 127 = 255 lb
[M][F]

LUMBER
N. L. G. A. RULES

CHORDS	SIZE		LUMBER	DESCR.
1 - 4	2x4	DRY	No.2	SPF
4 - 5	2x4	DRY	No.2	SPF
5 - 6	2x4	DRY	No.2	SPF
6 - 7	2x4	DRY	No.2	SPF
7 - 9	2x4	DRY	No.2	SPF
16 - 2	2x4	DRY	No.2	SPF
10 - 9	2x4	DRY	No.2	SPF
16 - 12	2x4	DRY	No.2	SPF
12 - 10	2x4	DRY	No.2	SPF
ALL WEBS EXCEPT	2x3	DRY	No.2	SPF

DRY: SEASONED LUMBER.

PLATES (table is in inches)

JT	TYPE	PLATES	W	LEN	Y	X
2	TMVW-t	MT20	4.0	5.0	1.50	2.00
3	TMWW-t	MT20	3.0	4.0	1.50	1.50
4	TS-t	MT20	3.0	6.0		
5	TTW-h	MT20	5.0	5.0	Edge	2.00
6	TTWW+m	MT20	4.0	5.0	2.25	1.75
7	TS-t	MT20	3.0	6.0		
8	TMWW-t	MT20	3.0	4.0	1.50	1.50
9	TMVW-t	MT20	4.0	5.0	1.50	2.00
10	BMV1+p	MT20	2.0	4.0		
11	BMWW-t	MT20	3.0	8.0	1.50	3.25
12	BS-t	MT20	3.0	6.0		
13	BMWW-t	MT20	3.0	4.0		
14	BMWWW-t	MT20	3.0	8.0		
15	BMWW-t	MT20	3.0	8.0	1.50	3.25
16	BMV1+p	MT20	2.0	4.0		

Edge - INDICATES REFERENCE CORNER OF PLATE TOUCHES EDGE OF CHORD.

A SIZE FOR SIZE SUBSTITUTION OF MITEK MII20 WITH TEE-LOK TL20 PLATES IS ALLOWED.

DIMENSIONS, SUPPORTS AND LOADINGS SPECIFIED BY FABRICATOR TO BE VERIFIED BY BUILDING DESIGNER

BEARINGS

JT	FACTORED GROSS REACTION VERT	HORZ	MAXIMUM FACTORED GROSS REACTION DOWN	HORZ	UPLIFT	INPUT BRG IN-SX	REQRD BRG IN-SX
16	1383	0	1383	0	0	5-8	5-8
10	1276	0	1276	0	0	1-8	1-8

UNFACTORED REACTIONS

JT	1ST LCASE COMBINED	MAX./MIN. COMPONENT REACTIONS SNOW	LIVE	PERM.LIVE	WIND	DEAD	SOIL
16	968	691 / 0	0 / 0	0 / 0	0 / 0	277 / 0	0 / 0
10	896	627 / 0	0 / 0	0 / 0	0 / 0	269 / 0	0 / 0

BEARING MATERIAL TO BE SPF NO.2 OR BETTER AT JOINT(S) 16, 10

BRACING
TOP CHORD TO BE SHEATHED OR MAX. PURLIN SPACING = 4.82 FT.
MAX. UNBRACED BOTTOM CHORD LENGTH = 10.00 FT. OR RIGID CEILING DIRECTLY APPLIED.

ALL PITCH BREAKS AND PERIMETER CORNER JOINTS MUST BE LATERALLY RESTRAINED.

1 - 2x3 SPF No.2 LATERAL BRACE(S) AT 1/ 2 LENGTH OF 3-14, 8-13. DBS = 20-0-0 . CBF = 61 LBS.

DBS = DIAGONAL BRACE SPACING (MAX). CBF = CUMULATIVE BRACING FORCE. FASTEN LATERAL BRACE(S) USING (0.122"X3") SPIRAL NAILS : 1 NAIL FOR 2x3 BRACE(S), 2 FOR 1x4, 2x4, 2x5, 3 FOR 2x6, 4 FOR 2x8, 5 FOR 2x10, AND 6 FOR 2x12.

END VERTICAL(S) MUST BE SHEATHED OR HAVE BRACES AS INDICATED IN THE MAX. UNBRACED LENGTH COLUMN OF THE TABLE BELOW

LOADING
TOTAL LOAD CASES: (3)

CHORDS

MEMB. FR-TO	MAX. FACTORED FORCE (LBS)	FACTORED VERT. LOAD (PLF) FROM	TO	LC1	MAX CSI (LC)	MAX. UNBRAC LENGTH
1- 2	0 / 29	-77.3	-77.3	0.10	(1)	10.00
2- 3	-1462 / 0	-77.3	-77.3	0.51	(1)	4.82
3- 4	-1094 / 0	-77.3	-77.3	0.47	(1)	5.43
4- 5	-1094 / 0	-77.3	-77.3	0.47	(1)	5.43
5- 6	-877 / 0	-77.3	-77.3	0.01	(1)	6.25
6- 7	-1090 / 0	-77.3	-77.3	0.47	(1)	5.44
7- 8	-1090 / 0	-77.3	-77.3	0.47	(1)	5.44
8- 9	-1463 / 0	-77.3	-77.3	0.51	(1)	4.82
16- 2	-1334 / 0	0.0	0.0	0.14	(1)	7.01
10- 9	-1229 / 0	0.0	0.0	0.13	(1)	7.23
16-15	0 / 0	-17.5	-17.5	0.18	(3)	10.00
15-14	0 / 1244	-17.5	-17.5	0.29	(1)	10.00
14-13	0 / 874	-17.5	-17.5	0.22	(1)	10.00
13-12	0 / 1246	-17.5	-17.5	0.30	(1)	10.00
12-11	0 / 1246	-17.5	-17.5	0.30	(1)	10.00
11-10	0 / 0	-17.5	-17.5	0.19	(3)	10.00

WEBS

MEMB. FR-TO	MAX. FACTORED FORCE (LBS)	MAX CSI (LC)
15- 3	-76 / 87	0.04 (1)
3-14	-482 / 0	0.23 (1)
14- 5	0 / 378	0.09 (1)
14- 6	0 / 41	0.01 (1)
13- 6	0 / 334	0.08 (1)
13- 8	-488 / 0	0.24 (1)
11- 8	-69 / 90	0.04 (1)
2-15	0 / 1261	0.28 (1)
11- 9	0 / 1262	0.28 (1)

RECEIVED
TOWN OF MILTON
MAR 29, 2017
17-4990
BUILDING DIVISION

READ ALL NOTES ON THIS PAGE AND ON THE ENGINEERING NOTE PAGE ENP-1. THE NOTE PAGE IS AN INTEGRAL PART OF THIS DRAWING AS IT CONTAINS SPECIFICATIONS AND CRITERIA USED IN THE DESIGN OF THIS COMPONENT.

DESIGN CRITERIA

SPECIFIED LOADS:

TOP CH.	LL	=	23.3	PSF
	DL	=	3.0	PSF
BOT CH.	LL	=	0.0	PSF
	DL	=	7.0	PSF
TOTAL LOAD		=	33.3	PSF

SPACING = 24.0 IN. C/C

LOADING IN FLAT SECTION BASED ON A SLOPE OF 6.00/12

THIS TRUSS IS DESIGNED FOR RESIDENTIAL OR SMALL BUILDING REQUIREMENTS OF PART 9, NBCC 2010

THIS DESIGN COMPLIES WITH:
- PART 9 OF OBC 2012 , BCBC 2012 , ABC 2014
- CSA 086-09
- TPIC 2011

(55 % OF 27.2 P.S.F. G.S.L. PLUS 8.4 P.S.F. RAIN LOAD) EQUALS 23.3 P.S.F. SPECIFIED ROOF LIVE LOAD

ALLOWABLE DEFL.(LL)= L/360 (0.90")
CALCULATED VERT. DEFL.(LL) = L/ 999 (0.05")
ALLOWABLE DEFL.(TL)= L/360 (0.90")
CALCULATED VERT. DEFL.(TL) = L/ 999 (0.11")

CSI: TC=0.51 (2-3:1) , BC=0.30 (11-13:1) , WB=0.28 (9-11:1) , SSI=0.21 (2-3:1)

DOL LUMBER=1.00 NAIL=1.00 LS BEND=1.10 COMP=1.10 SHEAR=1.10 TENS= 1.10

COMPANION LIVE LOAD FACTOR = 0.50

TRUSS PLATE MANUFACTURER IS NOT RESPONSIBLE FOR QUALITY CONTROL IN THE TRUSS MANUFACTURING PLANT .

NAIL VALUES

PLATE	GRIP(DRY) (PSI) MAX	MIN	SHEAR (PLI) MAX	MIN	SECTION (PLI) MAX	MIN
MT20	618	354	1667	822	2284	1656

PLATE PLACEMENT TOL. = 0.250 inches

PLATE ROTATION TOL. = 5.0 Deg.

JSI GRIP= 0.89 (9) (INPUT = 0.90)
JSI METAL= 0.50 (2) (INPUT = 1.00)

KOTT

JOB NAME	TRUSS NAME	QUANTITY	PLY	JOB DESC.	DRWG NO.
PT0317-054	T98	2	1	TRUSS DESC. LECCO RIDGE-BLOCK 328	

Kott Lumber Uxbridge, Stouffville, ON, CGC

Version 8.100 S Feb 9 2017 MiTek Industries, Inc. Mon Mar 13 09:57:24 2017 Page 1
ID:pF8Cn?9h9uHzAm5tCmlVl5yJJCp-QI8aEzFEH7pmmXKXuowIx1qFCMOJNu03MFsMqTzbOmv

SCALE = 1:72.7

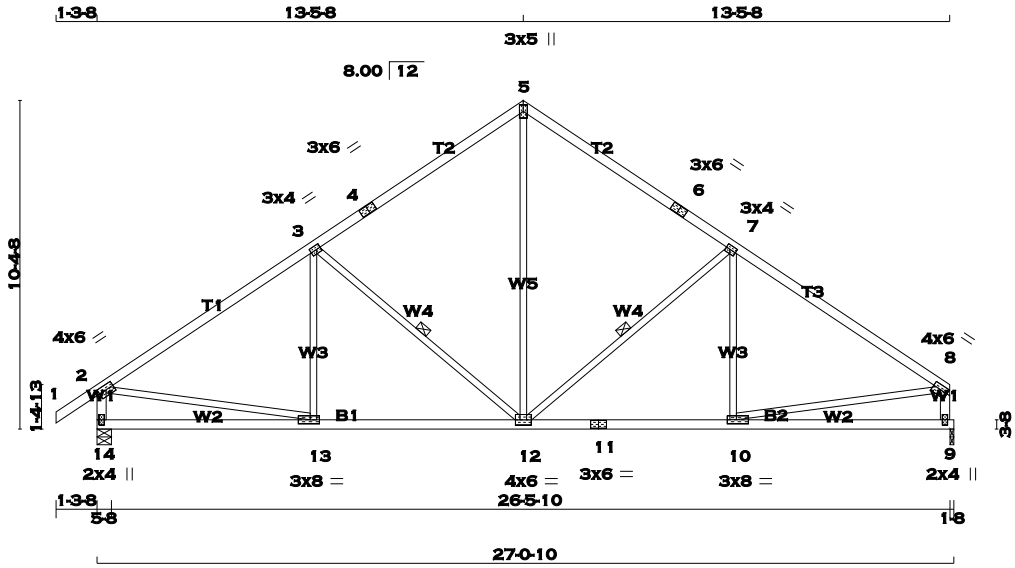

TOTAL WEIGHT = 2 X 113 = 226 lb

LUMBER

N. L. G. A. RULES

CHORDS	SIZE		LUMBER	DESCR.
1 - 4	2x4	DRY	No.2	SPF
4 - 5	2x4	DRY	No.2	SPF
5 - 6	2x4	DRY	No.2	SPF
6 - 8	2x4	DRY	No.2	SPF
14 - 2	2x4	DRY	No.2	SPF
9 - 8	2x4	DRY	No.2	SPF
14 - 11	2x4	DRY	No.2	SPF
11 - 9	2x4	DRY	No.2	SPF
ALL WEBS EXCEPT	2x3	DRY	No.2	SPF

DRY: SEASONED LUMBER.

PLATES (table is in inches)

JT	TYPE	PLATES	W	LEN	Y	X
2	TMVW-t	MT20	4.0	6.0	1.75	3.00
3	TMWW-t	MT20	3.0	4.0	1.50	1.50
4	TS-t	MT20	3.0	6.0		
5	TTW+p	MT20	3.0	5.0		
6	TS-t	MT20	3.0	6.0		
7	TMWW-t	MT20	3.0	4.0	1.50	1.50
8	TMVW-t	MT20	4.0	6.0	1.75	Edge
9	BMV1+p	MT20	2.0	4.0		
10	BMWW-t	MT20	3.0	8.0	1.50	3.50
11	BS-t	MT20	3.0	6.0		
12	BMWWW-t	MT20	4.0	6.0		
13	BMWW-t	MT20	3.0	8.0	1.50	3.50
14	BMV1+p	MT20	2.0	4.0		

Edge - INDICATES REFERENCE CORNER OF PLATE TOUCHES EDGE OF CHORD.

A SIZE FOR SIZE SUBSTITUTION OF MITEK MII20 WITH TEE-LOK TL20 PLATES IS ALLOWED.

DIMENSIONS, SUPPORTS AND LOADINGS SPECIFIED BY FABRICATOR TO BE VERIFIED BY BUILDING DESIGNER

BEARINGS

JT	FACTORED GROSS REACTION VERT	HORZ	MAXIMUM FACTORED GROSS REACTION DOWN	HORZ	UPLIFT	INPUT BRG IN-SX	REQRD BRG IN-SX
14	1383	0	1383	0	0	5-8	5-8
9	1276	0	1276	0	0	1-8	1-8

UNFACTORED REACTIONS

JT	1ST LCASE COMBINED	MAX./MIN. COMPONENT REACTIONS SNOW	LIVE	PERM.LIVE	WIND	DEAD	SOIL
14	968	691 / 0	0 / 0	0 / 0	0 / 0	277 / 0	0 / 0
9	896	627 / 0	0 / 0	0 / 0	0 / 0	269 / 0	0 / 0

BEARING MATERIAL TO BE SPF NO.2 OR BETTER AT JOINT(S) 14, 9

BRACING

TOP CHORD TO BE SHEATHED OR MAX. PURLIN SPACING = 4.79 FT.
MAX. UNBRACED BOTTOM CHORD LENGTH = 10.00 FT. OR RIGID CEILING DIRECTLY APPLIED.

ALL PITCH BREAKS AND PERIMETER CORNER JOINTS MUST BE LATERALLY RESTRAINED.

1 - 2x3 SPF No.2 LATERAL BRACE(S) AT 1/ 2 LENGTH OF 3-12, 7-12. DBS = 20-0-0 . CBF = 63 LBS.

DBS = DIAGONAL BRACE SPACING (MAX). CBF = CUMULATIVE BRACING FORCE. FASTEN LATERAL BRACE(S) USING (0.122"X3") SPIRAL NAILS : 1 NAIL FOR 2x3 BRACE(S), 2 FOR 1x4, 2x4, 2x5, 3 FOR 2x6, 4 FOR 2x8, 5 FOR 2x10, AND 6 FOR 2x12.

END VERTICAL(S) MUST BE SHEATHED OR HAVE BRACES AS INDICATED IN THE MAX. UNBRACED LENGTH COLUMN OF THE TABLE BELOW

LOADING

TOTAL LOAD CASES: (3)

CHORDS

MEMB. FR-TO	MAX. FACTORED FORCE (LBS)	FACTORED VERT. LOAD (PLF) FROM	TO	LC1 CSI (LC)	MAX UNBRAC LENGTH
1- 2	0 / 29	-77.3	-77.3	0.10 (1)	10.00
2- 3	-1460 / 0	-77.3	-77.3	0.54 (1)	4.79
3- 4	-1069 / 0	-77.3	-77.3	0.49 (1)	5.44
4- 5	-1069 / 0	-77.3	-77.3	0.49 (1)	5.44
5- 6	-1069 / 0	-77.3	-77.3	0.49 (1)	5.44
6- 7	-1069 / 0	-77.3	-77.3	0.49 (1)	5.44
7- 8	-1459 / 0	-77.3	-77.3	0.54 (1)	4.79
14- 2	-1334 / 0	0.0	0.0	0.14 (1)	7.01
9- 8	-1227 / 0	0.0	0.0	0.13 (1)	7.23
14-13	0 / 0	-17.5	-17.5	0.19 (3)	10.00
13-12	0 / 1243	-17.5	-17.5	0.30 (1)	10.00
12-11	0 / 1243	-17.5	-17.5	0.30 (1)	10.00
11-10	0 / 1243	-17.5	-17.5	0.30 (1)	10.00
10- 9	0 / 0	-17.5	-17.5	0.19 (3)	10.00

WEBS

MEMB. FR-TO	MAX. FACTORED FORCE (LBS)	MAX CSI (LC)
13- 3	-65 / 92	0.04 (1)
3-12	-503 / 0	0.26 (1)
12- 5	0 / 763	0.17 (1)
12- 7	-503 / 0	0.26 (1)
10- 7	-66 / 92	0.04 (1)
2-13	0 / 1259	0.28 (1)
10- 8	0 / 1259	0.28 (1)

DESIGN CRITERIA

SPECIFIED LOADS:

TOP	CH.	LL	=	23.3	PSF
		DL	=	3.0	PSF
BOT	CH.	LL	=	0.0	PSF
		DL	=	7.0	PSF
TOTAL	LOAD		=	33.3	PSF

SPACING = 24.0 IN. C/C

THIS TRUSS IS DESIGNED FOR RESIDENTIAL OR SMALL BUILDING REQUIREMENTS OF PART 9, NBCC 2010

THIS DESIGN COMPLIES WITH:
- PART 9 OF OBC 2012 , BCBC 2012 , ABC 2014
- CSA 086-09
- TPIC 2011

(55 % OF 27.2 P.S.F. G.S.L. PLUS 8.4 P.S.F. RAIN LOAD) EQUALS 23.3 P.S.F. SPECIFIED ROOF LIVE LOAD

ALLOWABLE DEFL.(LL)= L/360 (0.90")
CALCULATED VERT. DEFL.(LL) = L/ 999 (0.05")
ALLOWABLE DEFL.(TL)= L/360 (0.90")
CALCULATED VERT. DEFL.(TL) = L/ 999 (0.11")

CSI: TC=0.54 (2-3:1) , BC=0.30 (12-13:1) , WB=0.28 (2-13:1) , SSI=0.21 (2-3:1)

DOL LUMBER=1.00 NAIL=1.00 LS BEND=1.10 COMP=1.10 SHEAR=1.10 TENS= 1.10

COMPANION LIVE LOAD FACTOR = 0.50

TRUSS PLATE MANUFACTURER IS NOT RESPONSIBLE FOR QUALITY CONTROL IN THE TRUSS MANUFACTURING PLANT .

NAIL VALUES

PLATE	GRIP(DRY) (PSI) MAX	MIN	SHEAR (PLI) MAX	MIN	SECTION (PLI) MAX	MIN
MT20	618	354	1667	822	2284	1656

PLATE PLACEMENT TOL. = 0.250 inches

PLATE ROTATION TOL. = 5.0 Deg.

JSI GRIP= 0.90 (10) (INPUT = 0.90)
JSI METAL= 0.42 (8) (INPUT = 1.00)

LICENSED PROFESSIONAL ENGINEER
P.M. TREVISAN
100136551
March 13th, 2017
PROVINCE OF ONTARIO

RECEIVED
TOWN OF MILTON
MAR 29, 2017
17-4990
BUILDING DIVISION

READ ALL NOTES ON THIS PAGE AND ON THE ENGINEERING NOTE PAGE ENP-1. THE NOTE PAGE IS AN INTEGRAL PART OF THIS DRAWING AS IT CONTAINS SPECIFICATIONS AND CRITERIA USED IN THE DESIGN OF THIS COMPONENT.

KOTT

JOB NAME	TRUSS NAME	QUANTITY	PLY	JOB DESC.	DRWG NO.
PT0317-054	T99	1	1	TRUSS DESC. LECCO RIDGE-BLOCK 328	ENG JOB: PT0317-054

Kott Lumber Uxbridge, Stouffville, ON, CGC

Version 8.100 S Feb 9 2017 MiTek Industries, Inc. Mon Mar 13 09:57:25 2017 Page 1

ID:pF8Cn?9h9uHzAm5tCmlVl5yJJCp-uViySJGs2RxdOhvjSVRXUFMVzmi46IECavcvNvzbOmu

SCALE = 1:49.6

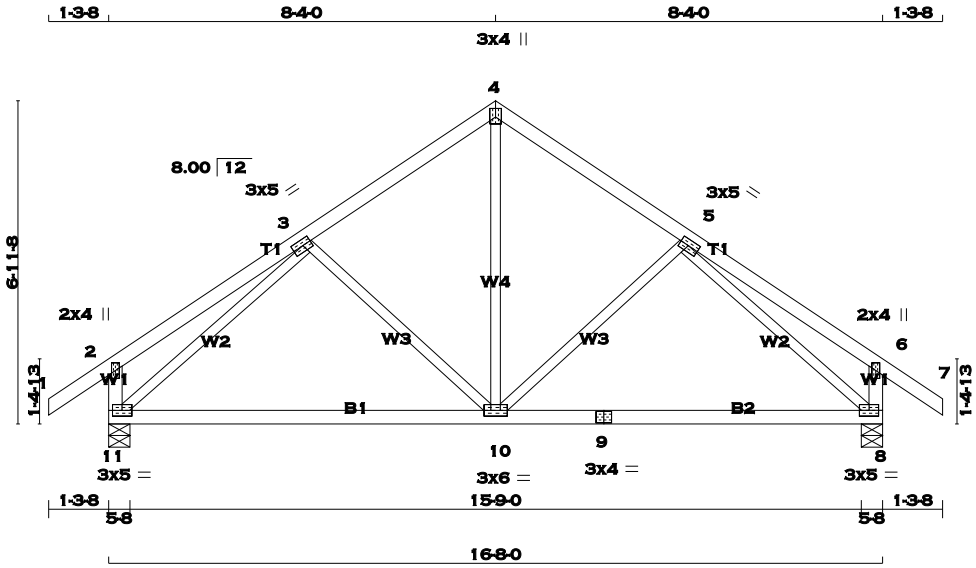

TOTAL WEIGHT = 71 lb

[M][F]

LUMBER

N. L. G. A. RULES

CHORDS	SIZE		LUMBER	DESCR.
1 - 4	2x4	DRY	No.2	SPF
4 - 7	2x4	DRY	No.2	SPF
11 - 2	2x4	DRY	No.2	SPF
8 - 6	2x4	DRY	No.2	SPF
11 - 9	2x4	DRY	No.2	SPF
9 - 8	2x4	DRY	No.2	SPF
ALL WEBS EXCEPT	2x3	DRY	No.2	SPF

DRY: SEASONED LUMBER.

PLATES (table is in inches)

JT	TYPE	PLATES	W	LEN	Y	X
2	TMV+p	MT20	2.0	4.0		
3	TMWW-t	MT20	3.0	5.0	1.50	2.25
4	TTW+p	MT20	3.0	4.0	2.25	1.50
5	TMWW-t	MT20	3.0	5.0	1.50	2.25
6	TMV+p	MT20	2.0	4.0		
8	BMVW1-t	MT20	3.0	5.0		
9	BS-t	MT20	3.0	4.0		
10	BMWWW-t	MT20	3.0	6.0		
11	BMVW1-t	MT20	3.0	5.0		

A SIZE FOR SIZE SUBSTITUTION OF MITEK MII20 WITH TEE-LOK TL20 PLATES IS ALLOWED.

DIMENSIONS, SUPPORTS AND LOADINGS SPECIFIED BY FABRICATOR TO BE VERIFIED BY BUILDING DESIGNER

BEARINGS

JT	FACTORED GROSS REACTION VERT	HORZ	MAXIMUM FACTORED GROSS REACTION DOWN	HORZ	UPLIFT	INPUT BRG IN-SX	REQRD BRG IN-SX
11	897	0	897	0	0	5-8	5-8
8	897	0	897	0	0	5-8	5-8

UNFACTORED REACTIONS

JT	1ST LCASE COMBINED	MAX./MIN. COMPONENT REACTIONS SNOW	LIVE	PERM.LIVE	WIND	DEAD	SOIL
11	627	452 / 0	0 / 0	0 / 0	0 / 0	175 / 0	0 / 0
8	627	452 / 0	0 / 0	0 / 0	0 / 0	175 / 0	0 / 0

BEARING MATERIAL TO BE SPF NO.2 OR BETTER AT JOINT(S) 11, 8

BRACING

TOP CHORD TO BE SHEATHED OR MAX. PURLIN SPACING = 6.25 FT.
MAX. UNBRACED BOTTOM CHORD LENGTH = 10.00 FT. OR RIGID CEILING DIRECTLY APPLIED.

ALL PITCH BREAKS AND PERIMETER CORNER JOINTS MUST BE LATERALLY RESTRAINED.

LOADING

TOTAL LOAD CASES: (3)

CHORDS

MEMB. FR-TO	MAX. FACTORED FORCE (LBS)	FACTORED VERT. LOAD (PLF) FROM	TO	LC1 MAX CSI (LC)	MAX. UNBRAC LENGTH
1- 2	0 / 29	-77.3	-77.3	0.10 (1)	10.00
2- 3	0 / 21	-77.3	-77.3	0.21 (1)	10.00
3- 4	-643 / 0	-77.3	-77.3	0.17 (1)	6.25
4- 5	-643 / 0	-77.3	-77.3	0.17 (1)	6.25
5- 6	0 / 21	-77.3	-77.3	0.21 (1)	10.00
6- 7	0 / 29	-77.3	-77.3	0.10 (1)	10.00
11- 2	-230 / 0	0.0	0.0	0.02 (1)	7.81
8- 6	-230 / 0	0.0	0.0	0.02 (1)	7.81
11-10	0 / 660	-17.5	-17.5	0.39 (3)	10.00
10- 9	0 / 660	-17.5	-17.5	0.39 (3)	10.00
9- 8	0 / 660	-17.5	-17.5	0.39 (3)	10.00

WEBS

MEMB. FR-TO	MAX. FACTORED FORCE (LBS)	MAX CSI (LC)
10- 4	0 / 442	0.10 (1)
10- 5	-193 / 2	0.11 (1)
3-10	-193 / 2	0.11 (1)
11- 3	-900 / 0	0.48 (1)
5- 8	-900 / 0	0.48 (1)

DESIGN CRITERIA

SPECIFIED LOADS:

TOP	CH.	LL	=	23.3	PSF
		DL	=	3.0	PSF
BOT	CH.	LL	=	0.0	PSF
		DL	=	7.0	PSF
TOTAL	LOAD		=	33.3	PSF

SPACING = 24.0 IN. C/C

THIS TRUSS IS DESIGNED FOR RESIDENTIAL OR SMALL BUILDING REQUIREMENTS OF PART 9, NBCC 2010

THIS DESIGN COMPLIES WITH:
- PART 9 OF OBC 2012 , BCBC 2012 , ABC 2014
- CSA 086-09
- TPIC 2011

(55 % OF 27.2 P.S.F. G.S.L. PLUS 8.4 P.S.F. RAIN LOAD) EQUALS 23.3 P.S.F. SPECIFIED ROOF LIVE LOAD

ALLOWABLE DEFL.(LL)= L/360 (0.56")
CALCULATED VERT. DEFL.(LL) = L/ 999 (0.02")
ALLOWABLE DEFL.(TL)= L/360 (0.56")
CALCULATED VERT. DEFL.(TL) = L/ 999 (0.11")

CSI: TC=0.21 (2-3:1) , BC=0.39 (10-11:3) , WB=0.48 (3-11:1) , SSI=0.13 (3-4:1)

DOL LUMBER=1.00 NAIL=1.00 LS BEND=1.10 COMP=1.10 SHEAR=1.10 TENS= 1.10

COMPANION LIVE LOAD FACTOR = 0.50

TRUSS PLATE MANUFACTURER IS NOT RESPONSIBLE FOR QUALITY CONTROL IN THE TRUSS MANUFACTURING PLANT .

NAIL VALUES

PLATE	GRIP(DRY) (PSI) MAX	MIN	SHEAR (PLI) MAX	MIN	SECTION (PLI) MAX	MIN
MT20	618	354	1667	822	2284	1656

PLATE PLACEMENT TOL. = 0.250 inches

PLATE ROTATION TOL. = 5.0 Deg.

JSI GRIP= 0.89 (11) (INPUT = 0.90)
JSI METAL= 0.25 (3) (INPUT = 1.00)

LICENSED PROFESSIONAL ENGINEER
P.M. TREVISAN
100136551
March 13th, 2017
PROVINCE OF ONTARIO

RECEIVED
TOWN OF MILTON
MAR 29, 2017
17-4990
BUILDING DIVISION

READ ALL NOTES ON THIS PAGE AND ON THE ENGINEERING NOTE PAGE ENP-1. THE NOTE PAGE IS AN INTEGRAL PART OF THIS DRAWING AS IT CONTAINS SPECIFICATIONS AND CRITERIA USED IN THE DESIGN OF THIS COMPONENT.

KOTT

JOB NAME	TRUSS NAME	QUANTITY	PLY	JOB DESC.	DRWG NO.
PT0317-054	T100	3	1	TRUSS DESC. LECCO RIDGE-BLOCK 328	ENG JOB: PT0317-054

Kott Lumber Uxbridge, Stouffville, ON, CGC

Version 8.100 S Feb 9 2017 MiTek Industries, Inc. Mon Mar 13 09:57:25 2017 Page 1

ID:pF8Cn?9h9uHzAm5tCmlVl5yJJCp-uViySJGs2RxdOhvjSVRXUFMVymjO6IVCavcvNvzbOmu

SCALE = 1:49.6

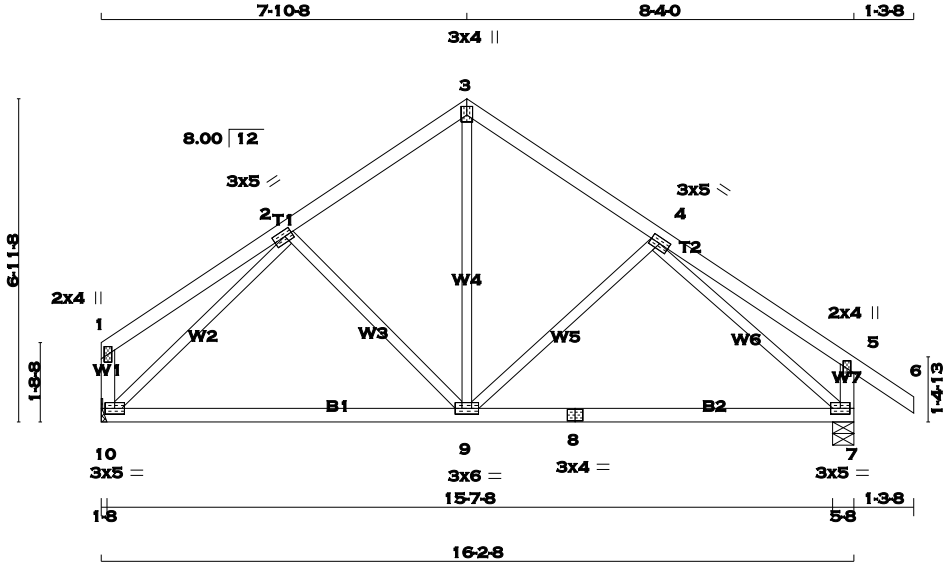

TOTAL WEIGHT = 3 X 68 = 203 lb

[M][F]

LUMBER

N. L. G. A. RULES

CHORDS	SIZE		LUMBER	DESCR.
1 - 3	2x4	DRY	No.2	SPF
3 - 6	2x4	DRY	No.2	SPF
10 - 1	2x4	DRY	No.2	SPF
7 - 5	2x4	DRY	No.2	SPF
10 - 8	2x4	DRY	No.2	SPF
8 - 7	2x4	DRY	No.2	SPF
ALL WEBS EXCEPT	2x3	DRY	No.2	SPF

DRY: SEASONED LUMBER.

PLATES (table is in inches)

JT	TYPE	PLATES	W	LEN	Y	X
1	TMV+p	MT20	2.0	4.0		
2	TMWW-t	MT20	3.0	5.0	1.50	2.00
3	TTW+p	MT20	3.0	4.0	2.25	1.50
4	TMWW-t	MT20	3.0	5.0		
5	TMV+p	MT20	2.0	4.0		
7	BMVW1-t	MT20	3.0	5.0		
8	BS-t	MT20	3.0	4.0		
9	BMWWW-t	MT20	3.0	6.0		
10	BMVW1-t	MT20	3.0	5.0		

A SIZE FOR SIZE SUBSTITUTION OF MITEK MII20 WITH TEE-LOK TL20 PLATES IS ALLOWED.

DIMENSIONS, SUPPORTS AND LOADINGS SPECIFIED BY FABRICATOR TO BE VERIFIED BY BUILDING DESIGNER

BEARINGS

JT	FACTORED GROSS REACTION VERT	HORZ	MAXIMUM FACTORED GROSS REACTION DOWN	HORZ	UPLIFT	INPUT BRG IN-SX	REQRD BRG IN-SX
10	769	0	769	0	0	HANGER BY OTHERS MIN. SEAT SIZE: 1-8	
7	875	0	875	0	0	5-8	5-8

UNFACTORED REACTIONS

JT	1ST LCASE COMBINED	MAX./MIN. COMPONENT REACTIONS SNOW	LIVE	PERM.LIVE	WIND	DEAD	SOIL
10	539	377 / 0	0 / 0	0 / 0	0 / 0	162 / 0	0 / 0
7	612	441 / 0	0 / 0	0 / 0	0 / 0	170 / 0	0 / 0

BEARING MATERIAL TO BE SPF NO.2 OR BETTER AT JOINT(S) 7

BRACING

TOP CHORD TO BE SHEATHED OR MAX. PURLIN SPACING = 6.25 FT.
MAX. UNBRACED BOTTOM CHORD LENGTH = 10.00 FT. OR RIGID CEILING DIRECTLY APPLIED.

ALL PITCH BREAKS AND PERIMETER CORNER JOINTS MUST BE LATERALLY RESTRAINED.

LOADING

TOTAL LOAD CASES: (3)

CHORDS

MEMB. FR-TO	MAX. FORCE (LBS)	FACTORED VERT. LOAD (PLF) FROM	TO	LC1 MAX CSI (LC)	MAX. UNBRAC LENGTH
1- 2	0 / 20	-77.3	-77.3	0.19 (1)	10.00
2- 3	-608 / 0	-77.3	-77.3	0.15 (1)	6.25
3- 4	-609 / 0	-77.3	-77.3	0.17 (1)	6.25
4- 5	0 / 21	-77.3	-77.3	0.22 (1)	10.00
5- 6	0 / 29	-77.3	-77.3	0.10 (1)	10.00
10- 1	-117 / 0	0.0	0.0	0.01 (1)	7.81
7- 5	-229 / 0	0.0	0.0	0.02 (1)	7.81
10- 9	0 / 589	-17.5	-17.5	0.37 (3)	10.00
9- 8	0 / 636	-17.5	-17.5	0.37 (3)	10.00
8- 7	0 / 636	-17.5	-17.5	0.37 (3)	10.00

WEBS

MEMB. FR-TO	MAX. FORCE (LBS)	MAX CSI (LC)
2- 9	-141 / 12	0.08 (1)
9- 3	0 / 411	0.09 (1)
9- 4	-199 / 0	0.11 (1)
10- 2	-841 / 0	0.43 (1)
4- 7	-867 / 0	0.46 (1)

DESIGN CRITERIA

SPECIFIED LOADS:

TOP	CH.	LL	=	23.3	PSF
		DL	=	3.0	PSF
BOT	CH.	LL	=	0.0	PSF
		DL	=	7.0	PSF
TOTAL	LOAD		=	33.3	PSF

SPACING = 24.0 IN. C/C

THIS TRUSS IS DESIGNED FOR RESIDENTIAL OR SMALL BUILDING REQUIREMENTS OF PART 9, NBCC 2010

THIS DESIGN COMPLIES WITH:
- PART 9 OF OBC 2012 , BCBC 2012 , ABC 2014
- CSA 086-09
- TPIC 2011

(55 % OF 27.2 P.S.F. G.S.L. PLUS 8.4 P.S.F. RAIN LOAD) EQUALS 23.3 P.S.F. SPECIFIED ROOF LIVE LOAD

ALLOWABLE DEFL.(LL)= L/360 (0.54")
CALCULATED VERT. DEFL.(LL) = L/ 999 (0.02")
ALLOWABLE DEFL.(TL)= L/360 (0.54")
CALCULATED VERT. DEFL.(TL) = L/ 999 (0.11")

CSI: TC=0.22 (4-5:1) , BC=0.37 (7-9:3) , WB=0.46 (4-7:1) , SSI=0.13 (3-4:1)

DOL LUMBER=1.00 NAIL=1.00 LS BEND=1.10 COMP=1.10 SHEAR=1.10 TENS= 1.10

COMPANION LIVE LOAD FACTOR = 0.50

TRUSS PLATE MANUFACTURER IS NOT RESPONSIBLE FOR QUALITY CONTROL IN THE TRUSS MANUFACTURING PLANT .

NAIL VALUES

PLATE	GRIP(DRY) (PSI) MAX	MIN	SHEAR (PLI) MAX	MIN	SECTION (PLI) MAX	MIN
MT20	618	354	1667	822	2284	1656

PLATE PLACEMENT TOL. = 0.250 inches

PLATE ROTATION TOL. = 5.0 Deg.

JSI GRIP= 0.90 (4) (INPUT = 0.90)
JSI METAL= 0.24 (4) (INPUT = 1.00)

LICENSED PROFESSIONAL ENGINEER
R.M. TREVISAN
100136551
March 13th, 2017
PROVINCE OF ONTARIO

RECEIVED
TOWN OF MILTON
MAR 29, 2017
17-4990
BUILDING DIVISION

READ ALL NOTES ON THIS PAGE AND ON THE ENGINEERING NOTE PAGE ENP-1. THE NOTE PAGE IS AN INTEGRAL PART OF THIS DRAWING AS IT CONTAINS SPECIFICATIONS AND CRITERIA USED IN THE DESIGN OF THIS COMPONENT.

KOTT

JOB NAME	TRUSS NAME	QUANTITY	PLY	JOB DESC.	DRWG NO.
PT0317-054	T101	12	1	TRUSS DESC. LECCO RIDGE-BLOCK 328	ENG JOB: PT0317-054

Kott Lumber Uxbridge, Stouffville, ON, CGC

Version 8.100 S Feb 9 2017 MiTek Industries, Inc. Mon Mar 13 09:57:25 2017 Page 1

ID:pF8Cn?9h9uHzAm5tCmlVl5yJJCp-uViySJGs2RxdOhvjSVRXUFMV2mlw6PhCavcvNvzbOmu

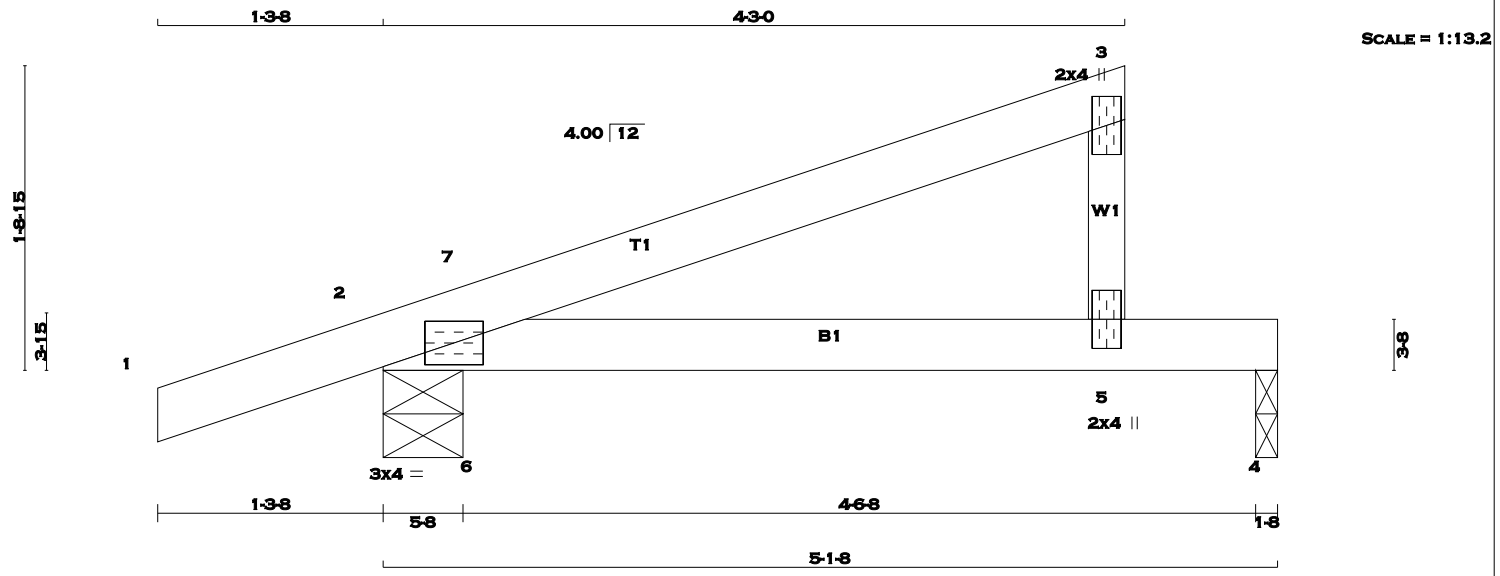

TOTAL WEIGHT = 12 X 14 = 163 lb [M]

LUMBER

N. L. G. A. RULES

CHORDS	SIZE		LUMBER	DESCR.
1 - 3	2x4	DRY	No.2	SPF
5 - 3	2x3	DRY	No.2	SPF
2 - 4	2x4	DRY	No.2	SPF

DRY: SEASONED LUMBER.

PLATES (table is in inches)

JT	TYPE	PLATES	W	LEN	Y	X
2	TMB1-I	MT20	3.0	4.0		
3	TMV+p	MT20	2.0	4.0		
5	BMV+p	MT20	2.0	4.0		

A SIZE FOR SIZE SUBSTITUTION OF MITEK MII20 WITH TEE-LOK TL20 PLATES IS ALLOWED.

DIMENSIONS, SUPPORTS AND LOADINGS SPECIFIED BY FABRICATOR TO BE VERIFIED BY BUILDING DESIGNER

BEARINGS

JT	FACTORED GROSS REACTION VERT	HORZ	MAXIMUM FACTORED GROSS REACTION DOWN	HORZ	UPLIFT	INPUT BRG IN-SX	REQRD BRG IN-SX
2	341	0	341	0	0	5-8	5-8
4	181	0	181	0	0	1-8	1-8

UNFACTORED REACTIONS

JT	1ST LCASE COMBINED	MAX./MIN. COMPONENT REACTIONS SNOW	LIVE	PERM.LIVE	WIND	DEAD	SOIL
2	237	178 / 0	0 / 0	0 / 0	0 / 0	59 / 0	0 / 0
4	129	82 / 0	0 / 0	0 / 0	0 / 0	46 / 0	0 / 0

BEARING MATERIAL TO BE SPF NO.2 OR BETTER AT JOINT(S) 2, 4

BRACING

TOP CHORD TO BE SHEATHED OR MAX. PURLIN SPACING = 6.25 FT.
MAX. UNBRACED BOTTOM CHORD LENGTH = 10.00 FT. OR RIGID CEILING DIRECTLY APPLIED.

ALL PITCH BREAKS AND PERIMETER CORNER JOINTS MUST BE LATERALLY RESTRAINED.

LOADING

TOTAL LOAD CASES: (3)

CHORDS

MEMB. FR-TO	MAX. FACTORED FORCE (LBS)	FACTORED VERT. LOAD (PLF) FROM	TO	LC1 MAX CSI (LC)	MAX. UNBRAC LENGTH
1- 2	0 / 15	-77.3	-77.3	0.10 (1)	10.00
2- 7	-28 / 0	-77.3	-77.3	0.08 (3)	6.25
7- 3	0 / 4	-77.3	-77.3	0.21 (1)	10.00
5- 3	-154 / 0	0.0	0.0	0.02 (1)	7.81
2- 6	0 / 0	-17.5	-17.5	0.11 (1)	10.00
6- 5	0 / 0	-17.5	-17.5	0.21 (1)	10.00
5- 4	0 / 0	-17.5	-17.5	0.21 (1)	10.00

WEBS

MEMB. FR-TO	MAX. FACTORED FORCE (LBS)	MAX CSI (LC)
6- 7	-71 / 51	0.00 (1)

DESIGN CRITERIA

SPECIFIED LOADS:

TOP CH.	LL	=	23.3	PSF
	DL	=	3.0	PSF
BOT CH.	LL	=	0.0	PSF
	DL	=	7.0	PSF
TOTAL LOAD		=	33.3	PSF

SPACING = 24.0 IN. C/C

THIS TRUSS IS DESIGNED FOR RESIDENTIAL OR SMALL BUILDING REQUIREMENTS OF PART 9, NBCC 2010

THIS DESIGN COMPLIES WITH:
- PART 9 OF OBC 2012 , BCBC 2012 , ABC 2014
- CSA 086-09
- TPIC 2011

(55 % OF 27.2 P.S.F. G.S.L. PLUS 8.4 P.S.F. RAIN LOAD) EQUALS 23.3 P.S.F. SPECIFIED ROOF LIVE LOAD

ALLOWABLE DEFL.(LL)= L/360 (0.19")
CALCULATED VERT. DEFL.(LL) = L/ 999 (0.05")
ALLOWABLE DEFL.(TL)= L/360 (0.19")
CALCULATED VERT. DEFL.(TL) = L/ 694 (0.09")

CSI: TC=0.21 (3-7:1) , BC=0.21 (5-6:1) , WB=0.00 (6-7:1) , SSI=0.14 (4-5:1)

DOL LUMBER=1.00 NAIL=1.00 LS BEND=1.10 COMP=1.10 SHEAR=1.10 TENS= 1.10

COMPANION LIVE LOAD FACTOR = 0.50

TRUSS PLATE MANUFACTURER IS NOT RESPONSIBLE FOR QUALITY CONTROL IN THE TRUSS MANUFACTURING PLANT .

NAIL VALUES

PLATE	GRIP(DRY) (PSI) MAX	MIN	SHEAR (PLI) MAX	MIN	SECTION (PLI) MAX	MIN
MT20	618	354	1667	822	2284	1656

PLATE PLACEMENT TOL. = 0.250 inches

PLATE ROTATION TOL. = 5.0 Deg.

JSI GRIP= 0.17 (2) (INPUT = 0.90)
JSI METAL= 0.05 (2) (INPUT = 1.00)

LICENSED PROFESSIONAL ENGINEER
P.M. TREVISAN
100136551
March 13th, 2017
PROVINCE OF ONTARIO

RECEIVED
TOWN OF MILTON
MAR 29, 2017
17-4990
BUILDING DIVISION

READ ALL NOTES ON THIS PAGE AND ON THE ENGINEERING NOTE PAGE ENP-1. THE NOTE PAGE IS AN INTEGRAL PART OF THIS DRAWING AS IT CONTAINS SPECIFICATIONS AND CRITERIA USED IN THE DESIGN OF THIS COMPONENT.

KOTT

JOB NAME	TRUSS NAME	QUANTITY	PLY	JOB DESC.	DRWG NO.
PT0317-054	**T102**	**3**	**1**	TRUSS DESC. LECCO RIDGE-BLOCK 328	

Kott Lumber Uxbridge, Stouffville, ON, CGC

Version 8.100 S Feb 9 2017 MiTek Industries, Inc. Mon Mar 13 09:57:25 2017 Page 1
ID:pF8Cn?9h9uHzAm5tCmlVl5yJJCp-uViySJGs2RxdOhvjSVRXUFMWtmoX6PhCavcvNvzbOmu

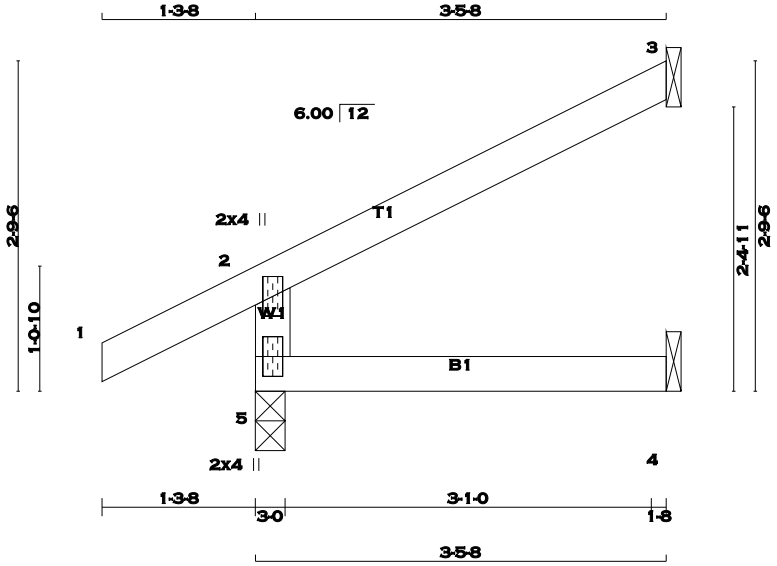

TOTAL WEIGHT = 3 X 11 = 32 lb [M]

LUMBER
N. L. G. A. RULES

CHORDS	SIZE		LUMBER	DESCR.
5 - 2	2x4	DRY	No.2	SPF
1 - 3	2x4	DRY	No.2	SPF
5 - 4	2x4	DRY	No.2	SPF

DRY: SEASONED LUMBER.

PLATES (table is in inches)

JT	TYPE	PLATES	W	LEN	Y	X
2	TMV+p	MT20	2.0	4.0		
5	BMV1+p	MT20	2.0	4.0		

A SIZE FOR SIZE SUBSTITUTION OF MITEK MII20 WITH TEE-LOK TL20 PLATES IS ALLOWED.

DIMENSIONS, SUPPORTS AND LOADINGS SPECIFIED BY FABRICATOR TO BE VERIFIED BY BUILDING DESIGNER

BEARINGS

JT	FACTORED GROSS REACTION VERT	HORZ	MAXIMUM FACTORED GROSS REACTION DOWN	HORZ	UPLIFT	INPUT BRG IN-SX	REQRD BRG IN-SX
5	307	0	307	0	0	3-0	3-0
3	100	0	100	0	0	1-8	1-8
4	26	0	29	0	0	1-8	1-8

SEE MITEK STANDARD DETAIL B37579H FOR CONNECTION TO JOINT(S) 3 , 4

UNFACTORED REACTIONS

JT	1ST LCASE COMBINED	MAX./MIN. COMPONENT REACTIONS SNOW	LIVE	PERM.LIVE	WIND	DEAD	SOIL
5	213	164 / 0	0 / 0	0 / 0	0 / 0	49 / 0	0 / 0
3	68	60 / 0	0 / 0	0 / 0	0 / 0	8 / 0	0 / 0
4	21	0 / 0	0 / 0	0 / 0	0 / 0	21 / 0	0 / 0

BEARING MATERIAL TO BE SPF NO.2 OR BETTER AT JOINT(S) 5

BRACING
TOP CHORD TO BE SHEATHED OR MAX. PURLIN SPACING = 6.25 FT.
MAX. UNBRACED BOTTOM CHORD LENGTH = 10.00 FT. OR RIGID CEILING DIRECTLY APPLIED.

ALL PITCH BREAKS AND PERIMETER CORNER JOINTS MUST BE LATERALLY RESTRAINED.

LOADING
TOTAL LOAD CASES: (4)

CHORDS MEMB. FR-TO	MAX. FACTORED FORCE (LBS)	FACTORED VERT. LOAD (PLF) FROM	TO	LC1 MAX CSI (LC)	MAX. UNBRAC LENGTH	WEBS MEMB. FR-TO	MAX. FACTORED FORCE (LBS)	MAX CSI (LC)
5- 2	-272 / 0	0.0	0.0	0.04 (3)	7.81			
1- 2	0 / 23	-77.3	-77.3	0.10 (1)	10.00			
2- 3	-15 / 0	-77.3	-77.3	0.16 (1)	6.25			
5- 4	0 / 0	-17.5	-17.5	0.04 (3)	10.00			

CANTILEVER ANALYSIS HAS BEEN CONSIDERED IN THIS DESIGN

DESIGN CRITERIA

SPECIFIED LOADS:

TOP CH.	LL	=	23.3	PSF
	DL	=	3.0	PSF
BOT CH.	LL	=	0.0	PSF
	DL	=	7.0	PSF
TOTAL LOAD		=	33.3	PSF

SPACING = 24.0 IN. C/C

THIS TRUSS IS DESIGNED FOR RESIDENTIAL OR SMALL BUILDING REQUIREMENTS OF PART 9, NBCC 2010

THIS DESIGN COMPLIES WITH:
- PART 9 OF OBC 2012 , BCBC 2012 , ABC 2014
- CSA 086-09
- TPIC 2011

DESIGN ASSUMPTIONS
-OVERHANG NOT TO BE ALTERED OR CUT OFF.

(55 % OF 27.2 P.S.F. G.S.L. PLUS 8.4 P.S.F. RAIN LOAD) EQUALS 23.3 P.S.F. SPECIFIED ROOF LIVE LOAD

ALLOWABLE DEFL.(LL)= L/360 (0.19")
CALCULATED VERT. DEFL.(LL) = L/ 999 (0.00")
ALLOWABLE DEFL.(TL)= L/360 (0.19")
CALCULATED VERT. DEFL.(TL) = L/ 999 (0.00")

CSI: TC=0.16 (2-3:1) , BC=0.04 (4-5:3) , WB=0.00 (n/a:0) , SSI=0.12 (2-3:1)

DOL LUMBER=1.00 NAIL=1.00 LS BEND=1.10 COMP=1.10 SHEAR=1.10 TENS= 1.10

COMPANION LIVE LOAD FACTOR = 0.50

TRUSS PLATE MANUFACTURER IS NOT RESPONSIBLE FOR QUALITY CONTROL IN THE TRUSS MANUFACTURING PLANT .

NAIL VALUES

PLATE	GRIP(DRY) (PSI) MAX	MIN	SHEAR (PLI) MAX	MIN	SECTION (PLI) MAX	MIN
MT20	618	354	1667	822	2284	1656

PLATE PLACEMENT TOL. = 0.250 inches

PLATE ROTATION TOL. = 5.0 Deg.

JSI GRIP= 0.16 (2) (INPUT = 0.90)
JSI METAL= 0.06 (2) (INPUT = 1.00)

RECEIVED
TOWN OF MILTON
MAR 29, 2017
17-4990
BUILDING DIVISION

JOB NAME	TRUSS NAME	QUANTITY	PLY	JOB DESC.	DRWG NO.
PT0317-054	**T103**	**2**	**1**	TRUSS DESC. LECCO RIDGE-BLOCK 328	ENG JOB: PT0317-054

Kott Lumber Uxbridge, Stouffville, ON, CGC

Version 8.100 S Feb 9 2017 MiTek Industries, Inc. Mon Mar 13 09:57:26 2017 Page 1

ID:pF8Cn?9h9uHzAm5tCmlVl5yJJCp-MhFKffHUpk3U0rUw0Dym0Svi4A8Vrs2MpZLTvMzbOmt

SCALE = 1:23.1

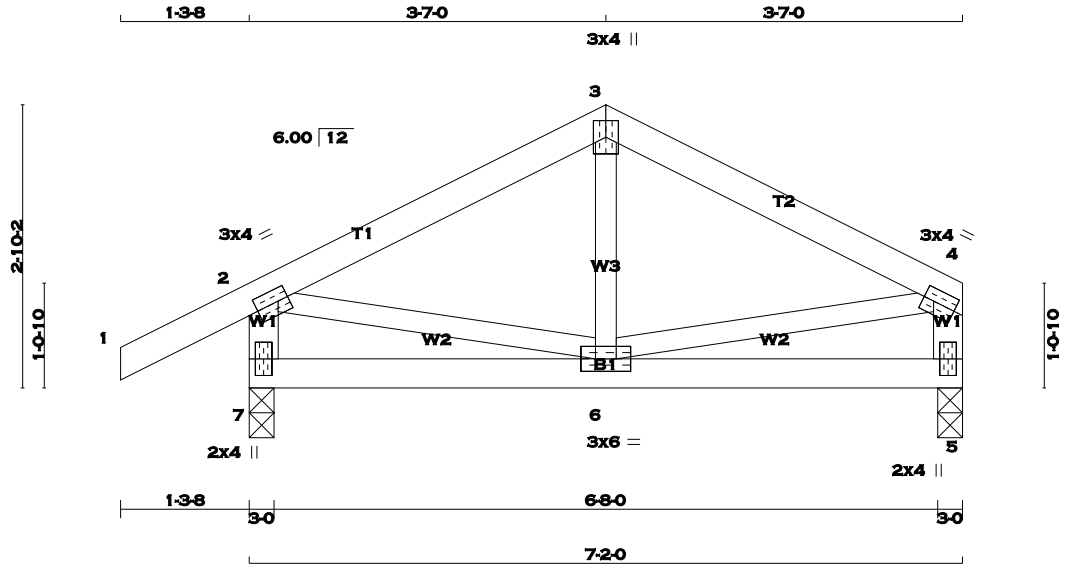

TOTAL WEIGHT = 2 X 28 = 55 lb

[M][F]

LUMBER

N. L. G. A. RULES

CHORDS	SIZE		LUMBER	DESCR.
1 - 3	2x4	DRY	No.2	SPF
3 - 4	2x4	DRY	No.2	SPF
7 - 2	2x4	DRY	No.2	SPF
5 - 4	2x4	DRY	No.2	SPF
7 - 5	2x4	DRY	No.2	SPF
ALL WEBS EXCEPT	2x3	DRY	No.2	SPF

DRY: SEASONED LUMBER.

PLATES (table is in inches)

JT	TYPE	PLATES	W	LEN	Y	X
2	TMVW-t	MT20	3.0	4.0	1.50	1.25
3	TTW+p	MT20	3.0	4.0		
4	TMVW-t	MT20	3.0	4.0	1.50	1.25
5	BMV1+p	MT20	2.0	4.0		
6	BMWWW-t	MT20	3.0	6.0		
7	BMV1+p	MT20	2.0	4.0		

A SIZE FOR SIZE SUBSTITUTION OF MITEK MII20 WITH TEE-LOK TL20 PLATES IS ALLOWED.

DIMENSIONS, SUPPORTS AND LOADINGS SPECIFIED BY FABRICATOR TO BE VERIFIED BY BUILDING DESIGNER

BEARINGS

JT	FACTORED GROSS REACTION VERT	HORZ	MAXIMUM FACTORED GROSS REACTION DOWN	HORZ	UPLIFT	INPUT BRG IN-SX	REQRD BRG IN-SX
7	445	0	445	0	0	3-0	3-0
5	340	0	340	0	0	3-0	3-0

UNFACTORED REACTIONS

JT	1ST LCASE COMBINED	MAX./MIN. COMPONENT REACTIONS SNOW	LIVE	PERM.LIVE	WIND	DEAD	SOIL
7	310	230 / 0	0 / 0	0 / 0	0 / 0	80 / 0	0 / 0
5	239	167 / 0	0 / 0	0 / 0	0 / 0	72 / 0	0 / 0

BEARING MATERIAL TO BE SPF NO.2 OR BETTER AT JOINT(S) 7, 5

BRACING

TOP CHORD TO BE SHEATHED OR MAX. PURLIN SPACING = 6.25 FT.
MAX. UNBRACED BOTTOM CHORD LENGTH = 10.00 FT. OR RIGID CEILING DIRECTLY APPLIED.

ALL PITCH BREAKS AND PERIMETER CORNER JOINTS MUST BE LATERALLY RESTRAINED.

LOADING

TOTAL LOAD CASES: (3)

CHORDS

MEMB. FR-TO	MAX. FACTORED FORCE (LBS)	FACTORED VERT. LOAD (PLF) FROM	TO	LC1 MAX CSI (LC)	MAX. UNBRAC LENGTH
1- 2	0 / 23	-77.3	-77.3	0.10 (1)	10.00
2- 3	-278 / 0	-77.3	-77.3	0.13 (1)	6.25
3- 4	-278 / 0	-77.3	-77.3	0.13 (1)	6.25
7- 2	-420 / 0	0.0	0.0	0.04 (1)	7.81
5- 4	-315 / 0	0.0	0.0	0.03 (1)	7.81
7- 6	0 / 0	-17.5	-17.5	0.06 (3)	10.00
6- 5	0 / 0	-17.5	-17.5	0.06 (3)	10.00

WEBS

MEMB. FR-TO	MAX. FACTORED FORCE (LBS)	MAX CSI (LC)
6- 3	-28 / 52	0.02 (3)
2- 6	0 / 254	0.06 (1)
6- 4	0 / 254	0.06 (1)

DESIGN CRITERIA

SPECIFIED LOADS:

TOP	CH.	LL	=	23.3	PSF
		DL	=	3.0	PSF
BOT	CH.	LL	=	0.0	PSF
		DL	=	7.0	PSF
TOTAL	LOAD		=	33.3	PSF

SPACING = 24.0 IN. C/C

THIS TRUSS IS DESIGNED FOR RESIDENTIAL OR SMALL BUILDING REQUIREMENTS OF PART 9, NBCC 2010

THIS DESIGN COMPLIES WITH:
- PART 9 OF OBC 2012 , BCBC 2012 , ABC 2014
- CSA 086-09
- TPIC 2011

(55 % OF 27.2 P.S.F. G.S.L. PLUS 8.4 P.S.F. RAIN LOAD) EQUALS 23.3 P.S.F. SPECIFIED ROOF LIVE LOAD

ALLOWABLE DEFL.(LL)= L/360 (0.24")
CALCULATED VERT. DEFL.(LL) = L/ 999 (0.00")
ALLOWABLE DEFL.(TL)= L/360 (0.24")
CALCULATED VERT. DEFL.(TL) = L/ 999 (0.01")

CSI: TC=0.13 (2-3:1) , BC=0.06 (5-6:3) , WB=0.06 (4-6:1) , SSI=0.10 (2-3:1)

DOL LUMBER=1.00 NAIL=1.00 LS BEND=1.10 COMP=1.10 SHEAR=1.10 TENS= 1.10

COMPANION LIVE LOAD FACTOR = 0.50

TRUSS PLATE MANUFACTURER IS NOT RESPONSIBLE FOR QUALITY CONTROL IN THE TRUSS MANUFACTURING PLANT .

NAIL VALUES

PLATE	GRIP(DRY) (PSI) MAX	MIN	SHEAR (PLI) MAX	MIN	SECTION (PLI) MAX	MIN
MT20	618	354	1667	822	2284	1656

PLATE PLACEMENT TOL. = 0.250 inches

PLATE ROTATION TOL. = 5.0 Deg.

JSI GRIP= 0.62 (2) (INPUT = 0.90)
JSI METAL= 0.15 (2) (INPUT = 1.00)

LICENSED PROFESSIONAL ENGINEER
P.M. TREVISAN
100136551
March 13th, 2017
PROVINCE OF ONTARIO

RECEIVED
TOWN OF MILTON
MAR 29, 2017
17-4990
BUILDING DIVISION

READ ALL NOTES ON THIS PAGE AND ON THE ENGINEERING NOTE PAGE ENP-1. THE NOTE PAGE IS AN INTEGRAL PART OF THIS DRAWING AS IT CONTAINS SPECIFICATIONS AND CRITERIA USED IN THE DESIGN OF THIS COMPONENT.

KOTT

BEARING ANCHORAGE BY TOE-NAILS FOR LATERAL CAPACITY B37579H1

NAIL TYPE	LENGTH (IN)	DIAMETER (IN)	NAIL LATERAL CAPACITY (LB)	
			S-P-F	D. FIR
COMMON WIRE	3.00	0.144	132	147
	3.25	0.144	132	147
	3.50	0.160	159	177
COMMON SPIRAL	3.00	0.122	97	108
	3.25	0.122	97	108
	3.50	0.152	145	162

NOTES:

1. Rafter and ceiling members may be anchored to top and bottom chords of girder truss by toe-nailing rafter and ceiling members to girder chords provided the reaction does not exceed the lateral capacities in the table. Hangers (specified by others) are required for reactions higher than the maximum toe-nail capacity. Reactions are based on factored loads.

2. Toe nail capacities shown in the table are for **one** toe-nail. For additional toe-nails multiply values in table by the number of toe-nails used. Toe-nail capacities take into account toe-nailing factor J_A in CSA O86-09, section 10.9.4.1.

3. For 9- 3/4 gauge 3.25" common wire gun nails (diameter = 0.120") use 3" common spiral nail values.

4. Maximum number of toe-nails allowed depends on the lumber size & species to be toe-nailed to supporting member and nail diameter, as shown in tables below.

5. Nail values in table are based on the following relative lumber densities: G = 0.42 (SPF), G = 0.49 (D. Fir).

6. Toe-nails shall be driven at approximately 1/3 the nail length from the edge of the joist/truss chord and driven at an angle of 30º to the grain of the member (See next page for nailing on bearing plate).

7. For loads due to **wind** the nail lateral capacity in this table may be multiplied by 1.15 (K_D factor).

8. Lumber must be dry (< 19% moisture content) at the time of nail installation.

9. Nail values in this table comply with CSA O86-09, section 10.9.4

10. This design is not valid after April 30, 2017.

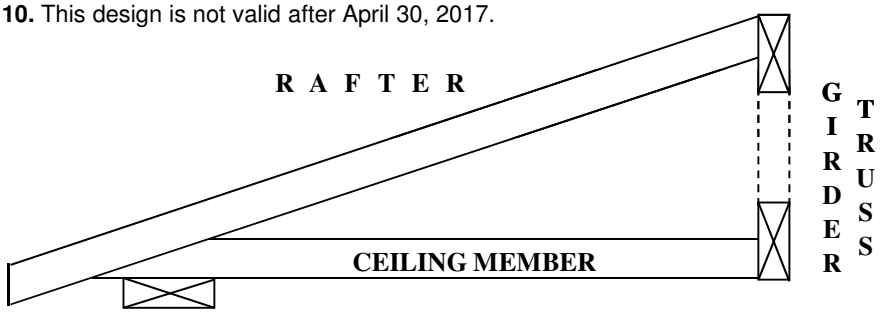

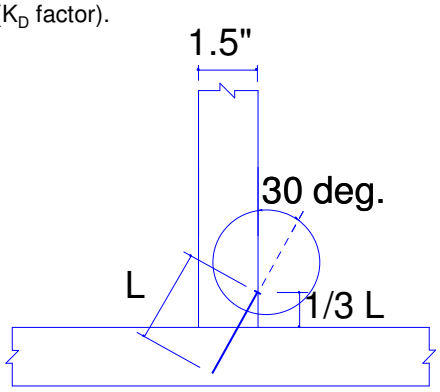

TOE-NAIL INSTALLATION

Nail type	Common wire	Common spiral	Common wire	Common spiral
Nail dia. (in)	0.160	0.152	0.144	0.122
	(3.5" nail)		(3" and 3.25" nail)	
LUMBER SIZE	**MAXIMUM NUMBER OF TOE-NAILS**			
2X4 SPF	2	2	3	3
2X4 D. Fir	2	2	2	2
2X6 SPF	4	4	4	5
2X6 D. Fir	3	3	3	4

MiTek Canada Inc
100 Industrial Rd.
Bradford, Ontario L3Z 3G7

RECEIVED
TOWN OF MILTON
MAR 29, 2017
17-4990
BUILDING DIVISION

PEO
Certificate No. 10889485

LICENSED PROFESSIONAL ENGINEER
C. Cordogiannis
90553736
PROVINCE OF ONTARIO

April 24, 2015

BEARING ANCHORAGE BY TOE-NAILS FOR WIND LOADING B37579H2

NAIL TYPE	LENGTH (IN)	DIAMETER (IN)	NAIL WITHDRAWAL CAPACITY (LB)	
			S-P-F	D. FIR
COMMON WIRE	3.00	0.144	30	42
	3.25	0.144	32	45
	3.50	0.160	38	52
COMMON SPIRAL	3.00	0.122	26	36
	3.25	0.122	28	40
	3.50	0.152	36	50

Note: If using truss with D. Fir lumber and S-P-F bearing plate, use values in table for S-P-F.

NOTES:

1. Truss chord, rafter, or ceiling members may be anchored to bearing plate by toe-nails, provided that the actual factored uplift force due to **wind** or **earthquake** load does not exceed the withdrawal capacities in the table. Hangers (specified by others) are required for uplift forces that are higher than the maximum toe-nail withdrawal capacity.
2. Toe nail capacities shown in the table are for **one** toe-nail. For additional toe-nails multiply values in table by the number of toe-nails used. Toe-nail capacities take into account toe-nailing factor J_A in CSA O86-09, section 10.9.5.2.
3. For 9- 3/4 gauge 3.25" common wire gun nails (diameter = 0.120") use 3" common spiral nail values.
4. Maximum number of toe-nails allowed depends on the lumber size & species to be toe-nailed to supporting member and nail diameter, as shown in table above.
5. Nail values in table are based on the following relative lumber densities: G = 0.42(SPF), G = 0.49(D. Fir).
6. Toe-nails shall be driven at approximately 1/3 the nail length from the edge of the joist/truss chord and driven at an angle of 30° to the grain of the member (See drawing on detail B37579H1).
7. Lumber must be dry (< 19% moisture content) at the time of nail installation.
8. Nail values in this table comply with CSA O86-09, section 10.9.5
9. This design is not valid after April 30, 2017

Toe-nailing on 2x6 Bearing Plate

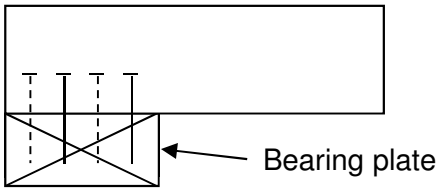

Elevation view

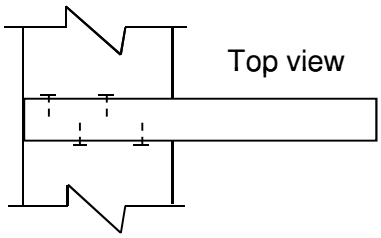

Top view

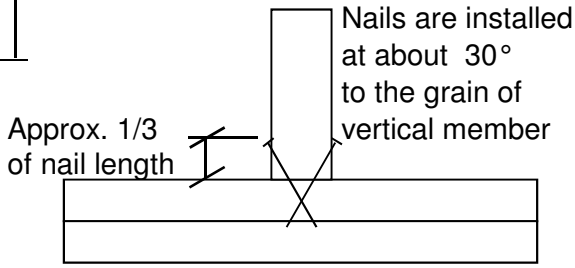

Toe-nailing viewed from end of joist or truss

Toe-nailing on 2x4 Bearing Plate

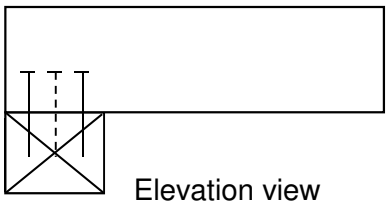

Elevation view

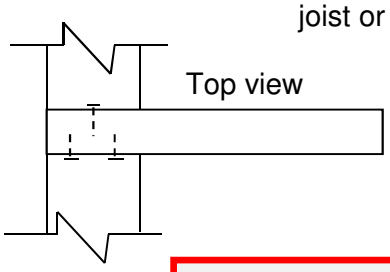

Top view

MiTek Canada Inc
100 Industrial Rd.
Bradford, Ontario L3Z 3G7

RECEIVED
TOWN OF MILTON
MAR 29, 2017
17-4990
BUILDING DIVISION

PEO
Certificate No. 10889485

LICENSED PROFESSIONAL ENGINEER
C. Cordogiannis
90553736
PROVINCE OF ONTARIO

April 24, 2015

JOB NAME	JOB DESC.	DRAWING NO.
DETAILS	HIP END FRAMING — EGO CRIDGE-BLOCK 328	B37579J — EMC JOB: P10317-054

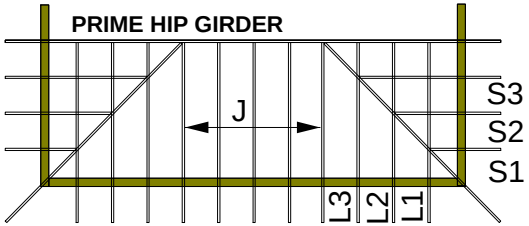

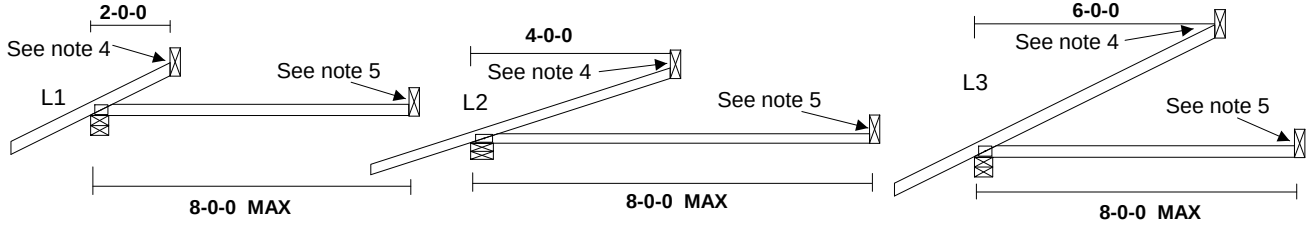

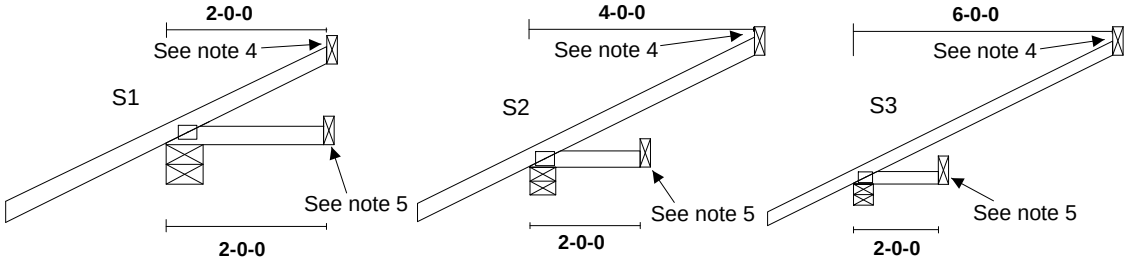

DETAIL "A"

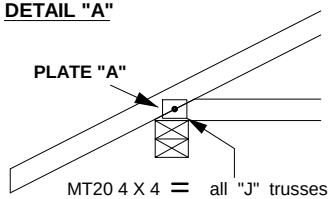

MT20 4 X 4 = all "J" trusses
MT20 3 X 4 = all other trusses

DETAIL "B"

RAISED HEEL

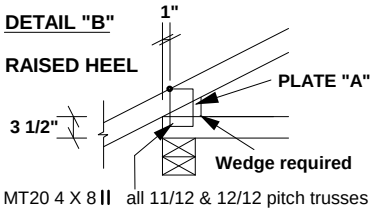

MT20 4 X 8 II all 11/12 & 12/12 pitch trusses
MT20 4 X 7 II all other trusses

DETAIL "C"

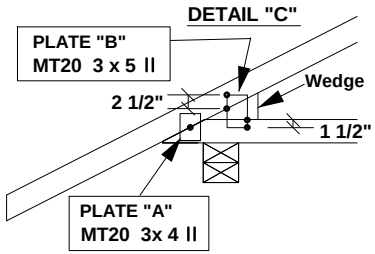

CANTILEVER DETAIL "C"

SLOPE	MAX CANTILEVER	PLATE "B"	WEDGE SIZE
3/12	17"	3 X 5	2 X 3
4/12	14"	3 X 5	2 X 3
5/12	12"	3 X 5	2 X 4
6/12	10"	3 X 5	2 X 4
7/12	9"	3 X 5	2 X 6
8/12	8.5"	3 X 5	2 X 6
9/12	8"	3 X 5	2 X 6
10/12	7.5"	3 X 5	2 X 6

"J"

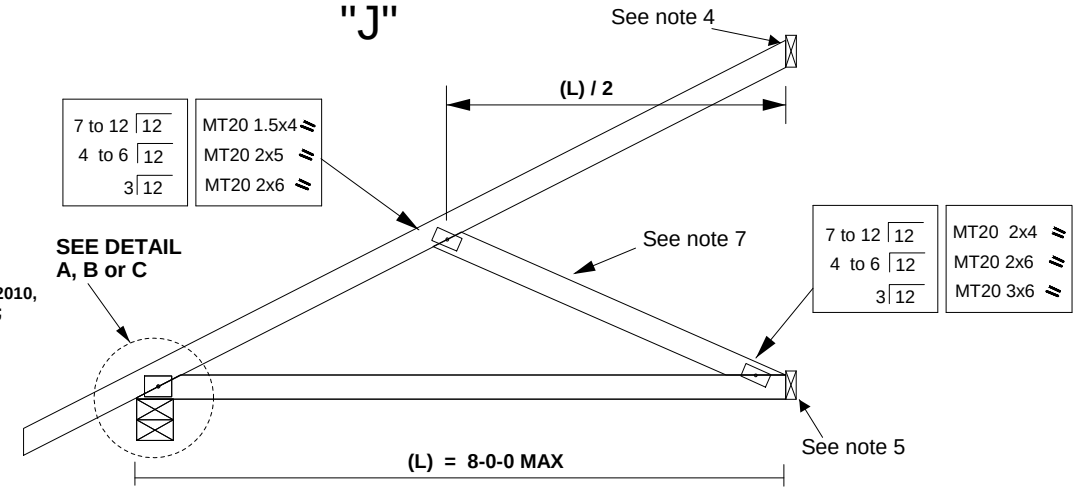

NOTES:

1. ALL LUMBER SHALL BE 2x4 SPF OR D. Fir No. 2 DRY OR BETTER.
2. THIS TRUSS IS DESIGNED FOR HOUSING AND SMALL BUILDING REQUIREMENTS OF PART 9 NBCC 2010, WHERE GROUND SNOW LOAD IS 60.0 PSF OR LESS AND RAIN LOAD DOES NOT EXCEED 12.53 PSF; TOP CHORD DEAD LOAD IS 6 PSF OR LESS; BC LIVE LOAD IS 0 PSF AND BC DEAD LOAD IS 7 PSF.
3. HIP RAFTER DESIGN SHALL CONFORM TO SECTION 9.23.14.6 OF NBCC 2010.
4. FASTEN HIGH END OF RAFTERS USING MITEK CANADA INC. "BEARING ANCHORAGE BY TOE-NAILS FOR LATERAL CAPACITY" STANDARD DETAIL B37579H1.
5. FASTEN RIGHT END OF CEILING USING MITEK CANADA INC. "BEARING ANCHORAGE BY TOE-NAILS FOR LATERAL CAPACITY" STANDARD DETAIL B37579H1.
6. OVERHANG LENGTH SHALL NOT EXCEED 2 FT.
7. WHEN SETBACK IS 6 FT OR LESS, DIAGONAL WEB MAY BE OMITTED AND HIGH END OF TOP CHORD SHALL BE CONNECTED AS PER NOTE 4.
8. ALL PLATES SPECIFIED ARE PRESSED INTO BOTH FACES OF THE TRUSS.
9. MITEK REFERENCE PAGE MII-7473C FORMS AN INTEGRAL PART OF THIS DETAIL.
10. THIS DETAIL IS NOT VALID AFTER APRIL 30, 2017

MiTek Canada, Inc.
100 Industrial Rd.
Bradford, Ontario, L3Z 3G7

PEO
Certificate No. 10889485

LICENSED PROFESSIONAL ENGINEER
C. Cordogiannis
90553736
PROVINCE OF ONTARIO

RECEIVED
TOWN OF MILTON
MAR 29, 2017
17-4990
BUILDING DIVISION

April 24, 2015

STANDARD GABLE END DETAIL

LECCO RIDGE-BLOCK 328

DRAWING NO.: ENG 103-P70317-054 B37579K

MINIMUM ROOF PITCH: 2/12

MAXIMUM ROOF PITCH: 12/12

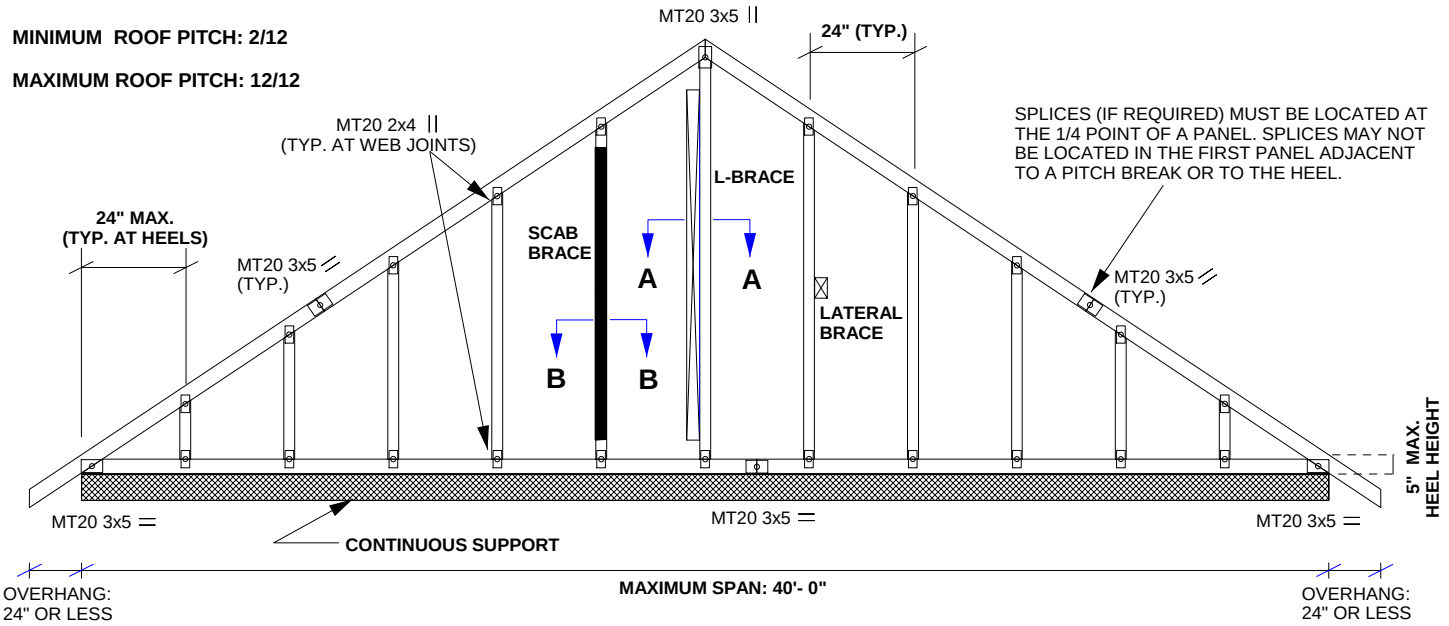

LUMBER

TOP CHORD:	**2 X 4 No. 2 DRY SPF or D- Fir**
BOTTOM CHORD:	**2 X 3 or 2 X 4 No. 2 DRY SPF or D- Fir**
GABLE WEB:	**2 X 3 or 2 X 4 No. 2 DRY SPF or D- Fir**

PLATES

JOINT	PLATES
HEELS	MT20 3 X 5
PEAK	MT20 3 X 5
TC SPLICES	MT20 3 X 5
BC SPLICES	MT20 3 X 5
WEB JOINTS	MT20 2 X 4

DESIGN CRITERIA

TOP CHORD LL = 60.0 PSF OR LESS
TOP CHORD DL = 6.0 PSF OR LESS
BOTTOM CHORD LL = 0 PSF
BOTTOM CHORD DL = 7.0 PSF

TOTAL LOAD = 73.0 PSF OR LESS

BRACING

TOP CHORD TO BE SHEATHED OR MAX. PURLIN SPACING = 2 FT.
MAX. UNBRACED BOTTOM CHORD LENGTH = 10 FT. OR RIGID CEILING DIRECTLY APPLIED.
WEBS MUST BE LATERALLY BRACED, SCAB BRACED OR L-BRACED AS INDICATED IN TABLE BELOW:

WEB LENGTH (L)	SCAB BRACE	L-BRACE	LATERAL BRACE
L < 6 FT.	NOT REQUIRED	NOT REQUIRED	NOT REQUIRED
6 FT. < L < 12 FT.	REQUIRED	2x4 L-BRACE	1 LATERAL AT 1/2 LENGTH OF WEB

SCAB BRACE DETAIL

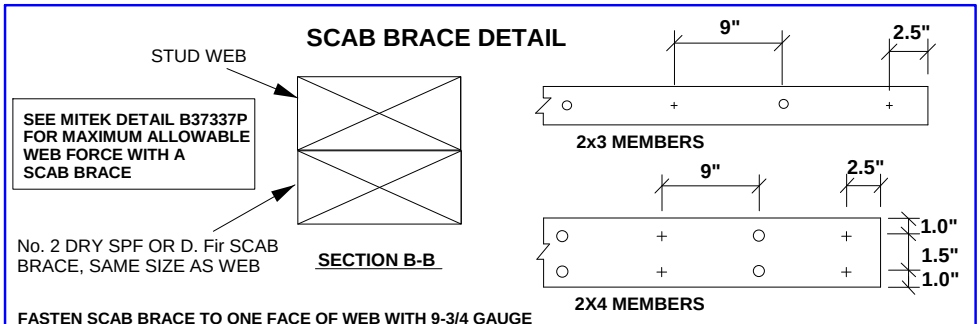

FASTEN SCAB BRACE TO ONE FACE OF WEB WITH 9-3/4 GAUGE 0.122" X 3" COMMON SPIRAL NAILS SPACED @ 9" C/C (MAX) WITH 2.5" MINIMUM END DISTANCE. SCAB BRACE MUST COVER 90% OF WEB LENGTH. DRIVE NAILS ALTERNATELY FROM FRONT AND BACK FACES.

+ NAIL FROM FRONT FACE
o NAIL FROM BACK FACE

CANTILEVER DETAIL

Note: Gable end may be cantilevered up to 6 inches past end wall as shown. Gable end to be continuously supported by 2x4 SPF No.2 (DRY) members at 12" o.c. along the bottom chord. Roof design loads shall not exceed the loading shown above.

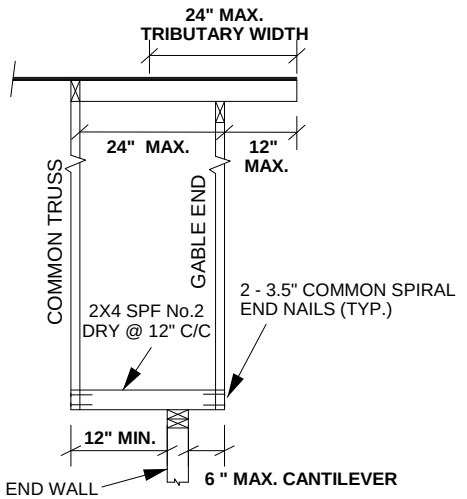

L-BRACE DETAIL

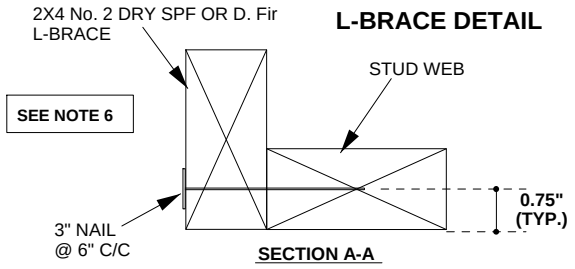

FASTEN L-BRACE TO NARROW EDGE OF WEB WITH ONE ROW OF 9-3/4 GAUGE 0.122" X 3" COMMON SPIRAL NAILS SPACED AT 6" C/C WITH 3" MINIMUM END DISTANCE. BRACE MUST COVER 90% OF WEB LENGTH.

PEO
Certificate No. 10889485

LICENSED PROFESSIONAL ENGINEER
C. Cordogiannis
90553736
PROVINCE OF ONTARIO

RECEIVED
TOWN OF MILTON
MAR 29, 2017
17-4990
BUILDING DIVISION

April 24, 2015

NOTES:

1. **Gable studs are spaced at 24" C/C (max.) with a max. length of 12 ft.**
2. **All plates specified are MiTek MT20, centered at each joint, and pressed into both faces of truss.**
3. **Truss spacing is 24" C/C, maximum.**
4. **Gable truss is designed for continuous support. Bearing material must be of the same species as chord member and of grade No. 2 or better.**
5. **This truss requires rigid sheathing attached to exposed face.**
6. **2x3 or 2x4 T-braces shown for gable webs in the MiTek engineering drawings may be replaced by a 2x4 L-brace as shown above.**
7. **This truss is designed for residential or small building requirements, conforming to Part 9, NBCC 2010.**
8. **This detail is not valid after April 30, 2017.**

MiTek Canada, Inc.
100 Industrial Rd.
Bradford, Ontario, L3Z 3G7