TOWN OF MILTON
PLANNING AND DEVELOPMENT
BUILDING PERMIT: 17-4967
BUILDING: REVIEWED
SCOTT SHERRIFFS APR 19, 2017
PLANS EXAMINER DATE
Neither the issuance of a permit nor carrying out of inspections by the Town of Milton relives the owner from full responsibility for compliance with the provisions of the Ontario Building Code Act and the Ontario Building Code, both as amended, as well as other applicable statutes and regulations of the Province on Ontario, By-laws of the Region of Halton and Town of Milton

RECEIVED
TOWN OF MILTON
MAR 29, 2017
17-4967
BUILDING DIVISION

TRUSSES BY KOTT

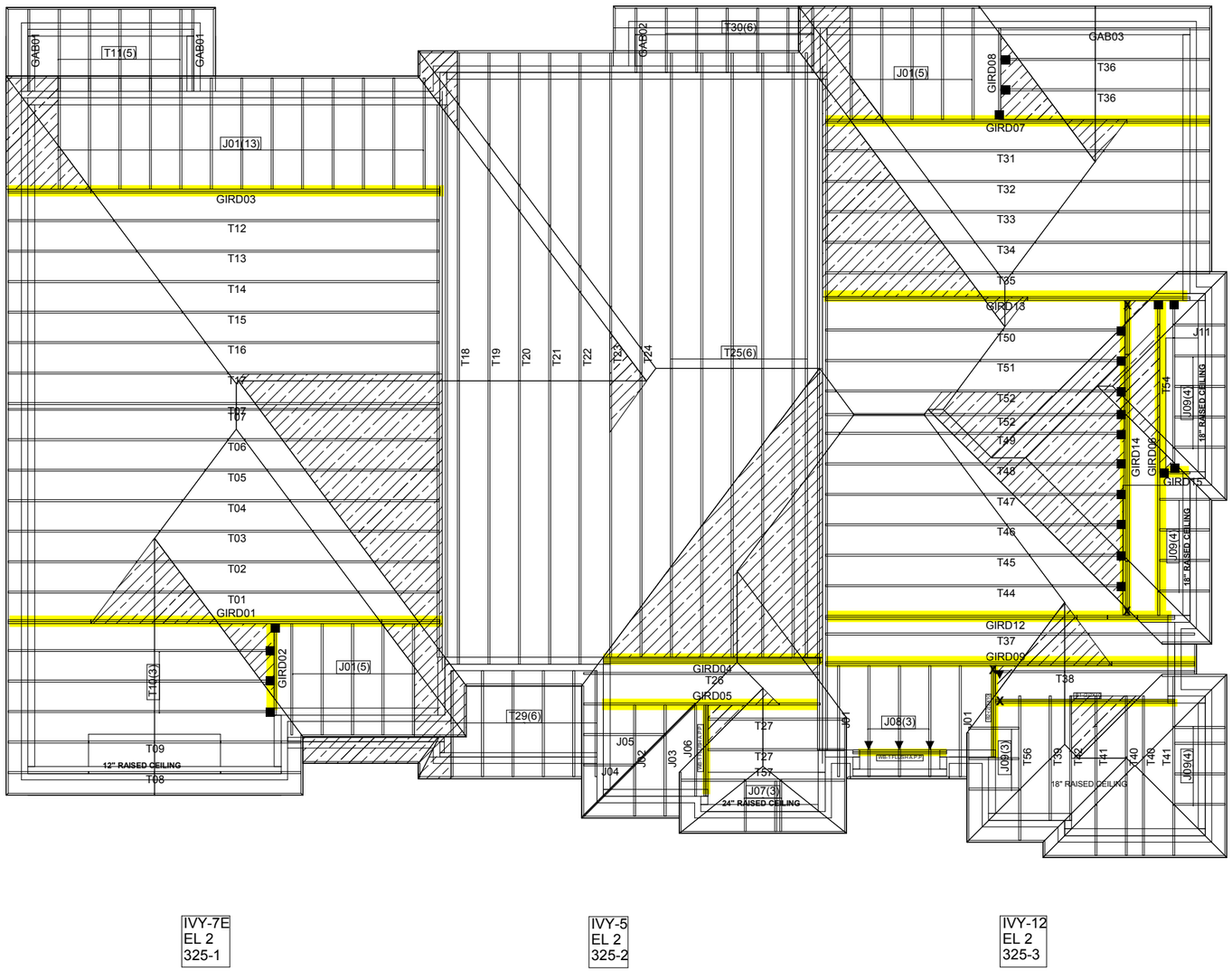

IVY-7E
EL 2
325-1

IVY-5
EL 2
325-2

IVY-12
EL 2
325-3

TOP OF ALL PORCH BEAMS AT 8' 7 1/4 A.F.F.

UNDERSIDE OF SOFFIT FOR PORCHES AT 8' 6" A.F.F.

GARAGE WALL PLATES AT 9' 1 2/16" A.F.F.

PARTY WALLS TO BE FRAMED ON SITE A.P.P.

HANGER LEGEND:

▼ LUS24 ■ LJS26DS
● HGUS26 ╳ HGUS26-2

CONVENTIONAL FRAMING BY OTHERS

SIZE AND LOCATION OF CONVENTIONAL FRAMING IS APPROXIMATE. ALL AREAS MAY NOT BE SHOWN. REFER TO ARCHITECTURAL PLANS FOR DETAILS.

ALL CONVENTIONAL FRAMING TO CONFORM WITH PART 9 OF THE O.B.C
ROOF RAFTERS THAT CROSS MEET OVER TRUSSES TO BE 2x4 S.P.F. @ 24"O/C WITH A 2x4 VERTICAL POST TO THE TRUSS UNDERNEATH EACH CROSS POINT. VERTICAL POST LONGER THAN 6' TO HAVE LATERAL BRACING SO THAT THE DISTANCE BETWEEN END POINT AND BETWEEN ROWS OF BRACING DOES NOT EXCEED 6'.

Model: **BLOCK 325**
Customer: GREENPARK
Project: LECCO RIDGE
Location: MILTON
Date: 3/9/2017 Drawn by: BB

ENGINEERING NOTE PAGE (ENP-1)
PLEASE READ PRIOR TO INSTALLATION

RESPONSIBILITIES

THIS DESIGN IS FOR AN INDIVIDUAL BUILDING COMPONENT AND HAS BEEN BASED ON INFORMATION PROVIDED BY THE DESIGN OFFICE OF KOTT LUMBER. THE UNDERSIGNED ENGINEER DISCLAIMS ANY RESPONSIBILITY FOR DAMAGES AS A RESULT OF FAULTY OR INCORRECT INFORMATION, SPECIFICATION AND/OR DESIGNS FURNISHED TO THE ENGINEER. THE UNDERSIGNED ENGINEER IS ONLY RESPONSIBLE FOR THE STRUCTURAL INTEGRITY OF THIS BUILDING COMPONENT FOR THE CONDITIONS AND LOADS SHOWN ON THIS DRAWING. THE STRUCTURAL INTEGRITY OF THE BUILDING AND THE VERIFICATION OF THE DIMENSIONS AND THE DESIGN LOADS USED ARE THE RESPONSIBILITY OF THE BUILDING DESIGNER.

TRUSSES ARE DESIGNED IN CONFORMANCE WITH THE RELEVANT SECTIONS OF THE NATIONAL BUILDING CODE OF CANADA OR THE CANADIAN CODE FOR FARM BUILDINGS, WHICHEVER APPLIES TO THE BUILDING TYPE INDICATED ON THE DRAWING

IT IS THE RESPONSIBILITY OF KOTT LUMBER TO ENSURE THAT TRUSSES ARE MANUFACTURED IN CONFORMANCE WITH THESE DESIGNS AND WITH THE SPECIFICATIONS OUTLINED BELOW. THE UNDERSIGNED ENGINEER IS NOT RESPONSIBLE FOR QUALITY CONTROL IN THE TRUSS MANUFACTURING PLANT.

USE AND OCCUPANCY

- The building is of the type indicated on the drawing

LOADING

- The truss loading intensity and distribution as well as load transfer mechanism is that indicated on the drawing
- No buildings, trees, parapets or other projections higher than the roof for which the trusses are used are located within a distance less than ten (10) times the difference in height, or five metres (16 ft) whichever is greater, unless the drawing indicates that the snow drifting has been taken into account

HANDLING, INSTALLATION AND BRACING

- The trusses must be handled and installed by a qualified professional as per the supplied document titled *Information for Truss Installers* and the BCSI-B1 and BCSI-B3 Summary Sheets
- The compression chords are laterally braced by continuous rigid diaphragm sheathing or as specified on the drawing
- Temporary and permanent bracing must be installed as indicated on the truss drawing and according to the BCSI-B1 and BCSI-B3 Summary Sheets. Bracing for the lateral stability of the truss is to be provided by the building designer
- **It is recommended that a Professional Engineer's advice be obtained for the bracing of trusses spanning more than 12.37m (40'-7")**

SUPPORTS

- The trusses are to be supported at the bearing points indicated and anchored to the supports where considered necessary by the designer of the overall structure
- Bearing sizes shown are the minimum required to prevent crushing of the truss members and do not necessarily take into account stability of the overall building structure
- Elevation of bearings must be carefully checked and shimmed to alignment for solid bearings
- Adequate wood truss bearing is the responsibility of the building designer.

DIMENSIONS

- Geometry of the truss and dimensions indicated on the drawing are identical to those of the installed truss.

RECEIVED
TOWN OF MILTON
MAR 29, 2017
17-4967
BUILDING DIVISION

BEARING ANCHORAGE BY TOE-NAILS FOR LATERAL CAPACITY

B37579H1

NAIL TYPE	LENGTH (IN)	DIAMETER (IN)	NAIL LATERAL CAPACITY (LB)	
			S-P-F	D. FIR
COMMON WIRE	3.00	0.144	132	147
	3.25	0.144	132	147
	3.50	0.160	159	177
COMMON SPIRAL	3.00	0.122	97	108
	3.25	0.122	97	108
	3.50	0.152	145	162

NOTES:

1. Rafter and ceiling members may be anchored to top and bottom chords of girder truss by toe-nailing rafter and ceiling members to girder chords provided the reaction does not exceed the lateral capacities in the table. Hangers (specified by others) are required for reactions higher than the maximum toe-nail capacity. Reactions are based on factored loads.
2. Toe nail capacities shown in the table are for **one** toe-nail. For additional toe-nails multiply values in table by the number of toe-nails used. Toe-nail capacities take into account toe-nailing factor J_A in CSA O86-09, section 10.9.4.1.
3. For 9- 3/4 gauge 3.25" common wire gun nails (diameter = 0.120") use 3" common spiral nail values.
4. Maximum number of toe-nails allowed depends on the lumber size & species to be toe-nailed to supporting member and nail diameter, as shown in tables below.
5. Nail values in table are based on the following relative lumber densities: G = 0.42 (SPF), G = 0.49 (D. Fir).
6. Toe-nails shall be driven at approximately 1/3 the nail length from the edge of the joist/truss chord and driven at an angle of 30° to the grain of the member (See next page for nailing on bearing plate).
7. For loads due to **wind** the nail lateral capacity in this table may be multiplied by 1.15 (K_D factor).
8. Lumber must be dry (< 19% moisture content) at the time of nail installation.
9. Nail values in this table comply with CSA O86-09, section 10.9.4
10. This design is not valid after April 30, 2017.

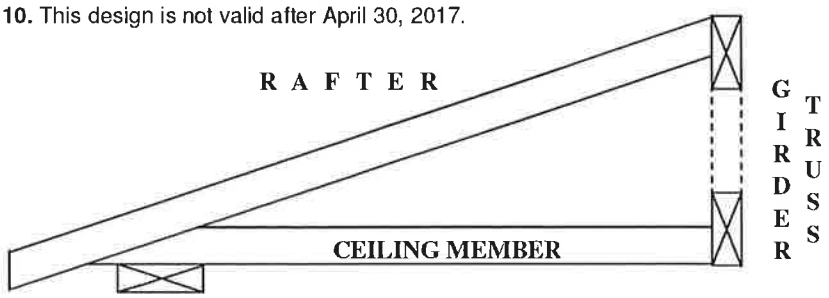

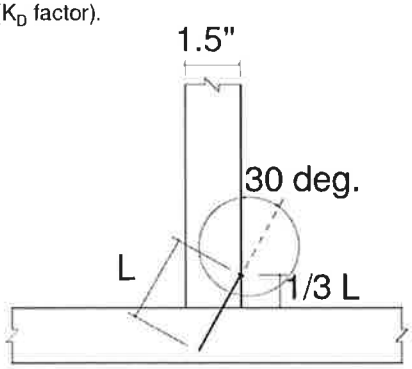

TOE-NAIL INSTALLATION

Nail type	Common wire	Common spiral	Common wire	Common spiral
Nail dia. (in)	0.160	0.152	0.144	0.122
	(3.5" nail)		(3" and 3.25" nail)	
LUMBER SIZE	MAXIMUM NUMBER OF TOE-NAILS			
2X4 SPF	2	2	3	3
2X4 D. Fir	2	2	2	2
2X6 SPF	4	4	4	5
2X6 D. Fir	3	3	3	4

MiTek Canada Inc
100 Industrial Rd.
Bradford, Ontario L3Z 3G7

RECEIVED
TOWN OF MILTON
MAR 29, 2017
17-4967
BUILDING DIVISION

PEO
Certificate No. 10889485

LICENSED PROFESSIONAL ENGINEER
C. Cordogiannis
90553736
PROVINCE OF ONTARIO

April 24, 2015

BEARING ANCHORAGE BY TOE-NAILS FOR WIND LOADING B37579H2

NAIL TYPE	LENGTH (IN)	DIAMETER (IN)	NAIL WITHDRAWAL CAPACITY (LB)	
			S-P-F	D. FIR
COMMON WIRE	3.00	0.144	30	42
	3.25	0.144	32	45
	3.50	0.160	38	52
COMMON SPIRAL	3.00	0.122	26	36
	3.25	0.122	28	40
	3.50	0.152	36	50

Note: If using truss with D. Fir lumber and S-P-F bearing plate, use values in table for S-P-F.

NOTES:

1. Truss chord, rafter, or ceiling members may be anchored to bearing plate by toe-nails, provided that the actual factored uplift force due to **wind** or **earthquake** load does not exceed the withdrawal capacities in the table. Hangers (specified by others) are required for uplift forces that are higher than the maximum toe-nail withdrawal capacity.
2. Toe nail capacities shown in the table are for **one** toe-nail. For additional toe-nails multiply values in table by the number of toe-nails used. Toe-nail capacities take into account toe-nailing factor J_A in CSA O86-09, section 10.9.5.2.
3. For 9- 3/4 gauge 3.25" common wire gun nails (diameter = 0.120") use 3" common spiral nail values.
4. Maximum number of toe-nails allowed depends on the lumber size & species to be toe-nailed to supporting member and nail diameter, as shown in table above.
5. Nail values in table are based on the following relative lumber densities: G = 0.42(SPF), G = 0.49(D. Fir).
6. Toe-nails shall be driven at approximately 1/3 the nail length from the edge of the joist/truss chord and driven at an angle of 30° to the grain of the member (See drawing on detail B37579H1).
7. Lumber must be dry (< 19% moisture content) at the time of nail installation.
8. Nail values in this table comply with CSA O86-09, section 10.9.5
9. This design is not valid after April 30, 2017

Toe-nailing on 2x6 Bearing Plate

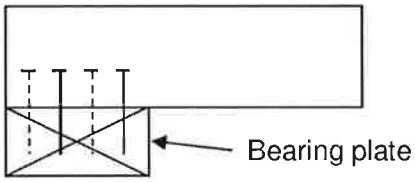

Elevation view

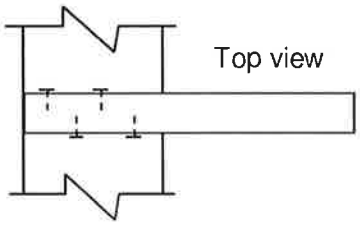

Top view

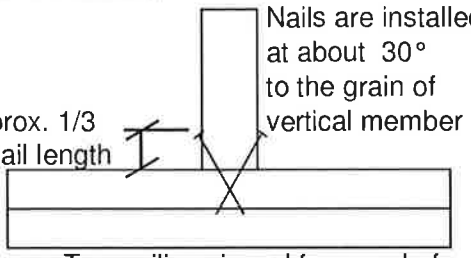

Toe-nailing viewed from end of joist or truss

Toe-nailing on 2x4 Bearing Plate

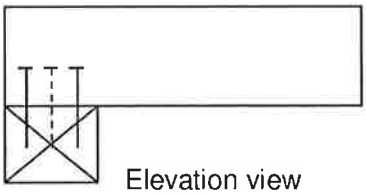

Elevation view

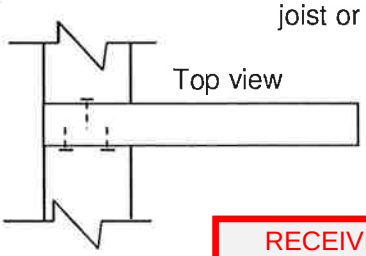

Top view

MiTek Canada Inc
100 Industrial Rd.
Bradford, Ontario L3Z 3G7

RECEIVED
TOWN OF MILTON
MAR 29, 2017
17-4967
BUILDING DIVISION

PEO
Certificate No. 10889485

LICENSED PROFESSIONAL ENGINEER
C. Cordogiannis
90553736
PROVINCE OF ONTARIO

April 24, 2015

JOB NAME **DETAILS** | JOB DESC. **HIP END FRAMING** | DRAWING NO. **B37579J**

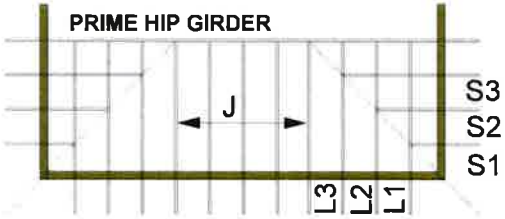

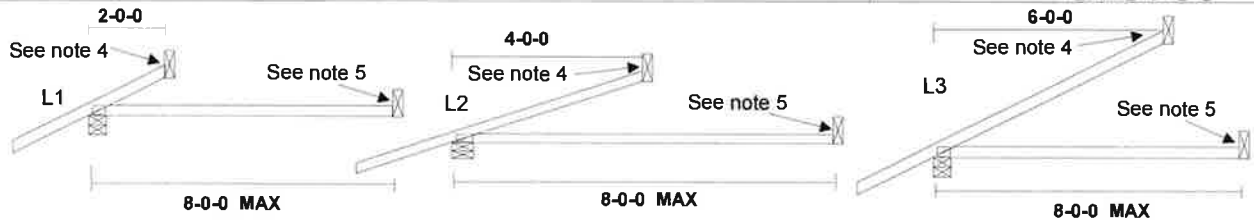

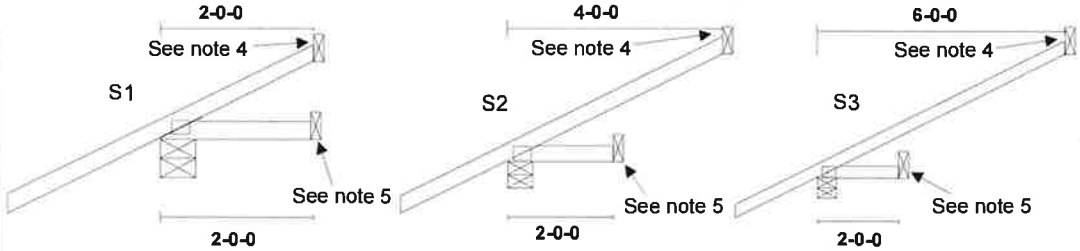

DETAIL "A"

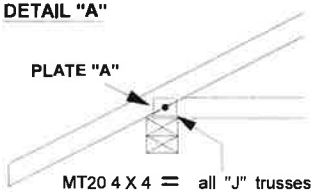

MT20 4 X 4 = all "J" trusses
MT20 3 X 4 = all other trusses

DETAIL "B"

RAISED HEEL

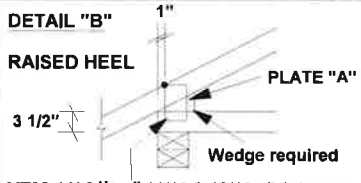

MT20 4 X 8 || all 11/12 & 12/12 pitch trusses
MT20 4 X 7 || all other trusses

DETAIL "C"

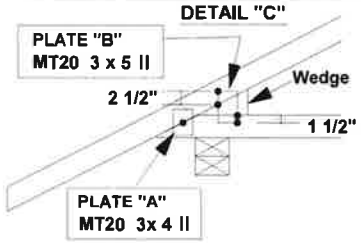

CANTILEVER DETAIL "C"

SLOPE	MAX CANTILEVER	PLATE "B"	WEDGE SIZE
3/12	17"	3 X 5	2 X 3
4/12	14"	3 X 5	2 X 3
5/12	12"	3 X 5	2 X 4
6/12	10"	3 X 5	2 X 4
7/12	9"	3 X 5	2 X 6
8/12	8.5"	3 X 5	2 X 6
9/12	8"	3 X 5	2 X 6
10/12	7.5"	3 X 5	2 X 6

"J"

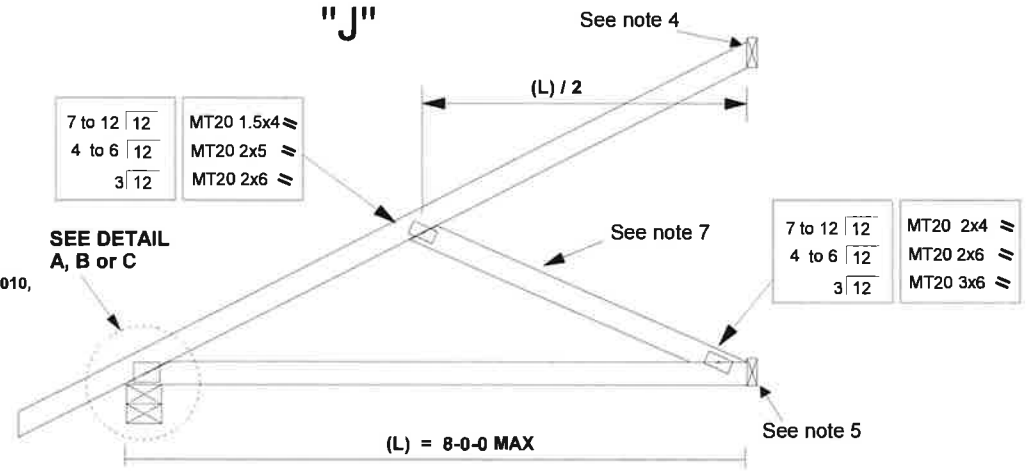

NOTES:

1. ALL LUMBER SHALL BE 2x4 SPF OR D. Fir No. 2 DRY OR BETTER.
2. THIS TRUSS IS DESIGNED FOR HOUSING AND SMALL BUILDING REQUIREMENTS OF PART 9 NBCC 2010, WHERE GROUND SNOW LOAD IS 60.0 PSF OR LESS AND RAIN LOAD DOES NOT EXCEED 12.53 PSF; TOP CHORD DEAD LOAD IS 6 PSF OR LESS; BC LIVE LOAD IS 0 PSF AND BC DEAD LOAD IS 7 PSF.
3. HIP RAFTER DESIGN SHALL CONFORM TO SECTION 9.23.14.6 OF NBCC 2010.
4. FASTEN HIGH END OF RAFTERS USING MITEK CANADA INC. "BEARING ANCHORAGE BY TOE-NAILS FOR LATERAL CAPACITY" STANDARD DETAIL B37579H1.
5. FASTEN RIGHT END OF CEILING USING MITEK CANADA INC. "BEARING ANCHORAGE BY TOE-NAILS FOR LATERAL CAPACITY" STANDARD DETAIL B37579H1.
6. OVERHANG LENGTH SHALL NOT EXCEED 2 FT.
7. WHEN SETBACK IS 6 FT OR LESS, DIAGONAL WEB MAY BE OMITTED AND HIGH END OF TOP CHORD SHALL BE CONNECTED AS PER NOTE 4.
8. ALL PLATES SPECIFIED ARE PRESSED INTO BOTH FACES OF THE TRUSS.
9. MITEK REFERENCE PAGE MII-7473C FORMS AN INTEGRAL PART OF THIS DETAIL.
10. THIS DETAIL IS NOT VALID AFTER APRIL 30, 2017

MiTek Canada, Inc.
100 Industrial Rd.
Bradford, Ontario, L3Z 3G7

PEO
Certificate No. 10889485

LICENSED PROFESSIONAL ENGINEER
C. Cordogiannis
90553736
PROVINCE OF ONTARIO

RECEIVED
TOWN OF MILTON
MAR 29, 2017
17-4967
BUILDING DIVISION

April 24, 2015

Member Data B1

Description:

Standard Load:
Snow Load: 30 PLF
Dead Load: 15 PLF

Building Type: Residential

Member Type: Beam
Top Lateral Bracing: Continuous
Bottom Lateral Bracing: Continuous
Moisture Condition: Dry
Deflection Criteria: L/360 live, L/240 total 0.720" max. LL
Deck Connection: Nailed
Filename: Beam2
Importance Category: Normal (Part 9)

Application: Roof
Slope: 0.00 / 12

Building Code: OBC-2012
Member Weight: 5.0 PLF

Other Loads

Type (Description)	Side	Begin	End	Trib. Width	Other Start	End	Dead Start	End	Category
Additional Uniform (PLF)	Top	0' 0.00"	5' 0.00"		0		41		Live
Additional Uniform (PLF)	Top	0' 0.00"	5' 0.00"		95		0		Snow
Additional Uniform (PLF)	Top	0' 0.00"	11' 9.50"		0		10		Live
Additional Uniform (PLF)	Top	5' 0.00"	11' 9.50"		0		50		Live
Additional Uniform (PLF)	Top	5' 0.00"	11' 9.50"		139		0		Snow

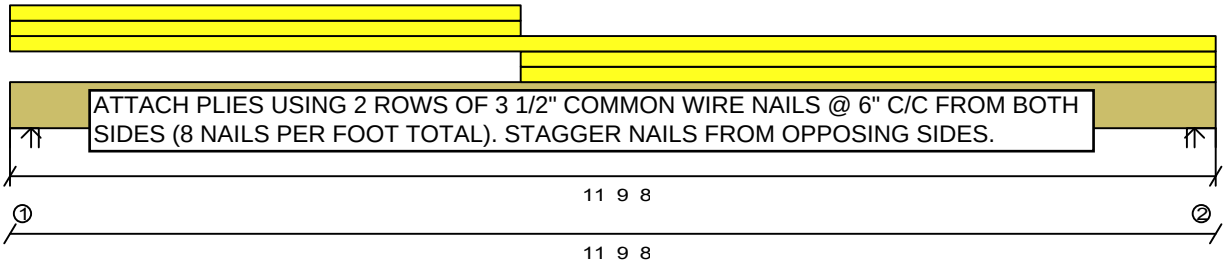

Bearings and Factored Reactions

	Location	Type	Material	Input Length	Min Required	Gravity Reaction	Gravity Uplift
1	0' 0.000"	Wall	Steel	3.500"	1.500"	1715#	--
2	11' 9.500"	Wall	Steel	3.500"	1.500"	1929#	--

Maximum Unfactored Load Case Reactions

Used for applying point loads (or line loads) to carrying members

	Snow	Dead
1	793#	420#
2	915#	445#

Design spans
11' 4.250"

Product: S-P-F No1/No2 2x10 2 ply

PASSES DESIGN CHECKS

Design assumes continuous lateral bracing along the top chord.
Design assumes continuous lateral bracing along the bottom chord.

Limit States Design

	Actual	Limit	Capacity	Location	Loading
Positive Moment	5255.#	6042.#	86%	5.9'	Total Load 1.25D+1.00*1.5S
Shear	1657.#	2656.#	62%	11.01'	Total Load 1.25D+1.00*1.5S
Max. Reaction	1929.#	6457.#	29%	11.79'	Total Load 1.25D+1.00*1.5S
TL Deflection	0.3093"	0.5677"	L/440	5.9'	Total Load D+S
LL Deflection	0.2058"	0.3785"	L/661	5.9'	Total Load S

(Actual is factored load effects, Limit is design resistance)
Bearing length from point load of top loads beams assumed to be 3.50"
Control: Positive Moment
Manufacturer's installation guide MUST be consulted for multi-ply connection details and alternatives

RECEIVED
TOWN OF MILTON
MAR 29, 2017
17-4967
BUILDING DIVISION

LICENSED PROFESSIONAL ENGINEER
C.G. CARSON
100076892
10 MAR 2017

READ ALL NOTES ON THIS PAGE AND ON THE ENGINEERING NOTE PAGE ENP-1. THE NOTE PAGE IS AN INTEGRAL PART OF THIS DRAWING AS IT CONTAINS SPECIFICATIONS AND CRITERIA USED IN THE DESIGN OF THIS COMPONENT.

All product names are trademarks of their respective owners

Copyright (C) 2013 by Simpson Strong-Tie Company Inc. ALL RIGHTS RESERVED.
**Passing is defined as when the member, floor joist, beam or girder, shown on this drawing meets applicable design criteria for Loads, Loading Conditions, and Spans listed on this sheet. The design must be reviewed by a qualified designer or design professional as required for approval. This design assumes product installation according to the manufacturer's specifications.

Member Data B2

Description:

Standard Load:
Snow Load: 30 PLF
Dead Load: 15 PLF

Building Type: Residential

Member Type: Beam
Top Lateral Bracing: Continuous
Bottom Lateral Bracing: Continuous
Moisture Condition: Dry
Deflection Criteria: L/360 live, L/240 total 0.720" max. LL
Deck Connection: Nailed
Filename: Beam3
Importance Category: Normal (Part 9)

Application: Roof
Slope: 0.00 / 12

Building Code: OBC-2012
Member Weight: 5.0 PLF

Other Loads

Type (Description)	Side	Begin	End	Trib. Width	Other Start	End	Dead Start	End	Category
Point (LBS)	Top	3' 8.00"			0		420		Live
Point (LBS)	Top	3' 8.00"			793		0		Snow
Additional Uniform (PLF)	Top	0' 0.00"	3' 8.00"		0		16		Live
Additional Uniform (PLF)	Top	0' 0.00"	3' 8.00"		61		0		Snow
Additional Uniform (PLF)	Top	3' 8.00"	6' 0.00"		0		59		Live
Additional Uniform (PLF)	Top	3' 8.00"	6' 0.00"		139		0		Snow
Additional Uniform (PLF)	Top	0' 0.00"	6' 0.00"		0		10		Live
Additional Uniform (PLF)	Top	0' 0.00"	6' 0.00"		23		0		Live

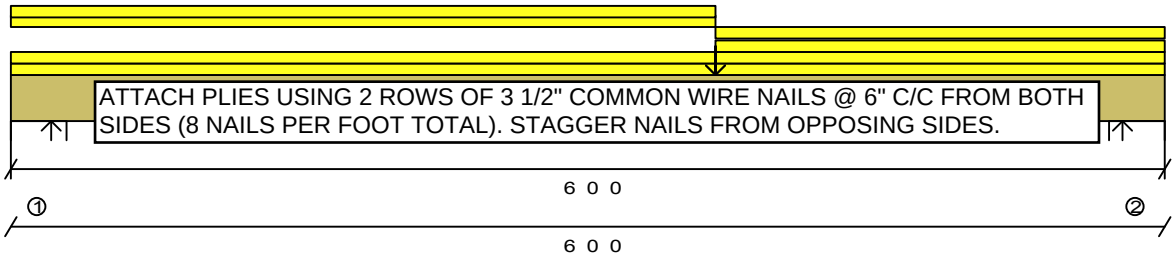

Bearings and Factored Reactions

	Location	Type	Material	Input Length	Min Required	Gravity Reaction	Gravity Uplift
1	0' 0.000"	Wall	Steel	3.500"	1.500"	1292#	--
2	6' 0.000"	Wall	Steel	3.500"	1.500"	1927#	--

Maximum Unfactored Load Case Reactions

Used for applying point loads (or line loads) to carrying members

	Live	Snow	Dead
1	65#	586#	305#
2	65#	878#	462#

Design spans
5' 6.750"

Product: S-P-F No1/No2 2x10 2 ply

PASSES DESIGN CHECKS

Design assumes continuous lateral bracing along the top chord.
Design assumes continuous lateral bracing along the bottom chord.

Limit States Design

	Actual	Limit	Capacity	Location	Loading
Positive Moment	3234.#	6042.#	53%	3.67'	Total Load 1.25D+1.00*1.5S+0.5L
Shear	1637.#	2656.#	61%	5.22'	Total Load 1.25D+1.00*1.5S+0.5L
Max. Reaction	1927.#	6457.#	29%	6'	Total Load 1.25D+1.00*1.5S+0.5L
TL Deflection	0.0395"	0.2781"	L/999+	3.28'	Total Load D+S+0.5L
LL Deflection	0.0262"	0.1854"	L/999+	3.28'	Total Load S+0.5L

(Actual is factored load effects, Limit is design resistance)
Bearing length from point load of top loads beams assumed to be 3.50"
Control: Shear
Manufacturer's installation guide MUST be consulted for multi-ply connection details and alternatives

READ ALL NOTES ON THIS PAGE AND ON THE ENGINEERING NOTE PAGE ENP-1. THE NOTE PAGE IS AN INTEGRAL PART OF THIS DRAWING AS IT CONTAINS SPECIFICATIONS AND CRITERIA USED IN THE DESIGN OF THIS COMPONENT.

RECEIVED
TOWN OF MILTON
MAR 29, 2017
17-4967
BUILDING DIVISION

LICENSED PROFESSIONAL ENGINEER
C.G. CARSON
100076892
10 MAR 2017

All product names are trademarks of their respective owners

Copyright (C) 2013 by Simpson Strong-Tie Company Inc. ALL RIGHTS RESERVED.
**Passing is defined as when the member, floor joist, beam or girder, shown on this drawing meets applicable design criteria for Loads, Loading Conditions, and Spans listed on this sheet. The design must be reviewed by a qualified designer or design professional as required for approval. This design assumes product installation according to the manufacturer's specifications.

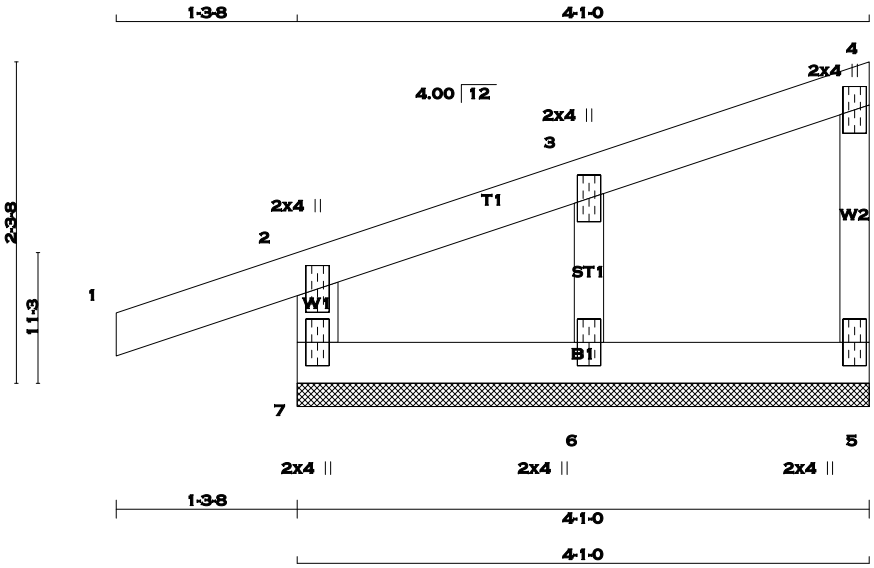

TOTAL WEIGHT = 2 X 14 = 28 lb [M]

LUMBER
N. L. G. A. RULES

CHORDS	SIZE		LUMBER	DESCR.
7 - 2	2x4	DRY	No.2	SPF
1 - 4	2x4	DRY	No.2	SPF
5 - 4	2x3	DRY	No.2	SPF
7 - 5	2x4	DRY	No.2	SPF
ALL WEBS	2x3	DRY	No.2	SPF
ALL GABLE WEBS	2x3	DRY	No.2	SPF

DRY: SEASONED LUMBER.

GABLE STUDS SPACED AT 2-0-0 OC.

PLATES (table is in inches)

JT	TYPE	PLATES	W	LEN	Y	X
2	TMV+p	MT20	2.0	4.0		
3	TMW+w	MT20	2.0	4.0		
4	TMV+p	MT20	2.0	4.0		
5	BMV1+p	MT20	2.0	4.0		
6	BMW1+w	MT20	2.0	4.0		
7	BMV1+p	MT20	2.0	4.0		

A SIZE FOR SIZE SUBSTITUTION OF MITEK MII20 WITH TEE-LOK TL20 PLATES IS ALLOWED.

READ ALL NOTES ON THIS PAGE AND ON THE ENGINEERING NOTE PAGE ENP-1. THE NOTE PAGE IS AN INTEGRAL PART OF THIS DRAWING AS IT CONTAINS SPECIFICATIONS AND CRITERIA USED IN THE DESIGN OF THIS COMPONENT.

LICENSED PROFESSIONAL ENGINEER
C.G. CARSON
100076892
10 MAR 2017

DIMENSIONS, SUPPORTS AND LOADINGS SPECIFIED BY FABRICATOR TO BE VERIFIED BY BUILDING DESIGNER

BEARINGS

THIS TRUSS DESIGNED FOR CONTINUOUS BEARINGS.

THIS TRUSS REQUIRES RIGID SHEATHING ON EXPOSED FACE.

BEARING MATERIAL TO BE SPF NO.2 OR BETTER AT JOINT(S)

BRACING
TOP CHORD TO BE SHEATHED OR MAX. PURLIN SPACING = 6.25 FT.
MAX. UNBRACED BOTTOM CHORD LENGTH = 10.00 FT. OR RIGID CEILING DIRECTLY APPLIED.

ALL PITCH BREAKS AND PERIMETER CORNER JOINTS MUST BE LATERALLY RESTRAINED.

LOADING
TOTAL LOAD CASES: (4)

CHORDS

MEMB. FR-TO	MAX. FACTORED FORCE (LBS)	FACTORED VERT. LOAD (PLF) FROM	TO	LC1 MAX CSI (LC)	MAX. UNBRAC LENGTH
7- 2	-184 / 0	0.0	0.0	0.01 (4)	7.81
1- 2	0 / 16	-77.3	-77.3	0.10 (1)	10.00
2- 3	-12 / 0	-77.3	-77.3	0.04 (1)	6.25
3- 4	-10 / 0	-77.3	-77.3	0.04 (1)	6.25
5- 4	-66 / 0	0.0	0.0	0.02 (1)	7.81
7- 6	0 / 13	-17.5	-17.5	0.02 (4)	10.00
6- 5	0 / 7	-17.5	-17.5	0.02 (4)	10.00

WEBS

MEMB. FR-TO	MAX. FACTORED FORCE (LBS)	MAX CSI (LC)
6- 3	-170 / 0	0.02 (1)

RECEIVED
TOWN OF MILTON
MAR 29, 2017
17-4967
BUILDING DIVISION

DESIGN CRITERIA

SPECIFIED LOADS:

TOP	CH.	LL	=	23.3	PSF
		DL	=	3.0	PSF
BOT	CH.	LL	=	0.0	PSF
		DL	=	7.0	PSF
TOTAL	LOAD		=	33.3	PSF

SPACING = 24.0 IN. C/C

THIS TRUSS IS DESIGNED FOR RESIDENTIAL OR SMALL BUILDING REQUIREMENTS OF PART 9, NBCC 2010

THIS DESIGN COMPLIES WITH:
- PART 9 OF OBC 2012 , BCBC 2012 , ABC 2014
- CSA 086-09
- TPIC 2011

DESIGN ASSUMPTIONS
-OVERHANG NOT TO BE ALTERED OR CUT OFF.

(55 % OF 27.2 P.S.F. G.S.L. PLUS 8.4 P.S.F. RAIN LOAD) EQUALS 23.3 P.S.F. SPECIFIED ROOF LIVE LOAD

CSI: TC=0.10 (1-2:1) , BC=0.02 (6-7:4) , WB=0.02 (3-6:1) , SSI=0.08 (1-2:1)

DOL LUMBER=1.00 NAIL=1.00 LS BEND=1.10 COMP=1.10 SHEAR=1.10 TENS= 1.10

COMPANION LIVE LOAD FACTOR = 0.50

TRUSS PLATE MANUFACTURER IS NOT RESPONSIBLE FOR QUALITY CONTROL IN THE TRUSS MANUFACTURING PLANT .

NAIL VALUES

PLATE	GRIP(DRY) (PSI) MAX	MIN	SHEAR (PLI) MAX	MIN	SECTION (PLI) MAX	MIN
MT20	618	354	1667	822	2284	1656

PLATE PLACEMENT TOL. = 0.250 inches

PLATE ROTATION TOL. = 5.0 Deg.

JSI GRIP= 0.10 (2) (INPUT = 0.90)
JSI METAL= 0.04 (2) (INPUT = 1.00)

KOTT

SCALE = 1:17.3

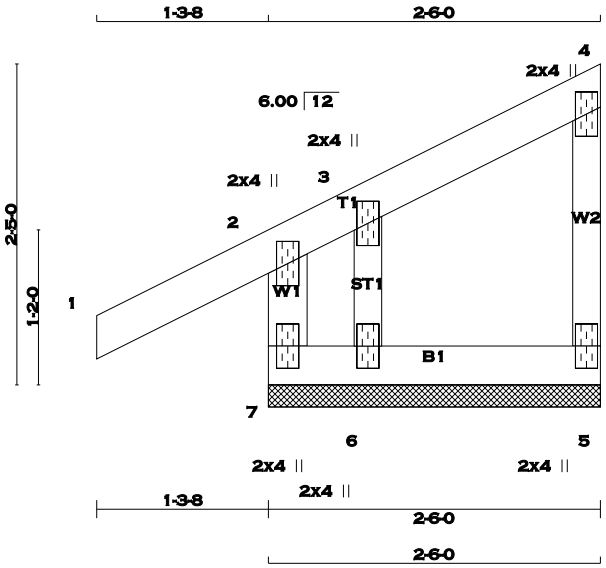

TOTAL WEIGHT = 11 lb [M]

LUMBER

N. L. G. A. RULES

CHORDS	SIZE		LUMBER	DESCR.
7 - 2	2x4	DRY	No.2	SPF
1 - 4	2x4	DRY	No.2	SPF
5 - 4	2x3	DRY	No.2	SPF
7 - 5	2x4	DRY	No.2	SPF
ALL WEBS	2x3	DRY	No.2	SPF
ALL GABLE WEBS	2x3	DRY	No.2	SPF

DRY: SEASONED LUMBER.

GABLE STUDS SPACED AT 2-0-0 OC.

PLATES (table is in inches)

JT	TYPE	PLATES	W	LEN	Y	X
2	TMV+p	MT20	2.0	4.0		
3	TMW+w	MT20	2.0	4.0		
4	TMV+p	MT20	2.0	4.0		
5	BMV1+p	MT20	2.0	4.0		
6	BMW1+w	MT20	2.0	4.0		
7	BMV1+p	MT20	2.0	4.0		

A SIZE FOR SIZE SUBSTITUTION OF MITEK MII20 WITH TEE-LOK TL20 PLATES IS ALLOWED.

READ ALL NOTES ON THIS PAGE AND ON THE ENGINEERING NOTE PAGE ENP-1. THE NOTE PAGE IS AN INTEGRAL PART OF THIS DRAWING AS IT CONTAINS SPECIFICATIONS AND CRITERIA USED IN THE DESIGN OF THIS COMPONENT.

LICENSED PROFESSIONAL ENGINEER
C.G. CARSON
100076892
10 MAR 2017

DIMENSIONS, SUPPORTS AND LOADINGS SPECIFIED BY FABRICATOR TO BE VERIFIED BY BUILDING DESIGNER

BEARINGS

THIS TRUSS DESIGNED FOR CONTINUOUS BEARINGS.

THIS TRUSS REQUIRES RIGID SHEATHING ON EXPOSED FACE.

PROVIDE ANCHORAGE AT BEARING JOINT 6 FOR 150 LBS FACTORED UPLIFT
BEARING MATERIAL TO BE SPF NO.2 OR BETTER AT JOINT(S)

BRACING

TOP CHORD TO BE SHEATHED OR MAX. PURLIN SPACING = 6.25 FT.
MAX. UNBRACED BOTTOM CHORD LENGTH = 10.00 FT. OR RIGID CEILING DIRECTLY APPLIED.

ALL PITCH BREAKS AND PERIMETER CORNER JOINTS MUST BE LATERALLY RESTRAINED.

LOADING

TOTAL LOAD CASES: (5)

CHORDS MEMB. FR-TO	MAX. FACTORED FORCE (LBS)	FACTORED VERT. LOAD (PLF) FROM	TO	LC1 MAX CSI (LC)	MAX. UNBRAC LENGTH	WEBS MEMB. FR-TO	MAX. FACTORED FORCE (LBS)	MAX CSI (LC)
7- 2	-198 / 0	0.0	0.0	0.02 (5)	7.81	6- 3	-37 / 75	0.02 (5)
1- 2	0 / 23	-77.3	-77.3	0.10 (1)	10.00			
2- 3	-34 / 0	-77.3	-77.3	0.08 (1)	6.25			
3- 4	-6 / 1	-77.3	-77.3	0.03 (1)	10.00			
5- 4	-63 / 0	0.0	0.0	0.01 (1)	7.81			
7- 6	-5 / 5	-17.5	-17.5	0.02 (1)	10.00			
6- 5	0 / 3	-17.5	-17.5	0.01 (4)	10.00			

CANTILEVER ANALYSIS HAS BEEN CONSIDERED IN THIS DESIGN

RECEIVED
TOWN OF MILTON
MAR 29, 2017
17-4967
BUILDING DIVISION

DESIGN CRITERIA

SPECIFIED LOADS:

TOP CH.	LL	=	23.3	PSF
	DL	=	3.0	PSF
BOT CH.	LL	=	0.0	PSF
	DL	=	7.0	PSF
TOTAL LOAD		=	33.3	PSF

SPACING = 24.0 IN. C/C

THIS TRUSS IS DESIGNED FOR RESIDENTIAL OR SMALL BUILDING REQUIREMENTS OF PART 9, NBCC 2010

THIS DESIGN COMPLIES WITH:
- PART 9 OF OBC 2012 , BCBC 2012 , ABC 2014
- CSA 086-09
- TPIC 2011

DESIGN ASSUMPTIONS
-OVERHANG NOT TO BE ALTERED OR CUT OFF.

(55 % OF 27.2 P.S.F. G.S.L. PLUS 8.4 P.S.F. RAIN LOAD) EQUALS 23.3 P.S.F. SPECIFIED ROOF LIVE LOAD

CSI: TC=0.10 (1-2:1) , BC=0.02 (6-7:1) , WB=0.02 (3-6:5) , SSI=0.07 (1-2:1)

DOL LUMBER=1.00 NAIL=1.00 LS BEND=1.10 COMP=1.10 SHEAR=1.10 TENS= 1.10

COMPANION LIVE LOAD FACTOR = 0.50

TRUSS PLATE MANUFACTURER IS NOT RESPONSIBLE FOR QUALITY CONTROL IN THE TRUSS MANUFACTURING PLANT .

NAIL VALUES

PLATE	GRIP(DRY) (PSI) MAX	MIN	SHEAR (PLI) MAX	MIN	SECTION (PLI) MAX	MIN
MT20	618	354	1667	822	2284	1656

PLATE PLACEMENT TOL. = 0.250 inches

PLATE ROTATION TOL. = 5.0 Deg.

JSI GRIP= 0.11 (2) (INPUT = 0.90)
JSI METAL= 0.05 (2) (INPUT = 1.00)

KOTT

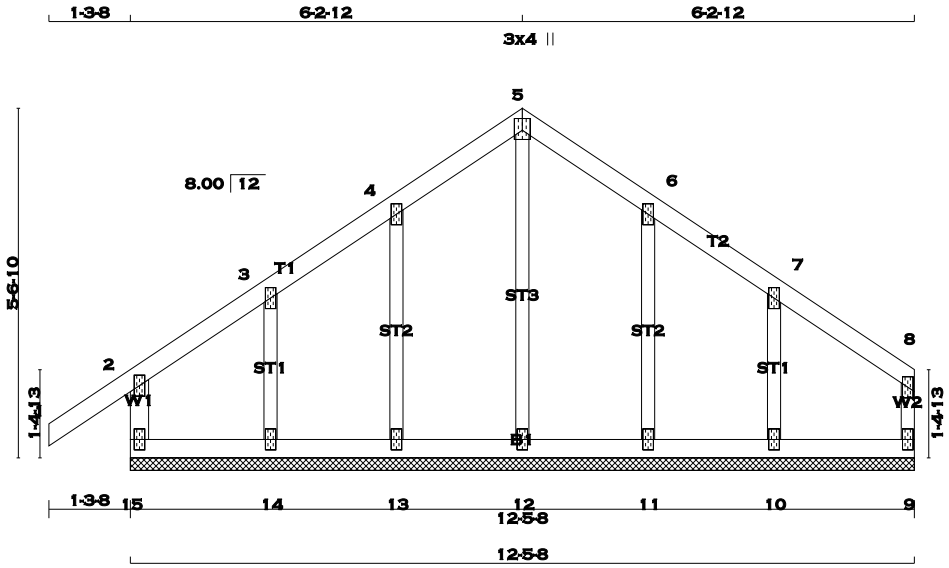

TOTAL WEIGHT = 49 lb [M]

LUMBER

N. L. G. A. RULES

CHORDS	SIZE		LUMBER	DESCR.
15 - 2	2x4	DRY	No.2	SPF
1 - 5	2x4	DRY	No.2	SPF
5 - 8	2x4	DRY	No.2	SPF
9 - 8	2x3	DRY	No.2	SPF
15 - 9	2x4	DRY	No.2	SPF
ALL WEBS	2x3	DRY	No.2	SPF
ALL GABLE WEBS	2x3	DRY	No.2	SPF

DRY: SEASONED LUMBER.

GABLE STUDS SPACED AT 2-0-0 OC.

PLATES (table is in inches)

JT	TYPE	PLATES	W	LEN	Y	X
2	TMV+p	MT20	2.0	4.0		
3, 4, 6, 7						
3	TMW+w	MT20	2.0	4.0		
5	TTW+p	MT20	3.0	4.0	2.25	1.50
8	TMV+p	MT20	2.0	4.0		
9	BMV1+p	MT20	2.0	4.0		
10, 11, 12, 13, 14						
10	BMW1+w	MT20	2.0	4.0		
15	BMV1+p	MT20	2.0	4.0		

A SIZE FOR SIZE SUBSTITUTION OF MITEK MII20 WITH TEE-LOK TL20 PLATES IS ALLOWED.

READ ALL NOTES ON THIS PAGE AND ON THE ENGINEERING NOTE PAGE ENP-1. THE NOTE PAGE IS AN INTEGRAL PART OF THIS DRAWING AS IT CONTAINS SPECIFICATIONS AND CRITERIA USED IN THE DESIGN OF THIS COMPONENT.

LICENSED PROFESSIONAL ENGINEER
C.G. CARSON
100076892
10 MAR 2017

DIMENSIONS, SUPPORTS AND LOADINGS SPECIFIED BY FABRICATOR TO BE VERIFIED BY BUILDING DESIGNER

BEARINGS

THIS TRUSS DESIGNED FOR CONTINUOUS BEARINGS.

THIS TRUSS REQUIRES RIGID SHEATHING ON EXPOSED FACE.

BEARING MATERIAL TO BE SPF NO.2 OR BETTER AT JOINT(S)

BRACING

TOP CHORD TO BE SHEATHED OR MAX. PURLIN SPACING = 6.25 FT.
MAX. UNBRACED BOTTOM CHORD LENGTH = 10.00 FT. OR RIGID CEILING DIRECTLY APPLIED.

ALL PITCH BREAKS AND PERIMETER CORNER JOINTS MUST BE LATERALLY RESTRAINED.

LOADING

TOTAL LOAD CASES: (4)

CHORDS

MEMB. FR-TO	MAX. FACTORED FORCE (LBS)	FACTORED VERT. LOAD (PLF) FROM	TO	LC1	MAX CSI (LC)	MAX. UNBRAC LENGTH
15- 2	-207 / 0	0.0	0.0	0.02 (1)	7.81	
1- 2	0 / 29	-77.3	-77.3	0.10 (1)	10.00	
2- 3	-29 / 0	-77.3	-77.3	0.04 (1)	6.25	
3- 4	-22 / 0	-77.3	-77.3	0.04 (1)	6.25	
4- 5	-17 / 0	-77.3	-77.3	0.04 (1)	6.25	
5- 6	-17 / 0	-77.3	-77.3	0.04 (1)	6.25	
6- 7	-23 / 0	-77.3	-77.3	0.04 (1)	6.25	
7- 8	-24 / 0	-77.3	-77.3	0.04 (1)	6.25	
9- 8	-92 / 0	0.0	0.0	0.04 (1)	7.81	
15-14	0 / 23	-17.5	-17.5	0.02 (4)	10.00	
14-13	0 / 18	-17.5	-17.5	0.02 (4)	10.00	
13-12	0 / 15	-17.5	-17.5	0.02 (4)	10.00	
12-11	0 / 15	-17.5	-17.5	0.02 (4)	10.00	
11-10	0 / 18	-17.5	-17.5	0.02 (4)	10.00	
10- 9	0 / 23	-17.5	-17.5	0.02 (4)	10.00	

WEBS

MEMB. FR-TO	MAX. FACTORED FORCE (LBS)	MAX CSI (LC)
12- 5	-143 / 0	0.07 (1)
13- 4	-155 / 0	0.04 (1)
14- 3	-155 / 0	0.03 (1)
11- 6	-152 / 0	0.04 (1)
10- 7	-166 / 0	0.03 (1)

RECEIVED
TOWN OF MILTON
MAR 29, 2017
17-4967
BUILDING DIVISION

DESIGN CRITERIA

SPECIFIED LOADS:

TOP	CH.	LL	=	23.3	PSF
		DL	=	3.0	PSF
BOT	CH.	LL	=	0.0	PSF
		DL	=	7.0	PSF
TOTAL	LOAD		=	33.3	PSF

SPACING = 24.0 IN. C/C

THIS TRUSS IS DESIGNED FOR RESIDENTIAL OR SMALL BUILDING REQUIREMENTS OF PART 9, NBCC 2010

THIS DESIGN COMPLIES WITH:
- PART 9 OF OBC 2012 , BCBC 2012 , ABC 2014
- CSA 086-09
- TPIC 2011

DESIGN ASSUMPTIONS
-OVERHANG NOT TO BE ALTERED OR CUT OFF.

(55 % OF 27.2 P.S.F. G.S.L. PLUS 8.4 P.S.F. RAIN LOAD) EQUALS 23.3 P.S.F. SPECIFIED ROOF LIVE LOAD

CSI: TC=0.10 (1-2:1) , BC=0.02 (9-10:4) , WB=0.07 (5-12:1) , SSI=0.07 (1-2:1)

DOL LUMBER=1.00 NAIL=1.00 LS BEND=1.10 COMP=1.10 SHEAR=1.10 TENS= 1.10

COMPANION LIVE LOAD FACTOR = 0.50

TRUSS PLATE MANUFACTURER IS NOT RESPONSIBLE FOR QUALITY CONTROL IN THE TRUSS MANUFACTURING PLANT .

NAIL VALUES

PLATE	GRIP(DRY) (PSI) MAX	MIN	SHEAR (PLI) MAX	MIN	SECTION (PLI) MAX	MIN
MT20	618	354	1667	822	2284	1656

PLATE PLACEMENT TOL. = 0.250 inches

PLATE ROTATION TOL. = 5.0 Deg.

JSI GRIP= 0.15 (2) (INPUT = 0.90)
JSI METAL= 0.06 (2) (INPUT = 1.00)

KOTT

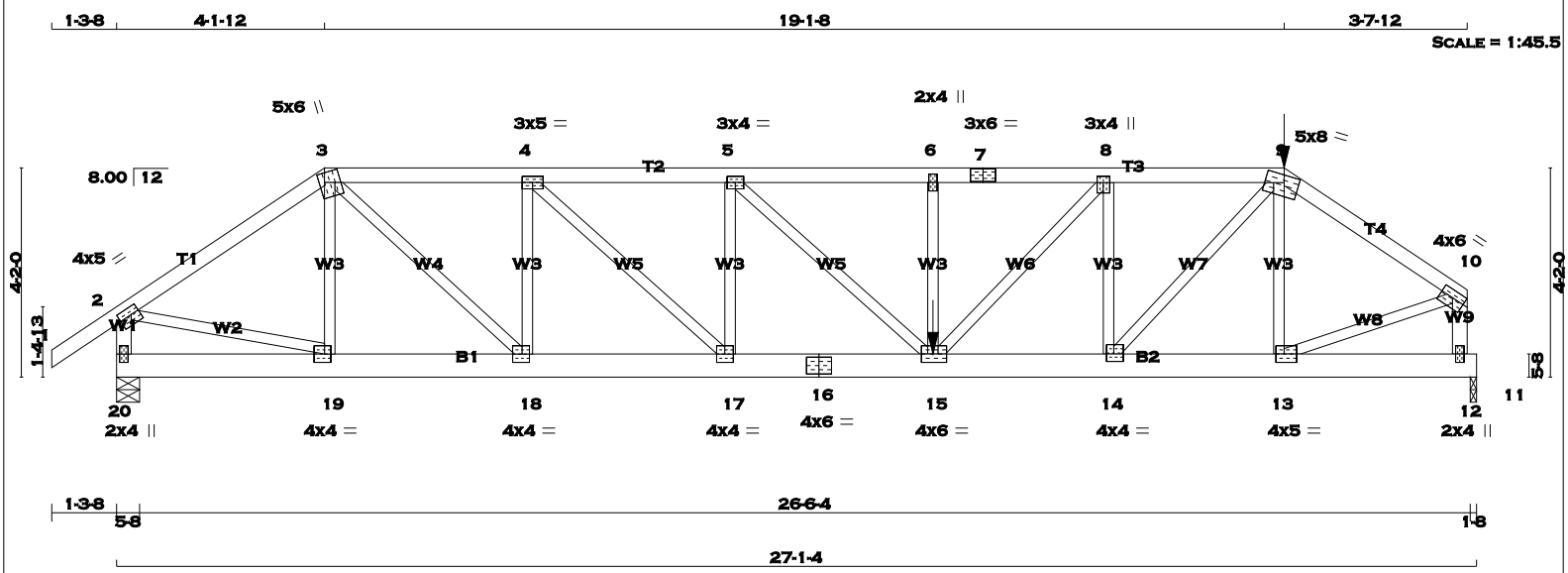

TOTAL WEIGHT = 2 X 128 = 257 lb [M]

LUMBER

N. L. G. A. RULES

CHORDS	SIZE		LUMBER	DESCR.
1 - 3	2x4	DRY	No.2	SPF
3 - 7	2x4	DRY	No.2	SPF
7 - 9	2x4	DRY	No.2	SPF
9 - 10	2x4	DRY	No.2	SPF
20 - 2	2x4	DRY	No.2	SPF
12 - 10	2x4	DRY	No.2	SPF
20 - 16	2x6	DRY	No.2	SPF
16 - 11	2x6	DRY	No.2	SPF
ALL WEBS EXCEPT	2x3	DRY	No.2	SPF

DRY: SEASONED LUMBER.

DESIGN CONSISTS OF 2 TRUSSES BUILT SEPARATELY THEN FASTENED TOGETHER AS FOLLOWS:

CHORDS #ROWS	SURFACE SPACING (IN)		LOAD(PLF)
TOP CHORDS : (0.122"X3") SPIRAL NAILS			
1- 3	1	12	TOP
3- 7	1	12	SIDE(34.2)
7- 9	1	12	SIDE(34.2)
9- 10	1	12	SIDE(0.0)
20- 2	1	12	TOP
12- 10	1	12	TOP
BOTTOM CHORDS : (0.122"X3") SPIRAL NAILS			
20- 16	2	12	TOP
16- 11	2	12	SIDE(8.7)
WEBS : (0.122"X3") SPIRAL NAILS			
2x3	1	6	

NAILS TO BE DRIVEN FROM ONE SIDE ONLY.

GIRDER NAILING ASSUMES NAILED HANGERS ARE FASTENED WITH MIN. 3-0 INCH NAILS.

TOP - COMPONENTS ARE LOADED FROM THE TOP AND MUST BE PLACED ON TOP EDGE OF ALL PLIES FOR THE LOAD TO BE TRANSFERRED TO EACH PLY.

SIDE - PLF SHOWN IS THE EQUIVALENT UDL APPLIED TO ONE SIDE THAT THE CORRESPONDING NAILING PATTERN SHALL BE CAPABLE OF TRANSFERING. REMAINING PLF MUST BE APPLIED ON THE OPPOSITE SIDE OR ON THE TOP.

PLATES (table is in inches)

JT	TYPE	PLATES	W	LEN	Y	X
2	TMVW-t	MT20	4.0	5.0	1.75	2.00

READ ALL NOTES ON THIS PAGE AND ON THE ENGINEERING NOTE PAGE ENP-1. THE NOTE PAGE IS AN INTEGRAL PART OF THIS DRAWING AS IT CONTAINS SPECIFICATIONS AND CRITERIA USED IN THE DESIGN OF THIS COMPONENT.

LICENSED PROFESSIONAL ENGINEER
C.G. CARSON
100076892
10 MAR 2017

DIMENSIONS, SUPPORTS AND LOADINGS SPECIFIED BY FABRICATOR TO BE VERIFIED BY BUILDING DESIGNER

BEARINGS

JT	FACTORED GROSS REACTION VERT	HORZ	MAXIMUM FACTORED GROSS REACTION DOWN	HORZ	UPLIFT	INPUT BRG IN-SX	REQRD BRG IN-SX
20	2090	0	2090	0	0	5-8	5-8
11	2701	0	2701	0	0	1-8	1-8

UNFACTORED REACTIONS

JT	1ST LCASE COMBINED	MAX./MIN. COMPONENT REACTIONS SNOW	LIVE	PERM.LIVE	WIND	DEAD	SOIL
20	1464	1039 / 0	0 / 0	0 / 0	0 / 0	425 / 0	0 / 0
11	1897	1318 / 0	0 / 0	0 / 0	0 / 0	579 / 0	0 / 0

BEARING MATERIAL TO BE SPF NO.2 OR BETTER AT JOINT(S) 20, 11

BRACING

TOP CHORD TO BE SHEATHED OR MAX. PURLIN SPACING = 4.06 FT.
MAX. UNBRACED BOTTOM CHORD LENGTH = 10.00 FT. OR RIGID CEILING DIRECTLY APPLIED.

ALL PITCH BREAKS AND PERIMETER CORNER JOINTS MUST BE LATERALLY RESTRAINED.

LOADING

TOTAL LOAD CASES: (4)

CHORDS

MEMB. FR-TO	MAX. FACTORED FORCE (LBS)	FACTORED VERT. LOAD (PLF) FROM	TO	LC1 CSI (LC)	MAX UNBRAC LENGTH
1- 2	0 / 29	-77.3	-77.3	0.06 (1)	10.00
2- 3	-2385 / 0	-77.3	-77.3	0.15 (1)	5.66
3- 4	-3469 / 0	-77.3	-77.3	0.14 (1)	4.92
4- 5	-4548 / 0	-77.3	-77.3	0.17 (1)	4.38
5- 6	-5181 / 0	-77.3	-77.3	0.17 (1)	4.14
6- 7	-5181 / 0	-145.8	-145.8	0.23 (1)	4.06
7- 8	-5181 / 0	-145.8	-145.8	0.23 (1)	4.06
8- 9	-4194 / 0	-145.8	-145.8	0.20 (1)	4.48
9-10	-3136 / 0	-77.3	-77.3	0.14 (1)	5.11
20- 2	-2059 / 0	0.0	0.0	0.11 (1)	7.71
12-10	-2811 / 0	0.0	0.0	0.16 (1)	6.84
20-19	0 / 0	-17.5	-17.5	0.02 (4)	10.00
19-18	0 / 1971	-17.5	-17.5	0.14 (1)	10.00
18-17	0 / 3469	-17.5	-17.5	0.25 (1)	10.00
17-16	0 / 4548	-17.5	-17.5	0.36 (1)	10.00
16-15	0 / 4548	-17.5	-17.5	0.36 (1)	10.00
15-14	0 / 4194	-33.0	-33.0	0.34 (1)	10.00
14-13	0 / 2588	-33.0	-33.0	0.23 (1)	10.00
13-12	0 / 0	-33.0	-33.0	0.19 (1)	10.00
12-11	0 / 0	-33.0	-33.0	0.19 (1)	10.00

WEBS

MEMB. FR-TO	MAX. FACTORED FORCE (LBS)	MAX CSI (LC)
19- 3	-373 / 0	0.05 (1)
3-18	0 / 2051	0.25 (1)
18- 4	-1348 / 0	0.17 (1)
4-17	0 / 1479	0.18 (1)
17- 5	-900 / 0	0.12 (1)
5-15	0 / 868	0.11 (1)
15- 6	-382 / 0	0.05 (1)
15- 8	0 / 1456	0.18 (1)
14- 8	-1639 / 0	0.21 (1)
14- 9	0 / 2361	0.29 (1)
13- 9	-569 / 0	0.07 (1)
2-19	0 / 2035	0.25 (1)
13-10	0 / 2763	0.34 (1)

FACTORED CONCENTRATED LOADS (LBS)

JT	LOC.	LC1	MAX-	MAX+	FACE	DIR.	TYPE
9	23-3-4	-219	-219	---	FRONT	VERT	TOTAL
15	16-3-4	-1262	-1262	---	FRONT	VERT	TOTAL

RECEIVED
TOWN OF MILTON
MAR 29, 2017
17-4967
BUILDING DIVISION

KOTT

DESIGN CRITERIA

*** SPECIAL LOADS ANALYSIS ***
GEOMETRY AND/OR BASIC LOADS CHANGED BY USER.
LOADS WERE DERIVED FROM USER INPUT
NO FURTHER MODIFICATIONS WERE MADE

SPECIFIED LOADS:

TOP	CH.	LL	=	23.3	PSF
		DL	=	3.0	PSF
BOT	CH.	LL	=	0.0	PSF
		DL	=	7.0	PSF
TOTAL	LOAD		=	33.3	PSF

SPACING = 24.0 IN. C/C

LOADING IN FLAT SECTION BASED ON A SLOPE OF 2.00/12 MINIMUM

GIRDER TYPE: CPrimeHip
LEFT SETBACK = 4-1-12
RIGHT SETBACK = 3-9-6
END SETBACK = 6-0-0
END WALL WIDTH = 5-8
CORNER FRAMING TYPE: CONVENTIONAL
END JACK TYPE: CONVENTIONAL
APPLIED TO FRONT SIDE
- ADDT'L LOADS BASED ON 55 % OF GSL.
LOADS APPLIED TO FIRST 10-10-0 OF SPAN MEASURED FROM THE RIGHT.

*** NON STANDARD GIRDER ***
ADDT'L USER-DEFINED LOADS APPLIED TO ALL LOAD CASES.

THIS TRUSS IS DESIGNED FOR RESIDENTIAL OR SMALL BUILDING REQUIREMENTS OF PART 9, NBCC 2010

THIS DESIGN COMPLIES WITH:
- PART 9 OF OBC 2012 , BCBC 2012 , ABC 2014
- CSA 086-09
- TPIC 2011

(55 % OF 27.2 P.S.F. G.S.L. PLUS 8.4 P.S.F. RAIN LOAD) EQUALS 23.3 P.S.F. SPECIFIED ROOF LIVE LOAD

ALLOWABLE DEFL.(LL)= L/360 (0.90")
CALCULATED VERT. DEFL.(LL) = L/ 999 (0.10")
ALLOWABLE DEFL.(TL)= L/360 (0.90")
CALCULATED VERT. DEFL.(TL) = L/ 999 (0.18")

CSI: TC=0.23 (6-8:1) , BC=0.36 (15-17:1) , WB=0.34 (10-13:1) , SSI=0.90 (11-12:1)

DOL LUMBER=1.00 NAIL=1.00 LS BEND=1.00 COMP=1.00 SHEAR=1.00 TENS= 1.00

COMPANION LIVE LOAD FACTOR = 0.50

TRUSS PLATE MANUFACTURER IS NOT RESPONSIBLE FOR QUALITY CONTROL IN THE TRUSS MANUFACTURING PLANT .

NAIL VALUES

PLATE	GRIP(DRY) (PSI) MAX	MIN	SHEAR (PLI) MAX	MIN	SECTION (PLI) MAX	MIN
MT20	618	354	1667	822	2284	1656

PLATE PLACEMENT TOL. = 0.250 inches

PLATE ROTATION TOL. = 5.0 Deg.

CONTINUED ON PAGE 2

PLATES (table is in inches)

JT	TYPE	PLATES	W	LEN	Y	X
3	TTWW+m	MT20	5.0	6.0	2.25	1.25
4	TMWW-t	MT20	3.0	5.0		
5	TMWW-t	MT20	3.0	4.0		
6	TMW+w	MT20	2.0	4.0		
7	TS-t	MT20	3.0	6.0		
8	TMWW+t	MT20	3.0	4.0	1.50	1.50
9	TTWW-m	MT20	5.0	8.0	1.75	3.50
10	TMVW-t	MT20	4.0	6.0	1.75	Edge
12	BMV+p	MT20	2.0	4.0		
13	BMWW-t	MT20	4.0	5.0	2.00	2.00
14	BMWW-t	MT20	4.0	4.0	1.75	1.75
15	BMWWW-t	MT20	4.0	6.0	2.00	1.50
16	BS-t	MT20	4.0	6.0		
17	BMWW-t	MT20	4.0	4.0		
18	BMWW-t	MT20	4.0	4.0	2.00	1.75
19	BMWW-t	MT20	4.0	4.0	2.00	1.50
20	BMV1+p	MT20	2.0	4.0		

Edge - INDICATES REFERENCE CORNER OF PLATE TOUCHES EDGE OF CHORD.

A SIZE FOR SIZE SUBSTITUTION OF MITEK MII20 WITH TEE-LOK TL20 PLATES IS ALLOWED.

HANGERS NOTES

1) SPECIAL HANGER(S) OR CONNECTION(S) REQUIRED TO SUPPORT CONCENTRATED LOAD(S) 219.4 lbs FACTORED DOWN AT 23-3-4 ON TOP CHORD, AND 1262.4 lbs FACTORED DOWN AT 16-3-4 ON BOTTOM CHORD. DESIGN FOR UNSPECIFIED CONNECTION(S) IS DELEGATED TO THE BUILDING DESIGNER.

JSI GRIP= 0.90 (8) (INPUT = 0.90)
JSI METAL= 0.50 (16) (INPUT = 1.00)

READ ALL NOTES ON THIS PAGE AND ON THE ENGINEERING NOTE PAGE ENP-1. THE NOTE PAGE IS AN INTEGRAL PART OF THIS DRAWING AS IT CONTAINS SPECIFICATIONS AND CRITERIA USED IN THE DESIGN OF THIS COMPONENT.

LICENSED PROFESSIONAL ENGINEER
C.G. CARSON
100076892
10 MAR 2017

RECEIVED
TOWN OF MILTON
MAR 29, 2017
17-4967
BUILDING DIVISION

KOTT

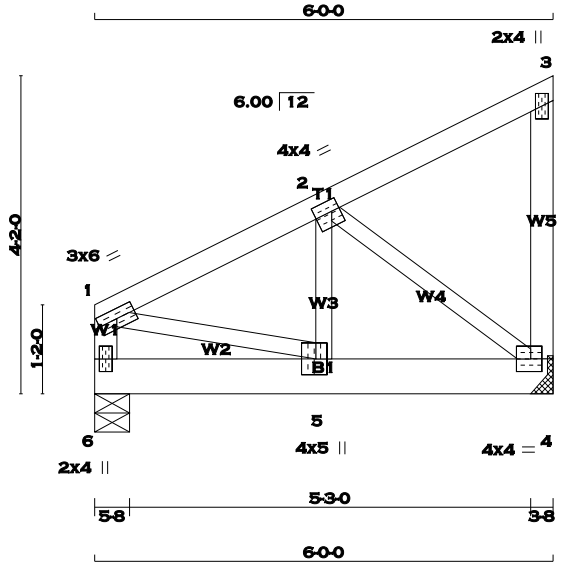

SCALE = 1:30.2

TOTAL WEIGHT = 29 lb [M]

LUMBER

N. L. G. A. RULES

CHORDS	SIZE		LUMBER	DESCR.
1 - 3	2x4	DRY	No.2	SPF
4 - 3	2x4	DRY	No.2	SPF
6 - 1	2x4	DRY	No.2	SPF
6 - 4	2x6	DRY	No.2	SPF
ALL WEBS EXCEPT	2x3	DRY	No.2	SPF

DRY: SEASONED LUMBER.

PLATES (table is in inches)

JT	TYPE	PLATES	W	LEN	Y	X
1	TMVW-t	MT20	3.0	6.0		
2	TMWW-t	MT20	4.0	4.0	1.75	1.25
3	TMV+p	MT20	2.0	4.0		
4	BMVW1-t	MT20	4.0	4.0	2.00	1.75
5	BMWW+t	MT20	4.0	5.0	2.50	1.75
6	BMV1+p	MT20	2.0	4.0		

A SIZE FOR SIZE SUBSTITUTION OF MITEK MII20 WITH TEE-LOK TL20 PLATES IS ALLOWED.

READ ALL NOTES ON THIS PAGE AND ON THE ENGINEERING NOTE PAGE ENP-1. THE NOTE PAGE IS AN INTEGRAL PART OF THIS DRAWING AS IT CONTAINS SPECIFICATIONS AND CRITERIA USED IN THE DESIGN OF THIS COMPONENT.

LICENSED PROFESSIONAL ENGINEER
C.G. CARSON
100076892
10 MAR 2017

DIMENSIONS, SUPPORTS AND LOADINGS SPECIFIED BY FABRICATOR TO BE VERIFIED BY BUILDING DESIGNER

BEARINGS

JT	FACTORED GROSS REACTION VERT	HORZ	MAXIMUM FACTORED GROSS REACTION DOWN	HORZ	UPLIFT	INPUT BRG IN-SX	REQRD BRG IN-SX
4	1263	0	1263	0	0	HANGER BY OTHERS MIN. SEAT SIZE: 3-8	
6	1263	0	1263	0	0	5-8	5-8

UNFACTORED REACTIONS

JT	1ST LCASE COMBINED	MAX./MIN. COMPONENT REACTIONS SNOW	LIVE	PERM.LIVE	WIND	DEAD	SOIL
4	886	620 / 0	0 / 0	0 / 0	0 / 0	266 / 0	0 / 0
6	886	620 / 0	0 / 0	0 / 0	0 / 0	266 / 0	0 / 0

BEARING MATERIAL TO BE SPF NO.2 OR BETTER AT JOINT(S) 6

BRACING

TOP CHORD TO BE SHEATHED OR MAX. PURLIN SPACING = 5.93 FT.
MAX. UNBRACED BOTTOM CHORD LENGTH = 10.00 FT. OR RIGID CEILING DIRECTLY APPLIED.

ALL PITCH BREAKS AND PERIMETER CORNER JOINTS MUST BE LATERALLY RESTRAINED.

LOADING

TOTAL LOAD CASES: (4)

CHORDS

MEMB. FR-TO	MAX. FACTORED FORCE (LBS)	FACTORED VERT. LOAD (PLF) FROM	TO	MAX CSI (LC)	MAX. UNBRAC LENGTH
1- 2	-1076 / 0	-77.3	-77.3	0.11 (1)	5.93
2- 3	-10 / 0	-77.3	-77.3	0.10 (1)	10.00
4- 3	-95 / 0	0.0	0.0	0.02 (1)	7.81
6- 1	-830 / 0	0.0	0.0	0.09 (1)	7.81
6- 5	0 / 0	-343.5	-343.5	0.20 (1)	10.00
5- 4	0 / 971	-343.5	-343.5	0.33 (1)	10.00

WEBS

MEMB. FR-TO	MAX. FACTORED FORCE (LBS)	MAX CSI (LC)
5- 2	0 / 946	0.23 (1)
2- 4	-1219 / 0	0.30 (1)
1- 5	0 / 1003	0.25 (1)

RECEIVED
TOWN OF MILTON
MAR 29, 2017
17-4967
BUILDING DIVISION

DESIGN CRITERIA

SPECIFIED LOADS:

TOP CH.	LL	=	23.3	PSF
	DL	=	3.0	PSF
BOT CH.	LL	=	0.0	PSF
	DL	=	7.0	PSF
TOTAL LOAD		=	33.3	PSF

SPACING = 24.0 IN. C/C

GIRDER TYPE: CStdGirder
START DISTANCE = 0-0
START SPAN CARRIED = 16-2-8
END DISTANCE = 6-0-0
END SPAN CARRIED = 16-2-8
END WALL WIDTH = 5-8
APPLIED TO FRONT SIDE OF BOTTOM CHORD.
- ADDT'L LOADS BASED ON 55 % OF GSL.

THIS TRUSS IS DESIGNED FOR RESIDENTIAL OR SMALL BUILDING REQUIREMENTS OF PART 9, NBCC 2010

THIS DESIGN COMPLIES WITH:
- PART 9 OF OBC 2012 , BCBC 2012 , ABC 2014
- CSA 086-09
- TPIC 2011

(55 % OF 27.2 P.S.F. G.S.L. PLUS 8.4 P.S.F. RAIN LOAD) EQUALS 23.3 P.S.F. SPECIFIED ROOF LIVE LOAD

ALLOWABLE DEFL.(LL)= L/360 (0.20")
CALCULATED VERT. DEFL.(LL) = L/ 999 (0.01")
ALLOWABLE DEFL.(TL)= L/360 (0.20")
CALCULATED VERT. DEFL.(TL) = L/ 999 (0.02")

CSI: TC=0.11 (1-2:1) , BC=0.33 (4-5:1) , WB=0.30 (2-4:1) , SSI=0.40 (5-6:1)

DOL LUMBER=1.00 NAIL=1.00 LS BEND=1.00 COMP=1.00 SHEAR=1.00 TENS= 1.00

COMPANION LIVE LOAD FACTOR = 0.50

TRUSS PLATE MANUFACTURER IS NOT RESPONSIBLE FOR QUALITY CONTROL IN THE TRUSS MANUFACTURING PLANT .

NAIL VALUES

PLATE	GRIP(DRY) (PSI) MAX	MIN	SHEAR (PLI) MAX	MIN	SECTION (PLI) MAX	MIN
MT20	618	354	1667	822	2284	1656

PLATE PLACEMENT TOL. = 0.250 inches

PLATE ROTATION TOL. = 5.0 Deg.

JSI GRIP= 0.90 (4) (INPUT = 0.90)
JSI METAL= 0.36 (4) (INPUT = 1.00)

KOTT

JOB NAME	TRUSS NAME	QUANTITY	PLY	JOB DESC.	DRWG NO.
CC0317-045	GIRD03	1	2	TRUSS DESC. GREENPARK-LECCO RIDGE-BLOCK 325	

KOTT , Stouffville, ON, CGC

Version 8.100 S Jan 17 2017 MiTek Industries, Inc. Fri Mar 10 13:59:18 2017 Page 1
ID:ROua3U0CyIZcrhsEOCClEDyLKB3-jwClqhmfKFWNyRfCzSh0zNmP374qWCOJj1g98AzcJdt

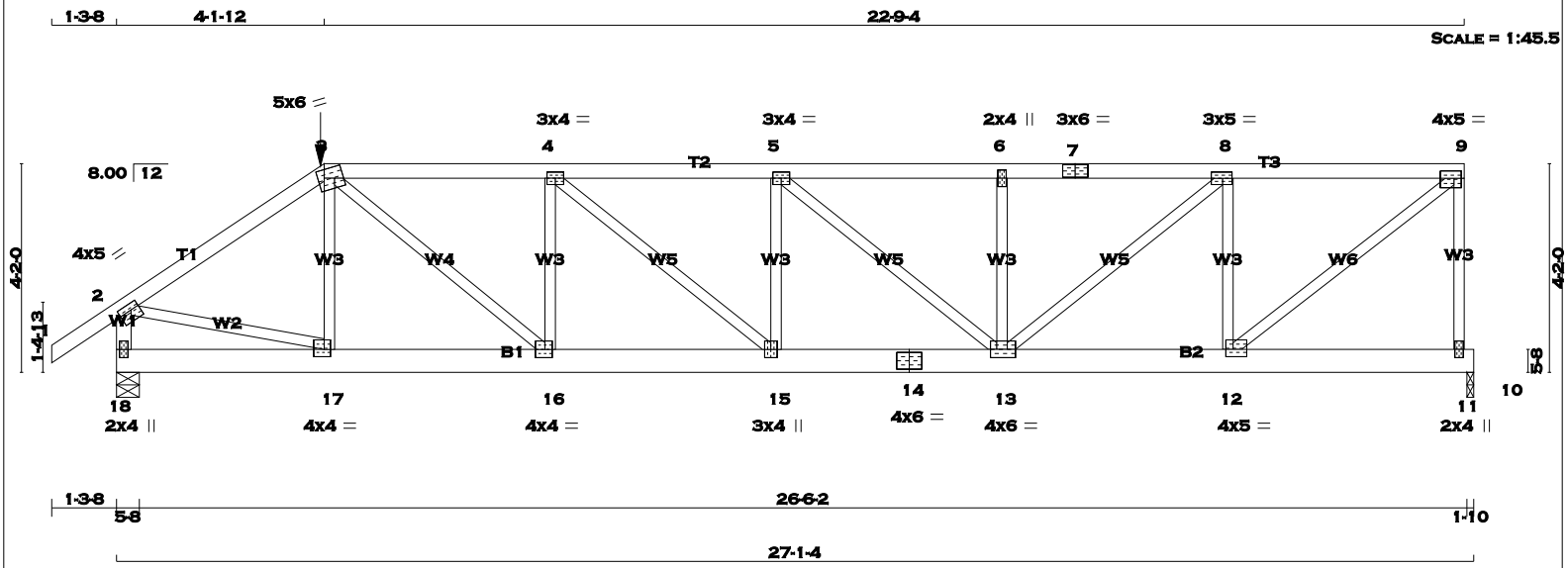

TOTAL WEIGHT = 2 X 125 = 251 lb
[M]

LUMBER
N. L. G. A. RULES

CHORDS	SIZE		LUMBER	DESCR.
1 - 3	2x4	DRY	No.2	SPF
3 - 7	2x4	DRY	No.2	SPF
7 - 9	2x4	DRY	No.2	SPF
11 - 9	2x3	DRY	No.2	SPF
18 - 2	2x4	DRY	No.2	SPF
18 - 14	2x6	DRY	No.2	SPF
14 - 10	2x6	DRY	No.2	SPF
ALL WEBS EXCEPT	2x3	DRY	No.2	SPF

DRY: SEASONED LUMBER.

DESIGN CONSISTS OF 2 TRUSSES BUILT SEPARATELY THEN FASTENED TOGETHER AS FOLLOWS:

CHORDS #ROWS	SURFACE SPACING (IN)		LOAD(PLF)
TOP CHORDS : (0.122"X3") SPIRAL NAILS			
1- 3	1	12	SIDE(0.0)
3- 7	1	12	SIDE(34.2)
7- 9	1	12	SIDE(34.2)
18- 2	1	12	TOP
9- 11	1	12	TOP
BOTTOM CHORDS : (0.122"X3") SPIRAL NAILS			
18- 14	2	12	SIDE(8.7)
14- 10	2	12	SIDE(8.7)
WEBS : (0.122"X3") SPIRAL NAILS			
2x3	1	6	

NAILS TO BE DRIVEN FROM ONE SIDE ONLY.

GIRDER NAILING ASSUMES NAILED HANGERS ARE FASTENED WITH MIN. 3-0 INCH NAILS.

TOP - COMPONENTS ARE LOADED FROM THE TOP AND MUST BE PLACED ON TOP EDGE OF ALL PLIES FOR THE LOAD TO BE TRANSFERRED TO EACH PLY.

SIDE - PLF SHOWN IS THE EQUIVALENT UDL APPLIED TO ONE SIDE THAT THE CORRESPONDING NAILING PATTERN SHALL BE CAPABLE OF TRANSFERING. REMAINING PLF MUST BE APPLIED ON THE OPPOSITE SIDE OR ON THE TOP.

PLATES (table is in inches)

JT	TYPE	PLATES	W	LEN	Y	X
2	TMVW-t	MT20	4.0	5.0	1.50	2.00
3	TTWW-m	MT20	5.0	6.0	2.00	1.50
4	TMWW-t	MT20	3.0	4.0		

READ ALL NOTES ON THIS PAGE AND ON THE ENGINEERING NOTE PAGE ENP-1. THE NOTE PAGE IS AN INTEGRAL PART OF THIS DRAWING AS IT CONTAINS SPECIFICATIONS AND CRITERIA USED IN THE DESIGN OF THIS COMPONENT.

LICENSED PROFESSIONAL ENGINEER
C.G. CARSON
100076892
10 MAR 2017

DIMENSIONS, SUPPORTS AND LOADINGS SPECIFIED BY FABRICATOR TO BE VERIFIED BY BUILDING DESIGNER

BEARINGS

JT	FACTORED GROSS REACTION VERT	HORZ	MAXIMUM FACTORED GROSS REACTION DOWN	HORZ	UPLIFT	INPUT BRG IN-SX	REQRD BRG IN-SX
18	2471	0	2471	0	0	5-8	5-8
10	2411	0	2411	0	0	1-10	1-10

UNFACTORED REACTIONS

JT	1ST LCASE COMBINED	MAX./MIN. COMPONENT REACTIONS SNOW	LIVE	PERM.LIVE	WIND	DEAD	SOIL
18	1733	1218 / 0	0 / 0	0 / 0	0 / 0	515 / 0	0 / 0
10	1693	1182 / 0	0 / 0	0 / 0	0 / 0	510 / 0	0 / 0

BEARING MATERIAL TO BE SPF NO.2 OR BETTER AT JOINT(S) 18, 10

BRACING
TOP CHORD TO BE SHEATHED OR MAX. PURLIN SPACING = 4.25 FT.
MAX. UNBRACED BOTTOM CHORD LENGTH = 10.00 FT. OR RIGID CEILING DIRECTLY APPLIED.

ALL PITCH BREAKS AND PERIMETER CORNER JOINTS MUST BE LATERALLY RESTRAINED.

LOADING
TOTAL LOAD CASES: (4)

CHORDS

MEMB. FR-TO	MAX. FACTORED FORCE (LBS)	FACTORED VERT. LOAD (PLF) FROM	TO	LC1 MAX CSI (LC)	MAX. UNBRAC LENGTH
1- 2	0 / 29	-77.3	-77.3	0.06 (1)	10.00
2- 3	-2854 / 0	-77.3	-77.3	0.17 (1)	5.27
3- 4	-3909 / 0	-145.8	-145.8	0.30 (1)	4.50
4- 5	-4438 / 0	-145.8	-145.8	0.32 (1)	4.25
5- 6	-3997 / 0	-145.8	-145.8	0.25 (1)	4.53
6- 7	-3997 / 0	-145.8	-145.8	0.32 (1)	4.43
7- 8	-3997 / 0	-145.8	-145.8	0.32 (1)	4.43
8- 9	-2703 / 0	-145.8	-145.8	0.28 (1)	5.23
11- 9	-2449 / 0	0.0	0.0	0.44 (1)	6.31
18- 2	-2411 / 0	0.0	0.0	0.13 (1)	7.26
18-17	0 / 0	-33.0	-33.0	0.04 (4)	10.00
17-16	0 / 2360	-33.0	-33.0	0.18 (1)	10.00
16-15	0 / 3909	-33.0	-33.0	0.29 (1)	10.00
15-14	0 / 4438	-33.0	-33.0	0.34 (1)	10.00
14-13	0 / 4438	-33.0	-33.0	0.34 (1)	10.00
13-12	0 / 2703	-33.0	-33.0	0.22 (1)	10.00
12-11	0 / 0	-33.0	-33.0	0.17 (1)	10.00
11-10	0 / 0	-33.0	-33.0	0.17 (1)	10.00

WEBS

MEMB. FR-TO	MAX. FACTORED FORCE (LBS)	MAX CSI (LC)
17- 3	-387 / 18	0.05 (1)
3-16	0 / 2020	0.25 (1)
16- 4	-1168 / 0	0.15 (1)
4-15	0 / 691	0.09 (1)
15- 5	-276 / 36	0.04 (1)
5-13	-575 / 0	0.17 (1)
13- 6	-631 / 0	0.08 (1)
13- 8	0 / 1691	0.21 (1)
12- 8	-1851 / 0	0.24 (1)
12- 9	0 / 3467	0.43 (1)
2-17	0 / 2435	0.30 (1)

FACTORED CONCENTRATED LOADS (LBS)

JT	LOC.	LC1	MAX-	MAX+	FACE	DIR.	TYPE
3	4-1-12	-241	-241	---	FRONT	VERT	TOTAL

RECEIVED
TOWN OF MILTON
MAR 29, 2017
17-4967
BUILDING DIVISION

KOTT

DESIGN CRITERIA

SPECIFIED LOADS:

TOP	CH.	LL	=	23.3	PSF
		DL	=	3.0	PSF
BOT	CH.	LL	=	0.0	PSF
		DL	=	7.0	PSF
TOTAL	LOAD		=	33.3	PSF

SPACING = 24.0 IN. C/C

LOADING IN FLAT SECTION BASED ON A SLOPE OF 2.00/12 MINIMUM

GIRDER TYPE: CPrimeHip
LEFT SETBACK = 4-1-12
RIGHT SETBACK = 0-0
END SETBACK = 6-0-0
END WALL WIDTH = 5-8
CORNER FRAMING TYPE: CONVENTIONAL
END JACK TYPE: CONVENTIONAL
APPLIED TO FRONT SIDE
- ADDT'L LOADS BASED ON 55 % OF GSL.

THIS TRUSS IS DESIGNED FOR RESIDENTIAL OR SMALL BUILDING REQUIREMENTS OF PART 9, NBCC 2010

THIS DESIGN COMPLIES WITH:
- PART 9 OF OBC 2012 , BCBC 2012 , ABC 2014
- CSA 086-09
- TPIC 2011

(55 % OF 27.2 P.S.F. G.S.L. PLUS 8.4 P.S.F. RAIN LOAD) EQUALS 23.3 P.S.F. SPECIFIED ROOF LIVE LOAD

ALLOWABLE DEFL.(LL)= L/360 (0.90")
CALCULATED VERT. DEFL.(LL) = L/ 999 (0.10")
ALLOWABLE DEFL.(TL)= L/360 (0.90")
CALCULATED VERT. DEFL.(TL) = L/ 999 (0.18")

CSI: TC=0.44 (9-11:1) , BC=0.34 (13-15:1) , WB=0.43 (9-12:1) , SSI=0.80 (10-11:1)

DOL LUMBER=1.00 NAIL=1.00 LS BEND=1.00 COMP=1.00 SHEAR=1.00 TENS= 1.00

COMPANION LIVE LOAD FACTOR = 0.50

TRUSS PLATE MANUFACTURER IS NOT RESPONSIBLE FOR QUALITY CONTROL IN THE TRUSS MANUFACTURING PLANT .

NAIL VALUES

PLATE	GRIP(DRY) (PSI) MAX	MIN	SHEAR (PLI) MAX	MIN	SECTION (PLI) MAX	MIN
MT20	618	354	1667	822	2284	1656

PLATE PLACEMENT TOL. = 0.250 inches

PLATE ROTATION TOL. = 5.0 Deg.

JSI GRIP= 0.88 (8) (INPUT = 0.90)
JSI METAL= 0.50 (14) (INPUT = 1.00)

CONTINUED ON PAGE 2

PLATES (table is in inches)

JT	TYPE	PLATES	W	LEN	Y	X
5	TMWW-t	MT20	3.0	4.0		
6	TMW+w	MT20	2.0	4.0		
7	TS-t	MT20	3.0	6.0		
8	TMWW-t	MT20	3.0	5.0	1.50	2.25
9	TMVW-t	MT20	4.0	5.0	1.75	1.75
11	BMV+p	MT20	2.0	4.0		
12	BMWW-t	MT20	4.0	5.0	1.75	1.75
13	BMWWW-t	MT20	4.0	6.0	2.00	1.50
14	BS-t	MT20	4.0	6.0		
15	BMWW+t	MT20	3.0	4.0		
16	BMWW-t	MT20	4.0	4.0	2.00	1.75
17	BMWW-t	MT20	4.0	4.0	1.75	1.50
18	BMV1+p	MT20	2.0	4.0		

A SIZE FOR SIZE SUBSTITUTION OF MITEK MII20 WITH TEE-LOK TL20 PLATES IS ALLOWED.

HANGERS NOTES

1) SPECIAL HANGER(S) OR CONNECTION(S) REQUIRED TO SUPPORT CONCENTRATED LOAD(S) 240.5 lbs FACTORED DOWN AT 4-1-12 ON TOP CHORD. DESIGN FOR UNSPECIFIED CONNECTION(S) IS DELEGATED TO THE BUILDING DESIGNER.

READ ALL NOTES ON THIS PAGE AND ON THE ENGINEERING NOTE PAGE ENP-1. THE NOTE PAGE IS AN INTEGRAL PART OF THIS DRAWING AS IT CONTAINS SPECIFICATIONS AND CRITERIA USED IN THE DESIGN OF THIS COMPONENT.

LICENSED PROFESSIONAL ENGINEER
C.G. CARSON
100076892
10 MAR 2017

RECEIVED
TOWN OF MILTON
MAR 29, 2017
17-4967
BUILDING DIVISION

KOTT

SCALE = 1:52.4

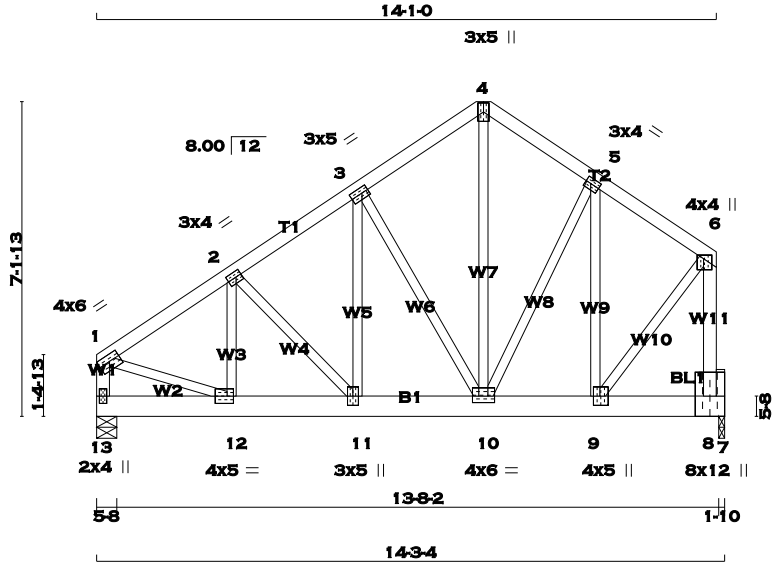

TOTAL WEIGHT = 4 X 82 = 330 lb

LUMBER

N. L. G. A. RULES

CHORDS	SIZE		LUMBER	DESCR.
1 - 4	2x4	DRY	No.2	SPF
4 - 6	2x4	DRY	No.2	SPF
13 - 1	2x4	DRY	No.2	SPF
8 - 6	2x4	DRY	No.2	SPF
13 - 7	2x6	DRY	2100F 1.8E	SPF

BEARING BLOCKS

BL1	2x8	DRY	No.2	SPF

ALL WEBS EXCEPT	2x3	DRY	No.2	SPF

DRY: SEASONED LUMBER.

DESIGN CONSISTS OF 4 TRUSSES BUILT SEPARATELY THEN FASTENED TOGETHER AS FOLLOWS:

CHORDS #ROWS		SURFACE SPACING (IN)	LOAD(PLF)
TOP CHORDS : (0.122"X3") SPIRAL NAILS			
1- 4	1	12	TOP
4- 6	1	12	TOP
13- 1	1	12	TOP
8- 6	1	12	TOP
BOTTOM CHORDS : (0.122"X3") SPIRAL NAILS			
13- 7	2	4	SIDE(638.7)
WEBS : (0.122"X3") SPIRAL NAILS			
2x3	1	6	
8- 7	2	4	SIDE(638.7)

STAGGER NAILS BY HALF THE SURFACE SPACING IN ADJACENT PLIES.

IN ADDITION, PRE-DRILL ONE 0.56" DIAM. HOLE IN EACH CHORD PANEL AND INSTALL 0.50" DIAM. ASTM A307 BOLTS WITH WASHERS, BOTH SIDES. FOR OTHER BOLT TYPES SEE CSAO86 3.3.2.

TOP - COMPONENTS ARE LOADED FROM THE TOP AND MUST BE PLACED ON TOP EDGE OF ALL PLIES FOR THE LOAD TO BE TRANSFERRED TO EACH PLY.

SIDE - PLF SHOWN IS THE EQUIVALENT UDL APPLIED TO ONE SIDE THAT THE CORRESPONDING NAILING PATTERN SHALL BE CAPABLE OF TRANSFERING. REMAINING PLF MUST BE APPLIED ON THE OPPOSITE SIDE OR ON THE TOP.

READ ALL NOTES ON THIS PAGE AND ON THE ENGINEERING NOTE PAGE ENP-1. THE NOTE PAGE IS AN INTEGRAL PART OF THIS DRAWING AS IT CONTAINS SPECIFICATIONS AND CRITERIA USED IN THE DESIGN OF THIS COMPONENT.

LICENSED PROFESSIONAL ENGINEER
C.G. CARSON
100076892
10 MAR 2017

*

DIMENSIONS, SUPPORTS AND LOADINGS SPECIFIED BY FABRICATOR TO BE VERIFIED BY BUILDING DESIGNER

BEARINGS

JT	FACTORED GROSS REACTION VERT	HORZ	MAXIMUM FACTORED GROSS REACTION DOWN	HORZ	UPLIFT	INPUT BRG IN-SX	REQRD BRG IN-SX
13	6754	0	6754	0	0	5-8	5-8
7	6765	0	6765	0	0	1-10	1-10 WITH FLUSH PLATES

UNFACTORED REACTIONS

JT	1ST LCASE COMBINED	MAX./MIN. COMPONENT REACTIONS SNOW	LIVE	PERM.LIVE	WIND	DEAD	SOIL
13	4740	3316 / 0	0 / 0	0 / 0	0 / 0	1424 / 0	0 / 0
7	4747	3322 / 0	0 / 0	0 / 0	0 / 0	1425 / 0	0 / 0

BEARING MATERIAL TO BE SPF NO.2 OR BETTER AT JOINT(S) 13, 7

BRACING

TOP CHORD TO BE SHEATHED OR MAX. PURLIN SPACING = 4.75 FT.
MAX. UNBRACED BOTTOM CHORD LENGTH = 6.25 FT. OR RIGID CEILING DIRECTLY APPLIED.

ALL PITCH BREAKS AND PERIMETER CORNER JOINTS MUST BE LATERALLY RESTRAINED.

LOADING

TOTAL LOAD CASES: (4)

CHORDS

MEMB. FR-TO	MAX. FACTORED FORCE (LBS)	FACTORED VERT. LOAD (PLF) FROM	TO	LC1 MAX CSI (LC)	MAX. UNBRAC LENGTH
1- 2	-6579 / 0	-77.3	-77.3	0.10 (1)	4.75
2- 3	-5742 / 0	-77.3	-77.3	0.07 (1)	5.04
3- 4	-4088 / 0	-77.3	-77.3	0.05 (1)	5.76
4- 5	-4079 / 0	-77.3	-77.3	0.06 (1)	5.76
5- 6	-3844 / 0	-77.3	-77.3	0.06 (1)	5.88
13- 1	-5547 / 0	0.0	0.0	0.17 (1)	6.45
8- 6	-6462 / 0	0.0	0.0	0.41 (1)	6.06
13-12	0 / 0	-869.2	-869.2	0.09 (1)	10.00
12-11	0 / 5473	-869.2	-869.2	0.14 (1)	10.00
11-10	0 / 4781	-869.2	-869.2	0.12 (1)	10.00
10- 9	0 / 3193	-869.2	-869.2	0.13 (1)	10.00
9- 8	-283 / 0	-869.2	-869.2	0.25 (1)	6.25
8- 7	0 / 0	-946.5	-946.5	0.07 (1)	10.00

WEBS

MEMB. FR-TO	MAX. FACTORED FORCE (LBS)	MAX CSI (LC)
12- 2	0 / 978	0.05 (1)
2-11	-1010 / 0	0.07 (1)
11- 3	0 / 3078	0.17 (1)
3-10	-2761 / 0	0.37 (1)
10- 4	0 / 4316	0.24 (1)
10- 5	0 / 466	0.03 (1)
9- 5	-736 / 0	0.08 (1)
1-12	0 / 5754	0.32 (1)
9- 6	0 / 5459	0.31 (1)

RECEIVED
TOWN OF MILTON
MAR 29, 2017
17-4967
BUILDING DIVISION

KOTT

[M]

DESIGN CRITERIA

SPECIFIED LOADS:

TOP	CH.	LL	=	23.3	PSF
		DL	=	3.0	PSF
BOT	CH.	LL	=	0.0	PSF
		DL	=	7.0	PSF
TOTAL	LOAD		=	33.3	PSF

SPACING = 24.0 IN. C/C

GIRDER TYPE: CStdGirder
START DISTANCE = 0-0
START SPAN CARRIED = 38-4-8
END DISTANCE = 14-3-4
END SPAN CARRIED = 38-4-8
END WALL WIDTH = 5-8
APPLIED TO FRONT SIDE OF BOTTOM CHORD.
- ADDT'L LOADS BASED ON 55 % OF GSL.

THIS TRUSS IS DESIGNED FOR RESIDENTIAL OR SMALL BUILDING REQUIREMENTS OF PART 9, NBCC 2010

THIS DESIGN COMPLIES WITH:
- PART 9 OF OBC 2012 , BCBC 2012 , ABC 2014
- CSA 086-09
- TPIC 2011

(55 % OF 27.2 P.S.F. G.S.L. PLUS 8.4 P.S.F. RAIN LOAD) EQUALS 23.3 P.S.F. SPECIFIED ROOF LIVE LOAD

ALLOWABLE DEFL.(LL)= L/360 (0.48")
CALCULATED VERT. DEFL.(LL) = L/ 999 (0.03")
ALLOWABLE DEFL.(TL)= L/360 (0.48")
CALCULATED VERT. DEFL.(TL) = L/ 999 (0.06")

CSI: TC=0.41 (6-8:1) , BC=0.25 (8-9:1) , WB=0.37 (3-10:1) , SSI=0.46 (7-8:1)

DOL LUMBER=1.00 NAIL=1.00 LS BEND=1.10 COMP=1.10 SHEAR=1.10 TENS= 1.10

COMPANION LIVE LOAD FACTOR = 0.50

TRUSS PLATE MANUFACTURER IS NOT RESPONSIBLE FOR QUALITY CONTROL IN THE TRUSS MANUFACTURING PLANT .

NAIL VALUES

PLATE	GRIP(DRY) (PSI) MAX	MIN	SHEAR (PLI) MAX	MIN	SECTION (PLI) MAX	MIN
MT20	618	354	1667	822	2284	1656

PLATE PLACEMENT TOL. = 0.250 inches

PLATE ROTATION TOL. = 5.0 Deg.

JSI GRIP= 0.90 (6) (INPUT = 0.90)
JSI METAL= 0.41 (1) (INPUT = 1.00)

CONTINUED ON PAGE 2

PLATES (table is in inches)

JT	TYPE	PLATES	W	LEN	Y	X
1	TMVW-t	MT20	4.0	6.0	1.75	Edge
2	TMWW-t	MT20	3.0	4.0	1.50	1.50
3	TMWW-t	MT20	3.0	5.0	1.50	1.75
4	TTW+p	MT20	3.0	5.0		
5	TMWW-t	MT20	3.0	4.0	1.50	1.50
6	TMVW+p	MT20	4.0	4.0	1.00	2.25
8	BMVK+p	MT20	8.0	12.0	5.50	Edge
9	BMWW+t	MT20	4.0	5.0	2.50	1.75
10	BMWWW-t	MT20	4.0	6.0	1.75	3.00
11	BMWW+t	MT20	3.0	5.0		
12	BMWW-t	MT20	4.0	5.0	2.00	1.75
13	BMV1+p	MT20	2.0	4.0		

Edge - INDICATES REFERENCE CORNER OF PLATE TOUCHES EDGE OF CHORD.

A SIZE FOR SIZE SUBSTITUTION OF MITEK MII20 WITH TEE-LOK TL20 PLATES IS ALLOWED.

READ ALL NOTES ON THIS PAGE AND ON THE ENGINEERING NOTE PAGE ENP-1. THE NOTE PAGE IS AN INTEGRAL PART OF THIS DRAWING AS IT CONTAINS SPECIFICATIONS AND CRITERIA USED IN THE DESIGN OF THIS COMPONENT.

10 MAR 2017

RECEIVED
TOWN OF MILTON
MAR 29, 2017
17-4967
BUILDING DIVISION

KOTT

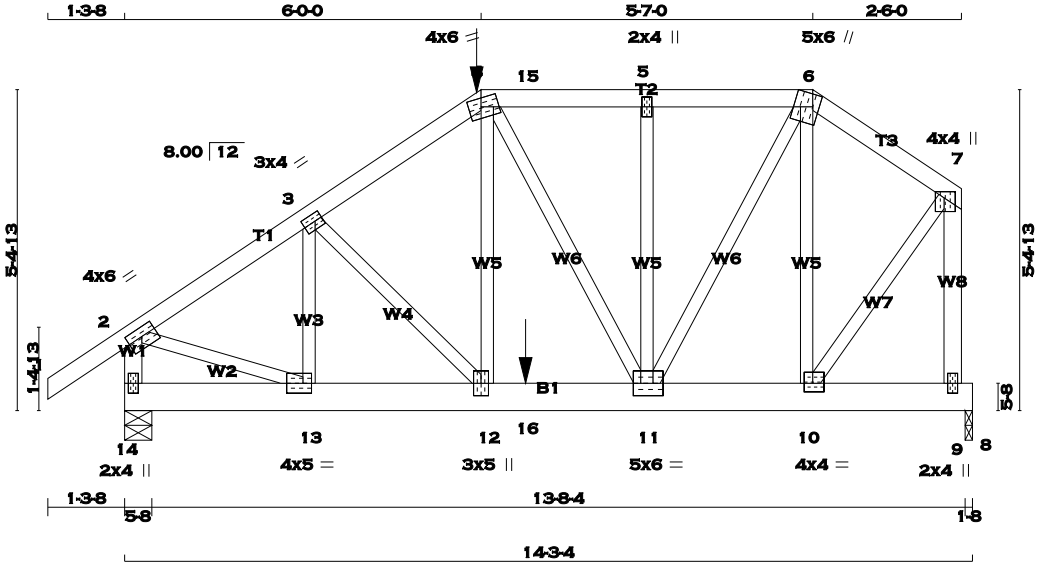

TOTAL WEIGHT = 81 lb [M]

LUMBER

N. L. G. A. RULES

CHORDS	SIZE		LUMBER	DESCR.
1 - 4	2x4	DRY	No.2	SPF
4 - 6	2x4	DRY	No.2	SPF
6 - 7	2x4	DRY	No.2	SPF
14 - 2	2x4	DRY	No.2	SPF
9 - 7	2x4	DRY	No.2	SPF
14 - 8	2x6	DRY	No.2	SPF
ALL WEBS EXCEPT	2x3	DRY	No.2	SPF

DRY: SEASONED LUMBER.

PLATES (table is in inches)

JT	TYPE	PLATES	W	LEN	Y	X
2	TMVW-t	MT20	4.0	6.0	1.75	3.00
3	TMWW-t	MT20	3.0	4.0	1.50	1.50
4	TTWW-m	MT20	4.0	6.0	1.75	2.50
5	TMW+w	MT20	2.0	4.0		
6	TTWW+m	MT20	5.0	6.0	Edge	3.75
7	TMVW+p	MT20	4.0	4.0	1.25	1.75
9	BMV+p	MT20	2.0	4.0		
10	BMWW-t	MT20	4.0	4.0	1.75	1.75
11	BMWWW-t	MT20	5.0	6.0	2.50	1.50
12	BMWW+t	MT20	3.0	5.0		
13	BMWW-t	MT20	4.0	5.0	2.00	1.75
14	BMV1+p	MT20	2.0	4.0		

Edge - INDICATES REFERENCE CORNER OF PLATE TOUCHES EDGE OF CHORD.

A SIZE FOR SIZE SUBSTITUTION OF MITEK MII20 WITH TEE-LOK TL20 PLATES IS ALLOWED.

HANGERS NOTES

1) SPECIAL HANGER(S) OR CONNECTION(S) REQUIRED TO SUPPORT CONCENTRATED LOAD(S) 348.1 lbs FACTORED DOWN AT 6-0-0 ON TOP CHORD, AND 916.2 lbs FACTORED DOWN AT 6-9-0 ON BOTTOM CHORD. DESIGN FOR UNSPECIFIED CONNECTION(S) IS DELEGATED TO THE BUILDING DESIGNER.

READ ALL NOTES ON THIS PAGE AND ON THE ENGINEERING NOTE PAGE ENP-1. THE NOTE PAGE IS AN INTEGRAL PART OF THIS DRAWING AS IT CONTAINS SPECIFICATIONS AND CRITERIA USED IN THE DESIGN OF THIS COMPONENT.

10 MAR 2017

DIMENSIONS, SUPPORTS AND LOADINGS SPECIFIED BY FABRICATOR TO BE VERIFIED BY BUILDING DESIGNER

BEARINGS

JT	FACTORED GROSS REACTION VERT	HORZ	MAXIMUM FACTORED GROSS REACTION DOWN	HORZ	UPLIFT	INPUT BRG IN-SX	REQRD BRG IN-SX
14	1576	0	1576	0	0	5-8	5-8
8	1290	0	1290	0	0	1-8	1-8

UNFACTORED REACTIONS

JT	1ST LCASE COMBINED	MAX./MIN. COMPONENT REACTIONS SNOW	LIVE	PERM.LIVE	WIND	DEAD	SOIL
14	1106	772 / 0	0 / 0	0 / 0	0 / 0	334 / 0	0 / 0
8	904	638 / 0	0 / 0	0 / 0	0 / 0	266 / 0	0 / 0

BEARING MATERIAL TO BE SPF NO.2 OR BETTER AT JOINT(S) 14, 8

BRACING

TOP CHORD TO BE SHEATHED OR MAX. PURLIN SPACING = 4.97 FT.
MAX. UNBRACED BOTTOM CHORD LENGTH = 10.00 FT. OR RIGID CEILING DIRECTLY APPLIED.

ALL PITCH BREAKS AND PERIMETER CORNER JOINTS MUST BE LATERALLY RESTRAINED.

LOADING

TOTAL LOAD CASES: (4)

CHORDS MEMB. FR-TO	MAX. FACTORED FORCE (LBS)	FACTORED VERT. LOAD (PLF) FROM	TO	LC1 CSI (LC)	MAX UNBRAC LENGTH	WEBS MEMB. FR-TO	MAX. FACTORED FORCE (LBS)	MAX CSI (LC)
1- 2	0 / 29	-77.3	-77.3	0.11 (1)	10.00	13- 3	-393 / 0	0.08 (1)
2- 3	-1574 / 0	-77.3	-77.3	0.14 (1)	5.10	3-12	-5 / 93	0.02 (1)
3- 4	-1681 / 0	-77.3	-77.3	0.14 (1)	4.97	12- 4	0 / 783	0.19 (1)
4-15	-1163 / 0	-145.8	-145.8	0.11 (1)	5.76	4-11	-488 / 0	0.26 (1)
15- 5	-1163 / 0	-77.3	-77.3	0.11 (1)	5.76	11- 5	-256 / 0	0.11 (1)
5- 6	-1163 / 0	-77.3	-77.3	0.11 (1)	5.76	11- 6	0 / 1060	0.26 (1)
6- 7	-797 / 0	-77.3	-77.3	0.10 (1)	6.25	10- 6	-670 / 0	0.28 (1)
14- 2	-1508 / 0	0.0	0.0	0.17 (1)	6.65	2-13	0 / 1386	0.34 (1)
9- 7	-1387 / 0	0.0	0.0	0.31 (1)	6.87	10- 7	0 / 1074	0.27 (1)
14-13	0 / 0	-33.0	-33.0	0.05 (1)	10.00			
13-12	0 / 1319	-33.0	-33.0	0.25 (1)	10.00			
12-16	0 / 1401	-33.0	-33.0	0.45 (1)	10.00			
16-11	0 / 1401	-17.5	-17.5	0.45 (1)	10.00			
11-10	0 / 648	-17.5	-17.5	0.14 (1)	10.00			
10- 9	0 / 0	-17.5	-17.5	0.18 (1)	10.00			
9- 8	0 / 0	-17.5	-17.5	0.18 (1)	10.00			

FACTORED CONCENTRATED LOADS (LBS)

JT	LOC.	LC1	MAX-	MAX+	FACE	DIR.	TYPE
4	6-0-0	-348	-348	---	FRONT	VERT	TOTAL
16	6-9-0	-916	-916	---	FRONT	VERT	TOTAL

RECEIVED
TOWN OF MILTON
MAR 29, 2017
17-4967
BUILDING DIVISION

DESIGN CRITERIA

*** SPECIAL LOADS ANALYSIS ***
GEOMETRY AND/OR BASIC LOADS CHANGED BY USER.
LOADS WERE DERIVED FROM USER INPUT
NO FURTHER MODIFICATIONS WERE MADE

SPECIFIED LOADS:

TOP	CH.	LL	=	23.3	PSF
		DL	=	3.0	PSF
BOT	CH.	LL	=	0.0	PSF
		DL	=	7.0	PSF
TOTAL	LOAD		=	33.3	PSF

SPACING = 24.0 IN. C/C

LOADING IN FLAT SECTION BASED ON A SLOPE OF 2.00/12 MINIMUM

GIRDER TYPE: CPrimeHip
LEFT SETBACK = 6-0-0
RIGHT SETBACK = 2-8-4
END SETBACK = 6-0-0
END WALL WIDTH = 5-8
CORNER FRAMING TYPE: CONVENTIONAL
END JACK TYPE: CONVENTIONAL
APPLIED TO FRONT SIDE
- ADDT'L LOADS BASED ON 55 % OF GSL.
LOADS APPLIED TO FIRST 6-9-0 OF SPAN MEASURED FROM THE LEFT.

*** NON STANDARD GIRDER ***
ADDT'L USER-DEFINED LOADS APPLIED TO ALL LOAD CASES.

THIS TRUSS IS DESIGNED FOR RESIDENTIAL OR SMALL BUILDING REQUIREMENTS OF PART 9, NBCC 2010

THIS DESIGN COMPLIES WITH:
- PART 9 OF OBC 2012 , BCBC 2012 , ABC 2014
- CSA 086-09
- TPIC 2011

(55 % OF 27.2 P.S.F. G.S.L. PLUS 8.4 P.S.F. RAIN LOAD) EQUALS 23.3 P.S.F. SPECIFIED ROOF LIVE LOAD

ALLOWABLE DEFL.(LL)= L/360 (0.48")
CALCULATED VERT. DEFL.(LL) = L/ 999 (0.03")
ALLOWABLE DEFL.(TL)= L/360 (0.48")
CALCULATED VERT. DEFL.(TL) = L/ 999 (0.06")

CSI: TC=0.31 (7-9:1) , BC=0.45 (11-12:1) , WB=0.34 (2-13:1) , SSI=0.86 (8-9:1)

DOL LUMBER=1.00 NAIL=1.00 LS BEND=1.00 COMP=1.00 SHEAR=1.00 TENS= 1.00

COMPANION LIVE LOAD FACTOR = 0.50

TRUSS PLATE MANUFACTURER IS NOT RESPONSIBLE FOR QUALITY CONTROL IN THE TRUSS MANUFACTURING PLANT .

NAIL VALUES

PLATE	GRIP(DRY) (PSI) MAX	MIN	SHEAR (PLI) MAX	MIN	SECTION (PLI) MAX	MIN
MT20	618	354	1667	822	2284	1656

PLATE PLACEMENT TOL. = 0.250 inches

PLATE ROTATION TOL. = 5.0 Deg.

CONTINUED ON PAGE 2

JSI GRIP= 0.90 (4) (INPUT = 0.90)
JSI METAL= 0.42 (2) (INPUT = 1.00)

READ ALL NOTES ON THIS PAGE AND ON THE ENGINEERING NOTE PAGE ENP-1. THE NOTE PAGE IS AN INTEGRAL PART OF THIS DRAWING AS IT CONTAINS SPECIFICATIONS AND CRITERIA USED IN THE DESIGN OF THIS COMPONENT.

10 MAR 2017

RECEIVED
TOWN OF MILTON
MAR 29, 2017
17-4967
BUILDING DIVISION

KOTT

JOB NAME	TRUSS NAME	QUANTITY	PLY	JOB DESC.	DRWG NO.
CC0317-045	GIRD06	1	1	TRUSS DESC. GREENPARK-LECCO RIDGE-BLOCK 325	

KOTT , Stouffville, ON, CGC

Version 8.100 S Jan 17 2017 MiTek Industries, Inc. Fri Mar 10 13:59:19 2017 Page 1
ID:ROua3U0CyIZcrhsEOCCIEDyLKB3-B7m720nH5ZeEabEOXACFVaJY8XNqFgTTxhQigdzcJds

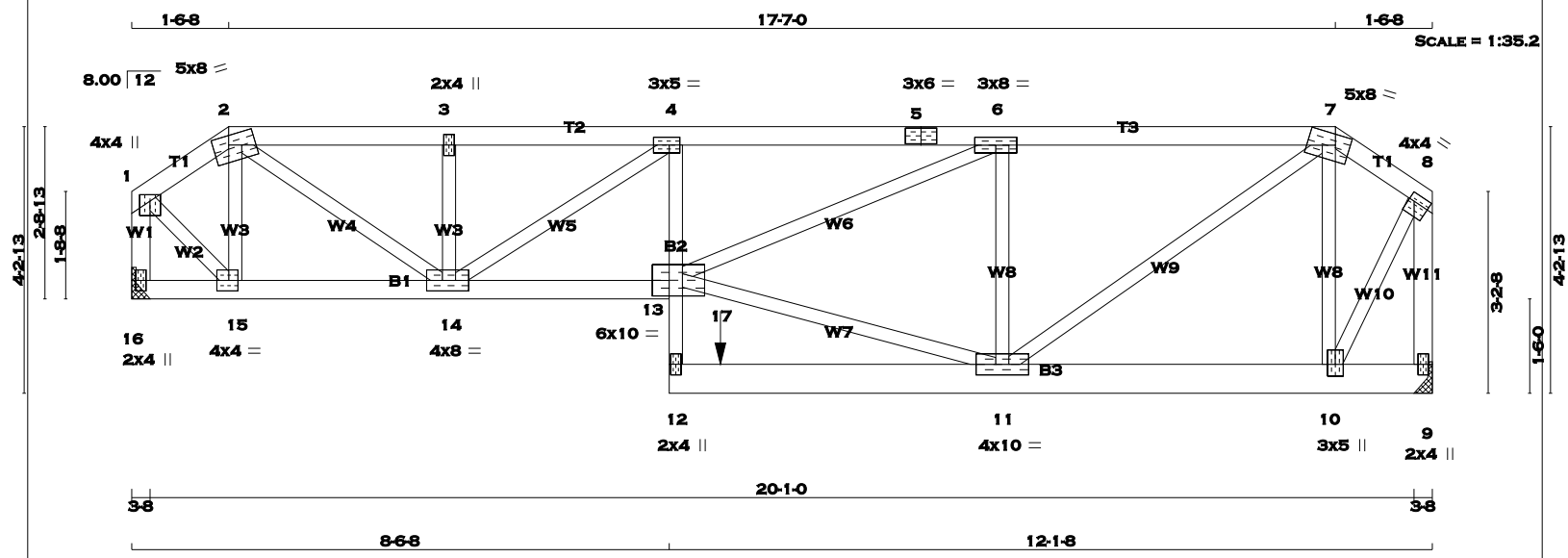

TOTAL WEIGHT = 96 lb [M]

LUMBER

N. L. G. A. RULES

CHORDS	SIZE		LUMBER	DESCR.
1 - 2	2x4	DRY	No.2	SPF
2 - 5	2x4	DRY	No.2	SPF
5 - 7	2x4	DRY	No.2	SPF
7 - 8	2x4	DRY	No.2	SPF
16 - 1	2x4	DRY	No.2	SPF
9 - 8	2x4	DRY	No.2	SPF
16 - 13	2x4	DRY	No.2	SPF
12 - 4	2x3	DRY	No.2	SPF
12 - 9	2x6	DRY	No.2	SPF
ALL WEBS EXCEPT	2x3	DRY	No.2	SPF

DRY: SEASONED LUMBER.

PLATES (table is in inches)

JT	TYPE	PLATES	W	LEN	Y	X
1	TMVW+p	MT20	4.0	4.0	1.25	2.00
2	TTWW-m	MT20	5.0	8.0	1.75	3.00
3	TMW+w	MT20	2.0	4.0		
4	TMVW-t	MT20	3.0	5.0	1.50	2.00
5	TS-t	MT20	3.0	6.0		
6	TMWW-t	MT20	3.0	8.0		
7	TTWW-m	MT20	5.0	8.0	2.00	2.75
8	TMVW-t	MT20	4.0	4.0	1.50	1.00
9	BMV1+p	MT20	2.0	4.0		
10	BMWW+t	MT20	3.0	5.0	2.25	1.50
11	BMWWW-t	MT20	4.0	10.0		
12	BMV+p	MT20	2.0	4.0		
13	BVMWW-l	MT20	6.0	10.0	4.25	5.75
14	BMWWW-t	MT20	4.0	8.0	2.00	3.00
15	BMWW-t	MT20	4.0	4.0	2.00	1.75
16	BMV1+p	MT20	2.0	4.0		

A SIZE FOR SIZE SUBSTITUTION OF MITEK MII20 WITH TEE-LOK TL20 PLATES IS ALLOWED.

HANGERS NOTES

1) SPECIAL HANGER(S) OR CONNECTION(S) REQUIRED TO SUPPORT CONCENTRATED LOAD(S) 303.5 lbs FACTORED DOWN AT 9-4-4 ON BOTTOM CHORD. DESIGN FOR UNSPECIFIED CONNECTION(S) IS DELEGATED TO THE BUILDING DESIGNER.

READ ALL NOTES ON THIS PAGE AND ON THE ENGINEERING NOTE PAGE ENP-1. THE NOTE PAGE IS AN INTEGRAL PART OF THIS DRAWING AS IT CONTAINS SPECIFICATIONS AND CRITERIA USED IN THE DESIGN OF THIS COMPONENT.

DIMENSIONS, SUPPORTS AND LOADINGS SPECIFIED BY FABRICATOR TO BE VERIFIED BY BUILDING DESIGNER

BEARINGS

JT	FACTORED GROSS REACTION VERT	HORZ	MAXIMUM FACTORED GROSS REACTION DOWN	HORZ	UPLIFT	INPUT BRG IN-SX	REQRD BRG IN-SX
16	1146	0	1146	0	0	HANGER BY OTHERS MIN. SEAT SIZE: 3-8	
9	1117	0	1117	0	0	HANGER BY OTHERS MIN. SEAT SIZE: 3-8	

UNFACTORED REACTIONS

JT	1ST LCASE COMBINED	MAX./MIN. COMPONENT REACTIONS SNOW	LIVE	PERM.LIVE	WIND	DEAD	SOIL
16	804	563 / 0	0 / 0	0 / 0	0 / 0	242 / 0	0 / 0
9	784	549 / 0	0 / 0	0 / 0	0 / 0	236 / 0	0 / 0

BRACING

TOP CHORD TO BE SHEATHED OR MAX. PURLIN SPACING = 3.58 FT.
MAX. UNBRACED BOTTOM CHORD LENGTH = 10.00 FT. OR RIGID CEILING DIRECTLY APPLIED.

ALL PITCH BREAKS AND PERIMETER CORNER JOINTS MUST BE LATERALLY RESTRAINED.

LOADING

TOTAL LOAD CASES: (3)

CHORDS

MEMB. FR-TO	MAX. FACTORED FORCE (LBS)	FACTORED VERT. LOAD (PLF) FROM	TO	LC1 MAX CSI (LC)	MAX. UNBRAC LENGTH
1- 2	-865 / 0	-77.3	-77.3	0.04 (1)	6.25
2- 3	-1906 / 0	-77.3	-77.3	0.18 (1)	4.68
3- 4	-1906 / 0	-77.3	-77.3	0.18 (1)	4.68
4- 5	-2819 / 0	-77.3	-77.3	0.55 (1)	3.58
5- 6	-2819 / 0	-77.3	-77.3	0.55 (1)	3.58
6- 7	-1480 / 0	-77.3	-77.3	0.42 (1)	4.85
7- 8	-539 / 0	-77.3	-77.3	0.04 (1)	6.25
16- 1	-1147 / 0	0.0	0.0	0.13 (1)	7.39
9- 8	-1122 / 0	0.0	0.0	0.20 (1)	7.45
16-15	0 / 0	-17.5	-17.5	0.04 (1)	10.00
15-14	0 / 693	-17.5	-17.5	0.16 (1)	10.00
14-13	0 / 2840	-17.5	-17.5	0.54 (1)	10.00
12-13	0 / 296	0.0	0.0	0.20 (1)	10.00
13- 4	0 / 325	0.0	0.0	0.20 (1)	10.00
12-17	0 / 26	-17.5	-17.5	0.15 (1)	10.00
17-11	0 / 26	-17.5	-17.5	0.15 (1)	10.00
11-10	0 / 428	-17.5	-17.5	0.10 (1)	10.00
10- 9	0 / 0	-17.5	-17.5	0.03 (3)	10.00

WEBS

MEMB. FR-TO	MAX. FACTORED FORCE (LBS)	MAX CSI (LC)
15- 2	-537 / 0	0.10 (1)
2-14	0 / 1476	0.37 (1)
14- 3	-293 / 0	0.05 (1)
14- 4	-1124 / 0	0.37 (1)
13-11	0 / 1521	0.38 (1)
13- 6	0 / 1461	0.36 (1)
11- 6	-1062 / 0	0.28 (1)
11- 7	0 / 1300	0.32 (1)
10- 7	-687 / 0	0.18 (1)
1-15	0 / 936	0.23 (1)
10- 8	0 / 882	0.22 (1)

FACTORED CONCENTRATED LOADS (LBS)

JT	LOC.	LC1	MAX-	MAX+	FACE	DIR.	TYPE
17	9-4-4	-304	-304	---	FRONT	VERT	TOTAL

DESIGN CRITERIA

*** SPECIAL LOADS ANALYSIS ***
GEOMETRY AND/OR BASIC LOADS CHANGED BY USER.
LOADS WERE DERIVED FROM USER INPUT
NO FURTHER MODIFICATIONS WERE MADE

SPECIFIED LOADS:

TOP	CH.	LL	=	23.3	PSF
		DL	=	3.0	PSF
BOT	CH.	LL	=	0.0	PSF
		DL	=	7.0	PSF
TOTAL	LOAD		=	33.3	PSF

SPACING = 24.0 IN. C/C

LOADING IN FLAT SECTION BASED ON A SLOPE OF 2.00/12 MINIMUM

*** NON STANDARD GIRDER ***
ADDT'L USER-DEFINED LOADS APPLIED TO ALL LOAD CASES.

THIS TRUSS IS DESIGNED FOR RESIDENTIAL OR SMALL BUILDING REQUIREMENTS OF PART 9, NBCC 2010

THIS DESIGN COMPLIES WITH:
- PART 9 OF OBC 2012 , BCBC 2012 , ABC 2014
- CSA 086-09
- TPIC 2011

(55 % OF 27.2 P.S.F. G.S.L. PLUS 8.4 P.S.F. RAIN LOAD) EQUALS 23.3 P.S.F. SPECIFIED ROOF LIVE LOAD

ALLOWABLE DEFL.(LL)= L/360 (0.69")
CALCULATED VERT. DEFL.(LL) = L/ 999 (0.12")
ALLOWABLE DEFL.(TL)= L/360 (0.69")
CALCULATED VERT. DEFL.(TL) = L/ 999 (0.21")

CSI: TC=0.55 (4-6:1) , BC=0.54 (13-14:1) , WB=0.38 (11-13:1) , SSI=0.21 (6-7:1)

DOL LUMBER=1.00 NAIL=1.00 LS BEND=1.00 COMP=1.00 SHEAR=1.00 TENS= 1.00

COMPANION LIVE LOAD FACTOR = 0.50

TRUSS PLATE MANUFACTURER IS NOT RESPONSIBLE FOR QUALITY CONTROL IN THE TRUSS MANUFACTURING PLANT .

NAIL VALUES

PLATE	GRIP(DRY) (PSI) MAX	MIN	SHEAR (PLI) MAX	MIN	SECTION (PLI) MAX	MIN
MT20	618	354	1667	822	2284	1656

PLATE PLACEMENT TOL. = 0.250 inches

PLATE ROTATION TOL. = 5.0 Deg.

JSI GRIP= 0.88 (2) (INPUT = 0.90)
JSI METAL= 0.46 (13) (INPUT = 1.00)

RECEIVED
TOWN OF MILTON
MAR 29, 2017
17-4967
BUILDING DIVISION

10 MAR 2017

KOTT

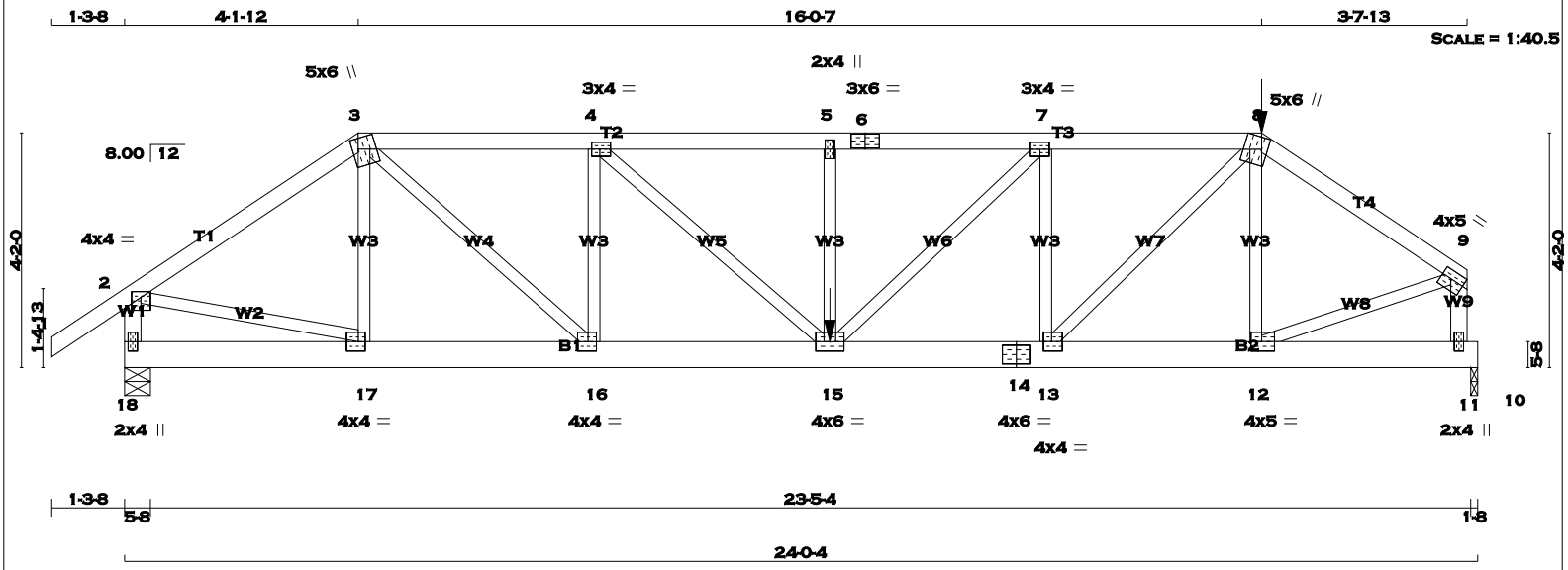

TOTAL WEIGHT = 2 X 113 = 226 lb [M]

LUMBER

N. L. G. A. RULES

CHORDS	SIZE		LUMBER	DESCR.
1 - 3	2x4	DRY	No.2	SPF
3 - 6	2x4	DRY	No.2	SPF
6 - 8	2x4	DRY	No.2	SPF
8 - 9	2x4	DRY	No.2	SPF
18 - 2	2x4	DRY	No.2	SPF
11 - 9	2x4	DRY	No.2	SPF
18 - 14	2x6	DRY	No.2	SPF
14 - 10	2x6	DRY	No.2	SPF
ALL WEBS EXCEPT	2x3	DRY	No.2	SPF

DRY: SEASONED LUMBER.

DESIGN CONSISTS OF 2 TRUSSES BUILT SEPARATELY THEN FASTENED TOGETHER AS FOLLOWS:

CHORDS #ROWS	SURFACE SPACING (IN)		LOAD(PLF)
TOP CHORDS : (0.122"X3") SPIRAL NAILS			
1- 3	1	12	TOP
3- 6	1	12	SIDE(34.2)
6- 8	1	12	SIDE(34.2)
8- 9	1	12	SIDE(0.0)
18- 2	1	12	TOP
11- 9	1	12	TOP
BOTTOM CHORDS : (0.122"X3") SPIRAL NAILS			
18- 14	2	12	SIDE(8.7)
14- 10	2	12	SIDE(8.7)
WEBS : (0.122"X3") SPIRAL NAILS			
2x3	1	6	

NAILS TO BE DRIVEN FROM ONE SIDE ONLY.

GIRDER NAILING ASSUMES NAILED HANGERS ARE FASTENED WITH MIN. 3-0 INCH NAILS.

TOP - COMPONENTS ARE LOADED FROM THE TOP AND MUST BE PLACED ON TOP EDGE OF ALL PLIES FOR THE LOAD TO BE TRANSFERRED TO EACH PLY.

SIDE - PLF SHOWN IS THE EQUIVALENT UDL APPLIED TO ONE SIDE THAT THE CORRESPONDING NAILING PATTERN SHALL BE CAPABLE OF TRANSFERING. REMAINING PLF MUST BE APPLIED ON THE OPPOSITE SIDE OR ON THE TOP.

PLATES (table is in inches)

JT	TYPE	PLATES	W	LEN	Y	X
2	TMVW-p	MT20	4.0	4.0	1.25	2.00

READ ALL NOTES ON THIS PAGE AND ON THE ENGINEERING NOTE PAGE ENP-1. THE NOTE PAGE IS AN INTEGRAL PART OF THIS DRAWING AS IT CONTAINS SPECIFICATIONS AND CRITERIA USED IN THE DESIGN OF THIS COMPONENT.

10 MAR 2017

DIMENSIONS, SUPPORTS AND LOADINGS SPECIFIED BY FABRICATOR TO BE VERIFIED BY BUILDING DESIGNER

BEARINGS

JT	FACTORED GROSS REACTION VERT	HORZ	MAXIMUM FACTORED GROSS REACTION DOWN	HORZ	UPLIFT	INPUT BRG IN-SX	REQRD BRG IN-SX
18	1967	0	1967	0	0	5-8	5-8
10	2321	0	2321	0	0	1-8	1-8

UNFACTORED REACTIONS

JT	1ST LCASE COMBINED	MAX./MIN. COMPONENT REACTIONS SNOW	LIVE	PERM.LIVE	WIND	DEAD	SOIL
18	1378	979 / 0	0 / 0	0 / 0	0 / 0	399 / 0	0 / 0
10	1631	1132 / 0	0 / 0	0 / 0	0 / 0	499 / 0	0 / 0

BEARING MATERIAL TO BE SPF NO.2 OR BETTER AT JOINT(S) 18, 10

BRACING

TOP CHORD TO BE SHEATHED OR MAX. PURLIN SPACING = 4.44 FT.
MAX. UNBRACED BOTTOM CHORD LENGTH = 10.00 FT. OR RIGID CEILING DIRECTLY APPLIED.

ALL PITCH BREAKS AND PERIMETER CORNER JOINTS MUST BE LATERALLY RESTRAINED.

LOADING

TOTAL LOAD CASES: (4)

CHORDS MEMB. FR-TO	MAX. FACTORED FORCE (LBS)	FACTORED VERT. LOAD (PLF) FROM	TO	LC1	MAX CSI (LC)	MAX. UNBRAC LENGTH	WEBS MEMB. FR-TO	MAX. FACTORED FORCE (LBS)	MAX CSI (LC)
1- 2	0 / 29	-77.3	-77.3	0.06 (1)		10.00	17- 3	-350 / 0	0.05 (1)
2- 3	-2220 / 0	-77.3	-77.3	0.15 (1)		5.82	3-16	0 / 1913	0.24 (1)
3- 4	-3255 / 0	-77.3	-77.3	0.14 (1)		5.04	16- 4	-1184 / 0	0.15 (1)
4- 5	-4175 / 0	-77.3	-77.3	0.17 (1)		4.53	4-15	0 / 1242	0.15 (1)
5- 6	-4175 / 0	-145.8	-145.8	0.24 (1)		4.44	15- 5	-400 / 0	0.05 (1)
6- 7	-4175 / 0	-145.8	-145.8	0.24 (1)		4.44	15- 7	0 / 861	0.11 (1)
7- 8	-3563 / 0	-145.8	-145.8	0.22 (1)		4.76	13- 7	-1241 / 0	0.16 (1)
8- 9	-2661 / 0	-77.3	-77.3	0.13 (1)		5.46	13- 8	0 / 1917	0.24 (1)
18- 2	-1935 / 0	0.0	0.0	0.11 (1)		7.81	12- 8	-461 / 0	0.06 (1)
11- 9	-2407 / 0	0.0	0.0	0.14 (1)		7.26	2-17	0 / 1894	0.23 (1)
							12- 9	0 / 2345	0.29 (1)
18-17	0 / 0	-17.5	-17.5	0.02 (4)		10.00			
17-16	0 / 1834	-17.5	-17.5	0.13 (1)		10.00			
16-15	0 / 3255	-17.5	-17.5	0.26 (1)		10.00			
15-14	0 / 3563	-33.0	-33.0	0.29 (1)		10.00			
14-13	0 / 3563	-33.0	-33.0	0.29 (1)		10.00			
13-12	0 / 2197	-33.0	-33.0	0.19 (1)		10.00			
12-11	0 / 0	-33.0	-33.0	0.16 (1)		10.00			
11-10	0 / 0	-33.0	-33.0	0.16 (1)		10.00			

FACTORED CONCENTRATED LOADS (LBS)

JT	LOC.	LC1	MAX-	MAX+	FACE	DIR.	TYPE
8	20-2-3	-220	-220	---	FRONT	VERT	TOTAL
15	12-6-4	-996	-996	---	FRONT	VERT	TOTAL

RECEIVED
TOWN OF MILTON
MAR 29, 2017
17-4967
BUILDING DIVISION

DESIGN CRITERIA

*** SPECIAL LOADS ANALYSIS ***
GEOMETRY AND/OR BASIC LOADS CHANGED BY USER.
LOADS WERE DERIVED FROM USER INPUT
NO FURTHER MODIFICATIONS WERE MADE

SPECIFIED LOADS:

TOP	CH.	LL	=	23.3	PSF
		DL	=	3.0	PSF
BOT	CH.	LL	=	0.0	PSF
		DL	=	7.0	PSF
TOTAL	LOAD		=	33.3	PSF

SPACING = 24.0 IN. C/C

LOADING IN FLAT SECTION BASED ON A SLOPE OF 2.00/12 MINIMUM

GIRDER TYPE: CPrimeHip
LEFT SETBACK = 4-1-12
RIGHT SETBACK = 3-9-7
END SETBACK = 6-0-0
END WALL WIDTH = 5-8
CORNER FRAMING TYPE: CONVENTIONAL
END JACK TYPE: CONVENTIONAL
APPLIED TO FRONT SIDE
- ADDT'L LOADS BASED ON 55 % OF GSL.
LOADS APPLIED TO FIRST 11-5-6 OF SPAN MEASURED FROM THE RIGHT.

*** NON STANDARD GIRDER ***
ADDT'L USER-DEFINED LOADS APPLIED TO ALL LOAD CASES.

THIS TRUSS IS DESIGNED FOR RESIDENTIAL OR SMALL BUILDING REQUIREMENTS OF PART 9, NBCC 2010

THIS DESIGN COMPLIES WITH:
- PART 9 OF OBC 2012 , BCBC 2012 , ABC 2014
- CSA 086-09
- TPIC 2011

(55 % OF 27.2 P.S.F. G.S.L. PLUS 8.4 P.S.F. RAIN LOAD) EQUALS 23.3 P.S.F. SPECIFIED ROOF LIVE LOAD

ALLOWABLE DEFL.(LL)= L/360 (0.80")
CALCULATED VERT. DEFL.(LL) = L/ 999 (0.07")
ALLOWABLE DEFL.(TL)= L/360 (0.80")
CALCULATED VERT. DEFL.(TL) = L/ 999 (0.13")

CSI: TC=0.24 (5-7:1) , BC=0.29 (13-15:1) , WB=0.29 (9-12:1) , SSI=0.77 (10-11:1)

DOL LUMBER=1.00 NAIL=1.00 LS BEND=1.00 COMP=1.00 SHEAR=1.00 TENS= 1.00

COMPANION LIVE LOAD FACTOR = 0.50

TRUSS PLATE MANUFACTURER IS NOT RESPONSIBLE FOR QUALITY CONTROL IN THE TRUSS MANUFACTURING PLANT .

NAIL VALUES

PLATE	GRIP(DRY) (PSI) MAX	MIN	SHEAR (PLI) MAX	MIN	SECTION (PLI) MAX	MIN
MT20	618	354	1667	822	2284	1656

PLATE PLACEMENT TOL. = 0.250 inches

PLATE ROTATION TOL. = 5.0 Deg.

CONTINUED ON PAGE 2

PLATES (table is in inches)

JT	TYPE	PLATES	W	LEN	Y	X
3	TTWW+m	MT20	5.0	6.0	2.25	1.25
4	TMWW-t	MT20	3.0	4.0	1.50	1.75
5	TMW+w	MT20	2.0	4.0		
6	TS-t	MT20	3.0	6.0		
7	TMWW-t	MT20	3.0	4.0		
8	TTWW+m	MT20	5.0	6.0	Edge	3.75
9	TMVW-t	MT20	4.0	5.0	1.75	Edge
11	BMV+p	MT20	2.0	4.0		
12	BMWW-t	MT20	4.0	5.0	2.00	2.25
13	BMWW-t	MT20	4.0	4.0	2.00	1.75
14	BS-t	MT20	4.0	6.0		
15	BMWWW-t	MT20	4.0	6.0		
16	BMWW-t	MT20	4.0	4.0	2.00	1.75
17	BMWW-t	MT20	4.0	4.0	2.00	1.50
18	BMV1+p	MT20	2.0	4.0		

Edge - INDICATES REFERENCE CORNER OF PLATE TOUCHES EDGE OF CHORD.

A SIZE FOR SIZE SUBSTITUTION OF MITEK MII20 WITH TEE-LOK TL20 PLATES IS ALLOWED.

HANGERS NOTES

1) SPECIAL HANGER(S) OR CONNECTION(S) REQUIRED TO SUPPORT CONCENTRATED LOAD(S) 219.7 lbs FACTORED DOWN AT 20-2-3 ON TOP CHORD, AND 996.0 lbs FACTORED DOWN AT 12-6-4 ON BOTTOM CHORD. DESIGN FOR UNSPECIFIED CONNECTION(S) IS DELEGATED TO THE BUILDING DESIGNER.

JSI GRIP= 0.90 (2) (INPUT = 0.90)
JSI METAL= 0.41 (9) (INPUT = 1.00)

READ ALL NOTES ON THIS PAGE AND ON THE ENGINEERING NOTE PAGE ENP-1. THE NOTE PAGE IS AN INTEGRAL PART OF THIS DRAWING AS IT CONTAINS SPECIFICATIONS AND CRITERIA USED IN THE DESIGN OF THIS COMPONENT.

10 MAR 2017

RECEIVED
TOWN OF MILTON
MAR 29, 2017
17-4967
BUILDING DIVISION

KOTT

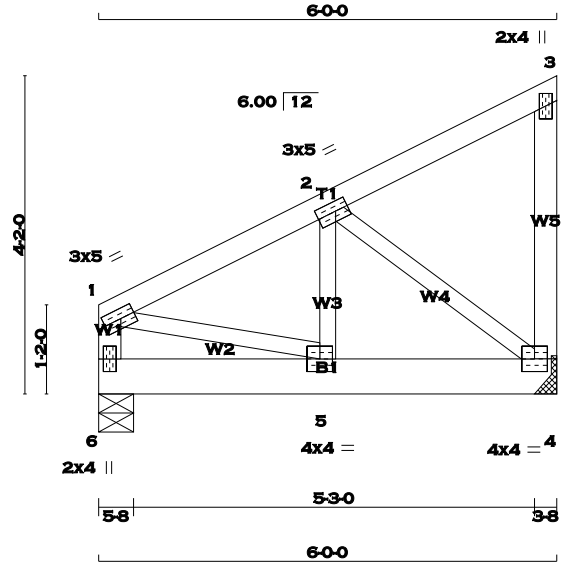

SCALE = 1:30.2

TOTAL WEIGHT = 29 lb
[M]

LUMBER
N. L. G. A. RULES

CHORDS	SIZE		LUMBER	DESCR.
1 - 3	2x4	DRY	No.2	SPF
4 - 3	2x4	DRY	No.2	SPF
6 - 1	2x4	DRY	No.2	SPF
6 - 4	2x6	DRY	No.2	SPF
ALL WEBS EXCEPT	2x3	DRY	No.2	SPF

DRY: SEASONED LUMBER.

PLATES (table is in inches)

JT	TYPE	PLATES	W	LEN	Y	X
1	TMVW-t	MT20	3.0	5.0	1.50	2.25
2	TMWW-t	MT20	3.0	5.0	1.50	2.00
3	TMV+p	MT20	2.0	4.0		
4	BMVW1-t	MT20	4.0	4.0		
5	BMWW-t	MT20	4.0	4.0		
6	BMV1+p	MT20	2.0	4.0		

A SIZE FOR SIZE SUBSTITUTION OF MITEK MII20 WITH TEE-LOK TL20 PLATES IS ALLOWED.

READ ALL NOTES ON THIS PAGE AND ON THE ENGINEERING NOTE PAGE ENP-1. THE NOTE PAGE IS AN INTEGRAL PART OF THIS DRAWING AS IT CONTAINS SPECIFICATIONS AND CRITERIA USED IN THE DESIGN OF THIS COMPONENT.

DIMENSIONS, SUPPORTS AND LOADINGS SPECIFIED BY FABRICATOR TO BE VERIFIED BY BUILDING DESIGNER

BEARINGS

JT	FACTORED GROSS REACTION VERT	HORZ	MAXIMUM FACTORED GROSS REACTION DOWN	HORZ	UPLIFT	INPUT BRG IN-SX	REQRD BRG IN-SX
4	996	0	996	0	0	HANGER BY OTHERS MIN. SEAT SIZE: 3-8	
6	996	0	996	0	0	5-8	5-8

UNFACTORED REACTIONS

JT	1ST LCASE COMBINED	MAX./MIN. COMPONENT REACTIONS SNOW	LIVE	PERM.LIVE	WIND	DEAD	SOIL
4	699	489 / 0	0 / 0	0 / 0	0 / 0	210 / 0	0 / 0
6	699	489 / 0	0 / 0	0 / 0	0 / 0	210 / 0	0 / 0

BEARING MATERIAL TO BE SPF NO.2 OR BETTER AT JOINT(S) 6

BRACING
TOP CHORD TO BE SHEATHED OR MAX. PURLIN SPACING = 6.25 FT.
MAX. UNBRACED BOTTOM CHORD LENGTH = 10.00 FT. OR RIGID CEILING DIRECTLY APPLIED.

ALL PITCH BREAKS AND PERIMETER CORNER JOINTS MUST BE LATERALLY RESTRAINED.

LOADING
TOTAL LOAD CASES: (4)

CHORDS

MEMB. FR-TO	MAX. FACTORED FORCE (LBS)	VERT. LOAD (PLF) FROM	TO	MAX CSI (LC)	MAX. UNBRAC LENGTH
1- 2	-846 / 0	-77.3	-77.3	0.12 (1)	6.25
2- 3	-10 / 0	-77.3	-77.3	0.10 (1)	6.25
4- 3	-93 / 0	0.0	0.0	0.02 (1)	7.81
6- 1	-674 / 0	0.0	0.0	0.07 (1)	7.81
6- 5	0 / 0	-254.6	-254.6	0.15 (1)	10.00
5- 4	0 / 766	-254.6	-254.6	0.25 (1)	10.00

WEBS

MEMB. FR-TO	MAX. FACTORED FORCE (LBS)	MAX CSI (LC)
5- 2	0 / 686	0.17 (1)
2- 4	-961 / 0	0.23 (1)
1- 5	0 / 791	0.20 (1)

DESIGN CRITERIA

SPECIFIED LOADS:

TOP	CH.	LL	=	23.3	PSF
		DL	=	3.0	PSF
BOT	CH.	LL	=	0.0	PSF
		DL	=	7.0	PSF
TOTAL	LOAD		=	33.3	PSF

SPACING = 24.0 IN. C/C

GIRDER TYPE: CStdGirder
START DISTANCE = 0-0
START SPAN CARRIED = 12-5-8
END DISTANCE = 6-0-0
END SPAN CARRIED = 12-5-8
END WALL WIDTH = 5-8
APPLIED TO FRONT SIDE OF BOTTOM CHORD.
- ADDT'L LOADS BASED ON 55 % OF GSL.

THIS TRUSS IS DESIGNED FOR RESIDENTIAL OR SMALL BUILDING REQUIREMENTS OF PART 9, NBCC 2010

THIS DESIGN COMPLIES WITH:
- PART 9 OF OBC 2012 , BCBC 2012 , ABC 2014
- CSA 086-09
- TPIC 2011

(55 % OF 27.2 P.S.F. G.S.L. PLUS 8.4 P.S.F. RAIN LOAD) EQUALS 23.3 P.S.F. SPECIFIED ROOF LIVE LOAD

ALLOWABLE DEFL.(LL)= L/360 (0.20")
CALCULATED VERT. DEFL.(LL) = L/ 999 (0.01")
ALLOWABLE DEFL.(TL)= L/360 (0.20")
CALCULATED VERT. DEFL.(TL) = L/ 999 (0.02")

CSI: TC=0.12 (1-2:1) , BC=0.25 (4-5:1) , WB=0.23 (2-4:1) , SSI=0.29 (5-6:1)

DOL LUMBER=1.00 NAIL=1.00 LS BEND=1.00 COMP=1.00 SHEAR=1.00 TENS= 1.00

COMPANION LIVE LOAD FACTOR = 0.50

TRUSS PLATE MANUFACTURER IS NOT RESPONSIBLE FOR QUALITY CONTROL IN THE TRUSS MANUFACTURING PLANT .

NAIL VALUES

PLATE	GRIP(DRY) (PSI) MAX	MIN	SHEAR (PLI) MAX	MIN	SECTION (PLI) MAX	MIN
MT20	618	354	1667	822	2284	1656

PLATE PLACEMENT TOL. = 0.250 inches

PLATE ROTATION TOL. = 5.0 Deg.

JSI GRIP= 0.89 (2) (INPUT = 0.90)
JSI METAL= 0.29 (4) (INPUT = 1.00)

RECEIVED
TOWN OF MILTON
MAR 29, 2017
17-4967
BUILDING DIVISION

10 MAR 2017

KOTT

JOB NAME	TRUSS NAME	QUANTITY	PLY	JOB DESC.	DRWG NO.
CC0317-045	GIRD09	1	2	TRUSS DESC. GREENPARK-LECCO RIDGE-BLOCK 325	ENG JOB: CC0317-045

KOTT , Stouffville, ON, CGC

Version 8.100 S Jan 17 2017 MiTek Industries, Inc. Fri Mar 10 13:59:21 2017 Page 1

ID:ROua3U0CyIZcrhsEOCCIEDyLKB3-8VttTioXdAuxpvNnebFja?OwKL4FjYVlP?vpkVzcJdq

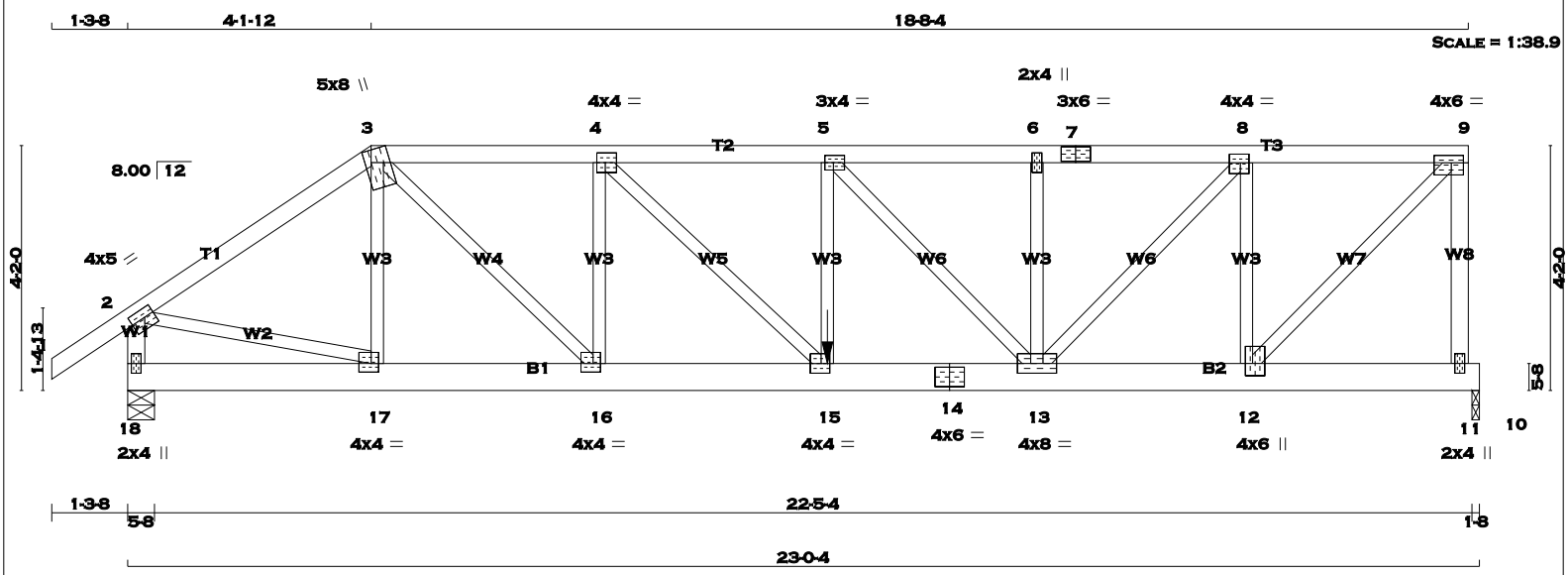

TOTAL WEIGHT = 2 X 112 = 224 lb [M]

LUMBER

N. L. G. A. RULES

CHORDS	SIZE		LUMBER	DESCR.
1 - 3	2x4	DRY	No.2	SPF
3 - 7	2x4	DRY	No.2	SPF
7 - 9	2x4	DRY	No.2	SPF
11 - 9	2x4	DRY	No.2	SPF
18 - 2	2x4	DRY	No.2	SPF
18 - 14	2x6	DRY	No.2	SPF
14 - 10	2x6	DRY	No.2	SPF
ALL WEBS EXCEPT	2x3	DRY	No.2	SPF

DRY: SEASONED LUMBER.

DESIGN CONSISTS OF 2 TRUSSES BUILT SEPARATELY THEN FASTENED TOGETHER AS FOLLOWS:

CHORDS	#ROWS	SURFACE SPACING (IN)	LOAD(PLF)
TOP CHORDS : (0.122"X3") SPIRAL NAILS			
1- 3	1	12	TOP
3- 7	1	12	SIDE(34.2)
7- 9	1	12	SIDE(34.2)
9- 11	1	12	TOP
18- 2	1	12	TOP
BOTTOM CHORDS : (0.122"X3") SPIRAL NAILS			
18- 14	2	12	SIDE(8.7)
14- 10	2	12	SIDE(8.7)
WEBS : (0.122"X3") SPIRAL NAILS			
2x3	1	6	

NAILS TO BE DRIVEN FROM ONE SIDE ONLY.

GIRDER NAILING ASSUMES NAILED HANGERS ARE FASTENED WITH MIN. 3-0 INCH NAILS.

TOP - COMPONENTS ARE LOADED FROM THE TOP AND MUST BE PLACED ON TOP EDGE OF ALL PLIES FOR THE LOAD TO BE TRANSFERRED TO EACH PLY.

SIDE - PLF SHOWN IS THE EQUIVALENT UDL APPLIED TO ONE SIDE THAT THE CORRESPONDING NAILING PATTERN SHALL BE CAPABLE OF TRANSFERING. REMAINING PLF MUST BE APPLIED ON THE OPPOSITE SIDE OR ON THE TOP.

PLATES (table is in inches)

JT	TYPE	PLATES	W	LEN	Y	X
2	TMVW-t	MT20	4.0	5.0	1.75	2.00
3	TTWW+m	MT20	5.0	8.0	Edge	3.75
4	TMWW-t	MT20	4.0	4.0	2.00	1.75

READ ALL NOTES ON THIS PAGE AND ON THE ENGINEERING NOTE PAGE ENP-1. THE NOTE PAGE IS AN INTEGRAL PART OF THIS DRAWING AS IT CONTAINS SPECIFICATIONS AND CRITERIA USED IN THE DESIGN OF THIS COMPONENT.

10 MAR 2017

DIMENSIONS, SUPPORTS AND LOADINGS SPECIFIED BY FABRICATOR TO BE VERIFIED BY BUILDING DESIGNER

BEARINGS

JT	FACTORED GROSS REACTION VERT	HORZ	MAXIMUM FACTORED GROSS REACTION DOWN	HORZ	UPLIFT	INPUT BRG IN-SX	REQRD BRG IN-SX
18	2388	0	2388	0	0	5-8	5-8
10	2808	0	2808	0	0	1-8	1-8

UNFACTORED REACTIONS

JT	1ST LCASE COMBINED	MAX./MIN. COMPONENT REACTIONS SNOW	LIVE	PERM.LIVE	WIND	DEAD	SOIL
18	1674	1184 / 0	0 / 0	0 / 0	0 / 0	489 / 0	0 / 0
10	1972	1376 / 0	0 / 0	0 / 0	0 / 0	596 / 0	0 / 0

BEARING MATERIAL TO BE SPF NO.2 OR BETTER AT JOINT(S) 18, 10

BRACING

TOP CHORD TO BE SHEATHED OR MAX. PURLIN SPACING = 4.06 FT.
MAX. UNBRACED BOTTOM CHORD LENGTH = 10.00 FT. OR RIGID CEILING DIRECTLY APPLIED.

ALL PITCH BREAKS AND PERIMETER CORNER JOINTS MUST BE LATERALLY RESTRAINED.

LOADING

TOTAL LOAD CASES: (4)

CHORDS MEMB. FR-TO	MAX. FACTORED FORCE (LBS)	FACTORED VERT. LOAD (PLF) FROM	TO	LC1 MAX CSI (LC)	MAX. UNBRAC LENGTH	WEBS MEMB. FR-TO	MAX. FACTORED FORCE (LBS)	MAX CSI (LC)
1- 2	0 / 29	-77.3	-77.3	0.06 (1)	10.00	17- 3	-463 / 0	0.06 (1)
2- 3	-2779 / 0	-77.3	-77.3	0.16 (1)	5.33	3-16	0 / 2449	0.30 (1)
3- 4	-4051 / 0	-77.3	-77.3	0.14 (1)	4.61	16- 4	-1601 / 0	0.21 (1)
4- 5	-5373 / 0	-77.3	-77.3	0.18 (1)	4.06	4-15	0 / 1846	0.23 (1)
5- 6	-4308 / 0	-145.8	-145.8	0.17 (1)	4.47	15- 5	0 / 735	0.09 (1)
6- 7	-4308 / 0	-145.8	-145.8	0.21 (1)	4.41	5-13	-1553 / 0	0.35 (1)
7- 8	-4308 / 0	-145.8	-145.8	0.21 (1)	4.41	13- 6	-518 / 0	0.07 (1)
8- 9	-2676 / 0	-145.8	-145.8	0.17 (1)	5.40	13- 8	0 / 2381	0.29 (1)
11- 9	-2912 / 0	0.0	0.0	0.37 (1)	6.74	12- 8	-2334 / 0	0.30 (1)
18- 2	-2355 / 0	0.0	0.0	0.13 (1)	7.32	12- 9	0 / 3791	0.47 (1)
						2-17	0 / 2371	0.29 (1)
18-17	0 / 0	-17.5	-17.5	0.02 (4)	10.00			
17-16	0 / 2295	-17.5	-17.5	0.16 (1)	10.00			
16-15	0 / 4051	-17.5	-17.5	0.33 (1)	10.00			
15-14	0 / 5373	-33.0	-33.0	0.42 (1)	10.00			
14-13	0 / 5373	-33.0	-33.0	0.42 (1)	10.00			
13-12	0 / 2676	-33.0	-33.0	0.22 (1)	10.00			
12-11	0 / 0	-33.0	-33.0	0.19 (1)	10.00			
11-10	0 / 0	-33.0	-33.0	0.19 (1)	10.00			

FACTORED CONCENTRATED LOADS (LBS)

JT	LOC.	LC1	MAX-	MAX+	FACE	DIR.	TYPE
15	11-11-0	-2002	-2002	---	FRONT	VERT	TOTAL

RECEIVED
TOWN OF MILTON
MAR 29, 2017
17-4967
BUILDING DIVISION

DESIGN CRITERIA

*** SPECIAL LOADS ANALYSIS ***
GEOMETRY AND/OR BASIC LOADS CHANGED BY USER.
LOADS WERE DERIVED FROM USER INPUT
NO FURTHER MODIFICATIONS WERE MADE

SPECIFIED LOADS:

TOP	CH.	LL	=	23.3	PSF
		DL	=	3.0	PSF
BOT	CH.	LL	=	0.0	PSF
		DL	=	7.0	PSF
TOTAL	LOAD		=	33.3	PSF

SPACING = 24.0 IN. C/C

LOADING IN FLAT SECTION BASED ON A SLOPE OF 2.00/12 MINIMUM

GIRDER TYPE: CPrimeHip
LEFT SETBACK = 4-1-12
RIGHT SETBACK = 0-0
END SETBACK = 6-0-0
END WALL WIDTH = 5-8
CORNER FRAMING TYPE: CONVENTIONAL
END JACK TYPE: CONVENTIONAL
APPLIED TO FRONT SIDE
- ADDT'L LOADS BASED ON 55 % OF GSL.
LOADS APPLIED TO FIRST 11-0-10 OF SPAN MEASURED FROM THE RIGHT.

*** NON STANDARD GIRDER ***
ADDT'L USER-DEFINED LOADS APPLIED TO ALL LOAD CASES.

THIS TRUSS IS DESIGNED FOR RESIDENTIAL OR SMALL BUILDING REQUIREMENTS OF PART 9, NBCC 2010

THIS DESIGN COMPLIES WITH:
- PART 9 OF OBC 2012 , BCBC 2012 , ABC 2014
- CSA 086-09
- TPIC 2011

(55 % OF 27.2 P.S.F. G.S.L. PLUS 8.4 P.S.F. RAIN LOAD) EQUALS 23.3 P.S.F. SPECIFIED ROOF LIVE LOAD

ALLOWABLE DEFL.(LL)= L/360 (0.77")
CALCULATED VERT. DEFL.(LL) = L/ 999 (0.09")
ALLOWABLE DEFL.(TL)= L/360 (0.77")
CALCULATED VERT. DEFL.(TL) = L/ 999 (0.16")

CSI: TC=0.37 (9-11:1) , BC=0.42 (13-15:1) , WB=0.47 (9-12:1) , SSI=0.93 (10-11:1)

DOL LUMBER=1.00 NAIL=1.00 LS BEND=1.00 COMP=1.00 SHEAR=1.00 TENS= 1.00

COMPANION LIVE LOAD FACTOR = 0.50

TRUSS PLATE MANUFACTURER IS NOT RESPONSIBLE FOR QUALITY CONTROL IN THE TRUSS MANUFACTURING PLANT .

NAIL VALUES

PLATE	GRIP(DRY) (PSI) MAX	MIN	SHEAR (PLI) MAX	MIN	SECTION (PLI) MAX	MIN
MT20	618	354	1667	822	2284	1656

PLATE PLACEMENT TOL. = 0.250 inches

PLATE ROTATION TOL. = 5.0 Deg.

CONTINUED ON PAGE 2

PLATES (table is in inches)

JT	TYPE	PLATES	W	LEN	Y	X
5	TMWW-t	MT20	3.0	4.0	1.50	1.75
6	TMW+w	MT20	2.0	4.0		
7	TS-t	MT20	3.0	6.0		
8	TMWW-t	MT20	4.0	4.0	1.75	1.75
9	TMVW-t	MT20	4.0	6.0	1.50	2.50
11	BMV+p	MT20	2.0	4.0		
12	BMWW+t	MT20	4.0	6.0	2.50	1.50
13	BMWWW-t	MT20	4.0	8.0		
14	BS-t	MT20	4.0	6.0		
15	BMWW-t	MT20	4.0	4.0	2.00	1.75
16	BMWW-t	MT20	4.0	4.0	1.75	1.50
17	BMWW-t	MT20	4.0	4.0	1.75	1.50
18	BMV1+p	MT20	2.0	4.0		

Edge - INDICATES REFERENCE CORNER OF PLATE TOUCHES EDGE OF CHORD.

A SIZE FOR SIZE SUBSTITUTION OF MITEK MII20 WITH TEE-LOK TL20 PLATES IS ALLOWED.

HANGERS NOTES

1) SPECIAL HANGER(S) OR CONNECTION(S) REQUIRED TO SUPPORT CONCENTRATED LOAD(S) 2002.0 lbs FACTORED DOWN AT 11-11-0 ON BOTTOM CHORD. DESIGN FOR UNSPECIFIED CONNECTION(S) IS DELEGATED TO THE BUILDING DESIGNER.

JSI GRIP= 0.90 (5) (INPUT = 0.90)
JSI METAL= 0.61 (14) (INPUT = 1.00)

READ ALL NOTES ON THIS PAGE AND ON THE ENGINEERING NOTE PAGE ENP-1. THE NOTE PAGE IS AN INTEGRAL PART OF THIS DRAWING AS IT CONTAINS SPECIFICATIONS AND CRITERIA USED IN THE DESIGN OF THIS COMPONENT.

10 MAR 2017

RECEIVED
TOWN OF MILTON
MAR 29, 2017
17-4967
BUILDING DIVISION

KOTT

Version 8.100 S Jan 17 2017 MiTek Industries, Inc. Fri Mar 10 13:59:22 2017 Page 1
ID:ROua3U0CylZcrhsEOCClEDyLKB3-ciRGg2p9OU0oR2yzCImy7Dx1clLXSvnvdfeMHyzcJdp

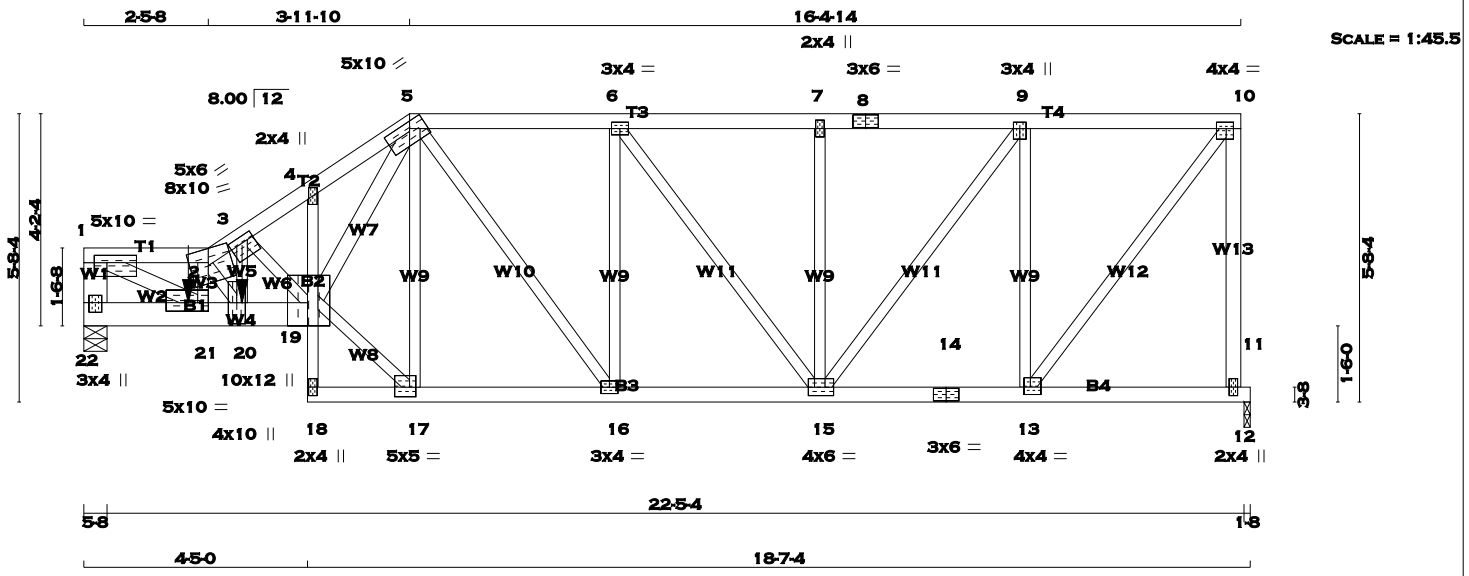

TOTAL WEIGHT = 2 X 116 = 233 lb [M]

LUMBER

N. L. G. A. RULES

CHORDS	SIZE		LUMBER	DESCR.
22 - 1	2x6	DRY	No.2	SPF
1 - 2	2x4	DRY	No.2	SPF
2 - 5	2x4	DRY	No.2	SPF
5 - 8	2x4	DRY	No.2	SPF
8 - 10	2x4	DRY	No.2	SPF
12 - 10	2x4	DRY	No.2	SPF
22 - 19	2x6	DRY	2100F 1.8E	SPF
18 - 4	2x3	DRY	No.2	SPF
18 - 14	2x4	DRY	No.2	SPF
14 - 11	2x4	DRY	No.2	SPF
ALL WEBS EXCEPT	2x3	DRY	No.2	SPF
1 - 21	2x4	DRY	1650F 1.5E	SPF
19 - 5	2x4	DRY	1650F 1.5E	SPF

DRY: SEASONED LUMBER.

DESIGN CONSISTS OF 2 TRUSSES BUILT SEPARATELY THEN FASTENED TOGETHER AS FOLLOWS:

CHORDS	#ROWS	SURFACE SPACING (IN)	LOAD(PLF)
TOP CHORDS : (0.122"X3") SPIRAL NAILS			
22- 1	2	12	TOP
1- 2	1	12	TOP
2- 5	1	12	TOP
5- 8	1	12	TOP
8- 10	1	12	TOP
10- 12	1	12	TOP
BOTTOM CHORDS : (0.122"X3") SPIRAL NAILS			
22- 19	2	12	SIDE(0.0)
4- 18	1	12	TOP
18- 14	1	12	TOP
14- 11	1	12	TOP
WEBS : (0.122"X3") SPIRAL NAILS			
2x3	1	6	
2x4	1	6	

NAILS TO BE DRIVEN FROM ONE SIDE ONLY.

GIRDER NAILING ASSUMES NAILED HANGERS ARE FASTENED WITH MIN. 3-0 INCH NAILS.

TOP - COMPONENTS ARE LOADED FROM THE TOP AND MUST BE PLACED ON TOP EDGE OF ALL PLIES FOR THE LOAD TO BE TRANSFERRED TO EACH PLY.

READ ALL NOTES ON THIS PAGE AND ON THE ENGINEERING NOTE PAGE ENP-1. THE NOTE PAGE IS AN INTEGRAL PART OF THIS DRAWING AS IT CONTAINS SPECIFICATIONS AND CRITERIA USED IN THE DESIGN OF THIS COMPONENT.

10 MAR 2017

DIMENSIONS, SUPPORTS AND LOADINGS SPECIFIED BY FABRICATOR TO BE VERIFIED BY BUILDING DESIGNER

BEARINGS

JT	FACTORED GROSS REACTION VERT	HORZ	MAXIMUM FACTORED GROSS REACTION DOWN	HORZ	UPLIFT	INPUT BRG IN-SX	REQRD BRG IN-SX
22	6693	0	6693	0	0	5-8	5-8
11	1913	0	1913	0	0	1-8	1-8

UNFACTORED REACTIONS

JT	1ST LCASE COMBINED	MAX./MIN. COMPONENT REACTIONS SNOW	LIVE	PERM.LIVE	WIND	DEAD	SOIL
22	4697	3286 / 0	0 / 0	0 / 0	0 / 0	1411 / 0	0 / 0
11	1343	937 / 0	0 / 0	0 / 0	0 / 0	405 / 0	0 / 0

BEARING MATERIAL TO BE SPF NO.2 OR BETTER AT JOINT(S) 22, 11

BRACING

TOP CHORD TO BE SHEATHED OR MAX. PURLIN SPACING = 2.23 FT.
MAX. UNBRACED BOTTOM CHORD LENGTH = 7.81 FT. OR RIGID CEILING DIRECTLY APPLIED.

ALL PITCH BREAKS AND PERIMETER CORNER JOINTS MUST BE LATERALLY RESTRAINED.

LOADING

TOTAL LOAD CASES: (4)

CHORDS

MEMB. FR-TO	MAX. FACTORED FORCE (LBS)	FACTORED VERT. LOAD (PLF) FROM	TO	LC1 MAX CSI (LC)	MAX. UNBRAC LENGTH
22- 1	-5926 / 0	0.0	0.0	0.21 (1)	6.07
1- 2	-11928 / 0	-77.3	-77.3	0.49 (1)	2.45
2- 3	-13184 / 0	-77.3	-77.3	0.54 (1)	2.23
3- 4	-9292 / 0	-77.3	-77.3	0.40 (1)	2.90
4- 5	-9136 / 0	-77.3	-77.3	0.40 (1)	2.93
5- 6	-3117 / 0	-77.3	-77.3	0.14 (1)	5.13
6- 7	-2412 / 0	-77.3	-77.3	0.12 (1)	5.68
7- 8	-2412 / 0	-77.3	-77.3	0.12 (1)	5.68
8- 9	-2412 / 0	-77.3	-77.3	0.12 (1)	5.68
9-10	-1460 / 0	-77.3	-77.3	0.11 (1)	6.25
12-10	-1985 / 0	0.0	0.0	0.60 (1)	7.81
22-21	0 / 0	-17.5	-17.5	0.35 (1)	10.00
21-20	0 / 12388	-17.5	-17.5	0.74 (1)	10.00
20-19	0 / 11095	-17.5	-17.5	0.70 (1)	10.00
18-19	-30 / 0	0.0	0.0	0.18 (1)	7.81
19- 4	0 / 81	0.0	0.0	0.19 (1)	10.00
18-17	0 / 77	-17.5	-17.5	0.08 (1)	10.00
17-16	0 / 3534	-17.5	-17.5	0.38 (1)	10.00
16-15	0 / 3117	-17.5	-17.5	0.31 (1)	10.00
15-14	0 / 1460	-17.5	-17.5	0.22 (1)	10.00
14-13	0 / 1460	-17.5	-17.5	0.22 (1)	10.00
13-12	0 / 0	-17.5	-17.5	0.27 (1)	10.00
12-11	0 / 0	-17.5	-17.5	0.27 (1)	10.00

WEBS

MEMB. FR-TO	MAX. FACTORED FORCE (LBS)	MAX CSI (LC)
1-21	0 / 13308	0.85 (1)
21- 2	-5104 / 0	0.40 (1)
2-20	-2578 / 0	0.20 (1)
20- 3	0 / 5673	0.70 (1)
3-19	-5184 / 0	0.43 (1)
19-17	0 / 4463	0.55 (1)
19- 5	0 / 8975	0.57 (1)
17- 5	-2632 / 0	0.67 (1)
5-16	-695 / 0	0.29 (1)
16- 6	0 / 594	0.07 (1)
6-15	-1174 / 0	0.50 (1)
15- 7	-288 / 0	0.07 (1)
15- 9	0 / 1586	0.20 (1)
13- 9	-1634 / 0	0.41 (1)
13-10	0 / 2358	0.29 (1)

FACTORED CONCENTRATED LOADS (LBS)

JT	LOC.	LC1	MAX-	MAX+	FACE	DIR.	TYPE
20	3-1-8	-5291	-5291	---	FRONT	VERT	TOTAL
21	2-0-12	-1146	-1146	---	FRONT	VERT	TOTAL

RECEIVED
TOWN OF MILTON
MAR 29, 2017
17-4967
BUILDING DIVISION

DESIGN CRITERIA

*** SPECIAL LOADS ANALYSIS ***
GEOMETRY AND/OR BASIC LOADS CHANGED BY USER.
LOADS WERE DERIVED FROM USER INPUT
NO FURTHER MODIFICATIONS WERE MADE

SPECIFIED LOADS:

TOP	CH.	LL	=	23.3	PSF
		DL	=	3.0	PSF
BOT	CH.	LL	=	0.0	PSF
		DL	=	7.0	PSF
TOTAL	LOAD		=	33.3	PSF

SPACING = 24.0 IN. C/C

LOADING IN ALL FLAT SECTIONS BASED ON A SLOPE OF 2.00/12 MINIMUM

*** NON STANDARD GIRDER ***
ADDT'L USER-DEFINED LOADS APPLIED TO ALL LOAD CASES.

THIS TRUSS IS DESIGNED FOR RESIDENTIAL OR SMALL BUILDING REQUIREMENTS OF PART 9, NBCC 2010

THIS DESIGN COMPLIES WITH:
- PART 9 OF OBC 2012 , BCBC 2012 , ABC 2014
- CSA 086-09
- TPIC 2011

(55 % OF 27.2 P.S.F. G.S.L. PLUS 8.4 P.S.F. RAIN LOAD) EQUALS 23.3 P.S.F. SPECIFIED ROOF LIVE LOAD

ALLOWABLE DEFL.(LL)= L/360 (0.77")
CALCULATED VERT. DEFL.(LL) = L/ 999 (0.15")
ALLOWABLE DEFL.(TL)= L/360 (0.77")
CALCULATED VERT. DEFL.(TL) = L/ 999 (0.26")

CSI: TC=0.60 (10-12:1) , BC=0.74 (20-21:1) , WB=0.85 (1-21:1) , SSI=0.82 (11-12:1)

DOL LUMBER=1.00 NAIL=1.00 LS BEND=1.00 COMP=1.00 SHEAR=1.00 TENS= 1.00

COMPANION LIVE LOAD FACTOR = 0.50

TRUSS PLATE MANUFACTURER IS NOT RESPONSIBLE FOR QUALITY CONTROL IN THE TRUSS MANUFACTURING PLANT .

NAIL VALUES

PLATE	GRIP(DRY) (PSI) MAX	MIN	SHEAR (PLI) MAX	MIN	SECTION (PLI) MAX	MIN
MT20	618	354	1667	822	2284	1656

PLATE PLACEMENT TOL. = 0.250 inches

PLATE ROTATION TOL. = 5.0 Deg.

JSI GRIP= 0.90 (19) (INPUT = 0.90)
JSI METAL= 0.93 (21) (INPUT = 1.00)

CONTINUED ON PAGE 2

PLATES (table is in inches)

JT	TYPE	PLATES	W	LEN	Y	X
1	TMVW-t	MT20	5.0	10.0	1.75	3.00
2	TTWW-m	MT20	8.0	10.0	3.25	4.50
3	TMWW-t	MT20	5.0	6.0	1.50	1.50
4	TMV+p	MT20	2.0	4.0		
5	TTWWW-h	MT20	5.0	10.0	1.50	6.25
6	TMWW-t	MT20	3.0	4.0		
7	TMW+w	MT20	2.0	4.0		
8	TS-t	MT20	3.0	6.0		
9	TMWW+t	MT20	3.0	4.0	1.50	1.50
10	TMVW-t	MT20	4.0	4.0	1.50	1.75
12	BMV+p	MT20	2.0	4.0		
13	BMWW-t	MT20	4.0	4.0	1.75	1.50
14	BS-t	MT20	3.0	6.0		
15	BMWWW-t	MT20	4.0	6.0	2.00	1.50
16	BMWW-t	MT20	3.0	4.0		
17	BMWW-t	MT20	5.0	5.0	2.25	1.50
18	BMV+p	MT20	2.0	4.0		
19	BVMWWW+l	MT20	10.0	12.0	Edge	4.75
20	BMWW+t	MT20	4.0	10.0		
21	BMWW-t	MT20	5.0	10.0	2.00	2.50
22	BMV1+p	MT20	3.0	4.0	2.25	1.50

Edge - INDICATES REFERENCE CORNER OF PLATE TOUCHES EDGE OF CHORD.

A SIZE FOR SIZE SUBSTITUTION OF MITEK MII20 WITH TEE-LOK TL20 PLATES IS ALLOWED.

HANGERS NOTES

1) SPECIAL HANGER(S) OR CONNECTION(S) REQUIRED TO SUPPORT CONCENTRATED LOAD(S) 1145.6 lbs FACTORED DOWN AT 2-0-12, AND 5290.6 lbs FACTORED DOWN AT 3-1-8 ON BOTTOM CHORD. DESIGN FOR UNSPECIFIED CONNECTION(S) IS DELEGATED TO THE BUILDING DESIGNER.

READ ALL NOTES ON THIS PAGE AND ON THE ENGINEERING NOTE PAGE ENP-1. THE NOTE PAGE IS AN INTEGRAL PART OF THIS DRAWING AS IT CONTAINS SPECIFICATIONS AND CRITERIA USED IN THE DESIGN OF THIS COMPONENT.

10 MAR 2017

RECEIVED
TOWN OF MILTON
MAR 29, 2017
17-4967
BUILDING DIVISION

KOTT

JOB NAME	TRUSS NAME	QUANTITY	PLY	JOB DESC.	DRWG NO.
CC0317-045	GIRD13	1	2	TRUSS DESC. GREENPARK-LECCO RIDGE-BLOCK 325	ENG JOB: CC0317-045

KOTT , Stouffville, ON, CGC

Version 8.100 S Jan 17 2017 MiTek Industries, Inc. Fri Mar 10 13:59:23 2017 Page 1

ID:ROua3U0CyIZcrhsEOCClEDyLKB3-4u?euOqn9o8f3CX9m0HBgQUC48j?BN82sJOwpOzcJdo

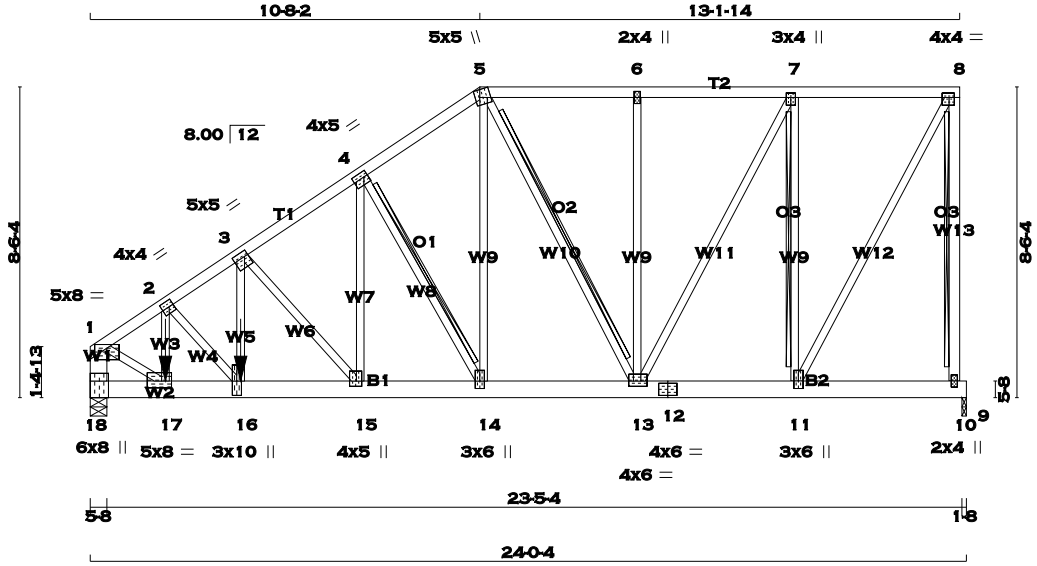

TOTAL WEIGHT = 2 X 145 = 291 lb [M]

LUMBER

N. L. G. A. RULES

CHORDS	SIZE		LUMBER	DESCR.
1 - 5	2x4	DRY	No.2	SPF
5 - 8	2x4	DRY	No.2	SPF
10 - 8	2x4	DRY	No.2	SPF
18 - 1	2x6	DRY	No.2	SPF
18 - 12	2x6	DRY	No.2	SPF
12 - 9	2x6	DRY	No.2	SPF
ALL WEBS EXCEPT	2x3	DRY	No.2	SPF

DRY: SEASONED LUMBER.

DESIGN CONSISTS OF 2 TRUSSES BUILT SEPARATELY THEN FASTENED TOGETHER AS FOLLOWS:

CHORDS #ROWS	SURFACE SPACING (IN)		LOAD(PLF)
TOP CHORDS : (0.122"X3") SPIRAL NAILS			
1- 5	1	12	TOP
5- 8	1	12	TOP
8- 10	1	12	TOP
18- 1	2	12	TOP
BOTTOM CHORDS : (0.122"X3") SPIRAL NAILS			
18- 12	2	12	SIDE(109.7)
12- 9	2	12	TOP
WEBS : (0.122"X3") SPIRAL NAILS			
2x3	1	6	

NAILS TO BE DRIVEN FROM ONE SIDE ONLY.

GIRDER NAILING ASSUMES NAILED HANGERS ARE FASTENED WITH MIN. 3-0 INCH NAILS.

TOP - COMPONENTS ARE LOADED FROM THE TOP AND MUST BE PLACED ON TOP EDGE OF ALL PLIES FOR THE LOAD TO BE TRANSFERRED TO EACH PLY.

SIDE - PLF SHOWN IS THE EQUIVALENT UDL APPLIED TO ONE SIDE THAT THE CORRESPONDING NAILING PATTERN SHALL BE CAPABLE OF TRANSFERING. REMAINING PLF MUST BE APPLIED ON THE OPPOSITE SIDE OR ON THE TOP.

PLATES (table is in inches)

JT	TYPE	PLATES	W	LEN	Y	X
1	TMVW-p	MT20	5.0	8.0	1.25	4.00
2	TMWW-t	MT20	4.0	4.0	2.00	1.50
3	TMWW-t	MT20	5.0	5.0	1.75	1.25
4	TMWW-t	MT20	4.0	5.0	1.75	1.25
5	TTWW+m	MT20	5.0	5.0	2.50	1.50

READ ALL NOTES ON THIS PAGE AND ON THE ENGINEERING NOTE PAGE ENP-1. THE NOTE PAGE IS AN INTEGRAL PART OF THIS DRAWING AS IT CONTAINS SPECIFICATIONS AND CRITERIA USED IN THE DESIGN OF THIS COMPONENT.

DIMENSIONS, SUPPORTS AND LOADINGS SPECIFIED BY FABRICATOR TO BE VERIFIED BY BUILDING DESIGNER

BEARINGS

JT	FACTORED GROSS REACTION VERT	HORZ	MAXIMUM FACTORED GROSS REACTION DOWN	HORZ	UPLIFT	INPUT BRG IN-SX	REQRD BRG IN-SX
18	6975	0	6975	0	0	5-8	5-8
9	2149	0	2149	0	0	1-8	1-8

UNFACTORED REACTIONS

JT	1ST LCASE COMBINED	MAX./MIN. COMPONENT REACTIONS SNOW	LIVE	PERM.LIVE	WIND	DEAD	SOIL
18	4895	3424 / 0	0 / 0	0 / 0	0 / 0	1471 / 0	0 / 0
9	1508	1053 / 0	0 / 0	0 / 0	0 / 0	455 / 0	0 / 0

BEARING MATERIAL TO BE SPF NO.2 OR BETTER AT JOINT(S) 18, 9

BRACING

TOP CHORD TO BE SHEATHED OR MAX. PURLIN SPACING = 3.38 FT.
MAX. UNBRACED BOTTOM CHORD LENGTH = 10.00 FT. OR RIGID CEILING DIRECTLY APPLIED.

ALL PITCH BREAKS AND PERIMETER CORNER JOINTS MUST BE LATERALLY RESTRAINED.

2x4 SPF No.2 T-BRACE AT 8-10, 4-14, 5-13, 7-11

FASTEN T AND I-BRACES TO NARROW EDGE OF WEB WITH ONE ROW PER PLY OF 3" COMMON WIRE NAILS @ 6" O.C. WITH 3" MINIMUM END DISTANCE. BRACE MUST COVER 90% OF WEB LENGTH.

END VERTICAL(S) MUST BE SHEATHED OR HAVE BRACES AS INDICATED IN THE MAX. UNBRACED LENGTH COLUMN OF THE TABLE BELOW

LOADING

TOTAL LOAD CASES: (4)

CHORDS

MEMB. FR-TO	MAX. FACTORED FORCE (LBS)	FACTORED VERT. LOAD (PLF) FROM	TO	LC1 MAX CSI (LC)	MAX. UNBRAC LENGTH
1- 2	-6853 / 0	-77.3	-77.3	0.22 (1)	3.58
2- 3	-7601 / 0	-77.3	-77.3	0.26 (1)	3.38
3- 4	-4634 / 0	-77.3	-77.3	0.14 (1)	4.38
4- 5	-3001 / 0	-77.3	-77.3	0.09 (1)	5.26
5- 6	-1937 / 0	-77.3	-77.3	0.12 (1)	6.17
6- 7	-1937 / 0	-77.3	-77.3	0.12 (1)	6.16
7- 8	-1154 / 0	-77.3	-77.3	0.11 (1)	6.25
10- 8	-2223 / 0	0.0	0.0	0.61 (1)	7.81
18- 1	-6657 / 0	0.0	0.0	0.24 (1)	5.77
18-17	0 / 0	-236.8	-236.8	0.08 (1)	10.00
17-16	0 / 5682	-17.5	-17.5	0.55 (1)	10.00
16-15	0 / 6346	-17.5	-17.5	0.59 (1)	10.00
15-14	0 / 3866	-17.5	-17.5	0.26 (1)	10.00
14-13	0 / 2513	-17.5	-17.5	0.18 (1)	10.00
13-12	0 / 1154	-17.5	-17.5	0.12 (1)	10.00
12-11	0 / 1154	-17.5	-17.5	0.12 (1)	10.00
11-10	0 / 0	-17.5	-17.5	0.15 (1)	10.00
10- 9	0 / 0	-17.5	-17.5	0.15 (1)	10.00

WEBS

MEMB. FR-TO	FORCE (LBS)	MAX CSI (LC)
13- 2	-1275 / 0	0.11 (1)
2-16	0 / 1012	0.13 (1)
16- 3	0 / 4256	0.53 (1)
3-15	-3767 / 0	0.77 (1)
15- 4	0 / 3043	0.38 (1)
4-14	-2796 / 0	0.62 (1)
14- 5	0 / 2504	0.31 (1)
5-13	-1229 / 0	0.54 (1)
13- 6	-356 / 0	0.25 (1)
13- 7	0 / 1672	0.21 (1)
11- 7	-1853 / 0	0.61 (1)
11- 8	0 / 2378	0.29 (1)
1-17	0 / 6310	0.78 (1)

FACTORED CONCENTRATED LOADS (LBS)

JT	LOC.	LC1	MAX-	MAX+	FACE	DIR.	TYPE
16	4-1-8	-5291	-5291	---	FRONT	VERT	TOTAL
17	2-0-12	-1117	-1117	---	FRONT	VERT	TOTAL

DESIGN CRITERIA

*** SPECIAL LOADS ANALYSIS ***
GEOMETRY AND/OR BASIC LOADS CHANGED BY USER.
LOADS WERE DERIVED FROM USER INPUT
NO FURTHER MODIFICATIONS WERE MADE

SPECIFIED LOADS:

TOP	CH.	LL	=	23.3	PSF
		DL	=	3.0	PSF
BOT	CH.	LL	=	0.0	PSF
		DL	=	7.0	PSF
TOTAL	LOAD		=	33.3	PSF

SPACING = 24.0 IN. C/C

LOADING IN FLAT SECTION BASED ON A SLOPE OF 2.00/12 MINIMUM

GIRDER TYPE: CStdGirder
START DISTANCE = 0-0
START SPAN CARRIED = 11-3-0
END DISTANCE = 2-0-12
END SPAN CARRIED = 11-3-0
END WALL WIDTH = 0-0
APPLIED TO FRONT SIDE OF BOTTOM CHORD.
- ADDT'L LOADS BASED ON 55 % OF GSL.

*** NON STANDARD GIRDER ***
ADDT'L USER-DEFINED LOADS APPLIED TO ALL LOAD CASES.

THIS TRUSS IS DESIGNED FOR RESIDENTIAL OR SMALL BUILDING REQUIREMENTS OF PART 9, NBCC 2010

THIS DESIGN COMPLIES WITH:
- PART 9 OF OBC 2012 , BCBC 2012 , ABC 2014
- CSA 086-09
- TPIC 2011

(55 % OF 27.2 P.S.F. G.S.L. PLUS 8.4 P.S.F. RAIN LOAD) EQUALS 23.3 P.S.F. SPECIFIED ROOF LIVE LOAD

ALLOWABLE DEFL.(LL)= L/360 (0.80")
CALCULATED VERT. DEFL.(LL) = L/ 999 (0.08")
ALLOWABLE DEFL.(TL)= L/360 (0.80")
CALCULATED VERT. DEFL.(TL) = L/ 999 (0.15")

CSI: TC=0.61 (8-10:1) , BC=0.59 (15-16:1) , WB=0.78 (1-17:1) , SSI=0.71 (9-10:1)

DOL LUMBER=1.00 NAIL=1.00 LS BEND=1.00 COMP=1.00 SHEAR=1.00 TENS= 1.00

COMPANION LIVE LOAD FACTOR = 0.50

TRUSS PLATE MANUFACTURER IS NOT RESPONSIBLE FOR QUALITY CONTROL IN THE TRUSS MANUFACTURING PLANT .

NAIL VALUES

PLATE	GRIP(DRY) (PSI) MAX	MIN	SHEAR (PLI) MAX	MIN	SECTION (PLI) MAX	MIN
MT20	618	354	1667	822	2284	1656

PLATE PLACEMENT TOL. = 0.250 inches

PLATE ROTATION TOL. = 5.0 Deg.

JSI GRIP= 0.89 (17) (INPUT = 0.90)
JSI METAL= 0.62 (16) (INPUT = 1.00)

CONTINUED ON PAGE 2

RECEIVED
TOWN OF MILTON
MAR 29, 2017
17-4967
BUILDING DIVISION

10 MAR 2017

KOTT

PLATES (table is in inches)

JT	TYPE	PLATES	W	LEN	Y	X
6	TMW+w	MT20	2.0	4.0		
7	TMWW+t	MT20	3.0	4.0	1.50	1.50
8	TMVW-t	MT20	4.0	4.0	1.50	1.75
10	BMV+p	MT20	2.0	4.0		
11	BMWW+t	MT20	3.0	6.0	2.50	1.50
12	BS-t	MT20	4.0	6.0		
13	BMWWW-t	MT20	4.0	6.0	1.75	1.50
14	BMWW+t	MT20	3.0	6.0	2.50	1.50
15	BMWW+t	MT20	4.0	5.0	1.75	1.75
16	BMWW+t	MT20	3.0	10.0	4.75	1.50
17	BMWW-t	MT20	5.0	8.0	2.25	3.25
18	BMV1+t	MT20	6.0	8.0	5.50	

A SIZE FOR SIZE SUBSTITUTION OF MITEK MII20 WITH TEE-LOK TL20 PLATES IS ALLOWED.

HANGERS NOTES

1) SPECIAL HANGER(S) OR CONNECTION(S) REQUIRED TO SUPPORT CONCENTRATED LOAD(S) 1117.1 lbs FACTORED DOWN AT 2-0-12, AND 5290.6 lbs FACTORED DOWN AT 4-1-8 ON BOTTOM CHORD. DESIGN FOR UNSPECIFIED CONNECTION(S) IS DELEGATED TO THE BUILDING DESIGNER.

READ ALL NOTES ON THIS PAGE AND ON THE ENGINEERING NOTE PAGE ENP-1. THE NOTE PAGE IS AN INTEGRAL PART OF THIS DRAWING AS IT CONTAINS SPECIFICATIONS AND CRITERIA USED IN THE DESIGN OF THIS COMPONENT.

10 MAR 2017

RECEIVED
TOWN OF MILTON
MAR 29, 2017
17-4967
BUILDING DIVISION

KOTT

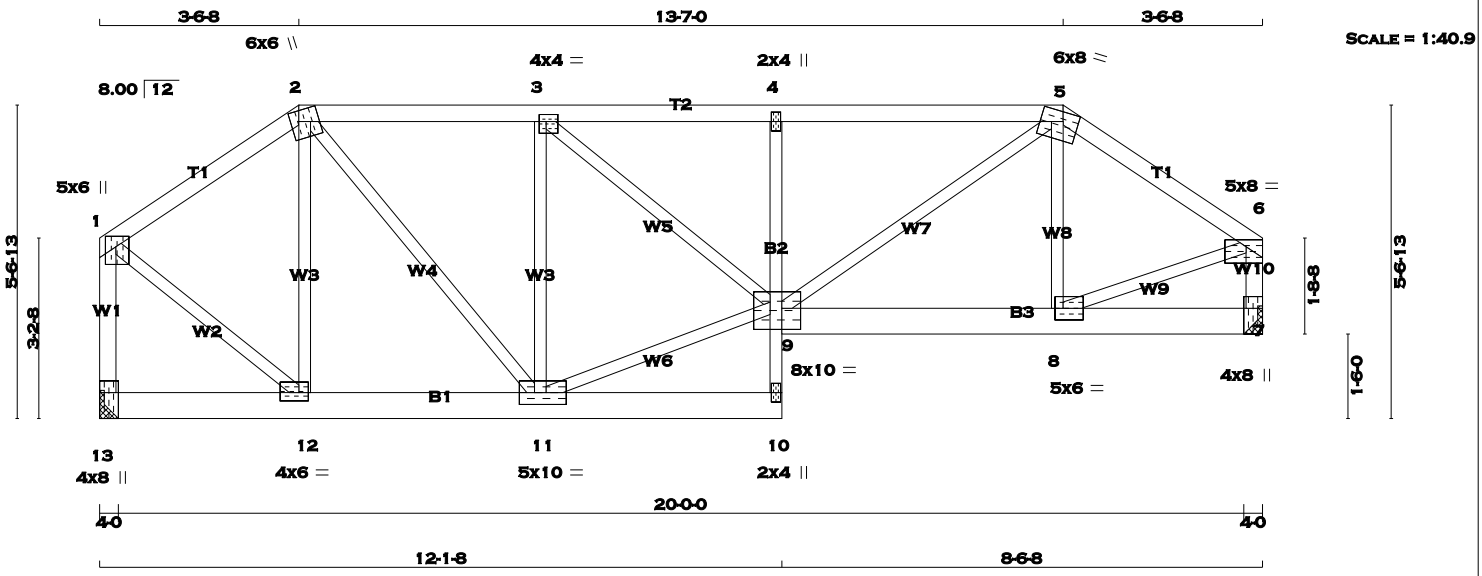

TOTAL WEIGHT = 2 X 105 = 210 lb [M]

LUMBER

N. L. G. A. RULES

CHORDS	SIZE		LUMBER	DESCR.
1 - 2	2x4	DRY	No.2	SPF
2 - 5	2x4	DRY	No.2	SPF
5 - 6	2x4	DRY	No.2	SPF
13 - 1	2x4	DRY	No.2	SPF
7 - 6	2x4	DRY	No.2	SPF
13 - 10	2x6	DRY	No.2	SPF
10 - 4	2x3	DRY	No.2	SPF
9 - 7	2x6	DRY	No.2	SPF
ALL WEBS EXCEPT	2x3	DRY	No.2	SPF

DRY: SEASONED LUMBER.

DESIGN CONSISTS OF 2 TRUSSES BUILT SEPARATELY THEN FASTENED TOGETHER AS FOLLOWS:

CHORDS	#ROWS	SURFACE SPACING (IN)	LOAD(PLF)
TOP CHORDS : (0.122"X3") SPIRAL NAILS			
1- 2	1	12	TOP
2- 5	1	12	TOP
5- 6	1	12	TOP
13- 1	1	12	TOP
7- 6	1	12	TOP
BOTTOM CHORDS : (0.122"X3") SPIRAL NAILS			
13- 10	2	12	SIDE(208.6)
9- 7	2	12	SIDE(208.6)
10- 4	1	12	TOP
WEBS : (0.122"X3") SPIRAL NAILS			
2x3	1	6	

NAILS TO BE DRIVEN FROM ONE SIDE ONLY.

TOP - COMPONENTS ARE LOADED FROM THE TOP AND MUST BE PLACED ON TOP EDGE OF ALL PLIES FOR THE LOAD TO BE TRANSFERRED TO EACH PLY.

SIDE - PLF SHOWN IS THE EQUIVALENT UDL APPLIED TO ONE SIDE THAT THE CORRESPONDING NAILING PATTERN SHALL BE CAPABLE OF TRANSFERING. REMAINING PLF MUST BE APPLIED ON THE OPPOSITE SIDE OR ON THE TOP.

PLATES (table is in inches)

JT	TYPE	PLATES	W	LEN	Y	X
1	TMVW+p	MT20	5.0	6.0	2.25	2.25
2	TTWW+m	MT20	6.0	6.0	2.25	1.75
3	TMWW-t	MT20	4.0	4.0	1.50	1.50
4	TMV+p	MT20	2.0	4.0		

READ ALL NOTES ON THIS PAGE AND ON THE ENGINEERING NOTE PAGE ENP-1. THE NOTE PAGE IS AN INTEGRAL PART OF THIS DRAWING AS IT CONTAINS SPECIFICATIONS AND CRITERIA USED IN THE DESIGN OF THIS COMPONENT.

DIMENSIONS, SUPPORTS AND LOADINGS SPECIFIED BY FABRICATOR TO BE VERIFIED BY BUILDING DESIGNER

BEARINGS

JT	FACTORED GROSS REACTION VERT	HORZ	MAXIMUM FACTORED GROSS REACTION DOWN	HORZ	UPLIFT	INPUT BRG	REQRD BRG
13	5291	0	5291	0	0	IN-SX	IN-SX
						HANGER BY OTHERS	
						MIN. SEAT SIZE: 4-0	
7	5291	0	5291	0	0	HANGER BY OTHERS	
						MIN. SEAT SIZE: 4-0	

UNFACTORED REACTIONS

JT	1ST LCASE COMBINED	SNOW	LIVE	PERM.LIVE	WIND	DEAD	SOIL
		MAX./MIN. COMPONENT REACTIONS					
13	3713	2598 / 0	0 / 0	0 / 0	0 / 0	1116 / 0	0 / 0
7	3713	2598 / 0	0 / 0	0 / 0	0 / 0	1116 / 0	0 / 0

BRACING

TOP CHORD TO BE SHEATHED OR MAX. PURLIN SPACING = 3.38 FT.
MAX. UNBRACED BOTTOM CHORD LENGTH = 7.81 FT. OR RIGID CEILING DIRECTLY APPLIED.

ALL PITCH BREAKS AND PERIMETER CORNER JOINTS MUST BE LATERALLY RESTRAINED.

LOADING

TOTAL LOAD CASES: (4)

CHORDS

MEMB. FR-TO	MAX. FACTORED FORCE (LBS)	FACTORED VERT. LOAD (PLF) FROM	TO	LC1 CSI (LC)	MAX. UNBRAC LENGTH
1- 2	-3790 / 0	-77.3	-77.3	0.15 (1)	4.73
2- 3	-5106 / 0	-77.3	-77.3	0.20 (1)	4.13
3- 4	-7217 / 0	-77.3	-77.3	0.28 (1)	3.47
4- 5	-7235 / 0	-77.3	-77.3	0.40 (1)	3.38
5- 6	-5423 / 0	-77.3	-77.3	0.21 (1)	4.02
13- 1	-4668 / 0	0.0	0.0	0.41 (1)	5.53
7- 6	-4767 / 0	0.0	0.0	0.27 (1)	5.48
13-12	0 / 0	-434.7	-434.7	0.23 (1)	10.00
12-11	0 / 3136	-434.7	-434.7	0.45 (1)	10.00
11-10	0 / 43	-434.7	-434.7	0.25 (1)	10.00
10- 9	0 / 748	0.0	0.0	0.19 (1)	10.00
9- 4	-361 / 0	0.0	0.0	0.10 (1)	7.81
9- 8	0 / 4524	-434.7	-434.7	0.65 (1)	10.00
8- 7	0 / 0	-434.7	-434.7	0.36 (1)	10.00

WEBS

MEMB. FR-TO	MAX. FACTORED FORCE (LBS)	MAX CSI (LC)
12- 2	-563 / 0	0.13 (1)
2-11	0 / 3087	0.38 (1)
11- 3	-2194 / 0	0.49 (1)
11- 9	0 / 5378	0.67 (1)
3- 9	0 / 2814	0.35 (1)
9- 5	0 / 3341	0.41 (1)
8- 5	0 / 734	0.09 (1)
1-12	0 / 3970	0.49 (1)
8- 6	0 / 4782	0.59 (1)

DESIGN CRITERIA

SPECIFIED LOADS:

TOP	CH.	LL	=	23.3	PSF
		DL	=	3.0	PSF
BOT	CH.	LL	=	0.0	PSF
		DL	=	7.0	PSF
TOTAL	LOAD		=	33.3	PSF

SPACING = 24.0 IN. C/C

LOADING IN FLAT SECTION BASED ON A SLOPE OF 2.00/12 MINIMUM

GIRDER TYPE: CStdGirder
START DISTANCE = 0-0
START SPAN CARRIED = 19-8-10
END DISTANCE = 20-8-0
END SPAN CARRIED = 19-8-10
END WALL WIDTH = 1-8
APPLIED TO FRONT SIDE OF BOTTOM CHORD.
- ADDT'L LOADS BASED ON 55 % OF GSL.

THIS TRUSS IS DESIGNED FOR RESIDENTIAL OR SMALL BUILDING REQUIREMENTS OF PART 9, NBCC 2010

THIS DESIGN COMPLIES WITH:
- PART 9 OF OBC 2012 , BCBC 2012 , ABC 2014
- CSA 086-09
- TPIC 2011

(55 % OF 27.2 P.S.F. G.S.L. PLUS 8.4 P.S.F. RAIN LOAD) EQUALS 23.3 P.S.F. SPECIFIED ROOF LIVE LOAD

ALLOWABLE DEFL.(LL)= L/360 (0.69")
CALCULATED VERT. DEFL.(LL) = L/ 999 (0.12")
ALLOWABLE DEFL.(TL)= L/360 (0.69")
CALCULATED VERT. DEFL.(TL) = L/ 999 (0.21")

CSI: TC=0.41 (1-13:1) , BC=0.65 (8-9:1) , WB=0.67 (9-11:1) , SSI=0.43 (8-9:1)

DOL LUMBER=1.00 NAIL=1.00 LS BEND=1.00 COMP=1.00 SHEAR=1.00 TENS= 1.00

COMPANION LIVE LOAD FACTOR = 0.50

TRUSS PLATE MANUFACTURER IS NOT RESPONSIBLE FOR QUALITY CONTROL IN THE TRUSS MANUFACTURING PLANT .

NAIL VALUES

PLATE	GRIP(DRY) (PSI) MAX	MIN	SHEAR (PLI) MAX	MIN	SECTION (PLI) MAX	MIN
MT20	618	354	1667	822	2284	1656

PLATE PLACEMENT TOL. = 0.250 inches

PLATE ROTATION TOL. = 5.0 Deg.

JSI GRIP= 0.90 (12) (INPUT = 0.90)
JSI METAL= 0.57 (8) (INPUT = 1.00)

RECEIVED
TOWN OF MILTON
MAR 29, 2017
17-4967
BUILDING DIVISION

10 MAR 2017

KOTT

CONTINUED ON PAGE 2

PLATES (table is in inches)

JT	TYPE	PLATES	W	LEN	Y	X
5	TTWW-m	MT20	6.0	8.0	2.00	3.25
6	TMVW-p	MT20	5.0	8.0	1.50	Edge
7	BMV1+t	MT20	4.0	8.0	Edge	0.50
8	BMWW-t	MT20	5.0	6.0	2.50	1.75
9	BVMWWW-l	MT20	8.0	10.0	4.50	4.00
10	BMV+p	MT20	2.0	4.0		
11	BMWWW-t	MT20	5.0	10.0	2.50	3.25
12	BMWW-t	MT20	4.0	6.0	1.75	2.00
13	BMV1+t	MT20	4.0	8.0	5.50	

Edge - INDICATES REFERENCE CORNER OF PLATE TOUCHES EDGE OF CHORD.

A SIZE FOR SIZE SUBSTITUTION OF MITEK MII20 WITH TEE-LOK TL20 PLATES IS ALLOWED.

READ ALL NOTES ON THIS PAGE AND ON THE ENGINEERING NOTE PAGE ENP-1. THE NOTE PAGE IS AN INTEGRAL PART OF THIS DRAWING AS IT CONTAINS SPECIFICATIONS AND CRITERIA USED IN THE DESIGN OF THIS COMPONENT.

10 MAR 2017

RECEIVED
TOWN OF MILTON
MAR 29, 2017
17-4967
BUILDING DIVISION

KOTT

SCALE = 1:19.3

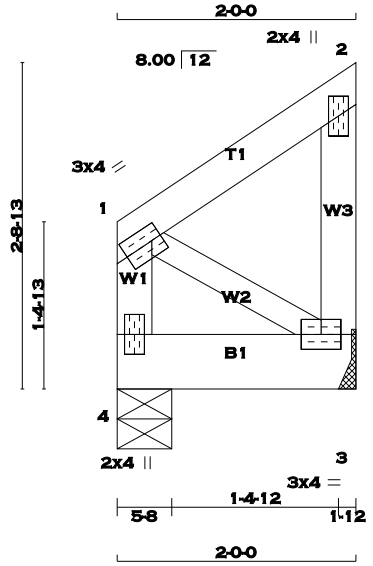

TOTAL WEIGHT = 11 lb [M]

LUMBER

N. L. G. A. RULES

CHORDS	SIZE		LUMBER	DESCR.
4 - 1	2x4	DRY	No.2	SPF
1 - 2	2x4	DRY	No.2	SPF
3 - 2	2x4	DRY	No.2	SPF
4 - 3	2x6	DRY	No.2	SPF
ALL WEBS	2x3	DRY	No.2	SPF

DRY: SEASONED LUMBER.

PLATES (table is in inches)

JT	TYPE	PLATES	W	LEN	Y	X
1	TMVW-t	MT20	3.0	4.0	1.50	1.00
2	TMV+p	MT20	2.0	4.0		
3	BMVW1-t	MT20	3.0	4.0		
4	BMV1+p	MT20	2.0	4.0		

A SIZE FOR SIZE SUBSTITUTION OF MITEK MII20 WITH TEE-LOK TL20 PLATES IS ALLOWED.

READ ALL NOTES ON THIS PAGE AND ON THE ENGINEERING NOTE PAGE ENP-1. THE NOTE PAGE IS AN INTEGRAL PART OF THIS DRAWING AS IT CONTAINS SPECIFICATIONS AND CRITERIA USED IN THE DESIGN OF THIS COMPONENT.

DIMENSIONS, SUPPORTS AND LOADINGS SPECIFIED BY FABRICATOR TO BE VERIFIED BY BUILDING DESIGNER

BEARINGS

JT	FACTORED GROSS REACTION VERT	HORZ	MAXIMUM FACTORED GROSS REACTION DOWN	HORZ	UPLIFT	INPUT BRG IN-SX	REQRD BRG IN-SX
4	303	0	303	0	0	5-8	5-8
3	303	0	303	0	0	HANGER BY OTHERS	
						MIN. SEAT SIZE: 1-12	

UNFACTORED REACTIONS

JT	1ST LCASE COMBINED	MAX./MIN. COMPONENT REACTIONS SNOW	LIVE	PERM.LIVE	WIND	DEAD	SOIL
4	213	149 / 0	0 / 0	0 / 0	0 / 0	64 / 0	0 / 0
3	213	149 / 0	0 / 0	0 / 0	0 / 0	64 / 0	0 / 0

BEARING MATERIAL TO BE SPF NO.2 OR BETTER AT JOINT(S) 4

BRACING

TOP CHORD TO BE SHEATHED OR MAX. PURLIN SPACING = 10.00 FT.
MAX. UNBRACED BOTTOM CHORD LENGTH = 10.00 FT. OR RIGID CEILING DIRECTLY APPLIED.

ALL PITCH BREAKS AND PERIMETER CORNER JOINTS MUST BE LATERALLY RESTRAINED.

LOADING

TOTAL LOAD CASES: (4)

CHORDS

MEMB. FR-TO	MAX. FACTORED FORCE (LBS)	VERT. LOAD (PLF) FROM	TO	LC1 MAX CSI (LC)	MAX. UNBRAC LENGTH
4- 1	-77 / 0	0.0	0.0	0.01 (1)	7.81
1- 2	0 / 0	-77.3	-77.3	0.06 (1)	10.00
3- 2	-77 / 0	0.0	0.0	0.01 (1)	7.81
4- 3	0 / 0	-226.0	-226.0	0.08 (1)	10.00

WEBS

MEMB. FR-TO	MAX. FACTORED FORCE (LBS)	MAX CSI (LC)
1- 3	0 / 0	0.00 (1)

DESIGN CRITERIA

SPECIFIED LOADS:

TOP CH.	LL =	23.3	PSF
	DL =	3.0	PSF
BOT CH.	LL =	0.0	PSF
	DL =	7.0	PSF
TOTAL LOAD	=	33.3	PSF

SPACING = 24.0 IN. C/C

GIRDER TYPE: CStdGirder
START DISTANCE = 0-0
START SPAN CARRIED = 11-3-0
END DISTANCE = 2-0-0
END SPAN CARRIED = 11-3-0
END WALL WIDTH = 5-8
APPLIED TO FRONT SIDE OF BOTTOM CHORD.
- ADDT'L LOADS BASED ON 55 % OF GSL.

THIS TRUSS IS DESIGNED FOR RESIDENTIAL OR SMALL BUILDING REQUIREMENTS OF PART 9, NBCC 2010

THIS DESIGN COMPLIES WITH:
- PART 9 OF OBC 2012 , BCBC 2012 , ABC 2014
- CSA 086-09
- TPIC 2011

(55 % OF 27.2 P.S.F. G.S.L. PLUS 8.4 P.S.F. RAIN LOAD) EQUALS 23.3 P.S.F. SPECIFIED ROOF LIVE LOAD

ALLOWABLE DEFL.(LL)= L/360 (0.19")
CALCULATED VERT. DEFL.(LL) = L/ 999 (0.00")
ALLOWABLE DEFL.(TL)= L/360 (0.19")
CALCULATED VERT. DEFL.(TL) = L/ 999 (0.00")

CSI: TC=0.06 (1-2:1) , BC=0.08 (3-4:1) , WB=0.00 (1-3:1) , SSI=0.15 (3-4:1)

DOL LUMBER=1.00 NAIL=1.00 LS BEND=1.00 COMP=1.00 SHEAR=1.00 TENS= 1.00

COMPANION LIVE LOAD FACTOR = 0.50

TRUSS PLATE MANUFACTURER IS NOT RESPONSIBLE FOR QUALITY CONTROL IN THE TRUSS MANUFACTURING PLANT .

NAIL VALUES

PLATE	GRIP(DRY) (PSI) MAX	MIN	SHEAR (PLI) MAX	MIN	SECTION (PLI) MAX	MIN
MT20	618	354	1667	822	2284	1656

PLATE PLACEMENT TOL. = 0.250 inches

PLATE ROTATION TOL. = 5.0 Deg.

JSI GRIP= 0.08 (3) (INPUT = 0.90)
JSI METAL= 0.02 (2) (INPUT = 1.00)

RECEIVED
TOWN OF MILTON
MAR 29, 2017
17-4967
BUILDING DIVISION

10 MAR 2017

KOTT

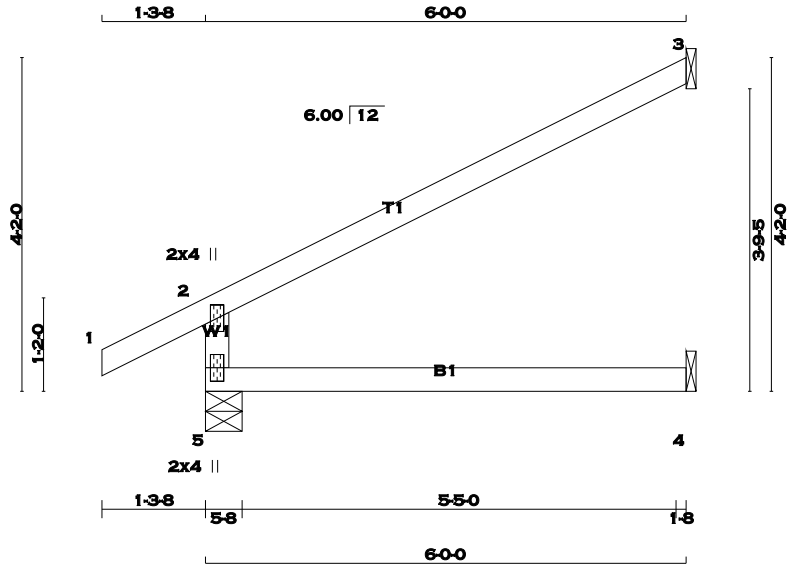

TOTAL WEIGHT = 25 X 17 = 427 lb [M]

LUMBER

N. L. G. A. RULES

CHORDS	SIZE		LUMBER	DESCR.
5 - 2	2x4	DRY	No.2	SPF
1 - 3	2x4	DRY	No.2	SPF
5 - 4	2x4	DRY	No.2	SPF

DRY: SEASONED LUMBER.

PLATES (table is in inches)

JT	TYPE	PLATES	W	LEN	Y	X
2	TMV+p	MT20	2.0	4.0		
5	BMV1+p	MT20	2.0	4.0		

A SIZE FOR SIZE SUBSTITUTION OF MITEK MII20 WITH TEE-LOK TL20 PLATES IS ALLOWED.

READ ALL NOTES ON THIS PAGE AND ON THE ENGINEERING NOTE PAGE ENP-1. THE NOTE PAGE IS AN INTEGRAL PART OF THIS DRAWING AS IT CONTAINS SPECIFICATIONS AND CRITERIA USED IN THE DESIGN OF THIS COMPONENT.

DIMENSIONS, SUPPORTS AND LOADINGS SPECIFIED BY FABRICATOR TO BE VERIFIED BY BUILDING DESIGNER

BEARINGS

JT	FACTORED GROSS REACTION VERT	HORZ	MAXIMUM FACTORED GROSS REACTION DOWN	HORZ	UPLIFT	INPUT BRG IN-SX	REQRD BRG IN-SX
5	457	0	457	0	0	5-8	5-8
3	174	0	174	0	0	1-8	1-8
4	43	0	49	0	0	1-8	1-8

SEE MITEK STANDARD DETAIL B37579H FOR CONNECTION TO JOINT(S) 3 , 4

UNFACTORED REACTIONS

JT	1ST LCASE COMBINED	MAX./MIN. COMPONENT REACTIONS SNOW	LIVE	PERM.LIVE	WIND	DEAD	SOIL
5	318	238 / 0	0 / 0	0 / 0	0 / 0	80 / 0	0 / 0
3	118	105 / 0	0 / 0	0 / 0	0 / 0	14 / 0	0 / 0
4	35	0 / 0	0 / 0	0 / 0	0 / 0	35 / 0	0 / 0

BEARING MATERIAL TO BE SPF NO.2 OR BETTER AT JOINT(S) 5

BRACING

TOP CHORD TO BE SHEATHED OR MAX. PURLIN SPACING = 6.25 FT.
MAX. UNBRACED BOTTOM CHORD LENGTH = 10.00 FT. OR RIGID CEILING DIRECTLY APPLIED.

ALL PITCH BREAKS AND PERIMETER CORNER JOINTS MUST BE LATERALLY RESTRAINED.

LOADING

TOTAL LOAD CASES: (4)

CHORDS MEMB. FR-TO	MAX. FACTORED FORCE (LBS)	FACTORED VERT. LOAD (PLF) FROM	TO	LC1 MAX CSI (LC)	MAX. UNBRAC LENGTH	WEBS MEMB. FR-TO	MAX. FACTORED FORCE (LBS)	MAX CSI (LC)
5- 2	-395 / 0	0.0	0.0	0.13 (4)	7.81			
1- 2	0 / 23	-77.3	-77.3	0.10 (1)	10.00			
2- 3	-26 / 0	-77.3	-77.3	0.47 (1)	6.25			
5- 4	0 / 0	-17.5	-17.5	0.13 (4)	10.00			

DESIGN CRITERIA

SPECIFIED LOADS:

TOP CH.	LL	=	23.3	PSF
	DL	=	3.0	PSF
BOT CH.	LL	=	0.0	PSF
	DL	=	7.0	PSF
TOTAL LOAD		=	33.3	PSF

SPACING = 24.0 IN. C/C

THIS TRUSS IS DESIGNED FOR RESIDENTIAL OR SMALL BUILDING REQUIREMENTS OF PART 9, NBCC 2010

THIS DESIGN COMPLIES WITH:
- PART 9 OF OBC 2012 , BCBC 2012 , ABC 2014
- CSA 086-09
- TPIC 2011

DESIGN ASSUMPTIONS
-OVERHANG NOT TO BE ALTERED OR CUT OFF.

(55 % OF 27.2 P.S.F. G.S.L. PLUS 8.4 P.S.F. RAIN LOAD) EQUALS 23.3 P.S.F. SPECIFIED ROOF LIVE LOAD

ALLOWABLE DEFL.(LL)= L/360 (0.20")
CALCULATED VERT. DEFL.(LL) = L/ 999 (0.00")
ALLOWABLE DEFL.(TL)= L/360 (0.20")
CALCULATED VERT. DEFL.(TL) = L/ 999 (0.03")

CSI: TC=0.47 (2-3:1) , BC=0.13 (4-5:4) , WB=0.00 (n/a:0) , SSI=0.20 (2-3:1)

DOL LUMBER=1.00 NAIL=1.00 LS BEND=1.10 COMP=1.10 SHEAR=1.10 TENS= 1.10

COMPANION LIVE LOAD FACTOR = 0.50

TRUSS PLATE MANUFACTURER IS NOT RESPONSIBLE FOR QUALITY CONTROL IN THE TRUSS MANUFACTURING PLANT .

NAIL VALUES

PLATE	GRIP(DRY) (PSI) MAX	MIN	SHEAR (PLI) MAX	MIN	SECTION (PLI) MAX	MIN
MT20	618	354	1667	822	2284	1656

PLATE PLACEMENT TOL. = 0.250 inches

PLATE ROTATION TOL. = 0.5 Deg.

JSI GRIP= 0.23 (2) (INPUT = 0.90)
JSI METAL= 0.09 (2) (INPUT = 1.00)

10 MAR 2017

RECEIVED
TOWN OF MILTON
MAR 29, 2017
17-4967
BUILDING DIVISION

KOTT

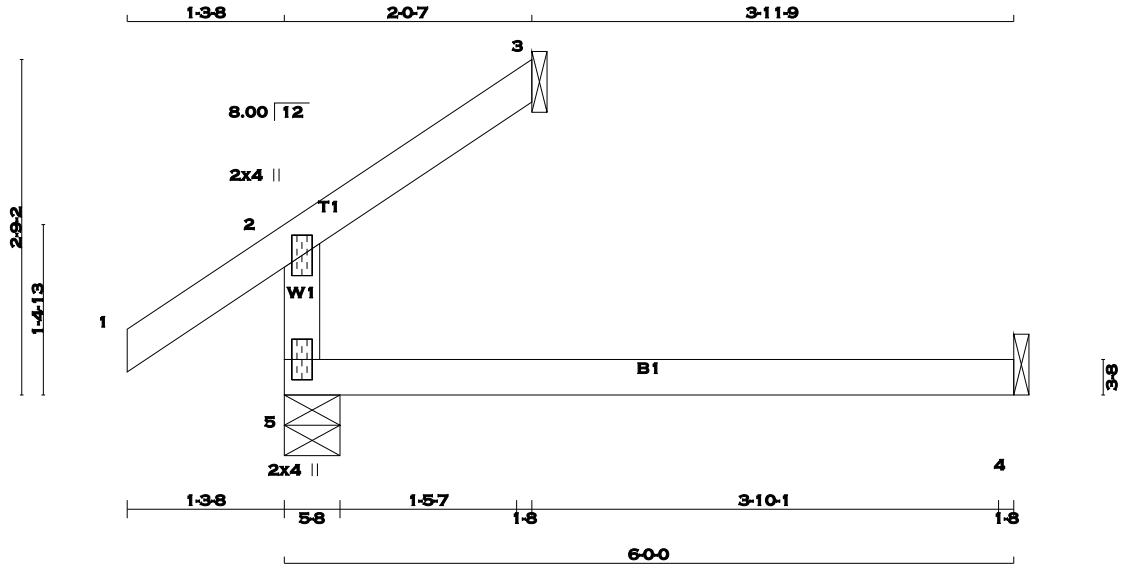

TOTAL WEIGHT = 13 lb [M]

LUMBER

N. L. G. A. RULES

CHORDS	SIZE		LUMBER	DESCR.
5 - 2	2x4	DRY	No.2	SPF
1 - 3	2x4	DRY	No.2	SPF
5 - 4	2x4	DRY	No.2	SPF

DRY: SEASONED LUMBER.

PLATES (table is in inches)

JT	TYPE	PLATES	W	LEN	Y	X
2	TMV+p	MT20	2.0	4.0		
5	BMV1+p	MT20	2.0	4.0		

A SIZE FOR SIZE SUBSTITUTION OF MITEK MII20 WITH TEE-LOK TL20 PLATES IS ALLOWED.

DIMENSIONS, SUPPORTS AND LOADINGS SPECIFIED BY FABRICATOR TO BE VERIFIED BY BUILDING DESIGNER

BEARINGS

JT	FACTORED GROSS REACTION VERT	HORZ	MAXIMUM FACTORED GROSS REACTION DOWN	HORZ	UPLIFT	INPUT BRG IN-SX	REQRD BRG IN-SX
5	265	0	265	0	0	5-8	5-8
3	60	0	60	0	0	1-8	1-8
4	44	0	49	0	0	1-8	1-8

SEE MITEK STANDARD DETAIL B37579H FOR CONNECTION TO JOINT(S) 3 , 4

UNFACTORED REACTIONS

JT	1ST LCASE COMBINED	MAX./MIN. COMPONENT REACTIONS SNOW	LIVE	PERM.LIVE	WIND	DEAD	SOIL
5	188	123 / 0	0 / 0	0 / 0	0 / 0	65 / 0	0 / 0
3	40	36 / 0	0 / 0	0 / 0	0 / 0	5 / 0	0 / 0
4	35	0 / 0	0 / 0	0 / 0	0 / 0	35 / 0	0 / 0

BEARING MATERIAL TO BE SPF NO.2 OR BETTER AT JOINT(S) 5, 3

BRACING

TOP CHORD TO BE SHEATHED OR MAX. PURLIN SPACING = 6.25 FT.
MAX. UNBRACED BOTTOM CHORD LENGTH = 10.00 FT. OR RIGID CEILING DIRECTLY APPLIED.

ALL PITCH BREAKS AND PERIMETER CORNER JOINTS MUST BE LATERALLY RESTRAINED.

LOADING

TOTAL LOAD CASES: (4)

CHORDS MEMB. FR-TO	MAX. FACTORED FORCE (LBS)	FACTORED VERT. LOAD (PLF) FROM	TO	LC1 MAX CSI (LC)	MAX. UNBRAC LENGTH	WEBS MEMB. FR-TO	MAX. FACTORED FORCE (LBS)	MAX CSI (LC)
5- 2	-204 / 0	0.0	0.0	0.12 (4)	7.81			
1- 2	0 / 29	-77.3	-77.3	0.10 (1)	10.00			
2- 3	-11 / 0	-77.3	-77.3	0.05 (1)	6.25			
5- 4	0 / 0	-17.5	-17.5	0.13 (4)	10.00			

DESIGN CRITERIA

SPECIFIED LOADS:

TOP CH.	LL	=	23.3	PSF
	DL	=	3.0	PSF
BOT CH.	LL	=	0.0	PSF
	DL	=	7.0	PSF
TOTAL LOAD		=	33.3	PSF

SPACING = 24.0 IN. C/C

THIS TRUSS IS DESIGNED FOR RESIDENTIAL OR SMALL BUILDING REQUIREMENTS OF PART 9, NBCC 2010

THIS DESIGN COMPLIES WITH:
- PART 9 OF OBC 2012 , BCBC 2012 , ABC 2014
- CSA 086-09
- TPIC 2011

DESIGN ASSUMPTIONS
-OVERHANG NOT TO BE ALTERED OR CUT OFF.

(55 % OF 27.2 P.S.F. G.S.L. PLUS 8.4 P.S.F. RAIN LOAD) EQUALS 23.3 P.S.F. SPECIFIED ROOF LIVE LOAD

ALLOWABLE DEFL.(LL)= L/360 (0.20")
CALCULATED VERT. DEFL.(LL) = L/ 999 (0.00")
ALLOWABLE DEFL.(TL)= L/360 (0.20")
CALCULATED VERT. DEFL.(TL) = L/ 999 (0.03")

CSI: TC=0.12 (2-5:4) , BC=0.13 (4-5:4) , WB=0.00 (n/a:0) , SSI=0.08 (4-5:4)

DOL LUMBER=1.00 NAIL=1.00 LS BEND=1.10 COMP=1.10 SHEAR=1.10 TENS= 1.10

COMPANION LIVE LOAD FACTOR = 0.50

TRUSS PLATE MANUFACTURER IS NOT RESPONSIBLE FOR QUALITY CONTROL IN THE TRUSS MANUFACTURING PLANT .

NAIL VALUES

PLATE	GRIP(DRY) (PSI) MAX	MIN	SHEAR (PLI) MAX	MIN	SECTION (PLI) MAX	MIN
MT20	618	354	1667	822	2284	1656

PLATE PLACEMENT TOL. = 0.250 inches

PLATE ROTATION TOL. = 0.5 Deg.

JSI GRIP= 0.13 (2) (INPUT = 0.90)
JSI METAL= 0.05 (2) (INPUT = 1.00)

READ ALL NOTES ON THIS PAGE AND ON THE ENGINEERING NOTE PAGE ENP-1. THE NOTE PAGE IS AN INTEGRAL PART OF THIS DRAWING AS IT CONTAINS SPECIFICATIONS AND CRITERIA USED IN THE DESIGN OF THIS COMPONENT.

10 MAR 2017

RECEIVED
TOWN OF MILTON
MAR 29, 2017
17-4967
BUILDING DIVISION

KOTT

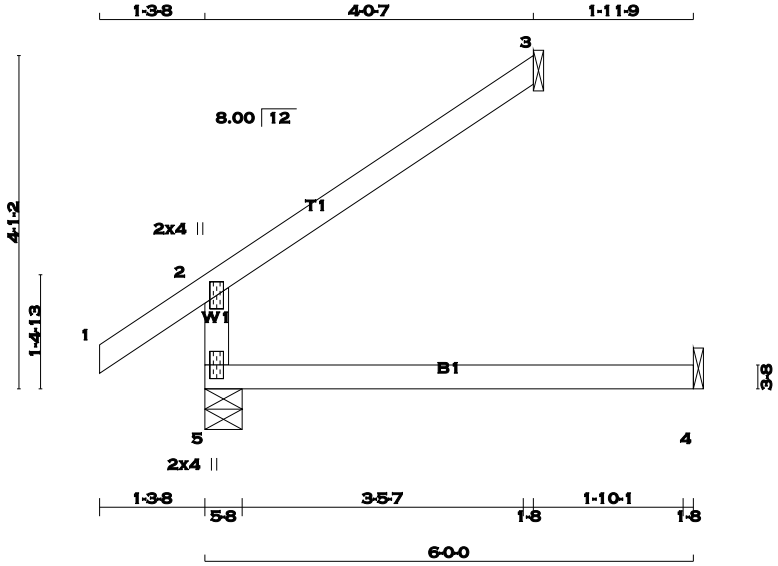

TOTAL WEIGHT = 15 lb [M]

LUMBER

N. L. G. A. RULES

CHORDS	SIZE		LUMBER	DESCR.
5 - 2	2x4	DRY	No.2	SPF
1 - 3	2x4	DRY	No.2	SPF
5 - 4	2x4	DRY	No.2	SPF

DRY: SEASONED LUMBER.

PLATES (table is in inches)

JT	TYPE	PLATES	W	LEN	Y	X
2	TMV+p	MT20	2.0	4.0		
5	BMV1+p	MT20	2.0	4.0		

A SIZE FOR SIZE SUBSTITUTION OF MITEK MII20 WITH TEE-LOK TL20 PLATES IS ALLOWED.

READ ALL NOTES ON THIS PAGE AND ON THE ENGINEERING NOTE PAGE ENP-1. THE NOTE PAGE IS AN INTEGRAL PART OF THIS DRAWING AS IT CONTAINS SPECIFICATIONS AND CRITERIA USED IN THE DESIGN OF THIS COMPONENT.

DIMENSIONS, SUPPORTS AND LOADINGS SPECIFIED BY FABRICATOR TO BE VERIFIED BY BUILDING DESIGNER

BEARINGS

JT	FACTORED GROSS REACTION VERT	HORZ	MAXIMUM GROSS REACTION DOWN	HORZ	FACTORED UPLIFT	INPUT BRG IN-SX	REQRD BRG IN-SX
5	362	0	362	0	0	5-8	5-8
3	117	0	117	0	0	1-8	1-8
4	44	0	49	0	0	1-8	1-8

SEE MITEK STANDARD DETAIL B37579H FOR CONNECTION TO JOINT(S) 3 , 4

UNFACTORED REACTIONS

JT	1ST LCASE COMBINED	MAX./MIN. COMPONENT REACTIONS SNOW	LIVE	PERM.LIVE	WIND	DEAD	SOIL
5	254	181 / 0	0 / 0	0 / 0	0 / 0	72 / 0	0 / 0
3	80	71 / 0	0 / 0	0 / 0	0 / 0	9 / 0	0 / 0
4	35	0 / 0	0 / 0	0 / 0	0 / 0	35 / 0	0 / 0

BEARING MATERIAL TO BE SPF NO.2 OR BETTER AT JOINT(S) 5, 3

BRACING

TOP CHORD TO BE SHEATHED OR MAX. PURLIN SPACING = 6.25 FT.
MAX. UNBRACED BOTTOM CHORD LENGTH = 10.00 FT. OR RIGID CEILING DIRECTLY APPLIED.

ALL PITCH BREAKS AND PERIMETER CORNER JOINTS MUST BE LATERALLY RESTRAINED.

LOADING

TOTAL LOAD CASES: (4)

CHORDS MEMB. FR-TO	MAX. FACTORED FORCE (LBS)	FACTORED VERT. LOAD (PLF) FROM	TO	LC1 MAX CSI (LC)	MAX. UNBRAC LENGTH	WEBS MEMB. FR-TO	MAX. FACTORED FORCE (LBS)	MAX CSI (LC)
5- 2	-301 / 0	0.0	0.0	0.12 (4)	7.81			
1- 2	0 / 29	-77.3	-77.3	0.10 (1)	10.00			
2- 3	-22 / 0	-77.3	-77.3	0.21 (1)	6.25			
5- 4	0 / 0	-17.5	-17.5	0.13 (4)	10.00			

DESIGN CRITERIA

SPECIFIED LOADS:

TOP	CH.	LL	=	23.3	PSF
		DL	=	3.0	PSF
BOT	CH.	LL	=	0.0	PSF
		DL	=	7.0	PSF
TOTAL	LOAD		=	33.3	PSF

SPACING = 24.0 IN. C/C

THIS TRUSS IS DESIGNED FOR RESIDENTIAL OR SMALL BUILDING REQUIREMENTS OF PART 9, NBCC 2010

THIS DESIGN COMPLIES WITH:
- PART 9 OF OBC 2012 , BCBC 2012 , ABC 2014
- CSA 086-09
- TPIC 2011

DESIGN ASSUMPTIONS
-OVERHANG NOT TO BE ALTERED OR CUT OFF.

(55 % OF 27.2 P.S.F. G.S.L. PLUS 8.4 P.S.F. RAIN LOAD) EQUALS 23.3 P.S.F. SPECIFIED ROOF LIVE LOAD

ALLOWABLE DEFL.(LL)= L/360 (0.20")
CALCULATED VERT. DEFL.(LL) = L/ 999 (0.00")
ALLOWABLE DEFL.(TL)= L/360 (0.20")
CALCULATED VERT. DEFL.(TL) = L/ 999 (0.03")

CSI: TC=0.21 (2-3:1) , BC=0.13 (4-5:4) , WB=0.00 (n/a:0) , SSI=0.13 (2-3:1)

DOL LUMBER=1.00 NAIL=1.00 LS BEND=1.10 COMP=1.10 SHEAR=1.10 TENS= 1.10

COMPANION LIVE LOAD FACTOR = 0.50

TRUSS PLATE MANUFACTURER IS NOT RESPONSIBLE FOR QUALITY CONTROL IN THE TRUSS MANUFACTURING PLANT .

NAIL VALUES

PLATE	GRIP(DRY) (PSI) MAX	MIN	SHEAR (PLI) MAX	MIN	SECTION (PLI) MAX	MIN
MT20	618	354	1667	822	2284	1656

PLATE PLACEMENT TOL. = 0.250 inches

PLATE ROTATION TOL. = 5.0 Deg.

JSI GRIP= 0.19 (2) (INPUT = 0.90)
JSI METAL= 0.07 (2) (INPUT = 1.00)

RECEIVED
TOWN OF MILTON
MAR 29, 2017
17-4967
BUILDING DIVISION

10 MAR 2017

KOTT

SCALE = 1:19.4

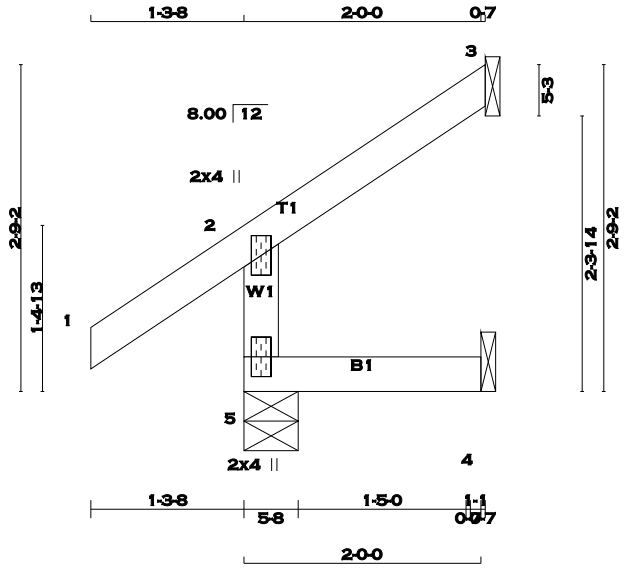

TOTAL WEIGHT = 8 lb [M]

LUMBER

N. L. G. A. RULES

CHORDS	SIZE		LUMBER	DESCR.
5 - 2	2x4	DRY	No.2	SPF
1 - 3	2x4	DRY	No.2	SPF
5 - 4	2x4	DRY	No.2	SPF

DRY: SEASONED LUMBER.

PLATES (table is in inches)

JT	TYPE	PLATES	W	LEN	Y	X
2	TMV+p	MT20	2.0	4.0		
5	BMV1+p	MT20	2.0	4.0		

A SIZE FOR SIZE SUBSTITUTION OF MITEK MII20 WITH TEE-LOK TL20 PLATES IS ALLOWED.

READ ALL NOTES ON THIS PAGE AND ON THE ENGINEERING NOTE PAGE ENP-1. THE NOTE PAGE IS AN INTEGRAL PART OF THIS DRAWING AS IT CONTAINS SPECIFICATIONS AND CRITERIA USED IN THE DESIGN OF THIS COMPONENT.

DIMENSIONS, SUPPORTS AND LOADINGS SPECIFIED BY FABRICATOR TO BE VERIFIED BY BUILDING DESIGNER

BEARINGS

JT	FACTORED GROSS REACTION VERT	HORZ	MAXIMUM FACTORED GROSS REACTION DOWN	HORZ	UPLIFT	INPUT BRG IN-SX	REQRD BRG IN-SX
5	223	0	223	0	0	5-8	5-8
3	60	0	60	0	0	1-8	1-8
4	16	0	18	0	0	1-8	1-8

SEE MITEK STANDARD DETAIL B37579H FOR CONNECTION TO JOINT(S) 3 , 4

UNFACTORED REACTIONS

JT	1ST LCASE COMBINED	MAX./MIN. COMPONENT REACTIONS SNOW	LIVE	PERM.LIVE	WIND	DEAD	SOIL
5	154	123 / 0	0 / 0	0 / 0	0 / 0	31 / 0	0 / 0
3	40	36 / 0	0 / 0	0 / 0	0 / 0	5 / 0	0 / 0
4	13	0 / 0	0 / 0	0 / 0	0 / 0	13 / 0	0 / 0

BEARING MATERIAL TO BE SPF NO.2 OR BETTER AT JOINT(S) 5

BRACING

TOP CHORD TO BE SHEATHED OR MAX. PURLIN SPACING = 6.25 FT.
MAX. UNBRACED BOTTOM CHORD LENGTH = 10.00 FT. OR RIGID CEILING DIRECTLY APPLIED.

ALL PITCH BREAKS AND PERIMETER CORNER JOINTS MUST BE LATERALLY RESTRAINED.

LOADING

TOTAL LOAD CASES: (5)

CHORDS MEMB. FR-TO	MAX. FACTORED FORCE (LBS)	FACTORED VERT. LOAD (PLF) FROM	TO	LC1 MAX CSI (LC)	WEBS MAX. UNBRAC LENGTH	MEMB. FR-TO	MAX. FACTORED FORCE (LBS)	MAX CSI (LC)
5- 2	-204 / 0	0.0	0.0	0.01 (4)	7.81			
1- 2	0 / 29	-77.3	-77.3	0.10 (1)	10.00			
2- 3	-11 / 0	-77.3	-77.3	0.05 (1)	6.25			
5- 4	0 / 0	-17.5	-17.5	0.02 (4)	10.00			

CANTILEVER ANALYSIS HAS BEEN CONSIDERED IN THIS DESIGN

DESIGN CRITERIA

SPECIFIED LOADS:

TOP CH.	LL	=	23.3	PSF
	DL	=	3.0	PSF
BOT CH.	LL	=	0.0	PSF
	DL	=	7.0	PSF
TOTAL LOAD		=	33.3	PSF

SPACING = 24.0 IN. C/C

THIS TRUSS IS DESIGNED FOR RESIDENTIAL OR SMALL BUILDING REQUIREMENTS OF PART 9, NBCC 2010

THIS DESIGN COMPLIES WITH:
- PART 9 OF OBC 2012 , BCBC 2012 , ABC 2014
- CSA 086-09
- TPIC 2011

DESIGN ASSUMPTIONS
-OVERHANG NOT TO BE ALTERED OR CUT OFF.

(55 % OF 27.2 P.S.F. G.S.L. PLUS 8.4 P.S.F. RAIN LOAD) EQUALS 23.3 P.S.F. SPECIFIED ROOF LIVE LOAD

ALLOWABLE DEFL.(LL)= L/360 (0.19")
CALCULATED VERT. DEFL.(LL) = L/ 999 (0.00")
ALLOWABLE DEFL.(TL)= L/360 (0.19")
CALCULATED VERT. DEFL.(TL) = L/ 999 (0.00")

CSI: TC=0.10 (1-2:1) , BC=0.02 (4-5:4) , WB=0.00 (n/a:0) , SSI=0.07 (1-2:1)

DOL LUMBER=1.00 NAIL=1.00 LS BEND=1.10 COMP=1.10 SHEAR=1.10 TENS= 1.10

COMPANION LIVE LOAD FACTOR = 0.50

TRUSS PLATE MANUFACTURER IS NOT RESPONSIBLE FOR QUALITY CONTROL IN THE TRUSS MANUFACTURING PLANT .

NAIL VALUES

PLATE	GRIP(DRY) (PSI) MAX	MIN	SHEAR (PLI) MAX	MIN	SECTION (PLI) MAX	MIN
MT20	618	354	1667	822	2284	1656

PLATE PLACEMENT TOL. = 0.250 inches

PLATE ROTATION TOL. = 5.0 Deg.

JSI GRIP= 0.13 (2) (INPUT = 0.90)
JSI METAL= 0.05 (2) (INPUT = 1.00)

RECEIVED
TOWN OF MILTON
MAR 29, 2017
17-4967
BUILDING DIVISION

10 MAR 2017

KOTT

SCALE = 1:27.4

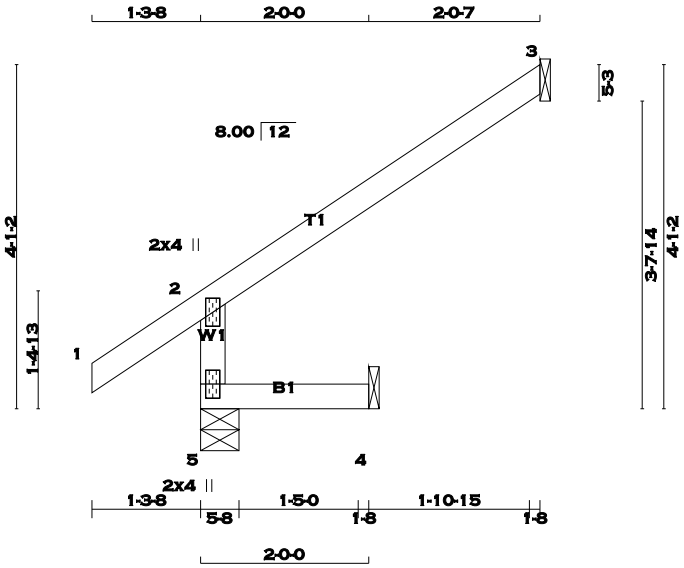

TOTAL WEIGHT = 11 lb [M]

LUMBER

N. L. G. A. RULES

CHORDS	SIZE		LUMBER	DESCR.
5 - 2	2x4	DRY	No.2	SPF
1 - 3	2x4	DRY	No.2	SPF
5 - 4	2x4	DRY	No.2	SPF

DRY: SEASONED LUMBER.

PLATES (table is in inches)

JT	TYPE	PLATES	W	LEN	Y	X
2	TMV+p	MT20	2.0	4.0		
5	BMV1+p	MT20	2.0	4.0		

A SIZE FOR SIZE SUBSTITUTION OF MITEK MII20 WITH TEE-LOK TL20 PLATES IS ALLOWED.

READ ALL NOTES ON THIS PAGE AND ON THE ENGINEERING NOTE PAGE ENP-1. THE NOTE PAGE IS AN INTEGRAL PART OF THIS DRAWING AS IT CONTAINS SPECIFICATIONS AND CRITERIA USED IN THE DESIGN OF THIS COMPONENT.

DIMENSIONS, SUPPORTS AND LOADINGS SPECIFIED BY FABRICATOR TO BE VERIFIED BY BUILDING DESIGNER

BEARINGS

JT	FACTORED GROSS REACTION VERT	HORZ	MAXIMUM FACTORED GROSS REACTION DOWN	HORZ	UPLIFT	INPUT BRG IN-SX	REQRD BRG IN-SX
5	320	0	320	0	0	5-8	5-8
3	117	0	117	0	0	1-8	1-8
4	16	0	18	0	0	1-8	1-8

SEE MITEK STANDARD DETAIL B37579H FOR CONNECTION TO JOINT(S) 3 , 4

UNFACTORED REACTIONS

JT	1ST LCASE COMBINED	MAX./MIN. COMPONENT REACTIONS SNOW	LIVE	PERM.LIVE	WIND	DEAD	SOIL
5	220	181 / 0	0 / 0	0 / 0	0 / 0	39 / 0	0 / 0
3	80	71 / 0	0 / 0	0 / 0	0 / 0	9 / 0	0 / 0
4	13	0 / 0	0 / 0	0 / 0	0 / 0	13 / 0	0 / 0

BEARING MATERIAL TO BE SPF NO.2 OR BETTER AT JOINT(S) 5

BRACING

TOP CHORD TO BE SHEATHED OR MAX. PURLIN SPACING = 6.25 FT.
MAX. UNBRACED BOTTOM CHORD LENGTH = 10.00 FT. OR RIGID CEILING DIRECTLY APPLIED.

ALL PITCH BREAKS AND PERIMETER CORNER JOINTS MUST BE LATERALLY RESTRAINED.

LOADING

TOTAL LOAD CASES: (4)

CHORDS MEMB. FR-TO	MAX. FACTORED FORCE (LBS)	FACTORED VERT. LOAD (PLF) FROM	TO	LC1 MAX CSI (LC)	MAX. UNBRAC LENGTH	WEBS MEMB. FR-TO	MAX. FACTORED FORCE (LBS)	MAX CSI (LC)
5- 2	-301 / 0	0.0	0.0	0.01 (4)	7.81			
1- 2	0 / 29	-77.3	-77.3	0.10 (1)	10.00			
2- 3	-22 / 0	-77.3	-77.3	0.21 (1)	6.25			
5- 4	0 / 0	-17.5	-17.5	0.02 (4)	10.00			

DESIGN CRITERIA

SPECIFIED LOADS:

TOP	CH.	LL	=	23.3	PSF
		DL	=	3.0	PSF
BOT	CH.	LL	=	0.0	PSF
		DL	=	7.0	PSF
TOTAL	LOAD		=	33.3	PSF

SPACING = 24.0 IN. C/C

THIS TRUSS IS DESIGNED FOR RESIDENTIAL OR SMALL BUILDING REQUIREMENTS OF PART 9, NBCC 2010

THIS DESIGN COMPLIES WITH:
- PART 9 OF OBC 2012 , BCBC 2012 , ABC 2014
- CSA 086-09
- TPIC 2011

DESIGN ASSUMPTIONS
-OVERHANG NOT TO BE ALTERED OR CUT OFF.

(55 % OF 27.2 P.S.F. G.S.L. PLUS 8.4 P.S.F. RAIN LOAD) EQUALS 23.3 P.S.F. SPECIFIED ROOF LIVE LOAD

ALLOWABLE DEFL.(TL)= L/360 (0.19")
CALCULATED VERT. DEFL.(TL) = L/ 999 (0.00")

CSI: TC=0.21 (2-3:1) , BC=0.02 (4-5:4) , WB=0.00 (n/a:0) , SSI=0.13 (2-3:1)

DOL LUMBER=1.00 NAIL=1.00 LS BEND=1.10 COMP=1.10 SHEAR=1.10 TENS= 1.10

COMPANION LIVE LOAD FACTOR = 0.50

TRUSS PLATE MANUFACTURER IS NOT RESPONSIBLE FOR QUALITY CONTROL IN THE TRUSS MANUFACTURING PLANT .

NAIL VALUES

PLATE	GRIP(DRY) (PSI) MAX	MIN	SHEAR (PLI) MAX	MIN	SECTION (PLI) MAX	MIN
MT20	618	354	1667	822	2284	1656

PLATE PLACEMENT TOL. = 0.250 inches

PLATE ROTATION TOL. = 5.0 Deg.

JSI GRIP= 0.19 (2) (INPUT = 0.90)
JSI METAL= 0.07 (2) (INPUT = 1.00)

10 MAR 2017

RECEIVED
TOWN OF MILTON
MAR 29, 2017
17-4967
BUILDING DIVISION

KOTT

SCALE = 1:35.9

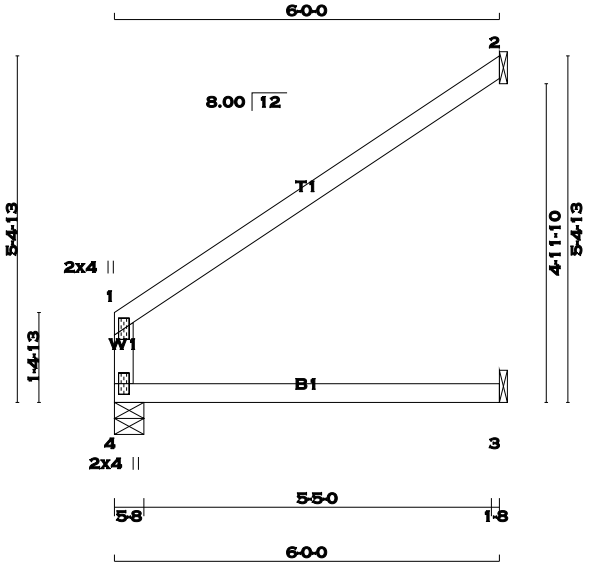

TOTAL WEIGHT = 16 lb

[M][F]

LUMBER

N. L. G. A. RULES

CHORDS	SIZE		LUMBER	DESCR.
4 - 1	2x4	DRY	No.2	SPF
1 - 2	2x4	DRY	No.2	SPF
4 - 3	2x4	DRY	No.2	SPF

DRY: SEASONED LUMBER.

PLATES (table is in inches)

JT	TYPE	PLATES	W	LEN	Y	X
1	TMV+p	MT20	2.0	4.0		
4	BMV1+p	MT20	2.0	4.0		

A SIZE FOR SIZE SUBSTITUTION OF MITEK MII20 WITH TEE-LOK TL20 PLATES IS ALLOWED.

READ ALL NOTES ON THIS PAGE AND ON THE ENGINEERING NOTE PAGE ENP-1. THE NOTE PAGE IS AN INTEGRAL PART OF THIS DRAWING AS IT CONTAINS SPECIFICATIONS AND CRITERIA USED IN THE DESIGN OF THIS COMPONENT.

DIMENSIONS, SUPPORTS AND LOADINGS SPECIFIED BY FABRICATOR TO BE VERIFIED BY BUILDING DESIGNER

BEARINGS

JT	FACTORED GROSS REACTION VERT	HORZ	MAXIMUM FACTORED GROSS REACTION DOWN	HORZ	UPLIFT	INPUT BRG IN-SX	REQRD BRG IN-SX
4	285	0	285	0	0	5-8	5-8
2	211	0	211	0	0	1-8	1-8
3	73	0	73	0	0	1-8	1-8

SEE MITEK STANDARD DETAIL B37579H FOR CONNECTION TO JOINT(S) 2 , 3

UNFACTORED REACTIONS

JT	1ST LCASE COMBINED	MAX./MIN. COMPONENT REACTIONS SNOW	LIVE	PERM.LIVE	WIND	DEAD	SOIL
4	200	140 / 0	0 / 0	0 / 0	0 / 0	60 / 0	0 / 0
2	144	124 / 0	0 / 0	0 / 0	0 / 0	20 / 0	0 / 0
3	55	15 / 0	0 / 0	0 / 0	0 / 0	40 / 0	0 / 0

BEARING MATERIAL TO BE SPF NO.2 OR BETTER AT JOINT(S) 4

BRACING

TOP CHORD TO BE SHEATHED OR MAX. PURLIN SPACING = 6.25 FT.
MAX. UNBRACED BOTTOM CHORD LENGTH = 10.00 FT. OR RIGID CEILING DIRECTLY APPLIED.

ALL PITCH BREAKS AND PERIMETER CORNER JOINTS MUST BE LATERALLY RESTRAINED.

LOADING

TOTAL LOAD CASES: (4)

CHORDS MEMB. FR-TO	MAX. FACTORED FORCE (LBS)	FACTORED VERT. LOAD (PLF) FROM	TO	LC1 MAX CSI (LC)	MAX. UNBRAC LENGTH	WEBS MEMB. FR-TO	MAX. FACTORED FORCE (LBS)	MAX CSI (LC)
4- 1	-253 / 0	0.0	0.0	0.15 (1)	7.81			
1- 2	-11 / 1	-77.3	-77.3	0.40 (1)	6.25			
4- 3	0 / 0	-17.5	-17.5	0.21 (1)	10.00			

DESIGN CRITERIA

SPECIFIED LOADS:

TOP	CH.	LL	=	23.3	PSF
		DL	=	3.0	PSF
BOT	CH.	LL	=	0.0	PSF
		DL	=	7.0	PSF
TOTAL	LOAD		=	33.3	PSF

SPACING = 24.0 IN. C/C

THIS TRUSS IS DESIGNED FOR RESIDENTIAL OR SMALL BUILDING REQUIREMENTS OF PART 9, NBCC 2010

THIS DESIGN COMPLIES WITH:
- PART 9 OF OBC 2012 , BCBC 2012 , ABC 2014
- CSA 086-09
- TPIC 2011

(55 % OF 27.2 P.S.F. G.S.L. PLUS 8.4 P.S.F. RAIN LOAD) EQUALS 23.3 P.S.F. SPECIFIED ROOF LIVE LOAD

ALLOWABLE DEFL.(LL)= L/360 (0.20")
CALCULATED VERT. DEFL.(LL) = L/ 999 (0.05")
ALLOWABLE DEFL.(TL)= L/360 (0.20")
CALCULATED VERT. DEFL.(TL) = L/ 628 (0.11")

CSI: TC=0.40 (1-2:1) , BC=0.21 (3-4:1) , WB=0.00 (n/a:0) , SSI=0.16 (1-2:1)

DOL LUMBER=1.00 NAIL=1.00 LS BEND=1.10 COMP=1.10 SHEAR=1.10 TENS= 1.10

COMPANION LIVE LOAD FACTOR = 0.50

TRUSS PLATE MANUFACTURER IS NOT RESPONSIBLE FOR QUALITY CONTROL IN THE TRUSS MANUFACTURING PLANT .

NAIL VALUES

PLATE	GRIP(DRY) (PSI) MAX	MIN	SHEAR (PLI) MAX	MIN	SECTION (PLI) MAX	MIN
MT20	618	354	1667	822	2284	1656

PLATE PLACEMENT TOL. = 0.250 inches

PLATE ROTATION TOL. = 0.5 Deg.

JSI GRIP= 0.16 (1) (INPUT = 0.90)
JSI METAL= 0.06 (1) (INPUT = 1.00)

10 MAR 2017

RECEIVED
TOWN OF MILTON
MAR 29, 2017
17-4967
BUILDING DIVISION

KOTT

SCALE = 1:22.7

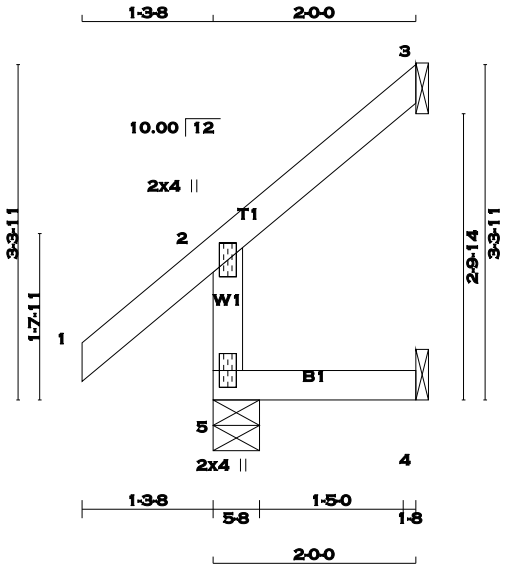

TOTAL WEIGHT = 3 X 9 = 26 lb [M]

LUMBER

N. L. G. A. RULES

CHORDS	SIZE		LUMBER	DESCR.
5 - 2	2x4	DRY	No.2	SPF
1 - 3	2x4	DRY	No.2	SPF
5 - 4	2x4	DRY	No.2	SPF

DRY: SEASONED LUMBER.

PLATES (table is in inches)

JT	TYPE	PLATES	W	LEN	Y	X
2	TMV+p	MT20	2.0	4.0		
5	BMV1+p	MT20	2.0	4.0		

A SIZE FOR SIZE SUBSTITUTION OF MITEK MII20 WITH TEE-LOK TL20 PLATES IS ALLOWED.

READ ALL NOTES ON THIS PAGE AND ON THE ENGINEERING NOTE PAGE ENP-1. THE NOTE PAGE IS AN INTEGRAL PART OF THIS DRAWING AS IT CONTAINS SPECIFICATIONS AND CRITERIA USED IN THE DESIGN OF THIS COMPONENT.

DIMENSIONS, SUPPORTS AND LOADINGS SPECIFIED BY FABRICATOR TO BE VERIFIED BY BUILDING DESIGNER

BEARINGS

JT	FACTORED GROSS REACTION VERT	HORZ	MAXIMUM FACTORED GROSS REACTION DOWN	HORZ	UPLIFT	INPUT BRG IN-SX	REQRD BRG IN-SX
5	222	0	222	0	0	5-8	5-8
3	59	0	59	0	0	1-8	1-8
4	16	0	18	0	0	1-8	1-8

SEE MITEK STANDARD DETAIL B37579H FOR CONNECTION TO JOINT(S) 3 , 4

UNFACTORED REACTIONS

JT	1ST LCASE COMBINED	MAX./MIN. COMPONENT REACTIONS SNOW	LIVE	PERM.LIVE	WIND	DEAD	SOIL
5	153	122 / 0	0 / 0	0 / 0	0 / 0	31 / 0	0 / 0
3	40	35 / 0	0 / 0	0 / 0	0 / 0	5 / 0	0 / 0
4	13	0 / 0	0 / 0	0 / 0	0 / 0	13 / 0	0 / 0

BEARING MATERIAL TO BE SPF NO.2 OR BETTER AT JOINT(S) 5

BRACING

TOP CHORD TO BE SHEATHED OR MAX. PURLIN SPACING = 6.25 FT.
MAX. UNBRACED BOTTOM CHORD LENGTH = 10.00 FT. OR RIGID CEILING DIRECTLY APPLIED.

ALL PITCH BREAKS AND PERIMETER CORNER JOINTS MUST BE LATERALLY RESTRAINED.

LOADING

TOTAL LOAD CASES: (5)

CHORDS MEMB. FR-TO	MAX. FACTORED FORCE (LBS)	FACTORED VERT. LOAD (PLF) FROM	TO	LC1 MAX CSI (LC)	MAX. UNBRAC LENGTH	WEBS MEMB. FR-TO	MAX. FACTORED FORCE (LBS)	MAX CSI (LC)
5- 2	-203 / 0	0.0	0.0	0.01 (4)	7.81			
1- 2	0 / 34	-77.3	-77.3	0.11 (1)	10.00			
2- 3	-12 / 0	-77.3	-77.3	0.05 (1)	6.25			
5- 4	0 / 0	-17.5	-17.5	0.02 (4)	10.00			

CANTILEVER ANALYSIS HAS BEEN CONSIDERED IN THIS DESIGN

DESIGN CRITERIA

SPECIFIED LOADS:

TOP CH.	LL	=	23.3	PSF
	DL	=	3.0	PSF
BOT CH.	LL	=	0.0	PSF
	DL	=	7.0	PSF
TOTAL LOAD		=	33.3	PSF

SPACING = 24.0 IN. C/C

THIS TRUSS IS DESIGNED FOR RESIDENTIAL OR SMALL BUILDING REQUIREMENTS OF PART 9, NBCC 2010

THIS DESIGN COMPLIES WITH:
- PART 9 OF OBC 2012 , BCBC 2012 , ABC 2014
- CSA 086-09
- TPIC 2011

DESIGN ASSUMPTIONS
-OVERHANG NOT TO BE ALTERED OR CUT OFF.

(55 % OF 27.2 P.S.F. G.S.L. PLUS 8.4 P.S.F. RAIN LOAD) EQUALS 23.3 P.S.F. SPECIFIED ROOF LIVE LOAD

ALLOWABLE DEFL.(LL)= L/360 (0.19")
CALCULATED VERT. DEFL.(LL) = L/ 999 (0.00")
ALLOWABLE DEFL.(TL)= L/360 (0.19")
CALCULATED VERT. DEFL.(TL) = L/ 999 (0.00")

CSI: TC=0.11 (1-2:1) , BC=0.02 (4-5:4) , WB=0.00 (n/a:0) , SSI=0.06 (1-2:1)

DOL LUMBER=1.00 NAIL=1.00 LS BEND=1.10 COMP=1.10 SHEAR=1.10 TENS= 1.10

COMPANION LIVE LOAD FACTOR = 0.50

TRUSS PLATE MANUFACTURER IS NOT RESPONSIBLE FOR QUALITY CONTROL IN THE TRUSS MANUFACTURING PLANT .

NAIL VALUES

PLATE	GRIP(DRY) (PSI) MAX	MIN	SHEAR (PLI) MAX	MIN	SECTION (PLI) MAX	MIN
MT20	618	354	1667	822	2284	1656

PLATE PLACEMENT TOL. = 0.250 inches

PLATE ROTATION TOL. = 5.0 Deg.

JSI GRIP= 0.15 (2) (INPUT = 0.90)
JSI METAL= 0.05 (2) (INPUT = 1.00)

RECEIVED
TOWN OF MILTON
MAR 29, 2017
17-4967
BUILDING DIVISION

10 MAR 2017

SCALE = 1:28.8

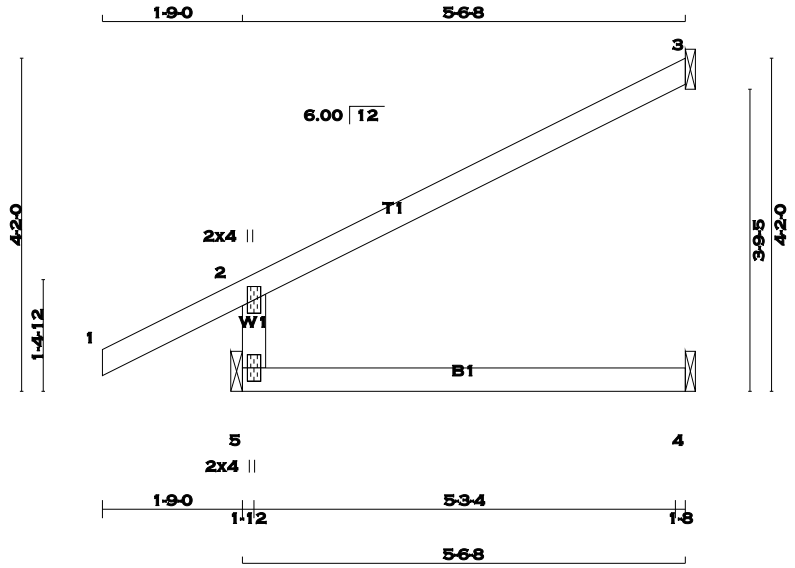

TOTAL WEIGHT = 3 X 17 = 51 lb [M]

LUMBER

N. L. G. A. RULES

CHORDS	SIZE		LUMBER	DESCR.
5 - 2	2x4	DRY	No.2	SPF
1 - 3	2x4	DRY	No.2	SPF
5 - 4	2x4	DRY	No.2	SPF

DRY: SEASONED LUMBER.

PLATES (table is in inches)

JT	TYPE	PLATES	W	LEN	Y	X
2	TMV+p	MT20	2.0	4.0		
5	BMV1+p	MT20	2.0	4.0		

A SIZE FOR SIZE SUBSTITUTION OF MITEK MII20 WITH TEE-LOK TL20 PLATES IS ALLOWED.

READ ALL NOTES ON THIS PAGE AND ON THE ENGINEERING NOTE PAGE ENP-1. THE NOTE PAGE IS AN INTEGRAL PART OF THIS DRAWING AS IT CONTAINS SPECIFICATIONS AND CRITERIA USED IN THE DESIGN OF THIS COMPONENT.

DIMENSIONS, SUPPORTS AND LOADINGS SPECIFIED BY FABRICATOR TO BE VERIFIED BY BUILDING DESIGNER

BEARINGS

JT	FACTORED GROSS REACTION VERT	HORZ	MAXIMUM FACTORED GROSS REACTION DOWN	HORZ	UPLIFT	INPUT BRG IN-SX	REQRD BRG IN-SX
5	464	0	464	0	0	1-12	1-12
3	161	0	161	0	0	1-8	1-8
4	41	0	46	0	0	1-8	1-8

SEE MITEK STANDARD DETAIL B37579H FOR CONNECTION TO JOINT(S) 5 , 3 , 4

UNFACTORED REACTIONS

JT	1ST LCASE COMBINED	MAX./MIN. COMPONENT REACTIONS SNOW	LIVE	PERM.LIVE	WIND	DEAD	SOIL
5	322	246 / 0	0 / 0	0 / 0	0 / 0	77 / 0	0 / 0
3	109	97 / 0	0 / 0	0 / 0	0 / 0	12 / 0	0 / 0
4	33	0 / 0	0 / 0	0 / 0	0 / 0	33 / 0	0 / 0

BRACING

TOP CHORD TO BE SHEATHED OR MAX. PURLIN SPACING = 6.25 FT.
MAX. UNBRACED BOTTOM CHORD LENGTH = 10.00 FT. OR RIGID CEILING DIRECTLY APPLIED.

ALL PITCH BREAKS AND PERIMETER CORNER JOINTS MUST BE LATERALLY RESTRAINED.

LOADING

TOTAL LOAD CASES: (4)

CHORDS MEMB. FR-TO	MAX. FACTORED FORCE (LBS)	FACTORED VERT. LOAD (PLF) FROM	TO	LC1 MAX CSI (LC)	MAX. UNBRAC LENGTH
5- 2	-408 / 0	0.0	0.0	0.10 (4)	7.81
1- 2	0 / 31	-77.3	-77.3	0.18 (1)	10.00
2- 3	-24 / 0	-77.3	-77.3	0.40 (1)	6.25
5- 4	0 / 0	-17.5	-17.5	0.11 (4)	10.00

WEBS MEMB. FR-TO	MAX. FACTORED FORCE (LBS)	MAX CSI (LC)

DESIGN CRITERIA

SPECIFIED LOADS:

TOP CH.	LL	=	23.3	PSF
	DL	=	3.0	PSF
BOT CH.	LL	=	0.0	PSF
	DL	=	7.0	PSF
TOTAL LOAD		=	33.3	PSF

SPACING = 24.0 IN. C/C

THIS TRUSS IS DESIGNED FOR RESIDENTIAL OR SMALL BUILDING REQUIREMENTS OF PART 9, NBCC 2010

THIS DESIGN COMPLIES WITH:
- PART 9 OF OBC 2012 , BCBC 2012 , ABC 2014
- CSA 086-09
- TPIC 2011

DESIGN ASSUMPTIONS
-OVERHANG NOT TO BE ALTERED OR CUT OFF.

(55 % OF 27.2 P.S.F. G.S.L. PLUS 8.4 P.S.F. RAIN LOAD) EQUALS 23.3 P.S.F. SPECIFIED ROOF LIVE LOAD

ALLOWABLE DEFL.(LL)= L/360 (0.19")
CALCULATED VERT. DEFL.(LL) = L/ 999 (0.00")
ALLOWABLE DEFL.(TL)= L/360 (0.19")
CALCULATED VERT. DEFL.(TL) = L/ 999 (0.03")

CSI: TC=0.40 (2-3:1) , BC=0.11 (4-5:4) , WB=0.00 (n/a:0) , SSI=0.19 (2-3:1)

DOL LUMBER=1.00 NAIL=1.00 LS BEND=1.10 COMP=1.10 SHEAR=1.10 TENS= 1.10

COMPANION LIVE LOAD FACTOR = 0.50

TRUSS PLATE MANUFACTURER IS NOT RESPONSIBLE FOR QUALITY CONTROL IN THE TRUSS MANUFACTURING PLANT .

NAIL VALUES

PLATE	GRIP(DRY) (PSI) MAX	MIN	SHEAR (PLI) MAX	MIN	SECTION (PLI) MAX	MIN
MT20	618	354	1667	822	2284	1656

PLATE PLACEMENT TOL. = 0.250 inches

PLATE ROTATION TOL. = 5.0 Deg.

JSI GRIP= 0.24 (2) (INPUT = 0.90)
JSI METAL= 0.09 (2) (INPUT = 1.00)

10 MAR 2017

RECEIVED
TOWN OF MILTON
MAR 29, 2017
17-4967
BUILDING DIVISION

KOTT

SCALE = 1:19.3

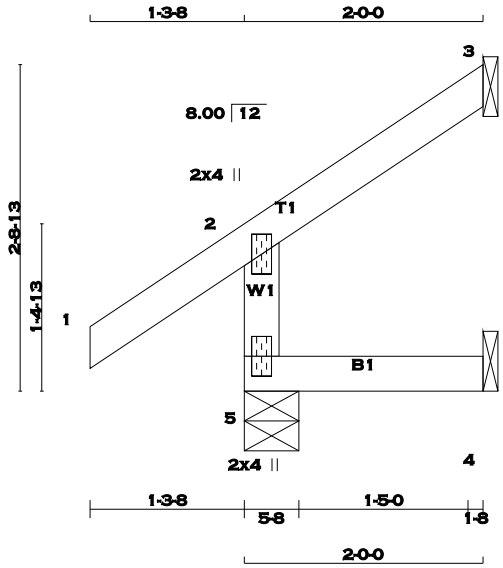

TOTAL WEIGHT = 15 X 8 = 122 lb [M]

LUMBER

N. L. G. A. RULES

CHORDS	SIZE		LUMBER	DESCR.
5 - 2	2x4	DRY	No.2	SPF
1 - 3	2x4	DRY	No.2	SPF
5 - 4	2x4	DRY	No.2	SPF

DRY: SEASONED LUMBER.

PLATES (table is in inches)

JT	TYPE	PLATES	W	LEN	Y	X
2	TMV+p	MT20	2.0	4.0		
5	BMV1+p	MT20	2.0	4.0		

A SIZE FOR SIZE SUBSTITUTION OF MITEK MII20 WITH TEE-LOK TL20 PLATES IS ALLOWED.

READ ALL NOTES ON THIS PAGE AND ON THE ENGINEERING NOTE PAGE ENP-1. THE NOTE PAGE IS AN INTEGRAL PART OF THIS DRAWING AS IT CONTAINS SPECIFICATIONS AND CRITERIA USED IN THE DESIGN OF THIS COMPONENT.

DIMENSIONS, SUPPORTS AND LOADINGS SPECIFIED BY FABRICATOR TO BE VERIFIED BY BUILDING DESIGNER

BEARINGS

JT	FACTORED GROSS REACTION VERT	HORZ	MAXIMUM FACTORED GROSS REACTION DOWN	HORZ	UPLIFT	INPUT BRG IN-SX	REQRD BRG IN-SX
5	222	0	222	0	0	5-8	5-8
3	59	0	59	0	0	1-8	1-8
4	16	0	18	0	0	1-8	1-8

SEE MITEK STANDARD DETAIL B37579H FOR CONNECTION TO JOINT(S) 3 , 4

UNFACTORED REACTIONS

JT	1ST LCASE COMBINED	MAX./MIN. COMPONENT REACTIONS SNOW	LIVE	PERM.LIVE	WIND	DEAD	SOIL
5	153	122 / 0	0 / 0	0 / 0	0 / 0	31 / 0	0 / 0
3	40	35 / 0	0 / 0	0 / 0	0 / 0	5 / 0	0 / 0
4	13	0 / 0	0 / 0	0 / 0	0 / 0	13 / 0	0 / 0

BEARING MATERIAL TO BE SPF NO.2 OR BETTER AT JOINT(S) 5, 3

BRACING

TOP CHORD TO BE SHEATHED OR MAX. PURLIN SPACING = 6.25 FT.
MAX. UNBRACED BOTTOM CHORD LENGTH = 10.00 FT. OR RIGID CEILING DIRECTLY APPLIED.

ALL PITCH BREAKS AND PERIMETER CORNER JOINTS MUST BE LATERALLY RESTRAINED.

LOADING

TOTAL LOAD CASES: (5)

CHORDS MEMB. FR-TO	MAX. FACTORED FORCE (LBS)	FACTORED VERT. LOAD (PLF) FROM	TO	LC1 MAX CSI (LC)	MAX. UNBRAC LENGTH	WEBS MEMB. FR-TO	MAX. FACTORED FORCE (LBS)	MAX CSI (LC)
5- 2	-202 / 0	0.0	0.0	0.01 (4)	7.81			
1- 2	0 / 29	-77.3	-77.3	0.10 (1)	10.00			
2- 3	-10 / 0	-77.3	-77.3	0.05 (1)	6.25			
5- 4	0 / 0	-17.5	-17.5	0.02 (4)	10.00			

CANTILEVER ANALYSIS HAS BEEN CONSIDERED IN THIS DESIGN

DESIGN CRITERIA

SPECIFIED LOADS:

TOP	CH.	LL	=	23.3	PSF
		DL	=	3.0	PSF
BOT	CH.	LL	=	0.0	PSF
		DL	=	7.0	PSF
TOTAL	LOAD		=	33.3	PSF

SPACING = 24.0 IN. C/C

THIS TRUSS IS DESIGNED FOR RESIDENTIAL OR SMALL BUILDING REQUIREMENTS OF PART 9, NBCC 2010

THIS DESIGN COMPLIES WITH:
- PART 9 OF OBC 2012 , BCBC 2012 , ABC 2014
- CSA 086-09
- TPIC 2011

DESIGN ASSUMPTIONS
-OVERHANG NOT TO BE ALTERED OR CUT OFF.

(55 % OF 27.2 P.S.F. G.S.L. PLUS 8.4 P.S.F. RAIN LOAD) EQUALS 23.3 P.S.F. SPECIFIED ROOF LIVE LOAD

ALLOWABLE DEFL.(LL)= L/360 (0.19")
CALCULATED VERT. DEFL.(LL) = L/ 999 (0.00")
ALLOWABLE DEFL.(TL)= L/360 (0.19")
CALCULATED VERT. DEFL.(TL) = L/ 999 (0.00")

CSI: TC=0.10 (1-2:1) , BC=0.02 (4-5:4) , WB=0.00 (n/a:0) , SSI=0.07 (1-2:1)

DOL LUMBER=1.00 NAIL=1.00 LS BEND=1.10 COMP=1.10 SHEAR=1.10 TENS= 1.10

COMPANION LIVE LOAD FACTOR = 0.50

TRUSS PLATE MANUFACTURER IS NOT RESPONSIBLE FOR QUALITY CONTROL IN THE TRUSS MANUFACTURING PLANT .

NAIL VALUES

PLATE	GRIP(DRY) (PSI) MAX	MIN	SHEAR (PLI) MAX	MIN	SECTION (PLI) MAX	MIN
MT20	618	354	1667	822	2284	1656

PLATE PLACEMENT TOL. = 0.250 inches

PLATE ROTATION TOL. = 0.5 Deg.

JSI GRIP= 0.13 (2) (INPUT = 0.90)
JSI METAL= 0.05 (2) (INPUT = 1.00)

RECEIVED
TOWN OF MILTON
MAR 29, 2017
17-4967
BUILDING DIVISION

10 MAR 2017

KOTT

SCALE = 1:28.3

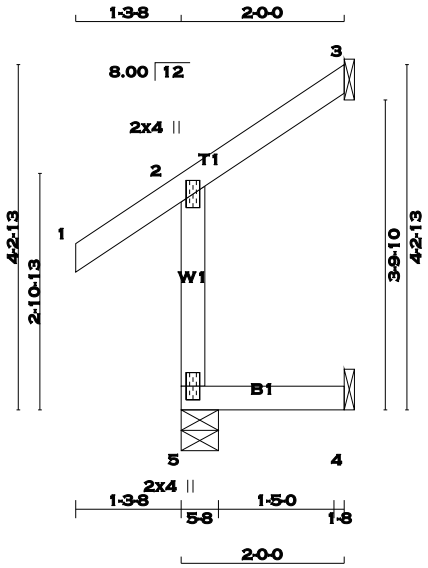

TOTAL WEIGHT = 10 lb [M]

LUMBER

N. L. G. A. RULES

CHORDS	SIZE		LUMBER	DESCR.
5 - 2	2x4	DRY	No.2	SPF
1 - 3	2x4	DRY	No.2	SPF
5 - 4	2x4	DRY	No.2	SPF

DRY: SEASONED LUMBER.

PLATES (table is in inches)

JT	TYPE	PLATES	W	LEN	Y	X
2	TMV+p	MT20	2.0	4.0		
5	BMV1+p	MT20	2.0	4.0		

A SIZE FOR SIZE SUBSTITUTION OF MITEK MII20 WITH TEE-LOK TL20 PLATES IS ALLOWED.

READ ALL NOTES ON THIS PAGE AND ON THE ENGINEERING NOTE PAGE ENP-1. THE NOTE PAGE IS AN INTEGRAL PART OF THIS DRAWING AS IT CONTAINS SPECIFICATIONS AND CRITERIA USED IN THE DESIGN OF THIS COMPONENT.

DIMENSIONS, SUPPORTS AND LOADINGS SPECIFIED BY FABRICATOR TO BE VERIFIED BY BUILDING DESIGNER

BEARINGS

JT	FACTORED GROSS REACTION VERT	HORZ	MAXIMUM FACTORED GROSS REACTION DOWN	HORZ	UPLIFT	INPUT BRG IN-SX	REQRD BRG IN-SX
5	220	0	220	0	0	5-8	5-8
3	59	0	59	0	0	1-8	1-8
4	17	0	19	0	0	1-8	1-8

SEE MITEK STANDARD DETAIL B37579H FOR CONNECTION TO JOINT(S) 3 , 4

UNFACTORED REACTIONS

JT	1ST LCASE COMBINED	MAX./MIN. COMPONENT REACTIONS SNOW	LIVE	PERM.LIVE	WIND	DEAD	SOIL
5	152	121 / 0	0 / 0	0 / 0	0 / 0	30 / 0	0 / 0
3	40	36 / 0	0 / 0	0 / 0	0 / 0	5 / 0	0 / 0
4	13	0 / 0	0 / 0	0 / 0	0 / 0	13 / 0	0 / 0

BEARING MATERIAL TO BE SPF NO.2 OR BETTER AT JOINT(S) 5

BRACING

TOP CHORD TO BE SHEATHED OR MAX. PURLIN SPACING = 6.25 FT.
MAX. UNBRACED BOTTOM CHORD LENGTH = 10.00 FT. OR RIGID CEILING DIRECTLY APPLIED.

ALL PITCH BREAKS AND PERIMETER CORNER JOINTS MUST BE LATERALLY RESTRAINED.

LOADING

TOTAL LOAD CASES: (5)

CHORDS MEMB. FR-TO	MAX. FACTORED FORCE (LBS)	FACTORED VERT. LOAD LC1 (PLF) FROM	TO	MAX CSI (LC)	MAX. UNBRAC LENGTH	WEBS MEMB. FR-TO	MAX. FACTORED FORCE (LBS)	MAX CSI (LC)
5- 2	-202 / 0	0.0	0.0	0.00 (4)	7.81			
1- 2	0 / 29	-77.3	-77.3	0.10 (1)	10.00			
2- 3	-10 / 0	-77.3	-77.3	0.05 (1)	6.25			
5- 4	0 / 0	-17.5	-17.5	0.02 (4)	10.00			

CANTILEVER ANALYSIS HAS BEEN CONSIDERED IN THIS DESIGN

DESIGN CRITERIA

SPECIFIED LOADS:

TOP	CH.	LL	=	23.3	PSF
		DL	=	3.0	PSF
BOT	CH.	LL	=	0.0	PSF
		DL	=	7.0	PSF
TOTAL	LOAD		=	33.3	PSF

SPACING = 24.0 IN. C/C

THIS TRUSS IS DESIGNED FOR RESIDENTIAL OR SMALL BUILDING REQUIREMENTS OF PART 9, NBCC 2010

THIS DESIGN COMPLIES WITH:
- PART 9 OF OBC 2012 , BCBC 2012 , ABC 2014
- CSA 086-09
- TPIC 2011

DESIGN ASSUMPTIONS
-OVERHANG NOT TO BE ALTERED OR CUT OFF.

(55 % OF 27.2 P.S.F. G.S.L. PLUS 8.4 P.S.F. RAIN LOAD) EQUALS 23.3 P.S.F. SPECIFIED ROOF LIVE LOAD

ALLOWABLE DEFL.(LL)= L/360 (0.19")
CALCULATED VERT. DEFL.(LL) = L/ 999 (0.00")
ALLOWABLE DEFL.(TL)= L/360 (0.19")
CALCULATED VERT. DEFL.(TL) = L/ 999 (0.00")

CSI: TC=0.10 (1-2:1) , BC=0.02 (4-5:4) , WB=0.00 (n/a:0) , SSI=0.07 (1-2:1)

DOL LUMBER=1.00 NAIL=1.00 LS BEND=1.10 COMP=1.10 SHEAR=1.10 TENS= 1.10

COMPANION LIVE LOAD FACTOR = 0.50

TRUSS PLATE MANUFACTURER IS NOT RESPONSIBLE FOR QUALITY CONTROL IN THE TRUSS MANUFACTURING PLANT .

NAIL VALUES

PLATE	GRIP(DRY) (PSI) MAX	MIN	SHEAR (PLI) MAX	MIN	SECTION (PLI) MAX	MIN
MT20	618	354	1667	822	2284	1656

PLATE PLACEMENT TOL. = 0.250 inches

PLATE ROTATION TOL. = 5.0 Deg.

JSI GRIP= 0.13 (2) (INPUT = 0.90)
JSI METAL= 0.05 (2) (INPUT = 1.00)

RECEIVED
TOWN OF MILTON
MAR 29, 2017
17-4967
BUILDING DIVISION

10 MAR 2017

KOTT

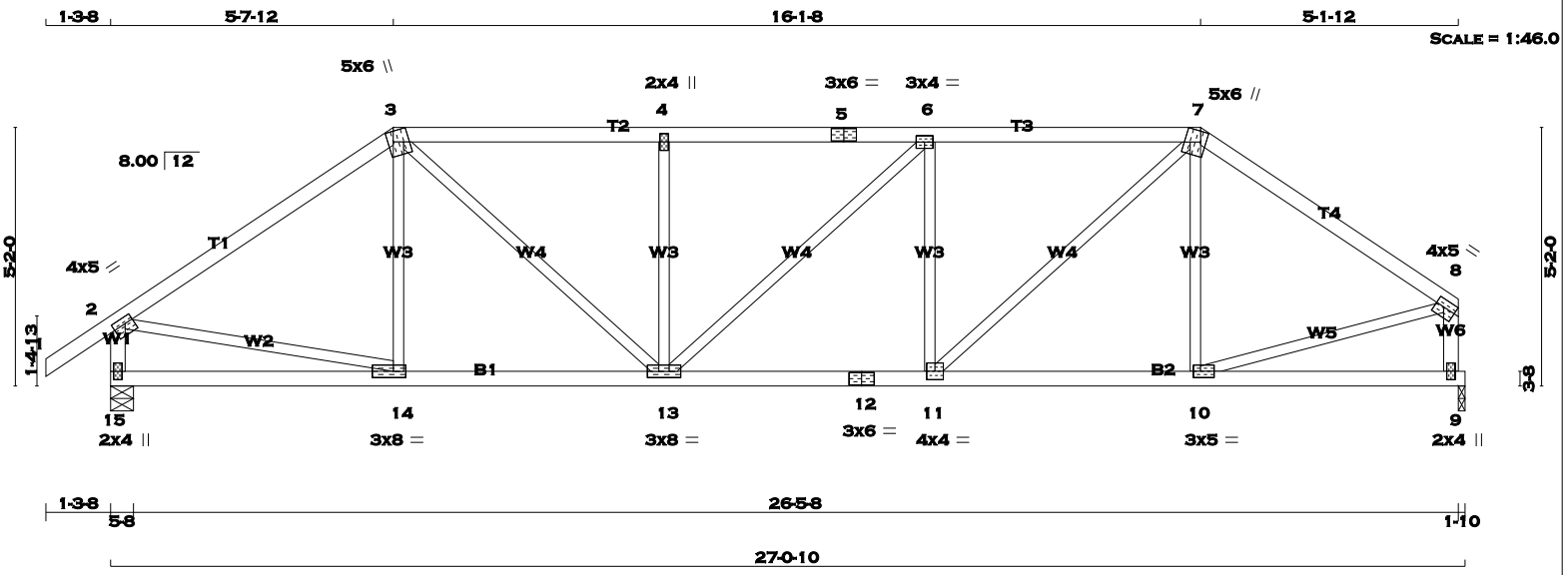

TOTAL WEIGHT = 109 lb [M]

LUMBER

N. L. G. A. RULES

CHORDS	SIZE		LUMBER	DESCR.
1 - 3	2x4	DRY	No.2	SPF
3 - 5	2x4	DRY	No.2	SPF
5 - 7	2x4	DRY	No.2	SPF
7 - 8	2x4	DRY	No.2	SPF
15 - 2	2x4	DRY	No.2	SPF
9 - 8	2x4	DRY	No.2	SPF
15 - 12	2x4	DRY	No.2	SPF
12 - 9	2x4	DRY	No.2	SPF
ALL WEBS EXCEPT	2x3	DRY	No.2	SPF

DRY: SEASONED LUMBER.

PLATES (table is in inches)

JT	TYPE	PLATES	W	LEN	Y	X
2	TMVW-t	MT20	4.0	5.0	1.50	2.00
3	TTWW+m	MT20	5.0	6.0	Edge	3.75
4	TMW+w	MT20	2.0	4.0		
5	TS-t	MT20	3.0	6.0		
6	TMWW-t	MT20	3.0	4.0		
7	TTWW+m	MT20	5.0	6.0	Edge	3.75
8	TMVW-t	MT20	4.0	5.0	1.75	Edge
9	BMV1+p	MT20	2.0	4.0		
10	BMWW-t	MT20	3.0	5.0	1.50	1.75
11	BMWW-t	MT20	4.0	4.0		
12	BS-t	MT20	3.0	6.0		
13	BMWWW-t	MT20	3.0	8.0		
14	BMWW-t	MT20	3.0	8.0	1.50	3.00
15	BMV1+p	MT20	2.0	4.0		

Edge - INDICATES REFERENCE CORNER OF PLATE TOUCHES EDGE OF CHORD.

A SIZE FOR SIZE SUBSTITUTION OF MITEK MII20 WITH TEE-LOK TL20 PLATES IS ALLOWED.

READ ALL NOTES ON THIS PAGE AND ON THE ENGINEERING NOTE PAGE ENP-1. THE NOTE PAGE IS AN INTEGRAL PART OF THIS DRAWING AS IT CONTAINS SPECIFICATIONS AND CRITERIA USED IN THE DESIGN OF THIS COMPONENT.

DIMENSIONS, SUPPORTS AND LOADINGS SPECIFIED BY FABRICATOR TO BE VERIFIED BY BUILDING DESIGNER

BEARINGS

JT	FACTORED GROSS REACTION VERT	HORZ	MAXIMUM FACTORED GROSS REACTION DOWN	HORZ	UPLIFT	INPUT BRG IN-SX	REQRD BRG IN-SX
15	1383	0	1383	0	0	5-8	5-8
9	1276	0	1276	0	0	1-10	1-10

UNFACTORED REACTIONS

JT	1ST LCASE COMBINED	MAX./MIN. COMPONENT REACTIONS SNOW	LIVE	PERM.LIVE	WIND	DEAD	SOIL
15	968	691 / 0	0 / 0	0 / 0	0 / 0	277 / 0	0 / 0
9	896	627 / 0	0 / 0	0 / 0	0 / 0	269 / 0	0 / 0

BEARING MATERIAL TO BE SPF NO.2 OR BETTER AT JOINT(S) 15, 9

BRACING

TOP CHORD TO BE SHEATHED OR MAX. PURLIN SPACING = 4.64 FT.
MAX. UNBRACED BOTTOM CHORD LENGTH = 10.00 FT. OR RIGID CEILING DIRECTLY APPLIED.

ALL PITCH BREAKS AND PERIMETER CORNER JOINTS MUST BE LATERALLY RESTRAINED.

LOADING

TOTAL LOAD CASES: (4)

CHORDS

MEMB. FR-TO	MAX. FACTORED FORCE (LBS)	FACTORED VERT. LOAD (PLF) FROM	TO	LC1 CSI (LC)	MAX UNBRAC LENGTH
1- 2	0 / 29	-77.3	-77.3	0.10 (1)	10.00
2- 3	-1428 / 0	-77.3	-77.3	0.52 (1)	4.83
3- 4	-1755 / 0	-77.3	-77.3	0.36 (1)	4.65
4- 5	-1755 / 0	-77.3	-77.3	0.37 (1)	4.64
5- 6	-1755 / 0	-77.3	-77.3	0.37 (1)	4.64
6- 7	-1731 / 0	-77.3	-77.3	0.37 (1)	4.68
7- 8	-1334 / 0	-77.3	-77.3	0.42 (1)	5.10
15- 2	-1342 / 0	0.0	0.0	0.14 (1)	7.00
9- 8	-1240 / 0	0.0	0.0	0.13 (1)	7.21
15-14	0 / 0	-17.5	-17.5	0.13 (4)	10.00
14-13	0 / 1184	-17.5	-17.5	0.26 (1)	10.00
13-12	0 / 1731	-17.5	-17.5	0.32 (1)	10.00
12-11	0 / 1731	-17.5	-17.5	0.32 (1)	10.00
11-10	0 / 1104	-17.5	-17.5	0.24 (1)	10.00
10- 9	0 / 0	-17.5	-17.5	0.12 (4)	10.00

WEBS

MEMB. FR-TO	MAX. FACTORED FORCE (LBS)	MAX CSI (LC)
14- 3	-112 / 56	0.04 (1)
3-13	0 / 767	0.17 (1)
13- 4	-448 / 0	0.18 (1)
13- 6	0 / 33	0.01 (1)
11- 6	-472 / 0	0.19 (1)
11- 7	0 / 842	0.19 (1)
10- 7	-194 / 26	0.08 (1)
2-14	0 / 1208	0.27 (1)
10- 8	0 / 1148	0.26 (1)

DESIGN CRITERIA

SPECIFIED LOADS:

TOP CH.	LL	=	23.3	PSF
	DL	=	3.0	PSF
BOT CH.	LL	=	0.0	PSF
	DL	=	7.0	PSF
TOTAL LOAD		=	33.3	PSF

SPACING = 24.0 IN. C/C

LOADING IN FLAT SECTION BASED ON A SLOPE OF 2.00/12 MINIMUM

THIS TRUSS IS DESIGNED FOR RESIDENTIAL OR SMALL BUILDING REQUIREMENTS OF PART 9, NBCC 2010

THIS DESIGN COMPLIES WITH:
- PART 9 OF OBC 2012 , BCBC 2012 , ABC 2014
- CSA 086-09
- TPIC 2011

(55 % OF 27.2 P.S.F. G.S.L. PLUS 8.4 P.S.F. RAIN LOAD) EQUALS 23.3 P.S.F. SPECIFIED ROOF LIVE LOAD

ALLOWABLE DEFL.(LL)= L/360 (0.90")
CALCULATED VERT. DEFL.(LL) = L/ 999 (0.07")
ALLOWABLE DEFL.(TL)= L/360 (0.90")
CALCULATED VERT. DEFL.(TL) = L/ 999 (0.14")

CSI: TC=0.52 (2-3:1) , BC=0.32 (11-13:1) , WB=0.27 (2-14:1) , SSI=0.19 (6-7:1)

DOL LUMBER=1.00 NAIL=1.00 LS BEND=1.10 COMP=1.10 SHEAR=1.10 TENS= 1.10

COMPANION LIVE LOAD FACTOR = 0.50

TRUSS PLATE MANUFACTURER IS NOT RESPONSIBLE FOR QUALITY CONTROL IN THE TRUSS MANUFACTURING PLANT .

NAIL VALUES

PLATE	GRIP(DRY) (PSI) MAX	MIN	SHEAR (PLI) MAX	MIN	SECTION (PLI) MAX	MIN
MT20	618	354	1667	822	2284	1656

PLATE PLACEMENT TOL. = 0.250 inches

PLATE ROTATION TOL. = 5.0 Deg.

JSI GRIP= 0.90 (10) (INPUT = 0.90)
JSI METAL= 0.48 (2) (INPUT = 1.00)

RECEIVED
TOWN OF MILTON
MAR 29, 2017
17-4967
BUILDING DIVISION

10 MAR 2017

KOTT

JOB NAME	TRUSS NAME	QUANTITY	PLY	JOB DESC.	DRWG NO.
CC0317-045	T02	1	1	TRUSS DESC. GREENPARK-LECCO RIDGE-BLOCK 325	

KOTT , Stouffville, ON, CGC

Version 8.100 S Jan 17 2017 MiTek Industries, Inc. Fri Mar 10 13:59:27 2017 Page 1
ID:ROua3U0CylZcrhsEOCClEDyLKB3-yfF9jmtIC0e5Xqrx?rM7qGewKm9S7ETenwM7y9zcJdk

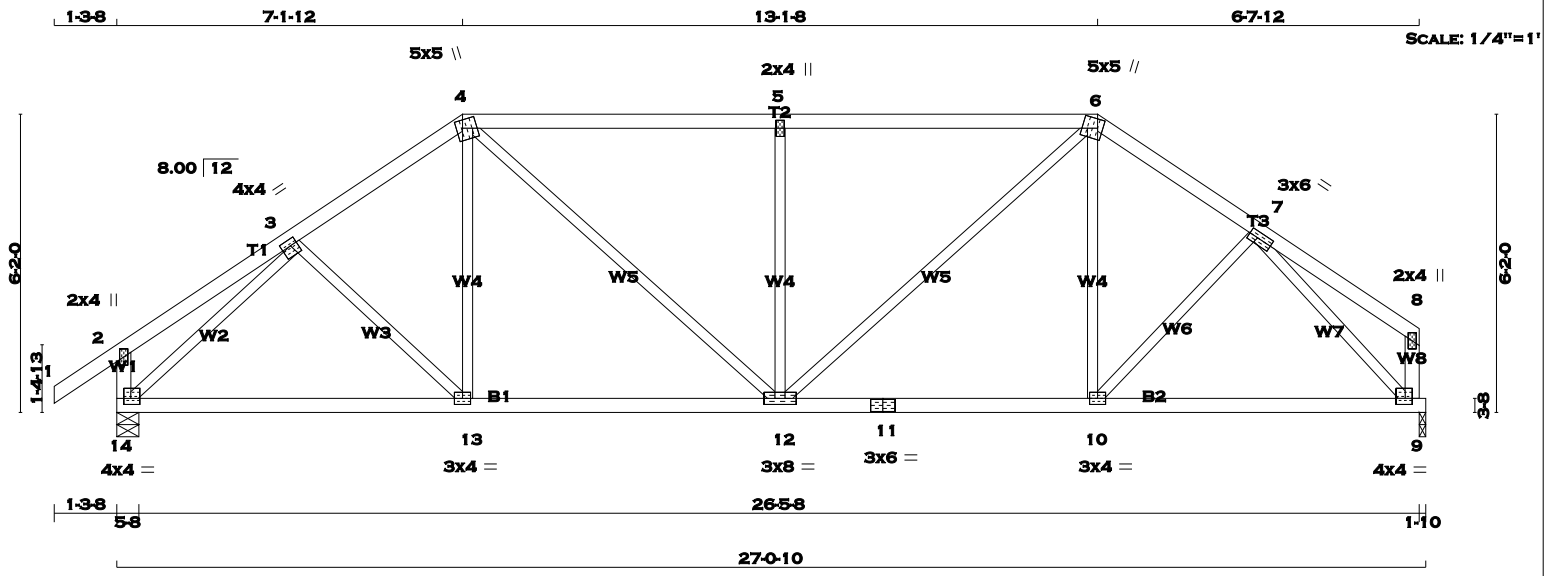

TOTAL WEIGHT = 112 lb
[M][F]

LUMBER
N. L. G. A. RULES

CHORDS	SIZE		LUMBER	DESCR.
1 - 4	2x4	DRY	No.2	SPF
4 - 6	2x4	DRY	No.2	SPF
6 - 8	2x4	DRY	No.2	SPF
14 - 2	2x4	DRY	No.2	SPF
9 - 8	2x4	DRY	No.2	SPF
14 - 11	2x4	DRY	No.2	SPF
11 - 9	2x4	DRY	No.2	SPF
ALL WEBS EXCEPT	2x3	DRY	No.2	SPF

DRY: SEASONED LUMBER.

PLATES (table is in inches)

JT	TYPE	PLATES	W	LEN	Y	X
2	TMV+p	MT20	2.0	4.0		
3	TMWW-t	MT20	4.0	4.0	1.50	1.75
4	TTWW+m	MT20	5.0	5.0	2.00	1.50
5	TMW+w	MT20	2.0	4.0		
6	TTWW+m	MT20	5.0	5.0	2.25	1.25
7	TMWW-t	MT20	3.0	6.0	1.50	2.25
8	TMV+p	MT20	2.0	4.0		
9	BMVW1-t	MT20	4.0	4.0	1.50	1.75
10	BMWW-t	MT20	3.0	4.0		
11	BS-t	MT20	3.0	6.0		
12	BMWWW-t	MT20	3.0	8.0		
13	BMWW-t	MT20	3.0	4.0		
14	BMVW1-t	MT20	4.0	4.0	1.50	1.75

A SIZE FOR SIZE SUBSTITUTION OF MITEK MII20 WITH TEE-LOK TL20 PLATES IS ALLOWED.

READ ALL NOTES ON THIS PAGE AND ON THE ENGINEERING NOTE PAGE ENP-1. THE NOTE PAGE IS AN INTEGRAL PART OF THIS DRAWING AS IT CONTAINS SPECIFICATIONS AND CRITERIA USED IN THE DESIGN OF THIS COMPONENT.

DIMENSIONS, SUPPORTS AND LOADINGS SPECIFIED BY FABRICATOR TO BE VERIFIED BY BUILDING DESIGNER

BEARINGS

JT	FACTORED GROSS REACTION VERT	HORZ	MAXIMUM FACTORED GROSS REACTION DOWN	HORZ	UPLIFT	INPUT BRG IN-SX	REQRD BRG IN-SX
14	1383	0	1383	0	0	5-8	5-8
9	1276	0	1276	0	0	1-10	1-10

UNFACTORED REACTIONS

JT	1ST LCASE COMBINED	MAX./MIN. COMPONENT REACTIONS SNOW	LIVE	PERM.LIVE	WIND	DEAD	SOIL
14	968	691 / 0	0 / 0	0 / 0	0 / 0	277 / 0	0 / 0
9	896	627 / 0	0 / 0	0 / 0	0 / 0	269 / 0	0 / 0

BEARING MATERIAL TO BE SPF NO.2 OR BETTER AT JOINT(S) 14, 9

BRACING
TOP CHORD TO BE SHEATHED OR MAX. PURLIN SPACING = 4.75 FT.
MAX. UNBRACED BOTTOM CHORD LENGTH = 10.00 FT. OR RIGID CEILING DIRECTLY APPLIED.

ALL PITCH BREAKS AND PERIMETER CORNER JOINTS MUST BE LATERALLY RESTRAINED.

LOADING
TOTAL LOAD CASES: (4)

CHORDS

MEMB. FR-TO	MAX. FACTORED FORCE (LBS)	FACTORED VERT. LOAD (PLF) FROM	TO	LC1 CSI (LC)	MAX UNBRAC LENGTH
1- 2	0 / 29	-77.3	-77.3	0.10 (1)	10.00
2- 3	0 / 16	-77.3	-77.3	0.14 (1)	10.00
3- 4	-1410 / 0	-77.3	-77.3	0.13 (1)	5.37
4- 5	-1537 / 0	-77.3	-77.3	0.47 (1)	4.75
5- 6	-1537 / 0	-77.3	-77.3	0.47 (1)	4.75
6- 7	-1345 / 0	-77.3	-77.3	0.11 (1)	5.49
7- 8	0 / 15	-77.3	-77.3	0.12 (1)	10.00
14- 2	-215 / 0	0.0	0.0	0.02 (1)	7.81
9- 8	-102 / 0	0.0	0.0	0.01 (1)	7.81
14-13	0 / 1151	-17.5	-17.5	0.30 (1)	10.00
13-12	0 / 1160	-17.5	-17.5	0.30 (1)	10.00
12-11	0 / 1105	-17.5	-17.5	0.29 (1)	10.00
11-10	0 / 1105	-17.5	-17.5	0.29 (1)	10.00
10- 9	0 / 1033	-17.5	-17.5	0.27 (1)	10.00

WEBS

MEMB. FR-TO	MAX. FACTORED FORCE (LBS)	MAX CSI (LC)
3-13	0 / 51	0.02 (4)
13- 4	0 / 134	0.04 (4)
4-12	0 / 506	0.11 (1)
12- 5	-624 / 0	0.37 (1)
12- 6	0 / 579	0.13 (1)
10- 6	0 / 95	0.03 (4)
10- 7	0 / 104	0.03 (4)
14- 3	-1604 / 0	0.63 (1)
7- 9	-1529 / 0	0.58 (1)

DESIGN CRITERIA

SPECIFIED LOADS:

TOP CH.	LL	=	23.3	PSF
	DL	=	3.0	PSF
BOT CH.	LL	=	0.0	PSF
	DL	=	7.0	PSF
TOTAL LOAD		=	33.3	PSF

SPACING = 24.0 IN. C/C

LOADING IN FLAT SECTION BASED ON A SLOPE OF 2.00/12 MINIMUM

THIS TRUSS IS DESIGNED FOR RESIDENTIAL OR SMALL BUILDING REQUIREMENTS OF PART 9, NBCC 2010

THIS DESIGN COMPLIES WITH:
- PART 9 OF OBC 2012 , BCBC 2012 , ABC 2014
- CSA 086-09
- TPIC 2011

(55 % OF 27.2 P.S.F. G.S.L. PLUS 8.4 P.S.F. RAIN LOAD) EQUALS 23.3 P.S.F. SPECIFIED ROOF LIVE LOAD

ALLOWABLE DEFL.(LL)= L/360 (0.90")
CALCULATED VERT. DEFL.(LL) = L/ 999 (0.06")
ALLOWABLE DEFL.(TL)= L/360 (0.90")
CALCULATED VERT. DEFL.(TL) = L/ 999 (0.11")

CSI: TC=0.47 (5-6:1) , BC=0.30 (12-13:1) , WB=0.63 (3-14:1) , SSI=0.25 (5-6:1)

DOL LUMBER=1.00 NAIL=1.00 LS BEND=1.10 COMP=1.10 SHEAR=1.10 TENS= 1.10

COMPANION LIVE LOAD FACTOR = 0.50

TRUSS PLATE MANUFACTURER IS NOT RESPONSIBLE FOR QUALITY CONTROL IN THE TRUSS MANUFACTURING PLANT .

NAIL VALUES

PLATE	GRIP(DRY) (PSI) MAX	MIN	SHEAR (PLI) MAX	MIN	SECTION (PLI) MAX	MIN
MT20	618	354	1667	822	2284	1656

PLATE PLACEMENT TOL. = 0.250 inches

PLATE ROTATION TOL. = 5.0 Deg.

JSI GRIP= 0.89 (14) (INPUT = 0.90)
JSI METAL= 0.59 (3) (INPUT = 1.00)

RECEIVED
TOWN OF MILTON
MAR 29, 2017
17-4967
BUILDING DIVISION

10 MAR 2017

KOTT

JOB NAME	TRUSS NAME	QUANTITY	PLY	JOB DESC.	DRWG NO.
CC0317-045	T03	1	1	TRUSS DESC. GREENPARK-LECCO RIDGE-BLOCK 325	

ENG JOB: CC0317-045

KOTT , Stouffville, ON, CGC

Version 8.100 S Jan 17 2017 MiTek Industries, Inc. Fri Mar 10 13:59:27 2017 Page 1

ID:ROua3U0CyIZcrhsEOCClEDyLKB3-yfF9jmtIC0e5Xqrx?rM7qGezRmAU7HgenwM7y9zcJdk

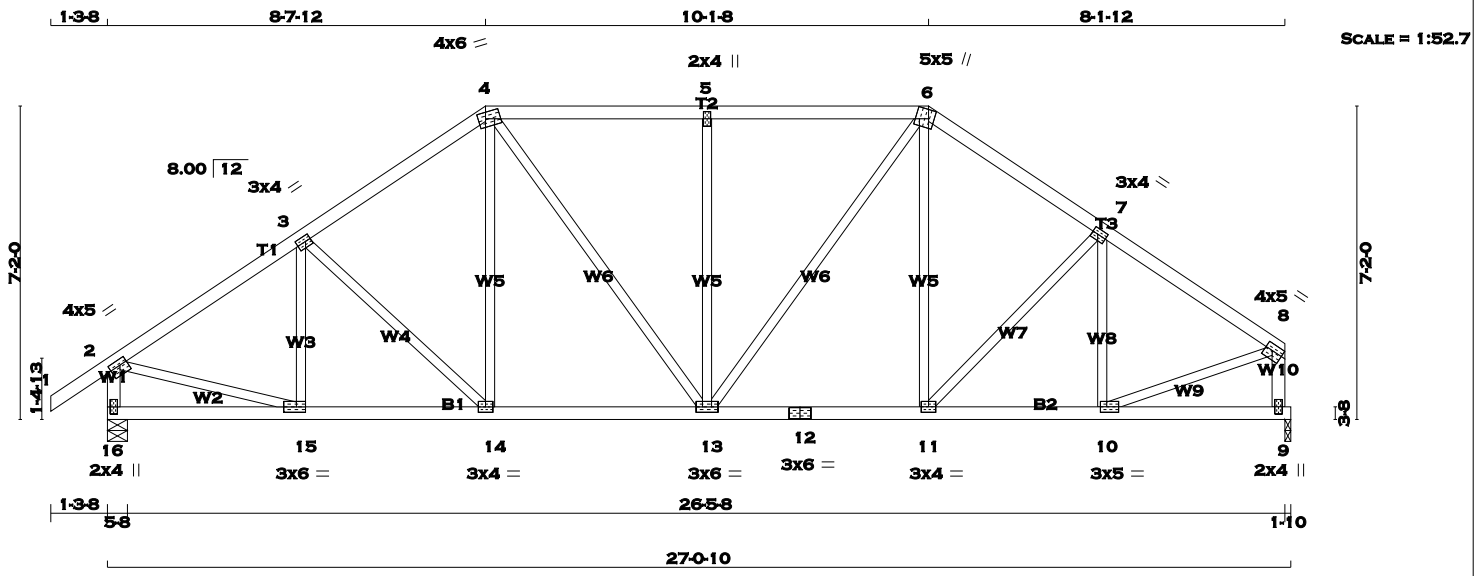

TOTAL WEIGHT = 121 lb

[M][F]

LUMBER

N. L. G. A. RULES

CHORDS	SIZE		LUMBER	DESCR.
1 - 4	2x4	DRY	No.2	SPF
4 - 6	2x4	DRY	No.2	SPF
6 - 8	2x4	DRY	No.2	SPF
16 - 2	2x4	DRY	No.2	SPF
9 - 8	2x4	DRY	No.2	SPF
16 - 12	2x4	DRY	No.2	SPF
12 - 9	2x4	DRY	No.2	SPF
ALL WEBS EXCEPT	2x3	DRY	No.2	SPF

DRY: SEASONED LUMBER.

PLATES (table is in inches)

JT	TYPE	PLATES	W	LEN	Y	X
2	TMVW-t	MT20	4.0	5.0	1.50	2.00
3	TMWW-t	MT20	3.0	4.0	1.50	1.50
4	TTWW-m	MT20	4.0	6.0	1.75	2.00
5	TMW+w	MT20	2.0	4.0		
6	TTWW+m	MT20	5.0	5.0	2.50	1.50
7	TMWW-t	MT20	3.0	4.0	1.50	1.50
8	TMVW-t	MT20	4.0	5.0	1.75	Edge
9	BMV1+p	MT20	2.0	4.0		
10	BMWW-t	MT20	3.0	5.0	1.50	1.75
11	BMWW-t	MT20	3.0	4.0		
12	BS-t	MT20	3.0	6.0		
13	BMWWW-t	MT20	3.0	6.0		
14	BMWW-t	MT20	3.0	4.0		
15	BMWW-t	MT20	3.0	6.0	1.50	2.50
16	BMV1+p	MT20	2.0	4.0		

Edge - INDICATES REFERENCE CORNER OF PLATE TOUCHES EDGE OF CHORD.

A SIZE FOR SIZE SUBSTITUTION OF MITEK MII20 WITH TEE-LOK TL20 PLATES IS ALLOWED.

READ ALL NOTES ON THIS PAGE AND ON THE ENGINEERING NOTE PAGE ENP-1. THE NOTE PAGE IS AN INTEGRAL PART OF THIS DRAWING AS IT CONTAINS SPECIFICATIONS AND CRITERIA USED IN THE DESIGN OF THIS COMPONENT.

DIMENSIONS, SUPPORTS AND LOADINGS SPECIFIED BY FABRICATOR TO BE VERIFIED BY BUILDING DESIGNER

BEARINGS

JT	FACTORED GROSS REACTION VERT	HORZ	MAXIMUM FACTORED GROSS REACTION DOWN	HORZ	UPLIFT	INPUT BRG IN-SX	REQRD BRG IN-SX
16	1383	0	1383	0	0	5-8	5-8
9	1276	0	1276	0	0	1-10	1-10

UNFACTORED REACTIONS

JT	1ST LCASE COMBINED	MAX./MIN. COMPONENT REACTIONS SNOW	LIVE	PERM.LIVE	WIND	DEAD	SOIL
16	968	691 / 0	0 / 0	0 / 0	0 / 0	277 / 0	0 / 0
9	896	627 / 0	0 / 0	0 / 0	0 / 0	269 / 0	0 / 0

BEARING MATERIAL TO BE SPF NO.2 OR BETTER AT JOINT(S) 16, 9

BRACING

TOP CHORD TO BE SHEATHED OR MAX. PURLIN SPACING = 5.24 FT.
MAX. UNBRACED BOTTOM CHORD LENGTH = 10.00 FT. OR RIGID CEILING DIRECTLY APPLIED.

ALL PITCH BREAKS AND PERIMETER CORNER JOINTS MUST BE LATERALLY RESTRAINED.

LOADING

TOTAL LOAD CASES: (4)

CHORDS

MEMB. FR-TO	MAX. FACTORED FORCE (LBS)	FACTORED VERT. LOAD (PLF) FROM	TO	LC1 MAX CSI (LC)	MAX. UNBRAC LENGTH
1- 2	0 / 29	-77.3	-77.3	0.10 (1)	10.00
2- 3	-1443 / 0	-77.3	-77.3	0.21 (1)	5.24
3- 4	-1340 / 0	-77.3	-77.3	0.20 (1)	5.40
4- 5	-1288 / 0	-77.3	-77.3	0.27 (1)	5.38
5- 6	-1288 / 0	-77.3	-77.3	0.27 (1)	5.38
6- 7	-1297 / 0	-77.3	-77.3	0.18 (1)	5.49
7- 8	-1318 / 0	-77.3	-77.3	0.18 (1)	5.46
16- 2	-1348 / 0	0.0	0.0	0.14 (1)	6.98
9- 8	-1244 / 0	0.0	0.0	0.13 (1)	7.20
16-15	0 / 0	-17.5	-17.5	0.07 (4)	10.00
15-14	0 / 1218	-17.5	-17.5	0.24 (1)	10.00
14-13	0 / 1097	-17.5	-17.5	0.22 (1)	10.00
13-12	0 / 1062	-17.5	-17.5	0.21 (1)	10.00
12-11	0 / 1062	-17.5	-17.5	0.21 (1)	10.00
11-10	0 / 1113	-17.5	-17.5	0.22 (1)	10.00
10- 9	0 / 0	-17.5	-17.5	0.06 (4)	10.00

WEBS

MEMB. FR-TO	MAX. FACTORED FORCE (LBS)	MAX CSI (LC)
15- 3	-219 / 6	0.06 (1)
3-14	-169 / 0	0.10 (1)
14- 4	0 / 199	0.04 (1)
4-13	0 / 321	0.07 (1)
13- 5	-477 / 0	0.43 (1)
13- 6	0 / 380	0.09 (1)
11- 6	0 / 136	0.03 (4)
11- 7	-75 / 0	0.04 (1)
10- 7	-303 / 0	0.09 (1)
2-15	0 / 1253	0.28 (1)
10- 8	0 / 1175	0.26 (1)

DESIGN CRITERIA

SPECIFIED LOADS:

TOP CH.	LL	=	23.3	PSF
	DL	=	3.0	PSF
BOT CH.	LL	=	0.0	PSF
	DL	=	7.0	PSF
TOTAL LOAD		=	33.3	PSF

SPACING = 24.0 IN. C/C

LOADING IN FLAT SECTION BASED ON A SLOPE OF 2.00/12 MINIMUM

THIS TRUSS IS DESIGNED FOR RESIDENTIAL OR SMALL BUILDING REQUIREMENTS OF PART 9, NBCC 2010

THIS DESIGN COMPLIES WITH:
- PART 9 OF OBC 2012 , BCBC 2012 , ABC 2014
- CSA 086-09
- TPIC 2011

(55 % OF 27.2 P.S.F. G.S.L. PLUS 8.4 P.S.F. RAIN LOAD) EQUALS 23.3 P.S.F. SPECIFIED ROOF LIVE LOAD

ALLOWABLE DEFL.(LL)= L/360 (0.90")
CALCULATED VERT. DEFL.(LL) = L/ 999 (0.05")
ALLOWABLE DEFL.(TL)= L/360 (0.90")
CALCULATED VERT. DEFL.(TL) = L/ 999 (0.09")

CSI: TC=0.27 (4-5:1) , BC=0.24 (14-15:1) , WB=0.43 (5-13:1) , SSI=0.19 (4-5:1)

DOL LUMBER=1.00 NAIL=1.00 LS BEND=1.10 COMP=1.10 SHEAR=1.10 TENS= 1.10

COMPANION LIVE LOAD FACTOR = 0.50

TRUSS PLATE MANUFACTURER IS NOT RESPONSIBLE FOR QUALITY CONTROL IN THE TRUSS MANUFACTURING PLANT .

NAIL VALUES

PLATE	GRIP(DRY) (PSI) MAX	MIN	SHEAR (PLI) MAX	MIN	SECTION (PLI) MAX	MIN
MT20	618	354	1667	822	2284	1656

PLATE PLACEMENT TOL. = 0.250 inches

PLATE ROTATION TOL. = 5.0 Deg.

JSI GRIP= 0.90 (10) (INPUT = 0.90)
JSI METAL= 0.48 (2) (INPUT = 1.00)

10 MAR 2017

RECEIVED
TOWN OF MILTON
MAR 29, 2017
17-4967
BUILDING DIVISION

KOTT

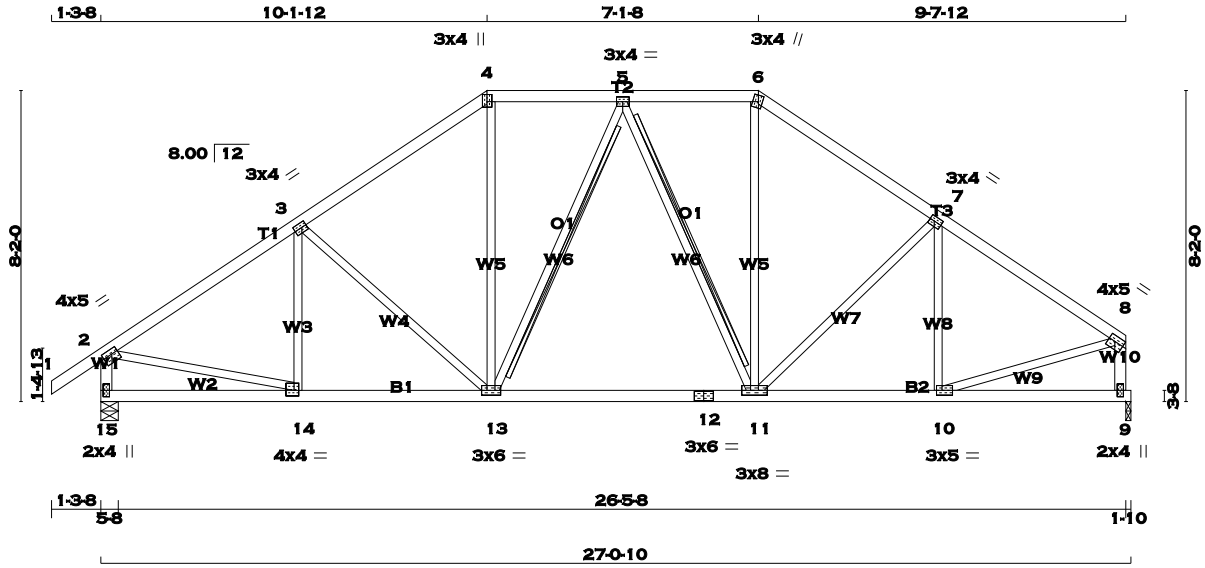

TOTAL WEIGHT = 122 lb

[M][F]

LUMBER

N. L. G. A. RULES

CHORDS	SIZE		LUMBER	DESCR.
1 - 4	2x4	DRY	No.2	SPF
4 - 6	2x4	DRY	No.2	SPF
6 - 8	2x4	DRY	No.2	SPF
15 - 2	2x4	DRY	No.2	SPF
9 - 8	2x4	DRY	No.2	SPF
15 - 12	2x4	DRY	No.2	SPF
12 - 9	2x4	DRY	No.2	SPF
ALL WEBS EXCEPT	2x3	DRY	No.2	SPF

DRY: SEASONED LUMBER.

PLATES (table is in inches)

JT	TYPE	PLATES	W	LEN	Y	X
2	TMVW-t	MT20	4.0	5.0	1.50	2.00
3	TMWW-t	MT20	3.0	4.0	1.50	1.50
4	TTW+p	MT20	3.0	4.0	2.25	1.50
5	TMWW-t	MT20	3.0	4.0		
6	TTW+m	MT20	3.0	4.0	2.00	1.25
7	TMWW-t	MT20	3.0	4.0	1.50	1.50
8	TMVW-t	MT20	4.0	5.0	1.75	Edge
9	BMV1+p	MT20	2.0	4.0		
10	BMWW-t	MT20	3.0	5.0	1.50	1.75
11	BMWWW-t	MT20	3.0	8.0		
12	BS-t	MT20	3.0	6.0		
13	BMWWW-t	MT20	3.0	6.0		
14	BMWW-t	MT20	4.0	4.0	1.75	1.50
15	BMV1+p	MT20	2.0	4.0		

Edge - INDICATES REFERENCE CORNER OF PLATE TOUCHES EDGE OF CHORD.

A SIZE FOR SIZE SUBSTITUTION OF MITEK MII20 WITH TEE-LOK TL20 PLATES IS ALLOWED.

READ ALL NOTES ON THIS PAGE AND ON THE ENGINEERING NOTE PAGE ENP-1. THE NOTE PAGE IS AN INTEGRAL PART OF THIS DRAWING AS IT CONTAINS SPECIFICATIONS AND CRITERIA USED IN THE DESIGN OF THIS COMPONENT.

10 MAR 2017

DIMENSIONS, SUPPORTS AND LOADINGS SPECIFIED BY FABRICATOR TO BE VERIFIED BY BUILDING DESIGNER

BEARINGS

JT	FACTORED GROSS REACTION VERT	HORZ	MAXIMUM FACTORED GROSS REACTION DOWN	HORZ	UPLIFT	INPUT BRG IN-SX	REQRD BRG IN-SX
15	1383	0	1383	0	0	5-8	5-8
9	1276	0	1276	0	0	1-10	1-10

UNFACTORED REACTIONS

JT	1ST LCASE COMBINED	MAX./MIN. COMPONENT REACTIONS SNOW	LIVE	PERM.LIVE	WIND	DEAD	SOIL
15	968	691 / 0	0 / 0	0 / 0	0 / 0	277 / 0	0 / 0
9	896	627 / 0	0 / 0	0 / 0	0 / 0	269 / 0	0 / 0

BEARING MATERIAL TO BE SPF NO.2 OR BETTER AT JOINT(S) 15, 9

BRACING

TOP CHORD TO BE SHEATHED OR MAX. PURLIN SPACING = 5.12 FT.
MAX. UNBRACED BOTTOM CHORD LENGTH = 10.00 FT. OR RIGID CEILING DIRECTLY APPLIED.

ALL PITCH BREAKS AND PERIMETER CORNER JOINTS MUST BE LATERALLY RESTRAINED.

2x3 SPF No.2 T-BRACE AT 5-13, 5-11

FASTEN T AND I-BRACES TO NARROW EDGE OF WEB WITH ONE ROW PER PLY OF 3" COMMON WIRE NAILS @ 6" O.C. WITH 3" MINIMUM END DISTANCE. BRACE MUST COVER 90% OF WEB LENGTH.

END VERTICAL(S) MUST BE SHEATHED OR HAVE BRACES AS INDICATED IN THE MAX. UNBRACED LENGTH COLUMN OF THE TABLE BELOW

LOADING

TOTAL LOAD CASES: (4)

CHORDS

MEMB. FR-TO	MAX. FACTORED FORCE (LBS)	FACTORED VERT. LOAD (PLF) FROM	TO	LC1 MAX CSI (LC)	MAX. UNBRAC LENGTH
1- 2	0 / 29	-77.3	-77.3	0.10 (1)	10.00
2- 3	-1461 / 0	-77.3	-77.3	0.29 (1)	5.12
3- 4	-1267 / 0	-77.3	-77.3	0.27 (1)	5.42
4- 5	-1037 / 0	-77.3	-77.3	0.13 (1)	6.04
5- 6	-1016 / 0	-77.3	-77.3	0.12 (1)	6.08
6- 7	-1241 / 0	-77.3	-77.3	0.25 (1)	5.50
7- 8	-1352 / 0	-77.3	-77.3	0.25 (1)	5.32
15- 2	-1343 / 0	0.0	0.0	0.14 (1)	6.99
9- 8	-1239 / 0	0.0	0.0	0.13 (1)	7.22
15-14	0 / 0	-17.5	-17.5	0.10 (4)	10.00
14-13	0 / 1236	-17.5	-17.5	0.28 (1)	10.00
13-12	0 / 1098	-17.5	-17.5	0.25 (1)	10.00
12-11	0 / 1098	-17.5	-17.5	0.25 (1)	10.00
11-10	0 / 1145	-17.5	-17.5	0.26 (1)	10.00
10- 9	0 / 0	-17.5	-17.5	0.09 (4)	10.00

WEBS

MEMB. FR-TO	MAX. FACTORED FORCE (LBS)	MAX CSI (LC)
14- 3	-168 / 29	0.06 (1)
3-13	-275 / 0	0.24 (1)
13- 4	0 / 434	0.10 (1)
13- 5	-153 / 0	0.19 (1)
5-11	-205 / 0	0.26 (1)
11- 6	0 / 428	0.10 (1)
11- 7	-188 / 0	0.16 (1)
10- 7	-244 / 2	0.09 (1)
2-14	0 / 1263	0.28 (1)
10- 8	0 / 1191	0.27 (1)

RECEIVED
TOWN OF MILTON
MAR 29, 2017
17-4967
BUILDING DIVISION

DESIGN CRITERIA

SPECIFIED LOADS:

TOP	CH.	LL	=	23.3	PSF
		DL	=	3.0	PSF
BOT	CH.	LL	=	0.0	PSF
		DL	=	7.0	PSF
TOTAL	LOAD		=	33.3	PSF

SPACING = 24.0 IN. C/C

LOADING IN FLAT SECTION BASED ON A SLOPE OF 2.00/12 MINIMUM

THIS TRUSS IS DESIGNED FOR RESIDENTIAL OR SMALL BUILDING REQUIREMENTS OF PART 9, NBCC 2010

THIS DESIGN COMPLIES WITH:
- PART 9 OF OBC 2012 , BCBC 2012 , ABC 2014
- CSA 086-09
- TPIC 2011

(55 % OF 27.2 P.S.F. G.S.L. PLUS 8.4 P.S.F. RAIN LOAD) EQUALS 23.3 P.S.F. SPECIFIED ROOF LIVE LOAD

ALLOWABLE DEFL.(LL)= L/360 (0.90")
CALCULATED VERT. DEFL.(LL) = L/ 999 (0.04")
ALLOWABLE DEFL.(TL)= L/360 (0.90")
CALCULATED VERT. DEFL.(TL) = L/ 999 (0.11")

CSI: TC=0.29 (2-3:1) , BC=0.28 (13-14:1) , WB=0.28 (2-14:1) , SSI=0.16 (2-3:1)

DOL LUMBER=1.00 NAIL=1.00 LS BEND=1.10 COMP=1.10 SHEAR=1.10 TENS= 1.10

COMPANION LIVE LOAD FACTOR = 0.50

TRUSS PLATE MANUFACTURER IS NOT RESPONSIBLE FOR QUALITY CONTROL IN THE TRUSS MANUFACTURING PLANT .

NAIL VALUES

PLATE	GRIP(DRY) (PSI) MAX	MIN	SHEAR (PLI) MAX	MIN	SECTION (PLI) MAX	MIN
MT20	618	354	1667	822	2284	1656

PLATE PLACEMENT TOL. = 0.250 inches

PLATE ROTATION TOL. = 5.0 Deg.

JSI GRIP= 0.90 (4) (INPUT = 0.90)
JSI METAL= 0.49 (2) (INPUT = 1.00)

KOTT

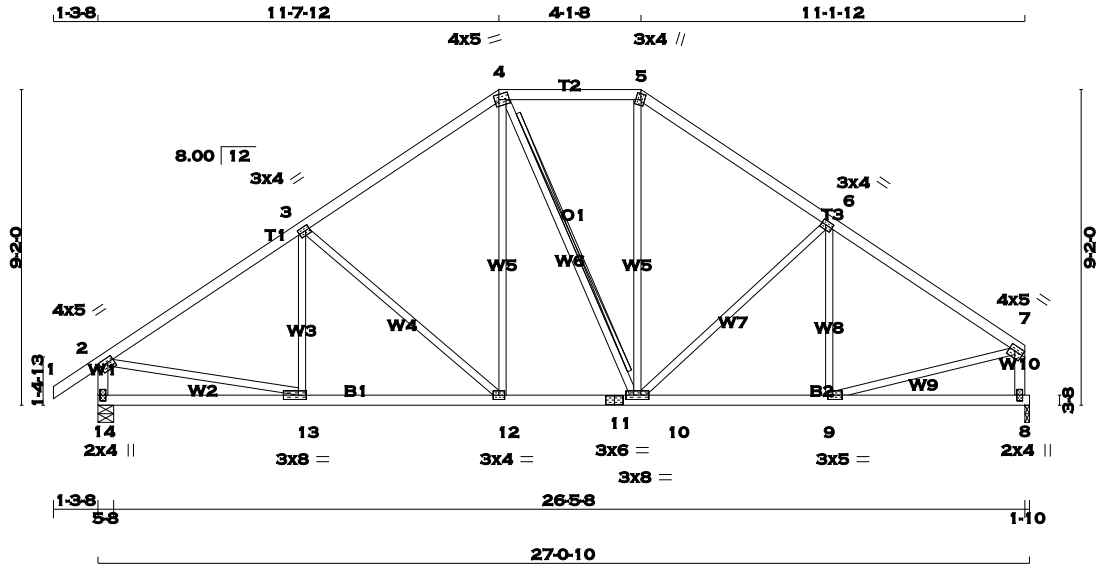

TOTAL WEIGHT = 122 lb

[M][F]

LUMBER

N. L. G. A. RULES

CHORDS	SIZE		LUMBER	DESCR.
1 - 4	2x4	DRY	No.2	SPF
4 - 5	2x4	DRY	No.2	SPF
5 - 7	2x4	DRY	No.2	SPF
14 - 2	2x4	DRY	No.2	SPF
8 - 7	2x4	DRY	No.2	SPF
14 - 11	2x4	DRY	No.2	SPF
11 - 8	2x4	DRY	No.2	SPF
ALL WEBS EXCEPT	2x3	DRY	No.2	SPF

DRY: SEASONED LUMBER.

PLATES (table is in inches)

JT	TYPE	PLATES	W	LEN	Y	X
2	TMVW-t	MT20	4.0	5.0	1.50	2.00
3	TMWW-t	MT20	3.0	4.0	1.50	1.50
4	TTWW-m	MT20	4.0	5.0	1.75	1.50
5	TTW+m	MT20	3.0	4.0	2.00	1.25
6	TMWW-t	MT20	3.0	4.0	1.50	1.50
7	TMVW-t	MT20	4.0	5.0	1.75	Edge
8	BMV1+p	MT20	2.0	4.0		
9	BMWW-t	MT20	3.0	5.0	1.50	1.75
10	BMWWW-t	MT20	3.0	8.0		
11	BS-t	MT20	3.0	6.0		
12	BMWW-t	MT20	3.0	4.0		
13	BMWW-t	MT20	3.0	8.0	1.50	2.75
14	BMV1+p	MT20	2.0	4.0		

Edge - INDICATES REFERENCE CORNER OF PLATE TOUCHES EDGE OF CHORD.

A SIZE FOR SIZE SUBSTITUTION OF MITEK MII20 WITH TEE-LOK TL20 PLATES IS ALLOWED.

READ ALL NOTES ON THIS PAGE AND ON THE ENGINEERING NOTE PAGE ENP-1. THE NOTE PAGE IS AN INTEGRAL PART OF THIS DRAWING AS IT CONTAINS SPECIFICATIONS AND CRITERIA USED IN THE DESIGN OF THIS COMPONENT.

DIMENSIONS, SUPPORTS AND LOADINGS SPECIFIED BY FABRICATOR TO BE VERIFIED BY BUILDING DESIGNER

BEARINGS

JT	FACTORED GROSS REACTION VERT	HORZ	MAXIMUM FACTORED GROSS REACTION DOWN	HORZ	UPLIFT	INPUT BRG IN-SX	REQRD BRG IN-SX
14	1383	0	1383	0	0	5-8	5-8
8	1276	0	1276	0	0	1-10	1-10

UNFACTORED REACTIONS

JT	1ST LCASE COMBINED	MAX./MIN. COMPONENT REACTIONS SNOW	LIVE	PERM.LIVE	WIND	DEAD	SOIL
14	968	691 / 0	0 / 0	0 / 0	0 / 0	277 / 0	0 / 0
8	896	627 / 0	0 / 0	0 / 0	0 / 0	269 / 0	0 / 0

BEARING MATERIAL TO BE SPF NO.2 OR BETTER AT JOINT(S) 14, 8

BRACING

TOP CHORD TO BE SHEATHED OR MAX. PURLIN SPACING = 4.99 FT.
MAX. UNBRACED BOTTOM CHORD LENGTH = 10.00 FT. OR RIGID CEILING DIRECTLY APPLIED.

ALL PITCH BREAKS AND PERIMETER CORNER JOINTS MUST BE LATERALLY RESTRAINED.

2x4 SPF No.2 T-BRACE AT 4-10

FASTEN T AND I-BRACES TO NARROW EDGE OF WEB WITH ONE ROW PER PLY OF 3" COMMON WIRE NAILS @ 6" O.C. WITH 3" MINIMUM END DISTANCE. BRACE MUST COVER 90% OF WEB LENGTH.

END VERTICAL(S) MUST BE SHEATHED OR HAVE BRACES AS INDICATED IN THE MAX. UNBRACED LENGTH COLUMN OF THE TABLE BELOW

LOADING

TOTAL LOAD CASES: (4)

CHORDS

MEMB. FR-TO	MAX. FACTORED FORCE (LBS)	FACTORED VERT. LOAD (PLF) FROM	TO	LC1 MAX CSI (LC)	MAX. UNBRAC LENGTH
1- 2	0 / 29	-77.3	-77.3	0.10 (1)	10.00
2- 3	-1468 / 0	-77.3	-77.3	0.39 (1)	4.99
3- 4	-1176 / 0	-77.3	-77.3	0.36 (1)	5.45
4- 5	-945 / 0	-77.3	-77.3	0.18 (1)	6.17
5- 6	-1163 / 0	-77.3	-77.3	0.33 (1)	5.52
6- 7	-1372 / 0	-77.3	-77.3	0.35 (1)	5.17
14- 2	-1340 / 0	0.0	0.0	0.14 (1)	7.00
8- 7	-1236 / 0	0.0	0.0	0.13 (1)	7.22
14-13	0 / 0	-17.5	-17.5	0.15 (4)	10.00
13-12	0 / 1246	-17.5	-17.5	0.28 (1)	10.00
12-11	0 / 956	-17.5	-17.5	0.20 (1)	10.00
11-10	0 / 956	-17.5	-17.5	0.20 (1)	10.00
10- 9	0 / 1165	-17.5	-17.5	0.25 (1)	10.00
9- 8	0 / 0	-17.5	-17.5	0.14 (4)	10.00

WEBS

MEMB. FR-TO	MAX. FACTORED FORCE (LBS)	MAX CSI (LC)
13- 3	-111 / 67	0.05 (1)
3-12	-389 / 0	0.47 (1)
12- 4	0 / 335	0.08 (1)
4-10	-25 / 0	0.02 (1)
10- 5	0 / 312	0.07 (1)
10- 6	-306 / 0	0.36 (1)
9- 6	-180 / 42	0.08 (1)
2-13	0 / 1267	0.29 (1)
9- 7	0 / 1201	0.27 (1)

DESIGN CRITERIA

SPECIFIED LOADS:

TOP CH.	LL	=	23.3	PSF
	DL	=	3.0	PSF
BOT CH.	LL	=	0.0	PSF
	DL	=	7.0	PSF
TOTAL LOAD		=	33.3	PSF

SPACING = 24.0 IN. C/C

LOADING IN FLAT SECTION BASED ON A SLOPE OF 2.00/12 MINIMUM

THIS TRUSS IS DESIGNED FOR RESIDENTIAL OR SMALL BUILDING REQUIREMENTS OF PART 9, NBCC 2010

THIS DESIGN COMPLIES WITH:
- PART 9 OF OBC 2012 , BCBC 2012 , ABC 2014
- CSA 086-09
- TPIC 2011

(55 % OF 27.2 P.S.F. G.S.L. PLUS 8.4 P.S.F. RAIN LOAD) EQUALS 23.3 P.S.F. SPECIFIED ROOF LIVE LOAD

ALLOWABLE DEFL.(LL)= L/360 (0.90")
CALCULATED VERT. DEFL.(LL) = L/ 999 (0.05")
ALLOWABLE DEFL.(TL)= L/360 (0.90")
CALCULATED VERT. DEFL.(TL) = L/ 999 (0.09")

CSI: TC=0.39 (2-3:1) , BC=0.28 (12-13:1) , WB=0.47 (3-12:1) , SSI=0.18 (2-3:1)

DOL LUMBER=1.00 NAIL=1.00 LS BEND=1.10 COMP=1.10 SHEAR=1.10 TENS= 1.10

COMPANION LIVE LOAD FACTOR = 0.50

TRUSS PLATE MANUFACTURER IS NOT RESPONSIBLE FOR QUALITY CONTROL IN THE TRUSS MANUFACTURING PLANT .

NAIL VALUES

PLATE	GRIP(DRY) (PSI) MAX	MIN	SHEAR (PLI) MAX	MIN	SECTION (PLI) MAX	MIN
MT20	618	354	1667	822	2284	1656

PLATE PLACEMENT TOL. = 0.250 inches

PLATE ROTATION TOL. = 5.0 Deg.

JSI GRIP= 0.90 (10) (INPUT = 0.90)
JSI METAL= 0.50 (2) (INPUT = 1.00)

RECEIVED
TOWN OF MILTON
MAR 29, 2017
17-4967
BUILDING DIVISION

10 MAR 2017

KOTT

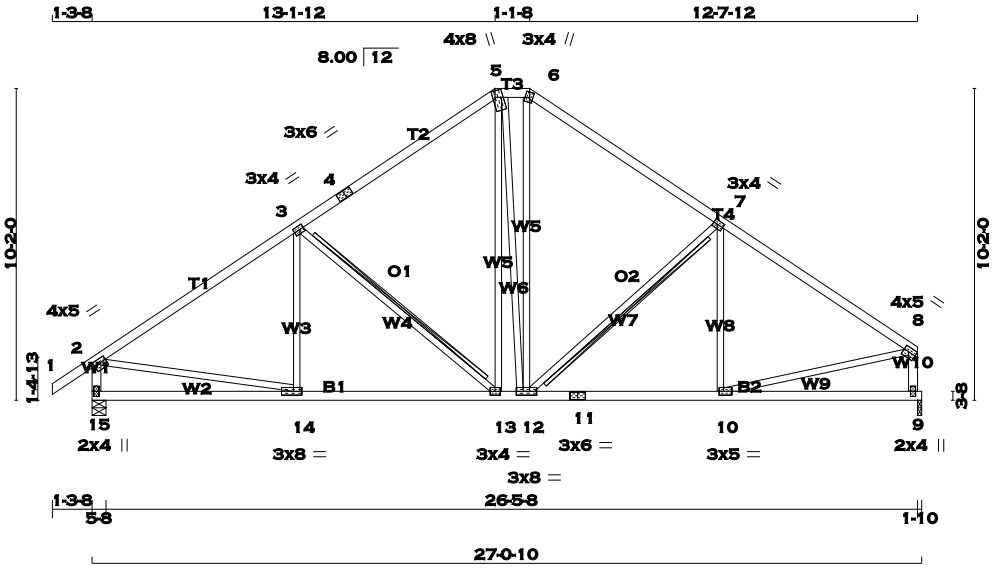

TOTAL WEIGHT = 128 lb

[M][F]

LUMBER

N. L. G. A. RULES

CHORDS	SIZE		LUMBER	DESCR.
1 - 4	2x4	DRY	No.2	SPF
4 - 5	2x4	DRY	No.2	SPF
5 - 6	2x4	DRY	No.2	SPF
6 - 8	2x4	DRY	No.2	SPF
15 - 2	2x4	DRY	No.2	SPF
9 - 8	2x4	DRY	No.2	SPF
15 - 11	2x4	DRY	No.2	SPF
11 - 9	2x4	DRY	No.2	SPF
ALL WEBS EXCEPT	2x3	DRY	No.2	SPF

DRY: SEASONED LUMBER.

PLATES (table is in inches)

JT	TYPE	PLATES	W	LEN	Y	X
2	TMVW-t	MT20	4.0	5.0	1.50	2.00
3	TMWW-t	MT20	3.0	4.0	1.50	1.50
4	TS-t	MT20	3.0	6.0		
5	TTWW+m	MT20	4.0	8.0	2.50	1.00
6	TTW+m	MT20	3.0	4.0	2.00	1.25
7	TMWW-t	MT20	3.0	4.0	1.50	1.50
8	TMVW-t	MT20	4.0	5.0	1.75	Edge
9	BMV1+p	MT20	2.0	4.0		
10	BMWW-t	MT20	3.0	5.0	1.50	1.75
11	BS-t	MT20	3.0	6.0		
12	BMWWW-t	MT20	3.0	8.0		
13	BMWW-t	MT20	3.0	4.0		
14	BMWW-t	MT20	3.0	8.0	1.50	3.25
15	BMV1+p	MT20	2.0	4.0		

Edge - INDICATES REFERENCE CORNER OF PLATE TOUCHES EDGE OF CHORD.

A SIZE FOR SIZE SUBSTITUTION OF MITEK MII20 WITH TEE-LOK TL20 PLATES IS ALLOWED.

READ ALL NOTES ON THIS PAGE AND ON THE ENGINEERING NOTE PAGE ENP-1. THE NOTE PAGE IS AN INTEGRAL PART OF THIS DRAWING AS IT CONTAINS SPECIFICATIONS AND CRITERIA USED IN THE DESIGN OF THIS COMPONENT.

10 MAR 2017

DIMENSIONS, SUPPORTS AND LOADINGS SPECIFIED BY FABRICATOR TO BE VERIFIED BY BUILDING DESIGNER

BEARINGS

JT	FACTORED GROSS REACTION VERT	HORZ	MAXIMUM FACTORED GROSS REACTION DOWN	HORZ	UPLIFT	INPUT BRG IN-SX	REQRD BRG IN-SX
15	1383	0	1383	0	0	5-8	5-8
9	1276	0	1276	0	0	1-10	1-10

UNFACTORED REACTIONS

JT	1ST LCASE COMBINED	MAX./MIN. COMPONENT REACTIONS SNOW	LIVE	PERM.LIVE	WIND	DEAD	SOIL
15	968	691 / 0	0 / 0	0 / 0	0 / 0	277 / 0	0 / 0
9	896	627 / 0	0 / 0	0 / 0	0 / 0	269 / 0	0 / 0

BEARING MATERIAL TO BE SPF NO.2 OR BETTER AT JOINT(S) 15, 9

BRACING

TOP CHORD TO BE SHEATHED OR MAX. PURLIN SPACING = 4.82 FT.
MAX. UNBRACED BOTTOM CHORD LENGTH = 10.00 FT. OR RIGID CEILING DIRECTLY APPLIED.

ALL PITCH BREAKS AND PERIMETER CORNER JOINTS MUST BE LATERALLY RESTRAINED.

2x3 SPF No.2 T-BRACE AT 3-13, 7-12

FASTEN T AND I-BRACES TO NARROW EDGE OF WEB WITH ONE ROW PER PLY OF 3" COMMON WIRE NAILS @ 6" O.C. WITH 3" MINIMUM END DISTANCE. BRACE MUST COVER 90% OF WEB LENGTH.

END VERTICAL(S) MUST BE SHEATHED OR HAVE BRACES AS INDICATED IN THE MAX. UNBRACED LENGTH COLUMN OF THE TABLE BELOW

LOADING

TOTAL LOAD CASES: (4)

CHORDS MEMB. FR-TO	MAX. FACTORED FORCE (LBS)	FACTORED VERT. LOAD (PLF) FROM	TO	LC1 MAX CSI (LC)	MAX. UNBRAC LENGTH	WEBS MEMB. FR-TO	MAX. FACTORED FORCE (LBS)	MAX CSI (LC)
1- 2	0 / 29	-77.3	-77.3	0.10 (1)	10.00	14- 3	-67 / 92	0.04 (1)
2- 3	-1464 / 0	-77.3	-77.3	0.51 (1)	4.82	3-13	-492 / 0	0.62 (1)
3- 4	-1082 / 0	-77.3	-77.3	0.47 (1)	5.46	13- 5	0 / 343	0.08 (1)
4- 5	-1082 / 0	-77.3	-77.3	0.47 (1)	5.46	5-12	0 / 9	0.00 (1)
5- 6	-874 / 0	-77.3	-77.3	0.02 (1)	6.25	12- 6	0 / 359	0.08 (1)
6- 7	-1081 / 0	-77.3	-77.3	0.43 (1)	5.52	12- 7	-407 / 0	0.50 (1)
7- 8	-1378 / 0	-77.3	-77.3	0.46 (1)	5.00	10- 7	-136 / 67	0.08 (1)
15- 2	-1336 / 0	0.0	0.0	0.14 (1)	7.00	2-14	0 / 1263	0.28 (1)
9- 8	-1230 / 0	0.0	0.0	0.13 (1)	7.23	10- 8	0 / 1201	0.27 (1)
15-14	0 / 0	-17.5	-17.5	0.19 (4)	10.00			
14-13	0 / 1246	-17.5	-17.5	0.30 (1)	10.00			
13-12	0 / 874	-17.5	-17.5	0.22 (1)	10.00			
12-11	0 / 1173	-17.5	-17.5	0.27 (1)	10.00			
11-10	0 / 1173	-17.5	-17.5	0.27 (1)	10.00			
10- 9	0 / 0	-17.5	-17.5	0.17 (4)	10.00			

RECEIVED
TOWN OF MILTON
MAR 29, 2017
17-4967
BUILDING DIVISION

KOTT

DESIGN CRITERIA

SPECIFIED LOADS:

TOP	CH.	LL	=	23.3	PSF
		DL	=	3.0	PSF
BOT	CH.	LL	=	0.0	PSF
		DL	=	7.0	PSF
TOTAL	LOAD		=	33.3	PSF

SPACING = 24.0 IN. C/C

LOADING IN FLAT SECTION BASED ON A SLOPE OF 2.00/12 MINIMUM

THIS TRUSS IS DESIGNED FOR RESIDENTIAL OR SMALL BUILDING REQUIREMENTS OF PART 9, NBCC 2010

THIS DESIGN COMPLIES WITH:
- PART 9 OF OBC 2012 , BCBC 2012 , ABC 2014
- CSA 086-09
- TPIC 2011

(55 % OF 27.2 P.S.F. G.S.L. PLUS 8.4 P.S.F. RAIN LOAD) EQUALS 23.3 P.S.F. SPECIFIED ROOF LIVE LOAD

ALLOWABLE DEFL.(LL)= L/360 (0.90")
CALCULATED VERT. DEFL.(LL) = L/ 999 (0.05")
ALLOWABLE DEFL.(TL)= L/360 (0.90")
CALCULATED VERT. DEFL.(TL) = L/ 999 (0.11")

CSI: TC=0.51 (2-3:1) , BC=0.30 (13-14:1) , WB=0.62 (3-13:1) , SSI=0.21 (2-3:1)

DOL LUMBER=1.00 NAIL=1.00 LS BEND=1.10 COMP=1.10 SHEAR=1.10 TENS= 1.10

COMPANION LIVE LOAD FACTOR = 0.50

TRUSS PLATE MANUFACTURER IS NOT RESPONSIBLE FOR QUALITY CONTROL IN THE TRUSS MANUFACTURING PLANT .

NAIL VALUES

PLATE	GRIP(DRY) (PSI) MAX	MIN	SHEAR (PLI) MAX	MIN	SECTION (PLI) MAX	MIN
MT20	618	354	1667	822	2284	1656

PLATE PLACEMENT TOL. = 0.250 inches

PLATE ROTATION TOL. = 5.0 Deg.

JSI GRIP= 0.90 (10) (INPUT = 0.90)
JSI METAL= 0.50 (2) (INPUT = 1.00)

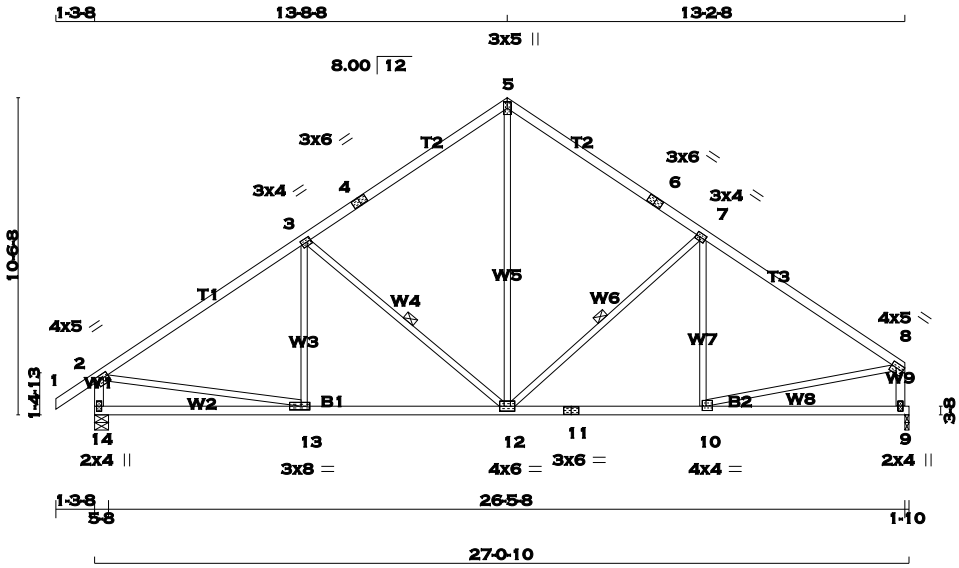

TOTAL WEIGHT = 2 X 114 = 228 lb

[M][F]

LUMBER

N. L. G. A. RULES

CHORDS	SIZE		LUMBER	DESCR.
1 - 4	2x4	DRY	No.2	SPF
4 - 5	2x4	DRY	No.2	SPF
5 - 6	2x4	DRY	No.2	SPF
6 - 8	2x4	DRY	No.2	SPF
14 - 2	2x4	DRY	No.2	SPF
9 - 8	2x4	DRY	No.2	SPF
14 - 11	2x4	DRY	No.2	SPF
11 - 9	2x4	DRY	No.2	SPF
ALL WEBS EXCEPT	2x3	DRY	No.2	SPF

DRY: SEASONED LUMBER.

PLATES (table is in inches)

JT	TYPE	PLATES	W	LEN	Y	X
2	TMVW-t	MT20	4.0	5.0	1.50	2.00
3	TMWW-t	MT20	3.0	4.0	1.50	1.50
4	TS-t	MT20	3.0	6.0		
5	TTW+p	MT20	3.0	5.0		
6	TS-t	MT20	3.0	6.0		
7	TMWW-t	MT20	3.0	4.0	1.50	1.50
8	TMVW-t	MT20	4.0	5.0	1.75	Edge
9	BMV1+p	MT20	2.0	4.0		
10	BMWW-t	MT20	4.0	4.0	1.75	1.50
11	BS-t	MT20	3.0	6.0		
12	BMWWW-t	MT20	4.0	6.0		
13	BMWW-t	MT20	3.0	8.0	1.50	3.50
14	BMV1+p	MT20	2.0	4.0		

Edge - INDICATES REFERENCE CORNER OF PLATE TOUCHES EDGE OF CHORD.

A SIZE FOR SIZE SUBSTITUTION OF MITEK MII20 WITH TEE-LOK TL20 PLATES IS ALLOWED.

READ ALL NOTES ON THIS PAGE AND ON THE ENGINEERING NOTE PAGE ENP-1. THE NOTE PAGE IS AN INTEGRAL PART OF THIS DRAWING AS IT CONTAINS SPECIFICATIONS AND CRITERIA USED IN THE DESIGN OF THIS COMPONENT.

DIMENSIONS, SUPPORTS AND LOADINGS SPECIFIED BY FABRICATOR TO BE VERIFIED BY BUILDING DESIGNER

BEARINGS

JT	FACTORED GROSS REACTION VERT	HORZ	MAXIMUM FACTORED GROSS REACTION DOWN	HORZ	UPLIFT	INPUT BRG IN-SX	REQRD BRG IN-SX
14	1383	0	1383	0	0	5-8	5-8
9	1276	0	1276	0	0	1-10	1-10

UNFACTORED REACTIONS

JT	1ST LCASE COMBINED	MAX./MIN. COMPONENT REACTIONS SNOW	LIVE	PERM.LIVE	WIND	DEAD	SOIL
14	968	691 / 0	0 / 0	0 / 0	0 / 0	277 / 0	0 / 0
9	896	627 / 0	0 / 0	0 / 0	0 / 0	269 / 0	0 / 0

BEARING MATERIAL TO BE SPF NO.2 OR BETTER AT JOINT(S) 14, 9

BRACING

TOP CHORD TO BE SHEATHED OR MAX. PURLIN SPACING = 4.75 FT.
MAX. UNBRACED BOTTOM CHORD LENGTH = 10.00 FT. OR RIGID CEILING DIRECTLY APPLIED.

ALL PITCH BREAKS AND PERIMETER CORNER JOINTS MUST BE LATERALLY RESTRAINED.

1 - 2x3 SPF No.2 LATERAL BRACE(S) AT 1/ 2 LENGTH OF 3-12, 7-12. DBS = 20-0-0 . CBF = 65 LBS.

DBS = DIAGONAL BRACE SPACING (MAX). CBF = CUMULATIVE BRACING FORCE. FASTEN LATERAL BRACE(S) USING (0.122"X3") SPIRAL NAILS : 1 NAIL FOR 2x3 BRACE(S), 2 FOR 1x4, 2x4, 2x5, 3 FOR 2x6, 4 FOR 2x8, 5 FOR 2x10, AND 6 FOR 2x12.

END VERTICAL(S) MUST BE SHEATHED OR HAVE BRACES AS INDICATED IN THE MAX. UNBRACED LENGTH COLUMN OF THE TABLE BELOW

LOADING

TOTAL LOAD CASES: (4)

CHORDS

MEMB. FR-TO	MAX. FACTORED FORCE (LBS)	FACTORED VERT. LOAD (PLF) FROM	TO	LC1 MAX CSI (LC)	MAX. UNBRAC LENGTH
1- 2	0 / 29	-77.3	-77.3	0.10 (1)	10.00
2- 3	-1458 / 0	-77.3	-77.3	0.56 (1)	4.75
3- 4	-1053 / 0	-77.3	-77.3	0.51 (1)	5.44
4- 5	-1053 / 0	-77.3	-77.3	0.51 (1)	5.44
5- 6	-1052 / 0	-77.3	-77.3	0.47 (1)	5.52
6- 7	-1052 / 0	-77.3	-77.3	0.47 (1)	5.52
7- 8	-1377 / 0	-77.3	-77.3	0.51 (1)	4.94
14- 2	-1333 / 0	0.0	0.0	0.14 (1)	7.02
9- 8	-1228 / 0	0.0	0.0	0.13 (1)	7.23
14-13	0 / 0	-17.5	-17.5	0.20 (4)	10.00
13-12	0 / 1243	-17.5	-17.5	0.30 (1)	10.00
12-11	0 / 1174	-17.5	-17.5	0.29 (1)	10.00
11-10	0 / 1174	-17.5	-17.5	0.29 (1)	10.00
10- 9	0 / 0	-17.5	-17.5	0.19 (4)	10.00

WEBS

MEMB. FR-TO	MAX. FACTORED FORCE (LBS)	MAX CSI (LC)
13- 3	-59 / 97	0.03 (1)
3-12	-520 / 0	0.28 (1)
12- 5	0 / 744	0.17 (1)
12- 7	-443 / 0	0.23 (1)
10- 7	-119 / 74	0.07 (1)
2-13	0 / 1257	0.28 (1)
10- 8	0 / 1200	0.27 (1)

DESIGN CRITERIA

SPECIFIED LOADS:

TOP	CH.	LL	=	23.3	PSF
		DL	=	3.0	PSF
BOT	CH.	LL	=	0.0	PSF
		DL	=	7.0	PSF
TOTAL	LOAD		=	33.3	PSF

SPACING = 24.0 IN. C/C

THIS TRUSS IS DESIGNED FOR RESIDENTIAL OR SMALL BUILDING REQUIREMENTS OF PART 9, NBCC 2010

THIS DESIGN COMPLIES WITH:
- PART 9 OF OBC 2012 , BCBC 2012 , ABC 2014
- CSA 086-09
- TPIC 2011

(55 % OF 27.2 P.S.F. G.S.L. PLUS 8.4 P.S.F. RAIN LOAD) EQUALS 23.3 P.S.F. SPECIFIED ROOF LIVE LOAD

ALLOWABLE DEFL.(LL)= L/360 (0.90")
CALCULATED VERT. DEFL.(LL) = L/ 999 (0.05")
ALLOWABLE DEFL.(TL)= L/360 (0.90")
CALCULATED VERT. DEFL.(TL) = L/ 999 (0.11")

CSI: TC=0.56 (2-3:1) , BC=0.30 (12-13:1) , WB=0.28 (2-13:1) , SSI=0.22 (2-3:1)

DOL LUMBER=1.00 NAIL=1.00 LS BEND=1.10 COMP=1.10 SHEAR=1.10 TENS= 1.10

COMPANION LIVE LOAD FACTOR = 0.50

TRUSS PLATE MANUFACTURER IS NOT RESPONSIBLE FOR QUALITY CONTROL IN THE TRUSS MANUFACTURING PLANT .

NAIL VALUES

PLATE	GRIP(DRY) (PSI) MAX	MIN	SHEAR (PLI) MAX	MIN	SECTION (PLI) MAX	MIN
MT20	618	354	1667	822	2284	1656

PLATE PLACEMENT TOL. = 0.250 inches

PLATE ROTATION TOL. = 5.0 Deg.

JSI GRIP= 0.90 (8) (INPUT = 0.90)
JSI METAL= 0.50 (2) (INPUT = 1.00)

RECEIVED
TOWN OF MILTON
MAR 29, 2017
17-4967
BUILDING DIVISION

10 MAR 2017

KOTT

SCALE = 1:50.2

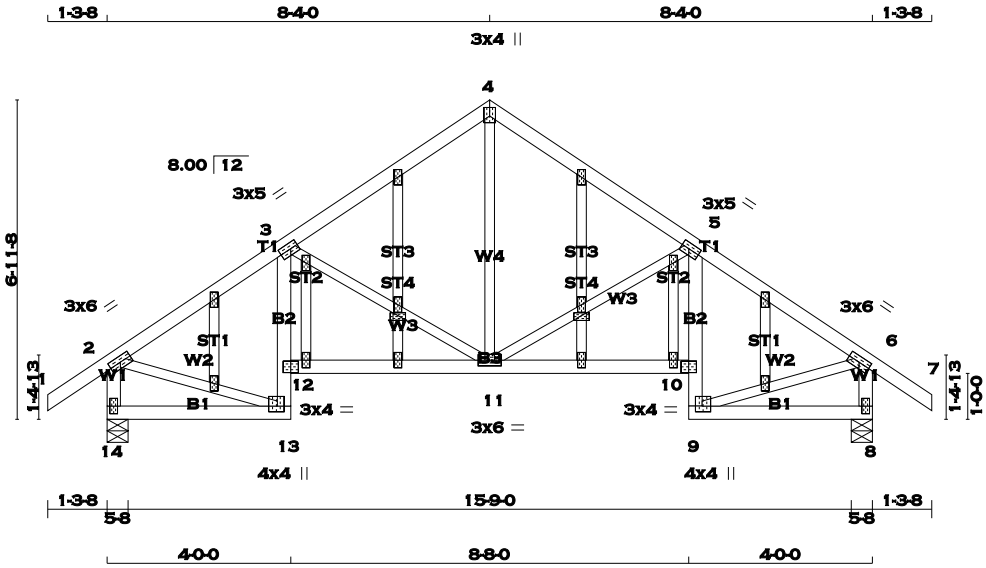

TOTAL WEIGHT = 87 lb [M]

LUMBER

N. L. G. A. RULES

CHORDS	SIZE		LUMBER	DESCR.
1 - 4	2x4	DRY	No.2	SPF
4 - 7	2x4	DRY	No.2	SPF
14 - 2	2x4	DRY	No.2	SPF
8 - 6	2x4	DRY	No.2	SPF
14 - 13	2x4	DRY	No.2	SPF
13 - 3	2x4	DRY	No.2	SPF
12 - 10	2x4	DRY	No.2	SPF
9 - 5	2x4	DRY	No.2	SPF
9 - 8	2x4	DRY	No.2	SPF
ALL WEBS	2x3	DRY	No.2	SPF
EXCEPT				
ALL GABLE WEBS	2x3	DRY	No.2	SPF

DRY: SEASONED LUMBER.

GABLE STUDS SPACED AT 2-0-0 OC.

PLATES (table is in inches)

JT	TYPE	PLATES	W	LEN	Y	X
2	TMVW-t	MT20	3.0	6.0		
3	TMVW-t	MT20	3.0	5.0	1.50	2.00
4	TTW+p	MT20	3.0	4.0	2.25	1.50
5	TMVW-t	MT20	3.0	5.0	1.50	2.00
6	TMVW-t	MT20	3.0	6.0		
8	BMV1+p	MT20	2.0	4.0		
9	BMVW+p	MT20	4.0	4.0	1.50	1.75
10	BVM-l	MT20	3.0	4.0		
11	BMWWW-t	MT20	3.0	6.0		
12	BVM-l	MT20	3.0	4.0		
13	BMVW+p	MT20	4.0	4.0	1.50	1.75
14	BMV1+p	MT20	2.0	4.0		
15	NP-p	MT20	2.0	4.0	0.75	2.00
15, 16, 17, 18, 19, 20, 21, 22, 23, 24, 25, 26, 27, 28						
15	NP+w	MT20	2.0	4.0		
24	NP-p	MT20	2.0	4.0	0.75	2.00

A SIZE FOR SIZE SUBSTITUTION OF MITEK MII20 WITH TEE-LOK TL20 PLATES IS ALLOWED.

READ ALL NOTES ON THIS PAGE AND ON THE ENGINEERING NOTE PAGE ENP-1. THE NOTE PAGE IS AN INTEGRAL PART OF THIS DRAWING AS IT CONTAINS SPECIFICATIONS AND CRITERIA USED IN THE DESIGN OF THIS COMPONENT.

DIMENSIONS, SUPPORTS AND LOADINGS SPECIFIED BY FABRICATOR TO BE VERIFIED BY BUILDING DESIGNER

BEARINGS

JT	FACTORED GROSS REACTION VERT	HORZ	MAXIMUM FACTORED GROSS REACTION DOWN	HORZ	UPLIFT	INPUT BRG IN-SX	REQRD BRG IN-SX
14	897	0	897	0	0	5-8	5-8
8	897	0	897	0	0	5-8	5-8

ALLOW FOR 0.4" OF HORIZONTAL MOVEMENT DUE TO TOTAL LOAD

UNFACTORED REACTIONS

JT	1ST LCASE COMBINED	MAX./MIN. COMPONENT REACTIONS SNOW	LIVE	PERM.LIVE	WIND	DEAD	SOIL
14	627	452 / 0	0 / 0	0 / 0	0 / 0	175 / 0	0 / 0
8	627	452 / 0	0 / 0	0 / 0	0 / 0	175 / 0	0 / 0

BEARING MATERIAL TO BE SPF NO.2 OR BETTER AT JOINT(S) 14, 8

BRACING

TOP CHORD TO BE SHEATHED OR MAX. PURLIN SPACING = 6.25 FT.
MAX. UNBRACED BOTTOM CHORD LENGTH = 7.81 FT. OR RIGID CEILING DIRECTLY APPLIED.

ALL PITCH BREAKS AND PERIMETER CORNER JOINTS MUST BE LATERALLY RESTRAINED.

LOADING

TOTAL LOAD CASES: (4)

CHORDS

MEMB. FR-TO	MAX. FACTORED FORCE (LBS)	FACTORED VERT. LOAD LC1 (PLF) FROM	TO	MAX CSI (LC)	MAX. UNBRAC LENGTH
1- 2	0 / 29	-77.3	-77.3	0.10 (1)	10.00
2- 3	-788 / 0	-77.3	-77.3	0.15 (1)	6.25
3- 4	-722 / 0	-77.3	-77.3	0.22 (1)	6.25
4- 5	-722 / 0	-77.3	-77.3	0.22 (1)	6.25
5- 6	-788 / 0	-77.3	-77.3	0.15 (1)	6.25
6- 7	0 / 29	-77.3	-77.3	0.10 (1)	10.00
14- 2	-863 / 0	0.0	0.0	0.09 (1)	7.81
8- 6	-863 / 0	0.0	0.0	0.09 (1)	7.81
14-13	0 / 0	-17.5	-17.5	0.08 (4)	10.00
13-12	-153 / 0	0.0	0.0	0.91 (1)	7.81
12- 3	-123 / 18	0.0	0.0	0.91 (1)	7.81
12-11	0 / 918	-17.5	-17.5	0.20 (1)	10.00
11-10	0 / 918	-17.5	-17.5	0.20 (1)	10.00
9-10	-153 / 0	0.0	0.0	0.91 (1)	7.81
10- 5	-123 / 18	0.0	0.0	0.91 (1)	7.81
9- 8	0 / 0	-17.5	-17.5	0.08 (4)	10.00

WEBS

MEMB. FR-TO	MAX. FACTORED FORCE (LBS)	MAX CSI (LC)
11- 4	0 / 483	0.11 (1)
11- 5	-380 / 0	0.17 (1)
3-11	-380 / 0	0.17 (1)
2-13	0 / 692	0.16 (1)
9- 6	0 / 692	0.16 (1)

DESIGN CRITERIA

SPECIFIED LOADS:

TOP	CH.	LL	=	23.3	PSF
		DL	=	3.0	PSF
BOT	CH.	LL	=	0.0	PSF
		DL	=	7.0	PSF
TOTAL	LOAD		=	33.3	PSF

SPACING = 24.0 IN. C/C

THIS TRUSS IS DESIGNED FOR RESIDENTIAL OR SMALL BUILDING REQUIREMENTS OF PART 9, NBCC 2010

THIS DESIGN COMPLIES WITH:
- PART 9 OF OBC 2012 , BCBC 2012 , ABC 2014
- CSA 086-09
- TPIC 2011

(55 % OF 27.2 P.S.F. G.S.L. PLUS 8.4 P.S.F. RAIN LOAD) EQUALS 23.3 P.S.F. SPECIFIED ROOF LIVE LOAD

ALLOWABLE DEFL.(LL)= L/360 (0.56")
CALCULATED VERT. DEFL.(LL) = L/ 999 (0.12")
ALLOWABLE DEFL.(TL)= L/360 (0.56")
CALCULATED VERT. DEFL.(TL) = L/ 921 (0.22")

CSI: TC=0.22 (3-4:1) , BC=0.91 (3-12:1) , WB=0.17 (3-11:1) , SSI=0.52 (12-13:1)

DOL LUMBER=1.00 NAIL=1.00 LS BEND=1.10 COMP=1.10 SHEAR=1.10 TENS= 1.10

COMPANION LIVE LOAD FACTOR = 0.50

TRUSS PLATE MANUFACTURER IS NOT RESPONSIBLE FOR QUALITY CONTROL IN THE TRUSS MANUFACTURING PLANT .

NAIL VALUES

PLATE	GRIP(DRY) (PSI) MAX	MIN	SHEAR (PLI) MAX	MIN	SECTION (PLI) MAX	MIN
MT20	618	354	1667	822	2284	1656

PLATE PLACEMENT TOL. = 0.250 inches

PLATE ROTATION TOL. = 5.0 Deg.

JSI GRIP= 0.88 (11) (INPUT = 0.90)
JSI METAL= 0.23 (2) (INPUT = 1.00)

RECEIVED
TOWN OF MILTON
MAR 29, 2017
17-4967
BUILDING DIVISION

10 MAR 2017

KOTT

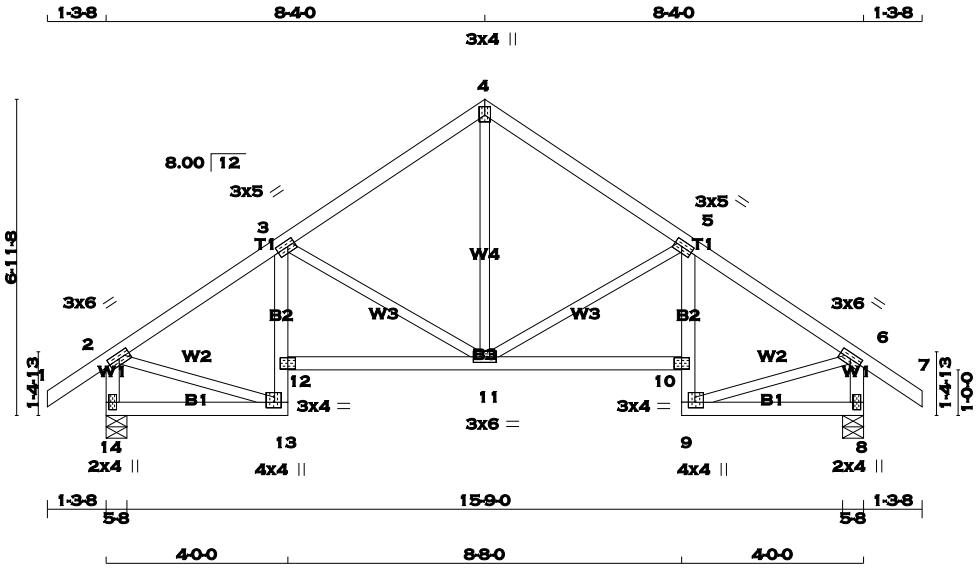

TOTAL WEIGHT = 74 lb [M]

LUMBER

N. L. G. A. RULES

CHORDS	SIZE		LUMBER	DESCR.
1 - 4	2x4	DRY	No.2	SPF
4 - 7	2x4	DRY	No.2	SPF
14 - 2	2x4	DRY	No.2	SPF
8 - 6	2x4	DRY	No.2	SPF
14 - 13	2x4	DRY	No.2	SPF
13 - 3	2x4	DRY	No.2	SPF
12 - 10	2x4	DRY	No.2	SPF
9 - 5	2x4	DRY	No.2	SPF
9 - 8	2x4	DRY	No.2	SPF
ALL WEBS EXCEPT	2x3	DRY	No.2	SPF

DRY: SEASONED LUMBER.

PLATES (table is in inches)

JT	TYPE	PLATES	W	LEN	Y	X
2	TMVW-t	MT20	3.0	6.0		
3	TMVW-t	MT20	3.0	5.0	1.50	2.00
4	TTW+p	MT20	3.0	4.0	2.25	1.50
5	TMVW-t	MT20	3.0	5.0	1.50	2.00
6	TMVW-t	MT20	3.0	6.0		
8	BMV1+p	MT20	2.0	4.0		
9	BMVW+p	MT20	4.0	4.0	1.50	1.75
10	BVM-l	MT20	3.0	4.0		
11	BMWWW-t	MT20	3.0	6.0		
12	BVM-l	MT20	3.0	4.0		
13	BMVW+p	MT20	4.0	4.0	1.50	1.75
14	BMV1+p	MT20	2.0	4.0		

A SIZE FOR SIZE SUBSTITUTION OF MITEK MII20 WITH TEE-LOK TL20 PLATES IS ALLOWED.

READ ALL NOTES ON THIS PAGE AND ON THE ENGINEERING NOTE PAGE ENP-1. THE NOTE PAGE IS AN INTEGRAL PART OF THIS DRAWING AS IT CONTAINS SPECIFICATIONS AND CRITERIA USED IN THE DESIGN OF THIS COMPONENT.

DIMENSIONS, SUPPORTS AND LOADINGS SPECIFIED BY FABRICATOR TO BE VERIFIED BY BUILDING DESIGNER

BEARINGS

JT	FACTORED GROSS REACTION VERT	HORZ	MAXIMUM FACTORED GROSS REACTION DOWN	HORZ	UPLIFT	INPUT BRG IN-SX	REQRD BRG IN-SX
14	897	0	897	0	0	5-8	5-8
8	897	0	897	0	0	5-8	5-8

ALLOW FOR 0.4" OF HORIZONTAL MOVEMENT DUE TO TOTAL LOAD

UNFACTORED REACTIONS

JT	1ST LCASE COMBINED	MAX./MIN. COMPONENT REACTIONS SNOW	LIVE	PERM.LIVE	WIND	DEAD	SOIL
14	627	452 / 0	0 / 0	0 / 0	0 / 0	175 / 0	0 / 0
8	627	452 / 0	0 / 0	0 / 0	0 / 0	175 / 0	0 / 0

BEARING MATERIAL TO BE SPF NO.2 OR BETTER AT JOINT(S) 14, 8

BRACING

TOP CHORD TO BE SHEATHED OR MAX. PURLIN SPACING = 6.25 FT.
MAX. UNBRACED BOTTOM CHORD LENGTH = 7.81 FT. OR RIGID CEILING DIRECTLY APPLIED.

ALL PITCH BREAKS AND PERIMETER CORNER JOINTS MUST BE LATERALLY RESTRAINED.

LOADING

TOTAL LOAD CASES: (4)

CHORDS

MEMB. FR-TO	MAX. FACTORED FORCE (LBS)	FACTORED VERT. LOAD (PLF) FROM	TO	LC1 CSI (LC)	MAX UNBRAC LENGTH
1- 2	0 / 29	-77.3	-77.3	0.10 (1)	10.00
2- 3	-788 / 0	-77.3	-77.3	0.15 (1)	6.25
3- 4	-722 / 0	-77.3	-77.3	0.22 (1)	6.25
4- 5	-722 / 0	-77.3	-77.3	0.22 (1)	6.25
5- 6	-788 / 0	-77.3	-77.3	0.15 (1)	6.25
6- 7	0 / 29	-77.3	-77.3	0.10 (1)	10.00
14- 2	-863 / 0	0.0	0.0	0.09 (1)	7.81
8- 6	-863 / 0	0.0	0.0	0.09 (1)	7.81
14-13	0 / 0	-17.5	-17.5	0.08 (4)	10.00
13-12	-153 / 0	0.0	0.0	0.91 (1)	7.81
12- 3	-123 / 18	0.0	0.0	0.91 (1)	7.81
12-11	0 / 918	-17.5	-17.5	0.20 (1)	10.00
11-10	0 / 918	-17.5	-17.5	0.20 (1)	10.00
9-10	-153 / 0	0.0	0.0	0.91 (1)	7.81
10- 5	-123 / 18	0.0	0.0	0.91 (1)	7.81
9- 8	0 / 0	-17.5	-17.5	0.08 (4)	10.00

WEBS

MEMB. FR-TO	MAX. FACTORED FORCE (LBS)	MAX CSI (LC)
11- 4	0 / 483	0.11 (1)
11- 5	-380 / 0	0.17 (1)
3-11	-380 / 0	0.17 (1)
2-13	0 / 692	0.16 (1)
9- 6	0 / 692	0.16 (1)

DESIGN CRITERIA

SPECIFIED LOADS:

TOP	CH.	LL	=	23.3	PSF
		DL	=	3.0	PSF
BOT	CH.	LL	=	0.0	PSF
		DL	=	7.0	PSF
TOTAL	LOAD		=	33.3	PSF

SPACING = 24.0 IN. C/C

THIS TRUSS IS DESIGNED FOR RESIDENTIAL OR SMALL BUILDING REQUIREMENTS OF PART 9, NBCC 2010

THIS DESIGN COMPLIES WITH:
- PART 9 OF OBC 2012 , BCBC 2012 , ABC 2014
- CSA 086-09
- TPIC 2011

(55 % OF 27.2 P.S.F. G.S.L. PLUS 8.4 P.S.F. RAIN LOAD) EQUALS 23.3 P.S.F. SPECIFIED ROOF LIVE LOAD

ALLOWABLE DEFL.(LL)= L/360 (0.56")
CALCULATED VERT. DEFL.(LL) = L/ 999 (0.12")
ALLOWABLE DEFL.(TL)= L/360 (0.56")
CALCULATED VERT. DEFL.(TL) = L/ 921 (0.22")

CSI: TC=0.22 (3-4:1) , BC=0.91 (3-12:1) , WB=0.17 (3-11:1) , SSI=0.52 (12-13:1)

DOL LUMBER=1.00 NAIL=1.00 LS BEND=1.10 COMP=1.10 SHEAR=1.10 TENS= 1.10

COMPANION LIVE LOAD FACTOR = 0.50

TRUSS PLATE MANUFACTURER IS NOT RESPONSIBLE FOR QUALITY CONTROL IN THE TRUSS MANUFACTURING PLANT .

NAIL VALUES

PLATE	GRIP(DRY) (PSI) MAX	MIN	SHEAR (PLI) MAX	MIN	SECTION (PLI) MAX	MIN
MT20	618	354	1667	822	2284	1656

PLATE PLACEMENT TOL. = 0.250 inches

PLATE ROTATION TOL. = 5.0 Deg.

JSI GRIP= 0.88 (11) (INPUT = 0.90)
JSI METAL= 0.23 (2) (INPUT = 1.00)

10 MAR 2017

RECEIVED
TOWN OF MILTON
MAR 29, 2017
17-4967
BUILDING DIVISION

KOTT

SCALE = 1:50.3

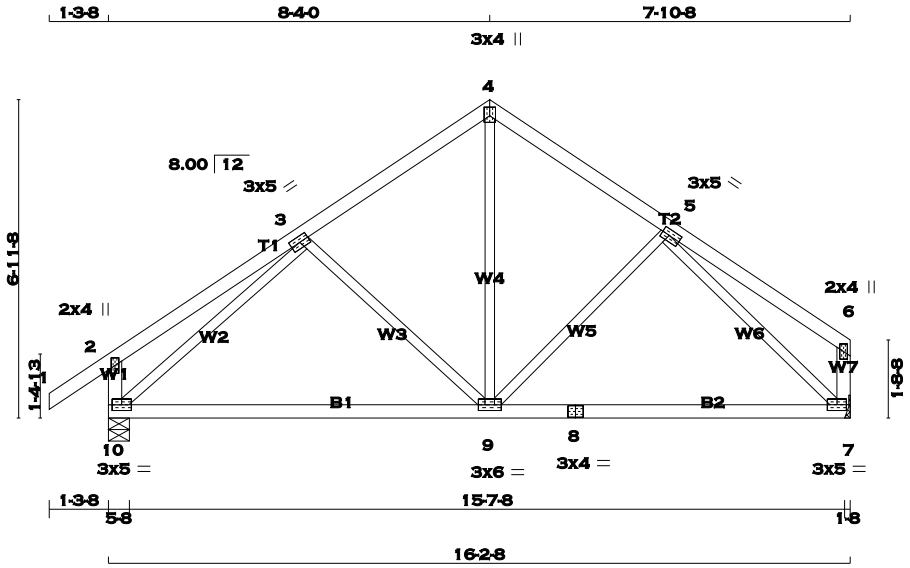

TOTAL WEIGHT = 3 X 68 = 203 lb

[M][F]

LUMBER

N. L. G. A. RULES

CHORDS	SIZE		LUMBER	DESCR.
1 - 4	2x4	DRY	No.2	SPF
4 - 6	2x4	DRY	No.2	SPF
10 - 2	2x4	DRY	No.2	SPF
7 - 6	2x4	DRY	No.2	SPF
10 - 8	2x4	DRY	No.2	SPF
8 - 7	2x4	DRY	No.2	SPF
ALL WEBS EXCEPT	2x3	DRY	No.2	SPF

DRY: SEASONED LUMBER.

PLATES (table is in inches)

JT	TYPE	PLATES	W	LEN	Y	X
2	TMV+p	MT20	2.0	4.0		
3	TMWW-t	MT20	3.0	5.0		
4	TTW+p	MT20	3.0	4.0	2.25	1.50
5	TMWW-t	MT20	3.0	5.0	1.50	2.00
6	TMV+p	MT20	2.0	4.0		
7	BMVW1-t	MT20	3.0	5.0		
8	BS-t	MT20	3.0	4.0		
9	BMWWW-t	MT20	3.0	6.0		
10	BMVW1-t	MT20	3.0	5.0		

A SIZE FOR SIZE SUBSTITUTION OF MITEK MII20 WITH TEE-LOK TL20 PLATES IS ALLOWED.

READ ALL NOTES ON THIS PAGE AND ON THE ENGINEERING NOTE PAGE ENP-1. THE NOTE PAGE IS AN INTEGRAL PART OF THIS DRAWING AS IT CONTAINS SPECIFICATIONS AND CRITERIA USED IN THE DESIGN OF THIS COMPONENT.

DIMENSIONS, SUPPORTS AND LOADINGS SPECIFIED BY FABRICATOR TO BE VERIFIED BY BUILDING DESIGNER

BEARINGS

JT	FACTORED GROSS REACTION VERT	HORZ	MAXIMUM FACTORED GROSS REACTION DOWN	HORZ	UPLIFT	INPUT BRG IN-SX	REQRD BRG IN-SX
10	875	0	875	0	0	5-8	5-8
7	769	0	769	0	0	HANGER BY OTHERS	
						MIN. SEAT SIZE: 1-8	

UNFACTORED REACTIONS

JT	1ST LCASE COMBINED	SNOW	MAX./MIN. COMPONENT REACTIONS LIVE	PERM.LIVE	WIND	DEAD	SOIL
10	612	441 / 0	0 / 0	0 / 0	0 / 0	170 / 0	0 / 0
7	539	377 / 0	0 / 0	0 / 0	0 / 0	162 / 0	0 / 0

BEARING MATERIAL TO BE SPF NO.2 OR BETTER AT JOINT(S) 10

BRACING

TOP CHORD TO BE SHEATHED OR MAX. PURLIN SPACING = 6.25 FT.
MAX. UNBRACED BOTTOM CHORD LENGTH = 10.00 FT. OR RIGID CEILING DIRECTLY APPLIED.

ALL PITCH BREAKS AND PERIMETER CORNER JOINTS MUST BE LATERALLY RESTRAINED.

LOADING

TOTAL LOAD CASES: (4)

CHORDS

MEMB. FR-TO	MAX. FORCE (LBS)	FACTORED VERT. LOAD LC1 (PLF) FROM	TO	MAX CSI (LC)	MAX. UNBRAC LENGTH
1- 2	0 / 29	-77.3	-77.3	0.10 (1)	10.00
2- 3	0 / 21	-77.3	-77.3	0.22 (1)	10.00
3- 4	-609 / 0	-77.3	-77.3	0.17 (1)	6.25
4- 5	-608 / 0	-77.3	-77.3	0.15 (1)	6.25
5- 6	0 / 20	-77.3	-77.3	0.19 (1)	10.00
10- 2	-229 / 0	0.0	0.0	0.02 (1)	7.81
7- 6	-117 / 0	0.0	0.0	0.01 (1)	7.81
10- 9	0 / 636	-17.5	-17.5	0.37 (4)	10.00
9- 8	0 / 589	-17.5	-17.5	0.37 (4)	10.00
8- 7	0 / 589	-17.5	-17.5	0.37 (4)	10.00

WEBS

MEMB. FR-TO	MAX. FORCE (LBS)	MAX CSI (LC)
3- 9	-199 / 0	0.11 (1)
9- 4	0 / 411	0.09 (1)
9- 5	-141 / 12	0.08 (1)
10- 3	-867 / 0	0.46 (1)
5- 7	-841 / 0	0.43 (1)

DESIGN CRITERIA

SPECIFIED LOADS:

TOP	CH.	LL	=	23.3	PSF
		DL	=	3.0	PSF
BOT	CH.	LL	=	0.0	PSF
		DL	=	7.0	PSF
TOTAL	LOAD		=	33.3	PSF

SPACING = 24.0 IN. C/C

THIS TRUSS IS DESIGNED FOR RESIDENTIAL OR SMALL BUILDING REQUIREMENTS OF PART 9, NBCC 2010

THIS DESIGN COMPLIES WITH:
- PART 9 OF OBC 2012 , BCBC 2012 , ABC 2014
- CSA 086-09
- TPIC 2011

(55 % OF 27.2 P.S.F. G.S.L. PLUS 8.4 P.S.F. RAIN LOAD) EQUALS 23.3 P.S.F. SPECIFIED ROOF LIVE LOAD

ALLOWABLE DEFL.(LL)= L/360 (0.54")
CALCULATED VERT. DEFL.(LL) = L/ 999 (0.02")
ALLOWABLE DEFL.(TL)= L/360 (0.54")
CALCULATED VERT. DEFL.(TL) = L/ 999 (0.11")

CSI: TC=0.22 (2-3:1) , BC=0.37 (9-10:4) , WB=0.46 (3-10:1) , SSI=0.13 (3-4:1)

DOL LUMBER=1.00 NAIL=1.00 LS BEND=1.10 COMP=1.10 SHEAR=1.10 TENS= 1.10

COMPANION LIVE LOAD FACTOR = 0.50

TRUSS PLATE MANUFACTURER IS NOT RESPONSIBLE FOR QUALITY CONTROL IN THE TRUSS MANUFACTURING PLANT .

NAIL VALUES

PLATE	GRIP(DRY) (PSI) MAX	MIN	SHEAR (PLI) MAX	MIN	SECTION (PLI) MAX	MIN
MT20	618	354	1667	822	2284	1656

PLATE PLACEMENT TOL. = 0.250 inches

PLATE ROTATION TOL. = 5.0 Deg.

JSI GRIP= 0.90 (3) (INPUT = 0.90)
JSI METAL= 0.24 (3) (INPUT = 1.00)

RECEIVED
TOWN OF MILTON
MAR 29, 2017
17-4967
BUILDING DIVISION

10 MAR 2017

KOTT

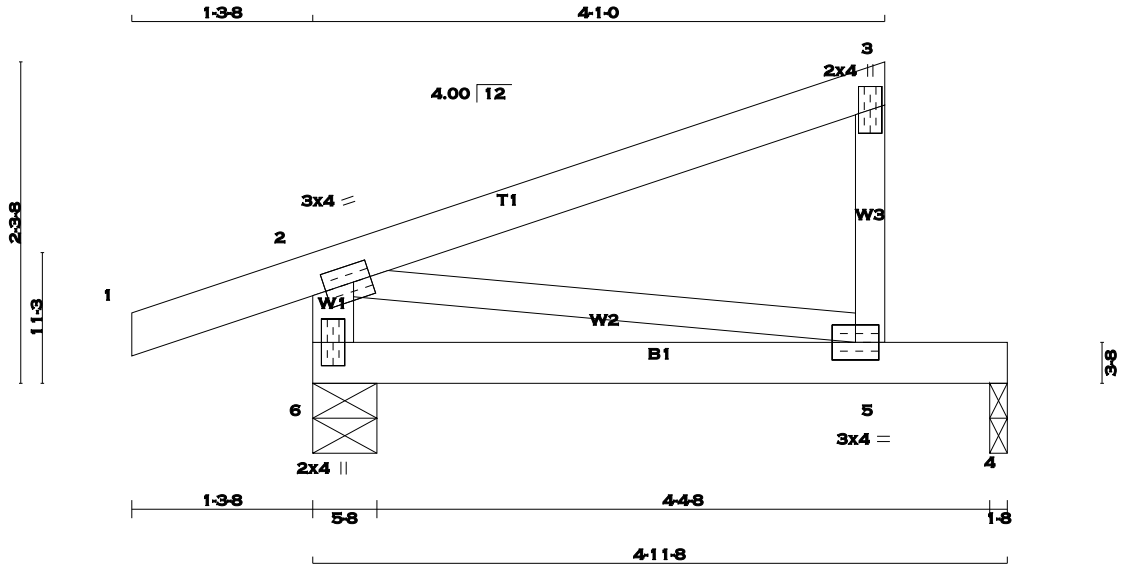

TOTAL WEIGHT = 5 X 17 = 85 lb [M]

LUMBER

N. L. G. A. RULES

CHORDS	SIZE		LUMBER	DESCR.
1 - 3	2x4	DRY	No.2	SPF
5 - 3	2x3	DRY	No.2	SPF
6 - 2	2x4	DRY	No.2	SPF
6 - 4	2x4	DRY	No.2	SPF
ALL WEBS	2x3	DRY	No.2	SPF

DRY: SEASONED LUMBER.

PLATES (table is in inches)

JT	TYPE	PLATES	W	LEN	Y	X
2	TMVW-t	MT20	3.0	4.0	1.50	1.50
3	TMV+p	MT20	2.0	4.0		
5	BMVW-t	MT20	3.0	4.0		
6	BMV1+p	MT20	2.0	4.0		

A SIZE FOR SIZE SUBSTITUTION OF MITEK MII20 WITH TEE-LOK TL20 PLATES IS ALLOWED.

READ ALL NOTES ON THIS PAGE AND ON THE ENGINEERING NOTE PAGE ENP-1. THE NOTE PAGE IS AN INTEGRAL PART OF THIS DRAWING AS IT CONTAINS SPECIFICATIONS AND CRITERIA USED IN THE DESIGN OF THIS COMPONENT.

DIMENSIONS, SUPPORTS AND LOADINGS SPECIFIED BY FABRICATOR TO BE VERIFIED BY BUILDING DESIGNER

BEARINGS

JT	FACTORED GROSS REACTION VERT	HORZ	MAXIMUM FACTORED GROSS REACTION DOWN	HORZ	UPLIFT	INPUT BRG IN-SX	REQRD BRG IN-SX
6	333	0	333	0	0	5-8	5-8
4	173	0	173	0	0	1-8	1-8

UNFACTORED REACTIONS

JT	1ST LCASE COMBINED	MAX./MIN. COMPONENT REACTIONS SNOW	LIVE	PERM.LIVE	WIND	DEAD	SOIL
6	231	174 / 0	0 / 0	0 / 0	0 / 0	57 / 0	0 / 0
4	123	78 / 0	0 / 0	0 / 0	0 / 0	45 / 0	0 / 0

BEARING MATERIAL TO BE SPF NO.2 OR BETTER AT JOINT(S) 6, 4

BRACING

TOP CHORD TO BE SHEATHED OR MAX. PURLIN SPACING = 10.00 FT.
MAX. UNBRACED BOTTOM CHORD LENGTH = 10.00 FT. OR RIGID CEILING DIRECTLY APPLIED.

ALL PITCH BREAKS AND PERIMETER CORNER JOINTS MUST BE LATERALLY RESTRAINED.

LOADING

TOTAL LOAD CASES: (4)

CHORDS

MEMB. FR-TO	MAX. FACTORED FORCE (LBS)	FACTORED VERT. LOAD (PLF) FROM	TO	LC1 MAX CSI (LC)	MAX. UNBRAC LENGTH
1- 2	0 / 16	-77.3	-77.3	0.10 (1)	10.00
2- 3	0 / 0	-77.3	-77.3	0.22 (1)	10.00
5- 3	-158 / 0	0.0	0.0	0.03 (1)	7.81
6- 2	-261 / 0	0.0	0.0	0.03 (1)	7.81
6- 5	0 / 0	-17.5	-17.5	0.20 (1)	10.00
5- 4	0 / 0	-17.5	-17.5	0.20 (1)	10.00

WEBS

MEMB. FR-TO	MAX. FACTORED FORCE (LBS)	MAX CSI (LC)
2- 5	0 / 0	0.00 (1)

DESIGN CRITERIA

SPECIFIED LOADS:

TOP	CH.	LL	=	23.3	PSF
		DL	=	3.0	PSF
BOT	CH.	LL	=	0.0	PSF
		DL	=	7.0	PSF
TOTAL	LOAD		=	33.3	PSF

SPACING = 24.0 IN. C/C

THIS TRUSS IS DESIGNED FOR RESIDENTIAL OR SMALL BUILDING REQUIREMENTS OF PART 9, NBCC 2010

THIS DESIGN COMPLIES WITH:
- PART 9 OF OBC 2012 , BCBC 2012 , ABC 2014
- CSA 086-09
- TPIC 2011

(55 % OF 27.2 P.S.F. G.S.L. PLUS 8.4 P.S.F. RAIN LOAD) EQUALS 23.3 P.S.F. SPECIFIED ROOF LIVE LOAD

ALLOWABLE DEFL.(LL)= L/360 (0.19")
CALCULATED VERT. DEFL.(LL) = L/ 999 (0.03")
ALLOWABLE DEFL.(TL)= L/360 (0.19")
CALCULATED VERT. DEFL.(TL) = L/ 872 (0.07")

CSI: TC=0.22 (2-3:1) , BC=0.20 (5-6:1) , WB=0.00 (2-5:1) , SSI=0.14 (4-5:1)

DOL LUMBER=1.00 NAIL=1.00 LS BEND=1.10 COMP=1.10 SHEAR=1.10 TENS= 1.10

COMPANION LIVE LOAD FACTOR = 0.50

TRUSS PLATE MANUFACTURER IS NOT RESPONSIBLE FOR QUALITY CONTROL IN THE TRUSS MANUFACTURING PLANT .

NAIL VALUES

PLATE	GRIP(DRY) (PSI) MAX	MIN	SHEAR (PLI) MAX	MIN	SECTION (PLI) MAX	MIN
MT20	618	354	1667	822	2284	1656

PLATE PLACEMENT TOL. = 0.250 inches

PLATE ROTATION TOL. = 0.5 Deg.

JSI GRIP= 0.24 (2) (INPUT = 0.90)
JSI METAL= 0.05 (6) (INPUT = 1.00)

10 MAR 2017

RECEIVED
TOWN OF MILTON
MAR 29, 2017
17-4967
BUILDING DIVISION

KOTT

JOB NAME	TRUSS NAME	QUANTITY	PLY	JOB DESC.	DRWG NO.
CC0317-045	T12	1	1	TRUSS DESC. GREENPARK-LECCO RIDGE-BLOCK 325	

KOTT , Stouffville, ON, CGC

Version 8.100 S Jan 17 2017 MiTek Industries, Inc. Fri Mar 10 13:59:31 2017 Page 1
ID:ROua3U0CyIZcrhsEOCClEDyLKB3-rQUfZ7wpGF9X0R8iEhQ3_6pXSNWd351EiYKL5wzcJdg

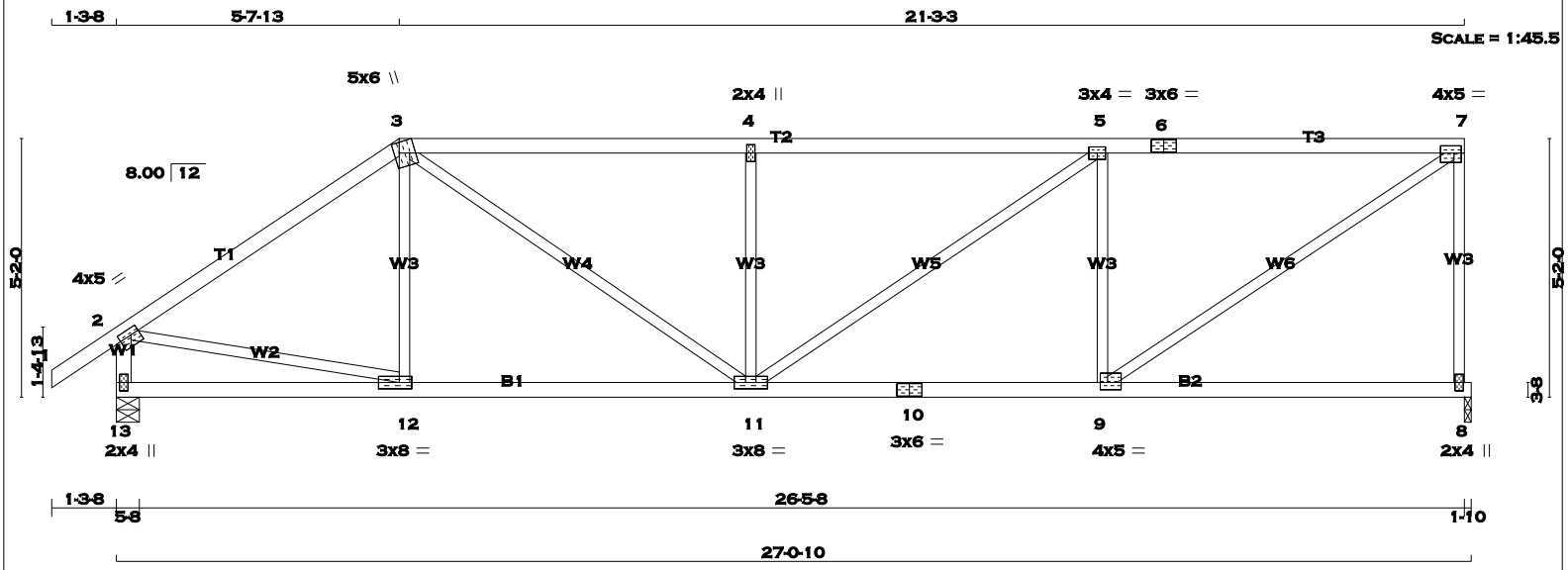

TOTAL WEIGHT = 105 lb [M]

LUMBER

N. L. G. A. RULES

CHORDS	SIZE		LUMBER	DESCR.
1 - 3	2x4	DRY	No.2	SPF
3 - 6	2x4	DRY	No.2	SPF
6 - 7	2x4	DRY	No.2	SPF
8 - 7	2x3	DRY	No.2	SPF
13 - 2	2x4	DRY	No.2	SPF
13 - 10	2x4	DRY	No.2	SPF
10 - 8	2x4	DRY	No.2	SPF
ALL WEBS EXCEPT	2x3	DRY	No.2	SPF

DRY: SEASONED LUMBER.

PLATES (table is in inches)

JT	TYPE	PLATES	W	LEN	Y	X
2	TMVW-t	MT20	4.0	5.0	1.50	2.00
3	TTWW+m	MT20	5.0	6.0	Edge	3.75
4	TMW+w	MT20	2.0	4.0		
5	TMWW-t	MT20	3.0	4.0		
6	TS-t	MT20	3.0	6.0		
7	TMVW-t	MT20	4.0	5.0	1.75	1.75
8	BMV1+p	MT20	2.0	4.0		
9	BMWW-t	MT20	4.0	5.0	1.75	1.75
10	BS-t	MT20	3.0	6.0		
11	BMWWW-t	MT20	3.0	8.0		
12	BMWW-t	MT20	3.0	8.0	1.50	3.00
13	BMV1+p	MT20	2.0	4.0		

Edge - INDICATES REFERENCE CORNER OF PLATE TOUCHES EDGE OF CHORD.

A SIZE FOR SIZE SUBSTITUTION OF MITEK MII20 WITH TEE-LOK TL20 PLATES IS ALLOWED.

READ ALL NOTES ON THIS PAGE AND ON THE ENGINEERING NOTE PAGE ENP-1. THE NOTE PAGE IS AN INTEGRAL PART OF THIS DRAWING AS IT CONTAINS SPECIFICATIONS AND CRITERIA USED IN THE DESIGN OF THIS COMPONENT.

DIMENSIONS, SUPPORTS AND LOADINGS SPECIFIED BY FABRICATOR TO BE VERIFIED BY BUILDING DESIGNER

BEARINGS

JT	FACTORED GROSS REACTION VERT	HORZ	MAXIMUM FACTORED GROSS REACTION DOWN	HORZ	UPLIFT	INPUT BRG IN-SX	REQRD BRG IN-SX
8	1276	0	1276	0	0	1-10	1-10
13	1383	0	1383	0	0	5-8	5-8

UNFACTORED REACTIONS

JT	1ST LCASE COMBINED	MAX./MIN. COMPONENT REACTIONS SNOW	LIVE	PERM.LIVE	WIND	DEAD	SOIL
8	896	627 / 0	0 / 0	0 / 0	0 / 0	269 / 0	0 / 0
13	968	691 / 0	0 / 0	0 / 0	0 / 0	277 / 0	0 / 0

BEARING MATERIAL TO BE SPF NO.2 OR BETTER AT JOINT(S) 8, 13

BRACING

TOP CHORD TO BE SHEATHED OR MAX. PURLIN SPACING = 4.10 FT.
MAX. UNBRACED BOTTOM CHORD LENGTH = 10.00 FT. OR RIGID CEILING DIRECTLY APPLIED.

ALL PITCH BREAKS AND PERIMETER CORNER JOINTS MUST BE LATERALLY RESTRAINED.

LOADING

TOTAL LOAD CASES: (4)

CHORDS MEMB. FR-TO	MAX. FACTORED FORCE (LBS)	FACTORED VERT. LOAD (PLF) FROM	TO	LC1 CSI (LC)	MAX UNBRAC LENGTH	WEBS MEMB. FR-TO	MAX. FACTORED FORCE (LBS)	MAX CSI (LC)
1- 2	0 / 29	-77.3	-77.3	0.10 (1)	10.00	12- 3	-98 / 71	0.04 (1)
2- 3	-1432 / 0	-77.3	-77.3	0.52 (1)	4.82	3-11	0 / 795	0.18 (1)
3- 4	-1841 / 0	-77.3	-77.3	0.68 (1)	4.17	11- 4	-587 / 0	0.23 (1)
4- 5	-1841 / 0	-77.3	-77.3	0.72 (1)	4.10	11- 5	0 / 438	0.10 (1)
5- 6	-1482 / 0	-77.3	-77.3	0.67 (1)	4.52	9- 5	-858 / 0	0.34 (1)
6- 7	-1482 / 0	-77.3	-77.3	0.67 (1)	4.52	9- 7	0 / 1787	0.40 (1)
8- 7	-1225 / 0	0.0	0.0	0.78 (1)	6.35	2-12	0 / 1211	0.27 (1)
13- 2	-1344 / 0	0.0	0.0	0.14 (1)	6.99			
13-12	0 / 0	-17.5	-17.5	0.17 (4)	10.00			
12-11	0 / 1188	-17.5	-17.5	0.29 (1)	10.00			
11-10	0 / 1482	-17.5	-17.5	0.35 (1)	10.00			
10- 9	0 / 1482	-17.5	-17.5	0.35 (1)	10.00			
9- 8	0 / 0	-17.5	-17.5	0.22 (4)	10.00			

DESIGN CRITERIA

SPECIFIED LOADS:

TOP	CH.	LL	=	23.3	PSF
		DL	=	3.0	PSF
BOT	CH.	LL	=	0.0	PSF
		DL	=	7.0	PSF
TOTAL	LOAD		=	33.3	PSF

SPACING = 24.0 IN. C/C

LOADING IN FLAT SECTION BASED ON A SLOPE OF 2.00/12 MINIMUM

THIS TRUSS IS DESIGNED FOR RESIDENTIAL OR SMALL BUILDING REQUIREMENTS OF PART 9, NBCC 2010

THIS DESIGN COMPLIES WITH:
- PART 9 OF OBC 2012 , BCBC 2012 , ABC 2014
- CSA 086-09
- TPIC 2011

(55 % OF 27.2 P.S.F. G.S.L. PLUS 8.4 P.S.F. RAIN LOAD) EQUALS 23.3 P.S.F. SPECIFIED ROOF LIVE LOAD

ALLOWABLE DEFL.(LL)= L/360 (0.90")
CALCULATED VERT. DEFL.(LL) = L/ 999 (0.09")
ALLOWABLE DEFL.(TL)= L/360 (0.90")
CALCULATED VERT. DEFL.(TL) = L/ 999 (0.17")

CSI: TC=0.78 (7-8:1) , BC=0.35 (9-11:1) , WB=0.40 (7-9:1) , SSI=0.26 (5-7:1)

DOL LUMBER=1.00 NAIL=1.00 LS BEND=1.10 COMP=1.10 SHEAR=1.10 TENS= 1.10

COMPANION LIVE LOAD FACTOR = 0.50

TRUSS PLATE MANUFACTURER IS NOT RESPONSIBLE FOR QUALITY CONTROL IN THE TRUSS MANUFACTURING PLANT .

NAIL VALUES

PLATE	GRIP(DRY) (PSI) MAX	MIN	SHEAR (PLI) MAX	MIN	SECTION (PLI) MAX	MIN
MT20	618	354	1667	822	2284	1656

PLATE PLACEMENT TOL. = 0.250 inches

PLATE ROTATION TOL. = 5.0 Deg.

JSI GRIP= 0.90 (12) (INPUT = 0.90)
JSI METAL= 0.48 (2) (INPUT = 1.00)

RECEIVED
TOWN OF MILTON
MAR 29, 2017
17-4967
BUILDING DIVISION

10 MAR 2017

KOTT

JOB NAME	TRUSS NAME	QUANTITY	PLY	JOB DESC.	DRWG NO.
CC0317-045	**T13**	**1**	**1**	TRUSS DESC. GREENPARK-LECCO RIDGE-BLOCK 325	

KOTT , Stouffville, ON, CGC

Version 8.100 S Jan 17 2017 MiTek Industries, Inc. Fri Mar 10 13:59:31 2017 Page 1
ID:ROua3U0CyIZcrhsEOCClEDyLKB3-rQUfZ7wpGF9X0R8iEhQ3_6pVONWV32SEiYKL5wzcJdg

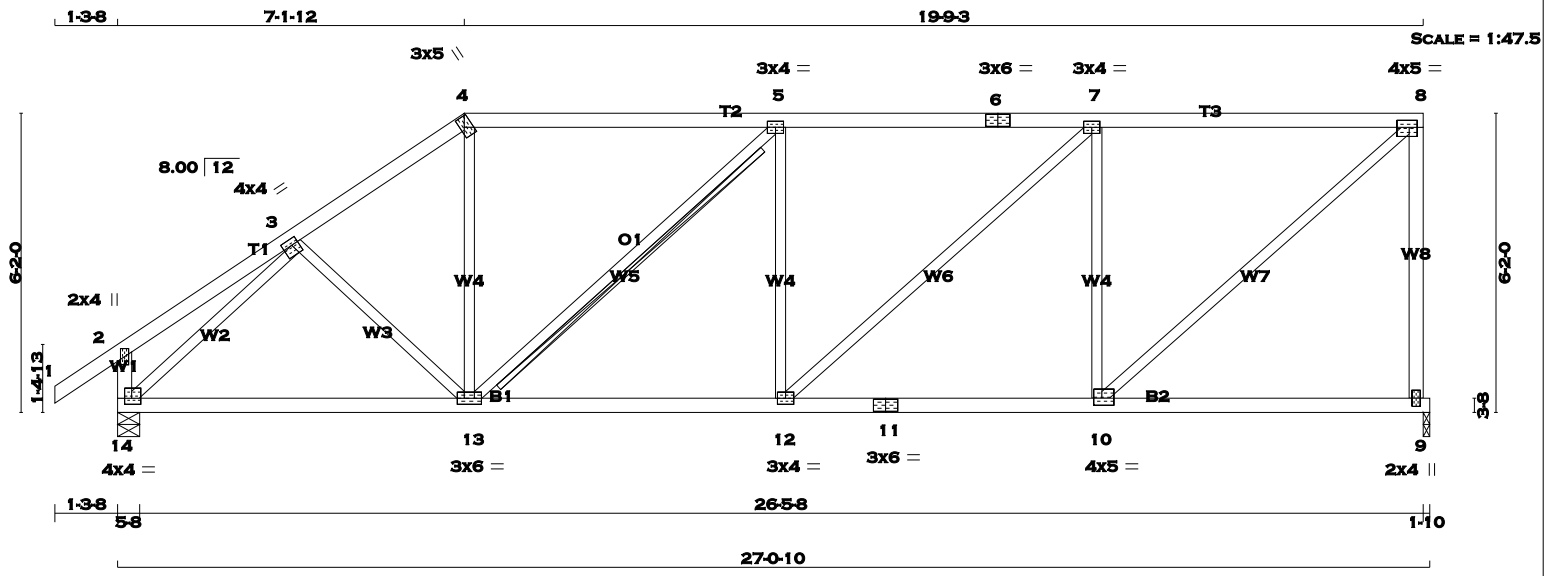

TOTAL WEIGHT = 114 lb
[M]

LUMBER
N. L. G. A. RULES

CHORDS	SIZE		LUMBER	DESCR.
1 - 4	2x4	DRY	No.2	SPF
4 - 6	2x4	DRY	No.2	SPF
6 - 8	2x4	DRY	No.2	SPF
9 - 8	2x4	DRY	No.2	SPF
14 - 2	2x4	DRY	No.2	SPF
14 - 11	2x4	DRY	No.2	SPF
11 - 9	2x4	DRY	No.2	SPF
ALL WEBS EXCEPT	2x3	DRY	No.2	SPF

DRY: SEASONED LUMBER.

PLATES (table is in inches)

JT	TYPE	PLATES	W	LEN	Y	X
2	TMV+p	MT20	2.0	4.0		
3	TMWW-t	MT20	4.0	4.0	1.50	1.75
4	TTW+h	MT20	3.0	5.0	2.50	1.00
5	TMWW-t	MT20	3.0	4.0		
6	TS-t	MT20	3.0	6.0		
7	TMWW-t	MT20	3.0	4.0		
8	TMVW-t	MT20	4.0	5.0	1.75	2.00
9	BMV1+p	MT20	2.0	4.0		
10	BMWW-t	MT20	4.0	5.0	1.75	2.00
11	BS-t	MT20	3.0	6.0		
12	BMWW-t	MT20	3.0	4.0		
13	BMWWW-t	MT20	3.0	6.0		
14	BMVW1-t	MT20	4.0	4.0	1.50	1.75

A SIZE FOR SIZE SUBSTITUTION OF MITEK MII20 WITH TEE-LOK TL20 PLATES IS ALLOWED.

READ ALL NOTES ON THIS PAGE AND ON THE ENGINEERING NOTE PAGE ENP-1. THE NOTE PAGE IS AN INTEGRAL PART OF THIS DRAWING AS IT CONTAINS SPECIFICATIONS AND CRITERIA USED IN THE DESIGN OF THIS COMPONENT.

DIMENSIONS, SUPPORTS AND LOADINGS SPECIFIED BY FABRICATOR TO BE VERIFIED BY BUILDING DESIGNER

BEARINGS

JT	FACTORED GROSS REACTION VERT	HORZ	MAXIMUM FACTORED GROSS REACTION DOWN	HORZ	UPLIFT	INPUT BRG IN-SX	REQRD BRG IN-SX
9	1276	0	1276	0	0	1-10	1-10
14	1383	0	1383	0	0	5-8	5-8

UNFACTORED REACTIONS

JT	1ST LCASE COMBINED	MAX./MIN. COMPONENT REACTIONS SNOW	LIVE	PERM.LIVE	WIND	DEAD	SOIL
9	896	627 / 0	0 / 0	0 / 0	0 / 0	269 / 0	0 / 0
14	968	691 / 0	0 / 0	0 / 0	0 / 0	277 / 0	0 / 0

BEARING MATERIAL TO BE SPF NO.2 OR BETTER AT JOINT(S) 9, 14

BRACING
TOP CHORD TO BE SHEATHED OR MAX. PURLIN SPACING = 4.63 FT.
MAX. UNBRACED BOTTOM CHORD LENGTH = 10.00 FT. OR RIGID CEILING DIRECTLY APPLIED.

ALL PITCH BREAKS AND PERIMETER CORNER JOINTS MUST BE LATERALLY RESTRAINED.

2x3 SPF No.2 T-BRACE AT 5-13

FASTEN T AND I-BRACES TO NARROW EDGE OF WEB WITH ONE ROW PER PLY OF 3" COMMON WIRE NAILS @ 6" O.C. WITH 3" MINIMUM END DISTANCE. BRACE MUST COVER 90% OF WEB LENGTH.

END VERTICAL(S) MUST BE SHEATHED OR HAVE BRACES AS INDICATED IN THE MAX. UNBRACED LENGTH COLUMN OF THE TABLE BELOW

LOADING
TOTAL LOAD CASES: (4)

CHORDS

MEMB. FR-TO	MAX. FACTORED FORCE (LBS)	FACTORED VERT. LOAD (PLF) FROM	TO	LC1 MAX CSI (LC)	MAX. UNBRAC LENGTH
1- 2	0 / 29	-77.3	-77.3	0.10 (1)	10.00
2- 3	0 / 16	-77.3	-77.3	0.14 (1)	10.00
3- 4	-1409 / 0	-77.3	-77.3	0.17 (1)	5.32
4- 5	-1165 / 0	-77.3	-77.3	0.50 (1)	5.22
5- 6	-1522 / 0	-77.3	-77.3	0.57 (1)	4.63
6- 7	-1522 / 0	-77.3	-77.3	0.57 (1)	4.63
7- 8	-1167 / 0	-77.3	-77.3	0.54 (1)	5.16
9- 8	-1229 / 0	0.0	0.0	0.91 (1)	7.23
14- 2	-215 / 0	0.0	0.0	0.02 (1)	7.81
14-13	0 / 1151	-17.5	-17.5	0.30 (1)	10.00
13-12	0 / 1522	-17.5	-17.5	0.36 (1)	10.00
12-11	0 / 1167	-17.5	-17.5	0.29 (1)	10.00
11-10	0 / 1167	-17.5	-17.5	0.29 (1)	10.00
10- 9	0 / 0	-17.5	-17.5	0.19 (4)	10.00

WEBS

MEMB. FR-TO	MAX. FACTORED FORCE (LBS)	MAX CSI (LC)
3-13	0 / 52	0.02 (4)
13- 4	0 / 460	0.10 (1)
13- 5	-484 / 0	0.63 (1)
12- 5	-220 / 22	0.13 (1)
12- 7	0 / 478	0.11 (1)
10- 7	-886 / 0	0.53 (1)
10- 8	0 / 1549	0.35 (1)
14- 3	-1603 / 0	0.63 (1)

DESIGN CRITERIA

SPECIFIED LOADS:

TOP CH.	LL	=	23.3	PSF
	DL	=	3.0	PSF
BOT CH.	LL	=	0.0	PSF
	DL	=	7.0	PSF
TOTAL LOAD		=	33.3	PSF

SPACING = 24.0 IN. C/C

LOADING IN FLAT SECTION BASED ON A SLOPE OF 2.00/12 MINIMUM

THIS TRUSS IS DESIGNED FOR RESIDENTIAL OR SMALL BUILDING REQUIREMENTS OF PART 9, NBCC 2010

THIS DESIGN COMPLIES WITH:
- PART 9 OF OBC 2012 , BCBC 2012 , ABC 2014
- CSA 086-09
- TPIC 2011

(55 % OF 27.2 P.S.F. G.S.L. PLUS 8.4 P.S.F. RAIN LOAD) EQUALS 23.3 P.S.F. SPECIFIED ROOF LIVE LOAD

ALLOWABLE DEFL.(LL)= L/360 (0.90")
CALCULATED VERT. DEFL.(LL) = L/ 999 (0.07")
ALLOWABLE DEFL.(TL)= L/360 (0.90")
CALCULATED VERT. DEFL.(TL) = L/ 999 (0.13")

CSI: TC=0.91 (8-9:1) , BC=0.36 (12-13:1) , WB=0.63 (3-14:1) , SSI=0.24 (7-8:1)

DOL LUMBER=1.00 NAIL=1.00 LS BEND=1.10 COMP=1.10 SHEAR=1.10 TENS= 1.10

COMPANION LIVE LOAD FACTOR = 0.50

TRUSS PLATE MANUFACTURER IS NOT RESPONSIBLE FOR QUALITY CONTROL IN THE TRUSS MANUFACTURING PLANT .

NAIL VALUES

PLATE	GRIP(DRY) (PSI) MAX	MIN	SHEAR (PLI) MAX	MIN	SECTION (PLI) MAX	MIN
MT20	618	354	1667	822	2284	1656

PLATE PLACEMENT TOL. = 0.250 inches

PLATE ROTATION TOL. = 5.0 Deg.

JSI GRIP= 0.89 (14) (INPUT = 0.90)
JSI METAL= 0.59 (3) (INPUT = 1.00)

RECEIVED
TOWN OF MILTON
MAR 29, 2017
17-4967
BUILDING DIVISION

10 MAR 2017

KOTT

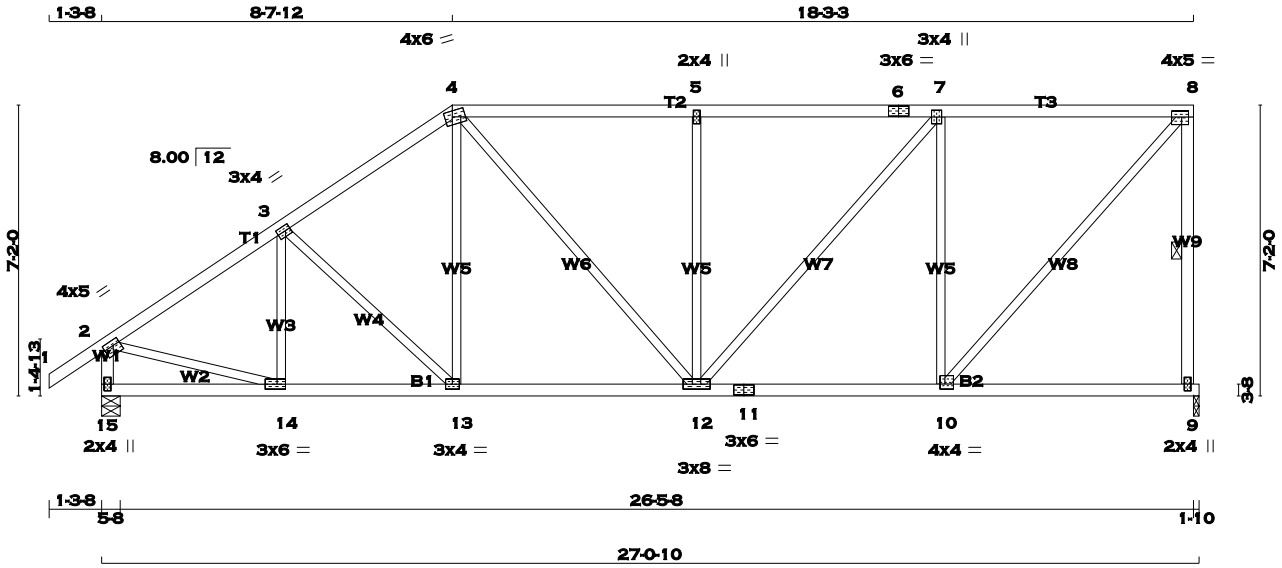

TOTAL WEIGHT = 123 lb [M]

LUMBER

N. L. G. A. RULES

CHORDS	SIZE		LUMBER	DESCR.
1 - 4	2x4	DRY	No.2	SPF
4 - 6	2x4	DRY	No.2	SPF
6 - 8	2x4	DRY	No.2	SPF
9 - 8	2x4	DRY	No.2	SPF
15 - 2	2x4	DRY	No.2	SPF
15 - 11	2x4	DRY	No.2	SPF
11 - 9	2x4	DRY	No.2	SPF
ALL WEBS EXCEPT	2x3	DRY	No.2	SPF

DRY: SEASONED LUMBER.

PLATES (table is in inches)

JT	TYPE	PLATES	W	LEN	Y	X
2	TMVW-t	MT20	4.0	5.0	1.50	2.00
3	TMWW-t	MT20	3.0	4.0	1.50	1.50
4	TTWW-m	MT20	4.0	6.0	1.75	2.25
5	TMW+w	MT20	2.0	4.0		
6	TS-t	MT20	3.0	6.0		
7	TMWW+t	MT20	3.0	4.0		
8	TMVW-t	MT20	4.0	5.0	1.75	2.00
9	BMV1+p	MT20	2.0	4.0		
10	BMWW-t	MT20	4.0	4.0	1.50	1.50
11	BS-t	MT20	3.0	6.0		
12	BMWWW-t	MT20	3.0	8.0		
13	BMWW-t	MT20	3.0	4.0		
14	BMWW-t	MT20	3.0	6.0	1.50	2.50
15	BMV1+p	MT20	2.0	4.0		

A SIZE FOR SIZE SUBSTITUTION OF MITEK MII20 WITH TEE-LOK TL20 PLATES IS ALLOWED.

READ ALL NOTES ON THIS PAGE AND ON THE ENGINEERING NOTE PAGE ENP-1. THE NOTE PAGE IS AN INTEGRAL PART OF THIS DRAWING AS IT CONTAINS SPECIFICATIONS AND CRITERIA USED IN THE DESIGN OF THIS COMPONENT.

DIMENSIONS, SUPPORTS AND LOADINGS SPECIFIED BY FABRICATOR TO BE VERIFIED BY BUILDING DESIGNER

BEARINGS

JT	FACTORED GROSS REACTION VERT	HORZ	MAXIMUM FACTORED GROSS REACTION DOWN	HORZ	UPLIFT	INPUT BRG IN-SX	REQRD BRG IN-SX
9	1276	0	1276	0	0	1-10	1-10
15	1383	0	1383	0	0	5-8	5-8

UNFACTORED REACTIONS

JT	1ST LCASE COMBINED	MAX./MIN. COMPONENT REACTIONS SNOW	LIVE	PERM.LIVE	WIND	DEAD	SOIL
9	896	627 / 0	0 / 0	0 / 0	0 / 0	269 / 0	0 / 0
15	968	691 / 0	0 / 0	0 / 0	0 / 0	277 / 0	0 / 0

BEARING MATERIAL TO BE SPF NO.2 OR BETTER AT JOINT(S) 9, 15

BRACING

TOP CHORD TO BE SHEATHED OR MAX. PURLIN SPACING = 5.10 FT.
MAX. UNBRACED BOTTOM CHORD LENGTH = 10.00 FT. OR RIGID CEILING DIRECTLY APPLIED.

ALL PITCH BREAKS AND PERIMETER CORNER JOINTS MUST BE LATERALLY RESTRAINED.

1 - 2x3 SPF No.2 LATERAL BRACE(S) AT 1/ 2 LENGTH OF 8-9. DBS = 12-0-0 . CBF = 92 LBS.

DBS = DIAGONAL BRACE SPACING (MAX). CBF = CUMULATIVE BRACING FORCE. FASTEN LATERAL BRACE(S) USING (0.122"X3") SPIRAL NAILS : 1 NAIL FOR 2x3 BRACE(S), 2 FOR 1x4, 2x4, 2x5, 3 FOR 2x6, 4 FOR 2x8, 5 FOR 2x10, AND 6 FOR 2x12.

END VERTICAL(S) MUST BE SHEATHED OR HAVE BRACES AS INDICATED IN THE MAX. UNBRACED LENGTH COLUMN OF THE TABLE BELOW

LOADING

TOTAL LOAD CASES: (4)

CHORDS

MEMB. FR-TO	MAX. FACTORED FORCE (LBS)	FACTORED VERT. LOAD (PLF) FROM	TO	LC1 MAX CSI (LC)	MAX. UNBRAC LENGTH
1- 2	0 / 29	-77.3	-77.3	0.10 (1)	10.00
2- 3	-1442 / 0	-77.3	-77.3	0.28 (1)	5.14
3- 4	-1341 / 0	-77.3	-77.3	0.27 (1)	5.29
4- 5	-1284 / 0	-77.3	-77.3	0.43 (1)	5.15
5- 6	-1284 / 0	-77.3	-77.3	0.46 (1)	5.10
6- 7	-1284 / 0	-77.3	-77.3	0.46 (1)	5.10
7- 8	-940 / 0	-77.3	-77.3	0.44 (1)	5.76
9- 8	-1232 / 0	0.0	0.0	0.29 (1)	5.78
15- 2	-1348 / 0	0.0	0.0	0.14 (1)	6.99
15-14	0 / 0	-17.5	-17.5	0.07 (4)	10.00
14-13	0 / 1217	-17.5	-17.5	0.25 (1)	10.00
13-12	0 / 1099	-17.5	-17.5	0.23 (1)	10.00
12-11	0 / 940	-17.5	-17.5	0.24 (1)	10.00
11-10	0 / 940	-17.5	-17.5	0.24 (1)	10.00
10- 9	0 / 0	-17.5	-17.5	0.16 (4)	10.00

WEBS

MEMB. FR-TO	MAX. FACTORED FORCE (LBS)	MAX CSI (LC)
14- 3	-222 / 2	0.06 (1)
3-13	-166 / 0	0.10 (1)
13- 4	0 / 209	0.05 (1)
4-12	0 / 281	0.06 (1)
12- 5	-503 / 0	0.45 (1)
12- 7	0 / 522	0.12 (1)
10- 7	-916 / 0	0.82 (1)
10- 8	0 / 1401	0.32 (1)
2-14	0 / 1253	0.28 (1)

DESIGN CRITERIA

SPECIFIED LOADS:

TOP CH.	LL	=	23.3	PSF
	DL	=	3.0	PSF
BOT CH.	LL	=	0.0	PSF
	DL	=	7.0	PSF
TOTAL LOAD		=	33.3	PSF

SPACING = 24.0 IN. C/C

LOADING IN FLAT SECTION BASED ON A SLOPE OF 2.00/12 MINIMUM

THIS TRUSS IS DESIGNED FOR RESIDENTIAL OR SMALL BUILDING REQUIREMENTS OF PART 9, NBCC 2010

THIS DESIGN COMPLIES WITH:
- PART 9 OF OBC 2012 , BCBC 2012 , ABC 2014
- CSA 086-09
- TPIC 2011

(55 % OF 27.2 P.S.F. G.S.L. PLUS 8.4 P.S.F. RAIN LOAD) EQUALS 23.3 P.S.F. SPECIFIED ROOF LIVE LOAD

ALLOWABLE DEFL.(LL)= L/360 (0.90")
CALCULATED VERT. DEFL.(LL) = L/ 999 (0.06")
ALLOWABLE DEFL.(TL)= L/360 (0.90")
CALCULATED VERT. DEFL.(TL) = L/ 999 (0.11")

CSI: TC=0.46 (5-7:1) , BC=0.25 (13-14:1) , WB=0.82 (7-10:1) , SSI=0.22 (7-8:1)

DOL LUMBER=1.00 NAIL=1.00 LS BEND=1.10 COMP=1.10 SHEAR=1.10 TENS= 1.10

COMPANION LIVE LOAD FACTOR = 0.50

TRUSS PLATE MANUFACTURER IS NOT RESPONSIBLE FOR QUALITY CONTROL IN THE TRUSS MANUFACTURING PLANT .

NAIL VALUES

PLATE	GRIP(DRY) (PSI) MAX	MIN	SHEAR (PLI) MAX	MIN	SECTION (PLI) MAX	MIN
MT20	618	354	1667	822	2284	1656

PLATE PLACEMENT TOL. = 0.250 inches

PLATE ROTATION TOL. = 5.0 Deg.

JSI GRIP= 0.86 (8) (INPUT = 0.90)
JSI METAL= 0.48 (2) (INPUT = 1.00)

RECEIVED
TOWN OF MILTON
MAR 29, 2017
17-4967
BUILDING DIVISION

10 MAR 2017

KOTT

JOB NAME	TRUSS NAME	QUANTITY	PLY	JOB DESC.	DRWG NO.
CC0317-045	T15	1	1	TRUSS DESC. GREENPARK-LECCO RIDGE-BLOCK 325	

KOTT , Stouffville, ON, CGC

Version 8.100 S Jan 17 2017 MiTek Industries, Inc. Fri Mar 10 13:59:32 2017 Page 1
ID:ROua3U0CyIZcrhsEOCClEDyLKB3-Jd21nTxR1ZHOebjuoPxIXKLoAnuRoQhNxC3udNzcJdf

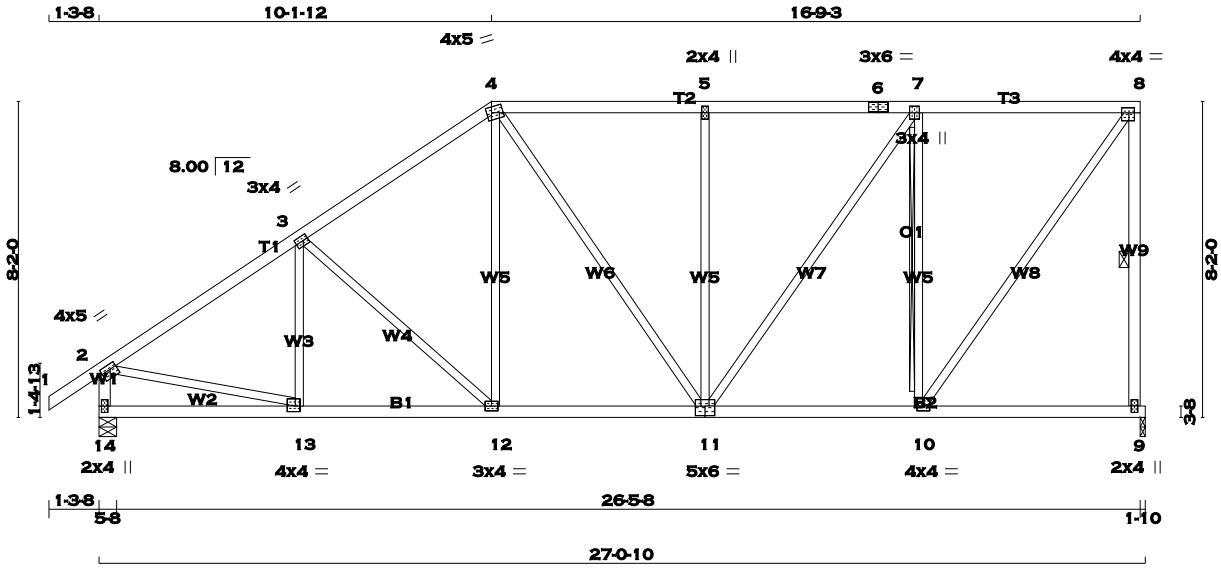

TOTAL WEIGHT = 129 lb
[M]

LUMBER
N. L. G. A. RULES

CHORDS	SIZE		LUMBER	DESCR.
1 - 4	2x4	DRY	No.2	SPF
4 - 6	2x4	DRY	No.2	SPF
6 - 8	2x4	DRY	No.2	SPF
9 - 8	2x4	DRY	No.2	SPF
14 - 2	2x4	DRY	No.2	SPF
14 - 11	2x4	DRY	No.2	SPF
11 - 9	2x4	DRY	No.2	SPF
ALL WEBS EXCEPT	2x3	DRY	No.2	SPF

DRY: SEASONED LUMBER.

PLATES (table is in inches)

JT	TYPE	PLATES	W	LEN	Y	X
2	TMVW-t	MT20	4.0	5.0	1.50	2.00
3	TMWW-t	MT20	3.0	4.0	1.50	1.50
4	TTWW-m	MT20	4.0	5.0	1.75	1.50
5	TMW+w	MT20	2.0	4.0		
6	TS-t	MT20	3.0	6.0		
7	TMWW+t	MT20	3.0	4.0		
8	TMVW-t	MT20	4.0	4.0	1.50	1.75
9	BMV1+p	MT20	2.0	4.0		
10	BMWW-t	MT20	4.0	4.0	1.50	1.75
11	BSWWW-l	MT20	5.0	6.0	3.00	3.00
12	BMWW-t	MT20	3.0	4.0		
13	BMWW-t	MT20	4.0	4.0	1.75	1.50
14	BMV1+p	MT20	2.0	4.0		

A SIZE FOR SIZE SUBSTITUTION OF MITEK MII20 WITH TEE-LOK TL20 PLATES IS ALLOWED.

READ ALL NOTES ON THIS PAGE AND ON THE ENGINEERING NOTE PAGE ENP-1. THE NOTE PAGE IS AN INTEGRAL PART OF THIS DRAWING AS IT CONTAINS SPECIFICATIONS AND CRITERIA USED IN THE DESIGN OF THIS COMPONENT.

DIMENSIONS, SUPPORTS AND LOADINGS SPECIFIED BY FABRICATOR TO BE VERIFIED BY BUILDING DESIGNER

BEARINGS

JT	FACTORED GROSS REACTION VERT	HORZ	MAXIMUM FACTORED GROSS REACTION DOWN	HORZ	UPLIFT	INPUT BRG IN-SX	REQRD BRG IN-SX
9	1276	0	1276	0	0	1-10	1-10
14	1383	0	1383	0	0	5-8	5-8

UNFACTORED REACTIONS

JT	1ST LCASE COMBINED	MAX./MIN. COMPONENT REACTIONS SNOW	LIVE	PERM.LIVE	WIND	DEAD	SOIL
9	896	627 / 0	0 / 0	0 / 0	0 / 0	269 / 0	0 / 0
14	968	691 / 0	0 / 0	0 / 0	0 / 0	277 / 0	0 / 0

BEARING MATERIAL TO BE SPF NO.2 OR BETTER AT JOINT(S) 9, 14

BRACING
TOP CHORD TO BE SHEATHED OR MAX. PURLIN SPACING = 4.96 FT.
MAX. UNBRACED BOTTOM CHORD LENGTH = 10.00 FT. OR RIGID CEILING DIRECTLY APPLIED.

ALL PITCH BREAKS AND PERIMETER CORNER JOINTS MUST BE LATERALLY RESTRAINED.

1 - 2x3 SPF No.2 LATERAL BRACE(S) AT 1/ 2 LENGTH OF 8-9. DBS = 12-0-0 . CBF = 93 LBS.
2x3 SPF No.2 T-BRACE AT 7-10

DBS = DIAGONAL BRACE SPACING (MAX). CBF = CUMULATIVE BRACING FORCE. FASTEN LATERAL BRACE(S) USING (0.122"X3") SPIRAL NAILS : 1 NAIL FOR 2x3 BRACE(S), 2 FOR 1x4, 2x4, 2x5, 3 FOR 2x6, 4 FOR 2x8, 5 FOR 2x10, AND 6 FOR 2x12.

FASTEN T AND I-BRACES TO NARROW EDGE OF WEB WITH ONE ROW PER PLY OF 3" COMMON WIRE NAILS @ 6" O.C. WITH 3" MINIMUM END DISTANCE. BRACE MUST COVER 90% OF WEB LENGTH.

END VERTICAL(S) MUST BE SHEATHED OR HAVE BRACES AS INDICATED IN THE MAX. UNBRACED LENGTH COLUMN OF THE TABLE BELOW

LOADING
TOTAL LOAD CASES: (4)

CHORDS

MEMB. FR-TO	MAX. FACTORED FORCE (LBS)	FACTORED VERT. LOAD LC1 (PLF) FROM	TO	MAX CSI (LC)	MAX. UNBRAC LENGTH
1- 2	0 / 29	-77.3	-77.3	0.10 (1)	10.00
2- 3	-1462 / 0	-77.3	-77.3	0.40 (1)	4.96
3- 4	-1264 / 0	-77.3	-77.3	0.38 (1)	5.26
4- 5	-1094 / 0	-77.3	-77.3	0.34 (1)	5.60
5- 6	-1094 / 0	-77.3	-77.3	0.37 (1)	5.55
6- 7	-1094 / 0	-77.3	-77.3	0.37 (1)	5.55
7- 8	-769 / 0	-77.3	-77.3	0.36 (1)	6.25
9- 8	-1236 / 0	0.0	0.0	0.37 (1)	5.77
14- 2	-1344 / 0	0.0	0.0	0.14 (1)	6.99
14-13	0 / 0	-17.5	-17.5	0.10 (4)	10.00
13-12	0 / 1238	-17.5	-17.5	0.25 (1)	10.00
12-11	0 / 1032	-17.5	-17.5	0.22 (1)	10.00
11-10	0 / 769	-17.5	-17.5	0.20 (1)	10.00
10- 9	0 / 0	-17.5	-17.5	0.14 (4)	10.00

WEBS

MEMB. FR-TO	MAX. FACTORED FORCE (LBS)	MAX CSI (LC)
13- 3	-163 / 36	0.06 (1)
3-12	-280 / 0	0.24 (1)
12- 4	0 / 281	0.06 (1)
4-11	0 / 107	0.02 (1)
11- 5	-461 / 0	0.60 (1)
11- 7	0 / 566	0.13 (1)
10- 7	-945 / 0	0.95 (1)
10- 8	0 / 1307	0.29 (1)
2-13	0 / 1264	0.28 (1)

DESIGN CRITERIA

SPECIFIED LOADS:

TOP CH.	LL	=	23.3	PSF
	DL	=	3.0	PSF
BOT CH.	LL	=	0.0	PSF
	DL	=	7.0	PSF
TOTAL LOAD		=	33.3	PSF

SPACING = 24.0 IN. C/C

LOADING IN FLAT SECTION BASED ON A SLOPE OF 2.00/12 MINIMUM

THIS TRUSS IS DESIGNED FOR RESIDENTIAL OR SMALL BUILDING REQUIREMENTS OF PART 9, NBCC 2010

THIS DESIGN COMPLIES WITH:
- PART 9 OF OBC 2012 , BCBC 2012 , ABC 2014
- CSA 086-09
- TPIC 2011

(55 % OF 27.2 P.S.F. G.S.L. PLUS 8.4 P.S.F. RAIN LOAD) EQUALS 23.3 P.S.F. SPECIFIED ROOF LIVE LOAD

ALLOWABLE DEFL.(LL)= L/360 (0.90")
CALCULATED VERT. DEFL.(LL) = L/ 999 (0.05")
ALLOWABLE DEFL.(TL)= L/360 (0.90")
CALCULATED VERT. DEFL.(TL) = L/ 999 (0.10")

CSI: TC=0.40 (2-3:1) , BC=0.25 (12-13:1) , WB=0.95 (7-10:1) , SSI=0.21 (7-8:1)

DOL LUMBER=1.00 NAIL=1.00 LS BEND=1.10 COMP=1.10 SHEAR=1.10 TENS= 1.10

COMPANION LIVE LOAD FACTOR = 0.50

TRUSS PLATE MANUFACTURER IS NOT RESPONSIBLE FOR QUALITY CONTROL IN THE TRUSS MANUFACTURING PLANT .

NAIL VALUES

PLATE	GRIP(DRY) (PSI) MAX	MIN	SHEAR (PLI) MAX	MIN	SECTION (PLI) MAX	MIN
MT20	618	354	1667	822	2284	1656

PLATE PLACEMENT TOL. = 0.250 inches

PLATE ROTATION TOL. = 5.0 Deg.

JSI GRIP= 0.90 (8) (INPUT = 0.90)
JSI METAL= 0.49 (2) (INPUT = 1.00)

RECEIVED
TOWN OF MILTON
MAR 29, 2017
17-4967
BUILDING DIVISION

10 MAR 2017

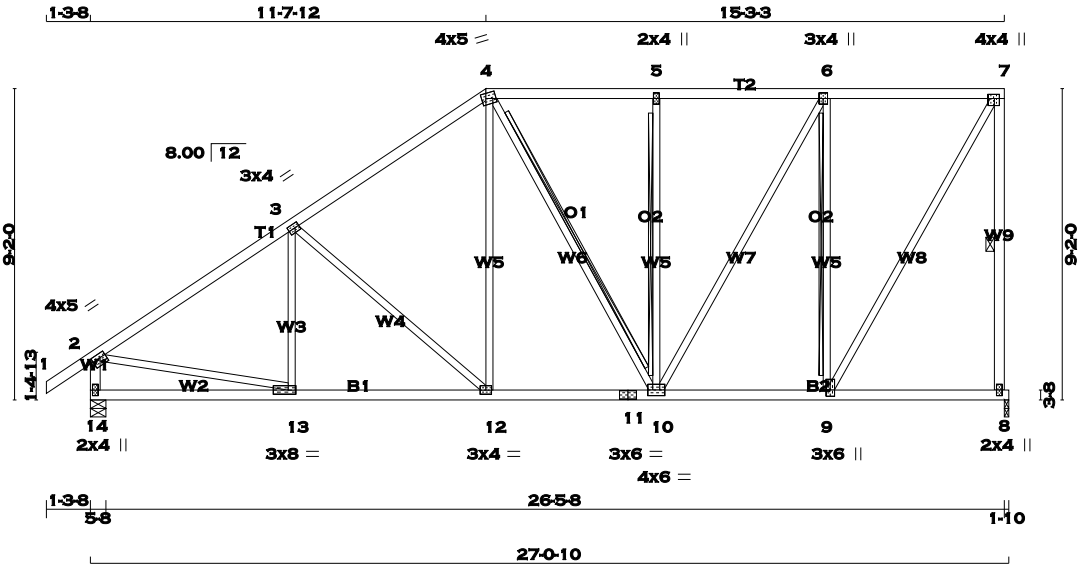

TOTAL WEIGHT = 137 lb [M]

LUMBER

N. L. G. A. RULES

CHORDS	SIZE		LUMBER	DESCR.
1 - 4	2x4	DRY	No.2	SPF
4 - 7	2x4	DRY	No.2	SPF
8 - 7	2x4	DRY	No.2	SPF
14 - 2	2x4	DRY	No.2	SPF
14 - 11	2x4	DRY	No.2	SPF
11 - 8	2x4	DRY	No.2	SPF
ALL WEBS EXCEPT	2x3	DRY	No.2	SPF

DRY: SEASONED LUMBER.

PLATES (table is in inches)

JT	TYPE	PLATES	W	LEN	Y	X
2	TMVW-t	MT20	4.0	5.0	1.50	2.00
3	TMWW-t	MT20	3.0	4.0	1.50	1.50
4	TTWW-m	MT20	4.0	5.0	1.75	1.50
5	TMW+w	MT20	2.0	4.0		
6	TMWW+t	MT20	3.0	4.0		
7	TMVW+p	MT20	4.0	4.0	1.50	1.75
8	BMV1+p	MT20	2.0	4.0		
9	BMWW+t	MT20	3.0	6.0	2.25	1.50
10	BMWWW-t	MT20	4.0	6.0		
11	BS-t	MT20	3.0	6.0		
12	BMWW-t	MT20	3.0	4.0		
13	BMWW-t	MT20	3.0	8.0	1.50	2.75
14	BMV1+p	MT20	2.0	4.0		

A SIZE FOR SIZE SUBSTITUTION OF MITEK MII20 WITH TEE-LOK TL20 PLATES IS ALLOWED.

READ ALL NOTES ON THIS PAGE AND ON THE ENGINEERING NOTE PAGE ENP-1. THE NOTE PAGE IS AN INTEGRAL PART OF THIS DRAWING AS IT CONTAINS SPECIFICATIONS AND CRITERIA USED IN THE DESIGN OF THIS COMPONENT.

DIMENSIONS, SUPPORTS AND LOADINGS SPECIFIED BY FABRICATOR TO BE VERIFIED BY BUILDING DESIGNER

BEARINGS

JT	FACTORED GROSS REACTION VERT	HORZ	MAXIMUM FACTORED GROSS REACTION DOWN	HORZ	UPLIFT	INPUT BRG IN-SX	REQRD BRG IN-SX
8	1276	0	1276	0	0	1-10	1-10
14	1383	0	1383	0	0	5-8	5-8

UNFACTORED REACTIONS

JT	1ST LCASE COMBINED	MAX./MIN. COMPONENT REACTIONS SNOW	LIVE	PERM.LIVE	WIND	DEAD	SOIL
8	896	627 / 0	0 / 0	0 / 0	0 / 0	269 / 0	0 / 0
14	968	691 / 0	0 / 0	0 / 0	0 / 0	277 / 0	0 / 0

BEARING MATERIAL TO BE SPF NO.2 OR BETTER AT JOINT(S) 8, 14

BRACING

TOP CHORD TO BE SHEATHED OR MAX. PURLIN SPACING = 4.75 FT.
MAX. UNBRACED BOTTOM CHORD LENGTH = 10.00 FT. OR RIGID CEILING DIRECTLY APPLIED.

ALL PITCH BREAKS AND PERIMETER CORNER JOINTS MUST BE LATERALLY RESTRAINED.

1 - 2x3 SPF No.2 LATERAL BRACE(S) AT 1/ 2 LENGTH OF 7-8. DBS = 12-0-0 . CBF = 93 LBS.
2x4 SPF No.2 T-BRACE AT 4-10, 6-9
2x3 SPF No.2 T-BRACE AT 5-10

DBS = DIAGONAL BRACE SPACING (MAX). CBF = CUMULATIVE BRACING FORCE. FASTEN LATERAL BRACE(S) USING (0.122"X3") SPIRAL NAILS : 1 NAIL FOR 2x3 BRACE(S), 2 FOR 1x4, 2x4, 2x5, 3 FOR 2x6, 4 FOR 2x8, 5 FOR 2x10, AND 6 FOR 2x12.

FASTEN T AND I-BRACES TO NARROW EDGE OF WEB WITH ONE ROW PER PLY OF 3" COMMON WIRE NAILS @ 6" O.C. WITH 3" MINIMUM END DISTANCE. BRACE MUST COVER 90% OF WEB LENGTH.

END VERTICAL(S) MUST BE SHEATHED OR HAVE BRACES AS INDICATED IN THE MAX. UNBRACED LENGTH COLUMN OF THE TABLE BELOW

LOADING

TOTAL LOAD CASES: (4)

CHORDS MEMB. FR-TO	MAX. FACTORED FORCE (LBS)	FACTORED VERT. LOAD LC1 (PLF) FROM	TO	MAX CSI (LC)	MAX. UNBRAC LENGTH
1- 2	0 / 29	-77.3	-77.3	0.10 (1)	10.00
2- 3	-1468 / 0	-77.3	-77.3	0.55 (1)	4.75
3- 4	-1177 / 0	-77.3	-77.3	0.51 (1)	5.20
4- 5	-936 / 0	-77.3	-77.3	0.27 (1)	6.04
5- 6	-936 / 0	-77.3	-77.3	0.30 (1)	5.99
6- 7	-634 / 0	-77.3	-77.3	0.29 (1)	6.25
8- 7	-1240 / 0	0.0	0.0	0.49 (1)	5.77
14- 2	-1340 / 0	0.0	0.0	0.14 (1)	7.00
14-13	0 / 0	-17.5	-17.5	0.15 (4)	10.00
13-12	0 / 1246	-17.5	-17.5	0.27 (1)	10.00
12-11	0 / 957	-17.5	-17.5	0.21 (1)	10.00
11-10	0 / 957	-17.5	-17.5	0.21 (1)	10.00
10- 9	0 / 634	-17.5	-17.5	0.17 (1)	10.00
9- 8	0 / 0	-17.5	-17.5	0.11 (4)	10.00

WEBS MEMB. FR-TO	MAX. FACTORED FORCE (LBS)	MAX CSI (LC)
13- 3	-113 / 65	0.05 (1)
3-12	-387 / 0	0.47 (1)
12- 4	0 / 349	0.08 (1)
4-10	-43 / 0	0.04 (1)
10- 5	-418 / 0	0.59 (1)
10- 6	0 / 614	0.14 (1)
9- 6	-973 / 0	0.60 (1)
9- 7	0 / 1249	0.28 (1)
2-13	0 / 1266	0.28 (1)

DESIGN CRITERIA

SPECIFIED LOADS:

TOP CH.	LL	=	23.3	PSF
	DL	=	3.0	PSF
BOT CH.	LL	=	0.0	PSF
	DL	=	7.0	PSF
TOTAL LOAD		=	33.3	PSF

SPACING = 24.0 IN. C/C

LOADING IN FLAT SECTION BASED ON A SLOPE OF 2.00/12 MINIMUM

THIS TRUSS IS DESIGNED FOR RESIDENTIAL OR SMALL BUILDING REQUIREMENTS OF PART 9, NBCC 2010

THIS DESIGN COMPLIES WITH:
- PART 9 OF OBC 2012 , BCBC 2012 , ABC 2014
- CSA 086-09
- TPIC 2011

(55 % OF 27.2 P.S.F. G.S.L. PLUS 8.4 P.S.F. RAIN LOAD) EQUALS 23.3 P.S.F. SPECIFIED ROOF LIVE LOAD

ALLOWABLE DEFL.(LL)= L/360 (0.90")
CALCULATED VERT. DEFL.(LL) = L/ 999 (0.05")
ALLOWABLE DEFL.(TL)= L/360 (0.90")
CALCULATED VERT. DEFL.(TL) = L/ 999 (0.10")

CSI: TC=0.55 (2-3:1) , BC=0.27 (12-13:1) , WB=0.60 (6-9:1) , SSI=0.19 (6-7:1)

DOL LUMBER=1.00 NAIL=1.00 LS BEND=1.10 COMP=1.10 SHEAR=1.10 TENS= 1.10

COMPANION LIVE LOAD FACTOR = 0.50

TRUSS PLATE MANUFACTURER IS NOT RESPONSIBLE FOR QUALITY CONTROL IN THE TRUSS MANUFACTURING PLANT .

NAIL VALUES

PLATE	GRIP(DRY) (PSI) MAX	MIN	SHEAR (PLI) MAX	MIN	SECTION (PLI) MAX	MIN
MT20	618	354	1667	822	2284	1656

PLATE PLACEMENT TOL. = 0.250 inches

PLATE ROTATION TOL. = 5.0 Deg.

JSI GRIP= 0.90 (6) (INPUT = 0.90)
JSI METAL= 0.50 (2) (INPUT = 1.00)

RECEIVED
TOWN OF MILTON
MAR 29, 2017
17-4967
BUILDING DIVISION

10 MAR 2017

KOTT

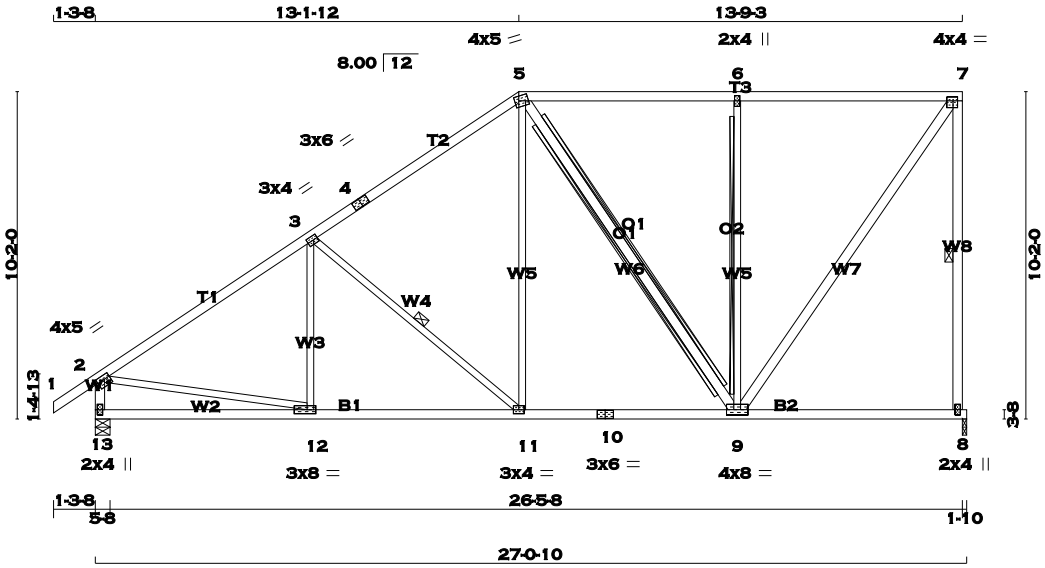

TOTAL WEIGHT = 137 lb [M]

LUMBER

N. L. G. A. RULES

CHORDS	SIZE		LUMBER	DESCR.
1 - 4	2x4	DRY	No.2	SPF
4 - 5	2x4	DRY	No.2	SPF
5 - 7	2x4	DRY	No.2	SPF
8 - 7	2x4	DRY	No.2	SPF
13 - 2	2x4	DRY	No.2	SPF
13 - 10	2x4	DRY	No.2	SPF
10 - 8	2x4	DRY	No.2	SPF
ALL WEBS EXCEPT	2x3	DRY	No.2	SPF
5 - 9	2x4	DRY	No.2	SPF
9 - 7	2x4	DRY	No.2	SPF

DRY: SEASONED LUMBER.

PLATES (table is in inches)

JT	TYPE	PLATES	W	LEN	Y	X
2	TMVW-t	MT20	4.0	5.0	1.50	2.00
3	TMWW-t	MT20	3.0	4.0	1.50	1.50
4	TS-t	MT20	3.0	6.0		
5	TTWW-m	MT20	4.0	5.0	1.75	1.50
6	TMW+w	MT20	2.0	4.0		
7	TMVW-t	MT20	4.0	4.0	1.50	1.75
8	BMV1+p	MT20	2.0	4.0		
9	BMWWW-t	MT20	4.0	8.0		
10	BS-t	MT20	3.0	6.0		
11	BMWW-t	MT20	3.0	4.0		
12	BMWW-t	MT20	3.0	8.0	1.50	3.25
13	BMV1+p	MT20	2.0	4.0		

A SIZE FOR SIZE SUBSTITUTION OF MITEK MII20 WITH TEE-LOK TL20 PLATES IS ALLOWED.

READ ALL NOTES ON THIS PAGE AND ON THE ENGINEERING NOTE PAGE ENP-1. THE NOTE PAGE IS AN INTEGRAL PART OF THIS DRAWING AS IT CONTAINS SPECIFICATIONS AND CRITERIA USED IN THE DESIGN OF THIS COMPONENT.

10 MAR 2017

DIMENSIONS, SUPPORTS AND LOADINGS SPECIFIED BY FABRICATOR TO BE VERIFIED BY BUILDING DESIGNER

BEARINGS

JT	FACTORED GROSS REACTION VERT	HORZ	MAXIMUM FACTORED GROSS REACTION DOWN	HORZ	UPLIFT	INPUT BRG IN-SX	REQRD BRG IN-SX
8	1276	0	1276	0	0	1-10	1-10
13	1383	0	1383	0	0	5-8	5-8

UNFACTORED REACTIONS

JT	1ST LCASE COMBINED	MAX./MIN. COMPONENT REACTIONS SNOW	LIVE	PERM.LIVE	WIND	DEAD	SOIL
8	896	627 / 0	0 / 0	0 / 0	0 / 0	269 / 0	0 / 0
13	968	691 / 0	0 / 0	0 / 0	0 / 0	277 / 0	0 / 0

BEARING MATERIAL TO BE SPF NO.2 OR BETTER AT JOINT(S) 8, 13

BRACING

TOP CHORD TO BE SHEATHED OR MAX. PURLIN SPACING = 4.48 FT.
MAX. UNBRACED BOTTOM CHORD LENGTH = 10.00 FT. OR RIGID CEILING DIRECTLY APPLIED.

ALL PITCH BREAKS AND PERIMETER CORNER JOINTS MUST BE LATERALLY RESTRAINED.

1 - 2x3 SPF No.2 LATERAL BRACE(S) AT 1/ 2 LENGTH OF 7-8. DBS = 12-0-0 . CBF = 92 LBS.
1 - 2x3 SPF No.2 LATERAL BRACE(S) AT 1/ 2 LENGTH OF 3-11. DBS = 20-0-0 . CBF = 61 LBS.
2x4 SPF No.2 I-BRACE AT 5-9
2x4 SPF No.2 T-BRACE AT 6-9

DBS = DIAGONAL BRACE SPACING (MAX). CBF = CUMULATIVE BRACING FORCE. FASTEN LATERAL BRACE(S) USING (0.122"X3") SPIRAL NAILS : 1 NAIL FOR 2x3 BRACE(S), 2 FOR 1x4, 2x4, 2x5, 3 FOR 2x6, 4 FOR 2x8, 5 FOR 2x10, AND 6 FOR 2x12.

FASTEN T AND I-BRACES TO NARROW EDGE OF WEB WITH ONE ROW PER PLY OF 3" COMMON WIRE NAILS @ 6" O.C. WITH 3" MINIMUM END DISTANCE. BRACE MUST COVER 90% OF WEB LENGTH.

END VERTICAL(S) MUST BE SHEATHED OR HAVE BRACES AS INDICATED IN THE MAX. UNBRACED LENGTH COLUMN OF THE TABLE BELOW

LOADING

TOTAL LOAD CASES: (4)

CHORDS

MEMB. FR-TO	MAX. FACTORED FORCE (LBS)	FACTORED VERT. LOAD (PLF) FROM	TO	LC1 MAX CSI (LC)	MAX. UNBRAC LENGTH
1- 2	0 / 29	-77.3	-77.3	0.10 (1)	10.00
2- 3	-1463 / 0	-77.3	-77.3	0.74 (1)	4.48
3- 4	-1084 / 0	-77.3	-77.3	0.67 (1)	5.08
4- 5	-1084 / 0	-77.3	-77.3	0.67 (1)	5.08
5- 6	-723 / 0	-77.3	-77.3	0.66 (1)	5.79
6- 7	-723 / 0	-77.3	-77.3	0.67 (1)	5.79
8- 7	-1227 / 0	0.0	0.0	0.62 (1)	5.79
13- 2	-1335 / 0	0.0	0.0	0.14 (1)	7.01
13-12	0 / 0	-17.5	-17.5	0.19 (4)	10.00
12-11	0 / 1245	-17.5	-17.5	0.30 (1)	10.00
11-10	0 / 877	-17.5	-17.5	0.27 (4)	10.00
10- 9	0 / 877	-17.5	-17.5	0.27 (4)	10.00
9- 8	0 / 0	-17.5	-17.5	0.21 (4)	10.00

WEBS

MEMB. FR-TO	MAX. FACTORED FORCE (LBS)	MAX CSI (LC)
12- 3	-72 / 89	0.04 (1)
3-11	-488 / 0	0.25 (1)
11- 5	0 / 423	0.10 (1)
5- 9	-272 / 0	0.22 (1)
9- 6	-662 / 0	0.54 (1)
9- 7	0 / 1251	0.20 (1)
2-12	0 / 1261	0.28 (1)

RECEIVED
TOWN OF MILTON
MAR 29, 2017
17-4967
BUILDING DIVISION

DESIGN CRITERIA

SPECIFIED LOADS:

TOP	CH.	LL	=	23.3	PSF
		DL	=	3.0	PSF
BOT	CH.	LL	=	0.0	PSF
		DL	=	7.0	PSF
TOTAL	LOAD		=	33.3	PSF

SPACING = 24.0 IN. C/C

LOADING IN FLAT SECTION BASED ON A SLOPE OF 2.00/12 MINIMUM

THIS TRUSS IS DESIGNED FOR RESIDENTIAL OR SMALL BUILDING REQUIREMENTS OF PART 9, NBCC 2010

THIS DESIGN COMPLIES WITH:
- PART 9 OF OBC 2012 , BCBC 2012 , ABC 2014
- CSA 086-09
- TPIC 2011

(55 % OF 27.2 P.S.F. G.S.L. PLUS 8.4 P.S.F. RAIN LOAD) EQUALS 23.3 P.S.F. SPECIFIED ROOF LIVE LOAD

ALLOWABLE DEFL.(LL)= L/360 (0.90")
CALCULATED VERT. DEFL.(LL) = L/ 999 (0.05")
ALLOWABLE DEFL.(TL)= L/360 (0.90")
CALCULATED VERT. DEFL.(TL) = L/ 999 (0.10")

CSI: TC=0.74 (2-3:1) , BC=0.30 (11-12:1) , WB=0.54 (6-9:1) , SSI=0.26 (6-7:1)

DOL LUMBER=1.00 NAIL=1.00 LS BEND=1.10 COMP=1.10 SHEAR=1.10 TENS= 1.10

COMPANION LIVE LOAD FACTOR = 0.50

TRUSS PLATE MANUFACTURER IS NOT RESPONSIBLE FOR QUALITY CONTROL IN THE TRUSS MANUFACTURING PLANT .

NAIL VALUES

PLATE	GRIP(DRY) (PSI) MAX	MIN	SHEAR (PLI) MAX	MIN	SECTION (PLI) MAX	MIN
MT20	618	354	1667	822	2284	1656

PLATE PLACEMENT TOL. = 0.250 inches

PLATE ROTATION TOL. = 5.0 Deg.

JSI GRIP= 0.90 (9) (INPUT = 0.90)
JSI METAL= 0.50 (2) (INPUT = 1.00)

KOTT

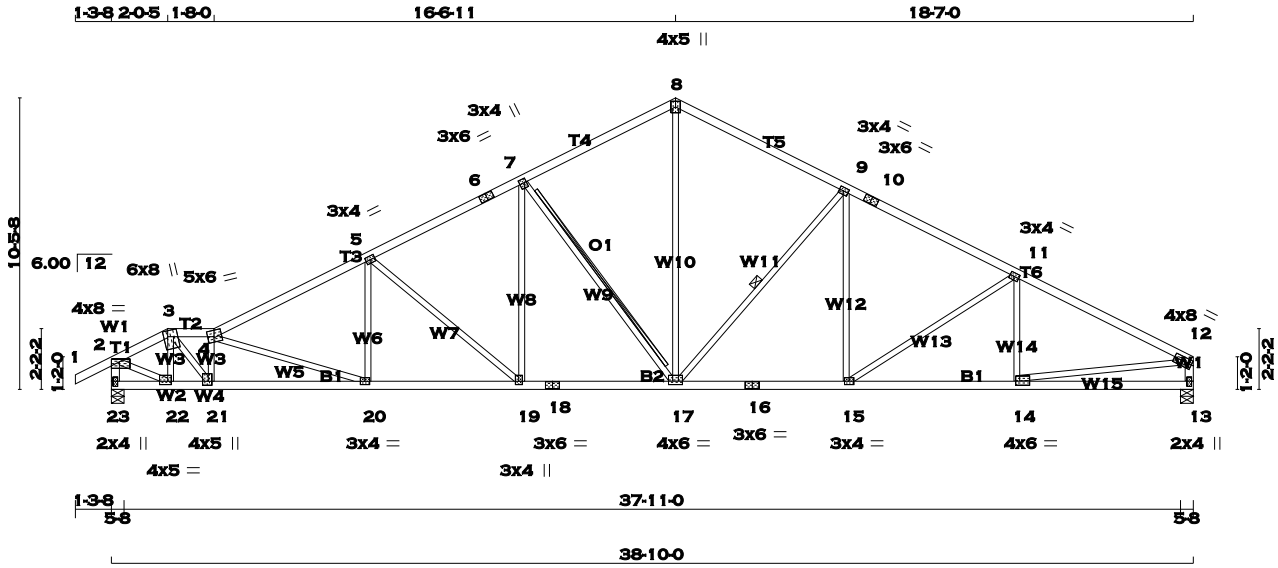

TOTAL WEIGHT = 164 lb

[M][F]

LUMBER

N. L. G. A. RULES

CHORDS	SIZE		LUMBER	DESCR.
1 - 3	2x4	DRY	No.2	SPF
3 - 4	2x4	DRY	No.2	SPF
4 - 6	2x4	DRY	No.2	SPF
6 - 8	2x4	DRY	No.2	SPF
8 - 10	2x4	DRY	No.2	SPF
10 - 12	2x4	DRY	No.2	SPF
23 - 2	2x4	DRY	No.2	SPF
13 - 12	2x4	DRY	No.2	SPF
23 - 18	2x4	DRY	No.2	SPF
18 - 16	2x4	DRY	No.2	SPF
16 - 13	2x4	DRY	No.2	SPF
ALL WEBS EXCEPT	2x3	DRY	No.2	SPF

DRY: SEASONED LUMBER.

PLATES (table is in inches)

JT	TYPE	PLATES	W	LEN	Y	X
2	TMVW-p	MT20	4.0	8.0	1.25	3.50
3	TTWW+m	MT20	6.0	8.0	2.50	1.75
4	TTWW-m	MT20	5.0	6.0	2.75	2.75
5, 9, 11						
5	TMWW-t	MT20	3.0	4.0	1.50	1.75
6	TS-t	MT20	3.0	6.0		
7	TMWW+t	MT20	3.0	4.0	1.75	0.75
8	TTW+p	MT20	4.0	5.0		
10	TS-t	MT20	3.0	6.0		
12	TMVW-t	MT20	4.0	8.0	1.75	Edge
13	BMV1+p	MT20	2.0	4.0	2.25	1.00
14	BMWW-t	MT20	4.0	6.0	1.75	1.75
15	BMWW-t	MT20	3.0	4.0		
16	BS-t	MT20	3.0	6.0		
17	BMWWW-t	MT20	4.0	6.0	1.50	3.00
18	BS-t	MT20	3.0	6.0		
19	BMWW+t	MT20	3.0	4.0	1.50	1.50
20	BMWW-t	MT20	3.0	4.0		
21	BMWW+t	MT20	4.0	5.0	1.75	1.50
22	BMWW-t	MT20	4.0	5.0	1.50	1.50
23	BMV1+p	MT20	2.0	4.0	2.25	1.00

Edge - INDICATES REFERENCE CORNER OF PLATE TOUCHES EDGE OF CHORD.

A SIZE FOR SIZE SUBSTITUTION OF MITEK MII20 WITH TEE-LOK TL20 PLATES IS ALLOWED.

READ ALL NOTES ON THIS PAGE AND ON THE ENGINEERING NOTE PAGE ENP-1. THE NOTE PAGE IS AN INTEGRAL PART OF THIS DRAWING AS IT CONTAINS SPECIFICATIONS AND CRITERIA USED IN THE DESIGN OF THIS COMPONENT.

DIMENSIONS, SUPPORTS AND LOADINGS SPECIFIED BY FABRICATOR TO BE VERIFIED BY BUILDING DESIGNER

BEARINGS

JT	FACTORED GROSS REACTION VERT	HORZ	MAXIMUM FACTORED GROSS REACTION DOWN	HORZ	UPLIFT	INPUT BRG IN-SX	REQRD BRG IN-SX
23	1947	0	1947	0	0	5-8	5-8
13	1842	0	1842	0	0	5-8	5-8

UNFACTORED REACTIONS

JT	1ST LCASE COMBINED	MAX./MIN. COMPONENT REACTIONS SNOW	LIVE	PERM.LIVE	WIND	DEAD	SOIL
23	1364	967 / 0	0 / 0	0 / 0	0 / 0	396 / 0	0 / 0
13	1292	904 / 0	0 / 0	0 / 0	0 / 0	388 / 0	0 / 0

BEARING MATERIAL TO BE SPF NO.2 OR BETTER AT JOINT(S) 23, 13

BRACING

TOP CHORD TO BE SHEATHED OR MAX. PURLIN SPACING = 3.59 FT.
MAX. UNBRACED BOTTOM CHORD LENGTH = 10.00 FT. OR RIGID CEILING DIRECTLY APPLIED.

ALL PITCH BREAKS AND PERIMETER CORNER JOINTS MUST BE LATERALLY RESTRAINED.

1 - 2x3 SPF No.2 LATERAL BRACE(S) AT 1/ 2 LENGTH OF 9-17. DBS = 20-0-0 . CBF = 92 LBS.
2x4 SPF No.2 T-BRACE AT 7-17

DBS = DIAGONAL BRACE SPACING (MAX). CBF = CUMULATIVE BRACING FORCE. FASTEN LATERAL BRACE(S) USING (0.122"X3") SPIRAL NAILS : 1 NAIL FOR 2x3 BRACE(S), 2 FOR 1x4, 2x4, 2x5, 3 FOR 2x6, 4 FOR 2x8, 5 FOR 2x10, AND 6 FOR 2x12.

FASTEN T AND I-BRACES TO NARROW EDGE OF WEB WITH ONE ROW PER PLY OF 3" COMMON WIRE NAILS @ 6" O.C. WITH 3" MINIMUM END DISTANCE. BRACE MUST COVER 90% OF WEB LENGTH.

END VERTICAL(S) MUST BE SHEATHED OR HAVE BRACES AS INDICATED IN THE MAX. UNBRACED LENGTH COLUMN OF THE TABLE BELOW

LOADING

TOTAL LOAD CASES: (4)

CHORDS

MEMB. FR-TO	MAX. FACTORED FORCE (LBS)	FACTORED VERT. LOAD (PLF) FROM	TO	LC1 MAX CSI (LC)	MAX. UNBRAC LENGTH
1- 2	0 / 23	-77.3	-77.3	0.10 (1)	10.00
2- 3	-2158 / 0	-77.3	-77.3	0.09 (1)	4.58
3- 4	-3174 / 0	-77.3	-77.3	0.13 (1)	3.86
4- 5	-3170 / 0	-77.3	-77.3	0.46 (1)	3.59
5- 6	-2585 / 0	-77.3	-77.3	0.36 (1)	4.02
6- 7	-2585 / 0	-77.3	-77.3	0.36 (1)	4.02
7- 8	-1990 / 0	-77.3	-77.3	0.34 (1)	4.49
8- 9	-1992 / 0	-77.3	-77.3	0.42 (1)	4.39
9-10	-2509 / 0	-77.3	-77.3	0.44 (1)	4.00
10-11	-2509 / 0	-77.3	-77.3	0.44 (1)	4.00
11-12	-2783 / 0	-77.3	-77.3	0.55 (1)	3.72
23- 2	-1931 / 0	0.0	0.0	0.20 (1)	6.05
13-12	-1794 / 0	0.0	0.0	0.18 (1)	6.24
23-22	0 / 0	-17.5	-17.5	0.02 (4)	10.00
22-21	0 / 1887	-17.5	-17.5	0.34 (1)	10.00
21-20	0 / 3258	-17.5	-17.5	0.61 (1)	10.00
20-19	0 / 2853	-17.5	-17.5	0.52 (1)	10.00
19-18	0 / 2313	-17.5	-17.5	0.45 (1)	10.00
18-17	0 / 2313	-17.5	-17.5	0.45 (1)	10.00
17-16	0 / 2244	-17.5	-17.5	0.44 (1)	10.00
16-15	0 / 2244	-17.5	-17.5	0.44 (1)	10.00
15-14	0 / 2507	-17.5	-17.5	0.47 (1)	10.00
14-13	0 / 0	-17.5	-17.5	0.15 (4)	10.00

WEBS

MEMB. FR-TO	MAX. FACTORED FORCE (LBS)	MAX CSI (LC)
22- 3	-720 / 0	0.11 (1)
3-21	0 / 2013	0.45 (1)
21- 4	-1524 / 0	0.23 (1)
4-20	-429 / 0	0.26 (1)
20- 5	0 / 252	0.06 (1)
5-19	-705 / 0	0.71 (1)
19- 7	0 / 541	0.12 (1)
7-17	-917 / 0	0.62 (1)
17- 8	0 / 1400	0.31 (1)
17- 9	-735 / 0	0.45 (1)
15- 9	0 / 277	0.06 (1)
15-11	-315 / 0	0.33 (1)
14-11	-223 / 36	0.06 (1)
2-22	0 / 2077	0.47 (1)
14-12	0 / 2530	0.57 (1)

DESIGN CRITERIA

SPECIFIED LOADS:

TOP	CH.	LL	=	23.3	PSF
		DL	=	3.0	PSF
BOT	CH.	LL	=	0.0	PSF
		DL	=	7.0	PSF
TOTAL	LOAD		=	33.3	PSF

SPACING = 24.0 IN. C/C

LOADING IN ALL FLAT SECTIONS BASED ON A SLOPE OF 2.00/12 MINIMUM

THIS TRUSS IS DESIGNED FOR RESIDENTIAL OR SMALL BUILDING REQUIREMENTS OF PART 9, NBCC 2010

THIS DESIGN COMPLIES WITH:
- PART 9 OF OBC 2012 , BCBC 2012 , ABC 2014
- CSA 086-09
- TPIC 2011

(55 % OF 27.2 P.S.F. G.S.L. PLUS 8.4 P.S.F. RAIN LOAD) EQUALS 23.3 P.S.F. SPECIFIED ROOF LIVE LOAD

ALLOWABLE DEFL.(LL)= L/360 (1.29")
CALCULATED VERT. DEFL.(LL) = L/ 999 (0.20")
ALLOWABLE DEFL.(TL)= L/360 (1.29")
CALCULATED VERT. DEFL.(TL) = L/ 999 (0.35")

CSI: TC=0.55 (11-12:1) , BC=0.61 (20-21:1) , WB=0.71 (5-19:1) , SSI=0.20 (11-12:1)

DOL LUMBER=1.00 NAIL=1.00 LS BEND=1.10 COMP=1.10 SHEAR=1.10 TENS= 1.10

COMPANION LIVE LOAD FACTOR = 0.50

TRUSS PLATE MANUFACTURER IS NOT RESPONSIBLE FOR QUALITY CONTROL IN THE TRUSS MANUFACTURING PLANT .

NAIL VALUES

PLATE	GRIP(DRY) (PSI) MAX	MIN	SHEAR (PLI) MAX	MIN	SECTION (PLI) MAX	MIN
MT20	618	354	1667	822	2284	1656

PLATE PLACEMENT TOL. = 0.250 inches

PLATE ROTATION TOL. = 5.0 Deg.

JSI GRIP= 0.90 (21) (INPUT = 0.90)
JSI METAL= 0.63 (14) (INPUT = 1.00)

RECEIVED
TOWN OF MILTON
MAR 29, 2017
17-4967
BUILDING DIVISION

10 MAR 2017

KOTT

CONTINUED ON PAGE 2

READ ALL NOTES ON THIS PAGE AND ON THE ENGINEERING NOTE PAGE ENP-1. THE NOTE PAGE IS AN INTEGRAL PART OF THIS DRAWING AS IT CONTAINS SPECIFICATIONS AND CRITERIA USED IN THE DESIGN OF THIS COMPONENT.

10 MAR 2017

RECEIVED
TOWN OF MILTON
MAR 29, 2017
17-4967
BUILDING DIVISION

KOTT

JOB NAME	TRUSS NAME	QUANTITY	PLY	JOB DESC.	DRWG NO.
CC0317-045	T19	1	1	TRUSS DESC. GREENPARK-LECCO RIDGE-BLOCK 325	

KOTT , Stouffville, ON, CGC

Version 8.100 S Jan 17 2017 MiTek Industries, Inc. Fri Mar 10 13:59:34 2017 Page 1
ID:ROua3U0CyIZcrhsEOCClEDyLKB3-F?AoB9yhZAX5tutHvq_mcIR6HaUDGOCgOWY?iFzcJdd

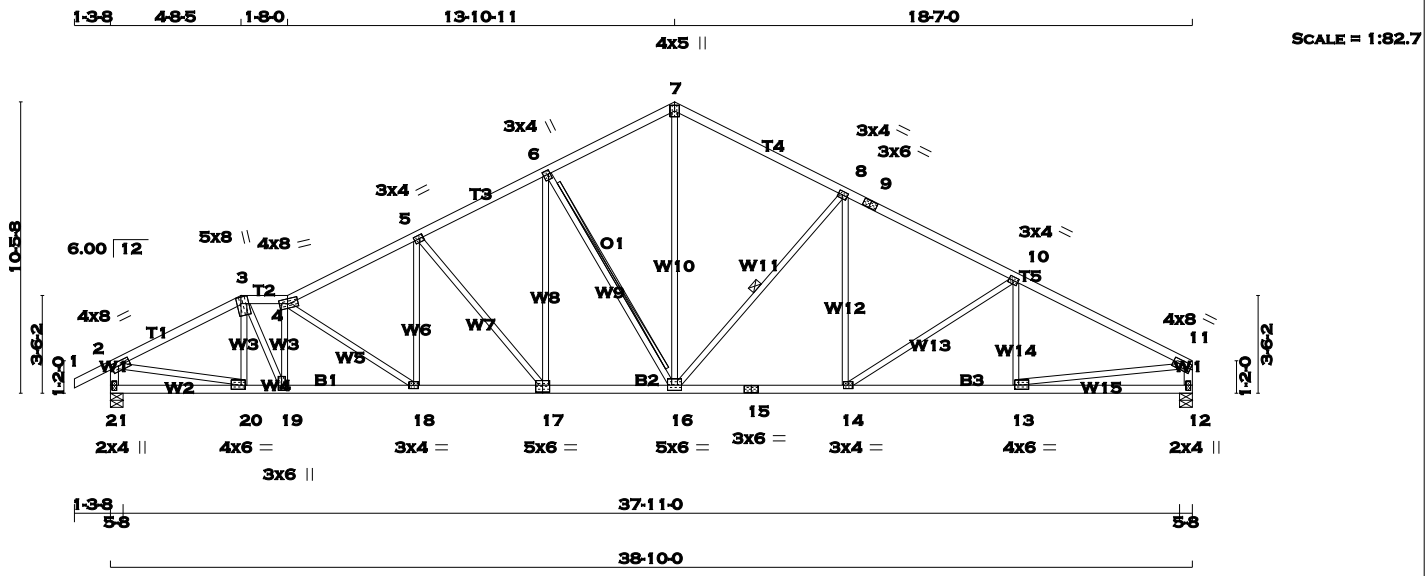

TOTAL WEIGHT = 170 lb
[M][F]

LUMBER
N. L. G. A. RULES

CHORDS	SIZE		LUMBER	DESCR.
1 - 3	2x4	DRY	No.2	SPF
3 - 4	2x4	DRY	No.2	SPF
4 - 7	2x4	DRY	No.2	SPF
7 - 9	2x4	DRY	No.2	SPF
9 - 11	2x4	DRY	No.2	SPF
21 - 2	2x4	DRY	No.2	SPF
12 - 11	2x4	DRY	No.2	SPF
21 - 17	2x4	DRY	No.2	SPF
17 - 15	2x4	DRY	No.2	SPF
15 - 12	2x4	DRY	No.2	SPF
ALL WEBS EXCEPT	2x3	DRY	No.2	SPF

DRY: SEASONED LUMBER.

PLATES (table is in inches)

JT	TYPE	PLATES	W	LEN	Y	X
2	TMVW-t	MT20	4.0	8.0	1.75	3.00
3	TTWW+m	MT20	5.0	8.0	2.75	1.75
4	TTWW-m	MT20	4.0	8.0	2.00	3.50
5, 8, 10						
5	TMWW-t	MT20	3.0	4.0	1.50	1.75
6	TMWW+t	MT20	3.0	4.0	1.75	0.75
7	TTW+p	MT20	4.0	5.0		
9	TS-t	MT20	3.0	6.0		
11	TMVW-t	MT20	4.0	8.0	1.75	Edge
12	BMV1+p	MT20	2.0	4.0	2.25	1.00
13	BMWW-t	MT20	4.0	6.0	1.75	1.75
14	BMWW-t	MT20	3.0	4.0		
15	BS-t	MT20	3.0	6.0		
16	BMWWW-t	MT20	5.0	6.0	2.25	3.00
17	BSWW-l	MT20	5.0	6.0	3.00	3.00
18	BMWW-t	MT20	3.0	4.0		
19	BMWW+t	MT20	3.0	6.0	2.25	1.50
20	BMWW-t	MT20	4.0	6.0	1.75	1.75
21	BMV1+p	MT20	2.0	4.0	2.25	1.00

Edge - INDICATES REFERENCE CORNER OF PLATE TOUCHES EDGE OF CHORD.

A SIZE FOR SIZE SUBSTITUTION OF MITEK MII20 WITH TEE-LOK TL20 PLATES IS ALLOWED.

READ ALL NOTES ON THIS PAGE AND ON THE ENGINEERING NOTE PAGE ENP-1. THE NOTE PAGE IS AN INTEGRAL PART OF THIS DRAWING AS IT CONTAINS SPECIFICATIONS AND CRITERIA USED IN THE DESIGN OF THIS COMPONENT.

DIMENSIONS, SUPPORTS AND LOADINGS SPECIFIED BY FABRICATOR TO BE VERIFIED BY BUILDING DESIGNER

BEARINGS

JT	FACTORED GROSS REACTION VERT	HORZ	MAXIMUM FACTORED GROSS REACTION DOWN	HORZ	UPLIFT	INPUT BRG IN-SX	REQRD BRG IN-SX
21	1947	0	1947	0	0	5-8	5-8
12	1842	0	1842	0	0	5-8	5-8

UNFACTORED REACTIONS

JT	1ST LCASE COMBINED	MAX./MIN. COMPONENT REACTIONS SNOW	LIVE	PERM.LIVE	WIND	DEAD	SOIL
21	1364	967 / 0	0 / 0	0 / 0	0 / 0	396 / 0	0 / 0
12	1292	904 / 0	0 / 0	0 / 0	0 / 0	388 / 0	0 / 0

BEARING MATERIAL TO BE SPF NO.2 OR BETTER AT JOINT(S) 21, 12

BRACING
TOP CHORD TO BE SHEATHED OR MAX. PURLIN SPACING = 3.72 FT.
MAX. UNBRACED BOTTOM CHORD LENGTH = 10.00 FT. OR RIGID CEILING DIRECTLY APPLIED.

ALL PITCH BREAKS AND PERIMETER CORNER JOINTS MUST BE LATERALLY RESTRAINED.

1 - 2x3 SPF No.2 LATERAL BRACE(S) AT 1/ 2 LENGTH OF 8-16. DBS = 20-0-0 . CBF = 92 LBS.
2x4 SPF No.2 T-BRACE AT 6-16

DBS = DIAGONAL BRACE SPACING (MAX). CBF = CUMULATIVE BRACING FORCE. FASTEN LATERAL BRACE(S) USING (0.122"X3") SPIRAL NAILS : 1 NAIL FOR 2x3 BRACE(S), 2 FOR 1x4, 2x4, 2x5, 3 FOR 2x6, 4 FOR 2x8, 5 FOR 2x10, AND 6 FOR 2x12.

FASTEN T AND I-BRACES TO NARROW EDGE OF WEB WITH ONE ROW PER PLY OF 3" COMMON WIRE NAILS @ 6" O.C. WITH 3" MINIMUM END DISTANCE. BRACE MUST COVER 90% OF WEB LENGTH.

END VERTICAL(S) MUST BE SHEATHED OR HAVE BRACES AS INDICATED IN THE MAX. UNBRACED LENGTH COLUMN OF THE TABLE BELOW

LOADING
TOTAL LOAD CASES: (4)

CHORDS

MEMB. FR-TO	MAX. FACTORED FORCE (LBS)	FACTORED VERT. LOAD (PLF) FROM	TO	LC1	MAX CSI (LC)	MAX. UNBRAC LENGTH
1- 2	0 / 23	-77.3	-77.3	0.10 (1)	10.00	
2- 3	-2669 / 0	-77.3	-77.3	0.32 (1)	3.98	
3- 4	-3000 / 0	-77.3	-77.3	0.12 (1)	3.96	
4- 5	-2960 / 0	-77.3	-77.3	0.31 (1)	3.83	
5- 6	-2478 / 0	-77.3	-77.3	0.25 (1)	4.19	
6- 7	-1987 / 0	-77.3	-77.3	0.24 (1)	4.59	
7- 8	-1992 / 0	-77.3	-77.3	0.42 (1)	4.39	
8- 9	-2510 / 0	-77.3	-77.3	0.44 (1)	4.00	
9-10	-2510 / 0	-77.3	-77.3	0.44 (1)	4.00	
10-11	-2783 / 0	-77.3	-77.3	0.55 (1)	3.72	
21- 2	-1910 / 0	0.0	0.0	0.19 (1)	6.08	
12-11	-1794 / 0	0.0	0.0	0.18 (1)	6.24	
21-20	0 / 0	-17.5	-17.5	0.08 (4)	10.00	
20-19	0 / 2374	-17.5	-17.5	0.42 (1)	10.00	
19-18	0 / 3042	-17.5	-17.5	0.55 (1)	10.00	
18-17	0 / 2663	-17.5	-17.5	0.47 (1)	10.00	
17-16	0 / 2216	-17.5	-17.5	0.43 (1)	10.00	
16-15	0 / 2244	-17.5	-17.5	0.43 (1)	10.00	
15-14	0 / 2244	-17.5	-17.5	0.43 (1)	10.00	
14-13	0 / 2507	-17.5	-17.5	0.47 (1)	10.00	
13-12	0 / 0	-17.5	-17.5	0.15 (4)	10.00	

WEBS

MEMB. FR-TO	MAX. FACTORED FORCE (LBS)	MAX CSI (LC)
20- 3	-336 / 0	0.07 (1)
3-19	0 / 1431	0.32 (1)
19- 4	-1274 / 0	0.26 (1)
4-18	-461 / 0	0.25 (1)
18- 5	0 / 359	0.08 (1)
5-17	-695 / 0	0.69 (1)
17- 6	0 / 601	0.14 (1)
6-16	-889 / 0	0.58 (1)
16- 7	0 / 1426	0.32 (1)
16- 8	-735 / 0	0.45 (1)
14- 8	0 / 278	0.06 (1)
14-10	-315 / 0	0.33 (1)
13-10	-223 / 36	0.06 (1)
2-20	0 / 2423	0.55 (1)
13-11	0 / 2530	0.57 (1)

DESIGN CRITERIA

SPECIFIED LOADS:

TOP CH.	LL	=	23.3	PSF
	DL	=	3.0	PSF
BOT CH.	LL	=	0.0	PSF
	DL	=	7.0	PSF
TOTAL LOAD		=	33.3	PSF

SPACING = 24.0 IN. C/C

LOADING IN ALL FLAT SECTIONS BASED ON A SLOPE OF 2.00/12 MINIMUM

THIS TRUSS IS DESIGNED FOR RESIDENTIAL OR SMALL BUILDING REQUIREMENTS OF PART 9, NBCC 2010

THIS DESIGN COMPLIES WITH:
- PART 9 OF OBC 2012 , BCBC 2012 , ABC 2014
- CSA 086-09
- TPIC 2011

(55 % OF 27.2 P.S.F. G.S.L. PLUS 8.4 P.S.F. RAIN LOAD) EQUALS 23.3 P.S.F. SPECIFIED ROOF LIVE LOAD

ALLOWABLE DEFL.(LL)= L/360 (1.29")
CALCULATED VERT. DEFL.(LL) = L/ 999 (0.20")
ALLOWABLE DEFL.(TL)= L/360 (1.29")
CALCULATED VERT. DEFL.(TL) = L/ 999 (0.35")

CSI: TC=0.55 (10-11:1) , BC=0.55 (18-19:1) , WB=0.69 (5-17:1) , SSI=0.20 (10-11:1)

DOL LUMBER=1.00 NAIL=1.00 LS BEND=1.10 COMP=1.10 SHEAR=1.10 TENS= 1.10

COMPANION LIVE LOAD FACTOR = 0.50

TRUSS PLATE MANUFACTURER IS NOT RESPONSIBLE FOR QUALITY CONTROL IN THE TRUSS MANUFACTURING PLANT .

NAIL VALUES

PLATE	GRIP(DRY) (PSI) MAX	MIN	SHEAR (PLI) MAX	MIN	SECTION (PLI) MAX	MIN
MT20	618	354	1667	822	2284	1656

PLATE PLACEMENT TOL. = 0.250 inches

PLATE ROTATION TOL. = 5.0 Deg.

JSI GRIP= 0.90 (19) (INPUT = 0.90)
JSI METAL= 0.63 (15) (INPUT = 1.00)

RECEIVED
TOWN OF MILTON
MAR 29, 2017
17-4967
BUILDING DIVISION

10 MAR 2017

KOTT

JOB NAME	TRUSS NAME	QUANTITY	PLY	JOB DESC.	DRWG NO.
CC0317-045	**T20**	**1**	**1**	TRUSS DESC. GREENPARK-LECCO RIDGE-BLOCK 325	

KOTT , Stouffville, ON, CGC

Version 8.100 S Jan 17 2017 MiTek Industries, Inc. Fri Mar 10 13:59:35 2017 Page 1
ID:ROua3U0CyIZcrhsEOCClEDyLKB3-jCkAPVzJKUfyV2STTXV?9yzH1_q??sOpdAIYEhzcJdc

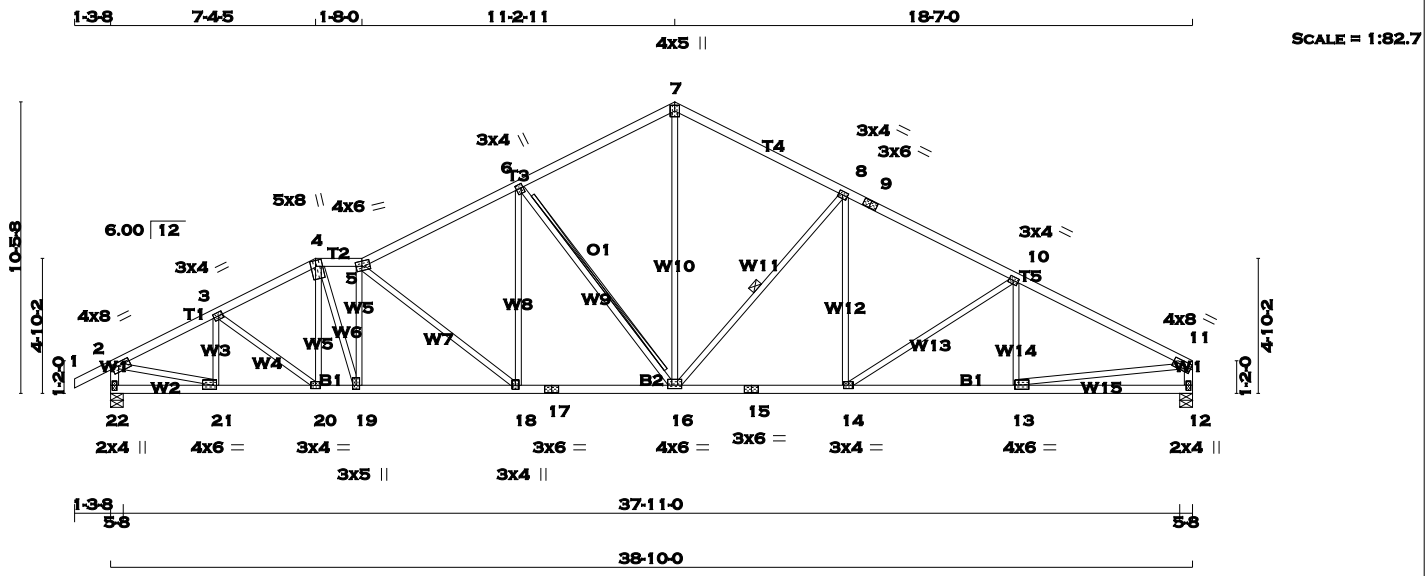

TOTAL WEIGHT = 169 lb
[M][F]

LUMBER

N. L. G. A. RULES

CHORDS	SIZE		LUMBER	DESCR.
1 - 4	2x4	DRY	No.2	SPF
4 - 5	2x4	DRY	No.2	SPF
5 - 7	2x4	DRY	No.2	SPF
7 - 9	2x4	DRY	No.2	SPF
9 - 11	2x4	DRY	No.2	SPF
22 - 2	2x4	DRY	No.2	SPF
12 - 11	2x4	DRY	No.2	SPF
22 - 17	2x4	DRY	No.2	SPF
17 - 15	2x4	DRY	No.2	SPF
15 - 12	2x4	DRY	No.2	SPF
ALL WEBS EXCEPT	2x3	DRY	No.2	SPF

DRY: SEASONED LUMBER.

PLATES (table is in inches)

JT	TYPE	PLATES	W	LEN	Y	X
2	TMVW-t	MT20	4.0	8.0	1.50	3.00
3, 8, 10						
3	TMWW-t	MT20	3.0	4.0	1.50	1.75
4	TTWW+m	MT20	5.0	8.0	2.50	2.00
5	TTWW-m	MT20	4.0	6.0	2.25	2.50
6	TMWW+t	MT20	3.0	4.0	1.75	0.75
7	TTW+p	MT20	4.0	5.0		
9	TS-t	MT20	3.0	6.0		
11	TMVW-t	MT20	4.0	8.0	1.75	Edge
12	BMV1+p	MT20	2.0	4.0	2.25	1.00
13	BMWW-t	MT20	4.0	6.0	1.75	1.75
14	BMWW-t	MT20	3.0	4.0		
15	BS-t	MT20	3.0	6.0		
16	BMWWW-t	MT20	4.0	6.0	1.50	3.00
17	BS-t	MT20	3.0	6.0		
18	BMWW+t	MT20	3.0	4.0	1.75	1.50
19	BMWW+t	MT20	3.0	5.0	1.75	1.50
20	BMWW-t	MT20	3.0	4.0		
21	BMWW-t	MT20	4.0	6.0	1.75	1.50
22	BMV1+p	MT20	2.0	4.0	2.25	1.00

Edge - INDICATES REFERENCE CORNER OF PLATE TOUCHES EDGE OF CHORD.

A SIZE FOR SIZE SUBSTITUTION OF MITEK MII20 WITH TEE-LOK TL20 PLATES IS ALLOWED.

READ ALL NOTES ON THIS PAGE AND ON THE ENGINEERING NOTE PAGE ENP-1. THE NOTE PAGE IS AN INTEGRAL PART OF THIS DRAWING AS IT CONTAINS SPECIFICATIONS AND CRITERIA USED IN THE DESIGN OF THIS COMPONENT.

DIMENSIONS, SUPPORTS AND LOADINGS SPECIFIED BY FABRICATOR TO BE VERIFIED BY BUILDING DESIGNER

BEARINGS

JT	FACTORED GROSS REACTION VERT	HORZ	MAXIMUM FACTORED GROSS REACTION DOWN	HORZ	UPLIFT	INPUT BRG IN-SX	REQRD BRG IN-SX
22	1947	0	1947	0	0	5-8	5-8
12	1842	0	1842	0	0	5-8	5-8

UNFACTORED REACTIONS

JT	1ST LCASE COMBINED	MAX./MIN. COMPONENT REACTIONS SNOW	LIVE	PERM.LIVE	WIND	DEAD	SOIL
22	1364	967 / 0	0 / 0	0 / 0	0 / 0	396 / 0	0 / 0
12	1292	904 / 0	0 / 0	0 / 0	0 / 0	388 / 0	0 / 0

BEARING MATERIAL TO BE SPF NO.2 OR BETTER AT JOINT(S) 22, 12

BRACING

TOP CHORD TO BE SHEATHED OR MAX. PURLIN SPACING = 3.72 FT.
MAX. UNBRACED BOTTOM CHORD LENGTH = 10.00 FT. OR RIGID CEILING DIRECTLY APPLIED.

ALL PITCH BREAKS AND PERIMETER CORNER JOINTS MUST BE LATERALLY RESTRAINED.

1 - 2x3 SPF No.2 LATERAL BRACE(S) AT 1/ 2 LENGTH OF 8-16. DBS = 20-0-0 . CBF = 92 LBS.
2x4 SPF No.2 T-BRACE AT 6-16

DBS = DIAGONAL BRACE SPACING (MAX). CBF = CUMULATIVE BRACING FORCE. FASTEN LATERAL BRACE(S) USING (0.122"X3") SPIRAL NAILS : 1 NAIL FOR 2x3 BRACE(S), 2 FOR 1x4, 2x4, 2x5, 3 FOR 2x6, 4 FOR 2x8, 5 FOR 2x10, AND 6 FOR 2x12.

FASTEN T AND I-BRACES TO NARROW EDGE OF WEB WITH ONE ROW PER PLY OF 3" COMMON WIRE NAILS @ 6" O.C. WITH 3" MINIMUM END DISTANCE. BRACE MUST COVER 90% OF WEB LENGTH.

END VERTICAL(S) MUST BE SHEATHED OR HAVE BRACES AS INDICATED IN THE MAX. UNBRACED LENGTH COLUMN OF THE TABLE BELOW

LOADING

TOTAL LOAD CASES: (4)

CHORDS

MEMB. FR-TO	MAX. FACTORED FORCE (LBS)	FACTORED VERT. LOAD LC1 (PLF) FROM	TO	MAX CSI (LC)	MAX. UNBRAC LENGTH
1- 2	0 / 23	-77.3	-77.3	0.10 (1)	10.00
2- 3	-2582 / 0	-77.3	-77.3	0.20 (1)	4.16
3- 4	-2725 / 0	-77.3	-77.3	0.19 (1)	4.06
4- 5	-2784 / 0	-77.3	-77.3	0.11 (1)	4.10
5- 6	-2583 / 0	-77.3	-77.3	0.43 (1)	3.93
6- 7	-1995 / 0	-77.3	-77.3	0.38 (1)	4.43
7- 8	-1992 / 0	-77.3	-77.3	0.42 (1)	4.39
8- 9	-2510 / 0	-77.3	-77.3	0.44 (1)	4.00
9-10	-2510 / 0	-77.3	-77.3	0.44 (1)	4.00
10-11	-2783 / 0	-77.3	-77.3	0.55 (1)	3.72
22- 2	-1911 / 0	0.0	0.0	0.19 (1)	6.08
12-11	-1794 / 0	0.0	0.0	0.18 (1)	6.24
22-21	0 / 0	-17.5	-17.5	0.05 (4)	10.00
21-20	0 / 2320	-17.5	-17.5	0.41 (1)	10.00
20-19	0 / 2424	-17.5	-17.5	0.43 (1)	10.00
19-18	0 / 2808	-17.5	-17.5	0.52 (1)	10.00
18-17	0 / 2332	-17.5	-17.5	0.45 (1)	10.00
17-16	0 / 2332	-17.5	-17.5	0.45 (1)	10.00
16-15	0 / 2244	-17.5	-17.5	0.44 (1)	10.00
15-14	0 / 2244	-17.5	-17.5	0.44 (1)	10.00
14-13	0 / 2507	-17.5	-17.5	0.47 (1)	10.00
13-12	0 / 0	-17.5	-17.5	0.15 (4)	10.00

WEBS

MEMB. FR-TO	MAX. FACTORED FORCE (LBS)	MAX CSI (LC)
21- 3	-474 / 0	0.09 (1)
3-20	0 / 130	0.03 (1)
20- 4	-7 / 12	0.00 (4)
4-19	0 / 1110	0.25 (1)
19- 5	-1008 / 0	0.35 (1)
5-18	-612 / 0	0.63 (1)
18- 6	0 / 487	0.11 (1)
6-16	-936 / 0	0.63 (1)
16- 7	0 / 1407	0.32 (1)
16- 8	-735 / 0	0.45 (1)
14- 8	0 / 278	0.06 (1)
14-10	-315 / 0	0.33 (1)
13-10	-223 / 36	0.06 (1)
2-21	0 / 2379	0.54 (1)
13-11	0 / 2530	0.57 (1)

DESIGN CRITERIA

SPECIFIED LOADS:

TOP CH.	LL	=	23.3	PSF
	DL	=	3.0	PSF
BOT CH.	LL	=	0.0	PSF
	DL	=	7.0	PSF
TOTAL LOAD		=	33.3	PSF

SPACING = 24.0 IN. C/C

LOADING IN ALL FLAT SECTIONS BASED ON A SLOPE OF 2.00/12 MINIMUM

THIS TRUSS IS DESIGNED FOR RESIDENTIAL OR SMALL BUILDING REQUIREMENTS OF PART 9, NBCC 2010

THIS DESIGN COMPLIES WITH:
- PART 9 OF OBC 2012 , BCBC 2012 , ABC 2014
- CSA 086-09
- TPIC 2011

(55 % OF 27.2 P.S.F. G.S.L. PLUS 8.4 P.S.F. RAIN LOAD) EQUALS 23.3 P.S.F. SPECIFIED ROOF LIVE LOAD

ALLOWABLE DEFL.(LL)= L/360 (1.29")
CALCULATED VERT. DEFL.(LL) = L/ 999 (0.18")
ALLOWABLE DEFL.(TL)= L/360 (1.29")
CALCULATED VERT. DEFL.(TL) = L/ 999 (0.33")

CSI: TC=0.55 (10-11:1) , BC=0.52 (18-19:1) , WB=0.63 (6-16:1) , SSI=0.20 (10-11:1)

DOL LUMBER=1.00 NAIL=1.00 LS BEND=1.10 COMP=1.10 SHEAR=1.10 TENS= 1.10

COMPANION LIVE LOAD FACTOR = 0.50

TRUSS PLATE MANUFACTURER IS NOT RESPONSIBLE FOR QUALITY CONTROL IN THE TRUSS MANUFACTURING PLANT .

NAIL VALUES

PLATE	GRIP(DRY) (PSI) MAX	MIN	SHEAR (PLI) MAX	MIN	SECTION (PLI) MAX	MIN
MT20	618	354	1667	822	2284	1656

PLATE PLACEMENT TOL. = 0.250 inches

PLATE ROTATION TOL. = 5.0 Deg.

JSI GRIP= 0.90 (16) (INPUT = 0.90)
JSI METAL= 0.63 (13) (INPUT = 1.00)

RECEIVED
TOWN OF MILTON
MAR 29, 2017
17-4967
BUILDING DIVISION

10 MAR 2017

KOTT

JOB NAME	TRUSS NAME	QUANTITY	PLY	JOB DESC.	DRWG NO.
CC0317-045	**T21**	**1**	**1**	TRUSS DESC. GREENPARK-LECCO RIDGE-BLOCK 325	

KOTT , Stouffville, ON, CGC

Version 8.100 S Jan 17 2017 MiTek Industries, Inc. Fri Mar 10 13:59:36 2017 Page 1
ID:ROua3U0CyIZcrhsEOCClEDyLKB3-COHYcr_x5nnp6C1f1E0EhAWSnOB1kHGzrq16m8zcJdb

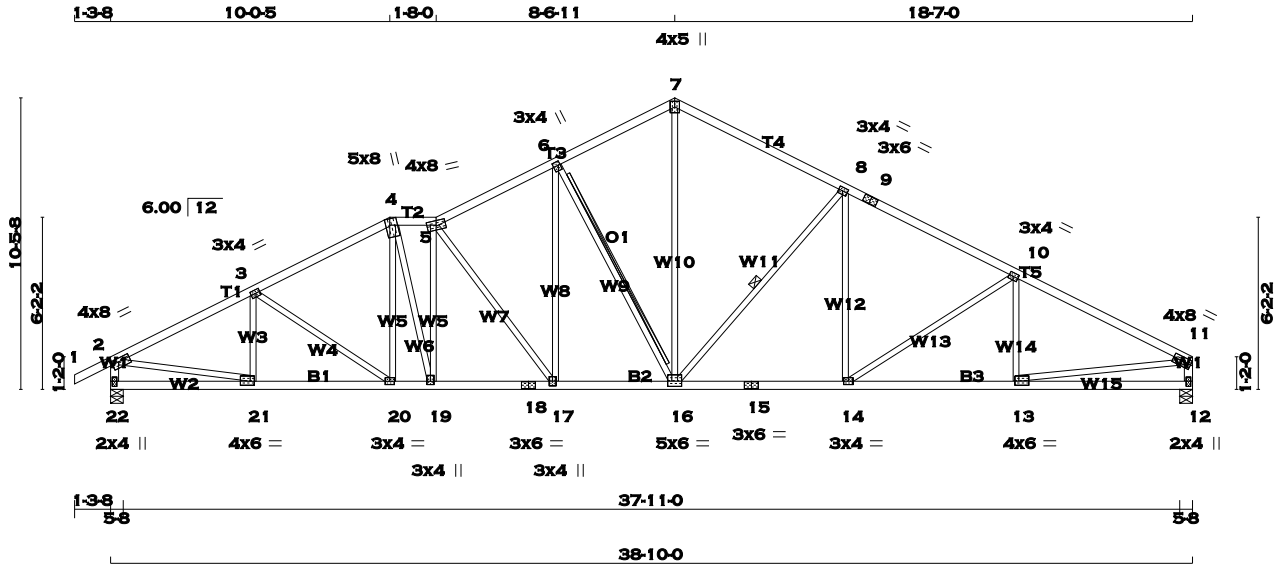

TOTAL WEIGHT = 176 lb
[M][F]

LUMBER

N. L. G. A. RULES

CHORDS	SIZE		LUMBER	DESCR.
1 - 4	2x4	DRY	No.2	SPF
4 - 5	2x4	DRY	No.2	SPF
5 - 7	2x4	DRY	No.2	SPF
7 - 9	2x4	DRY	No.2	SPF
9 - 11	2x4	DRY	No.2	SPF
22 - 2	2x4	DRY	No.2	SPF
12 - 11	2x4	DRY	No.2	SPF
22 - 18	2x4	DRY	No.2	SPF
18 - 15	2x4	DRY	No.2	SPF
15 - 12	2x4	DRY	No.2	SPF
ALL WEBS EXCEPT	2x3	DRY	No.2	SPF

DRY: SEASONED LUMBER.

PLATES (table is in inches)

JT	TYPE	PLATES	W	LEN	Y	X
2 3, 8, 10	TMVW-t	MT20	4.0	8.0	1.50	3.00
3	TMWW-t	MT20	3.0	4.0	1.50	1.75
4	TTWW+m	MT20	5.0	8.0	2.75	1.75
5	TTWW-m	MT20	4.0	8.0		
6	TMWW+t	MT20	3.0	4.0	1.75	0.75
7	TTW+p	MT20	4.0	5.0		
9	TS-t	MT20	3.0	6.0		
11	TMVW-t	MT20	4.0	8.0	1.75	Edge
12	BMV1+p	MT20	2.0	4.0	2.25	1.00
13	BMWW-t	MT20	4.0	6.0	1.75	1.75
14	BMWW-t	MT20	3.0	4.0		
15	BS-t	MT20	3.0	6.0		
16	BMWWW-t	MT20	5.0	6.0	2.25	3.00
17	BMWW+t	MT20	3.0	4.0		
18	BS-t	MT20	3.0	6.0		
19	BMWW+t	MT20	3.0	4.0	1.50	1.50
20	BMWW-t	MT20	3.0	4.0		
21	BMWW-t	MT20	4.0	6.0	1.75	1.75
22	BMV1+p	MT20	2.0	4.0	2.25	1.00

Edge - INDICATES REFERENCE CORNER OF PLATE TOUCHES EDGE OF CHORD.

A SIZE FOR SIZE SUBSTITUTION OF MITEK MII20 WITH TEE-LOK TL20 PLATES IS ALLOWED.

READ ALL NOTES ON THIS PAGE AND ON THE ENGINEERING NOTE PAGE ENP-1. THE NOTE PAGE IS AN INTEGRAL PART OF THIS DRAWING AS IT CONTAINS SPECIFICATIONS AND CRITERIA USED IN THE DESIGN OF THIS COMPONENT.

10 MAR 2017

DIMENSIONS, SUPPORTS AND LOADINGS SPECIFIED BY FABRICATOR TO BE VERIFIED BY BUILDING DESIGNER

BEARINGS

JT	FACTORED GROSS REACTION VERT	HORZ	MAXIMUM FACTORED GROSS REACTION DOWN	HORZ	UPLIFT	INPUT BRG IN-SX	REQRD BRG IN-SX
22	1947	0	1947	0	0	5-8	5-8
12	1842	0	1842	0	0	5-8	5-8

UNFACTORED REACTIONS

JT	1ST LCASE COMBINED	MAX./MIN. COMPONENT REACTIONS SNOW	LIVE	PERM.LIVE	WIND	DEAD	SOIL
22	1364	967 / 0	0 / 0	0 / 0	0 / 0	396 / 0	0 / 0
12	1292	904 / 0	0 / 0	0 / 0	0 / 0	388 / 0	0 / 0

BEARING MATERIAL TO BE SPF NO.2 OR BETTER AT JOINT(S) 22, 12

BRACING

TOP CHORD TO BE SHEATHED OR MAX. PURLIN SPACING = 3.72 FT.
MAX. UNBRACED BOTTOM CHORD LENGTH = 10.00 FT. OR RIGID CEILING DIRECTLY APPLIED.

ALL PITCH BREAKS AND PERIMETER CORNER JOINTS MUST BE LATERALLY RESTRAINED.

1 - 2x3 SPF No.2 LATERAL BRACE(S) AT 1/ 2 LENGTH OF 8-16. DBS = 20-0-0 . CBF = 92 LBS.
2x4 SPF No.2 T-BRACE AT 6-16

DBS = DIAGONAL BRACE SPACING (MAX). CBF = CUMULATIVE BRACING FORCE. FASTEN LATERAL BRACE(S) USING (0.122"X3") SPIRAL NAILS : 1 NAIL FOR 2x3 BRACE(S), 2 FOR 1x4, 2x4, 2x5, 3 FOR 2x6, 4 FOR 2x8, 5 FOR 2x10, AND 6 FOR 2x12.

FASTEN T AND I-BRACES TO NARROW EDGE OF WEB WITH ONE ROW PER PLY OF 3" COMMON WIRE NAILS @ 6" O.C. WITH 3" MINIMUM END DISTANCE. BRACE MUST COVER 90% OF WEB LENGTH.

END VERTICAL(S) MUST BE SHEATHED OR HAVE BRACES AS INDICATED IN THE MAX. UNBRACED LENGTH COLUMN OF THE TABLE BELOW

LOADING

TOTAL LOAD CASES: (4)

CHORDS MEMB. FR-TO	MAX. FACTORED FORCE (LBS)	FACTORED VERT. LOAD LC1 (PLF) FROM	TO	MAX CSI (LC)	MAX. UNBRAC LENGTH	WEBS MEMB. FR-TO	MAX. FACTORED FORCE (LBS)	MAX CSI (LC)
1- 2	0 / 23	-77.3	-77.3	0.10 (1)	10.00	21- 3	-325 / 0	0.07 (1)
2- 3	-2735 / 0	-77.3	-77.3	0.35 (1)	3.92	3-20	-156 / 0	0.10 (1)
3- 4	-2631 / 0	-77.3	-77.3	0.33 (1)	4.00	20- 4	0 / 176	0.04 (1)
4- 5	-2546 / 0	-77.3	-77.3	0.09 (1)	4.27	4-19	0 / 812	0.18 (1)
5- 6	-2422 / 0	-77.3	-77.3	0.25 (1)	4.22	19- 5	-763 / 0	0.46 (1)
6- 7	-1988 / 0	-77.3	-77.3	0.22 (1)	4.61	5-17	-639 / 0	0.66 (1)
7- 8	-1992 / 0	-77.3	-77.3	0.42 (1)	4.39	17- 6	0 / 585	0.13 (1)
8- 9	-2510 / 0	-77.3	-77.3	0.44 (1)	4.00	6-16	-890 / 0	0.58 (1)
9-10	-2510 / 0	-77.3	-77.3	0.44 (1)	4.00	16- 7	0 / 1444	0.32 (1)
10-11	-2783 / 0	-77.3	-77.3	0.55 (1)	3.72	16- 8	-736 / 0	0.45 (1)
22- 2	-1905 / 0	0.0	0.0	0.19 (1)	6.09	14- 8	0 / 278	0.06 (1)
12-11	-1794 / 0	0.0	0.0	0.18 (1)	6.24	14-10	-315 / 0	0.33 (1)
						13-10	-223 / 36	0.06 (1)
22-21	0 / 0	-17.5	-17.5	0.10 (4)	10.00	2-21	0 / 2497	0.56 (1)
21-20	0 / 2463	-17.5	-17.5	0.45 (1)	10.00	13-11	0 / 2530	0.57 (1)
20-19	0 / 2337	-17.5	-17.5	0.43 (1)	10.00			
19-18	0 / 2559	-17.5	-17.5	0.46 (1)	10.00			
18-17	0 / 2559	-17.5	-17.5	0.46 (1)	10.00			
17-16	0 / 2183	-17.5	-17.5	0.42 (1)	10.00			
16-15	0 / 2244	-17.5	-17.5	0.43 (1)	10.00			
15-14	0 / 2244	-17.5	-17.5	0.43 (1)	10.00			
14-13	0 / 2507	-17.5	-17.5	0.47 (1)	10.00			
13-12	0 / 0	-17.5	-17.5	0.15 (4)	10.00			

RECEIVED
TOWN OF MILTON
MAR 29, 2017
17-4967
BUILDING DIVISION

DESIGN CRITERIA

SPECIFIED LOADS:

TOP CH.	LL	=	23.3	PSF
	DL	=	3.0	PSF
BOT CH.	LL	=	0.0	PSF
	DL	=	7.0	PSF
TOTAL LOAD		=	33.3	PSF

SPACING = 24.0 IN. C/C

LOADING IN ALL FLAT SECTIONS BASED ON A SLOPE OF 2.00/12 MINIMUM

THIS TRUSS IS DESIGNED FOR RESIDENTIAL OR SMALL BUILDING REQUIREMENTS OF PART 9, NBCC 2010

THIS DESIGN COMPLIES WITH:
- PART 9 OF OBC 2012 , BCBC 2012 , ABC 2014
- CSA 086-09
- TPIC 2011

(55 % OF 27.2 P.S.F. G.S.L. PLUS 8.4 P.S.F. RAIN LOAD) EQUALS 23.3 P.S.F. SPECIFIED ROOF LIVE LOAD

ALLOWABLE DEFL.(LL)= L/360 (1.29")
CALCULATED VERT. DEFL.(LL) = L/ 999 (0.19")
ALLOWABLE DEFL.(TL)= L/360 (1.29")
CALCULATED VERT. DEFL.(TL) = L/ 999 (0.33")

CSI: TC=0.55 (10-11:1) , BC=0.47 (13-14:1) , WB=0.66 (5-17:1) , SSI=0.20 (10-11:1)

DOL LUMBER=1.00 NAIL=1.00 LS BEND=1.10 COMP=1.10 SHEAR=1.10 TENS= 1.10

COMPANION LIVE LOAD FACTOR = 0.50

TRUSS PLATE MANUFACTURER IS NOT RESPONSIBLE FOR QUALITY CONTROL IN THE TRUSS MANUFACTURING PLANT .

NAIL VALUES

PLATE	GRIP(DRY) (PSI) MAX	MIN	SHEAR (PLI) MAX	MIN	SECTION (PLI) MAX	MIN
MT20	618	354	1667	822	2284	1656

PLATE PLACEMENT TOL. = 0.250 inches

PLATE ROTATION TOL. = 5.0 Deg.

JSI GRIP= 0.89 (4) (INPUT = 0.90)
JSI METAL= 0.68 (18) (INPUT = 1.00)

KOTT

JOB NAME	TRUSS NAME	QUANTITY	PLY	JOB DESC.	DRWG NO.
CC0317-045	T22	1	1	TRUSS DESC. GREENPARK-LECCO RIDGE-BLOCK 325	

KOTT , Stouffville, ON, CGC

Version 8.100 S Jan 17 2017 MiTek Industries, Inc. Fri Mar 10 13:59:36 2017 Page 1
ID:ROua3U0CyIZcrhsEOCClEDyLKB3-COHYcr_x5nnp6C1f1E0EhAWRGOBukI8zrq16m8zcJdb

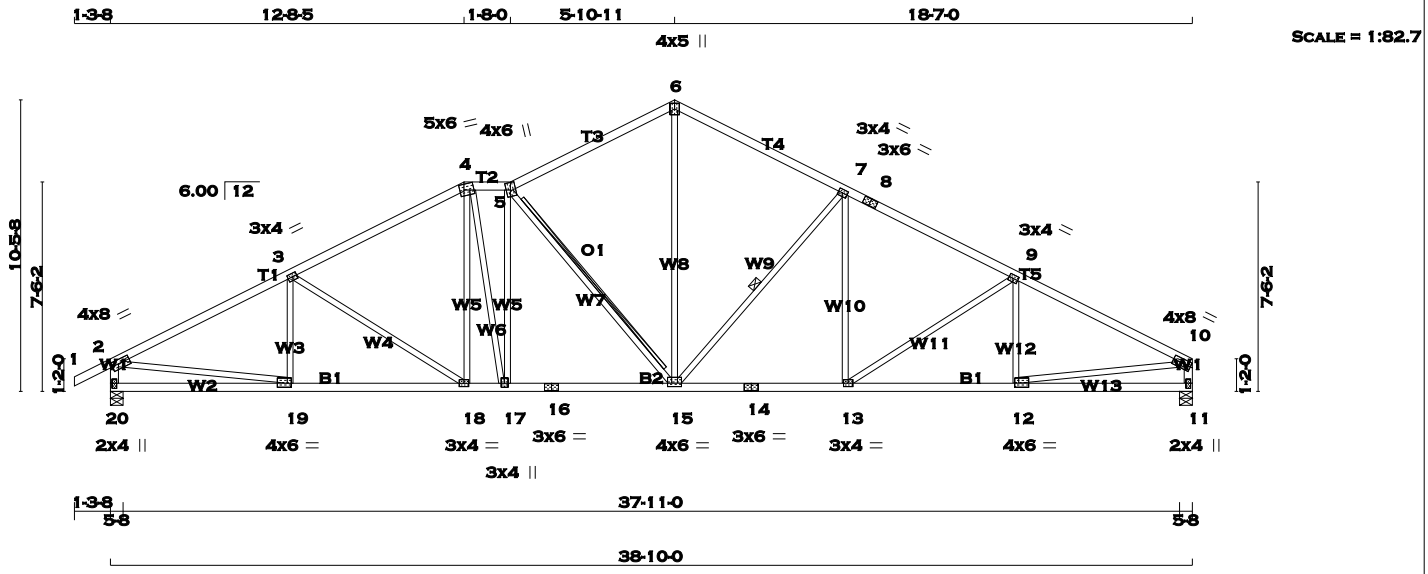

TOTAL WEIGHT = 170 lb
[M][F]

LUMBER
N. L. G. A. RULES

CHORDS	SIZE		LUMBER	DESCR.
1 - 4	2x4	DRY	No.2	SPF
4 - 5	2x4	DRY	No.2	SPF
5 - 6	2x4	DRY	No.2	SPF
6 - 8	2x4	DRY	No.2	SPF
8 - 10	2x4	DRY	No.2	SPF
20 - 2	2x4	DRY	No.2	SPF
11 - 10	2x4	DRY	No.2	SPF
20 - 16	2x4	DRY	No.2	SPF
16 - 14	2x4	DRY	No.2	SPF
14 - 11	2x4	DRY	No.2	SPF
ALL WEBS EXCEPT	2x3	DRY	No.2	SPF

DRY: SEASONED LUMBER.

PLATES (table is in inches)

JT	TYPE	PLATES	W	LEN	Y	X
2 3, 7, 9	TMVW-t	MT20	4.0	8.0	1.75	3.00
3	TMWW-t	MT20	3.0	4.0	1.50	1.75
4	TTWW-m	MT20	5.0	6.0	2.50	1.75
5	TTWW+m	MT20	4.0	6.0	3.25	1.75
6	TTW+p	MT20	4.0	5.0		
8	TS-t	MT20	3.0	6.0		
10	TMVW-t	MT20	4.0	8.0	1.75	Edge
11	BMV1+p	MT20	2.0	4.0	2.25	1.00
12	BMWW-t	MT20	4.0	6.0	1.75	1.75
13	BMWW-t	MT20	3.0	4.0		
14	BS-t	MT20	3.0	6.0		
15	BMWWW-t	MT20	4.0	6.0	1.50	3.00
16	BS-t	MT20	3.0	6.0		
17	BMWW+t	MT20	3.0	4.0	1.75	1.50
18	BMWW-t	MT20	3.0	4.0		
19	BMWW-t	MT20	4.0	6.0	1.75	1.75
20	BMV1+p	MT20	2.0	4.0	2.25	1.00

Edge - INDICATES REFERENCE CORNER OF PLATE TOUCHES EDGE OF CHORD.

A SIZE FOR SIZE SUBSTITUTION OF MITEK MII20 WITH TEE-LOK TL20 PLATES IS ALLOWED.

READ ALL NOTES ON THIS PAGE AND ON THE ENGINEERING NOTE PAGE ENP-1. THE NOTE PAGE IS AN INTEGRAL PART OF THIS DRAWING AS IT CONTAINS SPECIFICATIONS AND CRITERIA USED IN THE DESIGN OF THIS COMPONENT.

10 MAR 2017

DIMENSIONS, SUPPORTS AND LOADINGS SPECIFIED BY FABRICATOR TO BE VERIFIED BY BUILDING DESIGNER

BEARINGS

JT	FACTORED GROSS REACTION VERT	HORZ	MAXIMUM FACTORED GROSS REACTION DOWN	HORZ	UPLIFT	INPUT BRG IN-SX	REQRD BRG IN-SX
20	1947	0	1947	0	0	5-8	5-8
11	1842	0	1842	0	0	5-8	5-8

UNFACTORED REACTIONS

JT	1ST LCASE COMBINED	MAX./MIN. COMPONENT REACTIONS SNOW	LIVE	PERM.LIVE	WIND	DEAD	SOIL
20	1364	967 / 0	0 / 0	0 / 0	0 / 0	396 / 0	0 / 0
11	1292	904 / 0	0 / 0	0 / 0	0 / 0	388 / 0	0 / 0

BEARING MATERIAL TO BE SPF NO.2 OR BETTER AT JOINT(S) 20, 11

BRACING
TOP CHORD TO BE SHEATHED OR MAX. PURLIN SPACING = 3.65 FT.
MAX. UNBRACED BOTTOM CHORD LENGTH = 10.00 FT. OR RIGID CEILING DIRECTLY APPLIED.

ALL PITCH BREAKS AND PERIMETER CORNER JOINTS MUST BE LATERALLY RESTRAINED.

1 - 2x3 SPF No.2 LATERAL BRACE(S) AT 1/ 2 LENGTH OF 7-15. DBS = 20-0-0 . CBF = 92 LBS.
2x4 SPF No.2 T-BRACE AT 5-15

DBS = DIAGONAL BRACE SPACING (MAX). CBF = CUMULATIVE BRACING FORCE. FASTEN LATERAL BRACE(S) USING (0.122"X3") SPIRAL NAILS : 1 NAIL FOR 2x3 BRACE(S), 2 FOR 1x4, 2x4, 2x5, 3 FOR 2x6, 4 FOR 2x8, 5 FOR 2x10, AND 6 FOR 2x12.

FASTEN T AND I-BRACES TO NARROW EDGE OF WEB WITH ONE ROW PER PLY OF 3" COMMON WIRE NAILS @ 6" O.C. WITH 3" MINIMUM END DISTANCE. BRACE MUST COVER 90% OF WEB LENGTH.

END VERTICAL(S) MUST BE SHEATHED OR HAVE BRACES AS INDICATED IN THE MAX. UNBRACED LENGTH COLUMN OF THE TABLE BELOW

LOADING
TOTAL LOAD CASES: (4)

CHORDS

MEMB. FR-TO	MAX. FACTORED FORCE (LBS)	FACTORED VERT. LOAD LC1 (PLF) FROM	TO	MAX CSI (LC)	MAX. UNBRAC LENGTH
1- 2	0 / 23	-77.3	-77.3	0.10 (1)	10.00
2- 3	-2801 / 0	-77.3	-77.3	0.58 (1)	3.65
3- 4	-2470 / 0	-77.3	-77.3	0.52 (1)	3.91
4- 5	-2305 / 0	-77.3	-77.3	0.08 (1)	4.47
5- 6	-1972 / 0	-77.3	-77.3	0.42 (1)	4.39
6- 7	-1993 / 0	-77.3	-77.3	0.42 (1)	4.39
7- 8	-2509 / 0	-77.3	-77.3	0.44 (1)	4.00
8- 9	-2509 / 0	-77.3	-77.3	0.44 (1)	4.00
9-10	-2783 / 0	-77.3	-77.3	0.55 (1)	3.72
20- 2	-1898 / 0	0.0	0.0	0.19 (1)	6.10
11-10	-1794 / 0	0.0	0.0	0.18 (1)	6.24
20-19	0 / 0	-17.5	-17.5	0.17 (4)	10.00
19-18	0 / 2528	-17.5	-17.5	0.48 (1)	10.00
18-17	0 / 2189	-17.5	-17.5	0.42 (1)	10.00
17-16	0 / 2313	-17.5	-17.5	0.46 (1)	10.00
16-15	0 / 2313	-17.5	-17.5	0.46 (1)	10.00
15-14	0 / 2244	-17.5	-17.5	0.44 (1)	10.00
14-13	0 / 2244	-17.5	-17.5	0.44 (1)	10.00
13-12	0 / 2507	-17.5	-17.5	0.47 (1)	10.00
12-11	0 / 0	-17.5	-17.5	0.15 (4)	10.00

WEBS

MEMB. FR-TO	MAX. FACTORED FORCE (LBS)	MAX CSI (LC)
19- 3	-216 / 45	0.06 (1)
3-18	-408 / 0	0.47 (1)
18- 4	0 / 309	0.07 (1)
4-17	0 / 551	0.12 (1)
17- 5	-501 / 0	0.51 (1)
5-15	-867 / 0	0.60 (1)
15- 6	0 / 1343	0.30 (1)
15- 7	-734 / 0	0.45 (1)
13- 7	0 / 276	0.06 (1)
13- 9	-315 / 0	0.33 (1)
12- 9	-222 / 37	0.06 (1)
2-19	0 / 2550	0.57 (1)
12-10	0 / 2530	0.57 (1)

RECEIVED
TOWN OF MILTON
MAR 29, 2017
17-4967
BUILDING DIVISION

DESIGN CRITERIA

SPECIFIED LOADS:

TOP CH.	LL	=	23.3	PSF
	DL	=	3.0	PSF
BOT CH.	LL	=	0.0	PSF
	DL	=	7.0	PSF
TOTAL LOAD		=	33.3	PSF

SPACING = 24.0 IN. C/C

LOADING IN ALL FLAT SECTIONS BASED ON A SLOPE OF 2.00/12 MINIMUM

THIS TRUSS IS DESIGNED FOR RESIDENTIAL OR SMALL BUILDING REQUIREMENTS OF PART 9, NBCC 2010

THIS DESIGN COMPLIES WITH:
- PART 9 OF OBC 2012 , BCBC 2012 , ABC 2014
- CSA 086-09
- TPIC 2011

(55 % OF 27.2 P.S.F. G.S.L. PLUS 8.4 P.S.F. RAIN LOAD) EQUALS 23.3 P.S.F. SPECIFIED ROOF LIVE LOAD

ALLOWABLE DEFL.(LL)= L/360 (1.29")
CALCULATED VERT. DEFL.(LL) = L/ 999 (0.18")
ALLOWABLE DEFL.(TL)= L/360 (1.29")
CALCULATED VERT. DEFL.(TL) = L/ 999 (0.33")

CSI: TC=0.58 (2-3:1) , BC=0.48 (18-19:1) , WB=0.60 (5-15:1) , SSI=0.21 (2-3:1)

DOL LUMBER=1.00 NAIL=1.00 LS BEND=1.10 COMP=1.10 SHEAR=1.10 TENS= 1.10

COMPANION LIVE LOAD FACTOR = 0.50

TRUSS PLATE MANUFACTURER IS NOT RESPONSIBLE FOR QUALITY CONTROL IN THE TRUSS MANUFACTURING PLANT .

NAIL VALUES

PLATE	GRIP(DRY) (PSI) MAX	MIN	SHEAR (PLI) MAX	MIN	SECTION (PLI) MAX	MIN
MT20	618	354	1667	822	2284	1656

PLATE PLACEMENT TOL. = 0.250 inches

PLATE ROTATION TOL. = 5.0 Deg.

JSI GRIP= 0.90 (5) (INPUT = 0.90)
JSI METAL= 0.64 (16) (INPUT = 1.00)

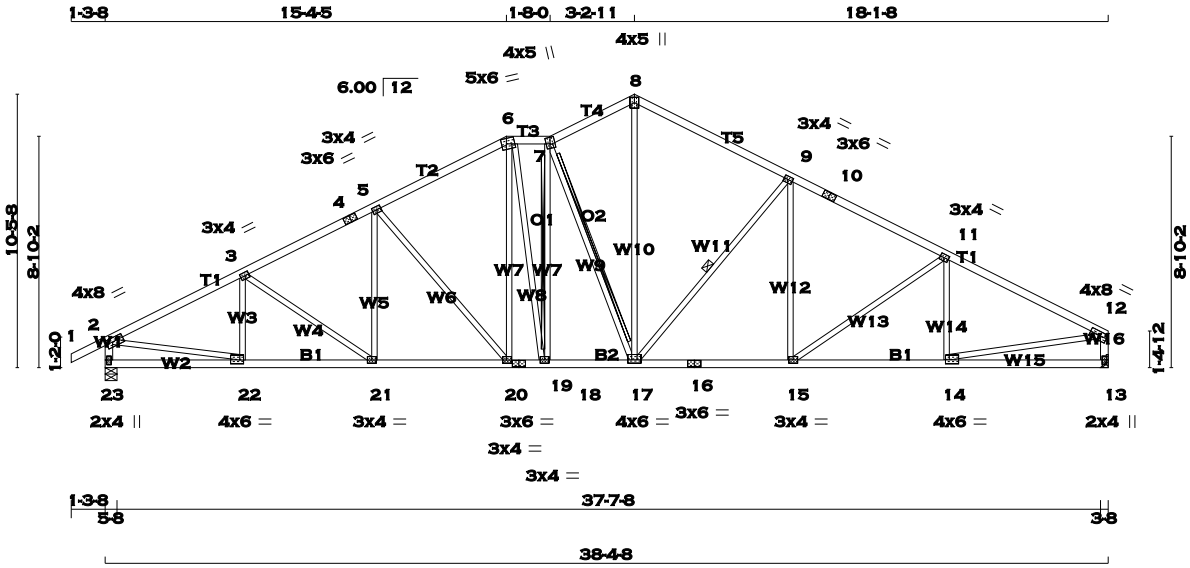

TOTAL WEIGHT = 181 lb

[M][F]

LUMBER

N. L. G. A. RULES

CHORDS	SIZE		LUMBER	DESCR.
1 - 4	2x4	DRY	No.2	SPF
4 - 6	2x4	DRY	No.2	SPF
6 - 7	2x4	DRY	No.2	SPF
7 - 8	2x4	DRY	No.2	SPF
8 - 10	2x4	DRY	No.2	SPF
10 - 12	2x4	DRY	No.2	SPF
23 - 2	2x4	DRY	No.2	SPF
13 - 12	2x4	DRY	No.2	SPF
23 - 19	2x4	DRY	No.2	SPF
19 - 16	2x4	DRY	No.2	SPF
16 - 13	2x4	DRY	No.2	SPF
ALL WEBS EXCEPT	2x3	DRY	No.2	SPF

DRY: SEASONED LUMBER.

PLATES (table is in inches)

JT	TYPE	PLATES	W	LEN	Y	X
2	TMVW-t	MT20	4.0	8.0	1.75	3.00
3, 5, 9, 11						
3	TMWW-t	MT20	3.0	4.0	1.50	1.75
4	TS-t	MT20	3.0	6.0		
6	TTWW-m	MT20	5.0	6.0	2.50	2.25
7	TTWW+m	MT20	4.0	5.0	3.00	1.75
8	TTW+p	MT20	4.0	5.0		
10	TS-t	MT20	3.0	6.0		
12	TMVW-t	MT20	4.0	8.0	1.75	Edge
13	BMV1+p	MT20	2.0	4.0	2.25	1.00
14	BMWW-t	MT20	4.0	6.0	1.75	1.75
15, 18, 21						
15	BMWW-t	MT20	3.0	4.0		
16	BS-t	MT20	3.0	6.0		
17	BMWWW-t	MT20	4.0	6.0	1.50	3.00
19	BS-t	MT20	3.0	6.0		
20	BMWW-t	MT20	3.0	4.0	1.50	1.75
22	BMWW-t	MT20	4.0	6.0	1.75	1.75
23	BMV1+p	MT20	2.0	4.0	2.25	1.00

Edge - INDICATES REFERENCE CORNER OF PLATE TOUCHES EDGE OF CHORD.

A SIZE FOR SIZE SUBSTITUTION OF MITEK MII20 WITH TEE-LOK TL20 PLATES IS ALLOWED.

READ ALL NOTES ON THIS PAGE AND ON THE ENGINEERING NOTE PAGE ENP-1. THE NOTE PAGE IS AN INTEGRAL PART OF THIS DRAWING AS IT CONTAINS SPECIFICATIONS AND CRITERIA USED IN THE DESIGN OF THIS COMPONENT.

10 MAR 2017

DIMENSIONS, SUPPORTS AND LOADINGS SPECIFIED BY FABRICATOR TO BE VERIFIED BY BUILDING DESIGNER

BEARINGS

JT	FACTORED GROSS REACTION VERT	HORZ	MAXIMUM FACTORED GROSS REACTION DOWN	HORZ	UPLIFT	INPUT BRG IN-SX	REQRD BRG IN-SX
23	1925	0	1925	0	0	5-8	5-8
13	1820	0	1820	0	0	HANGER BY OTHERS MIN. SEAT SIZE: 3-8	

UNFACTORED REACTIONS

JT	1ST LCASE COMBINED	SNOW	LIVE	PERM.LIVE	WIND	DEAD	SOIL
		MAX./MIN. COMPONENT REACTIONS					
23	1349	957 / 0	0 / 0	0 / 0	0 / 0	392 / 0	0 / 0
13	1277	893 / 0	0 / 0	0 / 0	0 / 0	384 / 0	0 / 0

BEARING MATERIAL TO BE SPF NO.2 OR BETTER AT JOINT(S) 23

BRACING

TOP CHORD TO BE SHEATHED OR MAX. PURLIN SPACING = 3.88 FT.
MAX. UNBRACED BOTTOM CHORD LENGTH = 10.00 FT. OR RIGID CEILING DIRECTLY APPLIED.

ALL PITCH BREAKS AND PERIMETER CORNER JOINTS MUST BE LATERALLY RESTRAINED.

1 - 2x3 SPF No.2 LATERAL BRACE(S) AT 1/ 2 LENGTH OF 9-17. DBS = 20-0-0 . CBF = 85 LBS.
2x3 SPF No.2 T-BRACE AT 7-18
2x4 SPF No.2 T-BRACE AT 7-17

DBS = DIAGONAL BRACE SPACING (MAX). CBF = CUMULATIVE BRACING FORCE. FASTEN LATERAL BRACE(S) USING (0.122"X3") SPIRAL NAILS : 1 NAIL FOR 2x3 BRACE(S), 2 FOR 1x4, 2x4, 2x5, 3 FOR 2x6, 4 FOR 2x8, 5 FOR 2x10, AND 6 FOR 2x12.

FASTEN T AND I-BRACES TO NARROW EDGE OF WEB WITH ONE ROW PER PLY OF 3" COMMON WIRE NAILS @ 6" O.C. WITH 3" MINIMUM END DISTANCE. BRACE MUST COVER 90% OF WEB LENGTH.

END VERTICAL(S) MUST BE SHEATHED OR HAVE BRACES AS INDICATED IN THE MAX. UNBRACED LENGTH COLUMN OF THE TABLE BELOW

LOADING

TOTAL LOAD CASES: (4)

CHORDS

MEMB. FR-TO	MAX. FACTORED FORCE (LBS)	FACTORED VERT. LOAD (PLF) FROM	TO	LC1	MAX CSI (LC)	MAX. UNBRAC LENGTH
1- 2	0 / 23	-77.3	-77.3	0.10 (1)	10.00	
2- 3	-2698 / 0	-77.3	-77.3	0.37 (1)	3.92	
3- 4	-2592 / 0	-77.3	-77.3	0.31 (1)	4.06	
4- 5	-2592 / 0	-77.3	-77.3	0.31 (1)	4.06	
5- 6	-2209 / 0	-77.3	-77.3	0.30 (1)	4.34	
6- 7	-2013 / 0	-77.3	-77.3	0.07 (1)	4.73	
7- 8	-1920 / 0	-77.3	-77.3	0.14 (1)	4.75	
8- 9	-1942 / 0	-77.3	-77.3	0.40 (1)	4.47	
9-10	-2407 / 0	-77.3	-77.3	0.41 (1)	4.10	
10-11	-2407 / 0	-77.3	-77.3	0.41 (1)	4.10	
11-12	-2591 / 0	-77.3	-77.3	0.50 (1)	3.88	
23- 2	-1883 / 0	0.0	0.0	0.19 (1)	6.12	
13-12	-1773 / 0	0.0	0.0	0.18 (1)	6.27	
23-22	0 / 0	-17.5	-17.5	0.10 (4)	10.00	
22-21	0 / 2427	-17.5	-17.5	0.43 (1)	10.00	
21-20	0 / 2319	-17.5	-17.5	0.41 (1)	10.00	
20-19	0 / 1965	-17.5	-17.5	0.35 (1)	10.00	
19-18	0 / 1965	-17.5	-17.5	0.35 (1)	10.00	
18-17	0 / 2016	-17.5	-17.5	0.39 (1)	10.00	
17-16	0 / 2153	-17.5	-17.5	0.41 (1)	10.00	
16-15	0 / 2153	-17.5	-17.5	0.41 (1)	10.00	
15-14	0 / 2335	-17.5	-17.5	0.44 (1)	10.00	
14-13	0 / 0	-17.5	-17.5	0.15 (4)	10.00	

WEBS

MEMB. FR-TO	MAX. FACTORED FORCE (LBS)	MAX CSI (LC)
22- 3	-304 / 0	0.07 (1)
3-21	-132 / 0	0.09 (1)
21- 5	0 / 167	0.04 (4)
5-20	-552 / 0	0.72 (1)
20- 6	0 / 501	0.11 (1)
6-18	0 / 264	0.06 (1)
18- 7	-259 / 0	0.33 (1)
7-17	-840 / 0	0.55 (1)
17- 8	0 / 1403	0.32 (1)
17- 9	-676 / 0	0.41 (1)
15- 9	0 / 231	0.05 (4)
15-11	-222 / 0	0.23 (1)
14-11	-296 / 12	0.09 (1)
2-22	0 / 2459	0.55 (1)
14-12	0 / 2371	0.53 (1)

RECEIVED
TOWN OF MILTON
MAR 29, 2017
17-4967
BUILDING DIVISION

DESIGN CRITERIA

SPECIFIED LOADS:

TOP	CH.	LL	=	23.3	PSF
		DL	=	3.0	PSF
BOT	CH.	LL	=	0.0	PSF
		DL	=	7.0	PSF
TOTAL	LOAD		=	33.3	PSF

SPACING = 24.0 IN. C/C

LOADING IN ALL FLAT SECTIONS BASED ON A SLOPE OF 2.00/12 MINIMUM

THIS TRUSS IS DESIGNED FOR RESIDENTIAL OR SMALL BUILDING REQUIREMENTS OF PART 9, NBCC 2010

THIS DESIGN COMPLIES WITH:
- PART 9 OF OBC 2012 , BCBC 2012 , ABC 2014
- CSA 086-09
- TPIC 2011

(55 % OF 27.2 P.S.F. G.S.L. PLUS 8.4 P.S.F. RAIN LOAD) EQUALS 23.3 P.S.F. SPECIFIED ROOF LIVE LOAD

ALLOWABLE DEFL.(LL)= L/360 (1.28")
CALCULATED VERT. DEFL.(LL) = L/ 999 (0.16")
ALLOWABLE DEFL.(TL)= L/360 (1.28")
CALCULATED VERT. DEFL.(TL) = L/ 999 (0.29")

CSI: TC=0.50 (11-12:1) , BC=0.44 (14-15:1) , WB=0.72 (5-20:1) , SSI=0.20 (11-12:1)

DOL LUMBER=1.00 NAIL=1.00 LS BEND=1.10 COMP=1.10 SHEAR=1.10 TENS= 1.10

COMPANION LIVE LOAD FACTOR = 0.50

TRUSS PLATE MANUFACTURER IS NOT RESPONSIBLE FOR QUALITY CONTROL IN THE TRUSS MANUFACTURING PLANT .

NAIL VALUES

PLATE	GRIP(DRY) (PSI) MAX	MIN	SHEAR (PLI) MAX	MIN	SECTION (PLI) MAX	MIN
MT20	618	354	1667	822	2284	1656

PLATE PLACEMENT TOL. = 0.250 inches

PLATE ROTATION TOL. = 5.0 Deg.

JSI GRIP= 0.90 (17) (INPUT = 0.90)
JSI METAL= 0.61 (22) (INPUT = 1.00)

KOTT

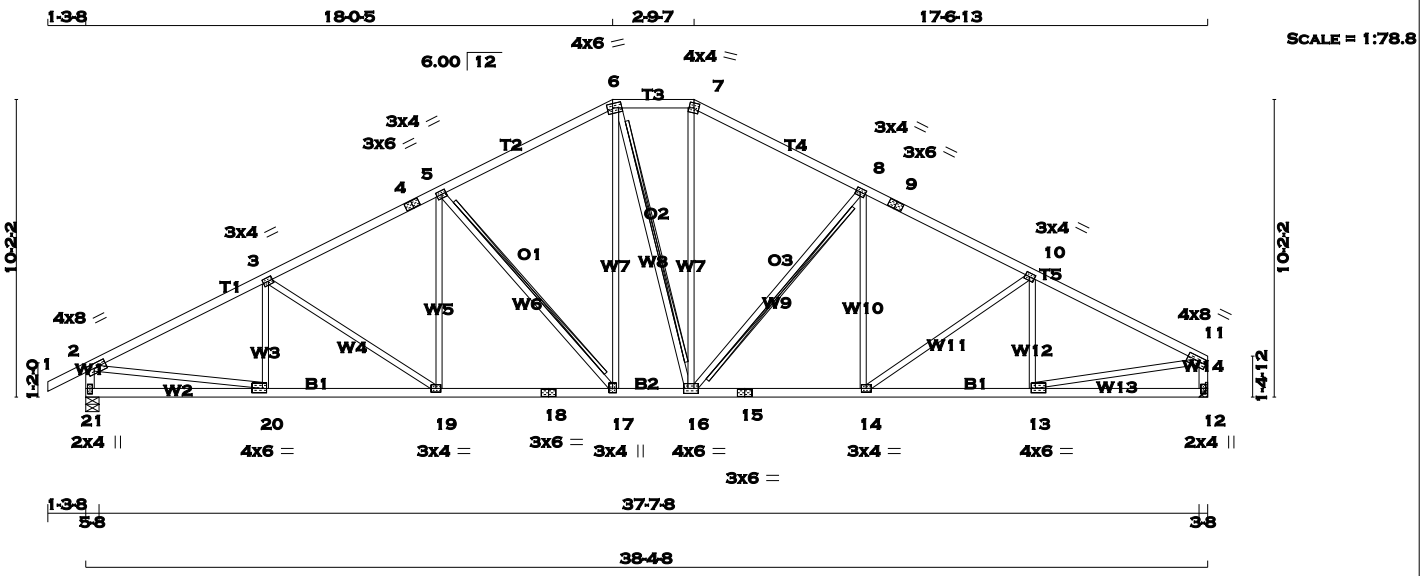

TOTAL WEIGHT = 172 lb

[M][F]

LUMBER

N. L. G. A. RULES

CHORDS	SIZE		LUMBER	DESCR.
1 - 4	2x4	DRY	No.2	SPF
4 - 6	2x4	DRY	No.2	SPF
6 - 7	2x4	DRY	No.2	SPF
7 - 9	2x4	DRY	No.2	SPF
9 - 11	2x4	DRY	No.2	SPF
21 - 2	2x4	DRY	No.2	SPF
12 - 11	2x4	DRY	No.2	SPF
21 - 18	2x4	DRY	No.2	SPF
18 - 15	2x4	DRY	No.2	SPF
15 - 12	2x4	DRY	No.2	SPF
ALL WEBS EXCEPT	2x3	DRY	No.2	SPF

DRY: SEASONED LUMBER.

PLATES (table is in inches)

JT	TYPE	PLATES	W	LEN	Y	X
2	TMVW-t	MT20	4.0	8.0	1.75	3.00
3, 5, 8, 10						
3	TMWW-t	MT20	3.0	4.0	1.50	1.75
4	TS-t	MT20	3.0	6.0		
6	TTWW-m	MT20	4.0	6.0	1.75	2.25
7	TTW-m	MT20	4.0	4.0		
9	TS-t	MT20	3.0	6.0		
11	TMVW-t	MT20	4.0	8.0	1.75	Edge
12	BMV1+p	MT20	2.0	4.0	2.25	1.00
13	BMWW-t	MT20	4.0	6.0	1.75	1.75
14	BMWW-t	MT20	3.0	4.0		
15	BS-t	MT20	3.0	6.0		
16	BMWWW-t	MT20	4.0	6.0		
17	BMWW+t	MT20	3.0	4.0	1.75	1.50
18	BS-t	MT20	3.0	6.0		
19	BMWW-t	MT20	3.0	4.0		
20	BMWW-t	MT20	4.0	6.0	1.75	1.75
21	BMV1+p	MT20	2.0	4.0	2.25	1.00

Edge - INDICATES REFERENCE CORNER OF PLATE TOUCHES EDGE OF CHORD.

A SIZE FOR SIZE SUBSTITUTION OF MITEK MII20 WITH TEE-LOK TL20 PLATES IS ALLOWED.

READ ALL NOTES ON THIS PAGE AND ON THE ENGINEERING NOTE PAGE ENP-1. THE NOTE PAGE IS AN INTEGRAL PART OF THIS DRAWING AS IT CONTAINS SPECIFICATIONS AND CRITERIA USED IN THE DESIGN OF THIS COMPONENT.

DIMENSIONS, SUPPORTS AND LOADINGS SPECIFIED BY FABRICATOR TO BE VERIFIED BY BUILDING DESIGNER

BEARINGS

JT	FACTORED GROSS REACTION VERT	HORZ	MAXIMUM FACTORED GROSS REACTION DOWN	HORZ	UPLIFT	INPUT BRG IN-SX	REQRD BRG IN-SX
21	1925	0	1925	0	0	5-8	5-8
12	1820	0	1820	0	0	HANGER BY OTHERS	
						MIN. SEAT SIZE: 3-8	

UNFACTORED REACTIONS

JT	1ST LCASE COMBINED	SNOW	MAX./MIN. COMPONENT REACTIONS LIVE	PERM.LIVE	WIND	DEAD	SOIL
21	1349	957 / 0	0 / 0	0 / 0	0 / 0	392 / 0	0 / 0
12	1277	893 / 0	0 / 0	0 / 0	0 / 0	384 / 0	0 / 0

BEARING MATERIAL TO BE SPF NO.2 OR BETTER AT JOINT(S) 21

BRACING

TOP CHORD TO BE SHEATHED OR MAX. PURLIN SPACING = 3.78 FT.
MAX. UNBRACED BOTTOM CHORD LENGTH = 10.00 FT. OR RIGID CEILING DIRECTLY APPLIED.

ALL PITCH BREAKS AND PERIMETER CORNER JOINTS MUST BE LATERALLY RESTRAINED.

2x4 SPF No.2 T-BRACE AT 5-17, 6-16, 8-16

FASTEN T AND I-BRACES TO NARROW EDGE OF WEB WITH ONE ROW PER PLY OF 3" COMMON WIRE NAILS @ 6" O.C. WITH 3" MINIMUM END DISTANCE. BRACE MUST COVER 90% OF WEB LENGTH.

END VERTICAL(S) MUST BE SHEATHED OR HAVE BRACES AS INDICATED IN THE MAX. UNBRACED LENGTH COLUMN OF THE TABLE BELOW

LOADING

TOTAL LOAD CASES: (4)

CHORDS

MEMB. FR-TO	MAX. FACTORED FORCE (LBS)	FACTORED VERT. LOAD (PLF) FROM	TO	LC1	MAX CSI (LC)	MAX. UNBRAC LENGTH
1- 2	0 / 23	-77.3	-77.3	0.10 (1)	10.00	
2- 3	-2739 / 0	-77.3	-77.3	0.51 (1)	3.78	
3- 4	-2492 / 0	-77.3	-77.3	0.41 (1)	4.03	
4- 5	-2492 / 0	-77.3	-77.3	0.41 (1)	4.03	
5- 6	-1986 / 0	-77.3	-77.3	0.40 (1)	4.43	
6- 7	-1760 / 0	-77.3	-77.3	0.11 (1)	4.95	
7- 8	-1981 / 0	-77.3	-77.3	0.38 (1)	4.46	
8- 9	-2428 / 0	-77.3	-77.3	0.39 (1)	4.10	
9-10	-2428 / 0	-77.3	-77.3	0.39 (1)	4.10	
10-11	-2581 / 0	-77.3	-77.3	0.47 (1)	3.91	
21- 2	-1878 / 0	0.0	0.0	0.19 (1)	6.12	
12-11	-1774 / 0	0.0	0.0	0.18 (1)	6.26	
21-20	0 / 0	-17.5	-17.5	0.14 (4)	10.00	
20-19	0 / 2467	-17.5	-17.5	0.46 (1)	10.00	
19-18	0 / 2229	-17.5	-17.5	0.43 (1)	10.00	
18-17	0 / 2229	-17.5	-17.5	0.43 (1)	10.00	
17-16	0 / 1764	-17.5	-17.5	0.35 (1)	10.00	
16-15	0 / 2171	-17.5	-17.5	0.41 (1)	10.00	
15-14	0 / 2171	-17.5	-17.5	0.41 (1)	10.00	
14-13	0 / 2326	-17.5	-17.5	0.43 (1)	10.00	
13-12	0 / 0	-17.5	-17.5	0.14 (4)	10.00	

WEBS

MEMB. FR-TO	MAX. FACTORED FORCE (LBS)	MAX CSI (LC)
20- 3	-233 / 29	0.06 (1)
3-19	-286 / 0	0.28 (1)
19- 5	0 / 268	0.06 (1)
5-17	-716 / 0	0.48 (1)
17- 6	0 / 603	0.14 (1)
6-16	-15 / 0	0.01 (1)
16- 7	0 / 591	0.13 (1)
16- 8	-647 / 0	0.43 (1)
14- 8	0 / 210	0.05 (4)
14-10	-189 / 0	0.18 (1)
13-10	-311 / 4	0.09 (1)
2-20	0 / 2491	0.56 (1)
13-11	0 / 2364	0.53 (1)

DESIGN CRITERIA

SPECIFIED LOADS:

TOP CH.	LL	=	23.3	PSF
	DL	=	3.0	PSF
BOT CH.	LL	=	0.0	PSF
	DL	=	7.0	PSF
TOTAL LOAD		=	33.3	PSF

SPACING = 24.0 IN. C/C

LOADING IN FLAT SECTION BASED ON A SLOPE OF 2.00/12 MINIMUM

THIS TRUSS IS DESIGNED FOR RESIDENTIAL OR SMALL BUILDING REQUIREMENTS OF PART 9, NBCC 2010

THIS DESIGN COMPLIES WITH:
- PART 9 OF OBC 2012 , BCBC 2012 , ABC 2014
- CSA 086-09
- TPIC 2011

(55 % OF 27.2 P.S.F. G.S.L. PLUS 8.4 P.S.F. RAIN LOAD) EQUALS 23.3 P.S.F. SPECIFIED ROOF LIVE LOAD

ALLOWABLE DEFL.(LL)= L/360 (1.28")
CALCULATED VERT. DEFL.(LL) = L/ 999 (0.15")
ALLOWABLE DEFL.(TL)= L/360 (1.28")
CALCULATED VERT. DEFL.(TL) = L/ 999 (0.29")

CSI: TC=0.51 (2-3:1) , BC=0.46 (19-20:1) , WB=0.56 (2-20:1) , SSI=0.20 (2-3:1)

DOL LUMBER=1.00 NAIL=1.00 LS BEND=1.10 COMP=1.10 SHEAR=1.10 TENS= 1.10

COMPANION LIVE LOAD FACTOR = 0.50

TRUSS PLATE MANUFACTURER IS NOT RESPONSIBLE FOR QUALITY CONTROL IN THE TRUSS MANUFACTURING PLANT .

NAIL VALUES

PLATE	GRIP(DRY) (PSI) MAX	MIN	SHEAR (PLI) MAX	MIN	SECTION (PLI) MAX	MIN
MT20	618	354	1667	822	2284	1656

PLATE PLACEMENT TOL. = 0.250 inches

PLATE ROTATION TOL. = 5.0 Deg.

JSI GRIP= 0.90 (7) (INPUT = 0.90)
JSI METAL= 0.64 (18) (INPUT = 1.00)

RECEIVED
TOWN OF MILTON
MAR 29, 2017
17-4967
BUILDING DIVISION

10 MAR 2017

KOTT

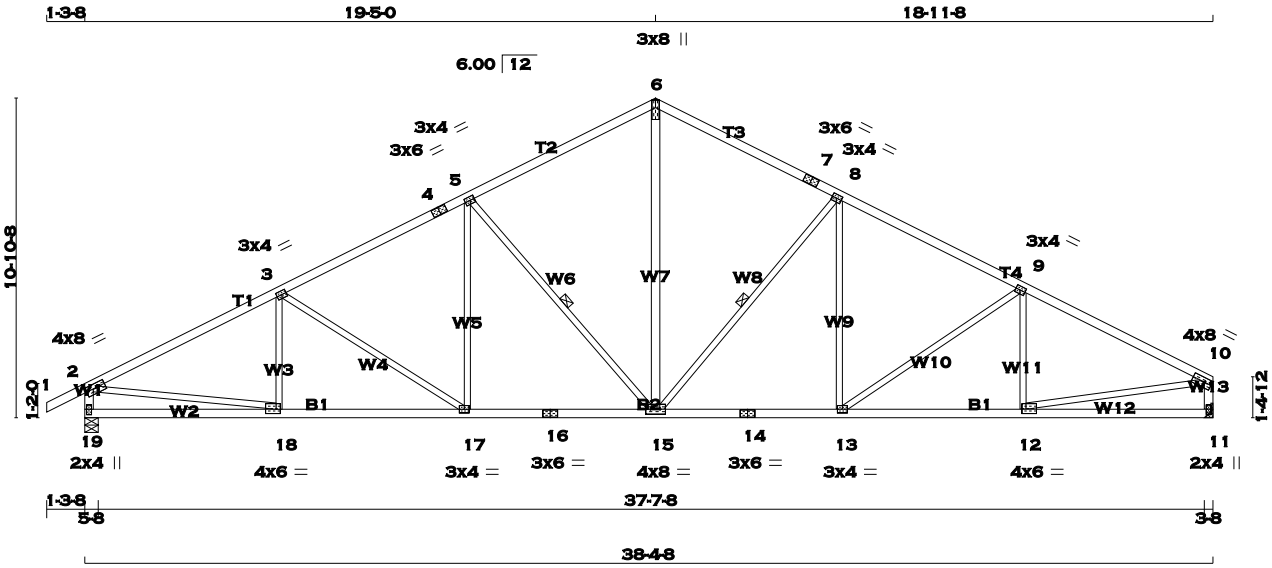

TOTAL WEIGHT = 6 X 164 = 982 lb

[M][F]

LUMBER

N. L. G. A. RULES

CHORDS	SIZE		LUMBER	DESCR.
1 - 4	2x4	DRY	No.2	SPF
4 - 6	2x4	DRY	No.2	SPF
6 - 7	2x4	DRY	No.2	SPF
7 - 10	2x4	DRY	No.2	SPF
19 - 2	2x4	DRY	No.2	SPF
11 - 10	2x4	DRY	No.2	SPF
19 - 16	2x4	DRY	No.2	SPF
16 - 14	2x4	DRY	No.2	SPF
14 - 11	2x4	DRY	No.2	SPF
ALL WEBS	2x3	DRY	No.2	SPF
EXCEPT				
15 - 6	2x4	DRY	No.2	SPF

DRY: SEASONED LUMBER.

PLATES (table is in inches)

JT	TYPE	PLATES	W	LEN	Y	X
2	TMVW-t	MT20	4.0	8.0	1.75	3.00
3, 5, 8, 9						
3	TMWW-t	MT20	3.0	4.0	1.50	1.75
4	TS-t	MT20	3.0	6.0		
6	TTW+p	MT20	3.0	8.0	Edge	
7	TS-t	MT20	3.0	6.0		
10	TMVW-t	MT20	4.0	8.0	1.75	Edge
11	BMV1+p	MT20	2.0	4.0	2.25	1.00
12	BMWW-t	MT20	4.0	6.0	1.75	1.75
13	BMWW-t	MT20	3.0	4.0		
14	BS-t	MT20	3.0	6.0		
15	BMWWW-t	MT20	4.0	8.0		
16	BS-t	MT20	3.0	6.0		
17	BMWW-t	MT20	3.0	4.0		
18	BMWW-t	MT20	4.0	6.0	1.75	1.75
19	BMV1+p	MT20	2.0	4.0	2.25	1.00

Edge - INDICATES REFERENCE CORNER OF PLATE TOUCHES EDGE OF CHORD.

A SIZE FOR SIZE SUBSTITUTION OF MITEK MII20 WITH TEE-LOK TL20 PLATES IS ALLOWED.

READ ALL NOTES ON THIS PAGE AND ON THE ENGINEERING NOTE PAGE ENP-1. THE NOTE PAGE IS AN INTEGRAL PART OF THIS DRAWING AS IT CONTAINS SPECIFICATIONS AND CRITERIA USED IN THE DESIGN OF THIS COMPONENT.

DIMENSIONS, SUPPORTS AND LOADINGS SPECIFIED BY FABRICATOR TO BE VERIFIED BY BUILDING DESIGNER

BEARINGS

JT	FACTORED GROSS REACTION VERT	HORZ	MAXIMUM FACTORED GROSS REACTION DOWN	HORZ	UPLIFT	INPUT BRG IN-SX	REQRD BRG IN-SX
19	1925	0	1925	0	0	5-8	5-8
11	1820	0	1820	0	0	HANGER BY OTHERS	
						MIN. SEAT SIZE: 3-8	

UNFACTORED REACTIONS

JT	1ST LCASE COMBINED	SNOW	MAX./MIN. COMPONENT REACTIONS LIVE	PERM.LIVE	WIND	DEAD	SOIL
19	1349	957 / 0	0 / 0	0 / 0	0 / 0	392 / 0	0 / 0
11	1277	893 / 0	0 / 0	0 / 0	0 / 0	384 / 0	0 / 0

BEARING MATERIAL TO BE SPF NO.2 OR BETTER AT JOINT(S) 19

BRACING

TOP CHORD TO BE SHEATHED OR MAX. PURLIN SPACING = 3.69 FT.
MAX. UNBRACED BOTTOM CHORD LENGTH = 10.00 FT. OR RIGID CEILING DIRECTLY APPLIED.

ALL PITCH BREAKS AND PERIMETER CORNER JOINTS MUST BE LATERALLY RESTRAINED.

1 - 2x3 SPF No.2 LATERAL BRACE(S) AT 1/ 2 LENGTH OF 5-15. DBS = 18-0-0 . CBF = 88 LBS.
1 - 2x3 SPF No.2 LATERAL BRACE(S) AT 1/ 2 LENGTH OF 8-15. DBS = 20-0-0 . CBF = 91 LBS.

DBS = DIAGONAL BRACE SPACING (MAX). CBF = CUMULATIVE BRACING FORCE. FASTEN LATERAL BRACE(S) USING (0.122"X3") SPIRAL NAILS : 1 NAIL FOR 2x3 BRACE(S), 2 FOR 1x4, 2x4, 2x5, 3 FOR 2x6, 4 FOR 2x8, 5 FOR 2x10, AND 6 FOR 2x12.

END VERTICAL(S) MUST BE SHEATHED OR HAVE BRACES AS INDICATED IN THE MAX. UNBRACED LENGTH COLUMN OF THE TABLE BELOW

LOADING

TOTAL LOAD CASES: (4)

CHORDS FR-TO	MAX. FACTORED MEMB. FORCE (LBS)	FACTORED VERT. LOAD LC1 (PLF) FROM	TO	MAX CSI (LC)	MAX. UNBRAC LENGTH	WEBS MEMB.	MAX. FACTORED FORCE (LBS)	MAX CSI (LC)
1- 2	0 / 23	-77.3	-77.3	0.10 (1)	10.00	18- 3	-199 / 48	0.06 (1)
2- 3	-2751 / 0	-77.3	-77.3	0.60 (1)	3.69	3-17	-365 / 0	0.43 (1)
3- 4	-2430 / 0	-77.3	-77.3	0.48 (1)	4.02	17- 5	0 / 308	0.07 (1)
4- 5	-2430 / 0	-77.3	-77.3	0.48 (1)	4.02	5-15	-785 / 0	0.53 (1)
5- 6	-1875 / 0	-77.3	-77.3	0.46 (1)	4.46	15- 6	0 / 1264	0.20 (1)
6- 7	-1875 / 0	-77.3	-77.3	0.43 (1)	4.49	15- 8	-724 / 0	0.49 (1)
7- 8	-1875 / 0	-77.3	-77.3	0.43 (1)	4.49	13- 8	0 / 258	0.06 (1)
8- 9	-2375 / 0	-77.3	-77.3	0.45 (1)	4.08	13- 9	-270 / 0	0.31 (1)
9-10	-2603 / 0	-77.3	-77.3	0.55 (1)	3.82	12- 9	-274 / 24	0.09 (1)
19- 2	-1875 / 0	0.0	0.0	0.19 (1)	6.13	2-18	0 / 2500	0.56 (1)
11-10	-1772 / 0	0.0	0.0	0.18 (1)	6.27	12-10	0 / 2379	0.54 (1)
19-18	0 / 0	-17.5	-17.5	0.17 (4)	10.00			
18-17	0 / 2480	-17.5	-17.5	0.47 (1)	10.00			
17-16	0 / 2174	-17.5	-17.5	0.44 (1)	10.00			
16-15	0 / 2174	-17.5	-17.5	0.44 (1)	10.00			
15-14	0 / 2124	-17.5	-17.5	0.43 (1)	10.00			
14-13	0 / 2124	-17.5	-17.5	0.43 (1)	10.00			
13-12	0 / 2346	-17.5	-17.5	0.45 (1)	10.00			
12-11	0 / 0	-17.5	-17.5	0.16 (4)	10.00			

DESIGN CRITERIA

SPECIFIED LOADS:

TOP	CH.	LL	=	23.3	PSF
		DL	=	3.0	PSF
BOT	CH.	LL	=	0.0	PSF
		DL	=	7.0	PSF
TOTAL	LOAD		=	33.3	PSF

SPACING = 24.0 IN. C/C

THIS TRUSS IS DESIGNED FOR RESIDENTIAL OR SMALL BUILDING REQUIREMENTS OF PART 9, NBCC 2010

THIS DESIGN COMPLIES WITH:
- PART 9 OF OBC 2012 , BCBC 2012 , ABC 2014
- CSA 086-09
- TPIC 2011

(55 % OF 27.2 P.S.F. G.S.L. PLUS 8.4 P.S.F. RAIN LOAD) EQUALS 23.3 P.S.F. SPECIFIED ROOF LIVE LOAD

ALLOWABLE DEFL.(LL)= L/360 (1.28")
CALCULATED VERT. DEFL.(LL) = L/ 999 (0.16")
ALLOWABLE DEFL.(TL)= L/360 (1.28")
CALCULATED VERT. DEFL.(TL) = L/ 999 (0.29")

CSI: TC=0.60 (2-3:1) , BC=0.47 (17-18:1) , WB=0.56 (2-18:1) , SSI=0.21 (2-3:1)

DOL LUMBER=1.00 NAIL=1.00 LS BEND=1.10 COMP=1.10 SHEAR=1.10 TENS= 1.10

COMPANION LIVE LOAD FACTOR = 0.50

TRUSS PLATE MANUFACTURER IS NOT RESPONSIBLE FOR QUALITY CONTROL IN THE TRUSS MANUFACTURING PLANT .

NAIL VALUES

PLATE	GRIP(DRY) (PSI) MAX	MIN	SHEAR (PLI) MAX	MIN	SECTION (PLI) MAX	MIN
MT20	618	354	1667	822	2284	1656

PLATE PLACEMENT TOL. = 0.250 inches

PLATE ROTATION TOL. = 5.0 Deg.

JSI GRIP= 0.88 (5) (INPUT = 0.90)
JSI METAL= 0.62 (18) (INPUT = 1.00)

RECEIVED
TOWN OF MILTON
MAR 29, 2017
17-4967
BUILDING DIVISION

10 MAR 2017

KOTT

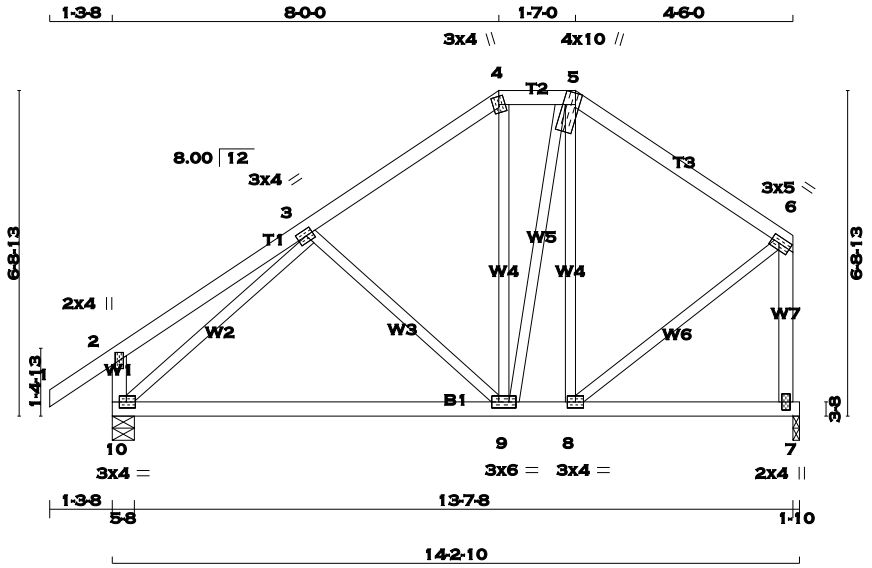

TOTAL WEIGHT = 70 lb

[M][F]

LUMBER

N. L. G. A. RULES

CHORDS	SIZE		LUMBER	DESCR.
1 - 4	2x4	DRY	No.2	SPF
4 - 5	2x4	DRY	No.2	SPF
5 - 6	2x4	DRY	No.2	SPF
10 - 2	2x4	DRY	No.2	SPF
7 - 6	2x4	DRY	No.2	SPF
10 - 7	2x4	DRY	No.2	SPF
ALL WEBS EXCEPT	2x3	DRY	No.2	SPF

DRY: SEASONED LUMBER.

PLATES (table is in inches)

JT	TYPE	PLATES	W	LEN	Y	X
2	TMV+p	MT20	2.0	4.0		
3	TMWW-t	MT20	3.0	4.0	1.50	1.75
4	TTW+m	MT20	3.0	4.0		
5	TTWW+m	MT20	4.0	10.0	Edge	1.00
6	TMVW-t	MT20	3.0	5.0	1.50	2.00
7	BMV1+p	MT20	2.0	4.0		
8	BMWW-t	MT20	3.0	4.0		
9	BMWWW-t	MT20	3.0	6.0		
10	BMVW1-t	MT20	3.0	4.0	1.50	1.75

Edge - INDICATES REFERENCE CORNER OF PLATE TOUCHES EDGE OF CHORD.

A SIZE FOR SIZE SUBSTITUTION OF MITEK MII20 WITH TEE-LOK TL20 PLATES IS ALLOWED.

READ ALL NOTES ON THIS PAGE AND ON THE ENGINEERING NOTE PAGE ENP-1. THE NOTE PAGE IS AN INTEGRAL PART OF THIS DRAWING AS IT CONTAINS SPECIFICATIONS AND CRITERIA USED IN THE DESIGN OF THIS COMPONENT.

DIMENSIONS, SUPPORTS AND LOADINGS SPECIFIED BY FABRICATOR TO BE VERIFIED BY BUILDING DESIGNER

BEARINGS

JT	FACTORED GROSS REACTION VERT	HORZ	MAXIMUM FACTORED GROSS REACTION DOWN	HORZ	UPLIFT	INPUT BRG IN-SX	REQRD BRG IN-SX
10	774	0	774	0	0	5-8	5-8
7	668	0	668	0	0	1-10	1-10

UNFACTORED REACTIONS

JT	1ST LCASE COMBINED	MAX./MIN. COMPONENT REACTIONS SNOW	LIVE	PERM.LIVE	WIND	DEAD	SOIL
10	541	392 / 0	0 / 0	0 / 0	0 / 0	149 / 0	0 / 0
7	469	328 / 0	0 / 0	0 / 0	0 / 0	141 / 0	0 / 0

BEARING MATERIAL TO BE SPF NO.2 OR BETTER AT JOINT(S) 10, 7

BRACING

TOP CHORD TO BE SHEATHED OR MAX. PURLIN SPACING = 6.25 FT.
MAX. UNBRACED BOTTOM CHORD LENGTH = 10.00 FT. OR RIGID CEILING DIRECTLY APPLIED.

ALL PITCH BREAKS AND PERIMETER CORNER JOINTS MUST BE LATERALLY RESTRAINED.

LOADING

TOTAL LOAD CASES: (4)

CHORDS

MEMB. FR-TO	MAX. FACTORED FORCE (LBS)	FACTORED VERT. LOAD LC1 (PLF) FROM	TO	MAX CSI (LC)	MAX. UNBRAC LENGTH
1- 2	0 / 29	-77.3	-77.3	0.10 (1)	10.00
2- 3	0 / 20	-77.3	-77.3	0.20 (1)	10.00
3- 4	-469 / 0	-77.3	-77.3	0.16 (1)	6.25
4- 5	-374 / 0	-77.3	-77.3	0.03 (1)	6.25
5- 6	-392 / 0	-77.3	-77.3	0.20 (1)	6.25
10- 2	-224 / 0	0.0	0.0	0.02 (1)	7.81
7- 6	-634 / 0	0.0	0.0	0.15 (1)	7.81
10- 9	0 / 526	-17.5	-17.5	0.31 (4)	10.00
9- 8	0 / 322	-17.5	-17.5	0.30 (4)	10.00
8- 7	0 / 0	-17.5	-17.5	0.08 (4)	10.00

WEBS

MEMB. FR-TO	MAX. FACTORED FORCE (LBS)	MAX CSI (LC)
3- 9	-207 / 0	0.11 (1)
9- 4	0 / 70	0.02 (4)
9- 5	0 / 229	0.05 (1)
8- 5	-240 / 0	0.18 (1)
10- 3	-720 / 0	0.35 (1)
8- 6	0 / 406	0.09 (1)

DESIGN CRITERIA

SPECIFIED LOADS:

TOP CH.	LL	=	23.3	PSF
	DL	=	3.0	PSF
BOT CH.	LL	=	0.0	PSF
	DL	=	7.0	PSF
TOTAL LOAD		=	33.3	PSF

SPACING = 24.0 IN. C/C

LOADING IN FLAT SECTION BASED ON A SLOPE OF 2.00/12 MINIMUM

THIS TRUSS IS DESIGNED FOR RESIDENTIAL OR SMALL BUILDING REQUIREMENTS OF PART 9, NBCC 2010

THIS DESIGN COMPLIES WITH:
- PART 9 OF OBC 2012 , BCBC 2012 , ABC 2014
- CSA 086-09
- TPIC 2011

(55 % OF 27.2 P.S.F. G.S.L. PLUS 8.4 P.S.F. RAIN LOAD) EQUALS 23.3 P.S.F. SPECIFIED ROOF LIVE LOAD

ALLOWABLE DEFL.(LL)= L/360 (0.47")
CALCULATED VERT. DEFL.(LL) = L/ 999 (0.01")
ALLOWABLE DEFL.(TL)= L/360 (0.47")
CALCULATED VERT. DEFL.(TL) = L/ 999 (0.11")

CSI: TC=0.20 (5-6:1) , BC=0.31 (9-10:4) , WB=0.35 (3-10:1) , SSI=0.12 (3-4:1)

DOL LUMBER=1.00 NAIL=1.00 LS BEND=1.10 COMP=1.10 SHEAR=1.10 TENS= 1.10

COMPANION LIVE LOAD FACTOR = 0.50

TRUSS PLATE MANUFACTURER IS NOT RESPONSIBLE FOR QUALITY CONTROL IN THE TRUSS MANUFACTURING PLANT .

NAIL VALUES

PLATE	GRIP(DRY) (PSI) MAX	MIN	SHEAR (PLI) MAX	MIN	SECTION (PLI) MAX	MIN
MT20	618	354	1667	822	2284	1656

PLATE PLACEMENT TOL. = 0.250 inches

PLATE ROTATION TOL. = 5.0 Deg.

JSI GRIP= 0.83 (3) (INPUT = 0.90)
JSI METAL= 0.25 (3) (INPUT = 1.00)

RECEIVED
TOWN OF MILTON
MAR 29, 2017
17-4967
BUILDING DIVISION

10 MAR 2017

KOTT

SCALE: 3/8"=1'

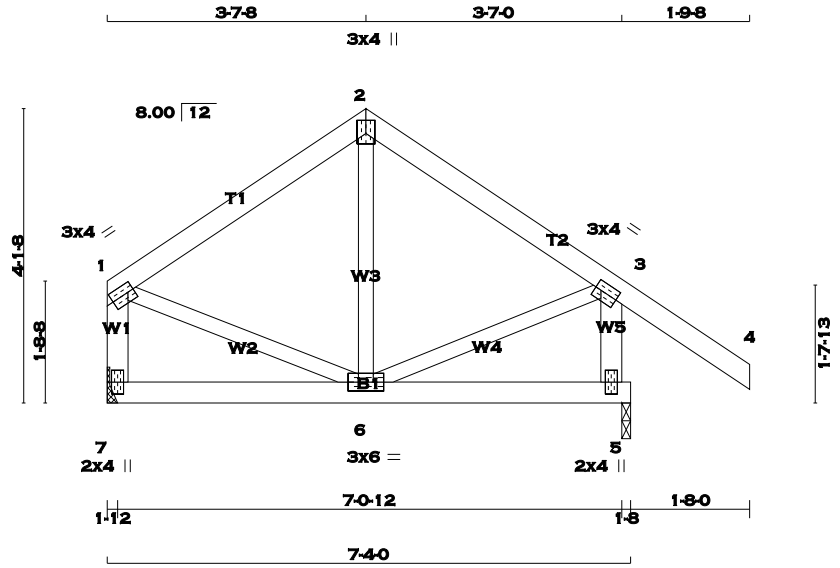

TOTAL WEIGHT = 2 X 33 = 65 lb [M]

LUMBER

N. L. G. A. RULES

CHORDS	SIZE		LUMBER	DESCR.
1 - 2	2x4	DRY	No.2	SPF
2 - 4	2x4	DRY	No.2	SPF
7 - 1	2x4	DRY	No.2	SPF
5 - 3	2x4	DRY	No.2	SPF
7 - 5	2x4	DRY	No.2	SPF
ALL WEBS EXCEPT	2x3	DRY	No.2	SPF

DRY: SEASONED LUMBER.

PLATES (table is in inches)

JT	TYPE	PLATES	W	LEN	Y	X
1	TMVW-t	MT20	3.0	4.0	1.50	1.00
2	TTW+p	MT20	3.0	4.0	2.25	1.50
3	TMVW-t	MT20	3.0	4.0	1.50	1.00
5	BMV1+p	MT20	2.0	4.0		
6	BMWWW-t	MT20	3.0	6.0		
7	BMV1+p	MT20	2.0	4.0		

A SIZE FOR SIZE SUBSTITUTION OF MITEK MII20 WITH TEE-LOK TL20 PLATES IS ALLOWED.

READ ALL NOTES ON THIS PAGE AND ON THE ENGINEERING NOTE PAGE ENP-1. THE NOTE PAGE IS AN INTEGRAL PART OF THIS DRAWING AS IT CONTAINS SPECIFICATIONS AND CRITERIA USED IN THE DESIGN OF THIS COMPONENT.

DIMENSIONS, SUPPORTS AND LOADINGS SPECIFIED BY FABRICATOR TO BE VERIFIED BY BUILDING DESIGNER

BEARINGS

JT	FACTORED GROSS REACTION VERT	HORZ	MAXIMUM FACTORED GROSS REACTION DOWN	HORZ	UPLIFT	INPUT BRG IN-SX	REQRD BRG IN-SX
7	342	0	342	0	0	HANGER BY OTHERS MIN. SEAT SIZE: 1-12	
5	487	0	487	0	0	1-8	1-8

UNFACTORED REACTIONS

JT	1ST LCASE COMBINED	SNOW	MAX./MIN. COMPONENT REACTIONS LIVE	PERM.LIVE	WIND	DEAD	SOIL
7	240	168 / 0	0 / 0	0 / 0	0 / 0	72 / 0	0 / 0
5	338	255 / 0	0 / 0	0 / 0	0 / 0	83 / 0	0 / 0

BEARING MATERIAL TO BE SPF NO.2 OR BETTER AT JOINT(S) 5

BRACING

TOP CHORD TO BE SHEATHED OR MAX. PURLIN SPACING = 6.25 FT.
MAX. UNBRACED BOTTOM CHORD LENGTH = 10.00 FT. OR RIGID CEILING DIRECTLY APPLIED.

ALL PITCH BREAKS AND PERIMETER CORNER JOINTS MUST BE LATERALLY RESTRAINED.

LOADING

TOTAL LOAD CASES: (4)

CHORDS

MEMB. FR-TO	MAX. FACTORED FORCE (LBS)	FACTORED VERT. LOAD (PLF) FROM	TO	LC1 MAX CSI (LC)	MAX. UNBRAC LENGTH
1- 2	-202 / 0	-77.3	-77.3	0.17 (1)	6.25
2- 3	-202 / 0	-77.3	-77.3	0.17 (1)	6.25
3- 4	0 / 40	-77.3	-77.3	0.19 (1)	10.00
7- 1	-317 / 0	0.0	0.0	0.03 (1)	7.81
5- 3	-462 / 0	0.0	0.0	0.05 (1)	7.81
7- 6	0 / 0	-17.5	-17.5	0.06 (4)	10.00
6- 5	0 / 0	-17.5	-17.5	0.06 (4)	10.00

WEBS

MEMB. FR-TO	MAX. FACTORED FORCE (LBS)	MAX CSI (LC)
6- 2	-54 / 44	0.02 (4)
1- 6	0 / 180	0.04 (1)
6- 3	0 / 181	0.04 (1)

DESIGN CRITERIA

SPECIFIED LOADS:

TOP	CH.	LL	=	23.3	PSF
		DL	=	3.0	PSF
BOT	CH.	LL	=	0.0	PSF
		DL	=	7.0	PSF
TOTAL	LOAD		=	33.3	PSF

SPACING = 24.0 IN. C/C

THIS TRUSS IS DESIGNED FOR RESIDENTIAL OR SMALL BUILDING REQUIREMENTS OF PART 9, NBCC 2010

THIS DESIGN COMPLIES WITH:
- PART 9 OF OBC 2012 , BCBC 2012 , ABC 2014
- CSA 086-09
- TPIC 2011

(55 % OF 27.2 P.S.F. G.S.L. PLUS 8.4 P.S.F. RAIN LOAD) EQUALS 23.3 P.S.F. SPECIFIED ROOF LIVE LOAD

ALLOWABLE DEFL.(LL)= L/360 (0.24")
CALCULATED VERT. DEFL.(LL) = L/ 999 (0.00")
ALLOWABLE DEFL.(TL)= L/360 (0.24")
CALCULATED VERT. DEFL.(TL) = L/ 999 (0.01")

CSI: TC=0.19 (3-4:1) , BC=0.06 (6-7:4) , WB=0.04 (3-6:1) , SSI=0.09 (3-4:1)

DOL LUMBER=1.00 NAIL=1.00 LS BEND=1.10 COMP=1.10 SHEAR=1.10 TENS= 1.10

COMPANION LIVE LOAD FACTOR = 0.50

TRUSS PLATE MANUFACTURER IS NOT RESPONSIBLE FOR QUALITY CONTROL IN THE TRUSS MANUFACTURING PLANT .

NAIL VALUES

PLATE	GRIP(DRY) (PSI) MAX	MIN	SHEAR (PLI) MAX	MIN	SECTION (PLI) MAX	MIN
MT20	618	354	1667	822	2284	1656

PLATE PLACEMENT TOL. = 0.250 inches

PLATE ROTATION TOL. = 5.0 Deg.

JSI GRIP= 0.59 (3) (INPUT = 0.90)
JSI METAL= 0.13 (3) (INPUT = 1.00)

10 MAR 2017

RECEIVED
TOWN OF MILTON
MAR 29, 2017
17-4967
BUILDING DIVISION

KOTT

Version 8.100 S Jan 17 2017 MiTek Industries, Inc. Fri Mar 10 13:59:39 2017 Page 1
ID:ROua3U0CyIZcrhsEOCClEDyLKB3-czzhFs0qNi9OzglEiNZxJo838bE6xnbPYoGmNTzcJdY

SCALE = 1:16.6

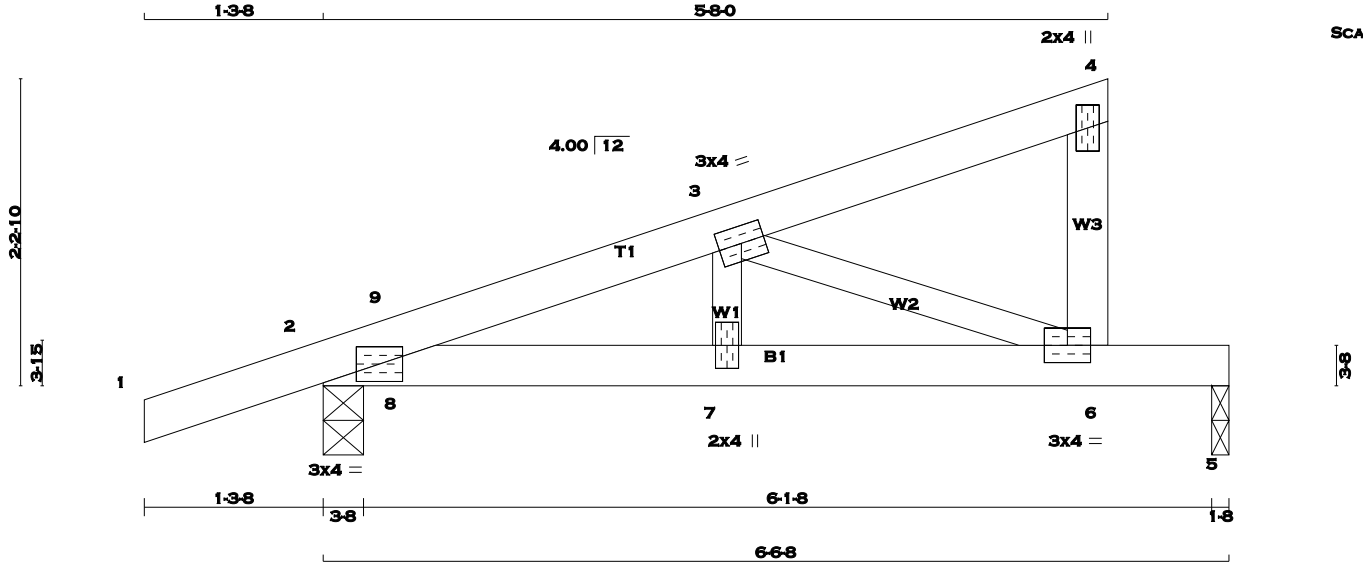

TOTAL WEIGHT = 6 X 20 = 122 lb
[M][F]

LUMBER
N. L. G. A. RULES

CHORDS	SIZE		LUMBER	DESCR.
1 - 4	2x4	DRY	No.2	SPF
6 - 4	2x4	DRY	No.2	SPF
2 - 5	2x4	DRY	No.2	SPF
ALL WEBS	2x3	DRY	No.2	SPF

DRY: SEASONED LUMBER.

PLATES (table is in inches)

JT	TYPE	PLATES	W	LEN	Y	X
2	TMB1-I	MT20	3.0	4.0		
3	TMWW-t	MT20	3.0	4.0		
4	TMV+p	MT20	2.0	4.0		
6	BMVW-t	MT20	3.0	4.0		
7	BMW+w	MT20	2.0	4.0		

A SIZE FOR SIZE SUBSTITUTION OF MITEK MII20 WITH TEE-LOK TL20 PLATES IS ALLOWED.

READ ALL NOTES ON THIS PAGE AND ON THE ENGINEERING NOTE PAGE ENP-1. THE NOTE PAGE IS AN INTEGRAL PART OF THIS DRAWING AS IT CONTAINS SPECIFICATIONS AND CRITERIA USED IN THE DESIGN OF THIS COMPONENT.

DIMENSIONS, SUPPORTS AND LOADINGS SPECIFIED BY FABRICATOR TO BE VERIFIED BY BUILDING DESIGNER

BEARINGS

JT	FACTORED GROSS REACTION VERT	HORZ	MAXIMUM FACTORED GROSS REACTION DOWN	HORZ	UPLIFT	INPUT BRG IN-SX	REQRD BRG IN-SX
2	409	0	409	0	0	3-8	3-8
5	247	0	247	0	0	1-8	1-8

UNFACTORED REACTIONS

JT	1ST LCASE COMBINED	MAX./MIN. COMPONENT REACTIONS SNOW	LIVE	PERM.LIVE	WIND	DEAD	SOIL
2	285	212 / 0	0 / 0	0 / 0	0 / 0	73 / 0	0 / 0
5	175	114 / 0	0 / 0	0 / 0	0 / 0	61 / 0	0 / 0

BEARING MATERIAL TO BE SPF NO.2 OR BETTER AT JOINT(S) 2, 5

BRACING
TOP CHORD TO BE SHEATHED OR MAX. PURLIN SPACING = 6.25 FT.
MAX. UNBRACED BOTTOM CHORD LENGTH = 10.00 FT. OR RIGID CEILING DIRECTLY APPLIED.

ALL PITCH BREAKS AND PERIMETER CORNER JOINTS MUST BE LATERALLY RESTRAINED.

LOADING
TOTAL LOAD CASES: (4)

CHORDS

MEMB. FR-TO	MAX. FACTORED FORCE (LBS)	FACTORED VERT. LOAD (PLF) FROM	TO	LC1 MAX CSI (LC)	MAX. UNBRAC LENGTH
1- 2	0 / 15	-77.3	-77.3	0.10 (1)	10.00
2- 9	-613 / 0	-77.3	-77.3	0.01 (1)	6.25
9- 3	-600 / 0	-77.3	-77.3	0.04 (1)	6.25
3- 4	-4 / 0	-77.3	-77.3	0.07 (1)	10.00
6- 4	-93 / 0	0.0	0.0	0.01 (1)	7.81
2- 8	0 / 573	-17.5	-17.5	0.14 (1)	10.00
8- 7	0 / 573	-17.5	-17.5	0.16 (1)	10.00
7- 6	0 / 573	-17.5	-17.5	0.38 (1)	10.00
6- 5	0 / 0	-17.5	-17.5	0.29 (1)	10.00

WEBS

MEMB. FR-TO	MAX. FACTORED FORCE (LBS)	MAX CSI (LC)
7- 3	0 / 176	0.04 (1)
3- 6	-610 / 0	0.11 (1)
8- 9	-72 / 1	0.00 (1)

DESIGN CRITERIA

SPECIFIED LOADS:

TOP	CH.	LL	=	23.3	PSF
		DL	=	3.0	PSF
BOT	CH.	LL	=	0.0	PSF
		DL	=	7.0	PSF
TOTAL	LOAD		=	33.3	PSF

SPACING = 24.0 IN. C/C

THIS TRUSS IS DESIGNED FOR RESIDENTIAL OR SMALL BUILDING REQUIREMENTS OF PART 9, NBCC 2010

THIS DESIGN COMPLIES WITH:
- PART 9 OF OBC 2012 , BCBC 2012 , ABC 2014
- CSA 086-09
- TPIC 2011

(55 % OF 27.2 P.S.F. G.S.L. PLUS 8.4 P.S.F. RAIN LOAD) EQUALS 23.3 P.S.F. SPECIFIED ROOF LIVE LOAD

ALLOWABLE DEFL.(LL)= L/360 (0.22")
CALCULATED VERT. DEFL.(LL) = L/ 999 (0.03")
ALLOWABLE DEFL.(TL)= L/360 (0.22")
CALCULATED VERT. DEFL.(TL) = L/ 999 (0.06")

CSI: TC=0.10 (1-2:1) , BC=0.38 (6-7:1) , WB=0.11 (3-6:1) , SSI=0.19 (5-6:1)

DOL LUMBER=1.00 NAIL=1.00 LS BEND=1.10 COMP=1.10 SHEAR=1.10 TENS= 1.10

COMPANION LIVE LOAD FACTOR = 0.50

TRUSS PLATE MANUFACTURER IS NOT RESPONSIBLE FOR QUALITY CONTROL IN THE TRUSS MANUFACTURING PLANT .

NAIL VALUES

PLATE	GRIP(DRY) (PSI) MAX	MIN	SHEAR (PLI) MAX	MIN	SECTION (PLI) MAX	MIN
MT20	618	354	1667	822	2284	1656

PLATE PLACEMENT TOL. = 0.250 inches

PLATE ROTATION TOL. = 5.0 Deg.

JSI GRIP= 0.87 (6) (INPUT = 0.90)
JSI METAL= 0.21 (6) (INPUT = 1.00)

RECEIVED
TOWN OF MILTON
MAR 29, 2017
17-4967
BUILDING DIVISION

10 MAR 2017

KOTT

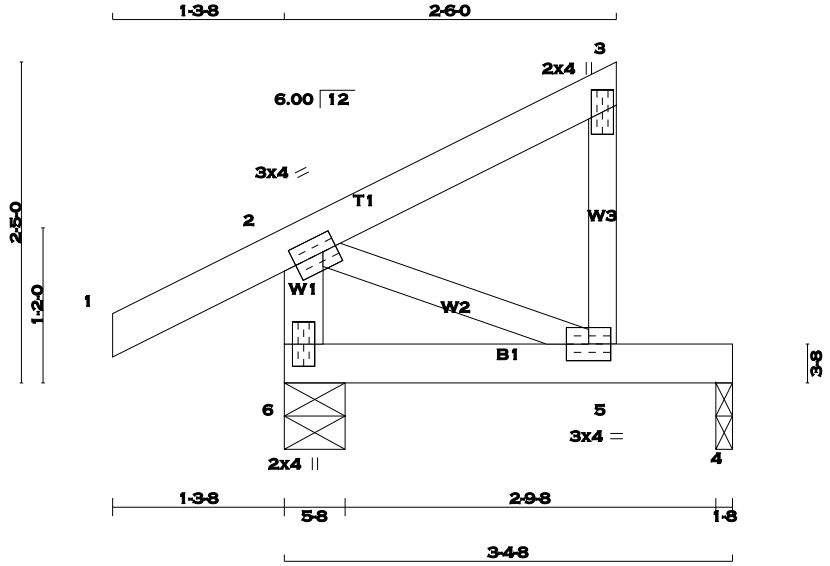

TOTAL WEIGHT = 6 X 13 = 77 lb [M]

LUMBER

N. L. G. A. RULES

CHORDS	SIZE		LUMBER	DESCR.
1 - 3	2x4	DRY	No.2	SPF
5 - 3	2x3	DRY	No.2	SPF
6 - 2	2x4	DRY	No.2	SPF
6 - 4	2x4	DRY	No.2	SPF
ALL WEBS	2x3	DRY	No.2	SPF

DRY: SEASONED LUMBER.

PLATES (table is in inches)

JT	TYPE	PLATES	W	LEN	Y	X
2	TMVW-t	MT20	3.0	4.0	1.50	1.25
3	TMV+p	MT20	2.0	4.0		
5	BMVW-t	MT20	3.0	4.0		
6	BMV1+p	MT20	2.0	4.0		

A SIZE FOR SIZE SUBSTITUTION OF MITEK MII20 WITH TEE-LOK TL20 PLATES IS ALLOWED.

READ ALL NOTES ON THIS PAGE AND ON THE ENGINEERING NOTE PAGE ENP-1. THE NOTE PAGE IS AN INTEGRAL PART OF THIS DRAWING AS IT CONTAINS SPECIFICATIONS AND CRITERIA USED IN THE DESIGN OF THIS COMPONENT.

DIMENSIONS, SUPPORTS AND LOADINGS SPECIFIED BY FABRICATOR TO BE VERIFIED BY BUILDING DESIGNER

BEARINGS

JT	FACTORED GROSS REACTION VERT	HORZ	MAXIMUM FACTORED GROSS REACTION DOWN	HORZ	UPLIFT	INPUT BRG IN-SX	REQRD BRG IN-SX
6	256	0	256	0	0	5-8	5-8
4	101	0	101	0	0	1-8	1-8

UNFACTORED REACTIONS

JT	1ST LCASE COMBINED	MAX./MIN. COMPONENT REACTIONS SNOW	LIVE	PERM.LIVE	WIND	DEAD	SOIL
6	178	136 / 0	0 / 0	0 / 0	0 / 0	41 / 0	0 / 0
4	72	43 / 0	0 / 0	0 / 0	0 / 0	29 / 0	0 / 0

BEARING MATERIAL TO BE SPF NO.2 OR BETTER AT JOINT(S) 6, 4

BRACING

TOP CHORD TO BE SHEATHED OR MAX. PURLIN SPACING = 10.00 FT.
MAX. UNBRACED BOTTOM CHORD LENGTH = 10.00 FT. OR RIGID CEILING DIRECTLY APPLIED.

ALL PITCH BREAKS AND PERIMETER CORNER JOINTS MUST BE LATERALLY RESTRAINED.

LOADING

TOTAL LOAD CASES: (5)

CHORDS

MEMB. FR-TO	MAX. FACTORED FORCE (LBS)	FACTORED VERT. LOAD (PLF) FROM	TO	LC1 MAX CSI (LC)	MAX. UNBRAC LENGTH
1- 2	0 / 23	-77.3	-77.3	0.10 (1)	10.00
2- 3	0 / 0	-77.3	-77.3	0.08 (1)	10.00
5- 3	-97 / 0	0.0	0.0	0.02 (1)	7.81
6- 2	-202 / 0	0.0	0.0	0.02 (1)	7.81
6- 5	0 / 0	-17.5	-17.5	0.11 (1)	10.00
5- 4	0 / 0	-17.5	-17.5	0.11 (1)	10.00

WEBS

MEMB. FR-TO	MAX. FACTORED FORCE (LBS)	MAX CSI (LC)
2- 5	0 / 0	0.00 (1)

CANTILEVER ANALYSIS HAS BEEN CONSIDERED IN THIS DESIGN

DESIGN CRITERIA

SPECIFIED LOADS:

TOP	CH.	LL	=	23.3	PSF
		DL	=	3.0	PSF
BOT	CH.	LL	=	0.0	PSF
		DL	=	7.0	PSF
TOTAL	LOAD		=	33.3	PSF

SPACING = 24.0 IN. C/C

THIS TRUSS IS DESIGNED FOR RESIDENTIAL OR SMALL BUILDING REQUIREMENTS OF PART 9, NBCC 2010

THIS DESIGN COMPLIES WITH:
- PART 9 OF OBC 2012 , BCBC 2012 , ABC 2014
- CSA 086-09
- TPIC 2011

(55 % OF 27.2 P.S.F. G.S.L. PLUS 8.4 P.S.F. RAIN LOAD) EQUALS 23.3 P.S.F. SPECIFIED ROOF LIVE LOAD

ALLOWABLE DEFL.(LL)= L/360 (0.19")
CALCULATED VERT. DEFL.(LL) = L/ 999 (0.01")
ALLOWABLE DEFL.(TL)= L/360 (0.19")
CALCULATED VERT. DEFL.(TL) = L/ 999 (0.02")

CSI: TC=0.10 (1-2:1) , BC=0.11 (5-6:1) , WB=0.00 (2-5:1) , SSI=0.08 (4-5:1)

DOL LUMBER=1.00 NAIL=1.00 LS BEND=1.10 COMP=1.10 SHEAR=1.10 TENS= 1.10

COMPANION LIVE LOAD FACTOR = 0.50

TRUSS PLATE MANUFACTURER IS NOT RESPONSIBLE FOR QUALITY CONTROL IN THE TRUSS MANUFACTURING PLANT .

NAIL VALUES

PLATE	GRIP(DRY) (PSI) MAX	MIN	SHEAR (PLI) MAX	MIN	SECTION (PLI) MAX	MIN
MT20	618	354	1667	822	2284	1656

PLATE PLACEMENT TOL. = 0.250 inches

PLATE ROTATION TOL. = 5.0 Deg.

JSI GRIP= 0.18 (2) (INPUT = 0.90)
JSI METAL= 0.04 (6) (INPUT = 1.00)

10 MAR 2017

RECEIVED
TOWN OF MILTON
MAR 29, 2017
17-4967
BUILDING DIVISION

KOTT

JOB NAME	TRUSS NAME	QUANTITY	PLY	JOB DESC.	DRWG NO.
CC0317-045	T31	1	1	TRUSS DESC. GREENPARK-LECCO RIDGE-BLOCK 325	

KOTT , Stouffville, ON, CGC

Version 8.100 S Jan 17 2017 MiTek Industries, Inc. Fri Mar 10 13:59:40 2017 Page 1
ID:ROua3U0CyIZcrhsEOCClEDyLKB3-49X3SC1S80HFbqKQG45As0h5B?cLgCjYmS?JvvzcJdX

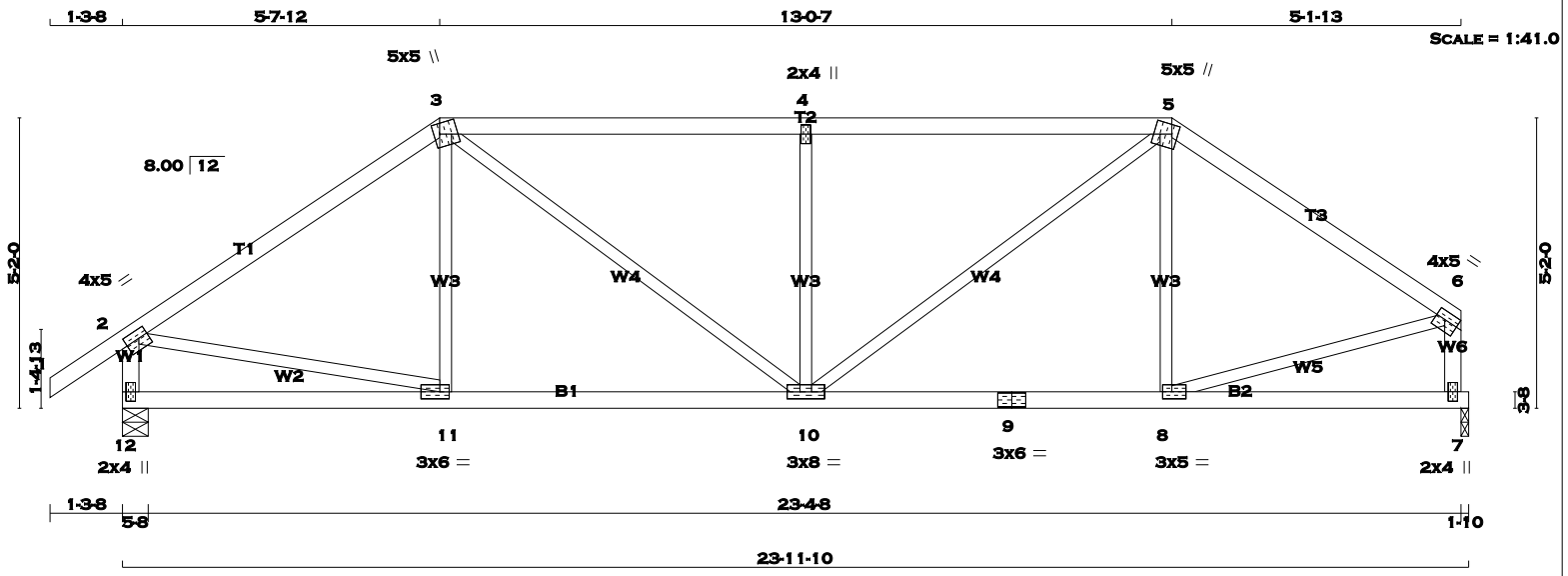

TOTAL WEIGHT = 94 lb [M]

LUMBER
N. L. G. A. RULES

CHORDS	SIZE		LUMBER	DESCR.
1 - 3	2x4	DRY	No.2	SPF
3 - 5	2x4	DRY	No.2	SPF
5 - 6	2x4	DRY	No.2	SPF
12 - 2	2x4	DRY	No.2	SPF
7 - 6	2x4	DRY	No.2	SPF
12 - 9	2x4	DRY	No.2	SPF
9 - 7	2x4	DRY	No.2	SPF
ALL WEBS EXCEPT	2x3	DRY	No.2	SPF

DRY: SEASONED LUMBER.

PLATES (table is in inches)

JT	TYPE	PLATES	W	LEN	Y	X
2	TMVW-t	MT20	4.0	5.0	1.75	2.00
3	TTWW+m	MT20	5.0	5.0	2.25	1.25
4	TMW+w	MT20	2.0	4.0		
5	TTWW+m	MT20	5.0	5.0	2.00	1.25
6	TMVW-t	MT20	4.0	5.0	1.75	Edge
7	BMV1+p	MT20	2.0	4.0		
8	BMWW-t	MT20	3.0	5.0	1.50	2.00
9	BS-t	MT20	3.0	6.0		
10	BMWWW-t	MT20	3.0	8.0		
11	BMWW-t	MT20	3.0	6.0	1.50	2.00
12	BMV1+p	MT20	2.0	4.0		

Edge - INDICATES REFERENCE CORNER OF PLATE TOUCHES EDGE OF CHORD.

A SIZE FOR SIZE SUBSTITUTION OF MITEK MII20 WITH TEE-LOK TL20 PLATES IS ALLOWED.

READ ALL NOTES ON THIS PAGE AND ON THE ENGINEERING NOTE PAGE ENP-1. THE NOTE PAGE IS AN INTEGRAL PART OF THIS DRAWING AS IT CONTAINS SPECIFICATIONS AND CRITERIA USED IN THE DESIGN OF THIS COMPONENT.

DIMENSIONS, SUPPORTS AND LOADINGS SPECIFIED BY FABRICATOR TO BE VERIFIED BY BUILDING DESIGNER

BEARINGS

JT	FACTORED GROSS REACTION VERT	HORZ	MAXIMUM FACTORED GROSS REACTION DOWN	HORZ	UPLIFT	INPUT BRG IN-SX	REQRD BRG IN-SX
12	1236	0	1236	0	0	5-8	5-8
7	1130	0	1130	0	0	1-10	1-10

UNFACTORED REACTIONS

JT	1ST LCASE COMBINED	MAX./MIN. COMPONENT REACTIONS SNOW	LIVE	PERM.LIVE	WIND	DEAD	SOIL
12	865	619 / 0	0 / 0	0 / 0	0 / 0	247 / 0	0 / 0
7	793	555 / 0	0 / 0	0 / 0	0 / 0	238 / 0	0 / 0

BEARING MATERIAL TO BE SPF NO.2 OR BETTER AT JOINT(S) 12, 7

BRACING
TOP CHORD TO BE SHEATHED OR MAX. PURLIN SPACING = 4.51 FT.
MAX. UNBRACED BOTTOM CHORD LENGTH = 10.00 FT. OR RIGID CEILING DIRECTLY APPLIED.

ALL PITCH BREAKS AND PERIMETER CORNER JOINTS MUST BE LATERALLY RESTRAINED.

LOADING
TOTAL LOAD CASES: (4)

CHORDS

MEMB. FR-TO	MAX. FACTORED FORCE (LBS)	FACTORED VERT. LOAD (PLF) FROM	TO	LC1 CSI (LC)	MAX UNBRAC LENGTH
1- 2	0 / 29	-77.3	-77.3	0.10 (1)	10.00
2- 3	-1225 / 0	-77.3	-77.3	0.50 (1)	5.14
3- 4	-1472 / 0	-77.3	-77.3	0.65 (1)	4.51
4- 5	-1472 / 0	-77.3	-77.3	0.65 (1)	4.51
5- 6	-1149 / 0	-77.3	-77.3	0.40 (1)	5.41
12- 2	-1197 / 0	0.0	0.0	0.12 (1)	7.31
7- 6	-1096 / 0	0.0	0.0	0.12 (1)	7.55
12-11	0 / 0	-17.5	-17.5	0.15 (4)	10.00
11-10	0 / 1017	-17.5	-17.5	0.25 (1)	10.00
10- 9	0 / 952	-17.5	-17.5	0.23 (1)	10.00
9- 8	0 / 952	-17.5	-17.5	0.23 (1)	10.00
8- 7	0 / 0	-17.5	-17.5	0.14 (4)	10.00

WEBS

MEMB. FR-TO	MAX. FACTORED FORCE (LBS)	MAX CSI (LC)
11- 3	-71 / 75	0.03 (1)
3-10	0 / 568	0.13 (1)
10- 4	-619 / 0	0.24 (1)
10- 5	0 / 648	0.15 (1)
8- 5	-142 / 49	0.06 (1)
2-11	0 / 1036	0.23 (1)
8- 6	0 / 989	0.22 (1)

DESIGN CRITERIA

SPECIFIED LOADS:

TOP CH.	LL	=	23.3	PSF
	DL	=	3.0	PSF
BOT CH.	LL	=	0.0	PSF
	DL	=	7.0	PSF
TOTAL LOAD		=	33.3	PSF

SPACING = 24.0 IN. C/C

LOADING IN FLAT SECTION BASED ON A SLOPE OF 2.00/12 MINIMUM

THIS TRUSS IS DESIGNED FOR RESIDENTIAL OR SMALL BUILDING REQUIREMENTS OF PART 9, NBCC 2010

THIS DESIGN COMPLIES WITH:
- PART 9 OF OBC 2012 , BCBC 2012 , ABC 2014
- CSA 086-09
- TPIC 2011

(55 % OF 27.2 P.S.F. G.S.L. PLUS 8.4 P.S.F. RAIN LOAD) EQUALS 23.3 P.S.F. SPECIFIED ROOF LIVE LOAD

ALLOWABLE DEFL.(LL)= L/360 (0.79")
CALCULATED VERT. DEFL.(LL) = L/ 999 (0.05")
ALLOWABLE DEFL.(TL)= L/360 (0.79")
CALCULATED VERT. DEFL.(TL) = L/ 999 (0.10")

CSI: TC=0.65 (3-4:1) , BC=0.25 (10-11:1) , WB=0.24 (4-10:1) , SSI=0.24 (3-4:1)

DOL LUMBER=1.00 NAIL=1.00 LS BEND=1.10 COMP=1.10 SHEAR=1.10 TENS= 1.10

COMPANION LIVE LOAD FACTOR = 0.50

TRUSS PLATE MANUFACTURER IS NOT RESPONSIBLE FOR QUALITY CONTROL IN THE TRUSS MANUFACTURING PLANT .

NAIL VALUES

PLATE	GRIP(DRY) (PSI) MAX	MIN	SHEAR (PLI) MAX	MIN	SECTION (PLI) MAX	MIN
MT20	618	354	1667	822	2284	1656

PLATE PLACEMENT TOL. = 0.250 inches

PLATE ROTATION TOL. = 5.0 Deg.

JSI GRIP= 0.88 (11) (INPUT = 0.90)
JSI METAL= 0.42 (2) (INPUT = 1.00)

10 MAR 2017

RECEIVED
TOWN OF MILTON
MAR 29, 2017
17-4967
BUILDING DIVISION

KOTT

JOB NAME	TRUSS NAME	QUANTITY	PLY	JOB DESC.	DRWG NO.
CC0317-045	T32	1	1	TRUSS DESC. GREENPARK-LECCO RIDGE-BLOCK 325	

KOTT , Stouffville, ON, CGC

Version 8.100 S Jan 17 2017 MiTek Industries, Inc. Fri Mar 10 13:59:40 2017 Page 1
ID:ROua3U0CyIZcrhsEOCClEDyLKB3-49X3SC1S80HFbqKQG45As0hBI?byg7zYmS?JvvzcJdX

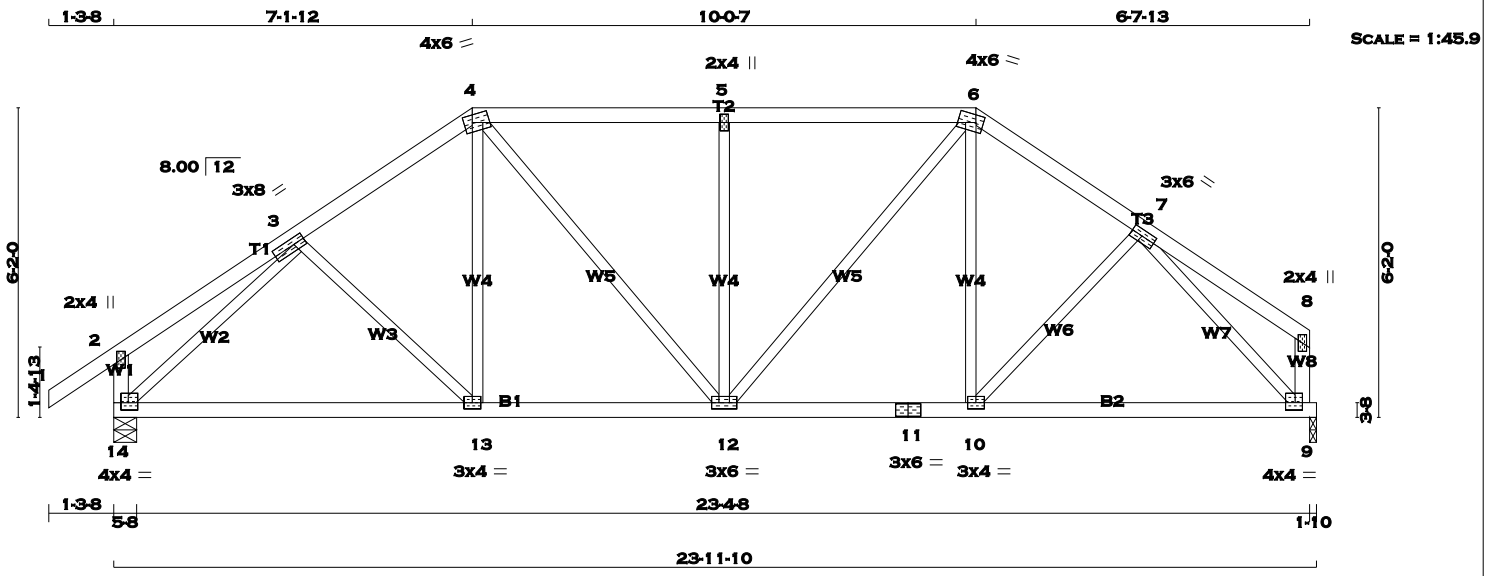

TOTAL WEIGHT = 103 lb
[M][F]

LUMBER
N. L. G. A. RULES

CHORDS	SIZE		LUMBER	DESCR.
1 - 4	2x4	DRY	No.2	SPF
4 - 6	2x4	DRY	No.2	SPF
6 - 8	2x4	DRY	No.2	SPF
14 - 2	2x4	DRY	No.2	SPF
9 - 8	2x4	DRY	No.2	SPF
14 - 11	2x4	DRY	No.2	SPF
11 - 9	2x4	DRY	No.2	SPF
ALL WEBS EXCEPT	2x3	DRY	No.2	SPF

DRY: SEASONED LUMBER.

PLATES (table is in inches)

JT	TYPE	PLATES	W	LEN	Y	X
2	TMV+p	MT20	2.0	4.0		
3	TMWW-t	MT20	3.0	8.0	1.50	2.75
4	TTWW-m	MT20	4.0	6.0	1.75	2.00
5	TMW+w	MT20	2.0	4.0		
6	TTWW-m	MT20	4.0	6.0	1.75	1.75
7	TMWW-t	MT20	3.0	6.0	1.50	2.75
8	TMV+p	MT20	2.0	4.0		
9	BMVW1-t	MT20	4.0	4.0	1.75	1.75
10	BMWW-t	MT20	3.0	4.0		
11	BS-t	MT20	3.0	6.0		
12	BMWWW-t	MT20	3.0	6.0		
13	BMWW-t	MT20	3.0	4.0		
14	BMVW1-t	MT20	4.0	4.0	1.75	1.75

A SIZE FOR SIZE SUBSTITUTION OF MITEK MII20 WITH TEE-LOK TL20 PLATES IS ALLOWED.

READ ALL NOTES ON THIS PAGE AND ON THE ENGINEERING NOTE PAGE ENP-1. THE NOTE PAGE IS AN INTEGRAL PART OF THIS DRAWING AS IT CONTAINS SPECIFICATIONS AND CRITERIA USED IN THE DESIGN OF THIS COMPONENT.

DIMENSIONS, SUPPORTS AND LOADINGS SPECIFIED BY FABRICATOR TO BE VERIFIED BY BUILDING DESIGNER

BEARINGS

JT	FACTORED GROSS REACTION VERT	HORZ	MAXIMUM FACTORED GROSS REACTION DOWN	HORZ	UPLIFT	INPUT BRG IN-SX	REQRD BRG IN-SX
14	1236	0	1236	0	0	5-8	5-8
9	1130	0	1130	0	0	1-10	1-10

UNFACTORED REACTIONS

JT	1ST LCASE COMBINED	MAX./MIN. COMPONENT REACTIONS SNOW	LIVE	PERM.LIVE	WIND	DEAD	SOIL
14	865	619 / 0	0 / 0	0 / 0	0 / 0	247 / 0	0 / 0
9	793	555 / 0	0 / 0	0 / 0	0 / 0	238 / 0	0 / 0

BEARING MATERIAL TO BE SPF NO.2 OR BETTER AT JOINT(S) 14, 9

BRACING
TOP CHORD TO BE SHEATHED OR MAX. PURLIN SPACING = 5.57 FT.
MAX. UNBRACED BOTTOM CHORD LENGTH = 10.00 FT. OR RIGID CEILING DIRECTLY APPLIED.

ALL PITCH BREAKS AND PERIMETER CORNER JOINTS MUST BE LATERALLY RESTRAINED.

LOADING
TOTAL LOAD CASES: (4)

CHORDS

MEMB. FR-TO	MAX. FACTORED FORCE (LBS)	FACTORED VERT. LOAD (PLF) FROM	TO	LC1 CSI (LC)	MAX UNBRAC LENGTH
1- 2	0 / 29	-77.3	-77.3	0.10 (1)	10.00
2- 3	0 / 16	-77.3	-77.3	0.15 (1)	10.00
3- 4	-1193 / 0	-77.3	-77.3	0.13 (1)	5.73
4- 5	-1186 / 0	-77.3	-77.3	0.26 (1)	5.57
5- 6	-1186 / 0	-77.3	-77.3	0.26 (1)	5.57
6- 7	-1143 / 0	-77.3	-77.3	0.11 (1)	5.84
7- 8	0 / 15	-77.3	-77.3	0.13 (1)	10.00
14- 2	-214 / 0	0.0	0.0	0.02 (1)	7.81
9- 8	-101 / 0	0.0	0.0	0.01 (1)	7.81
14-13	0 / 1000	-17.5	-17.5	0.27 (1)	10.00
13-12	0 / 980	-17.5	-17.5	0.27 (4)	10.00
12-11	0 / 938	-17.5	-17.5	0.25 (1)	10.00
11-10	0 / 938	-17.5	-17.5	0.25 (1)	10.00
10- 9	0 / 898	-17.5	-17.5	0.24 (1)	10.00

WEBS

MEMB. FR-TO	MAX. FACTORED FORCE (LBS)	MAX CSI (LC)
3-13	-31 / 40	0.01 (4)
13- 4	0 / 154	0.04 (4)
4-12	0 / 317	0.07 (1)
12- 5	-474 / 0	0.28 (1)
12- 6	0 / 382	0.09 (1)
10- 6	0 / 98	0.03 (4)
10- 7	0 / 60	0.02 (4)
14- 3	-1393 / 0	0.55 (1)
7- 9	-1330 / 0	0.51 (1)

DESIGN CRITERIA

SPECIFIED LOADS:

TOP CH.	LL	=	23.3	PSF
	DL	=	3.0	PSF
BOT CH.	LL	=	0.0	PSF
	DL	=	7.0	PSF
TOTAL LOAD		=	33.3	PSF

SPACING = 24.0 IN. C/C

LOADING IN FLAT SECTION BASED ON A SLOPE OF 2.00/12 MINIMUM

THIS TRUSS IS DESIGNED FOR RESIDENTIAL OR SMALL BUILDING REQUIREMENTS OF PART 9, NBCC 2010

THIS DESIGN COMPLIES WITH:
- PART 9 OF OBC 2012 , BCBC 2012 , ABC 2014
- CSA 086-09
- TPIC 2011

(55 % OF 27.2 P.S.F. G.S.L. PLUS 8.4 P.S.F. RAIN LOAD) EQUALS 23.3 P.S.F. SPECIFIED ROOF LIVE LOAD

ALLOWABLE DEFL.(LL)= L/360 (0.79")
CALCULATED VERT. DEFL.(LL) = L/ 999 (0.04")
ALLOWABLE DEFL.(TL)= L/360 (0.79")
CALCULATED VERT. DEFL.(TL) = L/ 999 (0.10")

CSI: TC=0.26 (4-5:1) , BC=0.27 (12-13:4) , WB=0.55 (3-14:1) , SSI=0.19 (4-5:1)

DOL LUMBER=1.00 NAIL=1.00 LS BEND=1.10 COMP=1.10 SHEAR=1.10 TENS= 1.10

COMPANION LIVE LOAD FACTOR = 0.50

TRUSS PLATE MANUFACTURER IS NOT RESPONSIBLE FOR QUALITY CONTROL IN THE TRUSS MANUFACTURING PLANT .

NAIL VALUES

PLATE	GRIP(DRY) (PSI) MAX	MIN	SHEAR (PLI) MAX	MIN	SECTION (PLI) MAX	MIN
MT20	618	354	1667	822	2284	1656

PLATE PLACEMENT TOL. = 0.250 inches

PLATE ROTATION TOL. = 5.0 Deg.

JSI GRIP= 0.90 (7) (INPUT = 0.90)
JSI METAL= 0.37 (14) (INPUT = 1.00)

RECEIVED
TOWN OF MILTON
MAR 29, 2017
17-4967
BUILDING DIVISION

10 MAR 2017

KOTT

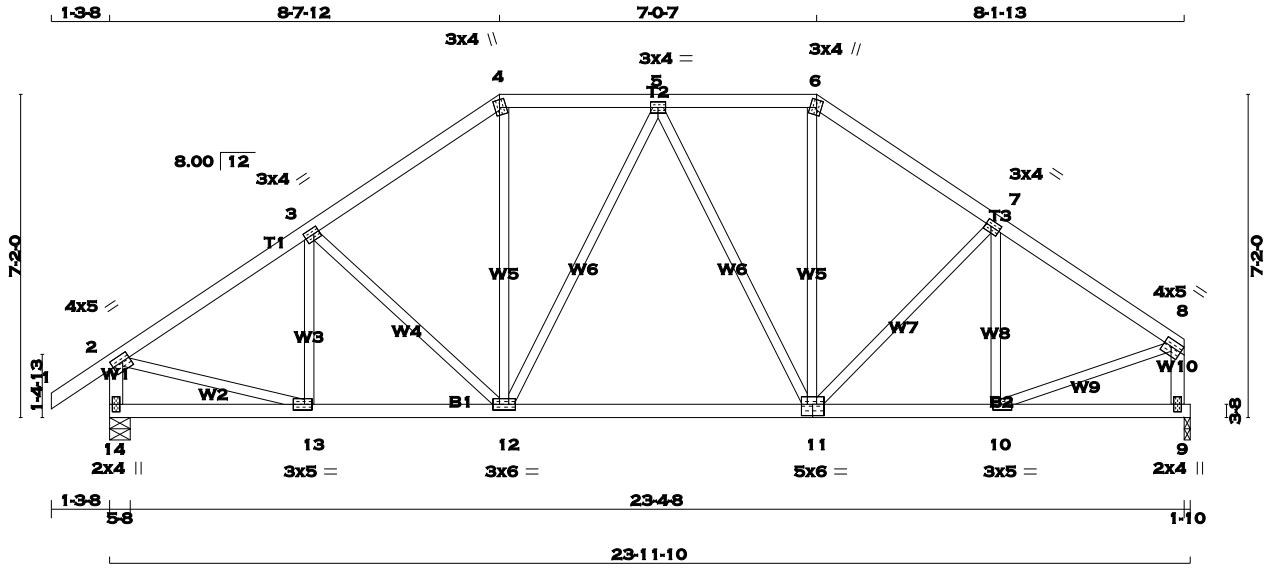

TOTAL WEIGHT = 108 lb

[M][F]

LUMBER

N. L. G. A. RULES

CHORDS	SIZE		LUMBER	DESCR.
1 - 4	2x4	DRY	No.2	SPF
4 - 6	2x4	DRY	No.2	SPF
6 - 8	2x4	DRY	No.2	SPF
14 - 2	2x4	DRY	No.2	SPF
9 - 8	2x4	DRY	No.2	SPF
14 - 11	2x4	DRY	No.2	SPF
11 - 9	2x4	DRY	No.2	SPF
ALL WEBS EXCEPT	2x3	DRY	No.2	SPF

DRY: SEASONED LUMBER.

PLATES (table is in inches)

JT	TYPE	PLATES	W	LEN	Y	X
2	TMVW-t	MT20	4.0	5.0	1.75	2.00
3	TMWW-t	MT20	3.0	4.0	1.50	1.50
4	TTW+m	MT20	3.0	4.0	2.00	1.25
5	TMWW-t	MT20	3.0	4.0		
6	TTW+m	MT20	3.0	4.0	2.00	1.25
7	TMWW-t	MT20	3.0	4.0	1.50	1.50
8	TMVW-t	MT20	4.0	5.0	1.75	Edge
9	BMV1+p	MT20	2.0	4.0		
10	BMWW-t	MT20	3.0	5.0	1.50	2.00
11	BSWWW-l	MT20	5.0	6.0	3.00	3.00
12	BMWWW-t	MT20	3.0	6.0		
13	BMWW-t	MT20	3.0	5.0	1.50	2.00
14	BMV1+p	MT20	2.0	4.0		

Edge - INDICATES REFERENCE CORNER OF PLATE TOUCHES EDGE OF CHORD.

A SIZE FOR SIZE SUBSTITUTION OF MITEK MII20 WITH TEE-LOK TL20 PLATES IS ALLOWED.

READ ALL NOTES ON THIS PAGE AND ON THE ENGINEERING NOTE PAGE ENP-1. THE NOTE PAGE IS AN INTEGRAL PART OF THIS DRAWING AS IT CONTAINS SPECIFICATIONS AND CRITERIA USED IN THE DESIGN OF THIS COMPONENT.

10 MAR 2017

DIMENSIONS, SUPPORTS AND LOADINGS SPECIFIED BY FABRICATOR TO BE VERIFIED BY BUILDING DESIGNER

BEARINGS

JT	FACTORED GROSS REACTION VERT	HORZ	MAXIMUM FACTORED GROSS REACTION DOWN	HORZ	UPLIFT	INPUT BRG IN-SX	REQRD BRG IN-SX
14	1236	0	1236	0	0	5-8	5-8
9	1130	0	1130	0	0	1-10	1-10

UNFACTORED REACTIONS

JT	1ST LCASE COMBINED	MAX./MIN. COMPONENT REACTIONS SNOW	LIVE	PERM.LIVE	WIND	DEAD	SOIL
14	865	619 / 0	0 / 0	0 / 0	0 / 0	247 / 0	0 / 0
9	793	555 / 0	0 / 0	0 / 0	0 / 0	238 / 0	0 / 0

BEARING MATERIAL TO BE SPF NO.2 OR BETTER AT JOINT(S) 14, 9

BRACING

TOP CHORD TO BE SHEATHED OR MAX. PURLIN SPACING = 5.55 FT.
MAX. UNBRACED BOTTOM CHORD LENGTH = 10.00 FT. OR RIGID CEILING DIRECTLY APPLIED.

ALL PITCH BREAKS AND PERIMETER CORNER JOINTS MUST BE LATERALLY RESTRAINED.

LOADING

TOTAL LOAD CASES: (4)

CHORDS

MEMB. FR-TO	MAX. FACTORED FORCE (LBS)	FACTORED VERT. LOAD (PLF) FROM	TO	LC1 MAX CSI (LC)	MAX. UNBRAC LENGTH
1- 2	0 / 29	-77.3	-77.3	0.10 (1)	10.00
2- 3	-1248 / 0	-77.3	-77.3	0.20 (1)	5.55
3- 4	-1121 / 0	-77.3	-77.3	0.19 (1)	5.78
4- 5	-919 / 0	-77.3	-77.3	0.12 (1)	6.25
5- 6	-894 / 0	-77.3	-77.3	0.12 (1)	6.25
6- 7	-1092 / 0	-77.3	-77.3	0.17 (1)	5.87
7- 8	-1141 / 0	-77.3	-77.3	0.17 (1)	5.77
14- 2	-1201 / 0	0.0	0.0	0.12 (1)	7.29
9- 8	-1097 / 0	0.0	0.0	0.12 (1)	7.55
14-13	0 / 0	-17.5	-17.5	0.07 (4)	10.00
13-12	0 / 1056	-17.5	-17.5	0.24 (1)	10.00
12-11	0 / 988	-17.5	-17.5	0.23 (1)	10.00
11-10	0 / 966	-17.5	-17.5	0.23 (1)	10.00
10- 9	0 / 0	-17.5	-17.5	0.07 (4)	10.00

WEBS

MEMB. FR-TO	MAX. FACTORED FORCE (LBS)	MAX CSI (LC)
13- 3	-187 / 9	0.05 (1)
3-12	-196 / 0	0.12 (1)
12- 4	0 / 379	0.09 (1)
12- 5	-155 / 0	0.19 (1)
5-11	-209 / 0	0.25 (1)
11- 6	0 / 371	0.08 (1)
11- 7	-110 / 0	0.06 (1)
10- 7	-262 / 0	0.08 (1)
2-13	0 / 1087	0.24 (1)
10- 8	0 / 1020	0.23 (1)

RECEIVED
TOWN OF MILTON
MAR 29, 2017
17-4967
BUILDING DIVISION

DESIGN CRITERIA

SPECIFIED LOADS:

TOP CH.	LL	=	23.3	PSF
	DL	=	3.0	PSF
BOT CH.	LL	=	0.0	PSF
	DL	=	7.0	PSF
TOTAL LOAD		=	33.3	PSF

SPACING = 24.0 IN. C/C

LOADING IN FLAT SECTION BASED ON A SLOPE OF 2.00/12 MINIMUM

THIS TRUSS IS DESIGNED FOR RESIDENTIAL OR SMALL BUILDING REQUIREMENTS OF PART 9, NBCC 2010

THIS DESIGN COMPLIES WITH:
- PART 9 OF OBC 2012 , BCBC 2012 , ABC 2014
- CSA 086-09
- TPIC 2011

(55 % OF 27.2 P.S.F. G.S.L. PLUS 8.4 P.S.F. RAIN LOAD) EQUALS 23.3 P.S.F. SPECIFIED ROOF LIVE LOAD

ALLOWABLE DEFL.(LL)= L/360 (0.79")
CALCULATED VERT. DEFL.(LL) = L/ 999 (0.03")
ALLOWABLE DEFL.(TL)= L/360 (0.79")
CALCULATED VERT. DEFL.(TL) = L/ 999 (0.09")

CSI: TC=0.20 (2-3:1) , BC=0.24 (12-13:1) , WB=0.25 (5-11:1) , SSI=0.14 (2-3:1)

DOL LUMBER=1.00 NAIL=1.00 LS BEND=1.10 COMP=1.10 SHEAR=1.10 TENS= 1.10

COMPANION LIVE LOAD FACTOR = 0.50

TRUSS PLATE MANUFACTURER IS NOT RESPONSIBLE FOR QUALITY CONTROL IN THE TRUSS MANUFACTURING PLANT .

NAIL VALUES

PLATE	GRIP(DRY) (PSI) MAX	MIN	SHEAR (PLI) MAX	MIN	SECTION (PLI) MAX	MIN
MT20	618	354	1667	822	2284	1656

PLATE PLACEMENT TOL. = 0.250 inches

PLATE ROTATION TOL. = 5.0 Deg.

JSI GRIP= 0.90 (13) (INPUT = 0.90)
JSI METAL= 0.42 (2) (INPUT = 1.00)

KOTT

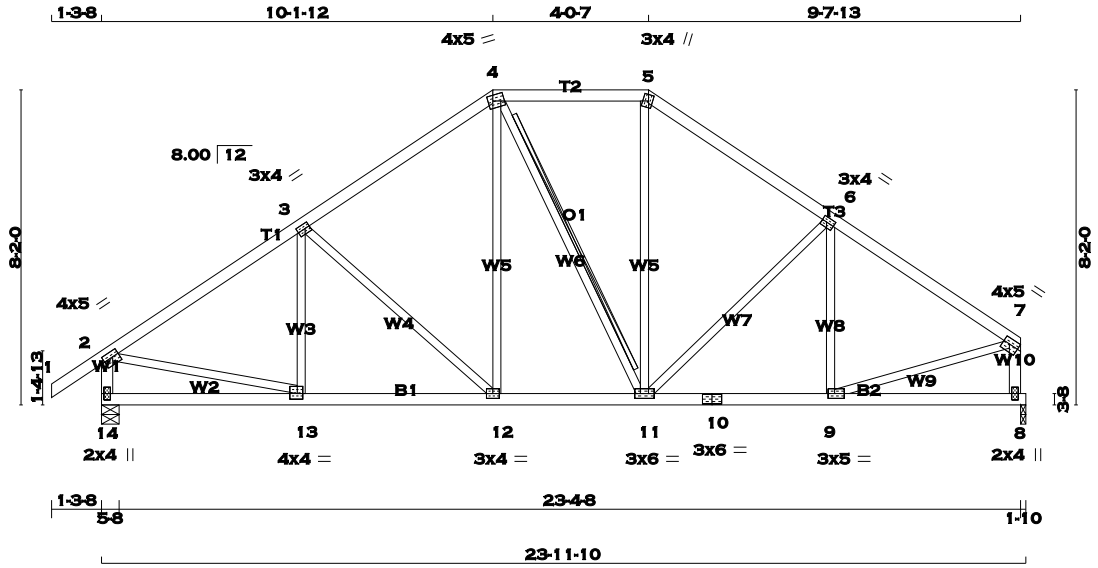

TOTAL WEIGHT = 108 lb

[M][F]

LUMBER

N. L. G. A. RULES

CHORDS	SIZE		LUMBER	DESCR.
1 - 4	2x4	DRY	No.2	SPF
4 - 5	2x4	DRY	No.2	SPF
5 - 7	2x4	DRY	No.2	SPF
14 - 2	2x4	DRY	No.2	SPF
8 - 7	2x4	DRY	No.2	SPF
14 - 10	2x4	DRY	No.2	SPF
10 - 8	2x4	DRY	No.2	SPF
ALL WEBS EXCEPT	2x3	DRY	No.2	SPF

DRY: SEASONED LUMBER.

PLATES (table is in inches)

JT	TYPE	PLATES	W	LEN	Y	X
2	TMVW-t	MT20	4.0	5.0	1.75	2.00
3	TMWW-t	MT20	3.0	4.0	1.50	1.50
4	TTWW-m	MT20	4.0	5.0	1.75	1.50
5	TTW+m	MT20	3.0	4.0	2.00	1.25
6	TMWW-t	MT20	3.0	4.0	1.50	1.50
7	TMVW-t	MT20	4.0	5.0	1.75	Edge
8	BMV1+p	MT20	2.0	4.0		
9	BMWW-t	MT20	3.0	5.0	1.50	2.00
10	BS-t	MT20	3.0	6.0		
11	BMWWW-t	MT20	3.0	6.0		
12	BMWW-t	MT20	3.0	4.0		
13	BMWW-t	MT20	4.0	4.0	1.75	1.75
14	BMV1+p	MT20	2.0	4.0		

Edge - INDICATES REFERENCE CORNER OF PLATE TOUCHES EDGE OF CHORD.

A SIZE FOR SIZE SUBSTITUTION OF MITEK MII20 WITH TEE-LOK TL20 PLATES IS ALLOWED.

READ ALL NOTES ON THIS PAGE AND ON THE ENGINEERING NOTE PAGE ENP-1. THE NOTE PAGE IS AN INTEGRAL PART OF THIS DRAWING AS IT CONTAINS SPECIFICATIONS AND CRITERIA USED IN THE DESIGN OF THIS COMPONENT.

DIMENSIONS, SUPPORTS AND LOADINGS SPECIFIED BY FABRICATOR TO BE VERIFIED BY BUILDING DESIGNER

BEARINGS

JT	FACTORED GROSS REACTION VERT	HORZ	MAXIMUM FACTORED GROSS REACTION DOWN	HORZ	UPLIFT	INPUT BRG IN-SX	REQRD BRG IN-SX
14	1236	0	1236	0	0	5-8	5-8
8	1130	0	1130	0	0	1-10	1-10

UNFACTORED REACTIONS

JT	1ST LCASE COMBINED	MAX./MIN. COMPONENT REACTIONS SNOW	LIVE	PERM.LIVE	WIND	DEAD	SOIL
14	865	619 / 0	0 / 0	0 / 0	0 / 0	247 / 0	0 / 0
8	793	555 / 0	0 / 0	0 / 0	0 / 0	238 / 0	0 / 0

BEARING MATERIAL TO BE SPF NO.2 OR BETTER AT JOINT(S) 14, 8

BRACING

TOP CHORD TO BE SHEATHED OR MAX. PURLIN SPACING = 5.43 FT.
MAX. UNBRACED BOTTOM CHORD LENGTH = 10.00 FT. OR RIGID CEILING DIRECTLY APPLIED.

ALL PITCH BREAKS AND PERIMETER CORNER JOINTS MUST BE LATERALLY RESTRAINED.

2x3 SPF No.2 T-BRACE AT 4-11

FASTEN T AND I-BRACES TO NARROW EDGE OF WEB WITH ONE ROW PER PLY OF 3" COMMON WIRE NAILS @ 6" O.C. WITH 3" MINIMUM END DISTANCE. BRACE MUST COVER 90% OF WEB LENGTH.

END VERTICAL(S) MUST BE SHEATHED OR HAVE BRACES AS INDICATED IN THE MAX. UNBRACED LENGTH COLUMN OF THE TABLE BELOW

LOADING

TOTAL LOAD CASES: (4)

CHORDS

MEMB. FR-TO	MAX. FACTORED FORCE (LBS)	FACTORED VERT. LOAD (PLF) FROM	TO	LC1 MAX CSI (LC)	MAX. UNBRAC LENGTH
1- 2	0 / 29	-77.3	-77.3	0.10 (1)	10.00
2- 3	-1263 / 0	-77.3	-77.3	0.28 (1)	5.43
3- 4	-1035 / 0	-77.3	-77.3	0.27 (1)	5.85
4- 5	-830 / 0	-77.3	-77.3	0.17 (1)	6.25
5- 6	-1020 / 0	-77.3	-77.3	0.24 (1)	5.92
6- 7	-1170 / 0	-77.3	-77.3	0.25 (1)	5.62
14- 2	-1199 / 0	0.0	0.0	0.12 (1)	7.30
8- 7	-1094 / 0	0.0	0.0	0.12 (1)	7.55
14-13	0 / 0	-17.5	-17.5	0.11 (4)	10.00
13-12	0 / 1072	-17.5	-17.5	0.23 (1)	10.00
12-11	0 / 841	-17.5	-17.5	0.17 (1)	10.00
11-10	0 / 993	-17.5	-17.5	0.21 (1)	10.00
10- 9	0 / 993	-17.5	-17.5	0.21 (1)	10.00
9- 8	0 / 0	-17.5	-17.5	0.10 (4)	10.00

WEBS

MEMB. FR-TO	MAX. FACTORED FORCE (LBS)	MAX CSI (LC)
13- 3	-123 / 50	0.04 (1)
3-12	-314 / 0	0.27 (1)
12- 4	0 / 284	0.06 (1)
4-11	-26 / 0	0.03 (1)
11- 5	0 / 260	0.06 (1)
11- 6	-233 / 0	0.20 (1)
9- 6	-191 / 25	0.07 (1)
2-13	0 / 1095	0.25 (1)
9- 7	0 / 1034	0.23 (1)

DESIGN CRITERIA

SPECIFIED LOADS:

TOP CH.	LL	=	23.3	PSF
	DL	=	3.0	PSF
BOT CH.	LL	=	0.0	PSF
	DL	=	7.0	PSF
TOTAL LOAD		=	33.3	PSF

SPACING = 24.0 IN. C/C

LOADING IN FLAT SECTION BASED ON A SLOPE OF 2.00/12 MINIMUM

THIS TRUSS IS DESIGNED FOR RESIDENTIAL OR SMALL BUILDING REQUIREMENTS OF PART 9, NBCC 2010

THIS DESIGN COMPLIES WITH:
- PART 9 OF OBC 2012 , BCBC 2012 , ABC 2014
- CSA 086-09
- TPIC 2011

(55 % OF 27.2 P.S.F. G.S.L. PLUS 8.4 P.S.F. RAIN LOAD) EQUALS 23.3 P.S.F. SPECIFIED ROOF LIVE LOAD

ALLOWABLE DEFL.(LL)= L/360 (0.79")
CALCULATED VERT. DEFL.(LL) = L/ 999 (0.03")
ALLOWABLE DEFL.(TL)= L/360 (0.79")
CALCULATED VERT. DEFL.(TL) = L/ 999 (0.07")

CSI: TC=0.28 (2-3:1) , BC=0.23 (12-13:1) , WB=0.27 (3-12:1) , SSI=0.16 (2-3:1)

DOL LUMBER=1.00 NAIL=1.00 LS BEND=1.10 COMP=1.10 SHEAR=1.10 TENS= 1.10

COMPANION LIVE LOAD FACTOR = 0.50

TRUSS PLATE MANUFACTURER IS NOT RESPONSIBLE FOR QUALITY CONTROL IN THE TRUSS MANUFACTURING PLANT .

NAIL VALUES

PLATE	GRIP(DRY) (PSI) MAX	MIN	SHEAR (PLI) MAX	MIN	SECTION (PLI) MAX	MIN
MT20	618	354	1667	822	2284	1656

PLATE PLACEMENT TOL. = 0.250 inches

PLATE ROTATION TOL. = 5.0 Deg.

JSI GRIP= 0.89 (11) (INPUT = 0.90)
JSI METAL= 0.43 (2) (INPUT = 1.00)

RECEIVED
TOWN OF MILTON
MAR 29, 2017
17-4967
BUILDING DIVISION

10 MAR 2017

KOTT

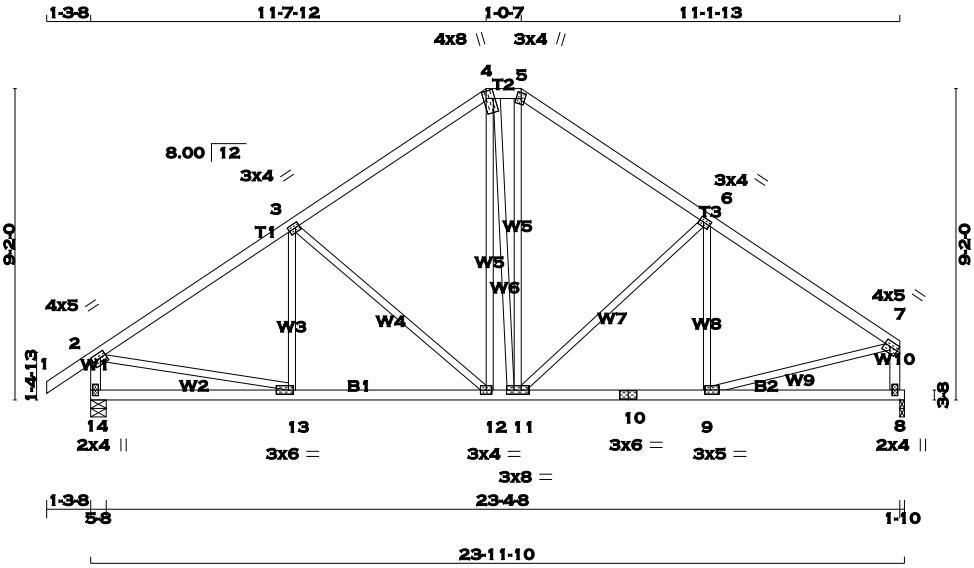

TOTAL WEIGHT = 114 lb

[M][F]

LUMBER

N. L. G. A. RULES

CHORDS	SIZE		LUMBER	DESCR.
1 - 4	2x4	DRY	No.2	SPF
4 - 5	2x4	DRY	No.2	SPF
5 - 7	2x4	DRY	No.2	SPF
14 - 2	2x4	DRY	No.2	SPF
8 - 7	2x4	DRY	No.2	SPF
14 - 10	2x4	DRY	No.2	SPF
10 - 8	2x4	DRY	No.2	SPF
ALL WEBS EXCEPT	2x3	DRY	No.2	SPF

DRY: SEASONED LUMBER.

PLATES (table is in inches)

JT	TYPE	PLATES	W	LEN	Y	X
2	TMVW-t	MT20	4.0	5.0	1.75	2.00
3	TMWW-t	MT20	3.0	4.0	1.50	1.50
4	TTWW+m	MT20	4.0	8.0	2.50	1.00
5	TTW+m	MT20	3.0	4.0	2.00	1.25
6	TMWW-t	MT20	3.0	4.0	1.50	1.50
7	TMVW-t	MT20	4.0	5.0	1.75	Edge
8	BMV1+p	MT20	2.0	4.0		
9	BMWW-t	MT20	3.0	5.0	1.50	2.00
10	BS-t	MT20	3.0	6.0		
11	BMWWW-t	MT20	3.0	8.0		
12	BMWW-t	MT20	3.0	4.0		
13	BMWW-t	MT20	3.0	6.0	1.50	1.75
14	BMV1+p	MT20	2.0	4.0		

Edge - INDICATES REFERENCE CORNER OF PLATE TOUCHES EDGE OF CHORD.

A SIZE FOR SIZE SUBSTITUTION OF MITEK MII20 WITH TEE-LOK TL20 PLATES IS ALLOWED.

READ ALL NOTES ON THIS PAGE AND ON THE ENGINEERING NOTE PAGE ENP-1. THE NOTE PAGE IS AN INTEGRAL PART OF THIS DRAWING AS IT CONTAINS SPECIFICATIONS AND CRITERIA USED IN THE DESIGN OF THIS COMPONENT.

DIMENSIONS, SUPPORTS AND LOADINGS SPECIFIED BY FABRICATOR TO BE VERIFIED BY BUILDING DESIGNER

BEARINGS

JT	FACTORED GROSS REACTION VERT	HORZ	MAXIMUM FACTORED GROSS REACTION DOWN	HORZ	UPLIFT	INPUT BRG IN-SX	REQRD BRG IN-SX
14	1236	0	1236	0	0	5-8	5-8
8	1130	0	1130	0	0	1-10	1-10

UNFACTORED REACTIONS

JT	1ST LCASE COMBINED	MAX./MIN. COMPONENT REACTIONS SNOW	LIVE	PERM.LIVE	WIND	DEAD	SOIL
14	865	619 / 0	0 / 0	0 / 0	0 / 0	247 / 0	0 / 0
8	793	555 / 0	0 / 0	0 / 0	0 / 0	238 / 0	0 / 0

BEARING MATERIAL TO BE SPF NO.2 OR BETTER AT JOINT(S) 14, 8

BRACING

TOP CHORD TO BE SHEATHED OR MAX. PURLIN SPACING = 5.29 FT.
MAX. UNBRACED BOTTOM CHORD LENGTH = 10.00 FT. OR RIGID CEILING DIRECTLY APPLIED.

ALL PITCH BREAKS AND PERIMETER CORNER JOINTS MUST BE LATERALLY RESTRAINED.

LOADING

TOTAL LOAD CASES: (4)

CHORDS

MEMB. FR-TO	MAX. FACTORED FORCE (LBS)	FACTORED VERT. LOAD (PLF) FROM	TO	LC1 MAX CSI (LC)	MAX. UNBRAC LENGTH
1- 2	0 / 29	-77.3	-77.3	0.10 (1)	10.00
2- 3	-1262 / 0	-77.3	-77.3	0.38 (1)	5.29
3- 4	-943 / 0	-77.3	-77.3	0.35 (1)	5.93
4- 5	-763 / 0	-77.3	-77.3	0.02 (1)	6.25
5- 6	-943 / 0	-77.3	-77.3	0.32 (1)	5.98
6- 7	-1180 / 0	-77.3	-77.3	0.34 (1)	5.48
14- 2	-1194 / 0	0.0	0.0	0.12 (1)	7.31
8- 7	-1089 / 0	0.0	0.0	0.12 (1)	7.57
14-13	0 / 0	-17.5	-17.5	0.15 (4)	10.00
13-12	0 / 1075	-17.5	-17.5	0.25 (1)	10.00
12-11	0 / 762	-17.5	-17.5	0.19 (1)	10.00
11-10	0 / 1005	-17.5	-17.5	0.23 (1)	10.00
10- 9	0 / 1005	-17.5	-17.5	0.23 (1)	10.00
9- 8	0 / 0	-17.5	-17.5	0.13 (4)	10.00

WEBS

MEMB. FR-TO	MAX. FACTORED FORCE (LBS)	MAX CSI (LC)
13- 3	-77 / 77	0.03 (1)
3-12	-419 / 0	0.50 (1)
12- 4	0 / 292	0.07 (1)
4-11	0 / 10	0.00 (1)
11- 5	0 / 310	0.07 (1)
11- 6	-337 / 0	0.39 (1)
9- 6	-144 / 52	0.07 (1)
2-13	0 / 1093	0.25 (1)
9- 7	0 / 1036	0.23 (1)

DESIGN CRITERIA

SPECIFIED LOADS:

TOP	CH.	LL	=	23.3	PSF
		DL	=	3.0	PSF
BOT	CH.	LL	=	0.0	PSF
		DL	=	7.0	PSF
TOTAL	LOAD		=	33.3	PSF

SPACING = 24.0 IN. C/C

LOADING IN FLAT SECTION BASED ON A SLOPE OF 2.00/12 MINIMUM

THIS TRUSS IS DESIGNED FOR RESIDENTIAL OR SMALL BUILDING REQUIREMENTS OF PART 9, NBCC 2010

THIS DESIGN COMPLIES WITH:
- PART 9 OF OBC 2012 , BCBC 2012 , ABC 2014
- CSA 086-09
- TPIC 2011

(55 % OF 27.2 P.S.F. G.S.L. PLUS 8.4 P.S.F. RAIN LOAD) EQUALS 23.3 P.S.F. SPECIFIED ROOF LIVE LOAD

ALLOWABLE DEFL.(LL)= L/360 (0.79")
CALCULATED VERT. DEFL.(LL) = L/ 999 (0.04")
ALLOWABLE DEFL.(TL)= L/360 (0.79")
CALCULATED VERT. DEFL.(TL) = L/ 999 (0.08")

CSI: TC=0.38 (2-3:1) , BC=0.25 (12-13:1) , WB=0.50 (3-12:1) , SSI=0.18 (2-3:1)

DOL LUMBER=1.00 NAIL=1.00 LS BEND=1.10 COMP=1.10 SHEAR=1.10 TENS= 1.10

COMPANION LIVE LOAD FACTOR = 0.50

TRUSS PLATE MANUFACTURER IS NOT RESPONSIBLE FOR QUALITY CONTROL IN THE TRUSS MANUFACTURING PLANT .

NAIL VALUES

PLATE	GRIP(DRY) (PSI) MAX	MIN	SHEAR (PLI) MAX	MIN	SECTION (PLI) MAX	MIN
MT20	618	354	1667	822	2284	1656

PLATE PLACEMENT TOL. = 0.250 inches

PLATE ROTATION TOL. = 5.0 Deg.

JSI GRIP= 0.90 (13) (INPUT = 0.90)
JSI METAL= 0.43 (2) (INPUT = 1.00)

RECEIVED
TOWN OF MILTON
MAR 29, 2017
17-4967
BUILDING DIVISION

10 MAR 2017

KOTT

SCALE = 1:40.7

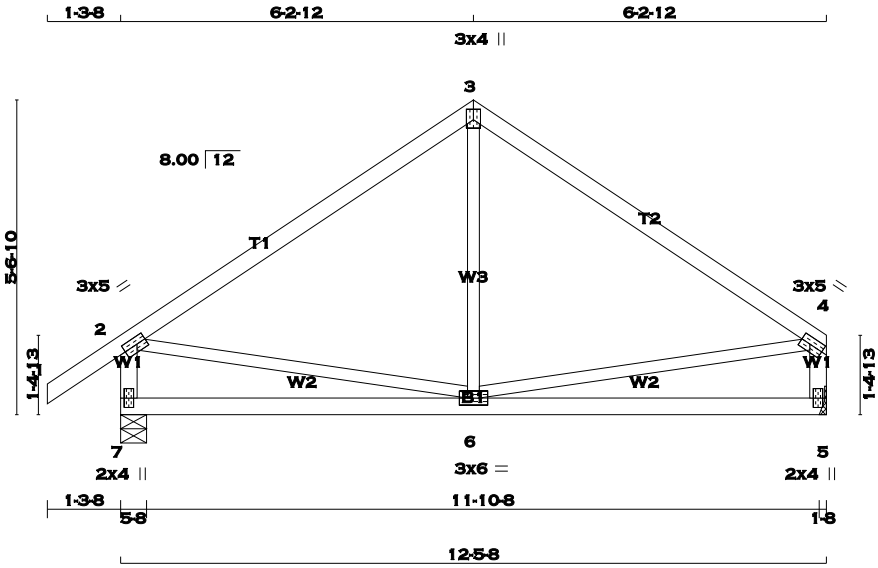

TOTAL WEIGHT = 2 X 49 = 99 lb

[M][F]

LUMBER

N. L. G. A. RULES

CHORDS	SIZE		LUMBER	DESCR.
1 - 3	2x4	DRY	No.2	SPF
3 - 4	2x4	DRY	No.2	SPF
7 - 2	2x4	DRY	No.2	SPF
5 - 4	2x4	DRY	No.2	SPF
7 - 5	2x4	DRY	No.2	SPF
ALL WEBS EXCEPT	2x3	DRY	No.2	SPF

DRY: SEASONED LUMBER.

PLATES (table is in inches)

JT	TYPE	PLATES	W	LEN	Y	X
2	TMVW-t	MT20	3.0	5.0	1.50	2.00
3	TTW+p	MT20	3.0	4.0	2.25	1.50
4	TMVW-t	MT20	3.0	5.0	1.50	2.00
5	BMV1+p	MT20	2.0	4.0		
6	BMWWW-t	MT20	3.0	6.0		
7	BMV1+p	MT20	2.0	4.0		

A SIZE FOR SIZE SUBSTITUTION OF MITEK MII20 WITH TEE-LOK TL20 PLATES IS ALLOWED.

READ ALL NOTES ON THIS PAGE AND ON THE ENGINEERING NOTE PAGE ENP-1. THE NOTE PAGE IS AN INTEGRAL PART OF THIS DRAWING AS IT CONTAINS SPECIFICATIONS AND CRITERIA USED IN THE DESIGN OF THIS COMPONENT.

DIMENSIONS, SUPPORTS AND LOADINGS SPECIFIED BY FABRICATOR TO BE VERIFIED BY BUILDING DESIGNER

BEARINGS

JT	FACTORED GROSS REACTION VERT	HORZ	MAXIMUM FACTORED GROSS REACTION DOWN	HORZ	UPLIFT	INPUT BRG IN-SX	REQRD BRG IN-SX
7	697	0	697	0	0	5-8	5-8
5	591	0	591	0	0	HANGER BY OTHERS MIN. SEAT SIZE: 1-8	

UNFACTORED REACTIONS

JT	1ST LCASE COMBINED	MAX./MIN. COMPONENT REACTIONS SNOW	LIVE	PERM.LIVE	WIND	DEAD	SOIL
7	487	354 / 0	0 / 0	0 / 0	0 / 0	133 / 0	0 / 0
5	415	290 / 0	0 / 0	0 / 0	0 / 0	125 / 0	0 / 0

BEARING MATERIAL TO BE SPF NO.2 OR BETTER AT JOINT(S) 7

BRACING

TOP CHORD TO BE SHEATHED OR MAX. PURLIN SPACING = 6.25 FT.
MAX. UNBRACED BOTTOM CHORD LENGTH = 10.00 FT. OR RIGID CEILING DIRECTLY APPLIED.

ALL PITCH BREAKS AND PERIMETER CORNER JOINTS MUST BE LATERALLY RESTRAINED.

LOADING

TOTAL LOAD CASES: (4)

CHORDS

MEMB. FR-TO	MAX. FACTORED FORCE (LBS)	VERT. LOAD (PLF) FROM	TO	MAX CSI (LC)	MAX. UNBRAC LENGTH
1- 2	0 / 29	-77.3	-77.3	0.10 (1)	10.00
2- 3	-441 / 0	-77.3	-77.3	0.39 (1)	6.25
3- 4	-441 / 0	-77.3	-77.3	0.39 (1)	6.25
7- 2	-655 / 0	0.0	0.0	0.07 (1)	7.81
5- 4	-549 / 0	0.0	0.0	0.06 (1)	7.81
7- 6	0 / 0	-17.5	-17.5	0.19 (4)	10.00
6- 5	0 / 0	-17.5	-17.5	0.19 (4)	10.00

WEBS

MEMB. FR-TO	MAX. FACTORED FORCE (LBS)	MAX CSI (LC)
6- 3	0 / 110	0.04 (4)
2- 6	0 / 372	0.08 (1)
6- 4	0 / 372	0.08 (1)

DESIGN CRITERIA

SPECIFIED LOADS:

TOP	CH.	LL	=	23.3	PSF
		DL	=	3.0	PSF
BOT	CH.	LL	=	0.0	PSF
		DL	=	7.0	PSF
TOTAL	LOAD		=	33.3	PSF

SPACING = 24.0 IN. C/C

THIS TRUSS IS DESIGNED FOR RESIDENTIAL OR SMALL BUILDING REQUIREMENTS OF PART 9, NBCC 2010

THIS DESIGN COMPLIES WITH:
- PART 9 OF OBC 2012 , BCBC 2012 , ABC 2014
- CSA 086-09
- TPIC 2011

(55 % OF 27.2 P.S.F. G.S.L. PLUS 8.4 P.S.F. RAIN LOAD) EQUALS 23.3 P.S.F. SPECIFIED ROOF LIVE LOAD

ALLOWABLE DEFL.(LL)= L/360 (0.42")
CALCULATED VERT. DEFL.(LL) = L/ 999 (0.01")
ALLOWABLE DEFL.(TL)= L/360 (0.42")
CALCULATED VERT. DEFL.(TL) = L/ 999 (0.04")

CSI: TC=0.39 (2-3:1) , BC=0.19 (6-7:4) , WB=0.08 (2-6:1) , SSI=0.16 (2-3:1)

DOL LUMBER=1.00 NAIL=1.00 LS BEND=1.10 COMP=1.10 SHEAR=1.10 TENS= 1.10

COMPANION LIVE LOAD FACTOR = 0.50

TRUSS PLATE MANUFACTURER IS NOT RESPONSIBLE FOR QUALITY CONTROL IN THE TRUSS MANUFACTURING PLANT .

NAIL VALUES

PLATE	GRIP(DRY) (PSI) MAX	MIN	SHEAR (PLI) MAX	MIN	SECTION (PLI) MAX	MIN
MT20	618	354	1667	822	2284	1656

PLATE PLACEMENT TOL. = 0.250 inches

PLATE ROTATION TOL. = 0.5 Deg.

JSI GRIP= 0.80 (6) (INPUT = 0.90)
JSI METAL= 0.19 (2) (INPUT = 1.00)

10 MAR 2017

RECEIVED
TOWN OF MILTON
MAR 29, 2017
17-4967
BUILDING DIVISION

KOTT

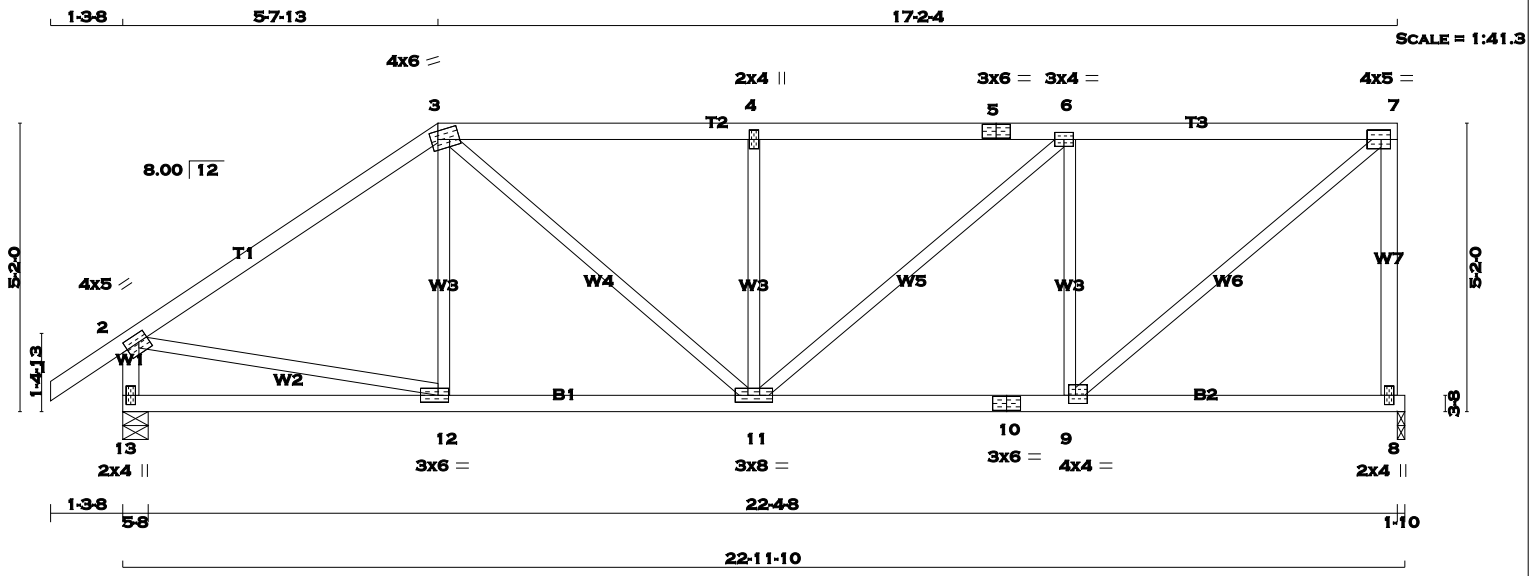

TOTAL WEIGHT = 95 lb [M]

LUMBER

N. L. G. A. RULES

CHORDS	SIZE		LUMBER	DESCR.
1 - 3	2x4	DRY	No.2	SPF
3 - 5	2x4	DRY	No.2	SPF
5 - 7	2x4	DRY	No.2	SPF
8 - 7	2x4	DRY	No.2	SPF
13 - 2	2x4	DRY	No.2	SPF
13 - 10	2x4	DRY	No.2	SPF
10 - 8	2x4	DRY	No.2	SPF
ALL WEBS EXCEPT	2x3	DRY	No.2	SPF

DRY: SEASONED LUMBER.

PLATES (table is in inches)

JT	TYPE	PLATES	W	LEN	Y	X
2	TMVW-t	MT20	4.0	5.0	1.75	2.00
3	TTWW-m	MT20	4.0	6.0	1.75	1.50
4	TMW+w	MT20	2.0	4.0		
5	TS-t	MT20	3.0	6.0		
6	TMWW-t	MT20	3.0	4.0		
7	TMVW-t	MT20	4.0	5.0	2.00	2.00
8	BMV1+p	MT20	2.0	4.0		
9	BMWW-t	MT20	4.0	4.0	1.75	1.50
10	BS-t	MT20	3.0	6.0		
11	BMWWW-t	MT20	3.0	8.0		
12	BMWW-t	MT20	3.0	6.0	1.50	2.25
13	BMV1+p	MT20	2.0	4.0		

A SIZE FOR SIZE SUBSTITUTION OF MITEK MII20 WITH TEE-LOK TL20 PLATES IS ALLOWED.

READ ALL NOTES ON THIS PAGE AND ON THE ENGINEERING NOTE PAGE ENP-1. THE NOTE PAGE IS AN INTEGRAL PART OF THIS DRAWING AS IT CONTAINS SPECIFICATIONS AND CRITERIA USED IN THE DESIGN OF THIS COMPONENT.

DIMENSIONS, SUPPORTS AND LOADINGS SPECIFIED BY FABRICATOR TO BE VERIFIED BY BUILDING DESIGNER

BEARINGS

JT	FACTORED GROSS REACTION VERT	HORZ	MAXIMUM FACTORED GROSS REACTION DOWN	HORZ	UPLIFT	INPUT BRG IN-SX	REQRD BRG IN-SX
8	1083	0	1083	0	0	1-10	1-10
13	1189	0	1189	0	0	5-8	5-8

UNFACTORED REACTIONS

JT	1ST LCASE COMBINED	MAX./MIN. COMPONENT REACTIONS SNOW	LIVE	PERM.LIVE	WIND	DEAD	SOIL
8	760	532 / 0	0 / 0	0 / 0	0 / 0	228 / 0	0 / 0
13	832	596 / 0	0 / 0	0 / 0	0 / 0	237 / 0	0 / 0

BEARING MATERIAL TO BE SPF NO.2 OR BETTER AT JOINT(S) 8, 13

BRACING

TOP CHORD TO BE SHEATHED OR MAX. PURLIN SPACING = 5.13 FT.
MAX. UNBRACED BOTTOM CHORD LENGTH = 10.00 FT. OR RIGID CEILING DIRECTLY APPLIED.

ALL PITCH BREAKS AND PERIMETER CORNER JOINTS MUST BE LATERALLY RESTRAINED.

LOADING

TOTAL LOAD CASES: (4)

CHORDS

MEMB. FR-TO	MAX. FACTORED FORCE (LBS)	FACTORED VERT. LOAD (PLF) FROM	TO	LC1 MAX CSI (LC)	MAX. UNBRAC LENGTH
1- 2	0 / 29	-77.3	-77.3	0.10 (1)	10.00
2- 3	-1157 / 0	-77.3	-77.3	0.49 (1)	5.26
3- 4	-1321 / 0	-77.3	-77.3	0.37 (1)	5.18
4- 5	-1322 / 0	-77.3	-77.3	0.40 (1)	5.13
5- 6	-1322 / 0	-77.3	-77.3	0.40 (1)	5.13
6- 7	-1032 / 0	-77.3	-77.3	0.39 (1)	5.65
8- 7	-1041 / 0	0.0	0.0	0.47 (1)	7.70
13- 2	-1149 / 0	0.0	0.0	0.12 (1)	7.42
13-12	0 / 0	-17.5	-17.5	0.14 (4)	10.00
12-11	0 / 960	-17.5	-17.5	0.23 (1)	10.00
11-10	0 / 1032	-17.5	-17.5	0.24 (1)	10.00
10- 9	0 / 1032	-17.5	-17.5	0.24 (1)	10.00
9- 8	0 / 0	-17.5	-17.5	0.14 (4)	10.00

WEBS

MEMB. FR-TO	MAX. FACTORED FORCE (LBS)	MAX CSI (LC)
12- 3	-67 / 72	0.03 (1)
3-11	0 / 477	0.11 (1)
11- 4	-472 / 0	0.19 (1)
11- 6	0 / 382	0.09 (1)
9- 6	-742 / 0	0.29 (1)
9- 7	0 / 1342	0.30 (1)
2-12	0 / 978	0.22 (1)

DESIGN CRITERIA

SPECIFIED LOADS:

TOP	CH.	LL	=	23.3	PSF
		DL	=	3.0	PSF
BOT	CH.	LL	=	0.0	PSF
		DL	=	7.0	PSF
TOTAL	LOAD		=	33.3	PSF

SPACING = 24.0 IN. C/C

LOADING IN FLAT SECTION BASED ON A SLOPE OF 2.00/12 MINIMUM

THIS TRUSS IS DESIGNED FOR RESIDENTIAL OR SMALL BUILDING REQUIREMENTS OF PART 9, NBCC 2010

THIS DESIGN COMPLIES WITH:
- PART 9 OF OBC 2012 , BCBC 2012 , ABC 2014
- CSA 086-09
- TPIC 2011

(55 % OF 27.2 P.S.F. G.S.L. PLUS 8.4 P.S.F. RAIN LOAD) EQUALS 23.3 P.S.F. SPECIFIED ROOF LIVE LOAD

ALLOWABLE DEFL.(LL)= L/360 (0.76")
CALCULATED VERT. DEFL.(LL) = L/ 999 (0.05")
ALLOWABLE DEFL.(TL)= L/360 (0.76")
CALCULATED VERT. DEFL.(TL) = L/ 999 (0.09")

CSI: TC=0.49 (2-3:1) , BC=0.24 (9-11:1) , WB=0.30 (7-9:1) , SSI=0.21 (6-7:1)

DOL LUMBER=1.00 NAIL=1.00 LS BEND=1.10 COMP=1.10 SHEAR=1.10 TENS= 1.10

COMPANION LIVE LOAD FACTOR = 0.50

TRUSS PLATE MANUFACTURER IS NOT RESPONSIBLE FOR QUALITY CONTROL IN THE TRUSS MANUFACTURING PLANT .

NAIL VALUES

PLATE	GRIP(DRY) (PSI) MAX	MIN	SHEAR (PLI) MAX	MIN	SECTION (PLI) MAX	MIN
MT20	618	354	1667	822	2284	1656

PLATE PLACEMENT TOL. = 0.250 inches

PLATE ROTATION TOL. = 5.0 Deg.

JSI GRIP= 0.90 (3) (INPUT = 0.90)
JSI METAL= 0.40 (2) (INPUT = 1.00)

RECEIVED
TOWN OF MILTON
MAR 29, 2017
17-4967
BUILDING DIVISION

10 MAR 2017

KOTT

JOB NAME	TRUSS NAME	QUANTITY	PLY	JOB DESC.	DRWG NO.
CC0317-045	**T38**	**1**	**1**	TRUSS DESC. GREENPARK-LECCO RIDGE-BLOCK 325	

ENG JOB: CC0317-045

KOTT , Stouffville, ON, CGC

Version 8.100 S Jan 17 2017 MiTek Industries, Inc. Fri Mar 10 13:59:43 2017 Page 1

ID:ROua3U0CyIZcrhsEOCClEDyLKB3-UkDC4E3KRxfqSH3?xCetTeJjQCeOtZf?SQEzWEzcJdU

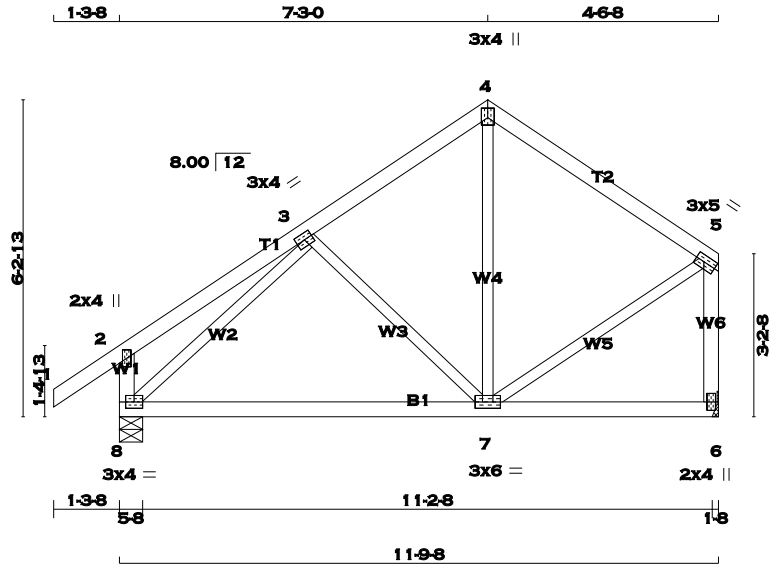

TOTAL WEIGHT = 52 lb

[M][F]

LUMBER

N. L. G. A. RULES

CHORDS	SIZE		LUMBER	DESCR.
1 - 4	2x4	DRY	No.2	SPF
4 - 5	2x4	DRY	No.2	SPF
8 - 2	2x4	DRY	No.2	SPF
6 - 5	2x4	DRY	No.2	SPF
8 - 6	2x4	DRY	No.2	SPF
ALL WEBS EXCEPT	2x3	DRY	No.2	SPF

DRY: SEASONED LUMBER.

PLATES (table is in inches)

JT	TYPE	PLATES	W	LEN	Y	X
2	TMV+p	MT20	2.0	4.0		
3	TMWW-t	MT20	3.0	4.0		
4	TTW+p	MT20	3.0	4.0	2.25	1.50
5	TMVW-t	MT20	3.0	5.0	1.50	2.00
6	BMV1+p	MT20	2.0	4.0		
7	BMWWW-t	MT20	3.0	6.0		
8	BMVW1-t	MT20	3.0	4.0		

A SIZE FOR SIZE SUBSTITUTION OF MITEK MII20 WITH TEE-LOK TL20 PLATES IS ALLOWED.

READ ALL NOTES ON THIS PAGE AND ON THE ENGINEERING NOTE PAGE ENP-1. THE NOTE PAGE IS AN INTEGRAL PART OF THIS DRAWING AS IT CONTAINS SPECIFICATIONS AND CRITERIA USED IN THE DESIGN OF THIS COMPONENT.

DIMENSIONS, SUPPORTS AND LOADINGS SPECIFIED BY FABRICATOR TO BE VERIFIED BY BUILDING DESIGNER

BEARINGS

JT	FACTORED GROSS REACTION VERT	HORZ	MAXIMUM FACTORED GROSS REACTION DOWN	HORZ	UPLIFT	INPUT BRG IN-SX	REQRD BRG IN-SX
6	559	0	559	0	0	HANGER BY OTHERS MIN. SEAT SIZE: 1-8	
8	665	0	665	0	0	5-8	5-8

UNFACTORED REACTIONS

JT	1ST LCASE COMBINED	MAX./MIN. COMPONENT REACTIONS SNOW	LIVE	PERM.LIVE	WIND	DEAD	SOIL
6	392	275 / 0	0 / 0	0 / 0	0 / 0	118 / 0	0 / 0
8	465	338 / 0	0 / 0	0 / 0	0 / 0	126 / 0	0 / 0

BEARING MATERIAL TO BE SPF NO.2 OR BETTER AT JOINT(S) 8

BRACING

TOP CHORD TO BE SHEATHED OR MAX. PURLIN SPACING = 6.25 FT.
MAX. UNBRACED BOTTOM CHORD LENGTH = 10.00 FT. OR RIGID CEILING DIRECTLY APPLIED.

ALL PITCH BREAKS AND PERIMETER CORNER JOINTS MUST BE LATERALLY RESTRAINED.

LOADING

TOTAL LOAD CASES: (4)

CHORDS

MEMB. FR-TO	MAX. FACTORED FORCE (LBS)	VERT. LOAD (PLF) FROM	TO	MAX CSI (LC)	MAX. UNBRAC LENGTH
1- 2	0 / 29	-77.3	-77.3	0.10 (1)	10.00
2- 3	0 / 18	-77.3	-77.3	0.16 (1)	10.00
3- 4	-352 / 0	-77.3	-77.3	0.13 (1)	6.25
4- 5	-334 / 0	-77.3	-77.3	0.21 (1)	6.25
8- 2	-213 / 0	0.0	0.0	0.02 (1)	7.81
6- 5	-538 / 0	0.0	0.0	0.10 (1)	7.81
8- 7	0 / 415	-17.5	-17.5	0.23 (4)	10.00
7- 6	0 / 0	-17.5	-17.5	0.20 (4)	10.00

WEBS

MEMB. FR-TO	MAX. FACTORED FORCE (LBS)	MAX CSI (LC)
3- 7	-189 / 0	0.08 (1)
7- 4	0 / 95	0.03 (4)
8- 3	-576 / 0	0.23 (1)
7- 5	0 / 329	0.07 (1)

DESIGN CRITERIA

SPECIFIED LOADS:

TOP	CH.	LL	=	23.3	PSF
		DL	=	3.0	PSF
BOT	CH.	LL	=	0.0	PSF
		DL	=	7.0	PSF
TOTAL	LOAD		=	33.3	PSF

SPACING = 24.0 IN. C/C

THIS TRUSS IS DESIGNED FOR RESIDENTIAL OR SMALL BUILDING REQUIREMENTS OF PART 9, NBCC 2010

THIS DESIGN COMPLIES WITH:
- PART 9 OF OBC 2012 , BCBC 2012 , ABC 2014
- CSA 086-09
- TPIC 2011

(55 % OF 27.2 P.S.F. G.S.L. PLUS 8.4 P.S.F. RAIN LOAD) EQUALS 23.3 P.S.F. SPECIFIED ROOF LIVE LOAD

ALLOWABLE DEFL.(LL)= L/360 (0.39")
CALCULATED VERT. DEFL.(LL) = L/ 999 (0.01")
ALLOWABLE DEFL.(TL)= L/360 (0.39")
CALCULATED VERT. DEFL.(TL) = L/ 999 (0.07")

CSI: TC=0.21 (4-5:1) , BC=0.23 (7-8:4) , WB=0.23 (3-8:1) , SSI=0.11 (4-5:1)

DOL LUMBER=1.00 NAIL=1.00 LS BEND=1.10 COMP=1.10 SHEAR=1.10 TENS= 1.10

COMPANION LIVE LOAD FACTOR = 0.50

TRUSS PLATE MANUFACTURER IS NOT RESPONSIBLE FOR QUALITY CONTROL IN THE TRUSS MANUFACTURING PLANT .

NAIL VALUES

PLATE	GRIP(DRY) (PSI) MAX	MIN	SHEAR (PLI) MAX	MIN	SECTION (PLI) MAX	MIN
MT20	618	354	1667	822	2284	1656

PLATE PLACEMENT TOL. = 0.250 inches

PLATE ROTATION TOL. = 5.0 Deg.

JSI GRIP= 0.79 (3) (INPUT = 0.90)
JSI METAL= 0.20 (3) (INPUT = 1.00)

10 MAR 2017

RECEIVED
TOWN OF MILTON
MAR 29, 2017
17-4967
BUILDING DIVISION

KOTT

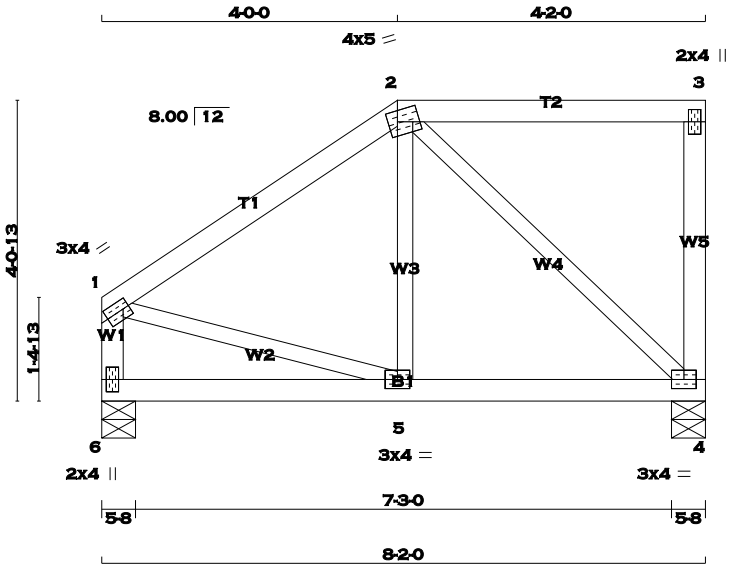

SCALE = 1:31.2

TOTAL WEIGHT = 35 lb [M]

LUMBER

N. L. G. A. RULES

CHORDS	SIZE		LUMBER	DESCR.
1 - 2	2x4	DRY	No.2	SPF
2 - 3	2x4	DRY	No.2	SPF
4 - 3	2x4	DRY	No.2	SPF
6 - 1	2x4	DRY	No.2	SPF
6 - 4	2x4	DRY	No.2	SPF
ALL WEBS EXCEPT	2x3	DRY	No.2	SPF

DRY: SEASONED LUMBER.

PLATES (table is in inches)

JT	TYPE	PLATES	W	LEN	Y	X
1	TMVW-t	MT20	3.0	4.0	1.50	1.00
2	TTWW-m	MT20	4.0	5.0	1.75	1.50
3	TMV+p	MT20	2.0	4.0		
4	BMVW1-t	MT20	3.0	4.0		
5	BMWW-t	MT20	3.0	4.0		
6	BMV1+p	MT20	2.0	4.0		

A SIZE FOR SIZE SUBSTITUTION OF MITEK MII20 WITH TEE-LOK TL20 PLATES IS ALLOWED.

READ ALL NOTES ON THIS PAGE AND ON THE ENGINEERING NOTE PAGE ENP-1. THE NOTE PAGE IS AN INTEGRAL PART OF THIS DRAWING AS IT CONTAINS SPECIFICATIONS AND CRITERIA USED IN THE DESIGN OF THIS COMPONENT.

DIMENSIONS, SUPPORTS AND LOADINGS SPECIFIED BY FABRICATOR TO BE VERIFIED BY BUILDING DESIGNER

BEARINGS

JT	FACTORED GROSS REACTION VERT	HORZ	MAXIMUM FACTORED GROSS REACTION DOWN	HORZ	UPLIFT	INPUT BRG IN-SX	REQRD BRG IN-SX
4	387	0	387	0	0	5-8	5-8
6	387	0	387	0	0	5-8	5-8

UNFACTORED REACTIONS

JT	1ST LCASE COMBINED	MAX./MIN. COMPONENT REACTIONS SNOW	LIVE	PERM.LIVE	WIND	DEAD	SOIL
4	272	190 / 0	0 / 0	0 / 0	0 / 0	82 / 0	0 / 0
6	272	190 / 0	0 / 0	0 / 0	0 / 0	82 / 0	0 / 0

BEARING MATERIAL TO BE SPF NO.2 OR BETTER AT JOINT(S) 4, 6

BRACING

TOP CHORD TO BE SHEATHED OR MAX. PURLIN SPACING = 6.25 FT.
MAX. UNBRACED BOTTOM CHORD LENGTH = 10.00 FT. OR RIGID CEILING DIRECTLY APPLIED.

ALL PITCH BREAKS AND PERIMETER CORNER JOINTS MUST BE LATERALLY RESTRAINED.

LOADING

TOTAL LOAD CASES: (4)

CHORDS

MEMB. FR-TO	MAX. FACTORED FORCE (LBS)	FACTORED VERT. LOAD (PLF) FROM	TO	LC1 MAX CSI (LC)	MAX. UNBRAC LENGTH
1- 2	-263 / 0	-77.3	-77.3	0.21 (1)	6.25
2- 3	0 / 0	-77.3	-77.3	0.23 (1)	10.00
4- 3	-161 / 0	0.0	0.0	0.04 (1)	7.81
6- 1	-359 / 0	0.0	0.0	0.04 (1)	7.81
6- 5	0 / 0	-17.5	-17.5	0.08 (4)	10.00
5- 4	0 / 220	-17.5	-17.5	0.10 (4)	10.00

WEBS

MEMB. FR-TO	MAX. FACTORED FORCE (LBS)	MAX CSI (LC)
5- 2	0 / 80	0.03 (4)
2- 4	-296 / 0	0.14 (1)
1- 5	0 / 226	0.05 (1)

DESIGN CRITERIA

SPECIFIED LOADS:

TOP	CH.	LL	=	23.3	PSF
		DL	=	3.0	PSF
BOT	CH.	LL	=	0.0	PSF
		DL	=	7.0	PSF
TOTAL	LOAD		=	33.3	PSF

SPACING = 24.0 IN. C/C

LOADING IN FLAT SECTION BASED ON A SLOPE OF 2.00/12 MINIMUM

THIS TRUSS IS DESIGNED FOR RESIDENTIAL OR SMALL BUILDING REQUIREMENTS OF PART 9, NBCC 2010

THIS DESIGN COMPLIES WITH:
- PART 9 OF OBC 2012 , BCBC 2012 , ABC 2014
- CSA 086-09
- TPIC 2011

(55 % OF 27.2 P.S.F. G.S.L. PLUS 8.4 P.S.F. RAIN LOAD) EQUALS 23.3 P.S.F. SPECIFIED ROOF LIVE LOAD

ALLOWABLE DEFL.(LL)= L/360 (0.27")
CALCULATED VERT. DEFL.(LL) = L/ 999 (0.00")
ALLOWABLE DEFL.(TL)= L/360 (0.27")
CALCULATED VERT. DEFL.(TL) = L/ 999 (0.01")

CSI: TC=0.23 (2-3:1) , BC=0.10 (4-5:4) , WB=0.14 (2-4:1) , SSI=0.13 (2-3:1)

DOL LUMBER=1.00 NAIL=1.00 LS BEND=1.10 COMP=1.10 SHEAR=1.10 TENS= 1.10

COMPANION LIVE LOAD FACTOR = 0.50

TRUSS PLATE MANUFACTURER IS NOT RESPONSIBLE FOR QUALITY CONTROL IN THE TRUSS MANUFACTURING PLANT .

NAIL VALUES

PLATE	GRIP(DRY) (PSI) MAX	MIN	SHEAR (PLI) MAX	MIN	SECTION (PLI) MAX	MIN
MT20	618	354	1667	822	2284	1656

PLATE PLACEMENT TOL. = 0.250 inches

PLATE ROTATION TOL. = 5.0 Deg.

JSI GRIP= 0.74 (1) (INPUT = 0.90)
JSI METAL= 0.13 (1) (INPUT = 1.00)

10 MAR 2017

RECEIVED
TOWN OF MILTON
MAR 29, 2017
17-4967
BUILDING DIVISION

KOTT

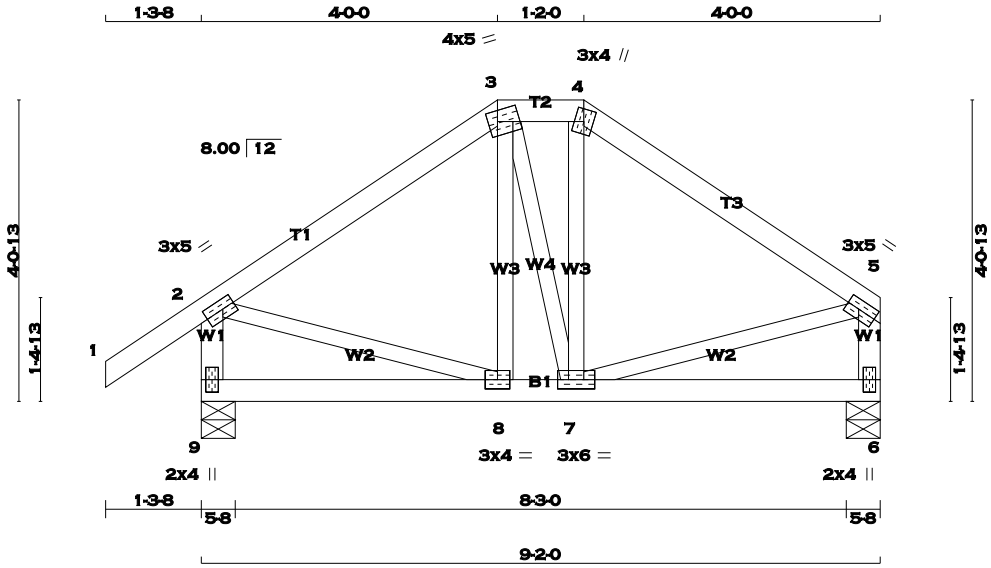

SCALE = 1:31.1

TOTAL WEIGHT = 2 X 42 = 84 lb

[M][F]

LUMBER

N. L. G. A. RULES

CHORDS	SIZE		LUMBER	DESCR.
1 - 3	2x4	DRY	No.2	SPF
3 - 4	2x4	DRY	No.2	SPF
4 - 5	2x4	DRY	No.2	SPF
9 - 2	2x4	DRY	No.2	SPF
6 - 5	2x4	DRY	No.2	SPF
9 - 6	2x4	DRY	No.2	SPF
ALL WEBS EXCEPT	2x3	DRY	No.2	SPF

DRY: SEASONED LUMBER.

PLATES (table is in inches)

JT	TYPE	PLATES	W	LEN	Y	X
2	TMVW-t	MT20	3.0	5.0	1.50	2.00
3	TTWW-m	MT20	4.0	5.0	1.75	1.50
4	TTW+m	MT20	3.0	4.0		
5	TMVW-t	MT20	3.0	5.0	1.50	2.00
6	BMV1+p	MT20	2.0	4.0		
7	BMWWW-t	MT20	3.0	6.0		
8	BMWW-t	MT20	3.0	4.0		
9	BMV1+p	MT20	2.0	4.0		

A SIZE FOR SIZE SUBSTITUTION OF MITEK MII20 WITH TEE-LOK TL20 PLATES IS ALLOWED.

READ ALL NOTES ON THIS PAGE AND ON THE ENGINEERING NOTE PAGE ENP-1. THE NOTE PAGE IS AN INTEGRAL PART OF THIS DRAWING AS IT CONTAINS SPECIFICATIONS AND CRITERIA USED IN THE DESIGN OF THIS COMPONENT.

DIMENSIONS, SUPPORTS AND LOADINGS SPECIFIED BY FABRICATOR TO BE VERIFIED BY BUILDING DESIGNER

BEARINGS

JT	FACTORED GROSS REACTION VERT	HORZ	MAXIMUM FACTORED GROSS REACTION DOWN	HORZ	UPLIFT	INPUT BRG IN-SX	REQRD BRG IN-SX
9	541	0	541	0	0	5-8	5-8
6	435	0	435	0	0	5-8	5-8

UNFACTORED REACTIONS

JT	1ST LCASE COMBINED	MAX./MIN. COMPONENT REACTIONS SNOW	LIVE	PERM.LIVE	WIND	DEAD	SOIL
9	377	277 / 0	0 / 0	0 / 0	0 / 0	100 / 0	0 / 0
6	305	213 / 0	0 / 0	0 / 0	0 / 0	92 / 0	0 / 0

BEARING MATERIAL TO BE SPF NO.2 OR BETTER AT JOINT(S) 9, 6

BRACING

TOP CHORD TO BE SHEATHED OR MAX. PURLIN SPACING = 6.25 FT.
MAX. UNBRACED BOTTOM CHORD LENGTH = 10.00 FT. OR RIGID CEILING DIRECTLY APPLIED.

ALL PITCH BREAKS AND PERIMETER CORNER JOINTS MUST BE LATERALLY RESTRAINED.

LOADING

TOTAL LOAD CASES: (4)

CHORDS

MEMB. FR-TO	MAX. FACTORED FORCE (LBS)	FACTORED VERT. LOAD (PLF) FROM	TO	LC1 MAX CSI (LC)	MAX. UNBRAC LENGTH
1- 2	0 / 29	-77.3	-77.3	0.10 (1)	10.00
2- 3	-322 / 0	-77.3	-77.3	0.16 (1)	6.25
3- 4	-267 / 0	-77.3	-77.3	0.01 (1)	6.25
4- 5	-322 / 0	-77.3	-77.3	0.16 (1)	6.25
9- 2	-511 / 0	0.0	0.0	0.05 (1)	7.81
6- 5	-404 / 0	0.0	0.0	0.04 (1)	7.81
9- 8	0 / 0	-17.5	-17.5	0.06 (4)	10.00
8- 7	0 / 267	-17.5	-17.5	0.08 (4)	10.00
7- 6	0 / 0	-17.5	-17.5	0.06 (4)	10.00

WEBS

MEMB. FR-TO	MAX. FACTORED FORCE (LBS)	MAX CSI (LC)
8- 3	-20 / 33	0.01 (4)
3- 7	0 / 2	0.00 (4)
7- 4	-21 / 35	0.01 (4)
2- 8	0 / 277	0.06 (1)
7- 5	0 / 277	0.06 (1)

DESIGN CRITERIA

SPECIFIED LOADS:

TOP	CH.	LL	=	23.3	PSF
		DL	=	3.0	PSF
BOT	CH.	LL	=	0.0	PSF
		DL	=	7.0	PSF
TOTAL	LOAD		=	33.3	PSF

SPACING = 24.0 IN. C/C

LOADING IN FLAT SECTION BASED ON A SLOPE OF 2.00/12 MINIMUM

THIS TRUSS IS DESIGNED FOR RESIDENTIAL OR SMALL BUILDING REQUIREMENTS OF PART 9, NBCC 2010

THIS DESIGN COMPLIES WITH:
- PART 9 OF OBC 2012 , BCBC 2012 , ABC 2014
- CSA 086-09
- TPIC 2011

(55 % OF 27.2 P.S.F. G.S.L. PLUS 8.4 P.S.F. RAIN LOAD) EQUALS 23.3 P.S.F. SPECIFIED ROOF LIVE LOAD

ALLOWABLE DEFL.(LL)= L/360 (0.31")
CALCULATED VERT. DEFL.(LL) = L/ 999 (0.00")
ALLOWABLE DEFL.(TL)= L/360 (0.31")
CALCULATED VERT. DEFL.(TL) = L/ 999 (0.01")

CSI: TC=0.16 (2-3:1) , BC=0.08 (7-8:4) , WB=0.06 (2-8:1) , SSI=0.10 (2-3:1)

DOL LUMBER=1.00 NAIL=1.00 LS BEND=1.10 COMP=1.10 SHEAR=1.10 TENS= 1.10

COMPANION LIVE LOAD FACTOR = 0.50

TRUSS PLATE MANUFACTURER IS NOT RESPONSIBLE FOR QUALITY CONTROL IN THE TRUSS MANUFACTURING PLANT .

NAIL VALUES

PLATE	GRIP(DRY) (PSI) MAX	MIN	SHEAR (PLI) MAX	MIN	SECTION (PLI) MAX	MIN
MT20	618	354	1667	822	2284	1656

PLATE PLACEMENT TOL. = 0.250 inches

PLATE ROTATION TOL. = 5.0 Deg.

JSI GRIP= 0.51 (7) (INPUT = 0.90)
JSI METAL= 0.14 (2) (INPUT = 1.00)

10 MAR 2017

RECEIVED
TOWN OF MILTON
MAR 29, 2017
17-4967
BUILDING DIVISION

KOTT

JOB NAME	TRUSS NAME	QUANTITY	PLY	JOB DESC.	DRWG NO.
CC0317-045	**T41**	**2**	**1**	TRUSS DESC. GREENPARK-LECCO RIDGE-BLOCK 325	

KOTT , Stouffville, ON, CGC

Version 8.100 S Jan 17 2017 MiTek Industries, Inc. Fri Mar 10 13:59:44 2017 Page 1
ID:ROua3U0CyIZcrhsEOCClEDyLKB3-zwmaIa4yCFnh4ReCVw960srsoc0kc2N8h4_X2gzcJdT

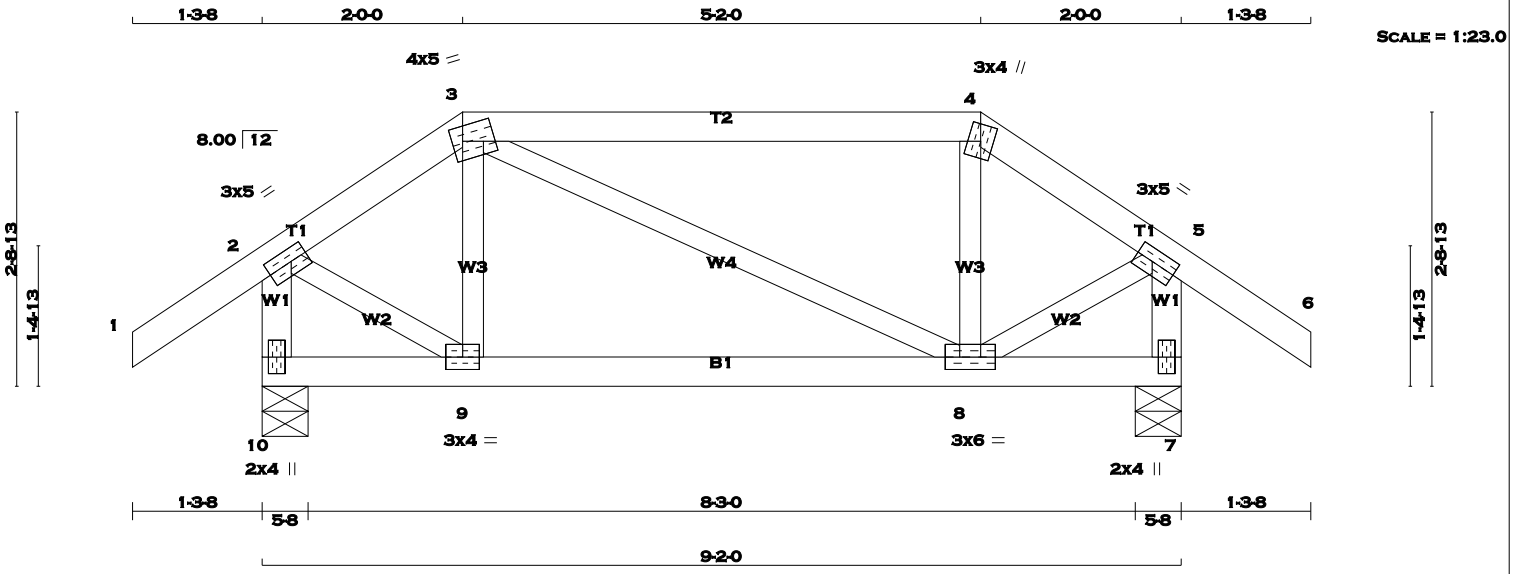

TOTAL WEIGHT = 2 X 39 = 78 lb [M]

LUMBER

N. L. G. A. RULES

CHORDS	SIZE		LUMBER	DESCR.
1 - 3	2x4	DRY	No.2	SPF
3 - 4	2x4	DRY	No.2	SPF
4 - 6	2x4	DRY	No.2	SPF
10 - 2	2x4	DRY	No.2	SPF
7 - 5	2x4	DRY	No.2	SPF
10 - 7	2x4	DRY	No.2	SPF
ALL WEBS EXCEPT	2x3	DRY	No.2	SPF

DRY: SEASONED LUMBER.

PLATES (table is in inches)

JT	TYPE	PLATES	W	LEN	Y	X
2	TMVW-t	MT20	3.0	5.0	1.50	2.00
3	TTWW-m	MT20	4.0	5.0	1.75	1.25
4	TTW+m	MT20	3.0	4.0		
5	TMVW-t	MT20	3.0	5.0	1.50	2.00
7	BMV1+p	MT20	2.0	4.0		
8	BMWWW-t	MT20	3.0	6.0		
9	BMWW-t	MT20	3.0	4.0		
10	BMV1+p	MT20	2.0	4.0		

A SIZE FOR SIZE SUBSTITUTION OF MITEK MII20 WITH TEE-LOK TL20 PLATES IS ALLOWED.

READ ALL NOTES ON THIS PAGE AND ON THE ENGINEERING NOTE PAGE ENP-1. THE NOTE PAGE IS AN INTEGRAL PART OF THIS DRAWING AS IT CONTAINS SPECIFICATIONS AND CRITERIA USED IN THE DESIGN OF THIS COMPONENT.

DIMENSIONS, SUPPORTS AND LOADINGS SPECIFIED BY FABRICATOR TO BE VERIFIED BY BUILDING DESIGNER

BEARINGS

JT	FACTORED GROSS REACTION VERT	HORZ	MAXIMUM FACTORED GROSS REACTION DOWN	HORZ	UPLIFT	INPUT BRG IN-SX	REQRD BRG IN-SX
10	541	0	541	0	0	5-8	5-8
7	541	0	541	0	0	5-8	5-8

UNFACTORED REACTIONS

JT	1ST LCASE COMBINED	MAX./MIN. COMPONENT REACTIONS SNOW	LIVE	PERM.LIVE	WIND	DEAD	SOIL
10	377	277 / 0	0 / 0	0 / 0	0 / 0	100 / 0	0 / 0
7	377	277 / 0	0 / 0	0 / 0	0 / 0	100 / 0	0 / 0

BEARING MATERIAL TO BE SPF NO.2 OR BETTER AT JOINT(S) 10, 7

BRACING

TOP CHORD TO BE SHEATHED OR MAX. PURLIN SPACING = 6.25 FT.
MAX. UNBRACED BOTTOM CHORD LENGTH = 10.00 FT. OR RIGID CEILING DIRECTLY APPLIED.

ALL PITCH BREAKS AND PERIMETER CORNER JOINTS MUST BE LATERALLY RESTRAINED.

LOADING

TOTAL LOAD CASES: (4)

CHORDS

MEMB. FR-TO	MAX. FACTORED FORCE (LBS)	FACTORED VERT. LOAD (PLF) FROM	TO	LC1 MAX CSI (LC)	MAX. UNBRAC LENGTH
1- 2	0 / 29	-77.3	-77.3	0.10 (1)	10.00
2- 3	-357 / 0	-77.3	-77.3	0.05 (1)	6.25
3- 4	-293 / 0	-77.3	-77.3	0.36 (1)	6.25
4- 5	-357 / 0	-77.3	-77.3	0.05 (1)	6.25
5- 6	0 / 29	-77.3	-77.3	0.10 (1)	10.00
10- 2	-535 / 0	0.0	0.0	0.06 (1)	7.81
7- 5	-535 / 0	0.0	0.0	0.06 (1)	7.81
10- 9	0 / 0	-17.5	-17.5	0.07 (4)	10.00
9- 8	0 / 293	-17.5	-17.5	0.09 (4)	10.00
8- 7	0 / 0	-17.5	-17.5	0.07 (4)	10.00

WEBS

MEMB. FR-TO	MAX. FACTORED FORCE (LBS)	MAX CSI (LC)
9- 3	-78 / 35	0.01 (1)
3- 8	0 / 0	0.00 (1)
8- 4	-78 / 35	0.01 (1)
2- 9	0 / 333	0.07 (1)
8- 5	0 / 333	0.07 (1)

DESIGN CRITERIA

SPECIFIED LOADS:

TOP	CH.	LL	=	23.3	PSF
		DL	=	3.0	PSF
BOT	CH.	LL	=	0.0	PSF
		DL	=	7.0	PSF
TOTAL	LOAD		=	33.3	PSF

SPACING = 24.0 IN. C/C

LOADING IN FLAT SECTION BASED ON A SLOPE OF 2.00/12 MINIMUM

THIS TRUSS IS DESIGNED FOR RESIDENTIAL OR SMALL BUILDING REQUIREMENTS OF PART 9, NBCC 2010

THIS DESIGN COMPLIES WITH:
- PART 9 OF OBC 2012 , BCBC 2012 , ABC 2014
- CSA 086-09
- TPIC 2011

(55 % OF 27.2 P.S.F. G.S.L. PLUS 8.4 P.S.F. RAIN LOAD) EQUALS 23.3 P.S.F. SPECIFIED ROOF LIVE LOAD

ALLOWABLE DEFL.(LL)= L/360 (0.31")
CALCULATED VERT. DEFL.(LL) = L/ 999 (0.00")
ALLOWABLE DEFL.(TL)= L/360 (0.31")
CALCULATED VERT. DEFL.(TL) = L/ 999 (0.02")

CSI: TC=0.36 (3-4:1) , BC=0.09 (8-9:4) , WB=0.07 (2-9:1) , SSI=0.16 (3-4:1)

DOL LUMBER=1.00 NAIL=1.00 LS BEND=1.10 COMP=1.10 SHEAR=1.10 TENS= 1.10

COMPANION LIVE LOAD FACTOR = 0.50

TRUSS PLATE MANUFACTURER IS NOT RESPONSIBLE FOR QUALITY CONTROL IN THE TRUSS MANUFACTURING PLANT .

NAIL VALUES

PLATE	GRIP(DRY) (PSI) MAX	MIN	SHEAR (PLI) MAX	MIN	SECTION (PLI) MAX	MIN
MT20	618	354	1667	822	2284	1656

PLATE PLACEMENT TOL. = 0.250 inches

PLATE ROTATION TOL. = 5.0 Deg.

JSI GRIP= 0.60 (8) (INPUT = 0.90)
JSI METAL= 0.14 (2) (INPUT = 1.00)

LICENSED

10 MAR 2017

RECEIVED
TOWN OF MILTON
MAR 29, 2017
17-4967
BUILDING DIVISION

KOTT

SCALE = 1:33.7

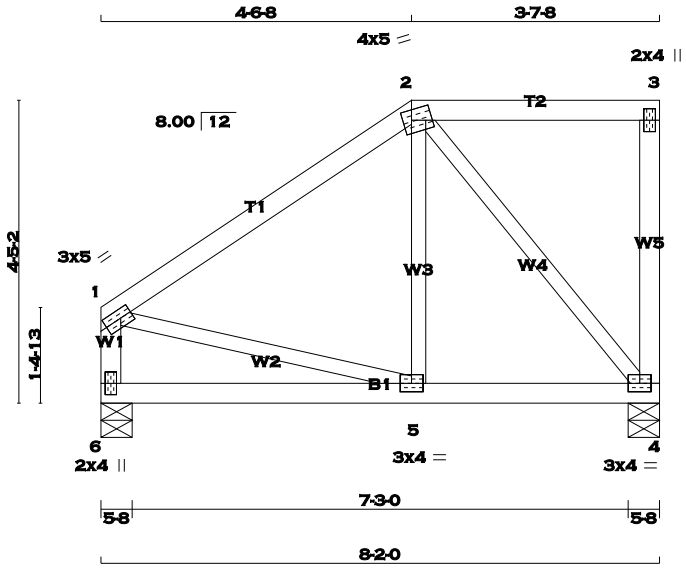

TOTAL WEIGHT = 36 lb

[M][F]

LUMBER

N. L. G. A. RULES

CHORDS	SIZE		LUMBER	DESCR.
1 - 2	2x4	DRY	No.2	SPF
2 - 3	2x4	DRY	No.2	SPF
4 - 3	2x4	DRY	No.2	SPF
6 - 1	2x4	DRY	No.2	SPF
6 - 4	2x4	DRY	No.2	SPF
ALL WEBS EXCEPT	2x3	DRY	No.2	SPF

DRY: SEASONED LUMBER.

PLATES (table is in inches)

JT	TYPE	PLATES	W	LEN	Y	X
1	TMVW-t	MT20	3.0	5.0	1.50	2.00
2	TTWW-m	MT20	4.0	5.0	1.75	1.50
3	TMV+p	MT20	2.0	4.0		
4	BMVW1-t	MT20	3.0	4.0		
5	BMWW-t	MT20	3.0	4.0		
6	BMV1+p	MT20	2.0	4.0		

A SIZE FOR SIZE SUBSTITUTION OF MITEK MII20 WITH TEE-LOK TL20 PLATES IS ALLOWED.

READ ALL NOTES ON THIS PAGE AND ON THE ENGINEERING NOTE PAGE ENP-1. THE NOTE PAGE IS AN INTEGRAL PART OF THIS DRAWING AS IT CONTAINS SPECIFICATIONS AND CRITERIA USED IN THE DESIGN OF THIS COMPONENT.

DIMENSIONS, SUPPORTS AND LOADINGS SPECIFIED BY FABRICATOR TO BE VERIFIED BY BUILDING DESIGNER

BEARINGS

JT	FACTORED GROSS REACTION VERT	HORZ	MAXIMUM FACTORED GROSS REACTION DOWN	HORZ	UPLIFT	INPUT BRG IN-SX	REQRD BRG IN-SX
4	387	0	387	0	0	5-8	5-8
6	387	0	387	0	0	5-8	5-8

UNFACTORED REACTIONS

JT	1ST LCASE COMBINED	MAX./MIN. COMPONENT REACTIONS SNOW	LIVE	PERM.LIVE	WIND	DEAD	SOIL
4	272	190 / 0	0 / 0	0 / 0	0 / 0	82 / 0	0 / 0
6	272	190 / 0	0 / 0	0 / 0	0 / 0	82 / 0	0 / 0

BEARING MATERIAL TO BE SPF NO.2 OR BETTER AT JOINT(S) 4, 6

BRACING

TOP CHORD TO BE SHEATHED OR MAX. PURLIN SPACING = 6.25 FT.
MAX. UNBRACED BOTTOM CHORD LENGTH = 10.00 FT. OR RIGID CEILING DIRECTLY APPLIED.

ALL PITCH BREAKS AND PERIMETER CORNER JOINTS MUST BE LATERALLY RESTRAINED.

LOADING

TOTAL LOAD CASES: (4)

CHORDS

MEMB. FR-TO	MAX. FACTORED FORCE (LBS)	FACTORED VERT. LOAD (PLF) FROM	TO	LC1 MAX CSI (LC)	MAX. UNBRAC LENGTH
1- 2	-238 / 0	-77.3	-77.3	0.20 (1)	6.25
2- 3	0 / 0	-77.3	-77.3	0.17 (1)	10.00
4- 3	-140 / 0	0.0	0.0	0.04 (1)	7.81
6- 1	-354 / 0	0.0	0.0	0.04 (1)	7.81
6- 5	0 / 0	-17.5	-17.5	0.09 (4)	10.00
5- 4	0 / 199	-17.5	-17.5	0.10 (4)	10.00

WEBS

MEMB. FR-TO	MAX. FACTORED FORCE (LBS)	MAX CSI (LC)
5- 2	0 / 85	0.03 (4)
2- 4	-301 / 0	0.14 (1)
1- 5	0 / 203	0.05 (1)

DESIGN CRITERIA

SPECIFIED LOADS:

TOP	CH.	LL	=	23.3	PSF
		DL	=	3.0	PSF
BOT	CH.	LL	=	0.0	PSF
		DL	=	7.0	PSF
TOTAL	LOAD		=	33.3	PSF

SPACING = 24.0 IN. C/C

LOADING IN FLAT SECTION BASED ON A SLOPE OF 2.00/12 MINIMUM

THIS TRUSS IS DESIGNED FOR RESIDENTIAL OR SMALL BUILDING REQUIREMENTS OF PART 9, NBCC 2010

THIS DESIGN COMPLIES WITH:
- PART 9 OF OBC 2012 , BCBC 2012 , ABC 2014
- CSA 086-09
- TPIC 2011

(55 % OF 27.2 P.S.F. G.S.L. PLUS 8.4 P.S.F. RAIN LOAD) EQUALS 23.3 P.S.F. SPECIFIED ROOF LIVE LOAD

ALLOWABLE DEFL.(LL)= L/360 (0.27")
CALCULATED VERT. DEFL.(LL) = L/ 999 (0.00")
ALLOWABLE DEFL.(TL)= L/360 (0.27")
CALCULATED VERT. DEFL.(TL) = L/ 999 (0.01")

CSI: TC=0.20 (1-2:1) , BC=0.10 (4-5:4) , WB=0.14 (2-4:1) , SSI=0.11 (1-2:1)

DOL LUMBER=1.00 NAIL=1.00 LS BEND=1.10 COMP=1.10 SHEAR=1.10 TENS= 1.10

COMPANION LIVE LOAD FACTOR = 0.50

TRUSS PLATE MANUFACTURER IS NOT RESPONSIBLE FOR QUALITY CONTROL IN THE TRUSS MANUFACTURING PLANT .

NAIL VALUES

PLATE	GRIP(DRY) (PSI) MAX	MIN	SHEAR (PLI) MAX	MIN	SECTION (PLI) MAX	MIN
MT20	618	354	1667	822	2284	1656

PLATE PLACEMENT TOL. = 0.250 inches

PLATE ROTATION TOL. = 5.0 Deg.

JSI GRIP= 0.55 (2) (INPUT = 0.90)
JSI METAL= 0.10 (1) (INPUT = 1.00)

RECEIVED
TOWN OF MILTON
MAR 29, 2017
17-4967
BUILDING DIVISION

10 MAR 2017

KOTT

JOB NAME	TRUSS NAME	QUANTITY	PLY	JOB DESC.	DRWG NO.
CC0317-045	**T44**	**1**	**1**	TRUSS DESC. GREENPARK-LECCO RIDGE-BLOCK 325	

KOTT , Stouffville, ON, CGC

Version 8.100 S Jan 17 2017 MiTek Industries, Inc. Fri Mar 10 13:59:44 2017 Page 1
ID:ROua3U0CylZcrhsEOCClEDyLKB3-zwmaIa4yCFnh4ReCVw960srk9czocx48h4_X2gzcJdT

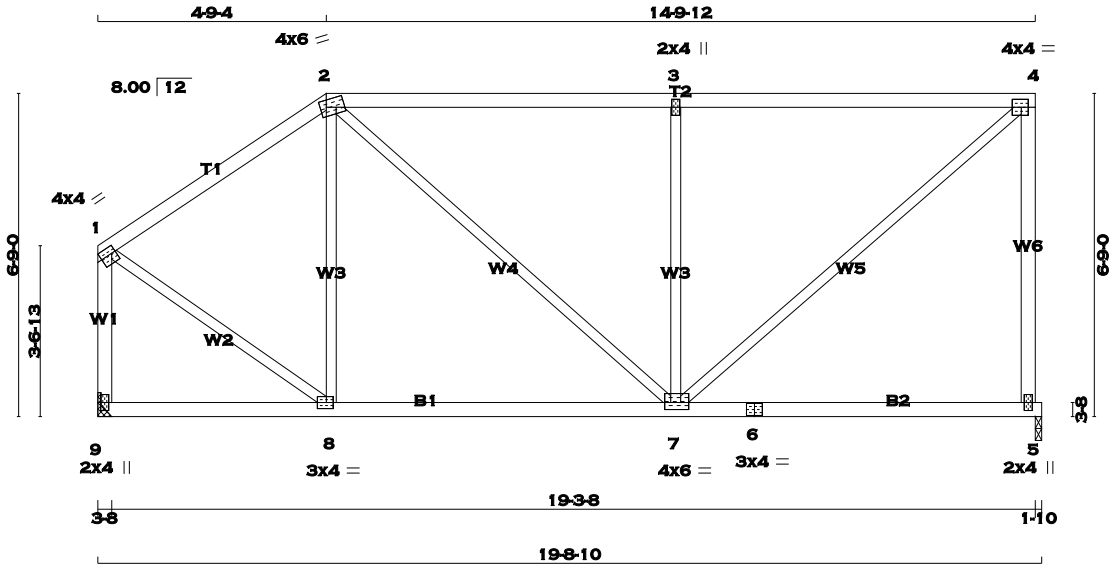

TOTAL WEIGHT = 86 lb
[M]

LUMBER
N. L. G. A. RULES

CHORDS	SIZE		LUMBER	DESCR.
1 - 2	2x4	DRY	No.2	SPF
2 - 4	2x4	DRY	No.2	SPF
5 - 4	2x4	DRY	No.2	SPF
9 - 1	2x4	DRY	No.2	SPF
9 - 6	2x4	DRY	No.2	SPF
6 - 5	2x4	DRY	No.2	SPF
ALL WEBS EXCEPT	2x3	DRY	No.2	SPF

DRY: SEASONED LUMBER.

PLATES (table is in inches)

JT	TYPE	PLATES	W	LEN	Y	X
1	TMVW-t	MT20	4.0	4.0	1.75	Edge
2	TTWW-m	MT20	4.0	6.0	1.75	1.50
3	TMW+w	MT20	2.0	4.0		
4	TMVW-t	MT20	4.0	4.0	2.00	1.75
5	BMV1+p	MT20	2.0	4.0		
6	BS-t	MT20	3.0	4.0		
7	BMWWW-t	MT20	4.0	6.0	1.75	1.50
8	BMWW-t	MT20	3.0	4.0	1.50	1.75
9	BMV1+p	MT20	2.0	4.0		

Edge - INDICATES REFERENCE CORNER OF PLATE TOUCHES EDGE OF CHORD.

A SIZE FOR SIZE SUBSTITUTION OF MITEK MII20 WITH TEE-LOK TL20 PLATES IS ALLOWED.

READ ALL NOTES ON THIS PAGE AND ON THE ENGINEERING NOTE PAGE ENP-1. THE NOTE PAGE IS AN INTEGRAL PART OF THIS DRAWING AS IT CONTAINS SPECIFICATIONS AND CRITERIA USED IN THE DESIGN OF THIS COMPONENT.

DIMENSIONS, SUPPORTS AND LOADINGS SPECIFIED BY FABRICATOR TO BE VERIFIED BY BUILDING DESIGNER

BEARINGS

JT	FACTORED GROSS REACTION VERT	HORZ	MAXIMUM FACTORED GROSS REACTION DOWN	HORZ	UPLIFT	INPUT BRG IN-SX	REQRD BRG IN-SX
5	929	0	929	0	0	1-10	1-10
9	929	0	929	0	0	HANGER BY OTHERS	
						MIN. SEAT SIZE: 3-8	

UNFACTORED REACTIONS

JT	1ST LCASE COMBINED	MAX./MIN. COMPONENT REACTIONS SNOW	LIVE	PERM.LIVE	WIND	DEAD	SOIL
5	652	456 / 0	0 / 0	0 / 0	0 / 0	196 / 0	0 / 0
9	652	456 / 0	0 / 0	0 / 0	0 / 0	196 / 0	0 / 0

BEARING MATERIAL TO BE SPF NO.2 OR BETTER AT JOINT(S) 5

BRACING
TOP CHORD TO BE SHEATHED OR MAX. PURLIN SPACING = 5.33 FT.
MAX. UNBRACED BOTTOM CHORD LENGTH = 10.00 FT. OR RIGID CEILING DIRECTLY APPLIED.

ALL PITCH BREAKS AND PERIMETER CORNER JOINTS MUST BE LATERALLY RESTRAINED.

LOADING
TOTAL LOAD CASES: (4)

CHORDS

MEMB. FR-TO	MAX. FORCE (LBS)	FACTORED VERT. LOAD (PLF) FROM	TO	MAX CSI (LC)	MAX. UNBRAC LENGTH
1- 2	-643 / 0	-77.3	-77.3	0.32 (1)	6.25
2- 3	-761 / 0	-77.3	-77.3	0.78 (1)	5.33
3- 4	-761 / 0	-77.3	-77.3	0.78 (1)	5.33
5- 4	-876 / 0	0.0	0.0	0.85 (1)	7.81
9- 1	-898 / 0	0.0	0.0	0.19 (1)	7.81
9- 8	0 / 0	-17.5	-17.5	0.13 (4)	10.00
8- 7	0 / 530	-17.5	-17.5	0.28 (4)	10.00
7- 6	0 / 0	-17.5	-17.5	0.24 (4)	10.00
6- 5	0 / 0	-17.5	-17.5	0.24 (4)	10.00

WEBS

MEMB. FR-TO	MAX. FORCE (LBS)	MAX CSI (LC)
8- 2	-243 / 15	0.19 (1)
2- 7	0 / 308	0.07 (1)
7- 3	-712 / 0	0.54 (1)
7- 4	0 / 1004	0.23 (1)
1- 8	0 / 642	0.14 (1)

DESIGN CRITERIA

SPECIFIED LOADS:

TOP	CH.	LL	=	23.3	PSF
		DL	=	3.0	PSF
BOT	CH.	LL	=	0.0	PSF
		DL	=	7.0	PSF
TOTAL	LOAD		=	33.3	PSF

SPACING = 24.0 IN. C/C

LOADING IN FLAT SECTION BASED ON A SLOPE OF 2.00/12 MINIMUM

THIS TRUSS IS DESIGNED FOR RESIDENTIAL OR SMALL BUILDING REQUIREMENTS OF PART 9, NBCC 2010

THIS DESIGN COMPLIES WITH:
- PART 9 OF OBC 2012 , BCBC 2012 , ABC 2014
- CSA 086-09
- TPIC 2011

(55 % OF 27.2 P.S.F. G.S.L. PLUS 8.4 P.S.F. RAIN LOAD) EQUALS 23.3 P.S.F. SPECIFIED ROOF LIVE LOAD

ALLOWABLE DEFL.(LL)= L/360 (0.65")
CALCULATED VERT. DEFL.(LL) = L/ 999 (0.03")
ALLOWABLE DEFL.(TL)= L/360 (0.65")
CALCULATED VERT. DEFL.(TL) = L/ 999 (0.10")

CSI: TC=0.85 (4-5:1) , BC=0.28 (7-8:4) , WB=0.54 (3-7:1) , SSI=0.28 (3-4:1)

DOL LUMBER=1.00 NAIL=1.00 LS BEND=1.10 COMP=1.10 SHEAR=1.10 TENS= 1.10

COMPANION LIVE LOAD FACTOR = 0.50

TRUSS PLATE MANUFACTURER IS NOT RESPONSIBLE FOR QUALITY CONTROL IN THE TRUSS MANUFACTURING PLANT .

NAIL VALUES

PLATE	GRIP(DRY) (PSI) MAX	MIN	SHEAR (PLI) MAX	MIN	SECTION (PLI) MAX	MIN
MT20	618	354	1667	822	2284	1656

PLATE PLACEMENT TOL. = 0.250 inches

PLATE ROTATION TOL. = 5.0 Deg.

JSI GRIP= 0.90 (1) (INPUT = 0.90)
JSI METAL= 0.29 (4) (INPUT = 1.00)

RECEIVED
TOWN OF MILTON
MAR 29, 2017
17-4967
BUILDING DIVISION

10 MAR 2017

KOTT

SCALE = 1:54.9

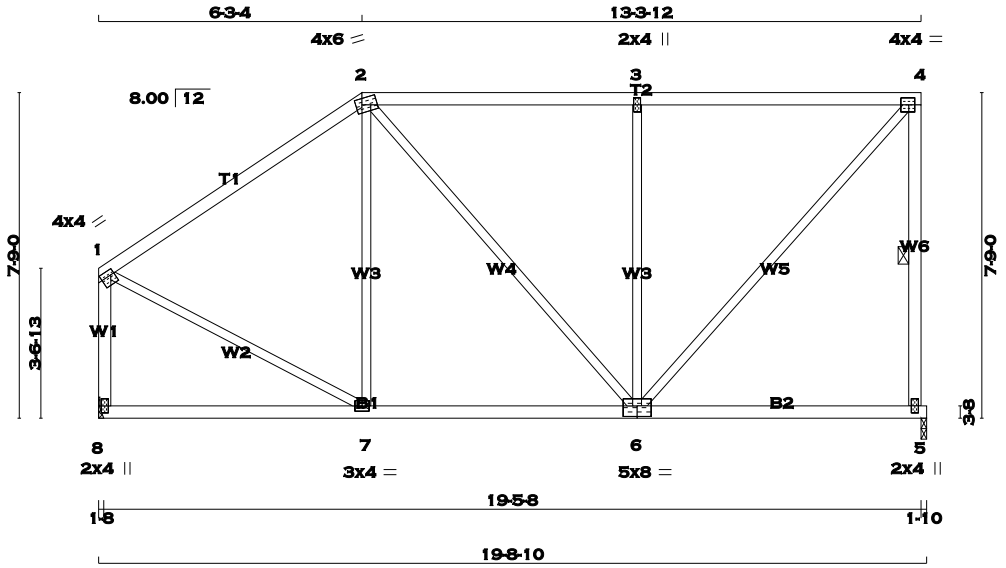

TOTAL WEIGHT = 91 lb [M]

LUMBER

N. L. G. A. RULES

CHORDS	SIZE		LUMBER	DESCR.
1 - 2	2x4	DRY	No.2	SPF
2 - 4	2x4	DRY	No.2	SPF
5 - 4	2x4	DRY	No.2	SPF
8 - 1	2x4	DRY	No.2	SPF
8 - 6	2x4	DRY	No.2	SPF
6 - 5	2x4	DRY	No.2	SPF
ALL WEBS EXCEPT	2x3	DRY	No.2	SPF

DRY: SEASONED LUMBER.

PLATES (table is in inches)

JT	TYPE	PLATES	W	LEN	Y	X
1	TMVW-t	MT20	4.0	4.0	1.50	1.00
2	TTWW-m	MT20	4.0	6.0	1.75	1.75
3	TMW+w	MT20	2.0	4.0		
4	TMVW-t	MT20	4.0	4.0	2.00	1.75
5	BMV1+p	MT20	2.0	4.0		
6	BSWWW-l	MT20	5.0	8.0	3.00	4.00
7	BMWW-t	MT20	3.0	4.0		
8	BMV1+p	MT20	2.0	4.0		

A SIZE FOR SIZE SUBSTITUTION OF MITEK MII20 WITH TEE-LOK TL20 PLATES IS ALLOWED.

READ ALL NOTES ON THIS PAGE AND ON THE ENGINEERING NOTE PAGE ENP-1. THE NOTE PAGE IS AN INTEGRAL PART OF THIS DRAWING AS IT CONTAINS SPECIFICATIONS AND CRITERIA USED IN THE DESIGN OF THIS COMPONENT.

DIMENSIONS, SUPPORTS AND LOADINGS SPECIFIED BY FABRICATOR TO BE VERIFIED BY BUILDING DESIGNER

BEARINGS

JT	FACTORED GROSS REACTION VERT	HORZ	MAXIMUM FACTORED GROSS REACTION DOWN	HORZ	UPLIFT	INPUT BRG IN-SX	REQRD BRG IN-SX
5	929	0	929	0	0	1-10	1-10
8	929	0	929	0	0	HANGER BY OTHERS	
						MIN. SEAT SIZE: 1-8	

UNFACTORED REACTIONS

JT	1ST LCASE COMBINED	MAX./MIN. COMPONENT REACTIONS SNOW	LIVE	PERM.LIVE	WIND	DEAD	SOIL
5	652	456 / 0	0 / 0	0 / 0	0 / 0	196 / 0	0 / 0
8	652	456 / 0	0 / 0	0 / 0	0 / 0	196 / 0	0 / 0

BEARING MATERIAL TO BE SPF NO.2 OR BETTER AT JOINT(S) 5

BRACING

TOP CHORD TO BE SHEATHED OR MAX. PURLIN SPACING = 6.25 FT.
MAX. UNBRACED BOTTOM CHORD LENGTH = 10.00 FT. OR RIGID CEILING DIRECTLY APPLIED.

ALL PITCH BREAKS AND PERIMETER CORNER JOINTS MUST BE LATERALLY RESTRAINED.

1 - 2x3 SPF No.2 LATERAL BRACE(S) AT 1/ 2 LENGTH OF 4-5. DBS = 16-0-0 . CBF = 88 LBS.

DBS = DIAGONAL BRACE SPACING (MAX). CBF = CUMULATIVE BRACING FORCE. FASTEN LATERAL BRACE(S) USING (0.122"X3") SPIRAL NAILS : 1 NAIL FOR 2x3 BRACE(S), 2 FOR 1x4, 2x4, 2x5, 3 FOR 2x6, 4 FOR 2x8, 5 FOR 2x10, AND 6 FOR 2x12.

END VERTICAL(S) MUST BE SHEATHED OR HAVE BRACES AS INDICATED IN THE MAX. UNBRACED LENGTH COLUMN OF THE TABLE BELOW

LOADING

TOTAL LOAD CASES: (4)

CHORDS

MEMB. FR-TO	MAX. FACTORED FORCE (LBS)	FACTORED VERT. LOAD (PLF) FROM	TO	LC1	MAX CSI (LC)	MAX. UNBRAC LENGTH
1- 2	-655 / 0	-77.3	-77.3	0.57	(1)	6.25
2- 3	-617 / 0	-77.3	-77.3	0.61	(1)	6.25
3- 4	-617 / 0	-77.3	-77.3	0.61	(1)	6.25
5- 4	-880 / 0	0.0	0.0	0.24	(1)	6.25
8- 1	-884 / 0	0.0	0.0	0.19	(1)	7.81
8- 7	0 / 0	-17.5	-17.5	0.16	(4)	10.00
7- 6	0 / 542	-17.5	-17.5	0.22	(4)	10.00
6- 5	0 / 0	-17.5	-17.5	0.18	(4)	10.00

WEBS

MEMB. FR-TO	MAX. FACTORED FORCE (LBS)	MAX CSI (LC)
7- 2	-154 / 51	0.17 (1)
2- 6	0 / 113	0.03 (1)
6- 3	-639 / 0	0.71 (1)
6- 4	0 / 918	0.21 (1)
1- 7	0 / 611	0.14 (1)

DESIGN CRITERIA

SPECIFIED LOADS:

TOP	CH.	LL	=	23.3	PSF
		DL	=	3.0	PSF
BOT	CH.	LL	=	0.0	PSF
		DL	=	7.0	PSF
TOTAL	LOAD		=	33.3	PSF

SPACING = 24.0 IN. C/C

LOADING IN FLAT SECTION BASED ON A SLOPE OF 2.00/12 MINIMUM

THIS TRUSS IS DESIGNED FOR RESIDENTIAL OR SMALL BUILDING REQUIREMENTS OF PART 9, NBCC 2010

THIS DESIGN COMPLIES WITH:
- PART 9 OF OBC 2012 , BCBC 2012 , ABC 2014
- CSA 086-09
- TPIC 2011

(55 % OF 27.2 P.S.F. G.S.L. PLUS 8.4 P.S.F. RAIN LOAD) EQUALS 23.3 P.S.F. SPECIFIED ROOF LIVE LOAD

ALLOWABLE DEFL.(LL)= L/360 (0.65")
CALCULATED VERT. DEFL.(LL) = L/ 999 (0.02")
ALLOWABLE DEFL.(TL)= L/360 (0.65")
CALCULATED VERT. DEFL.(TL) = L/ 999 (0.07")

CSI: TC=0.61 (3-4:1) , BC=0.22 (6-7:4) , WB=0.71 (3-6:1) , SSI=0.25 (3-4:1)

DOL LUMBER=1.00 NAIL=1.00 LS BEND=1.10 COMP=1.10 SHEAR=1.10 TENS= 1.10

COMPANION LIVE LOAD FACTOR = 0.50

TRUSS PLATE MANUFACTURER IS NOT RESPONSIBLE FOR QUALITY CONTROL IN THE TRUSS MANUFACTURING PLANT .

NAIL VALUES

PLATE	GRIP(DRY) (PSI) MAX	MIN	SHEAR (PLI) MAX	MIN	SECTION (PLI) MAX	MIN
MT20	618	354	1667	822	2284	1656

PLATE PLACEMENT TOL. = 0.250 inches

PLATE ROTATION TOL. = 5.0 Deg.

JSI GRIP= 0.89 (7) (INPUT = 0.90)
JSI METAL= 0.30 (1) (INPUT = 1.00)

RECEIVED
TOWN OF MILTON
MAR 29, 2017
17-4967
BUILDING DIVISION

10 MAR 2017

KOTT

JOB NAME	TRUSS NAME	QUANTITY	PLY	JOB DESC.	DRWG NO.
CC0317-045	T46	1	1	TRUSS DESC. GREENPARK-LECCO RIDGE-BLOCK 325	

KOTT , Stouffville, ON, CGC

Version 8.100 S Jan 17 2017 MiTek Industries, Inc. Fri Mar 10 13:59:45 2017 Page 1
ID:ROua3U0CyIZcrhsEOCClEDyLKB3-R7KyVv5bzYwXhbDO2dgLZ3O?p0JJLK_Hwkj4b6zcJdS

SCALE = 1:61.9

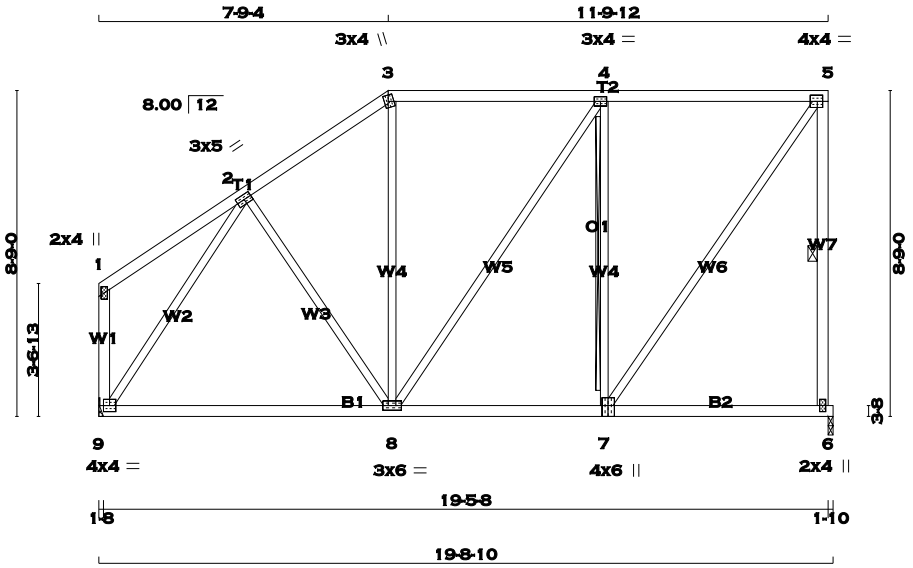

TOTAL WEIGHT = 100 lb
[M]

LUMBER
N. L. G. A. RULES

CHORDS	SIZE		LUMBER	DESCR.
1 - 3	2x4	DRY	No.2	SPF
3 - 5	2x4	DRY	No.2	SPF
6 - 5	2x4	DRY	No.2	SPF
9 - 1	2x4	DRY	No.2	SPF
9 - 7	2x4	DRY	No.2	SPF
7 - 6	2x4	DRY	No.2	SPF
ALL WEBS EXCEPT	2x3	DRY	No.2	SPF

DRY: SEASONED LUMBER.

PLATES (table is in inches)

JT	TYPE	PLATES	W	LEN	Y	X
1	TMV+p	MT20	2.0	4.0		
2	TMWW-t	MT20	3.0	5.0		
3	TTW+m	MT20	3.0	4.0	2.00	1.25
4	TMWW-t	MT20	3.0	4.0		
5	TMVW-t	MT20	4.0	4.0	2.00	1.75
6	BMV1+p	MT20	2.0	4.0		
7	BSWW+l	MT20	4.0	6.0	Edge	2.00
8	BMWWW-t	MT20	3.0	6.0		
9	BMVW1-t	MT20	4.0	4.0		

Edge - INDICATES REFERENCE CORNER OF PLATE TOUCHES EDGE OF CHORD.

A SIZE FOR SIZE SUBSTITUTION OF MITEK MII20 WITH TEE-LOK TL20 PLATES IS ALLOWED.

READ ALL NOTES ON THIS PAGE AND ON THE ENGINEERING NOTE PAGE ENP-1. THE NOTE PAGE IS AN INTEGRAL PART OF THIS DRAWING AS IT CONTAINS SPECIFICATIONS AND CRITERIA USED IN THE DESIGN OF THIS COMPONENT.

DIMENSIONS, SUPPORTS AND LOADINGS SPECIFIED BY FABRICATOR TO BE VERIFIED BY BUILDING DESIGNER

BEARINGS

JT	FACTORED GROSS REACTION VERT	HORZ	MAXIMUM FACTORED GROSS REACTION DOWN	HORZ	UPLIFT	INPUT BRG IN-SX	REQRD BRG IN-SX
6	929	0	929	0	0	1-10	1-10
9	929	0	929	0	0	HANGER BY OTHERS	
						MIN. SEAT SIZE: 1-8	

UNFACTORED REACTIONS

JT	1ST LCASE COMBINED	MAX./MIN. COMPONENT REACTIONS SNOW	LIVE	PERM.LIVE	WIND	DEAD	SOIL
6	652	456 / 0	0 / 0	0 / 0	0 / 0	196 / 0	0 / 0
9	652	456 / 0	0 / 0	0 / 0	0 / 0	196 / 0	0 / 0

BEARING MATERIAL TO BE SPF NO.2 OR BETTER AT JOINT(S) 6

BRACING

TOP CHORD TO BE SHEATHED OR MAX. PURLIN SPACING = 6.25 FT.
MAX. UNBRACED BOTTOM CHORD LENGTH = 10.00 FT. OR RIGID CEILING DIRECTLY APPLIED.

ALL PITCH BREAKS AND PERIMETER CORNER JOINTS MUST BE LATERALLY RESTRAINED.

1 - 2x3 SPF No.2 LATERAL BRACE(S) AT 1/ 2 LENGTH OF 5-6. DBS = 16-0-0 . CBF = 88 LBS.
2x3 SPF No.2 T-BRACE AT 4-7

DBS = DIAGONAL BRACE SPACING (MAX). CBF = CUMULATIVE BRACING FORCE. FASTEN LATERAL BRACE(S) USING (0.122"X3") SPIRAL NAILS : 1 NAIL FOR 2x3 BRACE(S), 2 FOR 1x4, 2x4, 2x5, 3 FOR 2x6, 4 FOR 2x8, 5 FOR 2x10, AND 6 FOR 2x12.

FASTEN T AND I-BRACES TO NARROW EDGE OF WEB WITH ONE ROW PER PLY OF 3" COMMON WIRE NAILS @ 6" O.C. WITH 3" MINIMUM END DISTANCE. BRACE MUST COVER 90% OF WEB LENGTH.

END VERTICAL(S) MUST BE SHEATHED OR HAVE BRACES AS INDICATED IN THE MAX. UNBRACED LENGTH COLUMN OF THE TABLE BELOW

LOADING

TOTAL LOAD CASES: (4)

CHORDS MEMB. FR-TO	MAX. FACTORED FORCE (LBS)	FACTORED VERT. LOAD LC1 (PLF) FROM	TO	MAX CSI (LC)	MAX. UNBRAC LENGTH	WEBS MEMB. FR-TO	MAX. FACTORED FORCE (LBS)	MAX CSI (LC)
1- 2	0 / 19	-77.3	-77.3	0.19 (1)	10.00	2- 8	0 / 58	0.02 (4)
2- 3	-653 / 0	-77.3	-77.3	0.20 (1)	6.25	8- 3	0 / 79	0.03 (4)
3- 4	-527 / 0	-77.3	-77.3	0.47 (1)	6.25	8- 4	0 / 45	0.01 (4)
4- 5	-502 / 0	-77.3	-77.3	0.47 (1)	6.25	7- 4	-604 / 0	0.74 (1)
6- 5	-884 / 0	0.0	0.0	0.31 (1)	6.25	7- 5	0 / 866	0.19 (1)
9- 1	-116 / 0	0.0	0.0	0.02 (1)	7.81	9- 2	-908 / 0	0.82 (1)
9- 8	0 / 505	-17.5	-17.5	0.26 (4)	10.00			
8- 7	0 / 502	-17.5	-17.5	0.26 (4)	10.00			
7- 6	0 / 0	-17.5	-17.5	0.13 (4)	10.00			

DESIGN CRITERIA

SPECIFIED LOADS:

TOP	CH.	LL	=	23.3	PSF
		DL	=	3.0	PSF
BOT	CH.	LL	=	0.0	PSF
		DL	=	7.0	PSF
TOTAL	LOAD		=	33.3	PSF

SPACING = 24.0 IN. C/C

LOADING IN FLAT SECTION BASED ON A SLOPE OF 2.00/12 MINIMUM

THIS TRUSS IS DESIGNED FOR RESIDENTIAL OR SMALL BUILDING REQUIREMENTS OF PART 9, NBCC 2010

THIS DESIGN COMPLIES WITH:
- PART 9 OF OBC 2012 , BCBC 2012 , ABC 2014
- CSA 086-09
- TPIC 2011

(55 % OF 27.2 P.S.F. G.S.L. PLUS 8.4 P.S.F. RAIN LOAD) EQUALS 23.3 P.S.F. SPECIFIED ROOF LIVE LOAD

ALLOWABLE DEFL.(LL)= L/360 (0.65")
CALCULATED VERT. DEFL.(LL) = L/ 999 (0.02")
ALLOWABLE DEFL.(TL)= L/360 (0.65")
CALCULATED VERT. DEFL.(TL) = L/ 999 (0.12")

CSI: TC=0.47 (4-5:1) , BC=0.26 (7-8:4) , WB=0.82 (2-9:1) , SSI=0.22 (4-5:1)

DOL LUMBER=1.00 NAIL=1.00 LS BEND=1.10 COMP=1.10 SHEAR=1.10 TENS= 1.10

COMPANION LIVE LOAD FACTOR = 0.50

TRUSS PLATE MANUFACTURER IS NOT RESPONSIBLE FOR QUALITY CONTROL IN THE TRUSS MANUFACTURING PLANT .

NAIL VALUES

PLATE	GRIP(DRY) (PSI) MAX	MIN	SHEAR (PLI) MAX	MIN	SECTION (PLI) MAX	MIN
MT20	618	354	1667	822	2284	1656

PLATE PLACEMENT TOL. = 0.250 inches

PLATE ROTATION TOL. = 5.0 Deg.

JSI GRIP= 0.90 (2) (INPUT = 0.90)
JSI METAL= 0.25 (2) (INPUT = 1.00)

RECEIVED
TOWN OF MILTON
MAR 29, 2017
17-4967
BUILDING DIVISION

10 MAR 2017

KOTT

JOB NAME	TRUSS NAME	QUANTITY	PLY	JOB DESC.	DRWG NO.
CC0317-045	T47	1	1	TRUSS DESC. GREENPARK-LECCO RIDGE-BLOCK 325	

KOTT , Stouffville, ON, CGC

Version 8.100 S Jan 17 2017 MiTek Industries, Inc. Fri Mar 10 13:59:45 2017 Page 1
ID:ROua3U0CyIZcrhsEOCClEDyLKB3-R7KyVv5bzYwXhbDO2dgLZ3O0o0L2LStHwkj4b6zcJdS

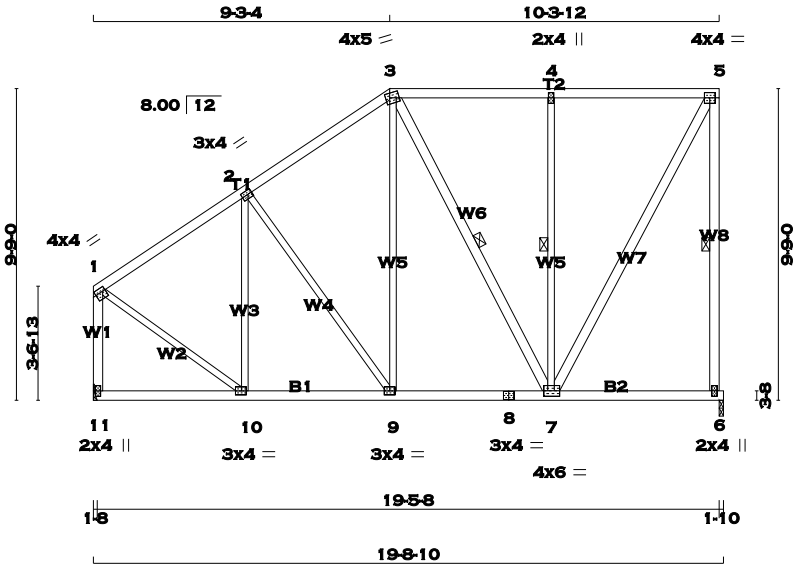

TOTAL WEIGHT = 115 lb
[M]

LUMBER
N. L. G. A. RULES

CHORDS	SIZE		LUMBER	DESCR.
1 - 3	2x4	DRY	No.2	SPF
3 - 5	2x4	DRY	No.2	SPF
6 - 5	2x4	DRY	No.2	SPF
11 - 1	2x4	DRY	No.2	SPF
11 - 8	2x4	DRY	No.2	SPF
8 - 6	2x4	DRY	No.2	SPF
ALL WEBS	2x3	DRY	No.2	SPF
EXCEPT				
3 - 7	2x4	DRY	No.2	SPF
7 - 5	2x4	DRY	No.2	SPF

DRY: SEASONED LUMBER.

PLATES (table is in inches)

JT	TYPE	PLATES	W	LEN	Y	X
1	TMVW-t	MT20	4.0	4.0	1.50	1.00
2	TMWW-t	MT20	3.0	4.0	1.50	1.50
3	TTWW-m	MT20	4.0	5.0	1.75	1.50
4	TMW+w	MT20	2.0	4.0		
5	TMVW-t	MT20	4.0	4.0		
6	BMV1+p	MT20	2.0	4.0		
7	BMWWW-t	MT20	4.0	6.0	2.00	1.50
8	BS-t	MT20	3.0	4.0		
9	BMWW-t	MT20	3.0	4.0		
10	BMWW-t	MT20	3.0	4.0	1.50	1.75
11	BMV1+p	MT20	2.0	4.0		

A SIZE FOR SIZE SUBSTITUTION OF MITEK MII20 WITH TEE-LOK TL20 PLATES IS ALLOWED.

READ ALL NOTES ON THIS PAGE AND ON THE ENGINEERING NOTE PAGE ENP-1. THE NOTE PAGE IS AN INTEGRAL PART OF THIS DRAWING AS IT CONTAINS SPECIFICATIONS AND CRITERIA USED IN THE DESIGN OF THIS COMPONENT.

DIMENSIONS, SUPPORTS AND LOADINGS SPECIFIED BY FABRICATOR TO BE VERIFIED BY BUILDING DESIGNER

BEARINGS

JT	FACTORED GROSS REACTION VERT	HORZ	MAXIMUM FACTORED GROSS REACTION DOWN	HORZ	UPLIFT	INPUT BRG IN-SX	REQRD BRG IN-SX
6	929	0	929	0	0	1-10	1-10
11	929	0	929	0	0	HANGER BY OTHERS	
						MIN. SEAT SIZE: 1-8	

UNFACTORED REACTIONS

JT	1ST LCASE COMBINED	MAX./MIN. COMPONENT REACTIONS SNOW	LIVE	PERM.LIVE	WIND	DEAD	SOIL
6	652	456 / 0	0 / 0	0 / 0	0 / 0	196 / 0	0 / 0
11	652	456 / 0	0 / 0	0 / 0	0 / 0	196 / 0	0 / 0

BEARING MATERIAL TO BE SPF NO.2 OR BETTER AT JOINT(S) 6

BRACING
TOP CHORD TO BE SHEATHED OR MAX. PURLIN SPACING = 6.25 FT.
MAX. UNBRACED BOTTOM CHORD LENGTH = 10.00 FT. OR RIGID CEILING DIRECTLY APPLIED.

ALL PITCH BREAKS AND PERIMETER CORNER JOINTS MUST BE LATERALLY RESTRAINED.

1 - 2x3 SPF No.2 LATERAL BRACE(S) AT 1/ 2 LENGTH OF 5-6. DBS = 16-0-0 . CBF = 89 LBS.
1 - 2x3 SPF No.2 LATERAL BRACE(S) AT 1/ 2 LENGTH OF 3-7, 4-7. DBS = 20-0-0 . CBF = 62 LBS.

DBS = DIAGONAL BRACE SPACING (MAX). CBF = CUMULATIVE BRACING FORCE. FASTEN LATERAL BRACE(S) USING (0.122"X3") SPIRAL NAILS : 1 NAIL FOR 2x3 BRACE(S), 2 FOR 1x4, 2x4, 2x5, 3 FOR 2x6, 4 FOR 2x8, 5 FOR 2x10, AND 6 FOR 2x12.

END VERTICAL(S) MUST BE SHEATHED OR HAVE BRACES AS INDICATED IN THE MAX. UNBRACED LENGTH COLUMN OF THE TABLE BELOW

LOADING
TOTAL LOAD CASES: (4)

CHORDS

MEMB. FR-TO	MAX. FACTORED FORCE (LBS)	FACTORED VERT. LOAD LC1 (PLF) FROM	TO	MAX CSI (LC)	MAX. UNBRAC LENGTH
1- 2	-647 / 0	-77.3	-77.3	0.29 (1)	6.25
2- 3	-604 / 0	-77.3	-77.3	0.29 (1)	6.25
3- 4	-408 / 0	-77.3	-77.3	0.35 (1)	6.25
4- 5	-409 / 0	-77.3	-77.3	0.35 (1)	6.25
6- 5	-891 / 0	0.0	0.0	0.41 (1)	6.25
11- 1	-895 / 0	0.0	0.0	0.19 (1)	7.81
11-10	0 / 0	-17.5	-17.5	0.09 (4)	10.00
10- 9	0 / 558	-17.5	-17.5	0.14 (1)	10.00
9- 8	0 / 483	-17.5	-17.5	0.15 (4)	10.00
8- 7	0 / 483	-17.5	-17.5	0.15 (4)	10.00
7- 6	0 / 0	-17.5	-17.5	0.12 (4)	10.00

WEBS

MEMB. FR-TO	MAX. FACTORED FORCE (LBS)	MAX CSI (LC)
10- 2	-290 / 0	0.22 (1)
2- 9	-131 / 0	0.17 (1)
9- 3	0 / 184	0.04 (1)
3- 7	-158 / 0	0.10 (1)
7- 4	-494 / 0	0.31 (1)
7- 5	0 / 841	0.14 (1)
1-10	0 / 676	0.15 (1)

DESIGN CRITERIA

SPECIFIED LOADS:

TOP	CH.	LL	=	23.3	PSF
		DL	=	3.0	PSF
BOT	CH.	LL	=	0.0	PSF
		DL	=	7.0	PSF
TOTAL	LOAD		=	33.3	PSF

SPACING = 24.0 IN. C/C

LOADING IN FLAT SECTION BASED ON A SLOPE OF 2.00/12 MINIMUM

THIS TRUSS IS DESIGNED FOR RESIDENTIAL OR SMALL BUILDING REQUIREMENTS OF PART 9, NBCC 2010

THIS DESIGN COMPLIES WITH:
- PART 9 OF OBC 2012 , BCBC 2012 , ABC 2014
- CSA 086-09
- TPIC 2011

(55 % OF 27.2 P.S.F. G.S.L. PLUS 8.4 P.S.F. RAIN LOAD) EQUALS 23.3 P.S.F. SPECIFIED ROOF LIVE LOAD

ALLOWABLE DEFL.(LL)= L/360 (0.65")
CALCULATED VERT. DEFL.(LL) = L/ 999 (0.02")
ALLOWABLE DEFL.(TL)= L/360 (0.65")
CALCULATED VERT. DEFL.(TL) = L/ 999 (0.04")

CSI: TC=0.41 (5-6:1) , BC=0.15 (7-9:4) , WB=0.31 (4-7:1) , SSI=0.20 (4-5:1)

DOL LUMBER=1.00 NAIL=1.00 LS BEND=1.10 COMP=1.10 SHEAR=1.10 TENS= 1.10

COMPANION LIVE LOAD FACTOR = 0.50

TRUSS PLATE MANUFACTURER IS NOT RESPONSIBLE FOR QUALITY CONTROL IN THE TRUSS MANUFACTURING PLANT .

NAIL VALUES

PLATE	GRIP(DRY) (PSI) MAX	MIN	SHEAR (PLI) MAX	MIN	SECTION (PLI) MAX	MIN
MT20	618	354	1667	822	2284	1656

PLATE PLACEMENT TOL. = 0.250 inches

PLATE ROTATION TOL. = 5.0 Deg.

JSI GRIP= 0.90 (10) (INPUT = 0.90)
JSI METAL= 0.28 (1) (INPUT = 1.00)

10 MAR 2017

RECEIVED
TOWN OF MILTON
MAR 29, 2017
17-4967
BUILDING DIVISION

KOTT

JOB NAME	TRUSS NAME	QUANTITY	PLY	JOB DESC.	DRWG NO.
CC0317-045	T48	1	1	TRUSS DESC. GREENPARK-LECCO RIDGE-BLOCK 325	ENG JOB: CC0317-045

KOTT , Stouffville, ON, CGC

Version 8.100 S Jan 17 2017 MiTek Industries, Inc. Fri Mar 10 13:59:46 2017 Page 1
ID:ROua3U0CyIZcrhsEOCClEDyLKB3-vJuKjF6Dks2OJloacLBa5Hx9iQgw4uyR9OTd7ZzcJdR

SCALE = 1:79.5

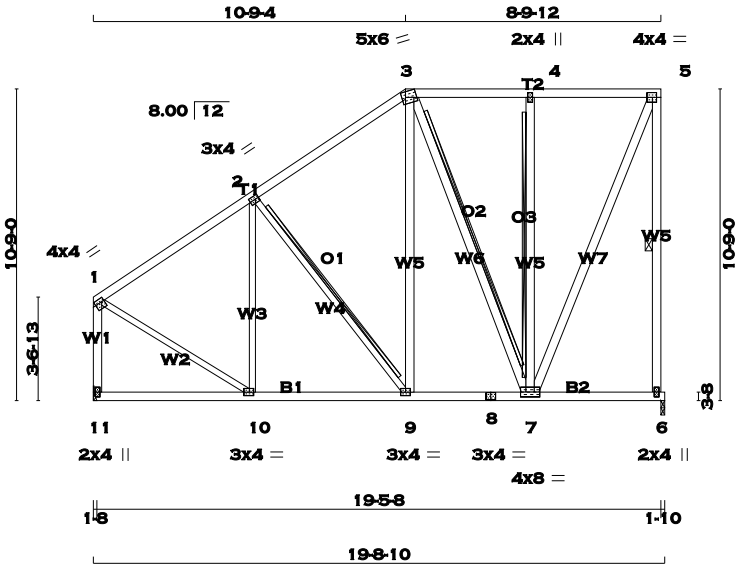

TOTAL WEIGHT = 128 lb

[M][F]

LUMBER

N. L. G. A. RULES

CHORDS	SIZE		LUMBER	DESCR.
1 - 3	2x4	DRY	No.2	SPF
3 - 5	2x4	DRY	No.2	SPF
6 - 5	2x4	DRY	No.2	SPF
11 - 1	2x4	DRY	No.2	SPF
11 - 8	2x4	DRY	No.2	SPF
8 - 6	2x4	DRY	No.2	SPF
ALL WEBS EXCEPT	2x4	DRY	No.2	SPF
10 - 2	2x3	DRY	No.2	SPF
2 - 9	2x3	DRY	No.2	SPF
1 - 10	2x3	DRY	No.2	SPF

DRY: SEASONED LUMBER.

PLATES (table is in inches)

JT	TYPE	PLATES	W	LEN	Y	X
1	TMVW-t	MT20	4.0	4.0	1.50	1.00
2	TMWW-t	MT20	3.0	4.0	1.50	1.50
3	TTWW-m	MT20	5.0	6.0	2.25	1.50
4	TMW+w	MT20	2.0	4.0		
5	TMVW-t	MT20	4.0	4.0	2.00	1.75
6	BMV1+p	MT20	2.0	4.0		
7	BMWWW-t	MT20	4.0	8.0		
8	BS-t	MT20	3.0	4.0		
9	BMWW-t	MT20	3.0	4.0		
10	BMWW-t	MT20	3.0	4.0	1.50	1.75
11	BMV1+p	MT20	2.0	4.0		

A SIZE FOR SIZE SUBSTITUTION OF MITEK MII20 WITH TEE-LOK TL20 PLATES IS ALLOWED.

READ ALL NOTES ON THIS PAGE AND ON THE ENGINEERING NOTE PAGE ENP-1. THE NOTE PAGE IS AN INTEGRAL PART OF THIS DRAWING AS IT CONTAINS SPECIFICATIONS AND CRITERIA USED IN THE DESIGN OF THIS COMPONENT.

DIMENSIONS, SUPPORTS AND LOADINGS SPECIFIED BY FABRICATOR TO BE VERIFIED BY BUILDING DESIGNER

BEARINGS

JT	FACTORED GROSS REACTION VERT	HORZ	MAXIMUM FACTORED GROSS REACTION DOWN	HORZ	UPLIFT	INPUT BRG IN-SX	REQRD BRG IN-SX
6	929	0	929	0	0	1-10	1-10
11	929	0	929	0	0	HANGER BY OTHERS	
						MIN. SEAT SIZE: 1-8	

UNFACTORED REACTIONS

JT	1ST LCASE COMBINED	SNOW	MAX./MIN. COMPONENT REACTIONS LIVE	PERM.LIVE	WIND	DEAD	SOIL
6	652	456 / 0	0 / 0	0 / 0	0 / 0	196 / 0	0 / 0
11	652	456 / 0	0 / 0	0 / 0	0 / 0	196 / 0	0 / 0

BEARING MATERIAL TO BE SPF NO.2 OR BETTER AT JOINT(S) 6

BRACING

TOP CHORD TO BE SHEATHED OR MAX. PURLIN SPACING = 6.25 FT.
MAX. UNBRACED BOTTOM CHORD LENGTH = 10.00 FT. OR RIGID CEILING DIRECTLY APPLIED.

ALL PITCH BREAKS AND PERIMETER CORNER JOINTS MUST BE LATERALLY RESTRAINED.

1 - 2x3 SPF No.2 LATERAL BRACE(S) AT 1/ 2 LENGTH OF 5-6. DBS = 16-0-0 . CBF = 90 LBS.
2x3 SPF No.2 T-BRACE AT 2-9
2x4 SPF No.2 T-BRACE AT 3-7, 4-7

DBS = DIAGONAL BRACE SPACING (MAX). CBF = CUMULATIVE BRACING FORCE. FASTEN LATERAL BRACE(S) USING (0.122"X3") SPIRAL NAILS : 1 NAIL FOR 2x3 BRACE(S), 2 FOR 1x4, 2x4, 2x5, 3 FOR 2x6, 4 FOR 2x8, 5 FOR 2x10, AND 6 FOR 2x12.

FASTEN T AND I-BRACES TO NARROW EDGE OF WEB WITH ONE ROW PER PLY OF 3" COMMON WIRE NAILS @ 6" O.C. WITH 3" MINIMUM END DISTANCE. BRACE MUST COVER 90% OF WEB LENGTH.

END VERTICAL(S) MUST BE SHEATHED OR HAVE BRACES AS INDICATED IN THE MAX. UNBRACED LENGTH COLUMN OF THE TABLE BELOW

LOADING

TOTAL LOAD CASES: (4)

CHORDS

MEMB. FR-TO	MAX. FACTORED FORCE (LBS)	FACTORED VERT. LOAD (PLF) FROM	TO	LC1	MAX CSI (LC)	MAX. UNBRAC LENGTH
1- 2	-668 / 0	-77.3	-77.3	0.30 (1)	6.25	
2- 3	-547 / 0	-77.3	-77.3	0.29 (1)	6.25	
3- 4	-328 / 0	-77.3	-77.3	0.19 (1)	6.25	
4- 5	-328 / 0	-77.3	-77.3	0.19 (1)	6.25	
6- 5	-895 / 0	0.0	0.0	0.52 (1)	6.25	
11- 1	-890 / 0	0.0	0.0	0.19 (1)	7.81	
11-10	0 / 0	-17.5	-17.5	0.13 (4)	10.00	
10- 9	0 / 579	-17.5	-17.5	0.17 (4)	10.00	
9- 8	0 / 434	-17.5	-17.5	0.11 (4)	10.00	
8- 7	0 / 434	-17.5	-17.5	0.11 (4)	10.00	
7- 6	0 / 0	-17.5	-17.5	0.08 (4)	10.00	

WEBS

MEMB. FR-TO	MAX. FACTORED FORCE (LBS)	MAX CSI (LC)
10- 2	-232 / 24	0.21 (1)
2- 9	-240 / 0	0.32 (1)
9- 3	0 / 268	0.04 (1)
3- 7	-279 / 0	0.26 (1)
7- 4	-421 / 0	0.33 (1)
7- 5	0 / 828	0.13 (1)
1-10	0 / 672	0.15 (1)

DESIGN CRITERIA

SPECIFIED LOADS:

TOP	CH.	LL	=	23.3	PSF
		DL	=	3.0	PSF
BOT	CH.	LL	=	0.0	PSF
		DL	=	7.0	PSF
TOTAL	LOAD		=	33.3	PSF

SPACING = 24.0 IN. C/C

LOADING IN FLAT SECTION BASED ON A SLOPE OF 2.00/12 MINIMUM

THIS TRUSS IS DESIGNED FOR RESIDENTIAL OR SMALL BUILDING REQUIREMENTS OF PART 9, NBCC 2010

THIS DESIGN COMPLIES WITH:
- PART 9 OF OBC 2012 , BCBC 2012 , ABC 2014
- CSA 086-09
- TPIC 2011

(55 % OF 27.2 P.S.F. G.S.L. PLUS 8.4 P.S.F. RAIN LOAD) EQUALS 23.3 P.S.F. SPECIFIED ROOF LIVE LOAD

ALLOWABLE DEFL.(LL)= L/360 (0.65")
CALCULATED VERT. DEFL.(LL) = L/ 999 (0.02")
ALLOWABLE DEFL.(TL)= L/360 (0.65")
CALCULATED VERT. DEFL.(TL) = L/ 999 (0.04")

CSI: TC=0.52 (5-6:1) , BC=0.17 (9-10:4) , WB=0.33 (4-7:1) , SSI=0.17 (1-2:1)

DOL LUMBER=1.00 NAIL=1.00 LS BEND=1.10 COMP=1.10 SHEAR=1.10 TENS= 1.10

COMPANION LIVE LOAD FACTOR = 0.50

TRUSS PLATE MANUFACTURER IS NOT RESPONSIBLE FOR QUALITY CONTROL IN THE TRUSS MANUFACTURING PLANT .

NAIL VALUES

PLATE	GRIP(DRY) (PSI) MAX	MIN	SHEAR (PLI) MAX	MIN	SECTION (PLI) MAX	MIN
MT20	618	354	1667	822	2284	1656

PLATE PLACEMENT TOL. = 0.250 inches

PLATE ROTATION TOL. = 5.0 Deg.

JSI GRIP= 0.90 (10) (INPUT = 0.90)
JSI METAL= 0.29 (1) (INPUT = 1.00)

RECEIVED
TOWN OF MILTON
MAR 29, 2017
17-4967
BUILDING DIVISION

10 MAR 2017

KOTT

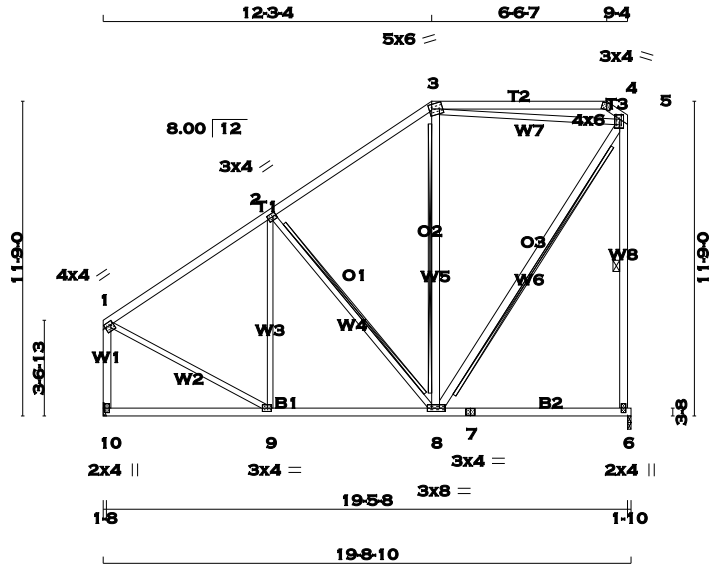

SCALE = 1:86.0

TOTAL WEIGHT = 115 lb

[M][F]

LUMBER

N. L. G. A. RULES

CHORDS	SIZE		LUMBER	DESCR.
1 - 3	2x4	DRY	No.2	SPF
3 - 4	2x4	DRY	No.2	SPF
4 - 5	2x4	DRY	No.2	SPF
10 - 1	2x4	DRY	No.2	SPF
6 - 5	2x4	DRY	No.2	SPF
10 - 7	2x4	DRY	No.2	SPF
7 - 6	2x4	DRY	No.2	SPF
ALL WEBS EXCEPT	2x3	DRY	No.2	SPF
8 - 3	2x4	DRY	No.2	SPF
8 - 5	2x4	DRY	No.2	SPF

DRY: SEASONED LUMBER.

PLATES (table is in inches)

JT	TYPE	PLATES	W	LEN	Y	X
1	TMVW-t	MT20	4.0	4.0	1.50	1.00
2	TMWW-t	MT20	3.0	4.0	1.50	1.50
3	TTWW-m	MT20	5.0	6.0	2.00	1.25
4	TT-m	MT20	3.0	4.0	Edge	
5	TMVWW+p	MT20	4.0	6.0	2.00	1.75
6	BMV1+p	MT20	2.0	4.0		
7	BS-t	MT20	3.0	4.0		
8	BMWWW-t	MT20	3.0	8.0	1.50	2.00
9	BMWW-t	MT20	3.0	4.0	1.50	1.75
10	BMV1+p	MT20	2.0	4.0		

Edge - INDICATES REFERENCE CORNER OF PLATE TOUCHES EDGE OF CHORD.

A SIZE FOR SIZE SUBSTITUTION OF MITEK MII20 WITH TEE-LOK TL20 PLATES IS ALLOWED.

READ ALL NOTES ON THIS PAGE AND ON THE ENGINEERING NOTE PAGE ENP-1. THE NOTE PAGE IS AN INTEGRAL PART OF THIS DRAWING AS IT CONTAINS SPECIFICATIONS AND CRITERIA USED IN THE DESIGN OF THIS COMPONENT.

DIMENSIONS, SUPPORTS AND LOADINGS SPECIFIED BY FABRICATOR TO BE VERIFIED BY BUILDING DESIGNER

BEARINGS

JT	FACTORED GROSS REACTION VERT	HORZ	MAXIMUM FACTORED GROSS REACTION DOWN	HORZ	UPLIFT	INPUT BRG IN-SX	REQRD BRG IN-SX
10	929	0	929	0	0	HANGER BY OTHERS	
						MIN. SEAT SIZE: 1-8	
6	929	0	929	0	0	1-10	1-10

UNFACTORED REACTIONS

JT	1ST LCASE COMBINED	SNOW	MAX./MIN. COMPONENT REACTIONS LIVE	PERM.LIVE	WIND	DEAD	SOIL
10	652	456 / 0	0 / 0	0 / 0	0 / 0	196 / 0	0 / 0
6	652	456 / 0	0 / 0	0 / 0	0 / 0	196 / 0	0 / 0

BEARING MATERIAL TO BE SPF NO.2 OR BETTER AT JOINT(S) 6

BRACING

TOP CHORD TO BE SHEATHED OR MAX. PURLIN SPACING = 6.25 FT.
MAX. UNBRACED BOTTOM CHORD LENGTH = 10.00 FT. OR RIGID CEILING DIRECTLY APPLIED.

ALL PITCH BREAKS AND PERIMETER CORNER JOINTS MUST BE LATERALLY RESTRAINED.

1 - 2x3 SPF No.2 LATERAL BRACE(S) AT 1/ 2 LENGTH OF 5-6. DBS = 16-0-0 . CBF = 88 LBS.
2x4 SPF No.2 T-BRACE AT 2-8, 3-8
2x3 SPF No.2 T-BRACE AT 5-8

DBS = DIAGONAL BRACE SPACING (MAX). CBF = CUMULATIVE BRACING FORCE. FASTEN LATERAL BRACE(S) USING (0.122"X3") SPIRAL NAILS : 1 NAIL FOR 2x3 BRACE(S), 2 FOR 1x4, 2x4, 2x5, 3 FOR 2x6, 4 FOR 2x8, 5 FOR 2x10, AND 6 FOR 2x12.

FASTEN T AND I-BRACES TO NARROW EDGE OF WEB WITH ONE ROW PER PLY OF 3" COMMON WIRE NAILS @ 6" O.C. WITH 3" MINIMUM END DISTANCE. BRACE MUST COVER 90% OF WEB LENGTH.

END VERTICAL(S) MUST BE SHEATHED OR HAVE BRACES AS INDICATED IN THE MAX. UNBRACED LENGTH COLUMN OF THE TABLE BELOW

LOADING

TOTAL LOAD CASES: (4)

CHORDS MEMB. FR-TO	MAX. FACTORED FORCE (LBS)	FACTORED VERT. LOAD (PLF) FROM	TO	LC1 MAX CSI (LC)	MAX. UNBRAC LENGTH	WEBS MEMB. FR-TO	MAX. FACTORED FORCE (LBS)	MAX CSI (LC)
1- 2	-677 / 0	-77.3	-77.3	0.40 (1)	6.25	9- 2	-192 / 39	0.21 (1)
2- 3	-484 / 0	-77.3	-77.3	0.38 (1)	6.25	2- 8	-335 / 0	0.25 (1)
3- 4	-412 / 0	-77.3	-77.3	0.42 (1)	6.25	8- 3	-178 / 37	0.18 (1)
4- 5	-500 / 0	-77.3	-77.3	0.01 (1)	6.25	1- 9	0 / 665	0.15 (1)
10- 1	-884 / 0	0.0	0.0	0.19 (1)	7.81	3- 5	-72 / 40	0.07 (4)
6- 5	-877 / 0	0.0	0.0	0.60 (1)	6.25	8- 5	0 / 679	0.11 (1)
10- 9	0 / 0	-17.5	-17.5	0.14 (4)	10.00			
9- 8	0 / 590	-17.5	-17.5	0.24 (4)	10.00			
8- 7	0 / 0	-17.5	-17.5	0.20 (4)	10.00			
7- 6	0 / 0	-17.5	-17.5	0.20 (4)	10.00			

DESIGN CRITERIA

SPECIFIED LOADS:

TOP	CH.	LL	=	23.3	PSF
		DL	=	3.0	PSF
BOT	CH.	LL	=	0.0	PSF
		DL	=	7.0	PSF
TOTAL	LOAD		=	33.3	PSF

SPACING = 24.0 IN. C/C

LOADING IN FLAT SECTION BASED ON A SLOPE OF 2.00/12 MINIMUM

THIS TRUSS IS DESIGNED FOR RESIDENTIAL OR SMALL BUILDING REQUIREMENTS OF PART 9, NBCC 2010

THIS DESIGN COMPLIES WITH:
- PART 9 OF OBC 2012 , BCBC 2012 , ABC 2014
- CSA 086-09
- TPIC 2011

(55 % OF 27.2 P.S.F. G.S.L. PLUS 8.4 P.S.F. RAIN LOAD) EQUALS 23.3 P.S.F. SPECIFIED ROOF LIVE LOAD

ALLOWABLE DEFL.(LL)= L/360 (0.65")
CALCULATED VERT. DEFL.(LL) = L/ 999 (0.02")
ALLOWABLE DEFL.(TL)= L/360 (0.65")
CALCULATED VERT. DEFL.(TL) = L/ 999 (0.08")

CSI: TC=0.60 (5-6:1) , BC=0.24 (8-9:4) , WB=0.25 (2-8:1) , SSI=0.20 (3-4:1)

DOL LUMBER=1.00 NAIL=1.00 LS BEND=1.10 COMP=1.10 SHEAR=1.10 TENS= 1.10

COMPANION LIVE LOAD FACTOR = 0.50

AUTOSOLVE LEFT HEEL ONLY

TRUSS PLATE MANUFACTURER IS NOT RESPONSIBLE FOR QUALITY CONTROL IN THE TRUSS MANUFACTURING PLANT .

NAIL VALUES

PLATE	GRIP(DRY) (PSI) MAX	MIN	SHEAR (PLI) MAX	MIN	SECTION (PLI) MAX	MIN
MT20	618	354	1667	822	2284	1656

PLATE PLACEMENT TOL. = 0.250 inches

PLATE ROTATION TOL. = 5.0 Deg.

JSI GRIP= 0.90 (9) (INPUT = 0.90)
JSI METAL= 0.30 (1) (INPUT = 1.00)

10 MAR 2017

RECEIVED
TOWN OF MILTON
MAR 29, 2017
17-4967
BUILDING DIVISION

KOTT

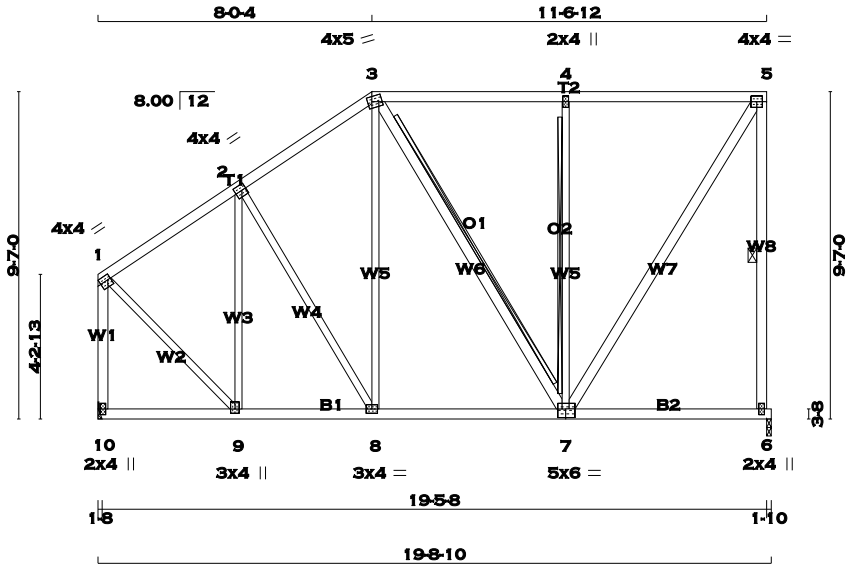

TOTAL WEIGHT = 116 lb [M]

LUMBER

N. L. G. A. RULES

CHORDS	SIZE		LUMBER	DESCR.
1 - 3	2x4	DRY	No.2	SPF
3 - 5	2x4	DRY	No.2	SPF
6 - 5	2x4	DRY	No.2	SPF
10 - 1	2x4	DRY	No.2	SPF
10 - 7	2x4	DRY	No.2	SPF
7 - 6	2x4	DRY	No.2	SPF
ALL WEBS	2x3	DRY	No.2	SPF
EXCEPT				
3 - 7	2x4	DRY	No.2	SPF
7 - 5	2x4	DRY	No.2	SPF

DRY: SEASONED LUMBER.

PLATES (table is in inches)

JT	TYPE	PLATES	W	LEN	Y	X
1	TMVW-t	MT20	4.0	4.0	1.75	Edge
2	TMWW-t	MT20	4.0	4.0	2.00	1.50
3	TTWW-m	MT20	4.0	5.0	1.75	1.50
4	TMW+w	MT20	2.0	4.0		
5	TMVW-t	MT20	4.0	4.0		
6	BMV1+p	MT20	2.0	4.0		
7	BSWWW-l	MT20	5.0	6.0	3.00	2.75
8	BMWW-t	MT20	3.0	4.0		
9	BMWW+t	MT20	3.0	4.0	1.50	1.50
10	BMV1+p	MT20	2.0	4.0		

Edge - INDICATES REFERENCE CORNER OF PLATE TOUCHES EDGE OF CHORD.

A SIZE FOR SIZE SUBSTITUTION OF MITEK MII20 WITH TEE-LOK TL20 PLATES IS ALLOWED.

READ ALL NOTES ON THIS PAGE AND ON THE ENGINEERING NOTE PAGE ENP-1. THE NOTE PAGE IS AN INTEGRAL PART OF THIS DRAWING AS IT CONTAINS SPECIFICATIONS AND CRITERIA USED IN THE DESIGN OF THIS COMPONENT.

DIMENSIONS, SUPPORTS AND LOADINGS SPECIFIED BY FABRICATOR TO BE VERIFIED BY BUILDING DESIGNER

BEARINGS

JT	FACTORED GROSS REACTION VERT	HORZ	MAXIMUM FACTORED GROSS REACTION DOWN	HORZ	UPLIFT	INPUT BRG IN-SX	REQRD BRG IN-SX
6	929	0	929	0	0	1-10	1-10
10	929	0	929	0	0	HANGER BY OTHERS	
						MIN. SEAT SIZE: 1-8	

UNFACTORED REACTIONS

JT	1ST LCASE COMBINED	MAX./MIN. COMPONENT REACTIONS SNOW	LIVE	PERM.LIVE	WIND	DEAD	SOIL
6	652	456 / 0	0 / 0	0 / 0	0 / 0	196 / 0	0 / 0
10	652	456 / 0	0 / 0	0 / 0	0 / 0	196 / 0	0 / 0

BEARING MATERIAL TO BE SPF NO.2 OR BETTER AT JOINT(S) 6

BRACING

TOP CHORD TO BE SHEATHED OR MAX. PURLIN SPACING = 6.25 FT.
MAX. UNBRACED BOTTOM CHORD LENGTH = 10.00 FT. OR RIGID CEILING DIRECTLY APPLIED.

ALL PITCH BREAKS AND PERIMETER CORNER JOINTS MUST BE LATERALLY RESTRAINED.

1 - 2x3 SPF No.2 LATERAL BRACE(S) AT 1/ 2 LENGTH OF 5-6. DBS = 16-0-0 . CBF = 89 LBS.
2x4 SPF No.2 T-BRACE AT 3-7, 4-7

DBS = DIAGONAL BRACE SPACING (MAX). CBF = CUMULATIVE BRACING FORCE. FASTEN LATERAL BRACE(S) USING (0.122"X3") SPIRAL NAILS : 1 NAIL FOR 2x3 BRACE(S), 2 FOR 1x4, 2x4, 2x5, 3 FOR 2x6, 4 FOR 2x8, 5 FOR 2x10, AND 6 FOR 2x12.

FASTEN T AND I-BRACES TO NARROW EDGE OF WEB WITH ONE ROW PER PLY OF 3" COMMON WIRE NAILS @ 6" O.C. WITH 3" MINIMUM END DISTANCE. BRACE MUST COVER 90% OF WEB LENGTH.

END VERTICAL(S) MUST BE SHEATHED OR HAVE BRACES AS INDICATED IN THE MAX. UNBRACED LENGTH COLUMN OF THE TABLE BELOW

LOADING

TOTAL LOAD CASES: (4)

CHORDS

MEMB. FR-TO	MAX. FACTORED FORCE (LBS)	FACTORED VERT. LOAD LC1 (PLF) FROM	TO	MAX CSI (LC)	MAX. UNBRAC LENGTH
1- 2	-556 / 0	-77.3	-77.3	0.21 (1)	6.25
2- 3	-595 / 0	-77.3	-77.3	0.21 (1)	6.25
3- 4	-451 / 0	-77.3	-77.3	0.44 (1)	6.25
4- 5	-452 / 0	-77.3	-77.3	0.44 (1)	6.25
6- 5	-887 / 0	0.0	0.0	0.39 (1)	6.25
10- 1	-899 / 0	0.0	0.0	0.27 (1)	7.81
10- 9	0 / 0	-17.5	-17.5	0.06 (4)	10.00
9- 8	0 / 480	-17.5	-17.5	0.11 (1)	10.00
8- 7	0 / 478	-17.5	-17.5	0.18 (4)	10.00
7- 6	0 / 0	-17.5	-17.5	0.15 (4)	10.00

WEBS

MEMB. FR-TO	MAX. FACTORED FORCE (LBS)	MAX CSI (LC)
9- 2	-380 / 0	0.32 (1)
2- 8	-6 / 4	0.01 (1)
8- 3	0 / 84	0.03 (4)
3- 7	-50 / 0	0.04 (1)
7- 4	-555 / 0	0.39 (1)
7- 5	0 / 844	0.14 (1)
1- 9	0 / 662	0.15 (1)

DESIGN CRITERIA

SPECIFIED LOADS:

TOP	CH.	LL	=	23.3	PSF
		DL	=	3.0	PSF
BOT	CH.	LL	=	0.0	PSF
		DL	=	7.0	PSF
TOTAL	LOAD		=	33.3	PSF

SPACING = 24.0 IN. C/C

LOADING IN FLAT SECTION BASED ON A SLOPE OF 2.00/12 MINIMUM

THIS TRUSS IS DESIGNED FOR RESIDENTIAL OR SMALL BUILDING REQUIREMENTS OF PART 9, NBCC 2010

THIS DESIGN COMPLIES WITH:
- PART 9 OF OBC 2012 , BCBC 2012 , ABC 2014
- CSA 086-09
- TPIC 2011

(55 % OF 27.2 P.S.F. G.S.L. PLUS 8.4 P.S.F. RAIN LOAD) EQUALS 23.3 P.S.F. SPECIFIED ROOF LIVE LOAD

ALLOWABLE DEFL.(LL)= L/360 (0.65")
CALCULATED VERT. DEFL.(LL) = L/ 999 (0.02")
ALLOWABLE DEFL.(TL)= L/360 (0.65")
CALCULATED VERT. DEFL.(TL) = L/ 999 (0.04")

CSI: TC=0.44 (4-5:1) , BC=0.18 (7-8:4) , WB=0.39 (4-7:1) , SSI=0.22 (4-5:1)

DOL LUMBER=1.00 NAIL=1.00 LS BEND=1.10 COMP=1.10 SHEAR=1.10 TENS= 1.10

COMPANION LIVE LOAD FACTOR = 0.50

TRUSS PLATE MANUFACTURER IS NOT RESPONSIBLE FOR QUALITY CONTROL IN THE TRUSS MANUFACTURING PLANT .

NAIL VALUES

PLATE	GRIP(DRY) (PSI) MAX	MIN	SHEAR (PLI) MAX	MIN	SECTION (PLI) MAX	MIN
MT20	618	354	1667	822	2284	1656

PLATE PLACEMENT TOL. = 0.250 inches

PLATE ROTATION TOL. = 5.0 Deg.

JSI GRIP= 0.88 (5) (INPUT = 0.90)
JSI METAL= 0.24 (1) (INPUT = 1.00)

RECEIVED
TOWN OF MILTON
MAR 29, 2017
17-4967
BUILDING DIVISION

10 MAR 2017

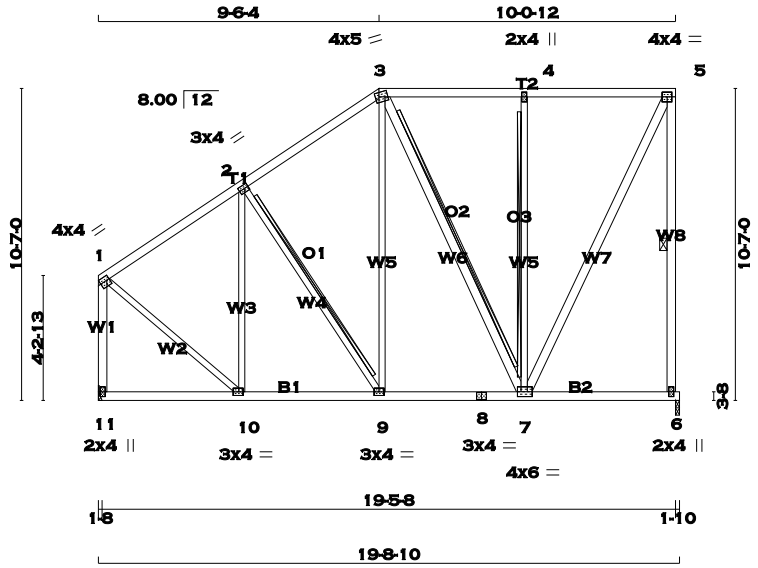

TOTAL WEIGHT = 122 lb [M]

LUMBER

N. L. G. A. RULES

CHORDS	SIZE		LUMBER	DESCR.
1 - 3	2x4	DRY	No.2	SPF
3 - 5	2x4	DRY	No.2	SPF
6 - 5	2x4	DRY	No.2	SPF
11 - 1	2x4	DRY	No.2	SPF
11 - 8	2x4	DRY	No.2	SPF
8 - 6	2x4	DRY	No.2	SPF
ALL WEBS	2x3	DRY	No.2	SPF
EXCEPT				
3 - 7	2x4	DRY	No.2	SPF
7 - 5	2x4	DRY	No.2	SPF

DRY: SEASONED LUMBER.

PLATES (table is in inches)

JT	TYPE	PLATES	W	LEN	Y	X
1	TMVW-t	MT20	4.0	4.0	1.75	Edge
2	TMWW-t	MT20	3.0	4.0	1.50	1.50
3	TTWW-m	MT20	4.0	5.0	1.75	1.50
4	TMW+w	MT20	2.0	4.0		
5	TMVW-t	MT20	4.0	4.0		
6	BMV1+p	MT20	2.0	4.0		
7	BMWWW-t	MT20	4.0	6.0	2.00	1.50
8	BS-t	MT20	3.0	4.0		
9	BMWW-t	MT20	3.0	4.0		
10	BMWW-t	MT20	3.0	4.0	1.50	1.75
11	BMV1+p	MT20	2.0	4.0		

Edge - INDICATES REFERENCE CORNER OF PLATE TOUCHES EDGE OF CHORD.

A SIZE FOR SIZE SUBSTITUTION OF MITEK MII20 WITH TEE-LOK TL20 PLATES IS ALLOWED.

READ ALL NOTES ON THIS PAGE AND ON THE ENGINEERING NOTE PAGE ENP-1. THE NOTE PAGE IS AN INTEGRAL PART OF THIS DRAWING AS IT CONTAINS SPECIFICATIONS AND CRITERIA USED IN THE DESIGN OF THIS COMPONENT.

DIMENSIONS, SUPPORTS AND LOADINGS SPECIFIED BY FABRICATOR TO BE VERIFIED BY BUILDING DESIGNER

BEARINGS

JT	FACTORED GROSS REACTION VERT	HORZ	MAXIMUM FACTORED GROSS REACTION DOWN	HORZ	UPLIFT	INPUT BRG IN-SX	REQRD BRG IN-SX
6	929	0	929	0	0	1-10	1-10
11	929	0	929	0	0	HANGER BY OTHERS	
						MIN. SEAT SIZE: 1-8	

UNFACTORED REACTIONS

JT	1ST LCASE COMBINED	SNOW	MAX./MIN. COMPONENT REACTIONS LIVE	PERM.LIVE	WIND	DEAD	SOIL
6	652	456 / 0	0 / 0	0 / 0	0 / 0	196 / 0	0 / 0
11	652	456 / 0	0 / 0	0 / 0	0 / 0	196 / 0	0 / 0

BEARING MATERIAL TO BE SPF NO.2 OR BETTER AT JOINT(S) 6

BRACING

TOP CHORD TO BE SHEATHED OR MAX. PURLIN SPACING = 6.25 FT.
MAX. UNBRACED BOTTOM CHORD LENGTH = 10.00 FT. OR RIGID CEILING DIRECTLY APPLIED.

ALL PITCH BREAKS AND PERIMETER CORNER JOINTS MUST BE LATERALLY RESTRAINED.

1 - 2x3 SPF No.2 LATERAL BRACE(S) AT 1/ 2 LENGTH OF 5-6. DBS = 16-0-0 . CBF = 89 LBS.
2x3 SPF No.2 T-BRACE AT 2-9
2x4 SPF No.2 T-BRACE AT 3-7, 4-7

DBS = DIAGONAL BRACE SPACING (MAX). CBF = CUMULATIVE BRACING FORCE. FASTEN LATERAL BRACE(S) USING (0.122"X3") SPIRAL NAILS : 1 NAIL FOR 2x3 BRACE(S), 2 FOR 1x4, 2x4, 2x5, 3 FOR 2x6, 4 FOR 2x8, 5 FOR 2x10, AND 6 FOR 2x12.

FASTEN T AND I-BRACES TO NARROW EDGE OF WEB WITH ONE ROW PER PLY OF 3" COMMON WIRE NAILS @ 6" O.C. WITH 3" MINIMUM END DISTANCE. BRACE MUST COVER 90% OF WEB LENGTH.

END VERTICAL(S) MUST BE SHEATHED OR HAVE BRACES AS INDICATED IN THE MAX. UNBRACED LENGTH COLUMN OF THE TABLE BELOW

LOADING

TOTAL LOAD CASES: (4)

CHORDS

MEMB. FR-TO	MAX. FACTORED FORCE (LBS)	FACTORED VERT. LOAD (PLF) FROM	TO	LC1	MAX CSI (LC)	MAX. UNBRAC LENGTH
1- 2	-589 / 0	-77.3	-77.3	0.31 (1)	6.25	
2- 3	-559 / 0	-77.3	-77.3	0.31 (1)	6.25	
3- 4	-369 / 0	-77.3	-77.3	0.33 (1)	6.25	
4- 5	-369 / 0	-77.3	-77.3	0.33 (1)	6.25	
6- 5	-892 / 0	0.0	0.0	0.50 (1)	6.25	
11- 1	-894 / 0	0.0	0.0	0.27 (1)	7.81	
11-10	0 / 0	-17.5	-17.5	0.10 (4)	10.00	
10- 9	0 / 510	-17.5	-17.5	0.14 (4)	10.00	
9- 8	0 / 445	-17.5	-17.5	0.14 (4)	10.00	
8- 7	0 / 445	-17.5	-17.5	0.14 (4)	10.00	
7- 6	0 / 0	-17.5	-17.5	0.11 (4)	10.00	

WEBS

MEMB. FR-TO	MAX. FACTORED FORCE (LBS)	MAX CSI (LC)
10- 2	-315 / 0	0.32 (1)
2- 9	-121 / 0	0.15 (1)
9- 3	0 / 178	0.04 (1)
3- 7	-176 / 0	0.17 (1)
7- 4	-481 / 0	0.43 (1)
7- 5	0 / 826	0.13 (1)
1-10	0 / 654	0.15 (1)

DESIGN CRITERIA

SPECIFIED LOADS:

TOP	CH.	LL	=	23.3	PSF
		DL	=	3.0	PSF
BOT	CH.	LL	=	0.0	PSF
		DL	=	7.0	PSF
TOTAL	LOAD		=	33.3	PSF

SPACING = 24.0 IN. C/C

LOADING IN FLAT SECTION BASED ON A SLOPE OF 2.00/12 MINIMUM

THIS TRUSS IS DESIGNED FOR RESIDENTIAL OR SMALL BUILDING REQUIREMENTS OF PART 9, NBCC 2010

THIS DESIGN COMPLIES WITH:
- PART 9 OF OBC 2012 , BCBC 2012 , ABC 2014
- CSA 086-09
- TPIC 2011

(55 % OF 27.2 P.S.F. G.S.L. PLUS 8.4 P.S.F. RAIN LOAD) EQUALS 23.3 P.S.F. SPECIFIED ROOF LIVE LOAD

ALLOWABLE DEFL.(LL)= L/360 (0.65")
CALCULATED VERT. DEFL.(LL) = L/ 999 (0.02")
ALLOWABLE DEFL.(TL)= L/360 (0.65")
CALCULATED VERT. DEFL.(TL) = L/ 999 (0.04")

CSI: TC=0.50 (5-6:1) , BC=0.14 (7-9:4) , WB=0.43 (4-7:1) , SSI=0.19 (4-5:1)

DOL LUMBER=1.00 NAIL=1.00 LS BEND=1.10 COMP=1.10 SHEAR=1.10 TENS= 1.10

COMPANION LIVE LOAD FACTOR = 0.50

TRUSS PLATE MANUFACTURER IS NOT RESPONSIBLE FOR QUALITY CONTROL IN THE TRUSS MANUFACTURING PLANT .

NAIL VALUES

PLATE	GRIP(DRY) (PSI) MAX	MIN	SHEAR (PLI) MAX	MIN	SECTION (PLI) MAX	MIN
MT20	618	354	1667	822	2284	1656

PLATE PLACEMENT TOL. = 0.250 inches

PLATE ROTATION TOL. = 5.0 Deg.

JSI GRIP= 0.90 (10) (INPUT = 0.90)
JSI METAL= 0.26 (1) (INPUT = 1.00)

10 MAR 2017

RECEIVED
TOWN OF MILTON
MAR 29, 2017
17-4967
BUILDING DIVISION

KOTT

SCALE = 1:85.5

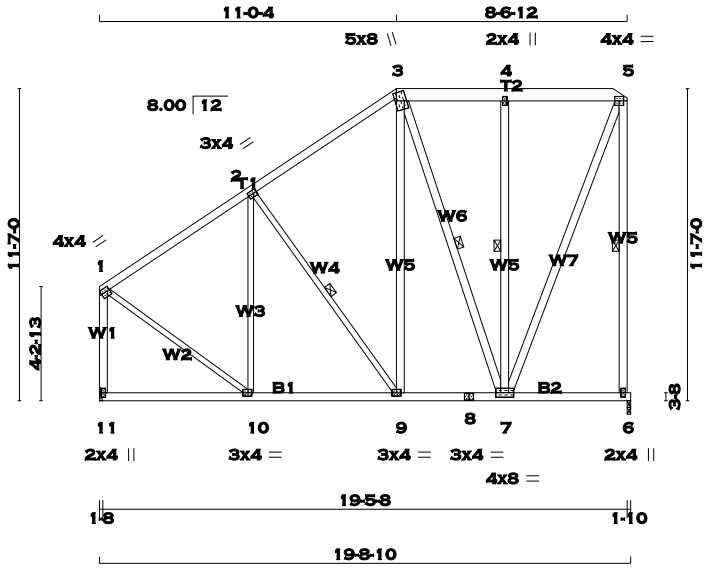

TOTAL WEIGHT = 2 X 139 = 279 lb

[M][F]

LUMBER

N. L. G. A. RULES

CHORDS	SIZE		LUMBER	DESCR.
1 - 3	2x4	DRY	No.2	SPF
3 - 5	2x6	DRY	No.2	SPF
11 - 1	2x4	DRY	No.2	SPF
6 - 5	2x4	DRY	No.2	SPF
11 - 8	2x4	DRY	No.2	SPF
8 - 6	2x4	DRY	No.2	SPF
ALL WEBS EXCEPT	2x4	DRY	No.2	SPF
10 - 2	2x3	DRY	No.2	SPF
2 - 9	2x3	DRY	No.2	SPF
1 - 10	2x3	DRY	No.2	SPF

DRY: SEASONED LUMBER.

PLATES (table is in inches)

JT	TYPE	PLATES	W	LEN	Y	X
1	TMVW-t	MT20	4.0	4.0	1.75	Edge
2	TMWW-t	MT20	3.0	4.0	1.50	1.50
3	TTWW+m	MT20	5.0	8.0	4.50	1.00
4	TMW+w	MT20	2.0	4.0		
5	TMVW-t	MT20	4.0	4.0		
6	BMV1+p	MT20	2.0	4.0		
7	BMWWW-t	MT20	4.0	8.0		
8	BS-t	MT20	3.0	4.0		
9	BMWW-t	MT20	3.0	4.0		
10	BMWW-t	MT20	3.0	4.0	1.50	1.75
11	BMV1+p	MT20	2.0	4.0		

Edge - INDICATES REFERENCE CORNER OF PLATE TOUCHES EDGE OF CHORD.

A SIZE FOR SIZE SUBSTITUTION OF MITEK MII20 WITH TEE-LOK TL20 PLATES IS ALLOWED.

READ ALL NOTES ON THIS PAGE AND ON THE ENGINEERING NOTE PAGE ENP-1. THE NOTE PAGE IS AN INTEGRAL PART OF THIS DRAWING AS IT CONTAINS SPECIFICATIONS AND CRITERIA USED IN THE DESIGN OF THIS COMPONENT.

DIMENSIONS, SUPPORTS AND LOADINGS SPECIFIED BY FABRICATOR TO BE VERIFIED BY BUILDING DESIGNER

BEARINGS

JT	FACTORED GROSS REACTION VERT	HORZ	MAXIMUM FACTORED GROSS REACTION DOWN	HORZ	UPLIFT	INPUT BRG	REQRD BRG
11	929	0	929	0	0	HANGER BY OTHERS MIN. SEAT SIZE: 1-8	
6	929	0	929	0	0	1-10	1-10

UNFACTORED REACTIONS

JT	1ST LCASE COMBINED	SNOW	MAX./MIN. COMPONENT REACTIONS LIVE	PERM.LIVE	WIND	DEAD	SOIL
11	652	456 / 0	0 / 0	0 / 0	0 / 0	196 / 0	0 / 0
6	652	456 / 0	0 / 0	0 / 0	0 / 0	196 / 0	0 / 0

BEARING MATERIAL TO BE SPF NO.2 OR BETTER AT JOINT(S) 6

BRACING

TOP CHORD TO BE SHEATHED OR MAX. PURLIN SPACING = 6.25 FT.
MAX. UNBRACED BOTTOM CHORD LENGTH = 10.00 FT. OR RIGID CEILING DIRECTLY APPLIED.

ALL PITCH BREAKS AND PERIMETER CORNER JOINTS MUST BE LATERALLY RESTRAINED.

1 - 2x3 SPF No.2 LATERAL BRACE(S) AT 1/ 2 LENGTH OF 2-9, 3-7, 4-7. DBS = 20-0-0 . CBF = 50 LBS.
1 - 2x3 SPF No.2 LATERAL BRACE(S) AT 1/ 2 LENGTH OF 5-6. DBS = 16-0-0 . CBF = 89 LBS.

DBS = DIAGONAL BRACE SPACING (MAX). CBF = CUMULATIVE BRACING FORCE. FASTEN LATERAL BRACE(S) USING (0.122"X3") SPIRAL NAILS : 1 NAIL FOR 2x3 BRACE(S), 2 FOR 1x4, 2x4, 2x5, 3 FOR 2x6, 4 FOR 2x8, 5 FOR 2x10, AND 6 FOR 2x12.

END VERTICAL(S) MUST BE SHEATHED OR HAVE BRACES AS INDICATED IN THE MAX. UNBRACED LENGTH COLUMN OF THE TABLE BELOW

LOADING

TOTAL LOAD CASES: (4)

CHORDS

MEMB. FR-TO	MAX. FACTORED FORCE (LBS)	FACTORED VERT. LOAD (PLF) FROM	TO	LC1 MAX CSI (LC)	MAX. UNBRAC LENGTH
1- 2	-610 / 0	-77.3	-77.3	0.31 (1)	6.25
2- 3	-506 / 0	-77.3	-77.3	0.31 (1)	6.25
3- 4	-304 / 0	-77.3	-77.3	0.07 (1)	6.25
4- 5	-304 / 0	-77.3	-77.3	0.08 (1)	6.25
11- 1	-890 / 0	0.0	0.0	0.27 (1)	7.81
6- 5	-895 / 0	0.0	0.0	0.61 (1)	6.25
11-10	0 / 0	-17.5	-17.5	0.14 (4)	10.00
10- 9	0 / 531	-17.5	-17.5	0.18 (4)	10.00
9- 8	0 / 401	-17.5	-17.5	0.10 (4)	10.00
8- 7	0 / 401	-17.5	-17.5	0.10 (4)	10.00
7- 6	0 / 0	-17.5	-17.5	0.07 (4)	10.00

WEBS

MEMB. FR-TO	MAX. FACTORED FORCE (LBS)	MAX CSI (LC)
10- 2	-256 / 19	0.31 (1)
2- 9	-227 / 0	0.14 (1)
9- 3	0 / 261	0.04 (1)
3- 7	-288 / 0	0.23 (1)
7- 4	-400 / 0	0.28 (1)
7- 5	0 / 810	0.13 (1)
1-10	0 / 647	0.15 (1)

DESIGN CRITERIA

SPECIFIED LOADS:

TOP	CH.	LL	=	23.3	PSF
		DL	=	3.0	PSF
BOT	CH.	LL	=	0.0	PSF
		DL	=	7.0	PSF
TOTAL	LOAD		=	33.3	PSF

SPACING = 24.0 IN. C/C

LOADING IN FLAT SECTION BASED ON A SLOPE OF 2.00/12 MINIMUM

THIS TRUSS IS DESIGNED FOR RESIDENTIAL OR SMALL BUILDING REQUIREMENTS OF PART 9, NBCC 2010

THIS DESIGN COMPLIES WITH:
- PART 9 OF OBC 2012 , BCBC 2012 , ABC 2014
- CSA 086-09
- TPIC 2011

(55 % OF 27.2 P.S.F. G.S.L. PLUS 8.4 P.S.F. RAIN LOAD) EQUALS 23.3 P.S.F. SPECIFIED ROOF LIVE LOAD

ALLOWABLE DEFL.(LL)= L/360 (0.65")
CALCULATED VERT. DEFL.(LL) = L/ 999 (0.02")
ALLOWABLE DEFL.(TL)= L/360 (0.65")
CALCULATED VERT. DEFL.(TL) = L/ 999 (0.04")

CSI: TC=0.61 (5-6:1) , BC=0.18 (9-10:4) , WB=0.31 (2-10:1) , SSI=0.17 (1-2:1)

DOL LUMBER=1.00 NAIL=1.00 LS BEND=1.10 COMP=1.10 SHEAR=1.10 TENS= 1.10

COMPANION LIVE LOAD FACTOR = 0.50

AUTOSOLVE LEFT HEEL ONLY

TRUSS PLATE MANUFACTURER IS NOT RESPONSIBLE FOR QUALITY CONTROL IN THE TRUSS MANUFACTURING PLANT .

NAIL VALUES

PLATE	GRIP(DRY) (PSI) MAX	MIN	SHEAR (PLI) MAX	MIN	SECTION (PLI) MAX	MIN
MT20	618	354	1667	822	2284	1656

PLATE PLACEMENT TOL. = 0.250 inches

PLATE ROTATION TOL. = 5.0 Deg.

JSI GRIP= 0.90 (1) (INPUT = 0.90)
JSI METAL= 0.27 (1) (INPUT = 1.00)

10 MAR 2017

RECEIVED
TOWN OF MILTON
MAR 29, 2017
17-4967
BUILDING DIVISION

KOTT

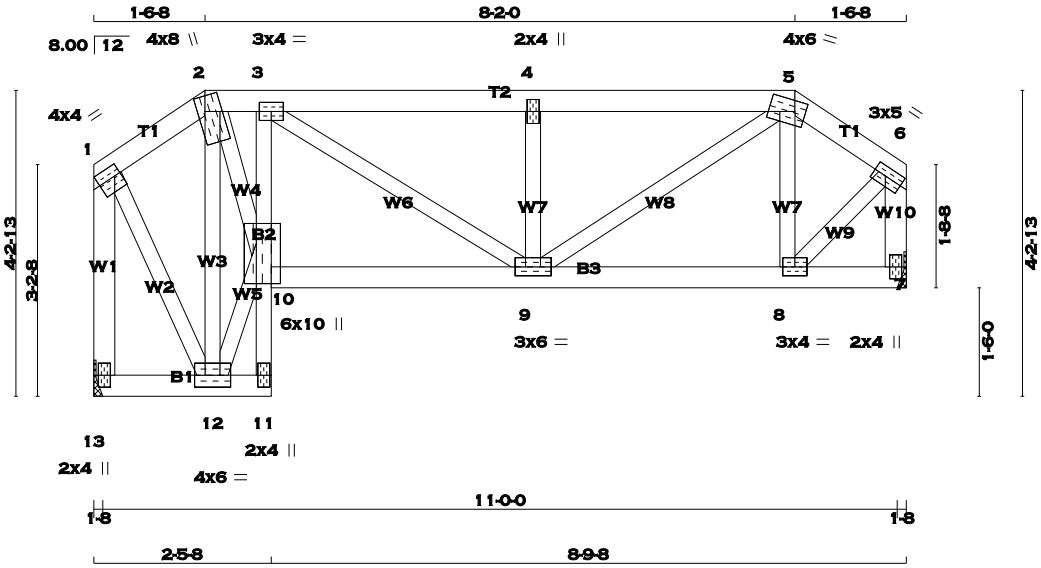

TOTAL WEIGHT = 55 lb [M]

LUMBER

N. L. G. A. RULES

CHORDS	SIZE		LUMBER	DESCR.
1 - 2	2x4	DRY	No.2	SPF
2 - 5	2x4	DRY	No.2	SPF
5 - 6	2x4	DRY	No.2	SPF
13 - 1	2x4	DRY	No.2	SPF
7 - 6	2x4	DRY	No.2	SPF
13 - 11	2x4	DRY	No.2	SPF
11 - 3	2x3	DRY	No.2	SPF
10 - 7	2x4	DRY	No.2	SPF
ALL WEBS EXCEPT	2x3	DRY	No.2	SPF

DRY: SEASONED LUMBER.

PLATES (table is in inches)

JT	TYPE	PLATES	W	LEN	Y	X
1	TMVW-t	MT20	4.0	4.0	1.75	Edge
2	TTWW+m	MT20	4.0	8.0	2.50	1.25
3	TMVW-t	MT20	3.0	4.0		
4	TMW+w	MT20	2.0	4.0		
5	TTWW-m	MT20	4.0	6.0	1.75	1.75
6	TMVW-t	MT20	3.0	5.0	1.50	2.00
7	BMV1+p	MT20	2.0	4.0		
8	BMWW-t	MT20	3.0	4.0		
9	BMWWW-t	MT20	3.0	6.0		
10	BVMWW+p	MT20	6.0	10.0	6.75	4.00
11	BMV+p	MT20	2.0	4.0		
12	BMWWW-t	MT20	4.0	6.0		
13	BMV1+p	MT20	2.0	4.0		

Edge - INDICATES REFERENCE CORNER OF PLATE TOUCHES EDGE OF CHORD.

A SIZE FOR SIZE SUBSTITUTION OF MITEK MII20 WITH TEE-LOK TL20 PLATES IS ALLOWED.

READ ALL NOTES ON THIS PAGE AND ON THE ENGINEERING NOTE PAGE ENP-1. THE NOTE PAGE IS AN INTEGRAL PART OF THIS DRAWING AS IT CONTAINS SPECIFICATIONS AND CRITERIA USED IN THE DESIGN OF THIS COMPONENT.

DIMENSIONS, SUPPORTS AND LOADINGS SPECIFIED BY FABRICATOR TO BE VERIFIED BY BUILDING DESIGNER

BEARINGS

JT	FACTORED GROSS REACTION VERT	HORZ	MAXIMUM FACTORED GROSS REACTION DOWN	HORZ	UPLIFT	INPUT BRG	REQRD BRG
13	534	0	534	0	0	IN-SX	IN-SX
						HANGER BY OTHERS	
						MIN. SEAT SIZE: 1-8	
7	534	0	534	0	0	HANGER BY OTHERS	
						MIN. SEAT SIZE: 1-8	

UNFACTORED REACTIONS

JT	1ST LCASE COMBINED	MAX./MIN. COMPONENT REACTIONS SNOW	LIVE	PERM.LIVE	WIND	DEAD	SOIL
13	374	262 / 0	0 / 0	0 / 0	0 / 0	113 / 0	0 / 0
7	374	262 / 0	0 / 0	0 / 0	0 / 0	113 / 0	0 / 0

BRACING

TOP CHORD TO BE SHEATHED OR MAX. PURLIN SPACING = 6.25 FT.
MAX. UNBRACED BOTTOM CHORD LENGTH = 7.81 FT. OR RIGID CEILING DIRECTLY APPLIED.

ALL PITCH BREAKS AND PERIMETER CORNER JOINTS MUST BE LATERALLY RESTRAINED.

LOADING

TOTAL LOAD CASES: (4)

CHORDS

MEMB. FR-TO	MAX. FACTORED FORCE (LBS)	FACTORED VERT. LOAD (PLF) FROM	TO	LC1 CSI (LC)	MAX UNBRAC LENGTH
1- 2	-235 / 0	-77.3	-77.3	0.03 (1)	6.25
2- 3	-511 / 0	-77.3	-77.3	0.06 (1)	6.25
3- 4	-659 / 0	-77.3	-77.3	0.15 (1)	6.25
4- 5	-659 / 0	-77.3	-77.3	0.15 (1)	6.25
5- 6	-373 / 0	-77.3	-77.3	0.03 (1)	6.25
13- 1	-533 / 0	0.0	0.0	0.09 (1)	7.81
7- 6	-528 / 0	0.0	0.0	0.06 (1)	7.81
13-12	0 / 0	-17.5	-17.5	0.03 (1)	10.00
12-11	0 / 11	-17.5	-17.5	0.03 (1)	10.00
11-10	-26 / 0	0.0	0.0	0.06 (1)	7.81
10- 3	-295 / 0	0.0	0.0	0.06 (1)	7.81
10- 9	0 / 527	-17.5	-17.5	0.12 (1)	10.00
9- 8	0 / 300	-17.5	-17.5	0.08 (4)	10.00
8- 7	0 / 0	-17.5	-17.5	0.03 (4)	10.00

WEBS

MEMB. FR-TO	MAX. FACTORED FORCE (LBS)	MAX CSI (LC)
12- 2	-730 / 0	0.20 (1)
12-10	0 / 483	0.11 (1)
2-10	0 / 884	0.20 (1)
3- 9	0 / 162	0.04 (1)
9- 4	-327 / 0	0.05 (1)
9- 5	0 / 432	0.10 (1)
8- 5	-205 / 0	0.03 (1)
1-12	0 / 393	0.09 (1)
8- 6	0 / 404	0.09 (1)

DESIGN CRITERIA

SPECIFIED LOADS:

TOP	CH.	LL	=	23.3	PSF
		DL	=	3.0	PSF
BOT	CH.	LL	=	0.0	PSF
		DL	=	7.0	PSF
TOTAL	LOAD		=	33.3	PSF

SPACING = 24.0 IN. C/C

LOADING IN FLAT SECTION BASED ON A SLOPE OF 2.00/12 MINIMUM

THIS TRUSS IS DESIGNED FOR RESIDENTIAL OR SMALL BUILDING REQUIREMENTS OF PART 9, NBCC 2010

THIS DESIGN COMPLIES WITH:
- PART 9 OF OBC 2012 , BCBC 2012 , ABC 2014
- CSA 086-09
- TPIC 2011

(55 % OF 27.2 P.S.F. G.S.L. PLUS 8.4 P.S.F. RAIN LOAD) EQUALS 23.3 P.S.F. SPECIFIED ROOF LIVE LOAD

ALLOWABLE DEFL.(LL)= L/360 (0.38")
CALCULATED VERT. DEFL.(LL) = L/ 999 (0.02")
ALLOWABLE DEFL.(TL)= L/360 (0.38")
CALCULATED VERT. DEFL.(TL) = L/ 999 (0.03")

CSI: TC=0.15 (3-4:1) , BC=0.12 (9-10:1) , WB=0.20 (2-10:1) , SSI=0.13 (4-5:1)

DOL LUMBER=1.00 NAIL=1.00 LS BEND=1.10 COMP=1.10 SHEAR=1.10 TENS= 1.10

COMPANION LIVE LOAD FACTOR = 0.50

TRUSS PLATE MANUFACTURER IS NOT RESPONSIBLE FOR QUALITY CONTROL IN THE TRUSS MANUFACTURING PLANT .

NAIL VALUES

PLATE	GRIP(DRY) (PSI) MAX	MIN	SHEAR (PLI) MAX	MIN	SECTION (PLI) MAX	MIN
MT20	618	354	1667	822	2284	1656

PLATE PLACEMENT TOL. = 0.250 inches

PLATE ROTATION TOL. = 5.0 Deg.

JSI GRIP= 0.86 (6) (INPUT = 0.90)
JSI METAL= 0.20 (2) (INPUT = 1.00)

RECEIVED
TOWN OF MILTON
MAR 29, 2017
17-4967
BUILDING DIVISION

10 MAR 2017

KOTT

SCALE = 1:21.2

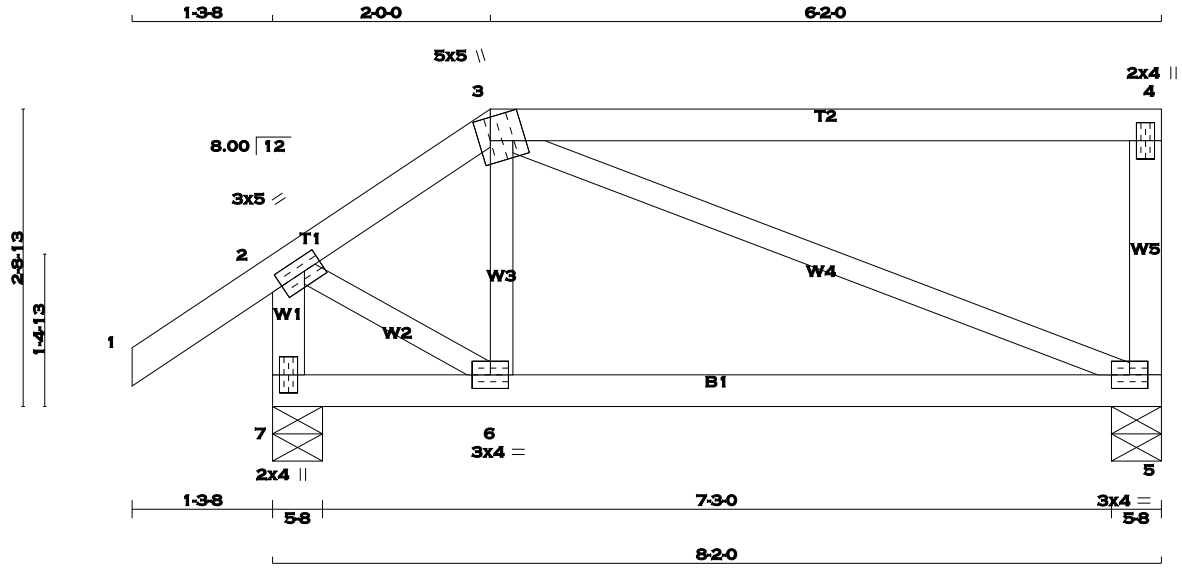

TOTAL WEIGHT = 33 lb [M]

LUMBER

N. L. G. A. RULES

CHORDS	SIZE		LUMBER	DESCR.
1 - 3	2x4	DRY	No.2	SPF
3 - 4	2x4	DRY	No.2	SPF
5 - 4	2x4	DRY	No.2	SPF
7 - 2	2x4	DRY	No.2	SPF
7 - 5	2x4	DRY	No.2	SPF
ALL WEBS EXCEPT	2x3	DRY	No.2	SPF

DRY: SEASONED LUMBER.

PLATES (table is in inches)

JT	TYPE	PLATES	W	LEN	Y	X
2	TMVW-t	MT20	3.0	5.0	1.50	2.00
3	TTWW+m	MT20	5.0	5.0	Edge	3.75
4	TMV+p	MT20	2.0	4.0		
5	BMVW1-t	MT20	3.0	4.0		
6	BMWW-t	MT20	3.0	4.0		
7	BMV1+p	MT20	2.0	4.0		

Edge - INDICATES REFERENCE CORNER OF PLATE TOUCHES EDGE OF CHORD.

A SIZE FOR SIZE SUBSTITUTION OF MITEK MII20 WITH TEE-LOK TL20 PLATES IS ALLOWED.

READ ALL NOTES ON THIS PAGE AND ON THE ENGINEERING NOTE PAGE ENP-1. THE NOTE PAGE IS AN INTEGRAL PART OF THIS DRAWING AS IT CONTAINS SPECIFICATIONS AND CRITERIA USED IN THE DESIGN OF THIS COMPONENT.

DIMENSIONS, SUPPORTS AND LOADINGS SPECIFIED BY FABRICATOR TO BE VERIFIED BY BUILDING DESIGNER

BEARINGS

JT	FACTORED GROSS REACTION VERT	HORZ	MAXIMUM FACTORED GROSS REACTION DOWN	HORZ	UPLIFT	INPUT BRG IN-SX	REQRD BRG IN-SX
5	387	0	387	0	0	5-8	5-8
7	493	0	493	0	0	5-8	5-8

UNFACTORED REACTIONS

JT	1ST LCASE COMBINED	MAX./MIN. COMPONENT REACTIONS SNOW	LIVE	PERM.LIVE	WIND	DEAD	SOIL
5	272	190 / 0	0 / 0	0 / 0	0 / 0	82 / 0	0 / 0
7	344	254 / 0	0 / 0	0 / 0	0 / 0	90 / 0	0 / 0

BEARING MATERIAL TO BE SPF NO.2 OR BETTER AT JOINT(S) 5, 7

BRACING

TOP CHORD TO BE SHEATHED OR MAX. PURLIN SPACING = 6.25 FT.
MAX. UNBRACED BOTTOM CHORD LENGTH = 10.00 FT. OR RIGID CEILING DIRECTLY APPLIED.

ALL PITCH BREAKS AND PERIMETER CORNER JOINTS MUST BE LATERALLY RESTRAINED.

LOADING

TOTAL LOAD CASES: (4)

CHORDS

MEMB. FR-TO	MAX. FACTORED FORCE (LBS)	FACTORED VERT. LOAD (PLF) FROM	TO	LC1 MAX CSI (LC)	MAX. UNBRAC LENGTH
1- 2	0 / 29	-77.3	-77.3	0.10 (1)	10.00
2- 3	-322 / 0	-77.3	-77.3	0.05 (1)	6.25
3- 4	0 / 0	-77.3	-77.3	0.50 (1)	10.00
5- 4	-238 / 0	0.0	0.0	0.03 (1)	7.81
7- 2	-501 / 0	0.0	0.0	0.05 (1)	7.81
7- 6	0 / 0	-17.5	-17.5	0.14 (4)	10.00
6- 5	0 / 266	-17.5	-17.5	0.16 (4)	10.00

WEBS

MEMB. FR-TO	MAX. FACTORED FORCE (LBS)	MAX CSI (LC)
6- 3	-31 / 72	0.02 (4)
3- 5	-286 / 0	0.21 (1)
2- 6	0 / 301	0.07 (1)

DESIGN CRITERIA

SPECIFIED LOADS:

TOP	CH.	LL	=	23.3	PSF
		DL	=	3.0	PSF
BOT	CH.	LL	=	0.0	PSF
		DL	=	7.0	PSF
TOTAL	LOAD		=	33.3	PSF

SPACING = 24.0 IN. C/C

LOADING IN FLAT SECTION BASED ON A SLOPE OF 2.00/12 MINIMUM

THIS TRUSS IS DESIGNED FOR RESIDENTIAL OR SMALL BUILDING REQUIREMENTS OF PART 9, NBCC 2010

THIS DESIGN COMPLIES WITH:
- PART 9 OF OBC 2012 , BCBC 2012 , ABC 2014
- CSA 086-09
- TPIC 2011

(55 % OF 27.2 P.S.F. G.S.L. PLUS 8.4 P.S.F. RAIN LOAD) EQUALS 23.3 P.S.F. SPECIFIED ROOF LIVE LOAD

ALLOWABLE DEFL.(LL)= L/360 (0.27")
CALCULATED VERT. DEFL.(LL) = L/ 999 (0.00")
ALLOWABLE DEFL.(TL)= L/360 (0.27")
CALCULATED VERT. DEFL.(TL) = L/ 999 (0.04")

CSI: TC=0.50 (3-4:1) , BC=0.16 (5-6:4) , WB=0.21 (3-5:1) , SSI=0.19 (3-4:1)

DOL LUMBER=1.00 NAIL=1.00 LS BEND=1.10 COMP=1.10 SHEAR=1.10 TENS= 1.10

COMPANION LIVE LOAD FACTOR = 0.50

TRUSS PLATE MANUFACTURER IS NOT RESPONSIBLE FOR QUALITY CONTROL IN THE TRUSS MANUFACTURING PLANT .

NAIL VALUES

PLATE	GRIP(DRY) (PSI) MAX	MIN	SHEAR (PLI) MAX	MIN	SECTION (PLI) MAX	MIN
MT20	618	354	1667	822	2284	1656

PLATE PLACEMENT TOL. = 0.250 inches

PLATE ROTATION TOL. = 5.0 Deg.

JSI GRIP= 0.49 (2) (INPUT = 0.90)
JSI METAL= 0.13 (2) (INPUT = 1.00)

RECEIVED
TOWN OF MILTON
MAR 29, 2017
17-4967
BUILDING DIVISION

10 MAR 2017

KOTT

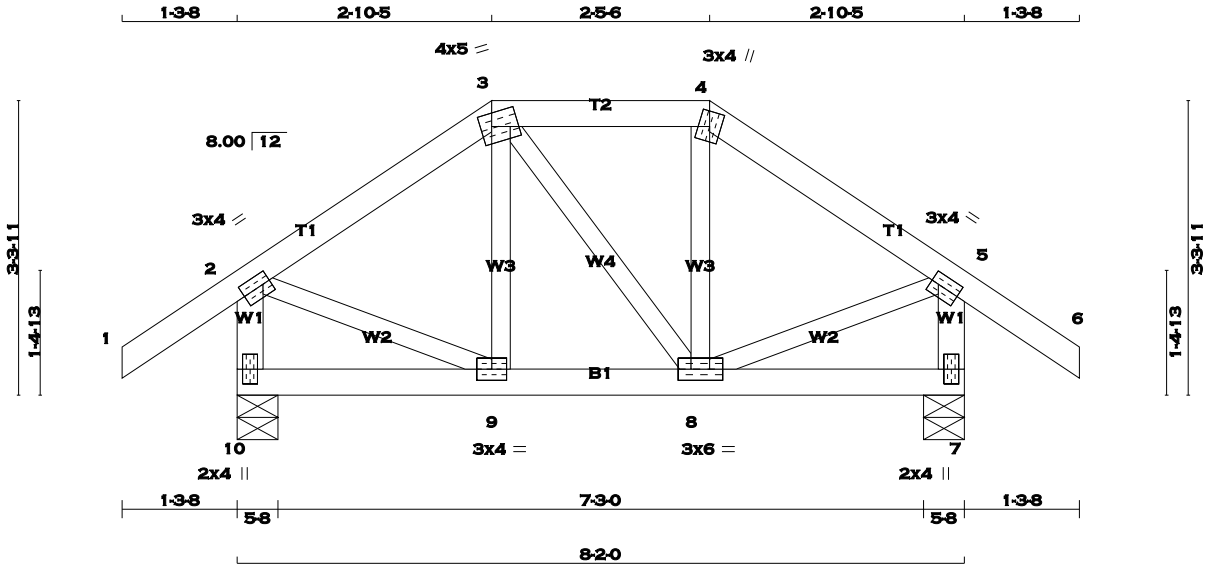

TOTAL WEIGHT = 38 lb

[M][F]

LUMBER

N. L. G. A. RULES

CHORDS	SIZE		LUMBER	DESCR.
1 - 3	2x4	DRY	No.2	SPF
3 - 4	2x4	DRY	No.2	SPF
4 - 6	2x4	DRY	No.2	SPF
10 - 2	2x4	DRY	No.2	SPF
7 - 5	2x4	DRY	No.2	SPF
10 - 7	2x4	DRY	No.2	SPF
ALL WEBS EXCEPT	2x3	DRY	No.2	SPF

DRY: SEASONED LUMBER.

PLATES (table is in inches)

JT	TYPE	PLATES	W	LEN	Y	X
2	TMVW-t	MT20	3.0	4.0	1.50	1.00
3	TTWW-m	MT20	4.0	5.0	1.75	1.50
4	TTW+m	MT20	3.0	4.0		
5	TMVW-t	MT20	3.0	4.0	1.50	1.00
7	BMV1+p	MT20	2.0	4.0		
8	BMWWW-t	MT20	3.0	6.0		
9	BMWW-t	MT20	3.0	4.0		
10	BMV1+p	MT20	2.0	4.0		

A SIZE FOR SIZE SUBSTITUTION OF MITEK MII20 WITH TEE-LOK TL20 PLATES IS ALLOWED.

READ ALL NOTES ON THIS PAGE AND ON THE ENGINEERING NOTE PAGE ENP-1. THE NOTE PAGE IS AN INTEGRAL PART OF THIS DRAWING AS IT CONTAINS SPECIFICATIONS AND CRITERIA USED IN THE DESIGN OF THIS COMPONENT.

DIMENSIONS, SUPPORTS AND LOADINGS SPECIFIED BY FABRICATOR TO BE VERIFIED BY BUILDING DESIGNER

BEARINGS

JT	FACTORED GROSS REACTION VERT	HORZ	MAXIMUM FACTORED GROSS REACTION DOWN	HORZ	UPLIFT	INPUT BRG IN-SX	REQRD BRG IN-SX
10	493	0	493	0	0	5-8	5-8
7	493	0	493	0	0	5-8	5-8

UNFACTORED REACTIONS

JT	1ST LCASE COMBINED	MAX./MIN. COMPONENT REACTIONS SNOW	LIVE	PERM.LIVE	WIND	DEAD	SOIL
10	344	254 / 0	0 / 0	0 / 0	0 / 0	90 / 0	0 / 0
7	344	254 / 0	0 / 0	0 / 0	0 / 0	90 / 0	0 / 0

BEARING MATERIAL TO BE SPF NO.2 OR BETTER AT JOINT(S) 10, 7

BRACING

TOP CHORD TO BE SHEATHED OR MAX. PURLIN SPACING = 6.25 FT.
MAX. UNBRACED BOTTOM CHORD LENGTH = 10.00 FT. OR RIGID CEILING DIRECTLY APPLIED.

ALL PITCH BREAKS AND PERIMETER CORNER JOINTS MUST BE LATERALLY RESTRAINED.

LOADING

TOTAL LOAD CASES: (4)

CHORDS

MEMB. FR-TO	MAX. FACTORED FORCE (LBS)	FACTORED VERT. LOAD (PLF) FROM	TO	LC1 CSI (LC)	MAX UNBRAC LENGTH
1- 2	0 / 29	-77.3	-77.3	0.10 (1)	10.00
2- 3	-295 / 0	-77.3	-77.3	0.08 (1)	6.25
3- 4	-243 / 0	-77.3	-77.3	0.06 (1)	6.25
4- 5	-295 / 0	-77.3	-77.3	0.08 (1)	6.25
5- 6	0 / 29	-77.3	-77.3	0.10 (1)	10.00
10- 2	-471 / 0	0.0	0.0	0.05 (1)	7.81
7- 5	-470 / 0	0.0	0.0	0.05 (1)	7.81
10- 9	0 / 0	-17.5	-17.5	0.03 (4)	10.00
9- 8	0 / 244	-17.5	-17.5	0.05 (1)	10.00
8- 7	0 / 0	-17.5	-17.5	0.03 (4)	10.00

WEBS

MEMB. FR-TO	MAX. FACTORED FORCE (LBS)	MAX CSI (LC)
9- 3	-40 / 28	0.01 (4)
3- 8	0 / 0	0.00 (1)
8- 4	-41 / 28	0.01 (4)
2- 9	0 / 261	0.06 (1)
8- 5	0 / 261	0.06 (1)

DESIGN CRITERIA

SPECIFIED LOADS:

TOP	CH.	LL	=	23.3	PSF
		DL	=	3.0	PSF
BOT	CH.	LL	=	0.0	PSF
		DL	=	7.0	PSF
TOTAL	LOAD		=	33.3	PSF

SPACING = 24.0 IN. C/C

LOADING IN FLAT SECTION BASED ON A SLOPE OF 2.00/12 MINIMUM

THIS TRUSS IS DESIGNED FOR RESIDENTIAL OR SMALL BUILDING REQUIREMENTS OF PART 9, NBCC 2010

THIS DESIGN COMPLIES WITH:
- PART 9 OF OBC 2012 , BCBC 2012 , ABC 2014
- CSA 086-09
- TPIC 2011

(55 % OF 27.2 P.S.F. G.S.L. PLUS 8.4 P.S.F. RAIN LOAD) EQUALS 23.3 P.S.F. SPECIFIED ROOF LIVE LOAD

ALLOWABLE DEFL.(LL)= L/360 (0.27")
CALCULATED VERT. DEFL.(LL) = L/ 999 (0.00")
ALLOWABLE DEFL.(TL)= L/360 (0.27")
CALCULATED VERT. DEFL.(TL) = L/ 999 (0.01")

CSI: TC=0.10 (1-2:1) , BC=0.05 (8-9:1) , WB=0.06 (2-9:1) , SSI=0.07 (3-4:1)

DOL LUMBER=1.00 NAIL=1.00 LS BEND=1.10 COMP=1.10 SHEAR=1.10 TENS= 1.10

COMPANION LIVE LOAD FACTOR = 0.50

TRUSS PLATE MANUFACTURER IS NOT RESPONSIBLE FOR QUALITY CONTROL IN THE TRUSS MANUFACTURING PLANT .

NAIL VALUES

PLATE	GRIP(DRY) (PSI) MAX	MIN	SHEAR (PLI) MAX	MIN	SECTION (PLI) MAX	MIN
MT20	618	354	1667	822	2284	1656

PLATE PLACEMENT TOL. = 0.250 inches

PLATE ROTATION TOL. = 5.0 Deg.

JSI GRIP= 0.85 (2) (INPUT = 0.90)
JSI METAL= 0.16 (2) (INPUT = 1.00)

10 MAR 2017

RECEIVED
TOWN OF MILTON
MAR 29, 2017
17-4967
BUILDING DIVISION

KOTT