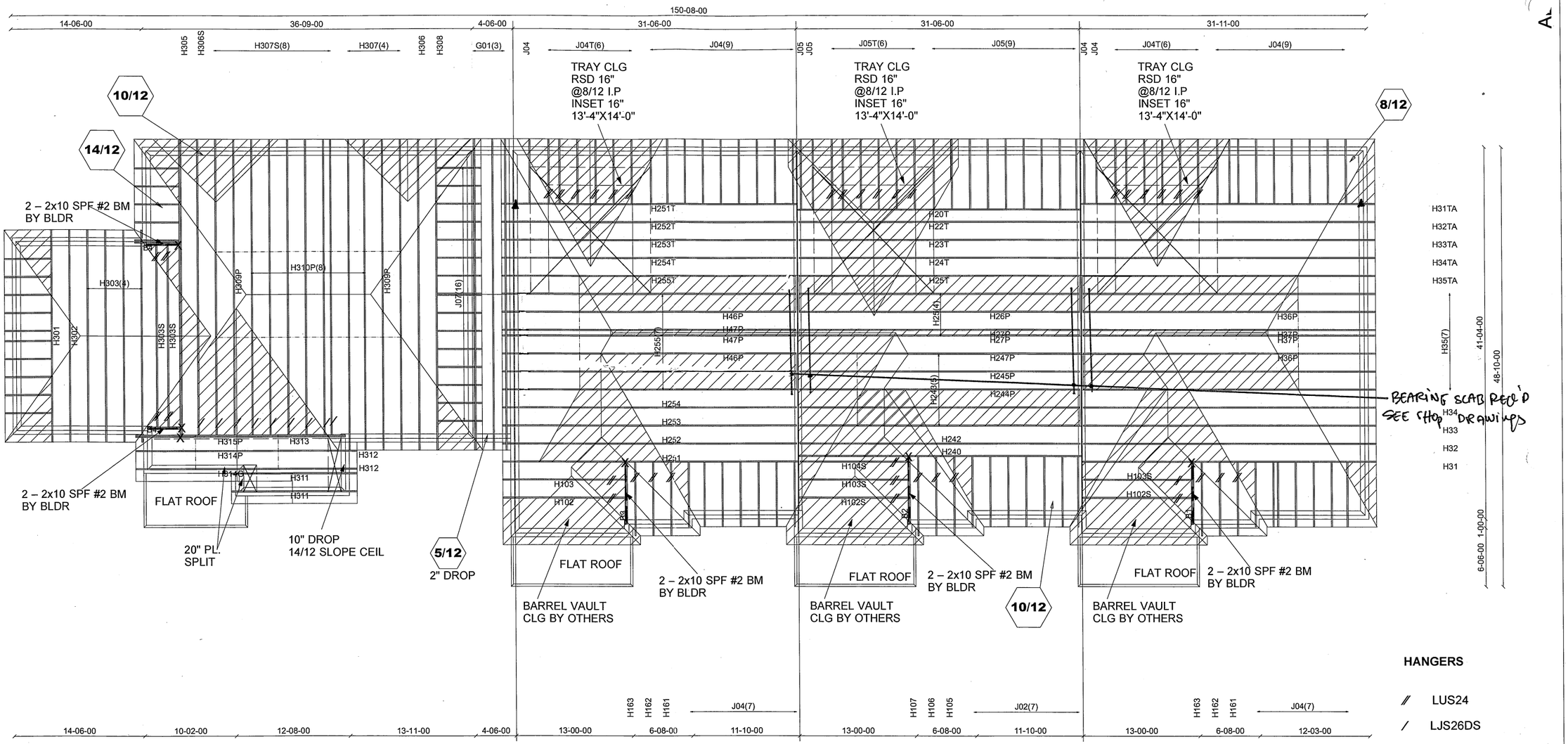

12" FIN. OH.
RSD HEEL-0"DROP
(2"X6" FASCIA)-FM
ASPHALT SHINGLES
2"X6"BRG./BRK.

PARTYWALL:
2-2"x4" STUD WALL
w/1-2"x4" STUD WALL
(G.T. = 3 1/2" BEARING
w/ MIN. 4" STAGGER)

PIGGYBACK TRS
PURLINS BY OTHERS

HANGERS

// LUS24
/ LJS26DS
X HHUS26-2
▲ TC26

1 UNIT 3106-MOD
ELEV. 'B'

2 UNIT 3103
ELEV. 'B'

3 UNIT 3103
ELEV. 'B'

4 UNIT 3103-END 2
ELEV. 'B'

E21104028 - E21104031
E21104051 - E21104055
E21104057 - E21104058
E21104139 - E21104140
E21104187 - E21104193
E21104295 - E21104297
E21104346 - E21104352

E21104363 , E21104367
E21104369
E21104371 - E21104374
E21104392 - E21104396
E21104398 - E21104399
E21104401 - E21104402
E21104404 - E21104434

PL: 111206(TYP.), 114170E

Mitek V. 8.2.0

ALL CONVENTIONAL FRAMING TO CONFORM WITH PART 9 O.B.C. LATEST EDITION. ROOF RAFTERS THAT CROSS OVER TRUSSES TO BE 2X4 SPF #2 @ 24" O.C WITH A VERT. POST TO THE TRUSS UNDERNEATH AT EACH CROSS POINT. VERT. POSTS LONGER THAN 6' TO HAVE LATERAL BRACING SO THAT THE DISTANCE BETWEEN END POINTS & BETWEEN ROWS OF BRACING DOES NOT EXCEED 6'

CONVENTIONAL FRAMING OTHERS

Job Track: 45147	Builder / Location: GOLD PARK HOMES / VAUGHAN	Model / Elevation: BLOCK 17 / UNIT 1-4	
Layout ID: 336337	Project: PINE VALLEY		
Plan Log: 113188	Date: 9/28/2021	Designer: JBURROWS/C	

THESE DRAWINGS CONSTITUTE THE PROPERTY OF ALPA ROOF TRUSSES INC., SHALL NOT BE REPRODUCED, PUBLISHED, OR REDISTRIBUTED IN ANY MANNER OR UTILIZED FOR ANY PURPOSE OTHER THAN THE MANUFACTURE OF TRUSSES BY ALPA ROOF TRUSSES INC AND WILL BE RETRACTED BY ALPA ROOF TRUSSES INC IF UTLILZED FOR ANY OTHER PURPOSE.

ALPA-BARRIE

EWP DESIGN INC.

(905) 832-2250 FAX (905) 832-0286

RESPONSIBILITIES AND SPECIFICATIONS

RESPONSIBILITIES

1. EWP DESIGN INC. is responsible for the design of trusses as individual components.
2. It is the responsibility of others to ascertain that the design loads utilized on each drawing meet or exceed the actual dead load imposed by the structure, the live load imposed by the intended use and the snow load imposed by local building code or authorities with jurisdictions.
3. All dimensions are to be verified by the owner, contractor, architect or other authorities with jurisdictions before truss fabrication.
4. EWP DESIGN INC. bears no responsibility for the erection of trusses. Persons erecting trusses are cautioned to seek professional advice regarding the temporary and permanent bracing for the system. Bracing shown on EWP DESIGN INC. drawing is specified for the truss as a component only and forms an integral part of the truss design.
5. It is the truss manufacturer's responsibility to ensure that trusses are manufactured in conformance with specifications of EWP DESIGN INC. as outlined below.

SPECIFICATIONS

1. Trusses designed by EWP DESIGN INC. conform to the relevant section of the Ontario Building Code of Canada (Part 9 or Part 4) or to the Canadian code for farm buildings, whichever applies to the building type, as indicated on the EWP DESIGN INC. drawings, and conform to the design procedures established by the Truss Plate Institute of Canada. Unit stresses used for truss designs are as per the edition of CSA-O86 shown on EWP DESIGN INC. drawings.
2. Lumber is to be the size, species and grade as specified on EWP DESIGN INC. drawings.
3. Moisture content of lumber shall not exceed 19% in service unless specified otherwise.
4. Metal connector plates shall be applied to both faces of truss at each joint and shall be positioned as specified.
5. Top chords of trusses are assumed to be continuously braced laterally by roof sheathing or by purlins at intervals not exceeding 12.5 times the thickness of top chord member.
6. Bottom chords shall be laterally braced at intervals not exceeding 3M (10') o.c., where rigid ceiling is not applied directly to the underside of chords.

THESE DRAWINGS CONSTITUTE THE PROPERTY OF EWP DESIGN INC., SHALL NOT BE REPRODUCED, PUBLISHED, OR REDISTRIBUTED IN ANY MANNER OR UTILIZED FOR ANY PURPOSE OTHER THAN THE MANUFACTURE OF TRUSSES BY THE ALPA LUMBER GROUP, AND WILL BE RETRACTED BY EWP DESIGN INC. IF UTILIZED FOR ANY OTHER PURPOSE.

JOB NAME	TRUSS NAME	QUANTITY	PLY	JOB DESC.		DRWG NO.
336321	J04		1	TRUSS DESC.	JT 45147	E21104028

Alpa Roof Truss, Maple

Version 8.420 S Jan 21 2021 MiTek Industries, Inc. Wed Oct 13 10:32:03 2021 Page 1

ID:hd511hZTz bdeQoS817GKByhVxV-3xuNPlGItVz2xog ?ZhCsc 8icW3SaVOMNeS1ayTswQ

Scale = 1:31.4

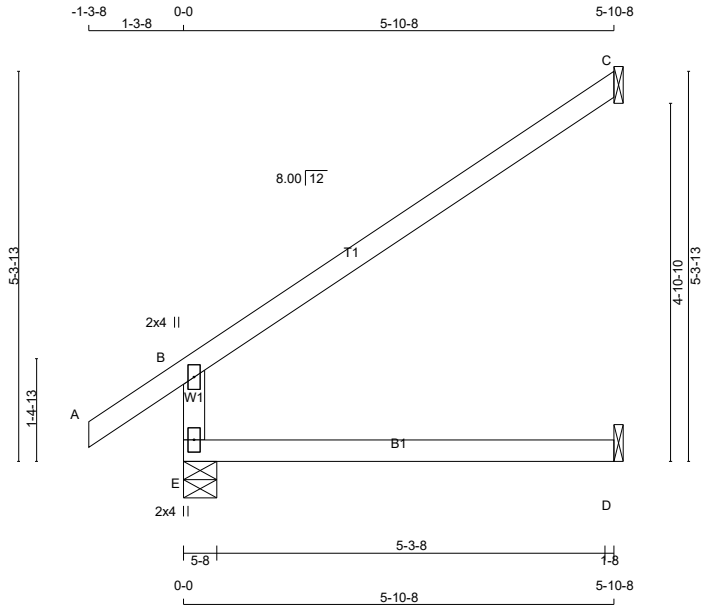

TOTAL WEIGHT = 83 X 18 = 1480 lb

LUMBER

N. L. G. A. RULES

CHORDS	SIZE		LUMBER	DESCR.
E - B	2x4	DRY	No.2	SPF
A - C	2x4	DRY	No.2	SPF
E - D	2x4	DRY	No.2	SPF

DRY: SEASONED LUMBER.

PLATES (table is in inches)

JT	TYPE	PLATES	W	LEN	Y	X
B	TMV+p	MT20	2.0	4.0		
E	BMV1+p	MT20	2.0	4.0		

LATERAL BRACE(S) SHOWN SHALL BE 2X4 SPF#2

DIMENSIONS, SUPPORTS AND LOADINGS SPECIFIED BY FABRICATOR TO BE VERIFIED BY BUILDING DESIGNER

BEARINGS

JT	FACTORED GROSS REACTION VERT	HORZ	MAXIMUM FACTORED GROSS REACTION DOWN	HORZ	UPLIFT	INPUT BRG IN-SX	REQRD BRG IN-SX
E	456	0	456	0	0	5-8	1-8
C	172	0	172	0	0	1-8	1-8
D	46	0	51	0	0	1-8	1-8

SEE MITEK STANDARD DETAIL B97791H FOR CONNECTION TO JOINT(S) C , D

UNFACTORED REACTIONS

JT	1ST LCASE COMBINED	MAX./MIN. COMPONENT REACTIONS SNOW	LIVE	PERM.LIVE	WIND	DEAD	SOIL
E	323	212 / 0	0 / 0	0 / 0	0 / 0	111 / 0	0 / 0
C	119	93 / 0	0 / 0	0 / 0	0 / 0	26 / 0	0 / 0
D	36	0 / 0	0 / 0	0 / 0	0 / 0	36 / 0	0 / 0

BEARING MATERIAL TO BE SPF NO.2 OR BETTER AT JOINT(S) E

BRACING

TOP CHORD TO BE SHEATHED OR MAX. PURLIN SPACING = 6.25 FT.
MAX. UNBRACED BOTTOM CHORD LENGTH = 10.00 FT OR RIGID CEILING DIRECTLY APPLIED.

ALL PITCH BREAKS AND PERIMETER CORNER JOINTS MUST BE LATERALLY RESTRAINED.

LOADING

TOTAL LOAD CASES: (4)

CHORDS MEMB. FR-TO	MAX. FACTORED FORCE (LBS)	FACTORED VERT. LOAD (PLF) FROM	TO	LC1 MAX CSI (LC)	MAX. UNBRAC LENGTH
E- B	-393 / 0	0.0	0.0	0.12 (4)	7.81
A- B	0 / 30	-78.0	-78.0	0.10 (1)	10.00
B- C	-32 / 0	-78.0	-78.0	0.46 (1)	6.25
E- D	0 / 0	-18.5	-18.5	0.13 (4)	10.00

WEBS MEMB. FR-TO	MAX. FACTORED FORCE (LBS)	MAX CSI (LC)

DESIGN CRITERIA

SPECIFIED LOADS:

TOP CH.	LL	=	21.0	PSF
	DL	=	6.0	PSF
BOT CH.	LL	=	0.0	PSF
	DL	=	7.4	PSF
TOTAL LOAD		=	34.4	PSF

SPACING = 24.0 IN. C/C

THIS TRUSS IS DESIGNED FOR RESIDENTIAL OR SMALL BUILDING REQUIREMENTS OF PART 9, NBCC 2015

THIS DESIGN COMPLIES WITH:
- PART 9 OF BCBC 2018 , ABC 2019
- PART 9 OF OBC 2012 (2019 AMENDMENT)
- CSA 086-14
- TPIC 2014

DESIGN ASSUMPTIONS
-OVERHANG NOT TO BE ALTERED OR CUT OFF.

(55 % OF 23.0 P.S.F. G.S.L. PLUS 8.4 P.S.F. RAIN LOAD) EQUALS 21.0 P.S.F. SPECIFIED ROOF LIVE LOAD

ALLOWABLE DEFL.(LL)= L/360 (0.20")
CALCULATED VERT. DEFL.(LL) = L/ 999 (0.00")
ALLOWABLE DEFL.(TL)= L/360 (0.20")
CALCULATED VERT. DEFL.(TL) = L/ 999 (0.03")

CSI: TC=0.46/1.00 (B-C:1) , BC=0.13/1.00 (D-E:4) , WB=0.00/1.00 (n/a:0) , SSI=0.19/1.00 (B-C:1)

DOL LUMBER=1.00 NAIL=1.00 LS BEND=1.10 COMP=1.10 SHEAR=1.10 TENS= 1.10

COMPANION LIVE LOAD FACTOR = 1.00

AUTOSOLVE RIGHT HEEL ONLY

TRUSS PLATE MANUFACTURER IS NOT RESPONSIBLE FOR QUALITY CONTROL IN THE TRUSS MANUFACTURING PLANT .

NAIL VALUES

PLATE	GRIP(DRY) (PSI) MAX	MIN	SHEAR (PLI) MAX	MIN	SECTION (PLI) MAX	MIN
MT20	650	371	1747	788	1987	1873

PLATE PLACEMENT TOL. = 0.250 inches

PLATE ROTATION TOL. = 5.0 Deg.

JSI GRIP= 0.24 (B) (INPUT = 0.90)
JSI METAL= 0.20 (B) (INPUT = 1.00)

JOB NAME	TRUSS NAME	QUANTITY	PLY	JOB DESC.		DRWG NO.
336321	J04T		1	TRUSS DESC.	JT 45147	E21104029

Alpa Roof Truss, Maple

Version 8.420 S Jan 21 2021 MiTek Industries, Inc. Wed Oct 13 10:32:06 2021 Page 1

ID:hd511hZTz_bdeQoS817GKByhVxV-TWaV2nIAAQLdoFPYhiFvUFclUpaDfxVq2Ks6euyTswN

Scale: 3/8"=1'

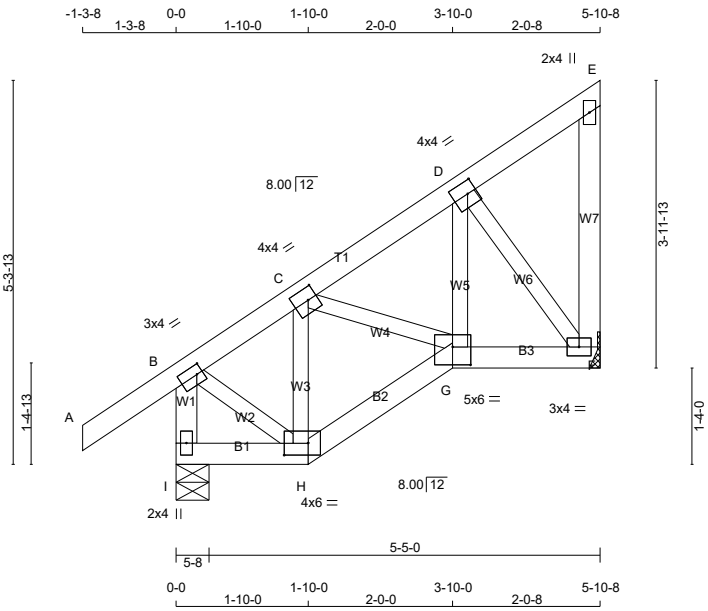

TOTAL WEIGHT = 33 X 31 = 1017 lb

LUMBER

N. L. G. A. RULES

CHORDS	SIZE		LUMBER	DESCR.
I - B	2x4	DRY	No.2	SPF
A - E	2x4	DRY	No.2	SPF
F - E	2x4	DRY	No.2	SPF
I - H	2x4	DRY	No.2	SPF
H - G	2x4	DRY	No.2	SPF
G - F	2x4	DRY	No.2	SPF
ALL WEBS	2x3	DRY	No.2	SPF

DRY: SEASONED LUMBER.

PLATES (table is in inches)

JT	TYPE	PLATES	W	LEN	Y	X
B	TMVW-t	MT20	3.0	4.0	1.50	1.00
C	TMWW-t	MT20	4.0	4.0	2.00	1.50
D	TMWW-t	MT20	4.0	4.0	2.00	1.50
E	TMV+p	MT20	2.0	4.0		
F	BMVW1-t	MT20	3.0	4.0		
G	BBWW-l	MT20	5.0	6.0	3.00	3.00
H	BBWW-l	MT20	4.0	6.0	2.00	4.00
I	BMV1+p	MT20	2.0	4.0		

LATERAL BRACE(S) SHOWN SHALL BE 2X4 SPF#2

DIMENSIONS, SUPPORTS AND LOADINGS SPECIFIED BY FABRICATOR TO BE VERIFIED BY BUILDING DESIGNER

BEARINGS

JT	FACTORED GROSS REACTION VERT	HORZ	MAXIMUM FACTORED GROSS REACTION DOWN	HORZ	UPLIFT	INPUT BRG IN-SX	REQRD BRG IN-SX
I	403	0	403	0	0	5-8	1-8
F	271	0	271	0	0	MECHANICAL	

A SUITABLE HANGER/MECHANICAL CONNECTION IS REQUIRED AT JOINT F. MINIMUM BEARING LENGTH AT JOINT F = 1-8.

UNFACTORED REACTIONS

JT	1ST LCASE COMBINED	MAX./MIN. COMPONENT REACTIONS SNOW	LIVE	PERM.LIVE	WIND	DEAD	SOIL
I	285	188 / 0	0 / 0	0 / 0	0 / 0	97 / 0	0 / 0
F	193	117 / 0	0 / 0	0 / 0	0 / 0	77 / 0	0 / 0

BEARING MATERIAL TO BE SPF NO.2 OR BETTER AT JOINT(S) I

BRACING

TOP CHORD TO BE SHEATHED OR MAX. PURLIN SPACING = 6.25 FT.
MAX. UNBRACED BOTTOM CHORD LENGTH = 10.00 FT OR RIGID CEILING DIRECTLY APPLIED.

ALL PITCH BREAKS AND PERIMETER CORNER JOINTS MUST BE LATERALLY RESTRAINED.

LOADING

TOTAL LOAD CASES: (4)

CHORDS

MEMB. FR-TO	MAX. FACTORED FORCE (LBS)	FACTORED VERT. LOAD LC1 (PLF) FROM	TO	MAX CSI (LC)	MAX. UNBRAC LENGTH
I- B	-386 / 0	0.0	0.0	0.04 (1)	7.81
A- B	0 / 30	-78.0	-78.0	0.10 (1)	10.00
B- C	-188 / 0	-78.0	-78.0	0.10 (1)	6.25
C- D	-192 / 0	-78.0	-78.0	0.05 (1)	6.25
D- E	-10 / 0	-78.0	-78.0	0.05 (1)	6.25
F- E	-57 / 0	0.0	0.0	0.01 (1)	7.81
I- H	0 / 0	-18.5	-18.5	0.02 (4)	10.00
H- G	0 / 160	-18.5	-18.5	0.04 (1)	10.00
G- F	0 / 160	-18.5	-18.5	0.04 (1)	10.00

WEBS

MEMB. FR-TO	MAX. FACTORED FORCE (LBS)	MAX CSI (LC)
B- H	0 / 161	0.04 (1)
H- C	-134 / 0	0.02 (1)
C- G	0 / 35	0.01 (1)
G- D	0 / 114	0.03 (4)
D- F	-254 / 0	0.05 (1)

DESIGN CRITERIA [M]

SPECIFIED LOADS:

TOP	CH.	LL	=	21.0	PSF
		DL	=	6.0	PSF
BOT	CH.	LL	=	0.0	PSF
		DL	=	7.4	PSF
TOTAL	LOAD		=	34.4	PSF

SPACING = 24.0 IN. C/C

THIS TRUSS IS DESIGNED FOR RESIDENTIAL OR SMALL BUILDING REQUIREMENTS OF PART 9, NBCC 2015

THIS DESIGN COMPLIES WITH:
- PART 9 OF BCBC 2018 , ABC 2019
- PART 9 OF OBC 2012 (2019 AMENDMENT)
- CSA 086-14
- TPIC 2014

DESIGN ASSUMPTIONS
-OVERHANG NOT TO BE ALTERED OR CUT OFF.

(55 % OF 23.0 P.S.F. G.S.L. PLUS 8.4 P.S.F. RAIN LOAD) EQUALS 21.0 P.S.F. SPECIFIED ROOF LIVE LOAD

ALLOWABLE DEFL.(LL)= L/360 (0.20")
CALCULATED VERT. DEFL.(LL) = L/ 999 (0.00")
ALLOWABLE DEFL.(TL)= L/360 (0.20")
CALCULATED VERT. DEFL.(TL) = L/ 999 (0.00")

CSI: TC=0.10/1.00 (A-B:1) , BC=0.04/1.00 (F-G:1) , WB=0.05/1.00 (D-F:1) , SSI=0.07/1.00 (A-B:1)

DOL LUMBER=1.00 NAIL=1.00 LS BEND=1.10 COMP=1.10 SHEAR=1.10 TENS= 1.10

COMPANION LIVE LOAD FACTOR = 1.00

TRUSS PLATE MANUFACTURER IS NOT RESPONSIBLE FOR QUALITY CONTROL IN THE TRUSS MANUFACTURING PLANT .

NAIL VALUES

PLATE	GRIP(DRY) (PSI) MAX	MIN	SHEAR (PLI) MAX	MIN	SECTION (PLI) MAX	MIN
MT20	650	371	1747	788	1987	1873

PLATE PLACEMENT TOL. = 0.250 inches

PLATE ROTATION TOL. = 5.0 Deg.

JSI GRIP= 0.50 (B) (INPUT = 0.90)
JSI METAL= 0.10 (B) (INPUT = 1.00)

JOB NAME	TRUSS NAME	QUANTITY	PLY	JOB DESC.		DRWG NO.
336321	J05		1	TRUSS DESC.	JT 45147	E21104030

Alpa Roof Truss, Maple

Version 8.420 S Jan 21 2021 MiTek Industries, Inc. Wed Oct 13 10:32:07 2021 Page 1

ID:hd511hZTz_bdeQoS817GKByhVxV-xi8tF7JoxkTUPPzlEPm81S9r3DuZOOU_H_cfBLyTswM

Scale = 1:33.5

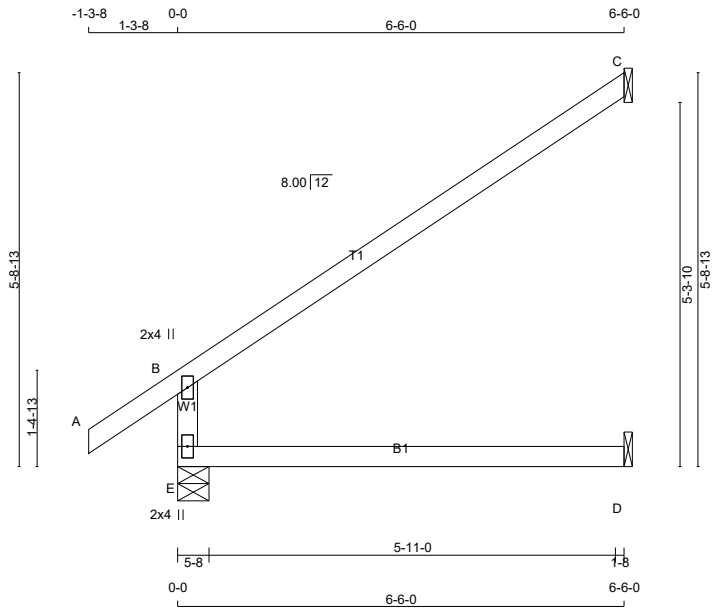

TOTAL WEIGHT = 17 X 19 = 330 lb

[M][F]

LUMBER

N. L. G. A. RULES

CHORDS	SIZE		LUMBER	DESCR.
E - B	2x4	DRY	No.2	SPF
A - C	2x4	DRY	No.2	SPF
E - D	2x4	DRY	No.2	SPF

DRY: SEASONED LUMBER.

PLATES (table is in inches)

JT	TYPE	PLATES	W	LEN	Y	X
B	TMV+p	MT20	2.0	4.0		
E	BMV1+p	MT20	2.0	4.0		

LATERAL BRACE(S) SHOWN SHALL BE 2X4 SPF#2

DIMENSIONS, SUPPORTS AND LOADINGS SPECIFIED BY FABRICATOR TO BE VERIFIED BY BUILDING DESIGNER

BEARINGS

JT	FACTORED GROSS REACTION VERT	HORZ	MAXIMUM FACTORED GROSS REACTION DOWN	HORZ	UPLIFT	INPUT BRG IN-SX	REQRD BRG IN-SX
E	494	0	494	0	0	5-8	1-8
C	190	0	190	0	0	1-8	1-8
D	50	0	56	0	0	1-8	1-8

SEE MITEK STANDARD DETAIL B97791H FOR CONNECTION TO JOINT(S) C , D

UNFACTORED REACTIONS

JT	1ST LCASE COMBINED	MAX./MIN. COMPONENT REACTIONS SNOW	LIVE	PERM.LIVE	WIND	DEAD	SOIL
E	349	228 / 0	0 / 0	0 / 0	0 / 0	121 / 0	0 / 0
C	132	102 / 0	0 / 0	0 / 0	0 / 0	29 / 0	0 / 0
D	40	0 / 0	0 / 0	0 / 0	0 / 0	40 / 0	0 / 0

BEARING MATERIAL TO BE SPF NO.2 OR BETTER AT JOINT(S) E

BRACING

TOP CHORD TO BE SHEATHED OR MAX. PURLIN SPACING = 6.25 FT.
MAX. UNBRACED BOTTOM CHORD LENGTH = 10.00 FT OR RIGID CEILING DIRECTLY APPLIED.

ALL PITCH BREAKS AND PERIMETER CORNER JOINTS MUST BE LATERALLY RESTRAINED.

LOADING

TOTAL LOAD CASES: (4)

CHORDS MEMB. FR-TO	MAX. FACTORED FORCE (LBS)	FACTORED VERT. LOAD (PLF) FROM	TO	LC1 MAX CSI (LC)	MAX. UNBRAC LENGTH
E- B	-424 / 0	0.0	0.0	0.13 (4)	7.81
A- B	0 / 30	-78.0	-78.0	0.10 (1)	10.00
B- C	-35 / 0	-78.0	-78.0	0.44 (1)	6.25
E- D	0 / 0	-18.5	-18.5	0.16 (4)	10.00

WEBS MEMB. FR-TO	MAX. FACTORED FORCE (LBS)	MAX CSI (LC)

DESIGN CRITERIA

SPECIFIED LOADS:

TOP CH.	LL	=	21.0	PSF
	DL	=	6.0	PSF
BOT CH.	LL	=	0.0	PSF
	DL	=	7.4	PSF
TOTAL LOAD		=	34.4	PSF

SPACING = 24.0 IN. C/C

THIS TRUSS IS DESIGNED FOR RESIDENTIAL OR SMALL BUILDING REQUIREMENTS OF PART 9, NBCC 2015

THIS DESIGN COMPLIES WITH:
- PART 9 OF BCBC 2018 , ABC 2019
- PART 9 OF OBC 2012 (2019 AMENDMENT)
- CSA 086-14
- TPIC 2014

DESIGN ASSUMPTIONS
-OVERHANG NOT TO BE ALTERED OR CUT OFF.

(55 % OF 23.0 P.S.F. G.S.L. PLUS 8.4 P.S.F. RAIN LOAD) EQUALS 21.0 P.S.F. SPECIFIED ROOF LIVE LOAD

ALLOWABLE DEFL.(LL)= L/360 (0.22")
CALCULATED VERT. DEFL.(LL) = L/ 999 (0.00")
ALLOWABLE DEFL.(TL)= L/360 (0.22")
CALCULATED VERT. DEFL.(TL) = L/ 999 (0.05")

CSI: TC=0.44/1.00 (B-C:1) , BC=0.16/1.00 (D-E:4) , WB=0.00/1.00 (n/a:0) , SSI=0.21/1.00 (B-C:1)

DOL LUMBER=1.00 NAIL=1.00 LS BEND=1.10 COMP=1.10 SHEAR=1.10 TENS= 1.10

COMPANION LIVE LOAD FACTOR = 1.00

AUTOSOLVE RIGHT HEEL ONLY

TRUSS PLATE MANUFACTURER IS NOT RESPONSIBLE FOR QUALITY CONTROL IN THE TRUSS MANUFACTURING PLANT .

NAIL VALUES

PLATE	GRIP(DRY) (PSI) MAX	MIN	SHEAR (PLI) MAX	MIN	SECTION (PLI) MAX	MIN
MT20	650	371	1747	788	1987	1873

PLATE PLACEMENT TOL. = 0.250 inches

PLATE ROTATION TOL. = 5.0 Deg.

JSI GRIP= 0.26 (B) (INPUT = 0.90)
JSI METAL= 0.22 (B) (INPUT = 1.00)

JOB NAME	TRUSS NAME	QUANTITY	PLY	JOB DESC.		DRWG NO.
336321	J05T		1	TRUSS DESC.	JT 45147	E21104031

Alpa Roof Truss, Maple

Version 8.420 S Jan 21 2021 MiTek Industries, Inc. Wed Oct 13 10:32:09 2021 Page 1

ID:hd511hZTz_bdeQoS817GKByhVxV-u5FegoL2TLkBfj77Mqoc6tEGj1bcsl0GkI5mFDyTswK

Scale = 1:34.2

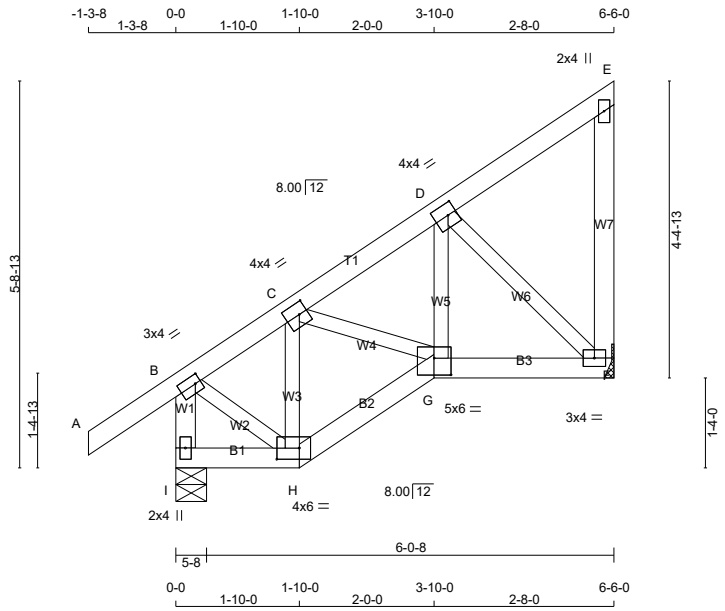

TOTAL WEIGHT = 7 X 33 = 232 lb

[M][F]

LUMBER

N. L. G. A. RULES

CHORDS	SIZE		LUMBER	DESCR.
I - B	2x4	DRY	No.2	SPF
A - E	2x4	DRY	No.2	SPF
F - E	2x4	DRY	No.2	SPF
I - H	2x4	DRY	No.2	SPF
H - G	2x4	DRY	No.2	SPF
G - F	2x4	DRY	No.2	SPF
ALL WEBS	2x3	DRY	No.2	SPF

DRY: SEASONED LUMBER.

PLATES (table is in inches)

JT	TYPE	PLATES	W	LEN	Y	X
B	TMVW-t	MT20	3.0	4.0	1.50	1.00
C	TMWW-t	MT20	4.0	4.0	2.00	1.50
D	TMWW-t	MT20	4.0	4.0	2.00	1.50
E	TMV+p	MT20	2.0	4.0		
F	BMVW1-t	MT20	3.0	4.0		
G	BBWW-l	MT20	5.0	6.0	3.00	3.00
H	BBWW-l	MT20	4.0	6.0	2.00	4.00
I	BMV1+p	MT20	2.0	4.0		

LATERAL BRACE(S) SHOWN SHALL BE 2X4 SPF#2

DIMENSIONS, SUPPORTS AND LOADINGS SPECIFIED BY FABRICATOR TO BE VERIFIED BY BUILDING DESIGNER

BEARINGS

JT	FACTORED GROSS REACTION VERT	HORZ	MAXIMUM FACTORED GROSS REACTION DOWN	HORZ	UPLIFT	INPUT BRG IN-SX	REQRD BRG IN-SX
I	432	0	432	0	0	5-8	1-8
F	302	0	302	0	0	MECHANICAL	

A SUITABLE HANGER/MECHANICAL CONNECTION IS REQUIRED AT JOINT F. MINIMUM BEARING LENGTH AT JOINT F = 1-8.

UNFACTORED REACTIONS

JT	1ST LCASE COMBINED	MAX./MIN. COMPONENT REACTIONS SNOW	LIVE	PERM.LIVE	WIND	DEAD	SOIL
I	305	200 / 0	0 / 0	0 / 0	0 / 0	105 / 0	0 / 0
F	216	130 / 0	0 / 0	0 / 0	0 / 0	85 / 0	0 / 0

BEARING MATERIAL TO BE SPF NO.2 OR BETTER AT JOINT(S) I

BRACING

TOP CHORD TO BE SHEATHED OR MAX. PURLIN SPACING = 6.25 FT.
MAX. UNBRACED BOTTOM CHORD LENGTH = 10.00 FT OR RIGID CEILING DIRECTLY APPLIED.

ALL PITCH BREAKS AND PERIMETER CORNER JOINTS MUST BE LATERALLY RESTRAINED.

LOADING

TOTAL LOAD CASES: (4)

CHORDS

MEMB. FR-TO	MAX. FACTORED FORCE (LBS)	FACTORED VERT. LOAD LC1 (PLF) FROM	TO	MAX CSI (LC)	MAX. UNBRAC LENGTH
I- B	-415 / 0	0.0	0.0	0.04 (1)	7.81
A- B	0 / 30	-78.0	-78.0	0.10 (1)	10.00
B- C	-215 / 0	-78.0	-78.0	0.08 (1)	6.25
C- D	-253 / 0	-78.0	-78.0	0.05 (1)	6.25
D- E	-11 / 0	-78.0	-78.0	0.05 (1)	6.25
F- E	-80 / 0	0.0	0.0	0.02 (1)	7.81
I- H	0 / 0	-18.5	-18.5	0.02 (4)	10.00
H- G	0 / 184	-18.5	-18.5	0.04 (1)	10.00
G- F	0 / 215	-18.5	-18.5	0.06 (4)	10.00

WEBS

MEMB. FR-TO	MAX. FACTORED FORCE (LBS)	MAX CSI (LC)
B- H	0 / 185	0.04 (1)
H- C	-160 / 0	0.03 (1)
C- G	0 / 73	0.02 (1)
G- D	0 / 118	0.03 (4)
D- F	-293 / 0	0.06 (1)

DESIGN CRITERIA

SPECIFIED LOADS:

TOP CH.	LL	=	21.0	PSF
	DL	=	6.0	PSF
BOT CH.	LL	=	0.0	PSF
	DL	=	7.4	PSF
TOTAL LOAD		=	34.4	PSF

SPACING = 24.0 IN. C/C

THIS TRUSS IS DESIGNED FOR RESIDENTIAL OR SMALL BUILDING REQUIREMENTS OF PART 9, NBCC 2015

THIS DESIGN COMPLIES WITH:
- PART 9 OF BCBC 2018 , ABC 2019
- PART 9 OF OBC 2012 (2019 AMENDMENT)
- CSA 086-14
- TPIC 2014

DESIGN ASSUMPTIONS
-OVERHANG NOT TO BE ALTERED OR CUT OFF.

(55 % OF 23.0 P.S.F. G.S.L. PLUS 8.4 P.S.F. RAIN LOAD) EQUALS 21.0 P.S.F. SPECIFIED ROOF LIVE LOAD

ALLOWABLE DEFL.(LL)= L/360 (0.22")
CALCULATED VERT. DEFL.(LL) = L/ 999 (0.00")
ALLOWABLE DEFL.(TL)= L/360 (0.22")
CALCULATED VERT. DEFL.(TL) = L/ 999 (0.01")

CSI: TC=0.10/1.00 (A-B:1) , BC=0.06/1.00 (F-G:4) , WB=0.06/1.00 (D-F:1) , SSI=0.08/1.00 (D-E:1)

DOL LUMBER=1.00 NAIL=1.00 LS BEND=1.10 COMP=1.10 SHEAR=1.10 TENS= 1.10

COMPANION LIVE LOAD FACTOR = 1.00

TRUSS PLATE MANUFACTURER IS NOT RESPONSIBLE FOR QUALITY CONTROL IN THE TRUSS MANUFACTURING PLANT .

NAIL VALUES

PLATE	GRIP(DRY) (PSI) MAX	MIN	SHEAR (PLI) MAX	MIN	SECTION (PLI) MAX	MIN
MT20	650	371	1747	788	1987	1873

PLATE PLACEMENT TOL. = 0.250 inches

PLATE ROTATION TOL. = 5.0 Deg.

JSI GRIP= 0.57 (B) (INPUT = 0.90)
JSI METAL= 0.11 (B) (INPUT = 1.00)

JOB NAME	TRUSS NAME	QUANTITY	PLY	JOB DESC.	DRWG NO.
336328	H32		1	TRUSS DESC. JT 45147	E21104051

Alpa Roof Truss, Maple

Version 8.420 S Jan 21 2021 MiTek Industries, Inc. Wed Oct 13 11:34:09 2021 Page 1

ID:hd511hZTz_bdeQoS817GKByhVxV-zl1yQoMUOJPNxPW4H5XytLIqSa9zSYKq83DcpcyTs0C

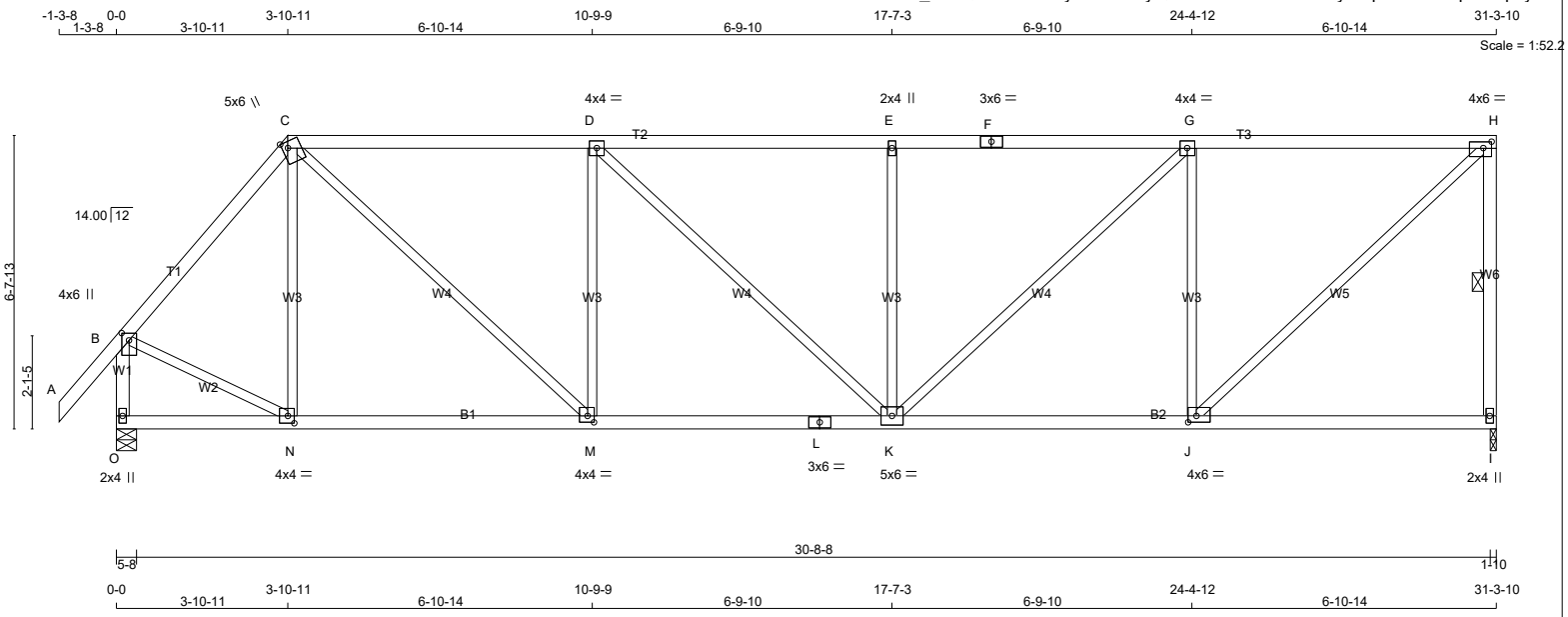

TOTAL WEIGHT = 137 lb

[M]

LUMBER

N. L. G. A. RULES

CHORDS	SIZE		LUMBER	DESCR.
A - C	2x4	DRY	No.2	SPF
C - F	2x4	DRY	No.2	SPF
F - H	2x4	DRY	No.2	SPF
I - H	2x4	DRY	No.2	SPF
O - B	2x4	DRY	No.2	SPF
O - L	2x4	DRY	No.2	SPF
L - I	2x4	DRY	No.2	SPF
ALL WEBS EXCEPT	2x3	DRY	No.2	SPF

DRY: SEASONED LUMBER.

PLATES (table is in inches)

JT	TYPE	PLATES	W	LEN	Y	X
B	TMVW+p	MT20	4.0	6.0	2.00	2.00
C	TTWW+m	MT20	5.0	6.0	1.75	1.50
D	TMWW-t	MT20	4.0	4.0		
E	TMW+w	MT20	2.0	4.0		
F	TS-t	MT20	3.0	6.0		
G	TMWW-t	MT20	4.0	4.0		
H	TMVW-t	MT20	4.0	6.0	1.75	2.25
I	BMV1+p	MT20	2.0	4.0		
J	BMWW-t	MT20	4.0	6.0	1.75	2.25
K	BMWWW-t	MT20	5.0	6.0		
L	BS-t	MT20	3.0	6.0		
M	BMWW-t	MT20	4.0	4.0	1.75	1.75
N	BMWW-t	MT20	4.0	4.0	2.00	1.75
O	BMV1+p	MT20	2.0	4.0		

LATERAL BRACE(S) SHOWN SHALL BE 2X4 SPF#2

DIMENSIONS, SUPPORTS AND LOADINGS SPECIFIED BY FABRICATOR TO BE VERIFIED BY BUILDING DESIGNER

BEARINGS

JT	FACTORED GROSS REACTION VERT	HORZ	MAXIMUM FACTORED GROSS REACTION DOWN	HORZ	UPLIFT	INPUT BRG IN-SX	REQRD BRG IN-SX
I	1510	0	1510	0	0	1-10	1-10
O	1619	0	1619	0	0	5-8	1-12

UNFACTORED REACTIONS

JT	1ST LCASE COMBINED	MAX./MIN. COMPONENT REACTIONS SNOW	LIVE	PERM.LIVE	WIND	DEAD	SOIL
I	1076	657 / 0	0 / 0	0 / 0	0 / 0	419 / 0	0 / 0
O	1152	716 / 0	0 / 0	0 / 0	0 / 0	436 / 0	0 / 0

BEARING MATERIAL TO BE SPF NO.2 OR BETTER AT JOINT(S) I, O

BRACING

TOP CHORD TO BE SHEATHED OR MAX. PURLIN SPACING = 4.07 FT.
MAX. UNBRACED BOTTOM CHORD LENGTH = 10.00 FT OR RIGID CEILING DIRECTLY APPLIED.

ALL PITCH BREAKS AND PERIMETER CORNER JOINTS MUST BE LATERALLY RESTRAINED.

1 LATERAL BRACE(S) AT 1/ 2 LENGTH OF H-I.

END VERTICAL(S) MUST BE SHEATHED OR HAVE BRACES AS INDICATED IN THE MAX. UNBRACED LENGTH COLUMN OF THE TABLE BELOW

LOADING

TOTAL LOAD CASES: (4)

CHORDS MEMB. FR-TO	MAX. FACTORED FORCE (LBS)	FACTORED VERT. LOAD (PLF) FROM	TO	LC1 CSI (LC)	MAX UNBRAC LENGTH	WEBS MEMB. FR-TO	MAX. FACTORED FORCE (LBS)	MAX CSI (LC)
A- B	0 / 42	-78.0	-78.0	0.11 (1)	10.00	N- C	-247 / 0	0.18 (1)
B- C	-1280 / 0	-78.0	-78.0	0.25 (1)	5.43	C- M	0 / 1255	0.28 (1)
C- D	-1750 / 0	-78.0	-78.0	0.70 (1)	4.21	M- D	-718 / 0	0.53 (1)
D- E	-1876 / 0	-78.0	-78.0	0.71 (1)	4.08	D- K	0 / 172	0.04 (1)
E- F	-1876 / 0	-78.0	-78.0	0.71 (1)	4.07	K- E	-489 / 0	0.36 (1)
F- G	-1876 / 0	-78.0	-78.0	0.71 (1)	4.07	K- G	0 / 718	0.16 (1)
G- H	-1352 / 0	-78.0	-78.0	0.64 (1)	4.71	J- G	-1101 / 0	0.81 (1)
I- H	-1458 / 0	0.0	0.0	0.30 (1)	5.42	J- H	0 / 1838	0.41 (1)
O- B	-1597 / 0	0.0	0.0	0.19 (1)	6.54	B- N	0 / 904	0.20 (1)
O- N	0 / 0	-18.5	-18.5	0.13 (4)	10.00			
N- M	0 / 825	-18.5	-18.5	0.25 (4)	10.00			
M- L	0 / 1751	-18.5	-18.5	0.38 (1)	10.00			
L- K	0 / 1751	-18.5	-18.5	0.38 (1)	10.00			
K- J	0 / 1352	-18.5	-18.5	0.34 (4)	10.00			
J- I	0 / 0	-18.5	-18.5	0.21 (4)	10.00			

DESIGN CRITERIA

SPECIFIED LOADS:

TOP CH.	LL	=	21.0	PSF
	DL	=	6.0	PSF
BOT CH.	LL	=	0.0	PSF
	DL	=	7.4	PSF
TOTAL LOAD		=	34.4	PSF

SPACING = 24.0 IN. C/C

LOADING IN FLAT SECTION BASED ON A SLOPE OF 2.00/12 MINIMUM

THIS TRUSS IS DESIGNED FOR RESIDENTIAL OR SMALL BUILDING REQUIREMENTS OF PART 9, NBCC 2015

THIS DESIGN COMPLIES WITH:
- PART 9 OF BCBC 2018 , ABC 2019
- PART 9 OF OBC 2012 (2019 AMENDMENT)
- CSA 086-14
- TPIC 2014

(55 % OF 23.0 P.S.F. G.S.L. PLUS 8.4 P.S.F. RAIN LOAD) EQUALS 21.0 P.S.F. SPECIFIED ROOF LIVE LOAD

ALLOWABLE DEFL.(LL)= L/360 (1.04")
CALCULATED VERT. DEFL.(LL) = L/ 999 (0.09")
ALLOWABLE DEFL.(TL)= L/360 (1.04")
CALCULATED VERT. DEFL.(TL) = L/ 999 (0.19")

CSI: TC=0.71/1.00 (E-G:1) , BC=0.38/1.00 (K-M:1) , WB=0.81/1.00 (G-J:1) , SSI=0.25/1.00 (G-H:1)

DOL LUMBER=1.00 NAIL=1.00 LS BEND=1.10 COMP=1.10 SHEAR=1.10 TENS= 1.10

COMPANION LIVE LOAD FACTOR = 1.00

TRUSS PLATE MANUFACTURER IS NOT RESPONSIBLE FOR QUALITY CONTROL IN THE TRUSS MANUFACTURING PLANT .

NAIL VALUES

PLATE	GRIP(DRY) (PSI) MAX	MIN	SHEAR (PLI) MAX	MIN	SECTION (PLI) MAX	MIN
MT20	650	371	1747	788	1987	1873

PLATE PLACEMENT TOL. = 0.250 inches

PLATE ROTATION TOL. = 5.0 Deg.

JSI GRIP= 0.90 (H) (INPUT = 0.90)
JSI METAL= 0.54 (L) (INPUT = 1.00)

JOB NAME	TRUSS NAME	QUANTITY	PLY	JOB DESC.	DRWG NO.
336328	H33		1	TRUSS DESC. JT 45147	E21104052

Alpa Roof Truss, Maple

Version 8.420 S Jan 21 2021 MiTek Industries, Inc. Wed Oct 13 11:34:10 2021 Page 1

ID:hd511hZTz bdeQoS817GKByhVxV-RybKd8N69dXEZZ5Hrp3BQZr1w VzB1GzNjzAM2yTs0B

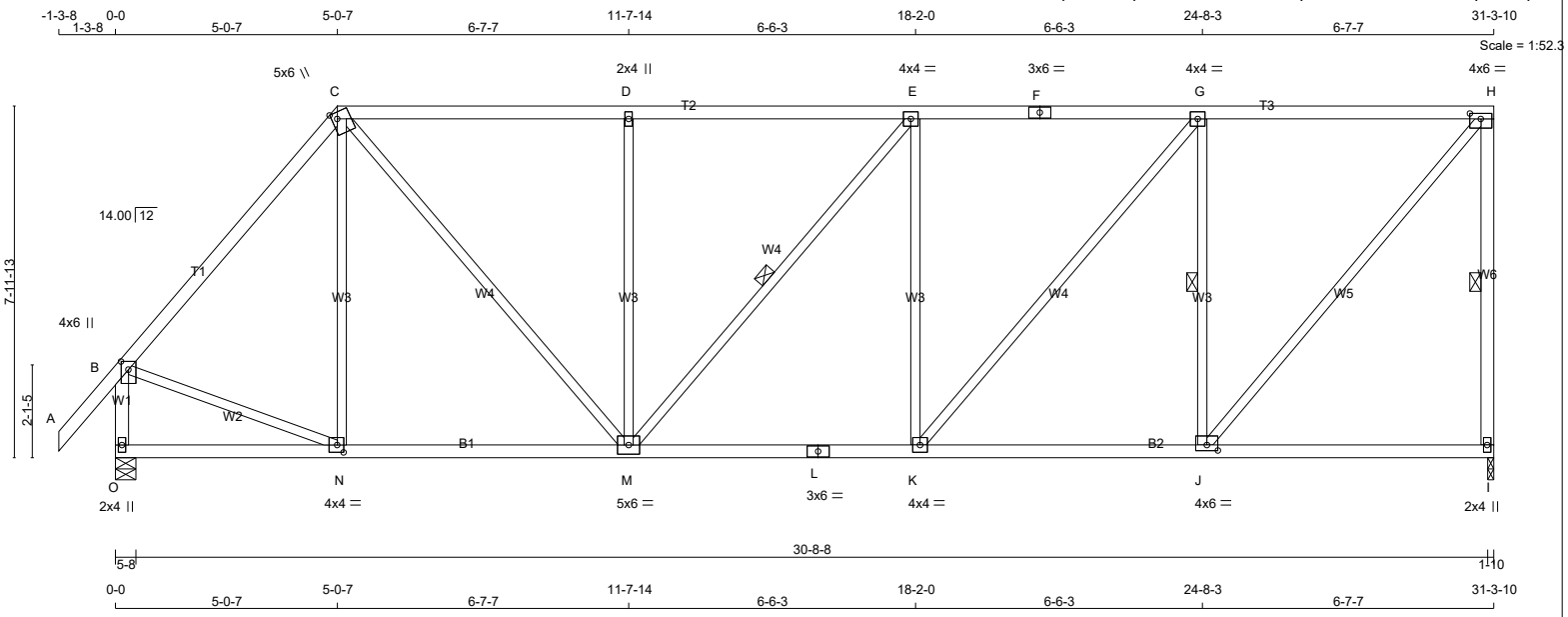

TOTAL WEIGHT = 147 lb [M]

LUMBER

N. L. G. A. RULES

CHORDS	SIZE		LUMBER	DESCR.
A - C	2x4	DRY	No.2	SPF
C - F	2x4	DRY	No.2	SPF
F - H	2x4	DRY	No.2	SPF
I - H	2x4	DRY	No.2	SPF
O - B	2x4	DRY	No.2	SPF
O - L	2x4	DRY	No.2	SPF
L - I	2x4	DRY	No.2	SPF
ALL WEBS EXCEPT	2x3	DRY	No.2	SPF

DRY: SEASONED LUMBER.

PLATES (table is in inches)

JT	TYPE	PLATES	W	LEN	Y	X
B	TMVW+p	MT20	4.0	6.0	2.25	2.00
C	TTWW+m	MT20	5.0	6.0	1.75	1.50
D	TMW+w	MT20	2.0	4.0		
E	TMWW-t	MT20	4.0	4.0		
F	TS-t	MT20	3.0	6.0		
G	TMWW-t	MT20	4.0	4.0		
H	TMVW-t	MT20	4.0	6.0	1.50	3.00
I	BMV1+p	MT20	2.0	4.0		
J	BMWW-t	MT20	4.0	6.0	1.50	3.00
K	BMWW-t	MT20	4.0	4.0		
L	BS-t	MT20	3.0	6.0		
M	BMWWW-t	MT20	5.0	6.0		
N	BMWW-t	MT20	4.0	4.0	2.00	1.75
O	BMV1+p	MT20	2.0	4.0		

LATERAL BRACE(S) SHOWN SHALL BE 2X4 SPF#2

DIMENSIONS, SUPPORTS AND LOADINGS SPECIFIED BY FABRICATOR TO BE VERIFIED BY BUILDING DESIGNER

BEARINGS

JT	FACTORED GROSS REACTION VERT	HORZ	MAXIMUM FACTORED GROSS REACTION DOWN	HORZ	UPLIFT	INPUT BRG IN-SX	REQRD BRG IN-SX
I	1510	0	1510	0	0	1-10	1-10
O	1619	0	1619	0	0	5-8	1-12

UNFACTORED REACTIONS

JT	1ST LCASE COMBINED	MAX./MIN. COMPONENT REACTIONS SNOW	LIVE	PERM.LIVE	WIND	DEAD	SOIL
I	1076	657 / 0	0 / 0	0 / 0	0 / 0	419 / 0	0 / 0
O	1152	716 / 0	0 / 0	0 / 0	0 / 0	436 / 0	0 / 0

BEARING MATERIAL TO BE SPF NO.2 OR BETTER AT JOINT(S) I, O

BRACING

TOP CHORD TO BE SHEATHED OR MAX. PURLIN SPACING = 4.56 FT.
MAX. UNBRACED BOTTOM CHORD LENGTH = 10.00 FT OR RIGID CEILING DIRECTLY APPLIED.

ALL PITCH BREAKS AND PERIMETER CORNER JOINTS MUST BE LATERALLY RESTRAINED.

1 LATERAL BRACE(S) AT 1/ 2 LENGTH OF H-I, E-M, G-J.

END VERTICAL(S) MUST BE SHEATHED OR HAVE BRACES AS INDICATED IN THE MAX. UNBRACED LENGTH COLUMN OF THE TABLE BELOW

LOADING

TOTAL LOAD CASES: (4)

CHORDS

MEMB. FR-TO	MAX. FACTORED FORCE (LBS)	FACTORED VERT. LOAD (PLF) FROM	TO	LC1 CSI (LC)	MAX UNBRAC LENGTH
A- B	0 / 42	-78.0	-78.0	0.11 (1)	10.00
B- C	-1303 / 0	-78.0	-78.0	0.44 (1)	5.17
C- D	-1489 / 0	-78.0	-78.0	0.60 (1)	4.63
D- E	-1489 / 0	-78.0	-78.0	0.59 (1)	4.63
E- F	-1533 / 0	-78.0	-78.0	0.60 (1)	4.56
F- G	-1533 / 0	-78.0	-78.0	0.60 (1)	4.56
G- H	-1081 / 0	-78.0	-78.0	0.55 (1)	5.27
I- H	-1461 / 0	0.0	0.0	0.42 (1)	5.41
O- B	-1584 / 0	0.0	0.0	0.19 (1)	6.56
O- N	0 / 0	-18.5	-18.5	0.15 (4)	10.00
N- M	0 / 843	-18.5	-18.5	0.24 (4)	10.00
M- L	0 / 1533	-18.5	-18.5	0.33 (1)	10.00
L- K	0 / 1533	-18.5	-18.5	0.33 (1)	10.00
K- J	0 / 1081	-18.5	-18.5	0.30 (4)	10.00
J- I	0 / 0	-18.5	-18.5	0.19 (4)	10.00

WEBS

MEMB. FR-TO	MAX. FACTORED FORCE (LBS)	MAX CSI (LC)
N- C	-165 / 21	0.20 (1)
C- M	0 / 988	0.22 (1)
M- D	-575 / 0	0.70 (1)
M- E	-68 / 0	0.05 (1)
K- E	-418 / 0	0.51 (1)
K- G	0 / 700	0.16 (1)
J- G	-1119 / 0	0.45 (1)
J- H	0 / 1657	0.37 (1)
B- N	0 / 892	0.20 (1)

DESIGN CRITERIA

SPECIFIED LOADS:

TOP CH.	LL	=	21.0	PSF
	DL	=	6.0	PSF
BOT CH.	LL	=	0.0	PSF
	DL	=	7.4	PSF
TOTAL LOAD		=	34.4	PSF

SPACING = 24.0 IN. C/C

LOADING IN FLAT SECTION BASED ON A SLOPE OF 2.00/12 MINIMUM

THIS TRUSS IS DESIGNED FOR RESIDENTIAL OR SMALL BUILDING REQUIREMENTS OF PART 9, NBCC 2015

THIS DESIGN COMPLIES WITH:
- PART 9 OF BCBC 2018 , ABC 2019
- PART 9 OF OBC 2012 (2019 AMENDMENT)
- CSA 086-14
- TPIC 2014

(55 % OF 23.0 P.S.F. G.S.L. PLUS 8.4 P.S.F. RAIN LOAD) EQUALS 21.0 P.S.F. SPECIFIED ROOF LIVE LOAD

ALLOWABLE DEFL.(LL)= L/360 (1.04")
CALCULATED VERT. DEFL.(LL) = L/ 999 (0.07")
ALLOWABLE DEFL.(TL)= L/360 (1.04")
CALCULATED VERT. DEFL.(TL) = L/ 999 (0.15")

CSI: TC=0.60/1.00 (E-G:1) , BC=0.33/1.00 (K-M:1) , WB=0.70/1.00 (D-M:1) , SSI=0.24/1.00 (G-H:1)

DOL LUMBER=1.00 NAIL=1.00 LS BEND=1.10 COMP=1.10 SHEAR=1.10 TENS= 1.10

COMPANION LIVE LOAD FACTOR = 1.00

TRUSS PLATE MANUFACTURER IS NOT RESPONSIBLE FOR QUALITY CONTROL IN THE TRUSS MANUFACTURING PLANT .

NAIL VALUES

PLATE	GRIP(DRY) (PSI) MAX	MIN	SHEAR (PLI) MAX	MIN	SECTION (PLI) MAX	MIN
MT20	650	371	1747	788	1987	1873

PLATE PLACEMENT TOL. = 0.250 inches

PLATE ROTATION TOL. = 5.0 Deg.

JSI GRIP= 0.90 (B) (INPUT = 0.90)
JSI METAL= 0.51 (L) (INPUT = 1.00)

JOB NAME	TRUSS NAME	QUANTITY	PLY	JOB DESC.		DRWG NO.
336328	H34		1	TRUSS DESC.	JT 45147	E21104053

Alpa Roof Truss, Maple

Version 8.420 S Jan 21 2021 MiTek Industries, Inc. Wed Oct 13 11:34:12 2021 Page 1

ID:hd511hZTz bdeQoS817GKByhVxV-NKj42qOMhEnxosFfyD5fV wHIo9xfzfGr1SGQxyTs09

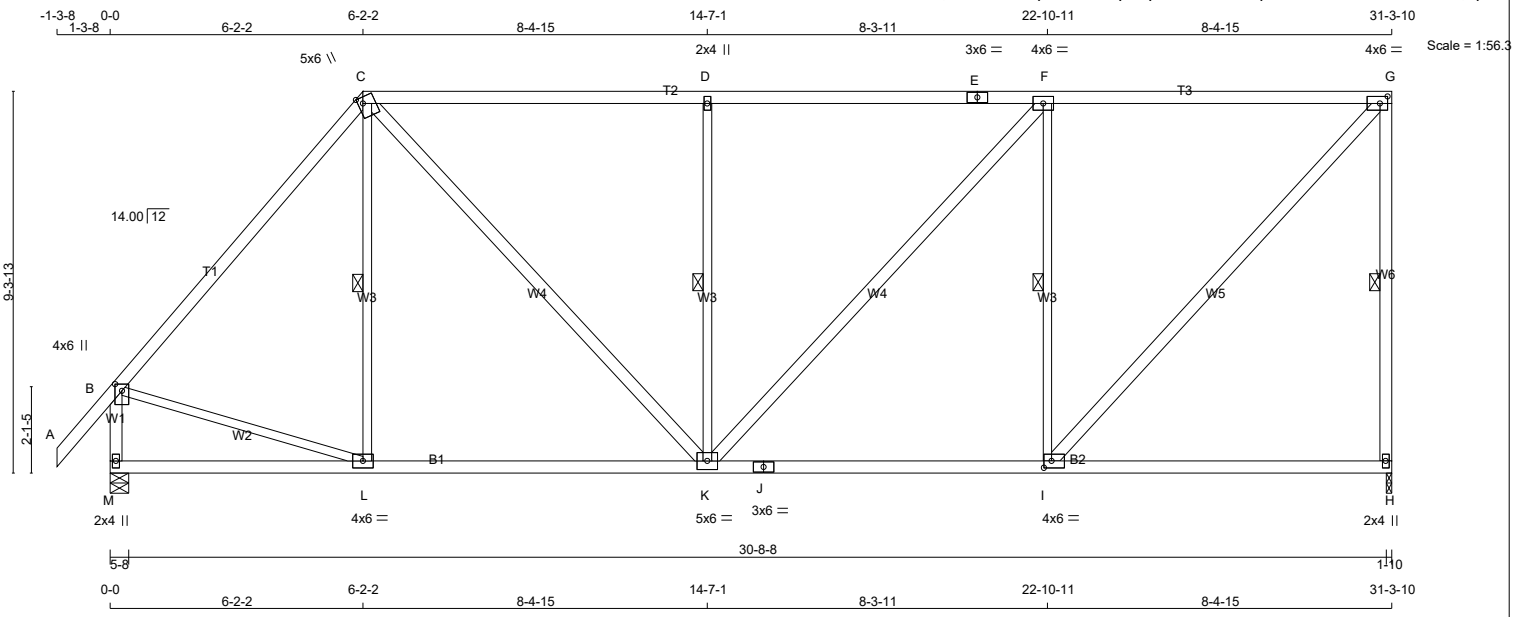

TOTAL WEIGHT = 157 lb

[M]

LUMBER

N. L. G. A. RULES

CHORDS	SIZE		LUMBER	DESCR.
A - C	2x4	DRY	2100F 1.8E	SPF
C - E	2x4	DRY	No.2	SPF
E - G	2x4	DRY	No.2	SPF
H - G	2x4	DRY	No.2	SPF
M - B	2x4	DRY	No.2	SPF
M - J	2x4	DRY	No.2	SPF
J - H	2x4	DRY	No.2	SPF
ALL WEBS	2x3	DRY	No.2	SPF
EXCEPT				
C - K	2x4	DRY	No.2	SPF
K - F	2x4	DRY	No.2	SPF
I - G	2x4	DRY	No.2	SPF

DRY: SEASONED LUMBER.

PLATES (table is in inches)

JT	TYPE	PLATES	W	LEN	Y	X
B	TMVW+p	MT20	4.0	6.0	2.00	2.00
C	TTWW+m	MT20	5.0	6.0	1.75	1.50
D	TMW+w	MT20	2.0	4.0		
E	TS-t	MT20	3.0	6.0		
F	TMWW-t	MT20	4.0	6.0		
G	TMVW-t	MT20	4.0	6.0	2.00	2.25
H	BMV1+p	MT20	2.0	4.0		
I	BMWW-t	MT20	4.0	6.0	2.00	2.25
J	BS-t	MT20	3.0	6.0		
K	BMWWW-t	MT20	5.0	6.0		
L	BMWW-t	MT20	4.0	6.0		
M	BMV1+p	MT20	2.0	4.0		

LATERAL BRACE(S) SHOWN SHALL BE 2X4 SPF#2

DIMENSIONS, SUPPORTS AND LOADINGS SPECIFIED BY FABRICATOR TO BE VERIFIED BY BUILDING DESIGNER

BEARINGS

JT	FACTORED GROSS REACTION VERT	HORZ	MAXIMUM FACTORED GROSS REACTION DOWN	HORZ	UPLIFT	INPUT BRG IN-SX	REQRD BRG IN-SX
H	1510	0	1510	0	0	1-10	1-10
M	1619	0	1619	0	0	5-8	1-12

UNFACTORED REACTIONS

JT	1ST LCASE COMBINED	MAX./MIN. COMPONENT REACTIONS SNOW	LIVE	PERM.LIVE	WIND	DEAD	SOIL
H	1076	657 / 0	0 / 0	0 / 0	0 / 0	419 / 0	0 / 0
M	1152	716 / 0	0 / 0	0 / 0	0 / 0	436 / 0	0 / 0

BEARING MATERIAL TO BE SPF NO.2 OR BETTER AT JOINT(S) H, M

BRACING

TOP CHORD TO BE SHEATHED OR MAX. PURLIN SPACING = 4.03 FT.
MAX. UNBRACED BOTTOM CHORD LENGTH = 10.00 FT OR RIGID CEILING DIRECTLY APPLIED.

ALL PITCH BREAKS AND PERIMETER CORNER JOINTS MUST BE LATERALLY RESTRAINED.

1 LATERAL BRACE(S) AT 1/ 2 LENGTH OF G-H, C-L, D-K, F-I.

END VERTICAL(S) MUST BE SHEATHED OR HAVE BRACES AS INDICATED IN THE MAX. UNBRACED LENGTH COLUMN OF THE TABLE BELOW

LOADING

TOTAL LOAD CASES: (4)

CHORDS

MEMB. FR-TO	MAX. FACTORED FORCE (LBS)	FACTORED VERT. LOAD (PLF) FROM	TO	LC1 CSI (LC)	MAX UNBRAC LENGTH
A- B	0 / 42	-78.0	-78.0	0.07 (1)	10.00
B- C	-1304 / 0	-78.0	-78.0	0.42 (1)	6.17
C- D	-1373 / 0	-78.0	-78.0	0.96 (1)	4.05
D- E	-1373 / 0	-78.0	-78.0	0.96 (1)	4.03
E- F	-1373 / 0	-78.0	-78.0	0.96 (1)	4.03
F- G	-1103 / 0	-78.0	-78.0	0.91 (1)	4.46
H- G	-1448 / 0	0.0	0.0	0.59 (1)	5.43
M- B	-1577 / 0	0.0	0.0	0.19 (1)	6.57
M- L	0 / 0	-18.5	-18.5	0.24 (4)	10.00
L- K	0 / 845	-18.5	-18.5	0.32 (4)	10.00
K- J	0 / 1103	-18.5	-18.5	0.42 (4)	10.00
J- I	0 / 1103	-18.5	-18.5	0.42 (4)	10.00
I- H	0 / 0	-18.5	-18.5	0.32 (4)	10.00

WEBS

MEMB. FR-TO	MAX. FACTORED FORCE (LBS)	MAX CSI (LC)
L- C	-82 / 76	0.05 (1)
C- K	0 / 772	0.12 (1)
K- D	-709 / 0	0.40 (1)
K- F	0 / 398	0.06 (1)
I- F	-1009 / 0	0.58 (1)
I- G	0 / 1619	0.26 (1)
B- L	0 / 878	0.20 (1)

DESIGN CRITERIA

SPECIFIED LOADS:

TOP	CH.	LL	=	21.0	PSF
		DL	=	6.0	PSF
BOT	CH.	LL	=	0.0	PSF
		DL	=	7.4	PSF
TOTAL	LOAD		=	34.4	PSF

SPACING = 24.0 IN. C/C

LOADING IN FLAT SECTION BASED ON A SLOPE OF 2.00/12 MINIMUM

THIS TRUSS IS DESIGNED FOR RESIDENTIAL OR SMALL BUILDING REQUIREMENTS OF PART 9, NBCC 2015

THIS DESIGN COMPLIES WITH:
- PART 9 OF BCBC 2018 , ABC 2019
- PART 9 OF OBC 2012 (2019 AMENDMENT)
- CSA 086-14
- TPIC 2014

(55 % OF 23.0 P.S.F. G.S.L. PLUS 8.4 P.S.F. RAIN LOAD) EQUALS 21.0 P.S.F. SPECIFIED ROOF LIVE LOAD

ALLOWABLE DEFL.(LL)= L/360 (1.04")
CALCULATED VERT. DEFL.(LL) = L/ 999 (0.06")
ALLOWABLE DEFL.(TL)= L/360 (1.04")
CALCULATED VERT. DEFL.(TL) = L/ 999 (0.16")

CSI: TC=0.96/1.00 (C-D:1) , BC=0.42/1.00 (I-K:4) , WB=0.58/1.00 (F-I:1) , SSI=0.31/1.00 (F-G:1)

DOL LUMBER=1.00 NAIL=1.00 LS BEND=1.10 COMP=1.10 SHEAR=1.10 TENS= 1.10

COMPANION LIVE LOAD FACTOR = 1.00

TRUSS PLATE MANUFACTURER IS NOT RESPONSIBLE FOR QUALITY CONTROL IN THE TRUSS MANUFACTURING PLANT .

NAIL VALUES

PLATE	GRIP(DRY) (PSI) MAX	MIN	SHEAR (PLI) MAX	MIN	SECTION (PLI) MAX	MIN
MT20	650	371	1747	788	1987	1873

PLATE PLACEMENT TOL. = 0.250 inches

PLATE ROTATION TOL. = 5.0 Deg.

JSI GRIP= 0.84 (G) (INPUT = 0.90)
JSI METAL= 0.52 (B) (INPUT = 1.00)

JOB NAME	TRUSS NAME	QUANTITY	PLY	JOB DESC.	DRWG NO.
336328	H35		1	TRUSS DESC. JT 45147	E21104054

Alpa Roof Truss, Maple

Version 8.420 S Jan 21 2021 MiTek Industries, Inc. Wed Oct 13 11:33:36 2021 Page 1

ID:hd511hZTz_bdeQoS817GKByhVxV-QPYTUWynAAF2UKUlrgSD1OR8aHt7DgtzZQjN90yTs0j

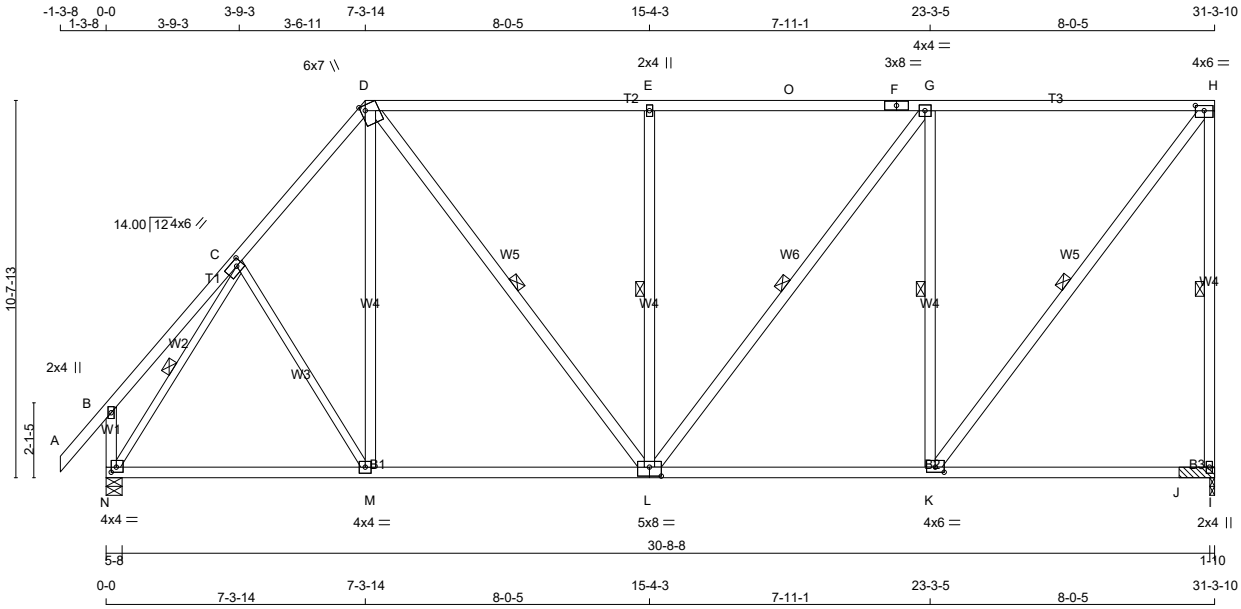

TOTAL WEIGHT = 7 X 182 = 1271 lb

[M]

LUMBER

N. L. G. A. RULES

CHORDS	SIZE		LUMBER	DESCR.
A - D	2x4	DRY	No.2	SPF
D - F	2x4	DRY	No.2	SPF
F - H	2x4	DRY	No.2	SPF
I - H	2x4	DRY	No.2	SPF
N - B	2x4	DRY	No.2	SPF
N - L	2x4	DRY	No.2	SPF
L - I	2x4	DRY	No.2	SPF
ALL WEBS EXCEPT	2x4	DRY	No.2	SPF
C - M	2x3	DRY	No.2	SPF
N - C	2x3	DRY	No.2	SPF

DRY: SEASONED LUMBER.

PLATES (table is in inches)

JT	TYPE	PLATES	W	LEN	Y	X
B	TMV+p	MT20	2.0	4.0		
C	TMWW-t	MT20	4.0	6.0	2.00	2.00
D	TTWW+m	MT20	6.0	7.0	Edge	1.50
E	TMW+w	MT20	2.0	4.0		
F	TS-t	MT20	3.0	8.0		
G	TMWW-t	MT20	4.0	4.0		
H	TMVW-t	MT20	4.0	6.0	1.75	3.00
I	BMV1+p	MT20	2.0	4.0		
K	BMWW-t	MT20	4.0	6.0	1.75	3.00
L	BSWWW-l	MT20	5.0	8.0	3.00	4.00
M	BMWW-t	MT20	4.0	4.0		
N	BMVW1-t	MT20	4.0	4.0	1.75	1.75

Edge - INDICATES REFERENCE CORNER OF PLATE TOUCHES EDGE OF CHORD.

LATERAL BRACE(S) SHOWN SHALL BE 2X4 SPF#2

DIMENSIONS, SUPPORTS AND LOADINGS SPECIFIED BY FABRICATOR TO BE VERIFIED BY BUILDING DESIGNER

BEARINGS

JT	FACTORED GROSS REACTION VERT	HORZ	MAXIMUM FACTORED GROSS REACTION DOWN	HORZ	UPLIFT	INPUT BRG IN-SX	REQRD BRG IN-SX
I	1621	0	1621	0	0	1-10	1-10 & BLOCK
N	1688	0	1688	0	0	5-8	1-13

UNFACTORED REACTIONS

JT	1ST LCASE COMBINED	MAX./MIN. COMPONENT REACTIONS SNOW	LIVE	PERM.LIVE	WIND	DEAD	SOIL
I	1165	657 / 0	0 / 0	0 / 0	0 / 0	508 / 0	0 / 0
N	1207	716 / 0	0 / 0	0 / 0	0 / 0	491 / 0	0 / 0

BEARING MATERIAL TO BE SPF NO.2 OR BETTER AT JOINT(S) I, N

2x4 DRY SPF No.2 BEARING BLOCK 12" LONG AT JT. I ATTACHED TO FRONT SIDE WITH 2 ROWS OF (0.122"X3") SPIRAL NAILS SPACED 3" C.C. 8 NAILS TOTAL.

BRACING

FOR SECTION D-H, MAX. PURLIN SPACING = 2.00 FT.
FOR OTHER SECTIONS, TOP CHORD TO BE SHEATHED OR MAX. PURLIN SPACING = 5.32 FT.
MAX. UNBRACED BOTTOM CHORD LENGTH = 10.00 FT OR RIGID CEILING DIRECTLY APPLIED.

ALL PITCH BREAKS AND PERIMETER CORNER JOINTS MUST BE LATERALLY RESTRAINED.

1 LATERAL BRACE(S) AT 1/ 2 LENGTH OF H-I, D-L, E-L, G-L, G-K, H-K, C-N.

END VERTICAL(S) MUST BE SHEATHED OR HAVE BRACES AS INDICATED IN THE MAX. UNBRACED LENGTH COLUMN OF THE TABLE BELOW

LOADING

TOTAL LOAD CASES: (4)

CHORDS

MEMB. FR-TO	MAX. FACTORED FORCE (LBS)	FACTORED VERT. LOAD (PLF) FROM	TO	LC1	MAX CSI (LC)	MAX. UNBRAC LENGTH
A- B	0 / 42	-78.0	-78.0	0.11 (1)	10.00	
B- C	0 / 24	-78.0	-78.0	0.16 (1)	10.00	
C- D	-1385 / 0	-78.0	-78.0	0.20 (1)	5.32	
D- E	-1270 / 0	-85.5	-85.5	0.92 (1)	2.00	
E- O	-1271 / 0	-85.5	-85.5	0.92 (1)	2.00	
O- F	-1271 / 0	-85.5	-85.5	0.92 (1)	2.00	
F- G	-1271 / 0	-85.5	-85.5	0.92 (1)	2.00	
G- H	-998 / 0	-85.5	-85.5	0.87 (1)	2.00	
I- H	-1564 / 0	0.0	0.0	0.89 (1)	5.27	
N- B	-218 / 0	0.0	0.0	0.03 (1)	7.81	
N- M	0 / 860	-18.5	-18.5	0.40 (4)	10.00	
M- L	0 / 883	-18.5	-18.5	0.41 (4)	10.00	
L- K	0 / 998	-18.5	-18.5	0.45 (4)	10.00	
K- J	0 / 0	-18.5	-18.5	0.34 (4)	10.00	
J- I	0 / 0	-18.5	-18.5	0.34 (4)	10.00	

WEBS

MEMB. FR-TO	MAX. FACTORED FORCE (LBS)	MAX CSI (LC)
C- M	0 / 63	0.02 (4)
M- D	0 / 145	0.04 (4)
D- L	0 / 631	0.10 (1)
L- E	-742 / 0	0.42 (1)
L- G	0 / 448	0.07 (1)
K- G	-1105 / 0	0.63 (1)
K- H	0 / 1630	0.26 (1)
N- C	-1659 / 0	0.54 (1)

DESIGN CRITERIA

SPECIFIED LOADS:

TOP CH.	LL	=	21.0	PSF
	DL	=	6.0	PSF
BOT CH.	LL	=	0.0	PSF
	DL	=	7.4	PSF
TOTAL LOAD		=	34.4	PSF

SPACING = 24.0 IN. C/C

LOADING IN FLAT SECTION BASED ON PIGGYBACK TRUSS WITH SLOPES OF 6.00/12 AND -6.00/12 AND RESPECTIVE HEEL HEIGHTS OF 0-0 AND 0-0 AND AN ADDITIONAL DEAD LOAD OF 3.0 P.S.F.

THIS TRUSS IS DESIGNED FOR RESIDENTIAL OR SMALL BUILDING REQUIREMENTS OF PART 9, NBCC 2015

THIS DESIGN COMPLIES WITH:
- PART 9 OF BCBC 2018 , ABC 2019
- PART 9 OF OBC 2012 (2019 AMENDMENT)
- CSA 086-14
- TPIC 2014

(55 % OF 23.0 P.S.F. G.S.L. PLUS 8.4 P.S.F. RAIN LOAD) EQUALS 21.0 P.S.F. SPECIFIED ROOF LIVE LOAD

ALLOWABLE DEFL.(LL)= L/360 (1.04")
CALCULATED VERT. DEFL.(LL) = L/ 999 (0.05")
ALLOWABLE DEFL.(TL)= L/360 (1.04")
CALCULATED VERT. DEFL.(TL) = L/ 999 (0.17")

CSI: TC=0.92/1.00 (D-E:1) , BC=0.45/1.00 (K-L:4) , WB=0.63/1.00 (G-K:1) , SSI=0.32/1.00 (G-H:1)

DOL LUMBER=1.00 NAIL=1.00 LS BEND=1.10 COMP=1.10 SHEAR=1.10 TENS= 1.10

COMPANION LIVE LOAD FACTOR = 1.00

TRUSS PLATE MANUFACTURER IS NOT RESPONSIBLE FOR QUALITY CONTROL IN THE TRUSS MANUFACTURING PLANT .

NAIL VALUES

PLATE	GRIP(DRY) (PSI) MAX	MIN	SHEAR (PLI) MAX	MIN	SECTION (PLI) MAX	MIN
MT20	650	371	1747	788	1987	1873

PLATE PLACEMENT TOL. = 0.250 inches

PLATE ROTATION TOL. = 5.0 Deg.

JSI GRIP= 0.90 (N) (INPUT = 0.90)
JSI METAL= 0.37 (C) (INPUT = 1.00)

JOB NAME	TRUSS NAME	QUANTITY	PLY	JOB DESC.		DRWG NO.
336328	H36P		1	TRUSS DESC.	JT 45147	E21104055

Alpa Roof Truss, Maple

Version 8.420 S Jan 21 2021 MiTek Industries, Inc. Wed Oct 13 11:34:13 2021 Page 1

ID:hd511hZTz bdeQoS817GKByhVxV-rXHTFAP SYvoQ0psWxcu1BTZuBY2OXMP3hBqyNyTs08

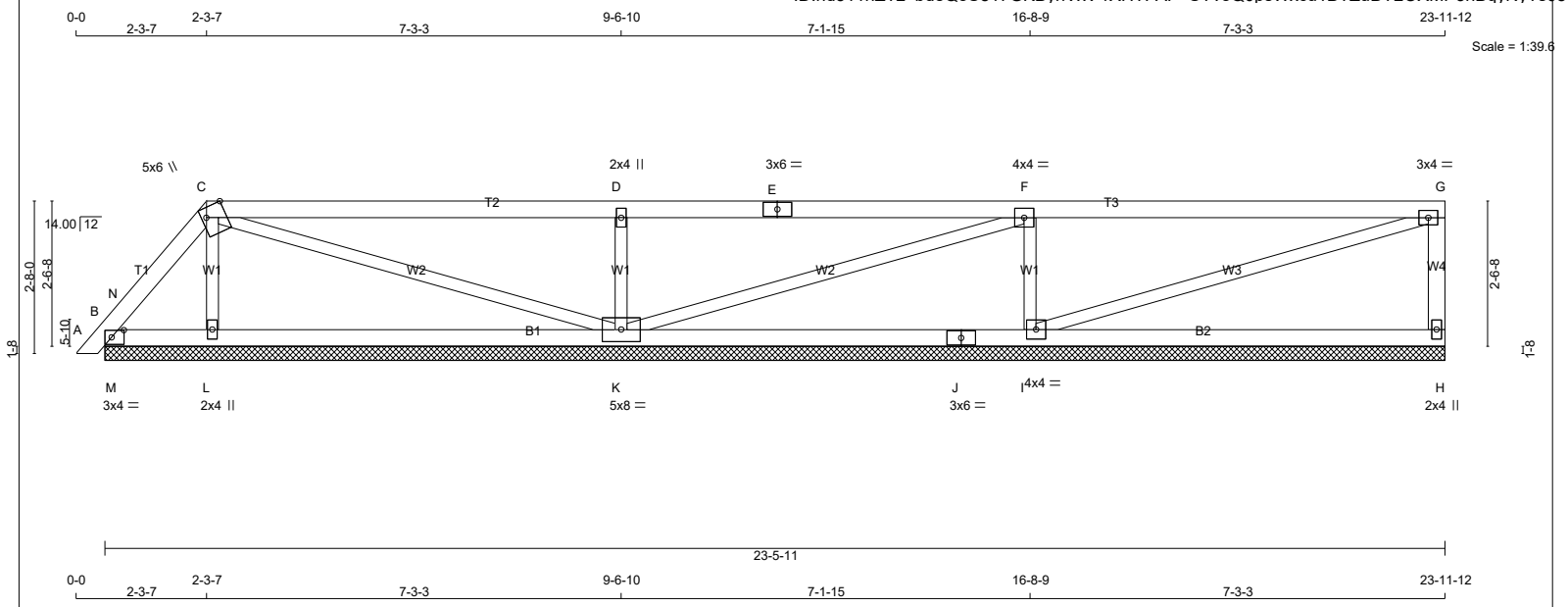

TOTAL WEIGHT = 2 X 80 = 160 lb

[M]

LUMBER

N. L. G. A. RULES

CHORDS	SIZE		LUMBER	DESCR.
A - C	2x4	DRY	No.2	SPF
C - E	2x4	DRY	No.2	SPF
E - G	2x4	DRY	No.2	SPF
H - G	2x4	DRY	No.2	SPF
B - J	2x4	DRY	No.2	SPF
J - H	2x4	DRY	No.2	SPF
ALL WEBS	2x3	DRY	No.2	SPF

DRY: SEASONED LUMBER.

PLATES (table is in inches)

JT	TYPE	PLATES	W	LEN	Y	X
B	TMB1-l	MT20	3.0	4.0	1.50	2.50
C	TTWW+m	MT20	5.0	6.0	Edge	4.00
D	TMW+w	MT20	2.0	4.0		
E	TS-t	MT20	3.0	6.0		
F	TMWW-t	MT20	4.0	4.0		
G	TMVW-t	MT20	3.0	4.0		
H	BMV1+p	MT20	2.0	4.0		
I	BMWW1-t	MT20	4.0	4.0		
J	BS-t	MT20	3.0	6.0		
K	BMWWW1-t	MT20	5.0	8.0		
L	BMW1+w	MT20	2.0	4.0		

Edge - INDICATES REFERENCE CORNER OF PLATE TOUCHES EDGE OF CHORD.

LATERAL BRACE(S) SHOWN SHALL BE 2X4 SPF#2

DIMENSIONS, SUPPORTS AND LOADINGS SPECIFIED BY FABRICATOR TO BE VERIFIED BY BUILDING DESIGNER

BEARINGS

JT	FACTORED GROSS REACTION VERT	HORZ	MAXIMUM FACTORED GROSS REACTION DOWN	HORZ	UPLIFT	INPUT BRG IN-SX	REQRD BRG IN-SX
H	283	0	283	0	0	23-5-11 (8-5-11)	
B	131	0	131	0	0	23-5-11 (8-5-11)	
L	353	0	353	0	0	23-5-11 (8-5-11)	
K	766	0	766	0	0	23-5-11 (8-5-11)	
I	761	0	761	0	0	23-5-11 (8-5-11)	

VALUE IN PARENTHESIS INDICATES EFFECTIVE BEARING LENGTH

UNFACTORED REACTIONS

JT	1ST LCASE COMBINED	MAX./MIN. COMPONENT REACTIONS SNOW	LIVE	PERM.LIVE	WIND	DEAD	SOIL
H	202	124 / 0	0 / 0	0 / 0	0 / 0	78 / 0	0 / 0
B	89	83 / 0	0 / 0	0 / 0	0 / 0	5 / 0	0 / 0
L	258	124 / 0	0 / 0	0 / 0	0 / 0	134 / 0	0 / 0
K	544	342 / 0	0 / 0	0 / 0	0 / 0	202 / 0	0 / 0
I	543	329 / 0	0 / 0	0 / 0	0 / 0	214 / 0	0 / 0

BEARING MATERIAL TO BE SPF NO.2 OR BETTER AT JOINT(S) H, B, L, K, I

BRACING

TOP CHORD TO BE SHEATHED OR MAX. PURLIN SPACING = 6.25 FT.
MAX. UNBRACED BOTTOM CHORD LENGTH = 10.00 FT OR RIGID CEILING DIRECTLY APPLIED.

ALL PITCH BREAKS AND PERIMETER CORNER JOINTS MUST BE LATERALLY RESTRAINED.

LOADING

TOTAL LOAD CASES: (4)

CHORDS

MEMB. FR-TO	MAX. FACTORED FORCE (LBS)	FACTORED VERT. LOAD LC1 (PLF) FROM	TO	MAX CSI (LC)	MAX. UNBRAC LENGTH
A- B	0 / 10	-78.0	-78.0	0.01 (1)	10.00
B- N	0 / 57	-78.0	-78.0	0.04 (4)	10.00
N- C	-73 / 0	-78.0	-78.0	0.03 (1)	6.25
C- D	0 / 9	-78.0	-78.0	0.55 (1)	10.00
D- E	0 / 9	-78.0	-78.0	0.55 (1)	10.00
E- F	0 / 9	-78.0	-78.0	0.55 (1)	10.00
F- G	-9 / 0	-78.0	-78.0	0.55 (1)	10.00
H- G	-230 / 0	0.0	0.0	0.03 (1)	7.81
B- M	0 / 40	-18.5	-18.5	0.04 (1)	10.00
M- L	0 / 40	-18.5	-18.5	0.16 (4)	10.00
L- K	0 / 30	-18.5	-18.5	0.18 (4)	10.00
K- J	0 / 9	-18.5	-18.5	0.24 (4)	10.00
J- I	0 / 9	-18.5	-18.5	0.24 (4)	10.00
I- H	0 / 0	-18.5	-18.5	0.24 (4)	10.00

WEBS

MEMB. FR-TO	MAX. FACTORED FORCE (LBS)	MAX CSI (LC)
L- C	-217 / 0	0.03 (1)
C- K	-41 / 0	0.05 (1)
K- D	-618 / 0	0.10 (1)
K- F	-19 / 0	0.02 (1)
I- F	-613 / 0	0.10 (1)
I- G	0 / 9	0.00 (1)
M- N	-183 / 0	0.00 (1)

DESIGN CRITERIA

SPECIFIED LOADS:

TOP CH.	LL	=	21.0	PSF
	DL	=	6.0	PSF
BOT CH.	LL	=	0.0	PSF
	DL	=	7.4	PSF
TOTAL LOAD		=	34.4	PSF

SPACING = 24.0 IN. C/C

LOADING IN FLAT SECTION BASED ON A SLOPE OF 2.00/12 MINIMUM

THIS TRUSS IS DESIGNED FOR RESIDENTIAL OR SMALL BUILDING REQUIREMENTS OF PART 9, NBCC 2015

THIS DESIGN COMPLIES WITH:
- PART 9 OF BCBC 2018 , ABC 2019
- PART 9 OF OBC 2012 (2019 AMENDMENT)
- CSA 086-14
- TPIC 2014

(55 % OF 23.0 P.S.F. G.S.L. PLUS 8.4 P.S.F. RAIN LOAD) EQUALS 21.0 P.S.F. SPECIFIED ROOF LIVE LOAD

CSI: TC=0.55/1.00 (C-D:1) , BC=0.24/1.00 (I-K:4) , WB=0.10/1.00 (D-K:1) , SSI=0.26/1.00 (F-G:1)

DOL LUMBER=1.00 NAIL=1.00 LS BEND=1.10 COMP=1.10 SHEAR=1.10 TENS= 1.10

COMPANION LIVE LOAD FACTOR = 1.00

TRUSS PLATE MANUFACTURER IS NOT RESPONSIBLE FOR QUALITY CONTROL IN THE TRUSS MANUFACTURING PLANT .

NAIL VALUES

PLATE	GRIP(DRY) (PSI) MAX	MIN	SHEAR (PLI) MAX	MIN	SECTION (PLI) MAX	MIN
MT20	650	371	1747	788	1987	1873

PLATE PLACEMENT TOL. = 0.250 inches

PLATE ROTATION TOL. = 5.0 Deg.

JSI GRIP= 0.83 (G) (INPUT = 0.90)
JSI METAL= 0.18 (E) (INPUT = 1.00)

JOB NAME	TRUSS NAME	QUANTITY	PLY	JOB DESC.		DRWG NO.
336328	H46P		1	TRUSS DESC.	JT 45147	E21104057

Alpa Roof Truss, Maple

Version 8.420 S Jan 21 2021 MiTek Industries, Inc. Wed Oct 13 11:34:15 2021 Page 1

ID:hd511hZTz bdeQoS817GKByhVxV-nvODgsRF 99WfKzEdMeN7cYvK?EUsQriX?gx1GyTs06

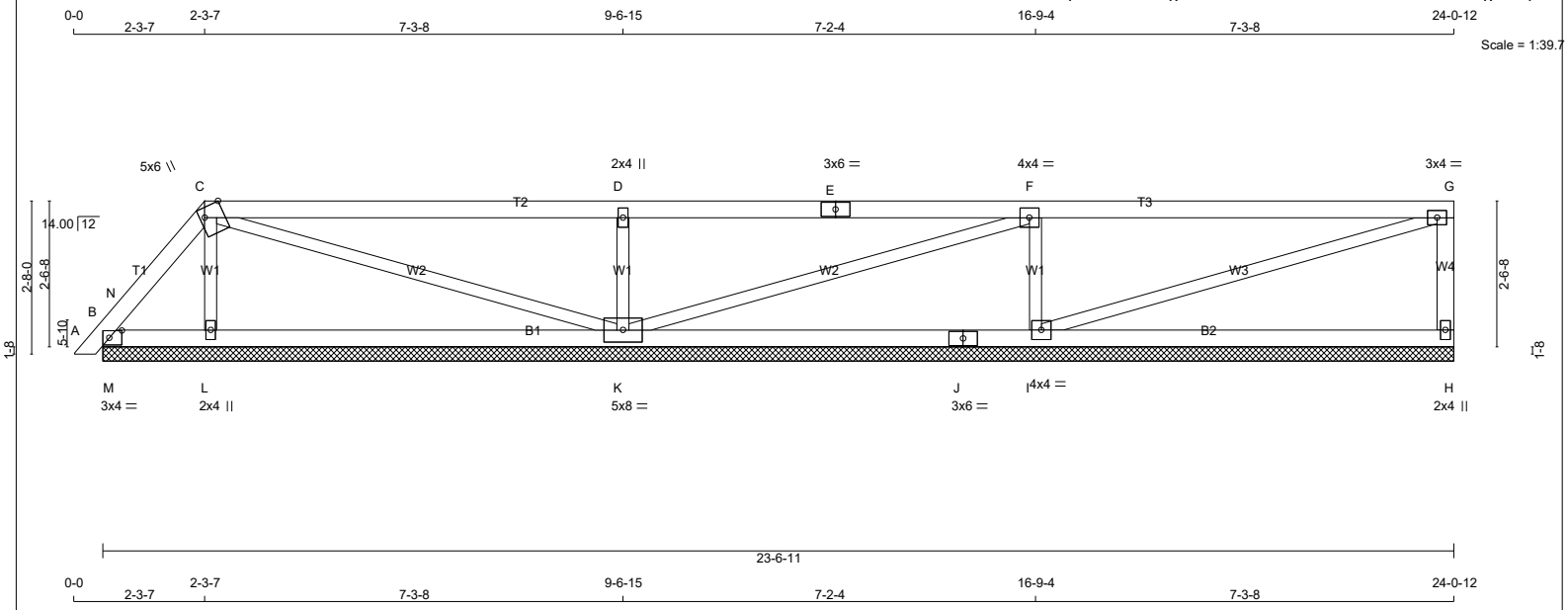

TOTAL WEIGHT = 2 X 80 = 161 lb

[M]

LUMBER

N. L. G. A. RULES

CHORDS	SIZE		LUMBER	DESCR.
A - C	2x4	DRY	No.2	SPF
C - E	2x4	DRY	No.2	SPF
E - G	2x4	DRY	No.2	SPF
H - G	2x4	DRY	No.2	SPF
B - J	2x4	DRY	No.2	SPF
J - H	2x4	DRY	No.2	SPF
ALL WEBS	2x3	DRY	No.2	SPF

DRY: SEASONED LUMBER.

PLATES (table is in inches)

JT	TYPE	PLATES	W	LEN	Y	X
B	TMB1-l	MT20	3.0	4.0	1.50	2.50
C	TTWW+m	MT20	5.0	6.0	Edge	4.00
D	TMW+w	MT20	2.0	4.0		
E	TS-t	MT20	3.0	6.0		
F	TMWW-t	MT20	4.0	4.0		
G	TMVW-t	MT20	3.0	4.0		
H	BMV1+p	MT20	2.0	4.0		
I	BMWW1-t	MT20	4.0	4.0		
J	BS-t	MT20	3.0	6.0		
K	BMWWW1-t	MT20	5.0	8.0		
L	BMW1+w	MT20	2.0	4.0		

Edge - INDICATES REFERENCE CORNER OF PLATE TOUCHES EDGE OF CHORD.

LATERAL BRACE(S) SHOWN SHALL BE 2X4 SPF#2

DIMENSIONS, SUPPORTS AND LOADINGS SPECIFIED BY FABRICATOR TO BE VERIFIED BY BUILDING DESIGNER

BEARINGS

JT	FACTORED GROSS REACTION VERT	HORZ	MAXIMUM FACTORED GROSS REACTION DOWN	HORZ	UPLIFT	INPUT BRG IN-SX	REQRD BRG IN-SX
H	284	0	284	0	0	23-6-11 (8-6-11)	
B	131	0	131	0	0	23-6-11 (8-6-11)	
L	354	0	354	0	0	23-6-11 (8-6-11)	
K	769	0	769	0	0	23-6-11 (8-6-11)	
I	764	0	764	0	0	23-6-11 (8-6-11)	

VALUE IN PARENTHESIS INDICATES EFFECTIVE BEARING LENGTH

UNFACTORED REACTIONS

JT	1ST LCASE COMBINED	MAX./MIN. COMPONENT REACTIONS SNOW	LIVE	PERM.LIVE	WIND	DEAD	SOIL
H	203	124 / 0	0 / 0	0 / 0	0 / 0	78 / 0	0 / 0
B	88	83 / 0	0 / 0	0 / 0	0 / 0	5 / 0	0 / 0
L	259	124 / 0	0 / 0	0 / 0	0 / 0	135 / 0	0 / 0
K	546	344 / 0	0 / 0	0 / 0	0 / 0	203 / 0	0 / 0
I	545	330 / 0	0 / 0	0 / 0	0 / 0	215 / 0	0 / 0

BEARING MATERIAL TO BE SPF NO.2 OR BETTER AT JOINT(S) H, B, L, K, I

BRACING

TOP CHORD TO BE SHEATHED OR MAX. PURLIN SPACING = 6.25 FT.
MAX. UNBRACED BOTTOM CHORD LENGTH = 10.00 FT OR RIGID CEILING DIRECTLY APPLIED.

ALL PITCH BREAKS AND PERIMETER CORNER JOINTS MUST BE LATERALLY RESTRAINED.

LOADING

TOTAL LOAD CASES: (4)

CHORDS

MEMB. FR-TO	MAX. FACTORED FORCE (LBS)	FACTORED VERT. LOAD LC1 (PLF) FROM	TO	MAX CSI (LC)	MAX. UNBRAC LENGTH
A- B	0 / 10	-78.0	-78.0	0.01 (1)	10.00
B- N	0 / 58	-78.0	-78.0	0.04 (4)	10.00
N- C	-73 / 0	-78.0	-78.0	0.03 (1)	6.25
C- D	0 / 9	-78.0	-78.0	0.56 (1)	10.00
D- E	0 / 9	-78.0	-78.0	0.56 (1)	10.00
E- F	0 / 9	-78.0	-78.0	0.56 (1)	10.00
F- G	-9 / 0	-78.0	-78.0	0.56 (1)	10.00
H- G	-231 / 0	0.0	0.0	0.03 (1)	7.81
B- M	0 / 40	-18.5	-18.5	0.04 (1)	10.00
M- L	0 / 40	-18.5	-18.5	0.16 (4)	10.00
L- K	0 / 30	-18.5	-18.5	0.18 (4)	10.00
K- J	0 / 9	-18.5	-18.5	0.24 (4)	10.00
J- I	0 / 9	-18.5	-18.5	0.24 (4)	10.00
I- H	0 / 0	-18.5	-18.5	0.24 (4)	10.00

WEBS

MEMB. FR-TO	MAX. FACTORED FORCE (LBS)	MAX CSI (LC)
L- C	-218 / 0	0.03 (1)
C- K	-41 / 0	0.05 (1)
K- D	-621 / 0	0.10 (1)
K- F	-19 / 0	0.02 (1)
I- F	-615 / 0	0.10 (1)
I- G	0 / 9	0.00 (1)
M- N	-184 / 0	0.00 (1)

DESIGN CRITERIA

SPECIFIED LOADS:

TOP CH.	LL	=	21.0	PSF
	DL	=	6.0	PSF
BOT CH.	LL	=	0.0	PSF
	DL	=	7.4	PSF
TOTAL LOAD		=	34.4	PSF

SPACING = 24.0 IN. C/C

LOADING IN FLAT SECTION BASED ON A SLOPE OF 2.00/12 MINIMUM

THIS TRUSS IS DESIGNED FOR RESIDENTIAL OR SMALL BUILDING REQUIREMENTS OF PART 9, NBCC 2015

THIS DESIGN COMPLIES WITH:
- PART 9 OF BCBC 2018 , ABC 2019
- PART 9 OF OBC 2012 (2019 AMENDMENT)
- CSA 086-14
- TPIC 2014

(55 % OF 23.0 P.S.F. G.S.L. PLUS 8.4 P.S.F. RAIN LOAD) EQUALS 21.0 P.S.F. SPECIFIED ROOF LIVE LOAD

CSI: TC=0.56/1.00 (C-D:1) , BC=0.24/1.00 (I-K:4) , WB=0.10/1.00 (D-K:1) , SSI=0.27/1.00 (F-G:1)

DOL LUMBER=1.00 NAIL=1.00 LS BEND=1.10 COMP=1.10 SHEAR=1.10 TENS= 1.10

COMPANION LIVE LOAD FACTOR = 1.00

TRUSS PLATE MANUFACTURER IS NOT RESPONSIBLE FOR QUALITY CONTROL IN THE TRUSS MANUFACTURING PLANT .

NAIL VALUES

PLATE	GRIP(DRY) (PSI) MAX	MIN	SHEAR (PLI) MAX	MIN	SECTION (PLI) MAX	MIN
MT20	650	371	1747	788	1987	1873

PLATE PLACEMENT TOL. = 0.250 inches

PLATE ROTATION TOL. = 5.0 Deg.

JSI GRIP= 0.83 (G) (INPUT = 0.90)
JSI METAL= 0.25 (E) (INPUT = 1.00)

JOB NAME	TRUSS NAME	QUANTITY	PLY	JOB DESC.		DRWG NO.
336328	H47P		1	TRUSS DESC.	JT 45147	E21104058

Alpa Roof Truss, Maple

Version 8.420 S Jan 21 2021 MiTek Industries, Inc. Wed Oct 13 11:34:17 2021 Page 1

ID:hd511hZTz bdeQoS817GKByhVxV-kIWz5XSVWnQEvd7dlnhrC1eGqpwKKJI? J9158yTs04

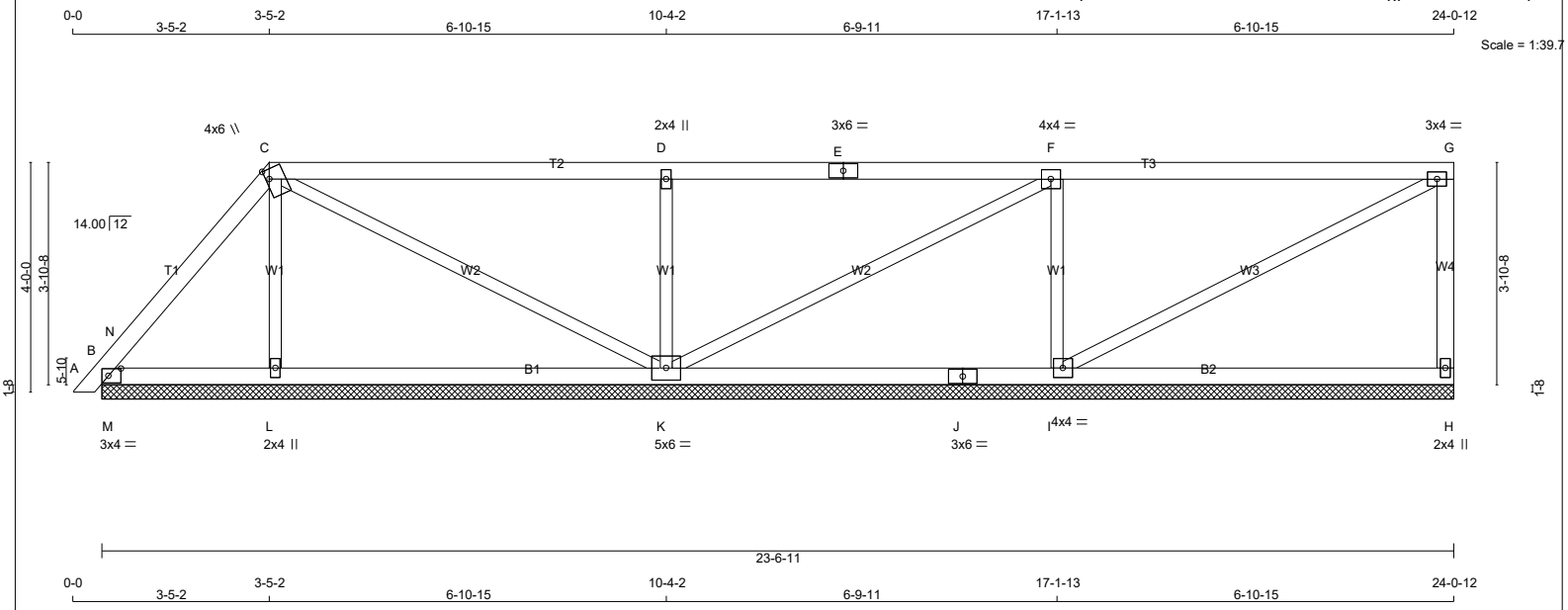

TOTAL WEIGHT = 2 X 86 = 172 lb [M]

LUMBER

N. L. G. A. RULES

CHORDS	SIZE		LUMBER	DESCR.
A - C	2x4	DRY	No.2	SPF
C - E	2x4	DRY	No.2	SPF
E - G	2x4	DRY	No.2	SPF
H - G	2x4	DRY	No.2	SPF
B - J	2x4	DRY	No.2	SPF
J - H	2x4	DRY	No.2	SPF
ALL WEBS	2x3	DRY	No.2	SPF

DRY: SEASONED LUMBER.

PLATES (table is in inches)

JT	TYPE	PLATES	W	LEN	Y	X
B	TMB1-l	MT20	3.0	4.0	1.50	2.50
C	TTWW+m	MT20	4.0	6.0	2.00	0.75
D	TMW+w	MT20	2.0	4.0		
E	TS-t	MT20	3.0	6.0		
F	TMWW-t	MT20	4.0	4.0		
G	TMVW-t	MT20	3.0	4.0		
H	BMV1+p	MT20	2.0	4.0		
I	BMWW1-t	MT20	4.0	4.0		
J	BS-t	MT20	3.0	6.0		
K	BMWWW1-t	MT20	5.0	6.0		
L	BMW1+w	MT20	2.0	4.0		

LATERAL BRACE(S) SHOWN SHALL BE 2X4 SPF#2

DIMENSIONS, SUPPORTS AND LOADINGS SPECIFIED BY FABRICATOR TO BE VERIFIED BY BUILDING DESIGNER

BEARINGS

JT	FACTORED GROSS REACTION VERT	HORZ	MAXIMUM FACTORED GROSS REACTION DOWN	HORZ	UPLIFT	INPUT BRG IN-SX	REQRD BRG IN-SX
H	276	0	276	0	0	23-6-11 (8-6-11)	118
B	222	0	222	0	0	23-6-11 (8-6-11)	118
L	331	0	331	0	0	23-6-11 (8-6-11)	118
K	773	0	773	0	0	23-6-11 (8-6-11)	118
I	700	0	700	0	0	23-6-11 (8-6-11)	118

VALUE IN PARENTHESIS INDICATES EFFECTIVE BEARING LENGTH

UNFACTORED REACTIONS

JT	1ST LCASE COMBINED	MAX./MIN. COMPONENT REACTIONS SNOW	LIVE	PERM.LIVE	WIND	DEAD	SOIL
H	197	122 / 0	0 / 0	0 / 0	0 / 0	75 / 0	0 / 0
B	155	116 / 0	0 / 0	0 / 0	0 / 0	39 / 0	0 / 0
L	241	119 / 0	0 / 0	0 / 0	0 / 0	122 / 0	0 / 0
K	548	349 / 0	0 / 0	0 / 0	0 / 0	199 / 0	0 / 0
I	500	300 / 0	0 / 0	0 / 0	0 / 0	200 / 0	0 / 0

BEARING MATERIAL TO BE SPF NO.2 OR BETTER AT JOINT(S) H, B, L, K, I

BRACING

TOP CHORD TO BE SHEATHED OR MAX. PURLIN SPACING = 6.25 FT.
MAX. UNBRACED BOTTOM CHORD LENGTH = 10.00 FT OR RIGID CEILING DIRECTLY APPLIED.

ALL PITCH BREAKS AND PERIMETER CORNER JOINTS MUST BE LATERALLY RESTRAINED.

LOADING

TOTAL LOAD CASES: (4)

CHORDS

MEMB. FR-TO	MAX. FACTORED FORCE (LBS)	FACTORED VERT. LOAD LC1 (PLF) FROM	TO	MAX CSI (LC)	MAX. UNBRAC LENGTH
A- B	0 / 10	-78.0	-78.0	0.01 (1)	10.00
B- N	0 / 78	-78.0	-78.0	0.07 (1)	10.00
N- C	-102 / 0	-78.0	-78.0	0.08 (1)	6.25
C- D	0 / 25	-78.0	-78.0	0.50 (1)	10.00
D- E	0 / 24	-78.0	-78.0	0.50 (1)	10.00
E- F	0 / 24	-78.0	-78.0	0.50 (1)	10.00
F- G	-18 / 0	-78.0	-78.0	0.50 (1)	6.25
H- G	-226 / 0	0.0	0.0	0.05 (1)	7.81
B- M	0 / 59	-18.5	-18.5	0.08 (1)	10.00
M- L	0 / 59	-18.5	-18.5	0.14 (4)	10.00
L- K	0 / 53	-18.5	-18.5	0.17 (4)	10.00
K- J	0 / 18	-18.5	-18.5	0.22 (4)	10.00
J- I	0 / 18	-18.5	-18.5	0.22 (4)	10.00
I- H	0 / 0	-18.5	-18.5	0.21 (4)	10.00

WEBS

MEMB. FR-TO	MAX. FACTORED FORCE (LBS)	MAX CSI (LC)
L- C	-200 / 0	0.05 (1)
C- K	-87 / 0	0.10 (1)
K- D	-588 / 0	0.14 (1)
K- F	-48 / 0	0.06 (1)
I- F	-566 / 0	0.13 (1)
I- G	0 / 20	0.00 (1)
M- N	-321 / 0	0.00 (1)

DESIGN CRITERIA

SPECIFIED LOADS:

TOP	CH.	LL	=	21.0	PSF
		DL	=	6.0	PSF
BOT	CH.	LL	=	0.0	PSF
		DL	=	7.4	PSF
TOTAL	LOAD		=	34.4	PSF

SPACING = 24.0 IN. C/C

LOADING IN FLAT SECTION BASED ON A SLOPE OF 2.00/12 MINIMUM

THIS TRUSS IS DESIGNED FOR RESIDENTIAL OR SMALL BUILDING REQUIREMENTS OF PART 9, NBCC 2015

THIS DESIGN COMPLIES WITH:
- PART 9 OF BCBC 2018 , ABC 2019
- PART 9 OF OBC 2012 (2019 AMENDMENT)
- CSA 086-14
- TPIC 2014

(55 % OF 23.0 P.S.F. G.S.L. PLUS 8.4 P.S.F. RAIN LOAD) EQUALS 21.0 P.S.F. SPECIFIED ROOF LIVE LOAD

CSI: TC=0.50/1.00 (D-F:1) , BC=0.22/1.00 (I-K:4) , WB=0.14/1.00 (D-K:1) , SSI=0.25/1.00 (F-G:1)

DOL LUMBER=1.00 NAIL=1.00 LS BEND=1.10 COMP=1.10 SHEAR=1.10 TENS= 1.10

COMPANION LIVE LOAD FACTOR = 1.00

TRUSS PLATE MANUFACTURER IS NOT RESPONSIBLE FOR QUALITY CONTROL IN THE TRUSS MANUFACTURING PLANT .

NAIL VALUES

PLATE	GRIP(DRY) (PSI) MAX	MIN	SHEAR (PLI) MAX	MIN	SECTION (PLI) MAX	MIN
MT20	650	371	1747	788	1987	1873

PLATE PLACEMENT TOL. = 0.250 inches

PLATE ROTATION TOL. = 5.0 Deg.

JSI GRIP= 0.90 (C) (INPUT = 0.90)
JSI METAL= 0.22 (E) (INPUT = 1.00)

JOB NAME	TRUSS NAME	QUANTITY	PLY	JOB DESC.	DRWG NO.
336336	H25		1	TRUSS DESC. JT 45147	E21104139

Alpa Roof Truss, Maple

ID:hd511hZTz bdeQoS817GKByhVxV-qAO6rh4Mwbn9wpXjtZ1yMKq9sho7WXV204WxR?yToTK

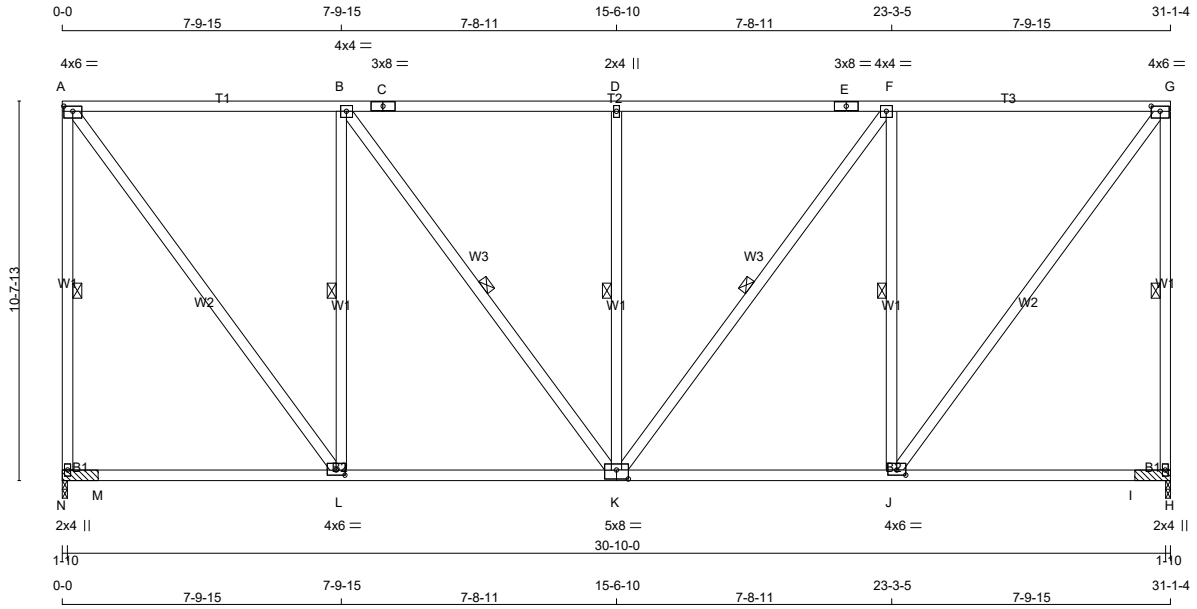

TOTAL WEIGHT = 3 X 188 = 563 lb

LUMBER

N. L. G. A. RULES

CHORDS	SIZE		LUMBER	DESCR.
N - A	2x4	DRY	No.2	SPF
A - C	2x4	DRY	No.2	SPF
C - E	2x4	DRY	No.2	SPF
E - G	2x4	DRY	No.2	SPF
H - G	2x4	DRY	No.2	SPF
N - K	2x4	DRY	No.2	SPF
K - H	2x4	DRY	No.2	SPF
ALL WEBS	2x4	DRY	No.2	SPF

DRY: SEASONED LUMBER.

PLATES (table is in inches)

JT	TYPE	PLATES	W	LEN	Y	X
A	TMVW-t	MT20	4.0	6.0	1.75	3.00
B	TMWW-t	MT20	4.0	4.0		
C	TS-t	MT20	3.0	8.0		
D	TMW+w	MT20	2.0	4.0		
E	TS-t	MT20	3.0	8.0		
F	TMWW-t	MT20	4.0	4.0		
G	TMVW-t	MT20	4.0	6.0	1.75	3.00
H	BMV1+p	MT20	2.0	4.0		
J	BMWW-t	MT20	4.0	6.0	1.75	3.00
K	BSWWW-l	MT20	5.0	8.0	3.00	4.00
L	BMWW-t	MT20	4.0	6.0	1.75	3.00
N	BMV1+p	MT20	2.0	4.0		

LATERAL BRACE(S) SHOWN SHALL BE 2X4 SPF#2

DIMENSIONS, SUPPORTS AND LOADINGS SPECIFIED BY FABRICATOR TO BE VERIFIED BY BUILDING DESIGNER

BEARINGS

JT	FACTORED GROSS REACTION VERT	HORZ	MAXIMUM FACTORED GROSS REACTION DOWN	HORZ	UPLIFT	INPUT BRG IN-SX	REQRD BRG IN-SX
N	1617	0	1617	0	0	1-10	1-10 & BLOCK
H	1617	0	1617	0	0	1-10	1-10 & BLOCK

UNFACTORED REACTIONS

JT	1ST LCASE COMBINED	MAX./MIN. COMPONENT REACTIONS SNOW	LIVE	PERM.LIVE	WIND	DEAD	SOIL
N	1163	653 / 0	0 / 0	0 / 0	0 / 0	510 / 0	0 / 0
H	1163	653 / 0	0 / 0	0 / 0	0 / 0	510 / 0	0 / 0

BEARING MATERIAL TO BE SPF NO.2 OR BETTER AT JOINT(S) N, H

2x4 DRY SPF No.2 BEARING BLOCK 12" LONG AT JT. N ATTACHED TO FRONT SIDE WITH 2 ROWS OF (0.122"X3") SPIRAL NAILS SPACED 3" C.C. 8 NAILS TOTAL.

2x4 DRY SPF No.2 BEARING BLOCK 12" LONG AT JT. H ATTACHED TO FRONT SIDE WITH 2 ROWS OF (0.122"X3") SPIRAL NAILS SPACED 3" C.C. 8 NAILS TOTAL.

BRACING

FOR SECTION A-G, MAX. PURLIN SPACING = 2.00 FT.
FOR OTHER SECTIONS, TOP CHORD TO BE SHEATHED OR MAX. PURLIN SPACING = 0.00 FT.
MAX. UNBRACED BOTTOM CHORD LENGTH = 10.00 FT OR RIGID CEILING DIRECTLY APPLIED.

ALL PITCH BREAKS AND PERIMETER CORNER JOINTS MUST BE LATERALLY RESTRAINED.

1 LATERAL BRACE(S) AT 1/ 2 LENGTH OF A-N, G-H, B-L, B-K, D-K, F-K, F-J.

END VERTICAL(S) MUST BE SHEATHED OR HAVE BRACES AS INDICATED IN THE MAX. UNBRACED LENGTH COLUMN OF THE TABLE BELOW

LOADING

TOTAL LOAD CASES: (4)

CHORDS

MEMB. FR-TO	MAX. FACTORED FORCE (LBS)	FACTORED VERT. LOAD (PLF) FROM	TO	LC1 CSI (LC)	MAX UNBRAC LENGTH
N- A	-1562 / 0	0.0	0.0	0.89 (1)	5.27
A- B	-981 / 0	-85.5	-85.5	0.88 (1)	2.00
B- C	-1248 / 0	-85.5	-85.5	0.92 (1)	2.00
C- D	-1248 / 0	-85.5	-85.5	0.92 (1)	2.00
D- E	-1248 / 0	-85.5	-85.5	0.92 (1)	2.00
E- F	-1248 / 0	-85.5	-85.5	0.92 (1)	2.00
F- G	-981 / 0	-85.5	-85.5	0.88 (1)	2.00
H- G	-1562 / 0	0.0	0.0	0.89 (1)	5.27
N- M	0 / 0	-18.5	-18.5	0.32 (4)	10.00
M- L	0 / 0	-18.5	-18.5	0.32 (4)	10.00
L- K	0 / 981	-18.5	-18.5	0.43 (4)	10.00
K- J	0 / 981	-18.5	-18.5	0.43 (4)	10.00
J- I	0 / 0	-18.5	-18.5	0.32 (4)	10.00
I- H	0 / 0	-18.5	-18.5	0.32 (4)	10.00

WEBS

MEMB. FR-TO	MAX. FACTORED FORCE (LBS)	MAX CSI (LC)
A- L	0 / 1626	0.26 (1)
L- B	-1119 / 0	0.64 (1)
B- K	0 / 447	0.07 (1)
K- D	-609 / 0	0.35 (1)
K- F	0 / 447	0.07 (1)
J- F	-1119 / 0	0.64 (1)
J- G	0 / 1626	0.26 (1)

[M]

DESIGN CRITERIA

SPECIFIED LOADS:

TOP CH.	LL	=	21.0	PSF
	DL	=	6.0	PSF
BOT CH.	LL	=	0.0	PSF
	DL	=	7.4	PSF
TOTAL LOAD		=	34.4	PSF

SPACING = 24.0 IN. C/C

LOADING IN FLAT SECTION BASED ON PIGGYBACK TRUSS WITH SLOPES OF 6.00/12 AND -6.00/12 AND RESPECTIVE HEEL HEIGHTS OF 0-0 AND 0-0 AND AN ADDITIONAL DEAD LOAD OF 3.0 P.S.F.

THIS TRUSS IS DESIGNED FOR RESIDENTIAL OR SMALL BUILDING REQUIREMENTS OF PART 9, NBCC 2015

THIS DESIGN COMPLIES WITH:
- PART 9 OF BCBC 2018 , ABC 2019
- PART 9 OF OBC 2012 (2019 AMENDMENT)
- CSA 086-14
- TPIC 2014

(55 % OF 23.0 P.S.F. G.S.L. PLUS 8.4 P.S.F. RAIN LOAD) EQUALS 21.0 P.S.F. SPECIFIED ROOF LIVE LOAD

ALLOWABLE DEFL.(LL)= L/360 (1.04")
CALCULATED VERT. DEFL.(LL) = L/ 999 (0.06")
ALLOWABLE DEFL.(TL)= L/360 (1.04")
CALCULATED VERT. DEFL.(TL) = L/ 999 (0.18")

CSI: TC=0.92/1.00 (B-D:1) , BC=0.43/1.00 (J-K:4) , WB=0.64/1.00 (B-L:1) , SSI=0.32/1.00 (A-B:1)

DOL LUMBER=1.00 NAIL=1.00 LS BEND=1.10 COMP=1.10 SHEAR=1.10 TENS= 1.10

COMPANION LIVE LOAD FACTOR = 1.00

TRUSS PLATE MANUFACTURER IS NOT RESPONSIBLE FOR QUALITY CONTROL IN THE TRUSS MANUFACTURING PLANT .

NAIL VALUES

PLATE	GRIP(DRY) (PSI) MAX	MIN	SHEAR (PLI) MAX	MIN	SECTION (PLI) MAX	MIN
MT20	650	371	1747	788	1987	1873

PLATE PLACEMENT TOL. = 0.250 inches

PLATE ROTATION TOL. = 5.0 Deg.

JSI GRIP= 0.86 (L) (INPUT = 0.90)
JSI METAL= 0.34 (A) (INPUT = 1.00)

JOB NAME	TRUSS NAME	QUANTITY	PLY	JOB DESC.		DRWG NO.
336336	H26P		1	TRUSS DESC.	JT 45147	E21104140

Alpa Roof Truss, Maple

Version 8.420 S Jan 21 2021 MiTek Industries, Inc. Wed Oct 13 15:36:10 2021 Page 1

ID:hd511hZTz bdeQoS817GKByhVxV-IMyU315?huv0Yz6vRGYBvXDO749yF61BFkFV SyToTJ

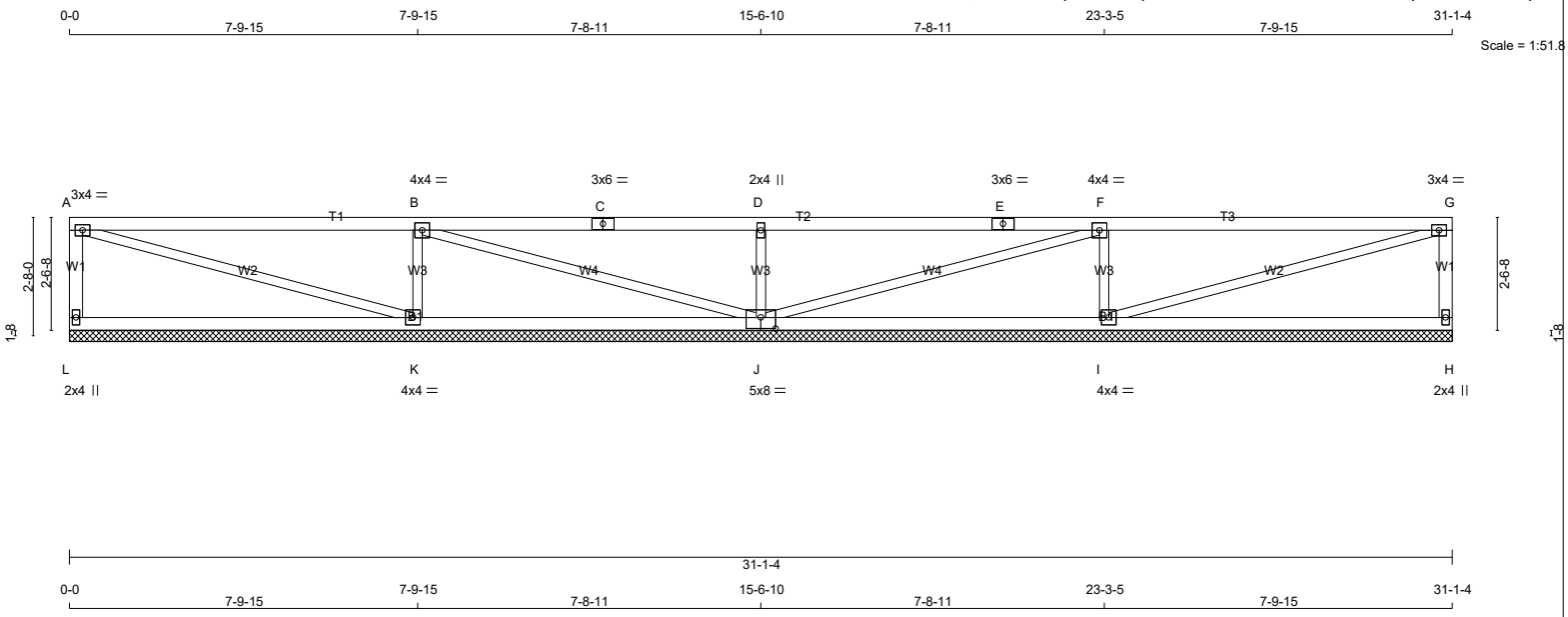

TOTAL WEIGHT = 105 lb

[M]

LUMBER

N. L. G. A. RULES

CHORDS	SIZE		LUMBER	DESCR.
L - A	2x4	DRY	No.2	SPF
A - C	2x4	DRY	No.2	SPF
C - E	2x4	DRY	No.2	SPF
E - G	2x4	DRY	No.2	SPF
H - G	2x4	DRY	No.2	SPF
L - J	2x4	DRY	No.2	SPF
J - H	2x4	DRY	No.2	SPF
ALL WEBS	2x3	DRY	No.2	SPF

DRY: SEASONED LUMBER.

PLATES (table is in inches)

JT	TYPE	PLATES	W	LEN	Y	X
A	TMVW-t	MT20	3.0	4.0		
B	TMWW-t	MT20	4.0	4.0		
C	TS-t	MT20	3.0	6.0		
D	TMW+w	MT20	2.0	4.0		
E	TS-t	MT20	3.0	6.0		
F	TMWW-t	MT20	4.0	4.0		
G	TMVW-t	MT20	3.0	4.0		
H	BMV1+p	MT20	2.0	4.0		
I	BMWW1-t	MT20	4.0	4.0		
J	BSWWW1-l	MT20	5.0	8.0	3.00	4.00
K	BMWW1-t	MT20	4.0	4.0		
L	BMV1+p	MT20	2.0	4.0		

LATERAL BRACE(S) SHOWN SHALL BE 2X4 SPF#2

DIMENSIONS, SUPPORTS AND LOADINGS SPECIFIED BY FABRICATOR TO BE VERIFIED BY BUILDING DESIGNER

BEARINGS

JT	FACTORED GROSS REACTION VERT	HORZ	MAXIMUM FACTORED GROSS REACTION DOWN	HORZ	UPLIFT	INPUT BRG IN-SX	REQRD BRG IN-SX
L	296	0	296	0	0	31-1-4 (15-6-10)	108
H	296	0	296	0	0	31-1-4 (15-6-10)	108
K	864	0	864	0	0	31-1-4 (15-6-10)	108
J	681	0	681	0	0	31-1-4 (15-6-10)	108
I	864	0	864	0	0	31-1-4 (15-6-10)	108

VALUE IN PARENTHESIS INDICATES EFFECTIVE BEARING LENGTH

UNFACTORED REACTIONS

JT	1ST LCASE COMBINED	MAX./MIN. COMPONENT REACTIONS SNOW	LIVE	PERM.LIVE	WIND	DEAD	SOIL
L	211	130 / 0	0 / 0	0 / 0	0 / 0	81 / 0	0 / 0
H	211	130 / 0	0 / 0	0 / 0	0 / 0	81 / 0	0 / 0
K	618	368 / 0	0 / 0	0 / 0	0 / 0	249 / 0	0 / 0
J	483	309 / 0	0 / 0	0 / 0	0 / 0	174 / 0	0 / 0
I	618	368 / 0	0 / 0	0 / 0	0 / 0	249 / 0	0 / 0

BEARING MATERIAL TO BE SPF NO.2 OR BETTER AT JOINT(S) L, H, K, J, I

BRACING

TOP CHORD TO BE SHEATHED OR MAX. PURLIN SPACING = 10.00 FT.

MAX. UNBRACED BOTTOM CHORD LENGTH = 10.00 FT OR RIGID CEILING DIRECTLY APPLIED.

ALL PITCH BREAKS AND PERIMETER CORNER JOINTS MUST BE LATERALLY RESTRAINED.

LOADING

TOTAL LOAD CASES: (4)

CHORDS

MEMB. FR-TO	MAX. FACTORED FORCE (LBS)	FACTORED VERT. LOAD LC1 (PLF) FROM	TO	MAX CSI (LC)	MAX. UNBRAC LENGTH
L- A	-241 / 0	0.0	0.0	0.03 (1)	7.81
A- B	-3 / 0	-78.0	-78.0	0.69 (1)	10.00
B- C	0 / 30	-78.0	-78.0	0.70 (1)	10.00
C- D	0 / 30	-78.0	-78.0	0.70 (1)	10.00
D- E	0 / 30	-78.0	-78.0	0.70 (1)	10.00
E- F	0 / 30	-78.0	-78.0	0.70 (1)	10.00
F- G	-3 / 0	-78.0	-78.0	0.69 (1)	10.00
H- G	-241 / 0	0.0	0.0	0.03 (1)	7.81
L- K	0 / 0	-18.5	-18.5	0.33 (4)	10.00
K- J	0 / 3	-18.5	-18.5	0.33 (4)	10.00
J- I	0 / 3	-18.5	-18.5	0.33 (4)	10.00
I- H	0 / 0	-18.5	-18.5	0.33 (4)	10.00

WEBS

MEMB. FR-TO	MAX. FACTORED FORCE (LBS)	MAX CSI (LC)
A- K	0 / 3	0.00 (1)
K- B	-685 / 0	0.11 (1)
B- J	-34 / 0	0.05 (1)
J- D	-556 / 0	0.09 (1)
J- F	-34 / 0	0.05 (1)
I- F	-685 / 0	0.11 (1)
I- G	0 / 3	0.00 (1)

DESIGN CRITERIA

SPECIFIED LOADS:

TOP CH.	LL	=	21.0	PSF
	DL	=	6.0	PSF
BOT CH.	LL	=	0.0	PSF
	DL	=	7.4	PSF
TOTAL LOAD		=	34.4	PSF

SPACING = 24.0 IN. C/C

LOADING IN FLAT SECTION BASED ON A SLOPE OF 2.00/12 MINIMUM

THIS TRUSS IS DESIGNED FOR RESIDENTIAL OR SMALL BUILDING REQUIREMENTS OF PART 9, NBCC 2015

THIS DESIGN COMPLIES WITH:
- PART 9 OF BCBC 2018 , ABC 2019
- PART 9 OF OBC 2012 (2019 AMENDMENT)
- CSA 086-14
- TPIC 2014

(55 % OF 23.0 P.S.F. G.S.L. PLUS 8.4 P.S.F. RAIN LOAD) EQUALS 21.0 P.S.F. SPECIFIED ROOF LIVE LOAD

CSI: TC=0.70/1.00 (B-D:1) , BC=0.33/1.00 (K-L:4) , WB=0.11/1.00 (B-K:1) , SSI=0.29/1.00 (A-B:1)

DOL LUMBER=1.00 NAIL=1.00 LS BEND=1.10 COMP=1.10 SHEAR=1.10 TENS= 1.10

COMPANION LIVE LOAD FACTOR = 1.00

TRUSS PLATE MANUFACTURER IS NOT RESPONSIBLE FOR QUALITY CONTROL IN THE TRUSS MANUFACTURING PLANT .

NAIL VALUES

PLATE	GRIP(DRY) (PSI) MAX	MIN	SHEAR (PLI) MAX	MIN	SECTION (PLI) MAX	MIN
MT20	650	371	1747	788	1987	1873

PLATE PLACEMENT TOL. = 0.250 inches

PLATE ROTATION TOL. = 5.0 Deg.

JSI GRIP= 0.85 (C) (INPUT = 0.90)
JSI METAL= 0.45 (C) (INPUT = 1.00)

JOB NAME	TRUSS NAME	QUANTITY	PLY	JOB DESC.	DRWG NO.
336335	H240		1	TRUSS DESC. JT 45147	E21104187

Alpa Roof Truss, Maple

Version 8.420 S Jan 21 2021 MiTek Industries, Inc. Thu Oct 14 08:53:28 2021 Page 1

ID:hd511hZTz_bdeQoS817GKByhVxV-_wc0SMIiYWE9Ic4YQM8ENGwMHblMjBI4slfsQ2yTZGr

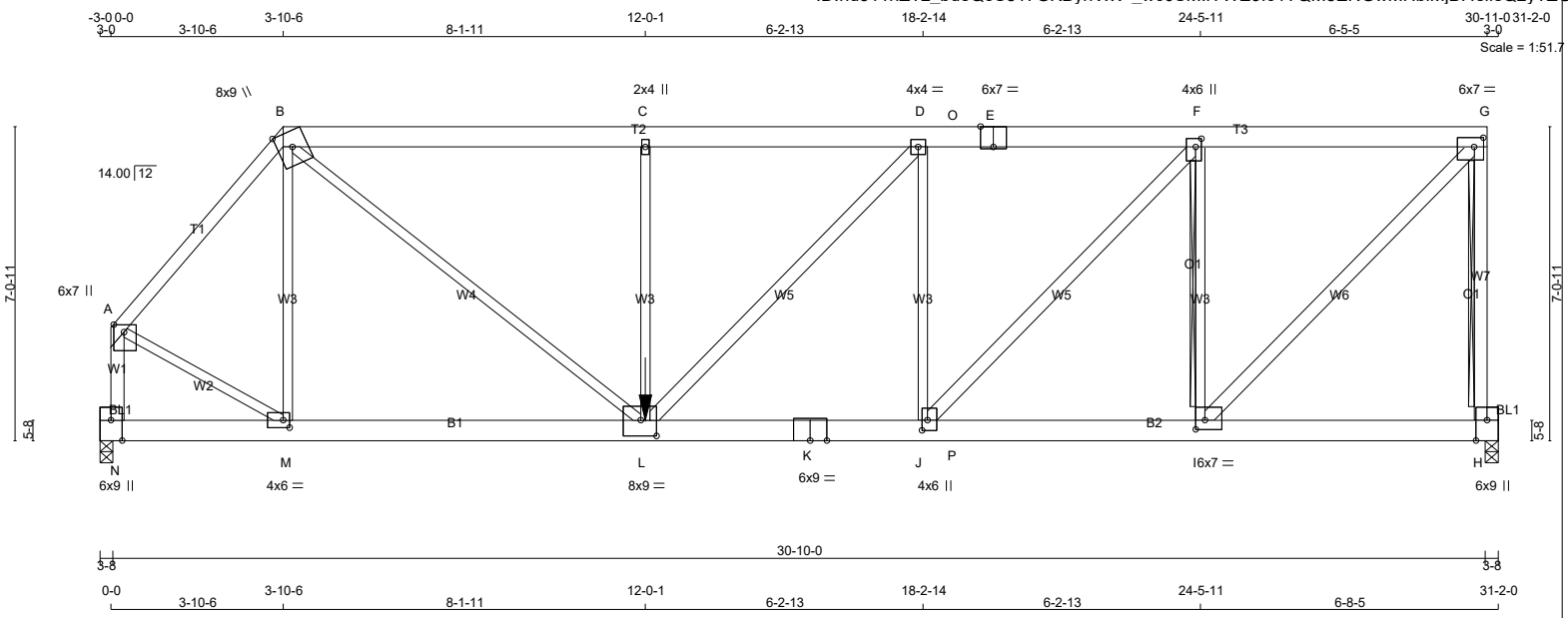

TOTAL WEIGHT = 183 lb

[M]

LUMBER

N. L. G. A. RULES

CHORDS	SIZE		LUMBER	DESCR.
A - B	2x4	DRY	No.2	SPF
B - E	2x6	DRY	No.2	SPF
E - G	2x6	DRY	No.2	SPF
H - G	2x4	DRY	No.2	SPF
N - A	2x4	DRY	No.2	SPF
N - K	2x6	DRY	No.2	SPF
K - H	2x6	DRY	No.2	SPF
BEARING BLOCKS				
BL1	2 - 2x4	DRY	No.2	SPF
ALL WEBS EXCEPT	2x3	DRY	No.2	SPF
L - D	2x4	DRY	No.2	SPF
J - F	2x4	DRY	No.2	SPF
I - G	2x4	DRY	No.2	SPF

DRY: SEASONED LUMBER.

PLATES (table is in inches)

JT	TYPE	PLATES	W	LEN	Y	X
A	TMVW+p	MT20	6.0	7.0	2.00	2.75
B	TTWW+m	MT20	8.0	9.0	Edge	
C	TMW+w	MT20	2.0	4.0		
D	TMWW-t	MT20	4.0	4.0		
E	TS-t	MT20	6.0	7.0	Edge	3.50
F	TMWW+t	MT20	4.0	6.0	2.25	1.50
G	TMVW-t	MT20	6.0	7.0	2.50	2.50
H	BMVK1+t	MT20	6.0	9.0	Edge	3.00
I	BMWW-t	MT20	6.0	7.0	2.50	2.50
J	BMWW+t	MT20	4.0	6.0	2.75	1.50
K	BS-t	MT20	6.0	9.0		
L	BMWWW-t	MT20	8.0	9.0	4.25	4.25
M	BMWW-t	MT20	4.0	6.0	2.00	1.75
N	BMVK1+t	MT20	6.0	9.0	Edge	3.00

Edge - INDICATES REFERENCE CORNER OF PLATE TOUCHES EDGE OF CHORD.

LATERAL BRACE(S) SHOWN SHALL BE 2X4 SPF#2

DIMENSIONS, SUPPORTS AND LOADINGS SPECIFIED BY FABRICATOR TO BE VERIFIED BY BUILDING DESIGNER

BEARINGS

JT	FACTORED GROSS REACTION VERT	HORZ	MAXIMUM FACTORED GROSS REACTION DOWN	HORZ	UPLIFT	INPUT BRG IN-SX	REQRD BRG IN-SX
H	3609	0	3609	0	0	3-8	3-8
N	3163	0	3163	0	0	3-8	3-8

UNFACTORED REACTIONS

JT	1ST LCASE COMBINED	MAX./MIN. COMPONENT REACTIONS SNOW	LIVE	PERM.LIVE	WIND	DEAD	SOIL
H	2573	1573 / 0	0 / 0	0 / 0	0 / 0	1000 / 0	0 / 0
N	2255	1378 / 0	0 / 0	0 / 0	0 / 0	877 / 0	0 / 0

BEARING MATERIAL TO BE SPF NO.2 OR BETTER AT JOINT(S) H, N

BEARING SIZE FACTOR = 1.15 AT JNT(S) H, N (BASED ON SUPPORT DEPTH = 1-8)

BRACING

TOP CHORD TO BE SHEATHED OR MAX. PURLIN SPACING = 3.31 FT.

MAX. UNBRACED BOTTOM CHORD LENGTH = 6.25 FT OR RIGID CEILING DIRECTLY APPLIED.

ALL PITCH BREAKS AND PERIMETER CORNER JOINTS MUST BE LATERALLY RESTRAINED.

2x4 DRY SPF No.2 T-BRACE AT G-H, F-I

FASTEN T AND I-BRACES TO NARROW EDGE OF WEB WITH ONE ROW PER PLY OF 3" COMMON WIRE NAILS @ 6" O.C. WITH 3" MINIMUM END DISTANCE. BRACE MUST COVER 90% OF WEB LENGTH.

END VERTICAL(S) MUST BE SHEATHED OR HAVE BRACES AS INDICATED IN THE MAX. UNBRACED LENGTH COLUMN OF THE TABLE BELOW

LOADING

TOTAL LOAD CASES: (4)

CHORDS

MEMB. FR-TO	MAX. FACTORED FORCE (LBS)	FACTORED VERT. LOAD (PLF) FROM	TO	LC1 CSI (LC)	MAX UNBRAC LENGTH
A- B	-2615 / 0	-78.0	-78.0	0.40 (1)	3.92
B- C	-4719 / 0	-78.0	-78.0	0.61 (1)	3.49
C- D	-4719 / 0	-78.0	-78.0	0.46 (1)	3.61
D- O	-4456 / 0	-78.0	-78.0	0.71 (1)	3.31
O- E	-4456 / 0	-165.7	-165.7	0.71 (1)	3.31
E- F	-4456 / 0	-165.7	-165.7	0.71 (1)	3.31
F- G	-2921 / 0	-165.7	-165.7	0.61 (1)	4.13
H- G	-3497 / 0	0.0	0.0	0.90 (1)	7.81
N- A	-3156 / 0	0.0	0.0	0.44 (1)	4.79
N- M	-219 / 0	-18.5	-18.5	0.10 (4)	6.25
M- L	0 / 1688	-18.5	-18.5	0.36 (1)	10.00
L- K	0 / 4456	-151.1	-151.1	0.93 (1)	10.00
K- J	0 / 4456	-151.1	-151.1	0.93 (1)	10.00
J- P	0 / 2921	-151.1	-151.1	0.62 (1)	10.00
P- I	0 / 2921	-39.3	-39.3	0.62 (1)	10.00
I- H	-77 / 0	-39.3	-39.3	0.17 (4)	6.25

WEBS

MEMB. FR-TO	MAX. FACTORED FORCE (LBS)	MAX CSI (LC)
M- B	-896 / 0	0.69 (1)
B- L	0 / 3903	0.97 (1)
L- C	-623 / 0	0.48 (1)
L- D	0 / 383	0.07 (1)
J- D	-891 / 0	0.68 (1)
J- F	0 / 2236	0.40 (1)
I- F	-2851 / 0	0.94 (1)
I- G	0 / 4291	0.76 (1)
A- M	0 / 2172	0.54 (1)

FACTORED CONCENTRATED LOADS (LBS)

JT	LOC.	LC1	MAX-	MAX+	FACE	DIR.	TYPE	HEEL	CONN.
L	12-0-1	-1578	-1578	---	FRONT	VERT	TOTAL	---	C1

CONNECTION REQUIREMENTS

1) **C1:** A SUITABLE HANGER/MECHANICAL CONNECTION IS REQUIRED.

DESIGN CRITERIA

*** SPECIAL LOADS ANALYSIS ***
GEOMETRY AND/OR BASIC LOADS CHANGED BY USER.
LOADS WERE DERIVED FROM USER INPUT
NO FURTHER MODIFICATIONS WERE MADE

SPECIFIED LOADS:

TOP	CH.	LL =	21.0	PSF
		DL =	6.0	PSF
BOT	CH.	LL =	0.0	PSF
		DL =	7.4	PSF
TOTAL	LOAD	=	34.4	PSF

SPACING = 24.0 IN. C/C

LOADING IN FLAT SECTION BASED ON A SLOPE OF 2.00/12 MINIMUM

GIRDER TYPE: CPrimeHip
LEFT SETBACK = 4-1-6
RIGHT SETBACK = 0-0
END SETBACK = 6-6-0
END WALL WIDTH = 0-0
CORNER FRAMING TYPE: CONVENTIONAL
END JACK TYPE: CONVENTIONAL
APPLIED TO FRONT SIDE
- ADDT'L LOADS BASED ON 55 % OF GSL.
LOADS APPLIED TO FIRST 12-5-8 OF SPAN MEASURED FROM THE RIGHT.

GIRDER TYPE: CStdGirder
START DISTANCE = 12-0-1
START SPAN CARRIED = 7-6-0
END DISTANCE = 18-11-8
END SPAN CARRIED = 7-6-0
END WALL WIDTH = 0-0
APPLIED TO FRONT SIDE OF BOTTOM CHORD.
- ADDT'L LOADS BASED ON 55 % OF GSL.

*** NON STANDARD GIRDER ***
ADDT'L USER-DEFINED LOADS APPLIED TO ALL LOAD CASES.

THIS TRUSS IS DESIGNED FOR RESIDENTIAL OR SMALL BUILDING REQUIREMENTS OF PART 9, NBCC 2015

THIS DESIGN COMPLIES WITH:
- PART 9 OF BCBC 2018 , ABC 2019
- PART 9 OF OBC 2012 (2019 AMENDMENT)
- CSA 086-14
- TPIC 2014

(55 % OF 23.0 P.S.F. G.S.L. PLUS 8.4 P.S.F. RAIN LOAD) EQUALS 21.0 P.S.F. SPECIFIED ROOF LIVE LOAD

ALLOWABLE DEFL.(LL)= L/360 (1.02")
CALCULATED VERT. DEFL.(LL) = L/ 999 (0.20")
ALLOWABLE DEFL.(TL)= L/360 (1.02")
CALCULATED VERT. DEFL.(TL) = L/ 934 (0.39")

CSI: TC=0.90/1.00 (G-H:1) , BC=0.93/1.00 (J-L:1) , WB=0.97/1.00 (B-L:1) , SSI=0.43/1.00 (F-G:1)

DOL LUMBER=1.00 NAIL=1.00 LS BEND=1.00 COMP=1.00 SHEAR=1.00 TENS= 1.00

COMPANION LIVE LOAD FACTOR = 1.00

CONTINUED ON PAGE 2

JOB NAME	TRUSS NAME	QUANTITY	PLY	JOB DESC.		DRWG NO.
336335	H242		1	TRUSS DESC.	JT 45147	E21104188

Alpa Roof Truss, Maple

Version 8.420 S Jan 21 2021 MiTek Industries, Inc. Thu Oct 14 08:53:29 2021 Page 1

ID:hd511hZTz bdeQoS817GKByhVxV-S7AOfiJKJqM0wmelz3fTvUTb2?CrSeXD4POPyUyTZGq

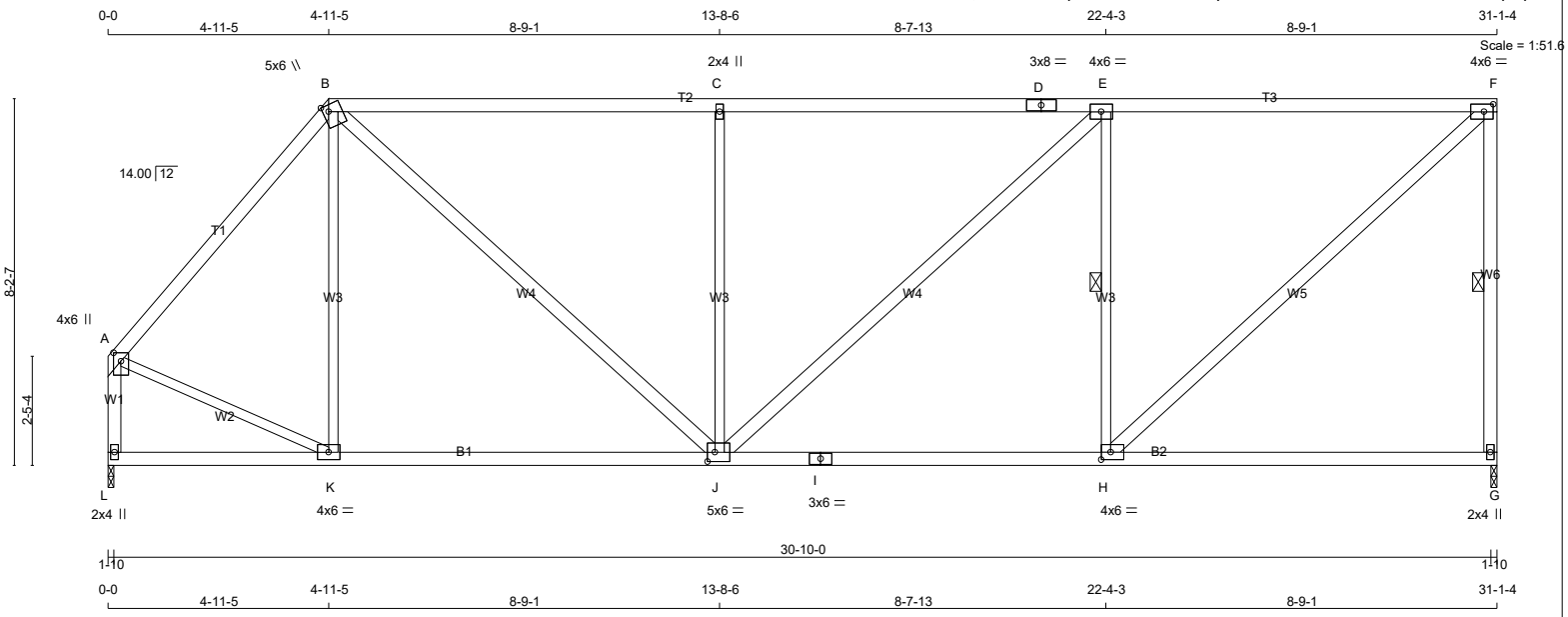

TOTAL WEIGHT = 147 lb [M]

LUMBER

N. L. G. A. RULES

CHORDS	SIZE		LUMBER	DESCR.
A - B	2x4	DRY	No.2	SPF
B - D	2x4	DRY	2100F 1.8E	SPF
D - F	2x4	DRY	2100F 1.8E	SPF
G - F	2x4	DRY	No.2	SPF
L - A	2x4	DRY	No.2	SPF
L - I	2x4	DRY	No.2	SPF
I - G	2x4	DRY	No.2	SPF
ALL WEBS	2x3	DRY	No.2	SPF
EXCEPT				
B - J	2x4	DRY	No.2	SPF
J - E	2x4	DRY	No.2	SPF
H - F	2x4	DRY	No.2	SPF

DRY: SEASONED LUMBER.

PLATES (table is in inches)

JT	TYPE	PLATES	W	LEN	Y	X
A	TMVW+p	MT20	4.0	6.0	2.25	2.00
B	TTWW+m	MT20	5.0	6.0	1.75	1.50
C	TMW+w	MT20	2.0	4.0		
D	TS-t	MT20	3.0	8.0		
E	TMWW-t	MT20	4.0	6.0		
F	TMVW-t	MT20	4.0	6.0	2.00	2.50
G	BMV1+p	MT20	2.0	4.0		
H	BMWW-t	MT20	4.0	6.0	2.00	2.50
I	BS-t	MT20	3.0	6.0		
J	BMWWW-t	MT20	5.0	6.0	2.50	2.00
K	BMWW-t	MT20	4.0	6.0		
L	BMV1+p	MT20	2.0	4.0		

LATERAL BRACE(S) SHOWN SHALL BE 2X4 SPF#2

DIMENSIONS, SUPPORTS AND LOADINGS SPECIFIED BY FABRICATOR TO BE VERIFIED BY BUILDING DESIGNER

BEARINGS

JT	FACTORED GROSS REACTION VERT	HORZ	MAXIMUM FACTORED GROSS REACTION DOWN	HORZ	UPLIFT	INPUT BRG IN-SX	REQRD BRG IN-SX
G	1500	0	1500	0	0	1-10	1-10
L	1500	0	1500	0	0	1-10	1-10

UNFACTORED REACTIONS

JT	1ST LCASE COMBINED	MAX./MIN. COMPONENT REACTIONS SNOW	LIVE	PERM.LIVE	WIND	DEAD	SOIL
G	1070	653 / 0	0 / 0	0 / 0	0 / 0	417 / 0	0 / 0
L	1070	653 / 0	0 / 0	0 / 0	0 / 0	417 / 0	0 / 0

BEARING MATERIAL TO BE SPF NO.2 OR BETTER AT JOINT(S) G, L

BRACING

TOP CHORD TO BE SHEATHED OR MAX. PURLIN SPACING = 5.29 FT.
MAX. UNBRACED BOTTOM CHORD LENGTH = 10.00 FT OR RIGID CEILING DIRECTLY APPLIED.

ALL PITCH BREAKS AND PERIMETER CORNER JOINTS MUST BE LATERALLY RESTRAINED.

1 LATERAL BRACE(S) AT 1/ 2 LENGTH OF F-G, E-H.

END VERTICAL(S) MUST BE SHEATHED OR HAVE BRACES AS INDICATED IN THE MAX. UNBRACED LENGTH COLUMN OF THE TABLE BELOW

LOADING

TOTAL LOAD CASES: (4)

CHORDS

MEMB. FR-TO	MAX. FACTORED FORCE (LBS)	FACTORED VERT. LOAD (PLF) FROM	TO	LC1 CSI (LC)	MAX UNBRAC LENGTH
A- B	-1246 / 0	-78.0	-78.0	0.42 (1)	5.29
B- C	-1540 / 0	-78.0	-78.0	0.64 (1)	5.40
C- D	-1540 / 0	-78.0	-78.0	0.64 (1)	5.40
D- E	-1540 / 0	-78.0	-78.0	0.64 (1)	5.40
E- F	-1285 / 0	-78.0	-78.0	0.62 (1)	5.79
G- F	-1436 / 0	0.0	0.0	0.44 (1)	5.45
L- A	-1472 / 0	0.0	0.0	0.19 (1)	6.74
L- K	0 / 0	-18.5	-18.5	0.22 (4)	10.00
K- J	0 / 805	-18.5	-18.5	0.34 (4)	10.00
J- I	0 / 1285	-18.5	-18.5	0.46 (4)	10.00
I- H	0 / 1285	-18.5	-18.5	0.46 (4)	10.00
H- G	0 / 0	-18.5	-18.5	0.34 (4)	10.00

WEBS

MEMB. FR-TO	MAX. FACTORED FORCE (LBS)	MAX CSI (LC)
K- B	-187 / 29	0.24 (1)
B- J	0 / 989	0.16 (1)
J- C	-738 / 0	0.97 (1)
J- E	0 / 346	0.06 (1)
H- E	-979 / 0	0.42 (1)
H- F	0 / 1732	0.28 (1)
A- K	0 / 873	0.20 (1)

DESIGN CRITERIA

SPECIFIED LOADS:

TOP CH.	LL	=	21.0	PSF
	DL	=	6.0	PSF
BOT CH.	LL	=	0.0	PSF
	DL	=	7.4	PSF
TOTAL LOAD		=	34.4	PSF

SPACING = 24.0 IN. C/C

LOADING IN FLAT SECTION BASED ON A SLOPE OF 2.00/12 MINIMUM

THIS TRUSS IS DESIGNED FOR RESIDENTIAL OR SMALL BUILDING REQUIREMENTS OF PART 9, NBCC 2015

THIS DESIGN COMPLIES WITH:
- PART 9 OF BCBC 2018 , ABC 2019
- PART 9 OF OBC 2012 (2019 AMENDMENT)
- CSA 086-14
- TPIC 2014

(55 % OF 23.0 P.S.F. G.S.L. PLUS 8.4 P.S.F. RAIN LOAD) EQUALS 21.0 P.S.F. SPECIFIED ROOF LIVE LOAD

ALLOWABLE DEFL.(LL)= L/360 (1.04")
CALCULATED VERT. DEFL.(LL) = L/ 999 (0.06")
ALLOWABLE DEFL.(TL)= L/360 (1.04")
CALCULATED VERT. DEFL.(TL) = L/ 999 (0.18")

CSI: TC=0.64/1.00 (B-C:1) , BC=0.46/1.00 (H-J:4) , WB=0.97/1.00 (C-J:1) , SSI=0.32/1.00 (E-F:1)

DOL LUMBER=1.00 NAIL=1.00 LS BEND=1.10 COMP=1.10 SHEAR=1.10 TENS= 1.10

COMPANION LIVE LOAD FACTOR = 1.00

TRUSS PLATE MANUFACTURER IS NOT RESPONSIBLE FOR QUALITY CONTROL IN THE TRUSS MANUFACTURING PLANT .

NAIL VALUES

PLATE	GRIP(DRY) (PSI) MAX	MIN	SHEAR (PLI) MAX	MIN	SECTION (PLI) MAX	MIN
MT20	650	371	1747	788	1987	1873

PLATE PLACEMENT TOL. = 0.250 inches

PLATE ROTATION TOL. = 5.0 Deg.

JSI GRIP= 0.84 (H) (INPUT = 0.90)
JSI METAL= 0.46 (A) (INPUT = 1.00)

JOB NAME	TRUSS NAME	QUANTITY	PLY	JOB DESC.	DRWG NO.
336335	H243		1	TRUSS DESC. JT 45147	E21104189

Alpa Roof Truss, Maple

Version 8.420 S Jan 21 2021 MiTek Industries, Inc. Thu Oct 14 08:52:40 2021 Page 1

ID:hd511hZTz_bdeQoS817GKByhVxV-OhjtNyjbrnBzYEPKcHHzQ9xBCFU_TYH0pH1JkqyTZHb

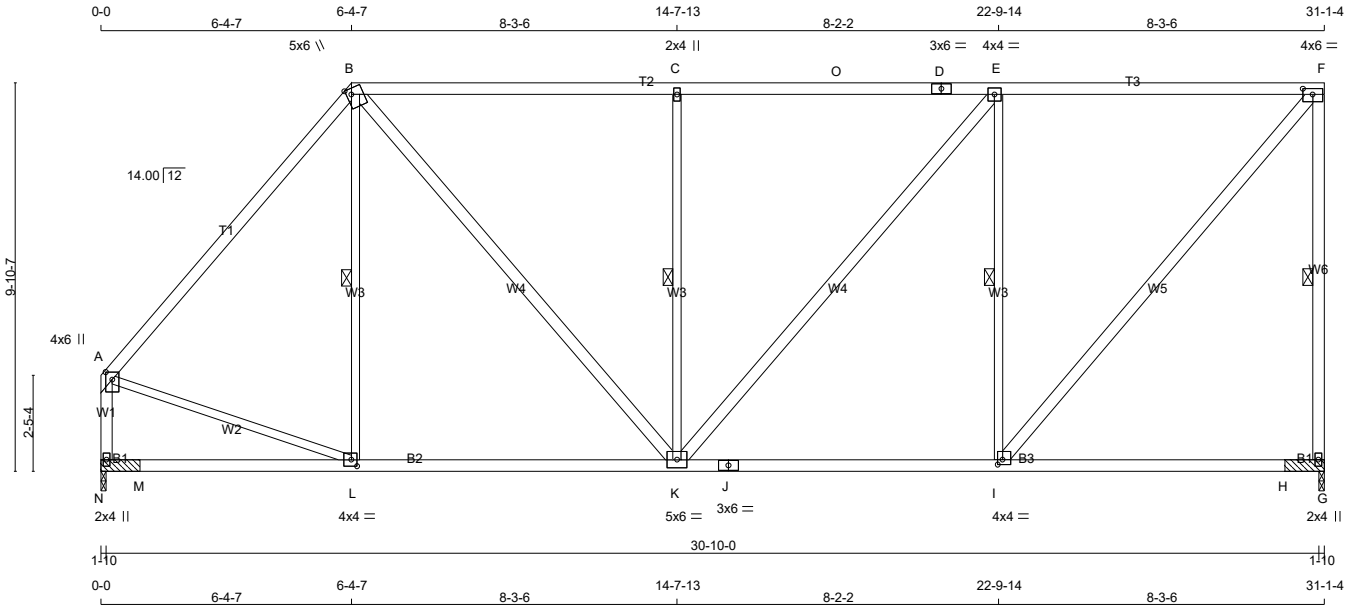

TOTAL WEIGHT = 7 X 160 = 1121 lb

LUMBER

N. L. G. A. RULES

CHORDS	SIZE		LUMBER	DESCR.
A - B	2x4	DRY	2100F 1.8E	SPF
B - D	2x4	DRY	1650F 1.5E	SPF
D - F	2x4	DRY	1650F 1.5E	SPF
G - F	2x4	DRY	No.2	SPF
N - A	2x4	DRY	No.2	SPF
N - J	2x4	DRY	No.2	SPF
J - G	2x4	DRY	No.2	SPF
ALL WEBS	2x3	DRY	No.2	SPF
EXCEPT				
B - K	2x4	DRY	No.2	SPF
K - E	2x4	DRY	No.2	SPF
I - F	2x4	DRY	No.2	SPF

DRY: SEASONED LUMBER.

PLATES (table is in inches)

JT	TYPE	PLATES	W	LEN	Y	X
A	TMVW+p	MT20	4.0	6.0	2.25	2.00
B	TTWW+m	MT20	5.0	6.0	1.75	1.50
C	TMW+w	MT20	2.0	4.0		
D	TS-t	MT20	3.0	6.0		
E	TMWW-t	MT20	4.0	4.0		
F	TMVW-t	MT20	4.0	6.0	1.75	3.00
G	BMV1+p	MT20	2.0	4.0		
I	BMWW-t	MT20	4.0	4.0	1.50	1.50
J	BS-t	MT20	3.0	6.0		
K	BMWWW-t	MT20	5.0	6.0		
L	BMWW-t	MT20	4.0	4.0	2.00	1.75
N	BMV1+p	MT20	2.0	4.0		

LATERAL BRACE(S) SHOWN SHALL BE 2X4 SPF#2

DIMENSIONS, SUPPORTS AND LOADINGS SPECIFIED BY FABRICATOR TO BE VERIFIED BY BUILDING DESIGNER

BEARINGS

JT	FACTORED GROSS REACTION VERT	HORZ	MAXIMUM FACTORED GROSS REACTION DOWN	HORZ	UPLIFT	INPUT BRG IN-SX	REQRD BRG IN-SX
G	1612	0	1612	0	0	1-10	1-10 & BLOCK
N	1574	0	1574	0	0	1-10	1-10 & BLOCK

UNFACTORED REACTIONS

JT	1ST LCASE COMBINED	MAX./MIN. COMPONENT REACTIONS SNOW	LIVE	PERM.LIVE	WIND	DEAD	SOIL
G	1159	653 / 0	0 / 0	0 / 0	0 / 0	506 / 0	0 / 0
N	1129	653 / 0	0 / 0	0 / 0	0 / 0	476 / 0	0 / 0

BEARING MATERIAL TO BE SPF NO.2 OR BETTER AT JOINT(S) G, N

2x4 DRY SPF No.2 BEARING BLOCK 12" LONG AT JT. G ATTACHED TO FRONT SIDE WITH 2 ROWS OF (0.122"X3") SPIRAL NAILS SPACED 3" C.C. 8 NAILS TOTAL.

2x4 DRY SPF No.2 BEARING BLOCK 12" LONG AT JT. N ATTACHED TO FRONT SIDE WITH 2 ROWS OF (0.122"X3") SPIRAL NAILS SPACED 3" C.C. 8 NAILS TOTAL.

BRACING

FOR SECTION B-F, MAX. PURLIN SPACING = 2.00 FT.
FOR OTHER SECTIONS, TOP CHORD TO BE SHEATHED OR MAX. PURLIN SPACING = 6.10 FT.
MAX. UNBRACED BOTTOM CHORD LENGTH = 10.00 FT OR RIGID CEILING DIRECTLY APPLIED.

ALL PITCH BREAKS AND PERIMETER CORNER JOINTS MUST BE LATERALLY RESTRAINED.

1 LATERAL BRACE(S) AT 1/ 2 LENGTH OF F-G, B-L, C-K, E-I.

END VERTICAL(S) MUST BE SHEATHED OR HAVE BRACES AS INDICATED IN THE MAX. UNBRACED LENGTH COLUMN OF THE TABLE BELOW

LOADING

TOTAL LOAD CASES: (4)

CHORDS

MEMB. FR-TO	MAX. FACTORED FORCE (LBS)	FACTORED VERT. LOAD (PLF) FROM	TO	LC1 CSI (LC)	MAX UNBRAC LENGTH
A- B	-1324 / 0	-78.0	-78.0	0.46 (1)	6.10
B- C	-1368 / 0	-85.5	-85.5	0.79 (1)	2.00
C- O	-1369 / 0	-85.5	-85.5	0.79 (1)	2.00
O- D	-1369 / 0	-85.5	-85.5	0.79 (1)	2.00
D- E	-1369 / 0	-85.5	-85.5	0.79 (1)	2.00
E- F	-1095 / 0	-85.5	-85.5	0.76 (1)	2.00
G- F	-1551 / 0	0.0	0.0	0.73 (1)	5.29
N- A	-1530 / 0	0.0	0.0	0.20 (1)	6.65
N- M	0 / 0	-18.5	-18.5	0.24 (4)	10.00
M- L	0 / 0	-18.5	-18.5	0.24 (4)	10.00
L- K	0 / 858	-18.5	-18.5	0.33 (4)	10.00
K- J	0 / 1095	-18.5	-18.5	0.43 (4)	10.00
J- I	0 / 1095	-18.5	-18.5	0.43 (4)	10.00
I- H	0 / 0	-18.5	-18.5	0.31 (4)	10.00
H- G	0 / 0	-18.5	-18.5	0.31 (4)	10.00

WEBS

MEMB. FR-TO	MAX. FACTORED FORCE (LBS)	MAX CSI (LC)
L- B	-121 / 50	0.08 (1)
B- K	0 / 780	0.13 (1)
K- C	-765 / 0	0.50 (1)
K- E	0 / 422	0.07 (1)
I- E	-1094 / 0	0.72 (1)
I- F	0 / 1674	0.27 (1)
A- L	0 / 902	0.20 (1)

[M]

DESIGN CRITERIA

SPECIFIED LOADS:

TOP	CH.	LL	=	21.0	PSF
		DL	=	6.0	PSF
BOT	CH.	LL	=	0.0	PSF
		DL	=	7.4	PSF
TOTAL	LOAD		=	34.4	PSF

SPACING = 24.0 IN. C/C

LOADING IN FLAT SECTION BASED ON PIGGYBACK TRUSS WITH SLOPES OF 6.00/12 AND -6.00/12 AND RESPECTIVE HEEL HEIGHTS OF 0-0 AND 0-0 AND AN ADDITIONAL DEAD LOAD OF 3.0 P.S.F.

THIS TRUSS IS DESIGNED FOR RESIDENTIAL OR SMALL BUILDING REQUIREMENTS OF PART 9, NBCC 2015

THIS DESIGN COMPLIES WITH:
- PART 9 OF BCBC 2018 , ABC 2019
- PART 9 OF OBC 2012 (2019 AMENDMENT)
- CSA 086-14
- TPIC 2014

(55 % OF 23.0 P.S.F. G.S.L. PLUS 8.4 P.S.F. RAIN LOAD) EQUALS 21.0 P.S.F. SPECIFIED ROOF LIVE LOAD

ALLOWABLE DEFL.(LL)= L/360 (1.04")
CALCULATED VERT. DEFL.(LL) = L/ 999 (0.05")
ALLOWABLE DEFL.(TL)= L/360 (1.04")
CALCULATED VERT. DEFL.(TL) = L/ 999 (0.15")

CSI: TC=0.79/1.00 (C-E:1) , BC=0.43/1.00 (I-K:4) , WB=0.72/1.00 (E-I:1) , SSI=0.33/1.00 (E-F:1)

DOL LUMBER=1.00 NAIL=1.00 LS BEND=1.10 COMP=1.10 SHEAR=1.10 TENS= 1.10

COMPANION LIVE LOAD FACTOR = 1.00

TRUSS PLATE MANUFACTURER IS NOT RESPONSIBLE FOR QUALITY CONTROL IN THE TRUSS MANUFACTURING PLANT .

NAIL VALUES

PLATE	GRIP(DRY) (PSI) MAX	MIN	SHEAR (PLI) MAX	MIN	SECTION (PLI) MAX	MIN
MT20	650	371	1747	788	1987	1873

PLATE PLACEMENT TOL. = 0.250 inches

PLATE ROTATION TOL. = 5.0 Deg.

JSI GRIP= 0.89 (I) (INPUT = 0.90)
JSI METAL= 0.50 (A) (INPUT = 1.00)

JOB NAME	TRUSS NAME	QUANTITY	PLY	JOB DESC.		DRWG NO.
336335	H244P		1	TRUSS DESC.	JT 45147	E21104190

Alpa Roof Truss, Maple

Version 8.420 S Jan 21 2021 MiTek Industries, Inc. Thu Oct 14 08:53:31 2021 Page 1

ID:hd511hZTz bdeQoS817GKByhVxV-OVI94OKbrRck94o75Uix vYyopxnwmJWYjtW0MyTZGo

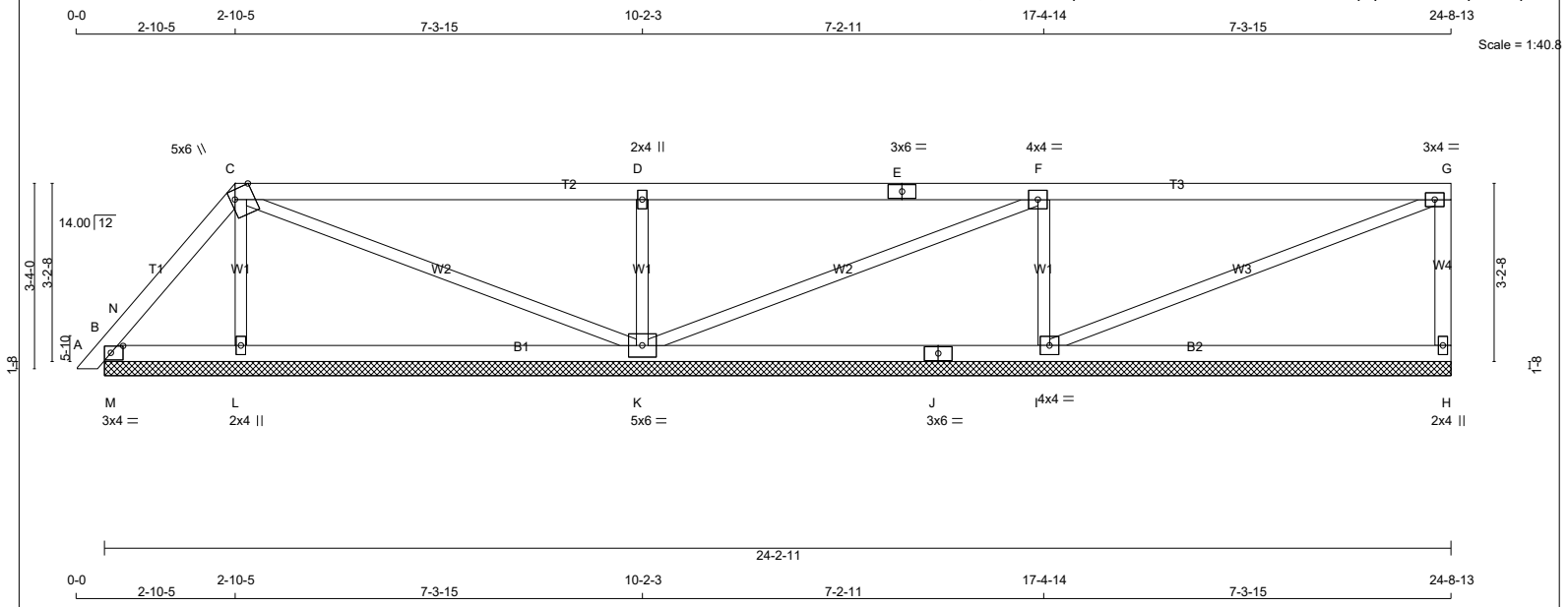

TOTAL WEIGHT = 85 lb [M]

LUMBER

N. L. G. A. RULES

CHORDS	SIZE		LUMBER	DESCR.
A - C	2x4	DRY	No.2	SPF
C - E	2x4	DRY	No.2	SPF
E - G	2x4	DRY	No.2	SPF
H - G	2x4	DRY	No.2	SPF
B - J	2x4	DRY	No.2	SPF
J - H	2x4	DRY	No.2	SPF
ALL WEBS	2x3	DRY	No.2	SPF

DRY: SEASONED LUMBER.

PLATES (table is in inches)

JT	TYPE	PLATES	W	LEN	Y	X
B	TMB1-I	MT20	3.0	4.0	1.50	2.50
C	TTWW+m	MT20	5.0	6.0	Edge	4.00
D	TMW+w	MT20	2.0	4.0		
E	TS-t	MT20	3.0	6.0		
F	TMWW-t	MT20	4.0	4.0		
G	TMVW-t	MT20	3.0	4.0		
H	BMV1+p	MT20	2.0	4.0		
I	BMWW1-t	MT20	4.0	4.0		
J	BS-t	MT20	3.0	6.0		
K	BMWWW1-t	MT20	5.0	6.0		
L	BMW1+w	MT20	2.0	4.0		

Edge - INDICATES REFERENCE CORNER OF PLATE TOUCHES EDGE OF CHORD.

LATERAL BRACE(S) SHOWN SHALL BE 2X4 SPF#2

DIMENSIONS, SUPPORTS AND LOADINGS SPECIFIED BY FABRICATOR TO BE VERIFIED BY BUILDING DESIGNER

BEARINGS

JT	FACTORED GROSS REACTION VERT	HORZ	MAXIMUM FACTORED GROSS REACTION DOWN	HORZ	UPLIFT	INPUT BRG IN-SX	REQRD BRG IN-SX
H	288	0	288	0	0	24-2-11 (9-2-11)	
B	177	0	177	0	0	24-2-11 (9-2-11)	
L	354	0	354	0	0	24-2-11 (9-2-11)	
K	789	0	789	0	0	24-2-11 (9-2-11)	
I	759	0	759	0	0	24-2-11 (9-2-11)	

VALUE IN PARENTHESIS INDICATES EFFECTIVE BEARING LENGTH

UNFACTORED REACTIONS

JT	1ST LCASE COMBINED	MAX./MIN. COMPONENT REACTIONS SNOW	LIVE	PERM.LIVE	WIND	DEAD	SOIL
H	205	126 / 0	0 / 0	0 / 0	0 / 0	79 / 0	0 / 0
B	122	100 / 0	0 / 0	0 / 0	0 / 0	22 / 0	0 / 0
L	258	126 / 0	0 / 0	0 / 0	0 / 0	132 / 0	0 / 0
K	560	354 / 0	0 / 0	0 / 0	0 / 0	206 / 0	0 / 0
I	542	327 / 0	0 / 0	0 / 0	0 / 0	215 / 0	0 / 0

BEARING MATERIAL TO BE SPF NO.2 OR BETTER AT JOINT(S) H, B, L, K, I

BRACING

TOP CHORD TO BE SHEATHED OR MAX. PURLIN SPACING = 6.25 FT.
MAX. UNBRACED BOTTOM CHORD LENGTH = 10.00 FT OR RIGID CEILING DIRECTLY APPLIED.

ALL PITCH BREAKS AND PERIMETER CORNER JOINTS MUST BE LATERALLY RESTRAINED.

LOADING

TOTAL LOAD CASES: (4)

CHORDS

MEMB. FR-TO	MAX. FACTORED FORCE (LBS)	FACTORED VERT. LOAD (PLF) FROM	TO	LC1	MAX CSI (LC)	MAX. UNBRAC LENGTH
A- B	0 / 10	-78.0	-78.0	0.01 (1)		10.00
B- N	0 / 49	-78.0	-78.0	0.05 (1)		10.00
N- C	-87 / 0	-78.0	-78.0	0.04 (1)		6.25
C- D	0 / 16	-78.0	-78.0	0.56 (1)		10.00
D- E	0 / 16	-78.0	-78.0	0.56 (1)		10.00
E- F	0 / 16	-78.0	-78.0	0.56 (1)		10.00
F- G	-13 / 0	-78.0	-78.0	0.56 (1)		6.25
H- G	-235 / 0	0.0	0.0	0.04 (1)		7.81
B- M	0 / 49	-18.5	-18.5	0.06 (1)		10.00
M- L	0 / 49	-18.5	-18.5	0.16 (4)		10.00
L- K	0 / 41	-18.5	-18.5	0.19 (4)		10.00
K- J	0 / 13	-18.5	-18.5	0.24 (4)		10.00
J- I	0 / 13	-18.5	-18.5	0.24 (4)		10.00
I- H	0 / 0	-18.5	-18.5	0.24 (4)		10.00

WEBS

MEMB. FR-TO	MAX. FACTORED FORCE (LBS)	MAX CSI (LC)
L- C	-220 / 0	0.04 (1)
C- K	-62 / 0	0.08 (1)
K- D	-624 / 0	0.12 (1)
K- F	-32 / 0	0.04 (1)
I- F	-612 / 0	0.11 (1)
I- G	0 / 14	0.00 (1)
M- N	-245 / 0	0.00 (1)

DESIGN CRITERIA

SPECIFIED LOADS:

TOP	CH.	LL	=	21.0	PSF
		DL	=	6.0	PSF
BOT	CH.	LL	=	0.0	PSF
		DL	=	7.4	PSF
TOTAL	LOAD		=	34.4	PSF

SPACING = 24.0 IN. C/C

LOADING IN FLAT SECTION BASED ON A SLOPE OF 2.00/12 MINIMUM

THIS TRUSS IS DESIGNED FOR RESIDENTIAL OR SMALL BUILDING REQUIREMENTS OF PART 9, NBCC 2015

THIS DESIGN COMPLIES WITH:
- PART 9 OF BCBC 2018 , ABC 2019
- PART 9 OF OBC 2012 (2019 AMENDMENT)
- CSA 086-14
- TPIC 2014

(55 % OF 23.0 P.S.F. G.S.L. PLUS 8.4 P.S.F. RAIN LOAD) EQUALS 21.0 P.S.F. SPECIFIED ROOF LIVE LOAD

CSI: TC=0.56/1.00 (C-D:1) , BC=0.24/1.00 (I-K:4) , WB=0.12/1.00 (D-K:1) , SSI=0.27/1.00 (F-G:1)

DOL LUMBER=1.00 NAIL=1.00 LS BEND=1.10 COMP=1.10 SHEAR=1.10 TENS= 1.10

COMPANION LIVE LOAD FACTOR = 1.00

TRUSS PLATE MANUFACTURER IS NOT RESPONSIBLE FOR QUALITY CONTROL IN THE TRUSS MANUFACTURING PLANT .

NAIL VALUES

PLATE	GRIP(DRY) (PSI) MAX	MIN	SHEAR (PLI) MAX	MIN	SECTION (PLI) MAX	MIN
MT20	650	371	1747	788	1987	1873

PLATE PLACEMENT TOL. = 0.250 inches

PLATE ROTATION TOL. = 5.0 Deg.

JSI GRIP= 0.85 (K) (INPUT = 0.90)
JSI METAL= 0.14 (E) (INPUT = 1.00)

JOB NAME	TRUSS NAME	QUANTITY	PLY	JOB DESC.		DRWG NO.
336335	H245P		1	TRUSS DESC.	JT 45147	E21104191

Alpa Roof Truss, Maple

Version 8.420 S Jan 21 2021 MiTek Industries, Inc. Thu Oct 14 08:53:32 2021 Page 1

ID:hd511hZTz_bdeQoS817GKByhVxV-tisXHkLDclkbnENJfCDAX658dDHTfBDgmNd3ZpyTZGn

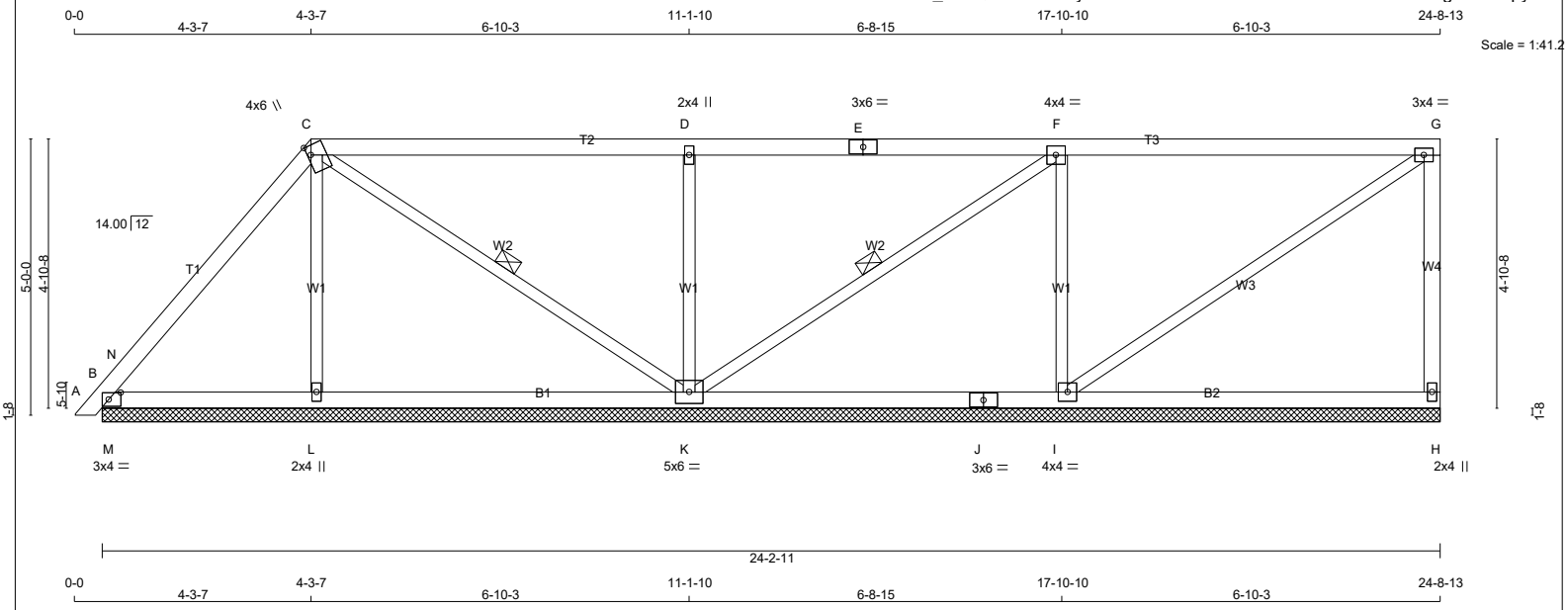

TOTAL WEIGHT = 93 lb [M]

LUMBER

N. L. G. A. RULES

CHORDS	SIZE		LUMBER	DESCR.
A - C	2x4	DRY	No.2	SPF
C - E	2x4	DRY	No.2	SPF
E - G	2x4	DRY	No.2	SPF
H - G	2x4	DRY	No.2	SPF
B - J	2x4	DRY	No.2	SPF
J - H	2x4	DRY	No.2	SPF
ALL WEBS	2x3	DRY	No.2	SPF

DRY: SEASONED LUMBER.

PLATES (table is in inches)

JT	TYPE	PLATES	W	LEN	Y	X
B	TMB1-l	MT20	3.0	4.0	1.50	2.50
C	TTWW+m	MT20	4.0	6.0	2.00	0.75
D	TMW+w	MT20	2.0	4.0		
E	TS-t	MT20	3.0	6.0		
F	TMWW-t	MT20	4.0	4.0		
G	TMVW-t	MT20	3.0	4.0		
H	BMV1+p	MT20	2.0	4.0		
I	BMWW1-t	MT20	4.0	4.0		
J	BS-t	MT20	3.0	6.0		
K	BMWWW1-t	MT20	5.0	6.0		
L	BMW1+w	MT20	2.0	4.0		

LATERAL BRACE(S) SHOWN SHALL BE 2X4 SPF#2

DIMENSIONS, SUPPORTS AND LOADINGS SPECIFIED BY FABRICATOR TO BE VERIFIED BY BUILDING DESIGNER

BEARINGS

JT	FACTORED GROSS REACTION VERT	HORZ	MAXIMUM FACTORED GROSS REACTION DOWN	HORZ	UPLIFT	INPUT BRG IN-SX	REQRD BRG IN-SX
H	280	0	280	0	0	24-2-11 (8-3-3)	8
B	285	0	285	0	0	24-2-11 (8-3-3)	8
L	322	0	322	0	0	24-2-11 (8-3-3)	8
K	809	0	809	0	0	24-2-11 (8-3-3)	8
I	672	0	672	0	0	24-2-11 (8-3-3)	8

VALUE IN PARENTHESIS INDICATES EFFECTIVE BEARING LENGTH

UNFACTORED REACTIONS

JT	1ST LCASE COMBINED	MAX./MIN. COMPONENT REACTIONS SNOW	LIVE	PERM.LIVE	WIND	DEAD	SOIL
H	200	124 / 0	0 / 0	0 / 0	0 / 0	76 / 0	0 / 0
B	200	141 / 0	0 / 0	0 / 0	0 / 0	58 / 0	0 / 0
L	235	114 / 0	0 / 0	0 / 0	0 / 0	120 / 0	0 / 0
K	573	369 / 0	0 / 0	0 / 0	0 / 0	204 / 0	0 / 0
I	480	285 / 0	0 / 0	0 / 0	0 / 0	195 / 0	0 / 0

BEARING MATERIAL TO BE SPF NO.2 OR BETTER AT JOINT(S) H, B, L, K, I

BRACING

TOP CHORD TO BE SHEATHED OR MAX. PURLIN SPACING = 6.25 FT.
MAX. UNBRACED BOTTOM CHORD LENGTH = 10.00 FT OR RIGID CEILING DIRECTLY APPLIED.

ALL PITCH BREAKS AND PERIMETER CORNER JOINTS MUST BE LATERALLY RESTRAINED.

1 LATERAL BRACE(S) AT 1/ 2 LENGTH OF C-K, F-K.

END VERTICAL(S) MUST BE SHEATHED OR HAVE BRACES AS INDICATED IN THE MAX. UNBRACED LENGTH COLUMN OF THE TABLE BELOW

LOADING

TOTAL LOAD CASES: (4)

CHORDS

MEMB. FR-TO	MAX. FACTORED FORCE (LBS)	FACTORED VERT. LOAD (PLF) FROM	TO	LC1	MAX CSI (LC)	MAX. UNBRAC LENGTH
A- B	0 / 10	-78.0	-78.0	0.01 (1)	10.00	
B- N	0 / 167	-78.0	-78.0	0.11 (1)	10.00	
N- C	-129 / 0	-78.0	-78.0	0.13 (1)	6.25	
C- D	0 / 33	-78.0	-78.0	0.50 (1)	10.00	
D- E	0 / 33	-78.0	-78.0	0.50 (1)	10.00	
E- F	0 / 33	-78.0	-78.0	0.50 (1)	10.00	
F- G	-24 / 0	-78.0	-78.0	0.49 (1)	6.25	
H- G	-230 / 0	0.0	0.0	0.09 (1)	7.81	
B- M	0 / 75	-18.5	-18.5	0.13 (1)	10.00	
M- L	0 / 75	-18.5	-18.5	0.15 (4)	10.00	
L- K	0 / 71	-18.5	-18.5	0.16 (4)	10.00	
K- J	0 / 24	-18.5	-18.5	0.21 (4)	10.00	
J- I	0 / 24	-18.5	-18.5	0.21 (4)	10.00	
I- H	0 / 0	-18.5	-18.5	0.21 (4)	10.00	

WEBS

MEMB. FR-TO	MAX. FACTORED FORCE (LBS)	MAX CSI (LC)
L- C	-181 / 0	0.06 (1)
C- K	-124 / 0	0.06 (1)
K- D	-583 / 0	0.20 (1)
K- F	-68 / 0	0.03 (1)
I- F	-544 / 0	0.19 (1)
I- G	0 / 29	0.01 (1)
M- N	-489 / 0	0.00 (1)

DESIGN CRITERIA

SPECIFIED LOADS:

TOP	CH.	LL	=	21.0	PSF
		DL	=	6.0	PSF
BOT	CH.	LL	=	0.0	PSF
		DL	=	7.4	PSF
TOTAL	LOAD		=	34.4	PSF

SPACING = 24.0 IN. C/C

LOADING IN FLAT SECTION BASED ON A SLOPE OF 2.00/12 MINIMUM

THIS TRUSS IS DESIGNED FOR RESIDENTIAL OR SMALL BUILDING REQUIREMENTS OF PART 9, NBCC 2015

THIS DESIGN COMPLIES WITH:
- PART 9 OF BCBC 2018 , ABC 2019
- PART 9 OF OBC 2012 (2019 AMENDMENT)
- CSA 086-14
- TPIC 2014

(55 % OF 23.0 P.S.F. G.S.L. PLUS 8.4 P.S.F. RAIN LOAD) EQUALS 21.0 P.S.F. SPECIFIED ROOF LIVE LOAD

CSI: TC=0.50/1.00 (D-F:1) , BC=0.21/1.00 (I-K:4) , WB=0.20/1.00 (D-K:1) , SSI=0.38/1.00 (B-M:1)

DOL LUMBER=1.00 NAIL=1.00 LS BEND=1.10 COMP=1.10 SHEAR=1.10 TENS= 1.10

COMPANION LIVE LOAD FACTOR = 1.00

TRUSS PLATE MANUFACTURER IS NOT RESPONSIBLE FOR QUALITY CONTROL IN THE TRUSS MANUFACTURING PLANT .

NAIL VALUES

PLATE	GRIP(DRY) (PSI) MAX	MIN	SHEAR (PLI) MAX	MIN	SECTION (PLI) MAX	MIN
MT20	650	371	1747	788	1987	1873

PLATE PLACEMENT TOL. = 0.250 inches

PLATE ROTATION TOL. = 5.0 Deg.

JSI GRIP= 0.89 (C) (INPUT = 0.90)
JSI METAL= 0.23 (E) (INPUT = 1.00)

JOB NAME	TRUSS NAME	QUANTITY	PLY	JOB DESC.		DRWG NO.
336335	H246P		1	TRUSS DESC.	JT 45147	E21104192

Alpa Roof Truss, Maple

Version 8.420 S Jan 21 2021 MiTek Industries, Inc. Thu Oct 14 08:53:34 2021 Page 1

ID:hd511hZTz bdeQoS817GKByhVxV-p4zHiQNT7M J0XXimdFecXAV80zl73yyEq6AdhyTZGl

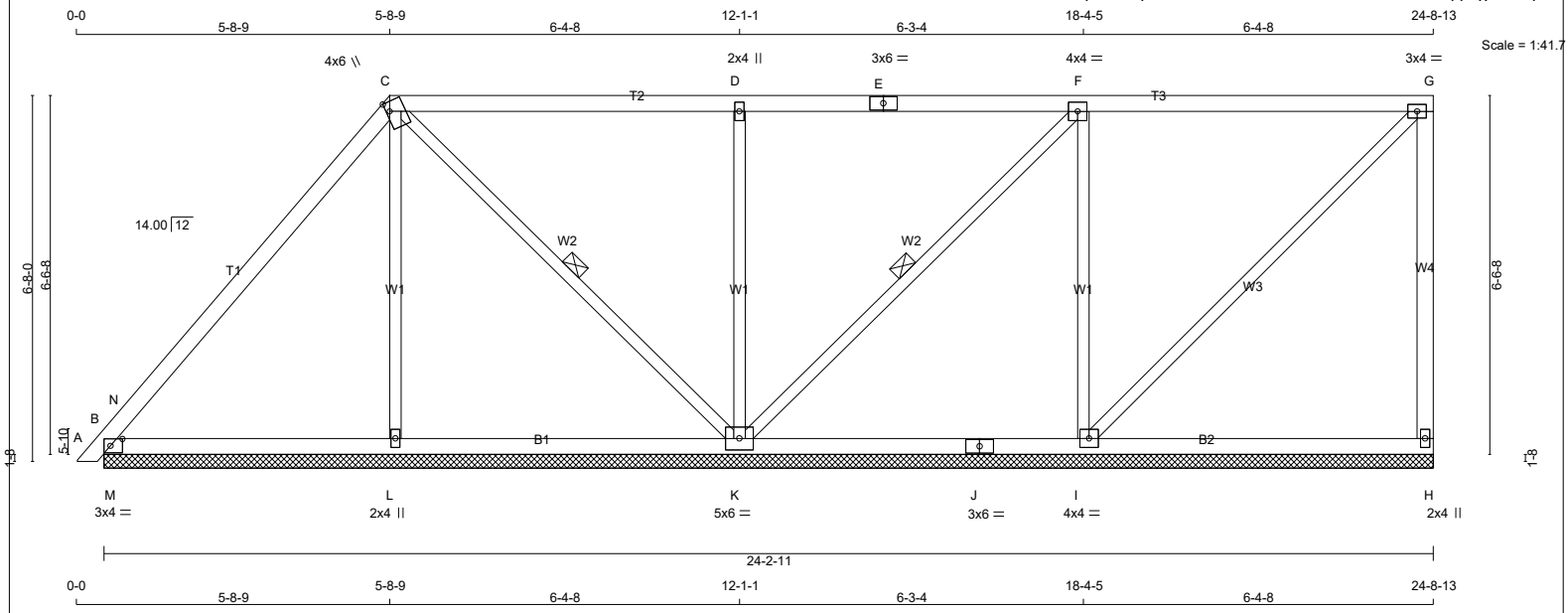

TOTAL WEIGHT = 101 lb

[M]

LUMBER

N. L. G. A. RULES

CHORDS	SIZE		LUMBER	DESCR.
A - C	2x4	DRY	No.2	SPF
C - E	2x4	DRY	No.2	SPF
E - G	2x4	DRY	No.2	SPF
H - G	2x4	DRY	No.2	SPF
B - J	2x4	DRY	No.2	SPF
J - H	2x4	DRY	No.2	SPF
ALL WEBS	2x3	DRY	No.2	SPF

DRY: SEASONED LUMBER.

PLATES (table is in inches)

JT	TYPE	PLATES	W	LEN	Y	X
B	TMB1-I	MT20	3.0	4.0	1.50	2.50
C	TTWW+m	MT20	4.0	6.0	2.00	0.75
D	TMW+w	MT20	2.0	4.0		
E	TS-t	MT20	3.0	6.0		
F	TMWW-t	MT20	4.0	4.0		
G	TMVW-t	MT20	3.0	4.0		
H	BMV1+p	MT20	2.0	4.0		
I	BMWW1-t	MT20	4.0	4.0		
J	BS-t	MT20	3.0	6.0		
K	BMWWW1-t	MT20	5.0	6.0		
L	BMW1+w	MT20	2.0	4.0		

LATERAL BRACE(S) SHOWN SHALL BE 2X4 SPF#2

DIMENSIONS, SUPPORTS AND LOADINGS SPECIFIED BY FABRICATOR TO BE VERIFIED BY BUILDING DESIGNER

BEARINGS

JT	FACTORED GROSS REACTION VERT	HORZ	MAXIMUM FACTORED GROSS REACTION DOWN	HORZ	UPLIFT	INPUT BRG IN-SX	REQRD BRG IN-SX
H	277	0	277	0	0	24-2-11 (8-3-3)	8
B	386	0	386	0	0	24-2-11 (8-3-3)	8
L	287	0	287	0	0	24-2-11 (8-3-3)	8
K	834	0	834	0	0	24-2-11 (8-3-3)	8
I	583	0	583	0	0	24-2-11 (8-3-3)	8

VALUE IN PARENTHESIS INDICATES EFFECTIVE BEARING LENGTH

UNFACTORED REACTIONS

JT	1ST LCASE COMBINED	MAX./MIN. COMPONENT REACTIONS SNOW	LIVE	PERM.LIVE	WIND	DEAD	SOIL
H	197	123 / 0	0 / 0	0 / 0	0 / 0	74 / 0	0 / 0
B	272	183 / 0	0 / 0	0 / 0	0 / 0	89 / 0	0 / 0
L	210	97 / 0	0 / 0	0 / 0	0 / 0	114 / 0	0 / 0
K	590	389 / 0	0 / 0	0 / 0	0 / 0	201 / 0	0 / 0
I	418	242 / 0	0 / 0	0 / 0	0 / 0	176 / 0	0 / 0

BEARING MATERIAL TO BE SPF NO.2 OR BETTER AT JOINT(S) H, B, L, K, I

BRACING

TOP CHORD TO BE SHEATHED OR MAX. PURLIN SPACING = 6.25 FT.
MAX. UNBRACED BOTTOM CHORD LENGTH = 10.00 FT OR RIGID CEILING DIRECTLY APPLIED.

ALL PITCH BREAKS AND PERIMETER CORNER JOINTS MUST BE LATERALLY RESTRAINED.

1 LATERAL BRACE(S) AT 1/ 2 LENGTH OF C-K, F-K.

END VERTICAL(S) MUST BE SHEATHED OR HAVE BRACES AS INDICATED IN THE MAX. UNBRACED LENGTH COLUMN OF THE TABLE BELOW

LOADING

TOTAL LOAD CASES: (4)

CHORDS

MEMB. FR-TO	MAX. FACTORED FORCE (LBS)	FACTORED VERT. LOAD LC1 (PLF) FROM	TO	MAX CSI (LC)	MAX. UNBRAC LENGTH
A- B	0 / 10	-78.0	-78.0	0.01 (1)	10.00
B- N	0 / 410	-78.0	-78.0	0.23 (1)	10.00
N- C	-176 / 0	-78.0	-78.0	0.26 (1)	6.25
C- D	0 / 31	-78.0	-78.0	0.43 (1)	10.00
D- E	0 / 31	-78.0	-78.0	0.43 (1)	10.00
E- F	0 / 31	-78.0	-78.0	0.43 (1)	10.00
F- G	-32 / 0	-78.0	-78.0	0.43 (1)	6.25
H- G	-231 / 0	0.0	0.0	0.20 (1)	7.81
B- M	0 / 102	-18.5	-18.5	0.22 (1)	10.00
M- L	0 / 102	-18.5	-18.5	0.22 (1)	10.00
L- K	0 / 100	-18.5	-18.5	0.17 (4)	10.00
K- J	0 / 32	-18.5	-18.5	0.19 (4)	10.00
J- I	0 / 32	-18.5	-18.5	0.19 (4)	10.00
I- H	0 / 0	-18.5	-18.5	0.19 (4)	10.00

WEBS

MEMB. FR-TO	MAX. FACTORED FORCE (LBS)	MAX CSI (LC)
L- C	-123 / 0	0.09 (1)
C- K	-183 / 0	0.10 (1)
K- D	-542 / 0	0.38 (1)
K- F	-89 / 0	0.05 (1)
I- F	-479 / 0	0.34 (1)
I- G	0 / 45	0.01 (1)
M- N	-879 / 0	0.00 (1)

DESIGN CRITERIA

SPECIFIED LOADS:

TOP	CH.	LL	=	21.0	PSF
		DL	=	6.0	PSF
BOT	CH.	LL	=	0.0	PSF
		DL	=	7.4	PSF
TOTAL	LOAD		=	34.4	PSF

SPACING = 24.0 IN. C/C

LOADING IN FLAT SECTION BASED ON A SLOPE OF 2.00/12 MINIMUM

THIS TRUSS IS DESIGNED FOR RESIDENTIAL OR SMALL BUILDING REQUIREMENTS OF PART 9, NBCC 2015

THIS DESIGN COMPLIES WITH:
- PART 9 OF BCBC 2018 , ABC 2019
- PART 9 OF OBC 2012 (2019 AMENDMENT)
- CSA 086-14
- TPIC 2014

(55 % OF 23.0 P.S.F. G.S.L. PLUS 8.4 P.S.F. RAIN LOAD) EQUALS 21.0 P.S.F. SPECIFIED ROOF LIVE LOAD

CSI: TC=0.43/1.00 (D-F:1) , BC=0.22/1.00 (B-M:1) , WB=0.38/1.00 (D-K:1) , SSI=0.69/1.00 (B-M:1)

DOL LUMBER=1.00 NAIL=1.00 LS BEND=1.10 COMP=1.10 SHEAR=1.10 TENS= 1.10

COMPANION LIVE LOAD FACTOR = 1.00

TRUSS PLATE MANUFACTURER IS NOT RESPONSIBLE FOR QUALITY CONTROL IN THE TRUSS MANUFACTURING PLANT .

NAIL VALUES

PLATE	GRIP(DRY) (PSI) MAX	MIN	SHEAR (PLI) MAX	MIN	SECTION (PLI) MAX	MIN
MT20	650	371	1747	788	1987	1873

PLATE PLACEMENT TOL. = 0.250 inches

PLATE ROTATION TOL. = 5.0 Deg.

JSI GRIP= 0.89 (C) (INPUT = 0.90)
JSI METAL= 0.17 (E) (INPUT = 1.00)

JOB NAME	TRUSS NAME	QUANTITY	PLY	JOB DESC.		DRWG NO.
336335	H247P		1	TRUSS DESC.	JT 45147	E21104193

Alpa Roof Truss, Maple

Version 8.420 S Jan 21 2021 MiTek Industries, Inc. Thu Oct 14 08:53:36 2021 Page 1

ID:hd511hZTz bdeQoS817GKByhVxV-lT5276Ojf E1Frh5u1H6hyGsRqgxbu5Fh bHiayTZGj

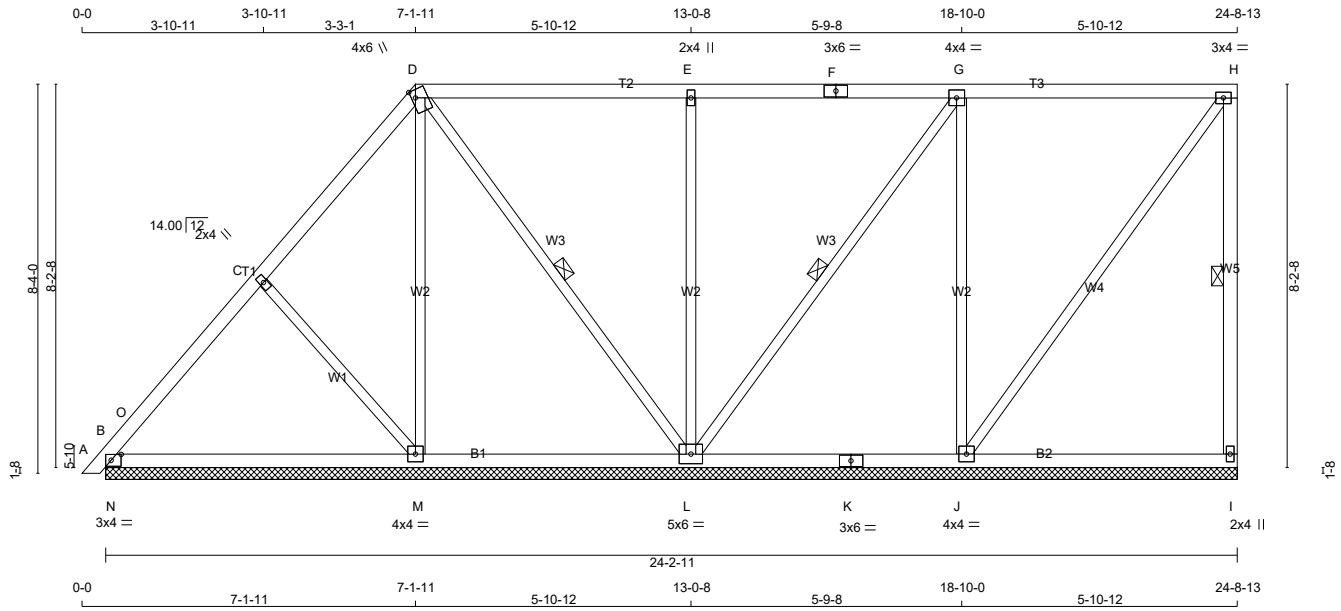

TOTAL WEIGHT = 2 X 115 = 229 lb

LUMBER

N. L. G. A. RULES

CHORDS	SIZE		LUMBER	DESCR.
A - D	2x4	DRY	No.2	SPF
D - F	2x4	DRY	No.2	SPF
F - H	2x4	DRY	No.2	SPF
I - H	2x4	DRY	No.2	SPF
B - K	2x4	DRY	No.2	SPF
K - I	2x4	DRY	No.2	SPF
ALL WEBS	2x3	DRY	No.2	SPF

DRY: SEASONED LUMBER.

PLATES (table is in inches)

JT	TYPE	PLATES	W	LEN	Y	X
B	TMB1-I	MT20	3.0	4.0	1.50	2.50
C	TMW+w	MT20	2.0	4.0		
D	TTWW+m	MT20	4.0	6.0	2.00	1.00
E	TMW+w	MT20	2.0	4.0		
F	TS-t	MT20	3.0	6.0		
G	TMWW-t	MT20	4.0	4.0		
H	TMVW-t	MT20	3.0	4.0		
I	BMV1+p	MT20	2.0	4.0		
J	BMWW1-t	MT20	4.0	4.0		
K	BS-t	MT20	3.0	6.0		
L	BMWWW1-t	MT20	5.0	6.0		
M	BMWW1-t	MT20	4.0	4.0		

LATERAL BRACE(S) SHOWN SHALL BE 2X4 SPF#2

DIMENSIONS, SUPPORTS AND LOADINGS SPECIFIED BY FABRICATOR TO BE VERIFIED BY BUILDING DESIGNER

BEARINGS

JT	FACTORED GROSS REACTION VERT	HORZ	MAXIMUM FACTORED GROSS REACTION DOWN	HORZ	UPLIFT	INPUT BRG IN-SX	REQRD BRG IN-SX
I	228	0	228	0	0	24-2-11 (8-3-3)	8
B	340	0	340	0	0	24-2-11 (8-3-3)	8
M	460	0	460	0	0	24-2-11 (8-3-3)	8
L	842	0	842	0	0	24-2-11 (8-3-3)	8
J	498	0	498	0	0	24-2-11 (8-3-3)	8

VALUE IN PARENTHESIS INDICATES EFFECTIVE BEARING LENGTH

UNFACTORED REACTIONS

JT	1ST LCASE COMBINED	MAX./MIN. COMPONENT REACTIONS SNOW	LIVE	PERM.LIVE	WIND	DEAD	SOIL
I	163	98 / 0	0 / 0	0 / 0	0 / 0	65 / 0	0 / 0
B	242	151 / 0	0 / 0	0 / 0	0 / 0	90 / 0	0 / 0
M	332	181 / 0	0 / 0	0 / 0	0 / 0	150 / 0	0 / 0
L	593	402 / 0	0 / 0	0 / 0	0 / 0	191 / 0	0 / 0
J	358	201 / 0	0 / 0	0 / 0	0 / 0	157 / 0	0 / 0

BEARING MATERIAL TO BE SPF NO.2 OR BETTER AT JOINT(S) I, B, M, L, J

BRACING

TOP CHORD TO BE SHEATHED OR MAX. PURLIN SPACING = 6.25 FT.
MAX. UNBRACED BOTTOM CHORD LENGTH = 10.00 FT OR RIGID CEILING DIRECTLY APPLIED.

ALL PITCH BREAKS AND PERIMETER CORNER JOINTS MUST BE LATERALLY RESTRAINED.

1 LATERAL BRACE(S) AT 1/ 2 LENGTH OF H-I, D-L, G-L.

END VERTICAL(S) MUST BE SHEATHED OR HAVE BRACES AS INDICATED IN THE MAX. UNBRACED LENGTH COLUMN OF THE TABLE BELOW

LOADING

TOTAL LOAD CASES: (4)

CHORDS

MEMB. FR-TO	MAX. FACTORED FORCE (LBS)	FACTORED VERT. LOAD (PLF) FROM	TO	LC1	MAX CSI (LC)	MAX. UNBRAC LENGTH
A- B	0 / 11	-78.0	-78.0	0.01 (1)	10.00	
B- O	-393 / 0	-78.0	-78.0	0.09 (4)	6.25	
O- C	-183 / 0	-78.0	-78.0	0.15 (1)	6.25	
C- D	-21 / 0	-78.0	-78.0	0.15 (1)	6.25	
D- E	0 / 93	-78.0	-78.0	0.38 (1)	10.00	
E- F	0 / 93	-78.0	-78.0	0.38 (1)	10.00	
F- G	0 / 93	-78.0	-78.0	0.38 (1)	10.00	
G- H	-2 / 0	-78.0	-78.0	0.36 (1)	10.00	
I- H	-185 / 0	0.0	0.0	0.06 (1)	6.25	
B- N	0 / 140	-18.5	-18.5	0.08 (4)	10.00	
N- M	0 / 140	-18.5	-18.5	0.18 (4)	10.00	
M- L	-5 / 4	-18.5	-18.5	0.17 (4)	10.00	
L- K	0 / 2	-18.5	-18.5	0.16 (4)	10.00	
K- J	0 / 2	-18.5	-18.5	0.16 (4)	10.00	
J- I	0 / 0	-18.5	-18.5	0.16 (4)	10.00	

WEBS

MEMB. FR-TO	MAX. FACTORED FORCE (LBS)	MAX CSI (LC)
C- M	-215 / 0	0.10 (1)
M- D	-169 / 0	0.22 (1)
D- L	-146 / 0	0.10 (1)
L- E	-501 / 0	0.66 (1)
L- G	-158 / 0	0.11 (1)
J- G	-374 / 0	0.49 (1)
J- H	0 / 4	0.00 (4)
N- O	0 / 257	0.00 (1)

DESIGN CRITERIA

SPECIFIED LOADS:

TOP CH.	LL	=	21.0	PSF
	DL	=	6.0	PSF
BOT CH.	LL	=	0.0	PSF
	DL	=	7.4	PSF
TOTAL LOAD		=	34.4	PSF

SPACING = 24.0 IN. C/C

LOADING IN FLAT SECTION BASED ON A SLOPE OF 2.00/12 MINIMUM

THIS TRUSS IS DESIGNED FOR RESIDENTIAL OR SMALL BUILDING REQUIREMENTS OF PART 9, NBCC 2015

THIS DESIGN COMPLIES WITH:
- PART 9 OF BCBC 2018 , ABC 2019
- PART 9 OF OBC 2012 (2019 AMENDMENT)
- CSA 086-14
- TPIC 2014

(55 % OF 23.0 P.S.F. G.S.L. PLUS 8.4 P.S.F. RAIN LOAD) EQUALS 21.0 P.S.F. SPECIFIED ROOF LIVE LOAD

CSI: TC=0.38/1.00 (E-G:1) , BC=0.18/1.00 (M-N:4) , WB=0.66/1.00 (E-L:1) , SSI=0.24/1.00 (B-N:4)

DOL LUMBER=1.00 NAIL=1.00 LS BEND=1.10 COMP=1.10 SHEAR=1.10 TENS= 1.10

COMPANION LIVE LOAD FACTOR = 1.00

TRUSS PLATE MANUFACTURER IS NOT RESPONSIBLE FOR QUALITY CONTROL IN THE TRUSS MANUFACTURING PLANT .

NAIL VALUES

PLATE	GRIP(DRY) (PSI) MAX	MIN	SHEAR (PLI) MAX	MIN	SECTION (PLI) MAX	MIN
MT20	650	371	1747	788	1987	1873

PLATE PLACEMENT TOL. = 0.250 inches

PLATE ROTATION TOL. = 5.0 Deg.

JSI GRIP= 0.75 (H) (INPUT = 0.90)
JSI METAL= 0.18 (F) (INPUT = 1.00)

JOB NAME	TRUSS NAME	QUANTITY	PLY	JOB DESC.	DRWG NO.
336322	H161		1	TRUSS DESC. JT 45147	E21104295

Alpa Roof Truss, Maple

Version 8.420 S Jan 21 2021 MiTek Industries, Inc. Thu Oct 14 10:16:11 2021 Page 1

ID:hd511hZTz_bdeQoS817GKByhVxV-Ak?E4OMqlPWzDK_PfAh40t_ehDpV31Wa5ON_7tyTY3I

Scale = 1:27.4

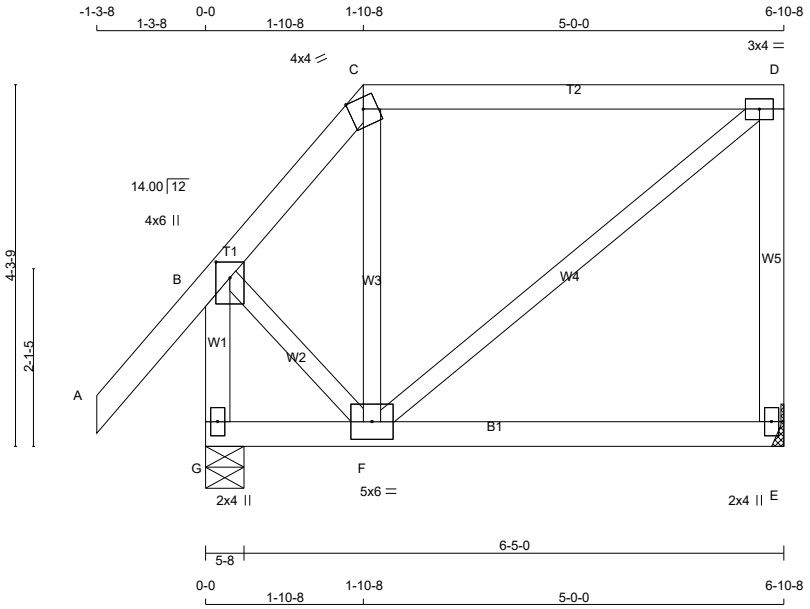

TOTAL WEIGHT = 35 lb

LUMBER

N. L. G. A. RULES

CHORDS	SIZE		LUMBER	DESCR.
A - C	2x4	DRY	No.2	SPF
C - D	2x4	DRY	No.2	SPF
E - D	2x4	DRY	No.2	SPF
G - B	2x4	DRY	No.2	SPF
G - E	2x4	DRY	No.2	SPF
ALL WEBS EXCEPT	2x3	DRY	No.2	SPF

DRY: SEASONED LUMBER.

PLATES (table is in inches)

JT	TYPE	PLATES	W	LEN	Y	X
B	TMVW+p	MT20	4.0	6.0	2.25	2.00
C	TTW-m	MT20	4.0	4.0	Edge	
D	TMVW-t	MT20	3.0	4.0		
E	BMV1+p	MT20	2.0	4.0		
F	BMWWW-t	MT20	5.0	6.0		
G	BMV1+p	MT20	2.0	4.0		

Edge - INDICATES REFERENCE CORNER OF PLATE TOUCHES EDGE OF CHORD.

LATERAL BRACE(S) SHOWN SHALL BE 2X4 SPF#2

DIMENSIONS, SUPPORTS AND LOADINGS SPECIFIED BY FABRICATOR TO BE VERIFIED BY BUILDING DESIGNER

BEARINGS

JT	FACTORED GROSS REACTION VERT	HORZ	MAXIMUM GROSS REACTION DOWN	HORZ	FACTORED UPLIFT	INPUT BRG IN-SX	REQRD BRG IN-SX
E	320	0	320	0	0	MECHANICAL	
G	452	0	452	0	0	5-8	1-8

A SUITABLE HANGER/MECHANICAL CONNECTION IS REQUIRED AT JOINT E. MINIMUM BEARING LENGTH AT JOINT E = 1-8.

UNFACTORED REACTIONS

JT	1ST LCASE COMBINED	MAX./MIN. COMPONENT REACTIONS SNOW	LIVE	PERM.LIVE	WIND	DEAD	SOIL
E	229	138 / 0	0 / 0	0 / 0	0 / 0	90 / 0	0 / 0
G	320	209 / 0	0 / 0	0 / 0	0 / 0	111 / 0	0 / 0

BEARING MATERIAL TO BE SPF NO.2 OR BETTER AT JOINT(S) G

BRACING

TOP CHORD TO BE SHEATHED OR MAX. PURLIN SPACING = 6.25 FT.
MAX. UNBRACED BOTTOM CHORD LENGTH = 10.00 FT OR RIGID CEILING DIRECTLY APPLIED.

ALL PITCH BREAKS AND PERIMETER CORNER JOINTS MUST BE LATERALLY RESTRAINED.

LOADING

TOTAL LOAD CASES: (4)

CHORDS

MEMB. FR-TO	MAX. FACTORED FORCE (LBS)	FACTORED VERT. LOAD LC1 (PLF) FROM	TO	MAX CSI (LC)	MAX. UNBRAC LENGTH
A- B	0 / 42	-78.0	-78.0	0.11 (1)	10.00
B- C	-204 / 0	-78.0	-78.0	0.11 (1)	6.25
C- D	-109 / 0	-78.0	-78.0	0.33 (1)	6.25
E- D	-283 / 0	0.0	0.0	0.08 (1)	7.81
G- B	-453 / 0	0.0	0.0	0.05 (1)	7.81
G- F	0 / 0	-18.5	-18.5	0.09 (4)	10.00
F- E	0 / 0	-18.5	-18.5	0.09 (4)	10.00

WEBS

MEMB. FR-TO	MAX. FACTORED FORCE (LBS)	MAX CSI (LC)
F- C	-96 / 13	0.03 (1)
F- D	0 / 140	0.03 (1)
B- F	0 / 148	0.03 (1)

DESIGN CRITERIA

SPECIFIED LOADS:

TOP CH.	LL	=	21.0	PSF
	DL	=	6.0	PSF
BOT CH.	LL	=	0.0	PSF
	DL	=	7.4	PSF
TOTAL LOAD		=	34.4	PSF

SPACING = 24.0 IN. C/C

LOADING IN FLAT SECTION BASED ON A SLOPE OF 2.00/12 MINIMUM

THIS TRUSS IS DESIGNED FOR RESIDENTIAL OR SMALL BUILDING REQUIREMENTS OF PART 9, NBCC 2015

THIS DESIGN COMPLIES WITH:
- PART 9 OF BCBC 2018 , ABC 2019
- PART 9 OF OBC 2012 (2019 AMENDMENT)
- CSA 086-14
- TPIC 2014

DESIGN ASSUMPTIONS
-OVERHANG NOT TO BE ALTERED OR CUT OFF.

(55 % OF 23.0 P.S.F. G.S.L. PLUS 8.4 P.S.F. RAIN LOAD) EQUALS 21.0 P.S.F. SPECIFIED ROOF LIVE LOAD

ALLOWABLE DEFL.(LL)= L/360 (0.23")
CALCULATED VERT. DEFL.(LL) = L/ 999 (0.00")
ALLOWABLE DEFL.(TL)= L/360 (0.23")
CALCULATED VERT. DEFL.(TL) = L/ 999 (0.02")

CSI: TC=0.33/1.00 (C-D:1) , BC=0.09/1.00 (F-G:4) , WB=0.03/1.00 (B-F:1) , SSI=0.15/1.00 (C-D:1)

DOL LUMBER=1.00 NAIL=1.00 LS BEND=1.10 COMP=1.10 SHEAR=1.10 TENS= 1.10

COMPANION LIVE LOAD FACTOR = 1.00

TRUSS PLATE MANUFACTURER IS NOT RESPONSIBLE FOR QUALITY CONTROL IN THE TRUSS MANUFACTURING PLANT .

NAIL VALUES

PLATE	GRIP(DRY) (PSI) MAX	MIN	SHEAR (PLI) MAX	MIN	SECTION (PLI) MAX	MIN
MT20	650	371	1747	788	1987	1873

PLATE PLACEMENT TOL. = 0.250 inches

PLATE ROTATION TOL. = 5.0 Deg.

JSI GRIP= 0.27 (D) (INPUT = 0.90)
JSI METAL= 0.11 (B) (INPUT = 1.00)

JOB NAME	TRUSS NAME	QUANTITY	PLY	JOB DESC.		DRWG NO.
336322	H162		1	TRUSS DESC.	JT 45147	E21104296

Alpa Roof Truss, Maple

Version 8.420 S Jan 21 2021 MiTek Industries, Inc. Thu Oct 14 10:16:12 2021 Page 1

ID:hd511hZTz_bdeQoS817GKByhVxV-ewZcHkNSWjeqqTZbDuCJZ4Wq9dADoTTkK27XfJyTY3H

Scale = 1:41.0

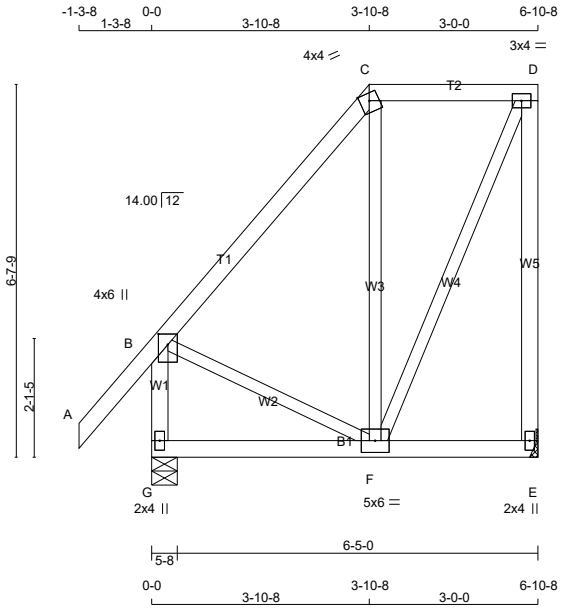

TOTAL WEIGHT = 43 lb

[M][F]

LUMBER

N. L. G. A. RULES

CHORDS	SIZE		LUMBER	DESCR.
A - C	2x4	DRY	No.2	SPF
C - D	2x4	DRY	No.2	SPF
E - D	2x4	DRY	No.2	SPF
G - B	2x4	DRY	No.2	SPF
G - E	2x4	DRY	No.2	SPF
ALL WEBS EXCEPT	2x3	DRY	No.2	SPF

DRY: SEASONED LUMBER.

PLATES (table is in inches)

JT	TYPE	PLATES	W	LEN	Y	X
B	TMVW+p	MT20	4.0	6.0	2.25	2.00
C	TTW-m	MT20	4.0	4.0	Edge	
D	TMVW-t	MT20	3.0	4.0		
E	BMV1+p	MT20	2.0	4.0		
F	BMWWW-t	MT20	5.0	6.0		
G	BMV1+p	MT20	2.0	4.0		

Edge - INDICATES REFERENCE CORNER OF PLATE TOUCHES EDGE OF CHORD.

LATERAL BRACE(S) SHOWN SHALL BE 2X4 SPF#2

DIMENSIONS, SUPPORTS AND LOADINGS SPECIFIED BY FABRICATOR TO BE VERIFIED BY BUILDING DESIGNER

BEARINGS

JT	FACTORED GROSS REACTION VERT	HORZ	MAXIMUM FACTORED GROSS REACTION DOWN	HORZ	UPLIFT	INPUT BRG IN-SX	REQRD BRG IN-SX
E	332	0	332	0	0	MECHANICAL	
G	441	0	441	0	0	5-8	1-8

A SUITABLE HANGER/MECHANICAL CONNECTION IS REQUIRED AT JOINT E. MINIMUM BEARING LENGTH AT JOINT E = 1-8.

UNFACTORED REACTIONS

JT	1ST LCASE COMBINED	MAX./MIN. COMPONENT REACTIONS SNOW	LIVE	PERM.LIVE	WIND	DEAD	SOIL
E	236	144 / 0	0 / 0	0 / 0	0 / 0	92 / 0	0 / 0
G	312	203 / 0	0 / 0	0 / 0	0 / 0	109 / 0	0 / 0

BEARING MATERIAL TO BE SPF NO.2 OR BETTER AT JOINT(S) G

BRACING

TOP CHORD TO BE SHEATHED OR MAX. PURLIN SPACING = 6.25 FT.
MAX. UNBRACED BOTTOM CHORD LENGTH = 10.00 FT OR RIGID CEILING DIRECTLY APPLIED.

ALL PITCH BREAKS AND PERIMETER CORNER JOINTS MUST BE LATERALLY RESTRAINED.

LOADING

TOTAL LOAD CASES: (4)

CHORDS

MEMB. FR-TO	MAX. FACTORED FORCE (LBS)	FACTORED VERT. LOAD LC1 (PLF) FROM	TO	MAX CSI (LC)	MAX. UNBRAC LENGTH
A- B	0 / 42	-78.0	-78.0	0.11 (1)	10.00
B- C	-143 / 0	-78.0	-78.0	0.15 (1)	6.25
C- D	-90 / 0	-78.0	-78.0	0.09 (1)	6.25
E- D	-313 / 0	0.0	0.0	0.29 (1)	7.81
G- B	-410 / 0	0.0	0.0	0.05 (1)	7.81
G- F	0 / 0	-18.5	-18.5	0.06 (4)	10.00
F- E	0 / 0	-18.5	-18.5	0.06 (4)	10.00

WEBS

MEMB. FR-TO	MAX. FACTORED FORCE (LBS)	MAX CSI (LC)
F- C	-160 / 0	0.12 (1)
F- D	0 / 217	0.05 (1)
B- F	0 / 101	0.02 (1)

DESIGN CRITERIA

SPECIFIED LOADS:

TOP CH.	LL	=	21.0	PSF
	DL	=	6.0	PSF
BOT CH.	LL	=	0.0	PSF
	DL	=	7.4	PSF
TOTAL LOAD		=	34.4	PSF

SPACING = 24.0 IN. C/C

LOADING IN FLAT SECTION BASED ON A SLOPE OF 2.00/12 MINIMUM

THIS TRUSS IS DESIGNED FOR RESIDENTIAL OR SMALL BUILDING REQUIREMENTS OF PART 9, NBCC 2015

THIS DESIGN COMPLIES WITH:
- PART 9 OF BCBC 2018 , ABC 2019
- PART 9 OF OBC 2012 (2019 AMENDMENT)
- CSA 086-14
- TPIC 2014

(55 % OF 23.0 P.S.F. G.S.L. PLUS 8.4 P.S.F. RAIN LOAD) EQUALS 21.0 P.S.F. SPECIFIED ROOF LIVE LOAD

ALLOWABLE DEFL.(LL)= L/360 (0.23")
CALCULATED VERT. DEFL.(LL) = L/ 999 (0.00")
ALLOWABLE DEFL.(TL)= L/360 (0.23")
CALCULATED VERT. DEFL.(TL) = L/ 999 (0.01")

CSI: TC=0.29/1.00 (D-E:1) , BC=0.06/1.00 (F-G:4) , WB=0.12/1.00 (C-F:1) , SSI=0.09/1.00 (C-D:1)

DOL LUMBER=1.00 NAIL=1.00 LS BEND=1.10 COMP=1.10 SHEAR=1.10 TENS= 1.10

COMPANION LIVE LOAD FACTOR = 1.00

TRUSS PLATE MANUFACTURER IS NOT RESPONSIBLE FOR QUALITY CONTROL IN THE TRUSS MANUFACTURING PLANT .

NAIL VALUES

PLATE	GRIP(DRY) (PSI) MAX	MIN	SHEAR (PLI) MAX	MIN	SECTION (PLI) MAX	MIN
MT20	650	371	1747	788	1987	1873

PLATE PLACEMENT TOL. = 0.250 inches

PLATE ROTATION TOL. = 5.0 Deg.

JSI GRIP= 0.47 (D) (INPUT = 0.90)
JSI METAL= 0.11 (B) (INPUT = 1.00)

JOB NAME	TRUSS NAME	QUANTITY	PLY	JOB DESC.		DRWG NO.
336322	H163		1	TRUSS DESC.	JT 45147	E21104297

Alpa Roof Truss, Maple

Version 8.420 S Jan 21 2021 MiTek Industries, Inc. Thu Oct 14 10:16:13 2021 Page 1

ID:hd511hZTz_bdeQoS817GKByhVxV-666?U4N4H0mhSd8nmbjY5I3z00SRXwbtYis5BmyTY3G

Scale = 1:54.2

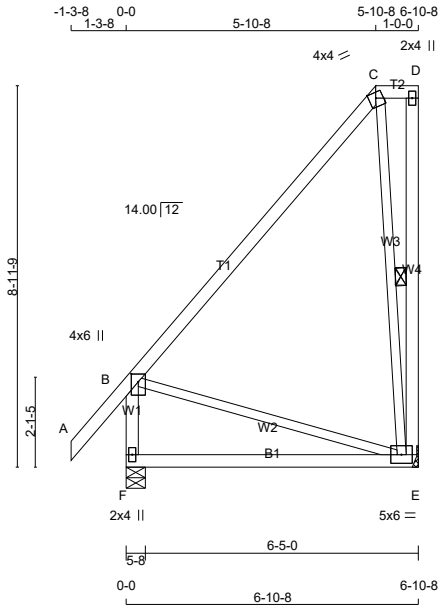

TOTAL WEIGHT = 45 lb

[M][F]

LUMBER

N. L. G. A. RULES

CHORDS	SIZE		LUMBER	DESCR.
A - C	2x4	DRY	No.2	SPF
C - D	2x4	DRY	No.2	SPF
E - D	2x4	DRY	No.2	SPF
F - B	2x4	DRY	No.2	SPF
F - E	2x4	DRY	No.2	SPF
ALL WEBS EXCEPT	2x3	DRY	No.2	SPF

DRY: SEASONED LUMBER.

PLATES (table is in inches)

JT	TYPE	PLATES	W	LEN	Y	X
B	TMVW+p	MT20	4.0	6.0	2.25	2.00
C	TTW-m	MT20	4.0	4.0	Edge	
D	TMV+p	MT20	2.0	4.0		
E	BMVWW1-t	MT20	5.0	6.0		
F	BMV1+p	MT20	2.0	4.0		

Edge - INDICATES REFERENCE CORNER OF PLATE TOUCHES EDGE OF CHORD.

LATERAL BRACE(S) SHOWN SHALL BE 2X4 SPF#2

DIMENSIONS, SUPPORTS AND LOADINGS SPECIFIED BY FABRICATOR TO BE VERIFIED BY BUILDING DESIGNER

BEARINGS

JT	FACTORED GROSS REACTION VERT	HORZ	MAXIMUM FACTORED GROSS REACTION DOWN	HORZ	UPLIFT	INPUT BRG IN-SX	REQRD BRG IN-SX
E	332	0	332	0	0	MECHANICAL	
F	441	0	441	0	0	5-8	1-8

A SUITABLE HANGER/MECHANICAL CONNECTION IS REQUIRED AT JOINT E. MINIMUM BEARING LENGTH AT JOINT E = 1-8.

UNFACTORED REACTIONS

JT	1ST LCASE COMBINED	MAX./MIN. COMPONENT REACTIONS SNOW	LIVE	PERM.LIVE	WIND	DEAD	SOIL
E	236	144 / 0	0 / 0	0 / 0	0 / 0	92 / 0	0 / 0
F	312	203 / 0	0 / 0	0 / 0	0 / 0	109 / 0	0 / 0

BEARING MATERIAL TO BE SPF NO.2 OR BETTER AT JOINT(S) F

BRACING

TOP CHORD TO BE SHEATHED OR MAX. PURLIN SPACING = 6.25 FT.
MAX. UNBRACED BOTTOM CHORD LENGTH = 10.00 FT OR RIGID CEILING DIRECTLY APPLIED.

ALL PITCH BREAKS AND PERIMETER CORNER JOINTS MUST BE LATERALLY RESTRAINED.

1 LATERAL BRACE(S) AT 1/ 2 LENGTH OF D-E, C-E.

END VERTICAL(S) MUST BE SHEATHED OR HAVE BRACES AS INDICATED IN THE MAX. UNBRACED LENGTH COLUMN OF THE TABLE BELOW

LOADING

TOTAL LOAD CASES: (4)

CHORDS MEMB. FR-TO	MAX. FACTORED FORCE (LBS)	FACTORED VERT. LOAD (PLF) FROM	TO	LC1 CSI (LC)	MAX UNBRAC LENGTH	WEBS MEMB. FR-TO	MAX. FACTORED FORCE (LBS)	MAX CSI (LC)
A- B	0 / 42	-78.0	-78.0	0.11 (1)	10.00	C- E	-238 / 0	0.12 (1)
B- C	-42 / 0	-78.0	-78.0	0.34 (1)	6.25	B- E	0 / 28	0.01 (1)
C- D	0 / 0	-78.0	-78.0	0.01 (1)	10.00			
E- D	-39 / 0	0.0	0.0	0.01 (1)	6.25			
F- B	-377 / 0	0.0	0.0	0.04 (1)	7.81			
F- E	0 / 0	-18.5	-18.5	0.26 (4)	10.00			

DESIGN CRITERIA

SPECIFIED LOADS:

TOP	CH.	LL	=	21.0	PSF
		DL	=	6.0	PSF
BOT	CH.	LL	=	0.0	PSF
		DL	=	7.4	PSF
TOTAL	LOAD		=	34.4	PSF

SPACING = 24.0 IN. C/C

LOADING IN FLAT SECTION BASED ON A SLOPE OF 2.00/12 MINIMUM

THIS TRUSS IS DESIGNED FOR RESIDENTIAL OR SMALL BUILDING REQUIREMENTS OF PART 9, NBCC 2015

THIS DESIGN COMPLIES WITH:
- PART 9 OF BCBC 2018 , ABC 2019
- PART 9 OF OBC 2012 (2019 AMENDMENT)
- CSA 086-14
- TPIC 2014

(55 % OF 23.0 P.S.F. G.S.L. PLUS 8.4 P.S.F. RAIN LOAD) EQUALS 21.0 P.S.F. SPECIFIED ROOF LIVE LOAD

ALLOWABLE DEFL.(TL)= L/360 (0.23")
CALCULATED VERT. DEFL.(TL) = L/ 819 (0.10")

CSI: TC=0.34/1.00 (B-C:1) , BC=0.26/1.00 (E-F:4) , WB=0.12/1.00 (C-E:1) , SSI=0.12/1.00 (B-C:1)

DOL LUMBER=1.00 NAIL=1.00 LS BEND=1.10 COMP=1.10 SHEAR=1.10 TENS= 1.10

COMPANION LIVE LOAD FACTOR = 1.00

TRUSS PLATE MANUFACTURER IS NOT RESPONSIBLE FOR QUALITY CONTROL IN THE TRUSS MANUFACTURING PLANT .

NAIL VALUES

PLATE	GRIP(DRY) (PSI) MAX	MIN	SHEAR (PLI) MAX	MIN	SECTION (PLI) MAX	MIN
MT20	650	371	1747	788	1987	1873

PLATE PLACEMENT TOL. = 0.250 inches

PLATE ROTATION TOL. = 5.0 Deg.

JSI GRIP= 0.21 (B) (INPUT = 0.90)
JSI METAL= 0.13 (C) (INPUT = 1.00)

JOB NAME	TRUSS NAME	QUANTITY	PLY	JOB DESC.		DRWG NO.
336323	H20T		1	TRUSS DESC.	JT 45147	E21104346

Alpa Roof Truss, Maple

Version 8.420 S Jan 21 2021 MiTek Industries, Inc. Thu Oct 14 14:36:51 2021 Page 1

ID:hd511hZTz_bdeQoS817GKByhVxV-Ec1oZFeFWo?rZsdHssHiu1lHCoXUXI0fVg_a2MyTUEw

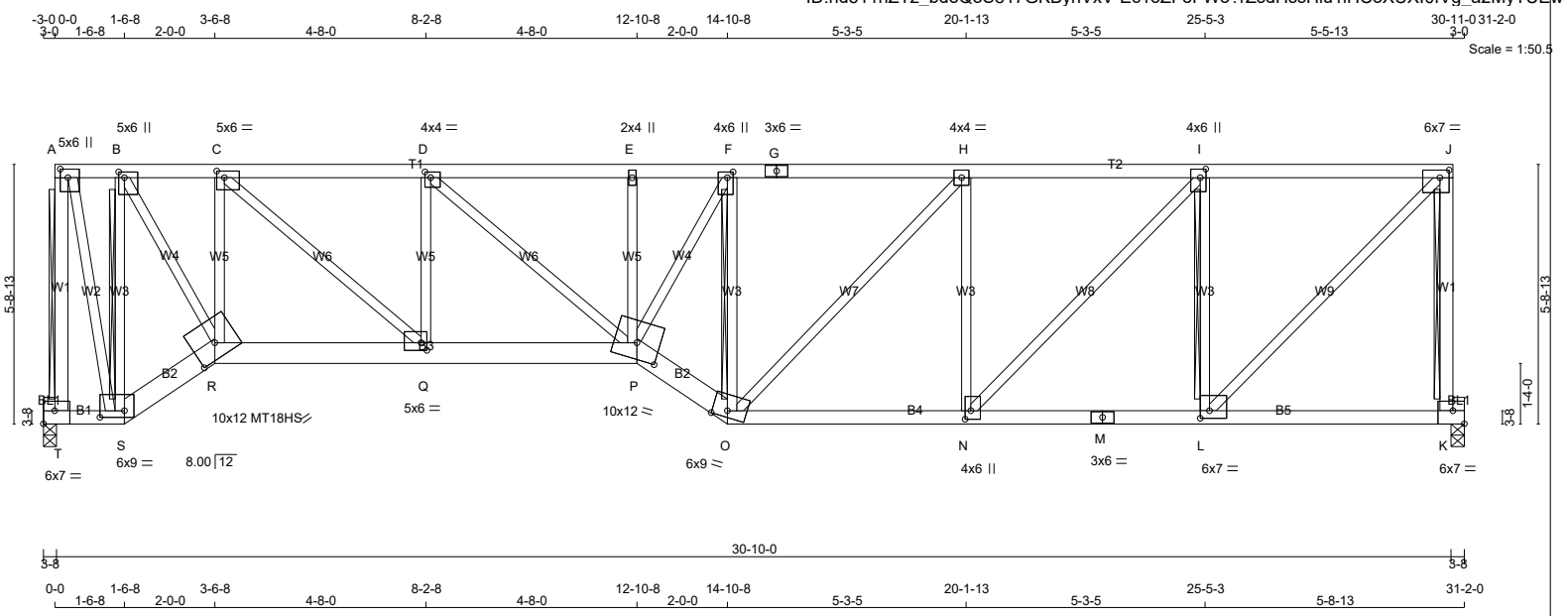

LUMBER

N. L. G. A. RULES

CHORDS	SIZE		LUMBER	DESCR.
T - A	2x4	DRY	No.2	SPF
A - G	2x4	DRY	1650F 1.5E	SPF
G - J	2x4	DRY	1650F 1.5E	SPF
K - J	2x4	DRY	No.2	SPF
T - S	2x4	DRY	No.2	SPF
S - R	2x6	DRY	No.2	SPF
R - P	2x6	DRY	No.2	SPF
P - O	2x6	DRY	No.2	SPF
O - M	2x4	DRY	No.2	SPF
M - K	2x4	DRY	No.2	SPF

BEARING BLOCKS

BL1	2 - 2x4	DRY	No.2	SPF

ALL WEBS	2x3	DRY	No.2	SPF

DRY: SEASONED LUMBER.

PLATES (table is in inches)

JT	TYPE	PLATES	W	LEN	Y	X
A	TMVW+p	MT20	5.0	6.0	2.25	2.00
B	TMWW+t	MT20	5.0	6.0	1.50	1.50
C	TMWW-t	MT20	5.0	6.0	1.75	2.00
D	TMWW-t	MT20	4.0	4.0	1.50	1.50
E	TMW+w	MT20	2.0	4.0		
F	TMWW+t	MT20	4.0	6.0	1.50	1.50
G	TS-t	MT20	3.0	6.0		
H	TMWW-t	MT20	4.0	4.0		
I	TMWW+t	MT20	4.0	6.0	2.25	1.50
J	TMVW-t	MT20	6.0	7.0	2.00	2.50
K	BMVK1-t	MT20	6.0	7.0	3.50	Edge
L	BMWW-t	MT20	6.0	7.0	2.00	2.50
M	BS-t	MT20	3.0	6.0		
N	BMWW+t	MT20	4.0	6.0	2.25	1.50
O	BBWW-m	MT20	6.0	9.0	1.75	4.00
P	BBWWW-m	MT20	10.0	12.0	4.25	6.00
Q	BMWW-t	MT20	5.0	6.0	2.00	1.50
R	BBWW-h	MT18HS	10.0	12.0	4.00	6.00
S	BBWW-l	MT20	6.0	9.0	1.75	6.50
T	BMVK1-t	MT20	6.0	7.0	3.50	Edge

Edge - INDICATES REFERENCE CORNER OF PLATE TOUCHES EDGE OF CHORD.

LATERAL BRACE(S) SHOWN SHALL BE 2X4 SPF#2

DIMENSIONS, SUPPORTS AND LOADINGS SPECIFIED BY FABRICATOR TO BE VERIFIED BY BUILDING DESIGNER

BEARINGS

JT	FACTORED GROSS REACTION VERT	HORZ	MAXIMUM FACTORED GROSS REACTION DOWN	HORZ	UPLIFT	INPUT BRG IN-SX	REQRD BRG IN-SX
T	3150	0	3150	0	0	3-8	3-8
K	3158	0	3158	0	0	3-8	3-8

UNFACTORED REACTIONS

JT	1ST LCASE COMBINED	MAX./MIN. COMPONENT REACTIONS SNOW	LIVE	PERM.LIVE	WIND	DEAD	SOIL
T	2245	1372 / 0	0 / 0	0 / 0	0 / 0	874 / 0	0 / 0
K	2251	1376 / 0	0 / 0	0 / 0	0 / 0	875 / 0	0 / 0

BEARING MATERIAL TO BE SPF NO.2 OR BETTER AT JOINT(S) T, K
BEARING SIZE FACTOR = 1.15 AT JNT(S) T, K (BASED ON SUPPORT DEPTH = 1-8)

BRACING

TOP CHORD TO BE SHEATHED OR MAX. PURLIN SPACING = 2.89 FT.
MAX. UNBRACED BOTTOM CHORD LENGTH = 6.25 FT OR RIGID CEILING DIRECTLY APPLIED.

ALL PITCH BREAKS AND PERIMETER CORNER JOINTS MUST BE LATERALLY RESTRAINED.

2x4 DRY SPF No.2 T-BRACE AT A-T, J-K, B-S, F-O, I-L

FASTEN T AND I-BRACES TO NARROW EDGE OF WEB WITH ONE ROW PER PLY OF 3" COMMON WIRE NAILS @ 6" O.C. WITH 3" MINIMUM END DISTANCE. BRACE MUST COVER 90% OF WEB LENGTH.

END VERTICAL(S) MUST BE SHEATHED OR HAVE BRACES AS INDICATED IN THE MAX. UNBRACED LENGTH COLUMN OF THE TABLE BELOW

LOADING

TOTAL LOAD CASES: (4)

CHORDS

MEMB. FR-TO	MAX. FACTORED FORCE (LBS)	FACTORED VERT. LOAD LC1 (PLF) FROM	TO	MAX CSI (LC)	MAX. UNBRAC LENGTH
T- A	-3120 / 0	0.0	0.0	0.61 (1)	7.81
A- B	-751 / 0	-165.7	-165.7	0.17 (1)	6.25
B- C	-2378 / 0	-78.0	-78.0	0.20 (1)	4.79
C- D	-4712 / 0	-78.0	-78.0	0.39 (1)	3.47
D- E	-5815 / 0	-78.0	-78.0	0.49 (1)	3.08
E- F	-5812 / 0	-78.0	-78.0	0.54 (1)	2.89
F- G	-4503 / 0	-165.7	-165.7	0.72 (1)	3.14
G- H	-4503 / 0	-165.7	-165.7	0.72 (1)	3.14
H- I	-4073 / 0	-165.7	-165.7	0.88 (1)	2.96
I- J	-2645 / 0	-165.7	-165.7	0.76 (1)	3.76
K- J	-3073 / 0	0.0	0.0	0.61 (1)	7.81
T- S	-84 / 0	-39.3	-39.3	0.02 (4)	6.25
S- R	0 / 835	-127.0	-127.0	0.16 (1)	10.00
R- Q	0 / 2439	-127.0	-127.0	0.50 (1)	10.00
Q- P	0 / 4712	-127.0	-127.0	0.79 (1)	10.00
P- O	0 / 5389	-127.0	-127.0	0.75 (1)	10.00
O- N	0 / 4073	-39.3	-39.3	0.87 (1)	10.00
N- M	0 / 2645	-39.3	-39.3	0.61 (1)	10.00
M- L	0 / 2645	-39.3	-39.3	0.61 (1)	10.00
L- K	-82 / 0	-39.3	-39.3	0.27 (4)	6.25

WEBS

MEMB. FR-TO	MAX. FACTORED FORCE (LBS)	MAX CSI (LC)
A- S	0 / 3028	0.75 (1)
S- B	-3234 / 0	0.83 (1)
B- R	0 / 3631	0.90 (1)
R- C	-2354 / 0	0.67 (1)
C- Q	0 / 3031	0.75 (1)
Q- D	-1353 / 0	0.38 (1)
D- P	0 / 1453	0.36 (1)
P- E	-104 / 0	0.03 (1)
P- F	0 / 2948	0.73 (1)
O- F	-3227 / 0	0.83 (1)
O- H	0 / 614	0.15 (1)
N- H	-1301 / 0	0.67 (1)
N- I	0 / 2051	0.51 (1)
L- I	-2477 / 0	0.64 (1)
L- J	0 / 3842	0.95 (1)

DESIGN CRITERIA

SPECIFIED LOADS:

TOP CH.	LL	=	21.0	PSF
	DL	=	6.0	PSF
BOT CH.	LL	=	0.0	PSF
	DL	=	7.4	PSF
TOTAL LOAD		=	34.4	PSF

SPACING = 24.0 IN. C/C

LOADING IN FLAT SECTION BASED ON A SLOPE OF 2.00/12 MINIMUM

GIRDER TYPE: CPrimeHip
SIDE SETBACK = 0-0
END SETBACK = 6-6-0
END WALL WIDTH = 0-0
CORNER FRAMING TYPE: CONVENTIONAL
END JACK TYPE: CONVENTIONAL
APPLIED TO FRONT SIDE
- ADDT'L LOADS BASED ON 55 % OF GSL.
LOADS APPLIED TO FIRST 1-6-8 OF SPAN MEASURED FROM THE LEFT.

GIRDER TYPE: CStdGirder
START DISTANCE = 1-6-8
START SPAN CARRIED = 6-6-0
END DISTANCE = 14-10-8
END SPAN CARRIED = 6-6-0
END WALL WIDTH = 0-0
APPLIED TO FRONT SIDE OF BOTTOM CHORD.
- ADDT'L LOADS BASED ON 55 % OF GSL.

GIRDER TYPE: CPrimeHip
SIDE SETBACK = 0-0
END SETBACK = 6-6-0
END WALL WIDTH = 0-0
CORNER FRAMING TYPE: CONVENTIONAL
END JACK TYPE: CONVENTIONAL
APPLIED TO FRONT SIDE
- ADDT'L LOADS BASED ON 55 % OF GSL.
LOADS APPLIED TO FIRST 16-3-8 OF SPAN MEASURED FROM THE RIGHT.

THIS TRUSS IS DESIGNED FOR RESIDENTIAL OR SMALL BUILDING REQUIREMENTS OF PART 9, NBCC 2015

THIS DESIGN COMPLIES WITH:
- PART 9 OF BCBC 2018 , ABC 2019
- PART 9 OF OBC 2012 (2019 AMENDMENT)
- CSA 086-14
- TPIC 2014

(55 % OF 23.0 P.S.F. G.S.L. PLUS 8.4 P.S.F. RAIN LOAD) EQUALS 21.0 P.S.F. SPECIFIED ROOF LIVE LOAD

ALLOWABLE DEFL.(LL)= L/360 (1.02")
CALCULATED VERT. DEFL.(LL) = L/ 999 (0.30")
ALLOWABLE DEFL.(TL)= L/360 (1.02")
CALCULATED VERT. DEFL.(TL) = L/ 617 (0.60")

CSI: TC=0.88/1.00 (H-I:1) , BC=0.87/1.00 (N-O:1) , WB=0.95/1.00 (J-L:1) , SSI=0.47/1.00 (I-J:1)

DOL LUMBER=1.00 NAIL=1.00 LS BEND=1.00 COMP=1.00 SHEAR=1.00 TENS= 1.00

COMPANION LIVE LOAD FACTOR = 1.00

CONTINUED ON PAGE 2

JOB NAME	TRUSS NAME	QUANTITY	PLY	JOB DESC.		DRWG NO.
336323	H22T		1	TRUSS DESC.	JT 45147	E21104347

Alpa Roof Truss, Maple

Version 8.420 S Jan 21 2021 MiTek Industries, Inc. Thu Oct 14 14:36:53 2021 Page 1

ID:hd511hZTz_bdeQoS817GKByhVxV-A_8Z_xfV1PFYo9ng_HJAzSqdibJr?Fnyz_Th6EyTUEu

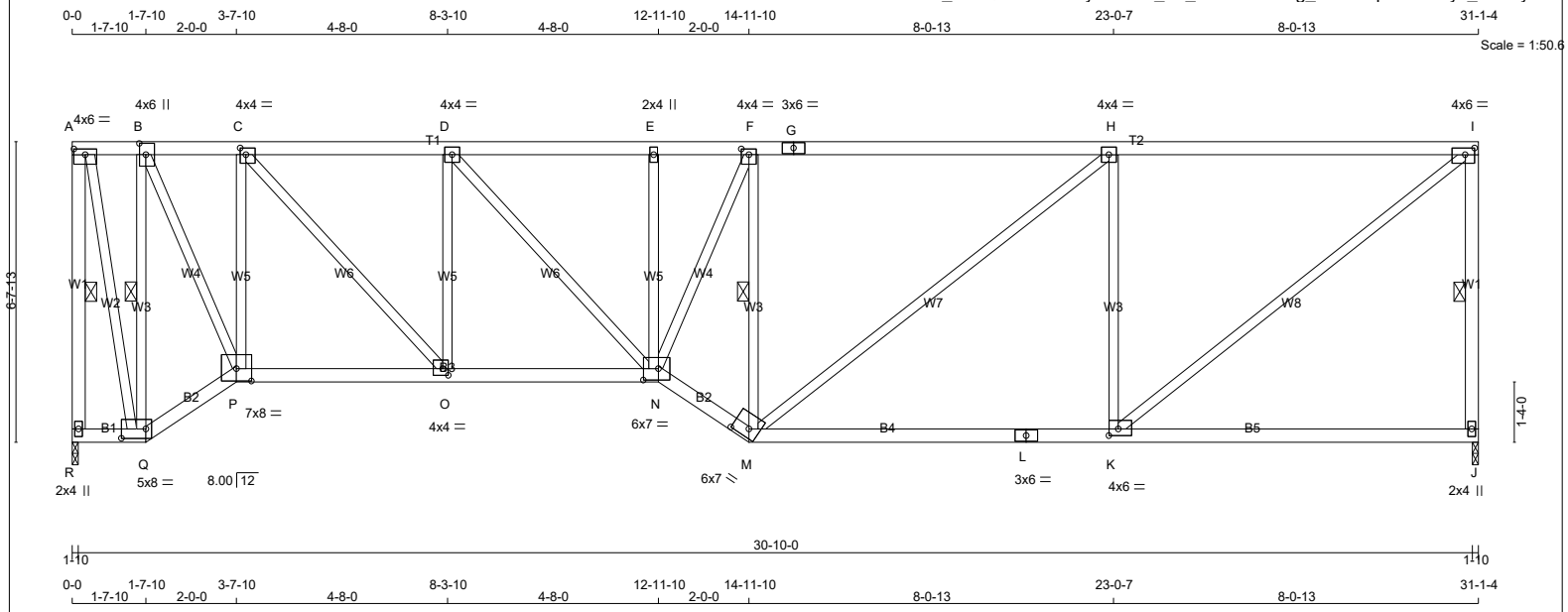

TOTAL WEIGHT = 152 lb

[M]

LUMBER

N. L. G. A. RULES

CHORDS	SIZE		LUMBER	DESCR.
R - A	2x4	DRY	No.2	SPF
A - G	2x4	DRY	1650F 1.5E	SPF
G - I	2x4	DRY	1650F 1.5E	SPF
J - I	2x4	DRY	No.2	SPF
R - Q	2x4	DRY	No.2	SPF
Q - P	2x4	DRY	No.2	SPF
P - N	2x4	DRY	No.2	SPF
N - M	2x4	DRY	No.2	SPF
M - L	2x4	DRY	No.2	SPF
L - J	2x4	DRY	No.2	SPF
ALL WEBS	2x3	DRY	No.2	SPF

DRY: SEASONED LUMBER.

PLATES (table is in inches)

JT	TYPE	PLATES	W	LEN	Y	X
A	TMVW-t	MT20	4.0	6.0	1.50	3.00
B	TMWW+t	MT20	4.0	6.0	3.00	1.75
C	TMWW-t	MT20	4.0	4.0	1.75	1.50
D	TMWW-t	MT20	4.0	4.0		
E	TMW+w	MT20	2.0	4.0		
F	TMWW-t	MT20	4.0	4.0	1.50	2.00
G	TS-t	MT20	3.0	6.0		
H	TMWW-t	MT20	4.0	4.0		
I	TMVW-t	MT20	4.0	6.0	1.75	2.50
J	BMV1+p	MT20	2.0	4.0		
K	BMWW-t	MT20	4.0	6.0	1.75	2.50
L	BS-t	MT20	3.0	6.0		
M	BBWW-h	MT20	6.0	7.0	2.25	4.25
N	BBWWW-p	MT20	6.0	7.0	3.00	4.00
O	BMWW-t	MT20	4.0	4.0	1.75	1.50
P	BBWW-l	MT20	7.0	8.0	3.25	4.00
Q	BBWW-l	MT20	5.0	8.0	2.50	6.50
R	BMV1+p	MT20	2.0	4.0		

LATERAL BRACE(S) SHOWN SHALL BE 2X4 SPF#2

DIMENSIONS, SUPPORTS AND LOADINGS SPECIFIED BY FABRICATOR TO BE VERIFIED BY BUILDING DESIGNER

BEARINGS

JT	FACTORED GROSS REACTION VERT	HORZ	MAXIMUM FACTORED GROSS REACTION DOWN	HORZ	UPLIFT	INPUT BRG IN-SX	REQRD BRG IN-SX
R	1500	0	1500	0	0	1-10	1-10
J	1500	0	1500	0	0	1-10	1-10

UNFACTORED REACTIONS

JT	1ST LCASE COMBINED	MAX./MIN. COMPONENT REACTIONS SNOW	LIVE	PERM.LIVE	WIND	DEAD	SOIL
R	1070	653 / 0	0 / 0	0 / 0	0 / 0	417 / 0	0 / 0
J	1070	653 / 0	0 / 0	0 / 0	0 / 0	417 / 0	0 / 0

BEARING MATERIAL TO BE SPF NO.2 OR BETTER AT JOINT(S) R, J

BRACING

TOP CHORD TO BE SHEATHED OR MAX. PURLIN SPACING = 4.38 FT.
MAX. UNBRACED BOTTOM CHORD LENGTH = 10.00 FT OR RIGID CEILING DIRECTLY APPLIED.

ALL PITCH BREAKS AND PERIMETER CORNER JOINTS MUST BE LATERALLY RESTRAINED.

1 LATERAL BRACE(S) AT 1/ 2 LENGTH OF A-R, I-J, B-Q, F-M.

END VERTICAL(S) MUST BE SHEATHED OR HAVE BRACES AS INDICATED IN THE MAX. UNBRACED LENGTH COLUMN OF THE TABLE BELOW

LOADING

TOTAL LOAD CASES: (4)

CHORDS

MEMB. FR-TO	MAX. FACTORED FORCE (LBS)	FACTORED VERT. LOAD (PLF) FROM	TO	LC1 CSI (LC)	MAX UNBRAC LENGTH
R- A	-1485 / 0	0.0	0.0	0.30 (1)	5.38
A- B	-358 / 0	-78.0	-78.0	0.07 (1)	6.25
B- C	-975 / 0	-78.0	-78.0	0.10 (1)	6.25
C- D	-1856 / 0	-78.0	-78.0	0.22 (1)	5.28
D- E	-2272 / 0	-78.0	-78.0	0.23 (1)	4.88
E- F	-2269 / 0	-78.0	-78.0	0.34 (1)	4.70
F- G	-1883 / 0	-78.0	-78.0	0.81 (1)	4.38
G- H	-1883 / 0	-78.0	-78.0	0.81 (1)	4.38
H- I	-1518 / 0	-78.0	-78.0	0.77 (1)	4.80
J- I	-1443 / 0	0.0	0.0	0.29 (1)	5.44
R- Q	0 / 0	-18.5	-18.5	0.01 (4)	10.00
Q- P	0 / 399	-18.5	-18.5	0.08 (1)	10.00
P- O	0 / 1001	-18.5	-18.5	0.21 (1)	10.00
O- N	0 / 1856	-18.5	-18.5	0.35 (1)	10.00
N- M	0 / 2234	-18.5	-18.5	0.37 (1)	10.00
M- L	0 / 1518	-18.5	-18.5	0.49 (4)	10.00
L- K	0 / 1518	-18.5	-18.5	0.49 (4)	10.00
K- J	0 / 0	-18.5	-18.5	0.34 (4)	10.00

WEBS

MEMB. FR-TO	MAX. FACTORED FORCE (LBS)	MAX CSI (LC)
A- Q	0 / 1435	0.32 (1)
Q- B	-1577 / 0	0.45 (1)
B- P	0 / 1661	0.37 (1)
P- C	-1253 / 0	0.53 (1)
C- O	0 / 1272	0.29 (1)
O- D	-848 / 0	0.36 (1)
D- N	0 / 610	0.14 (1)
N- E	-124 / 0	0.05 (1)
N- F	0 / 1059	0.24 (1)
M- F	-1448 / 0	0.41 (1)
M- H	0 / 465	0.10 (1)
K- H	-1016 / 0	0.74 (1)
K- I	0 / 1932	0.43 (1)

DESIGN CRITERIA

SPECIFIED LOADS:

TOP CH.	LL	=	21.0	PSF
	DL	=	6.0	PSF
BOT CH.	LL	=	0.0	PSF
	DL	=	7.4	PSF
TOTAL LOAD		=	34.4	PSF

SPACING = 24.0 IN. C/C

LOADING IN FLAT SECTION BASED ON A SLOPE OF 2.00/12 MINIMUM

THIS TRUSS IS DESIGNED FOR RESIDENTIAL OR SMALL BUILDING REQUIREMENTS OF PART 9, NBCC 2015

THIS DESIGN COMPLIES WITH:
- PART 9 OF BCBC 2018 , ABC 2019
- PART 9 OF OBC 2012 (2019 AMENDMENT)
- CSA 086-14
- TPIC 2014

(55 % OF 23.0 P.S.F. G.S.L. PLUS 8.4 P.S.F. RAIN LOAD) EQUALS 21.0 P.S.F. SPECIFIED ROOF LIVE LOAD

ALLOWABLE DEFL.(LL)= L/360 (1.04")
CALCULATED VERT. DEFL.(LL) = L/ 999 (0.13")
ALLOWABLE DEFL.(TL)= L/360 (1.04")
CALCULATED VERT. DEFL.(TL) = L/ 999 (0.29")

CSI: TC=0.81/1.00 (F-H:1) , BC=0.49/1.00 (K-M:4) , WB=0.74/1.00 (H-K:1) , SSI=0.30/1.00 (H-I:1)

DOL LUMBER=1.00 NAIL=1.00 LS BEND=1.10 COMP=1.10 SHEAR=1.10 TENS= 1.10

COMPANION LIVE LOAD FACTOR = 1.00

TRUSS PLATE MANUFACTURER IS NOT RESPONSIBLE FOR QUALITY CONTROL IN THE TRUSS MANUFACTURING PLANT .

NAIL VALUES

PLATE	GRIP(DRY) (PSI) MAX	MIN	SHEAR (PLI) MAX	MIN	SECTION (PLI) MAX	MIN
MT20	650	371	1747	788	1987	1873

PLATE PLACEMENT TOL. = 0.250 inches

PLATE ROTATION TOL. = 5.0 Deg.

JSI GRIP= 0.89 (C) (INPUT = 0.90)
JSI METAL= 0.43 (M) (INPUT = 1.00)

JOB NAME	TRUSS NAME	QUANTITY	PLY	JOB DESC.		DRWG NO.
336323	H23T		1	TRUSS DESC.	JT 45147	E21104348

Alpa Roof Truss, Maple

Version 8.420 S Jan 21 2021 MiTek Industries, Inc. Thu Oct 14 14:36:55 2021 Page 1

ID:hd511hZTz_bdeQoS817GKByhVxV-7NGJPchlZ1VG2Tx25iLe3tvwEP?fT6ZFQHyoB7yTUEs

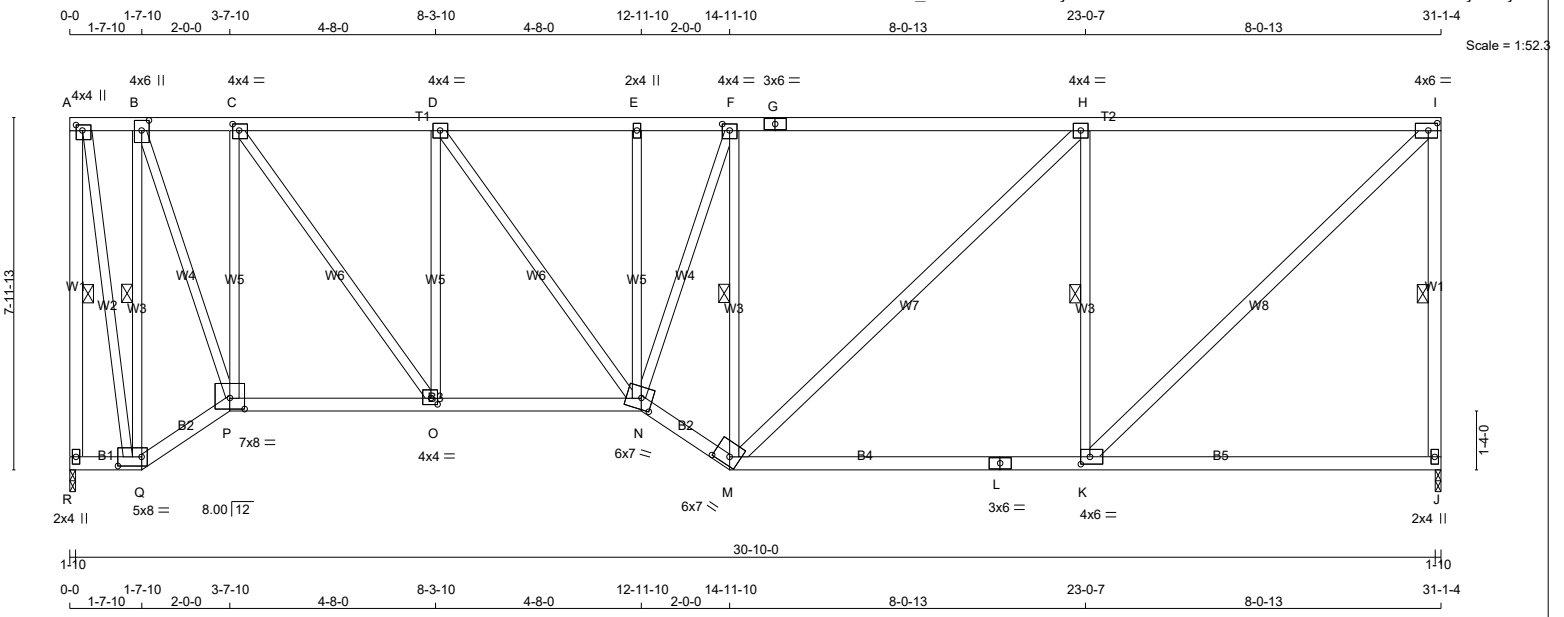

TOTAL WEIGHT = 175 lb

[M]

LUMBER

N. L. G. A. RULES

CHORDS	SIZE		LUMBER	DESCR.
R - A	2x4	DRY	No.2	SPF
A - G	2x4	DRY	No.2	SPF
G - I	2x4	DRY	No.2	SPF
J - I	2x4	DRY	No.2	SPF
R - Q	2x4	DRY	No.2	SPF
Q - P	2x4	DRY	No.2	SPF
P - N	2x4	DRY	No.2	SPF
N - M	2x4	DRY	No.2	SPF
M - L	2x4	DRY	No.2	SPF
L - J	2x4	DRY	No.2	SPF
ALL WEBS	2x3	DRY	No.2	SPF
EXCEPT				
M - H	2x4	DRY	No.2	SPF
K - I	2x4	DRY	No.2	SPF

DRY: SEASONED LUMBER.

PLATES (table is in inches)

JT	TYPE	PLATES	W	LEN	Y	X
A	TMVW+p	MT20	4.0	4.0	1.50	1.75
B	TMWW+t	MT20	4.0	6.0	2.75	2.00
C	TMWW-t	MT20	4.0	4.0	1.75	1.75
D	TMWW-t	MT20	4.0	4.0		
E	TMW+w	MT20	2.0	4.0		
F	TMWW-t	MT20	4.0	4.0	1.75	2.00
G	TS-t	MT20	3.0	6.0		
H	TMWW-t	MT20	4.0	4.0		
I	TMVW-t	MT20	4.0	6.0	2.00	2.50
J	BMV1+p	MT20	2.0	4.0		
K	BMWW-t	MT20	4.0	6.0	2.00	2.50
L	BS-t	MT20	3.0	6.0		
M	BBWW-h	MT20	6.0	7.0	2.25	4.25
N	BBWWW-m	MT20	6.0	7.0	3.00	3.00
O	BMWW-t	MT20	4.0	4.0	1.75	1.75
P	BBWW-l	MT20	7.0	8.0	3.00	4.00
Q	BBWW-l	MT20	5.0	8.0	2.50	6.50
R	BMV1+p	MT20	2.0	4.0		

LATERAL BRACE(S) SHOWN SHALL BE 2X4 SPF#2

DIMENSIONS, SUPPORTS AND LOADINGS SPECIFIED BY FABRICATOR TO BE VERIFIED BY BUILDING DESIGNER

BEARINGS

JT	FACTORED GROSS REACTION VERT	HORZ	MAXIMUM FACTORED GROSS REACTION DOWN	HORZ	UPLIFT	INPUT BRG IN-SX	REQRD BRG IN-SX
R	1500	0	1500	0	0	1-10	1-10
J	1500	0	1500	0	0	1-10	1-10

UNFACTORED REACTIONS

JT	1ST LCASE COMBINED	MAX./MIN. COMPONENT REACTIONS SNOW	LIVE	PERM.LIVE	WIND	DEAD	SOIL
R	1070	653 / 0	0 / 0	0 / 0	0 / 0	417 / 0	0 / 0
J	1070	653 / 0	0 / 0	0 / 0	0 / 0	417 / 0	0 / 0

BEARING MATERIAL TO BE SPF NO.2 OR BETTER AT JOINT(S) R, J

BRACING

TOP CHORD TO BE SHEATHED OR MAX. PURLIN SPACING = 3.72 FT.
MAX. UNBRACED BOTTOM CHORD LENGTH = 10.00 FT OR RIGID CEILING DIRECTLY APPLIED.

ALL PITCH BREAKS AND PERIMETER CORNER JOINTS MUST BE LATERALLY RESTRAINED.

1 LATERAL BRACE(S) AT 1/ 2 LENGTH OF A-R, I-J, B-Q, F-M, H-K.

END VERTICAL(S) MUST BE SHEATHED OR HAVE BRACES AS INDICATED IN THE MAX. UNBRACED LENGTH COLUMN OF THE TABLE BELOW

LOADING

TOTAL LOAD CASES: (4)

CHORDS

MEMB. FR-TO	MAX. FACTORED FORCE (LBS)	FACTORED VERT. LOAD (PLF) FROM	TO	LC1 CSI (LC)	MAX UNBRAC LENGTH
R- A	-1485 / 0	0.0	0.0	0.43 (1)	5.38
A- B	-296 / 0	-78.0	-78.0	0.08 (1)	6.25
B- C	-770 / 0	-78.0	-78.0	0.12 (1)	6.25
C- D	-1468 / 0	-78.0	-78.0	0.27 (1)	5.11
D- E	-1795 / 0	-78.0	-78.0	0.29 (1)	4.71
E- F	-1793 / 0	-78.0	-78.0	0.41 (1)	4.48
F- G	-1556 / 0	-78.0	-78.0	1.00 (1)	3.72
G- H	-1556 / 0	-78.0	-78.0	1.00 (1)	3.72
H- I	-1256 / 0	-78.0	-78.0	0.94 (1)	4.13
J- I	-1443 / 0	0.0	0.0	0.41 (1)	5.44
R- Q	0 / 0	-18.5	-18.5	0.01 (4)	10.00
Q- P	0 / 330	-18.5	-18.5	0.07 (1)	10.00
P- O	0 / 790	-18.5	-18.5	0.18 (4)	10.00
O- N	0 / 1468	-18.5	-18.5	0.29 (1)	10.00
N- M	0 / 1850	-18.5	-18.5	0.31 (1)	10.00
M- L	0 / 1256	-18.5	-18.5	0.47 (4)	10.00
L- K	0 / 1256	-18.5	-18.5	0.47 (4)	10.00
K- J	0 / 0	-18.5	-18.5	0.35 (4)	10.00

WEBS

MEMB. FR-TO	MAX. FACTORED FORCE (LBS)	MAX CSI (LC)
A- Q	0 / 1420	0.32 (1)
Q- B	-1539 / 0	0.62 (1)
B- P	0 / 1572	0.35 (1)
P- C	-1253 / 0	0.92 (1)
C- O	0 / 1162	0.26 (1)
O- D	-848 / 0	0.62 (1)
D- N	0 / 552	0.12 (1)
N- E	-125 / 0	0.09 (1)
N- F	0 / 805	0.18 (1)
M- F	-1235 / 0	0.50 (1)
M- H	0 / 415	0.07 (1)
K- H	-1015 / 0	0.41 (1)
K- I	0 / 1735	0.28 (1)

DESIGN CRITERIA

SPECIFIED LOADS:

TOP CH.	LL	=	21.0	PSF
	DL	=	6.0	PSF
BOT CH.	LL	=	0.0	PSF
	DL	=	7.4	PSF
TOTAL LOAD		=	34.4	PSF

SPACING = 24.0 IN. C/C

LOADING IN FLAT SECTION BASED ON A SLOPE OF 2.00/12 MINIMUM

THIS TRUSS IS DESIGNED FOR RESIDENTIAL OR SMALL BUILDING REQUIREMENTS OF PART 9, NBCC 2015

THIS DESIGN COMPLIES WITH:
- PART 9 OF BCBC 2018 , ABC 2019
- PART 9 OF OBC 2012 (2019 AMENDMENT)
- CSA 086-14
- TPIC 2014

(55 % OF 23.0 P.S.F. G.S.L. PLUS 8.4 P.S.F. RAIN LOAD) EQUALS 21.0 P.S.F. SPECIFIED ROOF LIVE LOAD

ALLOWABLE DEFL.(LL)= L/360 (1.04")
CALCULATED VERT. DEFL.(LL) = L/ 999 (0.12")
ALLOWABLE DEFL.(TL)= L/360 (1.04")
CALCULATED VERT. DEFL.(TL) = L/ 999 (0.25")

CSI: TC=1.00/1.00 (F-H:1) , BC=0.47/1.00 (K-M:4) , WB=0.92/1.00 (C-P:1) , SSI=0.30/1.00 (H-I:1)

DOL LUMBER=1.00 NAIL=1.00 LS BEND=1.10 COMP=1.10 SHEAR=1.10 TENS= 1.10

COMPANION LIVE LOAD FACTOR = 1.00

TRUSS PLATE MANUFACTURER IS NOT RESPONSIBLE FOR QUALITY CONTROL IN THE TRUSS MANUFACTURING PLANT .

NAIL VALUES

PLATE	GRIP(DRY) (PSI) MAX	MIN	SHEAR (PLI) MAX	MIN	SECTION (PLI) MAX	MIN
MT20	650	371	1747	788	1987	1873

PLATE PLACEMENT TOL. = 0.250 inches

PLATE ROTATION TOL. = 5.0 Deg.

JSI GRIP= 0.89 (A) (INPUT = 0.90)
JSI METAL= 0.36 (M) (INPUT = 1.00)

JOB NAME	TRUSS NAME	QUANTITY	PLY	JOB DESC.		DRWG NO.
336323	H24T		1	TRUSS DESC.	JT 45147	E21104349

Alpa Roof Truss, Maple

Version 8.420 S Jan 21 2021 MiTek Industries, Inc. Thu Oct 14 14:36:57 2021 Page 1

ID:hd511hZTz bdeQoS817GKByhVxV-3mO4qIi05eI Hn4RD6O68I HXDhNx1wYubRuF0yTUEq

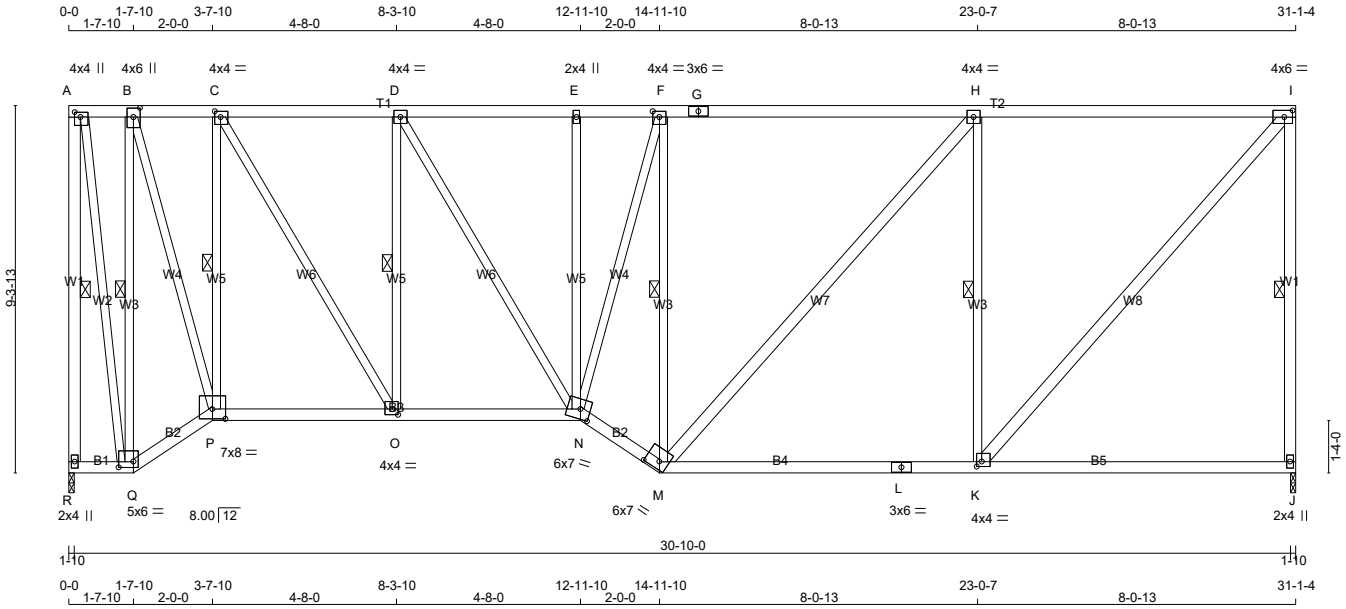

TOTAL WEIGHT = 192 lb

[M]

LUMBER

N. L. G. A. RULES

CHORDS	SIZE		LUMBER	DESCR.
R - A	2x4	DRY	No.2	SPF
A - G	2x4	DRY	No.2	SPF
G - I	2x4	DRY	No.2	SPF
J - I	2x4	DRY	No.2	SPF
R - Q	2x4	DRY	No.2	SPF
Q - P	2x4	DRY	No.2	SPF
P - N	2x4	DRY	No.2	SPF
N - M	2x4	DRY	No.2	SPF
M - L	2x4	DRY	No.2	SPF
L - J	2x4	DRY	No.2	SPF
ALL WEBS EXCEPT	2x3	DRY	No.2	SPF
M - H	2x4	DRY	No.2	SPF
K - I	2x4	DRY	No.2	SPF

DRY: SEASONED LUMBER.

PLATES (table is in inches)

JT	TYPE	PLATES	W	LEN	Y	X
A	TMVW+p	MT20	4.0	4.0	1.50	1.75
B	TMWW+t	MT20	4.0	6.0	2.75	2.00
C	TMWW-t	MT20	4.0	4.0	1.75	1.75
D	TMWW-t	MT20	4.0	4.0		
E	TMW+w	MT20	2.0	4.0		
F	TMWW-t	MT20	4.0	4.0	1.75	2.00
G	TS-t	MT20	3.0	6.0		
H	TMWW-t	MT20	4.0	4.0		
I	TMVW-t	MT20	4.0	6.0	2.00	2.50
J	BMV1+p	MT20	2.0	4.0		
K	BMWW-t	MT20	4.0	4.0	1.50	1.50
L	BS-t	MT20	3.0	6.0		
M	BBWW-h	MT20	6.0	7.0	2.25	4.25
N	BBWWW-m	MT20	6.0	7.0	3.00	3.00
O	BMWW-t	MT20	4.0	4.0	1.75	1.75
P	BBWW-l	MT20	7.0	8.0	3.00	4.00
Q	BBWW-l	MT20	5.0	6.0	1.75	4.50
R	BMV1+p	MT20	2.0	4.0		

LATERAL BRACE(S) SHOWN SHALL BE 2X4 SPF#2

DIMENSIONS, SUPPORTS AND LOADINGS SPECIFIED BY FABRICATOR TO BE VERIFIED BY BUILDING DESIGNER

BEARINGS

JT	FACTORED GROSS REACTION VERT	HORZ	MAXIMUM FACTORED GROSS REACTION DOWN	HORZ	UPLIFT	INPUT BRG IN-SX	REQRD BRG IN-SX
R	1500	0	1500	0	0	1-10	1-10
J	1500	0	1500	0	0	1-10	1-10

UNFACTORED REACTIONS

JT	1ST LCASE COMBINED	MAX./MIN. COMPONENT REACTIONS SNOW	LIVE	PERM.LIVE	WIND	DEAD	SOIL
R	1070	653 / 0	0 / 0	0 / 0	0 / 0	417 / 0	0 / 0
J	1070	653 / 0	0 / 0	0 / 0	0 / 0	417 / 0	0 / 0

BEARING MATERIAL TO BE SPF NO.2 OR BETTER AT JOINT(S) R, J

BRACING

TOP CHORD TO BE SHEATHED OR MAX. PURLIN SPACING = 4.03 FT.
MAX. UNBRACED BOTTOM CHORD LENGTH = 10.00 FT OR RIGID CEILING DIRECTLY APPLIED.

ALL PITCH BREAKS AND PERIMETER CORNER JOINTS MUST BE LATERALLY RESTRAINED.

1 LATERAL BRACE(S) AT 1/ 2 LENGTH OF A-R, I-J, B-Q, C-P, D-O, F-M, H-K.

END VERTICAL(S) MUST BE SHEATHED OR HAVE BRACES AS INDICATED IN THE MAX. UNBRACED LENGTH COLUMN OF THE TABLE BELOW

LOADING

TOTAL LOAD CASES: (4)

CHORDS

MEMB. FR-TO	MAX. FACTORED FORCE (LBS)	FACTORED VERT. LOAD (PLF) FROM	TO	LC1 CSI (LC)	MAX UNBRAC LENGTH
R- A	-1485 / 0	0.0	0.0	0.61 (1)	5.38
A- B	-252 / 0	-78.0	-78.0	0.09 (1)	6.25
B- C	-636 / 0	-78.0	-78.0	0.11 (1)	6.25
C- D	-1214 / 0	-78.0	-78.0	0.26 (1)	5.51
D- E	-1484 / 0	-78.0	-78.0	0.27 (1)	5.08
E- F	-1482 / 0	-78.0	-78.0	0.40 (1)	4.85
F- G	-1326 / 0	-78.0	-78.0	0.95 (1)	4.03
G- H	-1326 / 0	-78.0	-78.0	0.95 (1)	4.03
H- I	-1070 / 0	-78.0	-78.0	0.91 (1)	4.44
J- I	-1443 / 0	0.0	0.0	0.59 (1)	5.44
R- Q	0 / 0	-18.5	-18.5	0.01 (4)	10.00
Q- P	0 / 281	-18.5	-18.5	0.06 (1)	10.00
P- O	0 / 653	-18.5	-18.5	0.17 (4)	10.00
O- N	0 / 1214	-18.5	-18.5	0.25 (1)	10.00
N- M	0 / 1579	-18.5	-18.5	0.27 (1)	10.00
M- L	0 / 1070	-18.5	-18.5	0.45 (4)	10.00
L- K	0 / 1070	-18.5	-18.5	0.45 (4)	10.00
K- J	0 / 0	-18.5	-18.5	0.35 (4)	10.00

WEBS

MEMB. FR-TO	MAX. FACTORED FORCE (LBS)	MAX CSI (LC)
A- Q	0 / 1408	0.32 (1)
Q- B	-1508 / 0	0.86 (1)
B- P	0 / 1519	0.34 (1)
P- C	-1254 / 0	0.50 (1)
C- O	0 / 1100	0.25 (1)
O- D	-848 / 0	0.34 (1)
D- N	0 / 520	0.12 (1)
N- E	-126 / 0	0.15 (1)
N- F	0 / 637	0.14 (1)
M- F	-1084 / 0	0.62 (1)
M- H	0 / 383	0.06 (1)
K- H	-1015 / 0	0.58 (1)
K- I	0 / 1606	0.26 (1)

DESIGN CRITERIA

SPECIFIED LOADS:

TOP CH.	LL	=	21.0	PSF
	DL	=	6.0	PSF
BOT CH.	LL	=	0.0	PSF
	DL	=	7.4	PSF
TOTAL LOAD		=	34.4	PSF

SPACING = 24.0 IN. C/C

LOADING IN FLAT SECTION BASED ON A SLOPE OF 2.00/12 MINIMUM

THIS TRUSS IS DESIGNED FOR RESIDENTIAL OR SMALL BUILDING REQUIREMENTS OF PART 9, NBCC 2015

THIS DESIGN COMPLIES WITH:
- PART 9 OF BCBC 2018 , ABC 2019
- PART 9 OF OBC 2012 (2019 AMENDMENT)
- CSA 086-14
- TPIC 2014

(55 % OF 23.0 P.S.F. G.S.L. PLUS 8.4 P.S.F. RAIN LOAD) EQUALS 21.0 P.S.F. SPECIFIED ROOF LIVE LOAD

ALLOWABLE DEFL.(LL)= L/360 (1.04")
CALCULATED VERT. DEFL.(LL) = L/ 999 (0.11")
ALLOWABLE DEFL.(TL)= L/360 (1.04")
CALCULATED VERT. DEFL.(TL) = L/ 999 (0.24")

CSI: TC=0.95/1.00 (F-H:1) , BC=0.45/1.00 (K-M:4) , WB=0.86/1.00 (B-Q:1) , SSI=0.30/1.00 (H-I:1)

DOL LUMBER=1.00 NAIL=1.00 LS BEND=1.10 COMP=1.10 SHEAR=1.10 TENS= 1.10

COMPANION LIVE LOAD FACTOR = 1.00

TRUSS PLATE MANUFACTURER IS NOT RESPONSIBLE FOR QUALITY CONTROL IN THE TRUSS MANUFACTURING PLANT .

NAIL VALUES

PLATE	GRIP(DRY) (PSI) MAX	MIN	SHEAR (PLI) MAX	MIN	SECTION (PLI) MAX	MIN
MT20	650	371	1747	788	1987	1873

PLATE PLACEMENT TOL. = 0.250 inches

PLATE ROTATION TOL. = 5.0 Deg.

JSI GRIP= 0.90 (Q) (INPUT = 0.90)
JSI METAL= 0.36 (K) (INPUT = 1.00)

JOB NAME	TRUSS NAME	QUANTITY	PLY	JOB DESC.		DRWG NO.
336323	H25T		1	TRUSS DESC.	JT 45147	E21104350

Alpa Roof Truss, Maple

Version 8.420 S Jan 21 2021 MiTek Industries, Inc. Thu Oct 14 14:36:59 2021 Page 1

ID:hd511hZTz_bdeQoS817GKByhVxV-?8WqF_kGdF?iW4EqKXQaDj4de0N2PxNqLvw?KuyTUEo

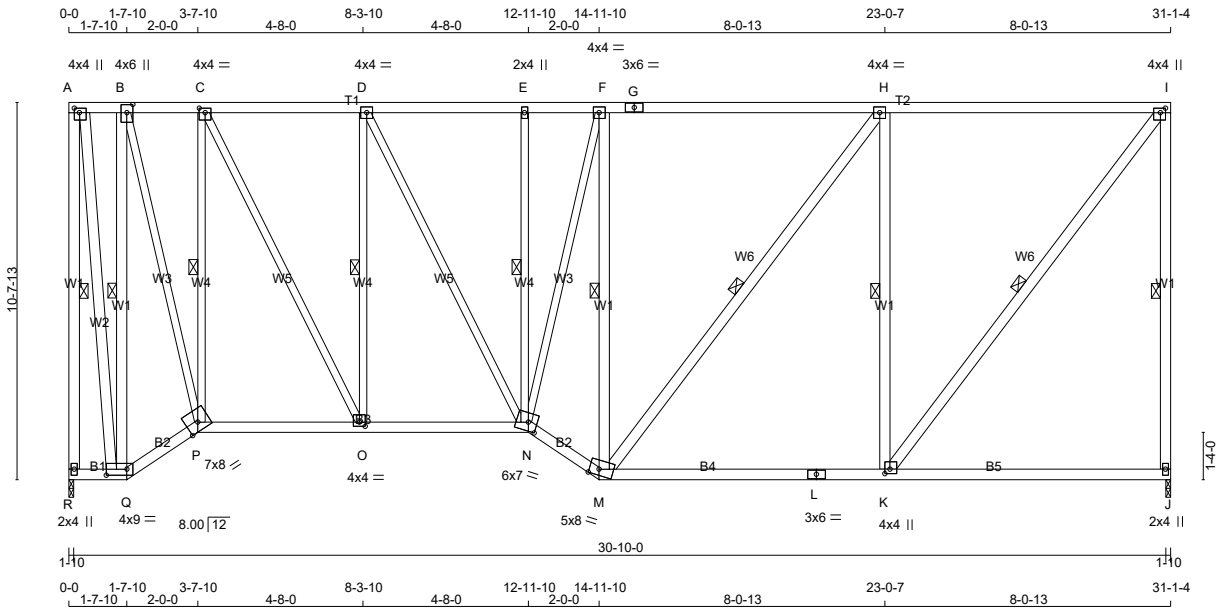

TOTAL WEIGHT = 222 lb

LUMBER

N. L. G. A. RULES

CHORDS	SIZE		LUMBER	DESCR.
R - A	2x4	DRY	No.2	SPF
A - G	2x4	DRY	No.2	SPF
G - I	2x4	DRY	No.2	SPF
J - I	2x4	DRY	No.2	SPF
R - Q	2x4	DRY	No.2	SPF
Q - P	2x4	DRY	No.2	SPF
P - N	2x4	DRY	No.2	SPF
N - M	2x4	DRY	No.2	SPF
M - L	2x4	DRY	No.2	SPF
L - J	2x4	DRY	No.2	SPF
ALL WEBS EXCEPT	2x3	DRY	No.2	SPF
A - Q	2x4	DRY	No.2	SPF
Q - B	2x4	DRY	No.2	SPF
M - F	2x4	DRY	No.2	SPF
M - H	2x4	DRY	No.2	SPF
K - H	2x4	DRY	No.2	SPF
K - I	2x4	DRY	No.2	SPF

DRY: SEASONED LUMBER.

PLATES (table is in inches)

JT	TYPE	PLATES	W	LEN	Y	X
A	TMVW+p	MT20	4.0	4.0	1.50	1.75
B	TMWW+t	MT20	4.0	6.0	2.75	2.00
C	TMWW-t	MT20	4.0	4.0	1.50	2.00
D, F, H						
D	TMWW-t	MT20	4.0	4.0		
E	TMW+w	MT20	2.0	4.0		
G	TS-t	MT20	3.0	6.0		
I	TMVW+p	MT20	4.0	4.0	1.50	1.75
J	BMV1+p	MT20	2.0	4.0		
K	BMWW+t	MT20	4.0	4.0	1.50	1.75
L	BS-t	MT20	3.0	6.0		
M	BBWW-m	MT20	5.0	8.0	2.00	3.25
N	BBWWW-m	MT20	6.0	7.0	3.00	3.00
O	BMWW-t	MT20	4.0	4.0	1.50	2.00
P	BBWW-h	MT20	7.0	8.0	Edge	
Q	BBWW-l	MT20	4.0	9.0	2.00	7.00
R	BMV1+p	MT20	2.0	4.0		

Edge - INDICATES REFERENCE CORNER OF PLATE TOUCHES EDGE OF CHORD.

LATERAL BRACE(S) SHOWN SHALL BE 2X4 SPF#2

DIMENSIONS, SUPPORTS AND LOADINGS SPECIFIED BY FABRICATOR TO BE VERIFIED BY BUILDING DESIGNER

BEARINGS

JT	FACTORED GROSS REACTION VERT	HORZ	MAXIMUM FACTORED GROSS REACTION DOWN	HORZ	UPLIFT	INPUT BRG IN-SX	REQRD BRG IN-SX
R	1500	0	1500	0	0	1-10	1-10
J	1500	0	1500	0	0	1-10	1-10

UNFACTORED REACTIONS

JT	1ST LCASE COMBINED	MAX./MIN. COMPONENT REACTIONS SNOW	LIVE	PERM.LIVE	WIND	DEAD	SOIL
R	1070	653 / 0	0 / 0	0 / 0	0 / 0	417 / 0	0 / 0
J	1070	653 / 0	0 / 0	0 / 0	0 / 0	417 / 0	0 / 0

BEARING MATERIAL TO BE SPF NO.2 OR BETTER AT JOINT(S) R, J

BRACING

TOP CHORD TO BE SHEATHED OR MAX. PURLIN SPACING = 4.30 FT.
MAX. UNBRACED BOTTOM CHORD LENGTH = 10.00 FT OR RIGID CEILING DIRECTLY APPLIED.

ALL PITCH BREAKS AND PERIMETER CORNER JOINTS MUST BE LATERALLY RESTRAINED.

1 LATERAL BRACE(S) AT 1/ 2 LENGTH OF A-R, I-J, B-Q, C-P, D-O, E-N, F-M, H-M, H-K, I-K.

END VERTICAL(S) MUST BE SHEATHED OR HAVE BRACES AS INDICATED IN THE MAX. UNBRACED LENGTH COLUMN OF THE TABLE BELOW

LOADING

TOTAL LOAD CASES: (4)

CHORDS

MEMB. FR-TO	MAX. FACTORED FORCE (LBS)	FACTORED VERT. LOAD LC1 (PLF) FROM	TO	MAX CSI (LC)	MAX. UNBRAC LENGTH
R- A	-1485 / 0	0.0	0.0	0.85 (1)	5.38
A- B	-223 / 0	-78.0	-78.0	0.05 (1)	6.25
B- C	-541 / 0	-78.0	-78.0	0.10 (1)	6.25
C- D	-1035 / 0	-78.0	-78.0	0.25 (1)	5.85
D- E	-1264 / 0	-78.0	-78.0	0.26 (1)	5.41
E- F	-1263 / 0	-78.0	-78.0	0.39 (1)	5.19
F- G	-1156 / 0	-78.0	-78.0	0.91 (1)	4.30
G- H	-1156 / 0	-78.0	-78.0	0.91 (1)	4.30
H- I	-932 / 0	-78.0	-78.0	0.88 (1)	4.72
J- I	-1443 / 0	0.0	0.0	0.82 (1)	5.44
R- Q	0 / 0	-18.5	-18.5	0.01 (4)	10.00
Q- P	0 / 242	-18.5	-18.5	0.05 (1)	10.00
P- O	0 / 555	-18.5	-18.5	0.16 (4)	10.00
O- N	0 / 1035	-18.5	-18.5	0.22 (1)	10.00
N- M	0 / 1373	-18.5	-18.5	0.23 (1)	10.00
M- L	0 / 933	-18.5	-18.5	0.44 (4)	10.00
L- K	0 / 933	-18.5	-18.5	0.44 (4)	10.00
K- J	0 / 0	-18.5	-18.5	0.35 (4)	10.00

WEBS

MEMB. FR-TO	MAX. FACTORED FORCE (LBS)	MAX CSI (LC)
A- Q	0 / 1428	0.23 (1)
Q- B	-1511 / 0	0.86 (1)
B- P	0 / 1464	0.33 (1)
P- C	-1235 / 0	0.70 (1)
C- O	0 / 1063	0.24 (1)
O- D	-850 / 0	0.48 (1)
D- N	0 / 499	0.11 (1)
N- E	-131 / 0	0.07 (1)
N- F	0 / 519	0.12 (1)
M- F	-971 / 0	0.55 (1)
M- H	0 / 364	0.06 (1)
K- H	-1014 / 0	0.58 (1)
K- I	0 / 1518	0.24 (1)

DESIGN CRITERIA

SPECIFIED LOADS:

TOP	CH.	LL	=	21.0	PSF
		DL	=	6.0	PSF
BOT	CH.	LL	=	0.0	PSF
		DL	=	7.4	PSF
TOTAL	LOAD		=	34.4	PSF

SPACING = 24.0 IN. C/C

LOADING IN FLAT SECTION BASED ON A SLOPE OF 2.00/12 MINIMUM

THIS TRUSS IS DESIGNED FOR RESIDENTIAL OR SMALL BUILDING REQUIREMENTS OF PART 9, NBCC 2015

THIS DESIGN COMPLIES WITH:
- PART 9 OF BCBC 2018 , ABC 2019
- PART 9 OF OBC 2012 (2019 AMENDMENT)
- CSA 086-14
- TPIC 2014

(55 % OF 23.0 P.S.F. G.S.L. PLUS 8.4 P.S.F. RAIN LOAD) EQUALS 21.0 P.S.F. SPECIFIED ROOF LIVE LOAD

ALLOWABLE DEFL.(LL)= L/360 (1.04")
CALCULATED VERT. DEFL.(LL) = L/ 999 (0.10")
ALLOWABLE DEFL.(TL)= L/360 (1.04")
CALCULATED VERT. DEFL.(TL) = L/ 999 (0.23")

CSI: TC=0.91/1.00 (F-H:1) , BC=0.44/1.00 (K-M:4) , WB=0.86/1.00 (B-Q:1) , SSI=0.30/1.00 (H-I:1)

DOL LUMBER=1.00 NAIL=1.00 LS BEND=1.10 COMP=1.10 SHEAR=1.10 TENS= 1.10

COMPANION LIVE LOAD FACTOR = 1.00

TRUSS PLATE MANUFACTURER IS NOT RESPONSIBLE FOR QUALITY CONTROL IN THE TRUSS MANUFACTURING PLANT .

NAIL VALUES

PLATE	GRIP(DRY) (PSI) MAX	MIN	SHEAR (PLI) MAX	MIN	SECTION (PLI) MAX	MIN
MT20	650	371	1747	788	1987	1873

PLATE PLACEMENT TOL. = 0.250 inches

PLATE ROTATION TOL. = 5.0 Deg.

JSI GRIP= 0.90 (K) (INPUT = 0.90)
JSI METAL= 0.41 (I) (INPUT = 1.00)

JOB NAME	TRUSS NAME	QUANTITY	PLY	JOB DESC.		DRWG NO.
336323	H27P		1	TRUSS DESC.	JT 45147	E21104351

Alpha Roof Truss, Maple

Version 8.420 S Jan 21 2021 MiTek Industries, Inc. Thu Oct 14 14:37:00 2021 Page 1

ID:hd511hZTz_bdeQoS817GKByhVxV-TL3CSKkuOZ7Z8Ep0uFxqmwcshQk_8Zi_aZfZsLyTUEn

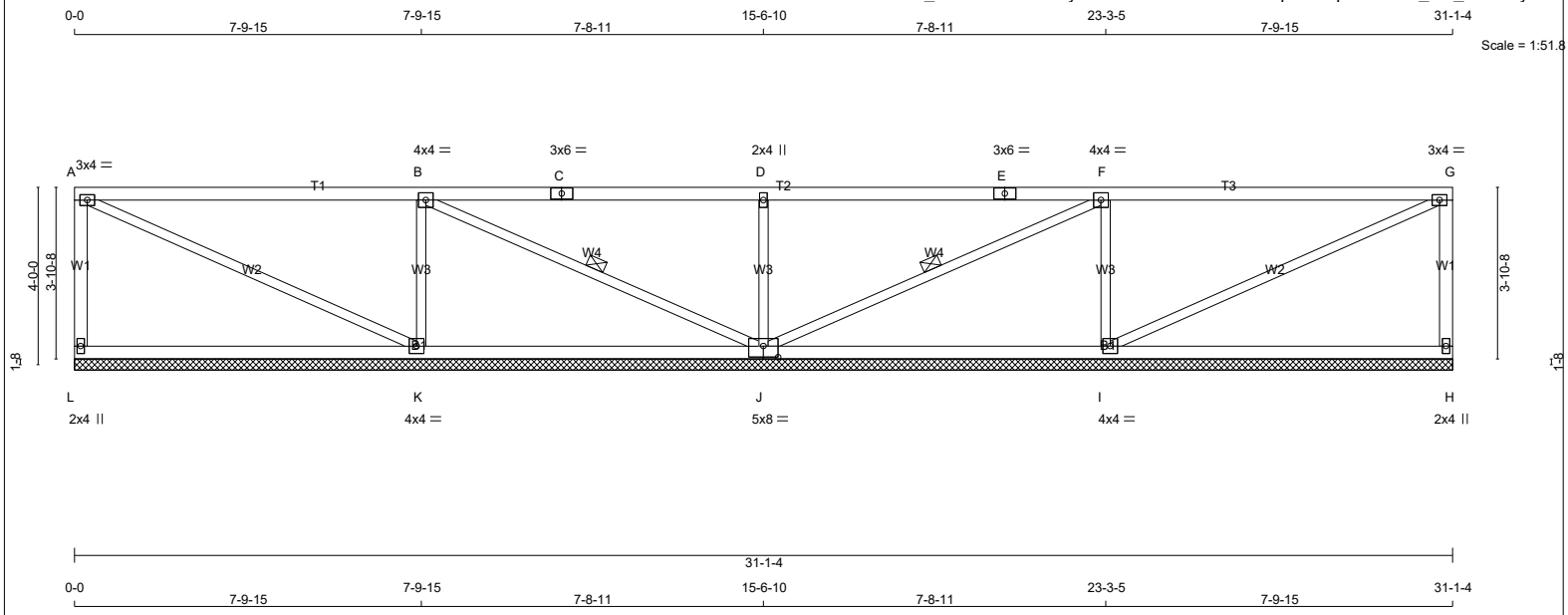

TOTAL WEIGHT = 2 X 113 = 226 lb

[M]

LUMBER

N. L. G. A. RULES

CHORDS	SIZE		LUMBER	DESCR.
L - A	2x4	DRY	No.2	SPF
A - C	2x4	DRY	No.2	SPF
C - E	2x4	DRY	No.2	SPF
E - G	2x4	DRY	No.2	SPF
H - G	2x4	DRY	No.2	SPF
L - J	2x4	DRY	No.2	SPF
J - H	2x4	DRY	No.2	SPF
ALL WEBS	2x3	DRY	No.2	SPF

DRY: SEASONED LUMBER.

PLATES (table is in inches)

JT	TYPE	PLATES	W	LEN	Y	X
A	TMVW-t	MT20	3.0	4.0		
B	TMWW-t	MT20	4.0	4.0		
C	TS-t	MT20	3.0	6.0		
D	TMW+w	MT20	2.0	4.0		
E	TS-t	MT20	3.0	6.0		
F	TMWW-t	MT20	4.0	4.0		
G	TMVW-t	MT20	3.0	4.0		
H	BMV1+p	MT20	2.0	4.0		
I	BMWW1-t	MT20	4.0	4.0		
J	BSWWW1-l	MT20	5.0	8.0	3.00	4.00
K	BMWW1-t	MT20	4.0	4.0		
L	BMV1+p	MT20	2.0	4.0		

LATERAL BRACE(S) SHOWN SHALL BE 2X4 SPF#2

DIMENSIONS, SUPPORTS AND LOADINGS SPECIFIED BY FABRICATOR TO BE VERIFIED BY BUILDING DESIGNER

BEARINGS

JT	FACTORED GROSS REACTION VERT	HORZ	MAXIMUM FACTORED GROSS REACTION DOWN	HORZ	UPLIFT	INPUT BRG IN-SX	REQRD BRG IN-SX
L	297	0	297	0	0	31-1-4 (15-6-10)	1-8
H	297	0	297	0	0	31-1-4 (15-6-10)	1-8
K	840	0	840	0	0	31-1-4 (15-6-10)	1-8
J	728	0	728	0	0	31-1-4 (15-6-10)	1-8
I	840	0	840	0	0	31-1-4 (15-6-10)	1-8

VALUE IN PARENTHESIS INDICATES EFFECTIVE BEARING LENGTH

UNFACTORED REACTIONS

JT	1ST LCASE COMBINED	MAX./MIN. COMPONENT REACTIONS SNOW	LIVE	PERM.LIVE	WIND	DEAD	SOIL
L	211	130 / 0	0 / 0	0 / 0	0 / 0	81 / 0	0 / 0
H	211	130 / 0	0 / 0	0 / 0	0 / 0	81 / 0	0 / 0
K	601	355 / 0	0 / 0	0 / 0	0 / 0	245 / 0	0 / 0
J	516	335 / 0	0 / 0	0 / 0	0 / 0	181 / 0	0 / 0
I	601	355 / 0	0 / 0	0 / 0	0 / 0	245 / 0	0 / 0

BEARING MATERIAL TO BE SPF NO.2 OR BETTER AT JOINT(S) L, H, K, J, I

BRACING

TOP CHORD TO BE SHEATHED OR MAX. PURLIN SPACING = 10.00 FT.
MAX. UNBRACED BOTTOM CHORD LENGTH = 10.00 FT OR RIGID CEILING DIRECTLY APPLIED.

ALL PITCH BREAKS AND PERIMETER CORNER JOINTS MUST BE LATERALLY RESTRAINED.

1 LATERAL BRACE(S) AT 1/ 2 LENGTH OF B-J, F-J.

END VERTICAL(S) MUST BE SHEATHED OR HAVE BRACES AS INDICATED IN THE MAX. UNBRACED LENGTH COLUMN OF THE TABLE BELOW

LOADING

TOTAL LOAD CASES: (4)

CHORDS

MEMB. FR-TO	MAX. FACTORED FORCE (LBS)	FACTORED VERT. LOAD (PLF) FROM	TO	LC1	MAX CSI (LC)	MAX. UNBRAC LENGTH
L- A	-242 / 0	0.0	0.0	0.06 (1)	7.81	
A- B	-4 / 0	-78.0	-78.0	0.69 (1)	10.00	
B- C	0 / 67	-78.0	-78.0	0.70 (1)	10.00	
C- D	0 / 67	-78.0	-78.0	0.70 (1)	10.00	
D- E	0 / 67	-78.0	-78.0	0.70 (1)	10.00	
E- F	0 / 67	-78.0	-78.0	0.70 (1)	10.00	
F- G	-4 / 0	-78.0	-78.0	0.69 (1)	10.00	
H- G	-242 / 0	0.0	0.0	0.06 (1)	7.81	
L- K	0 / 0	-18.5	-18.5	0.33 (4)	10.00	
K- J	0 / 4	-18.5	-18.5	0.33 (4)	10.00	
J- I	0 / 4	-18.5	-18.5	0.33 (4)	10.00	
I- H	0 / 0	-18.5	-18.5	0.33 (4)	10.00	

WEBS

MEMB. FR-TO	MAX. FACTORED FORCE (LBS)	MAX CSI (LC)
A- K	0 / 4	0.00 (1)
K- B	-662 / 0	0.15 (1)
B- J	-78 / 0	0.04 (1)
J- D	-556 / 0	0.13 (1)
J- F	-78 / 0	0.04 (1)
I- F	-662 / 0	0.15 (1)
I- G	0 / 4	0.00 (1)

DESIGN CRITERIA

SPECIFIED LOADS:

TOP CH.	LL	=	21.0	PSF
	DL	=	6.0	PSF
BOT CH.	LL	=	0.0	PSF
	DL	=	7.4	PSF
TOTAL LOAD		=	34.4	PSF

SPACING = 24.0 IN. C/C

LOADING IN FLAT SECTION BASED ON A SLOPE OF 2.00/12 MINIMUM

THIS TRUSS IS DESIGNED FOR RESIDENTIAL OR SMALL BUILDING REQUIREMENTS OF PART 9, NBCC 2015

THIS DESIGN COMPLIES WITH:
- PART 9 OF BCBC 2018 , ABC 2019
- PART 9 OF OBC 2012 (2019 AMENDMENT)
- CSA 086-14
- TPIC 2014

(55 % OF 23.0 P.S.F. G.S.L. PLUS 8.4 P.S.F. RAIN LOAD) EQUALS 21.0 P.S.F. SPECIFIED ROOF LIVE LOAD

CSI: TC=0.70/1.00 (B-D:1) , BC=0.33/1.00 (K-L:4) , WB=0.15/1.00 (B-K:1) , SSI=0.29/1.00 (A-B:1)

DOL LUMBER=1.00 NAIL=1.00 LS BEND=1.10 COMP=1.10 SHEAR=1.10 TENS= 1.10

COMPANION LIVE LOAD FACTOR = 1.00

TRUSS PLATE MANUFACTURER IS NOT RESPONSIBLE FOR QUALITY CONTROL IN THE TRUSS MANUFACTURING PLANT .

NAIL VALUES

PLATE	GRIP(DRY) (PSI) MAX	MIN	SHEAR (PLI) MAX	MIN	SECTION (PLI) MAX	MIN
MT20	650	371	1747	788	1987	1873

PLATE PLACEMENT TOL. = 0.250 inches

PLATE ROTATION TOL. = 5.0 Deg.

JSI GRIP= 0.79 (G) (INPUT = 0.90)
JSI METAL= 0.36 (C) (INPUT = 1.00)

JOB NAME	TRUSS NAME	QUANTITY	PLY	JOB DESC.	DRWG NO.
336323	H31		1	TRUSS DESC. JT 45147	E21104352

Alpha Roof Truss, Maple

Version 8.420 S Jan 21 2021 MiTek Industries, Inc. Thu Oct 14 14:37:02 2021 Page 1

ID:hd511hZTz bdeQoS817GKByhVxV-QjBzt0m8wANHNYzO?gzIrLiBoEL5cH?H1t8fxDyTUEl

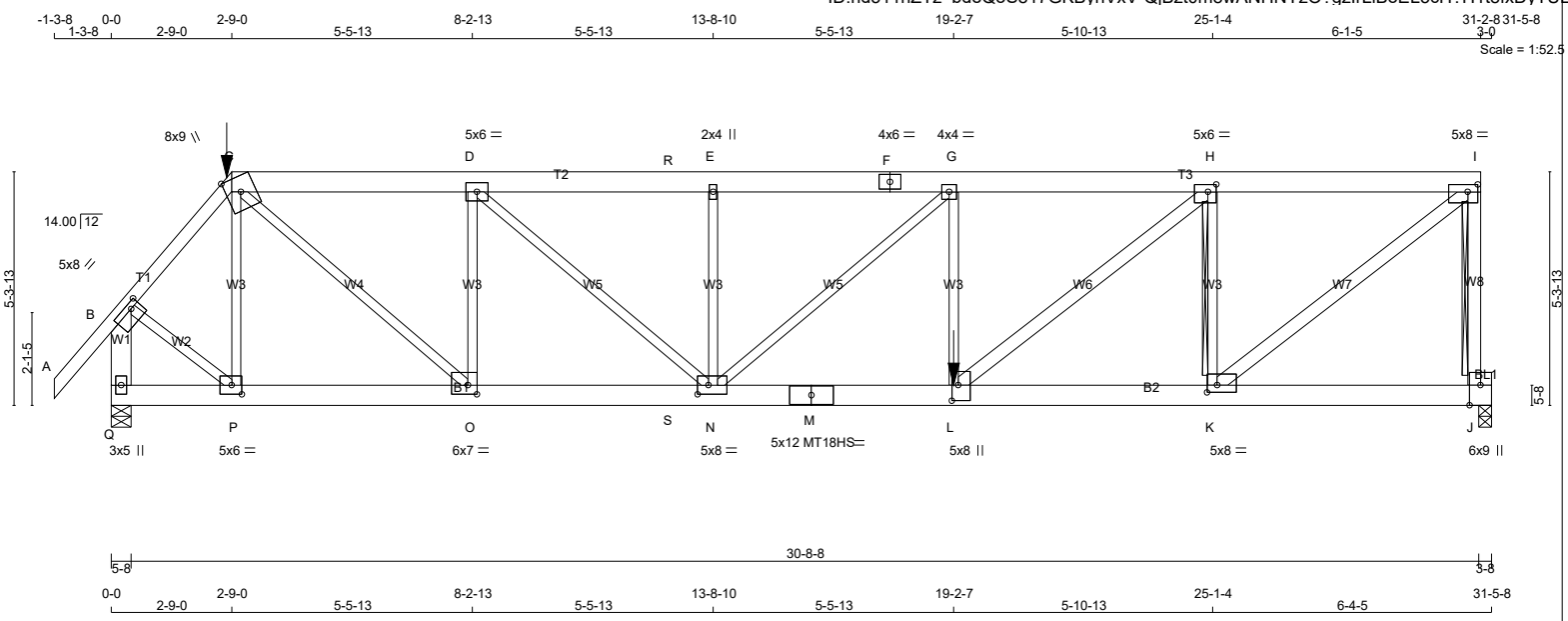

TOTAL WEIGHT = 177 lb

LUMBER

N. L. G. A. RULES

CHORDS	SIZE		LUMBER	DESCR.
A - C	2x4	DRY	No.2	SPF
C - F	2x6	DRY	No.2	SPF
F - I	2x6	DRY	No.2	SPF
J - I	2x4	DRY	No.2	SPF
Q - B	2x6	DRY	No.2	SPF
Q - M	2x6	DRY	1650F 1.5E	SPF
M - J	2x6	DRY	1650F 1.5E	SPF
BEARING BLOCKS				
BL1	2x4	DRY	No.2	SPF
ALL WEBS EXCEPT	2x3	DRY	No.2	SPF
L - H	2x4	DRY	No.2	SPF
K - I	2x4	DRY	No.2	SPF

DRY: SEASONED LUMBER.

PLATES (table is in inches)

JT	TYPE	PLATES	W	LEN	Y	X
B	TMVW-t	MT20	5.0	8.0	1.50	2.50
C	TTWW+m	MT20	8.0	9.0	Edge	
D	TMWW-t	MT20	5.0	6.0		
E	TMW+w	MT20	2.0	4.0		
F	TS-t	MT20	4.0	6.0		
G	TMWW-t	MT20	4.0	4.0		
H	TMWW-t	MT20	5.0	6.0	2.00	2.25
I	TMVW-t	MT20	5.0	8.0	2.00	2.75
J	BMVK1+t	MT20	6.0	9.0	Edge	3.00
K	BMWW-t	MT20	5.0	8.0	2.00	2.75
L	BMWW+t	MT20	5.0	8.0	4.25	1.75
M	BS-t	MT18HS	5.0	12.0		
N	BMWWW-t	MT20	5.0	8.0	2.50	3.00
O	BMWW-t	MT20	6.0	7.0	2.50	2.50
P	BMWW-t	MT20	5.0	6.0	2.50	2.75
Q	BMV1+p	MT20	3.0	5.0		

Edge - INDICATES REFERENCE CORNER OF PLATE TOUCHES EDGE OF CHORD.

LATERAL BRACE(S) SHOWN SHALL BE 2X4 SPF#2

DIMENSIONS, SUPPORTS AND LOADINGS SPECIFIED BY FABRICATOR TO BE VERIFIED BY BUILDING DESIGNER

BEARINGS

JT	FACTORED GROSS REACTION VERT	HORZ	MAXIMUM FACTORED GROSS REACTION DOWN	HORZ	UPLIFT	INPUT BRG IN-SX	REQRD BRG IN-SX
J	2995	0	2995	0	0	3-8	3-8
Q	3389	0	3389	0	0	5-8	5-8

UNFACTORED REACTIONS

JT	1ST LCASE COMBINED	MAX./MIN. COMPONENT REACTIONS SNOW	LIVE	PERM.LIVE	WIND	DEAD	SOIL
J	2135	1305 / 0	0 / 0	0 / 0	0 / 0	830 / 0	0 / 0
Q	2415	1480 / 0	0 / 0	0 / 0	0 / 0	935 / 0	0 / 0

BEARING MATERIAL TO BE SPF NO.2 OR BETTER AT JOINT(S) J, Q

BEARING SIZE FACTOR = 1.15 AT JNT(S) J (BASED ON SUPPORT DEPTH = 1-8)

BRACING

TOP CHORD TO BE SHEATHED OR MAX. PURLIN SPACING = 3.12 FT.

MAX. UNBRACED BOTTOM CHORD LENGTH = 6.25 FT OR RIGID CEILING DIRECTLY APPLIED.

ALL PITCH BREAKS AND PERIMETER CORNER JOINTS MUST BE LATERALLY RESTRAINED.

2x3 DRY SPF No.2 T-BRACE AT I-J, H-K

FASTEN T AND I-BRACES TO NARROW EDGE OF WEB WITH ONE ROW PER PLY OF 3" COMMON WIRE NAILS @ 6" O.C. WITH 3" MINIMUM END DISTANCE. BRACE MUST COVER 90% OF WEB LENGTH.

END VERTICAL(S) MUST BE SHEATHED OR HAVE BRACES AS INDICATED IN THE MAX. UNBRACED LENGTH COLUMN OF THE TABLE BELOW

LOADING

TOTAL LOAD CASES: (4)

CHORDS

MEMB. FR-TO	MAX. FACTORED FORCE (LBS)	FACTORED VERT. LOAD (PLF) FROM	TO	LC1 CSI (LC)	MAX UNBRAC LENGTH
A- B	0 / 42	-78.0	-78.0	0.12 (1)	10.00
B- C	-2791 / 0	-78.0	-78.0	0.24 (1)	3.94
C- D	-4434 / 0	-153.5	-153.5	0.48 (1)	3.67
D- R	-5830 / 0	-153.5	-153.5	0.59 (1)	3.12
R- E	-5830 / 0	-78.0	-78.0	0.59 (1)	3.12
E- F	-5830 / 0	-78.0	-78.0	0.39 (1)	3.37
F- G	-5830 / 0	-78.0	-78.0	0.39 (1)	3.37
G- H	-5924 / 0	-78.0	-78.0	0.47 (1)	3.27
H- I	-3361 / 0	-78.0	-78.0	0.29 (1)	4.38
J- I	-2941 / 0	0.0	0.0	0.73 (1)	6.55
Q- B	-3389 / 0	0.0	0.0	0.28 (1)	5.72
Q- P	0 / 0	-36.4	-36.4	0.08 (4)	10.00
P- O	0 / 1800	-36.4	-36.4	0.22 (1)	10.00
O- S	0 / 4434	-36.4	-36.4	0.46 (1)	10.00
S- N	0 / 4434	-136.1	-136.1	0.46 (1)	10.00
N- M	0 / 5924	-136.1	-136.1	0.67 (1)	10.00
M- L	0 / 5924	-136.1	-136.1	0.67 (1)	10.00
L- K	0 / 3361	-18.5	-18.5	0.32 (1)	10.00
K- J	-88 / 0	-18.5	-18.5	0.05 (4)	6.25

WEBS

MEMB. FR-TO	MAX. FACTORED FORCE (LBS)	MAX CSI (LC)
P- C	-822 / 0	0.31 (1)
C- O	0 / 3521	0.87 (1)
O- D	-2197 / 0	0.83 (1)
D- N	0 / 1865	0.46 (1)
N- E	-538 / 0	0.20 (1)
N- G	-125 / 0	0.13 (1)
L- G	-317 / 0	0.12 (1)
L- H	0 / 3321	0.59 (1)
K- H	-2650 / 0	0.86 (1)
K- I	0 / 4408	0.78 (1)
B- P	0 / 2101	0.52 (1)

FACTORED CONCENTRATED LOADS (LBS)

JT	LOC.	LC1	MAX-	MAX+	FACE	DIR.	TYPE	HEEL	CONN.
C	2-9-0	-156	-156	---	FRONT	VERT	TOTAL	---	C1
L	19-2-7	-1368	-1368	---	FRONT	VERT	TOTAL	---	C1

CONNECTION REQUIREMENTS

1) **C1:** A SUITABLE HANGER/MECHANICAL CONNECTION IS REQUIRED.

[M]

DESIGN CRITERIA

*** SPECIAL LOADS ANALYSIS ***
GEOMETRY AND/OR BASIC LOADS CHANGED BY USER.
LOADS WERE DERIVED FROM USER INPUT
NO FURTHER MODIFICATIONS WERE MADE

SPECIFIED LOADS:

TOP CH.	LL	=	21.0	PSF
	DL	=	6.0	PSF
BOT CH.	LL	=	0.0	PSF
	DL	=	7.4	PSF
TOTAL LOAD		=	34.4	PSF

SPACING = 24.0 IN. C/C

LOADING IN FLAT SECTION BASED ON A SLOPE OF 2.00/12 MINIMUM

GIRDER TYPE: CPrimeHip
LEFT SETBACK = 2-9-0
RIGHT SETBACK = 0-0
END SETBACK = 5-10-8
END WALL WIDTH = 0-0
CORNER FRAMING TYPE: CONVENTIONAL
END JACK TYPE: CONVENTIONAL
APPLIED TO FRONT SIDE
- ADDT'L LOADS BASED ON 55 % OF GSL.
LOADS APPLIED TO FIRST 12-9-0 OF SPAN MEASURED FROM THE LEFT.

GIRDER TYPE: CStdGirder
START DISTANCE = 12-9-0
START SPAN CARRIED = 6-10-8
END DISTANCE = 19-2-7
END SPAN CARRIED = 6-10-8
END WALL WIDTH = 0-0
APPLIED TO FRONT SIDE OF BOTTOM CHORD.
- ADDT'L LOADS BASED ON 55 % OF GSL.

*** NON STANDARD GIRDER ***
ADDT'L USER-DEFINED LOADS APPLIED TO ALL LOAD CASES.

THIS TRUSS IS DESIGNED FOR RESIDENTIAL OR SMALL BUILDING REQUIREMENTS OF PART 9, NBCC 2015

THIS DESIGN COMPLIES WITH:
- PART 9 OF BCBC 2018 , ABC 2019
- PART 9 OF OBC 2012 (2019 AMENDMENT)
- CSA 086-14
- TPIC 2014

(55 % OF 23.0 P.S.F. G.S.L. PLUS 8.4 P.S.F. RAIN LOAD) EQUALS 21.0 P.S.F. SPECIFIED ROOF LIVE LOAD

ALLOWABLE DEFL.(LL)= L/360 (1.04")
CALCULATED VERT. DEFL.(LL) = L/ 999 (0.22")
ALLOWABLE DEFL.(TL)= L/360 (1.04")
CALCULATED VERT. DEFL.(TL) = L/ 849 (0.44")

CSI: TC=0.73/1.00 (I-J:1) , BC=0.67/1.00 (L-N:1) , WB=0.87/1.00 (C-O:1) , SSI=0.33/1.00 (C-D:1)

DOL LUMBER=1.00 NAIL=1.00 LS BEND=1.00 COMP=1.00 SHEAR=1.00 TENS= 1.00

COMPANION LIVE LOAD FACTOR = 1.00

CONTINUED ON PAGE 2

JOB NAME	TRUSS NAME	QUANTITY	PLY	JOB DESC.		DRWG NO.
336323	H37P		1	TRUSS DESC.	JT 45147	E21104363

Alpa Roof Truss, Maple

Version 8.420 S Jan 21 2021 MiTek Industries, Inc. Thu Oct 14 14:37:16 2021 Page 1

ID:hd511hZTz bdeQoS817GKByhVxV-?Q1FpoxwdU8H3i15qcDaPIHeptEWuowLF3XPQPyTUEX

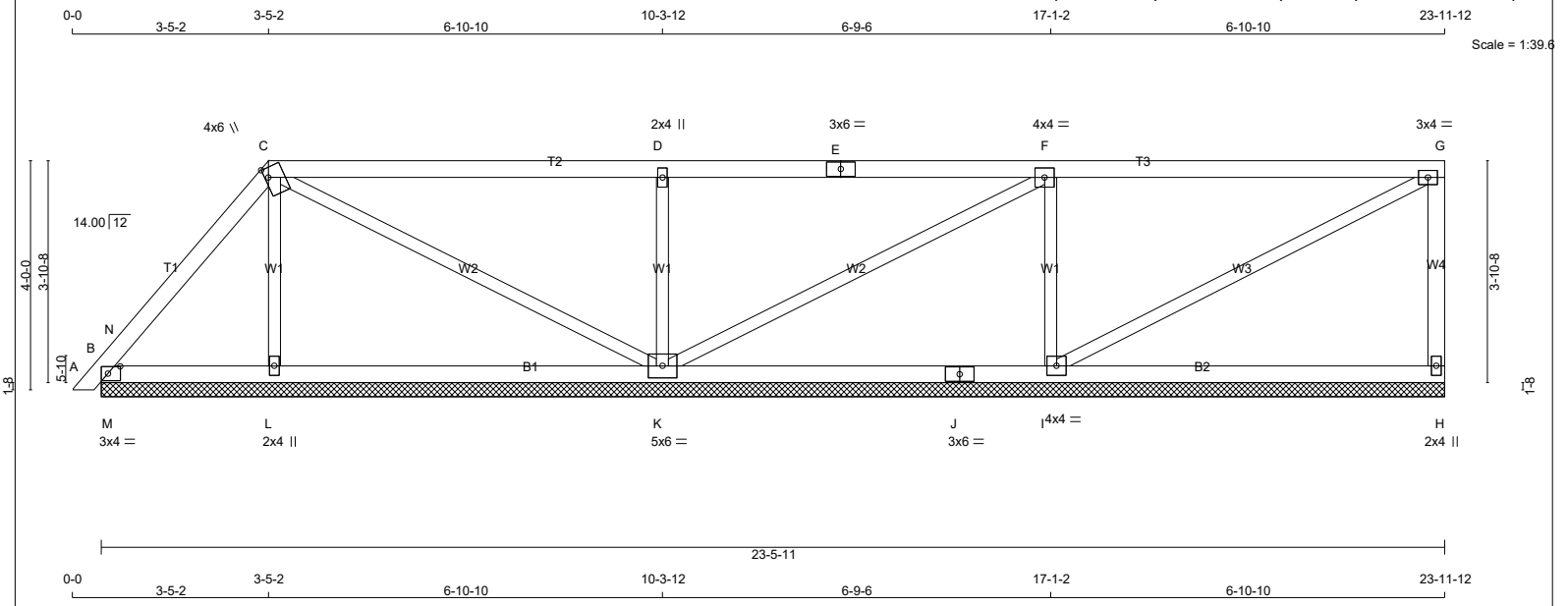

TOTAL WEIGHT = 4 X 86 = 344 lb [M]

LUMBER

N. L. G. A. RULES

CHORDS	SIZE		LUMBER	DESCR.
A - C	2x4	DRY	No.2	SPF
C - E	2x4	DRY	No.2	SPF
E - G	2x4	DRY	No.2	SPF
H - G	2x4	DRY	No.2	SPF
B - J	2x4	DRY	No.2	SPF
J - H	2x4	DRY	No.2	SPF
ALL WEBS	2x3	DRY	No.2	SPF

DRY: SEASONED LUMBER.

PLATES (table is in inches)

JT	TYPE	PLATES	W	LEN	Y	X
B	TMB1-l	MT20	3.0	4.0	1.50	2.50
C	TTWW+m	MT20	4.0	6.0	2.00	0.75
D	TMW+w	MT20	2.0	4.0		
E	TS-t	MT20	3.0	6.0		
F	TMWW-t	MT20	4.0	4.0		
G	TMVW-t	MT20	3.0	4.0		
H	BMV1+p	MT20	2.0	4.0		
I	BMWW1-t	MT20	4.0	4.0		
J	BS-t	MT20	3.0	6.0		
K	BMWWW1-t	MT20	5.0	6.0		
L	BMW1+w	MT20	2.0	4.0		

LATERAL BRACE(S) SHOWN SHALL BE 2X4 SPF#2

DIMENSIONS, SUPPORTS AND LOADINGS SPECIFIED BY FABRICATOR TO BE VERIFIED BY BUILDING DESIGNER

BEARINGS

JT	FACTORED GROSS REACTION VERT	HORZ	MAXIMUM FACTORED GROSS REACTION DOWN	HORZ	UPLIFT	INPUT BRG IN-SX	REQRD BRG IN-SX
H	275	0	275	0	0	23-5-11 (8-5-11)	
B	222	0	222	0	0	23-5-11 (8-5-11)	
L	330	0	330	0	0	23-5-11 (8-5-11)	
K	770	0	770	0	0	23-5-11 (8-5-11)	
I	697	0	697	0	0	23-5-11 (8-5-11)	

VALUE IN PARENTHESIS INDICATES EFFECTIVE BEARING LENGTH

UNFACTORED REACTIONS

JT	1ST LCASE COMBINED	MAX./MIN. COMPONENT REACTIONS SNOW	LIVE	PERM.LIVE	WIND	DEAD	SOIL
H	196	121 / 0	0 / 0	0 / 0	0 / 0	75 / 0	0 / 0
B	155	116 / 0	0 / 0	0 / 0	0 / 0	39 / 0	0 / 0
L	240	119 / 0	0 / 0	0 / 0	0 / 0	122 / 0	0 / 0
K	547	348 / 0	0 / 0	0 / 0	0 / 0	199 / 0	0 / 0
I	498	299 / 0	0 / 0	0 / 0	0 / 0	199 / 0	0 / 0

BEARING MATERIAL TO BE SPF NO.2 OR BETTER AT JOINT(S) H, B, L, K, I

BRACING

TOP CHORD TO BE SHEATHED OR MAX. PURLIN SPACING = 6.25 FT.
MAX. UNBRACED BOTTOM CHORD LENGTH = 10.00 FT OR RIGID CEILING DIRECTLY APPLIED.

ALL PITCH BREAKS AND PERIMETER CORNER JOINTS MUST BE LATERALLY RESTRAINED.

LOADING

TOTAL LOAD CASES: (4)

CHORDS

MEMB. FR-TO	MAX. FACTORED FORCE (LBS)	FACTORED VERT. LOAD LC1 (PLF) FROM	TO	MAX CSI (LC)	MAX. UNBRAC LENGTH
A- B	0 / 10	-78.0	-78.0	0.01 (1)	10.00
B- N	0 / 77	-78.0	-78.0	0.07 (1)	10.00
N- C	-102 / 0	-78.0	-78.0	0.08 (1)	6.25
C- D	0 / 25	-78.0	-78.0	0.50 (1)	10.00
D- E	0 / 24	-78.0	-78.0	0.50 (1)	10.00
E- F	0 / 24	-78.0	-78.0	0.50 (1)	10.00
F- G	-18 / 0	-78.0	-78.0	0.50 (1)	6.25
H- G	-225 / 0	0.0	0.0	0.05 (1)	7.81
B- M	0 / 59	-18.5	-18.5	0.08 (1)	10.00
M- L	0 / 59	-18.5	-18.5	0.14 (4)	10.00
L- K	0 / 53	-18.5	-18.5	0.16 (4)	10.00
K- J	0 / 18	-18.5	-18.5	0.21 (4)	10.00
J- I	0 / 18	-18.5	-18.5	0.21 (4)	10.00
I- H	0 / 0	-18.5	-18.5	0.21 (4)	10.00

WEBS

MEMB. FR-TO	MAX. FACTORED FORCE (LBS)	MAX CSI (LC)
L- C	-199 / 0	0.05 (1)
C- K	-87 / 0	0.10 (1)
K- D	-586 / 0	0.14 (1)
K- F	-48 / 0	0.06 (1)
I- F	-563 / 0	0.13 (1)
I- G	0 / 20	0.00 (1)
M- N	-320 / 0	0.00 (1)

DESIGN CRITERIA

SPECIFIED LOADS:

TOP CH.	LL	=	21.0	PSF
	DL	=	6.0	PSF
BOT CH.	LL	=	0.0	PSF
	DL	=	7.4	PSF
TOTAL LOAD		=	34.4	PSF

SPACING = 24.0 IN. C/C

LOADING IN FLAT SECTION BASED ON A SLOPE OF 2.00/12 MINIMUM

THIS TRUSS IS DESIGNED FOR RESIDENTIAL OR SMALL BUILDING REQUIREMENTS OF PART 9, NBCC 2015

THIS DESIGN COMPLIES WITH:
- PART 9 OF BCBC 2018 , ABC 2019
- PART 9 OF OBC 2012 (2019 AMENDMENT)
- CSA 086-14
- TPIC 2014

(55 % OF 23.0 P.S.F. G.S.L. PLUS 8.4 P.S.F. RAIN LOAD) EQUALS 21.0 P.S.F. SPECIFIED ROOF LIVE LOAD

CSI: TC=0.50/1.00 (D-F:1) , BC=0.21/1.00 (I-K:4) , WB=0.14/1.00 (D-K:1) , SSI=0.25/1.00 (F-G:1)

DOL LUMBER=1.00 NAIL=1.00 LS BEND=1.10 COMP=1.10 SHEAR=1.10 TENS= 1.10

COMPANION LIVE LOAD FACTOR = 1.00

TRUSS PLATE MANUFACTURER IS NOT RESPONSIBLE FOR QUALITY CONTROL IN THE TRUSS MANUFACTURING PLANT .

NAIL VALUES

PLATE	GRIP(DRY) (PSI) MAX	MIN	SHEAR (PLI) MAX	MIN	SECTION (PLI) MAX	MIN
MT20	650	371	1747	788	1987	1873

PLATE PLACEMENT TOL. = 0.250 inches

PLATE ROTATION TOL. = 5.0 Deg.

JSI GRIP= 0.89 (C) (INPUT = 0.90)
JSI METAL= 0.22 (E) (INPUT = 1.00)

JOB NAME	TRUSS NAME	QUANTITY	PLY	JOB DESC.	DRWG NO.
336323	H102S		1	TRUSS DESC. JT 45147	E21104367

Alpa Roof Truss, Maple

Version 8.420 S Jan 21 2021 MiTek Industries, Inc. Thu Oct 14 14:37:21 2021 Page 1

ID:hd511hZTz_bdeQoS817GKByhVxV-MNr8sV?3R0ma9Tw2d9pl6M_U5uzlZ3U4PKFA6dyTUES

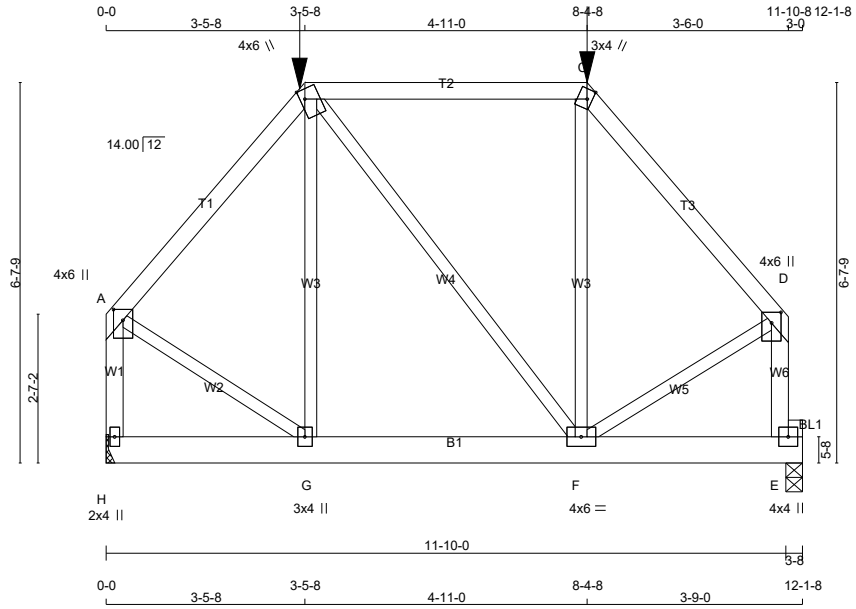

Scale = 1:40.1

TOTAL WEIGHT = 3 X 67 = 201 lb

[M]

LUMBER

N. L. G. A. RULES

CHORDS	SIZE		LUMBER	DESCR.
A - B	2x4	DRY	No.2	SPF
B - C	2x4	DRY	No.2	SPF
C - D	2x4	DRY	No.2	SPF
H - A	2x4	DRY	No.2	SPF
E - D	2x4	DRY	No.2	SPF
H - E	2x6	DRY	No.2	SPF

BEARING BLOCKS

BL1	2x4	DRY	No.2	SPF

ALL WEBS EXCEPT	2x3	DRY	No.2	SPF

DRY: SEASONED LUMBER.

PLATES (table is in inches)

JT	TYPE	PLATES	W	LEN	Y	X
A	TMVW+p	MT20	4.0	6.0	2.25	2.00
B	TTWW+m	MT20	4.0	6.0	2.00	1.00
C	TTW+m	MT20	3.0	4.0	2.00	1.00
D	TMVW+p	MT20	4.0	6.0	2.25	2.00
E	BMVK1+p	MT20	4.0	4.0		
F	BMWWW-t	MT20	4.0	6.0		
G	BMWW+t	MT20	3.0	4.0		
H	BMV1+p	MT20	2.0	4.0		

LATERAL BRACE(S) SHOWN SHALL BE 2X4 SPF#2

DIMENSIONS, SUPPORTS AND LOADINGS SPECIFIED BY FABRICATOR TO BE VERIFIED BY BUILDING DESIGNER

BEARINGS

JT	FACTORED GROSS REACTION VERT	HORZ	MAXIMUM FACTORED GROSS REACTION DOWN	HORZ	UPLIFT	INPUT BRG IN-SX	REQRD BRG IN-SX
H	814	0	814	0	0	MECHANICAL	
E	833	0	833	0	0	3-8	2-8

A SUITABLE HANGER/MECHANICAL CONNECTION IS REQUIRED AT JOINT H. MINIMUM BEARING LENGTH AT JOINT H = 1-8.

UNFACTORED REACTIONS

JT	1ST LCASE COMBINED	MAX./MIN. COMPONENT REACTIONS SNOW	LIVE	PERM.LIVE	WIND	DEAD	SOIL
H	581	352 / 0	0 / 0	0 / 0	0 / 0	228 / 0	0 / 0
E	594	363 / 0	0 / 0	0 / 0	0 / 0	231 / 0	0 / 0

BEARING MATERIAL TO BE SPF NO.2 OR BETTER AT JOINT(S) E

BRACING

TOP CHORD TO BE SHEATHED OR MAX. PURLIN SPACING = 6.25 FT.
MAX. UNBRACED BOTTOM CHORD LENGTH = 6.25 FT OR RIGID CEILING DIRECTLY APPLIED.

ALL PITCH BREAKS AND PERIMETER CORNER JOINTS MUST BE LATERALLY RESTRAINED.

LOADING

TOTAL LOAD CASES: (4)

CHORDS

MEMB. FR-TO	MAX. FACTORED FORCE (LBS)	FACTORED VERT. LOAD (PLF) FROM	TO	LC1	MAX CSI (LC)	MAX. UNBRAC LENGTH
A- B	-557 / 0	-78.0	-78.0		0.19 (1)	6.25
B- C	-354 / 0	-114.5	-114.5		0.53 (1)	6.25
C- D	-550 / 0	-78.0	-78.0		0.19 (1)	6.25
H- A	-776 / 0	0.0	0.0		0.11 (1)	7.81
E- D	-796 / 0	0.0	0.0		0.11 (1)	7.81
H- G	0 / 0	-27.2	-27.2		0.05 (4)	10.00
G- F	0 / 359	-27.2	-27.2		0.08 (4)	10.00
F- E	-55 / 0	-27.2	-27.2		0.05 (4)	6.25

WEBS

MEMB. FR-TO	MAX. FACTORED FORCE (LBS)	MAX CSI (LC)
G- B	-92 / 55	0.06 (1)
B- F	-8 / 0	0.01 (1)
F- C	-115 / 48	0.08 (1)
A- G	0 / 421	0.10 (1)
F- D	0 / 475	0.12 (1)

FACTORED CONCENTRATED LOADS (LBS)

JT	LOC.	LC1	MAX-	MAX+	FACE	DIR.	TYPE	HEEL	CONN.
B	3-5-8	-107	-107	---	FRONT	VERT	TOTAL	---	C1
C	8-4-8	-116	-116	---	FRONT	VERT	TOTAL	---	C1

DESIGN CRITERIA

SPECIFIED LOADS:

TOP CH.	LL	=	21.0	PSF
	DL	=	6.0	PSF
BOT CH.	LL	=	0.0	PSF
	DL	=	7.4	PSF
TOTAL LOAD		=	34.4	PSF

SPACING = 24.0 IN. C/C

LOADING IN FLAT SECTION BASED ON A SLOPE OF 2.00/12 MINIMUM

GIRDER TYPE: CPrimeHip
LEFT SETBACK = 3-5-8
RIGHT SETBACK = 3-9-0
END SETBACK = 3-10-8
END WALL WIDTH = 0-0
CORNER FRAMING TYPE: CONVENTIONAL
END JACK TYPE: CONVENTIONAL
APPLIED TO FRONT SIDE
- ADDT'L LOADS BASED ON 55 % OF GSL.

THIS TRUSS IS DESIGNED FOR RESIDENTIAL OR SMALL BUILDING REQUIREMENTS OF PART 9, NBCC 2015

THIS DESIGN COMPLIES WITH:
- PART 9 OF BCBC 2018 , ABC 2019
- PART 9 OF OBC 2012 (2019 AMENDMENT)
- CSA 086-14
- TPIC 2014

(55 % OF 23.0 P.S.F. G.S.L. PLUS 8.4 P.S.F. RAIN LOAD) EQUALS 21.0 P.S.F. SPECIFIED ROOF LIVE LOAD

ALLOWABLE DEFL.(LL)= L/360 (0.39")
CALCULATED VERT. DEFL.(LL) = L/ 999 (0.01")
ALLOWABLE DEFL.(TL)= L/360 (0.39")
CALCULATED VERT. DEFL.(TL) = L/ 999 (0.01")

CSI: TC=0.53/1.00 (B-C:1) , BC=0.08/1.00 (F-G:4) , WB=0.12/1.00 (D-F:1) , SSI=0.24/1.00 (B-C:1)

DOL LUMBER=1.00 NAIL=1.00 LS BEND=1.00 COMP=1.00 SHEAR=1.00 TENS= 1.00

COMPANION LIVE LOAD FACTOR = 1.00

TRUSS PLATE MANUFACTURER IS NOT RESPONSIBLE FOR QUALITY CONTROL IN THE TRUSS MANUFACTURING PLANT .

NAIL VALUES

PLATE	GRIP(DRY) (PSI) MAX	MIN	SHEAR (PLI) MAX	MIN	SECTION (PLI) MAX	MIN
MT20	650	371	1747	788	1987	1873

PLATE PLACEMENT TOL. = 0.250 inches

PLATE ROTATION TOL. = 5.0 Deg.

JSI GRIP= 0.68 (G) (INPUT = 0.90)
JSI METAL= 0.22 (A) (INPUT = 1.00)

JOB NAME	TRUSS NAME	QUANTITY	PLY	JOB DESC.	DRWG NO.
336323	H103S		1	TRUSS DESC. JT 45147	E21104369

Alpha Roof Truss, Maple

Version 8.420 S Jan 21 2021 MiTek Industries, Inc. Thu Oct 14 14:37:24 2021 Page 1

ID:hd511hZTz bdeQoS817GKByhVxV-myWHUX1xkx990wedIHNSk c2f5z9mRHW5ITqjxyTUEP

Scale = 1:55.2

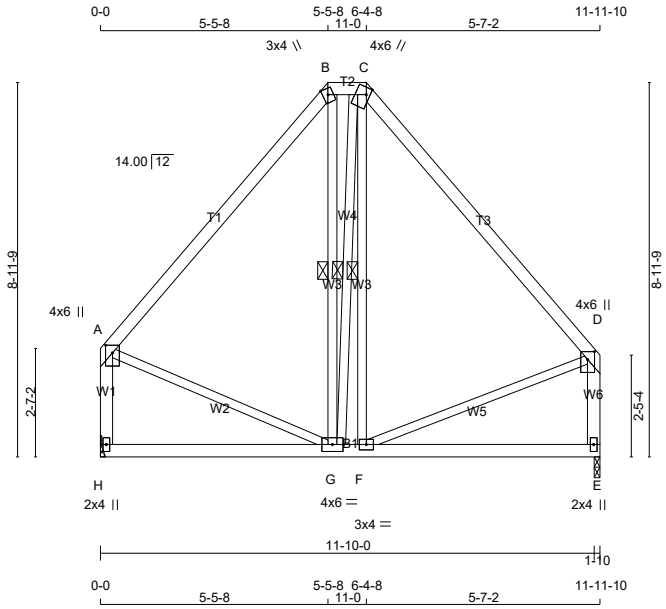

TOTAL WEIGHT = 3 X 69 = 208 lb

[M][F]

LUMBER

N. L. G. A. RULES

CHORDS	SIZE		LUMBER	DESCR.
A - B	2x4	DRY	No.2	SPF
B - C	2x4	DRY	No.2	SPF
C - D	2x4	DRY	No.2	SPF
H - A	2x4	DRY	No.2	SPF
E - D	2x4	DRY	No.2	SPF
H - E	2x4	DRY	No.2	SPF
ALL WEBS EXCEPT	2x3	DRY	No.2	SPF

DRY: SEASONED LUMBER.

PLATES (table is in inches)

JT	TYPE	PLATES	W	LEN	Y	X
A	TMVW+p	MT20	4.0	6.0	2.25	2.00
B	TTW+m	MT20	3.0	4.0	Edge	
C	TTWW+m	MT20	4.0	6.0	2.00	1.00
D	TMVW+p	MT20	4.0	6.0	2.25	2.00
E	BMV1+p	MT20	2.0	4.0		
F	BMWW-t	MT20	3.0	4.0		
G	BMWWW-t	MT20	4.0	6.0		
H	BMV1+p	MT20	2.0	4.0		

Edge - INDICATES REFERENCE CORNER OF PLATE TOUCHES EDGE OF CHORD.

LATERAL BRACE(S) SHOWN SHALL BE 2X4 SPF#2

DIMENSIONS, SUPPORTS AND LOADINGS SPECIFIED BY FABRICATOR TO BE VERIFIED BY BUILDING DESIGNER

BEARINGS

JT	FACTORED GROSS REACTION VERT	HORZ	MAXIMUM FACTORED GROSS REACTION DOWN	HORZ	UPLIFT	INPUT BRG IN-SX	REQRD BRG IN-SX
H	577	0	577	0	0	MECHANICAL	
E	577	0	577	0	0	1-10	1-8

A SUITABLE HANGER/MECHANICAL CONNECTION IS REQUIRED AT JOINT H. MINIMUM BEARING LENGTH AT JOINT H = 1-8.

UNFACTORED REACTIONS

JT	1ST LCASE COMBINED	MAX./MIN. COMPONENT REACTIONS SNOW	LIVE	PERM.LIVE	WIND	DEAD	SOIL
H	412	251 / 0	0 / 0	0 / 0	0 / 0	160 / 0	0 / 0
E	412	251 / 0	0 / 0	0 / 0	0 / 0	160 / 0	0 / 0

BEARING MATERIAL TO BE SPF NO.2 OR BETTER AT JOINT(S) E

BRACING

TOP CHORD TO BE SHEATHED OR MAX. PURLIN SPACING = 6.25 FT.
MAX. UNBRACED BOTTOM CHORD LENGTH = 10.00 FT OR RIGID CEILING DIRECTLY APPLIED.

ALL PITCH BREAKS AND PERIMETER CORNER JOINTS MUST BE LATERALLY RESTRAINED.

1 LATERAL BRACE(S) AT 1/ 2 LENGTH OF B-G, C-G, C-F.

END VERTICAL(S) MUST BE SHEATHED OR HAVE BRACES AS INDICATED IN THE MAX. UNBRACED LENGTH COLUMN OF THE TABLE BELOW

LOADING

TOTAL LOAD CASES: (4)

CHORDS

MEMB. FR-TO	MAX. FACTORED FORCE (LBS)	FACTORED VERT. LOAD LC1 (PLF) FROM	TO	MAX CSI (LC)	MAX. UNBRAC LENGTH
A- B	-317 / 0	-78.0	-78.0	0.30 (1)	6.25
B- C	-205 / 0	-78.0	-78.0	0.01 (1)	6.25
C- D	-318 / 0	-78.0	-78.0	0.32 (1)	6.25
H- A	-536 / 0	0.0	0.0	0.07 (1)	7.81
E- D	-535 / 0	0.0	0.0	0.07 (1)	7.81
H- G	0 / 0	-18.5	-18.5	0.14 (4)	10.00
G- F	0 / 206	-18.5	-18.5	0.16 (4)	10.00
F- E	0 / 0	-18.5	-18.5	0.14 (4)	10.00

WEBS

MEMB. FR-TO	MAX. FACTORED FORCE (LBS)	MAX CSI (LC)
G- B	-7 / 46	0.02 (4)
G- C	-10 / 0	0.01 (1)
F- C	-1 / 45	0.02 (4)
A- G	0 / 221	0.05 (1)
F- D	0 / 220	0.05 (1)

DESIGN CRITERIA

SPECIFIED LOADS:

TOP CH.	LL	=	21.0	PSF
	DL	=	6.0	PSF
BOT CH.	LL	=	0.0	PSF
	DL	=	7.4	PSF
TOTAL LOAD		=	34.4	PSF

SPACING = 24.0 IN. C/C

LOADING IN FLAT SECTION BASED ON A SLOPE OF 2.00/12 MINIMUM

THIS TRUSS IS DESIGNED FOR RESIDENTIAL OR SMALL BUILDING REQUIREMENTS OF PART 9, NBCC 2015

THIS DESIGN COMPLIES WITH:
- PART 9 OF BCBC 2018 , ABC 2019
- PART 9 OF OBC 2012 (2019 AMENDMENT)
- CSA 086-14
- TPIC 2014

(55 % OF 23.0 P.S.F. G.S.L. PLUS 8.4 P.S.F. RAIN LOAD) EQUALS 21.0 P.S.F. SPECIFIED ROOF LIVE LOAD

ALLOWABLE DEFL.(LL)= L/360 (0.40")
CALCULATED VERT. DEFL.(LL) = L/ 999 (0.00")
ALLOWABLE DEFL.(TL)= L/360 (0.40")
CALCULATED VERT. DEFL.(TL) = L/ 999 (0.03")

CSI: TC=0.32/1.00 (C-D:1) , BC=0.16/1.00 (F-G:4) , WB=0.05/1.00 (A-G:1) , SSI=0.11/1.00 (C-D:1)

DOL LUMBER=1.00 NAIL=1.00 LS BEND=1.10 COMP=1.10 SHEAR=1.10 TENS= 1.10

COMPANION LIVE LOAD FACTOR = 1.00

TRUSS PLATE MANUFACTURER IS NOT RESPONSIBLE FOR QUALITY CONTROL IN THE TRUSS MANUFACTURING PLANT .

NAIL VALUES

PLATE	GRIP(DRY) (PSI) MAX	MIN	SHEAR (PLI) MAX	MIN	SECTION (PLI) MAX	MIN
MT20	650	371	1747	788	1987	1873

PLATE PLACEMENT TOL. = 0.250 inches

PLATE ROTATION TOL. = 5.0 Deg.

JSI GRIP= 0.36 (B) (INPUT = 0.90)
JSI METAL= 0.16 (D) (INPUT = 1.00)

JOB NAME	TRUSS NAME	QUANTITY	PLY	JOB DESC.	DRWG NO.
336323	H104S		1	TRUSS DESC. JT 45147	E21104371

Alpa Roof Truss, Maple

Version 8.420 S Jan 21 2021 MiTek Industries, Inc. Thu Oct 14 14:37:27 2021 Page 1

ID:hd511hZTz_bdeQoS817GKByhVxV-BXCP7Z3q1sXktONCzQw9MdEZLJ_Kzm1ynGiUJGyTUEM

Scale = 1:59.6

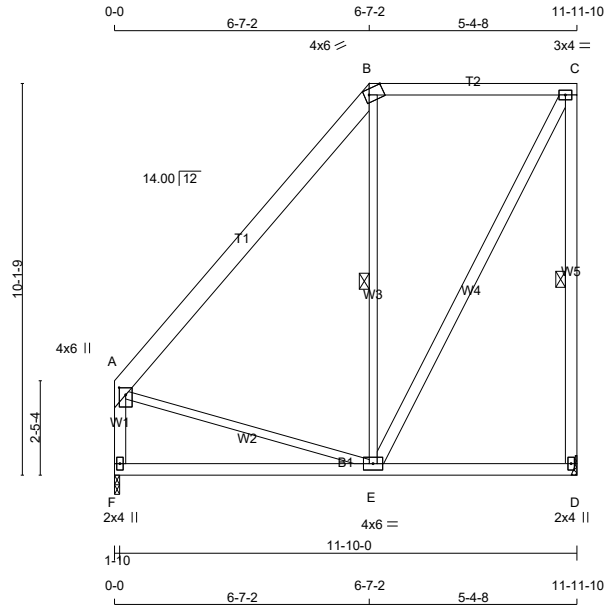

TOTAL WEIGHT = 77 lb

[M][F]

LUMBER

N. L. G. A. RULES

CHORDS	SIZE		LUMBER	DESCR.
A - B	2x6	DRY	No.2	SPF
B - C	2x4	DRY	No.2	SPF
D - C	2x4	DRY	No.2	SPF
F - A	2x4	DRY	No.2	SPF
F - D	2x4	DRY	No.2	SPF
ALL WEBS	2x3	DRY	No.2	SPF
EXCEPT				
E - C	2x4	DRY	No.2	SPF

DRY: SEASONED LUMBER.

PLATES (table is in inches)

JT	TYPE	PLATES	W	LEN	Y	X
A	TMVW+p	MT20	4.0	6.0	2.25	2.00
B	TTW-m	MT20	4.0	6.0	Edge	4.50
C	TMVW-t	MT20	3.0	4.0		
D	BMV1+p	MT20	2.0	4.0		
E	BMWWW-t	MT20	4.0	6.0		
F	BMV1+p	MT20	2.0	4.0		

Edge - INDICATES REFERENCE CORNER OF PLATE TOUCHES EDGE OF CHORD.

LATERAL BRACE(S) SHOWN SHALL BE 2X4 SPF#2

DIMENSIONS, SUPPORTS AND LOADINGS SPECIFIED BY FABRICATOR TO BE VERIFIED BY BUILDING DESIGNER

BEARINGS

JT	FACTORED GROSS REACTION VERT	HORZ	MAXIMUM FACTORED GROSS REACTION DOWN	HORZ	UPLIFT	INPUT BRG IN-SX	REQRD BRG IN-SX
D	577	0	577	0	0	MECHANICAL	
F	577	0	577	0	0	1-10	1-8

A SUITABLE HANGER/MECHANICAL CONNECTION IS REQUIRED AT JOINT D. MINIMUM BEARING LENGTH AT JOINT D = 1-8.

UNFACTORED REACTIONS

JT	1ST LCASE COMBINED	MAX./MIN. COMPONENT REACTIONS SNOW	LIVE	PERM.LIVE	WIND	DEAD	SOIL
D	412	251 / 0	0 / 0	0 / 0	0 / 0	160 / 0	0 / 0
F	412	251 / 0	0 / 0	0 / 0	0 / 0	160 / 0	0 / 0

BEARING MATERIAL TO BE SPF NO.2 OR BETTER AT JOINT(S) F

BRACING

TOP CHORD TO BE SHEATHED OR MAX. PURLIN SPACING = 6.25 FT.
MAX. UNBRACED BOTTOM CHORD LENGTH = 10.00 FT OR RIGID CEILING DIRECTLY APPLIED.

ALL PITCH BREAKS AND PERIMETER CORNER JOINTS MUST BE LATERALLY RESTRAINED.

1 LATERAL BRACE(S) AT 1/ 2 LENGTH OF C-D, B-E.

END VERTICAL(S) MUST BE SHEATHED OR HAVE BRACES AS INDICATED IN THE MAX. UNBRACED LENGTH COLUMN OF THE TABLE BELOW

LOADING

TOTAL LOAD CASES: (4)

CHORDS

MEMB. FR-TO	MAX. FACTORED FORCE (LBS)	FACTORED VERT. LOAD (PLF) FROM	TO	LC1	MAX CSI (LC)	MAX. UNBRAC LENGTH
A- B	-285 / 0	-78.0	-78.0	0.21 (1)	6.25	
B- C	-181 / 0	-78.0	-78.0	0.29 (1)	6.25	
D- C	-544 / 0	0.0	0.0	0.27 (1)	6.25	
F- A	-528 / 0	0.0	0.0	0.06 (1)	7.81	
F- E	0 / 0	-18.5	-18.5	0.20 (4)	10.00	
E- D	0 / 0	-18.5	-18.5	0.20 (4)	10.00	

WEBS

MEMB. FR-TO	MAX. FACTORED FORCE (LBS)	MAX CSI (LC)
E- B	-253 / 0	0.18 (1)
E- C	0 / 384	0.06 (1)
A- E	0 / 191	0.04 (1)

DESIGN CRITERIA

SPECIFIED LOADS:

TOP CH.	LL	=	21.0	PSF
	DL	=	6.0	PSF
BOT CH.	LL	=	0.0	PSF
	DL	=	7.4	PSF
TOTAL LOAD		=	34.4	PSF

SPACING = 24.0 IN. C/C

LOADING IN FLAT SECTION BASED ON A SLOPE OF 2.00/12 MINIMUM

THIS TRUSS IS DESIGNED FOR RESIDENTIAL OR SMALL BUILDING REQUIREMENTS OF PART 9, NBCC 2015

THIS DESIGN COMPLIES WITH:
- PART 9 OF BCBC 2018 , ABC 2019
- PART 9 OF OBC 2012 (2019 AMENDMENT)
- CSA 086-14
- TPIC 2014

(55 % OF 23.0 P.S.F. G.S.L. PLUS 8.4 P.S.F. RAIN LOAD) EQUALS 21.0 P.S.F. SPECIFIED ROOF LIVE LOAD

ALLOWABLE DEFL.(LL)= L/360 (0.40")
CALCULATED VERT. DEFL.(LL) = L/ 999 (0.00")
ALLOWABLE DEFL.(TL)= L/360 (0.40")
CALCULATED VERT. DEFL.(TL) = L/ 999 (0.05")

CSI: TC=0.29/1.00 (B-C:1) , BC=0.20/1.00 (E-F:4) , WB=0.18/1.00 (B-E:1) , SSI=0.16/1.00 (B-C:1)

DOL LUMBER=1.00 NAIL=1.00 LS BEND=1.10 COMP=1.10 SHEAR=1.10 TENS= 1.10

COMPANION LIVE LOAD FACTOR = 1.00

TRUSS PLATE MANUFACTURER IS NOT RESPONSIBLE FOR QUALITY CONTROL IN THE TRUSS MANUFACTURING PLANT .

NAIL VALUES

PLATE	GRIP(DRY) (PSI) MAX	MIN	SHEAR (PLI) MAX	MIN	SECTION (PLI) MAX	MIN
MT20	650	371	1747	788	1987	1873

PLATE PLACEMENT TOL. = 0.250 inches

PLATE ROTATION TOL. = 5.0 Deg.

JSI GRIP= 0.63 (C) (INPUT = 0.90)
JSI METAL= 0.16 (A) (INPUT = 1.00)

JOB NAME	TRUSS NAME	QUANTITY	PLY	JOB DESC.		DRWG NO.
336323	H105		1	TRUSS DESC.	JT 45147	E21104372

Alpa Roof Truss, Maple

Version 8.420 S Jan 21 2021 MiTek Industries, Inc. Thu Oct 14 14:37:28 2021 Page 1

ID:hd511hZTz_bdeQoS817GKByhVxV-fjmoKu4So9fbVYyOX7ROuqni_iMliFS60wR1sjyTUEL

Scale = 1:27.4

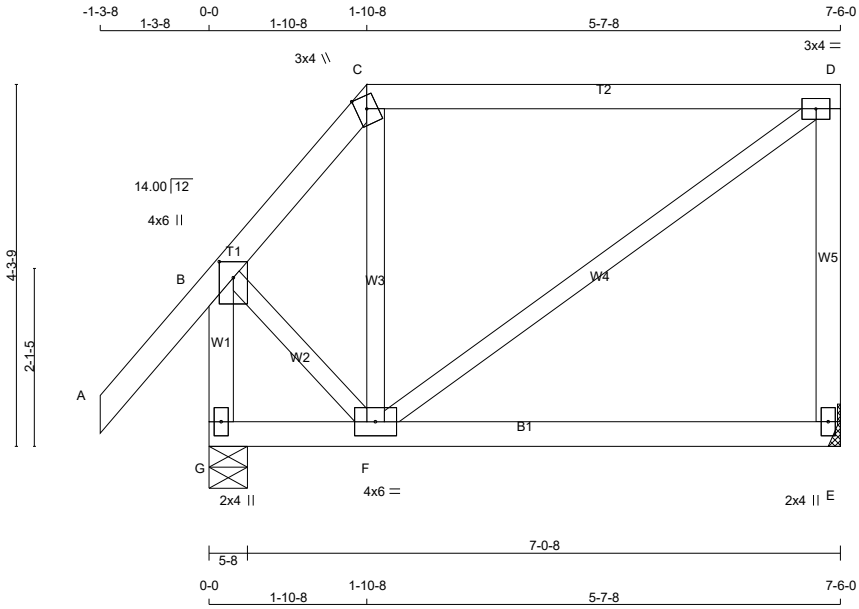

TOTAL WEIGHT = 2 X 37 = 74 lb

[M]

LUMBER

N. L. G. A. RULES

CHORDS	SIZE		LUMBER	DESCR.
A - C	2x4	DRY	No.2	SPF
C - D	2x4	DRY	No.2	SPF
E - D	2x4	DRY	No.2	SPF
G - B	2x4	DRY	No.2	SPF
G - E	2x4	DRY	No.2	SPF
ALL WEBS EXCEPT	2x3	DRY	No.2	SPF

DRY: SEASONED LUMBER.

PLATES (table is in inches)

JT	TYPE	PLATES	W	LEN	Y	X
B	TMVW+p	MT20	4.0	6.0	2.25	2.00
C	TTW+m	MT20	3.0	4.0	Edge	
D	TMVW-t	MT20	3.0	4.0		
E	BMV1+p	MT20	2.0	4.0		
F	BMWWW-t	MT20	4.0	6.0		
G	BMV1+p	MT20	2.0	4.0		

Edge - INDICATES REFERENCE CORNER OF PLATE TOUCHES EDGE OF CHORD.

LATERAL BRACE(S) SHOWN SHALL BE 2X4 SPF#2

DIMENSIONS, SUPPORTS AND LOADINGS SPECIFIED BY FABRICATOR TO BE VERIFIED BY BUILDING DESIGNER

BEARINGS

JT	FACTORED GROSS REACTION VERT	HORZ	MAXIMUM FACTORED GROSS REACTION DOWN	HORZ	UPLIFT	INPUT BRG IN-SX	REQRD BRG IN-SX
E	352	0	352	0	0	MECHANICAL	
G	481	0	481	0	0	5-8	1-8

A SUITABLE HANGER/MECHANICAL CONNECTION IS REQUIRED AT JOINT E. MINIMUM BEARING LENGTH AT JOINT E = 1-8.

UNFACTORED REACTIONS

JT	1ST LCASE COMBINED	MAX./MIN. COMPONENT REACTIONS SNOW	LIVE	PERM.LIVE	WIND	DEAD	SOIL
E	251	152 / 0	0 / 0	0 / 0	0 / 0	99 / 0	0 / 0
G	341	222 / 0	0 / 0	0 / 0	0 / 0	119 / 0	0 / 0

BEARING MATERIAL TO BE SPF NO.2 OR BETTER AT JOINT(S) G

BRACING

TOP CHORD TO BE SHEATHED OR MAX. PURLIN SPACING = 6.25 FT.
MAX. UNBRACED BOTTOM CHORD LENGTH = 10.00 FT OR RIGID CEILING DIRECTLY APPLIED.

ALL PITCH BREAKS AND PERIMETER CORNER JOINTS MUST BE LATERALLY RESTRAINED.

LOADING

TOTAL LOAD CASES: (4)

CHORDS

MEMB. FR-TO	MAX. FACTORED FORCE (LBS)	FACTORED VERT. LOAD (PLF) FROM	TO	LC1 MAX CSI (LC)	MAX. UNBRAC LENGTH
A- B	0 / 41	-78.0	-78.0	0.11 (1)	10.00
B- C	-230 / 0	-78.0	-78.0	0.11 (1)	6.25
C- D	-126 / 0	-78.0	-78.0	0.42 (1)	6.25
E- D	-309 / 0	0.0	0.0	0.09 (1)	7.81
G- B	-488 / 0	0.0	0.0	0.06 (1)	7.81
G- F	0 / 0	-18.5	-18.5	0.12 (4)	10.00
F- E	0 / 0	-18.5	-18.5	0.12 (4)	10.00

WEBS

MEMB. FR-TO	MAX. FACTORED FORCE (LBS)	MAX CSI (LC)
F- C	-100 / 19	0.03 (1)
F- D	0 / 155	0.03 (1)
B- F	0 / 171	0.04 (1)

DESIGN CRITERIA

SPECIFIED LOADS:

TOP CH.	LL	=	21.0	PSF
	DL	=	6.0	PSF
BOT CH.	LL	=	0.0	PSF
	DL	=	7.4	PSF
TOTAL LOAD		=	34.4	PSF

SPACING = 24.0 IN. C/C

LOADING IN FLAT SECTION BASED ON A SLOPE OF 2.00/12 MINIMUM

THIS TRUSS IS DESIGNED FOR RESIDENTIAL OR SMALL BUILDING REQUIREMENTS OF PART 9, NBCC 2015

THIS DESIGN COMPLIES WITH:
- PART 9 OF BCBC 2018 , ABC 2019
- PART 9 OF OBC 2012 (2019 AMENDMENT)
- CSA 086-14
- TPIC 2014

DESIGN ASSUMPTIONS
-OVERHANG NOT TO BE ALTERED OR CUT OFF.

(55 % OF 23.0 P.S.F. G.S.L. PLUS 8.4 P.S.F. RAIN LOAD) EQUALS 21.0 P.S.F. SPECIFIED ROOF LIVE LOAD

ALLOWABLE DEFL.(LL)= L/360 (0.25")
CALCULATED VERT. DEFL.(LL) = L/ 999 (0.00")
ALLOWABLE DEFL.(TL)= L/360 (0.25")
CALCULATED VERT. DEFL.(TL) = L/ 999 (0.03")

CSI: TC=0.42/1.00 (C-D:1) , BC=0.12/1.00 (F-G:4) , WB=0.04/1.00 (B-F:1) , SSI=0.17/1.00 (C-D:1)

DOL LUMBER=1.00 NAIL=1.00 LS BEND=1.10 COMP=1.10 SHEAR=1.10 TENS= 1.10

COMPANION LIVE LOAD FACTOR = 1.00

TRUSS PLATE MANUFACTURER IS NOT RESPONSIBLE FOR QUALITY CONTROL IN THE TRUSS MANUFACTURING PLANT .

NAIL VALUES

PLATE	GRIP(DRY) (PSI) MAX	MIN	SHEAR (PLI) MAX	MIN	SECTION (PLI) MAX	MIN
MT20	650	371	1747	788	1987	1873

PLATE PLACEMENT TOL. = 0.250 inches

PLATE ROTATION TOL. = 5.0 Deg.

JSI GRIP= 0.58 (C) (INPUT = 0.90)
JSI METAL= 0.12 (B) (INPUT = 1.00)

JOB NAME	TRUSS NAME	QUANTITY	PLY	JOB DESC.	DRWG NO.
336323	H106		1	TRUSS DESC. JT 45147	E21104373

Alpa Roof Truss, Maple

Version 8.420 S Jan 21 2021 MiTek Industries, Inc. Thu Oct 14 14:37:29 2021 Page 1

ID:hd511hZTz bdeQoS817GKByhVxV-7wKAYE54ZTnR7hXb5rydR2JvV6imRhSFFaBbO9yTUEK

Scale = 1:41.0

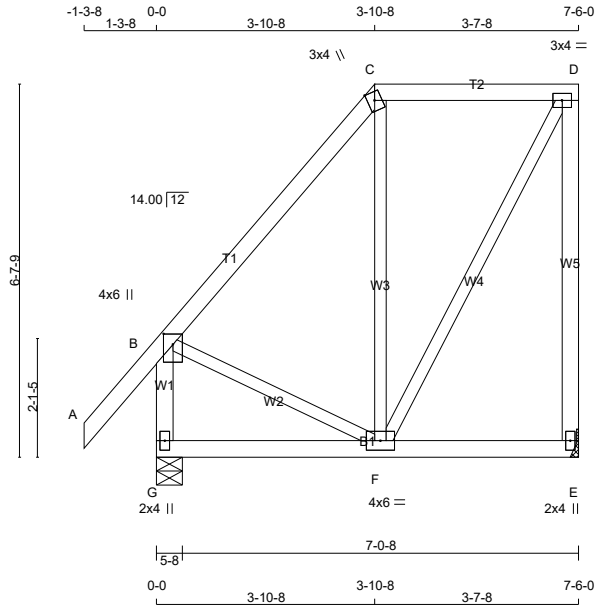

TOTAL WEIGHT = 2 X 45 = 89 lb

[M][F]

LUMBER

N. L. G. A. RULES

CHORDS	SIZE		LUMBER	DESCR.
A - C	2x4	DRY	No.2	SPF
C - D	2x4	DRY	No.2	SPF
E - D	2x4	DRY	No.2	SPF
G - B	2x4	DRY	No.2	SPF
G - E	2x4	DRY	No.2	SPF
ALL WEBS EXCEPT	2x3	DRY	No.2	SPF

DRY: SEASONED LUMBER.

PLATES (table is in inches)

JT	TYPE	PLATES	W	LEN	Y	X
B	TMVW+p	MT20	4.0	6.0	2.25	2.00
C	TTW+m	MT20	3.0	4.0	Edge	
D	TMVW-t	MT20	3.0	4.0		
E	BMV1+p	MT20	2.0	4.0		
F	BMWWW-t	MT20	4.0	6.0		
G	BMV1+p	MT20	2.0	4.0		

Edge - INDICATES REFERENCE CORNER OF PLATE TOUCHES EDGE OF CHORD.

LATERAL BRACE(S) SHOWN SHALL BE 2X4 SPF#2

LICENSED PROFESSIONAL ENGINEER
V. WIDYA
100225448
10/14/2021
PROVINCE OF ONTARIO

DIMENSIONS, SUPPORTS AND LOADINGS SPECIFIED BY FABRICATOR TO BE VERIFIED BY BUILDING DESIGNER

BEARINGS

JT	FACTORED GROSS REACTION VERT	HORZ	MAXIMUM FACTORED GROSS REACTION DOWN	HORZ	UPLIFT	INPUT BRG IN-SX	REQRD BRG IN-SX
E	362	0	362	0	0	MECHANICAL	
G	471	0	471	0	0	5-8	1-8

A SUITABLE HANGER/MECHANICAL CONNECTION IS REQUIRED AT JOINT E. MINIMUM BEARING LENGTH AT JOINT E = 1-8.

UNFACTORED REACTIONS

JT	1ST LCASE COMBINED	MAX./MIN. COMPONENT REACTIONS SNOW	LIVE	PERM.LIVE	WIND	DEAD	SOIL
E	258	157 / 0	0 / 0	0 / 0	0 / 0	101 / 0	0 / 0
G	334	216 / 0	0 / 0	0 / 0	0 / 0	117 / 0	0 / 0

BEARING MATERIAL TO BE SPF NO.2 OR BETTER AT JOINT(S) G

BRACING

TOP CHORD TO BE SHEATHED OR MAX. PURLIN SPACING = 6.25 FT.
MAX. UNBRACED BOTTOM CHORD LENGTH = 10.00 FT OR RIGID CEILING DIRECTLY APPLIED.

ALL PITCH BREAKS AND PERIMETER CORNER JOINTS MUST BE LATERALLY RESTRAINED.

LOADING

TOTAL LOAD CASES: (4)

CHORDS

MEMB. FR-TO	MAX. FACTORED FORCE (LBS)	FACTORED VERT. LOAD (PLF) FROM	TO	LC1 MAX CSI (LC)	MAX. UNBRAC LENGTH
A- B	0 / 41	-78.0	-78.0	0.11 (1)	10.00
B- C	-173 / 0	-78.0	-78.0	0.15 (1)	6.25
C- D	-109 / 0	-78.0	-78.0	0.13 (1)	6.25
E- D	-337 / 0	0.0	0.0	0.31 (1)	7.81
G- B	-441 / 0	0.0	0.0	0.05 (1)	7.81
G- F	0 / 0	-18.5	-18.5	0.07 (4)	10.00
F- E	0 / 0	-18.5	-18.5	0.07 (4)	10.00

WEBS

MEMB. FR-TO	MAX. FACTORED FORCE (LBS)	MAX CSI (LC)
F- C	-162 / 0	0.12 (1)
F- D	0 / 225	0.05 (1)
B- F	0 / 122	0.03 (1)

DESIGN CRITERIA

SPECIFIED LOADS:

TOP CH.	LL	=	21.0	PSF
	DL	=	6.0	PSF
BOT CH.	LL	=	0.0	PSF
	DL	=	7.4	PSF
TOTAL LOAD		=	34.4	PSF

SPACING = 24.0 IN. C/C

LOADING IN FLAT SECTION BASED ON A SLOPE OF 2.00/12 MINIMUM

THIS TRUSS IS DESIGNED FOR RESIDENTIAL OR SMALL BUILDING REQUIREMENTS OF PART 9, NBCC 2015

THIS DESIGN COMPLIES WITH:
- PART 9 OF BCBC 2018 , ABC 2019
- PART 9 OF OBC 2012 (2019 AMENDMENT)
- CSA 086-14
- TPIC 2014

(55 % OF 23.0 P.S.F. G.S.L. PLUS 8.4 P.S.F. RAIN LOAD) EQUALS 21.0 P.S.F. SPECIFIED ROOF LIVE LOAD

ALLOWABLE DEFL.(LL)= L/360 (0.25")
CALCULATED VERT. DEFL.(LL) = L/ 999 (0.00")
ALLOWABLE DEFL.(TL)= L/360 (0.25")
CALCULATED VERT. DEFL.(TL) = L/ 999 (0.01")

CSI: TC=0.31/1.00 (D-E:1) , BC=0.07/1.00 (E-F:4) , WB=0.12/1.00 (C-F:1) , SSI=0.11/1.00 (C-D:1)

DOL LUMBER=1.00 NAIL=1.00 LS BEND=1.10 COMP=1.10 SHEAR=1.10 TENS= 1.10

COMPANION LIVE LOAD FACTOR = 1.00

TRUSS PLATE MANUFACTURER IS NOT RESPONSIBLE FOR QUALITY CONTROL IN THE TRUSS MANUFACTURING PLANT .

NAIL VALUES

PLATE	GRIP(DRY) (PSI) MAX	MIN	SHEAR (PLI) MAX	MIN	SECTION (PLI) MAX	MIN
MT20	650	371	1747	788	1987	1873

PLATE PLACEMENT TOL. = 0.250 inches

PLATE ROTATION TOL. = 5.0 Deg.

JSI GRIP= 0.43 (D) (INPUT = 0.90)
JSI METAL= 0.12 (B) (INPUT = 1.00)

JOB NAME	TRUSS NAME	QUANTITY	PLY	JOB DESC.		DRWG NO.
336323	H107		1	TRUSS DESC.	JT 45147	E21104374

Alpa Roof Truss, Maple

Version 8.420 S Jan 21 2021 MiTek Industries, Inc. Thu Oct 14 14:37:31 2021 Page 1

ID:hd511hZTz bdeQoS817GKByhVxV-3lRwyw6K5419M?hzCF?5WTPESwM8vbzYiuqiS2yTUEI

Scale = 1:56.8

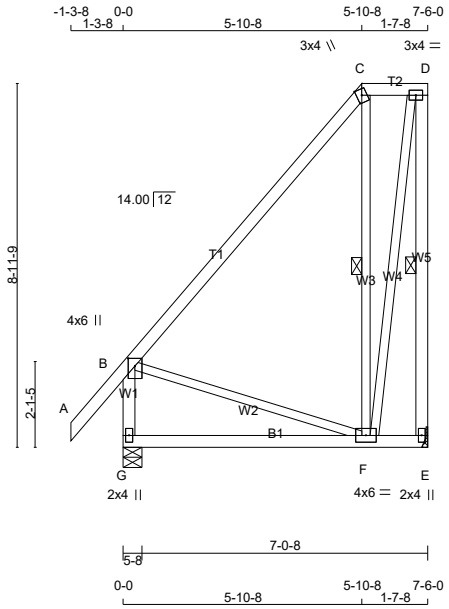

TOTAL WEIGHT = 2 X 53 = 107 lb

[M][F]

LUMBER

N. L. G. A. RULES

CHORDS	SIZE		LUMBER	DESCR.
A - C	2x4	DRY	No.2	SPF
C - D	2x4	DRY	No.2	SPF
E - D	2x4	DRY	No.2	SPF
G - B	2x4	DRY	No.2	SPF
G - E	2x4	DRY	No.2	SPF
ALL WEBS EXCEPT	2x3	DRY	No.2	SPF

DRY: SEASONED LUMBER.

PLATES (table is in inches)

JT	TYPE	PLATES	W	LEN	Y	X
B	TMVW+p	MT20	4.0	6.0	2.25	2.00
C	TTW+m	MT20	3.0	4.0	Edge	
D	TMVW-t	MT20	3.0	4.0		
E	BMV1+p	MT20	2.0	4.0		
F	BMWWW-t	MT20	4.0	6.0		
G	BMV1+p	MT20	2.0	4.0		

Edge - INDICATES REFERENCE CORNER OF PLATE TOUCHES EDGE OF CHORD.

LATERAL BRACE(S) SHOWN SHALL BE 2X4 SPF#2

DIMENSIONS, SUPPORTS AND LOADINGS SPECIFIED BY FABRICATOR TO BE VERIFIED BY BUILDING DESIGNER

BEARINGS

JT	FACTORED GROSS REACTION VERT	HORZ	MAXIMUM FACTORED GROSS REACTION DOWN	HORZ	UPLIFT	INPUT BRG IN-SX	REQRD BRG IN-SX
E	362	0	362	0	0	MECHANICAL	
G	471	0	471	0	0	5-8	1-8

A SUITABLE HANGER/MECHANICAL CONNECTION IS REQUIRED AT JOINT E. MINIMUM BEARING LENGTH AT JOINT E = 1-8.

UNFACTORED REACTIONS

JT	1ST LCASE COMBINED	MAX./MIN. COMPONENT REACTIONS SNOW	LIVE	PERM.LIVE	WIND	DEAD	SOIL
E	258	157 / 0	0 / 0	0 / 0	0 / 0	101 / 0	0 / 0
G	334	216 / 0	0 / 0	0 / 0	0 / 0	117 / 0	0 / 0

BEARING MATERIAL TO BE SPF NO.2 OR BETTER AT JOINT(S) G

BRACING

TOP CHORD TO BE SHEATHED OR MAX. PURLIN SPACING = 6.25 FT.
MAX. UNBRACED BOTTOM CHORD LENGTH = 10.00 FT OR RIGID CEILING DIRECTLY APPLIED.

ALL PITCH BREAKS AND PERIMETER CORNER JOINTS MUST BE LATERALLY RESTRAINED.

1 LATERAL BRACE(S) AT 1/ 2 LENGTH OF D-E, C-F.

END VERTICAL(S) MUST BE SHEATHED OR HAVE BRACES AS INDICATED IN THE MAX. UNBRACED LENGTH COLUMN OF THE TABLE BELOW

LOADING

TOTAL LOAD CASES: (4)

CHORDS

MEMB. FR-TO	MAX. FACTORED FORCE (LBS)	FACTORED VERT. LOAD (PLF) FROM	TO	LC1 CSI (LC)	MAX UNBRAC LENGTH
A- B	0 / 42	-78.0	-78.0	0.11 (1)	10.00
B- C	-91 / 0	-78.0	-78.0	0.34 (1)	6.25
C- D	-56 / 0	-78.0	-78.0	0.03 (1)	6.25
E- D	-383 / 0	0.0	0.0	0.14 (1)	6.25
G- B	-425 / 0	0.0	0.0	0.05 (1)	7.81
G- F	0 / 0	-18.5	-18.5	0.14 (4)	10.00
F- E	0 / 0	-18.5	-18.5	0.14 (4)	10.00

WEBS

MEMB. FR-TO	MAX. FACTORED FORCE (LBS)	MAX CSI (LC)
F- C	-225 / 0	0.12 (1)
F- D	0 / 326	0.07 (1)
B- F	0 / 61	0.01 (1)

DESIGN CRITERIA

SPECIFIED LOADS:

TOP CH.	LL	=	21.0	PSF
	DL	=	6.0	PSF
BOT CH.	LL	=	0.0	PSF
	DL	=	7.4	PSF
TOTAL LOAD		=	34.4	PSF

SPACING = 24.0 IN. C/C

LOADING IN FLAT SECTION BASED ON A SLOPE OF 2.00/12 MINIMUM

THIS TRUSS IS DESIGNED FOR RESIDENTIAL OR SMALL BUILDING REQUIREMENTS OF PART 9, NBCC 2015

THIS DESIGN COMPLIES WITH:
- PART 9 OF BCBC 2018 , ABC 2019
- PART 9 OF OBC 2012 (2019 AMENDMENT)
- CSA 086-14
- TPIC 2014

(55 % OF 23.0 P.S.F. G.S.L. PLUS 8.4 P.S.F. RAIN LOAD) EQUALS 21.0 P.S.F. SPECIFIED ROOF LIVE LOAD

ALLOWABLE DEFL.(LL)= L/360 (0.25")
CALCULATED VERT. DEFL.(LL) = L/ 999 (0.01")
ALLOWABLE DEFL.(TL)= L/360 (0.25")
CALCULATED VERT. DEFL.(TL) = L/ 999 (0.04")

CSI: TC=0.34/1.00 (B-C:1) , BC=0.14/1.00 (F-G:4) , WB=0.12/1.00 (C-F:1) , SSI=0.12/1.00 (B-C:1)

DOL LUMBER=1.00 NAIL=1.00 LS BEND=1.10 COMP=1.10 SHEAR=1.10 TENS= 1.10

COMPANION LIVE LOAD FACTOR = 1.00

TRUSS PLATE MANUFACTURER IS NOT RESPONSIBLE FOR QUALITY CONTROL IN THE TRUSS MANUFACTURING PLANT .

NAIL VALUES

PLATE	GRIP(DRY) (PSI) MAX	MIN	SHEAR (PLI) MAX	MIN	SECTION (PLI) MAX	MIN
MT20	650	371	1747	788	1987	1873

PLATE PLACEMENT TOL. = 0.250 inches

PLATE ROTATION TOL. = 5.0 Deg.

JSI GRIP= 0.64 (D) (INPUT = 0.90)
JSI METAL= 0.12 (B) (INPUT = 1.00)

JOB NAME	TRUSS NAME	QUANTITY	PLY	JOB DESC.		DRWG NO.
336327	H31TA		1	TRUSS DESC.	JT 45147	E21104392

Alpa Roof Truss, Maple

Version 8.420 S Jan 21 2021 MiTek Industries, Inc. Thu Oct 14 15:14:09 2021 Page 1

ID:hd511hZTz_bdeQoS817GKByhVxV-i9FsGVj3SQyI3njPztQXb_Rl3xLCvST47s6?beyTThy

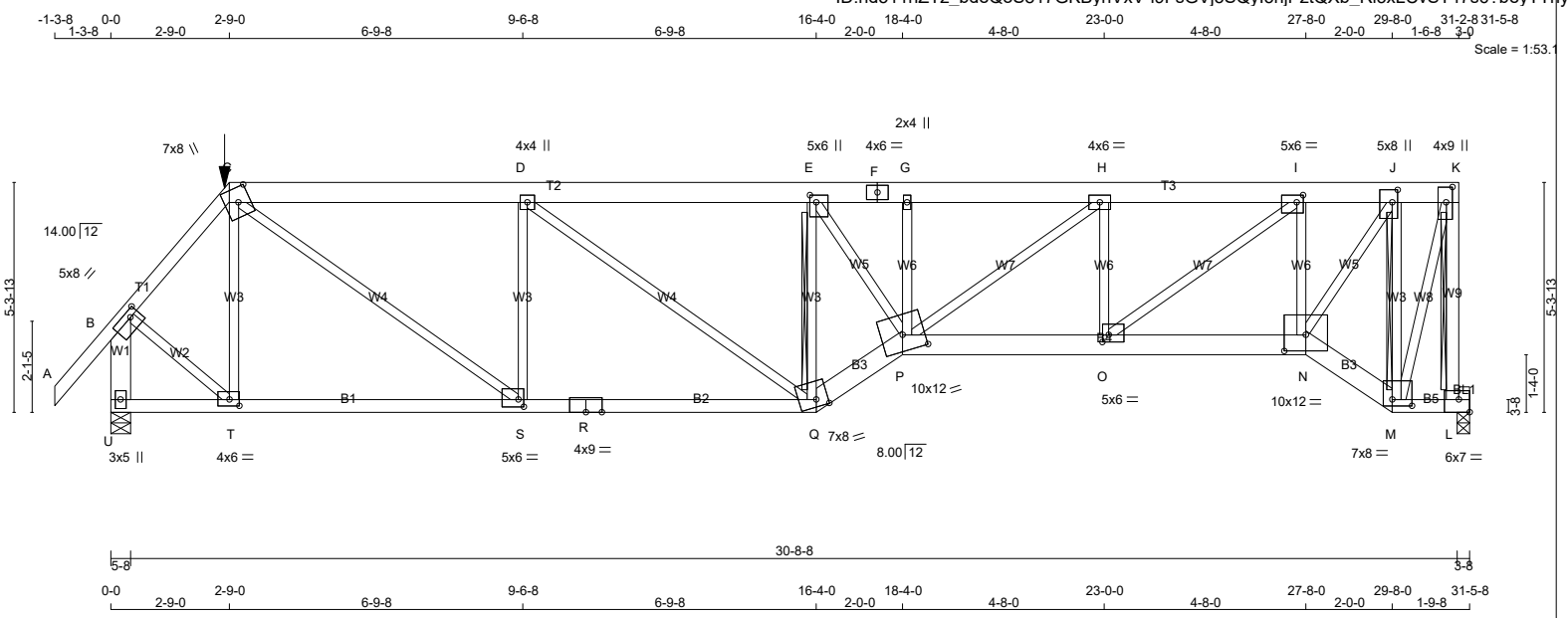

TOTAL WEIGHT = 171 lb

[M]

LUMBER

N. L. G. A. RULES

CHORDS	SIZE		LUMBER	DESCR.
A - C	2x4	DRY	No.2	SPF
C - F	2x6	DRY	No.2	SPF
F - K	2x6	DRY	No.2	SPF
L - K	2x4	DRY	No.2	SPF
U - B	2x6	DRY	No.2	SPF
U - R	2x4	DRY	No.2	SPF
R - Q	2x4	DRY	No.2	SPF
Q - P	2x6	DRY	No.2	SPF
P - N	2x6	DRY	No.2	SPF
N - M	2x6	DRY	No.2	SPF
M - L	2x4	DRY	No.2	SPF
BEARING BLOCKS				
BL1	2x4	DRY	No.2	SPF
ALL WEBS EXCEPT	2x3	DRY	No.2	SPF

DRY: SEASONED LUMBER.

PLATES (table is in inches)

JT	TYPE	PLATES	W	LEN	Y	X
B	TMVW-t	MT20	5.0	8.0	1.75	2.50
C	TTWW+m	MT20	7.0	8.0	4.00	3.25
D	TMWW+t	MT20	4.0	4.0		
E	TMWW+t	MT20	5.0	6.0	2.00	1.75
F	TS-t	MT20	4.0	6.0		
G	TMW+w	MT20	2.0	4.0		
H	TMWW-t	MT20	4.0	6.0		
I	TMWW-t	MT20	5.0	6.0	2.00	1.75
J	TMWW+t	MT20	5.0	8.0	3.50	1.50
K	TMVW+p	MT20	4.0	9.0	4.25	1.75
L	BMVK1-t	MT20	6.0	7.0	3.50	Edge
M	BBWW-l	MT20	7.0	8.0	1.75	5.50
N	BBWW-l	MT20	10.0	12.0	4.50	6.00
O	BMWW-t	MT20	5.0	6.0	2.00	1.75
P	BBWWW-m	MT20	10.0	12.0	4.50	6.00
Q	BBWW-m	MT20	7.0	8.0	2.00	3.25
R	BS-t	MT20	4.0	9.0		
S	BMWW-t	MT20	5.0	6.0	2.00	1.50
T	BMWW-t	MT20	4.0	6.0	1.75	2.75
U	BMV1+p	MT20	3.0	5.0		

LATERAL BRACE(S) SHOWN SHALL BE 2X4 SPF#2

DIMENSIONS, SUPPORTS AND LOADINGS SPECIFIED BY FABRICATOR TO BE VERIFIED BY BUILDING DESIGNER

BEARINGS

JT	FACTORED GROSS REACTION VERT	HORZ	MAXIMUM FACTORED GROSS REACTION DOWN	HORZ	UPLIFT	INPUT BRG IN-SX	REQRD BRG IN-SX
L	2965	0	2965	0	0	3-8	3-8
U	2999	0	2999	0	0	5-8	4-4

UNFACTORED REACTIONS

JT	1ST LCASE COMBINED	MAX./MIN. COMPONENT REACTIONS SNOW	LIVE	PERM.LIVE	WIND	DEAD	SOIL
L	2114	1292 / 0	0 / 0	0 / 0	0 / 0	822 / 0	0 / 0
U	2137	1310 / 0	0 / 0	0 / 0	0 / 0	827 / 0	0 / 0

BEARING MATERIAL TO BE SPF NO.2 OR BETTER AT JOINT(S) L, U
BEARING SIZE FACTOR = 1.15 AT JNT(S) L (BASED ON SUPPORT DEPTH = 1-8)

BRACING

TOP CHORD TO BE SHEATHED OR MAX. PURLIN SPACING = 3.07 FT.
MAX. UNBRACED BOTTOM CHORD LENGTH = 6.25 FT OR RIGID CEILING DIRECTLY APPLIED.

ALL PITCH BREAKS AND PERIMETER CORNER JOINTS MUST BE LATERALLY RESTRAINED.

2x3 DRY SPF No.2 T-BRACE AT K-L, J-M
2x4 DRY SPF No.2 T-BRACE AT E-Q

FASTEN T AND I-BRACES TO NARROW EDGE OF WEB WITH ONE ROW PER PLY OF 3" COMMON WIRE NAILS @ 6" O.C. WITH 3" MINIMUM END DISTANCE. BRACE MUST COVER 90% OF WEB LENGTH.

END VERTICAL(S) MUST BE SHEATHED OR HAVE BRACES AS INDICATED IN THE MAX. UNBRACED LENGTH COLUMN OF THE TABLE BELOW

LOADING

TOTAL LOAD CASES: (4)

CHORDS

MEMB. FR-TO	MAX. FACTORED FORCE (LBS)	FACTORED VERT. LOAD (PLF) FROM	TO	LC1	MAX CSI (LC)	MAX. UNBRAC LENGTH
A- B	0 / 42	-78.0	-78.0	0.12 (1)	10.00	
B- C	-2398 / 0	-78.0	-78.0	0.20 (1)	4.24	
C- D	-4125 / 0	-153.5	-153.5	0.70 (1)	3.45	
D- E	-4762 / 0	-153.5	-153.5	0.75 (1)	3.16	
E- F	-6275 / 0	-78.0	-78.0	0.51 (1)	3.07	
F- G	-6275 / 0	-78.0	-78.0	0.51 (1)	3.07	
G- H	-6273 / 0	-78.0	-78.0	0.49 (1)	3.13	
H- I	-5074 / 0	-78.0	-78.0	0.27 (1)	3.70	
I- J	-2555 / 0	-78.0	-78.0	0.33 (1)	4.80	
J- K	-722 / 0	-153.5	-153.5	0.29 (1)	6.25	
L- K	-2937 / 0	0.0	0.0	0.77 (1)	6.55	
U- B	-2988 / 0	0.0	0.0	0.26 (1)	6.04	
U- T	0 / 0	-36.4	-36.4	0.25 (4)	10.00	
T- S	0 / 1545	-36.4	-36.4	0.59 (4)	10.00	
S- R	0 / 4126	-36.4	-36.4	0.92 (1)	10.00	
R- Q	0 / 4126	-36.4	-36.4	0.92 (1)	10.00	
Q- P	0 / 5690	-112.0	-112.0	0.78 (1)	10.00	
P- O	0 / 5074	-112.0	-112.0	0.82 (1)	10.00	
O- N	0 / 2625	-112.0	-112.0	0.50 (1)	10.00	
N- M	0 / 802	-112.0	-112.0	0.15 (1)	10.00	
M- L	-87 / 0	-36.4	-36.4	0.02 (4)	6.25	

WEBS

MEMB. FR-TO	MAX. FACTORED FORCE (LBS)	MAX CSI (LC)
T- C	-739 / 0	0.30 (1)
C- S	0 / 3191	0.79 (1)
S- D	-1652 / 0	0.67 (1)
D- Q	0 / 784	0.19 (1)
Q- E	-3425 / 0	0.77 (1)
E- P	0 / 3080	0.76 (1)
P- G	0 / 43	0.01 (4)
P- H	0 / 1499	0.37 (1)
O- H	-1330 / 0	0.31 (1)
O- I	0 / 3095	0.77 (1)
N- I	-2354 / 0	0.54 (1)
N- J	0 / 3680	0.91 (1)
M- J	-2880 / 0	0.99 (1)
M- K	0 / 2683	0.66 (1)
B- T	0 / 1828	0.45 (1)

FACTORED CONCENTRATED LOADS (LBS)

JT	LOC.	LC1	MAX-	MAX+	FACE	DIR.	TYPE	HEEL	CONN.
C	2-9-0	-156	-156	---	FRONT	VERT	TOTAL	---	C1

CONNECTION REQUIREMENTS

1) **C1:** A SUITABLE HANGER/MECHANICAL CONNECTION IS REQUIRED.

DESIGN CRITERIA

SPECIFIED LOADS:

TOP	CH.	LL	=	21.0	PSF
		DL	=	6.0	PSF
BOT	CH.	LL	=	0.0	PSF
		DL	=	7.4	PSF
TOTAL	LOAD		=	34.4	PSF

SPACING = 24.0 IN. C/C

LOADING IN FLAT SECTION BASED ON A SLOPE OF 2.00/12 MINIMUM

GIRDER TYPE: CPrimeHip
LEFT SETBACK = 2-9-0
RIGHT SETBACK = 0-0
END SETBACK = 5-10-8
END WALL WIDTH = 0-0
CORNER FRAMING TYPE: CONVENTIONAL
END JACK TYPE: CONVENTIONAL
APPLIED TO FRONT SIDE
- ADDT'L LOADS BASED ON 55 % OF GSL.
LOADS APPLIED TO FIRST 1-9-8 OF SPAN MEASURED FROM THE RIGHT.

GIRDER TYPE: CPrimeHip
LEFT SETBACK = 2-9-0
RIGHT SETBACK = 0-0
END SETBACK = 5-10-8
END WALL WIDTH = 0-0
CORNER FRAMING TYPE: CONVENTIONAL
END JACK TYPE: CONVENTIONAL
APPLIED TO FRONT SIDE
- ADDT'L LOADS BASED ON 55 % OF GSL.
LOADS APPLIED TO FIRST 16-4-0 OF SPAN MEASURED FROM THE LEFT.

GIRDER TYPE: CStdGirder
START DISTANCE = 16-4-0
START SPAN CARRIED = 5-10-8
END DISTANCE = 29-8-0
END SPAN CARRIED = 5-10-8
END WALL WIDTH = 0-0
APPLIED TO FRONT SIDE OF BOTTOM CHORD.
- ADDT'L LOADS BASED ON 55 % OF GSL.

THIS TRUSS IS DESIGNED FOR RESIDENTIAL OR SMALL BUILDING REQUIREMENTS OF PART 9, NBCC 2015

THIS DESIGN COMPLIES WITH:
- PART 9 OF BCBC 2018 , ABC 2019
- PART 9 OF OBC 2012 (2019 AMENDMENT)
- CSA 086-14
- TPIC 2014

(55 % OF 23.0 P.S.F. G.S.L. PLUS 8.4 P.S.F. RAIN LOAD) EQUALS 21.0 P.S.F. SPECIFIED ROOF LIVE LOAD

ALLOWABLE DEFL.(LL)= L/360 (1.04")
CALCULATED VERT. DEFL.(LL) = L/ 999 (0.28")
ALLOWABLE DEFL.(TL)= L/360 (1.04")
CALCULATED VERT. DEFL.(TL) = L/ 675 (0.55")

CSI: TC=0.77/1.00 (K-L:1) , BC=0.92/1.00 (Q-S:1) , WB=0.99/1.00 (J-M:1) , SSI=0.41/1.00 (C-D:1)

DOL LUMBER=1.00 NAIL=1.00 LS BEND=1.00 COMP=1.00 SHEAR=1.00 TENS= 1.00

COMPANION LIVE LOAD FACTOR = 1.00

CONTINUED ON PAGE 2

JOB NAME	TRUSS NAME	QUANTITY	PLY	JOB DESC.		DRWG NO.
336327	H32TA		1	TRUSS DESC.	JT 45147	E21104393

Alpha Roof Truss, Maple

Version 8.420 S Jan 21 2021 MiTek Industries, Inc. Thu Oct 14 15:14:11 2021 Page 1

ID:hd511hZTz bdeQoS817GKByhVxV-fYNchBkJ 1C?I5to4IT?qPW8XlAENTpMbAb6qXyTThw

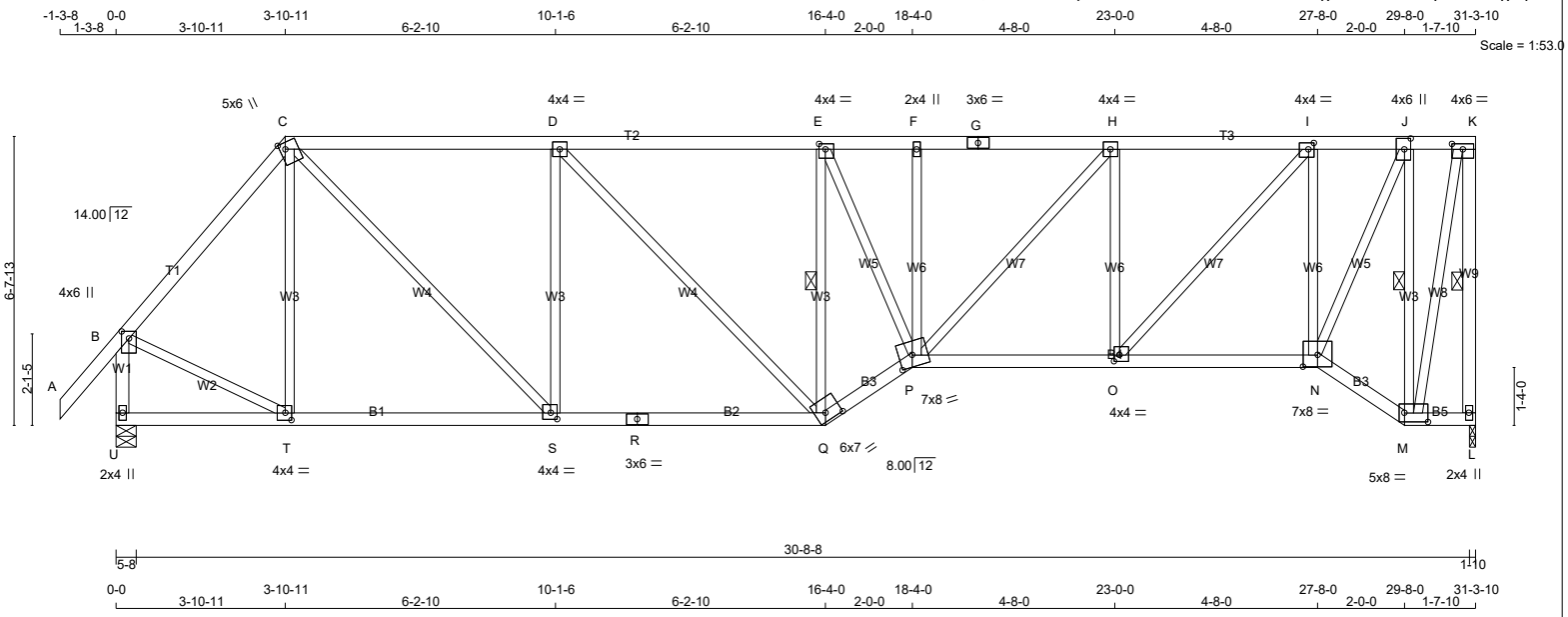

TOTAL WEIGHT = 159 lb

LUMBER

N. L. G. A. RULES

CHORDS	SIZE		LUMBER	DESCR.
A - C	2x4	DRY	No.2	SPF
C - G	2x4	DRY	No.2	SPF
G - K	2x4	DRY	No.2	SPF
L - K	2x4	DRY	No.2	SPF
U - B	2x4	DRY	No.2	SPF
U - R	2x4	DRY	No.2	SPF
R - Q	2x4	DRY	No.2	SPF
Q - P	2x4	DRY	No.2	SPF
P - N	2x4	DRY	No.2	SPF
N - M	2x4	DRY	No.2	SPF
M - L	2x4	DRY	No.2	SPF
ALL WEBS EXCEPT	2x3	DRY	No.2	SPF

DRY: SEASONED LUMBER.

PLATES (table is in inches)

JT	TYPE	PLATES	W	LEN	Y	X
B	TMVW+p	MT20	4.0	6.0	2.00	2.00
C	TTWW+m	MT20	5.0	6.0	1.75	1.50
D	TMWW-t	MT20	4.0	4.0		
E	TMWW-t	MT20	4.0	4.0	1.50	1.75
F	TMW+w	MT20	2.0	4.0		
G	TS-t	MT20	3.0	6.0		
H	TMWW-t	MT20	4.0	4.0		
I	TMWW-t	MT20	4.0	4.0	1.75	1.50
J	TMWW+t	MT20	4.0	6.0	3.00	1.75
K	TMVW-t	MT20	4.0	6.0	1.50	3.00
L	BMV1+p	MT20	2.0	4.0		
M	BBWW-l	MT20	5.0	8.0	2.50	6.50
N	BBWW-l	MT20	7.0	8.0	3.25	4.00
O	BMWW-t	MT20	4.0	4.0	1.75	1.50
P	BBWWW-m	MT20	7.0	8.0	3.25	3.75
Q	BBWW-h	MT20	6.0	7.0	2.25	4.25
R	BS-t	MT20	3.0	6.0		
S	BMWW-t	MT20	4.0	4.0	1.75	1.75
T	BMWW-t	MT20	4.0	4.0	2.00	1.75
U	BMV1+p	MT20	2.0	4.0		

LATERAL BRACE(S) SHOWN SHALL BE 2X4 SPF#2

DIMENSIONS, SUPPORTS AND LOADINGS SPECIFIED BY FABRICATOR TO BE VERIFIED BY BUILDING DESIGNER

BEARINGS

JT	FACTORED GROSS REACTION VERT	HORZ	MAXIMUM FACTORED GROSS REACTION DOWN	HORZ	UPLIFT	INPUT BRG IN-SX	REQRD BRG IN-SX
L	1510	0	1510	0	0	1-10	1-10
U	1619	0	1619	0	0	5-8	1-12

UNFACTORED REACTIONS

JT	1ST LCASE COMBINED	MAX./MIN. COMPONENT REACTIONS SNOW	LIVE	PERM.LIVE	WIND	DEAD	SOIL
L	1076	657 / 0	0 / 0	0 / 0	0 / 0	419 / 0	0 / 0
U	1152	716 / 0	0 / 0	0 / 0	0 / 0	436 / 0	0 / 0

BEARING MATERIAL TO BE SPF NO.2 OR BETTER AT JOINT(S) L, U

BRACING

TOP CHORD TO BE SHEATHED OR MAX. PURLIN SPACING = 4.24 FT.
MAX. UNBRACED BOTTOM CHORD LENGTH = 10.00 FT OR RIGID CEILING DIRECTLY APPLIED.

ALL PITCH BREAKS AND PERIMETER CORNER JOINTS MUST BE LATERALLY RESTRAINED.

1 LATERAL BRACE(S) AT 1/ 2 LENGTH OF K-L, E-Q, J-M.

END VERTICAL(S) MUST BE SHEATHED OR HAVE BRACES AS INDICATED IN THE MAX. UNBRACED LENGTH COLUMN OF THE TABLE BELOW

LOADING

TOTAL LOAD CASES: (4)

CHORDS

MEMB. FR-TO	MAX. FACTORED FORCE (LBS)	FACTORED VERT. LOAD LC1 (PLF) FROM	TO	MAX CSI (LC)	MAX. UNBRAC LENGTH
A- B	0 / 42	-78.0	-78.0	0.11 (1)	10.00
B- C	-1277 / 0	-78.0	-78.0	0.25 (1)	5.43
C- D	-1686 / 0	-78.0	-78.0	0.56 (1)	4.46
D- E	-1885 / 0	-78.0	-78.0	0.58 (1)	4.24
E- F	-2297 / 0	-78.0	-78.0	0.27 (1)	4.25
F- G	-2301 / 0	-78.0	-78.0	0.31 (1)	4.24
G- H	-2301 / 0	-78.0	-78.0	0.31 (1)	4.24
H- I	-1871 / 0	-78.0	-78.0	0.28 (1)	4.64
I- J	-982 / 0	-78.0	-78.0	0.13 (1)	6.13
J- K	-361 / 0	-78.0	-78.0	0.08 (1)	6.25
L- K	-1495 / 0	0.0	0.0	0.30 (1)	5.37
U- B	-1594 / 0	0.0	0.0	0.19 (1)	6.54
U- T	0 / 0	-18.5	-18.5	0.10 (4)	10.00
T- S	0 / 823	-18.5	-18.5	0.25 (4)	10.00
S- R	0 / 1687	-18.5	-18.5	0.36 (1)	10.00
R- Q	0 / 1687	-18.5	-18.5	0.36 (1)	10.00
Q- P	0 / 2239	-18.5	-18.5	0.37 (1)	10.00
P- O	0 / 1871	-18.5	-18.5	0.35 (1)	10.00
O- N	0 / 1009	-18.5	-18.5	0.21 (1)	10.00
N- M	0 / 403	-18.5	-18.5	0.08 (1)	10.00
M- L	0 / 0	-18.5	-18.5	0.01 (4)	10.00

WEBS

MEMB. FR-TO	MAX. FACTORED FORCE (LBS)	MAX CSI (LC)
T- C	-257 / 0	0.19 (1)
C- S	0 / 1232	0.28 (1)
S- D	-755 / 0	0.55 (1)
D- Q	0 / 284	0.06 (1)
Q- E	-1375 / 0	0.39 (1)
E- P	0 / 1121	0.25 (1)
P- F	-193 / 0	0.08 (1)
P- H	0 / 631	0.14 (1)
O- H	-857 / 0	0.36 (1)
O- I	0 / 1283	0.29 (1)
N- I	-1262 / 0	0.53 (1)
N- J	0 / 1672	0.38 (1)
M- J	-1591 / 0	0.45 (1)
M- K	0 / 1447	0.33 (1)
B- T	0 / 902	0.20 (1)

[M]

DESIGN CRITERIA

SPECIFIED LOADS:

TOP CH.	LL	=	21.0	PSF
	DL	=	6.0	PSF
BOT CH.	LL	=	0.0	PSF
	DL	=	7.4	PSF
TOTAL LOAD		=	34.4	PSF

SPACING = 24.0 IN. C/C

LOADING IN FLAT SECTION BASED ON A SLOPE OF 2.00/12 MINIMUM

THIS TRUSS IS DESIGNED FOR RESIDENTIAL OR SMALL BUILDING REQUIREMENTS OF PART 9, NBCC 2015

THIS DESIGN COMPLIES WITH:
- PART 9 OF BCBC 2018 , ABC 2019
- PART 9 OF OBC 2012 (2019 AMENDMENT)
- CSA 086-14
- TPIC 2014

(55 % OF 23.0 P.S.F. G.S.L. PLUS 8.4 P.S.F. RAIN LOAD) EQUALS 21.0 P.S.F. SPECIFIED ROOF LIVE LOAD

ALLOWABLE DEFL.(LL)= L/360 (1.04")
CALCULATED VERT. DEFL.(LL) = L/ 999 (0.13")
ALLOWABLE DEFL.(TL)= L/360 (1.04")
CALCULATED VERT. DEFL.(TL) = L/ 999 (0.25")

CSI: TC=0.58/1.00 (D-E:1) , BC=0.37/1.00 (P-Q:1) , WB=0.55/1.00 (D-S:1) , SSI=0.23/1.00 (C-D:1)

DOL LUMBER=1.00 NAIL=1.00 LS BEND=1.10 COMP=1.10 SHEAR=1.10 TENS= 1.10

COMPANION LIVE LOAD FACTOR = 1.00

TRUSS PLATE MANUFACTURER IS NOT RESPONSIBLE FOR QUALITY CONTROL IN THE TRUSS MANUFACTURING PLANT .

NAIL VALUES

PLATE	GRIP(DRY) (PSI) MAX	MIN	SHEAR (PLI) MAX	MIN	SECTION (PLI) MAX	MIN
MT20	650	371	1747	788	1987	1873

PLATE PLACEMENT TOL. = 0.250 inches

PLATE ROTATION TOL. = 5.0 Deg.

JSI GRIP= 0.90 (I) (INPUT = 0.90)
JSI METAL= 0.53 (R) (INPUT = 1.00)

JOB NAME	TRUSS NAME	QUANTITY	PLY	JOB DESC.		DRWG NO.
336327	H33TA		1	TRUSS DESC.	JT 45147	E21104394

Alpa Roof Truss, Maple

Version 8.420 S Jan 21 2021 MiTek Industries, Inc. Thu Oct 14 15:14:13 2021 Page 1

ID:hd511hZTz_bdeQoS817GKByhVxV-bxVN6smaWfTjXP0ACjVTmqbW6ZsBrHUf2U4CkPyTThu

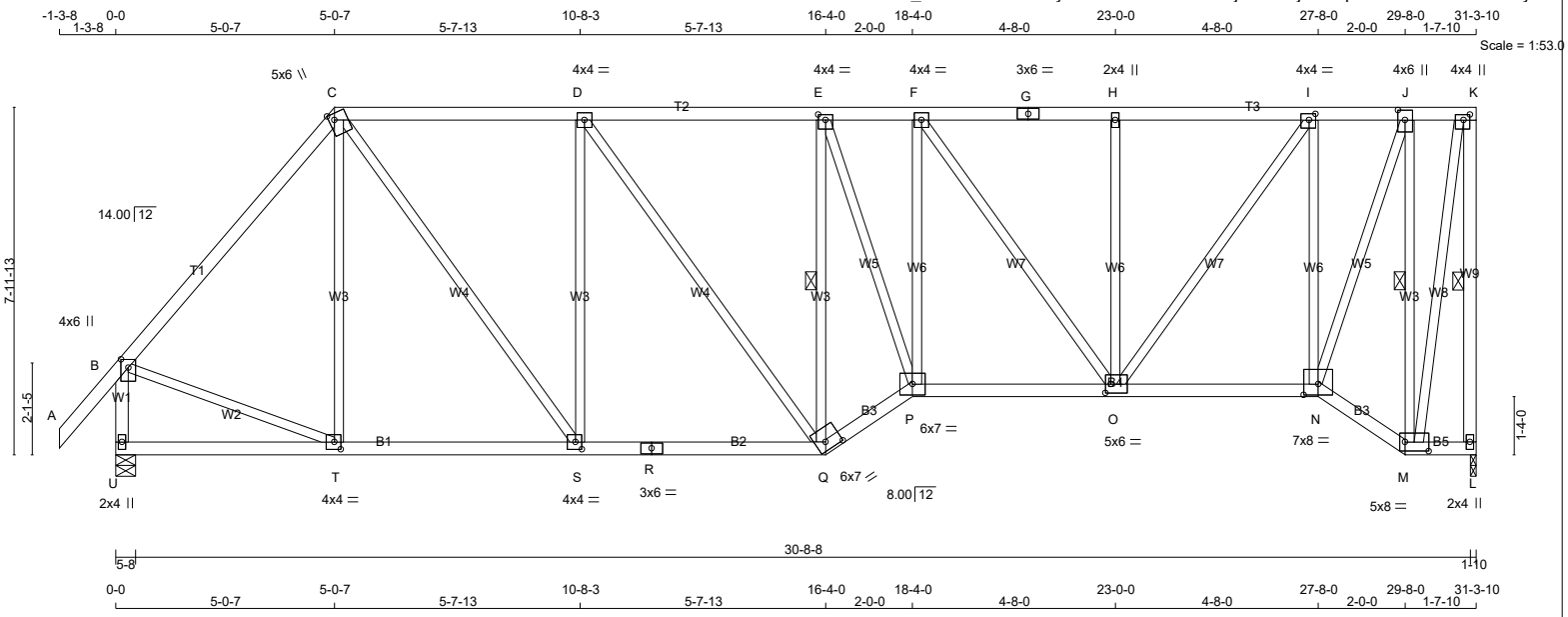

TOTAL WEIGHT = 175 lb [M]

LUMBER

N. L. G. A. RULES

CHORDS	SIZE		LUMBER	DESCR.
A - C	2x4	DRY	No.2	SPF
C - G	2x4	DRY	No.2	SPF
G - K	2x4	DRY	No.2	SPF
L - K	2x4	DRY	No.2	SPF
U - B	2x4	DRY	No.2	SPF
U - R	2x4	DRY	No.2	SPF
R - Q	2x4	DRY	No.2	SPF
Q - P	2x4	DRY	No.2	SPF
P - N	2x4	DRY	No.2	SPF
N - M	2x4	DRY	No.2	SPF
M - L	2x4	DRY	No.2	SPF
ALL WEBS EXCEPT	2x3	DRY	No.2	SPF

DRY: SEASONED LUMBER.

PLATES (table is in inches)

JT	TYPE	PLATES	W	LEN	Y	X
B	TMVW+p	MT20	4.0	6.0	2.25	2.00
C	TTWW+m	MT20	5.0	6.0	1.75	1.50
D	TMWW-t	MT20	4.0	4.0		
E	TMWW-t	MT20	4.0	4.0	1.50	2.00
F	TMWW-t	MT20	4.0	4.0		
G	TS-t	MT20	3.0	6.0		
H	TMW+w	MT20	2.0	4.0		
I	TMWW-t	MT20	4.0	4.0	1.75	1.75
J	TMWW+t	MT20	4.0	6.0	2.75	2.00
K	TMVW+p	MT20	4.0	4.0	1.50	1.75
L	BMV1+p	MT20	2.0	4.0		
M	BBWW-l	MT20	5.0	8.0	2.50	6.50
N	BBWW-l	MT20	7.0	8.0	3.00	4.00
O	BMWWW-t	MT20	5.0	6.0	2.50	1.50
P	BBWW-l	MT20	6.0	7.0		
Q	BBWW-h	MT20	6.0	7.0	2.25	4.25
R	BS-t	MT20	3.0	6.0		
S	BMWW-t	MT20	4.0	4.0	2.00	1.75
T	BMWW-t	MT20	4.0	4.0	2.00	1.75
U	BMV1+p	MT20	2.0	4.0		

LATERAL BRACE(S) SHOWN SHALL BE 2X4 SPF#2

LICENSED PROFESSIONAL ENGINEER
Y. WIDYA
100225448
10/14/2021
PROVINCE OF ONTARIO

DIMENSIONS, SUPPORTS AND LOADINGS SPECIFIED BY FABRICATOR TO BE VERIFIED BY BUILDING DESIGNER

BEARINGS

JT	FACTORED GROSS REACTION VERT	HORZ	MAXIMUM FACTORED GROSS REACTION DOWN	HORZ	UPLIFT	INPUT BRG IN-SX	REQRD BRG IN-SX
L	1510	0	1510	0	0	1-10	1-10
U	1619	0	1619	0	0	5-8	1-12

UNFACTORED REACTIONS

JT	1ST LCASE COMBINED	MAX./MIN. COMPONENT REACTIONS SNOW	LIVE	PERM.LIVE	WIND	DEAD	SOIL
L	1076	657 / 0	0 / 0	0 / 0	0 / 0	419 / 0	0 / 0
U	1152	716 / 0	0 / 0	0 / 0	0 / 0	436 / 0	0 / 0

BEARING MATERIAL TO BE SPF NO.2 OR BETTER AT JOINT(S) L, U

BRACING

TOP CHORD TO BE SHEATHED OR MAX. PURLIN SPACING = 4.75 FT.
MAX. UNBRACED BOTTOM CHORD LENGTH = 10.00 FT OR RIGID CEILING DIRECTLY APPLIED.

ALL PITCH BREAKS AND PERIMETER CORNER JOINTS MUST BE LATERALLY RESTRAINED.

1 LATERAL BRACE(S) AT 1/ 2 LENGTH OF K-L, E-Q, J-M.

END VERTICAL(S) MUST BE SHEATHED OR HAVE BRACES AS INDICATED IN THE MAX. UNBRACED LENGTH COLUMN OF THE TABLE BELOW

LOADING

TOTAL LOAD CASES: (4)

CHORDS

MEMB. FR-TO	MAX. FACTORED FORCE (LBS)	FACTORED VERT. LOAD (PLF) FROM	TO	LC1 CSI (LC)	MAX UNBRAC LENGTH
A- B	0 / 42	-78.0	-78.0	0.11 (1)	10.00
B- C	-1301 / 0	-78.0	-78.0	0.44 (1)	5.18
C- D	-1423 / 0	-78.0	-78.0	0.44 (1)	4.93
D- E	-1553 / 0	-78.0	-78.0	0.45 (1)	4.75
E- F	-1817 / 0	-78.0	-78.0	0.19 (1)	4.78
F- G	-1478 / 0	-78.0	-78.0	0.25 (1)	5.11
G- H	-1478 / 0	-78.0	-78.0	0.25 (1)	5.11
H- I	-1478 / 0	-78.0	-78.0	0.25 (1)	5.11
I- J	-775 / 0	-78.0	-78.0	0.12 (1)	6.25
J- K	-298 / 0	-78.0	-78.0	0.08 (1)	6.25
L- K	-1495 / 0	0.0	0.0	0.43 (1)	5.37
U- B	-1582 / 0	0.0	0.0	0.19 (1)	6.56
U- T	0 / 0	-18.5	-18.5	0.12 (4)	10.00
T- S	0 / 841	-18.5	-18.5	0.22 (4)	10.00
S- R	0 / 1423	-18.5	-18.5	0.30 (1)	10.00
R- Q	0 / 1423	-18.5	-18.5	0.30 (1)	10.00
Q- P	0 / 1848	-18.5	-18.5	0.31 (1)	10.00
P- O	0 / 1813	-18.5	-18.5	0.34 (1)	10.00
O- N	0 / 796	-18.5	-18.5	0.18 (4)	10.00
N- M	0 / 333	-18.5	-18.5	0.07 (1)	10.00
M- L	0 / 0	-18.5	-18.5	0.01 (4)	10.00

WEBS

MEMB. FR-TO	MAX. FACTORED FORCE (LBS)	MAX CSI (LC)
T- C	-176 / 8	0.21 (1)
C- S	0 / 980	0.22 (1)
S- D	-680 / 0	0.83 (1)
D- Q	0 / 219	0.05 (1)
Q- E	-1136 / 0	0.46 (1)
E- P	0 / 886	0.20 (1)
P- F	0 / 244	0.05 (1)
F- O	-573 / 0	0.71 (1)
O- H	-391 / 0	0.29 (1)
O- I	0 / 1171	0.26 (1)
N- I	-1262 / 0	0.92 (1)
N- J	0 / 1583	0.36 (1)
M- J	-1549 / 0	0.62 (1)
M- K	0 / 1430	0.32 (1)
B- T	0 / 891	0.20 (1)

DESIGN CRITERIA

SPECIFIED LOADS:

TOP CH.	LL	=	21.0	PSF
	DL	=	6.0	PSF
BOT CH.	LL	=	0.0	PSF
	DL	=	7.4	PSF
TOTAL LOAD		=	34.4	PSF

SPACING = 24.0 IN. C/C

LOADING IN FLAT SECTION BASED ON A SLOPE OF 2.00/12 MINIMUM

THIS TRUSS IS DESIGNED FOR RESIDENTIAL OR SMALL BUILDING REQUIREMENTS OF PART 9, NBCC 2015

THIS DESIGN COMPLIES WITH:
- PART 9 OF BCBC 2018 , ABC 2019
- PART 9 OF OBC 2012 (2019 AMENDMENT)
- CSA 086-14
- TPIC 2014

(55 % OF 23.0 P.S.F. G.S.L. PLUS 8.4 P.S.F. RAIN LOAD) EQUALS 21.0 P.S.F. SPECIFIED ROOF LIVE LOAD

ALLOWABLE DEFL.(LL)= L/360 (1.04")
CALCULATED VERT. DEFL.(LL) = L/ 999 (0.11")
ALLOWABLE DEFL.(TL)= L/360 (1.04")
CALCULATED VERT. DEFL.(TL) = L/ 999 (0.21")

CSI: TC=0.45/1.00 (D-E:1) , BC=0.34/1.00 (O-P:1) , WB=0.92/1.00 (I-N:1) , SSI=0.21/1.00 (C-D:1)

DOL LUMBER=1.00 NAIL=1.00 LS BEND=1.10 COMP=1.10 SHEAR=1.10 TENS= 1.10

COMPANION LIVE LOAD FACTOR = 1.00

TRUSS PLATE MANUFACTURER IS NOT RESPONSIBLE FOR QUALITY CONTROL IN THE TRUSS MANUFACTURING PLANT .

NAIL VALUES

PLATE	GRIP(DRY) (PSI) MAX	MIN	SHEAR (PLI) MAX	MIN	SECTION (PLI) MAX	MIN
MT20	650	371	1747	788	1987	1873

PLATE PLACEMENT TOL. = 0.250 inches

PLATE ROTATION TOL. = 5.0 Deg.

JSI GRIP= 0.90 (K) (INPUT = 0.90)
JSI METAL= 0.51 (B) (INPUT = 1.00)

JOB NAME	TRUSS NAME	QUANTITY	PLY	JOB DESC.	DRWG NO.
336327	H34TA		1	TRUSS DESC. JT 45147	E21104395

Alpa Roof Truss, Maple

Version 8.420 S Jan 21 2021 MiTek Industries, Inc. Thu Oct 14 15:14:15 2021 Page 1

ID:hd511hZTz bdeQoS817GKByhVxV-XJc7XYoq2GjRniAZJ8XxrFhq5MYrJCtyWnZJplyTThs

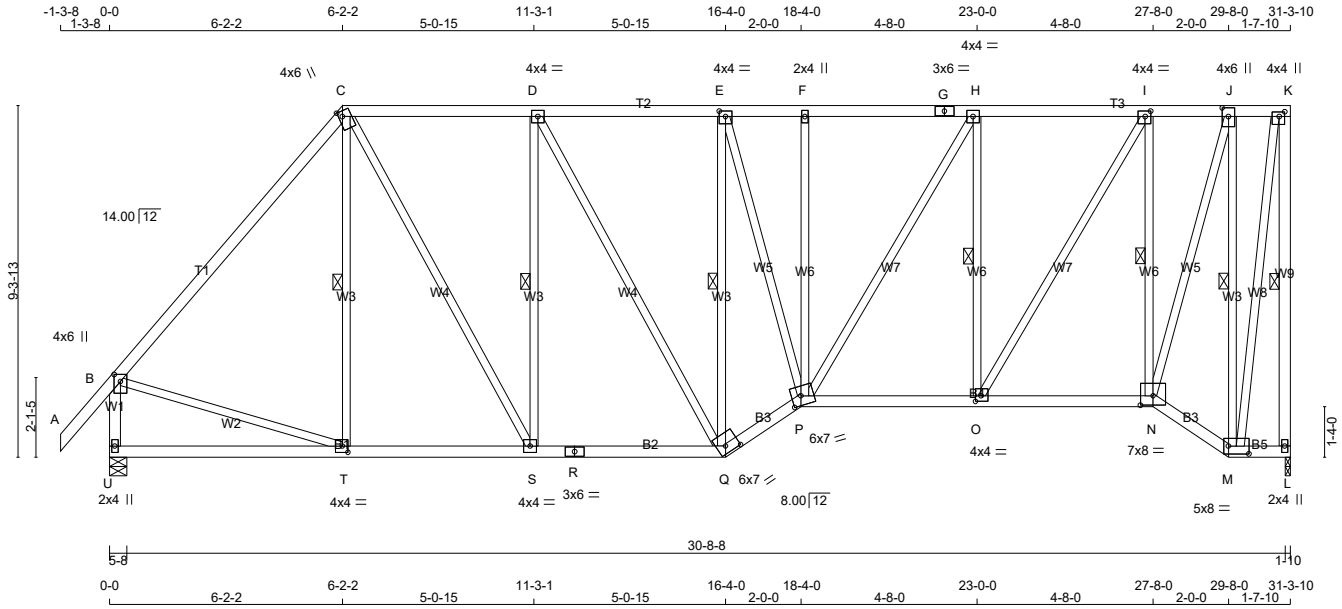

LUMBER

N. L. G. A. RULES

CHORDS	SIZE		LUMBER	DESCR.
A - C	2x4	DRY	2100F 1.8E	SPF
C - G	2x4	DRY	No.2	SPF
G - K	2x4	DRY	No.2	SPF
L - K	2x4	DRY	No.2	SPF
U - B	2x4	DRY	No.2	SPF
U - R	2x4	DRY	No.2	SPF
R - Q	2x4	DRY	No.2	SPF
Q - P	2x4	DRY	No.2	SPF
P - N	2x4	DRY	No.2	SPF
N - M	2x4	DRY	No.2	SPF
M - L	2x4	DRY	No.2	SPF
ALL WEBS EXCEPT	2x3	DRY	No.2	SPF

DRY: SEASONED LUMBER.

PLATES (table is in inches)

JT	TYPE	PLATES	W	LEN	Y	X
B	TMVW+p	MT20	4.0	6.0	2.25	2.00
C	TTWW+m	MT20	4.0	6.0	1.75	1.25
D	TMWW-t	MT20	4.0	4.0		
E	TMWW-t	MT20	4.0	4.0	1.75	2.00
F	TMW+w	MT20	2.0	4.0		
G	TS-t	MT20	3.0	6.0		
H	TMWW-t	MT20	4.0	4.0		
I	TMWW-t	MT20	4.0	4.0	1.75	1.75
J	TMWW+t	MT20	4.0	6.0	2.75	2.00
K	TMVW+p	MT20	4.0	4.0	1.50	1.75
L	BMV1+p	MT20	2.0	4.0		
M	BBWW-l	MT20	5.0	8.0	2.50	6.50
N	BBWW-l	MT20	7.0	8.0	3.00	4.00
O	BMWW-t	MT20	4.0	4.0	1.75	1.75
P	BBWWW-m	MT20	6.0	7.0	3.00	3.00
Q	BBWW-h	MT20	6.0	7.0	2.25	4.25
R	BS-t	MT20	3.0	6.0		
S	BMWW-t	MT20	4.0	4.0		
T	BMWW-t	MT20	4.0	4.0	2.00	1.75
U	BMV1+p	MT20	2.0	4.0		

LATERAL BRACE(S) SHOWN SHALL BE 2X4 SPF#2

DIMENSIONS, SUPPORTS AND LOADINGS SPECIFIED BY FABRICATOR TO BE VERIFIED BY BUILDING DESIGNER

BEARINGS

JT	FACTORED GROSS REACTION VERT	HORZ	MAXIMUM FACTORED GROSS REACTION DOWN	HORZ	UPLIFT	INPUT BRG IN-SX	REQRD BRG IN-SX
L	1510	0	1510	0	0	1-10	1-10
U	1619	0	1619	0	0	5-8	1-12

UNFACTORED REACTIONS

JT	1ST LCASE COMBINED	MAX./MIN. COMPONENT REACTIONS SNOW	LIVE	PERM.LIVE	WIND	DEAD	SOIL
L	1076	657 / 0	0 / 0	0 / 0	0 / 0	419 / 0	0 / 0
U	1152	716 / 0	0 / 0	0 / 0	0 / 0	436 / 0	0 / 0

BEARING MATERIAL TO BE SPF NO.2 OR BETTER AT JOINT(S) L, U

BRACING

TOP CHORD TO BE SHEATHED OR MAX. PURLIN SPACING = 5.07 FT.
MAX. UNBRACED BOTTOM CHORD LENGTH = 10.00 FT OR RIGID CEILING DIRECTLY APPLIED.

ALL PITCH BREAKS AND PERIMETER CORNER JOINTS MUST BE LATERALLY RESTRAINED.

1 LATERAL BRACE(S) AT 1/ 2 LENGTH OF K-L, C-T, D-S, E-Q, H-O, I-N, J-M.

END VERTICAL(S) MUST BE SHEATHED OR HAVE BRACES AS INDICATED IN THE MAX. UNBRACED LENGTH COLUMN OF THE TABLE BELOW

LOADING

TOTAL LOAD CASES: (4)

CHORDS

MEMB. FR-TO	MAX. FACTORED FORCE (LBS)	FACTORED VERT. LOAD (PLF) FROM	TO	LC1 MAX CSI (LC)	MAX. UNBRAC LENGTH
A- B	0 / 42	-78.0	-78.0	0.07 (1)	10.00
B- C	-1299 / 0	-78.0	-78.0	0.42 (1)	6.18
C- D	-1234 / 0	-78.0	-78.0	0.34 (1)	5.35
D- E	-1321 / 0	-78.0	-78.0	0.34 (1)	5.21
E- F	-1500 / 0	-78.0	-78.0	0.16 (1)	5.19
F- G	-1503 / 0	-78.0	-78.0	0.26 (1)	5.07
G- H	-1503 / 0	-78.0	-78.0	0.26 (1)	5.07
H- I	-1223 / 0	-78.0	-78.0	0.25 (1)	5.51
I- J	-640 / 0	-78.0	-78.0	0.11 (1)	6.25
J- K	-253 / 0	-78.0	-78.0	0.09 (1)	6.25
L- K	-1495 / 0	0.0	0.0	0.61 (1)	5.37
U- B	-1572 / 0	0.0	0.0	0.19 (1)	6.58
U- T	0 / 0	-18.5	-18.5	0.16 (4)	10.00
T- S	0 / 841	-18.5	-18.5	0.24 (4)	10.00
S- R	0 / 1234	-18.5	-18.5	0.25 (1)	10.00
R- Q	0 / 1234	-18.5	-18.5	0.25 (1)	10.00
Q- P	0 / 1574	-18.5	-18.5	0.27 (1)	10.00
P- O	0 / 1223	-18.5	-18.5	0.25 (1)	10.00
O- N	0 / 657	-18.5	-18.5	0.17 (4)	10.00
N- M	0 / 283	-18.5	-18.5	0.06 (1)	10.00
M- L	0 / 0	-18.5	-18.5	0.01 (4)	10.00

WEBS

MEMB. FR-TO	MAX. FACTORED FORCE (LBS)	MAX CSI (LC)
T- C	-112 / 42	0.06 (1)
C- S	0 / 798	0.18 (1)
S- D	-605 / 0	0.35 (1)
D- Q	0 / 178	0.04 (1)
Q- E	-966 / 0	0.55 (1)
E- P	0 / 720	0.16 (1)
P- F	-225 / 0	0.27 (1)
P- H	0 / 540	0.12 (1)
O- H	-856 / 0	0.34 (1)
O- I	0 / 1109	0.25 (1)
N- I	-1265 / 0	0.51 (1)
N- J	0 / 1531	0.34 (1)
M- J	-1518 / 0	0.87 (1)
M- K	0 / 1418	0.32 (1)
B- T	0 / 874	0.20 (1)

DESIGN CRITERIA

SPECIFIED LOADS:

TOP CH.	LL	=	21.0	PSF
	DL	=	6.0	PSF
BOT CH.	LL	=	0.0	PSF
	DL	=	7.4	PSF
TOTAL LOAD		=	34.4	PSF

SPACING = 24.0 IN. C/C

LOADING IN FLAT SECTION BASED ON A SLOPE OF 2.00/12 MINIMUM

THIS TRUSS IS DESIGNED FOR RESIDENTIAL OR SMALL BUILDING REQUIREMENTS OF PART 9, NBCC 2015

THIS DESIGN COMPLIES WITH:
- PART 9 OF BCBC 2018 , ABC 2019
- PART 9 OF OBC 2012 (2019 AMENDMENT)
- CSA 086-14
- TPIC 2014

(55 % OF 23.0 P.S.F. G.S.L. PLUS 8.4 P.S.F. RAIN LOAD) EQUALS 21.0 P.S.F. SPECIFIED ROOF LIVE LOAD

ALLOWABLE DEFL.(LL)= L/360 (1.04")
CALCULATED VERT. DEFL.(LL) = L/ 999 (0.10")
ALLOWABLE DEFL.(TL)= L/360 (1.04")
CALCULATED VERT. DEFL.(TL) = L/ 999 (0.20")

CSI: TC=0.61/1.00 (K-L:1) , BC=0.27/1.00 (P-Q:1) , WB=0.87/1.00 (J-M:1) , SSI=0.19/1.00 (C-D:1)

DOL LUMBER=1.00 NAIL=1.00 LS BEND=1.10 COMP=1.10 SHEAR=1.10 TENS= 1.10

COMPANION LIVE LOAD FACTOR = 1.00

TRUSS PLATE MANUFACTURER IS NOT RESPONSIBLE FOR QUALITY CONTROL IN THE TRUSS MANUFACTURING PLANT .

NAIL VALUES

PLATE	GRIP(DRY) (PSI) MAX	MIN	SHEAR (PLI) MAX	MIN	SECTION (PLI) MAX	MIN
MT20	650	371	1747	788	1987	1873

PLATE PLACEMENT TOL. = 0.250 inches

PLATE ROTATION TOL. = 5.0 Deg.

JSI GRIP= 0.89 (B) (INPUT = 0.90)
JSI METAL= 0.52 (B) (INPUT = 1.00)

JOB NAME	TRUSS NAME	QUANTITY	PLY	JOB DESC.	DRWG NO.
336327	H35TA		1	TRUSS DESC. JT 45147	E21104396

Alpa Roof Truss, Maple

Version 8.420 S Jan 21 2021 MiTek Industries, Inc. Thu Oct 14 15:14:17 2021 Page 1

ID:hd511hZTz bdeQoS817GKByhVxV-TikuyEp4atz900KyRZaPwqm4oABvn5KFz52QtAyTThq

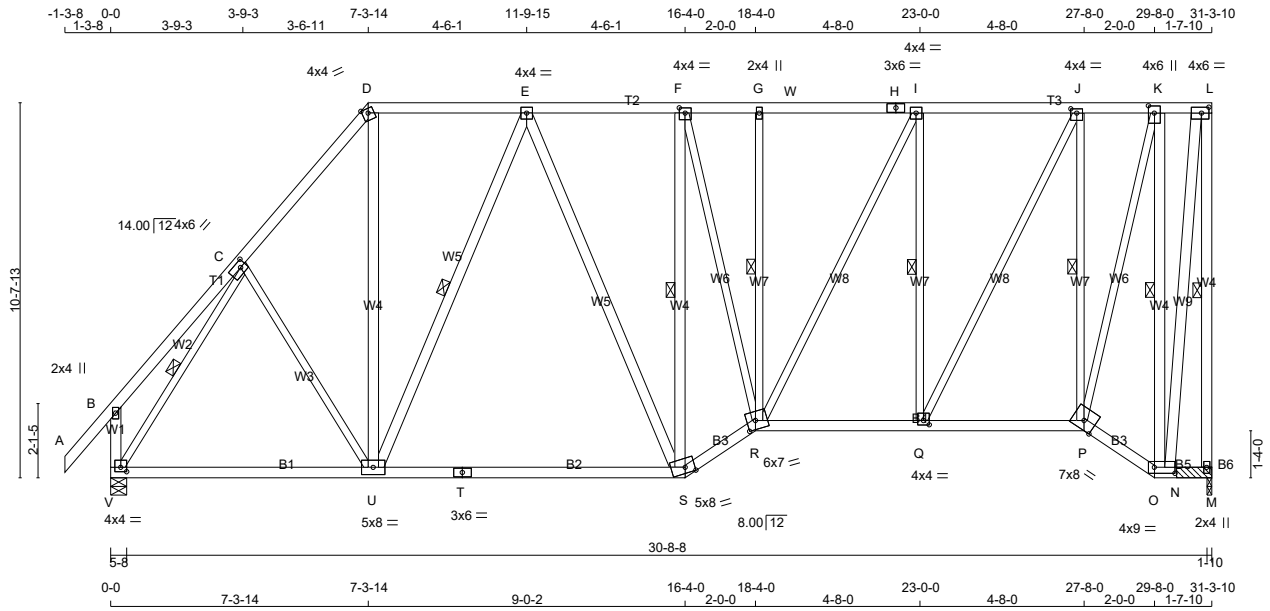

TOTAL WEIGHT = 228 lb

LUMBER

N. L. G. A. RULES

CHORDS	SIZE		LUMBER	DESCR.
A - D	2x4	DRY	No.2	SPF
D - H	2x4	DRY	No.2	SPF
H - L	2x4	DRY	No.2	SPF
M - L	2x4	DRY	No.2	SPF
V - B	2x4	DRY	No.2	SPF
V - T	2x4	DRY	No.2	SPF
T - S	2x4	DRY	No.2	SPF
S - R	2x4	DRY	No.2	SPF
R - P	2x4	DRY	No.2	SPF
P - O	2x4	DRY	No.2	SPF
O - M	2x4	DRY	No.2	SPF
ALL WEBS	2x3	DRY	No.2	SPF
EXCEPT				
U - D	2x4	DRY	No.2	SPF
U - E	2x4	DRY	No.2	SPF
E - S	2x4	DRY	No.2	SPF
S - F	2x4	DRY	No.2	SPF
O - K	2x4	DRY	No.2	SPF
O - L	2x4	DRY	No.2	SPF

DRY: SEASONED LUMBER.

PLATES (table is in inches)

JT	TYPE	PLATES	W	LEN	Y	X
B	TMV+p	MT20	2.0	4.0		
C	TMWW-t	MT20	4.0	6.0	2.00	2.00
D	TTW-m	MT20	4.0	4.0	Edge	
E	TMWW-t	MT20	4.0	4.0		
F	TMWW-t	MT20	4.0	4.0	1.75	2.00
G	TMW+w	MT20	2.0	4.0		
H	TS-t	MT20	3.0	6.0		
I	TMWW-t	MT20	4.0	4.0		
J	TMWW-t	MT20	4.0	4.0	1.50	2.00
K	TMWW+t	MT20	4.0	6.0	2.50	2.00
L	TMVW-t	MT20	4.0	6.0	2.00	2.50
M	BMV1+p	MT20	2.0	4.0		
O	BBWW-l	MT20	4.0	9.0	2.00	7.00
P	BBWW-h	MT20	7.0	8.0	Edge	
Q	BMWW-t	MT20	4.0	4.0	1.50	2.00
R	BBWWW-m	MT20	6.0	7.0	3.00	3.00
S	BBWW-m	MT20	5.0	8.0	2.00	3.25
T	BS-t	MT20	3.0	6.0		
U	BMWWW-t	MT20	5.0	8.0		

LATERAL BRACE(S) SHOWN SHALL BE 2X4 SPF#2

DIMENSIONS, SUPPORTS AND LOADINGS SPECIFIED BY FABRICATOR TO BE VERIFIED BY BUILDING DESIGNER

BEARINGS

JT	FACTORED GROSS REACTION VERT	HORZ	MAXIMUM FACTORED GROSS REACTION DOWN	HORZ	UPLIFT	INPUT BRG IN-SX	REQRD BRG IN-SX
M	1621	0	1621	0	0	1-10	1-10 & BLOCK
V	1688	0	1688	0	0	5-8	1-13

UNFACTORED REACTIONS

JT	1ST LCASE COMBINED	MAX./MIN. COMPONENT REACTIONS SNOW	LIVE	PERM.LIVE	WIND	DEAD	SOIL
M	1165	657 / 0	0 / 0	0 / 0	0 / 0	508 / 0	0 / 0
V	1207	716 / 0	0 / 0	0 / 0	0 / 0	491 / 0	0 / 0

BEARING MATERIAL TO BE SPF NO.2 OR BETTER AT JOINT(S) M, V

2x4 DRY SPF No.2 BEARING BLOCK 12" LONG AT JT. M ATTACHED TO FRONT SIDE WITH 2 ROWS OF (0.122"X3") SPIRAL NAILS SPACED 3" C.C. 8 NAILS TOTAL.

BRACING

FOR SECTION D-L, MAX. PURLIN SPACING = 2.00 FT.
FOR OTHER SECTIONS, TOP CHORD TO BE SHEATHED OR MAX. PURLIN SPACING = 5.33 FT.
MAX. UNBRACED BOTTOM CHORD LENGTH = 10.00 FT OR RIGID CEILING DIRECTLY APPLIED.

ALL PITCH BREAKS AND PERIMETER CORNER JOINTS MUST BE LATERALLY RESTRAINED.

1 LATERAL BRACE(S) AT 1/ 2 LENGTH OF L-M, E-U, F-S, G-R, I-Q, J-P, K-O, C-V.

END VERTICAL(S) MUST BE SHEATHED OR HAVE BRACES AS INDICATED IN THE MAX. UNBRACED LENGTH COLUMN OF THE TABLE BELOW

LOADING

TOTAL LOAD CASES: (4)

CHORDS

MEMB. FR-TO	MAX. FACTORED FORCE (LBS)	FACTORED VERT. LOAD (PLF) FROM	TO	LC1	MAX CSI (LC)	MAX. UNBRAC LENGTH
A- B	0 / 42	-78.0	-78.0	0.11 (1)	10.00	
B- C	0 / 24	-78.0	-78.0	0.16 (1)	10.00	
C- D	-1387 / 0	-78.0	-78.0	0.20 (1)	5.33	
D- E	-894 / 0	-85.5	-85.5	0.27 (1)	2.00	
E- F	-1230 / 0	-85.5	-85.5	0.29 (1)	2.00	
F- G	-1369 / 0	-85.5	-85.5	0.13 (1)	2.00	
G- W	-1372 / 0	-85.5	-85.5	0.28 (1)	2.00	
W- H	-1372 / 0	-85.5	-85.5	0.28 (1)	2.00	
H- I	-1372 / 0	-85.5	-85.5	0.28 (1)	2.00	
I- J	-1118 / 0	-85.5	-85.5	0.27 (1)	2.00	
J- K	-585 / 0	-85.5	-85.5	0.11 (1)	2.00	
K- L	-241 / 0	-85.5	-85.5	0.05 (1)	2.00	
M- L	-1606 / 0	0.0	0.0	0.92 (1)	5.22	
V- B	-219 / 0	0.0	0.0	0.03 (1)	7.81	
V- U	0 / 861	-18.5	-18.5	0.45 (4)	10.00	
U- T	0 / 1152	-18.5	-18.5	0.48 (4)	10.00	
T- S	0 / 1152	-18.5	-18.5	0.48 (4)	10.00	
S- R	0 / 1462	-18.5	-18.5	0.25 (1)	10.00	
R- Q	0 / 1118	-18.5	-18.5	0.23 (1)	10.00	
Q- P	0 / 600	-18.5	-18.5	0.17 (4)	10.00	
P- O	0 / 262	-18.5	-18.5	0.05 (1)	10.00	
O- N	0 / 0	-18.5	-18.5	0.01 (4)	10.00	
N- M	0 / 0	-18.5	-18.5	0.01 (4)	10.00	

WEBS

MEMB. FR-TO	MAX. FACTORED FORCE (LBS)	MAX CSI (LC)
C- U	0 / 64	0.02 (4)
U- D	0 / 766	0.12 (1)
U- E	-666 / 0	0.47 (1)
E- S	0 / 194	0.03 (1)
S- F	-903 / 0	0.52 (1)
F- R	0 / 656	0.15 (1)
R- G	-261 / 0	0.15 (1)
R- I	0 / 553	0.12 (1)
Q- I	-925 / 0	0.53 (1)
Q- J	0 / 1147	0.26 (1)
P- J	-1341 / 0	0.77 (1)
P- K	0 / 1584	0.36 (1)
O- K	-1635 / 0	0.93 (1)
O- L	0 / 1543	0.25 (1)
V- C	-1661 / 0	0.54 (1)

DESIGN CRITERIA

SPECIFIED LOADS:

TOP	CH.	LL	=	21.0	PSF
		DL	=	6.0	PSF
BOT	CH.	LL	=	0.0	PSF
		DL	=	7.4	PSF
TOTAL	LOAD		=	34.4	PSF

SPACING = 24.0 IN. C/C

LOADING IN FLAT SECTION BASED ON PIGGYBACK TRUSS WITH SLOPES OF 6.00/12 AND -6.00/12 AND RESPECTIVE HEEL HEIGHTS OF 0-0 AND 0-0 AND AN ADDITIONAL DEAD LOAD OF 3.0 P.S.F.

THIS TRUSS IS DESIGNED FOR RESIDENTIAL OR SMALL BUILDING REQUIREMENTS OF PART 9, NBCC 2015

THIS DESIGN COMPLIES WITH:
- PART 9 OF BCBC 2018 , ABC 2019
- PART 9 OF OBC 2012 (2019 AMENDMENT)
- CSA 086-14
- TPIC 2014

(55 % OF 23.0 P.S.F. G.S.L. PLUS 8.4 P.S.F. RAIN LOAD) EQUALS 21.0 P.S.F. SPECIFIED ROOF LIVE LOAD

ALLOWABLE DEFL.(LL)= L/360 (1.04")
CALCULATED VERT. DEFL.(LL) = L/ 999 (0.09")
ALLOWABLE DEFL.(TL)= L/360 (1.04")
CALCULATED VERT. DEFL.(TL) = L/ 999 (0.28")

CSI: TC=0.92/1.00 (L-M:1) , BC=0.48/1.00 (S-U:4) , WB=0.93/1.00 (K-O:1) , SSI=0.18/1.00 (D-E:1)

DOL LUMBER=1.00 NAIL=1.00 LS BEND=1.10 COMP=1.10 SHEAR=1.10 TENS= 1.10

COMPANION LIVE LOAD FACTOR = 1.00

TRUSS PLATE MANUFACTURER IS NOT RESPONSIBLE FOR QUALITY CONTROL IN THE TRUSS MANUFACTURING PLANT .

NAIL VALUES

PLATE	GRIP(DRY) (PSI) MAX	MIN	SHEAR (PLI) MAX	MIN	SECTION (PLI) MAX	MIN
MT20	650	371	1747	788	1987	1873

PLATE PLACEMENT TOL. = 0.250 inches

PLATE ROTATION TOL. = 5.0 Deg.

JSI GRIP= 0.90 (Q) (INPUT = 0.90)
JSI METAL= 0.42 (T) (INPUT = 1.00)

CONTINUED ON PAGE 2

JOB NAME	TRUSS NAME	QUANTITY	PLY	JOB DESC.		DRWG NO.
336329	H102		1	TRUSS DESC.	JT 45147	E21104398

Alpa Roof Truss, Maple

Version 8.420 S Jan 21 2021 MiTek Industries, Inc. Thu Oct 14 15:56:00 2021 Page 1

ID:hd511hZTz bdeQoS817GKByhVxV-hEU7H5676wJ0ogA?Zk NsVxw98YfkKqgX0tNEbyTT4j

Scale = 1:40.4

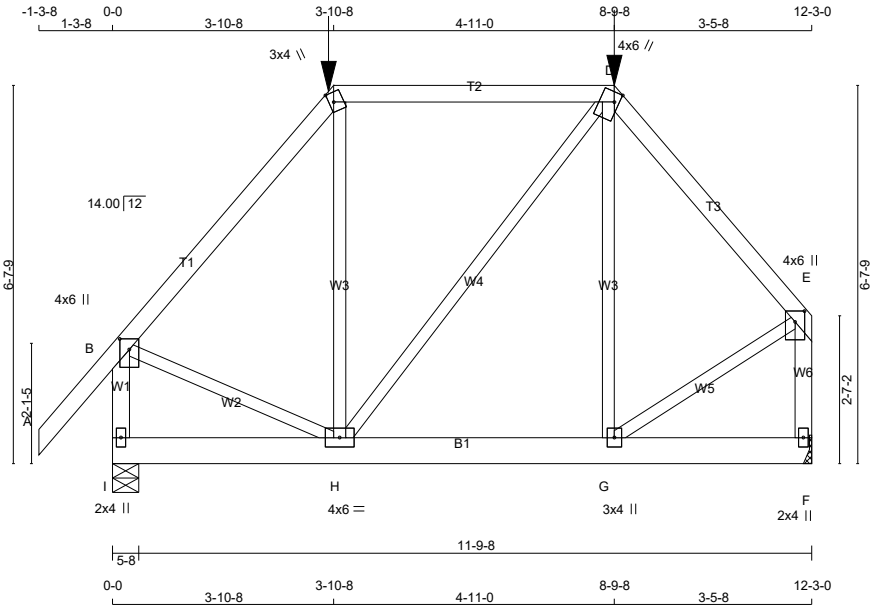

TOTAL WEIGHT = 69 lb

LUMBER

N. L. G. A. RULES

CHORDS	SIZE		LUMBER	DESCR.
A - C	2x4	DRY	No.2	SPF
C - D	2x4	DRY	No.2	SPF
D - E	2x4	DRY	No.2	SPF
I - B	2x4	DRY	No.2	SPF
F - E	2x4	DRY	No.2	SPF
I - F	2x6	DRY	No.2	SPF
ALL WEBS EXCEPT	2x3	DRY	No.2	SPF

DRY: SEASONED LUMBER.

PLATES (table is in inches)

JT	TYPE	PLATES	W	LEN	Y	X
B	TMVW+p	MT20	4.0	6.0	2.25	2.00
C	TTW+m	MT20	3.0	4.0	2.00	1.00
D	TTWW+m	MT20	4.0	6.0	2.00	1.00
E	TMVW+p	MT20	4.0	6.0	2.25	2.00
F	BMV1+p	MT20	2.0	4.0		
G	BMWW+t	MT20	3.0	4.0		
H	BMWWW-t	MT20	4.0	6.0		
I	BMV1+p	MT20	2.0	4.0		

LATERAL BRACE(S) SHOWN SHALL BE 2X4 SPF#2

DIMENSIONS, SUPPORTS AND LOADINGS SPECIFIED BY FABRICATOR TO BE VERIFIED BY BUILDING DESIGNER

BEARINGS

JT	FACTORED GROSS REACTION VERT	HORZ	MAXIMUM FACTORED GROSS REACTION DOWN	HORZ	UPLIFT	INPUT BRG IN-SX	REQRD BRG IN-SX
I	952	0	952	0	0	5-8	1-8
F	851	0	851	0	0	MECHANICAL	

A SUITABLE HANGER/MECHANICAL CONNECTION IS REQUIRED AT JOINT F. MINIMUM BEARING LENGTH AT JOINT F = 1-8.

UNFACTORED REACTIONS

JT	1ST LCASE COMBINED	MAX./MIN. COMPONENT REACTIONS SNOW	LIVE	PERM.LIVE	WIND	DEAD	SOIL
I	677	423 / 0	0 / 0	0 / 0	0 / 0	254 / 0	0 / 0
F	607	369 / 0	0 / 0	0 / 0	0 / 0	239 / 0	0 / 0

BEARING MATERIAL TO BE SPF NO.2 OR BETTER AT JOINT(S) I

BRACING

TOP CHORD TO BE SHEATHED OR MAX. PURLIN SPACING = 6.25 FT.
MAX. UNBRACED BOTTOM CHORD LENGTH = 10.00 FT OR RIGID CEILING DIRECTLY APPLIED.

ALL PITCH BREAKS AND PERIMETER CORNER JOINTS MUST BE LATERALLY RESTRAINED.

LOADING

TOTAL LOAD CASES: (4)

CHORDS

MEMB. FR-TO	MAX. FACTORED FORCE (LBS)	FACTORED VERT. LOAD (PLF) FROM	TO	LC1 MAX CSI (LC)	MAX. UNBRAC LENGTH
A- B	0 / 42	-78.0	-78.0	0.12 (1)	10.00
B- C	-626 / 0	-78.0	-78.0	0.24 (1)	6.25
C- D	-404 / 0	-114.5	-114.5	0.53 (1)	6.25
D- E	-589 / 0	-78.0	-78.0	0.19 (1)	6.25
I- B	-906 / 0	0.0	0.0	0.11 (1)	7.81
F- E	-813 / 0	0.0	0.0	0.11 (1)	7.81
I- H	0 / 0	-27.2	-27.2	0.06 (4)	10.00
H- G	0 / 380	-27.2	-27.2	0.09 (4)	10.00
G- F	0 / 0	-27.2	-27.2	0.05 (4)	10.00

WEBS

MEMB. FR-TO	MAX. FACTORED FORCE (LBS)	MAX CSI (LC)
H- C	-75 / 67	0.05 (1)
H- D	0 / 40	0.01 (1)
G- D	-106 / 48	0.07 (1)
B- H	0 / 439	0.11 (1)
G- E	0 / 445	0.11 (1)

FACTORED CONCENTRATED LOADS (LBS)

JT	LOC.	LC1	MAX-	MAX+	FACE	DIR.	TYPE	HEEL	CONN.
C	3-10-8	-120	-120	---	FRONT	VERT	TOTAL	---	C1
D	8-9-8	-107	-107	---	FRONT	VERT	TOTAL	---	C1

CONNECTION REQUIREMENTS

1) **C1:** A SUITABLE HANGER/MECHANICAL CONNECTION IS REQUIRED.

[M]

DESIGN CRITERIA

SPECIFIED LOADS:

TOP CH.	LL	=	21.0	PSF
	DL	=	6.0	PSF
BOT CH.	LL	=	0.0	PSF
	DL	=	7.4	PSF
TOTAL LOAD		=	34.4	PSF

SPACING = 24.0 IN. C/C

LOADING IN FLAT SECTION BASED ON A SLOPE OF 2.00/12 MINIMUM

GIRDER TYPE: CPrimeHip
LEFT SETBACK = 3-10-8
RIGHT SETBACK = 3-5-8
END SETBACK = 3-10-8
END WALL WIDTH = 0-0
CORNER FRAMING TYPE: CONVENTIONAL
END JACK TYPE: CONVENTIONAL
APPLIED TO FRONT SIDE
- ADDT'L LOADS BASED ON 55 % OF GSL.

THIS TRUSS IS DESIGNED FOR RESIDENTIAL OR SMALL BUILDING REQUIREMENTS OF PART 9, NBCC 2015

THIS DESIGN COMPLIES WITH:
- PART 9 OF BCBC 2018 , ABC 2019
- PART 9 OF OBC 2012 (2019 AMENDMENT)
- CSA 086-14
- TPIC 2014

(55 % OF 23.0 P.S.F. G.S.L. PLUS 8.4 P.S.F. RAIN LOAD) EQUALS 21.0 P.S.F. SPECIFIED ROOF LIVE LOAD

ALLOWABLE DEFL.(LL)= L/360 (0.41")
CALCULATED VERT. DEFL.(LL) = L/ 999 (0.01")
ALLOWABLE DEFL.(TL)= L/360 (0.41")
CALCULATED VERT. DEFL.(TL) = L/ 999 (0.01")

CSI: TC=0.53/1.00 (C-D:1) , BC=0.09/1.00 (G-H:4) , WB=0.11/1.00 (E-G:1) , SSI=0.24/1.00 (C-D:1)

DOL LUMBER=1.00 NAIL=1.00 LS BEND=1.00 COMP=1.00 SHEAR=1.00 TENS= 1.00

COMPANION LIVE LOAD FACTOR = 1.00

TRUSS PLATE MANUFACTURER IS NOT RESPONSIBLE FOR QUALITY CONTROL IN THE TRUSS MANUFACTURING PLANT .

NAIL VALUES

PLATE	GRIP(DRY) (PSI) MAX	MIN	SHEAR (PLI) MAX	MIN	SECTION (PLI) MAX	MIN
MT20	650	371	1747	788	1987	1873

PLATE PLACEMENT TOL. = 0.250 inches

PLATE ROTATION TOL. = 5.0 Deg.

JSI GRIP= 0.72 (G) (INPUT = 0.90)
JSI METAL= 0.28 (B) (INPUT = 1.00)

JOB NAME	TRUSS NAME	QUANTITY	PLY	JOB DESC.		DRWG NO.
336329	H103		1	TRUSS DESC.	JT 45147	E21104399

Alpa Roof Truss, Maple

Version 8.420 S Jan 21 2021 MiTek Industries, Inc. Thu Oct 14 15:56:02 2021 Page 1

ID:hd511hZTz_bdeQoS817GKByhVxV-ddbtin7NeYZj2_KOh90ryw0JVyDdCFFz?KMUIUyTT4h

Scale = 1:55.2

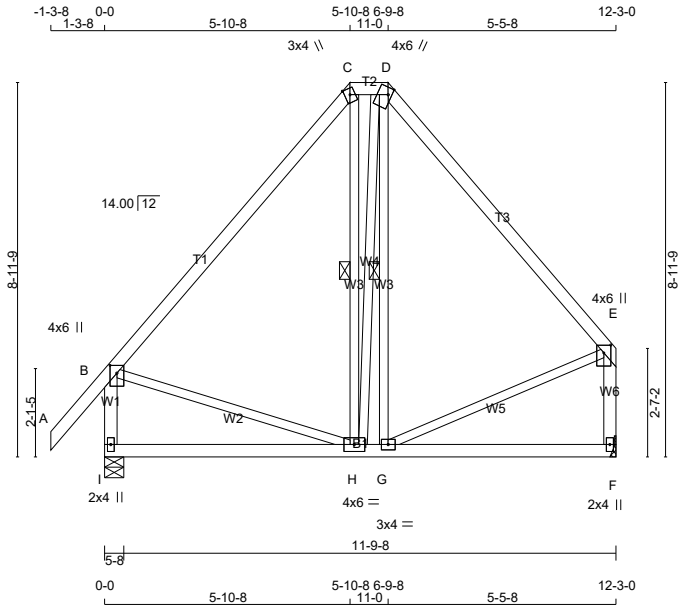

TOTAL WEIGHT = 72 lb

[M][F]

LUMBER

N. L. G. A. RULES

CHORDS	SIZE		LUMBER	DESCR.
A - C	2x4	DRY	No.2	SPF
C - D	2x4	DRY	No.2	SPF
D - E	2x4	DRY	No.2	SPF
I - B	2x4	DRY	No.2	SPF
F - E	2x4	DRY	No.2	SPF
I - F	2x4	DRY	No.2	SPF
ALL WEBS EXCEPT	2x3	DRY	No.2	SPF

DRY: SEASONED LUMBER.

PLATES (table is in inches)

JT	TYPE	PLATES	W	LEN	Y	X
B	TMVW+p	MT20	4.0	6.0	2.25	2.00
C	TTW+m	MT20	3.0	4.0	Edge	
D	TTWW+m	MT20	4.0	6.0	2.00	1.00
E	TMVW+p	MT20	4.0	6.0	2.25	2.00
F	BMV1+p	MT20	2.0	4.0		
G	BMWW-t	MT20	3.0	4.0		
H	BMWWW-t	MT20	4.0	6.0		
I	BMV1+p	MT20	2.0	4.0		

Edge - INDICATES REFERENCE CORNER OF PLATE TOUCHES EDGE OF CHORD.

LATERAL BRACE(S) SHOWN SHALL BE 2X4 SPF#2

LICENSED PROFESSIONAL ENGINEER
V. WIDYA
100225448
10/14/2021
PROVINCE OF ONTARIO

DIMENSIONS, SUPPORTS AND LOADINGS SPECIFIED BY FABRICATOR TO BE VERIFIED BY BUILDING DESIGNER

BEARINGS

JT	FACTORED GROSS REACTION VERT	HORZ	MAXIMUM FACTORED GROSS REACTION DOWN	HORZ	UPLIFT	INPUT BRG IN-SX	REQRD BRG IN-SX
I	700	0	700	0	0	5-8	1-8
F	591	0	591	0	0	MECHANICAL	

A SUITABLE HANGER/MECHANICAL CONNECTION IS REQUIRED AT JOINT F. MINIMUM BEARING LENGTH AT JOINT F = 1-8.

UNFACTORED REACTIONS

JT	1ST LCASE COMBINED	MAX./MIN. COMPONENT REACTIONS SNOW	LIVE	PERM.LIVE	WIND	DEAD	SOIL
I	497	316 / 0	0 / 0	0 / 0	0 / 0	181 / 0	0 / 0
F	421	257 / 0	0 / 0	0 / 0	0 / 0	164 / 0	0 / 0

BEARING MATERIAL TO BE SPF NO.2 OR BETTER AT JOINT(S) I

BRACING

TOP CHORD TO BE SHEATHED OR MAX. PURLIN SPACING = 6.25 FT.
MAX. UNBRACED BOTTOM CHORD LENGTH = 10.00 FT OR RIGID CEILING DIRECTLY APPLIED.

ALL PITCH BREAKS AND PERIMETER CORNER JOINTS MUST BE LATERALLY RESTRAINED.

1 LATERAL BRACE(S) AT 1/ 2 LENGTH OF C-H, D-G.

END VERTICAL(S) MUST BE SHEATHED OR HAVE BRACES AS INDICATED IN THE MAX. UNBRACED LENGTH COLUMN OF THE TABLE BELOW

LOADING

TOTAL LOAD CASES: (4)

CHORDS

MEMB. FR-TO	MAX. FACTORED FORCE (LBS)	FACTORED VERT. LOAD (PLF) FROM	TO	LC1 MAX CSI (LC)	MAX. UNBRAC LENGTH
A- B	0 / 42	-78.0	-78.0	0.11 (1)	10.00
B- C	-334 / 0	-78.0	-78.0	0.35 (1)	6.25
C- D	-217 / 0	-78.0	-78.0	0.01 (1)	6.25
D- E	-331 / 0	-78.0	-78.0	0.30 (1)	6.25
I- B	-656 / 0	0.0	0.0	0.08 (1)	7.81
F- E	-550 / 0	0.0	0.0	0.08 (1)	7.81
I- H	0 / 0	-18.5	-18.5	0.16 (4)	10.00
H- G	0 / 214	-18.5	-18.5	0.18 (4)	10.00
G- F	0 / 0	-18.5	-18.5	0.14 (4)	10.00

WEBS

MEMB. FR-TO	MAX. FACTORED FORCE (LBS)	MAX CSI (LC)
H- C	-10 / 48	0.02 (4)
H- D	0 / 28	0.01 (4)
G- D	-24 / 24	0.01 (1)
B- H	0 / 226	0.05 (1)
G- E	0 / 231	0.05 (1)

DESIGN CRITERIA

SPECIFIED LOADS:

TOP CH.	LL	=	21.0	PSF
	DL	=	6.0	PSF
BOT CH.	LL	=	0.0	PSF
	DL	=	7.4	PSF
TOTAL LOAD		=	34.4	PSF

SPACING = 24.0 IN. C/C

LOADING IN FLAT SECTION BASED ON A SLOPE OF 2.00/12 MINIMUM

THIS TRUSS IS DESIGNED FOR RESIDENTIAL OR SMALL BUILDING REQUIREMENTS OF PART 9, NBCC 2015

THIS DESIGN COMPLIES WITH:
- PART 9 OF BCBC 2018 , ABC 2019
- PART 9 OF OBC 2012 (2019 AMENDMENT)
- CSA 086-14
- TPIC 2014

(55 % OF 23.0 P.S.F. G.S.L. PLUS 8.4 P.S.F. RAIN LOAD) EQUALS 21.0 P.S.F. SPECIFIED ROOF LIVE LOAD

ALLOWABLE DEFL.(LL)= L/360 (0.41")
CALCULATED VERT. DEFL.(LL) = L/ 999 (0.00")
ALLOWABLE DEFL.(TL)= L/360 (0.41")
CALCULATED VERT. DEFL.(TL) = L/ 999 (0.03")

CSI: TC=0.35/1.00 (B-C:1) , BC=0.18/1.00 (G-H:4) , WB=0.05/1.00 (E-G:1) , SSI=0.12/1.00 (B-C:1)

DOL LUMBER=1.00 NAIL=1.00 LS BEND=1.10 COMP=1.10 SHEAR=1.10 TENS= 1.10

COMPANION LIVE LOAD FACTOR = 1.00

TRUSS PLATE MANUFACTURER IS NOT RESPONSIBLE FOR QUALITY CONTROL IN THE TRUSS MANUFACTURING PLANT .

NAIL VALUES

PLATE	GRIP(DRY) (PSI) MAX	MIN	SHEAR (PLI) MAX	MIN	SECTION (PLI) MAX	MIN
MT20	650	371	1747	788	1987	1873

PLATE PLACEMENT TOL. = 0.250 inches

PLATE ROTATION TOL. = 5.0 Deg.

JSI GRIP= 0.37 (C) (INPUT = 0.90)
JSI METAL= 0.20 (B) (INPUT = 1.00)

JOB NAME	TRUSS NAME	QUANTITY	PLY	JOB DESC.	DRWG NO.
336329	H251		1	TRUSS DESC. JT 45147	E21104401

Alpha Roof Truss, Maple

Version 8.420 S Jan 21 2021 MiTek Industries, Inc. Thu Oct 14 15:56:05 2021 Page 1

ID:hd511hZTz_bdeQoS817GKByhVxV-2CH0KoAGxTyIvR3zMHZYZYejW97LPOLPhIa8vpyTT4e

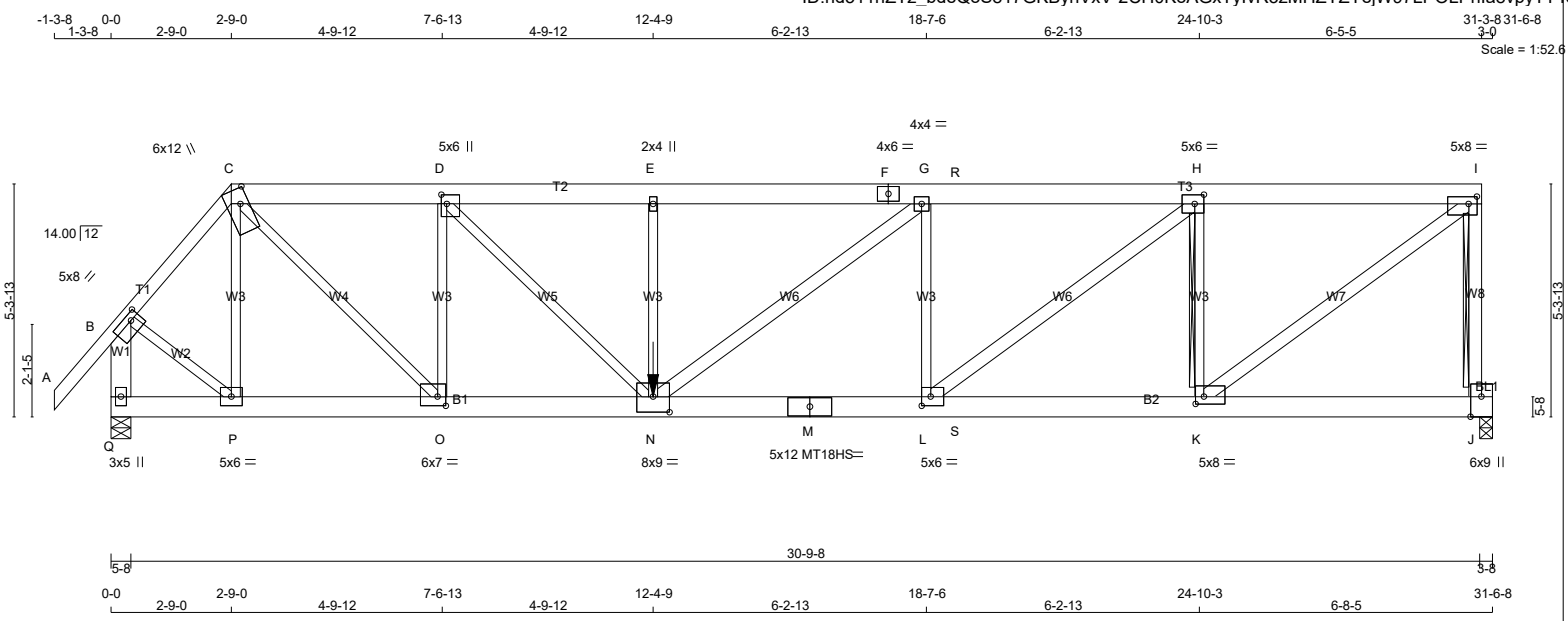

TOTAL WEIGHT = 180 lb

[M]

LUMBER

N. L. G. A. RULES

CHORDS	SIZE		LUMBER	DESCR.
A - C	2x4	DRY	No.2	SPF
C - F	2x6	DRY	No.2	SPF
F - I	2x6	DRY	No.2	SPF
J - I	2x4	DRY	No.2	SPF
Q - B	2x6	DRY	No.2	SPF
Q - M	2x6	DRY	1650F 1.5E	SPF
M - J	2x6	DRY	1650F 1.5E	SPF

BEARING BLOCKS

BL1	2x4	DRY	No.2	SPF
ALL WEBS EXCEPT	2x3	DRY	No.2	SPF
N - G	2x4	DRY	No.2	SPF
L - H	2x4	DRY	No.2	SPF
K - I	2x4	DRY	No.2	SPF

DRY: SEASONED LUMBER.

PLATES (table is in inches)

JT	TYPE	PLATES	W	LEN	Y	X
B	TMVW-t	MT20	5.0	8.0	1.75	2.50
C	TTWW+m	MT20	6.0	12.0	4.25	2.25
D	TMWW+t	MT20	5.0	6.0	2.50	1.50
E	TMW+w	MT20	2.0	4.0		
F	TS-t	MT20	4.0	6.0		
G	TMWW-t	MT20	4.0	4.0		
H	TMWW-t	MT20	5.0	6.0	2.50	2.50
I	TMVW-t	MT20	5.0	8.0	2.00	2.25
J	BMVK1+t	MT20	6.0	9.0	Edge	3.00
K	BMWW-t	MT20	5.0	8.0	2.00	2.25
L	BMWW-t	MT20	5.0	6.0	2.50	2.50
M	BS-t	MT18HS	5.0	12.0		
N	BMWWW-t	MT20	8.0	9.0	4.25	4.50
O	BMWW-t	MT20	6.0	7.0	2.50	2.25
P	BMWW-t	MT20	5.0	6.0		
Q	BMV1+p	MT20	3.0	5.0		

Edge - INDICATES REFERENCE CORNER OF PLATE TOUCHES EDGE OF CHORD.

LATERAL BRACE(S) SHOWN SHALL BE 2X4 SPF#2

DIMENSIONS, SUPPORTS AND LOADINGS SPECIFIED BY FABRICATOR TO BE VERIFIED BY BUILDING DESIGNER

BEARINGS

JT	FACTORED GROSS REACTION VERT	HORZ	MAXIMUM FACTORED GROSS REACTION DOWN	HORZ	UPLIFT	INPUT BRG IN-SX	REQRD BRG IN-SX
J	3388	0	3388	0	0	3-8	3-8
Q	3060	0	3060	0	0	5-8	4-7

UNFACTORED REACTIONS

JT	1ST LCASE COMBINED	MAX./MIN. COMPONENT REACTIONS SNOW	LIVE	PERM.LIVE	WIND	DEAD	SOIL
J	2415	1477 / 0	0 / 0	0 / 0	0 / 0	938 / 0	0 / 0
Q	2179	1343 / 0	0 / 0	0 / 0	0 / 0	836 / 0	0 / 0

BEARING MATERIAL TO BE SPF NO.2 OR BETTER AT JOINT(S) J, Q

BEARING SIZE FACTOR = 1.15 AT JNT(S) J (BASED ON SUPPORT DEPTH = 1-8)

BRACING

TOP CHORD TO BE SHEATHED OR MAX. PURLIN SPACING = 2.92 FT.

MAX. UNBRACED BOTTOM CHORD LENGTH = 6.25 FT OR RIGID CEILING DIRECTLY APPLIED.

ALL PITCH BREAKS AND PERIMETER CORNER JOINTS MUST BE LATERALLY RESTRAINED.

2x3 DRY SPF No.2 T-BRACE AT I-J, H-K

FASTEN T AND I-BRACES TO NARROW EDGE OF WEB WITH ONE ROW PER PLY OF 3" COMMON WIRE NAILS @ 6" O.C. WITH 3" MINIMUM END DISTANCE. BRACE MUST COVER 90% OF WEB LENGTH.

END VERTICAL(S) MUST BE SHEATHED OR HAVE BRACES AS INDICATED IN THE MAX. UNBRACED LENGTH COLUMN OF THE TABLE BELOW

LOADING

TOTAL LOAD CASES: (4)

CHORDS

MEMB. FR-TO	MAX. FACTORED FORCE (LBS)	FACTORED VERT. LOAD (PLF) FROM	TO	LC1 CSI (LC)	MAX UNBRAC LENGTH
A- B	0 / 42	-78.0	-78.0	0.12 (1)	10.00
B- C	-2513 / 0	-78.0	-78.0	0.21 (1)	4.14
C- D	-4040 / 0	-78.0	-78.0	0.24 (1)	4.10
D- E	-6040 / 0	-78.0	-78.0	0.36 (1)	3.34
E- F	-6040 / 0	-78.0	-78.0	0.52 (1)	3.19
F- G	-6040 / 0	-78.0	-78.0	0.52 (1)	3.19
G- R	-5725 / 0	-78.0	-78.0	0.76 (1)	2.92
R- H	-5725 / 0	-153.5	-153.5	0.76 (1)	2.92
H- I	-3721 / 0	-153.5	-153.5	0.59 (1)	3.78
J- I	-3282 / 0	0.0	0.0	0.81 (1)	6.20
Q- B	-3074 / 0	0.0	0.0	0.25 (1)	5.97
Q- P	0 / 0	-18.5	-18.5	0.06 (1)	10.00
P- O	0 / 1619	-18.5	-18.5	0.19 (1)	10.00
O- N	0 / 4040	-18.5	-18.5	0.41 (1)	10.00
N- M	0 / 5725	-136.1	-136.1	0.70 (1)	10.00
M- L	0 / 5725	-136.1	-136.1	0.70 (1)	10.00
L- S	0 / 3721	-136.1	-136.1	0.44 (1)	10.00
S- K	0 / 3721	-36.4	-36.4	0.44 (1)	10.00
K- J	-98 / 0	-36.4	-36.4	0.11 (4)	6.25

WEBS

MEMB. FR-TO	MAX. FACTORED FORCE (LBS)	MAX CSI (LC)
P- C	-803 / 0	0.30 (1)
C- O	0 / 3440	0.85 (1)
O- D	-2437 / 0	0.92 (1)
D- N	0 / 2842	0.70 (1)
N- E	-381 / 0	0.14 (1)
N- G	0 / 400	0.07 (1)
L- G	-901 / 0	0.34 (1)
L- H	0 / 2540	0.45 (1)
K- H	-2678 / 0	0.87 (1)
K- I	0 / 4784	0.85 (1)
B- P	0 / 1892	0.47 (1)

FACTORED CONCENTRATED LOADS (LBS)

JT	LOC.	LC1	MAX-	MAX+	FACE	DIR.	TYPE	HEEL	CONN.
N	12-4-9	-1390	-1390	---	FRONT	VERT	TOTAL	---	C1

CONNECTION REQUIREMENTS

1) **C1:** A SUITABLE HANGER/MECHANICAL CONNECTION IS REQUIRED.

DESIGN CRITERIA

*** SPECIAL LOADS ANALYSIS ***
GEOMETRY AND/OR BASIC LOADS CHANGED BY USER.
LOADS WERE DERIVED FROM USER INPUT
NO FURTHER MODIFICATIONS WERE MADE

SPECIFIED LOADS:

TOP	CH.	LL =	21.0	PSF
		DL =	6.0	PSF
BOT	CH.	LL =	0.0	PSF
		DL =	7.4	PSF
TOTAL	LOAD	=	34.4	PSF

SPACING = 24.0 IN. C/C

LOADING IN FLAT SECTION BASED ON A SLOPE OF 2.00/12 MINIMUM

GIRDER TYPE: CStdGirder
START DISTANCE = 12-4-9
START SPAN CARRIED = 6-10-8
END DISTANCE = 19-4-0
END SPAN CARRIED = 6-10-8
END WALL WIDTH = 0-0
APPLIED TO FRONT SIDE OF BOTTOM CHORD.
- ADDT'L LOADS BASED ON 55 % OF GSL.

GIRDER TYPE: CPrimeHip
LEFT SETBACK = 2-9-0
RIGHT SETBACK = 0-0
END SETBACK = 5-10-8
END WALL WIDTH = 0-0
CORNER FRAMING TYPE: CONVENTIONAL
END JACK TYPE: CONVENTIONAL
APPLIED TO FRONT SIDE
- ADDT'L LOADS BASED ON 55 % OF GSL.
LOADS APPLIED TO FIRST 12-2-8 OF SPAN MEASURED FROM THE RIGHT.

*** NON STANDARD GIRDER ***
ADDT'L USER-DEFINED LOADS APPLIED TO ALL LOAD CASES.

THIS TRUSS IS DESIGNED FOR RESIDENTIAL OR SMALL BUILDING REQUIREMENTS OF PART 9, NBCC 2015

THIS DESIGN COMPLIES WITH:
- PART 9 OF BCBC 2018 , ABC 2019
- PART 9 OF OBC 2012 (2019 AMENDMENT)
- CSA 086-14
- TPIC 2014

(55 % OF 23.0 P.S.F. G.S.L. PLUS 8.4 P.S.F. RAIN LOAD) EQUALS 21.0 P.S.F. SPECIFIED ROOF LIVE LOAD

ALLOWABLE DEFL.(LL)= L/360 (1.04")
CALCULATED VERT. DEFL.(LL) = L/ 999 (0.24")
ALLOWABLE DEFL.(TL)= L/360 (1.04")
CALCULATED VERT. DEFL.(TL) = L/ 795 (0.47")

CSI: TC=0.81/1.00 (I-J:1) , BC=0.70/1.00 (L-N:1) , WB=0.92/1.00 (D-O:1) , SSI=0.39/1.00 (H-I:1)

DOL LUMBER=1.00 NAIL=1.00 LS BEND=1.00 COMP=1.00 SHEAR=1.00 TENS= 1.00

COMPANION LIVE LOAD FACTOR = 1.00

CONTINUED ON PAGE 2

JOB NAME	TRUSS NAME	QUANTITY	PLY	JOB DESC.		DRWG NO.
336329	H252		1	TRUSS DESC.	JT 45147	E21104402

Alpa Roof Truss, Maple

Version 8.420 S Jan 21 2021 MiTek Industries, Inc. Thu Oct 14 15:56:07 2021 Page 1

ID:hd511hZTz bdeQoS817GKByhVxV- aPmlUBWT4C08lDLTic0fzj4SztntJqi8c3F hyTT4c

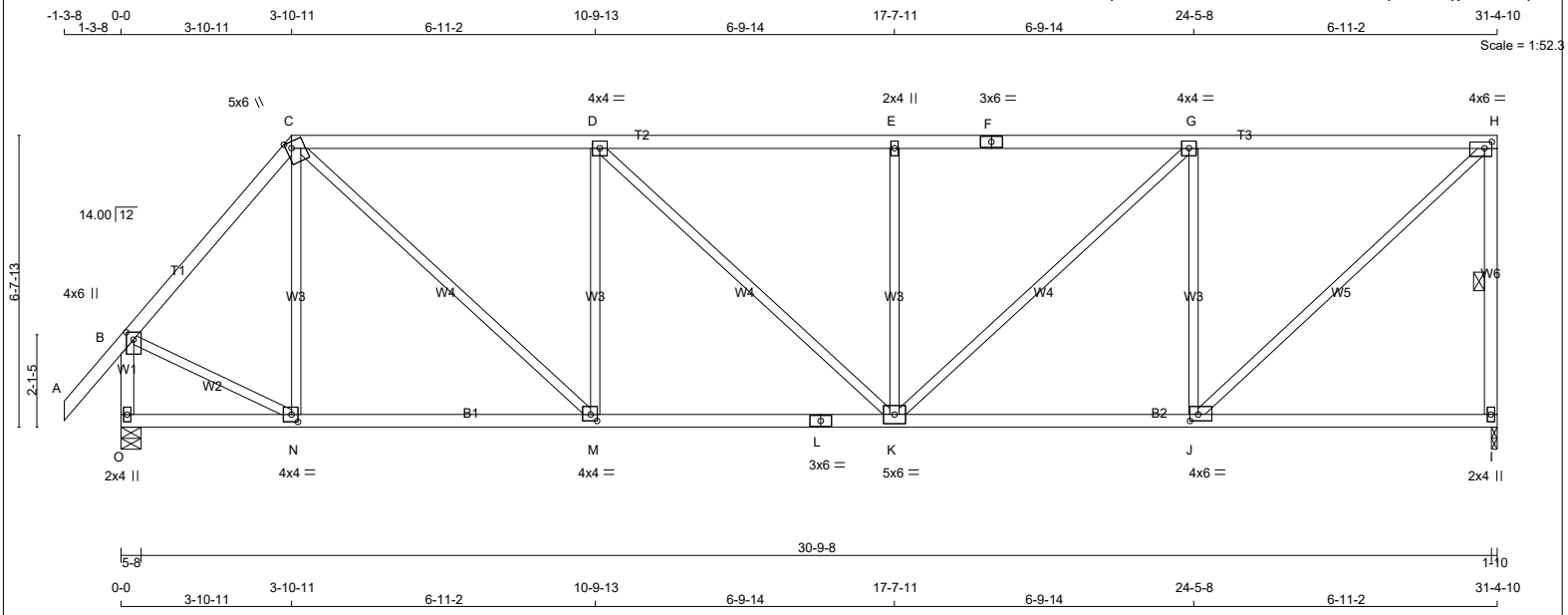

TOTAL WEIGHT = 138 lb

LUMBER

N. L. G. A. RULES

CHORDS	SIZE		LUMBER	DESCR.
A - C	2x4	DRY	No.2	SPF
C - F	2x4	DRY	No.2	SPF
F - H	2x4	DRY	No.2	SPF
I - H	2x4	DRY	No.2	SPF
O - B	2x4	DRY	No.2	SPF
O - L	2x4	DRY	No.2	SPF
L - I	2x4	DRY	No.2	SPF
ALL WEBS EXCEPT	2x3	DRY	No.2	SPF

DRY: SEASONED LUMBER.

PLATES (table is in inches)

JT	TYPE	PLATES	W	LEN	Y	X
B	TMVW+p	MT20	4.0	6.0	2.00	2.00
C	TTWW+m	MT20	5.0	6.0	1.75	1.50
D	TMWW-t	MT20	4.0	4.0		
E	TMW+w	MT20	2.0	4.0		
F	TS-t	MT20	3.0	6.0		
G	TMWW-t	MT20	4.0	4.0		
H	TMVW-t	MT20	4.0	6.0	1.75	2.00
I	BMV1+p	MT20	2.0	4.0		
J	BMWW-t	MT20	4.0	6.0	1.75	2.25
K	BMWWW-t	MT20	5.0	6.0		
L	BS-t	MT20	3.0	6.0		
M	BMWW-t	MT20	4.0	4.0	1.75	1.75
N	BMWW-t	MT20	4.0	4.0	2.00	1.75
O	BMV1+p	MT20	2.0	4.0		

LATERAL BRACE(S) SHOWN SHALL BE 2X4 SPF#2

DIMENSIONS, SUPPORTS AND LOADINGS SPECIFIED BY FABRICATOR TO BE VERIFIED BY BUILDING DESIGNER

BEARINGS

JT	FACTORED GROSS REACTION VERT	HORZ	MAXIMUM FACTORED GROSS REACTION DOWN	HORZ	UPLIFT	INPUT BRG IN-SX	REQRD BRG IN-SX
I	1514	0	1514	0	0	1-10	1-10
O	1623	0	1623	0	0	5-8	1-12

UNFACTORED REACTIONS

JT	1ST LCASE COMBINED	MAX./MIN. COMPONENT REACTIONS SNOW	LIVE	PERM.LIVE	WIND	DEAD	SOIL
I	1079	659 / 0	0 / 0	0 / 0	0 / 0	421 / 0	0 / 0
O	1155	718 / 0	0 / 0	0 / 0	0 / 0	437 / 0	0 / 0

BEARING MATERIAL TO BE SPF NO.2 OR BETTER AT JOINT(S) I, O

BRACING

TOP CHORD TO BE SHEATHED OR MAX. PURLIN SPACING = 4.05 FT.
MAX. UNBRACED BOTTOM CHORD LENGTH = 10.00 FT OR RIGID CEILING DIRECTLY APPLIED.

ALL PITCH BREAKS AND PERIMETER CORNER JOINTS MUST BE LATERALLY RESTRAINED.

1 LATERAL BRACE(S) AT 1/ 2 LENGTH OF H-I.

END VERTICAL(S) MUST BE SHEATHED OR HAVE BRACES AS INDICATED IN THE MAX. UNBRACED LENGTH COLUMN OF THE TABLE BELOW

LOADING

TOTAL LOAD CASES: (4)

CHORDS

MEMB. FR-TO	MAX. FACTORED FORCE (LBS)	FACTORED VERT. LOAD (PLF) FROM	TO	LC1 CSI (LC)	MAX UNBRAC LENGTH
A- B	0 / 42	-78.0	-78.0	0.11 (1)	10.00
B- C	-1284 / 0	-78.0	-78.0	0.25 (1)	5.42
C- D	-1759 / 0	-78.0	-78.0	0.70 (1)	4.19
D- E	-1887 / 0	-78.0	-78.0	0.72 (1)	4.05
E- F	-1887 / 0	-78.0	-78.0	0.72 (1)	4.05
F- G	-1887 / 0	-78.0	-78.0	0.72 (1)	4.05
G- H	-1359 / 0	-78.0	-78.0	0.65 (1)	4.69
I- H	-1462 / 0	0.0	0.0	0.30 (1)	5.41
O- B	-1601 / 0	0.0	0.0	0.19 (1)	6.53
O- N	0 / 0	-18.5	-18.5	0.13 (4)	10.00
N- M	0 / 827	-18.5	-18.5	0.26 (4)	10.00
M- L	0 / 1760	-18.5	-18.5	0.38 (1)	10.00
L- K	0 / 1760	-18.5	-18.5	0.38 (1)	10.00
K- J	0 / 1359	-18.5	-18.5	0.34 (4)	10.00
J- I	0 / 0	-18.5	-18.5	0.21 (4)	10.00

WEBS

MEMB. FR-TO	MAX. FACTORED FORCE (LBS)	MAX CSI (LC)
N- C	-248 / 0	0.18 (1)
C- M	0 / 1262	0.28 (1)
M- D	-721 / 0	0.53 (1)
D- K	0 / 174	0.04 (1)
K- E	-490 / 0	0.36 (1)
K- G	0 / 721	0.16 (1)
J- G	-1104 / 0	0.81 (1)
J- H	0 / 1846	0.42 (1)
B- N	0 / 907	0.20 (1)

[M]

DESIGN CRITERIA

SPECIFIED LOADS:

TOP CH.	LL	=	21.0	PSF
	DL	=	6.0	PSF
BOT CH.	LL	=	0.0	PSF
	DL	=	7.4	PSF
TOTAL LOAD		=	34.4	PSF

SPACING = 24.0 IN. C/C

LOADING IN FLAT SECTION BASED ON A SLOPE OF 2.00/12 MINIMUM

THIS TRUSS IS DESIGNED FOR RESIDENTIAL OR SMALL BUILDING REQUIREMENTS OF PART 9, NBCC 2015

THIS DESIGN COMPLIES WITH:
- PART 9 OF BCBC 2018 , ABC 2019
- PART 9 OF OBC 2012 (2019 AMENDMENT)
- CSA 086-14
- TPIC 2014

(55 % OF 23.0 P.S.F. G.S.L. PLUS 8.4 P.S.F. RAIN LOAD) EQUALS 21.0 P.S.F. SPECIFIED ROOF LIVE LOAD

ALLOWABLE DEFL.(LL)= L/360 (1.05")
CALCULATED VERT. DEFL.(LL) = L/ 999 (0.09")
ALLOWABLE DEFL.(TL)= L/360 (1.05")
CALCULATED VERT. DEFL.(TL) = L/ 999 (0.19")

CSI: TC=0.72/1.00 (E-G:1) , BC=0.38/1.00 (K-M:1) , WB=0.81/1.00 (G-J:1) , SSI=0.25/1.00 (G-H:1)

DOL LUMBER=1.00 NAIL=1.00 LS BEND=1.10 COMP=1.10 SHEAR=1.10 TENS= 1.10

COMPANION LIVE LOAD FACTOR = 1.00

TRUSS PLATE MANUFACTURER IS NOT RESPONSIBLE FOR QUALITY CONTROL IN THE TRUSS MANUFACTURING PLANT .

NAIL VALUES

PLATE	GRIP(DRY) (PSI) MAX	MIN	SHEAR (PLI) MAX	MIN	SECTION (PLI) MAX	MIN
MT20	650	371	1747	788	1987	1873

PLATE PLACEMENT TOL. = 0.250 inches

PLATE ROTATION TOL. = 5.0 Deg.

JSI GRIP= 0.90 (J) (INPUT = 0.90)
JSI METAL= 0.55 (L) (INPUT = 1.00)

JOB NAME	TRUSS NAME	QUANTITY	PLY	JOB DESC.		DRWG NO.
336337	G01		1	TRUSS DESC.	JT 45147	E21104404

Alpa Roof Truss, Maple

Version 8.420 S Jan 21 2021 MiTek Industries, Inc. Thu Oct 14 16:58:13 2021 Page 1

ID:hd511hZTz bdeQoS817GKByhVxV-uPYLlXHi ueL9M3SlESmfj2IlxW?tXl8xlePlkyTSAO

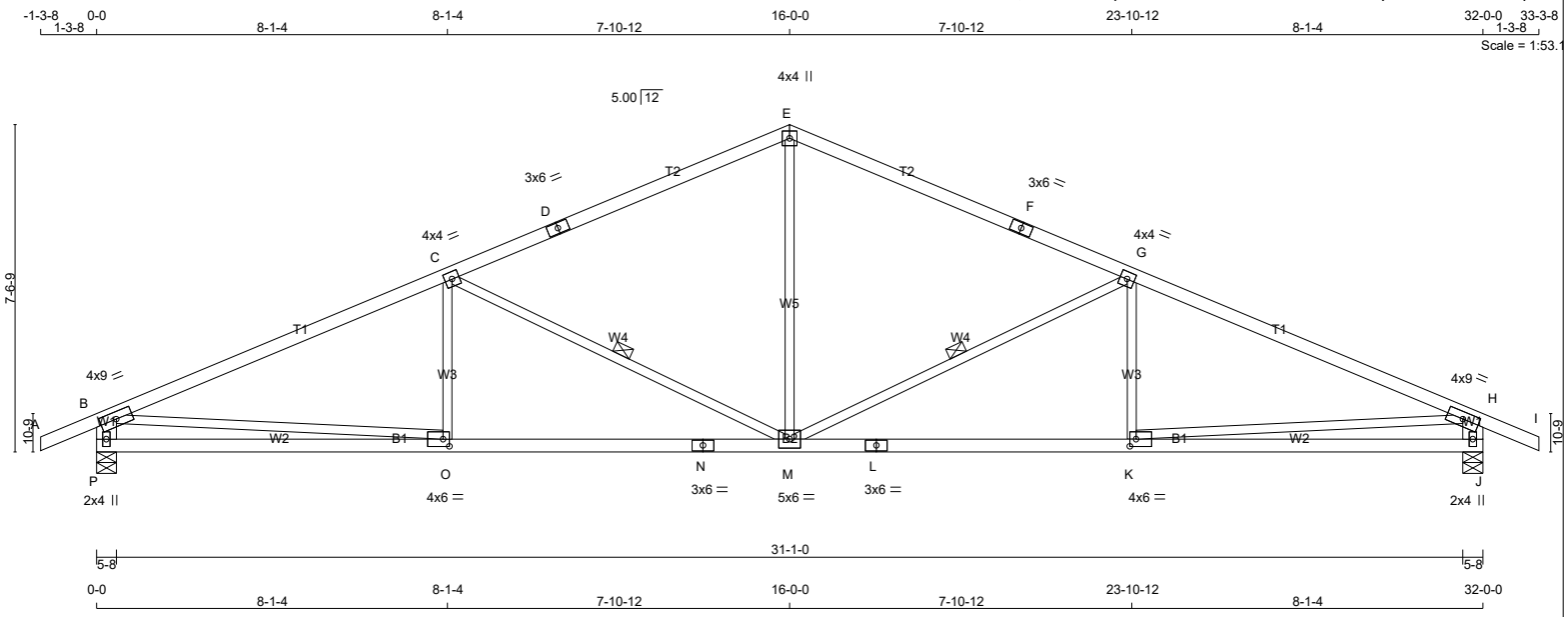

TOTAL WEIGHT = 3 X 119 = 357 lb

[M][F]

LUMBER

N. L. G. A. RULES

CHORDS	SIZE		LUMBER	DESCR.
A - D	2x4	DRY	No.2	SPF
D - E	2x4	DRY	No.2	SPF
E - F	2x4	DRY	No.2	SPF
F - I	2x4	DRY	No.2	SPF
P - B	2x6	DRY	No.2	SPF
J - H	2x6	DRY	No.2	SPF
P - N	2x4	DRY	No.2	SPF
N - L	2x4	DRY	No.2	SPF
L - J	2x4	DRY	No.2	SPF
ALL WEBS EXCEPT	2x3	DRY	No.2	SPF

DRY: SEASONED LUMBER.

PLATES (table is in inches)

JT	TYPE	PLATES	W	LEN	Y	X
B	TMVW-t	MT20	4.0	9.0		
C	TMWW-t	MT20	4.0	4.0		
D	TS-t	MT20	3.0	6.0		
E	TTW+p	MT20	4.0	4.0		
F	TS-t	MT20	3.0	6.0		
G	TMWW-t	MT20	4.0	4.0		
H	TMVW-t	MT20	4.0	9.0		
J	BMV1+p	MT20	2.0	4.0		
K	BMWW-t	MT20	4.0	6.0	2.00	1.75
L	BS-t	MT20	3.0	6.0		
M	BMWWW-t	MT20	5.0	6.0		
N	BS-t	MT20	3.0	6.0		
O	BMWW-t	MT20	4.0	6.0	2.00	1.75
P	BMV1+p	MT20	2.0	4.0		

LATERAL BRACE(S) SHOWN SHALL BE 2X4 SPF#2

DIMENSIONS, SUPPORTS AND LOADINGS SPECIFIED BY FABRICATOR TO BE VERIFIED BY BUILDING DESIGNER

BEARINGS

JT	FACTORED GROSS REACTION VERT	HORZ	MAXIMUM FACTORED GROSS REACTION DOWN	HORZ	UPLIFT	INPUT BRG IN-SX	REQRD BRG IN-SX
P	1649	0	1649	0	0	5-8	1-13
J	1649	0	1649	0	0	5-8	1-13

UNFACTORED REACTIONS

JT	1ST LCASE COMBINED	MAX./MIN. COMPONENT REACTIONS SNOW	LIVE	PERM.LIVE	WIND	DEAD	SOIL
P	1173	728 / 0	0 / 0	0 / 0	0 / 0	445 / 0	0 / 0
J	1173	728 / 0	0 / 0	0 / 0	0 / 0	445 / 0	0 / 0

BEARING MATERIAL TO BE SPF NO.2 OR BETTER AT JOINT(S) P, J

BRACING

TOP CHORD TO BE SHEATHED OR MAX. PURLIN SPACING = 3.17 FT.
MAX. UNBRACED BOTTOM CHORD LENGTH = 10.00 FT OR RIGID CEILING DIRECTLY APPLIED.

ALL PITCH BREAKS AND PERIMETER CORNER JOINTS MUST BE LATERALLY RESTRAINED.

1 LATERAL BRACE(S) AT 1/ 2 LENGTH OF G-M, C-M.

END VERTICAL(S) MUST BE SHEATHED OR HAVE BRACES AS INDICATED IN THE MAX. UNBRACED LENGTH COLUMN OF THE TABLE BELOW

LOADING

TOTAL LOAD CASES: (4)

CHORDS

MEMB. FR-TO	MAX. FACTORED FORCE (LBS)	FACTORED VERT. LOAD LC1 FROM (PLF)	TO	MAX CSI (LC)	MAX. UNBRAC LENGTH
A- B	0 / 20	-78.0	-78.0	0.10 (1)	10.00
B- C	-2721 / 0	-78.0	-78.0	0.96 (1)	3.17
C- D	-1890 / 0	-78.0	-78.0	0.78 (1)	3.90
D- E	-1890 / 0	-78.0	-78.0	0.78 (1)	3.90
E- F	-1890 / 0	-78.0	-78.0	0.78 (1)	3.90
F- G	-1890 / 0	-78.0	-78.0	0.78 (1)	3.90
G- H	-2721 / 0	-78.0	-78.0	0.96 (1)	3.17
H- I	0 / 20	-78.0	-78.0	0.10 (1)	10.00
P- B	-1585 / 0	0.0	0.0	0.10 (1)	7.79
J- H	-1585 / 0	0.0	0.0	0.10 (1)	7.79
P- O	0 / 0	-18.5	-18.5	0.27 (4)	10.00
O- N	0 / 2538	-18.5	-18.5	0.54 (1)	10.00
N- M	0 / 2538	-18.5	-18.5	0.54 (1)	10.00
M- L	0 / 2538	-18.5	-18.5	0.54 (1)	10.00
L- K	0 / 2538	-18.5	-18.5	0.54 (1)	10.00
K- J	0 / 0	-18.5	-18.5	0.27 (4)	10.00

WEBS

MEMB. FR-TO	MAX. FACTORED FORCE (LBS)	MAX CSI (LC)
M- E	0 / 967	0.22 (1)
M- G	-917 / 0	0.50 (1)
K- G	-20 / 117	0.04 (4)
C- M	-917 / 0	0.50 (1)
O- C	-20 / 117	0.04 (4)
B- O	0 / 2544	0.57 (1)
K- H	0 / 2544	0.57 (1)

DESIGN CRITERIA

SPECIFIED LOADS:

TOP CH.	LL	=	21.0	PSF
	DL	=	6.0	PSF
BOT CH.	LL	=	0.0	PSF
	DL	=	7.4	PSF
TOTAL LOAD		=	34.4	PSF

SPACING = 24.0 IN. C/C

THIS TRUSS IS DESIGNED FOR RESIDENTIAL OR SMALL BUILDING REQUIREMENTS OF PART 9, NBCC 2015

THIS DESIGN COMPLIES WITH:
- PART 9 OF BCBC 2018 , ABC 2019
- PART 9 OF OBC 2012 (2019 AMENDMENT)
- CSA 086-14
- TPIC 2014

(55 % OF 23.0 P.S.F. G.S.L. PLUS 8.4 P.S.F. RAIN LOAD) EQUALS 21.0 P.S.F. SPECIFIED ROOF LIVE LOAD

ALLOWABLE DEFL.(LL)= L/360 (1.07")
CALCULATED VERT. DEFL.(LL) = L/ 999 (0.15")
ALLOWABLE DEFL.(TL)= L/360 (1.07")
CALCULATED VERT. DEFL.(TL) = L/ 999 (0.32")

CSI: TC=0.96/1.00 (G-H:1) , BC=0.54/1.00 (K-M:1) , WB=0.57/1.00 (H-K:1) , SSI=0.28/1.00 (G-H:1)

DOL LUMBER=1.00 NAIL=1.00 LS BEND=1.10 COMP=1.10 SHEAR=1.10 TENS= 1.10

COMPANION LIVE LOAD FACTOR = 1.00

AUTOSOLVE HEELS OFF

TRUSS PLATE MANUFACTURER IS NOT RESPONSIBLE FOR QUALITY CONTROL IN THE TRUSS MANUFACTURING PLANT .

NAIL VALUES

PLATE	GRIP(DRY) (PSI) MAX	MIN	SHEAR (PLI) MAX	MIN	SECTION (PLI) MAX	MIN
MT20	650	371	1747	788	1987	1873

PLATE PLACEMENT TOL. = 0.250 inches

PLATE ROTATION TOL. = 5.0 Deg.

JSI GRIP= 0.90 (O) (INPUT = 0.90)
JSI METAL= 0.75 (N) (INPUT = 1.00)

JOB NAME	TRUSS NAME	QUANTITY	PLY	JOB DESC.		DRWG NO.
336337	H253		1	TRUSS DESC.	JT 45147	E21104405

Alpa Roof Truss, Maple

Version 8.420 S Jan 21 2021 MiTek Industries, Inc. Thu Oct 14 16:58:19 2021 Page 1

ID:hd511hZTz_bdeQoS817GKByhVxV-jZvd0bMTakOUtHWc5UZAv_ItMMciHCF0JE5kzNyTSAI

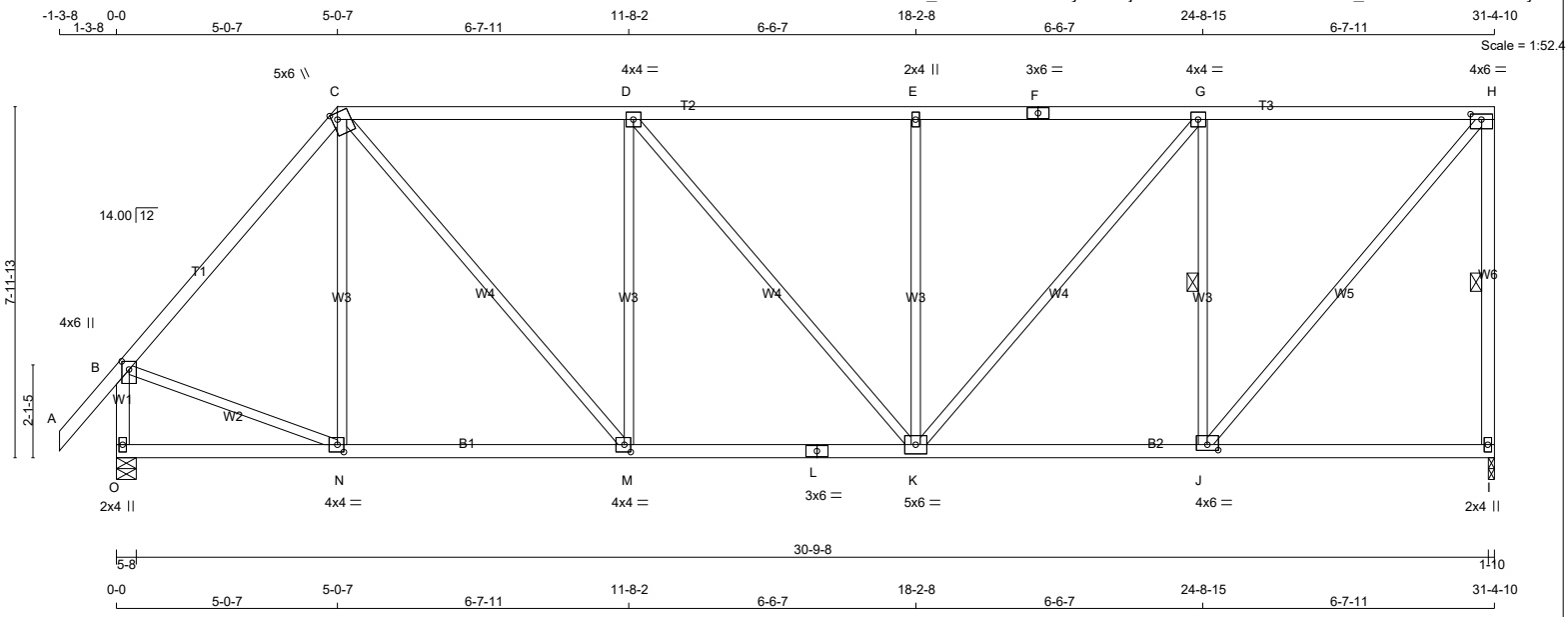

TOTAL WEIGHT = 148 lb

[M]

LUMBER

N. L. G. A. RULES

CHORDS	SIZE		LUMBER	DESCR.
A - C	2x4	DRY	No.2	SPF
C - F	2x4	DRY	No.2	SPF
F - H	2x4	DRY	No.2	SPF
I - H	2x4	DRY	No.2	SPF
O - B	2x4	DRY	No.2	SPF
O - L	2x4	DRY	No.2	SPF
L - I	2x4	DRY	No.2	SPF
ALL WEBS EXCEPT	2x3	DRY	No.2	SPF

DRY: SEASONED LUMBER.

PLATES (table is in inches)

JT	TYPE	PLATES	W	LEN	Y	X
B	TMVW+p	MT20	4.0	6.0	2.25	2.00
C	TTWW+m	MT20	5.0	6.0	1.75	1.50
D	TMWW-t	MT20	4.0	4.0		
E	TMW+w	MT20	2.0	4.0		
F	TS-t	MT20	3.0	6.0		
G	TMWW-t	MT20	4.0	4.0		
H	TMVW-t	MT20	4.0	6.0	1.50	3.00
I	BMV1+p	MT20	2.0	4.0		
J	BMWW-t	MT20	4.0	6.0	1.50	3.00
K	BMWWW-t	MT20	5.0	6.0		
L	BS-t	MT20	3.0	6.0		
M	BMWW-t	MT20	4.0	4.0	2.00	1.75
N	BMWW-t	MT20	4.0	4.0	2.00	1.75
O	BMV1+p	MT20	2.0	4.0		

LATERAL BRACE(S) SHOWN SHALL BE 2X4 SPF#2

DIMENSIONS, SUPPORTS AND LOADINGS SPECIFIED BY FABRICATOR TO BE VERIFIED BY BUILDING DESIGNER

BEARINGS

JT	FACTORED GROSS REACTION VERT	HORZ	MAXIMUM FACTORED GROSS REACTION DOWN	HORZ	UPLIFT	INPUT BRG IN-SX	REQRD BRG IN-SX
I	1514	0	1514	0	0	1-10	1-10
O	1623	0	1623	0	0	5-8	1-12

UNFACTORED REACTIONS

JT	1ST LCASE COMBINED	MAX./MIN. COMPONENT REACTIONS SNOW	LIVE	PERM.LIVE	WIND	DEAD	SOIL
I	1079	659 / 0	0 / 0	0 / 0	0 / 0	421 / 0	0 / 0
O	1155	718 / 0	0 / 0	0 / 0	0 / 0	437 / 0	0 / 0

BEARING MATERIAL TO BE SPF NO.2 OR BETTER AT JOINT(S) I, O

BRACING

TOP CHORD TO BE SHEATHED OR MAX. PURLIN SPACING = 4.54 FT.
MAX. UNBRACED BOTTOM CHORD LENGTH = 10.00 FT OR RIGID CEILING DIRECTLY APPLIED.

ALL PITCH BREAKS AND PERIMETER CORNER JOINTS MUST BE LATERALLY RESTRAINED.

1 LATERAL BRACE(S) AT 1/ 2 LENGTH OF H-I, G-J.

END VERTICAL(S) MUST BE SHEATHED OR HAVE BRACES AS INDICATED IN THE MAX. UNBRACED LENGTH COLUMN OF THE TABLE BELOW

LOADING

TOTAL LOAD CASES: (4)

CHORDS

MEMB. FR-TO	MAX. FACTORED FORCE (LBS)	FACTORED VERT. LOAD (PLF) FROM	TO	LC1 CSI (LC)	MAX UNBRAC LENGTH
A- B	0 / 42	-78.0	-78.0	0.11 (1)	10.00
B- C	-1307 / 0	-78.0	-78.0	0.44 (1)	5.16
C- D	-1497 / 0	-78.0	-78.0	0.61 (1)	4.60
D- E	-1540 / 0	-78.0	-78.0	0.61 (1)	4.54
E- F	-1540 / 0	-78.0	-78.0	0.61 (1)	4.54
F- G	-1540 / 0	-78.0	-78.0	0.61 (1)	4.54
G- H	-1087 / 0	-78.0	-78.0	0.56 (1)	5.25
I- H	-1465 / 0	0.0	0.0	0.42 (1)	5.41
O- B	-1588 / 0	0.0	0.0	0.19 (1)	6.55
O- N	0 / 0	-18.5	-18.5	0.15 (4)	10.00
N- M	0 / 845	-18.5	-18.5	0.24 (4)	10.00
M- L	0 / 1498	-18.5	-18.5	0.33 (1)	10.00
L- K	0 / 1498	-18.5	-18.5	0.33 (1)	10.00
K- J	0 / 1087	-18.5	-18.5	0.30 (4)	10.00
J- I	0 / 0	-18.5	-18.5	0.20 (4)	10.00

WEBS

MEMB. FR-TO	MAX. FACTORED FORCE (LBS)	MAX CSI (LC)
N- C	-167 / 21	0.20 (1)
C- M	0 / 995	0.22 (1)
M- D	-629 / 0	0.76 (1)
D- K	0 / 66	0.01 (1)
K- E	-470 / 0	0.57 (1)
K- G	0 / 700	0.16 (1)
J- G	-1121 / 0	0.45 (1)
J- H	0 / 1664	0.37 (1)
B- N	0 / 895	0.20 (1)

DESIGN CRITERIA

SPECIFIED LOADS:

TOP CH.	LL	=	21.0	PSF
	DL	=	6.0	PSF
BOT CH.	LL	=	0.0	PSF
	DL	=	7.4	PSF
TOTAL LOAD		=	34.4	PSF

SPACING = 24.0 IN. C/C

LOADING IN FLAT SECTION BASED ON A SLOPE OF 2.00/12 MINIMUM

THIS TRUSS IS DESIGNED FOR RESIDENTIAL OR SMALL BUILDING REQUIREMENTS OF PART 9, NBCC 2015

THIS DESIGN COMPLIES WITH:
- PART 9 OF BCBC 2018 , ABC 2019
- PART 9 OF OBC 2012 (2019 AMENDMENT)
- CSA 086-14
- TPIC 2014

(55 % OF 23.0 P.S.F. G.S.L. PLUS 8.4 P.S.F. RAIN LOAD) EQUALS 21.0 P.S.F. SPECIFIED ROOF LIVE LOAD

ALLOWABLE DEFL.(LL)= L/360 (1.05")
CALCULATED VERT. DEFL.(LL) = L/ 999 (0.07")
ALLOWABLE DEFL.(TL)= L/360 (1.05")
CALCULATED VERT. DEFL.(TL) = L/ 999 (0.16")

CSI: TC=0.61/1.00 (D-E:1) , BC=0.33/1.00 (K-M:1) , WB=0.76/1.00 (D-M:1) , SSI=0.24/1.00 (C-D:1)

DOL LUMBER=1.00 NAIL=1.00 LS BEND=1.10 COMP=1.10 SHEAR=1.10 TENS= 1.10

COMPANION LIVE LOAD FACTOR = 1.00

TRUSS PLATE MANUFACTURER IS NOT RESPONSIBLE FOR QUALITY CONTROL IN THE TRUSS MANUFACTURING PLANT .

NAIL VALUES

PLATE	GRIP(DRY) (PSI) MAX	MIN	SHEAR (PLI) MAX	MIN	SECTION (PLI) MAX	MIN
MT20	650	371	1747	788	1987	1873

PLATE PLACEMENT TOL. = 0.250 inches

PLATE ROTATION TOL. = 5.0 Deg.

JSI GRIP= 0.90 (B) (INPUT = 0.90)
JSI METAL= 0.51 (B) (INPUT = 1.00)

JOB NAME	TRUSS NAME	QUANTITY	PLY	JOB DESC.		DRWG NO.
336337	H254		1	TRUSS DESC.	JT 45147	E21104406

Alpa Roof Truss, Maple

Version 8.420 S Jan 21 2021 MiTek Industries, Inc. Thu Oct 14 16:58:23 2021 Page 1

ID:hd511hZTz bdeQoS817GKByhVxV-bK87ryP dzuwMupNKKd63pSZWz PD10cEs3x69yTSAE

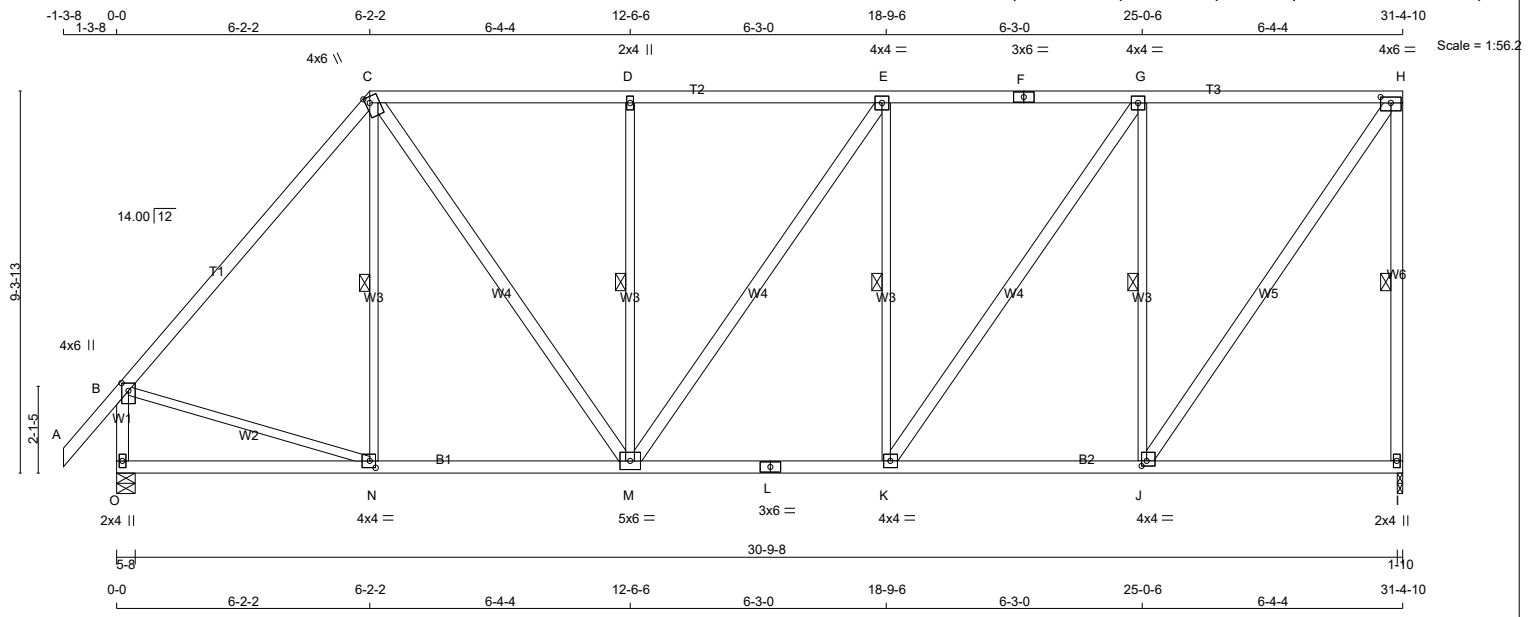

TOTAL WEIGHT = 172 lb

[M]

LUMBER

N. L. G. A. RULES

CHORDS	SIZE		LUMBER	DESCR.
A - C	2x4	DRY	2100F 1.8E	SPF
C - F	2x4	DRY	No.2	SPF
F - H	2x4	DRY	No.2	SPF
I - H	2x4	DRY	No.2	SPF
O - B	2x4	DRY	No.2	SPF
O - L	2x4	DRY	No.2	SPF
L - I	2x4	DRY	No.2	SPF
ALL WEBS	2x3	DRY	No.2	SPF
EXCEPT				
C - M	2x4	DRY	No.2	SPF
M - E	2x4	DRY	No.2	SPF
K - G	2x4	DRY	No.2	SPF
J - H	2x4	DRY	No.2	SPF

DRY: SEASONED LUMBER.

PLATES (table is in inches)

JT	TYPE	PLATES	W	LEN	Y	X
B	TMVW+p	MT20	4.0	6.0	2.25	2.00
C	TTWW+m	MT20	4.0	6.0	1.75	1.25
D	TMW+w	MT20	2.0	4.0		
E	TMWW-t	MT20	4.0	4.0		
F	TS-t	MT20	3.0	6.0		
G	TMWW-t	MT20	4.0	4.0		
H	TMVW-t	MT20	4.0	6.0	1.75	3.00
I	BMV1+p	MT20	2.0	4.0		
J	BMWW-t	MT20	4.0	4.0	1.50	1.50
K	BMWW-t	MT20	4.0	4.0		
L	BS-t	MT20	3.0	6.0		
M	BMWWW-t	MT20	5.0	6.0		
N	BMWW-t	MT20	4.0	4.0	2.00	1.75
O	BMV1+p	MT20	2.0	4.0		

LATERAL BRACE(S) SHOWN SHALL BE 2X4 SPF#2

DIMENSIONS, SUPPORTS AND LOADINGS SPECIFIED BY FABRICATOR TO BE VERIFIED BY BUILDING DESIGNER

BEARINGS

JT	FACTORED GROSS REACTION VERT	HORZ	MAXIMUM FACTORED GROSS REACTION DOWN	HORZ	UPLIFT	INPUT BRG IN-SX	REQRD BRG IN-SX
I	1514	0	1514	0	0	1-10	1-10
O	1623	0	1623	0	0	5-8	1-12

UNFACTORED REACTIONS

JT	1ST LCASE COMBINED	MAX./MIN. COMPONENT REACTIONS SNOW	LIVE	PERM.LIVE	WIND	DEAD	SOIL
I	1079	659 / 0	0 / 0	0 / 0	0 / 0	421 / 0	0 / 0
O	1155	718 / 0	0 / 0	0 / 0	0 / 0	437 / 0	0 / 0

BEARING MATERIAL TO BE SPF NO.2 OR BETTER AT JOINT(S) I, O

BRACING

TOP CHORD TO BE SHEATHED OR MAX. PURLIN SPACING = 4.97 FT.
MAX. UNBRACED BOTTOM CHORD LENGTH = 10.00 FT OR RIGID CEILING DIRECTLY APPLIED.

ALL PITCH BREAKS AND PERIMETER CORNER JOINTS MUST BE LATERALLY RESTRAINED.

1 LATERAL BRACE(S) AT 1/ 2 LENGTH OF H-I, C-N, D-M, E-K, G-J.

END VERTICAL(S) MUST BE SHEATHED OR HAVE BRACES AS INDICATED IN THE MAX. UNBRACED LENGTH COLUMN OF THE TABLE BELOW

LOADING

TOTAL LOAD CASES: (4)

CHORDS

MEMB. FR-TO	MAX. FACTORED FORCE (LBS)	FACTORED VERT. LOAD (PLF) FROM	TO	LC1 CSI (LC)	MAX UNBRAC LENGTH
A- B	0 / 42	-78.0	-78.0	0.07 (1)	10.00
B- C	-1304 / 0	-78.0	-78.0	0.42 (1)	6.17
C- D	-1304 / 0	-78.0	-78.0	0.53 (1)	4.97
D- E	-1304 / 0	-78.0	-78.0	0.52 (1)	4.97
E- F	-1294 / 0	-78.0	-78.0	0.53 (1)	4.98
F- G	-1294 / 0	-78.0	-78.0	0.53 (1)	4.98
G- H	-894 / 0	-78.0	-78.0	0.49 (1)	5.76
I- H	-1467 / 0	0.0	0.0	0.60 (1)	5.41
O- B	-1577 / 0	0.0	0.0	0.19 (1)	6.57
O- N	0 / 0	-18.5	-18.5	0.18 (4)	10.00
N- M	0 / 845	-18.5	-18.5	0.26 (4)	10.00
M- L	0 / 1294	-18.5	-18.5	0.28 (1)	10.00
L- K	0 / 1294	-18.5	-18.5	0.28 (1)	10.00
K- J	0 / 894	-18.5	-18.5	0.27 (4)	10.00
J- I	0 / 0	-18.5	-18.5	0.18 (4)	10.00

WEBS

MEMB. FR-TO	MAX. FACTORED FORCE (LBS)	MAX CSI (LC)
N- C	-102 / 54	0.06 (1)
C- M	0 / 795	0.13 (1)
M- D	-552 / 0	0.32 (1)
M- E	0 / 18	0.00 (1)
K- E	-465 / 0	0.27 (1)
K- G	0 / 702	0.11 (1)
J- G	-1139 / 0	0.65 (1)
J- H	0 / 1554	0.25 (1)
B- N	0 / 878	0.20 (1)

DESIGN CRITERIA

SPECIFIED LOADS:

TOP CH.	LL	=	21.0	PSF
	DL	=	6.0	PSF
BOT CH.	LL	=	0.0	PSF
	DL	=	7.4	PSF
TOTAL LOAD		=	34.4	PSF

SPACING = 24.0 IN. C/C

LOADING IN FLAT SECTION BASED ON A SLOPE OF 2.00/12 MINIMUM

THIS TRUSS IS DESIGNED FOR RESIDENTIAL OR SMALL BUILDING REQUIREMENTS OF PART 9, NBCC 2015

THIS DESIGN COMPLIES WITH:
- PART 9 OF BCBC 2018 , ABC 2019
- PART 9 OF OBC 2012 (2019 AMENDMENT)
- CSA 086-14
- TPIC 2014

(55 % OF 23.0 P.S.F. G.S.L. PLUS 8.4 P.S.F. RAIN LOAD) EQUALS 21.0 P.S.F. SPECIFIED ROOF LIVE LOAD

ALLOWABLE DEFL.(LL)= L/360 (1.05")
CALCULATED VERT. DEFL.(LL) = L/ 999 (0.06")
ALLOWABLE DEFL.(TL)= L/360 (1.05")
CALCULATED VERT. DEFL.(TL) = L/ 999 (0.13")

CSI: TC=0.60/1.00 (H-I:1) , BC=0.28/1.00 (K-M:1) , WB=0.65/1.00 (G-J:1) , SSI=0.23/1.00 (G-H:1)

DOL LUMBER=1.00 NAIL=1.00 LS BEND=1.10 COMP=1.10 SHEAR=1.10 TENS= 1.10

COMPANION LIVE LOAD FACTOR = 1.00

TRUSS PLATE MANUFACTURER IS NOT RESPONSIBLE FOR QUALITY CONTROL IN THE TRUSS MANUFACTURING PLANT .

NAIL VALUES

PLATE	GRIP(DRY) (PSI) MAX	MIN	SHEAR (PLI) MAX	MIN	SECTION (PLI) MAX	MIN
MT20	650	371	1747	788	1987	1873

PLATE PLACEMENT TOL. = 0.250 inches

PLATE ROTATION TOL. = 5.0 Deg.

JSI GRIP= 0.89 (B) (INPUT = 0.90)
JSI METAL= 0.52 (B) (INPUT = 1.00)

JOB NAME	TRUSS NAME	QUANTITY	PLY	JOB DESC.		DRWG NO.
336337	H255		1	TRUSS DESC.	JT 45147	E21104407

Alpa Roof Truss, Maple

Version 8.420 S Jan 21 2021 MiTek Industries, Inc. Thu Oct 14 16:58:12 2021 Page 1

ID:hd511hZTz bdeQoS817GKByhVxV-QD zYBG4DaWUXCUGBWxX7VVb8XCu83S ievsDHyTSAP

Scale = 1:65.1

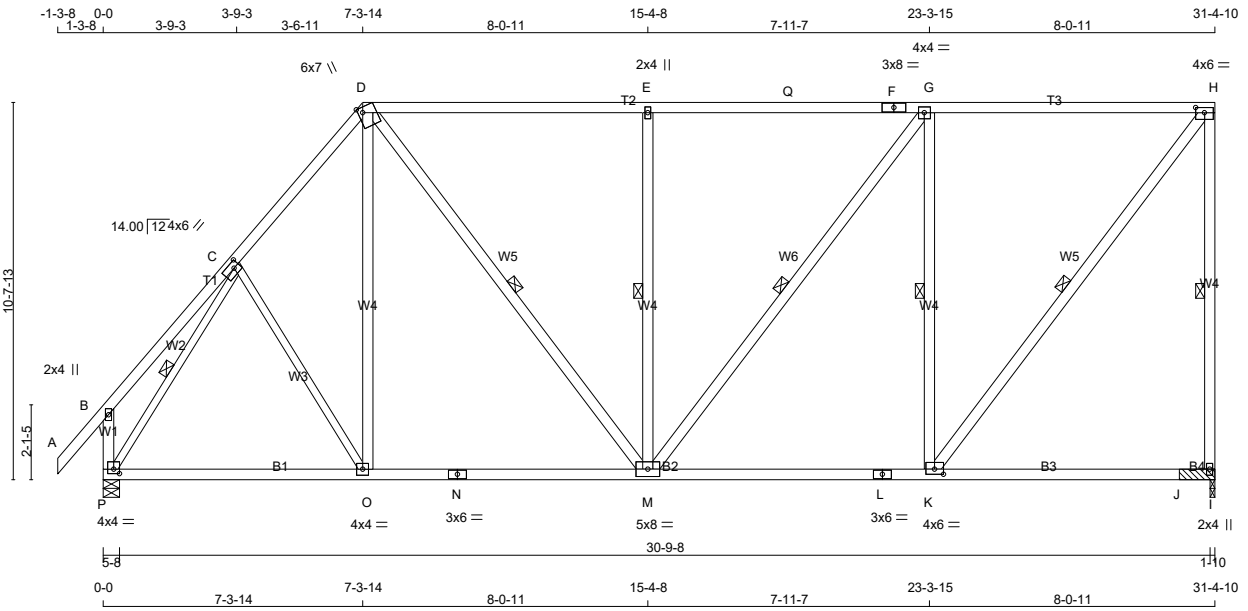

TOTAL WEIGHT = 7 X 182 = 1273 lb

[M]

LUMBER

N. L. G. A. RULES

CHORDS	SIZE		LUMBER	DESCR.
A - D	2x4	DRY	No.2	SPF
D - F	2x4	DRY	No.2	SPF
F - H	2x4	DRY	No.2	SPF
I - H	2x4	DRY	No.2	SPF
P - B	2x4	DRY	No.2	SPF
P - N	2x4	DRY	No.2	SPF
N - L	2x4	DRY	No.2	SPF
L - I	2x4	DRY	No.2	SPF
ALL WEBS	2x4	DRY	No.2	SPF
EXCEPT				
C - O	2x3	DRY	No.2	SPF
P - C	2x3	DRY	No.2	SPF

DRY: SEASONED LUMBER.

PLATES (table is in inches)

JT	TYPE	PLATES	W	LEN	Y	X
B	TMV+p	MT20	2.0	4.0		
C	TMWW-t	MT20	4.0	6.0	2.00	2.00
D	TTWW+m	MT20	6.0	7.0	Edge	1.50
E	TMW+w	MT20	2.0	4.0		
F	TS-t	MT20	3.0	8.0		
G	TMWW-t	MT20	4.0	4.0		
H	TMVW-t	MT20	4.0	6.0	1.75	3.00
I	BMV1+p	MT20	2.0	4.0		
K	BMWW-t	MT20	4.0	6.0	1.75	3.00
L	BS-t	MT20	3.0	6.0		
M	BMWWW-t	MT20	5.0	8.0		
N	BS-t	MT20	3.0	6.0		
O	BMWW-t	MT20	4.0	4.0		
P	BMVW1-t	MT20	4.0	4.0	1.50	2.00

Edge - INDICATES REFERENCE CORNER OF PLATE TOUCHES EDGE OF CHORD.

LATERAL BRACE(S) SHOWN SHALL BE 2X4 SPF#2

DIMENSIONS, SUPPORTS AND LOADINGS SPECIFIED BY FABRICATOR TO BE VERIFIED BY BUILDING DESIGNER

BEARINGS

JT	FACTORED GROSS REACTION VERT	HORZ	MAXIMUM FACTORED GROSS REACTION DOWN	HORZ	UPLIFT	INPUT BRG IN-SX	REQRD BRG IN-SX
I	1625	0	1625	0	0	1-10	1-10 & BLOCK
P	1692	0	1692	0	0	5-8	1-13

UNFACTORED REACTIONS

JT	1ST LCASE COMBINED	MAX./MIN. COMPONENT REACTIONS SNOW	LIVE	PERM.LIVE	WIND	DEAD	SOIL
I	1168	659 / 0	0 / 0	0 / 0	0 / 0	510 / 0	0 / 0
P	1210	718 / 0	0 / 0	0 / 0	0 / 0	493 / 0	0 / 0

BEARING MATERIAL TO BE SPF NO.2 OR BETTER AT JOINT(S) I, P

2x4 DRY SPF No.2 BEARING BLOCK 12" LONG AT JT. I ATTACHED TO FRONT SIDE WITH 2 ROWS OF (0.122"X3") SPIRAL NAILS SPACED 3" C.C. 8 NAILS TOTAL.

BRACING

FOR SECTION D-H, MAX. PURLIN SPACING = 2.00 FT.
FOR OTHER SECTIONS, TOP CHORD TO BE SHEATHED OR MAX. PURLIN SPACING = 5.32 FT.
MAX. UNBRACED BOTTOM CHORD LENGTH = 10.00 FT OR RIGID CEILING DIRECTLY APPLIED.

ALL PITCH BREAKS AND PERIMETER CORNER JOINTS MUST BE LATERALLY RESTRAINED.

1 LATERAL BRACE(S) AT 1/ 2 LENGTH OF H-I, D-M, E-M, G-M, G-K, H-K, C-P.

END VERTICAL(S) MUST BE SHEATHED OR HAVE BRACES AS INDICATED IN THE MAX. UNBRACED LENGTH COLUMN OF THE TABLE BELOW

LOADING

TOTAL LOAD CASES: (4)

CHORDS

MEMB. FR-TO	MAX. FACTORED FORCE (LBS)	FACTORED VERT. LOAD (PLF) FROM	TO	LC1 MAX CSI (LC)	MAX. UNBRAC LENGTH
A- B	0 / 42	-78.0	-78.0	0.11 (1)	10.00
B- C	0 / 24	-78.0	-78.0	0.16 (1)	10.00
C- D	-1387 / 0	-78.0	-78.0	0.20 (1)	5.32
D- E	-1285 / 0	-85.5	-85.5	0.93 (1)	2.00
E- Q	-1285 / 0	-85.5	-85.5	0.93 (1)	2.00
Q- F	-1285 / 0	-85.5	-85.5	0.93 (1)	2.00
F- G	-1285 / 0	-85.5	-85.5	0.93 (1)	2.00
G- H	-1002 / 0	-85.5	-85.5	0.88 (1)	2.00
I- H	-1566 / 0	0.0	0.0	0.89 (1)	5.27
P- B	-218 / 0	0.0	0.0	0.03 (1)	7.81
P- O	0 / 861	-18.5	-18.5	0.35 (4)	10.00
O- N	0 / 884	-18.5	-18.5	0.36 (4)	10.00
N- M	0 / 884	-18.5	-18.5	0.36 (4)	10.00
M- L	0 / 1002	-18.5	-18.5	0.40 (4)	10.00
L- K	0 / 1002	-18.5	-18.5	0.40 (4)	10.00
K- J	0 / 0	-18.5	-18.5	0.29 (4)	10.00
J- I	0 / 0	-18.5	-18.5	0.29 (4)	10.00

WEBS

MEMB. FR-TO	MAX. FACTORED FORCE (LBS)	MAX CSI (LC)
C- O	0 / 63	0.02 (4)
O- D	0 / 128	0.03 (4)
D- M	0 / 651	0.10 (1)
M- E	-745 / 0	0.43 (1)
M- G	0 / 464	0.07 (1)
K- G	-1120 / 0	0.64 (1)
K- H	0 / 1633	0.26 (1)
P- C	-1661 / 0	0.54 (1)

DESIGN CRITERIA

SPECIFIED LOADS:

TOP CH.	LL	=	21.0	PSF
	DL	=	6.0	PSF
BOT CH.	LL	=	0.0	PSF
	DL	=	7.4	PSF
TOTAL LOAD		=	34.4	PSF

SPACING = 24.0 IN. C/C

LOADING IN FLAT SECTION BASED ON PIGGYBACK TRUSS WITH SLOPES OF 6.00/12 AND -6.00/12 AND RESPECTIVE HEEL HEIGHTS OF 0-0 AND 0-0 AND AN ADDITIONAL DEAD LOAD OF 3.0 P.S.F.

THIS TRUSS IS DESIGNED FOR RESIDENTIAL OR SMALL BUILDING REQUIREMENTS OF PART 9, NBCC 2015

THIS DESIGN COMPLIES WITH:
- PART 9 OF BCBC 2018 , ABC 2019
- PART 9 OF OBC 2012 (2019 AMENDMENT)
- CSA 086-14
- TPIC 2014

(55 % OF 23.0 P.S.F. G.S.L. PLUS 8.4 P.S.F. RAIN LOAD) EQUALS 21.0 P.S.F. SPECIFIED ROOF LIVE LOAD

ALLOWABLE DEFL.(LL)= L/360 (1.05")
CALCULATED VERT. DEFL.(LL) = L/ 999 (0.05")
ALLOWABLE DEFL.(TL)= L/360 (1.05")
CALCULATED VERT. DEFL.(TL) = L/ 999 (0.14")

CSI: TC=0.93/1.00 (D-E:1) , BC=0.40/1.00 (K-M:4) , WB=0.64/1.00 (G-K:1) , SSI=0.32/1.00 (G-H:1)

DOL LUMBER=1.00 NAIL=1.00 LS BEND=1.10 COMP=1.10 SHEAR=1.10 TENS= 1.10

COMPANION LIVE LOAD FACTOR = 1.00

TRUSS PLATE MANUFACTURER IS NOT RESPONSIBLE FOR QUALITY CONTROL IN THE TRUSS MANUFACTURING PLANT .

NAIL VALUES

PLATE	GRIP(DRY) (PSI) MAX	MIN	SHEAR (PLI) MAX	MIN	SECTION (PLI) MAX	MIN
MT20	650	371	1747	788	1987	1873

PLATE PLACEMENT TOL. = 0.250 inches

PLATE ROTATION TOL. = 5.0 Deg.

JSI GRIP= 0.86 (C) (INPUT = 0.90)
JSI METAL= 0.37 (L) (INPUT = 1.00)

JOB NAME	TRUSS NAME	QUANTITY	PLY	JOB DESC.		DRWG NO.
336337	H251T		1	TRUSS DESC.	JT 45147	E21104408

Alpa Roof Truss, Maple

Version 8.420 S Jan 21 2021 MiTek Industries, Inc. Thu Oct 14 16:58:16 2021 Page 1

ID:hd511hZTz bdeQoS817GKByhVxV-I DUNZJbHp0v0pn1QM?THLqIb9SK4oladGt3M2yTSAL

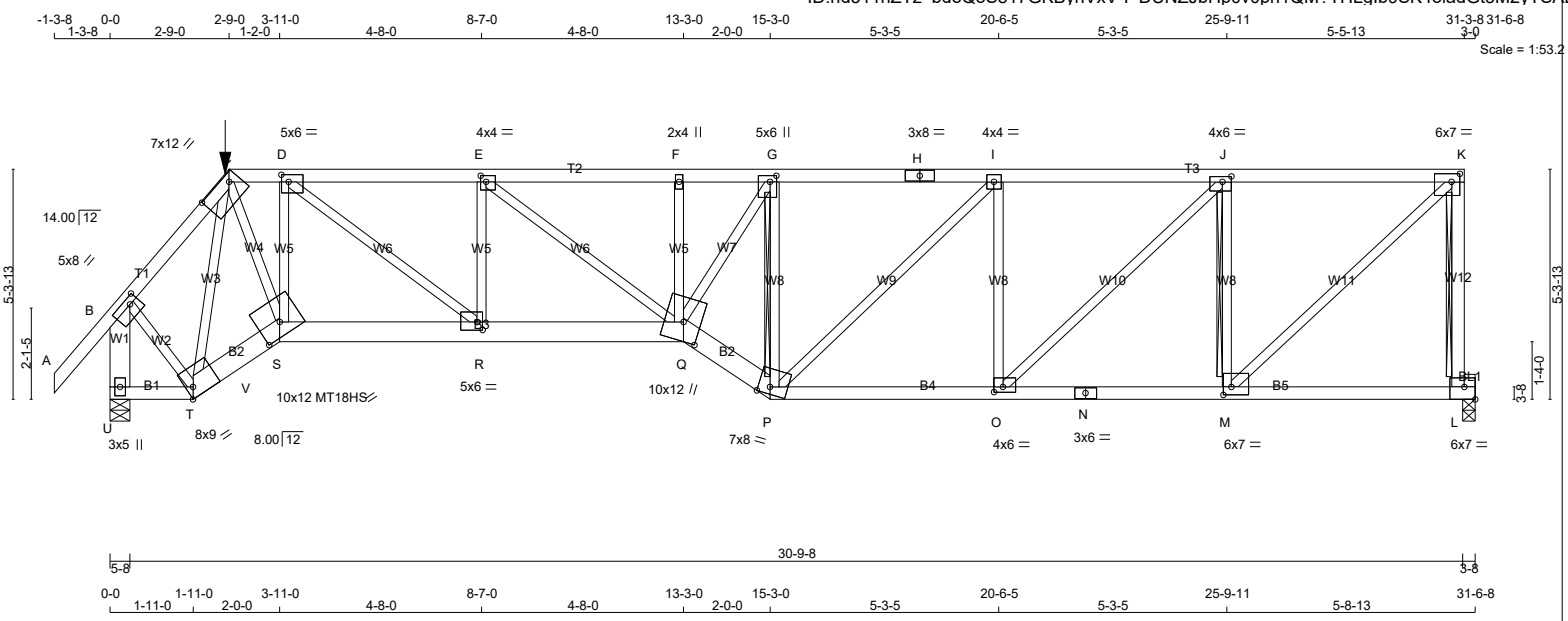

TOTAL WEIGHT = 153 lb

LUMBER

N. L. G. A. RULES

CHORDS	SIZE		LUMBER	DESCR.
A - C	2x4	DRY	No.2	SPF
C - H	2x4	DRY	1650F 1.5E	SPF
H - K	2x4	DRY	1650F 1.5E	SPF
L - K	2x4	DRY	No.2	SPF
U - B	2x6	DRY	No.2	SPF
U - T	2x4	DRY	No.2	SPF
T - S	2x6	DRY	No.2	SPF
S - Q	2x6	DRY	No.2	SPF
Q - P	2x6	DRY	No.2	SPF
P - N	2x4	DRY	No.2	SPF
N - L	2x4	DRY	No.2	SPF
BEARING BLOCKS				
BL1	2x4	DRY	No.2	SPF
ALL WEBS EXCEPT	2x3	DRY	No.2	SPF

DRY: SEASONED LUMBER.

PLATES (table is in inches)

JT	TYPE	PLATES	W	LEN	Y	X
B	TMVW-t	MT20	5.0	8.0	1.75	2.50
C	TTWW-h	MT20	7.0	12.0	2.00	9.25
D	TMWW-t	MT20	5.0	6.0	2.00	2.00
E	TMWW-t	MT20	4.0	4.0	1.75	1.50
F	TMW+w	MT20	2.0	4.0		
G	TMWW+t	MT20	5.0	6.0	1.75	1.75
H	TS-t	MT20	3.0	8.0		
I	TMWW-t	MT20	4.0	4.0		
J	TMWW-t	MT20	4.0	6.0	1.50	2.50
K	TMVW-t	MT20	6.0	7.0	2.25	2.25
L	BMVK1-t	MT20	6.0	7.0	3.50	Edge
M	BMWW-t	MT20	6.0	7.0	2.25	2.25
N	BS-t	MT20	3.0	6.0		
O	BMWW-t	MT20	4.0	6.0	1.50	2.50
P	BBWW-m	MT20	7.0	8.0	2.00	3.25
Q	BBWWW+m	MT20	10.0	12.0	5.25	4.75
R	BMWW-t	MT20	5.0	6.0	2.25	1.50
S	BBWW-h	MT18HS	10.0	12.0	3.75	6.00
T	BBWW-h	MT20	8.0	9.0	3.00	Edge
U	BMV1+p	MT20	3.0	5.0		

LATERAL BRACE(S) SHOWN SHALL BE 2X4 SPF#2

DIMENSIONS, SUPPORTS AND LOADINGS SPECIFIED BY FABRICATOR TO BE VERIFIED BY BUILDING DESIGNER

BEARINGS

JT	FACTORED GROSS REACTION VERT	HORZ	MAXIMUM FACTORED GROSS REACTION DOWN	HORZ	UPLIFT	INPUT BRG IN-SX	REQRD BRG IN-SX
L	2987	0	2987	0	0	3-8	3-8
U	3079	0	3079	0	0	5-8	4-8

UNFACTORED REACTIONS

JT	1ST LCASE COMBINED	MAX./MIN. COMPONENT REACTIONS SNOW	LIVE	PERM.LIVE	WIND	DEAD	SOIL
L	2129	1302 / 0	0 / 0	0 / 0	0 / 0	827 / 0	0 / 0
U	2194	1345 / 0	0 / 0	0 / 0	0 / 0	849 / 0	0 / 0

BEARING MATERIAL TO BE SPF NO.2 OR BETTER AT JOINT(S) L, U
BEARING SIZE FACTOR = 1.15 AT JNT(S) L (BASED ON SUPPORT DEPTH = 1-8)

BRACING

TOP CHORD TO BE SHEATHED OR MAX. PURLIN SPACING = 2.78 FT.
MAX. UNBRACED BOTTOM CHORD LENGTH = 6.25 FT OR RIGID CEILING DIRECTLY APPLIED.

ALL PITCH BREAKS AND PERIMETER CORNER JOINTS MUST BE LATERALLY RESTRAINED.

2x3 DRY SPF No.2 T-BRACE AT K-L, J-M
2x4 DRY SPF No.2 T-BRACE AT G-P

FASTEN T AND I-BRACES TO NARROW EDGE OF WEB WITH ONE ROW PER PLY OF 3" COMMON WIRE NAILS @ 6" O.C. WITH 3" MINIMUM END DISTANCE. BRACE MUST COVER 90% OF WEB LENGTH.

END VERTICAL(S) MUST BE SHEATHED OR HAVE BRACES AS INDICATED IN THE MAX. UNBRACED LENGTH COLUMN OF THE TABLE BELOW

LOADING

TOTAL LOAD CASES: (4)

CHORDS

MEMB. FR-TO	MAX. FACTORED FORCE (LBS)	FACTORED VERT. LOAD (PLF) FROM	TO	LC1	MAX CSI (LC)	MAX. UNBRAC LENGTH
A- B	0 / 42	-78.0	-78.0	0.12 (1)	10.00	
B- C	-2130 / 0	-78.0	-78.0	0.19 (1)	4.47	
C- D	-2909 / 0	-78.0	-78.0	0.09 (1)	4.54	
D- E	-5242 / 0	-78.0	-78.0	0.45 (1)	3.26	
E- F	-6313 / 0	-78.0	-78.0	0.55 (1)	2.91	
F- G	-6310 / 0	-78.0	-78.0	0.55 (1)	2.78	
G- H	-4716 / 0	-153.5	-153.5	0.70 (1)	3.12	
H- I	-4716 / 0	-153.5	-153.5	0.70 (1)	3.12	
I- J	-4213 / 0	-153.5	-153.5	0.83 (1)	3.02	
J- K	-2718 / 0	-153.5	-153.5	0.71 (1)	3.83	
L- K	-2907 / 0	0.0	0.0	0.82 (1)	6.58	
U- B	-3044 / 0	0.0	0.0	0.26 (1)	6.00	
U- T	0 / 0	-36.4	-36.4	0.04 (4)	10.00	
T- V	0 / 2130	-129.9	-129.9	0.32 (1)	10.00	
V- S	0 / 2130	-112.0	-112.0	0.32 (1)	10.00	
S- R	0 / 2965	-112.0	-112.0	0.55 (1)	10.00	
R- Q	0 / 5242	-112.0	-112.0	0.85 (1)	10.00	
Q- P	0 / 5636	-112.0	-112.0	0.77 (1)	10.00	
P- O	0 / 4214	-36.4	-36.4	0.88 (1)	10.00	
O- N	0 / 2718	-36.4	-36.4	0.61 (1)	10.00	
N- M	0 / 2718	-36.4	-36.4	0.61 (1)	10.00	
M- L	-84 / 0	-36.4	-36.4	0.25 (4)	6.25	

WEBS

MEMB. FR-TO	MAX. FACTORED FORCE (LBS)	MAX CSI (LC)
T- C	-2284 / 0	0.86 (1)
C- S	0 / 3685	0.91 (1)
S- D	-1938 / 0	0.47 (1)
D- R	0 / 2904	0.72 (1)
R- E	-1248 / 0	0.30 (1)
E- Q	0 / 1350	0.33 (1)
Q- F	-106 / 0	0.03 (1)
Q- G	0 / 3292	0.81 (1)
P- G	-3421 / 0	0.80 (1)
P- I	0 / 690	0.17 (1)
O- I	-1272 / 0	0.55 (1)
O- J	0 / 2066	0.51 (1)
M- J	-2355 / 0	0.86 (1)
M- K	0 / 3800	0.94 (1)
B- T	0 / 1827	0.45 (1)

FACTORED CONCENTRATED LOADS (LBS)

JT	LOC.	LC1	MAX-	MAX+	FACE	DIR.	TYPE	HEEL	CONN.
C	2-9-0	-156	-156	---	FRONT	VERT	TOTAL	---	C1

CONNECTION REQUIREMENTS

1) **C1:** A SUITABLE HANGER/MECHANICAL CONNECTION IS REQUIRED.

[M]

DESIGN CRITERIA

SPECIFIED LOADS:

TOP	CH.	LL	=	21.0	PSF
		DL	=	6.0	PSF
BOT	CH.	LL	=	0.0	PSF
		DL	=	7.4	PSF
TOTAL	LOAD		=	34.4	PSF

SPACING = 24.0 IN. C/C

LOADING IN FLAT SECTION BASED ON A SLOPE OF 2.00/12 MINIMUM

GIRDER TYPE: CPrimeHip
LEFT SETBACK = 2-9-0
RIGHT SETBACK = 0-0
END SETBACK = 5-10-8
END WALL WIDTH = 0-0
CORNER FRAMING TYPE: CONVENTIONAL
END JACK TYPE: CONVENTIONAL
APPLIED TO FRONT SIDE
- ADDT'L LOADS BASED ON 55 % OF GSL.
LOADS APPLIED TO FIRST 2-9-0 OF SPAN MEASURED FROM THE LEFT.

GIRDER TYPE: CStdGirder
START DISTANCE = 1-11-0
START SPAN CARRIED = 5-10-8
END DISTANCE = 15-3-0
END SPAN CARRIED = 5-10-8
END WALL WIDTH = 0-0
APPLIED TO FRONT SIDE OF BOTTOM CHORD.
- ADDT'L LOADS BASED ON 55 % OF GSL.

GIRDER TYPE: CPrimeHip
LEFT SETBACK = 2-9-0
RIGHT SETBACK = 0-0
END SETBACK = 5-10-8
END WALL WIDTH = 0-0
CORNER FRAMING TYPE: CONVENTIONAL
END JACK TYPE: CONVENTIONAL
APPLIED TO FRONT SIDE
- ADDT'L LOADS BASED ON 55 % OF GSL.
LOADS APPLIED TO FIRST 16-3-8 OF SPAN MEASURED FROM THE RIGHT.

THIS TRUSS IS DESIGNED FOR RESIDENTIAL OR SMALL BUILDING REQUIREMENTS OF PART 9, NBCC 2015

THIS DESIGN COMPLIES WITH:
- PART 9 OF BCBC 2018 , ABC 2019
- PART 9 OF OBC 2012 (2019 AMENDMENT)
- CSA 086-14
- TPIC 2014

(55 % OF 23.0 P.S.F. G.S.L. PLUS 8.4 P.S.F. RAIN LOAD) EQUALS 21.0 P.S.F. SPECIFIED ROOF LIVE LOAD

ALLOWABLE DEFL.(LL)= L/360 (1.04")
CALCULATED VERT. DEFL.(LL) = L/ 999 (0.32")
ALLOWABLE DEFL.(TL)= L/360 (1.04")
CALCULATED VERT. DEFL.(TL) = L/ 603 (0.62")

CSI: TC=0.83/1.00 (I-J:1) , BC=0.88/1.00 (O-P:1) , WB=0.94/1.00 (K-M:1) , SSI=0.43/1.00 (J-K:1)

DOL LUMBER=1.00 NAIL=1.00 LS BEND=1.00 COMP=1.00 SHEAR=1.00 TENS= 1.00

COMPANION LIVE LOAD FACTOR = 1.00

CONTINUED ON PAGE 2

JOB NAME	TRUSS NAME	QUANTITY	PLY	JOB DESC.		DRWG NO.
336337	H252T		1	TRUSS DESC.	JT 45147	E21104409

Alpa Roof Truss, Maple

Version 8.420 S Jan 21 2021 MiTek Industries, Inc. Thu Oct 14 16:58:17 2021 Page 1

ID:hd511hZTz_bdeQoS817GKByhVxV-mAnsbvKD278mezMD_3WiqZCUcYuhpIyjswcduVyTSAK

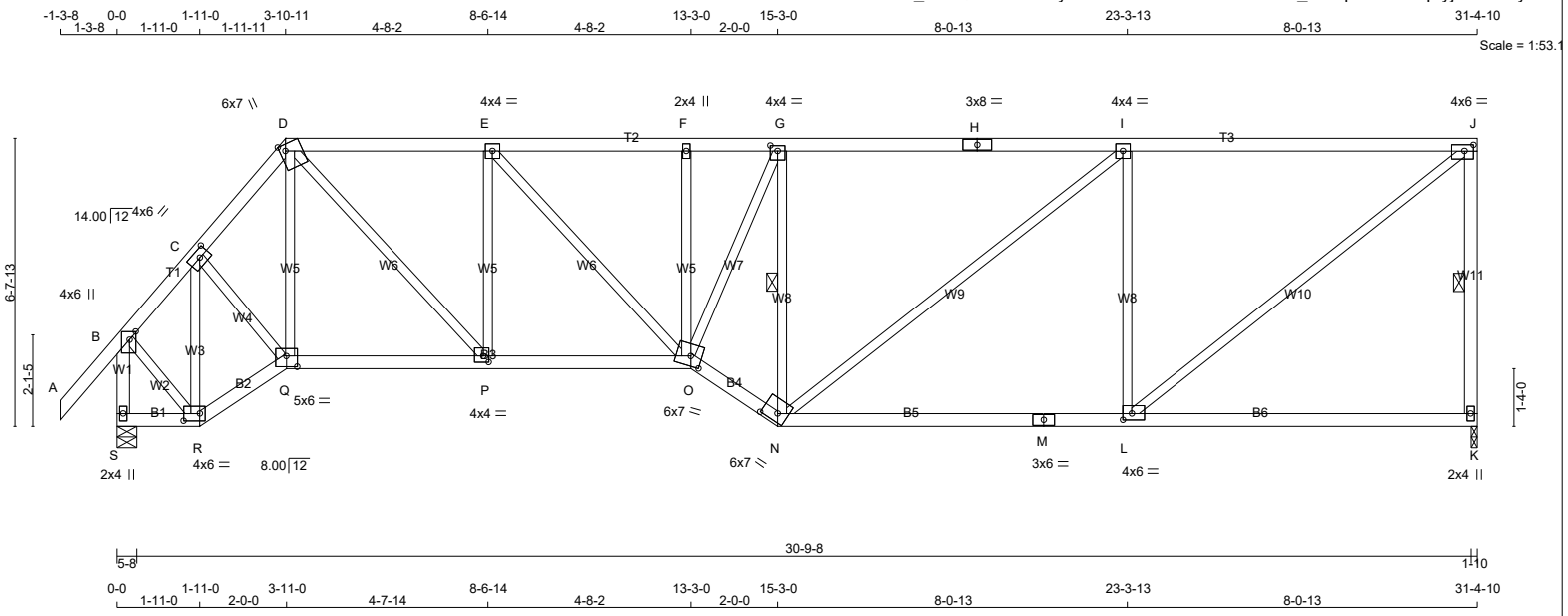

TOTAL WEIGHT = 146 lb

[M]

LUMBER

N. L. G. A. RULES

CHORDS	SIZE		LUMBER	DESCR.
A - D	2x4	DRY	No.2	SPF
D - H	2x4	DRY	1650F 1.5E	SPF
H - J	2x4	DRY	1650F 1.5E	SPF
K - J	2x4	DRY	No.2	SPF
S - B	2x4	DRY	No.2	SPF
S - R	2x4	DRY	No.2	SPF
R - Q	2x4	DRY	No.2	SPF
Q - O	2x4	DRY	No.2	SPF
O - N	2x4	DRY	No.2	SPF
N - M	2x4	DRY	No.2	SPF
M - K	2x4	DRY	No.2	SPF
ALL WEBS EXCEPT	2x3	DRY	No.2	SPF

DRY: SEASONED LUMBER.

PLATES (table is in inches)

JT	TYPE	PLATES	W	LEN	Y	X
B	TMVW+p	MT20	4.0	6.0	2.25	1.75
C	TMWW-t	MT20	4.0	6.0	2.00	2.75
D	TTWW+m	MT20	6.0	7.0	Edge	1.50
E	TMWW-t	MT20	4.0	4.0		
F	TMW+w	MT20	2.0	4.0		
G	TMWW-t	MT20	4.0	4.0	1.50	2.00
H	TS-t	MT20	3.0	8.0		
I	TMWW-t	MT20	4.0	4.0		
J	TMVW-t	MT20	4.0	6.0	1.75	2.50
K	BMV1+p	MT20	2.0	4.0		
L	BMWW-t	MT20	4.0	6.0	1.75	2.50
M	BS-t	MT20	3.0	6.0		
N	BBWW-h	MT20	6.0	7.0	2.25	4.25
O	BBWWW-m	MT20	6.0	7.0	2.75	3.00
P	BMWW-t	MT20	4.0	4.0	1.75	1.50
Q	BBWW-l	MT20	5.0	6.0	3.00	3.00
R	BBWW-l	MT20	4.0	6.0	2.00	4.50
S	BMV1+p	MT20	2.0	4.0		

Edge - INDICATES REFERENCE CORNER OF PLATE TOUCHES EDGE OF CHORD.

LATERAL BRACE(S) SHOWN SHALL BE 2X4 SPF#2

DIMENSIONS, SUPPORTS AND LOADINGS SPECIFIED BY FABRICATOR TO BE VERIFIED BY BUILDING DESIGNER

BEARINGS

JT	FACTORED GROSS REACTION VERT	HORZ	MAXIMUM FACTORED GROSS REACTION DOWN	HORZ	UPLIFT	INPUT BRG IN-SX	REQRD BRG IN-SX
K	1511	0	1511	0	0	1-10	1-10
S	1626	0	1626	0	0	5-8	1-13

UNFACTORED REACTIONS

JT	1ST LCASE COMBINED	MAX./MIN. COMPONENT REACTIONS SNOW	LIVE	PERM.LIVE	WIND	DEAD	SOIL
K	1078	657 / 0	0 / 0	0 / 0	0 / 0	420 / 0	0 / 0
S	1157	719 / 0	0 / 0	0 / 0	0 / 0	438 / 0	0 / 0

BEARING MATERIAL TO BE SPF NO.2 OR BETTER AT JOINT(S) K, S

BRACING

TOP CHORD TO BE SHEATHED OR MAX. PURLIN SPACING = 4.36 FT.
MAX. UNBRACED BOTTOM CHORD LENGTH = 10.00 FT OR RIGID CEILING DIRECTLY APPLIED.

ALL PITCH BREAKS AND PERIMETER CORNER JOINTS MUST BE LATERALLY RESTRAINED.

1 LATERAL BRACE(S) AT 1/ 2 LENGTH OF J-K, G-N.

END VERTICAL(S) MUST BE SHEATHED OR HAVE BRACES AS INDICATED IN THE MAX. UNBRACED LENGTH COLUMN OF THE TABLE BELOW

LOADING

TOTAL LOAD CASES: (4)

CHORDS

MEMB. FR-TO	MAX. FACTORED FORCE (LBS)	FACTORED VERT. LOAD (PLF) FROM	TO	LC1 CSI (LC)	MAX UNBRAC LENGTH
A- B	0 / 42	-78.0	-78.0	0.11 (1)	10.00
B- C	-1062 / 0	-78.0	-78.0	0.12 (1)	5.98
C- D	-1590 / 0	-78.0	-78.0	0.09 (1)	5.17
D- E	-1911 / 0	-78.0	-78.0	0.25 (1)	5.18
E- F	-2310 / 0	-78.0	-78.0	0.27 (1)	4.80
F- G	-2308 / 0	-78.0	-78.0	0.34 (1)	4.67
G- H	-1911 / 0	-78.0	-78.0	0.82 (1)	4.36
H- I	-1911 / 0	-78.0	-78.0	0.82 (1)	4.36
I- J	-1532 / 0	-78.0	-78.0	0.77 (1)	4.77
K- J	-1454 / 0	0.0	0.0	0.30 (1)	5.43
S- B	-1608 / 0	0.0	0.0	0.19 (1)	6.52
S- R	0 / 0	-18.5	-18.5	0.02 (4)	10.00
R- Q	0 / 774	-18.5	-18.5	0.14 (1)	10.00
Q- P	0 / 1025	-18.5	-18.5	0.22 (1)	10.00
P- O	0 / 1911	-18.5	-18.5	0.36 (1)	10.00
O- N	0 / 2268	-18.5	-18.5	0.38 (1)	10.00
N- M	0 / 1532	-18.5	-18.5	0.49 (4)	10.00
M- L	0 / 1532	-18.5	-18.5	0.49 (4)	10.00
L- K	0 / 0	-18.5	-18.5	0.34 (4)	10.00

WEBS

MEMB. FR-TO	MAX. FACTORED FORCE (LBS)	MAX CSI (LC)
R- C	-998 / 0	0.26 (1)
C- Q	0 / 592	0.13 (1)
Q- D	0 / 52	0.02 (4)
D- P	0 / 1296	0.29 (1)
P- E	-850 / 0	0.36 (1)
E- O	0 / 584	0.13 (1)
O- F	-111 / 0	0.05 (1)
O- G	0 / 1086	0.24 (1)
N- G	-1478 / 0	0.42 (1)
N- I	0 / 483	0.11 (1)
L- I	-1027 / 0	0.75 (1)
L- J	0 / 1950	0.44 (1)
B- R	0 / 903	0.20 (1)

DESIGN CRITERIA

SPECIFIED LOADS:

TOP CH.	LL	=	21.0	PSF
	DL	=	6.0	PSF
BOT CH.	LL	=	0.0	PSF
	DL	=	7.4	PSF
TOTAL LOAD		=	34.4	PSF

SPACING = 24.0 IN. C/C

LOADING IN FLAT SECTION BASED ON A SLOPE OF 2.00/12 MINIMUM

THIS TRUSS IS DESIGNED FOR RESIDENTIAL OR SMALL BUILDING REQUIREMENTS OF PART 9, NBCC 2015

THIS DESIGN COMPLIES WITH:
- PART 9 OF BCBC 2018 , ABC 2019
- PART 9 OF OBC 2012 (2019 AMENDMENT)
- CSA 086-14
- TPIC 2014

DESIGN ASSUMPTIONS
-OVERHANG NOT TO BE ALTERED OR CUT OFF.

(55 % OF 23.0 P.S.F. G.S.L. PLUS 8.4 P.S.F. RAIN LOAD) EQUALS 21.0 P.S.F. SPECIFIED ROOF LIVE LOAD

ALLOWABLE DEFL.(LL)= L/360 (1.05")
CALCULATED VERT. DEFL.(LL) = L/ 999 (0.12")
ALLOWABLE DEFL.(TL)= L/360 (1.05")
CALCULATED VERT. DEFL.(TL) = L/ 999 (0.27")

CSI: TC=0.82/1.00 (G-I:1) , BC=0.49/1.00 (L-N:4) , WB=0.75/1.00 (I-L:1) , SSI=0.30/1.00 (I-J:1)

DOL LUMBER=1.00 NAIL=1.00 LS BEND=1.10 COMP=1.10 SHEAR=1.10 TENS= 1.10

COMPANION LIVE LOAD FACTOR = 1.00

TRUSS PLATE MANUFACTURER IS NOT RESPONSIBLE FOR QUALITY CONTROL IN THE TRUSS MANUFACTURING PLANT .

NAIL VALUES

PLATE	GRIP(DRY) (PSI) MAX	MIN	SHEAR (PLI) MAX	MIN	SECTION (PLI) MAX	MIN
MT20	650	371	1747	788	1987	1873

PLATE PLACEMENT TOL. = 0.250 inches

PLATE ROTATION TOL. = 5.0 Deg.

JSI GRIP= 0.89 (G) (INPUT = 0.90)
JSI METAL= 0.44 (N) (INPUT = 1.00)

JOB NAME	TRUSS NAME	QUANTITY	PLY	JOB DESC.		DRWG NO.
336337	H253T		1	TRUSS DESC.	JT 45147	E21104410

Alpa Roof Truss, Maple

Version 8.420 S Jan 21 2021 MiTek Industries, Inc. Thu Oct 14 16:58:21 2021 Page 1

ID:hd511hZTz bdeQoS817GKByhVxV-fx1NRGNj6LeC6aq?Dvbe ONA0AFzlAqJnYaq2GyTSAG

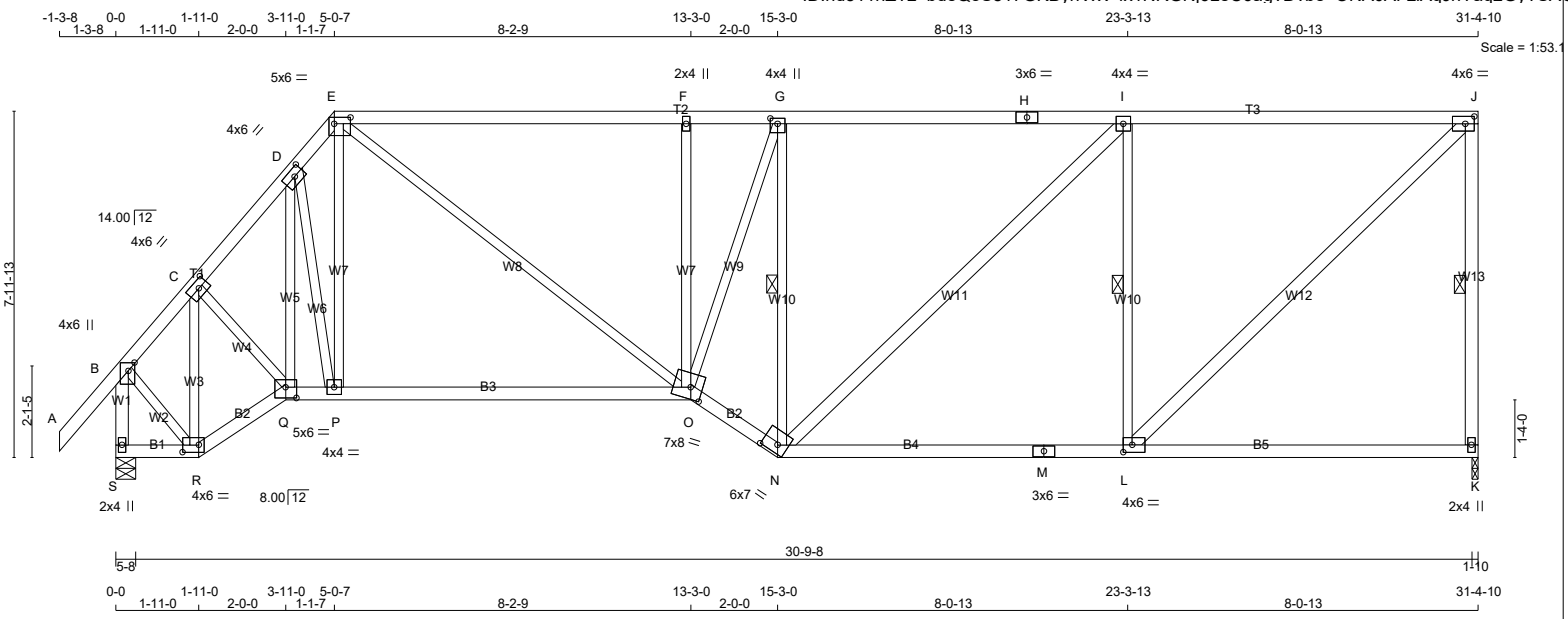

TOTAL WEIGHT = 164 lb

[M]

LUMBER

N. L. G. A. RULES

CHORDS	SIZE		LUMBER	DESCR.
A - E	2x4	DRY	No.2	SPF
E - H	2x4	DRY	1650F 1.5E	SPF
H - J	2x4	DRY	1650F 1.5E	SPF
K - J	2x4	DRY	No.2	SPF
S - B	2x4	DRY	No.2	SPF
S - R	2x4	DRY	No.2	SPF
R - Q	2x4	DRY	No.2	SPF
Q - O	2x4	DRY	No.2	SPF
O - N	2x4	DRY	No.2	SPF
N - M	2x4	DRY	No.2	SPF
M - K	2x4	DRY	No.2	SPF
ALL WEBS	2x3	DRY	No.2	SPF
EXCEPT				
N - I	2x4	DRY	No.2	SPF
L - J	2x4	DRY	No.2	SPF

DRY: SEASONED LUMBER.

PLATES (table is in inches)

JT	TYPE	PLATES	W	LEN	Y	X
B	TMVW+p	MT20	4.0	6.0	2.25	1.75
C	TMWW-t	MT20	4.0	6.0	2.00	2.75
D	TMWW-t	MT20	4.0	6.0	2.00	2.75
E	TTWW-l	MT20	5.0	6.0	1.75	4.50
F	TMW+w	MT20	2.0	4.0		
G	TMWW+t	MT20	4.0	4.0	1.50	2.00
H	TS-t	MT20	3.0	6.0		
I	TMWW-t	MT20	4.0	4.0		
J	TMVW-t	MT20	4.0	6.0	2.00	2.50
K	BMV1+p	MT20	2.0	4.0		
L	BMWW-t	MT20	4.0	6.0	2.00	2.50
M	BS-t	MT20	3.0	6.0		
N	BBWW-h	MT20	6.0	7.0	2.25	4.25
O	BBWWW-m	MT20	7.0	8.0	3.25	3.25
P	BMWW-t	MT20	4.0	4.0		
Q	BBWW-l	MT20	5.0	6.0	3.00	3.00
R	BBWW-l	MT20	4.0	6.0	2.00	4.50
S	BMV1+p	MT20	2.0	4.0		

LATERAL BRACE(S) SHOWN SHALL BE 2X4 SPF#2

DIMENSIONS, SUPPORTS AND LOADINGS SPECIFIED BY FABRICATOR TO BE VERIFIED BY BUILDING DESIGNER

BEARINGS

JT	FACTORED GROSS REACTION VERT	HORZ	MAXIMUM FACTORED GROSS REACTION DOWN	HORZ	UPLIFT	INPUT BRG IN-SX	REQRD BRG IN-SX
K	1511	0	1511	0	0	1-10	1-10
S	1626	0	1626	0	0	5-8	1-13

UNFACTORED REACTIONS

JT	1ST LCASE COMBINED	MAX./MIN. COMPONENT REACTIONS SNOW	LIVE	PERM.LIVE	WIND	DEAD	SOIL
K	1078	657 / 0	0 / 0	0 / 0	0 / 0	420 / 0	0 / 0
S	1157	719 / 0	0 / 0	0 / 0	0 / 0	438 / 0	0 / 0

BEARING MATERIAL TO BE SPF NO.2 OR BETTER AT JOINT(S) K, S

BRACING

TOP CHORD TO BE SHEATHED OR MAX. PURLIN SPACING = 4.63 FT.
MAX. UNBRACED BOTTOM CHORD LENGTH = 10.00 FT OR RIGID CEILING DIRECTLY APPLIED.

ALL PITCH BREAKS AND PERIMETER CORNER JOINTS MUST BE LATERALLY RESTRAINED.

1 LATERAL BRACE(S) AT 1/ 2 LENGTH OF J-K, G-N, I-L.

END VERTICAL(S) MUST BE SHEATHED OR HAVE BRACES AS INDICATED IN THE MAX. UNBRACED LENGTH COLUMN OF THE TABLE BELOW

LOADING

TOTAL LOAD CASES: (4)

CHORDS

MEMB. FR-TO	MAX. FACTORED FORCE (LBS)	FACTORED VERT. LOAD (PLF) FROM	TO	LC1 CSI (LC)	MAX. UNBRAC LENGTH
A- B	0 / 42	-78.0	-78.0	0.11 (1)	10.00
B- C	-1062 / 0	-78.0	-78.0	0.12 (1)	5.98
C- D	-1583 / 0	-78.0	-78.0	0.09 (1)	5.18
D- E	-1614 / 0	-78.0	-78.0	0.04 (1)	5.19
E- F	-1898 / 0	-78.0	-78.0	0.70 (1)	4.63
F- G	-1889 / 0	-78.0	-78.0	0.55 (1)	4.64
G- H	-1574 / 0	-78.0	-78.0	0.79 (1)	4.68
H- I	-1574 / 0	-78.0	-78.0	0.79 (1)	4.68
I- J	-1269 / 0	-78.0	-78.0	0.76 (1)	5.10
K- J	-1454 / 0	0.0	0.0	0.42 (1)	5.43
S- B	-1608 / 0	0.0	0.0	0.19 (1)	6.52
S- R	0 / 0	-18.5	-18.5	0.02 (4)	10.00
R- Q	0 / 776	-18.5	-18.5	0.14 (1)	10.00
Q- P	0 / 1034	-18.5	-18.5	0.41 (4)	10.00
P- O	0 / 1025	-18.5	-18.5	0.41 (4)	10.00
O- N	0 / 1871	-18.5	-18.5	0.31 (1)	10.00
N- M	0 / 1269	-18.5	-18.5	0.47 (4)	10.00
M- L	0 / 1269	-18.5	-18.5	0.47 (4)	10.00
L- K	0 / 0	-18.5	-18.5	0.35 (4)	10.00

WEBS

MEMB. FR-TO	MAX. FACTORED FORCE (LBS)	MAX CSI (LC)
R- C	-1000 / 0	0.26 (1)
C- Q	0 / 598	0.13 (1)
Q- D	-94 / 0	0.05 (4)
D- P	-83 / 37	0.04 (1)
P- E	0 / 279	0.07 (4)
E- O	0 / 1101	0.25 (1)
O- F	-557 / 0	0.41 (1)
O- G	0 / 1057	0.24 (1)
N- G	-1250 / 0	0.50 (1)
N- I	0 / 421	0.07 (1)
L- I	-1028 / 0	0.41 (1)
L- J	0 / 1753	0.28 (1)
B- R	0 / 906	0.20 (1)

DESIGN CRITERIA

SPECIFIED LOADS:

TOP CH.	LL	=	21.0	PSF
	DL	=	6.0	PSF
BOT CH.	LL	=	0.0	PSF
	DL	=	7.4	PSF
TOTAL LOAD		=	34.4	PSF

SPACING = 24.0 IN. C/C

LOADING IN FLAT SECTION BASED ON A SLOPE OF 2.00/12 MINIMUM

THIS TRUSS IS DESIGNED FOR RESIDENTIAL OR SMALL BUILDING REQUIREMENTS OF PART 9, NBCC 2015

THIS DESIGN COMPLIES WITH:
- PART 9 OF BCBC 2018 , ABC 2019
- PART 9 OF OBC 2012 (2019 AMENDMENT)
- CSA 086-14
- TPIC 2014

DESIGN ASSUMPTIONS
-OVERHANG NOT TO BE ALTERED OR CUT OFF.

(55 % OF 23.0 P.S.F. G.S.L. PLUS 8.4 P.S.F. RAIN LOAD) EQUALS 21.0 P.S.F. SPECIFIED ROOF LIVE LOAD

ALLOWABLE DEFL.(LL)= L/360 (1.05")
CALCULATED VERT. DEFL.(LL) = L/ 999 (0.09")
ALLOWABLE DEFL.(TL)= L/360 (1.05")
CALCULATED VERT. DEFL.(TL) = L/ 999 (0.24")

CSI: TC=0.79/1.00 (G-I:1) , BC=0.47/1.00 (L-N:4) , WB=0.50/1.00 (G-N:1) , SSI=0.30/1.00 (I-J:1)

DOL LUMBER=1.00 NAIL=1.00 LS BEND=1.10 COMP=1.10 SHEAR=1.10 TENS= 1.10

COMPANION LIVE LOAD FACTOR = 1.00

TRUSS PLATE MANUFACTURER IS NOT RESPONSIBLE FOR QUALITY CONTROL IN THE TRUSS MANUFACTURING PLANT .

NAIL VALUES

PLATE	GRIP(DRY) (PSI) MAX	MIN	SHEAR (PLI) MAX	MIN	SECTION (PLI) MAX	MIN
MT20	650	371	1747	788	1987	1873

PLATE PLACEMENT TOL. = 0.250 inches

PLATE ROTATION TOL. = 5.0 Deg.

JSI GRIP= 0.90 (R) (INPUT = 0.90)
JSI METAL= 0.42 (E) (INPUT = 1.00)

JOB NAME	TRUSS NAME	QUANTITY	PLY	JOB DESC.	DRWG NO.
336337	H254T		1	TRUSS DESC. JT 45147	E21104411

Alpha Roof Truss, Maple

Version 8.420 S Jan 21 2021 MiTek Industries, Inc. Thu Oct 14 16:58:25 2021 Page 1

ID:hd511hZTz_bdeQoS817GKByhVxV-XjGuGeQE9a8ebCzmSlga9EXpGnd9hyrviAY2B1yTSAC

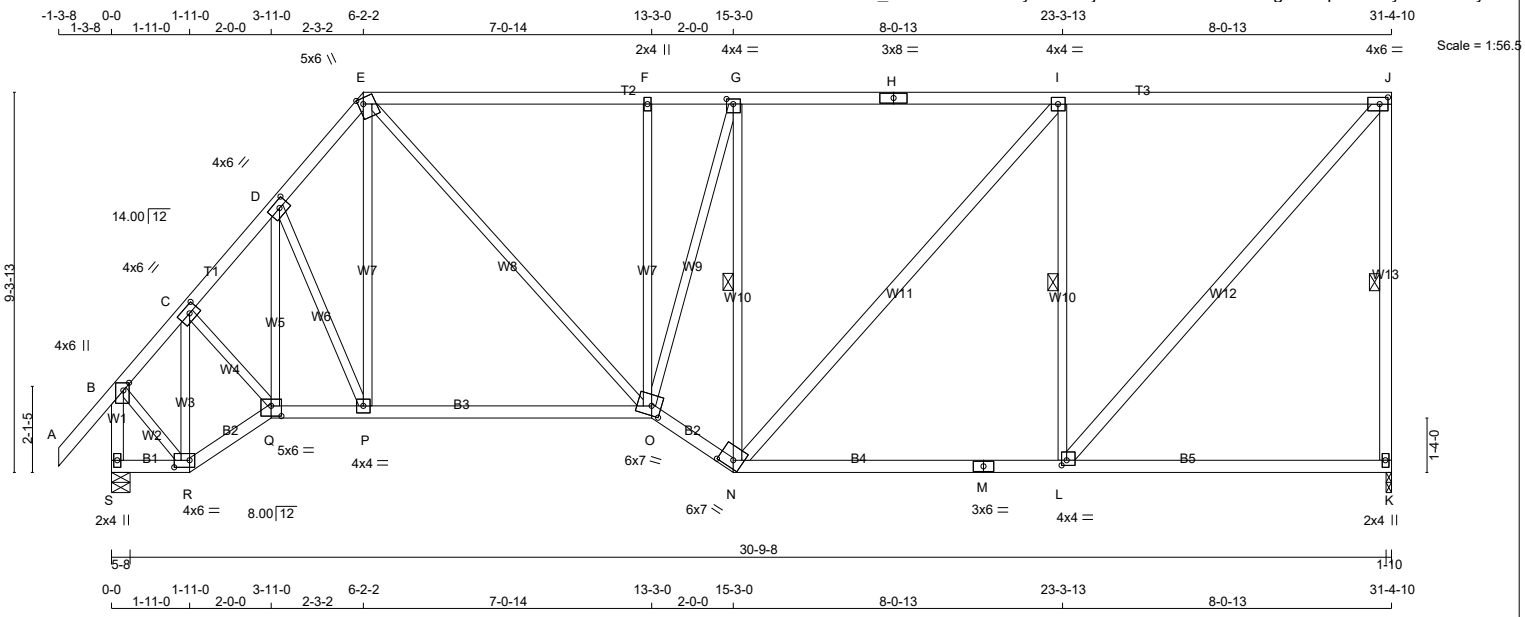

LUMBER

N. L. G. A. RULES

CHORDS	SIZE		LUMBER	DESCR.
A - E	2x4	DRY	No.2	SPF
E - H	2x4	DRY	No.2	SPF
H - J	2x4	DRY	No.2	SPF
K - J	2x4	DRY	No.2	SPF
S - B	2x4	DRY	No.2	SPF
S - R	2x4	DRY	No.2	SPF
R - Q	2x4	DRY	No.2	SPF
Q - O	2x4	DRY	No.2	SPF
O - N	2x4	DRY	No.2	SPF
N - M	2x4	DRY	No.2	SPF
M - K	2x4	DRY	No.2	SPF
ALL WEBS	2x3	DRY	No.2	SPF
EXCEPT				
N - I	2x4	DRY	No.2	SPF
L - J	2x4	DRY	No.2	SPF

DRY: SEASONED LUMBER.

PLATES (table is in inches)

JT	TYPE	PLATES	W	LEN	Y	X
B	TMVW+p	MT20	4.0	6.0	2.25	1.75
C	TMWW-t	MT20	4.0	6.0	2.00	2.75
D	TMWW-t	MT20	4.0	6.0	2.00	2.75
E	TTWW+m	MT20	5.0	6.0	1.75	1.50
F	TMW+w	MT20	2.0	4.0		
G	TMWW-t	MT20	4.0	4.0	1.50	2.00
H	TS-t	MT20	3.0	8.0		
I	TMWW-t	MT20	4.0	4.0		
J	TMVW-t	MT20	4.0	6.0	2.00	2.50
K	BMV1+p	MT20	2.0	4.0		
L	BMWW-t	MT20	4.0	4.0	1.50	1.50
M	BS-t	MT20	3.0	6.0		
N	BBWW-h	MT20	6.0	7.0	2.25	4.25
O	BBWWW-m	MT20	6.0	7.0	2.75	2.75
P	BMWW-t	MT20	4.0	4.0		
Q	BBWW-l	MT20	5.0	6.0	3.00	3.00
R	BBWW-l	MT20	4.0	6.0	2.00	4.50
S	BMV1+p	MT20	2.0	4.0		

LATERAL BRACE(S) SHOWN SHALL BE 2X4 SPF#2

DIMENSIONS, SUPPORTS AND LOADINGS SPECIFIED BY FABRICATOR TO BE VERIFIED BY BUILDING DESIGNER

BEARINGS

JT	FACTORED GROSS REACTION VERT	HORZ	MAXIMUM FACTORED GROSS REACTION DOWN	HORZ	UPLIFT	INPUT BRG IN-SX	REQRD BRG IN-SX
K	1511	0	1511	0	0	1-10	1-10
S	1626	0	1626	0	0	5-8	1-13

UNFACTORED REACTIONS

JT	1ST LCASE COMBINED	MAX./MIN. COMPONENT REACTIONS SNOW	LIVE	PERM.LIVE	WIND	DEAD	SOIL
K	1078	657 / 0	0 / 0	0 / 0	0 / 0	420 / 0	0 / 0
S	1157	719 / 0	0 / 0	0 / 0	0 / 0	438 / 0	0 / 0

BEARING MATERIAL TO BE SPF NO.2 OR BETTER AT JOINT(S) K, S

BRACING

TOP CHORD TO BE SHEATHED OR MAX. PURLIN SPACING = 3.96 FT.
MAX. UNBRACED BOTTOM CHORD LENGTH = 10.00 FT OR RIGID CEILING DIRECTLY APPLIED.

ALL PITCH BREAKS AND PERIMETER CORNER JOINTS MUST BE LATERALLY RESTRAINED.

1 LATERAL BRACE(S) AT 1/ 2 LENGTH OF J-K, G-N, I-L.

END VERTICAL(S) MUST BE SHEATHED OR HAVE BRACES AS INDICATED IN THE MAX. UNBRACED LENGTH COLUMN OF THE TABLE BELOW

LOADING

TOTAL LOAD CASES: (4)

CHORDS

MEMB. FR-TO	MAX. FACTORED FORCE (LBS)	FACTORED VERT. LOAD (PLF) FROM	TO	LC1 CSI (LC)	MAX. UNBRAC LENGTH
A- B	0 / 42	-78.0	-78.0	0.11 (1)	10.00
B- C	-1062 / 0	-78.0	-78.0	0.12 (1)	5.98
C- D	-1582 / 0	-78.0	-78.0	0.08 (1)	5.19
D- E	-1535 / 0	-78.0	-78.0	0.07 (1)	5.26
E- F	-1549 / 0	-78.0	-78.0	0.58 (1)	4.61
F- G	-1543 / 0	-78.0	-78.0	0.46 (1)	4.65
G- H	-1343 / 0	-78.0	-78.0	0.97 (1)	3.96
H- I	-1343 / 0	-78.0	-78.0	0.97 (1)	3.96
I- J	-1081 / 0	-78.0	-78.0	0.92 (1)	4.37
K- J	-1455 / 0	0.0	0.0	0.59 (1)	5.43
S- B	-1608 / 0	0.0	0.0	0.19 (1)	6.52
S- R	0 / 0	-18.5	-18.5	0.02 (4)	10.00
R- Q	0 / 773	-18.5	-18.5	0.14 (1)	10.00
Q- P	0 / 1037	-18.5	-18.5	0.30 (4)	10.00
P- O	0 / 986	-18.5	-18.5	0.30 (4)	10.00
O- N	0 / 1598	-18.5	-18.5	0.27 (1)	10.00
N- M	0 / 1081	-18.5	-18.5	0.45 (4)	10.00
M- L	0 / 1081	-18.5	-18.5	0.45 (4)	10.00
L- K	0 / 0	-18.5	-18.5	0.35 (4)	10.00

WEBS

MEMB. FR-TO	MAX. FACTORED FORCE (LBS)	MAX CSI (LC)
R- C	-996 / 0	0.26 (1)
C- Q	0 / 613	0.14 (1)
Q- D	-30 / 0	0.01 (1)
D- P	-136 / 0	0.07 (1)
P- E	0 / 251	0.06 (4)
E- O	0 / 829	0.19 (1)
O- F	-428 / 0	0.52 (1)
O- G	0 / 808	0.18 (1)
N- G	-1101 / 0	0.63 (1)
N- I	0 / 392	0.06 (1)
L- I	-1027 / 0	0.59 (1)
L- J	0 / 1622	0.26 (1)
B- R	0 / 901	0.20 (1)

[M]

DESIGN CRITERIA

SPECIFIED LOADS:

TOP CH.	LL	=	21.0	PSF
	DL	=	6.0	PSF
BOT CH.	LL	=	0.0	PSF
	DL	=	7.4	PSF
TOTAL LOAD		=	34.4	PSF

SPACING = 24.0 IN. C/C

LOADING IN FLAT SECTION BASED ON A SLOPE OF 2.00/12 MINIMUM

THIS TRUSS IS DESIGNED FOR RESIDENTIAL OR SMALL BUILDING REQUIREMENTS OF PART 9, NBCC 2015

THIS DESIGN COMPLIES WITH:
- PART 9 OF BCBC 2018 , ABC 2019
- PART 9 OF OBC 2012 (2019 AMENDMENT)
- CSA 086-14
- TPIC 2014

DESIGN ASSUMPTIONS
-OVERHANG NOT TO BE ALTERED OR CUT OFF.

(55 % OF 23.0 P.S.F. G.S.L. PLUS 8.4 P.S.F. RAIN LOAD) EQUALS 21.0 P.S.F. SPECIFIED ROOF LIVE LOAD

ALLOWABLE DEFL.(LL)= L/360 (1.05")
CALCULATED VERT. DEFL.(LL) = L/ 999 (0.08")
ALLOWABLE DEFL.(TL)= L/360 (1.05")
CALCULATED VERT. DEFL.(TL) = L/ 999 (0.19")

CSI: TC=0.97/1.00 (G-I:1) , BC=0.45/1.00 (L-N:4) , WB=0.63/1.00 (G-N:1) , SSI=0.30/1.00 (I-J:1)

DOL LUMBER=1.00 NAIL=1.00 LS BEND=1.10 COMP=1.10 SHEAR=1.10 TENS= 1.10

COMPANION LIVE LOAD FACTOR = 1.00

TRUSS PLATE MANUFACTURER IS NOT RESPONSIBLE FOR QUALITY CONTROL IN THE TRUSS MANUFACTURING PLANT .

NAIL VALUES

PLATE	GRIP(DRY) (PSI) MAX	MIN	SHEAR (PLI) MAX	MIN	SECTION (PLI) MAX	MIN
MT20	650	371	1747	788	1987	1873

PLATE PLACEMENT TOL. = 0.250 inches

PLATE ROTATION TOL. = 5.0 Deg.

JSI GRIP= 0.89 (R) (INPUT = 0.90)
JSI METAL= 0.40 (R) (INPUT = 1.00)

JOB NAME	TRUSS NAME	QUANTITY	PLY	JOB DESC.	DRWG NO.
336337	H255T		1	TRUSS DESC. JT 45147	E21104412

Alpa Roof Truss, Maple

Version 8.420 S Jan 21 2021 MiTek Industries, Inc. Thu Oct 14 16:58:27 2021 Page 1

ID:hd511hZTz bdeQoS817GKByhVxV-U5OehKSUhBPMqW78ZAi2EfdASaKq9r0B9T19FwyTSAA

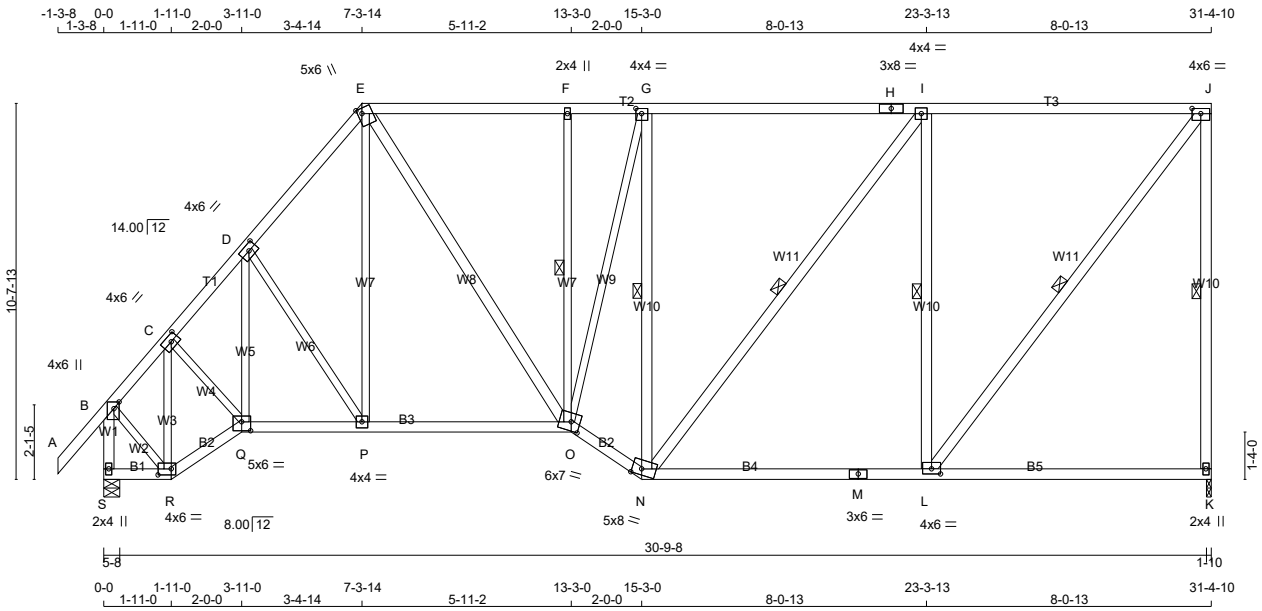

TOTAL WEIGHT = 194 lb

LUMBER

N. L. G. A. RULES

CHORDS	SIZE		LUMBER	DESCR.
A - E	2x4	DRY	No.2	SPF
E - H	2x4	DRY	No.2	SPF
H - J	2x4	DRY	No.2	SPF
K - J	2x4	DRY	No.2	SPF
S - B	2x4	DRY	No.2	SPF
S - R	2x4	DRY	No.2	SPF
R - Q	2x4	DRY	No.2	SPF
Q - O	2x4	DRY	No.2	SPF
O - N	2x4	DRY	No.2	SPF
N - M	2x4	DRY	No.2	SPF
M - K	2x4	DRY	No.2	SPF
ALL WEBS	2x3	DRY	No.2	SPF
EXCEPT				
E - O	2x4	DRY	No.2	SPF
N - G	2x4	DRY	No.2	SPF
N - I	2x4	DRY	No.2	SPF
L - I	2x4	DRY	No.2	SPF
L - J	2x4	DRY	No.2	SPF

DRY: SEASONED LUMBER.

PLATES (table is in inches)

JT	TYPE	PLATES	W	LEN	Y	X
B	TMVW+p	MT20	4.0	6.0	2.25	1.75
C	TMWW-t	MT20	4.0	6.0	2.00	2.75
D	TMWW-t	MT20	4.0	6.0	2.00	2.75
E	TTWW+m	MT20	5.0	6.0	1.75	1.50
F	TMW+w	MT20	2.0	4.0		
G	TMWW-t	MT20	4.0	4.0	1.75	2.00
H	TS-t	MT20	3.0	8.0		
I	TMWW-t	MT20	4.0	4.0		
J	TMVW-t	MT20	4.0	6.0	1.75	3.00
K	BMV1+p	MT20	2.0	4.0		
L	BMWW-t	MT20	4.0	6.0	1.75	3.00
M	BS-t	MT20	3.0	6.0		
N	BBWW-m	MT20	5.0	8.0	2.00	3.25
O	BBWWW-m	MT20	6.0	7.0	3.00	3.00
P	BMWW-t	MT20	4.0	4.0		
Q	BBWW-l	MT20	5.0	6.0	3.00	3.00
R	BBWW-l	MT20	4.0	6.0	2.00	4.50
S	BMV1+p	MT20	2.0	4.0		

LATERAL BRACE(S) SHOWN SHALL BE 2X4 SPF#2

DIMENSIONS, SUPPORTS AND LOADINGS SPECIFIED BY FABRICATOR TO BE VERIFIED BY BUILDING DESIGNER

BEARINGS

JT	FACTORED GROSS REACTION VERT	HORZ	MAXIMUM FACTORED GROSS REACTION DOWN	HORZ	UPLIFT	INPUT BRG IN-SX	REQRD BRG IN-SX
K	1511	0	1511	0	0	1-10	1-10
S	1626	0	1626	0	0	5-8	1-13

UNFACTORED REACTIONS

JT	1ST LCASE COMBINED	MAX./MIN. COMPONENT REACTIONS SNOW	LIVE	PERM.LIVE	WIND	DEAD	SOIL
K	1078	657 / 0	0 / 0	0 / 0	0 / 0	420 / 0	0 / 0
S	1157	719 / 0	0 / 0	0 / 0	0 / 0	438 / 0	0 / 0

BEARING MATERIAL TO BE SPF NO.2 OR BETTER AT JOINT(S) K, S

BRACING

TOP CHORD TO BE SHEATHED OR MAX. PURLIN SPACING = 4.25 FT.
MAX. UNBRACED BOTTOM CHORD LENGTH = 10.00 FT OR RIGID CEILING DIRECTLY APPLIED.

ALL PITCH BREAKS AND PERIMETER CORNER JOINTS MUST BE LATERALLY RESTRAINED.

1 LATERAL BRACE(S) AT 1/ 2 LENGTH OF J-K, F-O, G-N, I-N, I-L, J-L.

END VERTICAL(S) MUST BE SHEATHED OR HAVE BRACES AS INDICATED IN THE MAX. UNBRACED LENGTH COLUMN OF THE TABLE BELOW

LOADING

TOTAL LOAD CASES: (4)

CHORDS

MEMB. FR-TO	MAX. FACTORED FORCE (LBS)	FACTORED VERT. LOAD (PLF) FROM	TO	LC1 CSI (LC)	MAX UNBRAC LENGTH
A- B	0 / 42	-78.0	-78.0	0.11 (1)	10.00
B- C	-1063 / 0	-78.0	-78.0	0.12 (1)	5.98
C- D	-1576 / 0	-78.0	-78.0	0.13 (1)	5.13
D- E	-1475 / 0	-78.0	-78.0	0.14 (1)	5.27
E- F	-1306 / 0	-78.0	-78.0	0.39 (1)	5.18
F- G	-1302 / 0	-78.0	-78.0	0.37 (1)	5.16
G- H	-1172 / 0	-78.0	-78.0	0.92 (1)	4.25
H- I	-1172 / 0	-78.0	-78.0	0.92 (1)	4.25
I- J	-941 / 0	-78.0	-78.0	0.88 (1)	4.69
K- J	-1455 / 0	0.0	0.0	0.83 (1)	5.43
S- B	-1608 / 0	0.0	0.0	0.19 (1)	6.52
S- R	0 / 0	-18.5	-18.5	0.02 (4)	10.00
R- Q	0 / 769	-18.5	-18.5	0.14 (1)	10.00
Q- P	0 / 1045	-18.5	-18.5	0.25 (1)	10.00
P- O	0 / 946	-18.5	-18.5	0.23 (1)	10.00
O- N	0 / 1391	-18.5	-18.5	0.24 (1)	10.00
N- M	0 / 942	-18.5	-18.5	0.44 (4)	10.00
M- L	0 / 942	-18.5	-18.5	0.44 (4)	10.00
L- K	0 / 0	-18.5	-18.5	0.35 (4)	10.00

WEBS

MEMB. FR-TO	MAX. FACTORED FORCE (LBS)	MAX CSI (LC)
R- C	-991 / 0	0.26 (1)
C- Q	0 / 629	0.14 (1)
Q- D	-16 / 25	0.01 (4)
D- P	-184 / 0	0.12 (1)
P- E	0 / 258	0.06 (4)
E- O	0 / 652	0.10 (1)
O- F	-314 / 0	0.18 (1)
O- G	0 / 623	0.14 (1)
N- G	-990 / 0	0.57 (1)
N- I	0 / 374	0.06 (1)
L- I	-1026 / 0	0.59 (1)
L- J	0 / 1532	0.25 (1)
B- R	0 / 897	0.20 (1)

DESIGN CRITERIA

SPECIFIED LOADS:

TOP	CH.	LL	=	21.0	PSF
		DL	=	6.0	PSF
BOT	CH.	LL	=	0.0	PSF
		DL	=	7.4	PSF
TOTAL	LOAD		=	34.4	PSF

SPACING = 24.0 IN. C/C

LOADING IN FLAT SECTION BASED ON A SLOPE OF 2.00/12 MINIMUM

THIS TRUSS IS DESIGNED FOR RESIDENTIAL OR SMALL BUILDING REQUIREMENTS OF PART 9, NBCC 2015

THIS DESIGN COMPLIES WITH:
- PART 9 OF BCBC 2018 , ABC 2019
- PART 9 OF OBC 2012 (2019 AMENDMENT)
- CSA 086-14
- TPIC 2014

DESIGN ASSUMPTIONS
-OVERHANG NOT TO BE ALTERED OR CUT OFF.

(55 % OF 23.0 P.S.F. G.S.L. PLUS 8.4 P.S.F. RAIN LOAD) EQUALS 21.0 P.S.F. SPECIFIED ROOF LIVE LOAD

ALLOWABLE DEFL.(LL)= L/360 (1.05")
CALCULATED VERT. DEFL.(LL) = L/ 999 (0.07")
ALLOWABLE DEFL.(TL)= L/360 (1.05")
CALCULATED VERT. DEFL.(TL) = L/ 999 (0.18")

CSI: TC=0.92/1.00 (G-I:1) , BC=0.44/1.00 (L-N:4) , WB=0.59/1.00 (I-L:1) , SSI=0.30/1.00 (I-J:1)

DOL LUMBER=1.00 NAIL=1.00 LS BEND=1.10 COMP=1.10 SHEAR=1.10 TENS= 1.10

COMPANION LIVE LOAD FACTOR = 1.00

TRUSS PLATE MANUFACTURER IS NOT RESPONSIBLE FOR QUALITY CONTROL IN THE TRUSS MANUFACTURING PLANT .

NAIL VALUES

PLATE	GRIP(DRY) (PSI) MAX	MIN	SHEAR (PLI) MAX	MIN	SECTION (PLI) MAX	MIN
MT20	650	371	1747	788	1987	1873

PLATE PLACEMENT TOL. = 0.250 inches

PLATE ROTATION TOL. = 5.0 Deg.

JSI GRIP= 0.89 (R) (INPUT = 0.90)
JSI METAL= 0.40 (B) (INPUT = 1.00)

JOB NAME	TRUSS NAME	QUANTITY	PLY	JOB DESC.	DRWG NO.
336337	H301		1	TRUSS DESC. JT 45147	E21104413

Alpa Roof Truss, Maple

Version 8.420 S Jan 21 2021 MiTek Industries, Inc. Thu Oct 14 16:58:28 2021 Page 1

ID:hd511hZTz bdeQoS817GKByhVxV-ylv0vgT6SVXCSfiL7tDHmt9On g9uKBLO7ninMyTSA9

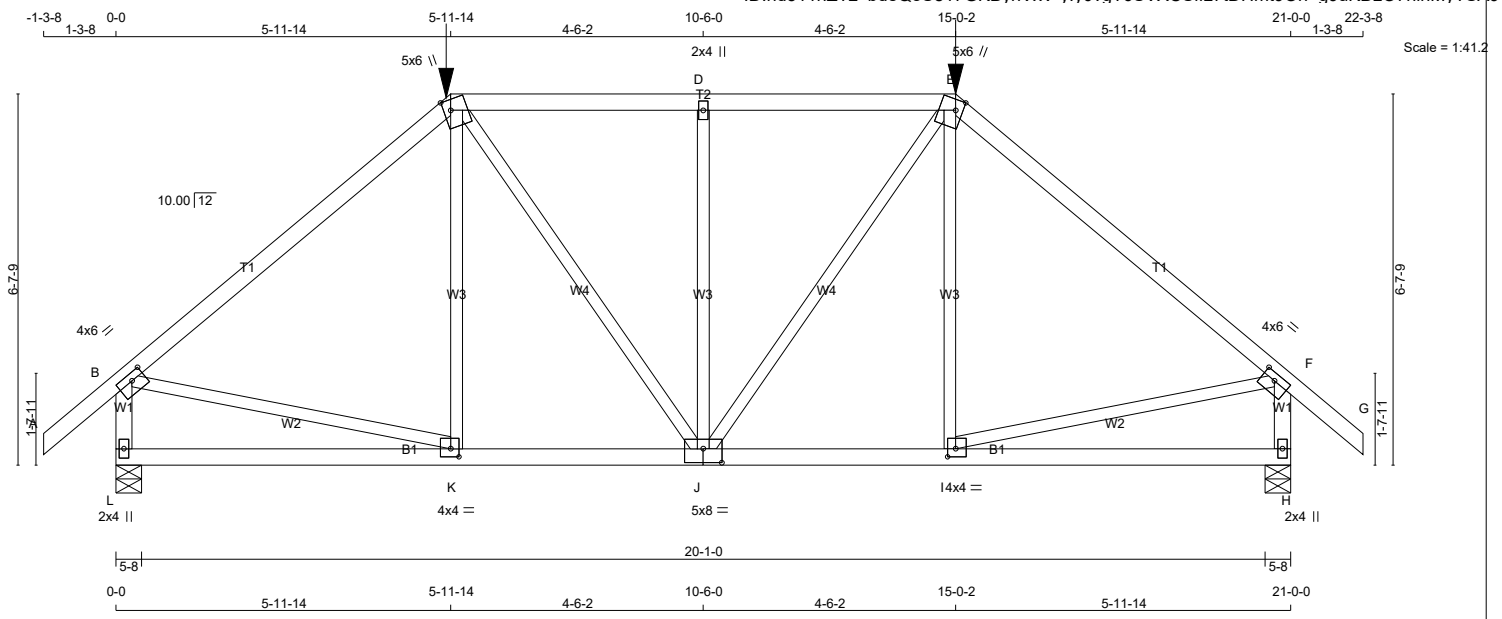

TOTAL WEIGHT = 95 lb

[M]

LUMBER

N. L. G. A. RULES

CHORDS	SIZE		LUMBER	DESCR.
A - C	2x4	DRY	No.2	SPF
C - E	2x4	DRY	No.2	SPF
E - G	2x4	DRY	No.2	SPF
L - B	2x4	DRY	No.2	SPF
H - F	2x4	DRY	No.2	SPF
L - J	2x4	DRY	No.2	SPF
J - H	2x4	DRY	No.2	SPF
ALL WEBS EXCEPT	2x3	DRY	No.2	SPF

DRY: SEASONED LUMBER.

PLATES (table is in inches)

JT	TYPE	PLATES	W	LEN	Y	X
B	TMVW-t	MT20	4.0	6.0	1.50	2.75
C	TTWW+m	MT20	5.0	6.0	2.25	1.50
D	TMW+w	MT20	2.0	4.0		
E	TTWW+m	MT20	5.0	6.0	2.25	1.50
F	TMVW-t	MT20	4.0	6.0	1.50	2.75
H	BMV1+p	MT20	2.0	4.0		
I	BMWW-t	MT20	4.0	4.0	1.75	1.75
J	BSWWW-l	MT20	5.0	8.0	3.00	4.00
K	BMWW-t	MT20	4.0	4.0	1.75	1.75
L	BMV1+p	MT20	2.0	4.0		

LATERAL BRACE(S) SHOWN SHALL BE 2X4 SPF#2

DIMENSIONS, SUPPORTS AND LOADINGS SPECIFIED BY FABRICATOR TO BE VERIFIED BY BUILDING DESIGNER

BEARINGS

JT	FACTORED GROSS REACTION VERT	HORZ	MAXIMUM FACTORED GROSS REACTION DOWN	HORZ	UPLIFT	INPUT BRG IN-SX	REQRD BRG IN-SX
L	1562	0	1562	0	0	5-8	1-11
H	1562	0	1562	0	0	5-8	1-11

UNFACTORED REACTIONS

JT	1ST LCASE COMBINED	MAX./MIN. COMPONENT REACTIONS SNOW	LIVE	PERM.LIVE	WIND	DEAD	SOIL
L	1112	687 / 0	0 / 0	0 / 0	0 / 0	425 / 0	0 / 0
H	1112	687 / 0	0 / 0	0 / 0	0 / 0	425 / 0	0 / 0

BEARING MATERIAL TO BE SPF NO.2 OR BETTER AT JOINT(S) L, H

BRACING

TOP CHORD TO BE SHEATHED OR MAX. PURLIN SPACING = 4.57 FT.
MAX. UNBRACED BOTTOM CHORD LENGTH = 10.00 FT OR RIGID CEILING DIRECTLY APPLIED.

ALL PITCH BREAKS AND PERIMETER CORNER JOINTS MUST BE LATERALLY RESTRAINED.

LOADING

TOTAL LOAD CASES: (4)

CHORDS

MEMB. FR-TO	MAX. FACTORED FORCE (LBS)	FACTORED VERT. LOAD (PLF) FROM	TO	LC1 CSI (LC)	MAX UNBRAC LENGTH
A- B	0 / 35	-78.0	-78.0	0.12 (1)	10.00
B- C	-1430 / 0	-78.0	-78.0	0.69 (1)	4.57
C- D	-1347 / 0	-114.5	-114.5	0.46 (1)	4.93
D- E	-1347 / 0	-114.5	-114.5	0.46 (1)	4.93
E- F	-1430 / 0	-78.0	-78.0	0.69 (1)	4.57
F- G	0 / 35	-78.0	-78.0	0.12 (1)	10.00
L- B	-1494 / 0	0.0	0.0	0.17 (1)	6.67
H- F	-1494 / 0	0.0	0.0	0.17 (1)	6.67
L- K	0 / 0	-27.2	-27.2	0.25 (4)	10.00
K- J	0 / 1096	-27.2	-27.2	0.37 (4)	10.00
J- I	0 / 1096	-27.2	-27.2	0.37 (4)	10.00
I- H	0 / 0	-27.2	-27.2	0.25 (4)	10.00

WEBS

MEMB. FR-TO	MAX. FACTORED FORCE (LBS)	MAX CSI (LC)
K- C	-56 / 112	0.04 (4)
C- J	0 / 432	0.11 (1)
J- D	-626 / 0	0.46 (1)
J- E	0 / 432	0.11 (1)
I- E	-56 / 112	0.04 (4)
B- K	0 / 1122	0.28 (1)
I- F	0 / 1122	0.28 (1)

FACTORED CONCENTRATED LOADS (LBS)

JT	LOC.	LC1	MAX-	MAX+	FACE	DIR.	TYPE	HEEL	CONN.
C	5-11-14	-185	-185	---	FRONT	VERT	TOTAL	---	C1
E	15-0-2	-185	-185	---	FRONT	VERT	TOTAL	---	C1

CONNECTION REQUIREMENTS

1) **C1:** A SUITABLE HANGER/MECHANICAL CONNECTION IS REQUIRED.

DESIGN CRITERIA

SPECIFIED LOADS:

TOP CH.	LL	=	21.0	PSF
	DL	=	6.0	PSF
BOT CH.	LL	=	0.0	PSF
	DL	=	7.4	PSF
TOTAL LOAD		=	34.4	PSF

SPACING = 24.0 IN. C/C

LOADING IN FLAT SECTION BASED ON A SLOPE OF 2.00/12 MINIMUM

GIRDER TYPE: CPrimeHip
SIDE SETBACK = 5-11-14
END SETBACK = 3-10-8
END WALL WIDTH = 0-0
CORNER FRAMING TYPE: CONVENTIONAL
END JACK TYPE: CONVENTIONAL
APPLIED TO FRONT SIDE
- ADDT'L LOADS BASED ON 55 % OF GSL.

THIS TRUSS IS DESIGNED FOR RESIDENTIAL OR SMALL BUILDING REQUIREMENTS OF PART 9, NBCC 2015

THIS DESIGN COMPLIES WITH:
- PART 9 OF BCBC 2018 , ABC 2019
- PART 9 OF OBC 2012 (2019 AMENDMENT)
- CSA 086-14
- TPIC 2014

(55 % OF 23.0 P.S.F. G.S.L. PLUS 8.4 P.S.F. RAIN LOAD) EQUALS 21.0 P.S.F. SPECIFIED ROOF LIVE LOAD

ALLOWABLE DEFL.(LL)= L/360 (0.70")
CALCULATED VERT. DEFL.(LL) = L/ 999 (0.03")
ALLOWABLE DEFL.(TL)= L/360 (0.70")
CALCULATED VERT. DEFL.(TL) = L/ 999 (0.08")

CSI: TC=0.69/1.00 (B-C:1) , BC=0.37/1.00 (J-K:4) , WB=0.46/1.00 (D-J:1) , SSI=0.27/1.00 (C-D:1)

DOL LUMBER=1.00 NAIL=1.00 LS BEND=1.00 COMP=1.00 SHEAR=1.00 TENS= 1.00

COMPANION LIVE LOAD FACTOR = 1.00

TRUSS PLATE MANUFACTURER IS NOT RESPONSIBLE FOR QUALITY CONTROL IN THE TRUSS MANUFACTURING PLANT .

NAIL VALUES

PLATE	GRIP(DRY) (PSI) MAX	MIN	SHEAR (PLI) MAX	MIN	SECTION (PLI) MAX	MIN
MT20	650	371	1747	788	1987	1873

PLATE PLACEMENT TOL. = 0.250 inches

PLATE ROTATION TOL. = 5.0 Deg.

JSI GRIP= 0.87 (I) (INPUT = 0.90)
JSI METAL= 0.39 (B) (INPUT = 1.00)

JOB NAME	TRUSS NAME	QUANTITY	PLY	JOB DESC.		DRWG NO.
336337	H302		1	TRUSS DESC.	JT 45147	E21104414

Alpa Roof Truss, Maple

Version 8.420 S Jan 21 2021 MiTek Industries, Inc. Thu Oct 14 16:58:30 2021 Page 1

ID:hd511hZTz_bdeQoS817GKByhVxV-ug3nJLUN_6nwhzsjFIFlsIFrGoMjM8jerRGpsFyTSA7

Scale = 1:52.9

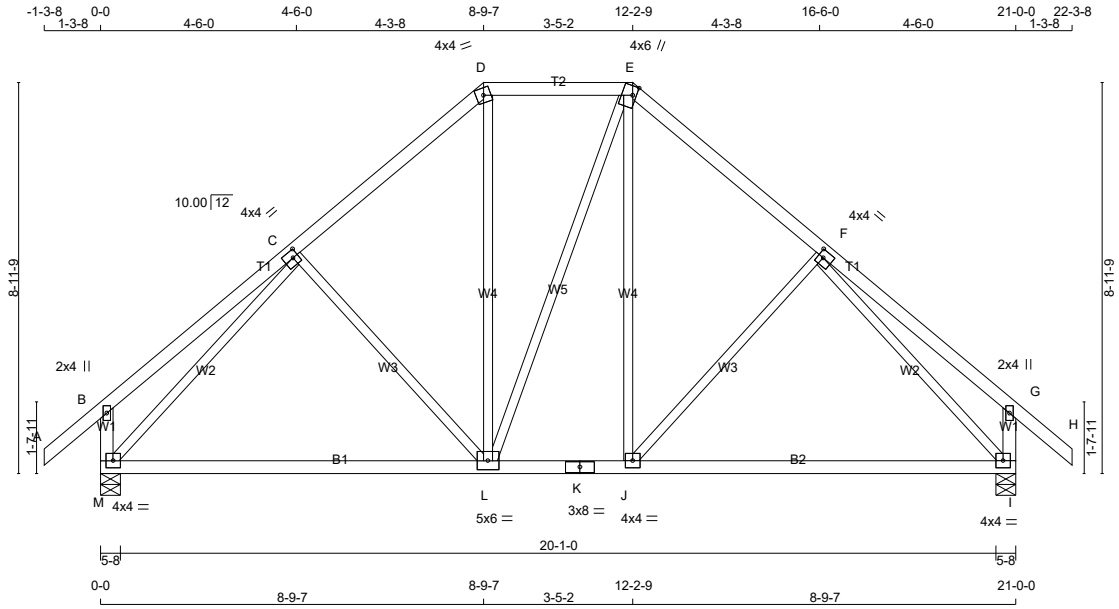

TOTAL WEIGHT = 103 lb

[M][F]

LUMBER

N. L. G. A. RULES

CHORDS	SIZE		LUMBER	DESCR.
A - D	2x4	DRY	No.2	SPF
D - E	2x4	DRY	No.2	SPF
E - H	2x4	DRY	No.2	SPF
M - B	2x4	DRY	No.2	SPF
I - G	2x4	DRY	No.2	SPF
M - K	2x4	DRY	No.2	SPF
K - I	2x4	DRY	No.2	SPF
ALL WEBS EXCEPT	2x3	DRY	No.2	SPF

DRY: SEASONED LUMBER.

PLATES (table is in inches)

JT	TYPE	PLATES	W	LEN	Y	X
B	TMV+p	MT20	2.0	4.0		
C	TMWW-t	MT20	4.0	4.0	2.00	1.50
D	TTW-m	MT20	4.0	4.0		
E	TTWW+m	MT20	4.0	6.0	Edge	1.00
F	TMWW-t	MT20	4.0	4.0	2.00	1.50
G	TMV+p	MT20	2.0	4.0		
I	BMVW1-t	MT20	4.0	4.0		
J	BMWW-t	MT20	4.0	4.0		
K	BS-t	MT20	3.0	8.0		
L	BMWWW-t	MT20	5.0	6.0		
M	BMVW1-t	MT20	4.0	4.0		

Edge - INDICATES REFERENCE CORNER OF PLATE TOUCHES EDGE OF CHORD.

LATERAL BRACE(S) SHOWN SHALL BE 2X4 SPF#2

DIMENSIONS, SUPPORTS AND LOADINGS SPECIFIED BY FABRICATOR TO BE VERIFIED BY BUILDING DESIGNER

BEARINGS

JT	FACTORED GROSS REACTION VERT	HORZ	MAXIMUM FACTORED GROSS REACTION DOWN	HORZ	UPLIFT	INPUT BRG IN-SX	REQRD BRG IN-SX
M	1121	0	1121	0	0	5-8	1-8
I	1121	0	1121	0	0	5-8	1-8

UNFACTORED REACTIONS

JT	1ST LCASE COMBINED	MAX./MIN. COMPONENT REACTIONS SNOW	LIVE	PERM.LIVE	WIND	DEAD	SOIL
M	797	499 / 0	0 / 0	0 / 0	0 / 0	298 / 0	0 / 0
I	797	499 / 0	0 / 0	0 / 0	0 / 0	298 / 0	0 / 0

BEARING MATERIAL TO BE SPF NO.2 OR BETTER AT JOINT(S) M, I

BRACING

TOP CHORD TO BE SHEATHED OR MAX. PURLIN SPACING = 6.25 FT.
MAX. UNBRACED BOTTOM CHORD LENGTH = 10.00 FT OR RIGID CEILING DIRECTLY APPLIED.

ALL PITCH BREAKS AND PERIMETER CORNER JOINTS MUST BE LATERALLY RESTRAINED.

LOADING

TOTAL LOAD CASES: (4)

CHORDS

MEMB. FR-TO	MAX. FACTORED FORCE (LBS)	FACTORED VERT. LOAD (PLF) FROM	TO	LC1	MAX CSI (LC)	MAX. UNBRAC LENGTH
A- B	0 / 35	-78.0	-78.0	0.11 (1)	10.00	
B- C	0 / 26	-78.0	-78.0	0.24 (1)	10.00	
C- D	-821 / 0	-78.0	-78.0	0.20 (1)	6.25	
D- E	-613 / 0	-78.0	-78.0	0.12 (1)	6.25	
E- F	-821 / 0	-78.0	-78.0	0.20 (1)	6.25	
F- G	0 / 26	-78.0	-78.0	0.24 (1)	10.00	
G- H	0 / 35	-78.0	-78.0	0.11 (1)	10.00	
M- B	-238 / 0	0.0	0.0	0.03 (1)	7.81	
I- G	-238 / 0	0.0	0.0	0.03 (1)	7.81	
M- L	0 / 719	-18.5	-18.5	0.36 (4)	10.00	
L- K	0 / 612	-18.5	-18.5	0.35 (4)	10.00	
K- J	0 / 612	-18.5	-18.5	0.35 (4)	10.00	
J- I	0 / 719	-18.5	-18.5	0.36 (4)	10.00	

WEBS

MEMB. FR-TO	MAX. FACTORED FORCE (LBS)	MAX CSI (LC)
C- L	-162 / 0	0.13 (1)
L- D	0 / 245	0.06 (1)
L- E	0 / 1	0.00 (1)
J- E	0 / 244	0.05 (1)
J- F	-162 / 0	0.13 (1)
M- C	-1087 / 0	0.84 (1)
F- I	-1086 / 0	0.84 (1)

DESIGN CRITERIA

SPECIFIED LOADS:

TOP CH.	LL	=	21.0	PSF
	DL	=	6.0	PSF
BOT CH.	LL	=	0.0	PSF
	DL	=	7.4	PSF
TOTAL LOAD		=	34.4	PSF

SPACING = 24.0 IN. C/C

LOADING IN FLAT SECTION BASED ON A SLOPE OF 2.00/12 MINIMUM

THIS TRUSS IS DESIGNED FOR RESIDENTIAL OR SMALL BUILDING REQUIREMENTS OF PART 9, NBCC 2015

THIS DESIGN COMPLIES WITH:
- PART 9 OF BCBC 2018 , ABC 2019
- PART 9 OF OBC 2012 (2019 AMENDMENT)
- CSA 086-14
- TPIC 2014

(55 % OF 23.0 P.S.F. G.S.L. PLUS 8.4 P.S.F. RAIN LOAD) EQUALS 21.0 P.S.F. SPECIFIED ROOF LIVE LOAD

ALLOWABLE DEFL.(LL)= L/360 (0.70")
CALCULATED VERT. DEFL.(LL) = L/ 999 (0.02")
ALLOWABLE DEFL.(TL)= L/360 (0.70")
CALCULATED VERT. DEFL.(TL) = L/ 999 (0.20")

CSI: TC=0.24/1.00 (F-G:1) , BC=0.36/1.00 (I-J:4) , WB=0.84/1.00 (C-M:1) , SSI=0.13/1.00 (L-M:4)

DOL LUMBER=1.00 NAIL=1.00 LS BEND=1.10 COMP=1.10 SHEAR=1.10 TENS= 1.10

COMPANION LIVE LOAD FACTOR = 1.00

TRUSS PLATE MANUFACTURER IS NOT RESPONSIBLE FOR QUALITY CONTROL IN THE TRUSS MANUFACTURING PLANT .

NAIL VALUES

PLATE	GRIP(DRY) (PSI) MAX	MIN	SHEAR (PLI) MAX	MIN	SECTION (PLI) MAX	MIN
MT20	650	371	1747	788	1987	1873

PLATE PLACEMENT TOL. = 0.250 inches

PLATE ROTATION TOL. = 5.0 Deg.

JSI GRIP= 0.84 (M) (INPUT = 0.90)
JSI METAL= 0.57 (K) (INPUT = 1.00)

JOB NAME	TRUSS NAME	QUANTITY	PLY	JOB DESC.		DRWG NO.
336337	H303		1	TRUSS DESC.	JT 45147	E21104415

Alpa Roof Truss, Maple

Version 8.420 S Jan 21 2021 MiTek Industries, Inc. Thu Oct 14 16:58:32 2021 Page 1

ID:hd511hZTz bdeQoS817GKByhVxV-q3BXk1WdWk1exH06MjIDxjKAxb4Uq9xxJllww7yTSA5

Scale: 3/16"=1'

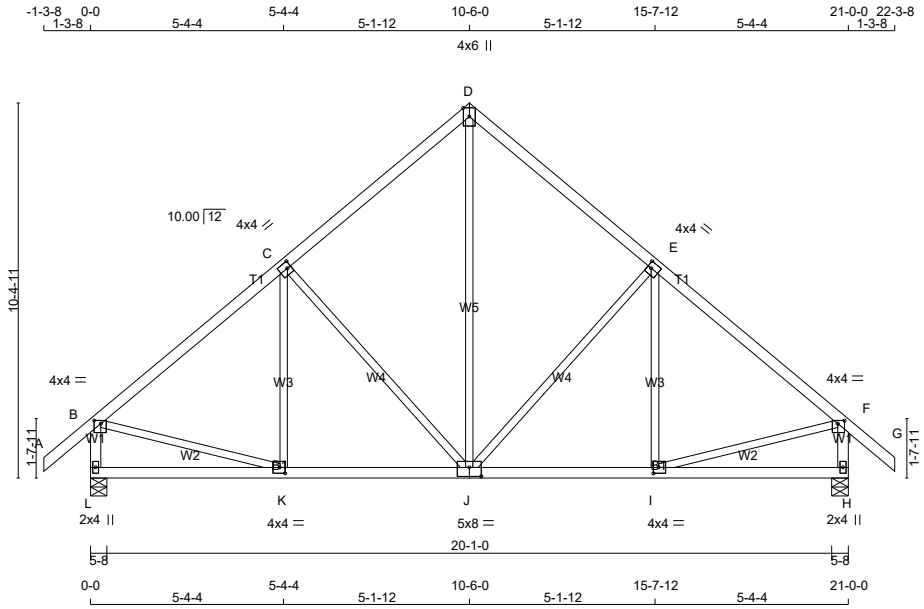

TOTAL WEIGHT = 4 X 100 = 398 lb

[M][F]

LUMBER

N. L. G. A. RULES

CHORDS	SIZE		LUMBER	DESCR.
A - D	2x4	DRY	No.2	SPF
D - G	2x4	DRY	No.2	SPF
L - B	2x4	DRY	No.2	SPF
H - F	2x4	DRY	No.2	SPF
L - J	2x4	DRY	No.2	SPF
J - H	2x4	DRY	No.2	SPF
ALL WEBS EXCEPT	2x3	DRY	No.2	SPF

DRY: SEASONED LUMBER.

PLATES (table is in inches)

JT	TYPE	PLATES	W	LEN	Y	X
B	TMVW-p	MT20	4.0	4.0	1.00	2.25
C	TMWW-t	MT20	4.0	4.0	2.00	1.25
D	TTW+p	MT20	4.0	6.0	Edge	
E	TMWW-t	MT20	4.0	4.0	2.00	1.25
F	TMVW-p	MT20	4.0	4.0	1.00	2.25
H	BMV1+p	MT20	2.0	4.0		
I	BMWW-t	MT20	4.0	4.0	2.00	1.75
J	BSWWW-l	MT20	5.0	8.0	3.00	4.00
K	BMWW-t	MT20	4.0	4.0	2.00	1.75
L	BMV1+p	MT20	2.0	4.0		

Edge - INDICATES REFERENCE CORNER OF PLATE TOUCHES EDGE OF CHORD.

LATERAL BRACE(S) SHOWN SHALL BE 2X4 SPF#2

DIMENSIONS, SUPPORTS AND LOADINGS SPECIFIED BY FABRICATOR TO BE VERIFIED BY BUILDING DESIGNER

BEARINGS

JT	FACTORED GROSS REACTION VERT	HORZ	MAXIMUM FACTORED GROSS REACTION DOWN	HORZ	UPLIFT	INPUT BRG IN-SX	REQRD BRG IN-SX
L	1121	0	1121	0	0	5-8	1-8
H	1121	0	1121	0	0	5-8	1-8

UNFACTORED REACTIONS

JT	1ST LCASE COMBINED	MAX./MIN. COMPONENT REACTIONS SNOW	LIVE	PERM.LIVE	WIND	DEAD	SOIL
L	797	499 / 0	0 / 0	0 / 0	0 / 0	298 / 0	0 / 0
H	797	499 / 0	0 / 0	0 / 0	0 / 0	298 / 0	0 / 0

BEARING MATERIAL TO BE SPF NO.2 OR BETTER AT JOINT(S) L, H

BRACING

TOP CHORD TO BE SHEATHED OR MAX. PURLIN SPACING = 6.00 FT.
MAX. UNBRACED BOTTOM CHORD LENGTH = 10.00 FT OR RIGID CEILING DIRECTLY APPLIED.

ALL PITCH BREAKS AND PERIMETER CORNER JOINTS MUST BE LATERALLY RESTRAINED.

LOADING

TOTAL LOAD CASES: (4)

CHORDS

MEMB. FR-TO	MAX. FACTORED FORCE (LBS)	FACTORED VERT. LOAD LC1 (PLF) FROM	TO	MAX CSI (LC)	MAX. UNBRAC LENGTH
A- B	0 / 35	-78.0	-78.0	0.11 (1)	10.00
B- C	-952 / 0	-78.0	-78.0	0.30 (1)	6.00
C- D	-721 / 0	-78.0	-78.0	0.28 (1)	6.25
D- E	-721 / 0	-78.0	-78.0	0.28 (1)	6.25
E- F	-952 / 0	-78.0	-78.0	0.30 (1)	6.00
F- G	0 / 35	-78.0	-78.0	0.11 (1)	10.00
L- B	-1082 / 0	0.0	0.0	0.12 (1)	7.59
H- F	-1082 / 0	0.0	0.0	0.12 (1)	7.59
L- K	0 / 0	-18.5	-18.5	0.14 (4)	10.00
K- J	0 / 755	-18.5	-18.5	0.21 (4)	10.00
J- I	0 / 755	-18.5	-18.5	0.21 (4)	10.00
I- H	0 / 0	-18.5	-18.5	0.14 (4)	10.00

WEBS

MEMB. FR-TO	MAX. FACTORED FORCE (LBS)	MAX CSI (LC)
J- D	0 / 581	0.13 (1)
J- E	-340 / 0	0.41 (1)
I- E	-66 / 63	0.04 (1)
C- J	-340 / 0	0.41 (1)
K- C	-66 / 63	0.04 (1)
B- K	0 / 777	0.17 (1)
I- F	0 / 777	0.17 (1)

DESIGN CRITERIA

SPECIFIED LOADS:

TOP CH.	LL	=	21.0	PSF
	DL	=	6.0	PSF
BOT CH.	LL	=	0.0	PSF
	DL	=	7.4	PSF
TOTAL LOAD		=	34.4	PSF

SPACING = 24.0 IN. C/C

THIS TRUSS IS DESIGNED FOR RESIDENTIAL OR SMALL BUILDING REQUIREMENTS OF PART 9, NBCC 2015

THIS DESIGN COMPLIES WITH:
- PART 9 OF BCBC 2018 , ABC 2019
- PART 9 OF OBC 2012 (2019 AMENDMENT)
- CSA 086-14
- TPIC 2014

(55 % OF 23.0 P.S.F. G.S.L. PLUS 8.4 P.S.F. RAIN LOAD) EQUALS 21.0 P.S.F. SPECIFIED ROOF LIVE LOAD

ALLOWABLE DEFL.(LL)= L/360 (0.70")
CALCULATED VERT. DEFL.(LL) = L/ 999 (0.02")
ALLOWABLE DEFL.(TL)= L/360 (0.70")
CALCULATED VERT. DEFL.(TL) = L/ 999 (0.06")

CSI: TC=0.30/1.00 (B-C:1) , BC=0.21/1.00 (J-K:4) , WB=0.41/1.00 (C-J:1) , SSI=0.15/1.00 (B-C:1)

DOL LUMBER=1.00 NAIL=1.00 LS BEND=1.10 COMP=1.10 SHEAR=1.10 TENS= 1.10

COMPANION LIVE LOAD FACTOR = 1.00

TRUSS PLATE MANUFACTURER IS NOT RESPONSIBLE FOR QUALITY CONTROL IN THE TRUSS MANUFACTURING PLANT .

NAIL VALUES

PLATE	GRIP(DRY) (PSI) MAX	MIN	SHEAR (PLI) MAX	MIN	SECTION (PLI) MAX	MIN
MT20	650	371	1747	788	1987	1873

PLATE PLACEMENT TOL. = 0.250 inches

PLATE ROTATION TOL. = 5.0 Deg.

JSI GRIP= 0.86 (B) (INPUT = 0.90)
JSI METAL= 0.28 (F) (INPUT = 1.00)

JOB NAME	TRUSS NAME	QUANTITY	PLY	JOB DESC.		DRWG NO.
336337	H303S		1	TRUSS DESC.	JT 45147	E21104416

Alpa Roof Truss, Maple

Version 8.420 S Jan 21 2021 MiTek Industries, Inc. Thu Oct 14 16:58:33 2021 Page 1

ID:hd511hZTz bdeQoS817GKByhVxV-IFlvyNXFH19VYRaIwQpSTwtL7?Q0Zd24XPUTTZyTSA4

Scale: 3/16"=1'

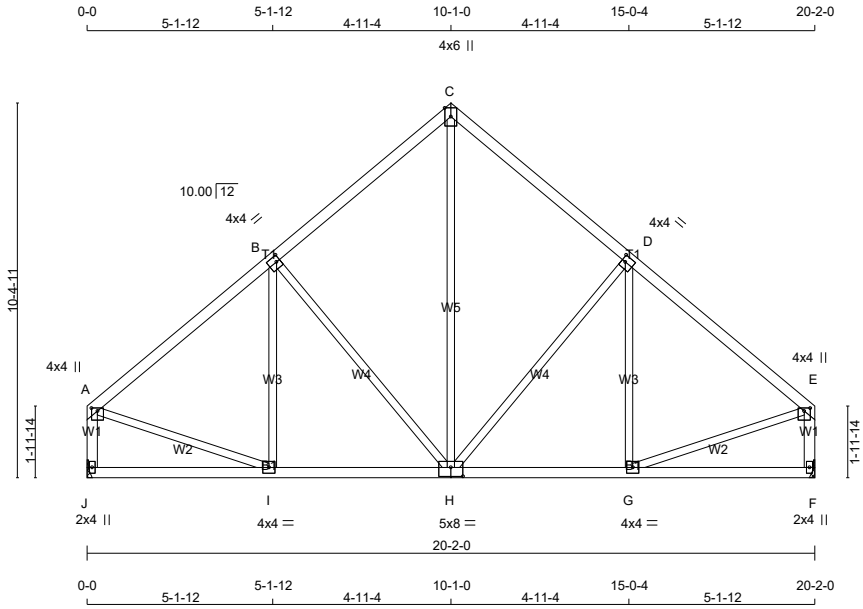

TOTAL WEIGHT = 2 X 94 = 189 lb

[M][F]

LUMBER

N. L. G. A. RULES

CHORDS	SIZE		LUMBER	DESCR.
A - C	2x4	DRY	No.2	SPF
C - E	2x4	DRY	No.2	SPF
J - A	2x4	DRY	No.2	SPF
F - E	2x4	DRY	No.2	SPF
J - H	2x4	DRY	No.2	SPF
H - F	2x4	DRY	No.2	SPF
ALL WEBS EXCEPT	2x3	DRY	No.2	SPF

DRY: SEASONED LUMBER.

PLATES (table is in inches)

JT	TYPE	PLATES	W	LEN	Y	X
A	TMVW+p	MT20	4.0	4.0	1.00	2.00
B	TMWW-t	MT20	4.0	4.0	2.00	1.25
C	TTW+p	MT20	4.0	6.0	Edge	
D	TMWW-t	MT20	4.0	4.0	2.00	1.25
E	TMVW+p	MT20	4.0	4.0	1.00	2.00
F	BMV1+p	MT20	2.0	4.0		
G	BMWW-t	MT20	4.0	4.0		
H	BSWWW-l	MT20	5.0	8.0	3.00	4.00
I	BMWW-t	MT20	4.0	4.0		
J	BMV1+p	MT20	2.0	4.0		

Edge - INDICATES REFERENCE CORNER OF PLATE TOUCHES EDGE OF CHORD.

LATERAL BRACE(S) SHOWN SHALL BE 2X4 SPF#2

DIMENSIONS, SUPPORTS AND LOADINGS SPECIFIED BY FABRICATOR TO BE VERIFIED BY BUILDING DESIGNER

BEARINGS

JT	FACTORED GROSS REACTION VERT	HORZ	MAXIMUM FACTORED GROSS REACTION DOWN	HORZ	UPLIFT	INPUT BRG IN-SX	REQRD BRG IN-SX
J	973	0	973	0	0	MECHANICAL	
F	973	0	973	0	0	MECHANICAL	

A SUITABLE HANGER/MECHANICAL CONNECTION IS REQUIRED AT JOINT J, F. MINIMUM BEARING LENGTH AT JOINT J = 1-8, JOINT F = 1-8.

UNFACTORED REACTIONS

JT	1ST LCASE COMBINED	MAX./MIN. COMPONENT REACTIONS SNOW	LIVE	PERM.LIVE	WIND	DEAD	SOIL
J	694	423 / 0	0 / 0	0 / 0	0 / 0	270 / 0	0 / 0
F	694	423 / 0	0 / 0	0 / 0	0 / 0	270 / 0	0 / 0

BRACING

TOP CHORD TO BE SHEATHED OR MAX. PURLIN SPACING = 6.25 FT.
MAX. UNBRACED BOTTOM CHORD LENGTH = 10.00 FT OR RIGID CEILING DIRECTLY APPLIED.

ALL PITCH BREAKS AND PERIMETER CORNER JOINTS MUST BE LATERALLY RESTRAINED.

LOADING

TOTAL LOAD CASES: (4)

CHORDS

MEMB. FR-TO	MAX. FORCE (LBS)	FACTORED VERT. LOAD (PLF) FROM	TO	LC1 CSI (LC)	MAX UNBRAC LENGTH
A- B	-851 / 0	-78.0	-78.0	0.27 (1)	6.25
B- C	-666 / 0	-78.0	-78.0	0.26 (1)	6.25
C- D	-666 / 0	-78.0	-78.0	0.26 (1)	6.25
D- E	-851 / 0	-78.0	-78.0	0.27 (1)	6.25
J- A	-935 / 0	0.0	0.0	0.11 (1)	7.81
F- E	-935 / 0	0.0	0.0	0.11 (1)	7.81
J- I	0 / 0	-18.5	-18.5	0.13 (4)	10.00
I- H	0 / 677	-18.5	-18.5	0.20 (4)	10.00
H- G	0 / 677	-18.5	-18.5	0.20 (4)	10.00
G- F	0 / 0	-18.5	-18.5	0.13 (4)	10.00

WEBS

MEMB. FR-TO	MAX. FORCE (LBS)	MAX CSI (LC)
H- C	0 / 525	0.12 (1)
H- D	-296 / 0	0.36 (1)
G- D	-104 / 45	0.07 (1)
B- H	-296 / 0	0.36 (1)
I- B	-104 / 45	0.07 (1)
A- I	0 / 711	0.16 (1)
G- E	0 / 711	0.16 (1)

DESIGN CRITERIA

SPECIFIED LOADS:

TOP	CH.	LL	=	21.0	PSF
		DL	=	6.0	PSF
BOT	CH.	LL	=	0.0	PSF
		DL	=	7.4	PSF
TOTAL	LOAD		=	34.4	PSF

SPACING = 24.0 IN. C/C

THIS TRUSS IS DESIGNED FOR RESIDENTIAL OR SMALL BUILDING REQUIREMENTS OF PART 9, NBCC 2015

THIS DESIGN COMPLIES WITH:
- PART 9 OF BCBC 2018 , ABC 2019
- PART 9 OF OBC 2012 (2019 AMENDMENT)
- CSA 086-14
- TPIC 2014

(55 % OF 23.0 P.S.F. G.S.L. PLUS 8.4 P.S.F. RAIN LOAD) EQUALS 21.0 P.S.F. SPECIFIED ROOF LIVE LOAD

ALLOWABLE DEFL.(LL)= L/360 (0.67")
CALCULATED VERT. DEFL.(LL) = L/ 999 (0.02")
ALLOWABLE DEFL.(TL)= L/360 (0.67")
CALCULATED VERT. DEFL.(TL) = L/ 999 (0.05")

CSI: TC=0.27/1.00 (A-B:1) , BC=0.20/1.00 (H-I:4) , WB=0.36/1.00 (B-H:1) , SSI=0.15/1.00 (A-B:1)

DOL LUMBER=1.00 NAIL=1.00 LS BEND=1.10 COMP=1.10 SHEAR=1.10 TENS= 1.10

COMPANION LIVE LOAD FACTOR = 1.00

TRUSS PLATE MANUFACTURER IS NOT RESPONSIBLE FOR QUALITY CONTROL IN THE TRUSS MANUFACTURING PLANT .

NAIL VALUES

PLATE	GRIP(DRY) (PSI) MAX	MIN	SHEAR (PLI) MAX	MIN	SECTION (PLI) MAX	MIN
MT20	650	371	1747	788	1987	1873

PLATE PLACEMENT TOL. = 0.250 inches

PLATE ROTATION TOL. = 5.0 Deg.

JSI GRIP= 0.88 (A) (INPUT = 0.90)
JSI METAL= 0.25 (A) (INPUT = 1.00)

JOB NAME	TRUSS NAME	QUANTITY	PLY	JOB DESC.	DRWG NO.
336337	H305		2	TRUSS DESC. JT 45147	E21104417

Alpa Roof Truss, Maple

Version 8.420 S Jan 21 2021 MiTek Industries, Inc. Thu Oct 14 16:58:35 2021 Page 1

ID:hd511hZTz_bdeQoS817GKByhVxV-FetgN3YVofPDokkh1rrwZLyf2p1D1WxN?jzaXSyTSA2

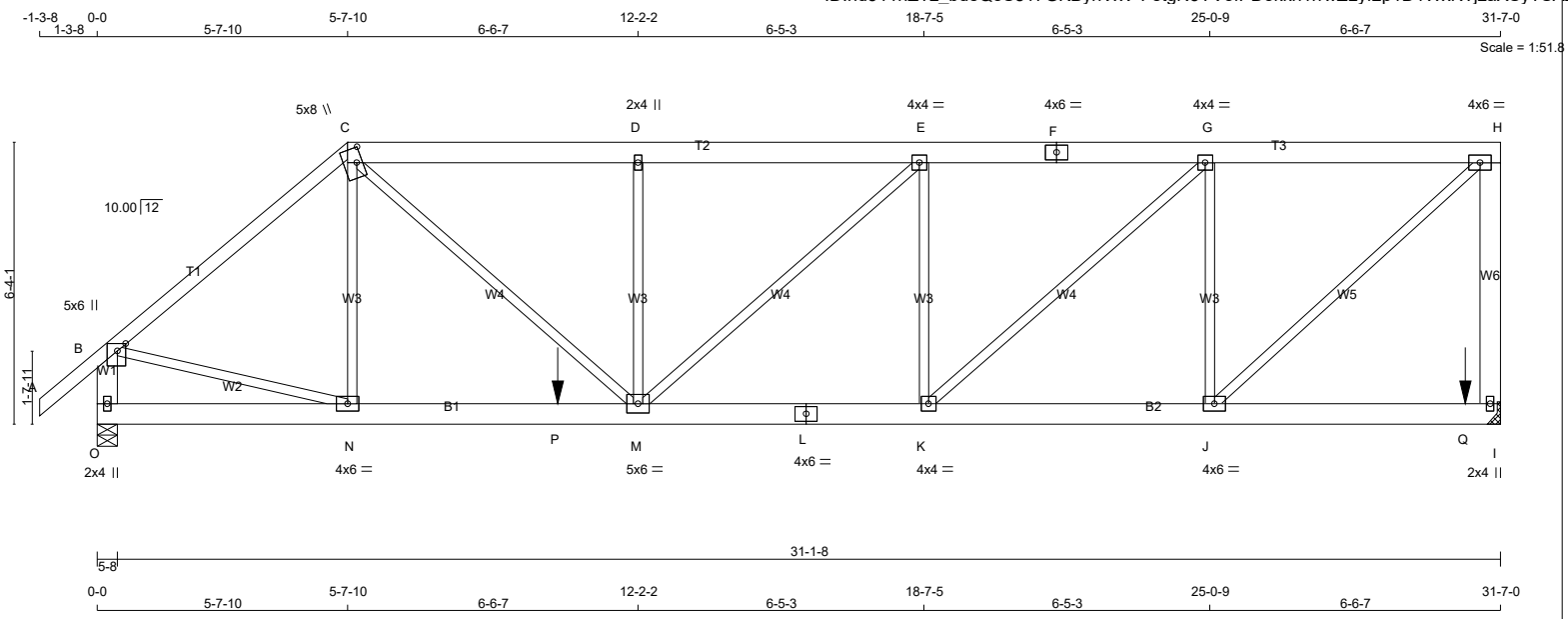

TOTAL WEIGHT = 2 X 174 = 348 lb

[M]

LUMBER

N. L. G. A. RULES

CHORDS	SIZE		LUMBER	DESCR.
A - C	2x4	DRY	No.2	SPF
C - F	2x6	DRY	No.2	SPF
F - H	2x6	DRY	No.2	SPF
I - H	2x6	DRY	No.2	SPF
O - B	2x6	DRY	No.2	SPF
O - L	2x6	DRY	No.2	SPF
L - I	2x6	DRY	No.2	SPF
ALL WEBS EXCEPT	2x3	DRY	No.2	SPF

DRY: SEASONED LUMBER.

DESIGN CONSISTS OF 2 TRUSSES BUILT SEPARATELY THEN FASTENED TOGETHER AS FOLLOWS:

CHORDS	#ROWS	SURFACE SPACING (IN)	LOAD(PLF)
TOP CHORDS : (0.122"X3") SPIRAL NAILS			
A- C	1	12	TOP
C- F	2	12	TOP
F- H	2	12	TOP
H- I	2	12	TOP
O- B	2	12	TOP
BOTTOM CHORDS : (0.122"X3") SPIRAL NAILS			
O- L	2	12	SIDE(0.0)
L- I	2	12	SIDE(0.0)
WEBS : (0.122"X3") SPIRAL NAILS			
2x3	1	6	

NAILS TO BE DRIVEN FROM ONE SIDE ONLY.

GIRDER NAILING ASSUMES NAILED HANGERS ARE FASTENED WITH MIN. 3-0 INCH NAILS.

TOP - COMPONENTS ARE LOADED FROM THE TOP AND MUST BE PLACED ON TOP EDGE OF ALL PLIES FOR THE LOAD TO BE TRANSFERRED TO EACH PLY.

SIDE - PLF SHOWN IS THE EQUIVALENT UDL APPLIED TO ONE SIDE THAT THE CORRESPONDING NAILING PATTERN SHALL BE CAPABLE OF TRANSFERING. REMAINING PLF MUST BE APPLIED ON THE OPPOSITE SIDE OR ON THE TOP.

LATERAL BRACE(S) SHOWN SHALL BE 2X4 SPF#2

DIMENSIONS, SUPPORTS AND LOADINGS SPECIFIED BY FABRICATOR TO BE VERIFIED BY BUILDING DESIGNER

BEARINGS

JT	FACTORED GROSS REACTION VERT	HORZ	MAXIMUM FACTORED GROSS REACTION DOWN	HORZ	UPLIFT	INPUT BRG IN-SX	REQRD BRG IN-SX
I	2874	0	2874	0	0	MECHANICAL	
O	2353	0	2353	0	0	5-8	1-8

A SUITABLE HANGER/MECHANICAL CONNECTION IS REQUIRED AT JOINT I. MINIMUM BEARING LENGTH AT JOINT I = 1-9.

UNFACTORED REACTIONS

JT	1ST LCASE COMBINED	MAX./MIN. COMPONENT REACTIONS SNOW	LIVE	PERM.LIVE	WIND	DEAD	SOIL
I	2049	1251 / 0	0 / 0	0 / 0	0 / 0	799 / 0	0 / 0
O	1676	1035 / 0	0 / 0	0 / 0	0 / 0	640 / 0	0 / 0

BEARING MATERIAL TO BE SPF NO.2 OR BETTER AT JOINT(S) O

BRACING

TOP CHORD TO BE SHEATHED OR MAX. PURLIN SPACING = 5.36 FT.
MAX. UNBRACED BOTTOM CHORD LENGTH = 10.00 FT OR RIGID CEILING DIRECTLY APPLIED.

ALL PITCH BREAKS AND PERIMETER CORNER JOINTS MUST BE LATERALLY RESTRAINED.

LOADING

TOTAL LOAD CASES: (4)

CHORDS MEMB. FR-TO	MAX. FACTORED FORCE (LBS)	FACTORED VERT. LOAD (PLF) FROM	TO	LC1 MAX CSI (LC)	MAX. UNBRAC LENGTH	WEBS MEMB. FR-TO	MAX. FACTORED FORCE (LBS)	MAX CSI (LC)
A- B	0 / 35	-78.0	-78.0	0.06 (1)	10.00	N- C	0 / 100	0.02 (4)
B- C	-2540 / 0	-78.0	-78.0	0.31 (1)	5.36	C- M	0 / 1750	0.22 (1)
C- D	-3254 / 0	-78.0	-78.0	0.13 (1)	6.01	M- D	-567 / 0	0.16 (1)
D- E	-3254 / 0	-78.0	-78.0	0.12 (1)	6.02	M- E	0 / 583	0.07 (1)
E- F	-2824 / 0	-78.0	-78.0	0.13 (1)	6.25	K- E	-872 / 0	0.25 (1)
F- G	-2824 / 0	-78.0	-78.0	0.13 (1)	6.25	K- G	0 / 1203	0.15 (1)
G- H	-1935 / 0	-78.0	-78.0	0.12 (1)	6.25	J- G	-1379 / 0	0.40 (1)
I- H	-1948 / 0	0.0	0.0	0.43 (1)	7.81	J- H	0 / 2603	0.32 (1)
O- B	-2366 / 0	0.0	0.0	0.09 (1)	7.81	B- N	0 / 1998	0.25 (1)
O- N	0 / 0	-18.5	-18.5	0.14 (1)	10.00			
N- P	0 / 1955	-18.5	-18.5	0.47 (1)	10.00			
P- M	0 / 1955	-18.5	-18.5	0.47 (1)	10.00			
M- L	0 / 2824	-18.5	-18.5	0.38 (1)	10.00			
L- K	0 / 2824	-18.5	-18.5	0.38 (1)	10.00			
K- J	0 / 1935	-18.5	-18.5	0.24 (1)	10.00			
J- Q	0 / 0	-18.5	-18.5	0.27 (1)	10.00			
Q- I	0 / 0	-18.5	-18.5	0.27 (1)	10.00			

FACTORED CONCENTRATED LOADS (LBS)

JT	LOC.	LC1	MAX-	MAX+	FACE	DIR.	TYPE	HEEL	CONN.
P	10-4-7	-1037	-1037	---	FRONT	VERT	TOTAL	---	C1
Q	30-9-9	-1037	-1037	---	FRONT	VERT	TOTAL	---	C1

CONNECTION REQUIREMENTS

1) **C1:** A SUITABLE HANGER/MECHANICAL CONNECTION IS REQUIRED.

DESIGN CRITERIA

*** SPECIAL LOADS ANALYSIS ***
GEOMETRY AND/OR BASIC LOADS CHANGED BY USER.
LOADS WERE DERIVED FROM USER INPUT
NO FURTHER MODIFICATIONS WERE MADE

SPECIFIED LOADS:

TOP CH.	LL	=	21.0	PSF
	DL	=	6.0	PSF
BOT CH.	LL	=	0.0	PSF
	DL	=	7.4	PSF
TOTAL LOAD		=	34.4	PSF

SPACING = 24.0 IN. C/C

LOADING IN FLAT SECTION BASED ON A SLOPE OF 2.00/12 MINIMUM

*** NON STANDARD GIRDER ***
ADDT'L USER-DEFINED LOADS APPLIED TO ALL LOAD CASES.

THIS TRUSS IS DESIGNED FOR RESIDENTIAL OR SMALL BUILDING REQUIREMENTS OF PART 9, NBCC 2015

THIS DESIGN COMPLIES WITH:
- PART 9 OF BCBC 2018 , ABC 2019
- PART 9 OF OBC 2012 (2019 AMENDMENT)
- CSA 086-14
- TPIC 2014

(55 % OF 23.0 P.S.F. G.S.L. PLUS 8.4 P.S.F. RAIN LOAD) EQUALS 21.0 P.S.F. SPECIFIED ROOF LIVE LOAD

ALLOWABLE DEFL.(LL)= L/360 (1.05")
CALCULATED VERT. DEFL.(LL) = L/ 999 (0.08")
ALLOWABLE DEFL.(TL)= L/360 (1.05")
CALCULATED VERT. DEFL.(TL) = L/ 999 (0.15")

CSI: TC=0.43/1.00 (H-I:1) , BC=0.47/1.00 (M-N:1) , WB=0.40/1.00 (G-J:1) , SSI=0.31/1.00 (I-J:1)

DOL LUMBER=1.00 NAIL=1.00 LS BEND=1.00 COMP=1.00 SHEAR=1.00 TENS= 1.00

COMPANION LIVE LOAD FACTOR = 1.00

AUTOSOLVE RIGHT HEEL ONLY

TRUSS PLATE MANUFACTURER IS NOT RESPONSIBLE FOR QUALITY CONTROL IN THE TRUSS MANUFACTURING PLANT .

NAIL VALUES

PLATE	GRIP(DRY) (PSI) MAX	MIN	SHEAR (PLI) MAX	MIN	SECTION (PLI) MAX	MIN
MT20	650	371	1747	788	1987	1873

PLATE PLACEMENT TOL. = 0.250 inches

PLATE ROTATION TOL. = 5.0 Deg.

JSI GRIP= 0.84 (M) (INPUT = 0.90)
JSI METAL= 0.33 (L) (INPUT = 1.00)

CONTINUED ON PAGE 2

PLATES (table is in inches)

JT	TYPE	PLATES	W	LEN	Y	X
B	TMVW+p	MT20	5.0	6.0	2.00	2.25
C	TTWW+m	MT20	5.0	8.0	4.00	1.50
D	TMW+w	MT20	2.0	4.0		
E	TMWW-t	MT20	4.0	4.0		
F	TS-t	MT20	4.0	6.0		
G	TMWW-t	MT20	4.0	4.0		
H	TMVW-t	MT20	4.0	6.0		
I	BMV1+p	MT20	2.0	4.0		
J	BMWW-t	MT20	4.0	6.0		
K	BMWW-t	MT20	4.0	4.0		
L	BS-t	MT20	4.0	6.0		
M	BMWWW-t	MT20	5.0	6.0		
N	BMWW-t	MT20	4.0	6.0		
O	BMV1+p	MT20	2.0	4.0		

LATERAL BRACE(S) SHOWN SHALL BE
2X4 SPF#2

JOB NAME	TRUSS NAME	QUANTITY	PLY	JOB DESC.		DRWG NO.
336337	H306		1	TRUSS DESC.	JT 45147	E21104418

Alpa Roof Truss, Maple

Version 8.420 S Jan 21 2021 MiTek Industries, Inc. Thu Oct 14 16:58:37 2021 Page 1

ID:hd511hZTz bdeQoS817GKByhVxV-B0 QnlamKGfx12u39GtOem1xFckKVPoqS1ShcLyTSA0

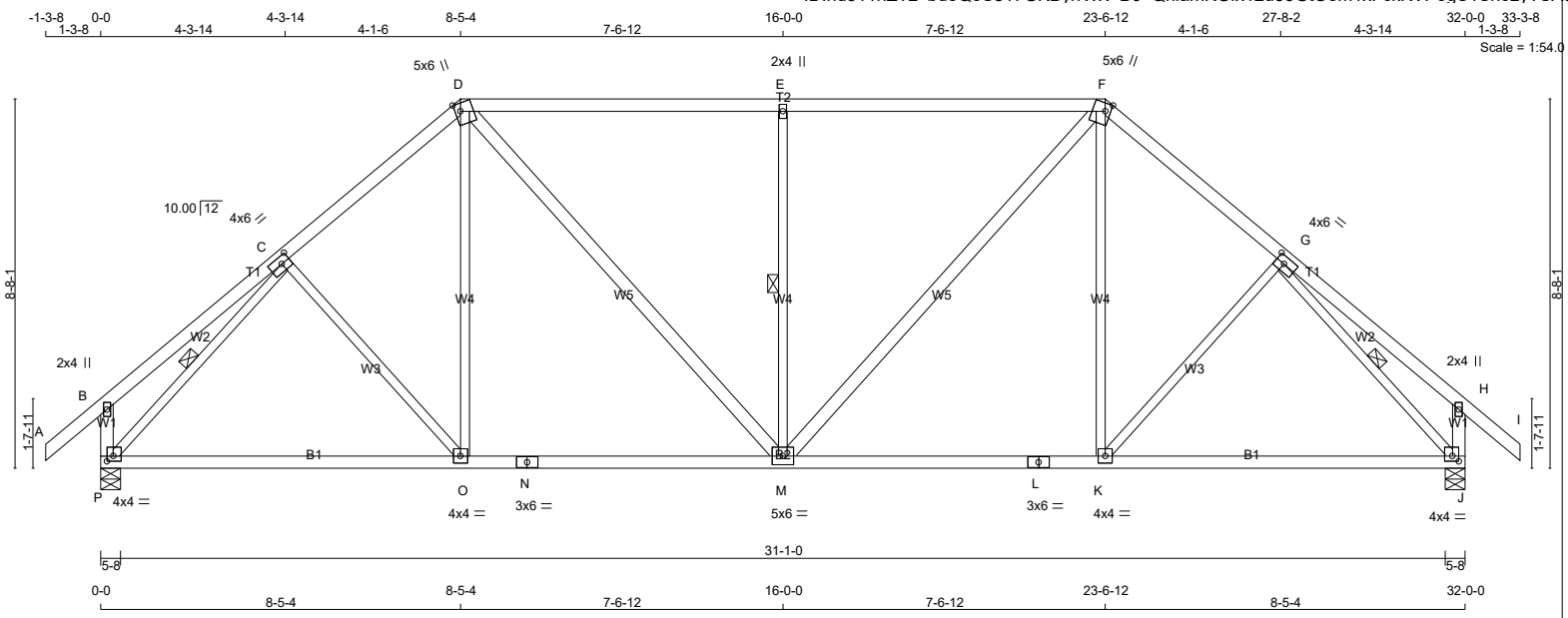

TOTAL WEIGHT = 150 lb

[M][F]

LUMBER

N. L. G. A. RULES

CHORDS	SIZE		LUMBER	DESCR.
A - D	2x4	DRY	No.2	SPF
D - F	2x4	DRY	No.2	SPF
F - I	2x4	DRY	No.2	SPF
P - B	2x4	DRY	No.2	SPF
J - H	2x4	DRY	No.2	SPF
P - N	2x4	DRY	No.2	SPF
N - L	2x4	DRY	No.2	SPF
L - J	2x4	DRY	No.2	SPF
ALL WEBS	2x3	DRY	No.2	SPF
EXCEPT				
D - M	2x4	DRY	No.2	SPF
M - F	2x4	DRY	No.2	SPF

DRY: SEASONED LUMBER.

PLATES (table is in inches)

JT	TYPE	PLATES	W	LEN	Y	X
B	TMV+p	MT20	2.0	4.0		
C	TMWW-t	MT20	4.0	6.0	2.00	2.50
D	TTWW+m	MT20	5.0	6.0	2.25	1.50
E	TMW+w	MT20	2.0	4.0		
F	TTWW+m	MT20	5.0	6.0	2.25	1.50
G	TMWW-t	MT20	4.0	6.0	2.00	2.50
H	TMV+p	MT20	2.0	4.0		
J	BMVW1-t	MT20	4.0	4.0	1.50	1.75
K	BMWW-t	MT20	4.0	4.0		
L	BS-t	MT20	3.0	6.0		
M	BMWWW-t	MT20	5.0	6.0		
N	BS-t	MT20	3.0	6.0		
O	BMWW-t	MT20	4.0	4.0		
P	BMVW1-t	MT20	4.0	4.0	1.50	1.75

LATERAL BRACE(S) SHOWN SHALL BE 2X4 SPF#2

DIMENSIONS, SUPPORTS AND LOADINGS SPECIFIED BY FABRICATOR TO BE VERIFIED BY BUILDING DESIGNER

BEARINGS

JT	FACTORED GROSS REACTION VERT	HORZ	MAXIMUM FACTORED GROSS REACTION DOWN	HORZ	UPLIFT	INPUT BRG IN-SX	REQRD BRG IN-SX
P	1651	0	1651	0	0	5-8	1-13
J	1651	0	1651	0	0	5-8	1-13

UNFACTORED REACTIONS

JT	1ST LCASE COMBINED	MAX./MIN. COMPONENT REACTIONS SNOW	LIVE	PERM.LIVE	WIND	DEAD	SOIL
P	1175	730 / 0	0 / 0	0 / 0	0 / 0	445 / 0	0 / 0
J	1175	730 / 0	0 / 0	0 / 0	0 / 0	445 / 0	0 / 0

BEARING MATERIAL TO BE SPF NO.2 OR BETTER AT JOINT(S) P, J

BRACING

TOP CHORD TO BE SHEATHED OR MAX. PURLIN SPACING = 4.44 FT.
MAX. UNBRACED BOTTOM CHORD LENGTH = 10.00 FT OR RIGID CEILING DIRECTLY APPLIED.

ALL PITCH BREAKS AND PERIMETER CORNER JOINTS MUST BE LATERALLY RESTRAINED.

1 LATERAL BRACE(S) AT 1/ 2 LENGTH OF E-M, C-P, G-J.

END VERTICAL(S) MUST BE SHEATHED OR HAVE BRACES AS INDICATED IN THE MAX. UNBRACED LENGTH COLUMN OF THE TABLE BELOW

LOADING

TOTAL LOAD CASES: (4)

CHORDS

MEMB. FR-TO	MAX. FACTORED FORCE (LBS)	FACTORED VERT. LOAD (PLF) FROM	TO	LC1 CSI (LC)	MAX UNBRAC LENGTH
A- B	0 / 35	-78.0	-78.0	0.11 (1)	10.00
B- C	0 / 24	-78.0	-78.0	0.22 (1)	10.00
C- D	-1539 / 0	-78.0	-78.0	0.20 (1)	5.12
D- E	-1545 / 0	-78.0	-78.0	0.64 (1)	4.44
E- F	-1545 / 0	-78.0	-78.0	0.64 (1)	4.44
F- G	-1539 / 0	-78.0	-78.0	0.20 (1)	5.12
G- H	0 / 24	-78.0	-78.0	0.22 (1)	10.00
H- I	0 / 35	-78.0	-78.0	0.11 (1)	10.00
P- B	-234 / 0	0.0	0.0	0.02 (1)	7.81
J- H	-234 / 0	0.0	0.0	0.02 (1)	7.81
P- O	0 / 1182	-18.5	-18.5	0.42 (4)	10.00
O- N	0 / 1164	-18.5	-18.5	0.43 (4)	10.00
N- M	0 / 1164	-18.5	-18.5	0.43 (4)	10.00
M- L	0 / 1164	-18.5	-18.5	0.43 (4)	10.00
L- K	0 / 1164	-18.5	-18.5	0.43 (4)	10.00
K- J	0 / 1182	-18.5	-18.5	0.42 (4)	10.00

WEBS

MEMB. FR-TO	MAX. FACTORED FORCE (LBS)	MAX CSI (LC)
C- O	-31 / 37	0.02 (1)
O- D	0 / 196	0.06 (4)
D- M	0 / 569	0.09 (1)
M- E	-725 / 0	0.35 (1)
M- F	0 / 569	0.09 (1)
K- F	0 / 196	0.06 (4)
K- G	-31 / 37	0.02 (1)
P- C	-1797 / 0	0.50 (1)
G- J	-1797 / 0	0.50 (1)

DESIGN CRITERIA

SPECIFIED LOADS:

TOP	CH.	LL	=	21.0	PSF
		DL	=	6.0	PSF
BOT	CH.	LL	=	0.0	PSF
		DL	=	7.4	PSF
TOTAL	LOAD		=	34.4	PSF

SPACING = 24.0 IN. C/C

LOADING IN FLAT SECTION BASED ON A SLOPE OF 2.00/12 MINIMUM

THIS TRUSS IS DESIGNED FOR RESIDENTIAL OR SMALL BUILDING REQUIREMENTS OF PART 9, NBCC 2015

THIS DESIGN COMPLIES WITH:
- PART 9 OF BCBC 2018 , ABC 2019
- PART 9 OF OBC 2012 (2019 AMENDMENT)
- CSA 086-14
- TPIC 2014

(55 % OF 23.0 P.S.F. G.S.L. PLUS 8.4 P.S.F. RAIN LOAD) EQUALS 21.0 P.S.F. SPECIFIED ROOF LIVE LOAD

ALLOWABLE DEFL.(LL)= L/360 (1.07")
CALCULATED VERT. DEFL.(LL) = L/ 999 (0.06")
ALLOWABLE DEFL.(TL)= L/360 (1.07")
CALCULATED VERT. DEFL.(TL) = L/ 999 (0.18")

CSI: TC=0.64/1.00 (D-E:1) , BC=0.43/1.00 (K-M:4) , WB=0.50/1.00 (G-J:1) , SSI=0.29/1.00 (D-E:1)

DOL LUMBER=1.00 NAIL=1.00 LS BEND=1.10 COMP=1.10 SHEAR=1.10 TENS= 1.10

COMPANION LIVE LOAD FACTOR = 1.00

TRUSS PLATE MANUFACTURER IS NOT RESPONSIBLE FOR QUALITY CONTROL IN THE TRUSS MANUFACTURING PLANT .

NAIL VALUES

PLATE	GRIP(DRY) (PSI) MAX	MIN	SHEAR (PLI) MAX	MIN	SECTION (PLI) MAX	MIN
MT20	650	371	1747	788	1987	1873

PLATE PLACEMENT TOL. = 0.250 inches

PLATE ROTATION TOL. = 5.0 Deg.

JSI GRIP= 0.90 (G) (INPUT = 0.90)
JSI METAL= 0.42 (N) (INPUT = 1.00)

JOB NAME	TRUSS NAME	QUANTITY	PLY	JOB DESC.		DRWG NO.
336337	H306S		1	TRUSS DESC.	JT 45147	E21104419

Alpa Roof Truss, Maple

Version 8.420 S Jan 21 2021 MiTek Industries, Inc. Thu Oct 14 16:58:39 2021 Page 1

ID:hd511hZTz bdeQoS817GKByhVxV-7P6ACQb0stvfGM2SGhwtjB7HnQQrzJQywLxnqDyTSA_

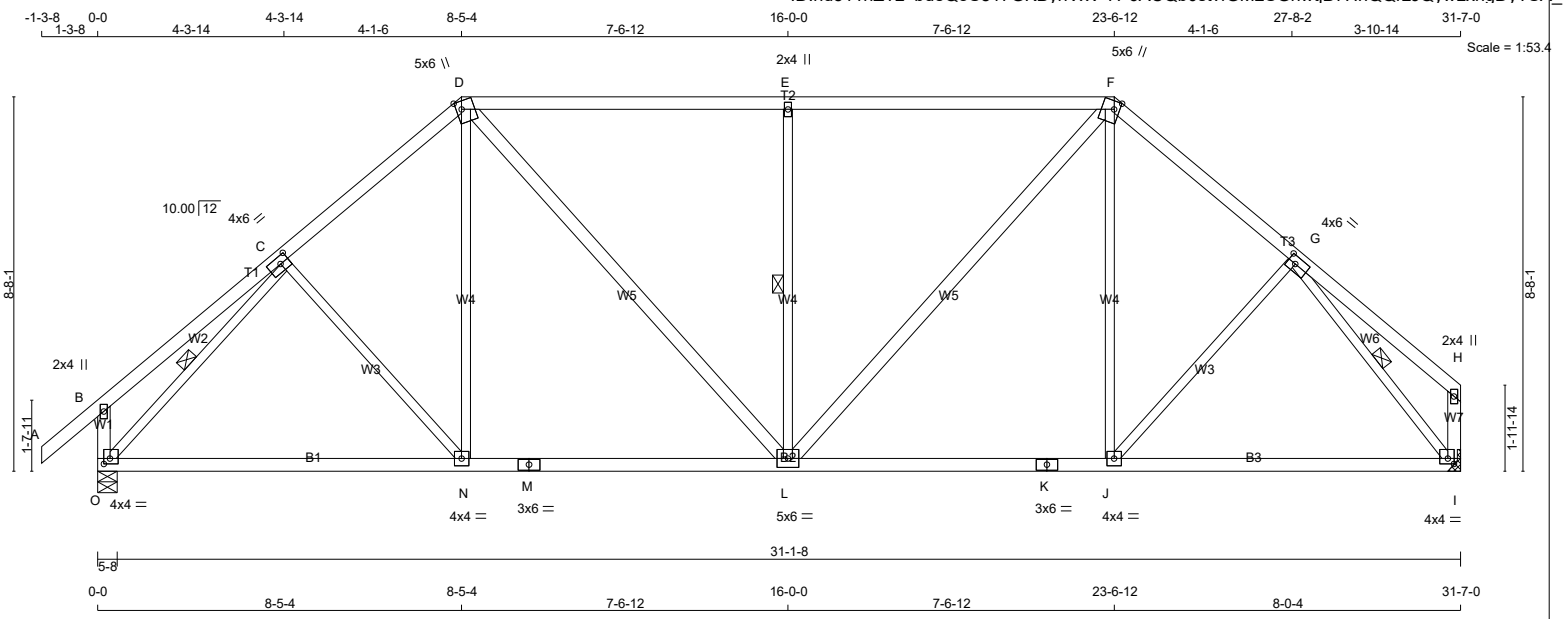

TOTAL WEIGHT = 147 lb

[M][F]

LUMBER

N. L. G. A. RULES

CHORDS	SIZE		LUMBER	DESCR.
A - D	2x4	DRY	No.2	SPF
D - F	2x4	DRY	No.2	SPF
F - H	2x4	DRY	No.2	SPF
O - B	2x4	DRY	No.2	SPF
I - H	2x4	DRY	No.2	SPF
O - M	2x4	DRY	No.2	SPF
M - K	2x4	DRY	No.2	SPF
K - I	2x4	DRY	No.2	SPF
ALL WEBS	2x3	DRY	No.2	SPF
EXCEPT				
D - L	2x4	DRY	No.2	SPF
L - F	2x4	DRY	No.2	SPF

DRY: SEASONED LUMBER.

PLATES (table is in inches)

JT	TYPE	PLATES	W	LEN	Y	X
B	TMV+p	MT20	2.0	4.0		
C	TMWW-t	MT20	4.0	6.0	2.00	2.50
D	TTWW+m	MT20	5.0	6.0	2.25	1.50
E	TMW+w	MT20	2.0	4.0		
F	TTWW+m	MT20	5.0	6.0	2.25	1.50
G	TMWW-t	MT20	4.0	6.0	2.00	2.25
H	TMV+p	MT20	2.0	4.0		
I	BMVW1-t	MT20	4.0	4.0	1.50	1.75
J	BMWW-t	MT20	4.0	4.0		
K	BS-t	MT20	3.0	6.0		
L	BMWWW-t	MT20	5.0	6.0		
M	BS-t	MT20	3.0	6.0		
N	BMWW-t	MT20	4.0	4.0		
O	BMVW1-t	MT20	4.0	4.0	1.50	1.75

LATERAL BRACE(S) SHOWN SHALL BE 2X4 SPF#2

DIMENSIONS, SUPPORTS AND LOADINGS SPECIFIED BY FABRICATOR TO BE VERIFIED BY BUILDING DESIGNER

BEARINGS

JT	FACTORED GROSS REACTION VERT	HORZ	MAXIMUM FACTORED GROSS REACTION DOWN	HORZ	UPLIFT	INPUT BRG IN-SX	REQRD BRG IN-SX
O	1631	0	1631	0	0	5-8	1-12
I	1523	0	1523	0	0	MECHANICAL	

A SUITABLE HANGER/MECHANICAL CONNECTION IS REQUIRED AT JOINT I. MINIMUM BEARING LENGTH AT JOINT I = 1-10.

UNFACTORED REACTIONS

JT	1ST LCASE COMBINED	MAX./MIN. COMPONENT REACTIONS SNOW	LIVE	PERM.LIVE	WIND	DEAD	SOIL
O	1161	721 / 0	0 / 0	0 / 0	0 / 0	440 / 0	0 / 0
I	1086	663 / 0	0 / 0	0 / 0	0 / 0	423 / 0	0 / 0

BEARING MATERIAL TO BE SPF NO.2 OR BETTER AT JOINT(S) O

BRACING

TOP CHORD TO BE SHEATHED OR MAX. PURLIN SPACING = 4.49 FT.
MAX. UNBRACED BOTTOM CHORD LENGTH = 10.00 FT OR RIGID CEILING DIRECTLY APPLIED.

ALL PITCH BREAKS AND PERIMETER CORNER JOINTS MUST BE LATERALLY RESTRAINED.

1 LATERAL BRACE(S) AT 1/ 2 LENGTH OF E-L, C-O, G-I.

END VERTICAL(S) MUST BE SHEATHED OR HAVE BRACES AS INDICATED IN THE MAX. UNBRACED LENGTH COLUMN OF THE TABLE BELOW

LOADING

TOTAL LOAD CASES: (4)

CHORDS

MEMB. FR-TO	MAX. FACTORED FORCE (LBS)	FACTORED VERT. LOAD (PLF) FROM	TO	LC1	MAX CSI (LC)	MAX. UNBRAC LENGTH
A- B	0 / 35	-78.0	-78.0	0.11 (1)	10.00	
B- C	0 / 24	-78.0	-78.0	0.22 (1)	10.00	
C- D	-1513 / 0	-78.0	-78.0	0.20 (1)	5.16	
D- E	-1507 / 0	-78.0	-78.0	0.64 (1)	4.49	
E- F	-1507 / 0	-78.0	-78.0	0.64 (1)	4.49	
F- G	-1463 / 0	-78.0	-78.0	0.19 (1)	5.24	
G- H	0 / 24	-78.0	-78.0	0.20 (1)	10.00	
O- B	-234 / 0	0.0	0.0	0.02 (1)	7.81	
I- H	-111 / 0	0.0	0.0	0.01 (1)	7.81	
O- N	0 / 1165	-18.5	-18.5	0.42 (4)	10.00	
N- M	0 / 1143	-18.5	-18.5	0.42 (4)	10.00	
M- L	0 / 1143	-18.5	-18.5	0.42 (4)	10.00	
L- K	0 / 1106	-18.5	-18.5	0.40 (4)	10.00	
K- J	0 / 1106	-18.5	-18.5	0.40 (4)	10.00	
J- I	0 / 1067	-18.5	-18.5	0.39 (4)	10.00	

WEBS

MEMB. FR-TO	MAX. FACTORED FORCE (LBS)	MAX CSI (LC)
C- N	-36 / 36	0.03 (1)
N- D	0 / 199	0.06 (4)
D- L	0 / 543	0.09 (1)
L- E	-726 / 0	0.35 (1)
L- F	0 / 598	0.10 (1)
J- F	0 / 137	0.05 (4)
J- G	0 / 68	0.02 (4)
O- C	-1771 / 0	0.49 (1)
G- I	-1722 / 0	0.45 (1)

DESIGN CRITERIA

SPECIFIED LOADS:

TOP CH.	LL	=	21.0	PSF
	DL	=	6.0	PSF
BOT CH.	LL	=	0.0	PSF
	DL	=	7.4	PSF
TOTAL LOAD		=	34.4	PSF

SPACING = 24.0 IN. C/C

LOADING IN FLAT SECTION BASED ON A SLOPE OF 2.00/12 MINIMUM

THIS TRUSS IS DESIGNED FOR RESIDENTIAL OR SMALL BUILDING REQUIREMENTS OF PART 9, NBCC 2015

THIS DESIGN COMPLIES WITH:
- PART 9 OF BCBC 2018 , ABC 2019
- PART 9 OF OBC 2012 (2019 AMENDMENT)
- CSA 086-14
- TPIC 2014

(55 % OF 23.0 P.S.F. G.S.L. PLUS 8.4 P.S.F. RAIN LOAD) EQUALS 21.0 P.S.F. SPECIFIED ROOF LIVE LOAD

ALLOWABLE DEFL.(LL)= L/360 (1.05")
CALCULATED VERT. DEFL.(LL) = L/ 999 (0.06")
ALLOWABLE DEFL.(TL)= L/360 (1.05")
CALCULATED VERT. DEFL.(TL) = L/ 999 (0.17")

CSI: TC=0.64/1.00 (D-E:1) , BC=0.42/1.00 (L-N:4) , WB=0.49/1.00 (C-O:1) , SSI=0.29/1.00 (D-E:1)

DOL LUMBER=1.00 NAIL=1.00 LS BEND=1.10 COMP=1.10 SHEAR=1.10 TENS= 1.10

COMPANION LIVE LOAD FACTOR = 1.00

TRUSS PLATE MANUFACTURER IS NOT RESPONSIBLE FOR QUALITY CONTROL IN THE TRUSS MANUFACTURING PLANT .

NAIL VALUES

PLATE	GRIP(DRY) (PSI) MAX	MIN	SHEAR (PLI) MAX	MIN	SECTION (PLI) MAX	MIN
MT20	650	371	1747	788	1987	1873

PLATE PLACEMENT TOL. = 0.250 inches

PLATE ROTATION TOL. = 5.0 Deg.

JSI GRIP= 0.89 (C) (INPUT = 0.90)
JSI METAL= 0.41 (M) (INPUT = 1.00)

JOB NAME	TRUSS NAME	QUANTITY	PLY	JOB DESC.	DRWG NO.
336337	H307		1	TRUSS DESC. JT 45147	E21104420

Alpa Roof Truss, Maple

Version 8.420 S Jan 21 2021 MiTek Industries, Inc. Thu Oct 14 16:58:40 2021 Page 1

ID:hd511hZTz bdeQoS817GKByhVxV-bbqZQmcedB1WuVdeqOR6FPfWRqmmipl68?hLBfyTS9z

Scale = 1:64.7

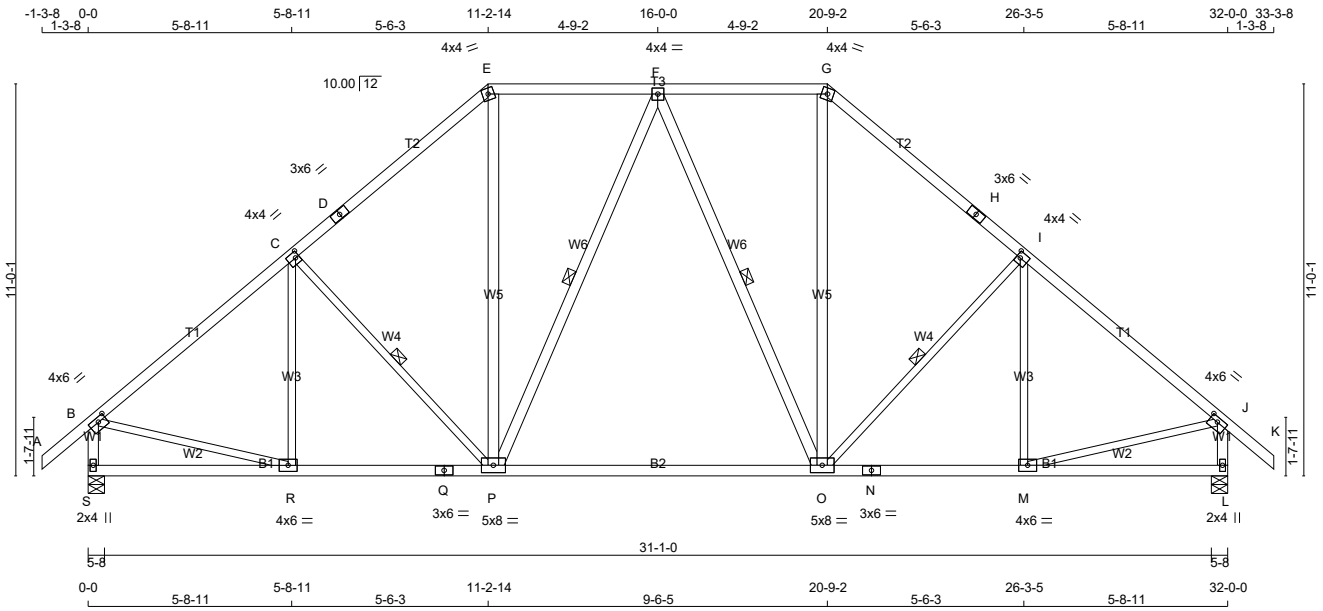

TOTAL WEIGHT = 4 X 169 = 675 lb

[M][F]

LUMBER

N. L. G. A. RULES

CHORDS	SIZE		LUMBER	DESCR.
A - D	2x4	DRY	No.2	SPF
D - E	2x4	DRY	No.2	SPF
E - G	2x4	DRY	No.2	SPF
G - H	2x4	DRY	No.2	SPF
H - K	2x4	DRY	No.2	SPF
S - B	2x4	DRY	No.2	SPF
L - J	2x4	DRY	No.2	SPF
S - Q	2x4	DRY	No.2	SPF
Q - N	2x4	DRY	No.2	SPF
N - L	2x4	DRY	No.2	SPF
ALL WEBS	2x3	DRY	No.2	SPF
EXCEPT				
P - E	2x4	DRY	No.2	SPF
P - F	2x4	DRY	No.2	SPF
F - O	2x4	DRY	No.2	SPF
O - G	2x4	DRY	No.2	SPF

DRY: SEASONED LUMBER.

PLATES (table is in inches)

JT	TYPE	PLATES	W	LEN	Y	X
B	TMVW-t	MT20	4.0	6.0	1.50	2.75
C	TMWW-t	MT20	4.0	4.0	2.00	1.25
D	TS-t	MT20	3.0	6.0		
E	TTW-m	MT20	4.0	4.0		
F	TMWW-t	MT20	4.0	4.0		
G	TTW-m	MT20	4.0	4.0		
H	TS-t	MT20	3.0	6.0		
I	TMWW-t	MT20	4.0	4.0	2.00	1.25
J	TMVW-t	MT20	4.0	6.0	1.50	2.75
L	BMV1+p	MT20	2.0	4.0		
M	BMWW-t	MT20	4.0	6.0		
N	BS-t	MT20	3.0	6.0		
O	BMWWW-t	MT20	5.0	8.0		
P	BMWWW-t	MT20	5.0	8.0		
Q	BS-t	MT20	3.0	6.0		
R	BMWW-t	MT20	4.0	6.0		
S	BMV1+p	MT20	2.0	4.0		

LATERAL BRACE(S) SHOWN SHALL BE 2X4 SPF#2

DIMENSIONS, SUPPORTS AND LOADINGS SPECIFIED BY FABRICATOR TO BE VERIFIED BY BUILDING DESIGNER

BEARINGS

JT	FACTORED GROSS REACTION VERT	HORZ	MAXIMUM FACTORED GROSS REACTION DOWN	HORZ	UPLIFT	INPUT BRG IN-SX	REQRD BRG IN-SX
S	1687	0	1687	0	0	5-8	2-0
L	1687	0	1687	0	0	5-8	2-0

UNFACTORED REACTIONS

JT	1ST LCASE COMBINED	MAX./MIN. COMPONENT REACTIONS SNOW	LIVE	PERM.LIVE	WIND	DEAD	SOIL
S	1204	730 / 0	0 / 0	0 / 0	0 / 0	474 / 0	0 / 0
L	1204	730 / 0	0 / 0	0 / 0	0 / 0	474 / 0	0 / 0

BEARING MATERIAL TO BE SPF NO.2 OR BETTER AT JOINT(S) S, L

BRACING

FOR SECTION E-G, MAX. PURLIN SPACING = 2.00 FT.
FOR OTHER SECTIONS, TOP CHORD TO BE SHEATHED OR MAX. PURLIN SPACING = 4.79 FT.
MAX. UNBRACED BOTTOM CHORD LENGTH = 10.00 FT OR RIGID CEILING DIRECTLY APPLIED.

ALL PITCH BREAKS AND PERIMETER CORNER JOINTS MUST BE LATERALLY RESTRAINED.

1 LATERAL BRACE(S) AT 1/ 2 LENGTH OF C-P, F-P, F-O, I-O.

END VERTICAL(S) MUST BE SHEATHED OR HAVE BRACES AS INDICATED IN THE MAX. UNBRACED LENGTH COLUMN OF THE TABLE BELOW

LOADING

TOTAL LOAD CASES: (4)

CHORDS FR-TO	MAX. FACTORED FORCE (LBS)	FACTORED VERT. LOAD (PLF) FROM	TO	LC1 CSI (LC)	MAX MAX. UNBRAC LENGTH	WEBS MEMB.	MAX. FACTORED FORCE (LBS)	MAX CSI (LC)
A- B	0 / 35	-78.0	-78.0	0.11 (1)	10.00	R- C	-193 / 0	0.13 (1)
B- C	-1637 / 0	-78.0	-78.0	0.39 (1)	4.79	C- P	-274 / 0	0.13 (1)
C- D	-1465 / 0	-78.0	-78.0	0.37 (1)	5.02	P- E	0 / 597	0.10 (1)
D- E	-1465 / 0	-78.0	-78.0	0.37 (1)	5.02	P- F	-269 / 0	0.21 (1)
E- F	-1104 / 0	-85.5	-85.5	0.26 (1)	2.00	F- O	-269 / 0	0.21 (1)
F- G	-1104 / 0	-85.5	-85.5	0.26 (1)	2.00	O- G	0 / 597	0.10 (1)
G- H	-1465 / 0	-78.0	-78.0	0.37 (1)	5.02	O- I	-274 / 0	0.13 (1)
H- I	-1465 / 0	-78.0	-78.0	0.37 (1)	5.02	M- I	-193 / 0	0.13 (1)
I- J	-1637 / 0	-78.0	-78.0	0.39 (1)	4.79	B- R	0 / 1316	0.30 (1)
J- K	0 / 35	-78.0	-78.0	0.11 (1)	10.00	M- J	0 / 1316	0.30 (1)
S- B	-1641 / 0	0.0	0.0	0.17 (1)	6.47			
L- J	-1641 / 0	0.0	0.0	0.17 (1)	6.47			
S- R	0 / 0	-18.5	-18.5	0.13 (4)	10.00			
R- Q	0 / 1283	-18.5	-18.5	0.38 (4)	10.00			
Q- P	0 / 1283	-18.5	-18.5	0.38 (4)	10.00			
P- O	0 / 1211	-18.5	-18.5	0.37 (4)	10.00			
O- N	0 / 1283	-18.5	-18.5	0.38 (4)	10.00			
N- M	0 / 1283	-18.5	-18.5	0.38 (4)	10.00			
M- L	0 / 0	-18.5	-18.5	0.13 (4)	10.00			

DESIGN CRITERIA

SPECIFIED LOADS:

TOP CH.	LL	=	21.0	PSF
	DL	=	6.0	PSF
BOT CH.	LL	=	0.0	PSF
	DL	=	7.4	PSF
TOTAL LOAD		=	34.4	PSF

SPACING = 24.0 IN. C/C

LOADING IN FLAT SECTION BASED ON PIGGYBACK TRUSS WITH SLOPES OF 6.00/12 AND -6.00/12 AND RESPECTIVE HEEL HEIGHTS OF 0-0 AND 0-0 AND AN ADDITIONAL DEAD LOAD OF 3.0 P.S.F.

THIS TRUSS IS DESIGNED FOR RESIDENTIAL OR SMALL BUILDING REQUIREMENTS OF PART 9, NBCC 2015

THIS DESIGN COMPLIES WITH:
- PART 9 OF BCBC 2018 , ABC 2019
- PART 9 OF OBC 2012 (2019 AMENDMENT)
- CSA 086-14
- TPIC 2014

(55 % OF 23.0 P.S.F. G.S.L. PLUS 8.4 P.S.F. RAIN LOAD) EQUALS 21.0 P.S.F. SPECIFIED ROOF LIVE LOAD

ALLOWABLE DEFL.(LL)= L/360 (1.07")
CALCULATED VERT. DEFL.(LL) = L/ 999 (0.05")
ALLOWABLE DEFL.(TL)= L/360 (1.07")
CALCULATED VERT. DEFL.(TL) = L/ 999 (0.21")

CSI: TC=0.39/1.00 (B-C:1) , BC=0.38/1.00 (M-O:4) , WB=0.30/1.00 (J-M:1) , SSI=0.20/1.00 (E-F:1)

DOL LUMBER=1.00 NAIL=1.00 LS BEND=1.10 COMP=1.10 SHEAR=1.10 TENS= 1.10

COMPANION LIVE LOAD FACTOR = 1.00

TRUSS PLATE MANUFACTURER IS NOT RESPONSIBLE FOR QUALITY CONTROL IN THE TRUSS MANUFACTURING PLANT .

NAIL VALUES

PLATE	GRIP(DRY) (PSI) MAX	MIN	SHEAR (PLI) MAX	MIN	SECTION (PLI) MAX	MIN
MT20	650	371	1747	788	1987	1873

PLATE PLACEMENT TOL. = 0.250 inches

PLATE ROTATION TOL. = 5.0 Deg.

JSI GRIP= 0.89 (R) (INPUT = 0.90)
JSI METAL= 0.45 (Q) (INPUT = 1.00)

JOB NAME	TRUSS NAME	QUANTITY	PLY	JOB DESC.		DRWG NO.
336337	H307S		1	TRUSS DESC.	JT 45147	E21104421

Alpa Roof Truss, Maple

Version 8.420 S Jan 21 2021 MiTek Industries, Inc. Thu Oct 14 16:58:42 2021 Page 1

ID:hd511hZTz bdeQoS817GKByhVxV-X oJrSeu9oID8pm1ypTaLqlszdSHAjJPcJARGYyTS9x

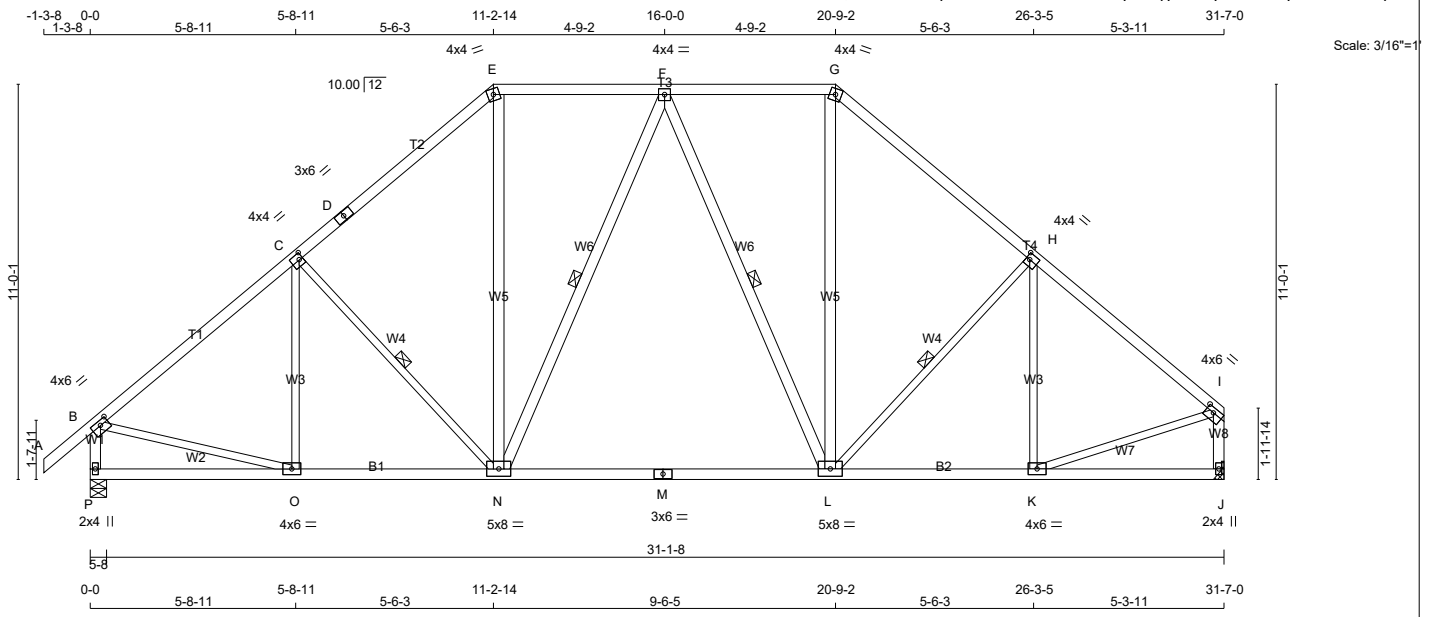

TOTAL WEIGHT = 8 X 166 = 1328 lb

[M][F]

LUMBER

N. L. G. A. RULES

CHORDS	SIZE		LUMBER	DESCR.
A - D	2x4	DRY	No.2	SPF
D - E	2x4	DRY	No.2	SPF
E - G	2x4	DRY	No.2	SPF
G - I	2x4	DRY	No.2	SPF
P - B	2x4	DRY	No.2	SPF
J - I	2x4	DRY	No.2	SPF
P - M	2x4	DRY	No.2	SPF
M - J	2x4	DRY	No.2	SPF
ALL WEBS	2x3	DRY	No.2	SPF
EXCEPT				
N - E	2x4	DRY	No.2	SPF
N - F	2x4	DRY	No.2	SPF
F - L	2x4	DRY	No.2	SPF
L - G	2x4	DRY	No.2	SPF

DRY: SEASONED LUMBER.

PLATES (table is in inches)

JT	TYPE	PLATES	W	LEN	Y	X
B	TMVW-t	MT20	4.0	6.0	1.50	2.75
C	TMWW-t	MT20	4.0	4.0	2.00	1.25
D	TS-t	MT20	3.0	6.0		
E	TTW-m	MT20	4.0	4.0		
F	TMWW-t	MT20	4.0	4.0		
G	TTW-m	MT20	4.0	4.0		
H	TMWW-t	MT20	4.0	4.0	2.00	1.25
I	TMVW-t	MT20	4.0	6.0	1.50	2.75
J	BMV1+p	MT20	2.0	4.0		
K	BMWW-t	MT20	4.0	6.0		
L	BMWWW-t	MT20	5.0	8.0		
M	BS-t	MT20	3.0	6.0		
N	BMWWW-t	MT20	5.0	8.0		
O	BMWW-t	MT20	4.0	6.0		
P	BMV1+p	MT20	2.0	4.0		

LATERAL BRACE(S) SHOWN SHALL BE 2X4 SPF#2

DIMENSIONS, SUPPORTS AND LOADINGS SPECIFIED BY FABRICATOR TO BE VERIFIED BY BUILDING DESIGNER

BEARINGS

JT	FACTORED GROSS REACTION VERT	HORZ	MAXIMUM FACTORED GROSS REACTION DOWN	HORZ	UPLIFT	INPUT BRG IN-SX	REQRD BRG IN-SX
P	1667	0	1667	0	0	5-8	1-15
J	1560	0	1560	0	0	MECHANICAL	

A SUITABLE HANGER/MECHANICAL CONNECTION IS REQUIRED AT JOINT J. MINIMUM BEARING LENGTH AT JOINT J = 1-11.

UNFACTORED REACTIONS

JT	1ST LCASE COMBINED	MAX./MIN. COMPONENT REACTIONS SNOW	LIVE	PERM.LIVE	WIND	DEAD	SOIL
P	1189	721 / 0	0 / 0	0 / 0	0 / 0	468 / 0	0 / 0
J	1115	663 / 0	0 / 0	0 / 0	0 / 0	452 / 0	0 / 0

BEARING MATERIAL TO BE SPF NO.2 OR BETTER AT JOINT(S) P

BRACING

FOR SECTION E-G, MAX. PURLIN SPACING = 2.00 FT.
FOR OTHER SECTIONS, TOP CHORD TO BE SHEATHED OR MAX. PURLIN SPACING = 4.82 FT.
MAX. UNBRACED BOTTOM CHORD LENGTH = 10.00 FT OR RIGID CEILING DIRECTLY APPLIED.

ALL PITCH BREAKS AND PERIMETER CORNER JOINTS MUST BE LATERALLY RESTRAINED.

1 LATERAL BRACE(S) AT 1/ 2 LENGTH OF C-N, F-N, F-L, H-L.

END VERTICAL(S) MUST BE SHEATHED OR HAVE BRACES AS INDICATED IN THE MAX. UNBRACED LENGTH COLUMN OF THE TABLE BELOW

LOADING

TOTAL LOAD CASES: (4)

CHORDS

MEMB. FR-TO	MAX. FACTORED FORCE (LBS)	FACTORED VERT. LOAD (PLF) FROM	TO	LC1 CSI (LC)	MAX UNBRAC LENGTH
A- B	0 / 35	-78.0	-78.0	0.11 (1)	10.00
B- C	-1612 / 0	-78.0	-78.0	0.39 (1)	4.82
C- D	-1437 / 0	-78.0	-78.0	0.36 (1)	5.07
D- E	-1437 / 0	-78.0	-78.0	0.36 (1)	5.07
E- F	-1083 / 0	-85.5	-85.5	0.26 (1)	2.00
F- G	-1065 / 0	-85.5	-85.5	0.26 (1)	2.00
G- H	-1411 / 0	-78.0	-78.0	0.34 (1)	5.13
H- I	-1515 / 0	-78.0	-78.0	0.34 (1)	4.99
P- B	-1620 / 0	0.0	0.0	0.17 (1)	6.50
J- I	-1516 / 0	0.0	0.0	0.17 (1)	6.67
P- O	0 / 0	-18.5	-18.5	0.13 (4)	10.00
O- N	0 / 1264	-18.5	-18.5	0.38 (4)	10.00
N- M	0 / 1180	-18.5	-18.5	0.37 (4)	10.00
M- L	0 / 1180	-18.5	-18.5	0.37 (4)	10.00
L- K	0 / 1189	-18.5	-18.5	0.37 (4)	10.00
K- J	0 / 0	-18.5	-18.5	0.11 (4)	10.00

WEBS

MEMB. FR-TO	MAX. FACTORED FORCE (LBS)	MAX CSI (LC)
O- C	-189 / 0	0.13 (1)
C- N	-277 / 0	0.13 (1)
N- E	0 / 579	0.09 (1)
N- F	-247 / 0	0.19 (1)
F- L	-291 / 0	0.23 (1)
L- G	0 / 561	0.09 (1)
L- H	-194 / 0	0.09 (1)
K- H	-276 / 0	0.18 (1)
B- O	0 / 1296	0.29 (1)
K- I	0 / 1246	0.28 (1)

DESIGN CRITERIA

SPECIFIED LOADS:

TOP CH.	LL	=	21.0	PSF
	DL	=	6.0	PSF
BOT CH.	LL	=	0.0	PSF
	DL	=	7.4	PSF
TOTAL LOAD		=	34.4	PSF

SPACING = 24.0 IN. C/C

LOADING IN FLAT SECTION BASED ON PIGGYBACK TRUSS WITH SLOPES OF 6.00/12 AND -6.00/12 AND RESPECTIVE HEEL HEIGHTS OF 0-0 AND 0-0 AND AN ADDITIONAL DEAD LOAD OF 3.0 P.S.F.

THIS TRUSS IS DESIGNED FOR RESIDENTIAL OR SMALL BUILDING REQUIREMENTS OF PART 9, NBCC 2015

THIS DESIGN COMPLIES WITH:
- PART 9 OF BCBC 2018 , ABC 2019
- PART 9 OF OBC 2012 (2019 AMENDMENT)
- CSA 086-14
- TPIC 2014

(55 % OF 23.0 P.S.F. G.S.L. PLUS 8.4 P.S.F. RAIN LOAD) EQUALS 21.0 P.S.F. SPECIFIED ROOF LIVE LOAD

ALLOWABLE DEFL.(LL)= L/360 (1.05")
CALCULATED VERT. DEFL.(LL) = L/ 999 (0.04")
ALLOWABLE DEFL.(TL)= L/360 (1.05")
CALCULATED VERT. DEFL.(TL) = L/ 999 (0.20")

CSI: TC=0.39/1.00 (B-C:1) , BC=0.38/1.00 (N-O:4) , WB=0.29/1.00 (B-O:1) , SSI=0.20/1.00 (E-F:1)

DOL LUMBER=1.00 NAIL=1.00 LS BEND=1.10 COMP=1.10 SHEAR=1.10 TENS= 1.10

COMPANION LIVE LOAD FACTOR = 1.00

TRUSS PLATE MANUFACTURER IS NOT RESPONSIBLE FOR QUALITY CONTROL IN THE TRUSS MANUFACTURING PLANT .

NAIL VALUES

PLATE	GRIP(DRY) (PSI) MAX	MIN	SHEAR (PLI) MAX	MIN	SECTION (PLI) MAX	MIN
MT20	650	371	1747	788	1987	1873

PLATE PLACEMENT TOL. = 0.250 inches

PLATE ROTATION TOL. = 5.0 Deg.

JSI GRIP= 0.88 (O) (INPUT = 0.90)
JSI METAL= 0.62 (M) (INPUT = 1.00)

JOB NAME	TRUSS NAME	QUANTITY	PLY	JOB DESC.		DRWG NO.
336337	H308		1	TRUSS DESC.	JT 45147	E21104422

Alpa Roof Truss, Maple

Version 8.420 S Jan 21 2021 MiTek Industries, Inc. Thu Oct 14 16:58:44 2021 Page 1

ID:hd511hZTz_bdeQoS817GKByhVxV-UNw3F8f9hQYxN7wP3EV2QFq5SR3zeZ?i3dfYLRyTS9v

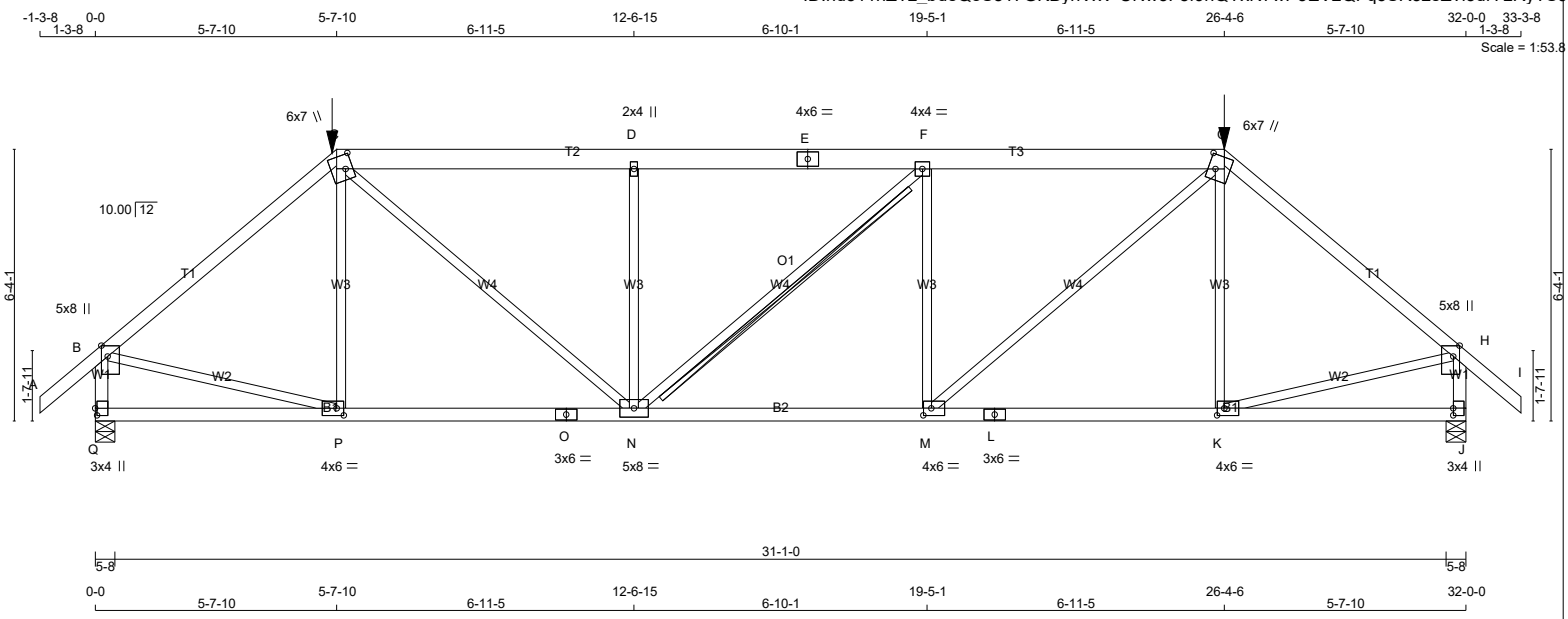

TOTAL WEIGHT = 146 lb

[M]

LUMBER

N. L. G. A. RULES

CHORDS	SIZE		LUMBER	DESCR.
A - C	2x4	DRY	No.2	SPF
C - E	2x6	DRY	No.2	SPF
E - G	2x6	DRY	No.2	SPF
G - I	2x4	DRY	No.2	SPF
Q - B	2x4	DRY	No.2	SPF
J - H	2x4	DRY	No.2	SPF
Q - O	2x4	DRY	No.2	SPF
O - L	2x4	DRY	No.2	SPF
L - J	2x4	DRY	No.2	SPF
ALL WEBS EXCEPT	2x3	DRY	No.2	SPF

DRY: SEASONED LUMBER.

PLATES (table is in inches)

JT	TYPE	PLATES	W	LEN	Y	X
B	TMVW+p	MT20	5.0	8.0	3.00	1.75
C	TTWW+m	MT20	6.0	7.0	4.00	2.00
D	TMW+w	MT20	2.0	4.0		
E	TS-t	MT20	4.0	6.0		
F	TMWW-t	MT20	4.0	4.0		
G	TTWW+m	MT20	6.0	7.0	4.00	2.00
H	TMVW+p	MT20	5.0	8.0	3.00	1.75
J	BMV1+p	MT20	3.0	4.0	2.00	
K	BMWW-t	MT20	4.0	6.0	2.00	2.00
L	BS-t	MT20	3.0	6.0		
M	BMWW-t	MT20	4.0	6.0	2.00	2.25
N	BMWWW-t	MT20	5.0	8.0		
O	BS-t	MT20	3.0	6.0		
P	BMWW-t	MT20	4.0	6.0	2.00	2.00
Q	BMV1+p	MT20	3.0	4.0	2.00	0.50

LATERAL BRACE(S) SHOWN SHALL BE 2X4 SPF#2

LICENSED PROFESSIONAL ENGINEER
Y. WIDYA
100225448
10/14/2021
PROVINCE OF ONTARIO

DIMENSIONS, SUPPORTS AND LOADINGS SPECIFIED BY FABRICATOR TO BE VERIFIED BY BUILDING DESIGNER

BEARINGS

JT	FACTORED GROSS REACTION VERT	HORZ	MAXIMUM FACTORED GROSS REACTION DOWN	HORZ	UPLIFT	INPUT BRG IN-SX	REQRD BRG IN-SX
Q	2343	0	2343	0	0	5-8	4-2
J	2343	0	2343	0	0	5-8	4-2

UNFACTORED REACTIONS

JT	1ST LCASE COMBINED	MAX./MIN. COMPONENT REACTIONS SNOW	LIVE	PERM.LIVE	WIND	DEAD	SOIL
Q	1669	1027 / 0	0 / 0	0 / 0	0 / 0	641 / 0	0 / 0
J	1669	1027 / 0	0 / 0	0 / 0	0 / 0	641 / 0	0 / 0

BEARING MATERIAL TO BE SPF NO.2 OR BETTER AT JOINT(S) Q, J

BRACING

TOP CHORD TO BE SHEATHED OR MAX. PURLIN SPACING = 3.67 FT.
MAX. UNBRACED BOTTOM CHORD LENGTH = 10.00 FT OR RIGID CEILING DIRECTLY APPLIED.

ALL PITCH BREAKS AND PERIMETER CORNER JOINTS MUST BE LATERALLY RESTRAINED.

2x4 DRY SPF No.2 T-BRACE AT F-N

FASTEN T AND I-BRACES TO NARROW EDGE OF WEB WITH ONE ROW PER PLY OF 3" COMMON WIRE NAILS @ 6" O.C. WITH 3" MINIMUM END DISTANCE. BRACE MUST COVER 90% OF WEB LENGTH.

END VERTICAL(S) MUST BE SHEATHED OR HAVE BRACES AS INDICATED IN THE MAX. UNBRACED LENGTH COLUMN OF THE TABLE BELOW

LOADING

TOTAL LOAD CASES: (4)

CHORDS

MEMB. FR-TO	MAX. FACTORED FORCE (LBS)	FACTORED VERT. LOAD (PLF) FROM	TO	LC1	MAX CSI (LC)	MAX. UNBRAC LENGTH
A- B	0 / 35	-78.0	-78.0	0.12 (1)	10.00	
B- C	-2404 / 0	-78.0	-78.0	0.77 (1)	3.67	
C- D	-3067 / 0	-114.5	-114.5	0.46 (1)	4.32	
D- E	-3067 / 0	-114.5	-114.5	0.46 (1)	4.31	
E- F	-3067 / 0	-114.5	-114.5	0.46 (1)	4.31	
F- G	-3069 / 0	-114.5	-114.5	0.46 (1)	4.31	
G- H	-2404 / 0	-78.0	-78.0	0.77 (1)	3.67	
H- I	0 / 35	-78.0	-78.0	0.12 (1)	10.00	
Q- B	-2283 / 0	0.0	0.0	0.27 (1)	5.58	
J- H	-2283 / 0	0.0	0.0	0.27 (1)	5.58	
Q- P	0 / 0	-27.2	-27.2	0.28 (4)	10.00	
P- O	0 / 1846	-27.2	-27.2	0.48 (1)	10.00	
O- N	0 / 1846	-27.2	-27.2	0.48 (1)	10.00	
N- M	0 / 3068	-27.2	-27.2	0.68 (1)	10.00	
M- L	0 / 1846	-27.2	-27.2	0.48 (1)	10.00	
L- K	0 / 1846	-27.2	-27.2	0.48 (1)	10.00	
K- J	0 / 0	-27.2	-27.2	0.28 (4)	10.00	

WEBS

MEMB. FR-TO	MAX. FACTORED FORCE (LBS)	MAX CSI (LC)
P- C	-229 / 50	0.14 (1)
C- N	0 / 1612	0.40 (1)
N- D	-867 / 0	0.53 (1)
N- F	-2 / 0	0.00 (1)
M- F	-869 / 0	0.54 (1)
M- G	0 / 1614	0.40 (1)
K- G	-230 / 50	0.14 (1)
B- P	0 / 1897	0.47 (1)
K- H	0 / 1897	0.47 (1)

FACTORED CONCENTRATED LOADS (LBS)

JT	LOC.	LC1	MAX-	MAX+	FACE	DIR.	TYPE	HEEL	CONN.
C	5-7-10	-174	-174	---	FRONT	VERT	TOTAL	---	C1
G	26-4-6	-174	-174	---	FRONT	VERT	TOTAL	---	C1

CONNECTION REQUIREMENTS

1) **C1:** A SUITABLE HANGER/MECHANICAL CONNECTION IS REQUIRED.

DESIGN CRITERIA

SPECIFIED LOADS:

TOP CH.	LL	=	21.0	PSF
	DL	=	6.0	PSF
BOT CH.	LL	=	0.0	PSF
	DL	=	7.4	PSF
TOTAL LOAD		=	34.4	PSF

SPACING = 24.0 IN. C/C

LOADING IN FLAT SECTION BASED ON A SLOPE OF 2.00/12 MINIMUM

GIRDER TYPE: CPrimeHip
SIDE SETBACK = 5-7-10
END SETBACK = 3-10-8
END WALL WIDTH = 0-0
CORNER FRAMING TYPE: CONVENTIONAL
END JACK TYPE: CONVENTIONAL
APPLIED TO FRONT SIDE
- ADDT'L LOADS BASED ON 55 % OF GSL.

THIS TRUSS IS DESIGNED FOR RESIDENTIAL OR SMALL BUILDING REQUIREMENTS OF PART 9, NBCC 2015

THIS DESIGN COMPLIES WITH:
- PART 9 OF BCBC 2018 , ABC 2019
- PART 9 OF OBC 2012 (2019 AMENDMENT)
- CSA 086-14
- TPIC 2014

(55 % OF 23.0 P.S.F. G.S.L. PLUS 8.4 P.S.F. RAIN LOAD) EQUALS 21.0 P.S.F. SPECIFIED ROOF LIVE LOAD

ALLOWABLE DEFL.(LL)= L/360 (1.07")
CALCULATED VERT. DEFL.(LL) = L/ 999 (0.12")
ALLOWABLE DEFL.(TL)= L/360 (1.07")
CALCULATED VERT. DEFL.(TL) = L/ 999 (0.26")

CSI: TC=0.77/1.00 (B-C:1) , BC=0.68/1.00 (M-N:1) , WB=0.54/1.00 (F-M:1) , SSI=0.31/1.00 (F-G:1)

DOL LUMBER=1.00 NAIL=1.00 LS BEND=1.00 COMP=1.00 SHEAR=1.00 TENS= 1.00

COMPANION LIVE LOAD FACTOR = 1.00

TRUSS PLATE MANUFACTURER IS NOT RESPONSIBLE FOR QUALITY CONTROL IN THE TRUSS MANUFACTURING PLANT .

NAIL VALUES

PLATE	GRIP(DRY) (PSI) MAX	MIN	SHEAR (PLI) MAX	MIN	SECTION (PLI) MAX	MIN
MT20	650	371	1747	788	1987	1873

PLATE PLACEMENT TOL. = 0.250 inches

PLATE ROTATION TOL. = 5.0 Deg.

JSI GRIP= 0.89 (M) (INPUT = 0.90)
JSI METAL= 0.87 (B) (INPUT = 1.00)

JOB NAME	TRUSS NAME	QUANTITY	PLY	JOB DESC.		DRWG NO.
336337	H309P		1	TRUSS DESC.	JT 45147	E21104423

Alpa Roof Truss, Maple

Version 8.420 S Jan 21 2021 MiTek Industries, Inc. Thu Oct 14 16:58:46 2021 Page 1

ID:hd511hZTz_bdeQoS817GKByhVxV-Ql1qgqhPD1ofcQ4oBfYWVgvarEvM6aR_Xx8fPJyTS9t

Scale = 1:17.5

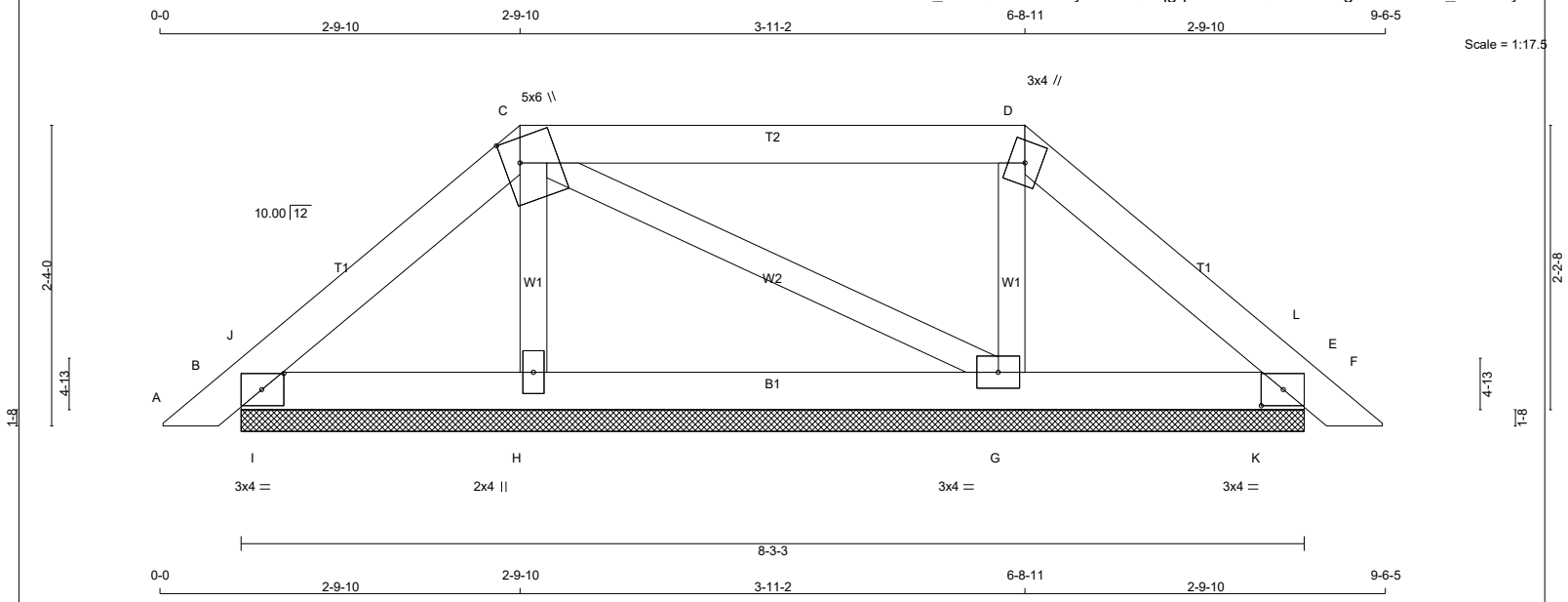

TOTAL WEIGHT = 2 X 28 = 56 lb

[M]

LUMBER

N. L. G. A. RULES

CHORDS	SIZE		LUMBER	DESCR.
A - C	2x4	DRY	No.2	SPF
C - D	2x4	DRY	No.2	SPF
D - F	2x4	DRY	No.2	SPF
B - E	2x4	DRY	No.2	SPF
ALL WEBS	2x3	DRY	No.2	SPF

DRY: SEASONED LUMBER.

PLATES (table is in inches)

JT	TYPE	PLATES	W	LEN	Y	X
B	TMB1-I	MT20	3.0	4.0	1.50	2.00
C	TTWW+m	MT20	5.0	6.0	2.25	1.50
D	TTW+m	MT20	3.0	4.0		
E	TMB1-I	MT20	3.0	4.0	1.50	2.00
G	BMWW1-t	MT20	3.0	4.0		
H	BMW1+w	MT20	2.0	4.0		

LATERAL BRACE(S) SHOWN SHALL BE 2X4 SPF#2

DIMENSIONS, SUPPORTS AND LOADINGS SPECIFIED BY FABRICATOR TO BE VERIFIED BY BUILDING DESIGNER

BEARINGS

JT	FACTORED GROSS REACTION VERT	HORZ	MAXIMUM FACTORED GROSS REACTION DOWN	HORZ	UPLIFT	INPUT BRG IN-SX	REQRD BRG IN-SX
B	190	0	190	0	0	8-3-3	1-8
E	177	0	177	0	0	8-3-3	1-8
H	242	0	242	0	0	8-3-3	1-8
G	270	0	270	0	0	8-3-3	1-8

UNFACTORED REACTIONS

JT	1ST LCASE COMBINED	MAX./MIN. COMPONENT REACTIONS SNOW	LIVE	PERM.LIVE	WIND	DEAD	SOIL
B	133	95 / 0	0 / 0	0 / 0	0 / 0	38 / 0	0 / 0
E	124	88 / 0	0 / 0	0 / 0	0 / 0	36 / 0	0 / 0
H	174	97 / 0	0 / 0	0 / 0	0 / 0	78 / 0	0 / 0
G	194	112 / 0	0 / 0	0 / 0	0 / 0	82 / 0	0 / 0

BEARING MATERIAL TO BE SPF NO.2 OR BETTER AT JOINT(S) B, E, H, G

BRACING

TOP CHORD TO BE SHEATHED OR MAX. PURLIN SPACING = 6.25 FT.
MAX. UNBRACED BOTTOM CHORD LENGTH = 10.00 FT OR RIGID CEILING DIRECTLY APPLIED.

ALL PITCH BREAKS AND PERIMETER CORNER JOINTS MUST BE LATERALLY RESTRAINED.

LOADING

TOTAL LOAD CASES: (4)

CHORDS

MEMB. FR-TO	MAX. FACTORED FORCE (LBS)	FACTORED VERT. LOAD LC1 (PLF) FROM	TO	MAX CSI (LC)	MAX. UNBRAC LENGTH
A- B	0 / 12	-78.0	-78.0	0.02 (1)	10.00
B- J	-56 / 0	-78.0	-78.0	0.02 (1)	6.25
J- C	-82 / 0	-78.0	-78.0	0.04 (1)	6.25
C- D	-36 / 0	-78.0	-78.0	0.20 (1)	6.25
D- L	-64 / 0	-78.0	-78.0	0.04 (1)	6.25
L- E	-35 / 0	-78.0	-78.0	0.01 (1)	6.25
E- F	0 / 12	-78.0	-78.0	0.02 (1)	10.00
B- I	0 / 60	-18.5	-18.5	0.05 (1)	10.00
I- H	0 / 60	-18.5	-18.5	0.05 (4)	10.00
H- G	0 / 51	-18.5	-18.5	0.05 (4)	10.00
G- K	0 / 46	-18.5	-18.5	0.05 (4)	10.00
K- E	0 / 46	-18.5	-18.5	0.05 (1)	10.00

WEBS

MEMB. FR-TO	MAX. FACTORED FORCE (LBS)	MAX CSI (LC)
H- C	-164 / 0	0.02 (1)
C- G	-17 / 0	0.01 (1)
G- D	-184 / 0	0.03 (1)
I- J	-120 / 0	0.00 (1)
K- L	-123 / 0	0.00 (1)

DESIGN CRITERIA

SPECIFIED LOADS:

TOP CH.	LL	=	21.0	PSF
	DL	=	6.0	PSF
BOT CH.	LL	=	0.0	PSF
	DL	=	7.4	PSF
TOTAL LOAD		=	34.4	PSF

SPACING = 24.0 IN. C/C

LOADING IN FLAT SECTION BASED ON A SLOPE OF 2.00/12 MINIMUM

THIS TRUSS IS DESIGNED FOR RESIDENTIAL OR SMALL BUILDING REQUIREMENTS OF PART 9, NBCC 2015

THIS DESIGN COMPLIES WITH:
- PART 9 OF BCBC 2018 , ABC 2019
- PART 9 OF OBC 2012 (2019 AMENDMENT)
- CSA 086-14
- TPIC 2014

(55 % OF 23.0 P.S.F. G.S.L. PLUS 8.4 P.S.F. RAIN LOAD) EQUALS 21.0 P.S.F. SPECIFIED ROOF LIVE LOAD

CSI: TC=0.20/1.00 (C-D:1) , BC=0.05/1.00 (H-I:4) , WB=0.03/1.00 (D-G:1) , SSI=0.12/1.00 (C-D:1)

DOL LUMBER=1.00 NAIL=1.00 LS BEND=1.10 COMP=1.10 SHEAR=1.10 TENS= 1.10

COMPANION LIVE LOAD FACTOR = 1.00

TRUSS PLATE MANUFACTURER IS NOT RESPONSIBLE FOR QUALITY CONTROL IN THE TRUSS MANUFACTURING PLANT .

NAIL VALUES

PLATE	GRIP(DRY) (PSI) MAX	MIN	SHEAR (PLI) MAX	MIN	SECTION (PLI) MAX	MIN
MT20	650	371	1747	788	1987	1873

PLATE PLACEMENT TOL. = 0.250 inches

PLATE ROTATION TOL. = 5.0 Deg.

JSI GRIP= 0.30 (D) (INPUT = 0.90)
JSI METAL= 0.04 (B) (INPUT = 1.00)

JOB NAME	TRUSS NAME	QUANTITY	PLY	JOB DESC.		DRWG NO.
336337	H310P		1	TRUSS DESC.	JT 45147	E21104424

Alpa Roof Truss, Maple

Version 8.420 S Jan 21 2021 MiTek Industries, Inc. Thu Oct 14 16:58:47 2021 Page 1

ID:hd511hZTz bdeQoS817GKByhVxV-uxbCu9h1 LwWEaf kN3I2tSmIeCyr1p8lbtCxlyTS9s

Scale = 1:25.8

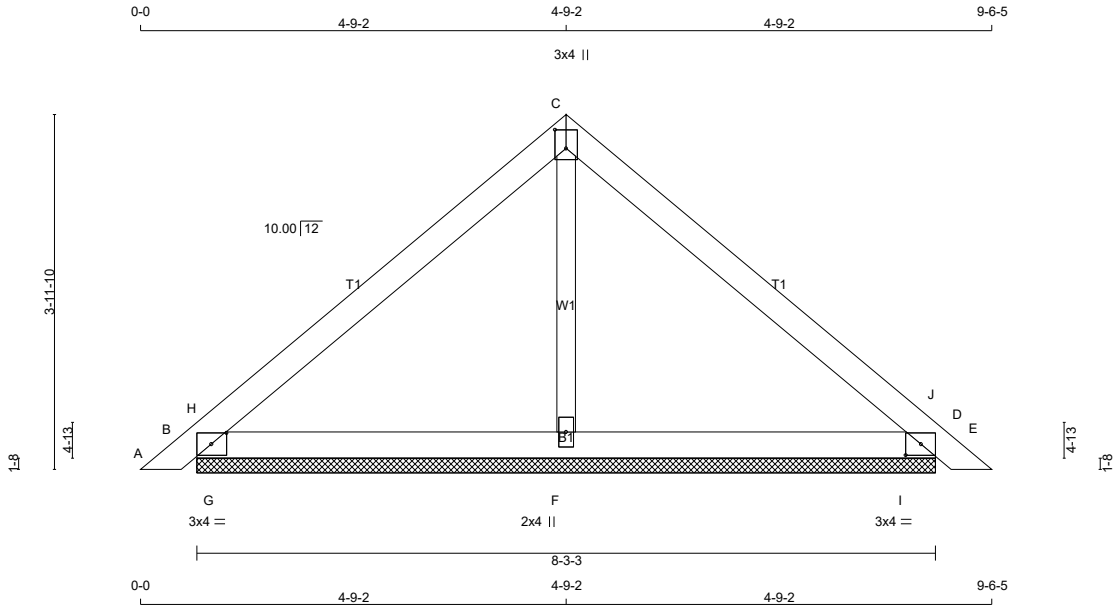

TOTAL WEIGHT = 8 X 26 = 209 lb

[M]

LUMBER

N. L. G. A. RULES

CHORDS	SIZE		LUMBER	DESCR.
A - C	2x4	DRY	No.2	SPF
C - E	2x4	DRY	No.2	SPF
B - D	2x4	DRY	No.2	SPF
ALL WEBS	2x3	DRY	No.2	SPF

DRY: SEASONED LUMBER.

PLATES (table is in inches)

JT	TYPE	PLATES	W	LEN	Y	X
B	TMB1-I	MT20	3.0	4.0	1.50	2.00
C	TTW+p	MT20	3.0	4.0	2.50	1.50
D	TMB1-I	MT20	3.0	4.0	1.50	2.00
F	BMW1+w	MT20	2.0	4.0		

LATERAL BRACE(S) SHOWN SHALL BE 2X4 SPF#2

DIMENSIONS, SUPPORTS AND LOADINGS SPECIFIED BY FABRICATOR TO BE VERIFIED BY BUILDING DESIGNER

BEARINGS

JT	FACTORED GROSS REACTION VERT	HORZ	MAXIMUM FACTORED GROSS REACTION DOWN	HORZ	UPLIFT	INPUT BRG IN-SX	REQRD BRG IN-SX
B	313	0	313	0	0	8-3-3	1-8
D	313	0	313	0	0	8-3-3	1-8
F	256	0	256	0	0	8-3-3	1-8

UNFACTORED REACTIONS

JT	1ST LCASE COMBINED	MAX./MIN. COMPONENT REACTIONS SNOW	LIVE	PERM.LIVE	WIND	DEAD	SOIL
B	221	148 / 0	0 / 0	0 / 0	0 / 0	72 / 0	0 / 0
D	221	148 / 0	0 / 0	0 / 0	0 / 0	72 / 0	0 / 0
F	185	95 / 0	0 / 0	0 / 0	0 / 0	90 / 0	0 / 0

BEARING MATERIAL TO BE SPF NO.2 OR BETTER AT JOINT(S) B, D, F

BRACING

TOP CHORD TO BE SHEATHED OR MAX. PURLIN SPACING = 6.25 FT.
MAX. UNBRACED BOTTOM CHORD LENGTH = 10.00 FT OR RIGID CEILING DIRECTLY APPLIED.

ALL PITCH BREAKS AND PERIMETER CORNER JOINTS MUST BE LATERALLY RESTRAINED.

LOADING

TOTAL LOAD CASES: (4)

CHORDS

MEMB. FR-TO	MAX. FACTORED FORCE (LBS)	FACTORED VERT. LOAD (PLF) FROM	TO	LC1 CSI (LC)	MAX UNBRAC LENGTH
A- B	0 / 12	-78.0	-78.0	0.02 (1)	10.00
B- H	-30 / 38	-78.0	-78.0	0.10 (1)	6.25
H- C	-154 / 0	-78.0	-78.0	0.16 (1)	6.25
C- J	-154 / 0	-78.0	-78.0	0.16 (1)	6.25
J- D	-30 / 38	-78.0	-78.0	0.10 (1)	6.25
D- E	0 / 12	-78.0	-78.0	0.02 (1)	10.00
B- G	0 / 110	-18.5	-18.5	0.15 (1)	10.00
G- F	0 / 110	-18.5	-18.5	0.15 (1)	10.00
F- I	0 / 110	-18.5	-18.5	0.15 (1)	10.00
I- D	0 / 110	-18.5	-18.5	0.15 (1)	10.00

WEBS

MEMB. FR-TO	MAX. FACTORED FORCE (LBS)	MAX CSI (LC)
F- C	-85 / 0	0.02 (1)
G- H	-422 / 0	0.00 (1)
I- J	-422 / 0	0.00 (1)

DESIGN CRITERIA

SPECIFIED LOADS:

TOP CH.	LL	=	21.0	PSF
	DL	=	6.0	PSF
BOT CH.	LL	=	0.0	PSF
	DL	=	7.4	PSF
TOTAL LOAD		=	34.4	PSF

SPACING = 24.0 IN. C/C

THIS TRUSS IS DESIGNED FOR RESIDENTIAL OR SMALL BUILDING REQUIREMENTS OF PART 9, NBCC 2015

THIS DESIGN COMPLIES WITH:
- PART 9 OF BCBC 2018 , ABC 2019
- PART 9 OF OBC 2012 (2019 AMENDMENT)
- CSA 086-14
- TPIC 2014

(55 % OF 23.0 P.S.F. G.S.L. PLUS 8.4 P.S.F. RAIN LOAD) EQUALS 21.0 P.S.F. SPECIFIED ROOF LIVE LOAD

CSI: TC=0.16/1.00 (C-H:1) , BC=0.15/1.00 (B-G:1) , WB=0.02/1.00 (C-F:1) , SSI=0.32/1.00 (B-G:1)

DOL LUMBER=1.00 NAIL=1.00 LS BEND=1.10 COMP=1.10 SHEAR=1.10 TENS= 1.10

COMPANION LIVE LOAD FACTOR = 1.00

TRUSS PLATE MANUFACTURER IS NOT RESPONSIBLE FOR QUALITY CONTROL IN THE TRUSS MANUFACTURING PLANT .

NAIL VALUES

PLATE	GRIP(DRY) (PSI) MAX	MIN	SHEAR (PLI) MAX	MIN	SECTION (PLI) MAX	MIN
MT20	650	371	1747	788	1987	1873

PLATE PLACEMENT TOL. = 0.250 inches

PLATE ROTATION TOL. = 5.0 Deg.

JSI GRIP= 0.26 (D) (INPUT = 0.90)
JSI METAL= 0.07 (D) (INPUT = 1.00)

JOB NAME	TRUSS NAME	QUANTITY	PLY	JOB DESC.		DRWG NO.
336337	H311		1	TRUSS DESC.	JT 45147	E21104425

Alpa Roof Truss, Maple

Version 8.420 S Jan 21 2021 MiTek Industries, Inc. Thu Oct 14 16:58:49 2021 Page 1

ID:hd511hZTz_bdeQoS817GKByhVxV-qKjyJrjHVyAETupNsn5D7IX60SuSJv_RDvMJ0eyTS9q

Scale = 1:53.4

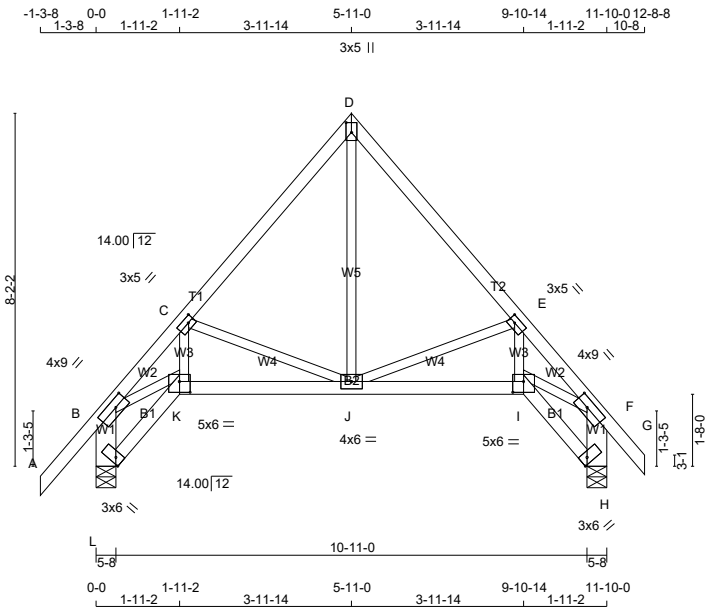

TOTAL WEIGHT = 2 X 61 = 123 lb

[M][F]

LUMBER

N. L. G. A. RULES

CHORDS	SIZE		LUMBER	DESCR.
L - B	2x6	DRY	No.2	SPF
A - D	2x4	DRY	No.2	SPF
D - G	2x4	DRY	No.2	SPF
H - F	2x6	DRY	No.2	SPF
L - K	2x4	DRY	No.2	SPF
K - I	2x4	DRY	No.2	SPF
I - H	2x4	DRY	No.2	SPF
ALL WEBS	2x3	DRY	No.2	SPF

DRY: SEASONED LUMBER.

PLATES (table is in inches)

JT	TYPE	PLATES	W	LEN	Y	X
B	TMVW-t	MT20	4.0	9.0	2.00	3.50
C	TMWW-t	MT20	3.0	5.0	1.50	1.75
D	TTW+p	MT20	3.0	5.0	2.75	1.50
E	TMWW-t	MT20	3.0	5.0	1.50	1.75
F	TMVW-t	MT20	4.0	9.0	2.00	3.50
H	BVM1+I	MT20	3.0	6.0	2.00	Edge
I	BBWW-I	MT20	5.0	6.0	3.00	3.00
J	BMWWW-t	MT20	4.0	6.0		
K	BBWW-I	MT20	5.0	6.0	3.00	3.00
L	BVM1+I	MT20	3.0	6.0	2.00	Edge

Edge - INDICATES REFERENCE CORNER OF PLATE TOUCHES EDGE OF CHORD.

LATERAL BRACE(S) SHOWN SHALL BE 2X4 SPF#2

DIMENSIONS, SUPPORTS AND LOADINGS SPECIFIED BY FABRICATOR TO BE VERIFIED BY BUILDING DESIGNER

BEARINGS

JT	FACTORED GROSS REACTION VERT	HORZ	MAXIMUM FACTORED GROSS REACTION DOWN	HORZ	UPLIFT	INPUT BRG IN-SX	REQRD BRG IN-SX
L	680	0	680	0	0	5-8	5-8
H	648	0	648	0	0	5-8	5-8

UNFACTORED REACTIONS

JT	1ST LCASE COMBINED	MAX./MIN. COMPONENT REACTIONS SNOW	LIVE	PERM.LIVE	WIND	DEAD	SOIL
L	483	307 / 0	0 / 0	0 / 0	0 / 0	175 / 0	0 / 0
H	460	290 / 0	0 / 0	0 / 0	0 / 0	170 / 0	0 / 0

BEARING MATERIAL TO BE SPF NO.2 OR BETTER AT JOINT(S) L, H

BEARING SIZE FACTOR = 1.15 AT JNT(S) L, H (BASED ON SUPPORT DEPTH = 1-8)

BRACING

TOP CHORD TO BE SHEATHED OR MAX. PURLIN SPACING = 6.09 FT.

MAX. UNBRACED BOTTOM CHORD LENGTH = 10.00 FT OR RIGID CEILING DIRECTLY APPLIED.

ALL PITCH BREAKS AND PERIMETER CORNER JOINTS MUST BE LATERALLY RESTRAINED.

LOADING

TOTAL LOAD CASES: (4)

CHORDS

MEMB. FR-TO	MAX. FACTORED FORCE (LBS)	FACTORED VERT. LOAD LC1 (PLF) FROM	TO	MAX CSI (LC)	MAX. UNBRAC LENGTH
L- B	-662 / 0	0.0	0.0	0.05 (1)	7.81
A- B	0 / 42	-78.0	-78.0	0.11 (1)	10.00
B- C	-1025 / 0	-78.0	-78.0	0.11 (1)	6.09
C- D	-448 / 0	-78.0	-78.0	0.15 (1)	6.25
D- E	-448 / 0	-78.0	-78.0	0.15 (1)	6.25
E- F	-1025 / 0	-78.0	-78.0	0.11 (1)	6.09
F- G	0 / 29	-78.0	-78.0	0.06 (1)	10.00
H- F	-630 / 0	0.0	0.0	0.04 (1)	7.81
L- K	0 / 0	-18.5	-18.5	0.02 (4)	10.00
K- J	0 / 666	-18.5	-18.5	0.15 (1)	10.00
J- I	0 / 666	-18.5	-18.5	0.15 (1)	10.00
I- H	0 / 0	-18.5	-18.5	0.02 (4)	10.00

WEBS

MEMB. FR-TO	MAX. FACTORED FORCE (LBS)	MAX CSI (LC)
J- D	0 / 398	0.09 (1)
J- E	-418 / 0	0.13 (1)
I- E	0 / 339	0.08 (1)
I- F	0 / 746	0.17 (1)
C- J	-418 / 0	0.13 (1)
K- C	0 / 339	0.08 (1)
B- K	0 / 746	0.17 (1)

DESIGN CRITERIA

SPECIFIED LOADS:

TOP CH.	LL	=	21.0	PSF
	DL	=	6.0	PSF
BOT CH.	LL	=	0.0	PSF
	DL	=	7.4	PSF
TOTAL LOAD		=	34.4	PSF

SPACING = 24.0 IN. C/C

THIS TRUSS IS DESIGNED FOR RESIDENTIAL OR SMALL BUILDING REQUIREMENTS OF PART 9, NBCC 2015

THIS DESIGN COMPLIES WITH:
- PART 9 OF BCBC 2018 , ABC 2019
- PART 9 OF OBC 2012 (2019 AMENDMENT)
- CSA 086-14
- TPIC 2014

(55 % OF 23.0 P.S.F. G.S.L. PLUS 8.4 P.S.F. RAIN LOAD) EQUALS 21.0 P.S.F. SPECIFIED ROOF LIVE LOAD

ALLOWABLE DEFL.(LL)= L/360 (0.39")
CALCULATED VERT. DEFL.(LL) = L/ 999 (0.02")
ALLOWABLE DEFL.(TL)= L/360 (0.39")
CALCULATED VERT. DEFL.(TL) = L/ 999 (0.04")

CSI: TC=0.15/1.00 (C-D:1) , BC=0.15/1.00 (I-J:1) , WB=0.17/1.00 (F-I:1) , SSI=0.09/1.00 (C-D:1)

DOL LUMBER=1.00 NAIL=1.00 LS BEND=1.10 COMP=1.10 SHEAR=1.10 TENS= 1.10

COMPANION LIVE LOAD FACTOR = 1.00

TRUSS PLATE MANUFACTURER IS NOT RESPONSIBLE FOR QUALITY CONTROL IN THE TRUSS MANUFACTURING PLANT .

NAIL VALUES

PLATE	GRIP(DRY) (PSI) MAX	MIN	SHEAR (PLI) MAX	MIN	SECTION (PLI) MAX	MIN
MT20	650	371	1747	788	1987	1873

PLATE PLACEMENT TOL. = 0.250 inches

PLATE ROTATION TOL. = 5.0 Deg.

JSI GRIP= 0.45 (I) (INPUT = 0.90)
JSI METAL= 0.29 (I) (INPUT = 1.00)

JOB NAME	TRUSS NAME	QUANTITY	PLY	JOB DESC.		DRWG NO.
336337	H312		1	TRUSS DESC.	JT 45147	E21104426

Alpa Roof Truss, Maple

Version 8.420 S Jan 21 2021 MiTek Industries, Inc. Thu Oct 14 16:58:51 2021 Page 1

ID:hd511hZTz bdeQoS817GKByhVxV-njrjjXkY1ZQyjCymzC7hCjcPbFYYnhzjgCrQ4XyTS9o

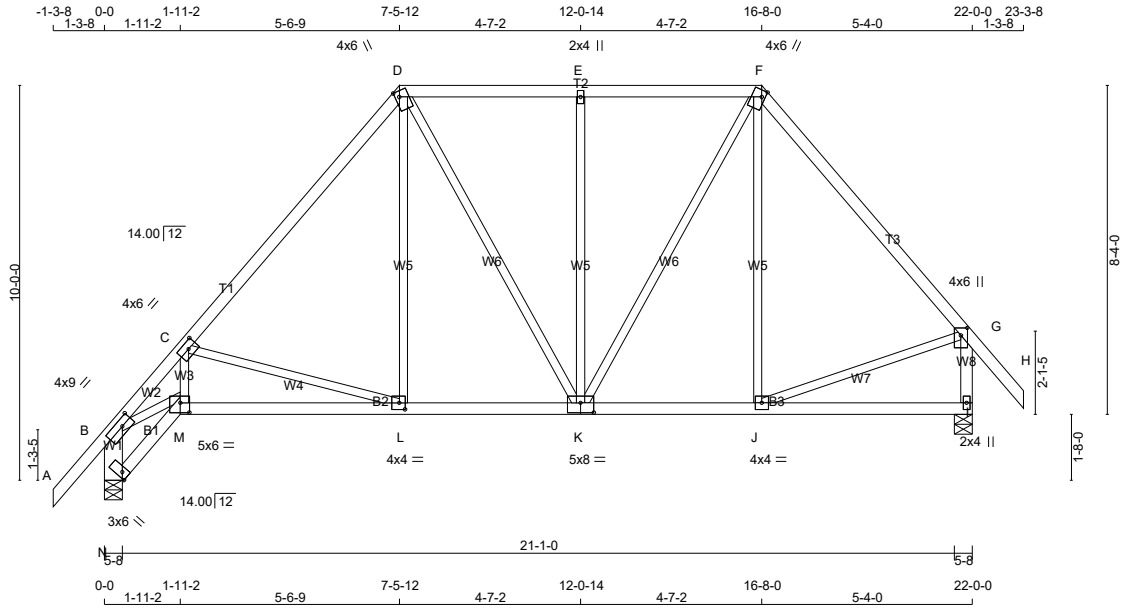

TOTAL WEIGHT = 2 X 113 = 226 lb

LUMBER

N. L. G. A. RULES

CHORDS	SIZE		LUMBER	DESCR.
N - B	2x6	DRY	No.2	SPF
A - D	2x4	DRY	No.2	SPF
D - F	2x4	DRY	No.2	SPF
F - H	2x4	DRY	No.2	SPF
I - G	2x4	DRY	No.2	SPF
N - M	2x4	DRY	No.2	SPF
M - K	2x4	DRY	No.2	SPF
K - I	2x4	DRY	No.2	SPF
ALL WEBS EXCEPT	2x3	DRY	No.2	SPF

DRY: SEASONED LUMBER.

PLATES (table is in inches)

JT	TYPE	PLATES	W	LEN	Y	X
B	TMVW-t	MT20	4.0	9.0	2.00	3.50
C	TMWW-t	MT20	4.0	6.0	2.00	2.75
D	TTWW+m	MT20	4.0	6.0	1.75	1.25
E	TMW+w	MT20	2.0	4.0		
F	TTWW+m	MT20	4.0	6.0	2.00	1.00
G	TMVW+p	MT20	4.0	6.0	2.25	2.00
I	BMV1+p	MT20	2.0	4.0		
J	BMWW-t	MT20	4.0	4.0		
K	BSWWW-l	MT20	5.0	8.0	3.00	4.00
L	BMWW-t	MT20	4.0	4.0	2.00	1.75
M	BBWW-l	MT20	5.0	6.0	3.00	2.75
N	BVM1+l	MT20	3.0	6.0	2.00	Edge

Edge - INDICATES REFERENCE CORNER OF PLATE TOUCHES EDGE OF CHORD.

LATERAL BRACE(S) SHOWN SHALL BE 2X4 SPF#2

DIMENSIONS, SUPPORTS AND LOADINGS SPECIFIED BY FABRICATOR TO BE VERIFIED BY BUILDING DESIGNER

BEARINGS

JT	FACTORED GROSS REACTION VERT	HORZ	MAXIMUM FACTORED GROSS REACTION DOWN	HORZ	UPLIFT	INPUT BRG IN-SX	REQRD BRG IN-SX
N	1202	0	1202	0	0	5-8	5-8
I	1208	0	1208	0	0	5-8	1-8

UNFACTORED REACTIONS

JT	1ST LCASE COMBINED	MAX./MIN. COMPONENT REACTIONS SNOW	LIVE	PERM.LIVE	WIND	DEAD	SOIL
N	857	521 / 0	0 / 0	0 / 0	0 / 0	337 / 0	0 / 0
I	863	521 / 0	0 / 0	0 / 0	0 / 0	342 / 0	0 / 0

BEARING MATERIAL TO BE SPF NO.2 OR BETTER AT JOINT(S) N, I
BEARING SIZE FACTOR = 1.15 AT JNT(S) N (BASED ON SUPPORT DEPTH = 1-8)

BRACING

FOR SECTION D-F, MAX. PURLIN SPACING = 2.00 FT.
FOR OTHER SECTIONS, TOP CHORD TO BE SHEATHED OR MAX. PURLIN SPACING = 4.42 FT.
MAX. UNBRACED BOTTOM CHORD LENGTH = 10.00 FT OR RIGID CEILING DIRECTLY APPLIED.

ALL PITCH BREAKS AND PERIMETER CORNER JOINTS MUST BE LATERALLY RESTRAINED.

LOADING

TOTAL LOAD CASES: (4)

CHORDS

MEMB. FR-TO	MAX. FACTORED FORCE (LBS)	VERT. LOAD (PLF) FROM	TO	LC1	MAX CSI (LC)	MAX. UNBRAC LENGTH
N- B	-1184 / 0	0.0	0.0	0.08 (1)	7.81	
A- B	0 / 42	-78.0	-78.0	0.11 (1)	10.00	
B- C	-2151 / 0	-78.0	-78.0	0.25 (1)	4.42	
C- D	-1086 / 0	-78.0	-78.0	0.33 (1)	5.69	
D- E	-782 / 0	-85.5	-85.5	0.23 (1)	2.00	
E- F	-782 / 0	-85.5	-85.5	0.23 (1)	2.00	
F- G	-879 / 0	-78.0	-78.0	0.31 (1)	6.17	
G- H	0 / 42	-78.0	-78.0	0.11 (1)	10.00	
I- G	-1168 / 0	0.0	0.0	0.14 (1)	7.37	
N- M	0 / 0	-18.5	-18.5	0.02 (4)	10.00	
M- L	0 / 1401	-18.5	-18.5	0.30 (1)	10.00	
L- K	0 / 692	-18.5	-18.5	0.21 (4)	10.00	
K- J	0 / 569	-18.5	-18.5	0.19 (4)	10.00	
J- I	0 / 0	-18.5	-18.5	0.13 (4)	10.00	

WEBS

MEMB. FR-TO	MAX. FACTORED FORCE (LBS)	MAX CSI (LC)
B- M	0 / 1565	0.35 (1)
M- C	0 / 670	0.15 (1)
C- L	-743 / 0	0.43 (1)
L- D	0 / 314	0.07 (1)
D- K	0 / 182	0.04 (1)
K- E	-472 / 0	0.65 (1)
K- F	0 / 429	0.10 (1)
J- F	-67 / 51	0.09 (1)
J- G	0 / 598	0.13 (1)

[M][F]

DESIGN CRITERIA

SPECIFIED LOADS:

TOP CH.	LL	=	21.0	PSF
	DL	=	6.0	PSF
BOT CH.	LL	=	0.0	PSF
	DL	=	7.4	PSF
TOTAL LOAD		=	34.4	PSF

SPACING = 24.0 IN. C/C

LOADING IN FLAT SECTION BASED ON PIGGYBACK TRUSS WITH SLOPES OF 6.00/12 AND -6.00/12 AND RESPECTIVE HEEL HEIGHTS OF 0-0 AND 0-0 AND AN ADDITIONAL DEAD LOAD OF 3.0 P.S.F.

THIS TRUSS IS DESIGNED FOR RESIDENTIAL OR SMALL BUILDING REQUIREMENTS OF PART 9, NBCC 2015

THIS DESIGN COMPLIES WITH:
- PART 9 OF BCBC 2018 , ABC 2019
- PART 9 OF OBC 2012 (2019 AMENDMENT)
- CSA 086-14
- TPIC 2014

(55 % OF 23.0 P.S.F. G.S.L. PLUS 8.4 P.S.F. RAIN LOAD) EQUALS 21.0 P.S.F. SPECIFIED ROOF LIVE LOAD

ALLOWABLE DEFL.(LL)= L/360 (0.73")
CALCULATED VERT. DEFL.(LL) = L/ 999 (0.03")
ALLOWABLE DEFL.(TL)= L/360 (0.73")
CALCULATED VERT. DEFL.(TL) = L/ 999 (0.09")

CSI: TC=0.33/1.00 (C-D:1) , BC=0.30/1.00 (L-M:1) , WB=0.65/1.00 (E-K:1) , SSI=0.19/1.00 (D-E:1)

DOL LUMBER=1.00 NAIL=1.00 LS BEND=1.10 COMP=1.10 SHEAR=1.10 TENS= 1.10

COMPANION LIVE LOAD FACTOR = 1.00

TRUSS PLATE MANUFACTURER IS NOT RESPONSIBLE FOR QUALITY CONTROL IN THE TRUSS MANUFACTURING PLANT .

NAIL VALUES

PLATE	GRIP(DRY) (PSI) MAX	MIN	SHEAR (PLI) MAX	MIN	SECTION (PLI) MAX	MIN
MT20	650	371	1747	788	1987	1873

PLATE PLACEMENT TOL. = 0.250 inches

PLATE ROTATION TOL. = 5.0 Deg.

JSI GRIP= 0.79 (M) (INPUT = 0.90)
JSI METAL= 0.56 (M) (INPUT = 1.00)

JOB NAME	TRUSS NAME	QUANTITY	PLY	JOB DESC.	DRWG NO.
336337	H313		2	TRUSS DESC. JT 45147	E21104427

Alpa Roof Truss, Maple

Version 8.420 S Jan 21 2021 MiTek Industries, Inc. Thu Oct 14 16:58:53 2021 Page 1

ID:hd511hZTz_bdeQoS817GKByhVxV-j5yT8DmoZBgfyV685dA9H8idC32OFXE08WKX9PyTS9m

Scale = 1:51.1

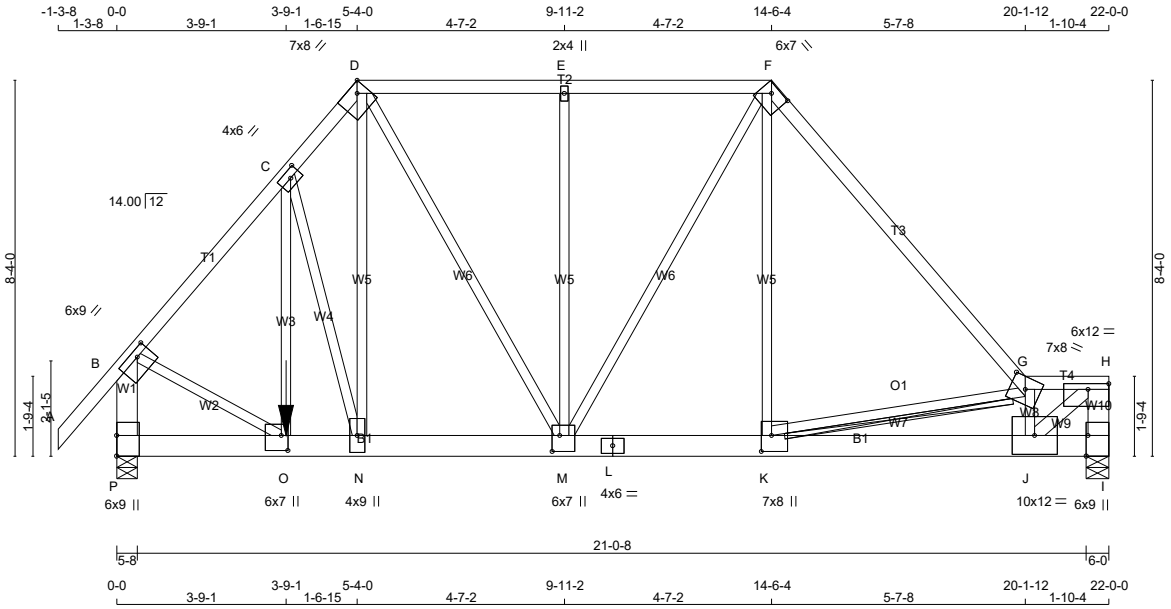

TOTAL WEIGHT = 2 X 132 = 263 lb

[M]

LUMBER

N. L. G. A. RULES

CHORDS	SIZE		LUMBER	DESCR.
A - D	2x4	DRY	No.2	SPF
D - F	2x4	DRY	No.2	SPF
F - G	2x4	DRY	1650F 1.5E	SPF
G - H	2x4	DRY	No.2	SPF
I - H	2x6	DRY	No.2	SPF
P - B	2x6	DRY	No.2	SPF
P - L	2x6	DRY	1650F 1.5E	SPF
L - I	2x6	DRY	1650F 1.5E	SPF
ALL WEBS EXCEPT	2x3	DRY	No.2	SPF
J - H	2x4	DRY	1650F 1.5E	SPF

DRY: SEASONED LUMBER.

DESIGN CONSISTS OF 2 TRUSSES BUILT SEPARATELY THEN FASTENED TOGETHER AS FOLLOWS:

CHORDS	#ROWS	SURFACE SPACING (IN)	LOAD(PLF)
TOP CHORDS : (0.122"X3") SPIRAL NAILS			
A- D	1	12	TOP
D- F	1	12	TOP
F- G	1	12	TOP
G- H	1	12	TOP
H- I	2	12	TOP
P- B	2	12	TOP
BOTTOM CHORDS : (0.122"X3") SPIRAL NAILS			
P- L	2	6	SIDE(356.7)
L- I	2	6	SIDE(356.7)
WEBS : (0.122"X3") SPIRAL NAILS			
C- O	1	4	SIDE(678.4)
2x3	1	6	
2x4	1	6	

NAILS TO BE DRIVEN FROM ONE SIDE ONLY.

GIRDER NAILING ASSUMES NAILED HANGERS ARE FASTENED WITH MIN. 3-0 INCH NAILS.

TOP - COMPONENTS ARE LOADED FROM THE TOP AND MUST BE PLACED ON TOP EDGE OF ALL PLIES FOR THE LOAD TO BE TRANSFERRED TO EACH PLY.

LATERAL BRACE(S) SHOWN SHALL BE 2X4 SPF#2

DIMENSIONS, SUPPORTS AND LOADINGS SPECIFIED BY FABRICATOR TO BE VERIFIED BY BUILDING DESIGNER

BEARINGS

JT	FACTORED GROSS REACTION VERT	HORZ	MAXIMUM FACTORED GROSS REACTION DOWN	HORZ	UPLIFT	INPUT BRG IN-SX	REQRD BRG IN-SX
I	9202	0	9202	0	0	6-0	6-0
P	8987	0	8987	0	0	5-8	5-8

UNFACTORED REACTIONS

JT	1ST LCASE COMBINED	MAX./MIN. COMPONENT REACTIONS SNOW	LIVE	PERM.LIVE	WIND	DEAD	SOIL
I	6563	3991 / 0	0 / 0	0 / 0	0 / 0	2573 / 0	0 / 0
P	6408	3906 / 0	0 / 0	0 / 0	0 / 0	2503 / 0	0 / 0

BEARING MATERIAL TO BE SPF NO.2 OR BETTER AT JOINT(S) I, P

BEARING SIZE FACTOR = 1.15 AT JNT(S) I, P (BASED ON SUPPORT DEPTH = 1-8)

BRACING

FOR SECTION D-F, MAX. PURLIN SPACING = 2.00 FT.

FOR OTHER SECTIONS, TOP CHORD TO BE SHEATHED OR MAX. PURLIN SPACING = 2.62 FT.

MAX. UNBRACED BOTTOM CHORD LENGTH = 10.00 FT OR RIGID CEILING DIRECTLY APPLIED.

ALL PITCH BREAKS AND PERIMETER CORNER JOINTS MUST BE LATERALLY RESTRAINED.

2x6 DRY SPF No.2 T-BRACE AT G-K

FASTEN T AND I-BRACES TO NARROW EDGE OF WEB WITH ONE ROW PER PLY OF 3" COMMON WIRE NAILS @ 6" O.C. WITH 3" MINIMUM END DISTANCE. BRACE MUST COVER 90% OF WEB LENGTH.

END VERTICAL(S) MUST BE SHEATHED OR HAVE BRACES AS INDICATED IN THE MAX. UNBRACED LENGTH COLUMN OF THE TABLE BELOW

LOADING

TOTAL LOAD CASES: (4)

CHORDS

MEMB. FR-TO	MAX. FACTORED FORCE (LBS)	FACTORED VERT. LOAD LC1 (PLF) FROM	TO	MAX CSI (LC)	MAX. UNBRAC LENGTH
A- B	0 / 42	-78.0	-78.0	0.06 (1)	10.00
B- C	-8195 / 0	-78.0	-78.0	0.47 (1)	3.19
C- D	-8110 / 0	-78.0	-78.0	0.23 (1)	3.31
D- E	-6698 / 0	-85.5	-85.5	0.32 (1)	2.00
E- F	-6698 / 0	-85.5	-85.5	0.32 (1)	2.00
F- G	-9255 / 0	-78.0	-78.0	0.84 (1)	3.50
G- H	-11232 / 0	-78.0	-78.0	0.41 (1)	2.62
I- H	-8799 / 0	0.0	0.0	0.32 (1)	5.08
P- B	-8830 / 0	0.0	0.0	0.36 (1)	5.07
P- O	0 / 0	-18.5	-18.5	0.12 (1)	10.00
O- N	0 / 5331	-732.0	-732.0	0.46 (1)	10.00
N- M	0 / 5263	-732.0	-732.0	0.50 (1)	10.00
M- L	0 / 6096	-732.0	-732.0	0.74 (1)	10.00
L- K	0 / 6096	-732.0	-732.0	0.74 (1)	10.00
K- J	0 / 11706	-732.0	-732.0	0.98 (1)	10.00
J- I	0 / 0	-732.0	-732.0	0.11 (1)	10.00

WEBS

MEMB. FR-TO	MAX. FACTORED FORCE (LBS)	MAX CSI (LC)
O- C	0 / 213	0.03 (1)
C- N	-422 / 0	0.15 (1)
N- D	0 / 3459	0.43 (1)
D- M	0 / 2858	0.35 (1)
M- E	-354 / 0	0.23 (1)
M- F	0 / 1199	0.15 (1)
K- F	0 / 5556	0.69 (1)
K- G	-5840 / 0	0.76 (1)
J- G	-6228 / 0	0.49 (1)
J- H	0 / 14369	0.92 (1)
B- O	0 / 5827	0.72 (1)

FACTORED CONCENTRATED LOADS (LBS)

JT	LOC.	LC1	MAX-	MAX+	FACE	DIR.	TYPE	HEEL	CONN.
O	3-9-1	-2871	-2871	---	FRONT	VERT	TOTAL	---	C1

CONNECTION REQUIREMENTS

1) **C1:** A SUITABLE HANGER/MECHANICAL CONNECTION IS REQUIRED.

DESIGN CRITERIA

*** SPECIAL LOADS ANALYSIS ***
GEOMETRY AND/OR BASIC LOADS CHANGED BY USER.
LOADS WERE DERIVED FROM USER INPUT
NO FURTHER MODIFICATIONS WERE MADE

SPECIFIED LOADS:

TOP CH.	LL	=	21.0	PSF
	DL	=	6.0	PSF
BOT CH.	LL	=	0.0	PSF
	DL	=	7.4	PSF
TOTAL LOAD		=	34.4	PSF

SPACING = 24.0 IN. C/C

LOADING IN HIGHEST FLAT SECTION BASED ON PIGGYBACK TRUSS WITH SLOPES OF 6.00/12 AND -6.00/12 AND RESPECTIVE HEEL HEIGHTS OF 0-0 AND 0-0 AND AN ADDITIONAL DEAD LOAD OF 3.0 P.S.F.

LOADING IN OTHER FLAT SECTIONS BASED ON A SLOPE OF 6.00/12

GIRDER TYPE: CStdGirder
START DISTANCE = 3-9-1
START SPAN CARRIED = 31-7-0
END DISTANCE = 22-0-0
END SPAN CARRIED = 31-7-0
END WALL WIDTH = 0-0
APPLIED TO FRONT SIDE OF BOTTOM CHORD.
- ADDT'L LOADS BASED ON 55 % OF GSL.

*** NON STANDARD GIRDER ***
ADDT'L USER-DEFINED LOADS APPLIED TO ALL LOAD CASES.

THIS TRUSS IS DESIGNED FOR RESIDENTIAL OR SMALL BUILDING REQUIREMENTS OF PART 9, NBCC 2015

THIS DESIGN COMPLIES WITH:
- PART 9 OF BCBC 2018 , ABC 2019
- PART 9 OF OBC 2012 (2019 AMENDMENT)
- CSA 086-14
- TPIC 2014

(55 % OF 23.0 P.S.F. G.S.L. PLUS 8.4 P.S.F. RAIN LOAD) EQUALS 21.0 P.S.F. SPECIFIED ROOF LIVE LOAD

ALLOWABLE DEFL.(LL)= L/360 (0.73")
CALCULATED VERT. DEFL.(LL) = L/ 999 (0.17")
ALLOWABLE DEFL.(TL)= L/360 (0.73")
CALCULATED VERT. DEFL.(TL) = L/ 774 (0.34")

CSI: TC=0.84/1.00 (F-G:1) , BC=0.98/1.00 (J-K:1) , WB=0.92/1.00 (H-J:1) , SSI=0.79/1.00 (J-K:1)

DOL LUMBER=1.00 NAIL=1.00 LS BEND=1.00 COMP=1.00 SHEAR=1.00 TENS= 1.00

COMPANION LIVE LOAD FACTOR = 1.00

AUTOSOLVE RIGHT HEEL ONLY

TRUSS PLATE MANUFACTURER IS NOT RESPONSIBLE FOR QUALITY CONTROL IN THE TRUSS MANUFACTURING PLANT .

CONTINUED ON PAGE 2

PLATES (table is in inches)

JT	TYPE	PLATES	W	LEN	Y	X
B	TMVW-t	MT20	6.0	9.0	1.75	3.50
C	TMWW-t	MT20	4.0	6.0	2.00	2.75
D	TTWW-h	MT20	7.0	8.0	Edge	2.75
E	TMW+w	MT20	2.0	4.0		
F	TTWW-h	MT20	6.0	7.0	2.00	4.25
G	TTWW-m	MT20	7.0	8.0	3.25	4.00
H	TMVW-t	MT20	6.0	12.0	1.50	Edge
I	BMV1+t	MT20	6.0	9.0	Edge	0.50
J	BMWW-t	MT20	10.0	12.0		
K	BMWW+t	MT20	7.0	8.0	4.25	2.75
L	BS-t	MT20	4.0	6.0		
M	BMWWW+t	MT20	6.0	7.0	4.25	2.00
N	BMWW+t	MT20	4.0	9.0		
O	BMWW+t	MT20	6.0	7.0	4.00	1.75
P	BMV1+t	MT20	6.0	9.0	5.50	

Edge - INDICATES REFERENCE CORNER OF PLATE TOUCHES EDGE OF CHORD.

NAIL VALUES

PLATE	GRIP(DRY) (PSI)		SHEAR (PLI)		SECTION (PLI)	
	MAX	MIN	MAX	MIN	MAX	MIN
MT20	650	371	1747	788	1987	1873

PLATE PLACEMENT TOL. = 0.250 inches

PLATE ROTATION TOL. = 5.0 Deg.

JSI GRIP= 0.90 (G) (INPUT = 0.90)
JSI METAL= 0.80 (O) (INPUT = 1.00)

LATERAL BRACE(S) SHOWN SHALL BE 2X4 SPF#2

JOB NAME	TRUSS NAME	QUANTITY	PLY	JOB DESC.		DRWG NO.
336337	H314G		1	TRUSS DESC.	JT 45147	E21104428

Alpa Roof Truss, Maple

Version 8.420 S Jan 21 2021 MiTek Industries, Inc. Thu Oct 14 16:58:54 2021 Page 1

ID:hd511hZTz_bdeQoS817GKByhVxV-BIWrMZnQKUoWafhKfLhOqME?HTdh_COAMA44hsyTS9l

Scale = 1:35.8

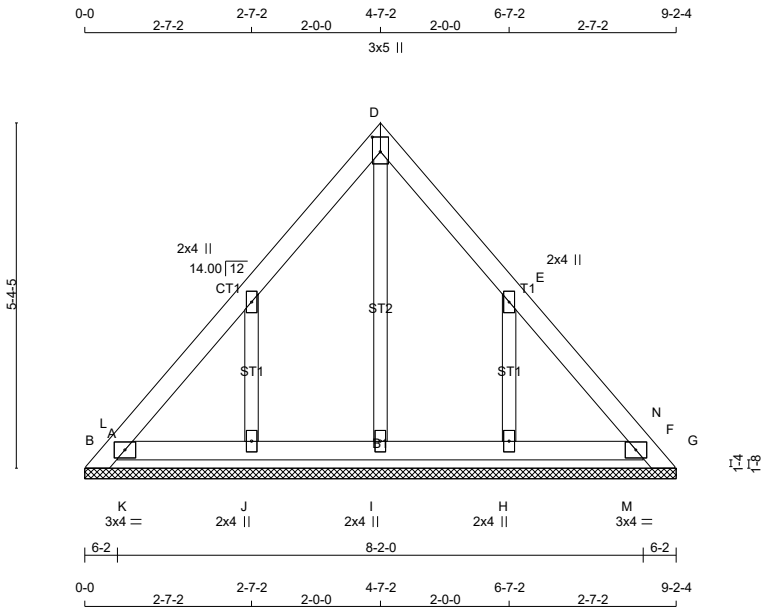

TOTAL WEIGHT = 33 lb

[M]

LUMBER

N. L. G. A. RULES

CHORDS	SIZE		LUMBER	DESCR.
A - D	2x4	DRY	No.2	SPF
D - G	2x4	DRY	No.2	SPF
B - F	2x4	DRY	No.2	SPF
ALL WEBS	2x3	DRY	No.2	SPF
ALL GABLE WEBS	2x3	DRY	No.2	SPF

DRY: SEASONED LUMBER.

GABLE STUDS SPACED AT 2-0-0 OC.

PLATES (table is in inches)

JT	TYPE	PLATES	W	LEN	Y	X
B	TMB1-I	MT20	3.0	4.0		
C	TMW+w	MT20	2.0	4.0		
D	TTW+p	MT20	3.0	5.0	2.75	1.50
E	TMW+w	MT20	2.0	4.0		
F	TMB1-I	MT20	3.0	4.0		
H, I, J						
H	BMW1+w	MT20	2.0	4.0		

LATERAL BRACE(S) SHOWN SHALL BE 2X4 SPF#2

DIMENSIONS, SUPPORTS AND LOADINGS SPECIFIED BY FABRICATOR TO BE VERIFIED BY BUILDING DESIGNER

BEARINGS

THIS TRUSS DESIGNED FOR CONTINUOUS BEARINGS.

THIS TRUSS REQUIRES RIGID SHEATHING ON EXPOSED FACE.

BEVELED PLATE OR SHIM REQUIRED TO PROVIDE FULL BEARING SURFACE WITH TRUSS CHORD AT JT(S): I , J , H

PROVIDE ANCHORAGE AT BEARING JOINT A FOR 150 LBS FACTORED UPLIFT
PROVIDE ANCHORAGE AT BEARING JOINT G FOR 150 LBS FACTORED UPLIFT
BEARING MATERIAL TO BE SPF NO.2 OR BETTER AT JOINT(S)

BRACING

TOP CHORD TO BE SHEATHED OR MAX. PURLIN SPACING = 6.25 FT.
MAX. UNBRACED BOTTOM CHORD LENGTH = 10.00 FT OR RIGID CEILING DIRECTLY APPLIED.

ALL PITCH BREAKS AND PERIMETER CORNER JOINTS MUST BE LATERALLY RESTRAINED.

LOADING

TOTAL LOAD CASES: (4)

CHORDS

MEMB. FR-TO	MAX. FACTORED FORCE (LBS)	FACTORED VERT. LOAD LC1 (PLF) FROM	TO	MAX CSI (LC)	MAX. UNBRAC LENGTH
A- B	0 / 24	-96.5	-96.5	0.02 (1)	10.00
B- L	-93 / 0	-78.0	-78.0	0.02 (1)	6.25
L- C	-42 / 0	-78.0	-78.0	0.05 (1)	6.25
C- D	-53 / 0	-78.0	-78.0	0.05 (1)	6.25
D- E	-53 / 0	-78.0	-78.0	0.05 (1)	6.25
E- N	-42 / 0	-78.0	-78.0	0.05 (1)	6.25
N- F	-93 / 0	-78.0	-78.0	0.02 (1)	6.25
F- G	0 / 24	-96.5	-96.5	0.02 (1)	10.00
B- K	0 / 34	-18.5	-18.5	0.01 (1)	10.00
K- J	0 / 34	-18.5	-18.5	0.02 (4)	10.00
J- I	0 / 26	-18.5	-18.5	0.02 (4)	10.00
I- H	0 / 26	-18.5	-18.5	0.02 (4)	10.00
H- M	0 / 34	-18.5	-18.5	0.02 (4)	10.00
M- F	0 / 34	-18.5	-18.5	0.01 (1)	10.00

WEBS

MEMB. FR-TO	MAX. FACTORED FORCE (LBS)	MAX CSI (LC)
I- D	-70 / 0	0.03 (1)
J- C	-174 / 0	0.03 (1)
H- E	-174 / 0	0.03 (1)
K- L	-15 / 23	0.00 (1)
M- N	-15 / 23	0.00 (1)

DESIGN CRITERIA

SPECIFIED LOADS:

TOP CH.	LL	=	21.0	PSF
	DL	=	6.0	PSF
BOT CH.	LL	=	0.0	PSF
	DL	=	7.4	PSF
TOTAL LOAD		=	34.4	PSF

SPACING = 24.0 IN. C/C

THIS TRUSS IS DESIGNED FOR RESIDENTIAL OR SMALL BUILDING REQUIREMENTS OF PART 9, NBCC 2015

THIS DESIGN COMPLIES WITH:
- PART 9 OF BCBC 2018 , ABC 2019
- PART 9 OF OBC 2012 (2019 AMENDMENT)
- CSA 086-14
- TPIC 2014

(55 % OF 23.0 P.S.F. G.S.L. PLUS 8.4 P.S.F. RAIN LOAD) EQUALS 21.0 P.S.F. SPECIFIED ROOF LIVE LOAD

CSI: TC=0.05/1.00 (C-D:1) , BC=0.02/1.00 (H-M:4) , WB=0.03/1.00 (C-J:1) , SSI=0.05/1.00 (C-D:1)

DOL LUMBER=1.00 NAIL=1.00 LS BEND=1.10 COMP=1.10 SHEAR=1.10 TENS= 1.10

COMPANION LIVE LOAD FACTOR = 1.00

TRUSS PLATE MANUFACTURER IS NOT RESPONSIBLE FOR QUALITY CONTROL IN THE TRUSS MANUFACTURING PLANT .

NAIL VALUES

PLATE	GRIP(DRY) (PSI) MAX	MIN	SHEAR (PLI) MAX	MIN	SECTION (PLI) MAX	MIN
MT20	650	371	1747	788	1987	1873

PLATE PLACEMENT TOL. = 0.250 inches

PLATE ROTATION TOL. = 5.0 Deg.

JSI GRIP= 0.14 (C) (INPUT = 0.90)
JSI METAL= 0.09 (E) (INPUT = 1.00)

JOB NAME	TRUSS NAME	QUANTITY	PLY	JOB DESC.		DRWG NO.
336337	H314P		1	TRUSS DESC.	JT 45147	E21104429

Alpa Roof Truss, Maple

Version 8.420 S Jan 21 2021 MiTek Industries, Inc. Thu Oct 14 16:58:56 2021 Page 1

ID:hd511hZTz_bdeQoS817GKByhVxV-7gecnEogs62Epzrjmmjsvn KJ5GH7S6CTqUZBmkyTS9j

Scale = 1:35.1

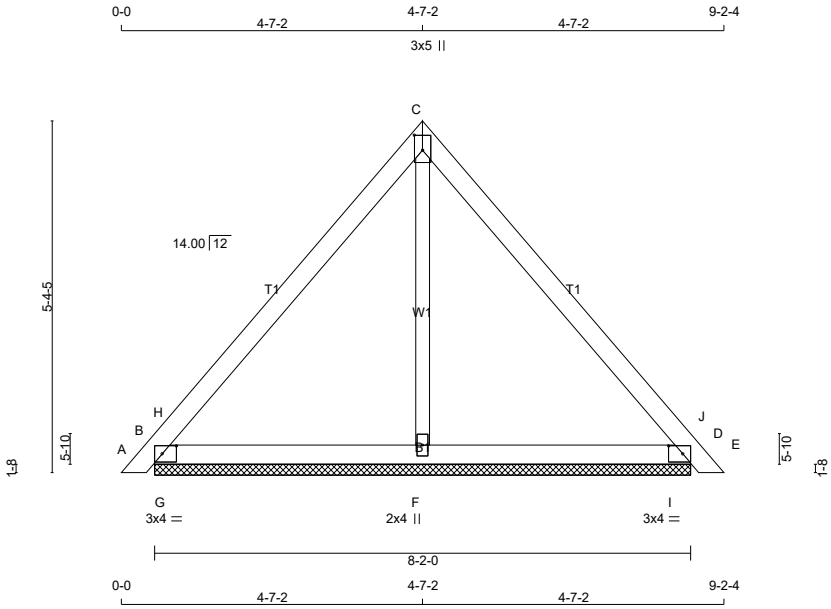

TOTAL WEIGHT = 29 lb

[M]

LUMBER

N. L. G. A. RULES

CHORDS	SIZE		LUMBER	DESCR.
A - C	2x4	DRY	No.2	SPF
C - E	2x4	DRY	No.2	SPF
B - D	2x4	DRY	No.2	SPF
ALL WEBS	2x3	DRY	No.2	SPF

DRY: SEASONED LUMBER.

PLATES (table is in inches)

JT	TYPE	PLATES	W	LEN	Y	X
B	TMB1-I	MT20	3.0	4.0	1.50	2.50
C	TTW+p	MT20	3.0	5.0	2.75	1.50
D	TMB1-I	MT20	3.0	4.0	1.50	2.50
F	BMW1+w	MT20	2.0	4.0		

LATERAL BRACE(S) SHOWN SHALL BE 2X4 SPF#2

DIMENSIONS, SUPPORTS AND LOADINGS SPECIFIED BY FABRICATOR TO BE VERIFIED BY BUILDING DESIGNER

BEARINGS

JT	FACTORED GROSS REACTION VERT	HORZ	MAXIMUM FACTORED GROSS REACTION DOWN	HORZ	UPLIFT	INPUT BRG IN-SX	REQRD BRG IN-SX
B	330	0	330	0	0	8-2-0	1-8
D	330	0	330	0	0	8-2-0	1-8
F	190	0	190	0	0	8-2-0	1-8

UNFACTORED REACTIONS

JT	1ST LCASE COMBINED	MAX./MIN. COMPONENT REACTIONS SNOW	LIVE	PERM.LIVE	WIND	DEAD	SOIL
B	232	157 / 0	0 / 0	0 / 0	0 / 0	75 / 0	0 / 0
D	232	157 / 0	0 / 0	0 / 0	0 / 0	75 / 0	0 / 0
F	140	61 / 0	0 / 0	0 / 0	0 / 0	78 / 0	0 / 0

BEARING MATERIAL TO BE SPF NO.2 OR BETTER AT JOINT(S) B, D, F

BRACING

TOP CHORD TO BE SHEATHED OR MAX. PURLIN SPACING = 6.25 FT.
MAX. UNBRACED BOTTOM CHORD LENGTH = 10.00 FT OR RIGID CEILING DIRECTLY APPLIED.

ALL PITCH BREAKS AND PERIMETER CORNER JOINTS MUST BE LATERALLY RESTRAINED.

LOADING

TOTAL LOAD CASES: (4)

CHORDS MEMB. FR-TO	MAX. FACTORED FORCE (LBS)	FACTORED VERT. LOAD (PLF) FROM	TO	LC1 CSI (LC)	MAX UNBRAC LENGTH	WEBS MEMB. FR-TO	MAX. FACTORED FORCE (LBS)	MAX CSI (LC)
A- B	0 / 11	-78.0	-78.0	0.01 (1)	10.00	F- C	-23 / 6	0.01 (1)
B- H	-10 / 183	-78.0	-78.0	0.14 (1)	10.00	G- H	-571 / 0	0.00 (1)
H- C	-175 / 0	-78.0	-78.0	0.16 (1)	6.25	I- J	-571 / 0	0.00 (1)
C- J	-175 / 0	-78.0	-78.0	0.16 (1)	6.25			
J- D	-10 / 183	-78.0	-78.0	0.14 (1)	10.00			
D- E	0 / 11	-78.0	-78.0	0.01 (1)	10.00			
B- G	0 / 104	-18.5	-18.5	0.15 (1)	10.00			
G- F	0 / 104	-18.5	-18.5	0.15 (1)	10.00			
F- I	0 / 104	-18.5	-18.5	0.15 (1)	10.00			
I- D	0 / 104	-18.5	-18.5	0.15 (1)	10.00			

DESIGN CRITERIA

SPECIFIED LOADS:

TOP CH.	LL	=	21.0	PSF
	DL	=	6.0	PSF
BOT CH.	LL	=	0.0	PSF
	DL	=	7.4	PSF
TOTAL LOAD		=	34.4	PSF

SPACING = 24.0 IN. C/C

THIS TRUSS IS DESIGNED FOR RESIDENTIAL OR SMALL BUILDING REQUIREMENTS OF PART 9, NBCC 2015

THIS DESIGN COMPLIES WITH:
- PART 9 OF BCBC 2018 , ABC 2019
- PART 9 OF OBC 2012 (2019 AMENDMENT)
- CSA 086-14
- TPIC 2014

(55 % OF 23.0 P.S.F. G.S.L. PLUS 8.4 P.S.F. RAIN LOAD) EQUALS 21.0 P.S.F. SPECIFIED ROOF LIVE LOAD

CSI: TC=0.16/1.00 (C-H:1) , BC=0.15/1.00 (B-G:1) , WB=0.01/1.00 (C-F:1) , SSI=0.44/1.00 (B-G:1)

DOL LUMBER=1.00 NAIL=1.00 LS BEND=1.10 COMP=1.10 SHEAR=1.10 TENS= 1.10

COMPANION LIVE LOAD FACTOR = 1.00

TRUSS PLATE MANUFACTURER IS NOT RESPONSIBLE FOR QUALITY CONTROL IN THE TRUSS MANUFACTURING PLANT .

NAIL VALUES

PLATE	GRIP(DRY) (PSI) MAX	MIN	SHEAR (PLI) MAX	MIN	SECTION (PLI) MAX	MIN
MT20	650	371	1747	788	1987	1873

PLATE PLACEMENT TOL. = 0.250 inches

PLATE ROTATION TOL. = 5.0 Deg.

JSI GRIP= 0.40 (B) (INPUT = 0.90)
JSI METAL= 0.08 (D) (INPUT = 1.00)

JOB NAME	TRUSS NAME	QUANTITY	PLY	JOB DESC.		DRWG NO.
336337	H315P		2	TRUSS DESC.	JT 45147	E21104430

Alpa Roof Truss, Maple

Version 8.420 S Jan 21 2021 MiTek Industries, Inc. Thu Oct 14 16:58:57 2021 Page 1

ID:hd511hZTz bdeQoS817GKByhVxV-btC apJdPB5R7QvKTE5S sV3geYBZXc38IkIAyTS9i

Scale = 1:35.1

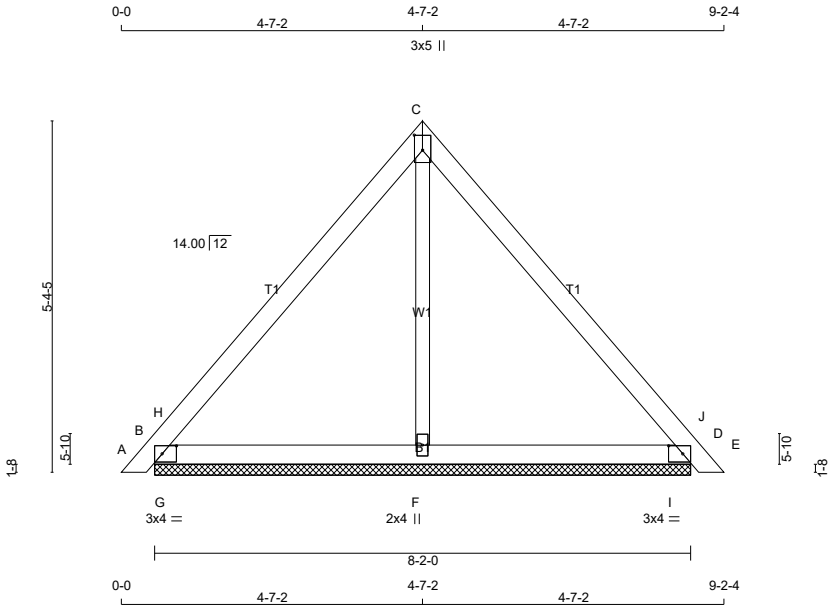

TOTAL WEIGHT = 2 X 29 = 58 lb

[M]

LUMBER

N. L. G. A. RULES

CHORDS	SIZE		LUMBER	DESCR.
A - C	2x4	DRY	No.2	SPF
C - E	2x4	DRY	No.2	SPF
B - D	2x4	DRY	No.2	SPF
ALL WEBS	2x3	DRY	No.2	SPF

DRY: SEASONED LUMBER.

DESIGN CONSISTS OF 2 TRUSSES BUILT SEPARATELY THEN FASTENED TOGETHER AS FOLLOWS:

CHORDS	#ROWS	SURFACE SPACING (IN)	LOAD(PLF)
TOP CHORDS : (0.122"X3") SPIRAL NAILS			
A- C	1	12	TOP
C- E	1	12	TOP
BOTTOM CHORDS : (0.122"X3") SPIRAL NAILS			
B- D	1	12	TOP
WEBS : (0.122"X3") SPIRAL NAILS			
2x3	1	6	

NAILS TO BE DRIVEN FROM ONE SIDE ONLY.

TOP - COMPONENTS ARE LOADED FROM THE TOP AND MUST BE PLACED ON TOP EDGE OF ALL PLIES FOR THE LOAD TO BE TRANSFERRED TO EACH PLY.

PLATES (table is in inches)

JT	TYPE	PLATES	W	LEN	Y	X
B	TMB1-I	MT20	3.0	4.0	1.50	2.50
C	TTW+p	MT20	3.0	5.0	2.75	1.50
D	TMB1-I	MT20	3.0	4.0	1.50	2.50
F	BMW1+w	MT20	2.0	4.0		

LATERAL BRACE(S) SHOWN SHALL BE 2X4 SPF#2

DIMENSIONS, SUPPORTS AND LOADINGS SPECIFIED BY FABRICATOR TO BE VERIFIED BY BUILDING DESIGNER

BEARINGS

JT	FACTORED GROSS REACTION VERT	HORZ	MAXIMUM FACTORED GROSS REACTION DOWN	HORZ	UPLIFT	INPUT BRG IN-SX	REQRD BRG IN-SX
B	332	0	332	0	0	8-2-0	1-8
D	332	0	332	0	0	8-2-0	1-8
F	185	0	185	0	0	8-2-0	1-8

UNFACTORED REACTIONS

JT	1ST LCASE COMBINED	MAX./MIN. COMPONENT REACTIONS SNOW	LIVE	PERM.LIVE	WIND	DEAD	SOIL
B	234	159 / 0	0 / 0	0 / 0	0 / 0	75 / 0	0 / 0
D	234	159 / 0	0 / 0	0 / 0	0 / 0	75 / 0	0 / 0
F	137	59 / 0	0 / 0	0 / 0	0 / 0	78 / 0	0 / 0

BEARING MATERIAL TO BE SPF NO.2 OR BETTER AT JOINT(S) B, D, F

BRACING

TOP CHORD TO BE SHEATHED OR MAX. PURLIN SPACING = 6.25 FT.

MAX. UNBRACED BOTTOM CHORD LENGTH = 10.00 FT OR RIGID CEILING DIRECTLY APPLIED.

ALL PITCH BREAKS AND PERIMETER CORNER JOINTS MUST BE LATERALLY RESTRAINED.

LOADING

TOTAL LOAD CASES: (4)

CHORDS

MEMB. FR-TO	MAX. FACTORED FORCE (LBS)	FACTORED VERT. LOAD (PLF) FROM	TO	LC1 MAX CSI (LC)	MAX. UNBRAC LENGTH
A- B	0 / 11	-78.0	-78.0	0.01 (1)	10.00
B- H	-12 / 168	-78.0	-78.0	0.07 (1)	6.25
H- C	-177 / 0	-78.0	-78.0	0.08 (1)	6.25
C- J	-177 / 0	-78.0	-78.0	0.08 (1)	6.25
J- D	-12 / 168	-78.0	-78.0	0.07 (1)	6.25
D- E	0 / 11	-78.0	-78.0	0.01 (1)	10.00
B- G	0 / 105	-18.5	-18.5	0.07 (1)	10.00
G- F	0 / 105	-18.5	-18.5	0.07 (1)	10.00
F- I	0 / 105	-18.5	-18.5	0.07 (1)	10.00
I- D	0 / 105	-18.5	-18.5	0.07 (1)	10.00

WEBS

MEMB. FR-TO	MAX. FACTORED FORCE (LBS)	MAX CSI (LC)
F- C	-20 / 6	0.00 (1)
G- H	-557 / 0	0.00 (1)
I- J	-557 / 0	0.00 (1)

DESIGN CRITERIA

SPECIFIED LOADS:

TOP CH.	LL	=	21.0	PSF
	DL	=	6.0	PSF
BOT CH.	LL	=	0.0	PSF
	DL	=	7.4	PSF
TOTAL LOAD		=	34.4	PSF

SPACING = 24.0 IN. C/C

THIS TRUSS IS DESIGNED FOR RESIDENTIAL OR SMALL BUILDING REQUIREMENTS OF PART 9, NBCC 2015

THIS DESIGN COMPLIES WITH:
- PART 9 OF BCBC 2018 , ABC 2019
- PART 9 OF OBC 2012 (2019 AMENDMENT)
- CSA 086-14
- TPIC 2014

(55 % OF 23.0 P.S.F. G.S.L. PLUS 8.4 P.S.F. RAIN LOAD) EQUALS 21.0 P.S.F. SPECIFIED ROOF LIVE LOAD

CSI: TC=0.08/1.00 (C-J:1) , BC=0.07/1.00 (F-I:1) , WB=0.00/1.00 (C-F:1) , SSI=0.21/1.00 (D-I:1)

DOL LUMBER=1.00 NAIL=1.00 LS BEND=1.10 COMP=1.10 SHEAR=1.10 TENS= 1.10

COMPANION LIVE LOAD FACTOR = 1.00

TRUSS PLATE MANUFACTURER IS NOT RESPONSIBLE FOR QUALITY CONTROL IN THE TRUSS MANUFACTURING PLANT .

NAIL VALUES

PLATE	GRIP(DRY) (PSI) MAX	MIN	SHEAR (PLI) MAX	MIN	SECTION (PLI) MAX	MIN
MT20	650	371	1747	788	1987	1873

PLATE PLACEMENT TOL. = 0.250 inches

PLATE ROTATION TOL. = 5.0 Deg.

JSI GRIP= 0.20 (D) (INPUT = 0.90)
JSI METAL= 0.04 (D) (INPUT = 1.00)

JOB NAME	TRUSS NAME	QUANTITY	PLY	JOB DESC.		DRWG NO.
336337	J02		1	TRUSS DESC.	JT 45147	E21104431

Alpa Roof Truss, Maple

Version 8.420 S Jan 21 2021 MiTek Industries, Inc. Thu Oct 14 16:58:59 2021 Page 1

ID:hd511hZTz bdeQoS817GKByhVxV-YFKkPGrZ91RpqQaIRuHZXPymsUJcfT4vWSnrM3yTS9g

Scale = 1:41.5

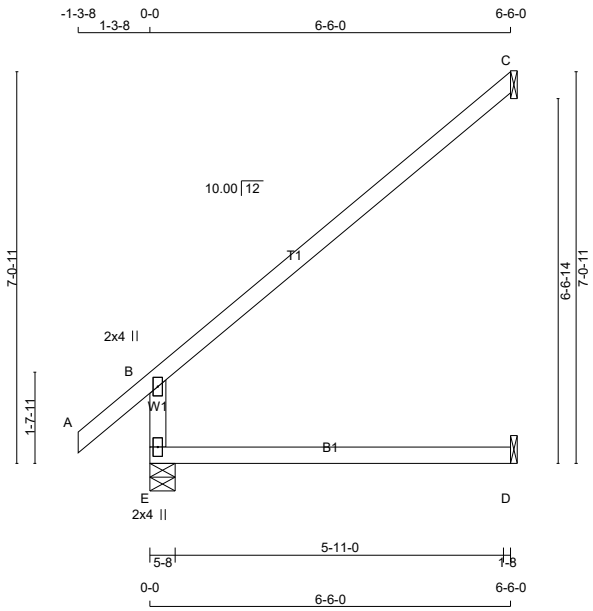

TOTAL WEIGHT = 7 X 21 = 144 lb

LUMBER

N. L. G. A. RULES

CHORDS	SIZE		LUMBER	DESCR.
E - B	2x4	DRY	No.2	SPF
A - C	2x4	DRY	No.2	SPF
E - D	2x4	DRY	No.2	SPF

DRY: SEASONED LUMBER.

PLATES (table is in inches)

JT	TYPE	PLATES	W	LEN	Y	X
B	TMV+p	MT20	2.0	4.0		
E	BMV1+p	MT20	2.0	4.0		

LATERAL BRACE(S) SHOWN SHALL BE 2X4 SPF#2

DIMENSIONS, SUPPORTS AND LOADINGS SPECIFIED BY FABRICATOR TO BE VERIFIED BY BUILDING DESIGNER

BEARINGS

JT	FACTORED GROSS REACTION VERT	HORZ	MAXIMUM FACTORED GROSS REACTION DOWN	HORZ	UPLIFT	INPUT BRG IN-SX	REQRD BRG IN-SX
E	494	0	494	0	0	5-8	1-8
C	190	0	190	0	0	1-8	1-8
D	51	0	57	0	0	1-8	1-8

SEE MITEK STANDARD DETAIL B97791H FOR CONNECTION TO JOINT(S) C , D

UNFACTORED REACTIONS

JT	1ST LCASE COMBINED	MAX./MIN. COMPONENT REACTIONS SNOW	LIVE	PERM.LIVE	WIND	DEAD	SOIL
E	350	229 / 0	0 / 0	0 / 0	0 / 0	121 / 0	0 / 0
C	132	102 / 0	0 / 0	0 / 0	0 / 0	29 / 0	0 / 0
D	41	0 / 0	0 / 0	0 / 0	0 / 0	41 / 0	0 / 0

BEARING MATERIAL TO BE SPF NO.2 OR BETTER AT JOINT(S) E

BRACING

TOP CHORD TO BE SHEATHED OR MAX. PURLIN SPACING = 6.25 FT.
MAX. UNBRACED BOTTOM CHORD LENGTH = 10.00 FT OR RIGID CEILING DIRECTLY APPLIED.

ALL PITCH BREAKS AND PERIMETER CORNER JOINTS MUST BE LATERALLY RESTRAINED.

LOADING

TOTAL LOAD CASES: (4)

CHORDS

MEMB. FR-TO	MAX. FACTORED FORCE (LBS)	FACTORED VERT. LOAD (PLF) FROM	TO	LC1 MAX CSI (LC)	MAX. UNBRAC LENGTH
E- B	-425 / 0	0.0	0.0	0.13 (4)	7.81
A- B	0 / 35	-78.0	-78.0	0.11 (1)	10.00
B- C	-41 / 0	-78.0	-78.0	0.44 (1)	6.25
E- D	0 / 0	-18.5	-18.5	0.16 (4)	10.00

WEBS

MEMB. FR-TO	MAX. FACTORED FORCE (LBS)	MAX CSI (LC)

DESIGN CRITERIA

SPECIFIED LOADS:

TOP CH.	LL =	21.0	PSF
	DL =	6.0	PSF
BOT CH.	LL =	0.0	PSF
	DL =	7.4	PSF
TOTAL LOAD	=	34.4	PSF

SPACING = 24.0 IN. C/C

THIS TRUSS IS DESIGNED FOR RESIDENTIAL OR SMALL BUILDING REQUIREMENTS OF PART 9, NBCC 2015

THIS DESIGN COMPLIES WITH:
- PART 9 OF BCBC 2018 , ABC 2019
- PART 9 OF OBC 2012 (2019 AMENDMENT)
- CSA 086-14
- TPIC 2014

DESIGN ASSUMPTIONS
-OVERHANG NOT TO BE ALTERED OR CUT OFF.

(55 % OF 23.0 P.S.F. G.S.L. PLUS 8.4 P.S.F. RAIN LOAD) EQUALS 21.0 P.S.F. SPECIFIED ROOF LIVE LOAD

ALLOWABLE DEFL.(LL)= L/360 (0.22")
CALCULATED VERT. DEFL.(LL) = L/ 999 (0.00")
ALLOWABLE DEFL.(TL)= L/360 (0.22")
CALCULATED VERT. DEFL.(TL) = L/ 999 (0.05")

CSI: TC=0.44/1.00 (B-C:1) , BC=0.16/1.00 (D-E:4) , WB=0.00/1.00 (n/a:0) , SSI=0.19/1.00 (B-C:1)

DOL LUMBER=1.00 NAIL=1.00 LS BEND=1.10 COMP=1.10 SHEAR=1.10 TENS= 1.10

COMPANION LIVE LOAD FACTOR = 1.00

AUTOSOLVE RIGHT HEEL ONLY

TRUSS PLATE MANUFACTURER IS NOT RESPONSIBLE FOR QUALITY CONTROL IN THE TRUSS MANUFACTURING PLANT .

NAIL VALUES

PLATE	GRIP(DRY) (PSI) MAX	MIN	SHEAR (PLI) MAX	MIN	SECTION (PLI) MAX	MIN
MT20	650	371	1747	788	1987	1873

PLATE PLACEMENT TOL. = 0.250 inches

PLATE ROTATION TOL. = 5.0 Deg.

JSI GRIP= 0.29 (B) (INPUT = 0.90)
JSI METAL= 0.23 (B) (INPUT = 1.00)

[M][F]

JOB NAME	TRUSS NAME	QUANTITY	PLY	JOB DESC.		DRWG NO.
336337	J06		1	TRUSS DESC.	JT 45147	E21104432

Alpa Roof Truss, Maple

Version 8.420 S Jan 21 2021 MiTek Industries, Inc. Thu Oct 14 16:59:00 2021 Page 1

ID:hd511hZTz bdeQoS817GKByhVxV-0St7ccrBwKZgIa9U?boo3dU ougVOwK2l6XOvVyTS9f

Scale = 1:37.5

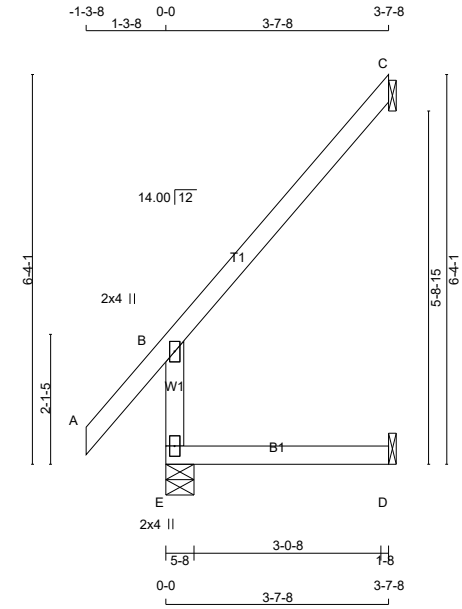

TOTAL WEIGHT = 6 X 15 = 91 lb

[M]

LUMBER

N. L. G. A. RULES

CHORDS	SIZE		LUMBER	DESCR.
E - B	2x4	DRY	No.2	SPF
A - C	2x4	DRY	No.2	SPF
E - D	2x4	DRY	No.2	SPF

DRY: SEASONED LUMBER.

PLATES (table is in inches)

JT	TYPE	PLATES	W	LEN	Y	X
B	TMV+p	MT20	2.0	4.0		
E	BMV1+p	MT20	2.0	4.0		

LATERAL BRACE(S) SHOWN SHALL BE 2X4 SPF#2

DIMENSIONS, SUPPORTS AND LOADINGS SPECIFIED BY FABRICATOR TO BE VERIFIED BY BUILDING DESIGNER

BEARINGS

JT	FACTORED GROSS REACTION VERT	HORZ	MAXIMUM FACTORED GROSS REACTION DOWN	HORZ	UPLIFT	INPUT BRG IN-SX	REQRD BRG IN-SX
E	323	0	323	0	0	5-8	1-8
C	106	0	106	0	0	1-8	1-8
D	30	0	34	0	0	1-8	1-8

SEE MITEK STANDARD DETAIL B97791H FOR CONNECTION TO JOINT(S) C , D

UNFACTORED REACTIONS

JT	1ST LCASE COMBINED	MAX./MIN. COMPONENT REACTIONS SNOW	LIVE	PERM.LIVE	WIND	DEAD	SOIL
E	227	154 / 0	0 / 0	0 / 0	0 / 0	74 / 0	0 / 0
C	74	57 / 0	0 / 0	0 / 0	0 / 0	16 / 0	0 / 0
D	24	0 / 0	0 / 0	0 / 0	0 / 0	24 / 0	0 / 0

BEARING MATERIAL TO BE SPF NO.2 OR BETTER AT JOINT(S) E

BRACING

TOP CHORD TO BE SHEATHED OR MAX. PURLIN SPACING = 6.25 FT.
MAX. UNBRACED BOTTOM CHORD LENGTH = 10.00 FT OR RIGID CEILING DIRECTLY APPLIED.

ALL PITCH BREAKS AND PERIMETER CORNER JOINTS MUST BE LATERALLY RESTRAINED.

LOADING

TOTAL LOAD CASES: (7)

CHORDS

MEMB. FR-TO	MAX. FACTORED FORCE (LBS)	FACTORED VERT. LOAD (PLF) FROM	TO	LC1 MAX CSI (LC)	MAX. UNBRAC LENGTH
E- B	-286 / 0	0.0	0.0	0.03 (4)	7.81
A- B	0 / 42	-78.0	-78.0	0.13 (5)	10.00
B- C	-27 / 0	-78.0	-78.0	0.17 (6)	6.25
E- D	0 / 0	-18.5	-18.5	0.06 (4)	10.00

WEBS

MEMB. FR-TO	MAX. FACTORED FORCE (LBS)	MAX CSI (LC)

CANTILEVER ANALYSIS HAS BEEN CONSIDERED IN THIS DESIGN

PATTERN-LOADING CHECK APPLIED TO THIS TRUSS.

DESIGN CRITERIA

SPECIFIED LOADS:

TOP CH.	LL	=	21.0	PSF
	DL	=	6.0	PSF
BOT CH.	LL	=	0.0	PSF
	DL	=	7.4	PSF
TOTAL LOAD		=	34.4	PSF

SPACING = 24.0 IN. C/C

THIS TRUSS IS DESIGNED FOR RESIDENTIAL OR SMALL BUILDING REQUIREMENTS OF PART 9, NBCC 2015

THIS DESIGN COMPLIES WITH:
- PART 9 OF BCBC 2018 , ABC 2019
- PART 9 OF OBC 2012 (2019 AMENDMENT)
- CSA 086-14
- TPIC 2014

DESIGN ASSUMPTIONS
-OVERHANG NOT TO BE ALTERED OR CUT OFF.

(55 % OF 23.0 P.S.F. G.S.L. PLUS 8.4 P.S.F. RAIN LOAD) EQUALS 21.0 P.S.F. SPECIFIED ROOF LIVE LOAD

ALLOWABLE DEFL.(LL)= L/360 (0.19")
CALCULATED VERT. DEFL.(LL) = L/ 999 (0.00")
ALLOWABLE DEFL.(TL)= L/360 (0.19")
CALCULATED VERT. DEFL.(TL) = L/ 999 (0.01")

CSI: TC=0.17/1.00 (B-C:6) , BC=0.06/1.00 (D-E:4) , WB=0.00/1.00 (n/a:0) , SSI=0.09/1.00 (B-C:6)

DOL LUMBER=1.00 NAIL=1.00 LS BEND=1.10 COMP=1.10 SHEAR=1.10 TENS= 1.10

COMPANION LIVE LOAD FACTOR = 1.00

AUTOSOLVE RIGHT HEEL ONLY

TRUSS PLATE MANUFACTURER IS NOT RESPONSIBLE FOR QUALITY CONTROL IN THE TRUSS MANUFACTURING PLANT .

NAIL VALUES

PLATE	GRIP(DRY) (PSI) MAX	MIN	SHEAR (PLI) MAX	MIN	SECTION (PLI) MAX	MIN
MT20	650	371	1747	788	1987	1873

PLATE PLACEMENT TOL. = 0.250 inches

PLATE ROTATION TOL. = 5.0 Deg.

JSI GRIP= 0.23 (B) (INPUT = 0.90)
JSI METAL= 0.14 (B) (INPUT = 1.00)

JOB NAME	TRUSS NAME	QUANTITY	PLY	JOB DESC.		DRWG NO.
336337	J07		1	TRUSS DESC.	JT 45147	E21104433

Alpa Roof Truss, Maple

Version 8.420 S Jan 21 2021 MiTek Industries, Inc. Thu Oct 14 16:59:02 2021 Page 1

ID:hd511hZTz bdeQoS817GKByhVxV-yq?t1ltRSypOXuIt70qG92aJvhMssqpLCQ0VzOyTS9d

Scale = 1:37.4

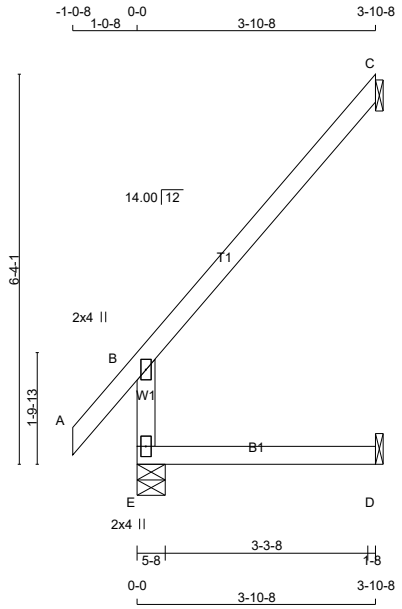

TOTAL WEIGHT = 16 X 15 = 241 lb

LUMBER

N. L. G. A. RULES

CHORDS	SIZE		LUMBER	DESCR.
E - B	2x4	DRY	No.2	SPF
A - C	2x4	DRY	No.2	SPF
E - D	2x4	DRY	No.2	SPF

DRY: SEASONED LUMBER.

PLATES (table is in inches)

JT	TYPE	PLATES	W	LEN	Y	X
B	TMV+p	MT20	2.0	4.0		
E	BMV1+p	MT20	2.0	4.0		

LATERAL BRACE(S) SHOWN SHALL BE 2X4 SPF#2

DIMENSIONS, SUPPORTS AND LOADINGS SPECIFIED BY FABRICATOR TO BE VERIFIED BY BUILDING DESIGNER

BEARINGS

JT	FACTORED GROSS REACTION VERT	HORZ	MAXIMUM FACTORED GROSS REACTION DOWN	HORZ	UPLIFT	INPUT BRG IN-SX	REQRD BRG IN-SX
E	319	0	319	0	0	5-8	1-8
C	113	0	113	0	0	1-8	1-8
D	32	0	35	0	0	1-8	1-8

SEE MITEK STANDARD DETAIL B97791H FOR CONNECTION TO JOINT(S) C , D

UNFACTORED REACTIONS

JT	1ST LCASE COMBINED	MAX./MIN. COMPONENT REACTIONS SNOW	LIVE	PERM.LIVE	WIND	DEAD	SOIL
E	225	150 / 0	0 / 0	0 / 0	0 / 0	75 / 0	0 / 0
C	79	61 / 0	0 / 0	0 / 0	0 / 0	17 / 0	0 / 0
D	25	0 / 0	0 / 0	0 / 0	0 / 0	25 / 0	0 / 0

BEARING MATERIAL TO BE SPF NO.2 OR BETTER AT JOINT(S) E, C

BRACING

TOP CHORD TO BE SHEATHED OR MAX. PURLIN SPACING = 6.25 FT.
MAX. UNBRACED BOTTOM CHORD LENGTH = 10.00 FT OR RIGID CEILING DIRECTLY APPLIED.

ALL PITCH BREAKS AND PERIMETER CORNER JOINTS MUST BE LATERALLY RESTRAINED.

LOADING

TOTAL LOAD CASES: (4)

CHORDS MEMB. FR-TO	MAX. FACTORED FORCE (LBS)	FACTORED VERT. LOAD (PLF) FROM	TO	LC1 MAX CSI (LC)	MAX. UNBRAC LENGTH	WEBS MEMB. FR-TO	MAX. FACTORED FORCE (LBS)	MAX CSI (LC)
E- B	-279 / 0	0.0	0.0	0.04 (4)	7.81			
A- B	0 / 34	-78.0	-78.0	0.08 (1)	10.00			
B- C	-29 / 0	-78.0	-78.0	0.20 (1)	6.25			
E- D	0 / 0	-18.5	-18.5	0.06 (4)	10.00			

[M]

DESIGN CRITERIA

SPECIFIED LOADS:

TOP	CH.	LL	=	21.0	PSF
		DL	=	6.0	PSF
BOT	CH.	LL	=	0.0	PSF
		DL	=	7.4	PSF
TOTAL	LOAD		=	34.4	PSF

SPACING = 24.0 IN. C/C

THIS TRUSS IS DESIGNED FOR RESIDENTIAL OR SMALL BUILDING REQUIREMENTS OF PART 9, NBCC 2015

THIS DESIGN COMPLIES WITH:
- PART 9 OF BCBC 2018 , ABC 2019
- PART 9 OF OBC 2012 (2019 AMENDMENT)
- CSA 086-14
- TPIC 2014

DESIGN ASSUMPTIONS
-OVERHANG NOT TO BE ALTERED OR CUT OFF.

(55 % OF 23.0 P.S.F. G.S.L. PLUS 8.4 P.S.F. RAIN LOAD) EQUALS 21.0 P.S.F. SPECIFIED ROOF LIVE LOAD

ALLOWABLE DEFL.(LL)= L/360 (0.19")
CALCULATED VERT. DEFL.(LL) = L/ 999 (0.00")
ALLOWABLE DEFL.(TL)= L/360 (0.19")
CALCULATED VERT. DEFL.(TL) = L/ 999 (0.01")

CSI: TC=0.20/1.00 (B-C:1) , BC=0.06/1.00 (D-E:4) , WB=0.00/1.00 (n/a:0) , SSI=0.10/1.00 (B-C:1)

DOL LUMBER=1.00 NAIL=1.00 LS BEND=1.10 COMP=1.10 SHEAR=1.10 TENS= 1.10

COMPANION LIVE LOAD FACTOR = 1.00

AUTOSOLVE RIGHT HEEL ONLY

TRUSS PLATE MANUFACTURER IS NOT RESPONSIBLE FOR QUALITY CONTROL IN THE TRUSS MANUFACTURING PLANT .

NAIL VALUES

PLATE	GRIP(DRY) (PSI) MAX	MIN	SHEAR (PLI) MAX	MIN	SECTION (PLI) MAX	MIN
MT20	650	371	1747	788	1987	1873

PLATE PLACEMENT TOL. = 0.250 inches

PLATE ROTATION TOL. = 5.0 Deg.

JSI GRIP= 0.22 (B) (INPUT = 0.90)
JSI METAL= 0.14 (B) (INPUT = 1.00)

JOB NAME	TRUSS NAME	QUANTITY	PLY	JOB DESC.		DRWG NO.
336337	J10		1	TRUSS DESC.	JT 45147	E21104434

Alpha Roof Truss, Maple

Version 8.420 S Jan 21 2021 MiTek Industries, Inc. Thu Oct 14 16:59:04 2021 Page 1

ID:hd511hZTz bdeQoS817GKByhVxV-uD7dSzvizZ36mBSFERskETffPV1JKjJeqkVc2GyTS9b

Scale = 1:39.0

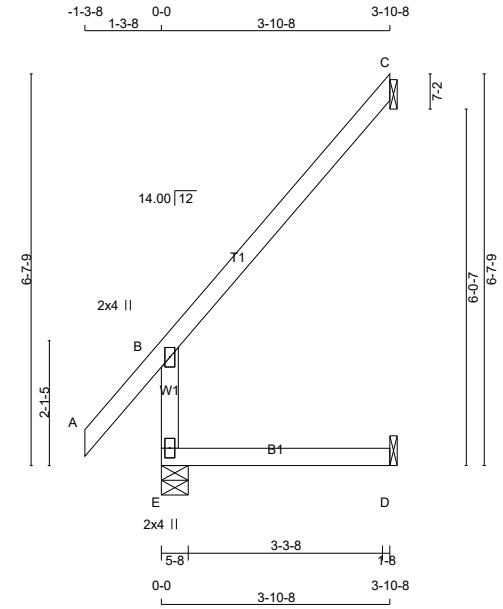

TOTAL WEIGHT = 10 X 16 = 158 lb

[M]

LUMBER

N. L. G. A. RULES

CHORDS	SIZE		LUMBER	DESCR.
E - B	2x4	DRY	No.2	SPF
A - C	2x4	DRY	No.2	SPF
E - D	2x4	DRY	No.2	SPF

DRY: SEASONED LUMBER.

PLATES (table is in inches)

JT	TYPE	PLATES	W	LEN	Y	X
B	TMV+p	MT20	2.0	4.0		
E	BMV1+p	MT20	2.0	4.0		

LATERAL BRACE(S) SHOWN SHALL BE 2X4 SPF#2

DIMENSIONS, SUPPORTS AND LOADINGS SPECIFIED BY FABRICATOR TO BE VERIFIED BY BUILDING DESIGNER

BEARINGS

JT	FACTORED GROSS REACTION VERT	HORZ	MAXIMUM FACTORED GROSS REACTION DOWN	HORZ	UPLIFT	INPUT BRG IN-SX	REQRD BRG IN-SX
E	338	0	338	0	0	5-8	1-8
C	113	0	113	0	0	1-8	1-8
D	32	0	36	0	0	1-8	1-8

SEE MITEK STANDARD DETAIL B97791H FOR CONNECTION TO JOINT(S) C , D

UNFACTORED REACTIONS

JT	1ST LCASE COMBINED	MAX./MIN. COMPONENT REACTIONS SNOW	LIVE	PERM.LIVE	WIND	DEAD	SOIL
E	238	160 / 0	0 / 0	0 / 0	0 / 0	78 / 0	0 / 0
C	79	61 / 0	0 / 0	0 / 0	0 / 0	17 / 0	0 / 0
D	26	0 / 0	0 / 0	0 / 0	0 / 0	26 / 0	0 / 0

BEARING MATERIAL TO BE SPF NO.2 OR BETTER AT JOINT(S) E

BRACING

TOP CHORD TO BE SHEATHED OR MAX. PURLIN SPACING = 6.25 FT.
MAX. UNBRACED BOTTOM CHORD LENGTH = 10.00 FT OR RIGID CEILING DIRECTLY APPLIED.

ALL PITCH BREAKS AND PERIMETER CORNER JOINTS MUST BE LATERALLY RESTRAINED.

LOADING

TOTAL LOAD CASES: (7)

CHORDS MEMB. FR-TO	MAX. FACTORED FORCE (LBS)	VERT. LOAD (PLF) FROM	TO	LC1 MAX CSI (LC)	MAX. UNBRAC LENGTH	WEBS MEMB. FR-TO	MAX. FACTORED FORCE (LBS)	MAX CSI (LC)
E- B	-298 / 0	0.0	0.0	0.03 (4)	7.81			
A- B	0 / 42	-78.0	-78.0	0.13 (5)	10.00			
B- C	-29 / 0	-78.0	-78.0	0.20 (6)	6.25			
E- D	0 / 0	-18.5	-18.5	0.06 (4)	10.00			

CANTILEVER ANALYSIS HAS BEEN CONSIDERED IN THIS DESIGN

PATTERN-LOADING CHECK APPLIED TO THIS TRUSS.

DESIGN CRITERIA

SPECIFIED LOADS:

TOP CH.	LL	=	21.0	PSF
	DL	=	6.0	PSF
BOT CH.	LL	=	0.0	PSF
	DL	=	7.4	PSF
TOTAL LOAD		=	34.4	PSF

SPACING = 24.0 IN. C/C

THIS TRUSS IS DESIGNED FOR RESIDENTIAL OR SMALL BUILDING REQUIREMENTS OF PART 9, NBCC 2015

THIS DESIGN COMPLIES WITH:
- PART 9 OF BCBC 2018 , ABC 2019
- PART 9 OF OBC 2012 (2019 AMENDMENT)
- CSA 086-14
- TPIC 2014

DESIGN ASSUMPTIONS
-OVERHANG NOT TO BE ALTERED OR CUT OFF.

(55 % OF 23.0 P.S.F. G.S.L. PLUS 8.4 P.S.F. RAIN LOAD) EQUALS 21.0 P.S.F. SPECIFIED ROOF LIVE LOAD

ALLOWABLE DEFL.(LL)= L/360 (0.19")
CALCULATED VERT. DEFL.(LL) = L/ 999 (0.00")
ALLOWABLE DEFL.(TL)= L/360 (0.19")
CALCULATED VERT. DEFL.(TL) = L/ 999 (0.01")

CSI: TC=0.20/1.00 (B-C:6) , BC=0.06/1.00 (D-E:4) , WB=0.00/1.00 (n/a:0) , SSI=0.10/1.00 (B-C:6)

DOL LUMBER=1.00 NAIL=1.00 LS BEND=1.10 COMP=1.10 SHEAR=1.10 TENS= 1.10

COMPANION LIVE LOAD FACTOR = 1.00

AUTOSOLVE RIGHT HEEL ONLY

TRUSS PLATE MANUFACTURER IS NOT RESPONSIBLE FOR QUALITY CONTROL IN THE TRUSS MANUFACTURING PLANT .

NAIL VALUES

PLATE	GRIP(DRY) (PSI) MAX	MIN	SHEAR (PLI) MAX	MIN	SECTION (PLI) MAX	MIN
MT20	650	371	1747	788	1987	1873

PLATE PLACEMENT TOL. = 0.250 inches

PLATE ROTATION TOL. = 5.0 Deg.

JSI GRIP= 0.24 (B) (INPUT = 0.90)
JSI METAL= 0.15 (B) (INPUT = 1.00)

TECHNICAL BULLETIN

LUS – Double Shear Joist Hangers

SIMPSON Strong-Tie®

All LUS hangers have double shear nailing. This patented innovation distributes the load through two points on each joist nail for greater strength. It also allows the use of fewer nails, faster installation and the use of common nails for all connections.

Material: 18 gauge

Finish: G90 galvanized

Design:

- Factored resistances are in accordance with CSA O86-14.
- Uplift resistances have been increased 15%. No further increase is permitted.
- Wood shear is not considered in the factored resistances given. The specifier must ensure that the joist and header capacities are capable of withstanding these loads.

Installation:

- Use all specified fasteners.
- Nails: 16d = 0.162" dia. x 3½" long common wire, 10d = 0.148" x 3" long common wire.
- Double shear nails must be driven at an angle through the joist or truss into the header to achieve the table loads.
- Not designed for welded or nailer applications.

Options:

- These hangers cannot be modified

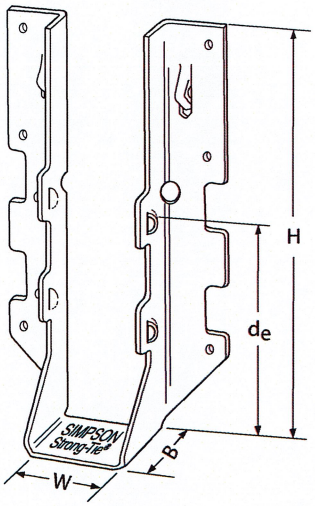

LUS28

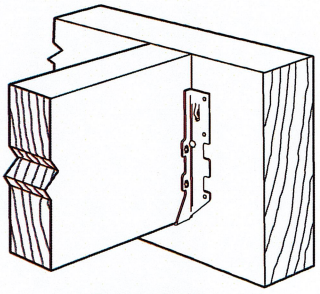

Typical LUS Installation

Model No.	Ga.	Dimensions (in.)				Fasteners		Factored Resistance (lb.)			
								D.Fir-L		S-P-F	
		W	H	B	d_e[1]	Face	Joist	Uplift (K_D=1.15)	Normal (K_D=1.00)	Uplift (K_D=1.15)	Normal (K_D=1.00)
LUS24	18	1 9/16	3 1/8	1 3/4	1 15/16	(4) 10d	(2) 10d	710	1630	645	1155
LUS24-2	18	3 1/8	3 1/8	2	1 13/16	(4) 16d	(2) 16d	835	2020	590	1435
LUS26	18	1 9/16	4 3/4	1 3/4	3 5/8	(4) 10d	(4) 10d	1420	2170	1290	1630
LUS26-2	18	3 1/8	4 7/8	2	4	(4) 16d	(4) 16d	1720	2595	1545	1920
LUS26-3	18	4 5/8	4 3/16	2	3 1/4	(4) 16d	(4) 16d	1720	2595	1545	2340
LUS28	18	1 9/16	6 5/8	1 3/4	3 3/4	(6) 10d	(6) 10d	1420	2520	1290	1790
LUS28-2	18	3 1/8	7	2	4	(6) 16d	(4) 16d	1720	3325	1545	2575
LUS28-3	18	4 5/8	6 1/4	2	3 1/4	(6) 16d	(4) 16d	1720	3325	1545	2375
LUS210	18	1 9/16	7 13/16	1 3/4	3 7/8	(8) 10d	(4) 10d	1420	2785	1290	2210
LUS210-2	18	3 1/8	9	2	6	(8) 16d	(6) 16d	2580	4500	2320	3195
LUS210-3	18	4 5/8	8 3/16	2	5 1/4	(8) 16d	(6) 16d	2580	3345	2320	2375

1. d_e is the distance from the seat of the hanger to the highest joist nail.

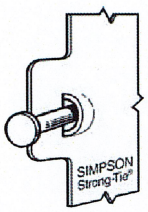

Dome Double Shear Nailing prevents tabs breaking off (available on some models).

U.S. Patent 5,603,580

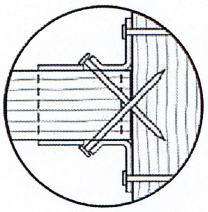

Double Shear Nailing Top View.

LICENSED PROFESSIONAL ENGINEER
04/01/2020
B. D. BUNTING
PROVINCE OF ONTARIO

LIMIT STATES DESIGN

This technical bulletin is effective until June 30, 2022, and reflects information available as of April 1, 2020. This information is updated periodically and should not be relied upon after June 30, 2022. Contact Simpson Strong-Tie for current information and limited warranty or see strongtie.com.

© 2020 Simpson Strong-Tie Company Inc.

(800) 999-5099
strongtie.com

TECHNICAL BULLETIN

HUS/LJS – Double Shear Joist Hangers

SIMPSON Strong-Tie®

All hangers have double shear nailing. This patented innovation distributes the load through two points on each joist nail for greater strength. It also allows the use of fewer nails, faster installation and the use of common nails for all connections. Do not bend or remove tabs.

Material: See table

Finish: G90 galvanized

Design:

- Factored resistances are in accordance with CSA O86 -14.
- Uplift resistances have been increased 15%. No further increase is permitted.
- Wood shear is not considered in the factored resistances given. The specifier must ensure that the joist and header capacities are capable of withstanding these loads.

Installation:

- Use all specified fasteners
- Nails: 16d = 0.162" dia. x 3½" long common wire
- Double shear nails must be driven at an angle through the joist or truss into the header to achieve the table loads
- Not designed for welded or nailer applications

Options:

- See current catalogue for options

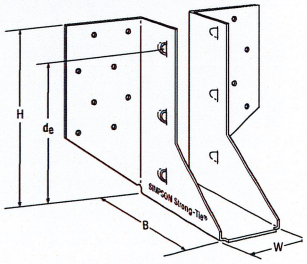

LJS26DS

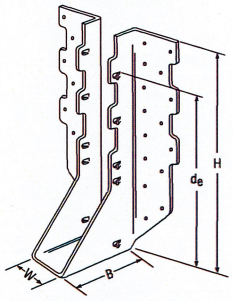

HUS210
(HUS26, HUS28, similar)

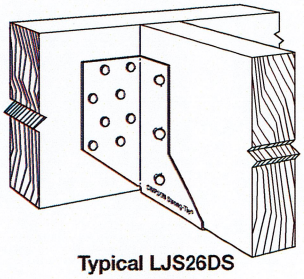

Typical LJS26DS Installation

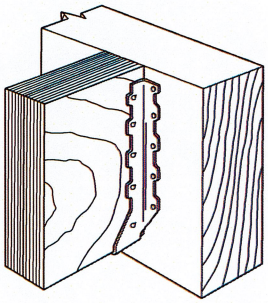

Typical HUS Installation

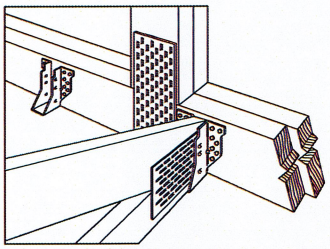

Typical HUS Installation
(Truss Designer to provide fastener quantity for connecting multiple members together)

Model No.	Ga.	Dimensions (in.)				Fasteners		Factored Resistance (lb.)			
								D.Fir-L		S-P-F	
		W	H	B	d_e[1]	Face	Joist	Uplift (K_D=1.15) lb.	Normal (K_D=1.00) lb.	Uplift (K_D=1.15) lb.	Normal (K_D=1.00) lb.
LJS26DS	18	1 9/16	5	3½	4⅝	(16) 16d	(6) 16d	2055	4265	1460	4115
HUS26	16	1⅝	5⅜	3	3 15/16	(14) 16d	(6) 16d	2705	4940	2065	3875
HUS28	16	1⅝	7 3/32	3	6 3/32	(22) 16d	(8) 16d	3605	5365	2675	4345
HUS210	16	1⅝	9 3/32	3	7 31/32	(30) 16d	(10) 16d	4505	5795	4010	4740
HUS1.81/10	16	1 13/16	9	3	8	(30) 16d	(10) 16d	4505	6450	4010	5200

1. d_e is the distance from the seat of the hanger to the highest joist nail.

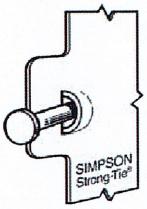

Dome Double Shear Nailing prevents tabs breaking off (available on some models).

U.S. Patent 5,603,580

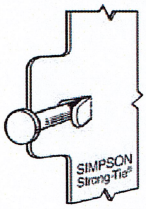

Double Shear Nailing Side View. Do not bend tab back.

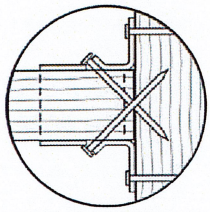

Double Shear Nailing Top View.

LICENSED PROFESSIONAL ENGINEER
04/01/2020
B. D. BUNTING
PROVINCE OF ONTARIO

LIMIT STATES DESIGN

This technical bulletin is effective until June 30, 2022, and reflects information available as of April 1, 2020. This information is updated periodically and should not be relied upon after June 30, 2022. Contact Simpson Strong-Tie for current information and limited warranty or see strongtie.com.

© 2020 Simpson Strong-Tie Company Inc.

(800) 999-5099
strongtie.com

TECHNICAL BULLETIN

HHUS – Double Shear Joist Hangers

SIMPSON Strong-Tie®

All HHUS hangers have double shear nailing. This patented innovation distributes the load through two points on each joist nail for greater strength. It also allows the use of fewer nails, faster installation and the use of common nails for all connections. Do not bend or remove tabs.

Material: 14 gauge

Finish: G90 galvanized

Design:

- Factored resistances are in accordance with CSA O86-14.
- Uplift resistances have been increased 15%. No further increase is permitted.
- Wood shear is not considered in the factored resistances given. The specifier must ensure that the joist and header capacities are capable of withstanding these loads.

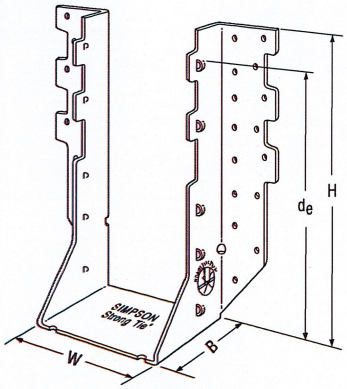

HHUS410

Installation:

- Use all specified fasteners
- Nails: 16d = 0.162" dia. x 3½" long common wire
- Double shear nails must be driven at an angle through the joist or truss into the header to achieve the table loads
- Not designed for welded or nailer applications

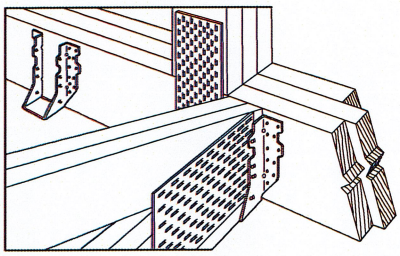

Typical HHUS Installation (Truss Designer to provide fastener quantity for connecting multiple members together)

Options:

- See current catalogue for options

Model No.	Ga.	Dimensions (in.)				Fasteners		Factored Resistance (lb.)			
								D.Fir-L		S-P-F	
		W	H	B	d_e[1]	Face	Joist	Uplift (K_D=1.15)	Normal (K_D=1.00)	Uplift (K_D=1.15)	Normal (K_D=1.00)
HHUS26-2	14	3 5/16	5 13/16	3	3 15/16	(14) 16d	(6) 16d	2850	7335	2065	5205
HHUS28-2	14	3 5/16	7 7/32	3	6 5/32	(22) 16d	(8) 16d	3765	8940	2675	6345
HHUS210-2	14	3 5/16	9 3/32	3	8	(30) 16d	(10) 16d	4670	9660	4235	7000
HHUS210-3	14	4 11/16	9	3	7 15/16	(30) 16d	(10) 16d	4670	9670	4235	6865
HHUS210-4	14	6 1/8	8 29/32	3	7 27/32	(30) 16d	(10) 16d	4670	10155	4235	7210
HHUS46	14	3 5/8	5 13/32	3	3 15/16	(14) 16d	(6) 16d	2540	7335	2065	5205
HHUS48	14	3 5/8	7 1/8	3	6 1/8	(22) 16d	(8) 16d	3765	8940	2675	6345
HHUS410	14	3 5/8	9	3	8	(30) 16d	(10) 16d	4670	9855	4235	7000
HHUS5.50/10	14	5 1/2	9	3	8	(30) 16d	(10) 16d	4670	10155	4235	7210
HHUS7.25/10	14	7 1/4	9	3 5/16	7 29/32	(30) 16d	(10) 16d	4670	10155	3370	7210

1. d_e is the distance from the seat of the hanger to the highest joist nail.

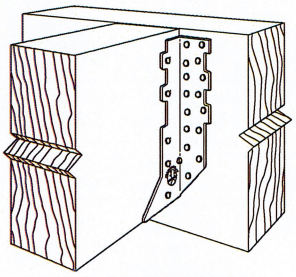

Typical HHUS Installation

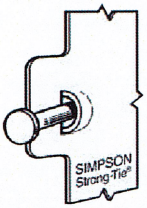

Dome Double Shear Nailing prevents tabs breaking off (available on some models).

U.S. Patent 5,603,580

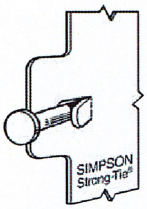

Double Shear Nailing Side View. Do not bend tab back.

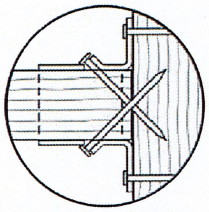

Double Shear Nailing Top View.

LIMIT STATES DESIGN

This technical bulletin is effective until June 30, 2022, and reflects information available as of April 1, 2020. This information is updated periodically and should not be relied upon after June 30, 2022. Contact Simpson Strong-Tie for current information and limited warranty or see strongtie.com.

© 2020 Simpson Strong-Tie Company Inc.

T-SPECHHUS20 3/20 exp. 6/22

(800) 999-5099
strongtie.com

TC – Truss Connectors

SIMPSON Strong-Tie®

The TC truss connector is an ideal connector for scissor trusses and can allow horizontal movement up to 1¼". The TC also attaches plated trusses to top plates or sill plates to resist uplift forces. Typically used on one or both ends of truss as determined by the building designer.

Material: 16 gauge

Finish: G90 galvanized

Design: Factored resistances are in accordance with CSA 086-14

Installation:

- Use all specified fasteners.
- Nails: 10d = 0.148" dia. x 3" long common wire, 10d x 1½ = 0.148" dia. x 1½" long.
- Drive 10d nails into the truss at the inside end of the slotted holes (inside end is towards the centre of the truss) and clinch on the back side. Do not seat these nails into the truss–allow room under the nail head for movement of the truss with respect to the wall.

Optional TC Installation:

- Bend one flange up 90°. Drive specified nails into the top and face of the top plates or install Titen® screws into the top and face of masonry wall. See optional load tables and installation details.

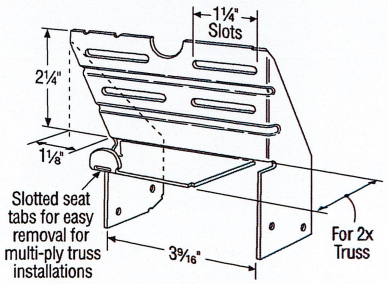

TC24
U.S. Patent 4,932,173

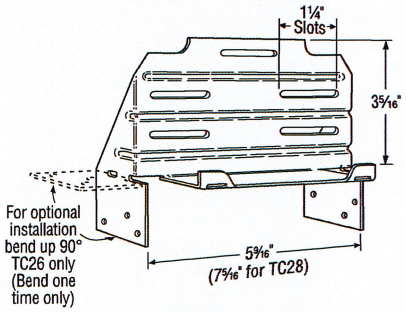

TC26
(TC28 Similiar)

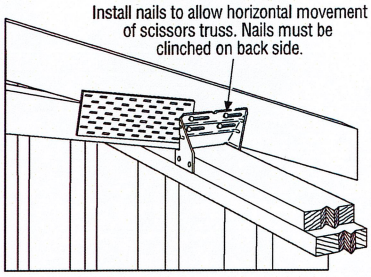

Typical TC24 Installation

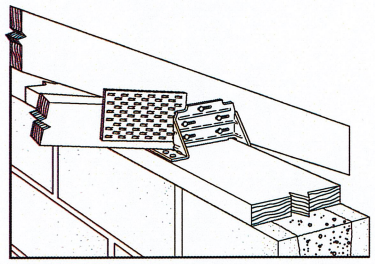

Optional TC26 Installation for Grouted Concrete Block using a Wood Nailer
(8", 10", 12" Wall Installation Similar)

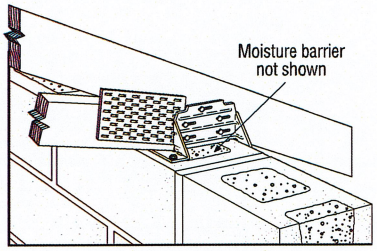

Optional TC26 Installation for Grouted Concrete Block using Titen Screws

Model No.	Fasteners		Factored Resistance	
	Truss	Wall Plates	D.Fir-L	S-P-F
			Uplift (K_D=1.15)	Uplift (K_D=1.15)
			lb.	lb.
TC24	(4) 10d	(4) 10d	605	430
TC26	(5) 10d	(6) 10d	1015	720
TC28	(5) 10d	(6) 10d	1015	720

Optional TC Installation Table

Model No.	Fasteners		Factored Resistance	
	Truss	Wall Plates	D.Fir-L	S-P-F
			Uplift (K_D=1.15)	Uplift (K_D=1.15)
			lb.	lb.
TC26	(5) 10d	(6) 10d x 1½"	810	660
	(5) 10d	(6) 10d	930	660

1. Factored resistances have been increased 15% for earthquake or wind loading; no further increase allowed; reduce where other loads govern.
2. Grout strength is 15 MPa minimum.
3. Optional TC26 installation with 10d nails requires minimum 3" top plate thickness.
4. TC26 fastened to grouted concrete block with (6) – ⁹⁄₁₆" x 2¼" Titen screws has a factored uplift resistance of 275 lb.

LIMIT STATES DESIGN

This technical bulletin is effective until June 30, 2022, and reflects information available as of April 1, 2020. This information is updated periodically and should not be relied upon after June 30, 2022. Contact Simpson Strong-Tie for current information and limited warranty or see strongtie.com.

© 2020 Simpson Strong-Tie Company Inc.

(800) 999-5099
strongtie.com

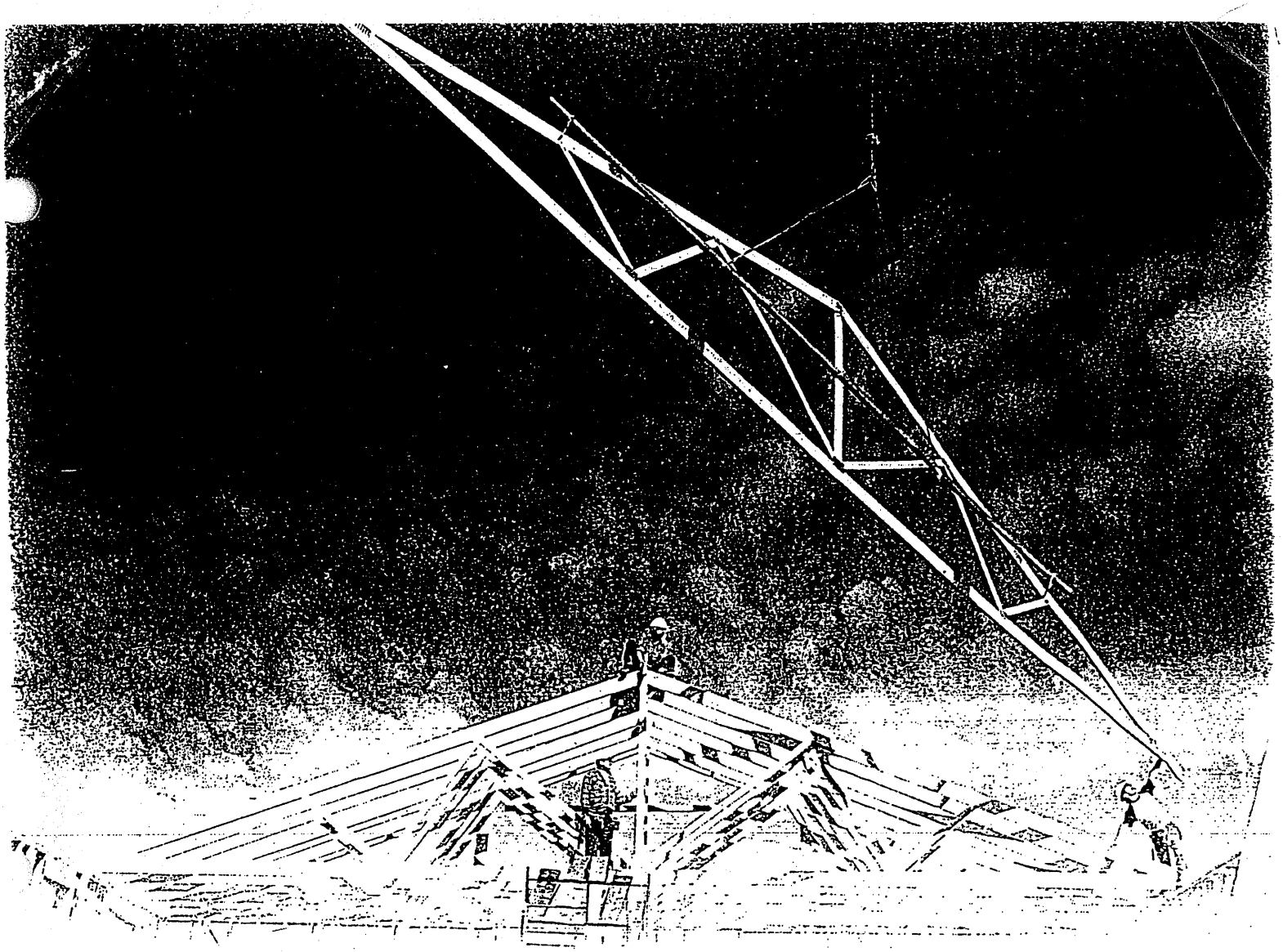

Wood Truss Installation

A Guide to proper handling, erecting and bracing metal plate connected wood trusses

Table of Content

Warning.....4

1 Unloading & Lifting.....5

2 Job Site Handling.....5

3 Hoisting.....6

4 Beginning the Erection Process.....7

5 Erection Tolerance.....8

6 Bracing.....8

7 Bracing Requirements for 3 Planes of Roof.....9

8 Stacking Materials.....10

Caution Notes.....11

Warning

General

Familiarity with the **Construction Design Documents**, the **Truss Design Drawings**, and **Truss Placement Plans** (if required by the **Construction Design Documents**) is required to properly erect, brace, and connect the trusses to the building system.

All of the care and quality involved in the design and manufacture of wood trusses can be jeopardized if the trusses are not properly handled, erected, and braced.

The consequences of improper handling, erecting, and bracing may be a collapse of the structure, which at best is a substantial loss of time and materials, and at worst is a loss of life. The majority of truss accidents occur during truss installation and not as a result of improper design or manufacture.

Prior to truss erection, the builder/erector shall meet with the erection crew for a safety and planning meeting, making sure each crew member understands his or her roles and responsibilities during the erection process.

Temporary Erection Bracing

Trusses are not marked in any way to identify the frequency, or location of temporary erection bracing.

All temporary bracing shall comply with the latest edition of *Commentary and Recommendations for Handling, Installing & Bracing Metal Plate Connected Wood Trusses* (HIB), published by the Truss Plate Institute, and/or as specified in the **Construction Design Documents** prepared by the building designer.

Permanent Truss Bracing

Permanent bracing for the roof or floor trusses is the responsibility of the building designer and should be shown on the **Construction Design Documents**. Permanent bracing locations for individual compression members of a wood truss are shown on the **Truss Design Drawings**, and shall be installed by the building or erection contractor. This bracing is needed for the proper performance of individual trusses within the roof or floor system. The design and connection of the bracing to the truss and then to the overall building system is the responsibility of the building designer, and is in addition to the permanent bracing plan, which is also specified by the building designer.

Special Design Requirements

Special design requirements, such as wind bracing, portal bracing, seismic bracing, diaphragms, shear walls, or other load transfer elements and their connections to wood trusses must be considered separately by the building designer, who shall determine size, location, and method of connections for all bracing as needed to resist these forces.

1 Unloading & Lifting

Never handle trusses flat

Beginning with the unloading process, and throughout all phases of construction, care must be taken to avoid **lateral bending** of trusses, which can cause damage to the lumber and metal connector plates at the joints.

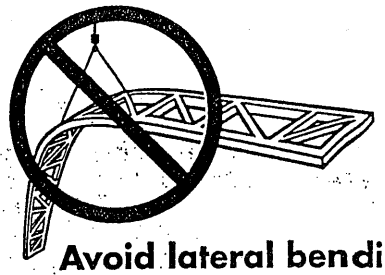

Avoid lateral bending

- **Use special care in windy weather.**
- **If using a crane within 10 feet of an electric line, contact the local power company.**
- **If using a crane within 5 miles of an airport, contact the airport 30 days prior to erection to learn about any safety regulations that must be followed.**

2 Job Site Handling

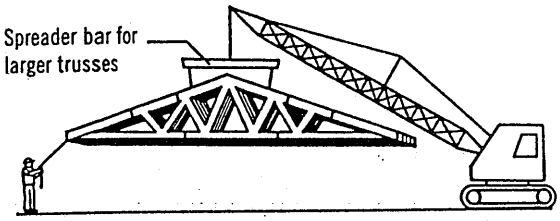

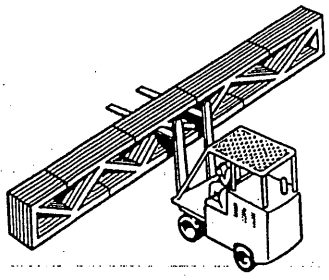

All trusses should be picked up at the top chords in a vertical position only

Proper banding and smooth ground allow for unloading of trusses without damage. This should be done as close to the building site as possible to minimize handling. **Do not** break banding until installation begins. Hand erection of trusses is allowed, provided excessive lateral bending is prevented.

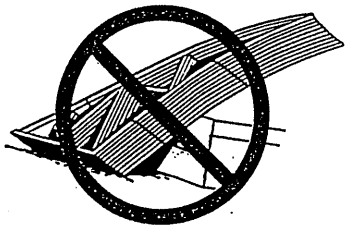

Do not store unbraced bundles upright

If trusses are stored vertically they shall be braced in a manner that will prevent tipping or topping. Generally cuting of the banding is done just prior to installation.

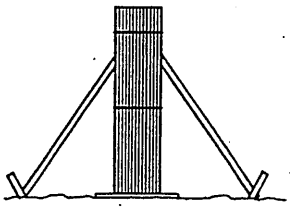

Do not store on uneven ground

If trusses are stored horizontally, blocking should be used on eight to ten foot centers, or as required, to minimize lateral bending and moisture gain.

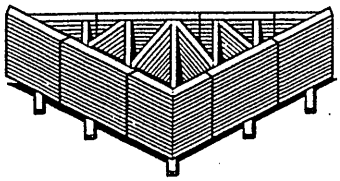

Care should be exercised when removing banding to avoid damaging trusses.

During long term storage, trusses shall be protected from the environment in a manner that provides for adequate ventilation of the trusses. If tarpaulins or other material is used, the ends shall be left open for ventilation. Plastic is not recommended, since it can trap moisture.

3 Hoisting

All trusses that are erected one at a time shall be held safely in position by the erection equipment until such time as all necessary bracing has been installed and the ends of the trusses are securely fastened to the building.

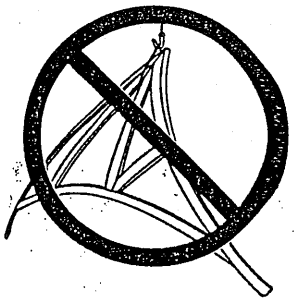

Avoid lateral bending

L ≤ 30'

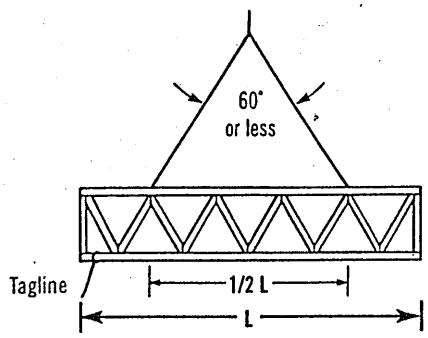

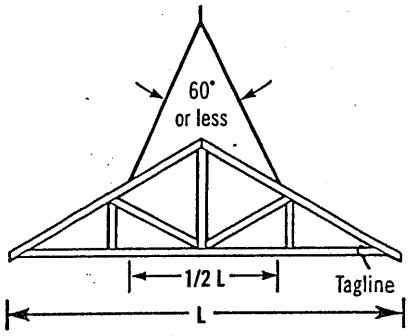

Truss sling is acceptable where these criteria are met.

30' < L ≤ 60'

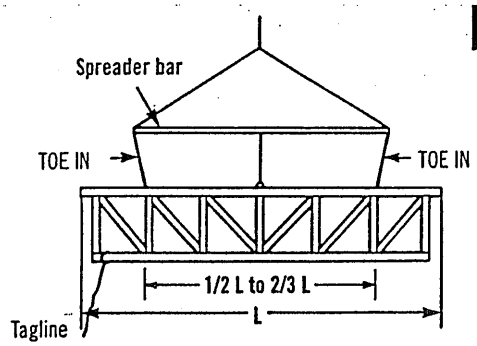

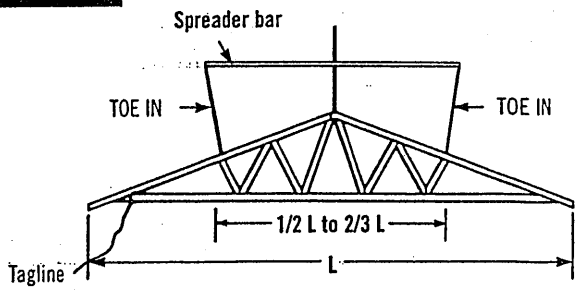

Use spreader bar in all other cases. It should be noted that the lines from the ends of the spreader bar "**TOE IN**"; if these lines should "**TOE OUT**" the truss may fold in half.

L > 60'

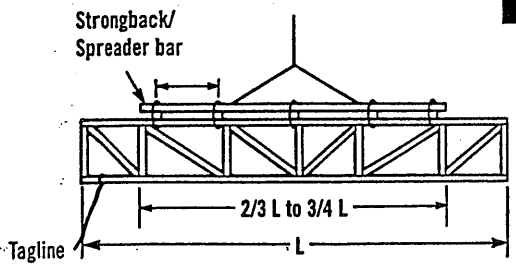

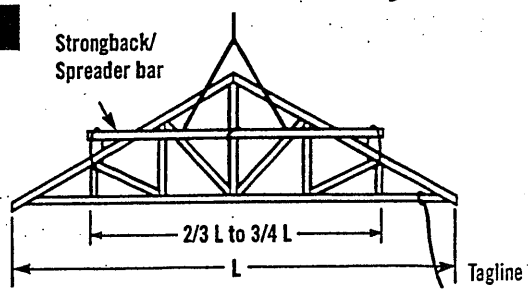

For lifting trusses with spans in excess of 60 feet, it is recommended that a strongback/spreader bar be used as illustrated. The strongback/spreader bar should be attached to the top chord and web members at intervals of approximately 10 feet. Further, the strongback/spreader bar should be at or above the mid-height of the truss to prevent overturning. The strongback/spreader bar can be of any material with sufficient strength to safely carry the weight of the truss and sufficient rigidity to adequately resist bending of the truss.

4 Beginning the Erection Process

It is important for the builder or erection contractor to provide substantial bracing for the first truss erected. The two or more trusses making up the rest of the first set are tied to and rely upon the first truss for stability. Likewise, after this first set of trusses is adequately cross-braced, the remaining trusses installed rely upon this first set for stability. Thus, the performance of the truss bracing system depends to a great extent on how well the first group of trusses is braced.

Ground Brace – Exterior

One satisfactory method ties the first unit of trusses off to a series of braces that are attached to a stake driven into the ground and securely anchored. The ground brace itself should be supported as shown below or it is apt to buckle. Additional ground braces in the opposite direction, inside the building, are also recommended.

Ground Brace – Interior

Another satisfactory method where height of building or ground conditions prohibit bracing from the exterior is to tie the first truss rigidly in place from the interior at the floor level, provided the floor is substantially completed and capable of supporting the ground bracing forces. Securely fasten the first truss to the middle of the building. Brace the bracing similar to exterior ground bracing shown at left. Set trusses from the middle toward the end of the building. Properly cross-brace the first set of trusses before removing floor braces and setting remaining trusses.

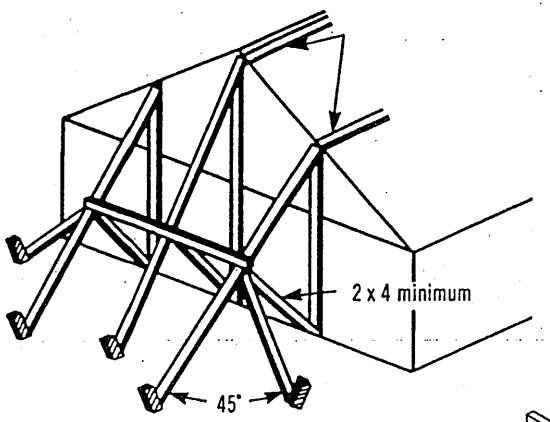

Note: Locate ground braces for first truss directly in line with all rows of top chord continuous lateral bracing (either temporary or permanent).

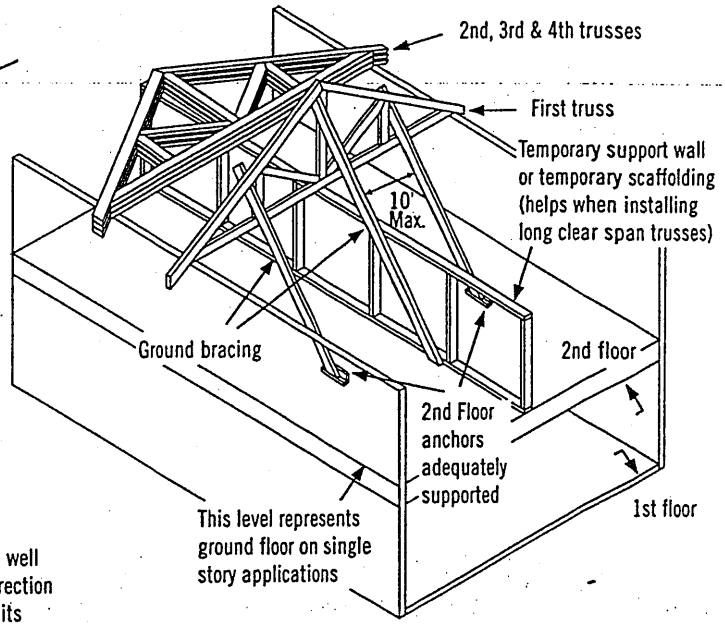

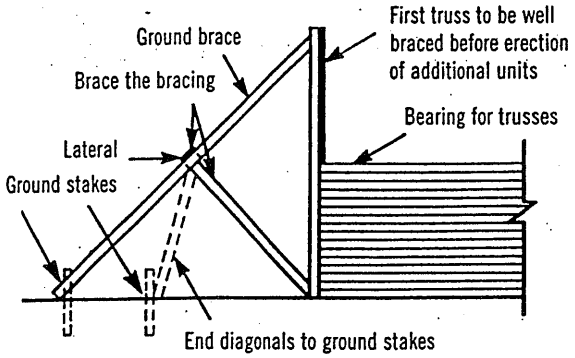

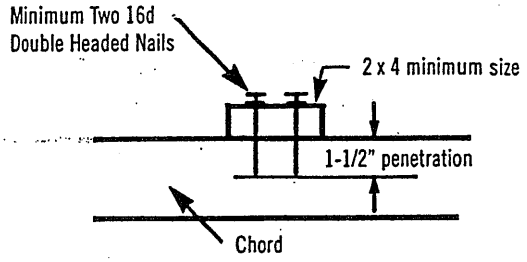

Inadequate size of bracing material or inadequate fastening is a major cause of erection dominoing.

5 Erection Tolerance

Complying with erection tolerances is critical to achieving an acceptable roof or floor line, and to accomplishing effective bracing. Setting trusses within tolerance the first time will prevent the need for the hazardous practice of respacing or adjusting trusses when roof sheathing or roof purlins are installed. Trusses leaning or bowing can cause nails to miss the top chords when sheathing is applied, and create cumulative stresses on the bracing, which is a frequent cause of dominoing.

When sheathing, make sure nails are driven into the top chord of the trusses.

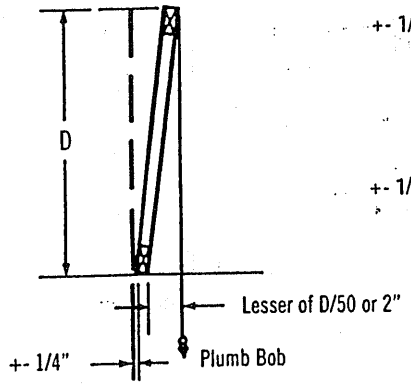

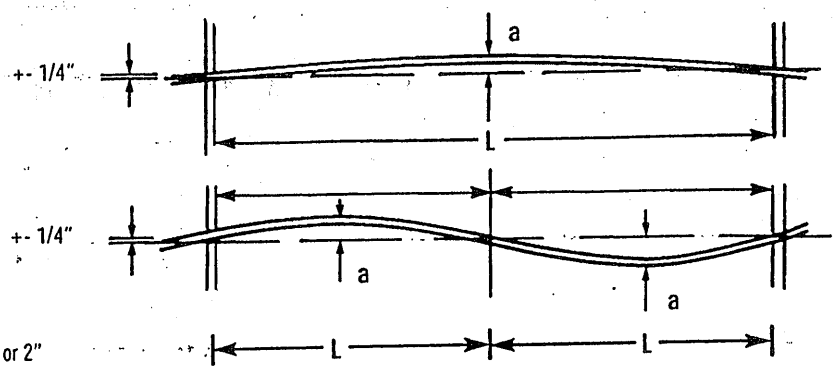

L = 16' to 32', a = 1"
L = 32' & over, a = 2"

6 Bracing

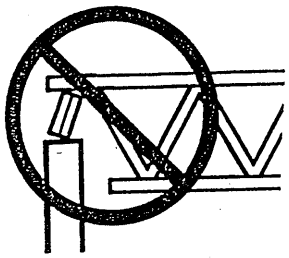

Do not install trusses on temporarily connected supports

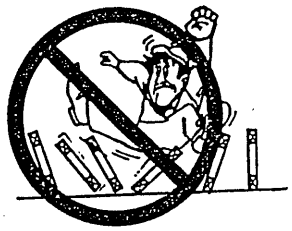

Do not walk on unbraced trusses

Do not walk on trusses or gable ends lying flat

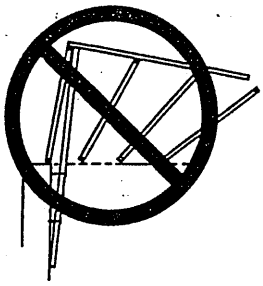

Nails in withdrawal (parallel to force)

All anchors, hangers, tie-downs, seats, bearing ledgers, etc., that are part of the supporting structure shall be accurately and properly placed and permanently attached before truss installation begins. No trusses shall ever be installed on anchors or ties that have temporary connections to the supporting structure.

Nailing scabs to the end of the building to brace the first truss is not recommended.
All nailing of bracing should be done so that nails are driven perpendicular to the direction of force, as shown at right.

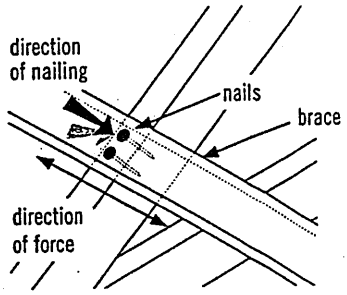

Well nailed (perpendicular to force)

7 Bracing Requirements for 3 Planes of Roof

Temporary erection bracing must be applied to three planes of the roof system to ensure stability: Plane 1) **Top Chord** (sheathing), Plane 2) **Bottom Chord** (ceiling plane), and Plane 3) **Web Member** plane or vertical plane perpendicular to trusses.

1) Top Chord Plane

Most important to the builder or erection contractor is bracing in the plane of the top chord. Truss top chords are susceptible to lateral buckling before they are braced or sheathed.

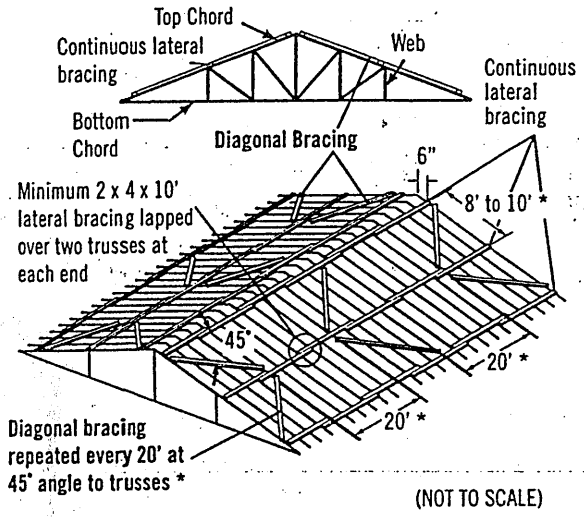

(NOT TO SCALE)

Exact spacing between trusses should be maintained as bracing is installed to avoid the hazardous practice of removing bracing to adjust spacing. This act of "adjusting spacing" can cause trusses to topple if connections are removed at the wrong time.

2) Bottom Chord Plane

In order to hold proper spacing on the bottom chord, temporary bracing is recommended on the top of the bottom chord.

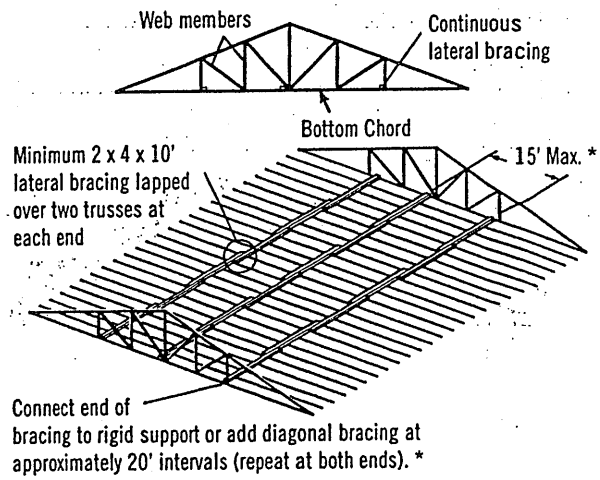

* Long spans, heavy loads or other spacing configurations may require closer spacing between lateral bracing and closer intervals between diagonals. Consult the building designer or HIB and DSB (*Recommended Design Specification for Temporary Bracing of Metal-Plate Connected Wood Trusses*) for details.

Diagonal or cross-bracing is very important!

3) Web Member Plane

"X" bracing, as shown, is critical in preventing trusses from leaning or dominoing. Repeat as shown to create a succession of rigid units.

X-bracing should be installed on vertical web members wherever possible, at or near lateral bracing. Plywood or OSB may be substituted for X-bracing.

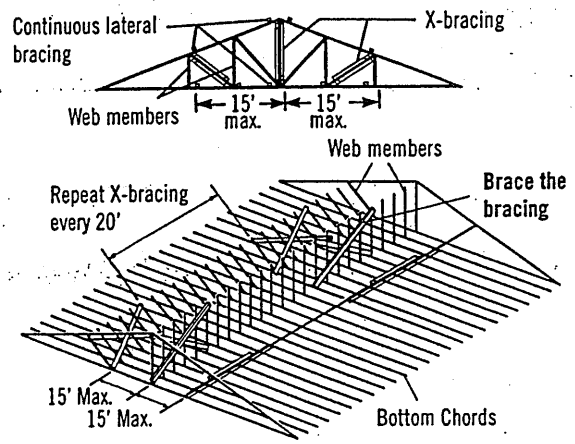

Note: Top chords and some web members are not shown, in order to make drawings more readable.

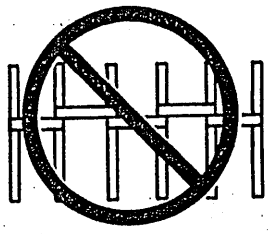

Do not use short blocks to brace individual trusses without a specific bracing plan detailing their use

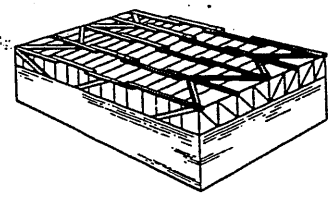

Bracing requirements using the same principles apply to parallel chord trusses

8 Stacking Materials

Do not proceed with building completion until all bracing is securely and properly in place

Never stack materials on unbraced or inadequately braced trusses

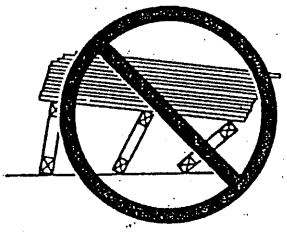

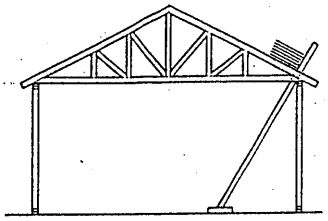

Proper distribution of construction materials is a must during construction.

Never stack materials near a peak

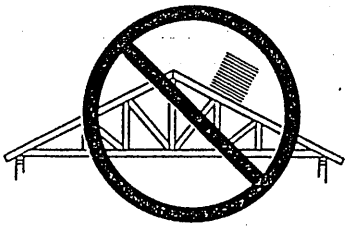

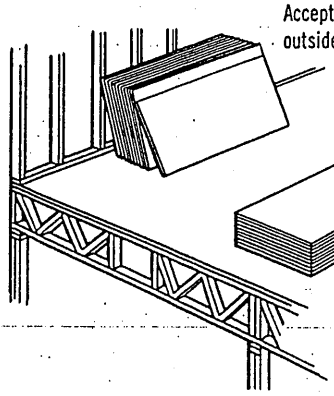

Never stack materials on the cantilever of a truss

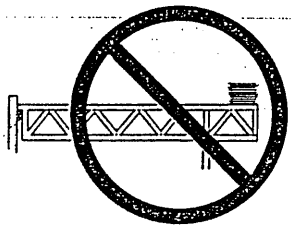

Always stack materials over two or more trusses.

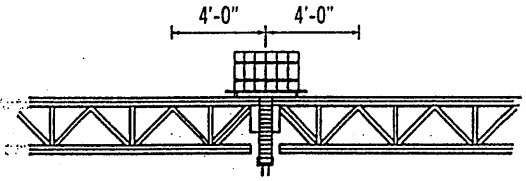

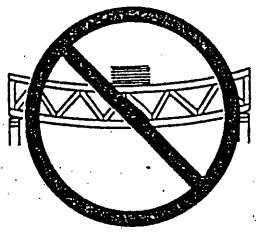

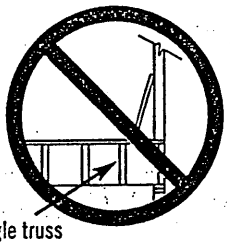

Roofing and mechanical contractors are cautioned to stack materials only along outside supporting members or directly over inside supporting members. Trusses are not designed for dynamic loads (i.e., moving vehicles). Extreme care should be taken when loading and stacking construction materials (rolled roofing, mechanical equipment, etc.) on the roof or floor system.

Never overload small groups or single trusses. Position load over as many trusses as possible.

Never cut any structural member of a truss.

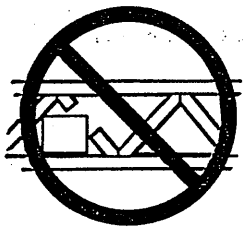

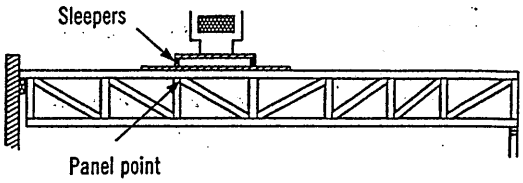

Sleepers for mechanical equipment should be located at panel points (joints) or over main supporting members, and only on trusses that have been designed for such loads.

Caution Notes

Errors in building lines and/or dimensions, or errors by others shall be corrected by the contractor or responsible construction trade subcontractor or supplier **before** erection of trusses begins.

Cutting of nonstructural overhangs is considered a part of normal erection and shall be done by the builder or erection contractor.

Any field modification that involves the cutting, drilling, or relocation of any structural truss member or connector plate shall not be done without the approval of the truss manufacturer or a licensed design professional.

The methods and procedures outlined are intended to ensure that the overall construction techniques employed will put floor and roof trusses **safely** in place in a completed structure. These recommendations for bracing wood trusses originate from the collective experience of leading technical personnel in the wood truss industry, but must, due to the nature of responsibilities involved, be presented only as a **guide** for use by a qualified building designer, builder, or erection contractor. Thus, the Wood Truss Council of America expressly disclaims any responsibility for damages arising from the use, application, or reliance on the recommendations and information contained herein.

[Selected text and figures referenced or reproduced from HIB and DSB by permission of the Truss Plate Institute, Madison, WI.]

THE CANADIAN WOOD TRUSS ASSOCIATION

L'ASSOCIATION CANADIENNE DES FABRICANTS DE FERMES DE BOIS

1400 Blair Place, Suite 210, Ottawa, ON K1J 9B8
Tel.: 613-747-5544 Fax: 613-747-6264

Wood Truss Council of America

One WTCA Center
6300 Enterprise Lane, Madison, WI 53719-1140
Tel.: 608-274-4849 Fax: 608-274-3329
wtca@woodtruss.com www.woodtruss.com