A-BARRIE

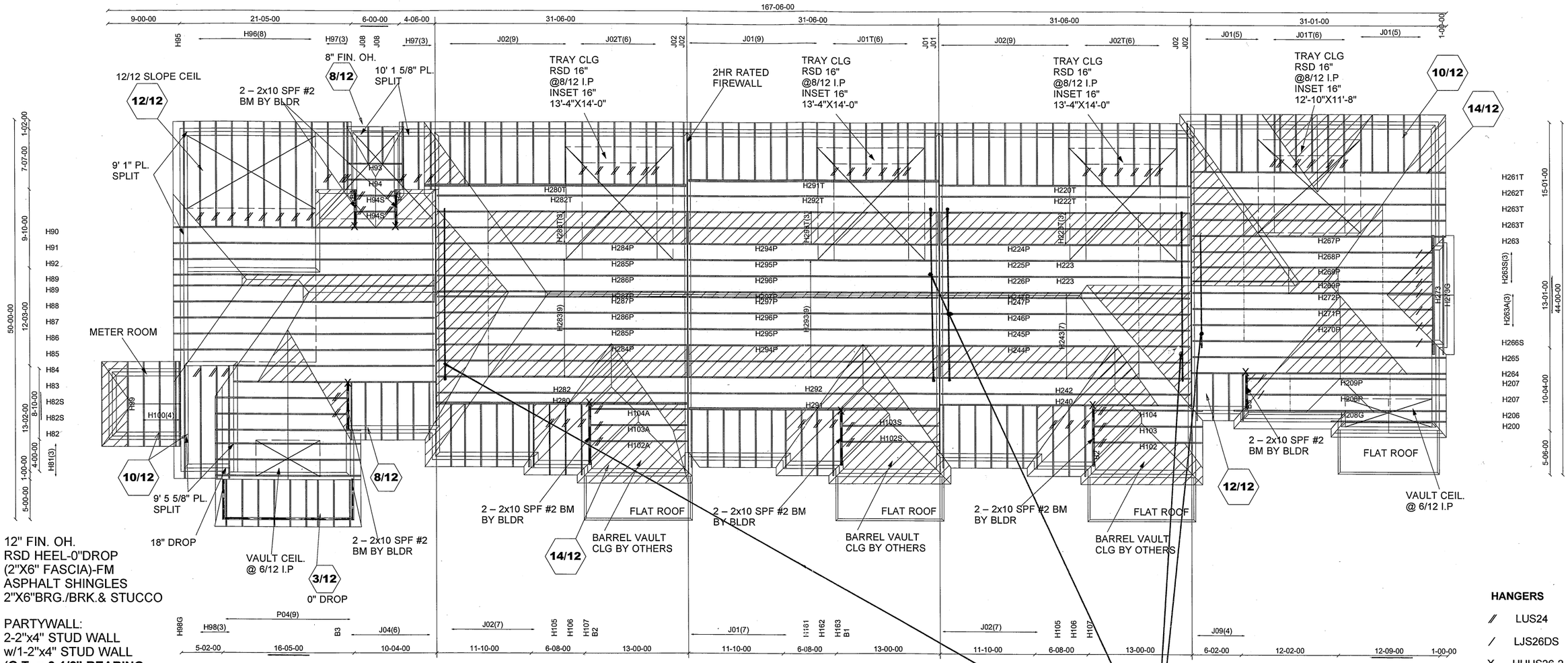

E21104078 - E21104098

E21104164 - E21104238

BEARING SCAB PER'D
SEE SHOP DRAWINGS.

Mitek V. 8.2.0

ALL CONVENTIONAL FRAMING TO CONFORM WITH PART 9 O.B.C. LATEST EDITION. ROOF RAFTERS THAT CROSS OVER TRUSSES TO BE 2X4 SPF #2 @ 24" O.C WITH A VERT. POST TO THE TRUSS UNDERNEATH AT EACH CROSS POINT. VERT. POSTS LONGER THAN 6' TO HAVE LATERAL BRACING SO THAT THE DISTANCE BETWEEN END POINTS & BETWEEN ROWS OF BRACING DOES NOT EXCEED 6'

CONVENTIONAL FRAMING OTHERS

PL: 111206(TYP.), 114170E

Job Track: 45147	Builder / Location: GOLD PARK HOMES / VAUGHAN	Model / Elevation: BLOCK 15 / UNIT 1-5	
Layout ID: 336335	Project: PINE VALLEY		
Plan Log: 113188	Date: 9/29/2021	Designer: JBURROWS/C	

THESE DRAWINGS CONSTITUTE THE PROPERTY OF ALPA ROOF TRUSSES INC., SHALL NOT BE REPRODUCED, PUBLISHED, OR REDISTRIBUTED IN ANY MANNER OR UTILIZED FOR ANY PURPOSE OTHER THAN THE MANUFACTURE OF TRUSSES BY ALPA ROOF TRUSSES INC AND WILL BE RETRACTED BY ALPA ROOF TRUSSES INC IF UTLILZED FOR ANY OTHER PURPOSE.

EWP DESIGN INC.

(905) 832-2250 FAX (905) 832-0286

RESPONSIBILITIES AND SPECIFICATIONS

RESPONSIBILITIES

1. EWP DESIGN INC. is responsible for the design of trusses as individual components.
2. It is the responsibility of others to ascertain that the design loads utilized on each drawing meet or exceed the actual dead load imposed by the structure, the live load imposed by the intended use and the snow load imposed by local building code or authorities with jurisdictions.
3. All dimensions are to be verified by the owner, contractor, architect or other authorities with jurisdictions before truss fabrication.
4. EWP DESIGN INC. bears no responsibility for the erection of trusses. Persons erecting trusses are cautioned to seek professional advice regarding the temporary and permanent bracing for the system. Bracing shown on EWP DESIGN INC. drawing is specified for the truss as a component only and forms an integral part of the truss design.
5. It is the truss manufacturer's responsibility to ensure that trusses are manufactured in conformance with specifications of EWP DESIGN INC. as outlined below.

SPECIFICATIONS

1. Trusses designed by EWP DESIGN INC. conform to the relevant section of the Ontario Building Code of Canada (Part 9 or Part 4) or to the Canadian code for farm buildings, whichever applies to the building type, as indicated on the EWP DESIGN INC. drawings, and conform to the design procedures established by the Truss Plate Institute of Canada. Unit stresses used for truss designs are as per the edition of CSA-O86 shown on EWP DESIGN INC. drawings.
2. Lumber is to be the size, species and grade as specified on EWP DESIGN INC. drawings.
3. Moisture content of lumber shall not exceed 19% in service unless specified otherwise.
4. Metal connector plates shall be applied to both faces of truss at each joint and shall be positioned as specified.
5. Top chords of trusses are assumed to be continuously braced laterally by roof sheathing or by purlins at intervals not exceeding 12.5 times the thickness of top chord member.
6. Bottom chords shall be laterally braced at intervals not exceeding 3M (10') o.c., where rigid ceiling is not applied directly to the underside of chords.

THESE DRAWINGS CONSTITUTE THE PROPERTY OF EWP DESIGN INC., SHALL NOT BE REPRODUCED, PUBLISHED, OR REDISTRIBUTED IN ANY MANNER OR UTILIZED FOR ANY PURPOSE OTHER THAN THE MANUFACTURE OF TRUSSES BY THE ALPA LUMBER GROUP, AND WILL BE RETRACTED BY EWP DESIGN INC. IF UTILIZED FOR ANY OTHER PURPOSE.

JOB NAME	TRUSS NAME	QUANTITY	PLY	JOB DESC.		DRWG NO.
336324	H81		1	TRUSS DESC.	JT 45147	E21104078

Alpa Roof Truss, Maple

Version 8.420 S Jan 21 2021 MiTek Industries, Inc. Wed Oct 13 14:51:43 2021 Page 1

ID:hd511hZTz bdeQoS817GKByhVxV-tGIFJ5p4mSuQ46kKieCmJ7Gkd?yvsuRdzJittXyTp7_

Scale = 1:64.7

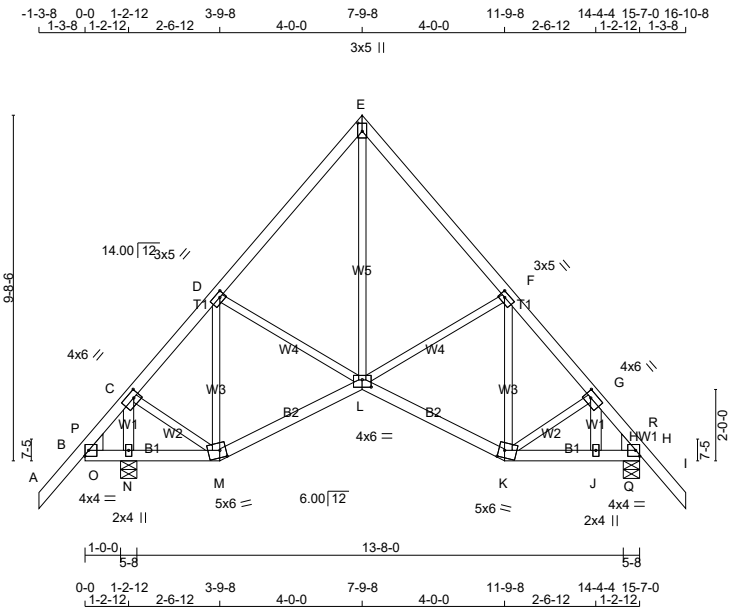

TOTAL WEIGHT = 3 X 81 = 243 lb

[M][F]

LUMBER

N. L. G. A. RULES

CHORDS	SIZE		LUMBER	DESCR.
A - E	2x4	DRY	No.2	SPF
E - I	2x4	DRY	No.2	SPF
B - M	2x4	DRY	No.2	SPF
M - L	2x4	DRY	No.2	SPF
L - K	2x4	DRY	No.2	SPF
K - H	2x4	DRY	No.2	SPF
ALL WEBS	2x3	DRY	No.2	SPF
EXCEPT				
J - G	2x4	DRY	No.2	SPF
N - C	2x4	DRY	No.2	SPF

DRY: SEASONED LUMBER.

PLATES (table is in inches)

JT	TYPE	PLATES	W	LEN	Y	X
B	TMBH-I	MT20	4.0	4.0		Edge
C	TMWW-t	MT20	4.0	6.0	2.00	2.00
D	TMWW-t	MT20	3.0	5.0	1.50	1.75
E	TTW+p	MT20	3.0	5.0	2.75	1.50
F	TMWW-t	MT20	3.0	5.0	1.50	1.75
G	TMWW-t	MT20	4.0	6.0	2.00	2.00
H	TMBH1-I	MT20	4.0	4.0		Edge
J	BMW+w	MT20	2.0	4.0		
K	BBWW-m	MT20	5.0	6.0	2.50	2.00
L	BBWWW-p	MT20	4.0	6.0	2.50	3.00
M	BBWW-m	MT20	5.0	6.0	2.50	2.00
N	BMW1+w	MT20	2.0	4.0		

Edge - INDICATES REFERENCE CORNER OF PLATE TOUCHES EDGE OF CHORD.

LATERAL BRACE(S) SHOWN SHALL BE 2X4 SPF#2

LICENSED PROFESSIONAL ENGINEER
V. WIDYA
100225448
10/13/2021
PROVINCE OF ONTARIO

DIMENSIONS, SUPPORTS AND LOADINGS SPECIFIED BY FABRICATOR TO BE VERIFIED BY BUILDING DESIGNER

BEARINGS

JT	FACTORED GROSS REACTION VERT	HORZ	MAXIMUM FACTORED GROSS REACTION DOWN	HORZ	UPLIFT	INPUT BRG IN-SX	REQRD BRG IN-SX	HEEL WEDGE
H	787	0	787	0	0	5-8	1-8	2x6 R
N	935	0	935	0	0	5-8	1-8	2x6 L

UNFACTORED REACTIONS

JT	1ST LCASE COMBINED	MAX./MIN. COMPONENT REACTIONS SNOW	LIVE	PERM.LIVE	WIND	DEAD	SOIL
H	559	353 / 0	0 / 0	0 / 0	0 / 0	206 / 0	0 / 0
N	664	419 / 0	0 / 0	0 / 0	0 / 0	245 / 0	0 / 0

BEARING MATERIAL TO BE SPF NO.2 OR BETTER AT JOINT(S) H, N

BRACING

TOP CHORD TO BE SHEATHED OR MAX. PURLIN SPACING = 6.25 FT.
MAX. UNBRACED BOTTOM CHORD LENGTH = 6.25 FT OR RIGID CEILING DIRECTLY APPLIED.

ALL PITCH BREAKS AND PERIMETER CORNER JOINTS MUST BE LATERALLY RESTRAINED.

LOADING

TOTAL LOAD CASES: (4)

CHORDS

MEMB. FR-TO	MAX. FACTORED FORCE (LBS)	FACTORED VERT. LOAD (PLF) FROM	TO	LC1 CSI (LC)	MAX. UNBRAC LENGTH
A- B	0 / 39	-78.0	-78.0	0.11 (1)	10.00
B- P	0 / 145	-78.0	-78.0	0.13 (1)	10.00
P- C	0 / 215	-78.0	-78.0	0.06 (1)	10.00
C- D	-409 / 0	-78.0	-78.0	0.12 (1)	6.25
D- E	-500 / 0	-78.0	-78.0	0.15 (1)	6.25
E- F	-501 / 0	-78.0	-78.0	0.15 (1)	6.25
F- G	-596 / 0	-78.0	-78.0	0.13 (1)	6.25
G- R	-652 / 0	-78.0	-78.0	0.06 (1)	6.25
R- H	-960 / 0	-78.0	-78.0	0.09 (1)	6.25
H- I	0 / 39	-78.0	-78.0	0.11 (1)	10.00
B- O	-147 / 0	-18.5	-18.5	0.01 (1)	6.25
O- N	-147 / 0	-18.5	-18.5	0.03 (1)	6.25
N- M	-147 / 0	-18.5	-18.5	0.03 (1)	6.25
M- L	0 / 313	-18.5	-18.5	0.12 (4)	10.00
L- K	0 / 462	-18.5	-18.5	0.13 (4)	10.00
K- J	0 / 387	-18.5	-18.5	0.10 (1)	10.00
J- Q	0 / 387	-18.5	-18.5	0.14 (1)	10.00
Q- H	0 / 387	-18.5	-18.5	0.14 (1)	10.00

WEBS

MEMB. FR-TO	MAX. FACTORED FORCE (LBS)	MAX CSI (LC)
L- E	0 / 465	0.10 (1)
L- F	-119 / 0	0.05 (1)
K- F	-158 / 0	0.06 (1)
K- G	-4 / 36	0.01 (1)
J- G	-54 / 19	0.01 (1)
D- L	0 / 37	0.01 (1)
M- D	-375 / 0	0.13 (1)
C- M	0 / 519	0.12 (1)
N- C	-865 / 0	0.09 (1)
O- P	-6 / 20	0.00 (1)
Q- R	0 / 305	0.00 (1)

DESIGN CRITERIA

SPECIFIED LOADS:

TOP CH.	LL	=	21.0	PSF
	DL	=	6.0	PSF
BOT CH.	LL	=	0.0	PSF
	DL	=	7.4	PSF
TOTAL LOAD		=	34.4	PSF

SPACING = 24.0 IN. C/C

THIS TRUSS IS DESIGNED FOR RESIDENTIAL OR SMALL BUILDING REQUIREMENTS OF PART 9, NBCC 2015

THIS DESIGN COMPLIES WITH:
- PART 9 OF BCBC 2018 , ABC 2019
- PART 9 OF OBC 2012 (2019 AMENDMENT)
- CSA 086-14
- TPIC 2014

DESIGN ASSUMPTIONS
-OVERHANG NOT TO BE ALTERED OR CUT OFF.

(55 % OF 23.0 P.S.F. G.S.L. PLUS 8.4 P.S.F. RAIN LOAD) EQUALS 21.0 P.S.F. SPECIFIED ROOF LIVE LOAD

ALLOWABLE DEFL.(LL)= L/360 (0.48")
CALCULATED VERT. DEFL.(LL) = L/ 999 (0.01")
ALLOWABLE DEFL.(TL)= L/360 (0.48")
CALCULATED VERT. DEFL.(TL) = L/ 999 (0.03")

CANTILEVER DEFLECTION:
ALLOWABLE DEFL.(LL)= L/120 (0.19")
CALCULATED VERT. DEFL.(LL) = L/ 999 (0.00")
ALLOWABLE DEFL.(TL)= L/120 (0.19")
CALCULATED VERT. DEFL.(TL) = L/ 999 (0.00")

CSI: TC=0.15/1.00 (D-E:1) , BC=0.14/1.00 (J-Q:1) , WB=0.13/1.00 (D-M:1) , SSI=0.17/1.00 (H-Q:1)

DOL LUMBER=1.00 NAIL=1.00 LS BEND=1.10 COMP=1.10 SHEAR=1.10 TENS= 1.10

COMPANION LIVE LOAD FACTOR = 1.00

TRUSS PLATE MANUFACTURER IS NOT RESPONSIBLE FOR QUALITY CONTROL IN THE TRUSS MANUFACTURING PLANT .

NAIL VALUES

PLATE	GRIP(DRY) (PSI) MAX	MIN	SHEAR (PLI) MAX	MIN	SECTION (PLI) MAX	MIN
MT20	650	371	1747	788	1987	1873

PLATE PLACEMENT TOL. = 0.250 inches

PLATE ROTATION TOL. = 5.0 Deg.

JSI GRIP= 0.73 (M) (INPUT = 0.90)
JSI METAL= 0.31 (B) (INPUT = 1.00)

JOB NAME	TRUSS NAME	QUANTITY	PLY	JOB DESC.		DRWG NO.
336324	H82		1	TRUSS DESC.	JT 45147	E21104079

Alpa Roof Truss, Maple

Version 8.420 S Jan 21 2021 MiTek Industries, Inc. Wed Oct 13 14:51:45 2021 Page 1

ID:hd511hZTz_bdeQoS817GKByhVxV-qfQ0knrKI488JQtjp3EEOYL_TpbrKlxwQdB_xQyTp6y

Scale = 1:64.7

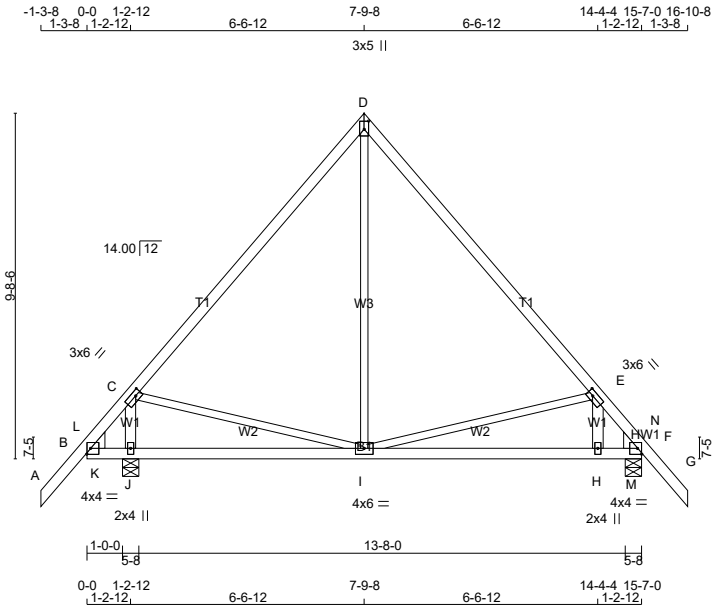

TOTAL WEIGHT = 73 lb

[M][F]

LUMBER

N. L. G. A. RULES

CHORDS	SIZE		LUMBER	DESCR.
A - D	2x4	DRY	No.2	SPF
D - G	2x4	DRY	No.2	SPF
B - F	2x4	DRY	No.2	SPF
ALL WEBS	2x3	DRY	No.2	SPF
EXCEPT				
H - E	2x4	DRY	No.2	SPF
J - C	2x4	DRY	No.2	SPF

DRY: SEASONED LUMBER.

PLATES (table is in inches)

JT	TYPE	PLATES	W	LEN	Y	X
B	TMBH-I	MT20	4.0	4.0		Edge
C	TMWW-t	MT20	3.0	6.0	1.50	2.00
D	TTW+p	MT20	3.0	5.0	2.75	1.50
E	TMWW-t	MT20	3.0	6.0	1.50	2.00
F	TMBH1-I	MT20	4.0	4.0		Edge
H	BMW+w	MT20	2.0	4.0		
I	BMWWW-t	MT20	4.0	6.0		
J	BMW1+w	MT20	2.0	4.0		

Edge - INDICATES REFERENCE CORNER OF PLATE TOUCHES EDGE OF CHORD.

LATERAL BRACE(S) SHOWN SHALL BE 2X4 SPF#2

DIMENSIONS, SUPPORTS AND LOADINGS SPECIFIED BY FABRICATOR TO BE VERIFIED BY BUILDING DESIGNER

BEARINGS

JT	FACTORED GROSS REACTION VERT	HORZ	MAXIMUM FACTORED GROSS REACTION DOWN	HORZ	UPLIFT	INPUT BRG IN-SX	REQRD BRG IN-SX	HEEL WEDGE
F	787	0	787	0	0	5-8	1-8	2x6 R
J	935	0	935	0	0	5-8	1-8	2x6 L

UNFACTORED REACTIONS

JT	1ST LCASE COMBINED	MAX./MIN. COMPONENT REACTIONS SNOW	LIVE	PERM.LIVE	WIND	DEAD	SOIL
F	559	353 / 0	0 / 0	0 / 0	0 / 0	206 / 0	0 / 0
J	664	419 / 0	0 / 0	0 / 0	0 / 0	245 / 0	0 / 0

BEARING MATERIAL TO BE SPF NO.2 OR BETTER AT JOINT(S) F, J

BRACING

TOP CHORD TO BE SHEATHED OR MAX. PURLIN SPACING = 5.24 FT.
MAX. UNBRACED BOTTOM CHORD LENGTH = 10.00 FT OR RIGID CEILING DIRECTLY APPLIED.

ALL PITCH BREAKS AND PERIMETER CORNER JOINTS MUST BE LATERALLY RESTRAINED.

LOADING

TOTAL LOAD CASES: (4)

CHORDS

MEMB. FR-TO	MAX. FACTORED FORCE (LBS)	FACTORED VERT. LOAD (PLF) FROM	TO	LC1 MAX CSI (LC)	MAX. UNBRAC LENGTH
A- B	0 / 39	-78.0	-78.0	0.11 (1)	10.00
B- L	-391 / 0	-78.0	-78.0	0.08 (1)	6.25
L- C	-4 / 177	-78.0	-78.0	0.52 (1)	10.00
C- D	-431 / 0	-78.0	-78.0	0.43 (1)	6.25
D- E	-429 / 0	-78.0	-78.0	0.43 (1)	6.25
E- N	-709 / 0	-78.0	-78.0	0.36 (1)	6.25
N- F	-1521 / 0	-78.0	-78.0	0.10 (1)	5.24
F- G	0 / 39	-78.0	-78.0	0.11 (1)	10.00
B- K	0 / 67	-18.5	-18.5	0.20 (1)	10.00
K- J	0 / 67	-18.5	-18.5	0.20 (1)	10.00
J- I	0 / 67	-18.5	-18.5	0.18 (4)	10.00
I- H	0 / 617	-18.5	-18.5	0.23 (4)	10.00
H- M	0 / 617	-18.5	-18.5	0.37 (1)	10.00
M- F	0 / 617	-18.5	-18.5	0.37 (1)	10.00

WEBS

MEMB. FR-TO	MAX. FACTORED FORCE (LBS)	MAX CSI (LC)
I- D	0 / 186	0.06 (4)
I- E	-375 / 0	0.32 (1)
H- E	-142 / 66	0.02 (4)
C- I	0 / 192	0.04 (1)
J- C	-981 / 0	0.10 (1)
K- L	0 / 645	0.00 (1)
M- N	0 / 939	0.00 (1)

DESIGN CRITERIA

SPECIFIED LOADS:

TOP CH.	LL	=	21.0	PSF
	DL	=	6.0	PSF
BOT CH.	LL	=	0.0	PSF
	DL	=	7.4	PSF
TOTAL LOAD		=	34.4	PSF

SPACING = 24.0 IN. C/C

THIS TRUSS IS DESIGNED FOR RESIDENTIAL OR SMALL BUILDING REQUIREMENTS OF PART 9, NBCC 2015

THIS DESIGN COMPLIES WITH:
- PART 9 OF BCBC 2018 , ABC 2019
- PART 9 OF OBC 2012 (2019 AMENDMENT)
- CSA 086-14
- TPIC 2014

DESIGN ASSUMPTIONS
-OVERHANG NOT TO BE ALTERED OR CUT OFF.

(55 % OF 23.0 P.S.F. G.S.L. PLUS 8.4 P.S.F. RAIN LOAD) EQUALS 21.0 P.S.F. SPECIFIED ROOF LIVE LOAD

ALLOWABLE DEFL.(LL)= L/360 (0.48")
CALCULATED VERT. DEFL.(LL) = L/ 999 (0.02")
ALLOWABLE DEFL.(TL)= L/360 (0.48")
CALCULATED VERT. DEFL.(TL) = L/ 999 (0.06")

CANTILEVER DEFLECTION:
ALLOWABLE DEFL.(LL)= L/120 (0.19")
CALCULATED VERT. DEFL.(LL) = L/ 999 (0.00")
ALLOWABLE DEFL.(TL)= L/120 (0.19")
CALCULATED VERT. DEFL.(TL) = L/ 999 (0.00")

CSI: TC=0.52/1.00 (C-L:1) , BC=0.37/1.00 (F-M:1) , WB=0.32/1.00 (E-I:1) , SSI=0.57/1.00 (F-M:1)

DOL LUMBER=1.00 NAIL=1.00 LS BEND=1.10 COMP=1.10 SHEAR=1.10 TENS= 1.10

COMPANION LIVE LOAD FACTOR = 1.00

TRUSS PLATE MANUFACTURER IS NOT RESPONSIBLE FOR QUALITY CONTROL IN THE TRUSS MANUFACTURING PLANT .

NAIL VALUES

PLATE	GRIP(DRY) (PSI) MAX	MIN	SHEAR (PLI) MAX	MIN	SECTION (PLI) MAX	MIN
MT20	650	371	1747	788	1987	1873

PLATE PLACEMENT TOL. = 0.250 inches

PLATE ROTATION TOL. = 5.0 Deg.

JSI GRIP= 0.68 (E) (INPUT = 0.90)
JSI METAL= 0.33 (F) (INPUT = 1.00)

JOB NAME	TRUSS NAME	QUANTITY	PLY	JOB DESC.		DRWG NO.
336324	H82S		1	TRUSS DESC.	JT 45147	E21104080

Alpa Roof Truss, Maple

Version 8.420 S Jan 21 2021 MiTek Industries, Inc. Wed Oct 13 14:51:47 2021 Page 1

ID:hd511hZTz_bdeQoS817GKByhVxV-m2Ym9TsbqhOsZj15xUHiTzQLbclhogLDuxg4?lyTp6w

Scale = 1:65.3

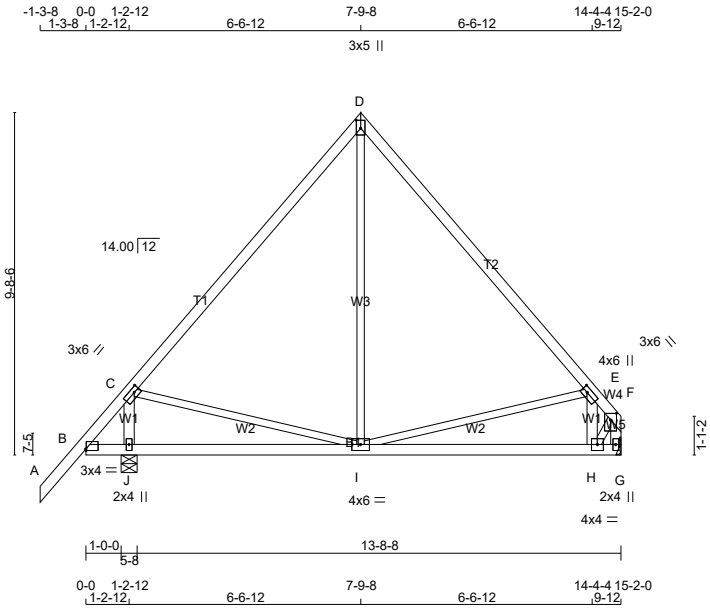

TOTAL WEIGHT = 2 X 70 = 139 lb

[M][F]

LUMBER

N. L. G. A. RULES

CHORDS	SIZE		LUMBER	DESCR.
A - D	2x4	DRY	No.2	SPF
D - F	2x4	DRY	No.2	SPF
G - F	2x4	DRY	No.2	SPF
B - G	2x4	DRY	No.2	SPF
ALL WEBS	2x3	DRY	No.2	SPF
EXCEPT				
J - C	2x4	DRY	No.2	SPF
H - E	2x4	DRY	No.2	SPF

DRY: SEASONED LUMBER.

PLATES (table is in inches)

JT	TYPE	PLATES	W	LEN	Y	X
B	TMB-I	MT20	3.0	4.0	0.50	0.25
C	TMWW-t	MT20	3.0	6.0	1.50	2.00
D	TTW+p	MT20	3.0	5.0	2.75	1.50
E	TMWW-t	MT20	3.0	6.0	1.50	2.00
F	TMVW+p	MT20	4.0	6.0	2.25	2.00
G	BMV1+p	MT20	2.0	4.0		
H	BMWW-t	MT20	4.0	4.0		
I	BMWWW-t	MT20	4.0	6.0		
J	BMW1+w	MT20	2.0	4.0		

LATERAL BRACE(S) SHOWN SHALL BE 2X4 SPF#2

DIMENSIONS, SUPPORTS AND LOADINGS SPECIFIED BY FABRICATOR TO BE VERIFIED BY BUILDING DESIGNER

BEARINGS

JT	FACTORED GROSS REACTION VERT	HORZ	MAXIMUM FACTORED GROSS REACTION DOWN	HORZ	UPLIFT	INPUT BRG IN-SX	REQRD BRG IN-SX
G	652	0	652	0	0	MECHANICAL	
J	921	0	921	0	0	5-8	1-8

A SUITABLE HANGER/MECHANICAL CONNECTION IS REQUIRED AT JOINT G. MINIMUM BEARING LENGTH AT JOINT G = 1-8.

UNFACTORED REACTIONS

JT	1ST LCASE COMBINED	MAX./MIN. COMPONENT REACTIONS SNOW	LIVE	PERM.LIVE	WIND	DEAD	SOIL
G	465	282 / 0	0 / 0	0 / 0	0 / 0	183 / 0	0 / 0
J	654	413 / 0	0 / 0	0 / 0	0 / 0	240 / 0	0 / 0

BEARING MATERIAL TO BE SPF NO.2 OR BETTER AT JOINT(S) J

BRACING

TOP CHORD TO BE SHEATHED OR MAX. PURLIN SPACING = 6.25 FT.
MAX. UNBRACED BOTTOM CHORD LENGTH = 10.00 FT OR RIGID CEILING DIRECTLY APPLIED.

ALL PITCH BREAKS AND PERIMETER CORNER JOINTS MUST BE LATERALLY RESTRAINED.

LOADING

TOTAL LOAD CASES: (4)

CHORDS MEMB. FR-TO	MAX. FACTORED FORCE (LBS)	FACTORED VERT. LOAD LC1 (PLF) FROM	TO	MAX CSI (LC)	MAX. UNBRAC LENGTH	WEBS MEMB. FR-TO	MAX. FACTORED FORCE (LBS)	MAX CSI (LC)
A- B	0 / 39	-78.0	-78.0	0.11 (1)	10.00	J- C	-801 / 0	0.08 (1)
B- C	-25 / 54	-78.0	-78.0	0.48 (1)	6.25	C- I	0 / 175	0.04 (1)
C- D	-411 / 0	-78.0	-78.0	0.43 (1)	6.25	I- D	0 / 160	0.05 (4)
D- E	-413 / 0	-78.0	-78.0	0.43 (1)	6.25	I- E	-307 / 0	0.26 (1)
E- F	-489 / 0	-78.0	-78.0	0.38 (1)	6.25	H- E	-367 / 0	0.04 (1)
G- F	-696 / 0	0.0	0.0	0.07 (1)	7.81	H- F	0 / 723	0.16 (1)
B- J	0 / 72	-18.5	-18.5	0.14 (4)	10.00			
J- I	0 / 72	-18.5	-18.5	0.18 (4)	10.00			
I- H	0 / 539	-18.5	-18.5	0.22 (4)	10.00			
H- G	0 / 0	-18.5	-18.5	0.12 (4)	10.00			

DESIGN CRITERIA

SPECIFIED LOADS:

TOP	CH.	LL	=	21.0	PSF
		DL	=	6.0	PSF
BOT	CH.	LL	=	0.0	PSF
		DL	=	7.4	PSF
TOTAL	LOAD		=	34.4	PSF

SPACING = 24.0 IN. C/C

THIS TRUSS IS DESIGNED FOR RESIDENTIAL OR SMALL BUILDING REQUIREMENTS OF PART 9, NBCC 2015

THIS DESIGN COMPLIES WITH:
- PART 9 OF BCBC 2018 , ABC 2019
- PART 9 OF OBC 2012 (2019 AMENDMENT)
- CSA 086-14
- TPIC 2014

DESIGN ASSUMPTIONS
-OVERHANG NOT TO BE ALTERED OR CUT OFF.

(55 % OF 23.0 P.S.F. G.S.L. PLUS 8.4 P.S.F. RAIN LOAD) EQUALS 21.0 P.S.F. SPECIFIED ROOF LIVE LOAD

ALLOWABLE DEFL.(LL)= L/360 (0.46")
CALCULATED VERT. DEFL.(LL) = L/ 999 (0.01")
ALLOWABLE DEFL.(TL)= L/360 (0.46")
CALCULATED VERT. DEFL.(TL) = L/ 999 (0.04")

CANTILEVER DEFLECTION:
ALLOWABLE DEFL.(LL)= L/120 (0.19")
CALCULATED VERT. DEFL.(LL) = L/ 999 (0.00")
ALLOWABLE DEFL.(TL)= L/120 (0.19")
CALCULATED VERT. DEFL.(TL) = L/ 999 (0.00")

CSI: TC=0.48/1.00 (B-C:1) , BC=0.22/1.00 (H-I:4) , WB=0.26/1.00 (E-I:1) , SSI=0.24/1.00 (E-F:1)

DOL LUMBER=1.00 NAIL=1.00 LS BEND=1.10 COMP=1.10 SHEAR=1.10 TENS= 1.10

COMPANION LIVE LOAD FACTOR = 1.00

TRUSS PLATE MANUFACTURER IS NOT RESPONSIBLE FOR QUALITY CONTROL IN THE TRUSS MANUFACTURING PLANT .

NAIL VALUES

PLATE	GRIP(DRY) (PSI) MAX	MIN	SHEAR (PLI) MAX	MIN	SECTION (PLI) MAX	MIN
MT20	650	371	1747	788	1987	1873

PLATE PLACEMENT TOL. = 0.250 inches

PLATE ROTATION TOL. = 5.0 Deg.

JSI GRIP= 0.78 (H) (INPUT = 0.90)
JSI METAL= 0.20 (H) (INPUT = 1.00)

JOB NAME	TRUSS NAME	QUANTITY	PLY	JOB DESC.	DRWG NO.
336324	H83		1	TRUSS DESC. JT 45147	E21104081

Alpha Roof Truss, Maple

Version 8.420 S Jan 21 2021 MiTek Industries, Inc. Wed Oct 13 14:51:48 2021 Page 1

ID:hd511hZTz_bdeQoS817GKByhVxV-EE58MotDa?WjBtclVCox0AzR50bbX_XM7bQeXkyTp6v

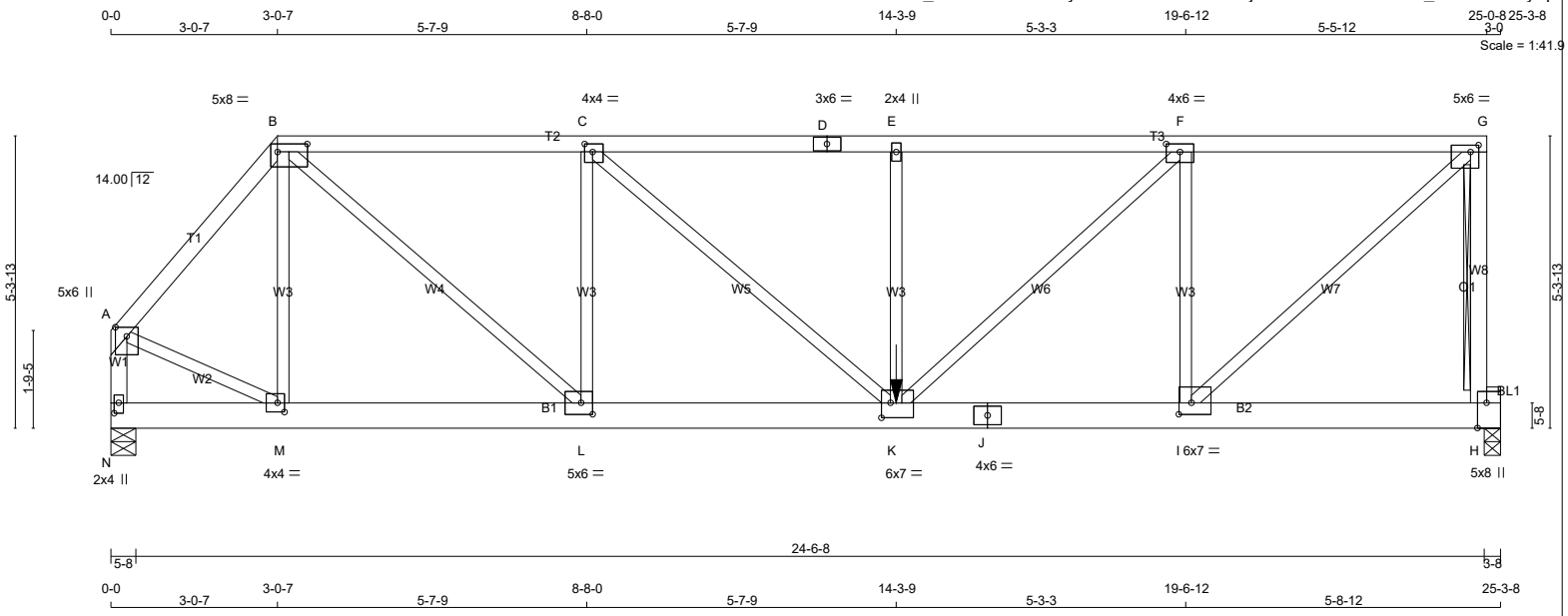

TOTAL WEIGHT = 123 lb

[M]

LUMBER

N. L. G. A. RULES

CHORDS	SIZE		LUMBER	DESCR.
A - B	2x4	DRY	No.2	SPF
B - D	2x4	DRY	1650F 1.5E	SPF
D - G	2x4	DRY	1650F 1.5E	SPF
H - G	2x4	DRY	No.2	SPF
N - A	2x4	DRY	No.2	SPF
N - J	2x6	DRY	No.2	SPF
J - H	2x6	DRY	No.2	SPF
BEARING BLOCKS				
BL1	2x4	DRY	No.2	SPF
ALL WEBS EXCEPT	2x3	DRY	No.2	SPF

DRY: SEASONED LUMBER.

PLATES (table is in inches)

JT	TYPE	PLATES	W	LEN	Y	X
A	TMVW+p	MT20	5.0	6.0	2.00	2.50
B	TTWW-l	MT20	5.0	8.0	1.75	6.50
C	TMWW-t	MT20	4.0	4.0	1.75	1.75
D	TS-t	MT20	3.0	6.0		
E	TMW+w	MT20	2.0	4.0		
F	TMWW-t	MT20	4.0	6.0	1.75	3.00
G	TMVW-t	MT20	5.0	6.0	1.50	1.75
H	BMVK1+t	MT20	5.0	8.0	Edge	2.00
I	BMWW-t	MT20	6.0	7.0	2.50	2.75
J	BS-t	MT20	4.0	6.0		
K	BMWWW-t	MT20	6.0	7.0	3.25	2.00
L	BMWW-t	MT20	5.0	6.0	2.50	2.50
M	BMWW-t	MT20	4.0	4.0	2.00	1.50
N	BMV1+p	MT20	2.0	4.0	2.25	1.00

Edge - INDICATES REFERENCE CORNER OF PLATE TOUCHES EDGE OF CHORD.

LATERAL BRACE(S) SHOWN SHALL BE 2X4 SPF#2

DIMENSIONS, SUPPORTS AND LOADINGS SPECIFIED BY FABRICATOR TO BE VERIFIED BY BUILDING DESIGNER

BEARINGS

JT	FACTORED GROSS REACTION VERT	HORZ	MAXIMUM FACTORED GROSS REACTION DOWN	HORZ	UPLIFT	INPUT BRG IN-SX	REQRD BRG IN-SX
H	2702	0	2702	0	0	3-8	3-8
N	1930	0	1930	0	0	5-8	2-12

UNFACTORED REACTIONS

JT	1ST LCASE COMBINED	MAX./MIN. COMPONENT REACTIONS SNOW	LIVE	PERM.LIVE	WIND	DEAD	SOIL
H	1926	1178 / 0	0 / 0	0 / 0	0 / 0	748 / 0	0 / 0
N	1376	840 / 0	0 / 0	0 / 0	0 / 0	536 / 0	0 / 0

BEARING MATERIAL TO BE SPF NO.2 OR BETTER AT JOINT(S) H, N
BEARING SIZE FACTOR = 1.15 AT JNT(S) H (BASED ON SUPPORT DEPTH = 1-8)

BRACING

TOP CHORD TO BE SHEATHED OR MAX. PURLIN SPACING = 3.21 FT.
MAX. UNBRACED BOTTOM CHORD LENGTH = 6.25 FT OR RIGID CEILING DIRECTLY APPLIED.

ALL PITCH BREAKS AND PERIMETER CORNER JOINTS MUST BE LATERALLY RESTRAINED.

2x3 DRY SPF No.2 T-BRACE AT G-H

FASTEN T AND I-BRACES TO NARROW EDGE OF WEB WITH ONE ROW PER PLY OF 3" COMMON WIRE NAILS @ 6" O.C. WITH 3" MINIMUM END DISTANCE. BRACE MUST COVER 90% OF WEB LENGTH.

END VERTICAL(S) MUST BE SHEATHED OR HAVE BRACES AS INDICATED IN THE MAX. UNBRACED LENGTH COLUMN OF THE TABLE BELOW

LOADING

TOTAL LOAD CASES: (4)

CHORDS

MEMB. FR-TO	MAX. FACTORED FORCE (LBS)	FACTORED VERT. LOAD (PLF) FROM	TO	LC1 CSI (LC)	MAX. UNBRAC LENGTH
A- B	-1740 / 0	-78.0	-78.0	0.19 (1)	4.85
B- C	-2705 / 0	-78.0	-78.0	0.41 (1)	4.33
C- D	-3614 / 0	-78.0	-78.0	0.48 (1)	3.80
D- E	-3614 / 0	-78.0	-78.0	0.48 (1)	3.80
E- F	-3614 / 0	-153.5	-153.5	0.81 (1)	3.21
F- G	-2456 / 0	-153.5	-153.5	0.73 (1)	3.92
H- G	-2620 / 0	0.0	0.0	0.69 (1)	6.92
N- A	-1920 / 0	0.0	0.0	0.22 (1)	6.02
N- M	0 / 0	-18.5	-18.5	0.06 (4)	10.00
M- L	0 / 1118	-18.5	-18.5	0.19 (1)	10.00
L- K	0 / 2706	-18.5	-18.5	0.43 (1)	10.00
K- J	0 / 2456	-36.4	-36.4	0.42 (1)	10.00
J- I	0 / 2456	-36.4	-36.4	0.42 (1)	10.00
I- H	-77 / 0	-36.4	-36.4	0.12 (4)	6.25

WEBS

MEMB. FR-TO	MAX. FACTORED FORCE (LBS)	MAX CSI (LC)
M- B	-369 / 0	0.15 (1)
B- L	0 / 2106	0.52 (1)
L- C	-1267 / 0	0.51 (1)
C- K	0 / 1208	0.30 (1)
K- E	-564 / 0	0.23 (1)
K- F	0 / 1588	0.39 (1)
I- F	-2051 / 0	0.83 (1)
I- G	0 / 3412	0.84 (1)
A- M	0 / 1221	0.30 (1)

FACTORED CONCENTRATED LOADS (LBS)

JT	LOC.	LC1	MAX-	MAX+	FACE	DIR.	TYPE	HEEL	CONN.
K	14-3-9	-1217	-1217	---	FRONT	VERT	TOTAL	---	C1

CONNECTION REQUIREMENTS

1) **C1:** A SUITABLE HANGER/MECHANICAL CONNECTION IS REQUIRED.

DESIGN CRITERIA

*** SPECIAL LOADS ANALYSIS ***
GEOMETRY AND/OR BASIC LOADS CHANGED BY USER.
LOADS WERE DERIVED FROM USER INPUT
NO FURTHER MODIFICATIONS WERE MADE

SPECIFIED LOADS:

TOP	CH.	LL =	21.0	PSF
		DL =	6.0	PSF
BOT	CH.	LL =	0.0	PSF
		DL =	7.4	PSF
TOTAL	LOAD	=	34.4	PSF

SPACING = 24.0 IN. C/C

LOADING IN FLAT SECTION BASED ON A SLOPE OF 2.00/12 MINIMUM

GIRDER TYPE: CPrimeHip
LEFT SETBACK = 3-0-7
RIGHT SETBACK = 0-0
END SETBACK = 5-10-8
END WALL WIDTH = 0-0
CORNER FRAMING TYPE: CONVENTIONAL
END JACK TYPE: CONVENTIONAL
APPLIED TO FRONT SIDE
- ADDT'L LOADS BASED ON 55 % OF GSL.
LOADS APPLIED TO FIRST 10-11-15 OF SPAN MEASURED FROM THE RIGHT.

*** NON STANDARD GIRDER ***
ADDT'L USER-DEFINED LOADS APPLIED TO ALL LOAD CASES.

THIS TRUSS IS DESIGNED FOR RESIDENTIAL OR SMALL BUILDING REQUIREMENTS OF PART 9, NBCC 2015

THIS DESIGN COMPLIES WITH:
- PART 9 OF BCBC 2018 , ABC 2019
- PART 9 OF OBC 2012 (2019 AMENDMENT)
- CSA 086-14
- TPIC 2014

(55 % OF 23.0 P.S.F. G.S.L. PLUS 8.4 P.S.F. RAIN LOAD) EQUALS 21.0 P.S.F. SPECIFIED ROOF LIVE LOAD

ALLOWABLE DEFL.(LL)= L/360 (0.83")
CALCULATED VERT. DEFL.(LL) = L/ 999 (0.12")
ALLOWABLE DEFL.(TL)= L/360 (0.83")
CALCULATED VERT. DEFL.(TL) = L/ 999 (0.24")

CSI: TC=0.81/1.00 (E-F:1) , BC=0.43/1.00 (K-L:1) , WB=0.84/1.00 (G-I:1) , SSI=0.44/1.00 (F-G:1)

DOL LUMBER=1.00 NAIL=1.00 LS BEND=1.00 COMP=1.00 SHEAR=1.00 TENS= 1.00

COMPANION LIVE LOAD FACTOR = 1.00

TRUSS PLATE MANUFACTURER IS NOT RESPONSIBLE FOR QUALITY CONTROL IN THE TRUSS MANUFACTURING PLANT .

NAIL VALUES

PLATE	GRIP(DRY) (PSI) MAX	MIN	SHEAR (PLI) MAX	MIN	SECTION (PLI) MAX	MIN
MT20	650	371	1747	788	1987	1873

CONTINUED ON PAGE 2

JOB NAME	TRUSS NAME	QUANTITY	PLY	JOB DESC.	DRWG NO.
336324	H84		1	TRUSS DESC. JT 45147	E21104082

Alpa Roof Truss, Maple

Version 8.420 S Jan 21 2021 MiTek Industries, Inc. Wed Oct 13 14:51:50 2021 Page 1

ID:hd511hZTz bdeQoS817GKByhVxV-AdDunUvT6cmRQBmqcdqP5b2qmqJp?y9fauvlcdyTp6t

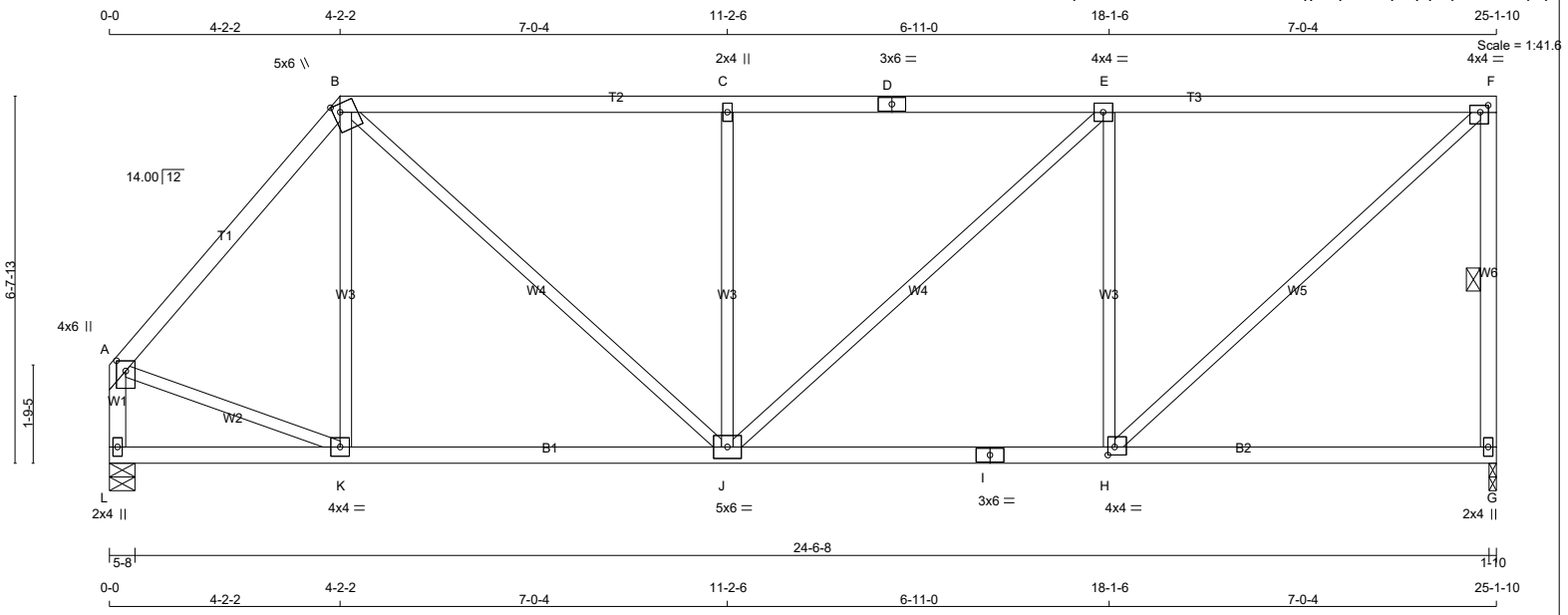

TOTAL WEIGHT = 109 lb [M]

LUMBER

N. L. G. A. RULES

CHORDS	SIZE		LUMBER	DESCR.
A - B	2x4	DRY	No.2	SPF
B - D	2x4	DRY	No.2	SPF
D - F	2x4	DRY	No.2	SPF
G - F	2x4	DRY	No.2	SPF
L - A	2x4	DRY	No.2	SPF
L - I	2x4	DRY	No.2	SPF
I - G	2x4	DRY	No.2	SPF
ALL WEBS EXCEPT	2x3	DRY	No.2	SPF

DRY: SEASONED LUMBER.

PLATES (table is in inches)

JT	TYPE	PLATES	W	LEN	Y	X
A	TMVW+p	MT20	4.0	6.0	2.25	2.00
B	TTWW+m	MT20	5.0	6.0	1.75	1.50
C	TMW+w	MT20	2.0	4.0		
D	TS-t	MT20	3.0	6.0		
E	TMWW-t	MT20	4.0	4.0		
F	TMVW-t	MT20	4.0	4.0	1.50	1.75
G	BMV1+p	MT20	2.0	4.0		
H	BMWW-t	MT20	4.0	4.0	1.75	1.50
I	BS-t	MT20	3.0	6.0		
J	BMWWW-t	MT20	5.0	6.0		
K	BMWW-t	MT20	4.0	4.0		
L	BMV1+p	MT20	2.0	4.0		

LATERAL BRACE(S) SHOWN SHALL BE 2X4 SPF#2

DIMENSIONS, SUPPORTS AND LOADINGS SPECIFIED BY FABRICATOR TO BE VERIFIED BY BUILDING DESIGNER

BEARINGS

JT	FACTORED GROSS REACTION VERT	HORZ	MAXIMUM FACTORED GROSS REACTION DOWN	HORZ	UPLIFT	INPUT BRG IN-SX	REQRD BRG IN-SX
G	1212	0	1212	0	0	1-10	1-8
L	1212	0	1212	0	0	5-8	1-8

UNFACTORED REACTIONS

JT	1ST LCASE COMBINED	MAX./MIN. COMPONENT REACTIONS SNOW	LIVE	PERM.LIVE	WIND	DEAD	SOIL
G	864	528 / 0	0 / 0	0 / 0	0 / 0	337 / 0	0 / 0
L	864	528 / 0	0 / 0	0 / 0	0 / 0	337 / 0	0 / 0

BEARING MATERIAL TO BE SPF NO.2 OR BETTER AT JOINT(S) G, L

BRACING

TOP CHORD TO BE SHEATHED OR MAX. PURLIN SPACING = 4.91 FT.
MAX. UNBRACED BOTTOM CHORD LENGTH = 10.00 FT OR RIGID CEILING DIRECTLY APPLIED.

ALL PITCH BREAKS AND PERIMETER CORNER JOINTS MUST BE LATERALLY RESTRAINED.

1 LATERAL BRACE(S) AT 1/ 2 LENGTH OF F-G.

END VERTICAL(S) MUST BE SHEATHED OR HAVE BRACES AS INDICATED IN THE MAX. UNBRACED LENGTH COLUMN OF THE TABLE BELOW

LOADING

TOTAL LOAD CASES: (4)

CHORDS

MEMB. FR-TO	MAX. FACTORED FORCE (LBS)	FACTORED VERT. LOAD (PLF) FROM	TO	LC1 CSI (LC)	MAX UNBRAC LENGTH
A- B	-1052 / 0	-78.0	-78.0	0.27 (1)	5.80
B- C	-1251 / 0	-78.0	-78.0	0.61 (1)	4.92
C- D	-1252 / 0	-78.0	-78.0	0.61 (1)	4.91
D- E	-1252 / 0	-78.0	-78.0	0.61 (1)	4.91
E- F	-1037 / 0	-78.0	-78.0	0.59 (1)	5.30
G- F	-1160 / 0	0.0	0.0	0.24 (1)	5.91
L- A	-1188 / 0	0.0	0.0	0.13 (1)	7.32
L- K	0 / 0	-18.5	-18.5	0.15 (4)	10.00
K- J	0 / 679	-18.5	-18.5	0.23 (4)	10.00
J- I	0 / 1037	-18.5	-18.5	0.32 (4)	10.00
I- H	0 / 1037	-18.5	-18.5	0.32 (4)	10.00
H- G	0 / 0	-18.5	-18.5	0.22 (4)	10.00

WEBS

MEMB. FR-TO	MAX. FACTORED FORCE (LBS)	MAX CSI (LC)
K- B	-105 / 42	0.08 (1)
B- J	0 / 770	0.17 (1)
J- C	-589 / 0	0.43 (1)
J- E	0 / 291	0.07 (1)
H- E	-794 / 0	0.58 (1)
H- F	0 / 1399	0.31 (1)
A- K	0 / 717	0.16 (1)

DESIGN CRITERIA

SPECIFIED LOADS:

TOP CH.	LL	=	21.0	PSF
	DL	=	6.0	PSF
BOT CH.	LL	=	0.0	PSF
	DL	=	7.4	PSF
TOTAL LOAD		=	34.4	PSF

SPACING = 24.0 IN. C/C

LOADING IN FLAT SECTION BASED ON A SLOPE OF 2.00/12 MINIMUM

THIS TRUSS IS DESIGNED FOR RESIDENTIAL OR SMALL BUILDING REQUIREMENTS OF PART 9, NBCC 2015

THIS DESIGN COMPLIES WITH:
- PART 9 OF BCBC 2018 , ABC 2019
- PART 9 OF OBC 2012 (2019 AMENDMENT)
- CSA 086-14
- TPIC 2014

(55 % OF 23.0 P.S.F. G.S.L. PLUS 8.4 P.S.F. RAIN LOAD) EQUALS 21.0 P.S.F. SPECIFIED ROOF LIVE LOAD

ALLOWABLE DEFL.(LL)= L/360 (0.84")
CALCULATED VERT. DEFL.(LL) = L/ 999 (0.05")
ALLOWABLE DEFL.(TL)= L/360 (0.84")
CALCULATED VERT. DEFL.(TL) = L/ 999 (0.10")

CSI: TC=0.61/1.00 (C-E:1) , BC=0.32/1.00 (H-J:4) , WB=0.58/1.00 (E-H:1) , SSI=0.26/1.00 (E-F:1)

DOL LUMBER=1.00 NAIL=1.00 LS BEND=1.10 COMP=1.10 SHEAR=1.10 TENS= 1.10

COMPANION LIVE LOAD FACTOR = 1.00

TRUSS PLATE MANUFACTURER IS NOT RESPONSIBLE FOR QUALITY CONTROL IN THE TRUSS MANUFACTURING PLANT .

NAIL VALUES

PLATE	GRIP(DRY) (PSI) MAX	MIN	SHEAR (PLI) MAX	MIN	SECTION (PLI) MAX	MIN
MT20	650	371	1747	788	1987	1873

PLATE PLACEMENT TOL. = 0.250 inches

PLATE ROTATION TOL. = 5.0 Deg.

JSI GRIP= 0.90 (F) (INPUT = 0.90)
JSI METAL= 0.39 (A) (INPUT = 1.00)

JOB NAME	TRUSS NAME	QUANTITY	PLY	JOB DESC.	DRWG NO.
336324	H85		1	TRUSS DESC. JT 45147	E21104083

Alpa Roof Truss, Maple

Version 8.420 S Jan 21 2021 MiTek Industries, Inc. Wed Oct 13 14:51:52 2021 Page 1

ID:hd511hZTz bdeQoS817GKByhVxV-7?LfCAwjeD08fUw3k1ttA087Idy7TrOy2COrqWyTp6r

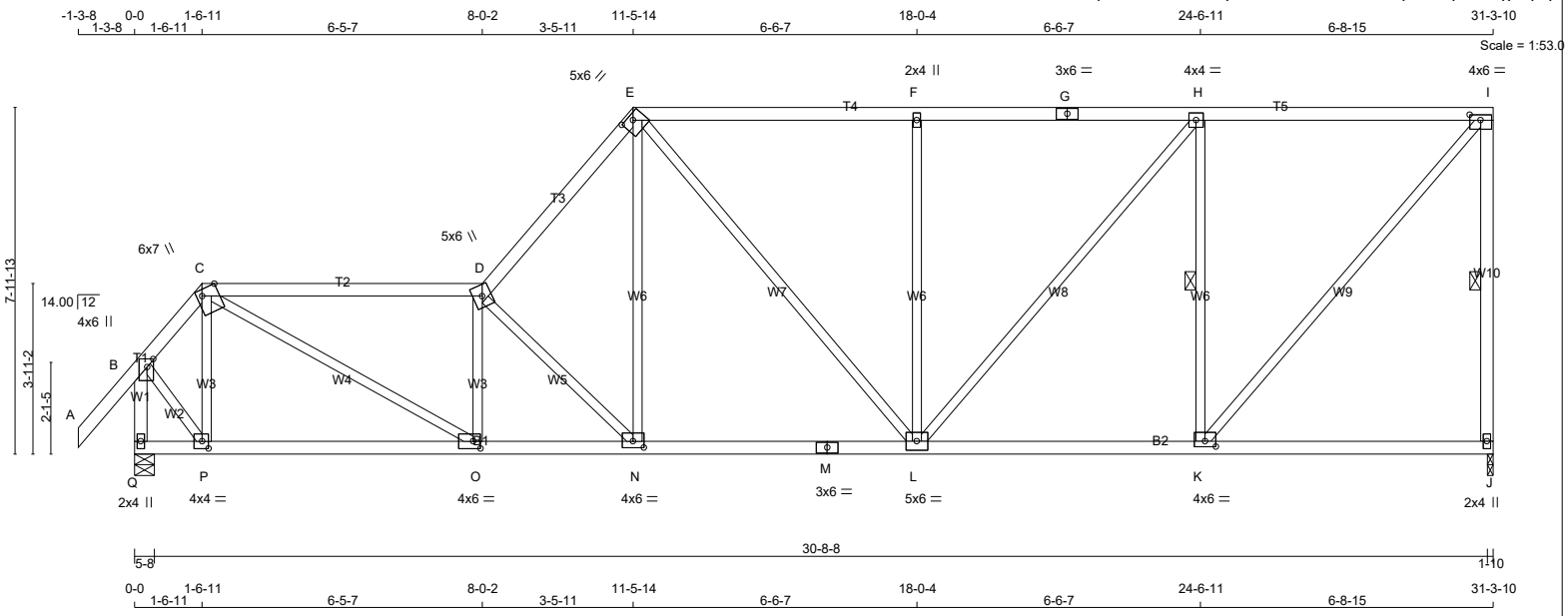

TOTAL WEIGHT = 146 lb

[M]

LUMBER

N. L. G. A. RULES

CHORDS	SIZE		LUMBER	DESCR.
A - C	2x4	DRY	No.2	SPF
C - D	2x4	DRY	No.2	SPF
D - E	2x4	DRY	No.2	SPF
E - G	2x4	DRY	No.2	SPF
G - I	2x4	DRY	No.2	SPF
J - I	2x4	DRY	No.2	SPF
Q - B	2x4	DRY	No.2	SPF
Q - M	2x4	DRY	No.2	SPF
M - J	2x4	DRY	No.2	SPF
ALL WEBS EXCEPT	2x3	DRY	No.2	SPF

DRY: SEASONED LUMBER.

PLATES (table is in inches)

JT	TYPE	PLATES	W	LEN	Y	X
B	TMVW+p	MT20	4.0	6.0	2.25	1.75
C	TTWW+m	MT20	6.0	7.0	Edge	4.50
D	TTWW+m	MT20	5.0	6.0		
E	TTWW-h	MT20	5.0	6.0	1.50	3.00
F	TMW+w	MT20	2.0	4.0		
G	TS-t	MT20	3.0	6.0		
H	TMWW-t	MT20	4.0	4.0		
I	TMVW-t	MT20	4.0	6.0	1.50	3.00
J	BMV1+p	MT20	2.0	4.0		
K	BMWW-t	MT20	4.0	6.0	1.50	3.00
L	BMWWW-t	MT20	5.0	6.0		
M	BS-t	MT20	3.0	6.0		
N	BMWW-t	MT20	4.0	6.0	1.75	3.00
O	BMWW-t	MT20	4.0	6.0	2.00	2.00
P	BMWW-t	MT20	4.0	4.0	2.00	1.75
Q	BMV1+p	MT20	2.0	4.0		

Edge - INDICATES REFERENCE CORNER OF PLATE TOUCHES EDGE OF CHORD.

LATERAL BRACE(S) SHOWN SHALL BE 2X4 SPF#2

DIMENSIONS, SUPPORTS AND LOADINGS SPECIFIED BY FABRICATOR TO BE VERIFIED BY BUILDING DESIGNER

BEARINGS

JT	FACTORED GROSS REACTION VERT	HORZ	MAXIMUM FACTORED GROSS REACTION DOWN	HORZ	UPLIFT	INPUT BRG IN-SX	REQRD BRG IN-SX
J	1507	0	1507	0	0	1-10	1-10
Q	1622	0	1622	0	0	5-8	1-12

UNFACTORED REACTIONS

JT	1ST LCASE COMBINED	MAX./MIN. COMPONENT REACTIONS SNOW	LIVE	PERM.LIVE	WIND	DEAD	SOIL
J	1075	656 / 0	0 / 0	0 / 0	0 / 0	419 / 0	0 / 0
Q	1154	717 / 0	0 / 0	0 / 0	0 / 0	437 / 0	0 / 0

BEARING MATERIAL TO BE SPF NO.2 OR BETTER AT JOINT(S) J, Q

BRACING

TOP CHORD TO BE SHEATHED OR MAX. PURLIN SPACING = 3.50 FT.
MAX. UNBRACED BOTTOM CHORD LENGTH = 10.00 FT OR RIGID CEILING DIRECTLY APPLIED.

ALL PITCH BREAKS AND PERIMETER CORNER JOINTS MUST BE LATERALLY RESTRAINED.

1 LATERAL BRACE(S) AT 1/ 2 LENGTH OF I-J, H-K.

END VERTICAL(S) MUST BE SHEATHED OR HAVE BRACES AS INDICATED IN THE MAX. UNBRACED LENGTH COLUMN OF THE TABLE BELOW

LOADING

TOTAL LOAD CASES: (4)

CHORDS

MEMB. FR-TO	MAX. FACTORED FORCE (LBS)	FACTORED VERT. LOAD LC1 (PLF) FROM	TO	MAX CSI (LC)	MAX. UNBRAC LENGTH
A- B	0 / 42	-78.0	-78.0	0.11 (1)	10.00
B- C	-1036 / 0	-78.0	-78.0	0.12 (1)	6.03
C- D	-2457 / 0	-78.0	-78.0	0.80 (1)	3.50
D- E	-2179 / 0	-78.0	-78.0	0.25 (1)	4.41
E- F	-1545 / 0	-78.0	-78.0	0.55 (1)	4.64
F- G	-1546 / 0	-78.0	-78.0	0.58 (1)	4.58
G- H	-1546 / 0	-78.0	-78.0	0.58 (1)	4.58
H- I	-1091 / 0	-78.0	-78.0	0.54 (1)	5.29
J- I	-1457 / 0	0.0	0.0	0.42 (1)	5.42
Q- B	-1655 / 0	0.0	0.0	0.20 (1)	6.44
Q- P	0 / 0	-18.5	-18.5	0.15 (4)	10.00
P- O	0 / 626	-18.5	-18.5	0.21 (4)	10.00
O- N	0 / 2485	-18.5	-18.5	0.45 (1)	10.00
N- M	0 / 1434	-18.5	-18.5	0.31 (1)	10.00
M- L	0 / 1434	-18.5	-18.5	0.31 (1)	10.00
L- K	0 / 1091	-18.5	-18.5	0.30 (4)	10.00
K- J	0 / 0	-18.5	-18.5	0.20 (4)	10.00

WEBS

MEMB. FR-TO	MAX. FACTORED FORCE (LBS)	MAX CSI (LC)
P- C	-536 / 0	0.13 (1)
C- O	0 / 2104	0.47 (1)
O- D	-970 / 0	0.23 (1)
D- N	-1512 / 0	0.63 (1)
N- E	0 / 1174	0.26 (1)
E- L	0 / 171	0.04 (1)
L- F	-546 / 0	0.66 (1)
L- H	0 / 702	0.16 (1)
K- H	-1107 / 0	0.44 (1)
K- I	0 / 1655	0.37 (1)
B- P	0 / 929	0.21 (1)

DESIGN CRITERIA

SPECIFIED LOADS:

TOP	CH.	LL	=	21.0	PSF
		DL	=	6.0	PSF
BOT	CH.	LL	=	0.0	PSF
		DL	=	7.4	PSF
TOTAL	LOAD		=	34.4	PSF

SPACING = 24.0 IN. C/C

LOADING IN ALL FLAT SECTIONS BASED ON A SLOPE OF 2.00/12 MINIMUM

THIS TRUSS IS DESIGNED FOR RESIDENTIAL OR SMALL BUILDING REQUIREMENTS OF PART 9, NBCC 2015

THIS DESIGN COMPLIES WITH:
- PART 9 OF BCBC 2018 , ABC 2019
- PART 9 OF OBC 2012 (2019 AMENDMENT)
- CSA 086-14
- TPIC 2014

DESIGN ASSUMPTIONS
-OVERHANG NOT TO BE ALTERED OR CUT OFF.

(55 % OF 23.0 P.S.F. G.S.L. PLUS 8.4 P.S.F. RAIN LOAD) EQUALS 21.0 P.S.F. SPECIFIED ROOF LIVE LOAD

ALLOWABLE DEFL.(LL)= L/360 (1.04")
CALCULATED VERT. DEFL.(LL) = L/ 999 (0.12")
ALLOWABLE DEFL.(TL)= L/360 (1.04")
CALCULATED VERT. DEFL.(TL) = L/ 999 (0.25")

CSI: TC=0.80/1.00 (C-D:1) , BC=0.45/1.00 (N-O:1) , WB=0.66/1.00 (F-L:1) , SSI=0.24/1.00 (H-I:1)

DOL LUMBER=1.00 NAIL=1.00 LS BEND=1.10 COMP=1.10 SHEAR=1.10 TENS= 1.10

COMPANION LIVE LOAD FACTOR = 1.00

TRUSS PLATE MANUFACTURER IS NOT RESPONSIBLE FOR QUALITY CONTROL IN THE TRUSS MANUFACTURING PLANT .

NAIL VALUES

PLATE	GRIP(DRY) (PSI) MAX	MIN	SHEAR (PLI) MAX	MIN	SECTION (PLI) MAX	MIN
MT20	650	371	1747	788	1987	1873

PLATE PLACEMENT TOL. = 0.250 inches

PLATE ROTATION TOL. = 5.0 Deg.

JSI GRIP= 0.88 (C) (INPUT = 0.90)
JSI METAL= 0.48 (M) (INPUT = 1.00)

JOB NAME	TRUSS NAME	QUANTITY	PLY	JOB DESC.	DRWG NO.
336324	H86		1	TRUSS DESC. JT 45147	E21104084

Alpa Roof Truss, Maple

Version 8.420 S Jan 21 2021 MiTek Industries, Inc. Wed Oct 13 14:51:53 2021 Page 1

ID:hd511hZTz bdeQoS817GKByhVxV-bCv1PWxLPX8?HeUFHIO6jEqJM1J5CGH5Gs7PDyyTp6q

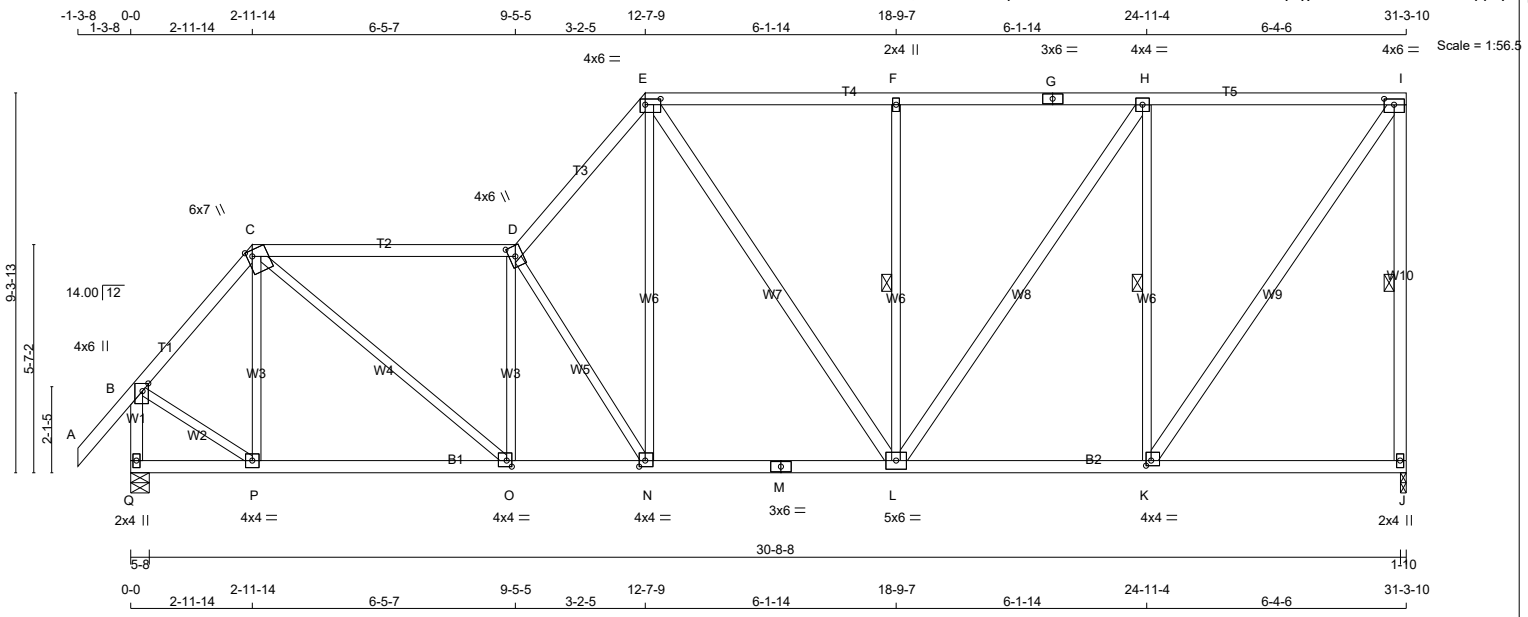

TOTAL WEIGHT = 169 lb

[M]

LUMBER

N. L. G. A. RULES

CHORDS	SIZE		LUMBER	DESCR.
A - C	2x4	DRY	No.2	SPF
C - D	2x4	DRY	No.2	SPF
D - E	2x4	DRY	No.2	SPF
E - G	2x4	DRY	No.2	SPF
G - I	2x4	DRY	No.2	SPF
J - I	2x4	DRY	No.2	SPF
Q - B	2x4	DRY	No.2	SPF
Q - M	2x4	DRY	No.2	SPF
M - J	2x4	DRY	No.2	SPF
ALL WEBS	2x3	DRY	No.2	SPF
EXCEPT				
E - L	2x4	DRY	No.2	SPF
L - H	2x4	DRY	No.2	SPF
K - I	2x4	DRY	No.2	SPF

DRY: SEASONED LUMBER.

PLATES (table is in inches)

JT	TYPE	PLATES	W	LEN	Y	X
B	TMVW+p	MT20	4.0	6.0	2.25	1.75
C	TTWW+m	MT20	6.0	7.0	Edge	1.50
D	TTWW+m	MT20	4.0	6.0	3.00	1.75
E	TTWW-l	MT20	4.0	6.0	1.75	4.50
F	TMW+w	MT20	2.0	4.0		
G	TS-t	MT20	3.0	6.0		
H	TMWW-t	MT20	4.0	4.0		
I	TMVW-t	MT20	4.0	6.0	1.75	3.00
J	BMV1+p	MT20	2.0	4.0		
K	BMWW-t	MT20	4.0	4.0	1.50	1.50
L	BMWWW-t	MT20	5.0	6.0		
M	BS-t	MT20	3.0	6.0		
N	BMWW-t	MT20	4.0	4.0	1.75	1.75
O	BMWW-t	MT20	4.0	4.0	1.75	1.50
P	BMWW-t	MT20	4.0	4.0		
Q	BMV1+p	MT20	2.0	4.0		

Edge - INDICATES REFERENCE CORNER OF PLATE TOUCHES EDGE OF CHORD.

LATERAL BRACE(S) SHOWN SHALL BE 2X4 SPF#2

DIMENSIONS, SUPPORTS AND LOADINGS SPECIFIED BY FABRICATOR TO BE VERIFIED BY BUILDING DESIGNER

BEARINGS

JT	FACTORED GROSS REACTION VERT	HORZ	MAXIMUM FACTORED GROSS REACTION DOWN	HORZ	UPLIFT	INPUT BRG IN-SX	REQRD BRG IN-SX
J	1510	0	1510	0	0	1-10	1-10
Q	1619	0	1619	0	0	5-8	1-12

UNFACTORED REACTIONS

JT	1ST LCASE COMBINED	MAX./MIN. COMPONENT REACTIONS SNOW	LIVE	PERM.LIVE	WIND	DEAD	SOIL
J	1076	657 / 0	0 / 0	0 / 0	0 / 0	419 / 0	0 / 0
Q	1152	716 / 0	0 / 0	0 / 0	0 / 0	436 / 0	0 / 0

BEARING MATERIAL TO BE SPF NO.2 OR BETTER AT JOINT(S) J, Q

BRACING

TOP CHORD TO BE SHEATHED OR MAX. PURLIN SPACING = 4.00 FT.
MAX. UNBRACED BOTTOM CHORD LENGTH = 10.00 FT OR RIGID CEILING DIRECTLY APPLIED.

ALL PITCH BREAKS AND PERIMETER CORNER JOINTS MUST BE LATERALLY RESTRAINED.

1 LATERAL BRACE(S) AT 1/ 2 LENGTH OF I-J, F-L, H-K.

END VERTICAL(S) MUST BE SHEATHED OR HAVE BRACES AS INDICATED IN THE MAX. UNBRACED LENGTH COLUMN OF THE TABLE BELOW

LOADING

TOTAL LOAD CASES: (4)

CHORDS

MEMB. FR-TO	MAX. FACTORED FORCE (LBS)	FACTORED VERT. LOAD (PLF) FROM	TO	LC1 CSI (LC)	MAX UNBRAC LENGTH
A- B	0 / 42	-78.0	-78.0	0.11 (1)	10.00
B- C	-1229 / 0	-78.0	-78.0	0.14 (1)	5.63
C- D	-1878 / 0	-78.0	-78.0	0.71 (1)	4.00
D- E	-1931 / 0	-78.0	-78.0	0.20 (1)	4.68
E- F	-1294 / 0	-78.0	-78.0	0.46 (1)	5.10
F- G	-1294 / 0	-78.0	-78.0	0.49 (1)	5.04
G- H	-1294 / 0	-78.0	-78.0	0.49 (1)	5.04
H- I	-890 / 0	-78.0	-78.0	0.46 (1)	5.83
J- I	-1462 / 0	0.0	0.0	0.60 (1)	5.41
Q- B	-1611 / 0	0.0	0.0	0.19 (1)	6.52
Q- P	0 / 0	-18.5	-18.5	0.13 (4)	10.00
P- O	0 / 788	-18.5	-18.5	0.21 (1)	10.00
O- N	0 / 1894	-18.5	-18.5	0.34 (1)	10.00
N- M	0 / 1270	-18.5	-18.5	0.28 (1)	10.00
M- L	0 / 1270	-18.5	-18.5	0.28 (1)	10.00
L- K	0 / 890	-18.5	-18.5	0.26 (4)	10.00
K- J	0 / 0	-18.5	-18.5	0.18 (4)	10.00

WEBS

MEMB. FR-TO	MAX. FACTORED FORCE (LBS)	MAX CSI (LC)
P- C	-334 / 0	0.16 (1)
C- O	0 / 1416	0.32 (1)
O- D	-823 / 0	0.39 (1)
D- N	-1202 / 0	0.81 (1)
N- E	0 / 1104	0.25 (1)
E- L	0 / 43	0.01 (1)
L- F	-514 / 0	0.29 (1)
L- H	0 / 717	0.12 (1)
K- H	-1132 / 0	0.65 (1)
K- I	0 / 1544	0.25 (1)
B- P	0 / 912	0.21 (1)

DESIGN CRITERIA

SPECIFIED LOADS:

TOP CH.	LL	=	21.0	PSF
	DL	=	6.0	PSF
BOT CH.	LL	=	0.0	PSF
	DL	=	7.4	PSF
TOTAL LOAD		=	34.4	PSF

SPACING = 24.0 IN. C/C

LOADING IN ALL FLAT SECTIONS BASED ON A SLOPE OF 2.00/12 MINIMUM

THIS TRUSS IS DESIGNED FOR RESIDENTIAL OR SMALL BUILDING REQUIREMENTS OF PART 9, NBCC 2015

THIS DESIGN COMPLIES WITH:
- PART 9 OF BCBC 2018 , ABC 2019
- PART 9 OF OBC 2012 (2019 AMENDMENT)
- CSA 086-14
- TPIC 2014

(55 % OF 23.0 P.S.F. G.S.L. PLUS 8.4 P.S.F. RAIN LOAD) EQUALS 21.0 P.S.F. SPECIFIED ROOF LIVE LOAD

ALLOWABLE DEFL.(LL)= L/360 (1.04")
CALCULATED VERT. DEFL.(LL) = L/ 999 (0.09")
ALLOWABLE DEFL.(TL)= L/360 (1.04")
CALCULATED VERT. DEFL.(TL) = L/ 999 (0.19")

CSI: TC=0.71/1.00 (C-D:1) , BC=0.34/1.00 (N-O:1) , WB=0.81/1.00 (D-N:1) , SSI=0.23/1.00 (H-I:1)

DOL LUMBER=1.00 NAIL=1.00 LS BEND=1.10 COMP=1.10 SHEAR=1.10 TENS= 1.10

COMPANION LIVE LOAD FACTOR = 1.00

TRUSS PLATE MANUFACTURER IS NOT RESPONSIBLE FOR QUALITY CONTROL IN THE TRUSS MANUFACTURING PLANT .

NAIL VALUES

PLATE	GRIP(DRY) (PSI) MAX	MIN	SHEAR (PLI) MAX	MIN	SECTION (PLI) MAX	MIN
MT20	650	371	1747	788	1987	1873

PLATE PLACEMENT TOL. = 0.250 inches

PLATE ROTATION TOL. = 5.0 Deg.

JSI GRIP= 0.90 (N) (INPUT = 0.90)
JSI METAL= 0.59 (E) (INPUT = 1.00)

JOB NAME	TRUSS NAME	QUANTITY	PLY	JOB DESC.		DRWG NO.
336324	H87		1	TRUSS DESC.	JT 45147	E21104085

Alpa Roof Truss, Maple

Version 8.420 S Jan 21 2021 MiTek Industries, Inc. Wed Oct 13 14:51:55 2021 Page 1

ID:hd511hZTz_bdeQoS817GKByhVxV-Xa1nqCycx8PjWyeePAQaoflcxr0RgC9OkAcWHqyTp6o

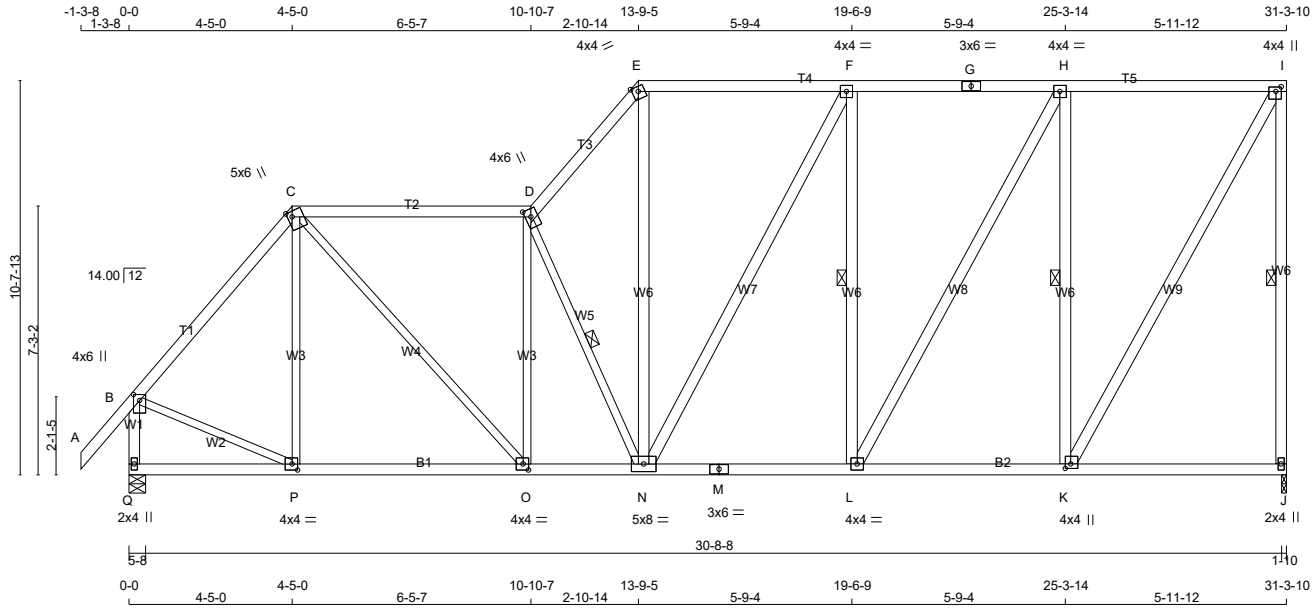

TOTAL WEIGHT = 194 lb

LUMBER

N. L. G. A. RULES

CHORDS	SIZE		LUMBER	DESCR.
A - C	2x4	DRY	No.2	SPF
C - D	2x4	DRY	No.2	SPF
D - E	2x4	DRY	No.2	SPF
E - G	2x4	DRY	No.2	SPF
G - I	2x4	DRY	No.2	SPF
J - I	2x4	DRY	No.2	SPF
Q - B	2x4	DRY	No.2	SPF
Q - M	2x4	DRY	No.2	SPF
M - J	2x4	DRY	No.2	SPF
ALL WEBS	2x4	DRY	No.2	SPF
EXCEPT				
P - C	2x3	DRY	No.2	SPF
C - O	2x3	DRY	No.2	SPF
O - D	2x3	DRY	No.2	SPF
D - N	2x3	DRY	No.2	SPF
B - P	2x3	DRY	No.2	SPF

DRY: SEASONED LUMBER.

PLATES (table is in inches)

JT	TYPE	PLATES	W	LEN	Y	X
B	TMVW+p	MT20	4.0	6.0	2.00	2.00
C	TTWW+m	MT20	5.0	6.0	1.75	1.50
D	TTWW+m	MT20	4.0	6.0	2.50	1.75
E	TTW-m	MT20	4.0	4.0	Edge	
F	TMWW-t	MT20	4.0	4.0		
G	TS-t	MT20	3.0	6.0		
H	TMWW-t	MT20	4.0	4.0		
I	TMVW+p	MT20	4.0	4.0	1.50	1.75
J	BMV1+p	MT20	2.0	4.0		
K	BMWW+t	MT20	4.0	4.0	1.50	1.75
L	BMWW-t	MT20	4.0	4.0		
M	BS-t	MT20	3.0	6.0		
N	BMWWW-t	MT20	5.0	8.0		
O	BMWW-t	MT20	4.0	4.0	2.00	1.75
P	BMWW-t	MT20	4.0	4.0	2.00	1.75
Q	BMV1+p	MT20	2.0	4.0		

Edge - INDICATES REFERENCE CORNER OF PLATE TOUCHES EDGE OF CHORD.

LATERAL BRACE(S) SHOWN SHALL BE 2X4 SPF#2

DIMENSIONS, SUPPORTS AND LOADINGS SPECIFIED BY FABRICATOR TO BE VERIFIED BY BUILDING DESIGNER

BEARINGS

JT	FACTORED GROSS REACTION VERT	HORZ	MAXIMUM FACTORED GROSS REACTION DOWN	HORZ	UPLIFT	INPUT BRG IN-SX	REQRD BRG IN-SX
J	1510	0	1510	0	0	1-10	1-10
Q	1619	0	1619	0	0	5-8	1-12

UNFACTORED REACTIONS

JT	1ST LCASE COMBINED	MAX./MIN. COMPONENT REACTIONS SNOW	LIVE	PERM.LIVE	WIND	DEAD	SOIL
J	1076	657 / 0	0 / 0	0 / 0	0 / 0	419 / 0	0 / 0
Q	1152	716 / 0	0 / 0	0 / 0	0 / 0	436 / 0	0 / 0

BEARING MATERIAL TO BE SPF NO.2 OR BETTER AT JOINT(S) J, Q

BRACING

TOP CHORD TO BE SHEATHED OR MAX. PURLIN SPACING = 4.39 FT.
MAX. UNBRACED BOTTOM CHORD LENGTH = 10.00 FT OR RIGID CEILING DIRECTLY APPLIED.

ALL PITCH BREAKS AND PERIMETER CORNER JOINTS MUST BE LATERALLY RESTRAINED.

1 LATERAL BRACE(S) AT 1/ 2 LENGTH OF I-J, D-N, F-L, H-K.

END VERTICAL(S) MUST BE SHEATHED OR HAVE BRACES AS INDICATED IN THE MAX. UNBRACED LENGTH COLUMN OF THE TABLE BELOW

LOADING

TOTAL LOAD CASES: (4)

CHORDS

MEMB. FR-TO	MAX. FACTORED FORCE (LBS)	FACTORED VERT. LOAD (PLF) FROM	TO	LC1 CSI (LC)	MAX UNBRAC LENGTH
A- B	0 / 42	-78.0	-78.0	0.11 (1)	10.00
B- C	-1296 / 0	-78.0	-78.0	0.33 (1)	5.31
C- D	-1538 / 0	-78.0	-78.0	0.67 (1)	4.39
D- E	-1716 / 0	-78.0	-78.0	0.16 (1)	4.94
E- F	-1131 / 0	-78.0	-78.0	0.38 (1)	5.47
F- G	-1098 / 0	-78.0	-78.0	0.41 (1)	5.47
G- H	-1098 / 0	-78.0	-78.0	0.41 (1)	5.47
H- I	-737 / 0	-78.0	-78.0	0.40 (1)	6.25
J- I	-1465 / 0	0.0	0.0	0.84 (1)	5.41
Q- B	-1591 / 0	0.0	0.0	0.19 (1)	6.55
Q- P	0 / 0	-18.5	-18.5	0.14 (4)	10.00
P- O	0 / 836	-18.5	-18.5	0.22 (4)	10.00
O- N	0 / 1549	-18.5	-18.5	0.29 (1)	10.00
N- M	0 / 1098	-18.5	-18.5	0.24 (1)	10.00
M- L	0 / 1098	-18.5	-18.5	0.24 (1)	10.00
L- K	0 / 737	-18.5	-18.5	0.23 (4)	10.00
K- J	0 / 0	-18.5	-18.5	0.15 (4)	10.00

WEBS

MEMB. FR-TO	MAX. FACTORED FORCE (LBS)	MAX CSI (LC)
P- C	-203 / 3	0.19 (1)
C- O	0 / 1039	0.23 (1)
O- D	-686 / 0	0.64 (1)
D- N	-1072 / 0	0.41 (1)
N- E	0 / 1000	0.16 (1)
N- F	0 / 69	0.01 (1)
L- F	-542 / 0	0.31 (1)
L- H	0 / 741	0.12 (1)
K- H	-1155 / 0	0.66 (1)
K- I	0 / 1475	0.24 (1)
B- P	0 / 900	0.20 (1)

[M]

DESIGN CRITERIA

SPECIFIED LOADS:

TOP CH.	LL	=	21.0	PSF
	DL	=	6.0	PSF
BOT CH.	LL	=	0.0	PSF
	DL	=	7.4	PSF
TOTAL LOAD		=	34.4	PSF

SPACING = 24.0 IN. C/C

LOADING IN ALL FLAT SECTIONS BASED ON A SLOPE OF 2.00/12 MINIMUM

THIS TRUSS IS DESIGNED FOR RESIDENTIAL OR SMALL BUILDING REQUIREMENTS OF PART 9, NBCC 2015

THIS DESIGN COMPLIES WITH:
- PART 9 OF BCBC 2018 , ABC 2019
- PART 9 OF OBC 2012 (2019 AMENDMENT)
- CSA 086-14
- TPIC 2014

(55 % OF 23.0 P.S.F. G.S.L. PLUS 8.4 P.S.F. RAIN LOAD) EQUALS 21.0 P.S.F. SPECIFIED ROOF LIVE LOAD

ALLOWABLE DEFL.(LL)= L/360 (1.04")
CALCULATED VERT. DEFL.(LL) = L/ 999 (0.07")
ALLOWABLE DEFL.(TL)= L/360 (1.04")
CALCULATED VERT. DEFL.(TL) = L/ 999 (0.15")

CSI: TC=0.84/1.00 (I-J:1) , BC=0.29/1.00 (N-O:1) , WB=0.66/1.00 (H-K:1) , SSI=0.22/1.00 (H-I:1)

DOL LUMBER=1.00 NAIL=1.00 LS BEND=1.10 COMP=1.10 SHEAR=1.10 TENS= 1.10

COMPANION LIVE LOAD FACTOR = 1.00

TRUSS PLATE MANUFACTURER IS NOT RESPONSIBLE FOR QUALITY CONTROL IN THE TRUSS MANUFACTURING PLANT .

NAIL VALUES

PLATE	GRIP(DRY) (PSI) MAX	MIN	SHEAR (PLI) MAX	MIN	SECTION (PLI) MAX	MIN
MT20	650	371	1747	788	1987	1873

PLATE PLACEMENT TOL. = 0.250 inches

PLATE ROTATION TOL. = 5.0 Deg.

JSI GRIP= 0.89 (O) (INPUT = 0.90)
JSI METAL= 0.52 (D) (INPUT = 1.00)

JOB NAME	TRUSS NAME	QUANTITY	PLY	JOB DESC.		DRWG NO.
336324	H88		1	TRUSS DESC.	JT 45147	E21104086

Alpa Roof Truss, Maple

Version 8.420 S Jan 21 2021 MiTek Industries, Inc. Wed Oct 13 14:51:57 2021 Page 1

ID:hd511hZTz bdeQoS817GKByhVxV-Tz8YFt sTmfRmGo0WbS2t4r?OeiJ81XhBU5cMjyTp6m

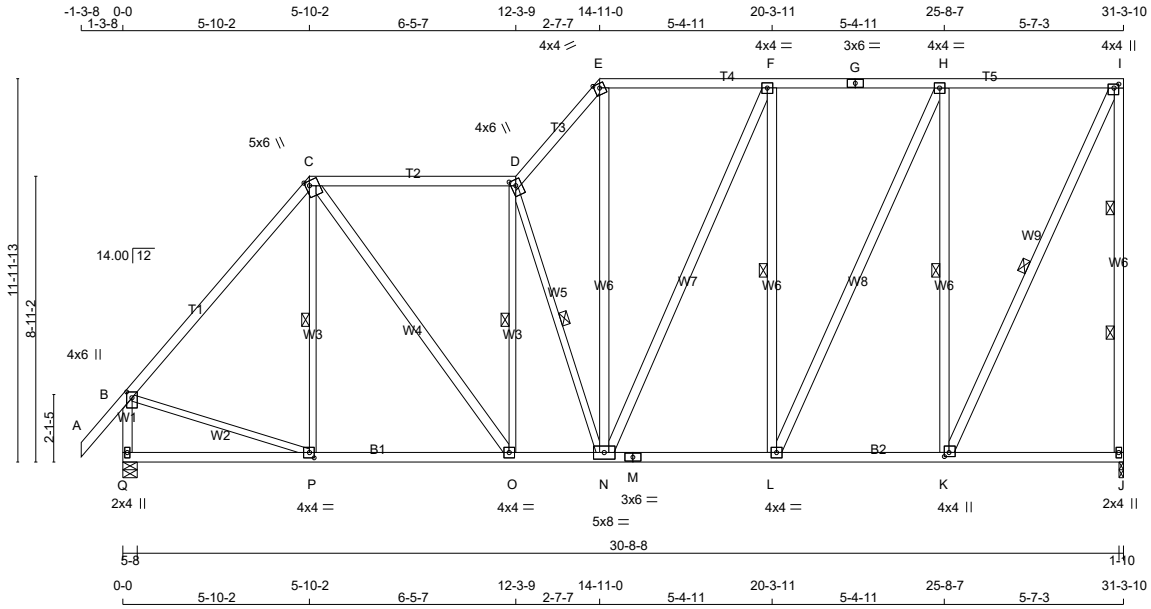

TOTAL WEIGHT = 213 lb

LUMBER

N. L. G. A. RULES

CHORDS	SIZE		LUMBER	DESCR.
A - C	2x4	DRY	No.2	SPF
C - D	2x4	DRY	No.2	SPF
D - E	2x4	DRY	No.2	SPF
E - G	2x4	DRY	No.2	SPF
G - I	2x4	DRY	No.2	SPF
J - I	2x4	DRY	No.2	SPF
Q - B	2x4	DRY	No.2	SPF
Q - M	2x4	DRY	No.2	SPF
M - J	2x4	DRY	No.2	SPF
ALL WEBS	2x4	DRY	No.2	SPF
EXCEPT				
P - C	2x3	DRY	No.2	SPF
O - D	2x3	DRY	No.2	SPF
D - N	2x3	DRY	No.2	SPF
B - P	2x3	DRY	No.2	SPF

DRY: SEASONED LUMBER.

PLATES (table is in inches)

JT	TYPE	PLATES	W	LEN	Y	X
B	TMVW+p	MT20	4.0	6.0	2.25	2.00
C	TTWW+m	MT20	5.0	6.0	1.75	1.50
D	TTWW+m	MT20	4.0	6.0	2.25	1.75
E	TTW-m	MT20	4.0	4.0	Edge	
F	TMWW-t	MT20	4.0	4.0		
G	TS-t	MT20	3.0	6.0		
H	TMWW-t	MT20	4.0	4.0		
I	TMVW+p	MT20	4.0	4.0	1.50	1.75
J	BMV1+p	MT20	2.0	4.0		
K	BMWW+t	MT20	4.0	4.0	1.50	1.75
L	BMWW-t	MT20	4.0	4.0		
M	BS-t	MT20	3.0	6.0		
N	BMWWW-t	MT20	5.0	8.0		
O	BMWW-t	MT20	4.0	4.0		
P	BMWW-t	MT20	4.0	4.0	2.00	1.75
Q	BMV1+p	MT20	2.0	4.0		

Edge - INDICATES REFERENCE CORNER OF PLATE TOUCHES EDGE OF CHORD.

LATERAL BRACE(S) SHOWN SHALL BE 2X4 SPF#2

DIMENSIONS, SUPPORTS AND LOADINGS SPECIFIED BY FABRICATOR TO BE VERIFIED BY BUILDING DESIGNER

BEARINGS

JT	FACTORED GROSS REACTION VERT	HORZ	MAXIMUM FACTORED GROSS REACTION DOWN	HORZ	UPLIFT	INPUT BRG IN-SX	REQRD BRG IN-SX
J	1510	0	1510	0	0	1-10	1-10
Q	1619	0	1619	0	0	5-8	1-12

UNFACTORED REACTIONS

JT	1ST LCASE COMBINED	MAX./MIN. COMPONENT REACTIONS SNOW	LIVE	PERM.LIVE	WIND	DEAD	SOIL
J	1076	657 / 0	0 / 0	0 / 0	0 / 0	419 / 0	0 / 0
Q	1152	716 / 0	0 / 0	0 / 0	0 / 0	436 / 0	0 / 0

BEARING MATERIAL TO BE SPF NO.2 OR BETTER AT JOINT(S) J, Q

BRACING

TOP CHORD TO BE SHEATHED OR MAX. PURLIN SPACING = 4.71 FT.
MAX. UNBRACED BOTTOM CHORD LENGTH = 10.00 FT OR RIGID CEILING DIRECTLY APPLIED.

ALL PITCH BREAKS AND PERIMETER CORNER JOINTS MUST BE LATERALLY RESTRAINED.

2 LATERAL BRACE(S) AT 1/ 3 LENGTH OF I-J.
1 LATERAL BRACE(S) AT 1/ 2 LENGTH OF C-P, D-O, D-N, F-L, H-K, I-K.

END VERTICAL(S) MUST BE SHEATHED OR HAVE BRACES AS INDICATED IN THE MAX. UNBRACED LENGTH COLUMN OF THE TABLE BELOW

LOADING

TOTAL LOAD CASES: (4)

CHORDS

MEMB. FR-TO	MAX. FACTORED FORCE (LBS)	FACTORED VERT. LOAD (PLF) FROM	TO	LC1	MAX CSI (LC)	MAX. UNBRAC LENGTH
A- B	0 / 42	-78.0	-78.0	0.11 (1)	10.00	
B- C	-1304 / 0	-78.0	-78.0	0.64 (1)	4.94	
C- D	-1307 / 0	-78.0	-78.0	0.65 (1)	4.71	
D- E	-1538 / 0	-78.0	-78.0	0.12 (1)	5.19	
E- F	-1012 / 0	-78.0	-78.0	0.32 (1)	5.79	
F- G	-943 / 0	-78.0	-78.0	0.35 (1)	5.90	
G- H	-943 / 0	-78.0	-78.0	0.35 (1)	5.90	
H- I	-619 / 0	-78.0	-78.0	0.34 (1)	6.25	
J- I	-1468 / 0	0.0	0.0	0.48 (1)	5.41	
Q- B	-1577 / 0	0.0	0.0	0.19 (1)	6.57	
Q- P	0 / 0	-18.5	-18.5	0.18 (4)	10.00	
P- O	0 / 844	-18.5	-18.5	0.26 (4)	10.00	
O- N	0 / 1314	-18.5	-18.5	0.24 (1)	10.00	
N- M	0 / 943	-18.5	-18.5	0.20 (1)	10.00	
M- L	0 / 943	-18.5	-18.5	0.20 (1)	10.00	
L- K	0 / 619	-18.5	-18.5	0.19 (4)	10.00	
K- J	0 / 0	-18.5	-18.5	0.14 (4)	10.00	

WEBS

MEMB. FR-TO	MAX. FACTORED FORCE (LBS)	MAX CSI (LC)
P- C	-113 / 50	0.06 (1)
C- O	0 / 779	0.13 (1)
O- D	-550 / 0	0.28 (1)
D- N	-1021 / 0	0.57 (1)
N- E	0 / 888	0.14 (1)
N- F	0 / 170	0.03 (1)
L- F	-604 / 0	0.47 (1)
L- H	0 / 773	0.12 (1)
K- H	-1177 / 0	0.92 (1)
K- I	0 / 1432	0.23 (1)
B- P	0 / 881	0.20 (1)

[M]

DESIGN CRITERIA

SPECIFIED LOADS:

TOP CH.	LL	=	21.0	PSF
	DL	=	6.0	PSF
BOT CH.	LL	=	0.0	PSF
	DL	=	7.4	PSF
TOTAL LOAD		=	34.4	PSF

SPACING = 24.0 IN. C/C

LOADING IN ALL FLAT SECTIONS BASED ON A SLOPE OF 2.00/12 MINIMUM

THIS TRUSS IS DESIGNED FOR RESIDENTIAL OR SMALL BUILDING REQUIREMENTS OF PART 9, NBCC 2015

THIS DESIGN COMPLIES WITH:
- PART 9 OF BCBC 2018 , ABC 2019
- PART 9 OF OBC 2012 (2019 AMENDMENT)
- CSA 086-14
- TPIC 2014

(55 % OF 23.0 P.S.F. G.S.L. PLUS 8.4 P.S.F. RAIN LOAD) EQUALS 21.0 P.S.F. SPECIFIED ROOF LIVE LOAD

ALLOWABLE DEFL.(LL)= L/360 (1.04")
CALCULATED VERT. DEFL.(LL) = L/ 999 (0.07")
ALLOWABLE DEFL.(TL)= L/360 (1.04")
CALCULATED VERT. DEFL.(TL) = L/ 999 (0.14")

CSI: TC=0.65/1.00 (C-D:1) , BC=0.26/1.00 (O-P:4) , WB=0.92/1.00 (H-K:1) , SSI=0.20/1.00 (H-I:1)

DOL LUMBER=1.00 NAIL=1.00 LS BEND=1.10 COMP=1.10 SHEAR=1.10 TENS= 1.10

COMPANION LIVE LOAD FACTOR = 1.00

TRUSS PLATE MANUFACTURER IS NOT RESPONSIBLE FOR QUALITY CONTROL IN THE TRUSS MANUFACTURING PLANT .

NAIL VALUES

PLATE	GRIP(DRY) (PSI) MAX	MIN	SHEAR (PLI) MAX	MIN	SECTION (PLI) MAX	MIN
MT20	650	371	1747	788	1987	1873

PLATE PLACEMENT TOL. = 0.250 inches

PLATE ROTATION TOL. = 5.0 Deg.

JSI GRIP= 0.89 (B) (INPUT = 0.90)
JSI METAL= 0.52 (B) (INPUT = 1.00)

JOB NAME	TRUSS NAME	QUANTITY	PLY	JOB DESC.		DRWG NO.
336324	H89		1	TRUSS DESC.	JT 45147	E21104087

Alpa Roof Truss, Maple

Version 8.420 S Jan 21 2021 MiTek Industries, Inc. Wed Oct 13 14:51:59 2021 Page 1

ID:hd511hZTz bdeQoS817GKByhVxV-PLGIqZ06?Nv9?ZyPe0VWyVwJ0SMtc0O foajQcyTp6k

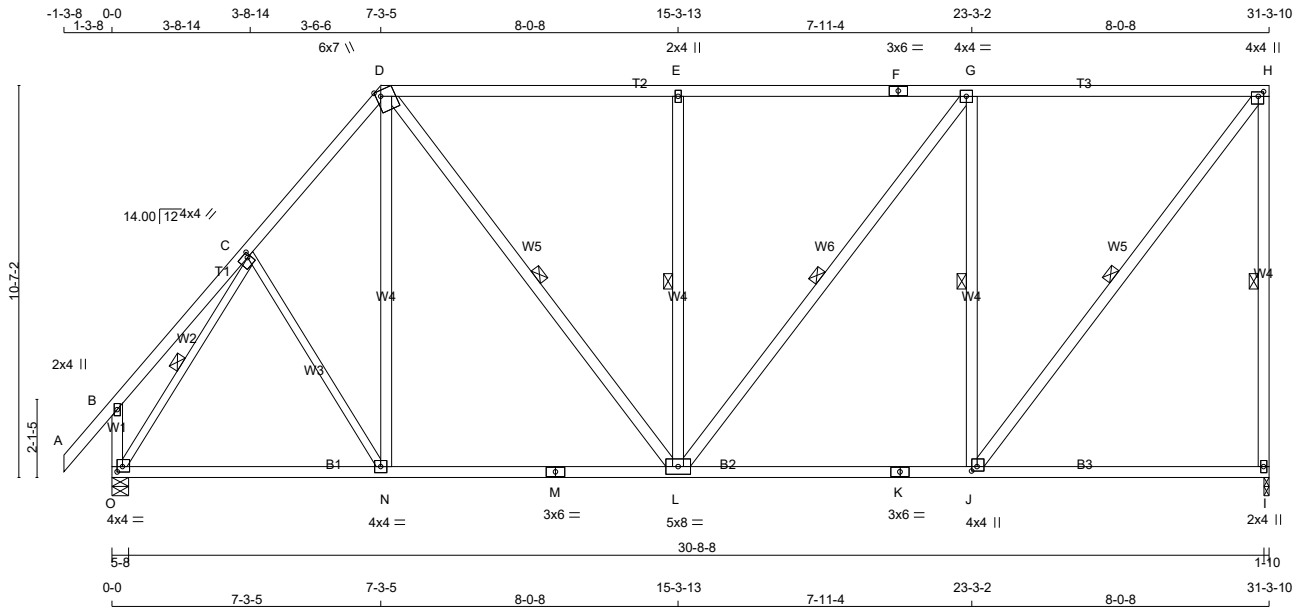

TOTAL WEIGHT = 2 X 180 = 360 lb

[M]

LUMBER

N. L. G. A. RULES

CHORDS	SIZE		LUMBER	DESCR.
A - D	2x4	DRY	No.2	SPF
D - F	2x4	DRY	No.2	SPF
F - H	2x4	DRY	No.2	SPF
I - H	2x4	DRY	No.2	SPF
O - B	2x4	DRY	No.2	SPF
O - M	2x4	DRY	No.2	SPF
M - K	2x4	DRY	No.2	SPF
K - I	2x4	DRY	No.2	SPF
ALL WEBS	2x4	DRY	No.2	SPF
EXCEPT				
C - N	2x3	DRY	No.2	SPF
O - C	2x3	DRY	No.2	SPF

DRY: SEASONED LUMBER.

PLATES (table is in inches)

JT	TYPE	PLATES	W	LEN	Y	X
B	TMV+p	MT20	2.0	4.0		
C	TMWW-t	MT20	4.0	4.0	1.50	1.00
D	TTWW+m	MT20	6.0	7.0	Edge	1.50
E	TMW+w	MT20	2.0	4.0		
F	TS-t	MT20	3.0	6.0		
G	TMWW-t	MT20	4.0	4.0		
H	TMVW+p	MT20	4.0	4.0	1.50	1.75
I	BMV1+p	MT20	2.0	4.0		
J	BMWW+t	MT20	4.0	4.0	1.50	1.75
K	BS-t	MT20	3.0	6.0		
L	BMWWW-t	MT20	5.0	8.0		
M	BS-t	MT20	3.0	6.0		
N	BMWW-t	MT20	4.0	4.0		
O	BMVW1-t	MT20	4.0	4.0	1.75	1.75

Edge - INDICATES REFERENCE CORNER OF PLATE TOUCHES EDGE OF CHORD.

LATERAL BRACE(S) SHOWN SHALL BE 2X4 SPF#2

DIMENSIONS, SUPPORTS AND LOADINGS SPECIFIED BY FABRICATOR TO BE VERIFIED BY BUILDING DESIGNER

BEARINGS

JT	FACTORED GROSS REACTION VERT	HORZ	MAXIMUM FACTORED GROSS REACTION DOWN	HORZ	UPLIFT	INPUT BRG IN-SX	REQRD BRG IN-SX
I	1510	0	1510	0	0	1-10	1-10
O	1619	0	1619	0	0	5-8	1-12

UNFACTORED REACTIONS

JT	1ST LCASE COMBINED	MAX./MIN. COMPONENT REACTIONS SNOW	LIVE	PERM.LIVE	WIND	DEAD	SOIL
I	1076	657 / 0	0 / 0	0 / 0	0 / 0	419 / 0	0 / 0
O	1152	716 / 0	0 / 0	0 / 0	0 / 0	436 / 0	0 / 0

BEARING MATERIAL TO BE SPF NO.2 OR BETTER AT JOINT(S) I, O

BRACING

TOP CHORD TO BE SHEATHED OR MAX. PURLIN SPACING = 4.53 FT.
MAX. UNBRACED BOTTOM CHORD LENGTH = 10.00 FT OR RIGID CEILING DIRECTLY APPLIED.

ALL PITCH BREAKS AND PERIMETER CORNER JOINTS MUST BE LATERALLY RESTRAINED.

1 LATERAL BRACE(S) AT 1/ 2 LENGTH OF H-I, D-L, E-L, G-L, G-J, H-J, C-O.

END VERTICAL(S) MUST BE SHEATHED OR HAVE BRACES AS INDICATED IN THE MAX. UNBRACED LENGTH COLUMN OF THE TABLE BELOW

LOADING

TOTAL LOAD CASES: (4)

CHORDS

MEMB. FR-TO	MAX. FACTORED FORCE (LBS)	FACTORED VERT. LOAD (PLF) FROM	TO	LC1 CSI (LC)	MAX UNBRAC LENGTH
A- B	0 / 42	-78.0	-78.0	0.11 (1)	10.00
B- C	0 / 24	-78.0	-78.0	0.16 (1)	10.00
C- D	-1308 / 0	-78.0	-78.0	0.20 (1)	5.45
D- E	-1201 / 0	-78.0	-78.0	0.83 (1)	4.54
E- F	-1202 / 0	-78.0	-78.0	0.83 (1)	4.53
F- G	-1202 / 0	-78.0	-78.0	0.83 (1)	4.53
G- H	-936 / 0	-78.0	-78.0	0.79 (1)	5.03
I- H	-1451 / 0	0.0	0.0	0.82 (1)	5.43
O- B	-217 / 0	0.0	0.0	0.03 (1)	7.81
O- N	0 / 816	-18.5	-18.5	0.34 (4)	10.00
N- M	0 / 833	-18.5	-18.5	0.35 (4)	10.00
M- L	0 / 833	-18.5	-18.5	0.35 (4)	10.00
L- K	0 / 936	-18.5	-18.5	0.38 (4)	10.00
K- J	0 / 936	-18.5	-18.5	0.38 (4)	10.00
J- I	0 / 0	-18.5	-18.5	0.29 (4)	10.00

WEBS

MEMB. FR-TO	MAX. FACTORED FORCE (LBS)	MAX CSI (LC)
C- N	0 / 48	0.02 (4)
N- D	0 / 139	0.03 (4)
D- L	0 / 597	0.10 (1)
L- E	-678 / 0	0.38 (1)
L- G	0 / 436	0.07 (1)
J- G	-1030 / 0	0.58 (1)
J- H	0 / 1521	0.24 (1)
O- C	-1576 / 0	0.51 (1)

DESIGN CRITERIA

SPECIFIED LOADS:

TOP CH.	LL	=	21.0	PSF
	DL	=	6.0	PSF
BOT CH.	LL	=	0.0	PSF
	DL	=	7.4	PSF
TOTAL LOAD		=	34.4	PSF

SPACING = 24.0 IN. C/C

LOADING IN FLAT SECTION BASED ON A SLOPE OF 2.00/12 MINIMUM

THIS TRUSS IS DESIGNED FOR RESIDENTIAL OR SMALL BUILDING REQUIREMENTS OF PART 9, NBCC 2015

THIS DESIGN COMPLIES WITH:
- PART 9 OF BCBC 2018 , ABC 2019
- PART 9 OF OBC 2012 (2019 AMENDMENT)
- CSA 086-14
- TPIC 2014

(55 % OF 23.0 P.S.F. G.S.L. PLUS 8.4 P.S.F. RAIN LOAD) EQUALS 21.0 P.S.F. SPECIFIED ROOF LIVE LOAD

ALLOWABLE DEFL.(LL)= L/360 (1.04")
CALCULATED VERT. DEFL.(LL) = L/ 999 (0.05")
ALLOWABLE DEFL.(TL)= L/360 (1.04")
CALCULATED VERT. DEFL.(TL) = L/ 999 (0.13")

CSI: TC=0.83/1.00 (D-E:1) , BC=0.38/1.00 (J-L:4) , WB=0.58/1.00 (G-J:1) , SSI=0.29/1.00 (G-H:1)

DOL LUMBER=1.00 NAIL=1.00 LS BEND=1.10 COMP=1.10 SHEAR=1.10 TENS= 1.10

COMPANION LIVE LOAD FACTOR = 1.00

TRUSS PLATE MANUFACTURER IS NOT RESPONSIBLE FOR QUALITY CONTROL IN THE TRUSS MANUFACTURING PLANT .

NAIL VALUES

PLATE	GRIP(DRY) (PSI) MAX	MIN	SHEAR (PLI) MAX	MIN	SECTION (PLI) MAX	MIN
MT20	650	371	1747	788	1987	1873

PLATE PLACEMENT TOL. = 0.250 inches

PLATE ROTATION TOL. = 5.0 Deg.

JSI GRIP= 0.90 (H) (INPUT = 0.90)
JSI METAL= 0.53 (C) (INPUT = 1.00)

JOB NAME	TRUSS NAME	QUANTITY	PLY	JOB DESC.		DRWG NO.
336324	H90		1	TRUSS DESC.	JT 45147	E21104088

Alpa Roof Truss, Maple

Version 8.420 S Jan 21 2021 MiTek Industries, Inc. Wed Oct 13 14:52:01 2021 Page 1

ID:hd511hZTz_bdeQoS817GKByhVxV-MkO35F1NX_9tEt6nlQX_2w?hwFxP4qJH663qVUyTp6i

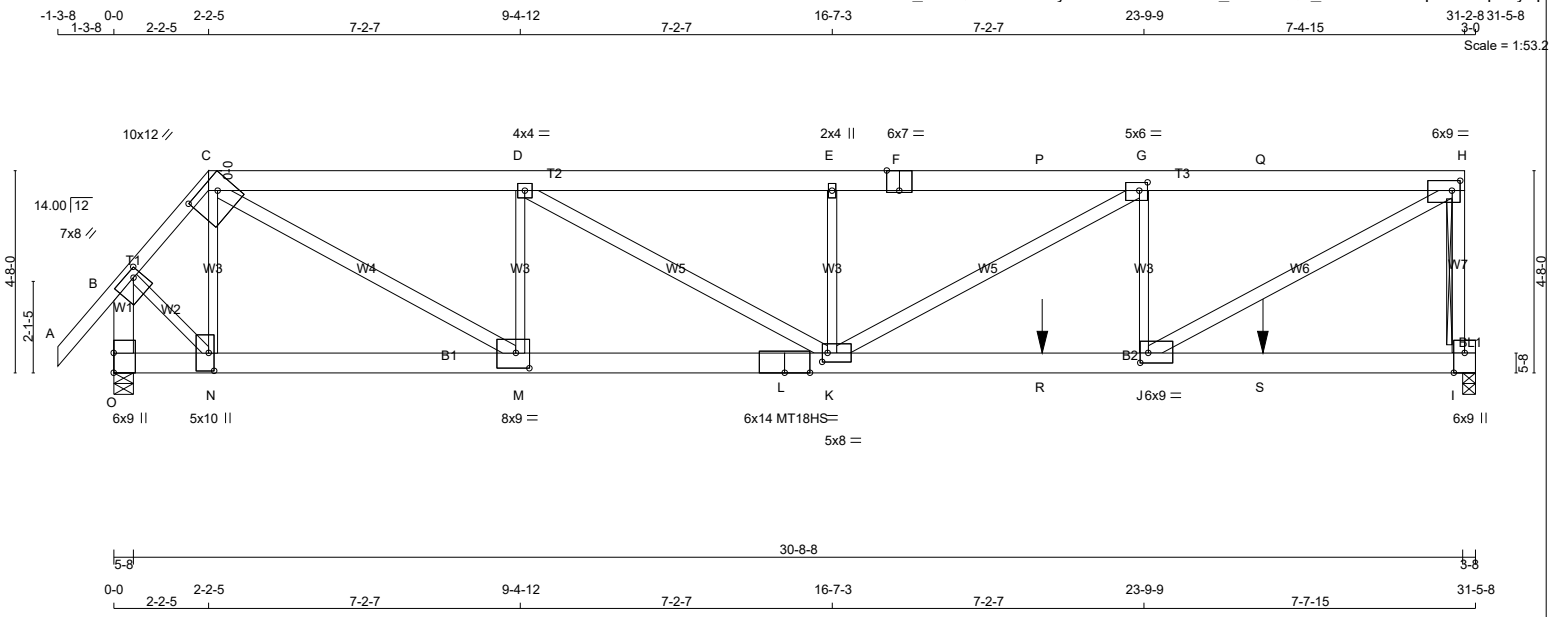

TOTAL WEIGHT = 173 lb

[M]

LUMBER

N. L. G. A. RULES

CHORDS	SIZE		LUMBER	DESCR.
A - C	2x4	DRY	No.2	SPF
C - F	2x6	DRY	1650F 1.5E	SPF
F - H	2x6	DRY	1650F 1.5E	SPF
I - H	2x4	DRY	No.2	SPF
O - B	2x6	DRY	No.2	SPF
O - L	2x6	DRY	2100F 1.8E	SPF
L - I	2x6	DRY	2100F 1.8E	SPF
BEARING BLOCKS				
BL1	2x4	DRY	No.2	SPF
ALL WEBS EXCEPT	2x3	DRY	No.2	SPF
C - M	2x4	DRY	No.2	SPF
D - K	2x4	DRY	1650F 1.5E	SPF
K - G	2x4	DRY	1650F 1.5E	SPF
J - H	2x4	DRY	1650F 1.5E	SPF

DRY: SEASONED LUMBER.

PLATES (table is in inches)

JT	TYPE	PLATES	W	LEN	Y	X
B	TMVW-t	MT20	7.0	8.0	2.00	2.25
C	TTWW-h	MT20	10.0	12.0	3.75	8.00
D	TMWW-t	MT20	4.0	4.0		
E	TMW+w	MT20	2.0	4.0		
F	TS-t	MT20	6.0	7.0	Edge	3.50
G	TMWW-t	MT20	5.0	6.0	2.25	2.25
H	TMVW-t	MT20	6.0	9.0	2.75	2.25
I	BMVK1+t	MT20	6.0	9.0	Edge	3.00
J	BMWW-t	MT20	6.0	9.0	2.75	2.25
K	BMWWW-t	MT20	5.0	8.0	2.50	1.50
L	BS-t	MT18HS	6.0	14.0		
M	BMWW-t	MT20	8.0	9.0	4.25	3.75
N	BMWW+t	MT20	5.0	10.0	5.00	1.50
O	BMV1+t	MT20	6.0	9.0	5.50	

Edge - INDICATES REFERENCE CORNER OF PLATE TOUCHES EDGE OF CHORD.

LATERAL BRACE(S) SHOWN SHALL BE 2X4 SPF#2

LICENSED PROFESSIONAL ENGINEER
V. WIDYA
100225448
10/13/2021
PROVINCE OF ONTARIO

DIMENSIONS, SUPPORTS AND LOADINGS SPECIFIED BY FABRICATOR TO BE VERIFIED BY BUILDING DESIGNER

BEARINGS

JT	FACTORED GROSS REACTION VERT	HORZ	MAXIMUM FACTORED GROSS REACTION DOWN	HORZ	UPLIFT	INPUT BRG IN-SX	REQRD BRG IN-SX
I	3675	0	3675	0	0	3-8	3-8
O	4844	0	4844	0	0	5-8	5-8

UNFACTORED REACTIONS

JT	1ST LCASE COMBINED	MAX./MIN. COMPONENT REACTIONS SNOW	LIVE	PERM.LIVE	WIND	DEAD	SOIL
I	2620	1600 / 0	0 / 0	0 / 0	0 / 0	1020 / 0	0 / 0
O	3452	2119 / 0	0 / 0	0 / 0	0 / 0	1333 / 0	0 / 0

BEARING MATERIAL TO BE SPF NO.2 OR BETTER AT JOINT(S) I, O
BEARING SIZE FACTOR = 1.15 AT JNT(S) I, O (BASED ON SUPPORT DEPTH = 1-8)

BRACING

TOP CHORD TO BE SHEATHED OR MAX. PURLIN SPACING = 3.23 FT.
MAX. UNBRACED BOTTOM CHORD LENGTH = 6.25 FT OR RIGID CEILING DIRECTLY APPLIED.

ALL PITCH BREAKS AND PERIMETER CORNER JOINTS MUST BE LATERALLY RESTRAINED.

2x3 DRY SPF No.2 T-BRACE AT H-I

FASTEN T AND I-BRACES TO NARROW EDGE OF WEB WITH ONE ROW PER PLY OF 3" COMMON WIRE NAILS @ 6" O.C. WITH 3" MINIMUM END DISTANCE. BRACE MUST COVER 90% OF WEB LENGTH.

END VERTICAL(S) MUST BE SHEATHED OR HAVE BRACES AS INDICATED IN THE MAX. UNBRACED LENGTH COLUMN OF THE TABLE BELOW

LOADING

TOTAL LOAD CASES: (4)

CHORDS

MEMB. FR-TO	MAX. FACTORED FORCE (LBS)	FACTORED VERT. LOAD (PLF) FROM	TO	LC1 CSI (LC)	MAX UNBRAC LENGTH
A- B	0 / 42	-78.0	-78.0	0.12 (1)	10.00
B- C	-3851 / 0	-78.0	-78.0	0.27 (1)	3.36
C- D	-7387 / 0	-78.0	-78.0	0.41 (1)	3.49
D- E	-7922 / 0	-78.0	-78.0	0.39 (1)	3.41
E- F	-7922 / 0	-137.2	-137.2	0.57 (1)	3.23
F- P	-7922 / 0	-137.2	-137.2	0.57 (1)	3.23
P- G	-7922 / 0	-78.0	-78.0	0.57 (1)	3.23
G- Q	-5342 / 0	-78.0	-78.0	0.43 (1)	3.95
Q- H	-5342 / 0	-130.8	-130.8	0.43 (1)	3.95
I- H	-3483 / 0	0.0	0.0	0.68 (1)	6.00
O- B	-4925 / 0	0.0	0.0	0.40 (1)	4.81
O- N	0 / 0	-256.7	-256.7	0.35 (1)	10.00
N- M	0 / 2502	-256.7	-256.7	0.57 (1)	10.00
M- L	0 / 7387	-256.7	-256.7	0.83 (1)	10.00
L- K	0 / 7387	-256.7	-256.7	0.83 (1)	10.00
K- R	0 / 5342	-33.5	-33.5	0.50 (1)	10.00
R- J	0 / 5342	-18.5	-18.5	0.50 (1)	10.00
J- S	-121 / 0	-18.5	-18.5	0.22 (1)	6.25
S- I	-121 / 0	-31.0	-31.0	0.22 (1)	6.25

WEBS

MEMB. FR-TO	MAX. FACTORED FORCE (LBS)	MAX CSI (LC)
N- C	-260 / 0	0.08 (1)
C- M	0 / 5660	1.00 (1)
M- D	-914 / 0	0.27 (1)
D- K	0 / 619	0.08 (1)
K- E	-713 / 0	0.21 (1)
K- G	0 / 2988	0.38 (1)
J- G	-2372 / 0	0.70 (1)
J- H	0 / 6282	0.80 (1)
B- N	0 / 3092	0.77 (1)

FACTORED CONCENTRATED LOADS (LBS)

JT	LOC.	LC1	MAX-	MAX+	FACE	DIR.	TYPE	HEEL	CONN.
R	21-5-7	-393	-393	---	FRONT	VERT	TOTAL	---	C1
S	26-6-9	-393	-393	---	FRONT	VERT	TOTAL	---	C1

CONNECTION REQUIREMENTS

1) **C1:** A SUITABLE HANGER/MECHANICAL CONNECTION IS REQUIRED.

DESIGN CRITERIA

*** SPECIAL LOADS ANALYSIS ***
GEOMETRY AND/OR BASIC LOADS CHANGED BY USER.
LOADS WERE DERIVED FROM USER INPUT
NO FURTHER MODIFICATIONS WERE MADE

SPECIFIED LOADS:

TOP CH.	LL	=	21.0	PSF
	DL	=	6.0	PSF
BOT CH.	LL	=	0.0	PSF
	DL	=	7.4	PSF
TOTAL LOAD		=	34.4	PSF

SPACING = 24.0 IN. C/C

LOADING IN FLAT SECTION BASED ON A SLOPE OF 2.00/12 MINIMUM

GIRDER TYPE: CStdGirder
START DISTANCE = 0-0
START SPAN CARRIED = 11-10-8
END DISTANCE = 16-6-0
END SPAN CARRIED = 11-10-8
END WALL WIDTH = 0-0
APPLIED TO FRONT SIDE OF BOTTOM CHORD.
- ADDT'L LOADS BASED ON 55 % OF GSL.

GIRDER TYPE: CPrimeHip
LEFT SETBACK = 2-2-5
RIGHT SETBACK = 0-0
END SETBACK = 4-8-8
END WALL WIDTH = 0-0
CORNER FRAMING TYPE: CONVENTIONAL
END JACK TYPE: CONVENTIONAL
APPLIED TO FRONT SIDE
- ADDT'L LOADS BASED ON 55 % OF GSL.
LOADS APPLIED TO FIRST 4-10-15 OF SPAN MEASURED FROM THE RIGHT.

*** NON STANDARD GIRDER ***
ADDT'L USER-DEFINED LOADS APPLIED TO ALL LOAD CASES.

THIS TRUSS IS DESIGNED FOR RESIDENTIAL OR SMALL BUILDING REQUIREMENTS OF PART 9, NBCC 2015

THIS DESIGN COMPLIES WITH:
- PART 9 OF BCBC 2018 , ABC 2019
- PART 9 OF OBC 2012 (2019 AMENDMENT)
- CSA 086-14
- TPIC 2014

(55 % OF 23.0 P.S.F. G.S.L. PLUS 8.4 P.S.F. RAIN LOAD) EQUALS 21.0 P.S.F. SPECIFIED ROOF LIVE LOAD

ALLOWABLE DEFL.(LL)= L/360 (1.04")
CALCULATED VERT. DEFL.(LL) = L/ 999 (0.33")
ALLOWABLE DEFL.(TL)= L/360 (1.04")
CALCULATED VERT. DEFL.(TL) = L/ 581 (0.64")

CSI: TC=0.68/1.00 (H-I:1) , BC=0.83/1.00 (K-M:1) , WB=1.00/1.00 (C-M:1) , SSI=0.66/1.00 (K-M:1)

DOL LUMBER=1.00 NAIL=1.00 LS BEND=1.00 COMP=1.00 SHEAR=1.00 TENS= 1.00

COMPANION LIVE LOAD FACTOR = 1.00

CONTINUED ON PAGE 2

JOB NAME	TRUSS NAME	QUANTITY	PLY	JOB DESC.	DRWG NO.
336324	H91		1	TRUSS DESC. JT 45147	E21104089

Alpa Roof Truss, Maple

Version 8.420 S Jan 21 2021 MiTek Industries, Inc. Wed Oct 13 14:52:02 2021 Page 1

ID:hd511hZTz bdeQoS817GKByhVxV-qwyRIb2?HIHks1q J82Da7Yr9fOipKWQLmpN1xyTp6h

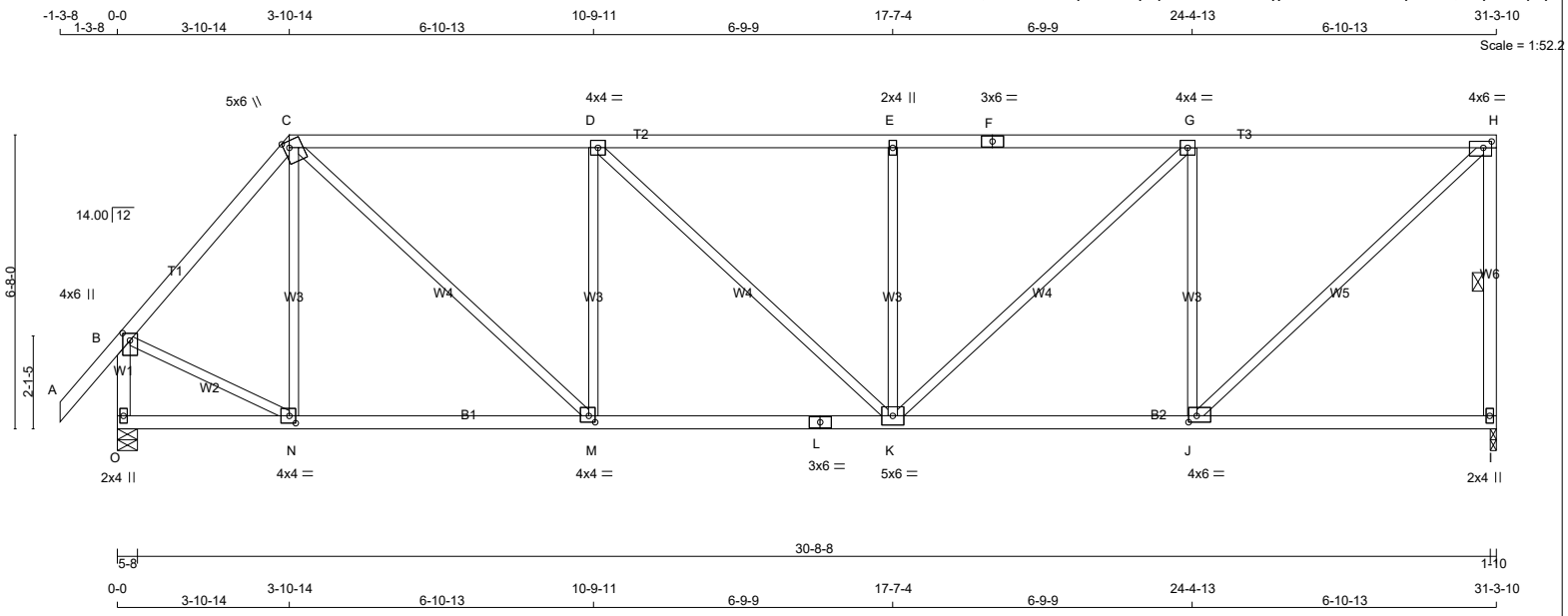

TOTAL WEIGHT = 138 lb

[M]

LUMBER

N. L. G. A. RULES

CHORDS	SIZE		LUMBER	DESCR.
A - C	2x4	DRY	No.2	SPF
C - F	2x4	DRY	No.2	SPF
F - H	2x4	DRY	No.2	SPF
I - H	2x4	DRY	No.2	SPF
O - B	2x4	DRY	No.2	SPF
O - L	2x4	DRY	No.2	SPF
L - I	2x4	DRY	No.2	SPF
ALL WEBS EXCEPT	2x3	DRY	No.2	SPF

DRY: SEASONED LUMBER.

PLATES (table is in inches)

JT	TYPE	PLATES	W	LEN	Y	X
B	TMVW+p	MT20	4.0	6.0	2.00	2.00
C	TTWW+m	MT20	5.0	6.0	1.75	1.50
D	TMWW-t	MT20	4.0	4.0		
E	TMW+w	MT20	2.0	4.0		
F	TS-t	MT20	3.0	6.0		
G	TMWW-t	MT20	4.0	4.0		
H	TMVW-t	MT20	4.0	6.0	1.75	2.25
I	BMV1+p	MT20	2.0	4.0		
J	BMWW-t	MT20	4.0	6.0	1.75	2.25
K	BMWWW-t	MT20	5.0	6.0		
L	BS-t	MT20	3.0	6.0		
M	BMWW-t	MT20	4.0	4.0	1.75	1.75
N	BMWW-t	MT20	4.0	4.0	2.00	1.75
O	BMV1+p	MT20	2.0	4.0		

LATERAL BRACE(S) SHOWN SHALL BE 2X4 SPF#2

LICENSED PROFESSIONAL ENGINEER
V. WIDYA
100225448
10/13/2021
PROVINCE OF ONTARIO

DIMENSIONS, SUPPORTS AND LOADINGS SPECIFIED BY FABRICATOR TO BE VERIFIED BY BUILDING DESIGNER

BEARINGS

JT	FACTORED GROSS REACTION VERT	HORZ	MAXIMUM FACTORED GROSS REACTION DOWN	HORZ	UPLIFT	INPUT BRG IN-SX	REQRD BRG IN-SX
I	1510	0	1510	0	0	1-10	1-10
O	1619	0	1619	0	0	5-8	1-12

UNFACTORED REACTIONS

JT	1ST LCASE COMBINED	MAX./MIN. COMPONENT REACTIONS SNOW	LIVE	PERM.LIVE	WIND	DEAD	SOIL
I	1076	657 / 0	0 / 0	0 / 0	0 / 0	419 / 0	0 / 0
O	1152	716 / 0	0 / 0	0 / 0	0 / 0	436 / 0	0 / 0

BEARING MATERIAL TO BE SPF NO.2 OR BETTER AT JOINT(S) I, O

BRACING

TOP CHORD TO BE SHEATHED OR MAX. PURLIN SPACING = 4.08 FT.
MAX. UNBRACED BOTTOM CHORD LENGTH = 10.00 FT OR RIGID CEILING DIRECTLY APPLIED.

ALL PITCH BREAKS AND PERIMETER CORNER JOINTS MUST BE LATERALLY RESTRAINED.

1 LATERAL BRACE(S) AT 1/ 2 LENGTH OF H-I.

END VERTICAL(S) MUST BE SHEATHED OR HAVE BRACES AS INDICATED IN THE MAX. UNBRACED LENGTH COLUMN OF THE TABLE BELOW

LOADING

TOTAL LOAD CASES: (4)

CHORDS

MEMB. FR-TO	MAX. FACTORED FORCE (LBS)	FACTORED VERT. LOAD (PLF) FROM	TO	LC1 CSI (LC)	MAX UNBRAC LENGTH
A- B	0 / 42	-78.0	-78.0	0.11 (1)	10.00
B- C	-1280 / 0	-78.0	-78.0	0.25 (1)	5.43
C- D	-1746 / 0	-78.0	-78.0	0.70 (1)	4.21
D- E	-1871 / 0	-78.0	-78.0	0.71 (1)	4.08
E- F	-1871 / 0	-78.0	-78.0	0.71 (1)	4.08
F- G	-1871 / 0	-78.0	-78.0	0.71 (1)	4.08
G- H	-1348 / 0	-78.0	-78.0	0.64 (1)	4.72
I- H	-1458 / 0	0.0	0.0	0.30 (1)	5.42
O- B	-1597 / 0	0.0	0.0	0.19 (1)	6.54
O- N	0 / 0	-18.5	-18.5	0.13 (4)	10.00
N- M	0 / 825	-18.5	-18.5	0.25 (4)	10.00
M- L	0 / 1747	-18.5	-18.5	0.37 (1)	10.00
L- K	0 / 1747	-18.5	-18.5	0.37 (1)	10.00
K- J	0 / 1348	-18.5	-18.5	0.34 (4)	10.00
J- I	0 / 0	-18.5	-18.5	0.21 (4)	10.00

WEBS

MEMB. FR-TO	MAX. FACTORED FORCE (LBS)	MAX CSI (LC)
N- C	-246 / 0	0.18 (1)
C- M	0 / 1251	0.28 (1)
M- D	-717 / 0	0.53 (1)
D- K	0 / 170	0.04 (1)
K- E	-489 / 0	0.36 (1)
K- G	0 / 718	0.16 (1)
J- G	-1102 / 0	0.81 (1)
J- H	0 / 1835	0.41 (1)
B- N	0 / 904	0.20 (1)

DESIGN CRITERIA

SPECIFIED LOADS:

TOP CH.	LL	=	21.0	PSF
	DL	=	6.0	PSF
BOT CH.	LL	=	0.0	PSF
	DL	=	7.4	PSF
TOTAL LOAD		=	34.4	PSF

SPACING = 24.0 IN. C/C

LOADING IN FLAT SECTION BASED ON A SLOPE OF 2.00/12 MINIMUM

THIS TRUSS IS DESIGNED FOR RESIDENTIAL OR SMALL BUILDING REQUIREMENTS OF PART 9, NBCC 2015

THIS DESIGN COMPLIES WITH:
- PART 9 OF BCBC 2018 , ABC 2019
- PART 9 OF OBC 2012 (2019 AMENDMENT)
- CSA 086-14
- TPIC 2014

(55 % OF 23.0 P.S.F. G.S.L. PLUS 8.4 P.S.F. RAIN LOAD) EQUALS 21.0 P.S.F. SPECIFIED ROOF LIVE LOAD

ALLOWABLE DEFL.(LL)= L/360 (1.04")
CALCULATED VERT. DEFL.(LL) = L/ 999 (0.09")
ALLOWABLE DEFL.(TL)= L/360 (1.04")
CALCULATED VERT. DEFL.(TL) = L/ 999 (0.19")

CSI: TC=0.71/1.00 (E-G:1) , BC=0.37/1.00 (K-M:1) , WB=0.81/1.00 (G-J:1) , SSI=0.25/1.00 (G-H:1)

DOL LUMBER=1.00 NAIL=1.00 LS BEND=1.10 COMP=1.10 SHEAR=1.10 TENS= 1.10

COMPANION LIVE LOAD FACTOR = 1.00

TRUSS PLATE MANUFACTURER IS NOT RESPONSIBLE FOR QUALITY CONTROL IN THE TRUSS MANUFACTURING PLANT .

NAIL VALUES

PLATE	GRIP(DRY) (PSI) MAX	MIN	SHEAR (PLI) MAX	MIN	SECTION (PLI) MAX	MIN
MT20	650	371	1747	788	1987	1873

PLATE PLACEMENT TOL. = 0.250 inches

PLATE ROTATION TOL. = 5.0 Deg.

JSI GRIP= 0.90 (H) (INPUT = 0.90)
JSI METAL= 0.54 (L) (INPUT = 1.00)

JOB NAME	TRUSS NAME	QUANTITY	PLY	JOB DESC.		DRWG NO.
336324	H92		1	TRUSS DESC.	JT 45147	E21104090

Alpa Roof Truss, Maple

Version 8.420 S Jan 21 2021 MiTek Industries, Inc. Wed Oct 13 14:52:04 2021 Page 1

ID:hd511hZTz bdeQoS817GKByhVxV-mJ3BjH3FpvXS5KqMRZ4hfYdDhT5KHIDjo4IU6pyTp6f

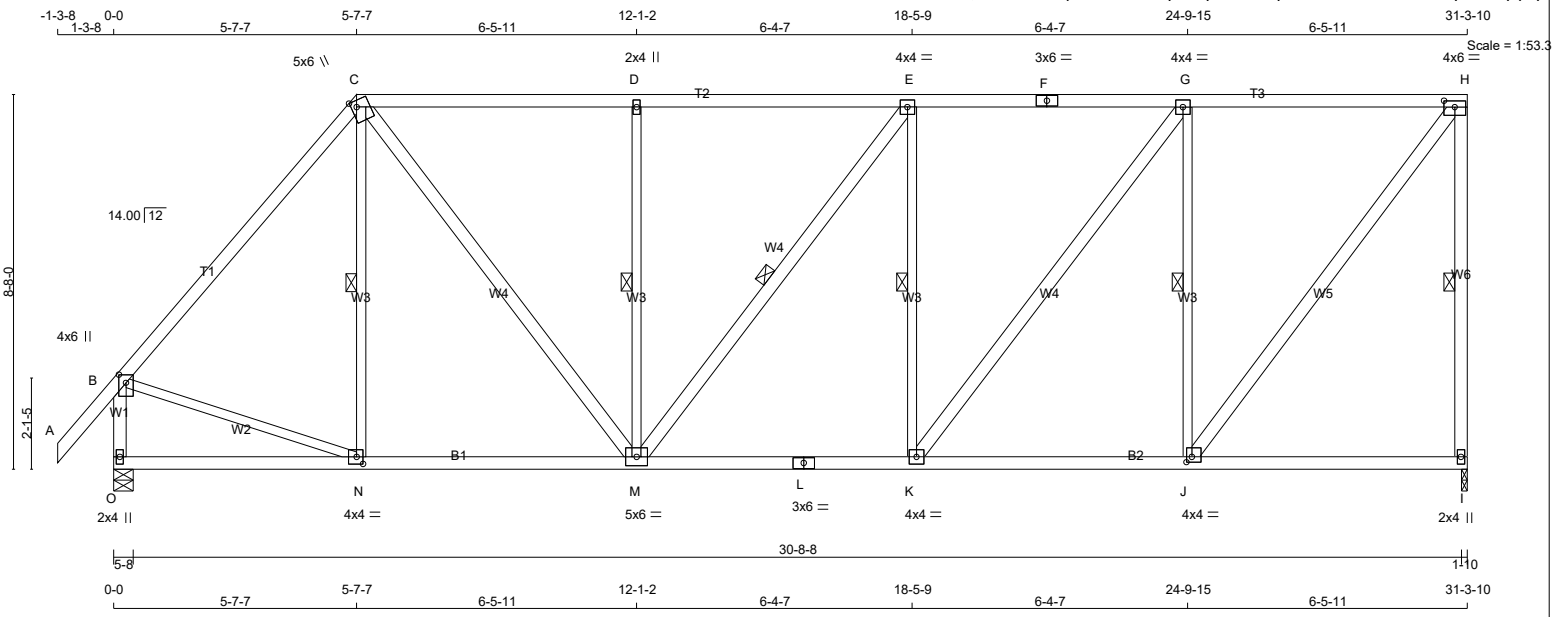

TOTAL WEIGHT = 166 lb

LUMBER

N. L. G. A. RULES

CHORDS	SIZE		LUMBER	DESCR.
A - C	2x4	DRY	No.2	SPF
C - F	2x4	DRY	No.2	SPF
F - H	2x4	DRY	No.2	SPF
I - H	2x4	DRY	No.2	SPF
O - B	2x4	DRY	No.2	SPF
O - L	2x4	DRY	No.2	SPF
L - I	2x4	DRY	No.2	SPF
ALL WEBS	2x3	DRY	No.2	SPF
EXCEPT				
C - M	2x4	DRY	No.2	SPF
M - E	2x4	DRY	No.2	SPF
K - G	2x4	DRY	No.2	SPF
J - H	2x4	DRY	No.2	SPF

DRY: SEASONED LUMBER.

PLATES (table is in inches)

JT	TYPE	PLATES	W	LEN	Y	X
B	TMVW+p	MT20	4.0	6.0	2.25	2.00
C	TTWW+m	MT20	5.0	6.0	1.75	1.50
D	TMW+w	MT20	2.0	4.0		
E	TMWW-t	MT20	4.0	4.0		
F	TS-t	MT20	3.0	6.0		
G	TMWW-t	MT20	4.0	4.0		
H	TMVW-t	MT20	4.0	6.0	1.75	3.00
I	BMV1+p	MT20	2.0	4.0		
J	BMWW-t	MT20	4.0	4.0	1.50	1.50
K	BMWW-t	MT20	4.0	4.0		
L	BS-t	MT20	3.0	6.0		
M	BMWWW-t	MT20	5.0	6.0		
N	BMWW-t	MT20	4.0	4.0	2.00	1.75
O	BMV1+p	MT20	2.0	4.0		

LATERAL BRACE(S) SHOWN SHALL BE 2X4 SPF#2

DIMENSIONS, SUPPORTS AND LOADINGS SPECIFIED BY FABRICATOR TO BE VERIFIED BY BUILDING DESIGNER

BEARINGS

JT	FACTORED GROSS REACTION VERT	HORZ	MAXIMUM FACTORED GROSS REACTION DOWN	HORZ	UPLIFT	INPUT BRG IN-SX	REQRD BRG IN-SX
I	1510	0	1510	0	0	1-10	1-10
O	1619	0	1619	0	0	5-8	1-12

UNFACTORED REACTIONS

JT	1ST LCASE COMBINED	MAX./MIN. COMPONENT REACTIONS SNOW	LIVE	PERM.LIVE	WIND	DEAD	SOIL
I	1076	657 / 0	0 / 0	0 / 0	0 / 0	419 / 0	0 / 0
O	1152	716 / 0	0 / 0	0 / 0	0 / 0	436 / 0	0 / 0

BEARING MATERIAL TO BE SPF NO.2 OR BETTER AT JOINT(S) I, O

BRACING

TOP CHORD TO BE SHEATHED OR MAX. PURLIN SPACING = 4.79 FT.
MAX. UNBRACED BOTTOM CHORD LENGTH = 10.00 FT OR RIGID CEILING DIRECTLY APPLIED.

ALL PITCH BREAKS AND PERIMETER CORNER JOINTS MUST BE LATERALLY RESTRAINED.

1 LATERAL BRACE(S) AT 1/ 2 LENGTH OF H-I, C-N, D-M, E-M, E-K, G-J.

END VERTICAL(S) MUST BE SHEATHED OR HAVE BRACES AS INDICATED IN THE MAX. UNBRACED LENGTH COLUMN OF THE TABLE BELOW

LOADING

TOTAL LOAD CASES: (4)

CHORDS

MEMB. FR-TO	MAX. FORCE (LBS)	FACTORED VERT. LOAD (PLF) FROM	TO	LC1 CSI (LC)	MAX UNBRAC LENGTH
A- B	0 / 42	-78.0	-78.0	0.11 (1)	10.00
B- C	-1304 / 0	-78.0	-78.0	0.58 (1)	5.02
C- D	-1384 / 0	-78.0	-78.0	0.56 (1)	4.81
D- E	-1385 / 0	-78.0	-78.0	0.55 (1)	4.81
E- F	-1398 / 0	-78.0	-78.0	0.56 (1)	4.79
F- G	-1398 / 0	-78.0	-78.0	0.56 (1)	4.79
G- H	-975 / 0	-78.0	-78.0	0.52 (1)	5.54
I- H	-1462 / 0	0.0	0.0	0.50 (1)	5.41
O- B	-1578 / 0	0.0	0.0	0.19 (1)	6.57
O- N	0 / 0	-18.5	-18.5	0.16 (4)	10.00
N- M	0 / 844	-18.5	-18.5	0.24 (4)	10.00
M- L	0 / 1398	-18.5	-18.5	0.30 (1)	10.00
L- K	0 / 1398	-18.5	-18.5	0.30 (1)	10.00
K- J	0 / 975	-18.5	-18.5	0.28 (4)	10.00
J- I	0 / 0	-18.5	-18.5	0.19 (4)	10.00

WEBS

MEMB. FR-TO	MAX. FORCE (LBS)	MAX CSI (LC)
N- C	-131 / 38	0.06 (1)
C- M	0 / 881	0.14 (1)
M- D	-563 / 0	0.27 (1)
M- E	-22 / 0	0.01 (1)
K- E	-442 / 0	0.21 (1)
K- G	0 / 698	0.11 (1)
J- G	-1127 / 0	0.54 (1)
J- H	0 / 1595	0.26 (1)
B- N	0 / 884	0.20 (1)

DESIGN CRITERIA

SPECIFIED LOADS:

TOP CH.	LL	=	21.0	PSF
	DL	=	6.0	PSF
BOT CH.	LL	=	0.0	PSF
	DL	=	7.4	PSF
TOTAL LOAD		=	34.4	PSF

SPACING = 24.0 IN. C/C

LOADING IN FLAT SECTION BASED ON A SLOPE OF 2.00/12 MINIMUM

THIS TRUSS IS DESIGNED FOR RESIDENTIAL OR SMALL BUILDING REQUIREMENTS OF PART 9, NBCC 2015

THIS DESIGN COMPLIES WITH:
- PART 9 OF BCBC 2018 , ABC 2019
- PART 9 OF OBC 2012 (2019 AMENDMENT)
- CSA 086-14
- TPIC 2014

(55 % OF 23.0 P.S.F. G.S.L. PLUS 8.4 P.S.F. RAIN LOAD) EQUALS 21.0 P.S.F. SPECIFIED ROOF LIVE LOAD

ALLOWABLE DEFL.(LL)= L/360 (1.04")
CALCULATED VERT. DEFL.(LL) = L/ 999 (0.06")
ALLOWABLE DEFL.(TL)= L/360 (1.04")
CALCULATED VERT. DEFL.(TL) = L/ 999 (0.13")

CSI: TC=0.58/1.00 (B-C:1) , BC=0.30/1.00 (K-M:1) , WB=0.54/1.00 (G-J:1) , SSI=0.24/1.00 (G-H:1)

DOL LUMBER=1.00 NAIL=1.00 LS BEND=1.10 COMP=1.10 SHEAR=1.10 TENS= 1.10

COMPANION LIVE LOAD FACTOR = 1.00

TRUSS PLATE MANUFACTURER IS NOT RESPONSIBLE FOR QUALITY CONTROL IN THE TRUSS MANUFACTURING PLANT .

NAIL VALUES

PLATE	GRIP(DRY) (PSI) MAX	MIN	SHEAR (PLI) MAX	MIN	SECTION (PLI) MAX	MIN
MT20	650	371	1747	788	1987	1873

PLATE PLACEMENT TOL. = 0.250 inches

PLATE ROTATION TOL. = 5.0 Deg.

JSI GRIP= 0.89 (B) (INPUT = 0.90)
JSI METAL= 0.52 (B) (INPUT = 1.00)

JOB NAME	TRUSS NAME	QUANTITY	PLY	JOB DESC.		DRWG NO.
336324	H93		1	TRUSS DESC.	JT 45147	E21104091

Alpa Roof Truss, Maple

Version 8.420 S Jan 21 2021 MiTek Industries, Inc. Wed Oct 13 14:52:06 2021 Page 1

ID:hd511hZTz_bdeQoS817GKByhVxV-iiBy8y5VLXn9Le_IY_79IzjhzGqtlKQ0GOnbAiyTp6d

Scale: 1/2"=1'

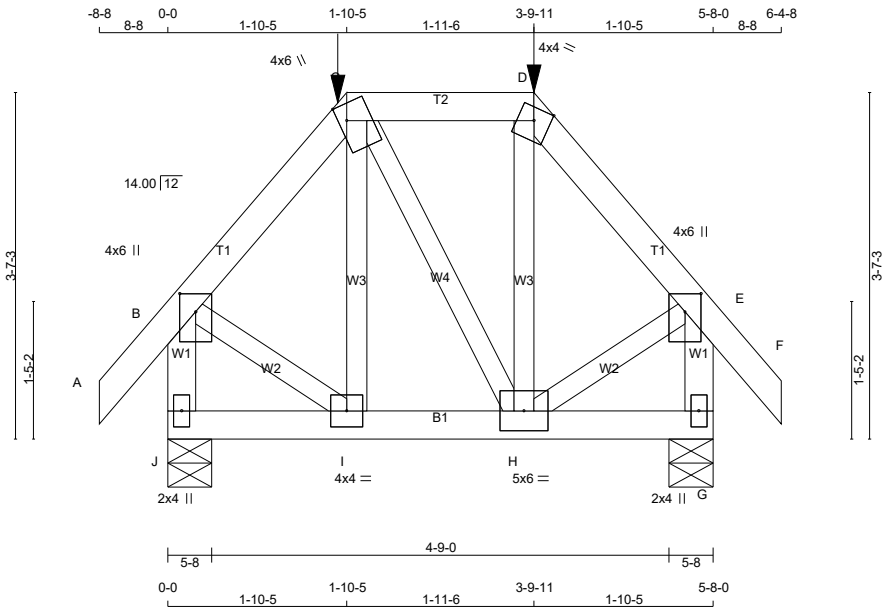

TOTAL WEIGHT = 32 lb

[M]

LUMBER

N. L. G. A. RULES

CHORDS	SIZE		LUMBER	DESCR.
A - C	2x4	DRY	No.2	SPF
C - D	2x4	DRY	No.2	SPF
D - F	2x4	DRY	No.2	SPF
J - B	2x4	DRY	No.2	SPF
G - E	2x4	DRY	No.2	SPF
J - G	2x4	DRY	No.2	SPF
ALL WEBS EXCEPT	2x3	DRY	No.2	SPF

DRY: SEASONED LUMBER.

PLATES (table is in inches)

JT	TYPE	PLATES	W	LEN	Y	X
B	TMVW+p	MT20	4.0	6.0	2.25	2.00
C	TTWW+m	MT20	4.0	6.0	2.00	1.00
D	TTW-m	MT20	4.0	4.0	Edge	
E	TMVW+p	MT20	4.0	6.0	2.25	2.00
G	BMV1+p	MT20	2.0	4.0		
H	BMWWW-t	MT20	5.0	6.0		
I	BMWW-t	MT20	4.0	4.0		
J	BMV1+p	MT20	2.0	4.0		

Edge - INDICATES REFERENCE CORNER OF PLATE TOUCHES EDGE OF CHORD.

LATERAL BRACE(S) SHOWN SHALL BE 2X4 SPF#2

DIMENSIONS, SUPPORTS AND LOADINGS SPECIFIED BY FABRICATOR TO BE VERIFIED BY BUILDING DESIGNER

BEARINGS

JT	FACTORED GROSS REACTION VERT	HORZ	MAXIMUM FACTORED GROSS REACTION DOWN	HORZ	UPLIFT	INPUT BRG IN-SX	REQRD BRG IN-SX
J	455	0	455	0	0	5-8	1-8
G	455	0	455	0	0	5-8	1-8

UNFACTORED REACTIONS

JT	1ST LCASE COMBINED	MAX./MIN. COMPONENT REACTIONS SNOW	LIVE	PERM.LIVE	WIND	DEAD	SOIL
J	323	203 / 0	0 / 0	0 / 0	0 / 0	120 / 0	0 / 0
G	323	203 / 0	0 / 0	0 / 0	0 / 0	120 / 0	0 / 0

BEARING MATERIAL TO BE SPF NO.2 OR BETTER AT JOINT(S) J, G

BRACING

TOP CHORD TO BE SHEATHED OR MAX. PURLIN SPACING = 6.25 FT.
MAX. UNBRACED BOTTOM CHORD LENGTH = 10.00 FT OR RIGID CEILING DIRECTLY APPLIED.

ALL PITCH BREAKS AND PERIMETER CORNER JOINTS MUST BE LATERALLY RESTRAINED.

LOADING

TOTAL LOAD CASES: (4)

CHORDS

MEMB. FR-TO	MAX. FACTORED FORCE (LBS)	FACTORED VERT. LOAD (PLF) FROM	TO	LC1	MAX CSI (LC)	MAX. UNBRAC LENGTH
A- B	0 / 24	-78.0	-78.0	0.04 (1)	10.00	
B- C	-265 / 0	-78.0	-78.0	0.05 (1)	6.25	
C- D	-169 / 0	-114.5	-114.5	0.08 (1)	6.25	
D- E	-265 / 0	-78.0	-78.0	0.05 (1)	6.25	
E- F	0 / 24	-78.0	-78.0	0.04 (1)	10.00	
J- B	-431 / 0	0.0	0.0	0.05 (1)	7.81	
G- E	-431 / 0	0.0	0.0	0.05 (1)	7.81	
J- I	0 / 0	-27.2	-27.2	0.02 (4)	10.00	
I- H	0 / 170	-27.2	-27.2	0.04 (4)	10.00	
H- G	0 / 0	-27.2	-27.2	0.02 (4)	10.00	

WEBS

MEMB. FR-TO	MAX. FACTORED FORCE (LBS)	MAX CSI (LC)
I- C	-38 / 25	0.01 (4)
C- H	0 / 0	0.00 (1)
H- D	-39 / 26	0.01 (4)
B- I	0 / 194	0.05 (1)
H- E	0 / 194	0.05 (1)

FACTORED CONCENTRATED LOADS (LBS)

JT	LOC.	LC1	MAX-	MAX+	FACE	DIR.	TYPE	HEEL	CONN.
C	1-10-5	-57	-57	---	FRONT	VERT	TOTAL	---	C1
D	3-9-11	-57	-57	---	FRONT	VERT	TOTAL	---	C1

DESIGN CRITERIA

SPECIFIED LOADS:

TOP CH.	LL	=	21.0	PSF
	DL	=	6.0	PSF
BOT CH.	LL	=	0.0	PSF
	DL	=	7.4	PSF
TOTAL LOAD		=	34.4	PSF

SPACING = 24.0 IN. C/C

LOADING IN FLAT SECTION BASED ON A SLOPE OF 2.00/12 MINIMUM

GIRDER TYPE: CPrimeHip
SIDE SETBACK = 1-10-5
END SETBACK = 3-10-8
END WALL WIDTH = 0-0
CORNER FRAMING TYPE: CONVENTIONAL
END JACK TYPE: CONVENTIONAL
APPLIED TO FRONT SIDE
- ADDT'L LOADS BASED ON 55 % OF GSL.

THIS TRUSS IS DESIGNED FOR RESIDENTIAL OR SMALL BUILDING REQUIREMENTS OF PART 9, NBCC 2015

THIS DESIGN COMPLIES WITH:
- PART 9 OF BCBC 2018 , ABC 2019
- PART 9 OF OBC 2012 (2019 AMENDMENT)
- CSA 086-14
- TPIC 2014

(55 % OF 23.0 P.S.F. G.S.L. PLUS 8.4 P.S.F. RAIN LOAD) EQUALS 21.0 P.S.F. SPECIFIED ROOF LIVE LOAD

ALLOWABLE DEFL.(LL)= L/360 (0.19")
CALCULATED VERT. DEFL.(LL) = L/ 999 (0.00")
ALLOWABLE DEFL.(TL)= L/360 (0.19")
CALCULATED VERT. DEFL.(TL) = L/ 999 (0.00")

CSI: TC=0.08/1.00 (C-D:1) , BC=0.04/1.00 (H-I:4) , WB=0.05/1.00 (B-I:1) , SSI=0.10/1.00 (C-D:1)

DOL LUMBER=1.00 NAIL=1.00 LS BEND=1.00 COMP=1.00 SHEAR=1.00 TENS= 1.00

COMPANION LIVE LOAD FACTOR = 1.00

TRUSS PLATE MANUFACTURER IS NOT RESPONSIBLE FOR QUALITY CONTROL IN THE TRUSS MANUFACTURING PLANT .

NAIL VALUES

PLATE	GRIP(DRY) (PSI) MAX	MIN	SHEAR (PLI) MAX	MIN	SECTION (PLI) MAX	MIN
MT20	650	371	1747	788	1987	1873

PLATE PLACEMENT TOL. = 0.250 inches

PLATE ROTATION TOL. = 5.0 Deg.

JSI GRIP= 0.24 (B) (INPUT = 0.90)
JSI METAL= 0.12 (B) (INPUT = 1.00)

JOB NAME	TRUSS NAME	QUANTITY	PLY	JOB DESC.		DRWG NO.
336324	H94		1	TRUSS DESC.	JT 45147	E21104092

Alpa Roof Truss, Maple

Version 8.420 S Jan 21 2021 MiTek Industries, Inc. Wed Oct 13 14:52:07 2021 Page 1

ID:hd511hZTz bdeQoS817GKByhVxV-AulKLl676qv0yoZx6heOHBFskqA6Un49U2W8i8yTp6c

Scale = 1:32.6

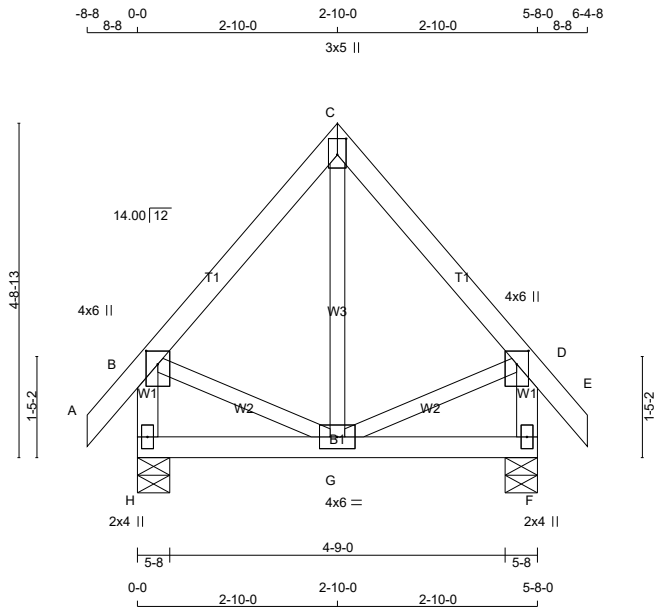

TOTAL WEIGHT = 30 lb

[M][F]

LUMBER

N. L. G. A. RULES

CHORDS	SIZE		LUMBER	DESCR.
A - C	2x4	DRY	No.2	SPF
C - E	2x4	DRY	No.2	SPF
H - B	2x4	DRY	No.2	SPF
F - D	2x4	DRY	No.2	SPF
H - F	2x4	DRY	No.2	SPF
ALL WEBS EXCEPT	2x3	DRY	No.2	SPF

DRY: SEASONED LUMBER.

PLATES (table is in inches)

JT	TYPE	PLATES	W	LEN	Y	X
B	TMVW+p	MT20	4.0	6.0	2.25	2.00
C	TTW+p	MT20	3.0	5.0	2.75	1.50
D	TMVW+p	MT20	4.0	6.0	2.25	2.00
F	BMV1+p	MT20	2.0	4.0		
G	BMWWW-t	MT20	4.0	6.0		
H	BMV1+p	MT20	2.0	4.0		

LATERAL BRACE(S) SHOWN SHALL BE 2X4 SPF#2

DIMENSIONS, SUPPORTS AND LOADINGS SPECIFIED BY FABRICATOR TO BE VERIFIED BY BUILDING DESIGNER

BEARINGS

JT	FACTORED GROSS REACTION VERT	HORZ	MAXIMUM FACTORED GROSS REACTION DOWN	HORZ	UPLIFT	INPUT BRG IN-SX	REQRD BRG IN-SX
H	337	0	337	0	0	5-8	1-8
F	337	0	337	0	0	5-8	1-8

UNFACTORED REACTIONS

JT	1ST LCASE COMBINED	MAX./MIN. COMPONENT REACTIONS SNOW	LIVE	PERM.LIVE	WIND	DEAD	SOIL
H	239	153 / 0	0 / 0	0 / 0	0 / 0	86 / 0	0 / 0
F	239	153 / 0	0 / 0	0 / 0	0 / 0	86 / 0	0 / 0

BEARING MATERIAL TO BE SPF NO.2 OR BETTER AT JOINT(S) H, F

BRACING

TOP CHORD TO BE SHEATHED OR MAX. PURLIN SPACING = 6.25 FT.
MAX. UNBRACED BOTTOM CHORD LENGTH = 10.00 FT OR RIGID CEILING DIRECTLY APPLIED.

ALL PITCH BREAKS AND PERIMETER CORNER JOINTS MUST BE LATERALLY RESTRAINED.

LOADING

TOTAL LOAD CASES: (4)

CHORDS

MEMB. FR-TO	MAX. FACTORED FORCE (LBS)	FACTORED VERT. LOAD LC1 (PLF) FROM	TO	MAX CSI (LC)	MAX. UNBRAC LENGTH
A- B	0 / 24	-78.0	-78.0	0.04 (1)	10.00
B- C	-142 / 0	-78.0	-78.0	0.08 (1)	6.25
C- D	-142 / 0	-78.0	-78.0	0.08 (1)	6.25
D- E	0 / 24	-78.0	-78.0	0.04 (1)	10.00
H- B	-316 / 0	0.0	0.0	0.03 (1)	7.81
F- D	-316 / 0	0.0	0.0	0.03 (1)	7.81
H- G	0 / 0	-18.5	-18.5	0.04 (4)	10.00
G- F	0 / 0	-18.5	-18.5	0.04 (4)	10.00

WEBS

MEMB. FR-TO	MAX. FACTORED FORCE (LBS)	MAX CSI (LC)
G- C	-6 / 43	0.01 (4)
B- G	0 / 98	0.02 (1)
G- D	0 / 98	0.02 (1)

DESIGN CRITERIA

SPECIFIED LOADS:

TOP CH.	LL	=	21.0	PSF
	DL	=	6.0	PSF
BOT CH.	LL	=	0.0	PSF
	DL	=	7.4	PSF
TOTAL LOAD		=	34.4	PSF

SPACING = 24.0 IN. C/C

THIS TRUSS IS DESIGNED FOR RESIDENTIAL OR SMALL BUILDING REQUIREMENTS OF PART 9, NBCC 2015

THIS DESIGN COMPLIES WITH:
- PART 9 OF BCBC 2018 , ABC 2019
- PART 9 OF OBC 2012 (2019 AMENDMENT)
- CSA 086-14
- TPIC 2014

(55 % OF 23.0 P.S.F. G.S.L. PLUS 8.4 P.S.F. RAIN LOAD) EQUALS 21.0 P.S.F. SPECIFIED ROOF LIVE LOAD

ALLOWABLE DEFL.(LL)= L/360 (0.19")
CALCULATED VERT. DEFL.(LL) = L/ 999 (0.00")
ALLOWABLE DEFL.(TL)= L/360 (0.19")
CALCULATED VERT. DEFL.(TL) = L/ 999 (0.00")

CSI: TC=0.08/1.00 (C-D:1) , BC=0.04/1.00 (F-G:4) , WB=0.02/1.00 (B-G:1) , SSI=0.06/1.00 (C-D:1)

DOL LUMBER=1.00 NAIL=1.00 LS BEND=1.10 COMP=1.10 SHEAR=1.10 TENS= 1.10

COMPANION LIVE LOAD FACTOR = 1.00

TRUSS PLATE MANUFACTURER IS NOT RESPONSIBLE FOR QUALITY CONTROL IN THE TRUSS MANUFACTURING PLANT .

NAIL VALUES

PLATE	GRIP(DRY) (PSI) MAX	MIN	SHEAR (PLI) MAX	MIN	SECTION (PLI) MAX	MIN
MT20	650	371	1747	788	1987	1873

PLATE PLACEMENT TOL. = 0.250 inches

PLATE ROTATION TOL. = 5.0 Deg.

JSI GRIP= 0.18 (D) (INPUT = 0.90)
JSI METAL= 0.09 (B) (INPUT = 1.00)

JOB NAME	TRUSS NAME	QUANTITY	PLY	JOB DESC.		DRWG NO.
336324	H94S		1	TRUSS DESC.	JT 45147	E21104093

Alpa Roof Truss, Maple

Version 8.420 S Jan 21 2021 MiTek Industries, Inc. Wed Oct 13 14:52:08 2021 Page 1

ID:hd511hZTz_bdeQoS817GKByhVxV-f4JiZe6mt81tay88gO9dqOo2q4WWDEPJjiGiFayTp6b

Scale = 1:28.5

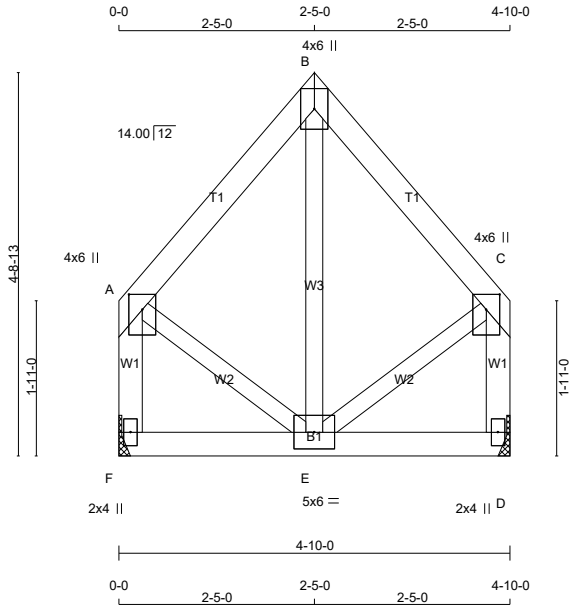

TOTAL WEIGHT = 2 X 26 = 51 lb

LUMBER

N. L. G. A. RULES

CHORDS	SIZE		LUMBER	DESCR.
A - B	2x4	DRY	No.2	SPF
B - C	2x4	DRY	No.2	SPF
F - A	2x4	DRY	No.2	SPF
D - C	2x4	DRY	No.2	SPF
F - D	2x4	DRY	No.2	SPF
ALL WEBS EXCEPT	2x3	DRY	No.2	SPF

DRY: SEASONED LUMBER.

PLATES (table is in inches)

JT	TYPE	PLATES	W	LEN	Y	X
A	TMVW+p	MT20	4.0	6.0	2.25	2.00
B	TTW+p	MT20	4.0	6.0		
C	TMVW+p	MT20	4.0	6.0	2.25	2.00
D	BMV1+p	MT20	2.0	4.0		
E	BMWWW-t	MT20	5.0	6.0		
F	BMV1+p	MT20	2.0	4.0		

LATERAL BRACE(S) SHOWN SHALL BE 2X4 SPF#2

DIMENSIONS, SUPPORTS AND LOADINGS SPECIFIED BY FABRICATOR TO BE VERIFIED BY BUILDING DESIGNER

BEARINGS

JT	FACTORED GROSS REACTION VERT	HORZ	MAXIMUM FACTORED GROSS REACTION DOWN	HORZ	UPLIFT	INPUT BRG IN-SX	REQRD BRG IN-SX
F	233	0	233	0	0	MECHANICAL	
D	233	0	233	0	0	MECHANICAL	

A SUITABLE HANGER/MECHANICAL CONNECTION IS REQUIRED AT JOINT F, D. MINIMUM BEARING LENGTH AT JOINT F = 1-8, JOINT D = 1-8.

UNFACTORED REACTIONS

JT	1ST LCASE COMBINED	MAX./MIN. COMPONENT REACTIONS SNOW	LIVE	PERM.LIVE	WIND	DEAD	SOIL
F	166	101 / 0	0 / 0	0 / 0	0 / 0	65 / 0	0 / 0
D	166	101 / 0	0 / 0	0 / 0	0 / 0	65 / 0	0 / 0

BRACING

TOP CHORD TO BE SHEATHED OR MAX. PURLIN SPACING = 6.25 FT.
MAX. UNBRACED BOTTOM CHORD LENGTH = 10.00 FT OR RIGID CEILING DIRECTLY APPLIED.

ALL PITCH BREAKS AND PERIMETER CORNER JOINTS MUST BE LATERALLY RESTRAINED.

LOADING

TOTAL LOAD CASES: (4)

CHORDS

MEMB. FR-TO	MAX. FACTORED FORCE (LBS)	FACTORED VERT. LOAD (PLF) FROM	TO	LC1 MAX CSI (LC)	MAX. UNBRAC LENGTH
A- B	-103 / 0	-78.0	-78.0	0.06 (1)	6.25
B- C	-103 / 0	-78.0	-78.0	0.06 (1)	6.25
F- A	-215 / 0	0.0	0.0	0.02 (1)	7.81
D- C	-215 / 0	0.0	0.0	0.02 (1)	7.81
F- E	0 / 0	-18.5	-18.5	0.03 (4)	10.00
E- D	0 / 0	-18.5	-18.5	0.03 (4)	10.00

WEBS

MEMB. FR-TO	MAX. FACTORED FORCE (LBS)	MAX CSI (LC)
E- B	-32 / 25	0.01 (1)
A- E	0 / 80	0.02 (1)
E- C	0 / 80	0.02 (1)

DESIGN CRITERIA

SPECIFIED LOADS:

TOP	CH.	LL	=	21.0	PSF
		DL	=	6.0	PSF
BOT	CH.	LL	=	0.0	PSF
		DL	=	7.4	PSF
TOTAL	LOAD		=	34.4	PSF

SPACING = 24.0 IN. C/C

THIS TRUSS IS DESIGNED FOR RESIDENTIAL OR SMALL BUILDING REQUIREMENTS OF PART 9, NBCC 2015

THIS DESIGN COMPLIES WITH:
- PART 9 OF BCBC 2018 , ABC 2019
- PART 9 OF OBC 2012 (2019 AMENDMENT)
- CSA 086-14
- TPIC 2014

(55 % OF 23.0 P.S.F. G.S.L. PLUS 8.4 P.S.F. RAIN LOAD) EQUALS 21.0 P.S.F. SPECIFIED ROOF LIVE LOAD

ALLOWABLE DEFL.(LL)= L/360 (0.19")
CALCULATED VERT. DEFL.(LL) = L/ 999 (0.00")
ALLOWABLE DEFL.(TL)= L/360 (0.19")
CALCULATED VERT. DEFL.(TL) = L/ 999 (0.00")

CSI: TC=0.06/1.00 (A-B:1) , BC=0.03/1.00 (E-F:4) , WB=0.02/1.00 (C-E:1) , SSI=0.05/1.00 (A-B:1)

DOL LUMBER=1.00 NAIL=1.00 LS BEND=1.10 COMP=1.10 SHEAR=1.10 TENS= 1.10

COMPANION LIVE LOAD FACTOR = 1.00

TRUSS PLATE MANUFACTURER IS NOT RESPONSIBLE FOR QUALITY CONTROL IN THE TRUSS MANUFACTURING PLANT .

NAIL VALUES

PLATE	GRIP(DRY) (PSI) MAX	MIN	SHEAR (PLI) MAX	MIN	SECTION (PLI) MAX	MIN
MT20	650	371	1747	788	1987	1873

PLATE PLACEMENT TOL. = 0.250 inches

PLATE ROTATION TOL. = 5.0 Deg.

JSI GRIP= 0.12 (C) (INPUT = 0.90)
JSI METAL= 0.06 (A) (INPUT = 1.00)

JOB NAME	TRUSS NAME	QUANTITY	PLY	JOB DESC.	DRWG NO.
336324	H95		1	TRUSS DESC. JT 45147	E21104094

Alpa Roof Truss, Maple

Version 8.420 S Jan 21 2021 MiTek Industries, Inc. Wed Oct 13 14:52:10 2021 Page 1

ID:hd511hZTz_bdeQoS817GKByhVxV-bTRS_K80PlHbpFIWnpB5vptKZu92h4bcA0loJTyTp6Z

Scale = 1:69.2

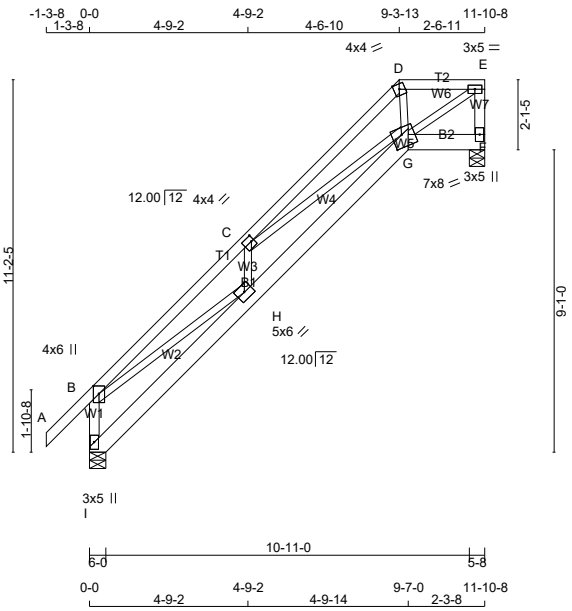

TOTAL WEIGHT = 66 lb

[M][F]

LUMBER

N. L. G. A. RULES

CHORDS	SIZE		LUMBER	DESCR.
I - B	2x4	DRY	No.2	SPF
A - D	2x4	DRY	No.2	SPF
D - E	2x4	DRY	No.2	SPF
F - E	2x4	DRY	No.2	SPF
I - G	2x6	DRY	No.2	SPF
G - F	2x6	DRY	No.2	SPF
ALL WEBS	2x3	DRY	No.2	SPF

DRY: SEASONED LUMBER.

PLATES (table is in inches)

JT	TYPE	PLATES	W	LEN	Y	X
B	TMVW+p	MT20	4.0	6.0	2.75	2.00
C	TMWW-t	MT20	4.0	4.0	2.00	1.00
D	TTW-m	MT20	4.0	4.0	Edge	
E	TMVW-t	MT20	3.0	5.0		
F	BMV1+p	MT20	3.0	5.0		
G	BBWWW-m	MT20	7.0	8.0	4.50	3.50
H	BMWW-t	MT20	5.0	6.0		
I	BMV1+p	MT20	3.0	5.0		

Edge - INDICATES REFERENCE CORNER OF PLATE TOUCHES EDGE OF CHORD.

LATERAL BRACE(S) SHOWN SHALL BE 2X4 SPF#2

DIMENSIONS, SUPPORTS AND LOADINGS SPECIFIED BY FABRICATOR TO BE VERIFIED BY BUILDING DESIGNER

BEARINGS

JT	FACTORED GROSS REACTION VERT	HORZ	MAXIMUM FACTORED GROSS REACTION DOWN	HORZ	UPLIFT	INPUT BRG IN-SX	REQRD BRG IN-SX
I	682	0	682	0	0	6-0	1-8
F	573	0	573	0	0	5-8	1-8

UNFACTORED REACTIONS

JT	1ST LCASE COMBINED	MAX./MIN. COMPONENT REACTIONS SNOW	LIVE	PERM.LIVE	WIND	DEAD	SOIL
I	484	308 / 0	0 / 0	0 / 0	0 / 0	176 / 0	0 / 0
F	408	249 / 0	0 / 0	0 / 0	0 / 0	159 / 0	0 / 0

BEARING MATERIAL TO BE SPF NO.2 OR BETTER AT JOINT(S) I, F

BRACING

TOP CHORD TO BE SHEATHED OR MAX. PURLIN SPACING = 5.31 FT.
MAX. UNBRACED BOTTOM CHORD LENGTH = 10.00 FT OR RIGID CEILING DIRECTLY APPLIED.

ALL PITCH BREAKS AND PERIMETER CORNER JOINTS MUST BE LATERALLY RESTRAINED.

LOADING

TOTAL LOAD CASES: (4)

CHORDS

MEMB. FR-TO	MAX. FACTORED FORCE (LBS)	FACTORED VERT. LOAD (PLF) FROM	TO	LC1 CSI (LC)	MAX. UNBRAC LENGTH
I- B	-623 / 0	0.0	0.0	0.07 (1)	7.81
A- B	0 / 38	-78.0	-78.0	0.11 (1)	10.00
B- C	-1379 / 0	-78.0	-78.0	0.23 (1)	5.31
C- D	-839 / 0	-78.0	-78.0	0.21 (1)	6.25
D- E	-624 / 0	-78.0	-78.0	0.07 (1)	6.25
F- E	-552 / 0	0.0	0.0	0.06 (1)	7.81
I- H	-9 / 2	-18.5	-18.5	0.07 (1)	10.00
H- G	0 / 1342	-18.5	-18.5	0.22 (1)	10.00
G- F	0 / 0	-18.5	-18.5	0.01 (4)	10.00

WEBS

MEMB. FR-TO	MAX. FACTORED FORCE (LBS)	MAX CSI (LC)
B- H	0 / 1174	0.26 (1)
H- C	-257 / 0	0.04 (1)
C- G	-440 / 0	0.29 (1)
D- G	0 / 329	0.07 (1)
G- E	0 / 775	0.17 (1)

DESIGN CRITERIA

SPECIFIED LOADS:

TOP	CH.	LL	=	21.0	PSF
		DL	=	6.0	PSF
BOT	CH.	LL	=	0.0	PSF
		DL	=	7.4	PSF
TOTAL	LOAD		=	34.4	PSF

SPACING = 24.0 IN. C/C

LOADING IN FLAT SECTION BASED ON A SLOPE OF 2.00/12 MINIMUM

THIS TRUSS IS DESIGNED FOR RESIDENTIAL OR SMALL BUILDING REQUIREMENTS OF PART 9, NBCC 2015

THIS DESIGN COMPLIES WITH:
- PART 9 OF BCBC 2018 , ABC 2019
- PART 9 OF OBC 2012 (2019 AMENDMENT)
- CSA 086-14
- TPIC 2014

(55 % OF 23.0 P.S.F. G.S.L. PLUS 8.4 P.S.F. RAIN LOAD) EQUALS 21.0 P.S.F. SPECIFIED ROOF LIVE LOAD

ALLOWABLE DEFL.(LL)= L/360 (0.40")
CALCULATED VERT. DEFL.(LL) = L/ 999 (0.05")
ALLOWABLE DEFL.(TL)= L/360 (0.40")
CALCULATED VERT. DEFL.(TL) = L/ 999 (0.09")

CSI: TC=0.23/1.00 (B-C:1) , BC=0.22/1.00 (G-H:1) , WB=0.29/1.00 (C-G:1) , SSI=0.12/1.00 (C-D:1)

DOL LUMBER=1.00 NAIL=1.00 LS BEND=1.10 COMP=1.10 SHEAR=1.10 TENS= 1.10

COMPANION LIVE LOAD FACTOR = 1.00

TRUSS PLATE MANUFACTURER IS NOT RESPONSIBLE FOR QUALITY CONTROL IN THE TRUSS MANUFACTURING PLANT .

NAIL VALUES

PLATE	GRIP(DRY) (PSI) MAX	MIN	SHEAR (PLI) MAX	MIN	SECTION (PLI) MAX	MIN
MT20	650	371	1747	788	1987	1873

PLATE PLACEMENT TOL. = 0.250 inches

PLATE ROTATION TOL. = 5.0 Deg.

JSI GRIP= 0.81 (E) (INPUT = 0.90)
JSI METAL= 0.59 (B) (INPUT = 1.00)

JOB NAME	TRUSS NAME	QUANTITY	PLY	JOB DESC.	DRWG NO.
336324	H96		1	TRUSS DESC. JT 45147	E21104095

Alpa Roof Truss, Maple

Version 8.420 S Jan 21 2021 MiTek Industries, Inc. Wed Oct 13 14:52:12 2021 Page 1

ID:hd511hZTz_bdeQoS817GKByhVxV-XrYDO0AGxNYJ3ZRvvEEZ_EzgvhqX9_9ueKEvOLyTp6X

Scale = 1:83.8

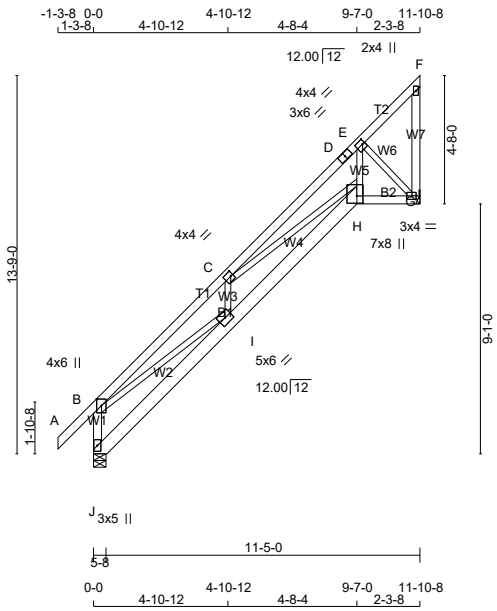

TOTAL WEIGHT = 8 X 69 = 556 lb

[M][F]

LUMBER

N. L. G. A. RULES

CHORDS	SIZE		LUMBER	DESCR.
J - B	2x4	DRY	No.2	SPF
A - D	2x4	DRY	No.2	SPF
D - F	2x4	DRY	No.2	SPF
G - F	2x4	DRY	No.2	SPF
J - H	2x6	DRY	No.2	SPF
H - G	2x4	DRY	No.2	SPF
ALL WEBS	2x3	DRY	No.2	SPF

DRY: SEASONED LUMBER.

PLATES (table is in inches)

JT	TYPE	PLATES	W	LEN	Y	X
B	TMVW+p	MT20	4.0	6.0	2.75	2.00
C	TMWW-t	MT20	4.0	4.0	2.00	1.00
D	TS-t	MT20	3.0	6.0		
E	TMWW-t	MT20	4.0	4.0	2.00	1.00
F	TMV+p	MT20	2.0	4.0		
G	BMVW1-t	MT20	3.0	4.0	1.50	1.75
H	BBWW+p	MT20	7.0	8.0	3.25	2.75
I	BMWW-t	MT20	5.0	6.0		
J	BMV1+p	MT20	3.0	5.0		

LATERAL BRACE(S) SHOWN SHALL BE 2X4 SPF#2

DIMENSIONS, SUPPORTS AND LOADINGS SPECIFIED BY FABRICATOR TO BE VERIFIED BY BUILDING DESIGNER

BEARINGS

JT	FACTORED GROSS REACTION VERT	HORZ	MAXIMUM FACTORED GROSS REACTION DOWN	HORZ	UPLIFT	INPUT BRG	REQRD BRG
J	682	0	682	0	0	5-8	1-8
G	573	0	573	0	0	MECHANICAL	

A SUITABLE HANGER/MECHANICAL CONNECTION IS REQUIRED AT JOINT G. MINIMUM BEARING LENGTH AT JOINT G = 1-8.

UNFACTORED REACTIONS

JT	1ST LCASE COMBINED	MAX./MIN. COMPONENT REACTIONS SNOW	LIVE	PERM.LIVE	WIND	DEAD	SOIL
J	484	308 / 0	0 / 0	0 / 0	0 / 0	176 / 0	0 / 0
G	408	249 / 0	0 / 0	0 / 0	0 / 0	159 / 0	0 / 0

BEARING MATERIAL TO BE SPF NO.2 OR BETTER AT JOINT(S) J

BRACING

TOP CHORD TO BE SHEATHED OR MAX. PURLIN SPACING = 5.29 FT.
MAX. UNBRACED BOTTOM CHORD LENGTH = 10.00 FT OR RIGID CEILING DIRECTLY APPLIED.

ALL PITCH BREAKS AND PERIMETER CORNER JOINTS MUST BE LATERALLY RESTRAINED.

LOADING

TOTAL LOAD CASES: (4)

CHORDS

MEMB. FR-TO	MAX. FACTORED FORCE (LBS)	FACTORED VERT. LOAD (PLF) FROM	TO	LC1 MAX CSI (LC)	MAX. UNBRAC LENGTH
J- B	-622 / 0	0.0	0.0	0.07 (1)	7.81
A- B	0 / 38	-78.0	-78.0	0.11 (1)	10.00
B- C	-1383 / 0	-78.0	-78.0	0.24 (1)	5.29
C- D	-850 / 0	-78.0	-78.0	0.19 (1)	6.25
D- E	-850 / 0	-78.0	-78.0	0.19 (1)	6.25
E- F	-35 / 0	-78.0	-78.0	0.11 (1)	6.25
G- F	-36 / 0	0.0	0.0	0.01 (1)	7.81
J- I	-9 / 2	-18.5	-18.5	0.07 (1)	10.00
I- H	0 / 1342	-18.5	-18.5	0.22 (1)	10.00
H- G	0 / 553	-18.5	-18.5	0.11 (1)	10.00

WEBS

MEMB. FR-TO	MAX. FACTORED FORCE (LBS)	MAX CSI (LC)
B- I	0 / 1181	0.27 (1)
I- C	-242 / 0	0.04 (1)
C- H	-416 / 0	0.29 (1)
H- E	0 / 819	0.18 (1)
E- G	-770 / 0	0.14 (1)

DESIGN CRITERIA

SPECIFIED LOADS:

TOP	CH.	LL	=	21.0	PSF
		DL	=	6.0	PSF
BOT	CH.	LL	=	0.0	PSF
		DL	=	7.4	PSF
TOTAL	LOAD		=	34.4	PSF

SPACING = 24.0 IN. C/C

THIS TRUSS IS DESIGNED FOR RESIDENTIAL OR SMALL BUILDING REQUIREMENTS OF PART 9, NBCC 2015

THIS DESIGN COMPLIES WITH:
- PART 9 OF BCBC 2018 , ABC 2019
- PART 9 OF OBC 2012 (2019 AMENDMENT)
- CSA 086-14
- TPIC 2014

(55 % OF 23.0 P.S.F. G.S.L. PLUS 8.4 P.S.F. RAIN LOAD) EQUALS 21.0 P.S.F. SPECIFIED ROOF LIVE LOAD

ALLOWABLE DEFL.(LL)= L/360 (0.40")
CALCULATED VERT. DEFL.(LL) = L/ 999 (0.05")
ALLOWABLE DEFL.(TL)= L/360 (0.40")
CALCULATED VERT. DEFL.(TL) = L/ 999 (0.09")

CSI: TC=0.24/1.00 (B-C:1) , BC=0.22/1.00 (H-I:1) , WB=0.29/1.00 (C-H:1) , SSI=0.12/1.00 (B-C:1)

DOL LUMBER=1.00 NAIL=1.00 LS BEND=1.10 COMP=1.10 SHEAR=1.10 TENS= 1.10

COMPANION LIVE LOAD FACTOR = 1.00

TRUSS PLATE MANUFACTURER IS NOT RESPONSIBLE FOR QUALITY CONTROL IN THE TRUSS MANUFACTURING PLANT .

NAIL VALUES

PLATE	GRIP(DRY) (PSI) MAX	MIN	SHEAR (PLI) MAX	MIN	SECTION (PLI) MAX	MIN
MT20	650	371	1747	788	1987	1873

PLATE PLACEMENT TOL. = 0.250 inches

PLATE ROTATION TOL. = 5.0 Deg.

JSI GRIP= 0.83 (E) (INPUT = 0.90)
JSI METAL= 0.59 (B) (INPUT = 1.00)

JOB NAME	TRUSS NAME	QUANTITY	PLY	JOB DESC.		DRWG NO.
336324	H97		1	TRUSS DESC.	JT 45147	E21104096

Alpa Roof Truss, Maple

Version 8.420 S Jan 21 2021 MiTek Industries, Inc. Wed Oct 13 14:52:13 2021 Page 1

ID:hd511hZTz bdeQoS817GKByhVxV-?26bcMAuigqAgj05SyloXSVso59iuT?2tzzTwoyTp6W

Scale = 1:60.0

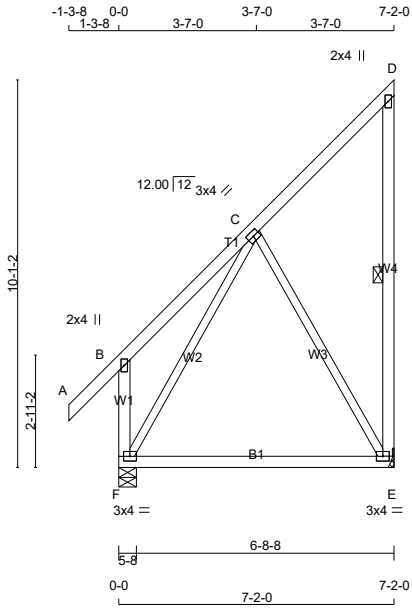

TOTAL WEIGHT = 6 X 47 = 279 lb

[M][F]

LUMBER

N. L. G. A. RULES

CHORDS	SIZE		LUMBER	DESCR.
A - D	2x4	DRY	No.2	SPF
E - D	2x4	DRY	No.2	SPF
F - B	2x4	DRY	No.2	SPF
F - E	2x4	DRY	No.2	SPF
ALL WEBS EXCEPT	2x3	DRY	No.2	SPF

DRY: SEASONED LUMBER.

PLATES (table is in inches)

JT	TYPE	PLATES	W	LEN Y	X
B	TMV+p	MT20	2.0	4.0	
C	TMWW-t	MT20	3.0	4.0	
D	TMV+p	MT20	2.0	4.0	
E	BMVW1-t	MT20	3.0	4.0	
F	BMVW1-t	MT20	3.0	4.0	

LATERAL BRACE(S) SHOWN SHALL BE 2X4 SPF#2

DIMENSIONS, SUPPORTS AND LOADINGS SPECIFIED BY FABRICATOR TO BE VERIFIED BY BUILDING DESIGNER

BEARINGS

JT	FACTORED GROSS REACTION VERT	HORZ	MAXIMUM FACTORED GROSS REACTION DOWN	HORZ	UPLIFT	INPUT BRG IN-SX	REQRD BRG IN-SX
E	346	0	346	0	0	MECHANICAL	
F	454	0	454	0	0	5-8	1-8

A SUITABLE HANGER/MECHANICAL CONNECTION IS REQUIRED AT JOINT E. MINIMUM BEARING LENGTH AT JOINT E = 1-8.

UNFACTORED REACTIONS

JT	1ST LCASE COMBINED	MAX./MIN. COMPONENT REACTIONS SNOW	LIVE	PERM.LIVE	WIND	DEAD	SOIL
E	246	150 / 0	0 / 0	0 / 0	0 / 0	96 / 0	0 / 0
F	322	209 / 0	0 / 0	0 / 0	0 / 0	113 / 0	0 / 0

BEARING MATERIAL TO BE SPF NO.2 OR BETTER AT JOINT(S) F

BRACING

TOP CHORD TO BE SHEATHED OR MAX. PURLIN SPACING = 6.25 FT.
MAX. UNBRACED BOTTOM CHORD LENGTH = 10.00 FT OR RIGID CEILING DIRECTLY APPLIED.

ALL PITCH BREAKS AND PERIMETER CORNER JOINTS MUST BE LATERALLY RESTRAINED.

1 LATERAL BRACE(S) AT 1/ 2 LENGTH OF D-E.

END VERTICAL(S) MUST BE SHEATHED OR HAVE BRACES AS INDICATED IN THE MAX. UNBRACED LENGTH COLUMN OF THE TABLE BELOW

LOADING

TOTAL LOAD CASES: (4)

CHORDS

MEMB. FR-TO	MAX. FACTORED FORCE (LBS)	FACTORED VERT. LOAD (PLF) FROM	TO	LC1 CSI (LC)	MAX UNBRAC LENGTH
A- B	0 / 38	-78.0	-78.0	0.11 (1)	10.00
B- C	0 / 25	-78.0	-78.0	0.17 (1)	10.00
C- D	-24 / 0	-78.0	-78.0	0.13 (1)	6.25
E- D	-109 / 0	0.0	0.0	0.05 (1)	6.25
F- B	-210 / 0	0.0	0.0	0.03 (1)	7.81
F- E	0 / 102	-18.5	-18.5	0.28 (4)	10.00

WEBS

MEMB. FR-TO	MAX. FACTORED FORCE (LBS)	MAX CSI (LC)
C- E	-199 / 0	0.19 (1)
F- C	-205 / 0	0.18 (1)

DESIGN CRITERIA

SPECIFIED LOADS:

TOP CH.	LL	=	21.0	PSF
	DL	=	6.0	PSF
BOT CH.	LL	=	0.0	PSF
	DL	=	7.4	PSF
TOTAL LOAD		=	34.4	PSF

SPACING = 24.0 IN. C/C

THIS TRUSS IS DESIGNED FOR RESIDENTIAL OR SMALL BUILDING REQUIREMENTS OF PART 9, NBCC 2015

THIS DESIGN COMPLIES WITH:
- PART 9 OF BCBC 2018 , ABC 2019
- PART 9 OF OBC 2012 (2019 AMENDMENT)
- CSA 086-14
- TPIC 2014

(55 % OF 23.0 P.S.F. G.S.L. PLUS 8.4 P.S.F. RAIN LOAD) EQUALS 21.0 P.S.F. SPECIFIED ROOF LIVE LOAD

ALLOWABLE DEFL.(TL)= L/360 (0.24")
CALCULATED VERT. DEFL.(TL) = L/ 723 (0.12")

CSI: TC=0.17/1.00 (B-C:1) , BC=0.28/1.00 (E-F:4) , WB=0.19/1.00 (C-E:1) , SSI=0.10/1.00 (C-D:1)

DOL LUMBER=1.00 NAIL=1.00 LS BEND=1.10 COMP=1.10 SHEAR=1.10 TENS= 1.10

COMPANION LIVE LOAD FACTOR = 1.00

TRUSS PLATE MANUFACTURER IS NOT RESPONSIBLE FOR QUALITY CONTROL IN THE TRUSS MANUFACTURING PLANT .

NAIL VALUES

PLATE	GRIP(DRY) (PSI) MAX	MIN	SHEAR (PLI) MAX	MIN	SECTION (PLI) MAX	MIN
MT20	650	371	1747	788	1987	1873

PLATE PLACEMENT TOL. = 0.250 inches

PLATE ROTATION TOL. = 5.0 Deg.

JSI GRIP= 0.32 (C) (INPUT = 0.90)
JSI METAL= 0.11 (B) (INPUT = 1.00)

JOB NAME	TRUSS NAME	QUANTITY	PLY	JOB DESC.		DRWG NO.
336324	H98		1	TRUSS DESC.	JT 45147	E21104097

Alpa Roof Truss, Maple

Version 8.420 S Jan 21 2021 MiTek Industries, Inc. Wed Oct 13 14:52:15 2021 Page 1

ID:hd511hZTz bdeQoS817GKByhVxV-xQEL11C9Elwuw1AUaNnGcta8GvsfMKwLKHSZ gyTp6U

Scale = 1:67.8

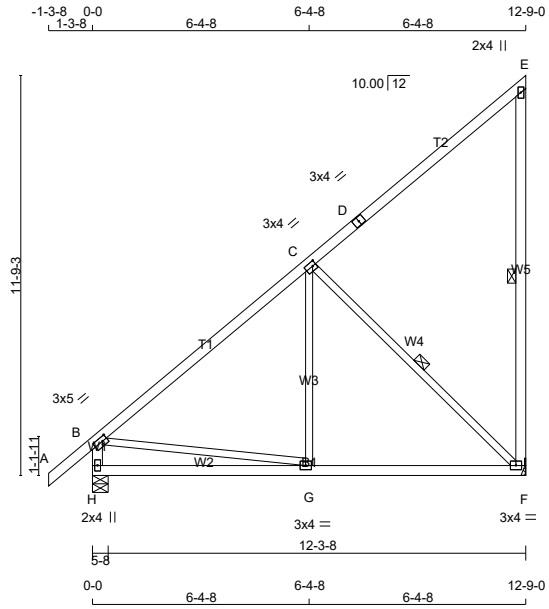

TOTAL WEIGHT = 3 X 66 = 197 lb

[M][F]

LUMBER

N. L. G. A. RULES

CHORDS	SIZE		LUMBER	DESCR.
A - D	2x4	DRY	No.2	SPF
D - E	2x4	DRY	No.2	SPF
F - E	2x4	DRY	No.2	SPF
H - B	2x4	DRY	No.2	SPF
H - F	2x4	DRY	No.2	SPF
ALL WEBS EXCEPT	2x3	DRY	No.2	SPF

DRY: SEASONED LUMBER.

PLATES (table is in inches)

JT	TYPE	PLATES	W	LEN	Y	X
B	TMVW-t	MT20	3.0	5.0	1.50	1.75
C	TMWW-t	MT20	3.0	4.0	1.50	1.25
D	TS-t	MT20	3.0	4.0		
E	TMV+p	MT20	2.0	4.0		
F	BMVW1-t	MT20	3.0	4.0		
G	BMWW-t	MT20	3.0	4.0		
H	BMV1+p	MT20	2.0	4.0		

LATERAL BRACE(S) SHOWN SHALL BE 2X4 SPF#2

DIMENSIONS, SUPPORTS AND LOADINGS SPECIFIED BY FABRICATOR TO BE VERIFIED BY BUILDING DESIGNER

BEARINGS

JT	FACTORED GROSS REACTION VERT	HORZ	MAXIMUM FACTORED GROSS REACTION DOWN	HORZ	UPLIFT	INPUT BRG IN-SX	REQRD BRG IN-SX
F	615	0	615	0	0	MECHANICAL	
H	723	0	723	0	0	5-8	1-8

A SUITABLE HANGER/MECHANICAL CONNECTION IS REQUIRED AT JOINT F. MINIMUM BEARING LENGTH AT JOINT F = 1-8.

UNFACTORED REACTIONS

JT	1ST LCASE COMBINED	MAX./MIN. COMPONENT REACTIONS SNOW	LIVE	PERM.LIVE	WIND	DEAD	SOIL
F	438	268 / 0	0 / 0	0 / 0	0 / 0	171 / 0	0 / 0
H	513	326 / 0	0 / 0	0 / 0	0 / 0	187 / 0	0 / 0

BEARING MATERIAL TO BE SPF NO.2 OR BETTER AT JOINT(S) H

BRACING

TOP CHORD TO BE SHEATHED OR MAX. PURLIN SPACING = 6.25 FT.
MAX. UNBRACED BOTTOM CHORD LENGTH = 10.00 FT OR RIGID CEILING DIRECTLY APPLIED.

ALL PITCH BREAKS AND PERIMETER CORNER JOINTS MUST BE LATERALLY RESTRAINED.

1 LATERAL BRACE(S) AT 1/ 2 LENGTH OF E-F, C-F.

END VERTICAL(S) MUST BE SHEATHED OR HAVE BRACES AS INDICATED IN THE MAX. UNBRACED LENGTH COLUMN OF THE TABLE BELOW

LOADING

TOTAL LOAD CASES: (4)

CHORDS

MEMB. FR-TO	MAX. FACTORED FORCE (LBS)	FACTORED VERT. LOAD (PLF) FROM	TO	LC1 MAX CSI (LC)	MAX. UNBRAC LENGTH
A- B	0 / 35	-78.0	-78.0	0.11 (1)	10.00
B- C	-480 / 0	-78.0	-78.0	0.43 (1)	6.25
C- D	-39 / 0	-78.0	-78.0	0.42 (1)	6.25
D- E	-39 / 0	-78.0	-78.0	0.42 (1)	6.25
F- E	-187 / 0	0.0	0.0	0.14 (1)	6.25
H- B	-678 / 0	0.0	0.0	0.07 (1)	7.81
H- G	0 / 0	-18.5	-18.5	0.21 (4)	10.00
G- F	0 / 399	-18.5	-18.5	0.25 (4)	10.00

WEBS

MEMB. FR-TO	MAX. FACTORED FORCE (LBS)	MAX CSI (LC)
G- C	0 / 145	0.05 (4)
C- F	-553 / 0	0.29 (1)
B- G	0 / 402	0.09 (1)

DESIGN CRITERIA

SPECIFIED LOADS:

TOP CH.	LL	=	21.0	PSF
	DL	=	6.0	PSF
BOT CH.	LL	=	0.0	PSF
	DL	=	7.4	PSF
TOTAL LOAD		=	34.4	PSF

SPACING = 24.0 IN. C/C

THIS TRUSS IS DESIGNED FOR RESIDENTIAL OR SMALL BUILDING REQUIREMENTS OF PART 9, NBCC 2015

THIS DESIGN COMPLIES WITH:
- PART 9 OF BCBC 2018 , ABC 2019
- PART 9 OF OBC 2012 (2019 AMENDMENT)
- CSA 086-14
- TPIC 2014

(55 % OF 23.0 P.S.F. G.S.L. PLUS 8.4 P.S.F. RAIN LOAD) EQUALS 21.0 P.S.F. SPECIFIED ROOF LIVE LOAD

ALLOWABLE DEFL.(LL)= L/360 (0.42")
CALCULATED VERT. DEFL.(LL) = L/ 999 (0.01")
ALLOWABLE DEFL.(TL)= L/360 (0.42")
CALCULATED VERT. DEFL.(TL) = L/ 999 (0.04")

CSI: TC=0.43/1.00 (B-C:1) , BC=0.25/1.00 (F-G:4) , WB=0.29/1.00 (C-F:1) , SSI=0.19/1.00 (B-C:1)

DOL LUMBER=1.00 NAIL=1.00 LS BEND=1.10 COMP=1.10 SHEAR=1.10 TENS= 1.10

COMPANION LIVE LOAD FACTOR = 1.00

TRUSS PLATE MANUFACTURER IS NOT RESPONSIBLE FOR QUALITY CONTROL IN THE TRUSS MANUFACTURING PLANT .

NAIL VALUES

PLATE	GRIP(DRY) (PSI) MAX	MIN	SHEAR (PLI) MAX	MIN	SECTION (PLI) MAX	MIN
MT20	650	371	1747	788	1987	1873

PLATE PLACEMENT TOL. = 0.250 inches

PLATE ROTATION TOL. = 5.0 Deg.

JSI GRIP= 0.68 (C) (INPUT = 0.90)
JSI METAL= 0.20 (B) (INPUT = 1.00)

JOB NAME	TRUSS NAME	QUANTITY	PLY	JOB DESC.		DRWG NO.
336324	H98G		1	TRUSS DESC.	JT 45147	E21104098

Alpa Roof Truss, Maple

Version 8.420 S Jan 21 2021 MiTek Industries, Inc. Wed Oct 13 14:52:16 2021 Page 1

ID:hd511hZTz bdeQoS817GKByhVxV-QdokENDn b2lXAlg84lV847O1IFI5p1UZxC7X7yTp6T

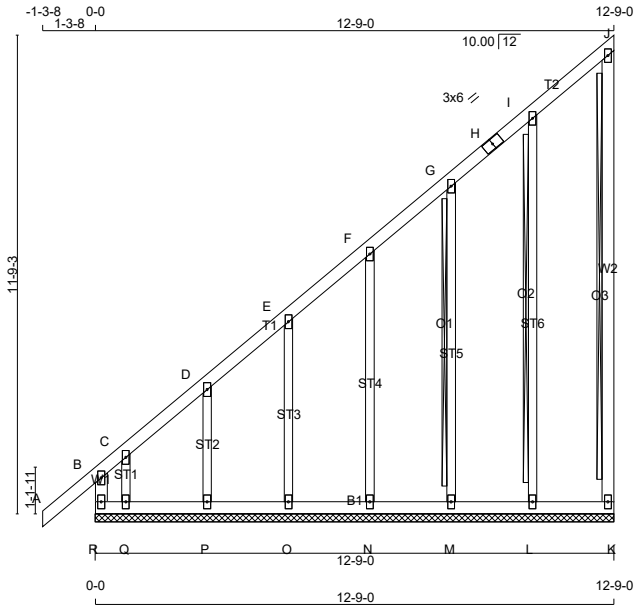

TOTAL WEIGHT = 75 lb

[M]

LUMBER

N. L. G. A. RULES

CHORDS	SIZE		LUMBER	DESCR.
R - B	2x4	DRY	No.2	SPF
A - H	2x4	DRY	No.2	SPF
H - J	2x4	DRY	No.2	SPF
K - J	2x4	DRY	No.2	SPF
R - K	2x4	DRY	No.2	SPF
ALL WEBS	2x3	DRY	No.2	SPF
ALL GABLE WEBS	2x3	DRY	No.2	SPF

DRY: SEASONED LUMBER.

GABLE STUDS SPACED AT 2-0-0 OC.

PLATES (table is in inches)

JT	TYPE	PLATES	W	LEN	Y	X
B	TMV+p	MT20	2.0	4.0		
C, D, E, F, G, I						
C	TMW+w	MT20	2.0	4.0		
H	TS-t	MT20	3.0	6.0		
J	TMV+p	MT20	2.0	4.0		
K	BMV1+p	MT20	2.0	4.0		
L, M, N, O, P, Q						
L	BMW1+w	MT20	2.0	4.0		
R	BMV1+p	MT20	2.0	4.0		

LATERAL BRACE(S) SHOWN SHALL BE 2X4 SPF#2

DIMENSIONS, SUPPORTS AND LOADINGS SPECIFIED BY FABRICATOR TO BE VERIFIED BY BUILDING DESIGNER

BEARINGS

THIS TRUSS DESIGNED FOR CONTINUOUS BEARINGS.

THIS TRUSS REQUIRES RIGID SHEATHING ON EXPOSED FACE.

BEARING MATERIAL TO BE SPF NO.2 OR BETTER AT JOINT(S)

BRACING

TOP CHORD TO BE SHEATHED OR MAX. PURLIN SPACING = 6.25 FT.
MAX. UNBRACED BOTTOM CHORD LENGTH = 10.00 FT OR RIGID CEILING DIRECTLY APPLIED.

ALL PITCH BREAKS AND PERIMETER CORNER JOINTS MUST BE LATERALLY RESTRAINED.

2x4 DRY SPF No.2 T-BRACE AT J-K, I-L
2x3 DRY SPF No.2 T-BRACE AT G-M

FASTEN T AND I-BRACES TO NARROW EDGE OF WEB WITH ONE ROW PER PLY OF 3" COMMON WIRE NAILS @ 6" O.C. WITH 3" MINIMUM END DISTANCE. BRACE MUST COVER 90% OF WEB LENGTH.

END VERTICAL(S) MUST BE SHEATHED OR HAVE BRACES AS INDICATED IN THE MAX. UNBRACED LENGTH COLUMN OF THE TABLE BELOW

LOADING

TOTAL LOAD CASES: (4)

CHORDS

MEMB. FR-TO	MAX. FACTORED FORCE (LBS)	FACTORED VERT. LOAD (PLF) FROM	TO	LC1	MAX CSI (LC)	MAX. UNBRAC LENGTH
R- B	-223 / 0	0.0	0.0	0.03 (1)	7.81	
A- B	0 / 35	-78.0	-78.0	0.11 (1)	10.00	
B- C	-70 / 0	-78.0	-78.0	0.09 (1)	6.25	
C- D	-15 / 0	-78.0	-78.0	0.04 (1)	6.25	
D- E	-14 / 0	-78.0	-78.0	0.04 (1)	6.25	
E- F	-9 / 0	-78.0	-78.0	0.04 (1)	10.00	
F- G	-6 / 0	-78.0	-78.0	0.04 (1)	10.00	
G- H	-3 / 0	-78.0	-78.0	0.04 (1)	10.00	
H- I	-3 / 0	-78.0	-78.0	0.04 (1)	10.00	
I- J	-8 / 0	-78.0	-78.0	0.04 (1)	10.00	
K- J	-71 / 0	0.0	0.0	0.02 (1)	7.81	
R- Q	0 / 16	-18.5	-18.5	0.03 (1)	10.00	
Q- P	0 / 15	-18.5	-18.5	0.02 (4)	10.00	
P- O	0 / 10	-18.5	-18.5	0.02 (4)	10.00	
O- N	0 / 7	-18.5	-18.5	0.02 (4)	10.00	
N- M	0 / 4	-18.5	-18.5	0.02 (4)	10.00	
M- L	0 / 3	-18.5	-18.5	0.02 (4)	10.00	
L- K	0 / 1	-18.5	-18.5	0.02 (4)	10.00	

WEBS

MEMB. FR-TO	MAX. FACTORED FORCE (LBS)	MAX CSI (LC)
L- I	-169 / 0	0.13 (1)
M- G	-153 / 0	0.17 (1)
N- F	-155 / 0	0.12 (1)
O- E	-152 / 0	0.06 (1)
P- D	-161 / 0	0.03 (1)
Q- C	-19 / 0	0.00 (1)

DESIGN CRITERIA

SPECIFIED LOADS:

TOP	CH.	LL	=	21.0	PSF
		DL	=	6.0	PSF
BOT	CH.	LL	=	0.0	PSF
		DL	=	7.4	PSF
TOTAL	LOAD		=	34.4	PSF

SPACING = 24.0 IN. C/C

THIS TRUSS IS DESIGNED FOR RESIDENTIAL OR SMALL BUILDING REQUIREMENTS OF PART 9, NBCC 2015

THIS DESIGN COMPLIES WITH:
- PART 9 OF BCBC 2018 , ABC 2019
- PART 9 OF OBC 2012 (2019 AMENDMENT)
- CSA 086-14
- TPIC 2014

DESIGN ASSUMPTIONS
-OVERHANG NOT TO BE ALTERED OR CUT OFF.

(55 % OF 23.0 P.S.F. G.S.L. PLUS 8.4 P.S.F. RAIN LOAD) EQUALS 21.0 P.S.F. SPECIFIED ROOF LIVE LOAD

CSI: TC=0.11/1.00 (A-B:1) , BC=0.03/1.00 (Q-R:1) , WB=0.17/1.00 (G-M:1) , SSI=0.06/1.00 (A-B:1)

DOL LUMBER=1.00 NAIL=1.00 LS BEND=1.10 COMP=1.10 SHEAR=1.10 TENS= 1.10

COMPANION LIVE LOAD FACTOR = 1.00

TRUSS PLATE MANUFACTURER IS NOT RESPONSIBLE FOR QUALITY CONTROL IN THE TRUSS MANUFACTURING PLANT .

NAIL VALUES

PLATE	GRIP(DRY) (PSI) MAX	MIN	SHEAR (PLI) MAX	MIN	SECTION (PLI) MAX	MIN
MT20	650	371	1747	788	1987	1873

PLATE PLACEMENT TOL. = 0.250 inches

PLATE ROTATION TOL. = 5.0 Deg.

JSI GRIP= 0.17 (B) (INPUT = 0.90)
JSI METAL= 0.13 (B) (INPUT = 1.00)

JOB NAME	TRUSS NAME	QUANTITY	PLY	JOB DESC.		DRWG NO.
336335	H99		1	TRUSS DESC.	JT 45147	E21104164

Alpa Roof Truss, Maple

Version 8.420 S Jan 21 2021 MiTek Industries, Inc. Thu Oct 14 08:52:54 2021 Page 1

ID:hd511hZTz_bdeQoS817GKByhVxV-_OZAJkuNY4y_DOT0QDXF_6WkauLpI2?41SQ3E0yTZHN

Scale = 1:27.5

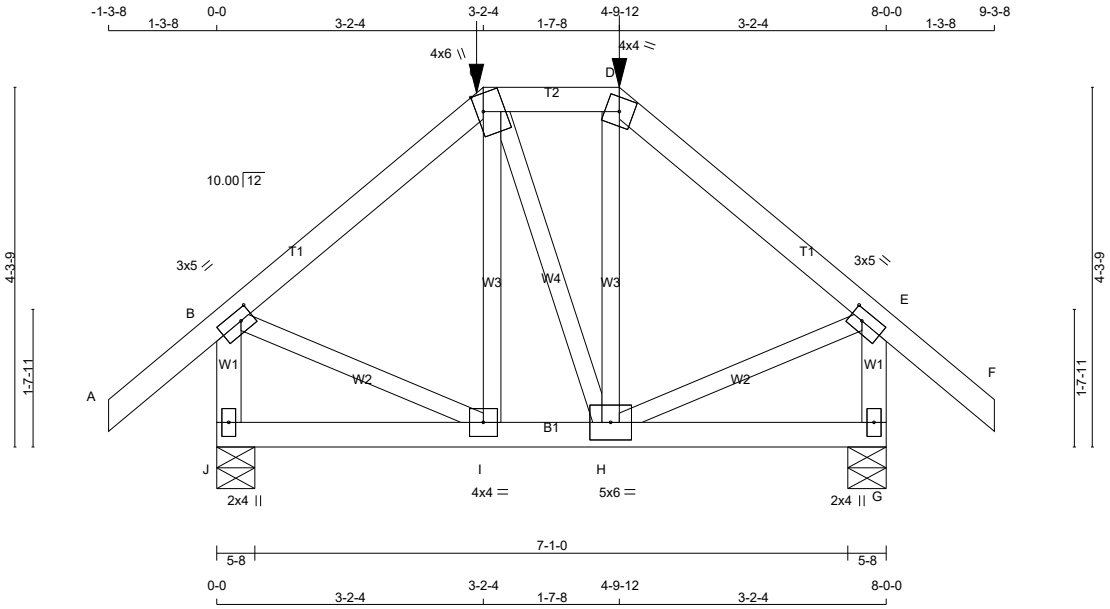

TOTAL WEIGHT = 42 lb

[M]

LUMBER

N. L. G. A. RULES

CHORDS	SIZE		LUMBER	DESCR.
A - C	2x4	DRY	No.2	SPF
C - D	2x4	DRY	No.2	SPF
D - F	2x4	DRY	No.2	SPF
J - B	2x4	DRY	No.2	SPF
G - E	2x4	DRY	No.2	SPF
J - G	2x4	DRY	No.2	SPF
ALL WEBS EXCEPT	2x3	DRY	No.2	SPF

DRY: SEASONED LUMBER.

PLATES (table is in inches)

JT	TYPE	PLATES	W	LEN	Y	X
B	TMVW-t	MT20	3.0	5.0	1.50	1.75
C	TTWW+m	MT20	4.0	6.0	Edge	1.00
D	TTW-m	MT20	4.0	4.0		
E	TMVW-t	MT20	3.0	5.0	1.50	1.75
G	BMV1+p	MT20	2.0	4.0		
H	BMWWW-t	MT20	5.0	6.0		
I	BMWW-t	MT20	4.0	4.0		
J	BMV1+p	MT20	2.0	4.0		

Edge - INDICATES REFERENCE CORNER OF PLATE TOUCHES EDGE OF CHORD.

LATERAL BRACE(S) SHOWN SHALL BE 2X4 SPF#2

DIMENSIONS, SUPPORTS AND LOADINGS SPECIFIED BY FABRICATOR TO BE VERIFIED BY BUILDING DESIGNER

BEARINGS

JT	FACTORED GROSS REACTION VERT	HORZ	MAXIMUM FACTORED GROSS REACTION DOWN	HORZ	UPLIFT	INPUT BRG IN-SX	REQRD BRG IN-SX
J	552	0	552	0	0	5-8	1-8
G	552	0	552	0	0	5-8	1-8

UNFACTORED REACTIONS

JT	1ST LCASE COMBINED	MAX./MIN. COMPONENT REACTIONS SNOW	LIVE	PERM.LIVE	WIND	DEAD	SOIL
J	391	253 / 0	0 / 0	0 / 0	0 / 0	139 / 0	0 / 0
G	391	253 / 0	0 / 0	0 / 0	0 / 0	139 / 0	0 / 0

BEARING MATERIAL TO BE SPF NO.2 OR BETTER AT JOINT(S) J, G

BRACING

TOP CHORD TO BE SHEATHED OR MAX. PURLIN SPACING = 6.25 FT.
MAX. UNBRACED BOTTOM CHORD LENGTH = 10.00 FT OR RIGID CEILING DIRECTLY APPLIED.

ALL PITCH BREAKS AND PERIMETER CORNER JOINTS MUST BE LATERALLY RESTRAINED.

LOADING

TOTAL LOAD CASES: (4)

CHORDS

MEMB. FR-TO	MAX. FACTORED FORCE (LBS)	FACTORED VERT. LOAD (PLF) FROM	TO	LC1 CSI (LC)	MAX UNBRAC LENGTH
A- B	0 / 35	-78.0	-78.0	0.12 (1)	10.00
B- C	-307 / 0	-78.0	-78.0	0.15 (1)	6.25
C- D	-234 / 0	-87.7	-87.7	0.04 (1)	6.25
D- E	-306 / 0	-78.0	-78.0	0.15 (1)	6.25
E- F	0 / 35	-78.0	-78.0	0.12 (1)	10.00
J- B	-523 / 0	0.0	0.0	0.06 (1)	7.81
G- E	-522 / 0	0.0	0.0	0.06 (1)	7.81
J- I	0 / 0	-20.8	-20.8	0.05 (4)	10.00
I- H	0 / 234	-20.8	-20.8	0.07 (4)	10.00
H- G	0 / 0	-20.8	-20.8	0.05 (4)	10.00

WEBS

MEMB. FR-TO	MAX. FACTORED FORCE (LBS)	MAX CSI (LC)
I- C	-38 / 24	0.01 (1)
C- H	-1 / 0	0.00 (1)
H- D	-40 / 25	0.01 (1)
B- I	0 / 253	0.06 (1)
H- E	0 / 252	0.06 (1)

FACTORED CONCENTRATED LOADS (LBS)

JT	LOC.	LC1	MAX-	MAX+	FACE	DIR.	TYPE	HEEL	CONN.
C	3-2-4	-41	-41	---	FRONT	VERT	TOTAL	---	C1
D	4-9-12	-41	-41	---	FRONT	VERT	TOTAL	---	C1

DESIGN CRITERIA

SPECIFIED LOADS:

TOP CH.	LL	=	21.0	PSF
	DL	=	6.0	PSF
BOT CH.	LL	=	0.0	PSF
	DL	=	7.4	PSF
TOTAL LOAD		=	34.4	PSF

SPACING = 24.0 IN. C/C

LOADING IN FLAT SECTION BASED ON A SLOPE OF 2.00/12 MINIMUM

GIRDER TYPE: CPrimeHip
SIDE SETBACK = 3-2-4
END SETBACK = 2-6-0
END WALL WIDTH = 0-0
CORNER FRAMING TYPE: CONVENTIONAL
END JACK TYPE: CONVENTIONAL
APPLIED TO FRONT SIDE
- ADDT'L LOADS BASED ON 55 % OF GSL.

THIS TRUSS IS DESIGNED FOR RESIDENTIAL OR SMALL BUILDING REQUIREMENTS OF PART 9, NBCC 2015

THIS DESIGN COMPLIES WITH:
- PART 9 OF BCBC 2018 , ABC 2019
- PART 9 OF OBC 2012 (2019 AMENDMENT)
- CSA 086-14
- TPIC 2014

(55 % OF 23.0 P.S.F. G.S.L. PLUS 8.4 P.S.F. RAIN LOAD) EQUALS 21.0 P.S.F. SPECIFIED ROOF LIVE LOAD

ALLOWABLE DEFL.(LL)= L/360 (0.27")
CALCULATED VERT. DEFL.(LL) = L/ 999 (0.00")
ALLOWABLE DEFL.(TL)= L/360 (0.27")
CALCULATED VERT. DEFL.(TL) = L/ 999 (0.01")

CSI: TC=0.15/1.00 (B-C:1) , BC=0.07/1.00 (H-I:4) , WB=0.06/1.00 (B-I:1) , SSI=0.08/1.00 (D-E:1)

DOL LUMBER=1.00 NAIL=1.00 LS BEND=1.00 COMP=1.00 SHEAR=1.00 TENS= 1.00

COMPANION LIVE LOAD FACTOR = 1.00

TRUSS PLATE MANUFACTURER IS NOT RESPONSIBLE FOR QUALITY CONTROL IN THE TRUSS MANUFACTURING PLANT .

NAIL VALUES

PLATE	GRIP(DRY) (PSI) MAX	MIN	SHEAR (PLI) MAX	MIN	SECTION (PLI) MAX	MIN
MT20	650	371	1747	788	1987	1873

PLATE PLACEMENT TOL. = 0.250 inches

PLATE ROTATION TOL. = 5.0 Deg.

JSI GRIP= 0.44 (B) (INPUT = 0.90)
JSI METAL= 0.13 (B) (INPUT = 1.00)

JOB NAME	TRUSS NAME	QUANTITY	PLY	JOB DESC.		DRWG NO.
336335	H100		1	TRUSS DESC.	JT 45147	E21104165

Alpa Roof Truss, Maple

Version 8.420 S Jan 21 2021 MiTek Industries, Inc. Thu Oct 14 08:52:56 2021 Page 1

ID:hd511hZTz bdeQoS817GKByhVxV-wmqwkQve4hCiSidPYeaj4Xc4yi14DyqMVmvAluyTZHL

Scale = 1:33.2

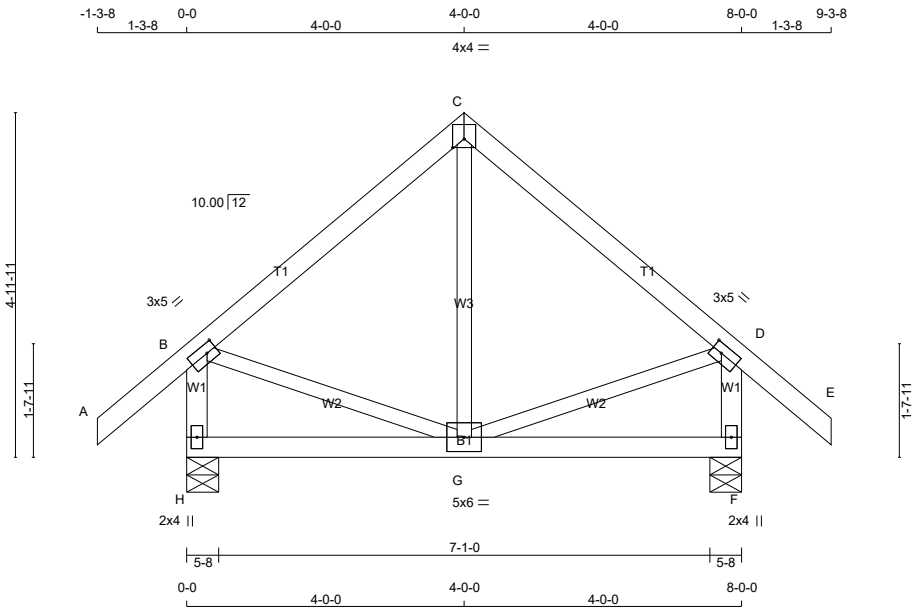

TOTAL WEIGHT = 4 X 38 = 151 lb

LUMBER

N. L. G. A. RULES

CHORDS	SIZE		LUMBER	DESCR.
A - C	2x4	DRY	No.2	SPF
C - E	2x4	DRY	No.2	SPF
H - B	2x4	DRY	No.2	SPF
F - D	2x4	DRY	No.2	SPF
H - F	2x4	DRY	No.2	SPF
ALL WEBS EXCEPT	2x3	DRY	No.2	SPF

DRY: SEASONED LUMBER.

PLATES (table is in inches)

JT	TYPE	PLATES	W	LEN	Y	X
B	TMVW-t	MT20	3.0	5.0	1.50	1.75
C	TTW-p	MT20	4.0	4.0	1.50	2.00
D	TMVW-t	MT20	3.0	5.0	1.50	1.75
F	BMV1+p	MT20	2.0	4.0		
G	BMWWW-t	MT20	5.0	6.0		
H	BMV1+p	MT20	2.0	4.0		

LATERAL BRACE(S) SHOWN SHALL BE 2X4 SPF#2

DIMENSIONS, SUPPORTS AND LOADINGS SPECIFIED BY FABRICATOR TO BE VERIFIED BY BUILDING DESIGNER

BEARINGS

JT	FACTORED GROSS REACTION VERT	HORZ	MAXIMUM FACTORED GROSS REACTION DOWN	HORZ	UPLIFT	INPUT BRG IN-SX	REQRD BRG IN-SX
H	494	0	494	0	0	5-8	1-8
F	494	0	494	0	0	5-8	1-8

UNFACTORED REACTIONS

JT	1ST LCASE COMBINED	MAX./MIN. COMPONENT REACTIONS SNOW	LIVE	PERM.LIVE	WIND	DEAD	SOIL
H	350	226 / 0	0 / 0	0 / 0	0 / 0	124 / 0	0 / 0
F	350	226 / 0	0 / 0	0 / 0	0 / 0	124 / 0	0 / 0

BEARING MATERIAL TO BE SPF NO.2 OR BETTER AT JOINT(S) H, F

BRACING

TOP CHORD TO BE SHEATHED OR MAX. PURLIN SPACING = 6.25 FT.
MAX. UNBRACED BOTTOM CHORD LENGTH = 10.00 FT OR RIGID CEILING DIRECTLY APPLIED.

ALL PITCH BREAKS AND PERIMETER CORNER JOINTS MUST BE LATERALLY RESTRAINED.

LOADING

TOTAL LOAD CASES: (4)

CHORDS

MEMB. FR-TO	MAX. FACTORED FORCE (LBS)	FACTORED VERT. LOAD (PLF) FROM	TO	LC1 CSI (LC)	MAX. UNBRAC LENGTH
A- B	0 / 35	-78.0	-78.0	0.11 (1)	10.00
B- C	-226 / 0	-78.0	-78.0	0.16 (1)	6.25
C- D	-226 / 0	-78.0	-78.0	0.16 (1)	6.25
D- E	0 / 35	-78.0	-78.0	0.11 (1)	10.00
H- B	-465 / 0	0.0	0.0	0.05 (1)	7.81
F- D	-465 / 0	0.0	0.0	0.05 (1)	7.81
H- G	0 / 0	-18.5	-18.5	0.08 (4)	10.00
G- F	0 / 0	-18.5	-18.5	0.08 (4)	10.00

WEBS

MEMB. FR-TO	MAX. FACTORED FORCE (LBS)	MAX CSI (LC)
G- C	-23 / 55	0.02 (4)
B- G	0 / 183	0.04 (1)
G- D	0 / 183	0.04 (1)

[M][F]

DESIGN CRITERIA

SPECIFIED LOADS:

TOP CH.	LL	=	21.0	PSF
	DL	=	6.0	PSF
BOT CH.	LL	=	0.0	PSF
	DL	=	7.4	PSF
TOTAL LOAD		=	34.4	PSF

SPACING = 24.0 IN. C/C

THIS TRUSS IS DESIGNED FOR RESIDENTIAL OR SMALL BUILDING REQUIREMENTS OF PART 9, NBCC 2015

THIS DESIGN COMPLIES WITH:
- PART 9 OF BCBC 2018 , ABC 2019
- PART 9 OF OBC 2012 (2019 AMENDMENT)
- CSA 086-14
- TPIC 2014

(55 % OF 23.0 P.S.F. G.S.L. PLUS 8.4 P.S.F. RAIN LOAD) EQUALS 21.0 P.S.F. SPECIFIED ROOF LIVE LOAD

ALLOWABLE DEFL.(LL)= L/360 (0.27")
CALCULATED VERT. DEFL.(LL) = L/ 999 (0.00")
ALLOWABLE DEFL.(TL)= L/360 (0.27")
CALCULATED VERT. DEFL.(TL) = L/ 999 (0.01")

CSI: TC=0.16/1.00 (C-D:1) , BC=0.08/1.00 (F-G:4) , WB=0.04/1.00 (B-G:1) , SSI=0.09/1.00 (C-D:1)

DOL LUMBER=1.00 NAIL=1.00 LS BEND=1.10 COMP=1.10 SHEAR=1.10 TENS= 1.10

COMPANION LIVE LOAD FACTOR = 1.00

TRUSS PLATE MANUFACTURER IS NOT RESPONSIBLE FOR QUALITY CONTROL IN THE TRUSS MANUFACTURING PLANT .

NAIL VALUES

PLATE	GRIP(DRY) (PSI) MAX	MIN	SHEAR (PLI) MAX	MIN	SECTION (PLI) MAX	MIN
MT20	650	371	1747	788	1987	1873

PLATE PLACEMENT TOL. = 0.250 inches

PLATE ROTATION TOL. = 5.0 Deg.

JSI GRIP= 0.39 (D) (INPUT = 0.90)
JSI METAL= 0.11 (B) (INPUT = 1.00)

JOB NAME	TRUSS NAME	QUANTITY	PLY	JOB DESC.		DRWG NO.
336335	H102A		1	TRUSS DESC.	JT 45147	E21104166

Alpa Roof Truss, Maple

Version 8.420 S Jan 21 2021 MiTek Industries, Inc. Thu Oct 14 08:52:57 2021 Page 1

ID:hd511hZTz_bdeQoS817GKByhVxV-OzEIxmwGr?KZ4rCb5L5yck89x6NJyOvWjQejrKyTZHK

Scale = 1:40.4

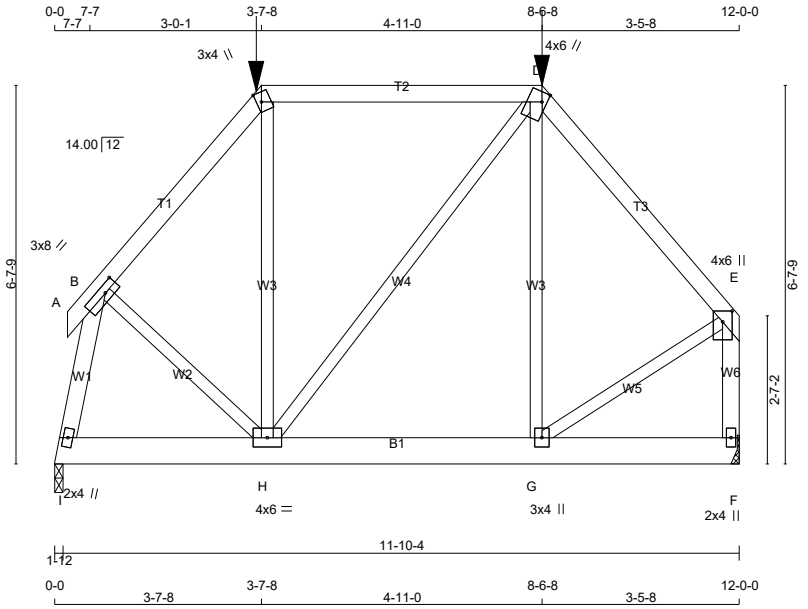

TOTAL WEIGHT = 67 lb

[M]

LUMBER

N. L. G. A. RULES

CHORDS	SIZE		LUMBER	DESCR.
A - C	2x4	DRY	No.2	SPF
C - D	2x4	DRY	No.2	SPF
D - E	2x4	DRY	No.2	SPF
F - E	2x4	DRY	No.2	SPF
I - F	2x6	DRY	No.2	SPF
ALL WEBS	2x4	DRY	No.2	SPF
EXCEPT				
B - H	2x3	DRY	No.2	SPF
H - C	2x3	DRY	No.2	SPF
H - D	2x3	DRY	No.2	SPF
G - D	2x3	DRY	No.2	SPF
G - E	2x3	DRY	No.2	SPF

DRY: SEASONED LUMBER.

PLATES (table is in inches)

JT	TYPE	PLATES	W	LEN	Y	X
B	TMWW-t	MT20	3.0	8.0	1.50	3.00
C	TTW+m	MT20	3.0	4.0	2.00	1.00
D	TTWW+m	MT20	4.0	6.0	2.00	1.00
E	TMVW+p	MT20	4.0	6.0	2.25	2.00
F	BMV1+p	MT20	2.0	4.0		
G	BMWW+t	MT20	3.0	4.0		
H	BMWWW-t	MT20	4.0	6.0		
I	BMW1+w	MT20	2.0	4.0		

LATERAL BRACE(S) SHOWN SHALL BE 2X4 SPF#2

DIMENSIONS, SUPPORTS AND LOADINGS SPECIFIED BY FABRICATOR TO BE VERIFIED BY BUILDING DESIGNER

BEARINGS

JT	FACTORED GROSS REACTION VERT	HORZ	MAXIMUM FACTORED GROSS REACTION DOWN	HORZ	UPLIFT	INPUT BRG IN-SX	REQRD BRG IN-SX
I	828	0	828	0	0	1-12	1-8
F	817	0	817	0	0	MECHANICAL	

A SUITABLE HANGER/MECHANICAL CONNECTION IS REQUIRED AT JOINT F. MINIMUM BEARING LENGTH AT JOINT F = 1-8.

UNFACTORED REACTIONS

JT	1ST LCASE COMBINED	MAX./MIN. COMPONENT REACTIONS SNOW	LIVE	PERM.LIVE	WIND	DEAD	SOIL
I	590	360 / 0	0 / 0	0 / 0	0 / 0	231 / 0	0 / 0
F	583	354 / 0	0 / 0	0 / 0	0 / 0	229 / 0	0 / 0

BEARING MATERIAL TO BE SPF NO.2 OR BETTER AT JOINT(S) I

BRACING

TOP CHORD TO BE SHEATHED OR MAX. PURLIN SPACING = 6.25 FT.
MAX. UNBRACED BOTTOM CHORD LENGTH = 10.00 FT OR RIGID CEILING DIRECTLY APPLIED.

ALL PITCH BREAKS AND PERIMETER CORNER JOINTS MUST BE LATERALLY RESTRAINED.

LOADING

TOTAL LOAD CASES: (4)

CHORDS

MEMB. FR-TO	MAX. FACTORED FORCE (LBS)	FACTORED VERT. LOAD (PLF) FROM	TO	LC1	MAX CSI (LC)	MAX. UNBRAC LENGTH
A- B	0 / 19	-78.0	-78.0		0.03 (1)	10.00
B- C	-556 / 0	-78.0	-78.0		0.13 (1)	6.25
C- D	-358 / 0	-114.5	-114.5		0.53 (1)	6.25
D- E	-559 / 0	-78.0	-78.0		0.19 (1)	6.25
F- E	-779 / 0	0.0	0.0		0.11 (1)	7.81
I- H	0 / 145	-27.2	-27.2		0.06 (4)	10.00
H- G	0 / 360	-27.2	-27.2		0.08 (4)	10.00
G- F	0 / 0	-27.2	-27.2		0.05 (4)	10.00

WEBS

MEMB. FR-TO	MAX. FACTORED FORCE (LBS)	MAX CSI (LC)
I- B	-803 / 0	0.12 (1)
B- H	0 / 296	0.07 (1)
H- C	-81 / 56	0.06 (1)
H- D	-4 / 0	0.00 (1)
G- D	-94 / 54	0.06 (1)
G- E	0 / 422	0.10 (1)

FACTORED CONCENTRATED LOADS (LBS)

JT	LOC.	LC1	MAX-	MAX+	FACE	DIR.	TYPE	HEEL	CONN.
C	3-7-8	-112	-112	---	FRONT	VERT	TOTAL	---	C1
D	8-6-8	-107	-107	---	FRONT	VERT	TOTAL	---	C1

DESIGN CRITERIA

SPECIFIED LOADS:

TOP	CH.	LL	=	21.0	PSF
		DL	=	6.0	PSF
BOT	CH.	LL	=	0.0	PSF
		DL	=	7.4	PSF
TOTAL	LOAD		=	34.4	PSF

SPACING = 24.0 IN. C/C

LOADING IN FLAT SECTION BASED ON A SLOPE OF 2.00/12 MINIMUM

GIRDER TYPE: CPrimeHip
LEFT SETBACK = 3-7-9
RIGHT SETBACK = 3-5-8
END SETBACK = 3-10-8
END WALL WIDTH = 0-0
CORNER FRAMING TYPE: CONVENTIONAL
END JACK TYPE: CONVENTIONAL
APPLIED TO FRONT SIDE
- ADDT'L LOADS BASED ON 55 % OF GSL.

THIS TRUSS IS DESIGNED FOR RESIDENTIAL OR SMALL BUILDING REQUIREMENTS OF PART 9, NBCC 2015

THIS DESIGN COMPLIES WITH:
- PART 9 OF BCBC 2018 , ABC 2019
- PART 9 OF OBC 2012 (2019 AMENDMENT)
- CSA 086-14
- TPIC 2014

(55 % OF 23.0 P.S.F. G.S.L. PLUS 8.4 P.S.F. RAIN LOAD) EQUALS 21.0 P.S.F. SPECIFIED ROOF LIVE LOAD

ALLOWABLE DEFL.(LL)= L/360 (0.39")
CALCULATED VERT. DEFL.(LL) = L/ 999 (0.00")
ALLOWABLE DEFL.(TL)= L/360 (0.39")
CALCULATED VERT. DEFL.(TL) = L/ 999 (0.01")

CSI: TC=0.53/1.00 (C-D:1) , BC=0.08/1.00 (G-H:4) , WB=0.12/1.00 (B-I:1) , SSI=0.24/1.00 (C-D:1)

DOL LUMBER=1.00 NAIL=1.00 LS BEND=1.00 COMP=1.00 SHEAR=1.00 TENS= 1.00

COMPANION LIVE LOAD FACTOR = 1.00

AUTOSOLVE RIGHT HEEL ONLY

TRUSS PLATE MANUFACTURER IS NOT RESPONSIBLE FOR QUALITY CONTROL IN THE TRUSS MANUFACTURING PLANT .

NAIL VALUES

PLATE	GRIP(DRY) (PSI) MAX	MIN	SHEAR (PLI) MAX	MIN	SECTION (PLI) MAX	MIN
MT20	650	371	1747	788	1987	1873

PLATE PLACEMENT TOL. = 0.250 inches

PLATE ROTATION TOL. = 5.0 Deg.

JSI GRIP= 0.69 (G) (INPUT = 0.90)
JSI METAL= 0.22 (E) (INPUT = 1.00)

JOB NAME	TRUSS NAME	QUANTITY	PLY	JOB DESC.		DRWG NO.
336335	H102S		1	TRUSS DESC.	JT 45147	E21104167

Alpa Roof Truss, Maple

Version 8.420 S Jan 21 2021 MiTek Industries, Inc. Thu Oct 14 08:52:59 2021 Page 1

ID:hd511hZTz_bdeQoS817GKByhVxV-KLM3MSxWNcaHJ9M_Dm7Qh9EURv2oQIOpBk7qvDyTZHI

Scale = 1:40.0

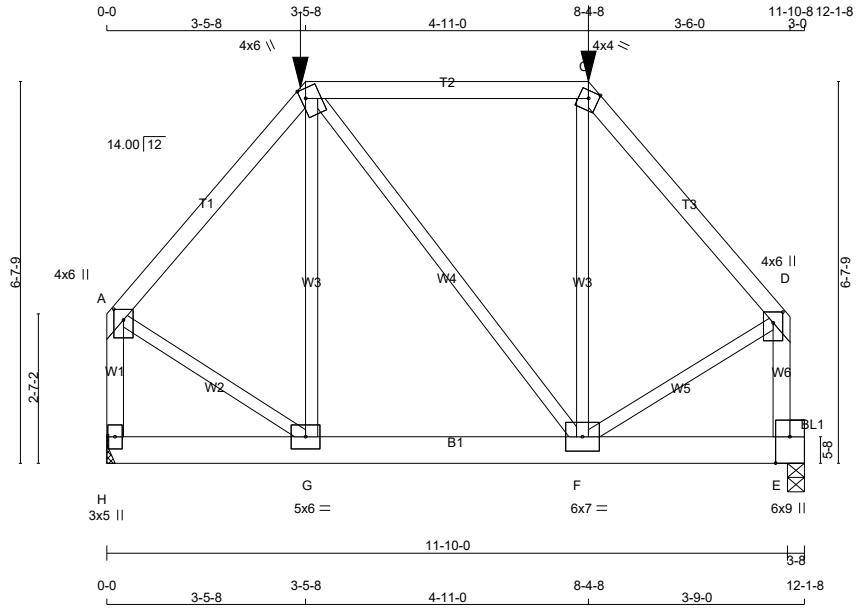

TOTAL WEIGHT = 67 lb

[M]

LUMBER

N. L. G. A. RULES

CHORDS	SIZE		LUMBER	DESCR.
A - B	2x4	DRY	No.2	SPF
B - C	2x4	DRY	No.2	SPF
C - D	2x4	DRY	No.2	SPF
H - A	2x4	DRY	No.2	SPF
E - D	2x4	DRY	No.2	SPF
H - E	2x6	DRY	No.2	SPF

BEARING BLOCKS

BL1	2x4	DRY	No.2	SPF

ALL WEBS EXCEPT	2x3	DRY	No.2	SPF

DRY: SEASONED LUMBER.

PLATES (table is in inches)

JT	TYPE	PLATES	W	LEN	Y	X
A	TMVW+p	MT20	4.0	6.0	2.25	2.00
B	TTWW+m	MT20	4.0	6.0	2.00	1.00
C	TTW-m	MT20	4.0	4.0	Edge	
D	TMVW+p	MT20	4.0	6.0	2.25	2.00
E	BMVK1+p	MT20	6.0	9.0	Edge	3.00
F	BMWWW-t	MT20	6.0	7.0		
G	BMWW-t	MT20	5.0	6.0		
H	BMV1+p	MT20	3.0	5.0		

Edge - INDICATES REFERENCE CORNER OF PLATE TOUCHES EDGE OF CHORD.

LATERAL BRACE(S) SHOWN SHALL BE 2X4 SPF#2

DIMENSIONS, SUPPORTS AND LOADINGS SPECIFIED BY FABRICATOR TO BE VERIFIED BY BUILDING DESIGNER

BEARINGS

JT	FACTORED GROSS REACTION VERT	HORZ	MAXIMUM FACTORED GROSS REACTION DOWN	HORZ	UPLIFT	INPUT BRG IN-SX	REQRD BRG IN-SX
H	814	0	814	0	0	MECHANICAL	
E	833	0	833	0	0	3-8	2-8

A SUITABLE HANGER/MECHANICAL CONNECTION IS REQUIRED AT JOINT H. MINIMUM BEARING LENGTH AT JOINT H = 1-8.

UNFACTORED REACTIONS

JT	1ST LCASE COMBINED	MAX./MIN. COMPONENT REACTIONS SNOW	LIVE	PERM.LIVE	WIND	DEAD	SOIL
H	581	352 / 0	0 / 0	0 / 0	0 / 0	228 / 0	0 / 0
E	594	363 / 0	0 / 0	0 / 0	0 / 0	231 / 0	0 / 0

BEARING MATERIAL TO BE SPF NO.2 OR BETTER AT JOINT(S) E

BRACING

TOP CHORD TO BE SHEATHED OR MAX. PURLIN SPACING = 6.25 FT.
MAX. UNBRACED BOTTOM CHORD LENGTH = 6.25 FT OR RIGID CEILING DIRECTLY APPLIED.

ALL PITCH BREAKS AND PERIMETER CORNER JOINTS MUST BE LATERALLY RESTRAINED.

LOADING

TOTAL LOAD CASES: (4)

CHORDS

MEMB. FR-TO	MAX. FACTORED FORCE (LBS)	FACTORED VERT. LOAD (PLF) FROM	TO	LC1	MAX CSI (LC)	MAX. UNBRAC LENGTH
A- B	-557 / 0	-78.0	-78.0	0.19 (1)	6.25	
B- C	-354 / 0	-114.5	-114.5	0.53 (1)	6.25	
C- D	-550 / 0	-78.0	-78.0	0.19 (1)	6.25	
H- A	-776 / 0	0.0	0.0	0.11 (1)	7.81	
E- D	-796 / 0	0.0	0.0	0.11 (1)	7.81	
H- G	0 / 0	-27.2	-27.2	0.05 (4)	10.00	
G- F	0 / 359	-27.2	-27.2	0.08 (4)	10.00	
F- E	-55 / 0	-27.2	-27.2	0.05 (4)	6.25	

WEBS

MEMB. FR-TO	MAX. FACTORED FORCE (LBS)	MAX CSI (LC)
G- B	-92 / 55	0.06 (1)
B- F	-8 / 0	0.01 (1)
F- C	-115 / 48	0.08 (1)
A- G	0 / 421	0.10 (1)
F- D	0 / 475	0.12 (1)

FACTORED CONCENTRATED LOADS (LBS)

JT	LOC.	LC1	MAX-	MAX+	FACE	DIR.	TYPE	HEEL	CONN.
B	3-5-8	-107	-107	---	FRONT	VERT	TOTAL	---	C1
C	8-4-8	-116	-116	---	FRONT	VERT	TOTAL	---	C1

DESIGN CRITERIA

SPECIFIED LOADS:

TOP	CH.	LL	=	21.0	PSF
		DL	=	6.0	PSF
BOT	CH.	LL	=	0.0	PSF
		DL	=	7.4	PSF
TOTAL	LOAD		=	34.4	PSF

SPACING = 24.0 IN. C/C

LOADING IN FLAT SECTION BASED ON A SLOPE OF 2.00/12 MINIMUM

GIRDER TYPE: CPrimeHip
LEFT SETBACK = 3-5-8
RIGHT SETBACK = 3-9-0
END SETBACK = 3-10-8
END WALL WIDTH = 0-0
CORNER FRAMING TYPE: CONVENTIONAL
END JACK TYPE: CONVENTIONAL
APPLIED TO FRONT SIDE
- ADDT'L LOADS BASED ON 55 % OF GSL.

THIS TRUSS IS DESIGNED FOR RESIDENTIAL OR SMALL BUILDING REQUIREMENTS OF PART 9, NBCC 2015

THIS DESIGN COMPLIES WITH:
- PART 9 OF BCBC 2018 , ABC 2019
- PART 9 OF OBC 2012 (2019 AMENDMENT)
- CSA 086-14
- TPIC 2014

(55 % OF 23.0 P.S.F. G.S.L. PLUS 8.4 P.S.F. RAIN LOAD) EQUALS 21.0 P.S.F. SPECIFIED ROOF LIVE LOAD

ALLOWABLE DEFL.(LL)= L/360 (0.39")
CALCULATED VERT. DEFL.(LL) = L/ 999 (0.01")
ALLOWABLE DEFL.(TL)= L/360 (0.39")
CALCULATED VERT. DEFL.(TL) = L/ 999 (0.01")

CSI: TC=0.53/1.00 (B-C:1) , BC=0.08/1.00 (F-G:4) , WB=0.12/1.00 (D-F:1) , SSI=0.24/1.00 (B-C:1)

DOL LUMBER=1.00 NAIL=1.00 LS BEND=1.00 COMP=1.00 SHEAR=1.00 TENS= 1.00

COMPANION LIVE LOAD FACTOR = 1.00

TRUSS PLATE MANUFACTURER IS NOT RESPONSIBLE FOR QUALITY CONTROL IN THE TRUSS MANUFACTURING PLANT .

NAIL VALUES

PLATE	GRIP(DRY) (PSI) MAX	MIN	SHEAR (PLI) MAX	MIN	SECTION (PLI) MAX	MIN
MT20	650	371	1747	788	1987	1873

PLATE PLACEMENT TOL. = 0.250 inches

PLATE ROTATION TOL. = 5.0 Deg.

JSI GRIP= 0.48 (C) (INPUT = 0.90)
JSI METAL= 0.22 (A) (INPUT = 1.00)

JOB NAME	TRUSS NAME	QUANTITY	PLY	JOB DESC.		DRWG NO.
336335	H103A		1	TRUSS DESC.	JT 45147	E21104168

Alpa Roof Truss, Maple

Version 8.420 S Jan 21 2021 MiTek Industries, Inc. Thu Oct 14 08:53:00 2021 Page 1

ID:hd511hZTz_bdeQoS817GKByhVxV-pYwRaoy88wi8xJxAnUefENmjeJNw9lGyPOtNRfyTZHH

Scale = 1:55.2

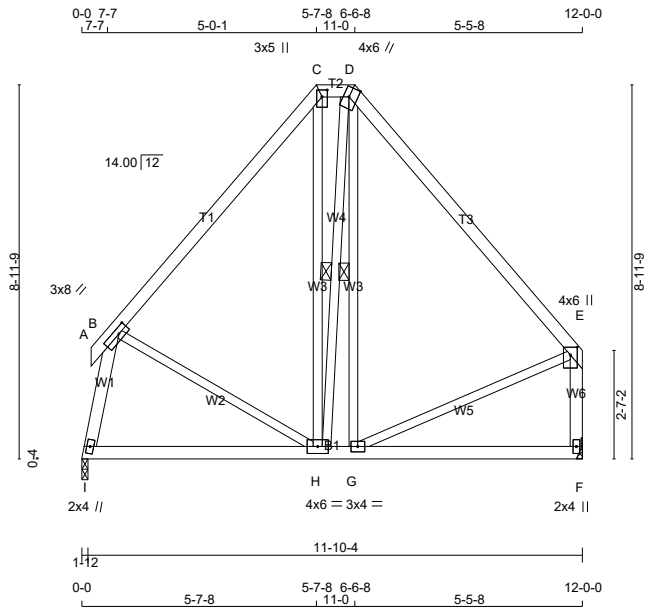

TOTAL WEIGHT = 70 lb

[M][F]

LUMBER

N. L. G. A. RULES

CHORDS	SIZE		LUMBER	DESCR.
A - C	2x4	DRY	No.2	SPF
C - D	2x4	DRY	No.2	SPF
D - E	2x4	DRY	No.2	SPF
F - E	2x4	DRY	No.2	SPF
I - F	2x4	DRY	No.2	SPF
ALL WEBS	2x4	DRY	No.2	SPF
EXCEPT				
B - H	2x3	DRY	No.2	SPF
H - C	2x3	DRY	No.2	SPF
H - D	2x3	DRY	No.2	SPF
G - D	2x3	DRY	No.2	SPF
G - E	2x3	DRY	No.2	SPF

DRY: SEASONED LUMBER.

PLATES (table is in inches)

JT	TYPE	PLATES	W	LEN	Y	X
B	TMWW-t	MT20	3.0	8.0	1.50	3.00
C	TTW+p	MT20	3.0	5.0	2.00	1.50
D	TTWW+m	MT20	4.0	6.0	Edge	2.50
E	TMVW+p	MT20	4.0	6.0	2.25	2.00
F	BMV1+p	MT20	2.0	4.0		
G	BMWW-t	MT20	3.0	4.0		
H	BMWWW-t	MT20	4.0	6.0		
I	BMW1+w	MT20	2.0	4.0		

Edge - INDICATES REFERENCE CORNER OF PLATE TOUCHES EDGE OF CHORD.

LATERAL BRACE(S) SHOWN SHALL BE 2X4 SPF#2

DIMENSIONS, SUPPORTS AND LOADINGS SPECIFIED BY FABRICATOR TO BE VERIFIED BY BUILDING DESIGNER

BEARINGS

JT	FACTORED GROSS REACTION VERT	HORZ	MAXIMUM FACTORED GROSS REACTION DOWN	HORZ	UPLIFT	INPUT BRG IN-SX	REQRD BRG IN-SX
I	574	0	574	0	0	1-12	1-8
F	570	0	570	0	0	MECHANICAL	

A SUITABLE HANGER/MECHANICAL CONNECTION IS REQUIRED AT JOINT F. MINIMUM BEARING LENGTH AT JOINT F = 1-8.

UNFACTORED REACTIONS

JT	1ST LCASE COMBINED	MAX./MIN. COMPONENT REACTIONS SNOW	LIVE	PERM.LIVE	WIND	DEAD	SOIL
I	409	250 / 0	0 / 0	0 / 0	0 / 0	159 / 0	0 / 0
F	407	248 / 0	0 / 0	0 / 0	0 / 0	158 / 0	0 / 0

BEARING MATERIAL TO BE SPF NO.2 OR BETTER AT JOINT(S) I

BRACING

TOP CHORD TO BE SHEATHED OR MAX. PURLIN SPACING = 6.25 FT.
MAX. UNBRACED BOTTOM CHORD LENGTH = 10.00 FT OR RIGID CEILING DIRECTLY APPLIED.

ALL PITCH BREAKS AND PERIMETER CORNER JOINTS MUST BE LATERALLY RESTRAINED.

1 LATERAL BRACE(S) AT 1/ 2 LENGTH OF D-H, D-G.

END VERTICAL(S) MUST BE SHEATHED OR HAVE BRACES AS INDICATED IN THE MAX. UNBRACED LENGTH COLUMN OF THE TABLE BELOW

LOADING

TOTAL LOAD CASES: (4)

CHORDS

MEMB. FR-TO	MAX. FACTORED FORCE (LBS)	FACTORED VERT. LOAD (PLF) FROM	TO	LC1	MAX CSI (LC)	MAX. UNBRAC LENGTH
A- B	0 / 19	-78.0	-78.0	0.02 (1)	10.00	
B- C	-307 / 0	-78.0	-78.0	0.24 (1)	6.25	
C- D	-200 / 0	-78.0	-78.0	0.01 (1)	6.25	
D- E	-307 / 0	-78.0	-78.0	0.31 (1)	6.25	
F- E	-529 / 0	0.0	0.0	0.07 (1)	7.81	
I- H	0 / 101	-18.5	-18.5	0.14 (4)	10.00	
H- G	0 / 200	-18.5	-18.5	0.15 (4)	10.00	
G- F	0 / 0	-18.5	-18.5	0.13 (4)	10.00	

WEBS

MEMB. FR-TO	MAX. FACTORED FORCE (LBS)	MAX CSI (LC)
I- B	-543 / 0	0.08 (1)
B- H	0 / 114	0.03 (1)
H- C	0 / 48	0.02 (4)
H- D	-2 / 3	0.00 (1)
G- D	-11 / 40	0.01 (4)
G- E	0 / 216	0.05 (1)

DESIGN CRITERIA

SPECIFIED LOADS:

TOP CH.	LL	=	21.0	PSF
	DL	=	6.0	PSF
BOT CH.	LL	=	0.0	PSF
	DL	=	7.4	PSF
TOTAL LOAD		=	34.4	PSF

SPACING = 24.0 IN. C/C

LOADING IN FLAT SECTION BASED ON A SLOPE OF 2.00/12 MINIMUM

THIS TRUSS IS DESIGNED FOR RESIDENTIAL OR SMALL BUILDING REQUIREMENTS OF PART 9, NBCC 2015

THIS DESIGN COMPLIES WITH:
- PART 9 OF BCBC 2018 , ABC 2019
- PART 9 OF OBC 2012 (2019 AMENDMENT)
- CSA 086-14
- TPIC 2014

(55 % OF 23.0 P.S.F. G.S.L. PLUS 8.4 P.S.F. RAIN LOAD) EQUALS 21.0 P.S.F. SPECIFIED ROOF LIVE LOAD

ALLOWABLE DEFL.(LL)= L/360 (0.39")
CALCULATED VERT. DEFL.(LL) = L/ 999 (0.00")
ALLOWABLE DEFL.(TL)= L/360 (0.39")
CALCULATED VERT. DEFL.(TL) = L/ 999 (0.03")

CSI: TC=0.31/1.00 (D-E:1) , BC=0.15/1.00 (G-H:4) , WB=0.08/1.00 (B-I:1) , SSI=0.11/1.00 (D-E:1)

DOL LUMBER=1.00 NAIL=1.00 LS BEND=1.10 COMP=1.10 SHEAR=1.10 TENS= 1.10

COMPANION LIVE LOAD FACTOR = 1.00

AUTOSOLVE RIGHT HEEL ONLY

TRUSS PLATE MANUFACTURER IS NOT RESPONSIBLE FOR QUALITY CONTROL IN THE TRUSS MANUFACTURING PLANT .

NAIL VALUES

PLATE	GRIP(DRY) (PSI) MAX	MIN	SHEAR (PLI) MAX	MIN	SECTION (PLI) MAX	MIN
MT20	650	371	1747	788	1987	1873

PLATE PLACEMENT TOL. = 0.250 inches

PLATE ROTATION TOL. = 5.0 Deg.

JSI GRIP= 0.31 (B) (INPUT = 0.90)
JSI METAL= 0.16 (E) (INPUT = 1.00)

JOB NAME	TRUSS NAME	QUANTITY	PLY	JOB DESC.		DRWG NO.
336335	H103S		1	TRUSS DESC.	JT 45147	E21104169

Alpa Roof Truss, Maple

Version 8.420 S Jan 21 2021 MiTek Industries, Inc. Thu Oct 14 08:53:02 2021 Page 1

ID:hd511hZTz_bdeQoS817GKByhVxV-lw2B_T_OgXyrAd4Yuug8Jos2u73LdgBFtiMUWYyTZHF

Scale = 1:55.2

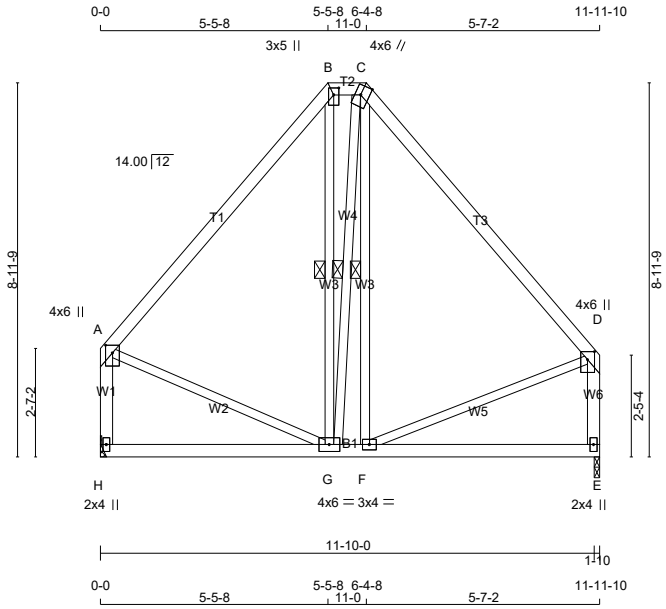

TOTAL WEIGHT = 69 lb

[M][F]

LUMBER

N. L. G. A. RULES

CHORDS	SIZE		LUMBER	DESCR.
A - B	2x4	DRY	No.2	SPF
B - C	2x4	DRY	No.2	SPF
C - D	2x4	DRY	No.2	SPF
H - A	2x4	DRY	No.2	SPF
E - D	2x4	DRY	No.2	SPF
H - E	2x4	DRY	No.2	SPF
ALL WEBS EXCEPT	2x3	DRY	No.2	SPF

DRY: SEASONED LUMBER.

PLATES (table is in inches)

JT	TYPE	PLATES	W	LEN	Y	X
A	TMVW+p	MT20	4.0	6.0	2.25	2.00
B	TTW+p	MT20	3.0	5.0	2.00	1.50
C	TTWW+m	MT20	4.0	6.0	Edge	2.50
D	TMVW+p	MT20	4.0	6.0	2.25	2.00
E	BMV1+p	MT20	2.0	4.0		
F	BMWW-t	MT20	3.0	4.0		
G	BMWWW-t	MT20	4.0	6.0		
H	BMV1+p	MT20	2.0	4.0		

Edge - INDICATES REFERENCE CORNER OF PLATE TOUCHES EDGE OF CHORD.

LATERAL BRACE(S) SHOWN SHALL BE 2X4 SPF#2

DIMENSIONS, SUPPORTS AND LOADINGS SPECIFIED BY FABRICATOR TO BE VERIFIED BY BUILDING DESIGNER

BEARINGS

JT	FACTORED GROSS REACTION VERT	HORZ	MAXIMUM FACTORED GROSS REACTION DOWN	HORZ	UPLIFT	INPUT BRG IN-SX	REQRD BRG IN-SX
H	577	0	577	0	0	MECHANICAL	
E	577	0	577	0	0	1-10	1-8

A SUITABLE HANGER/MECHANICAL CONNECTION IS REQUIRED AT JOINT H. MINIMUM BEARING LENGTH AT JOINT H = 1-8.

UNFACTORED REACTIONS

JT	1ST LCASE COMBINED	MAX./MIN. COMPONENT REACTIONS SNOW	LIVE	PERM.LIVE	WIND	DEAD	SOIL
H	412	251 / 0	0 / 0	0 / 0	0 / 0	160 / 0	0 / 0
E	412	251 / 0	0 / 0	0 / 0	0 / 0	160 / 0	0 / 0

BEARING MATERIAL TO BE SPF NO.2 OR BETTER AT JOINT(S) E

BRACING

TOP CHORD TO BE SHEATHED OR MAX. PURLIN SPACING = 6.25 FT.
MAX. UNBRACED BOTTOM CHORD LENGTH = 10.00 FT OR RIGID CEILING DIRECTLY APPLIED.

ALL PITCH BREAKS AND PERIMETER CORNER JOINTS MUST BE LATERALLY RESTRAINED.

1 LATERAL BRACE(S) AT 1/ 2 LENGTH OF B-G, C-G, C-F.

END VERTICAL(S) MUST BE SHEATHED OR HAVE BRACES AS INDICATED IN THE MAX. UNBRACED LENGTH COLUMN OF THE TABLE BELOW

LOADING

TOTAL LOAD CASES: (4)

CHORDS

MEMB. FR-TO	MAX. FACTORED FORCE (LBS)	FACTORED VERT. LOAD (PLF) FROM	TO	LC1 CSI (LC)	MAX UNBRAC LENGTH
A- B	-314 / 0	-78.0	-78.0	0.31 (1)	6.25
B- C	-204 / 0	-78.0	-78.0	0.01 (1)	6.25
C- D	-315 / 0	-78.0	-78.0	0.32 (1)	6.25
H- A	-536 / 0	0.0	0.0	0.07 (1)	7.81
E- D	-535 / 0	0.0	0.0	0.07 (1)	7.81
H- G	0 / 0	-18.5	-18.5	0.13 (4)	10.00
G- F	0 / 205	-18.5	-18.5	0.16 (4)	10.00
F- E	0 / 0	-18.5	-18.5	0.13 (4)	10.00

WEBS

MEMB. FR-TO	MAX. FACTORED FORCE (LBS)	MAX CSI (LC)
G- B	-8 / 46	0.02 (4)
G- C	-10 / 0	0.01 (1)
F- C	-2 / 46	0.02 (4)
A- G	0 / 220	0.05 (1)
F- D	0 / 219	0.05 (1)

DESIGN CRITERIA

SPECIFIED LOADS:

TOP	CH.	LL	=	21.0	PSF
		DL	=	6.0	PSF
BOT	CH.	LL	=	0.0	PSF
		DL	=	7.4	PSF
TOTAL	LOAD		=	34.4	PSF

SPACING = 24.0 IN. C/C

LOADING IN FLAT SECTION BASED ON A SLOPE OF 2.00/12 MINIMUM

THIS TRUSS IS DESIGNED FOR RESIDENTIAL OR SMALL BUILDING REQUIREMENTS OF PART 9, NBCC 2015

THIS DESIGN COMPLIES WITH:
- PART 9 OF BCBC 2018 , ABC 2019
- PART 9 OF OBC 2012 (2019 AMENDMENT)
- CSA 086-14
- TPIC 2014

(55 % OF 23.0 P.S.F. G.S.L. PLUS 8.4 P.S.F. RAIN LOAD) EQUALS 21.0 P.S.F. SPECIFIED ROOF LIVE LOAD

ALLOWABLE DEFL.(LL)= L/360 (0.40")
CALCULATED VERT. DEFL.(LL) = L/ 999 (0.00")
ALLOWABLE DEFL.(TL)= L/360 (0.40")
CALCULATED VERT. DEFL.(TL) = L/ 999 (0.03")

CSI: TC=0.32/1.00 (C-D:1) , BC=0.16/1.00 (F-G:4) , WB=0.05/1.00 (A-G:1) , SSI=0.11/1.00 (C-D:1)

DOL LUMBER=1.00 NAIL=1.00 LS BEND=1.10 COMP=1.10 SHEAR=1.10 TENS= 1.10

COMPANION LIVE LOAD FACTOR = 1.00

TRUSS PLATE MANUFACTURER IS NOT RESPONSIBLE FOR QUALITY CONTROL IN THE TRUSS MANUFACTURING PLANT .

NAIL VALUES

PLATE	GRIP(DRY) (PSI) MAX	MIN	SHEAR (PLI) MAX	MIN	SECTION (PLI) MAX	MIN
MT20	650	371	1747	788	1987	1873

PLATE PLACEMENT TOL. = 0.250 inches

PLATE ROTATION TOL. = 5.0 Deg.

JSI GRIP= 0.31 (F) (INPUT = 0.90)
JSI METAL= 0.16 (D) (INPUT = 1.00)

JOB NAME	TRUSS NAME	QUANTITY	PLY	JOB DESC.		DRWG NO.
336335	H104A		1	TRUSS DESC.	JT 45147	E21104170

Alpa Roof Truss, Maple

Version 8.420 S Jan 21 2021 MiTek Industries, Inc. Thu Oct 14 08:53:03 2021 Page 1

ID:hd511hZTz bdeQoS817GKByhVxV-D7cZCp?1Rr4iomflScCNs?ODHWOuM5hO6M512 yTZHE

Scale = 1:59.2

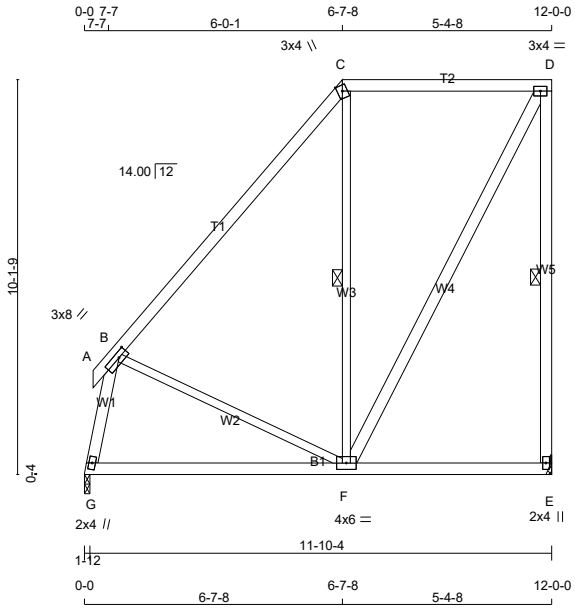

TOTAL WEIGHT = 71 lb

LUMBER

N. L. G. A. RULES

CHORDS	SIZE		LUMBER	DESCR.
A - C	2x4	DRY	No.2	SPF
C - D	2x4	DRY	No.2	SPF
E - D	2x4	DRY	No.2	SPF
G - E	2x4	DRY	No.2	SPF
ALL WEBS	2x4	DRY	No.2	SPF
EXCEPT				
B - F	2x3	DRY	No.2	SPF
F - C	2x3	DRY	No.2	SPF

DRY: SEASONED LUMBER.

PLATES (table is in inches)

JT	TYPE	PLATES	W	LEN	Y	X
B	TMWW-t	MT20	3.0	8.0	1.50	3.00
C	TTW+m	MT20	3.0	4.0	Edge	
D	TMVW-t	MT20	3.0	4.0		
E	BMV1+p	MT20	2.0	4.0		
F	BMWWW-t	MT20	4.0	6.0		
G	BMW1+w	MT20	2.0	4.0		

Edge - INDICATES REFERENCE CORNER OF PLATE TOUCHES EDGE OF CHORD.

LATERAL BRACE(S) SHOWN SHALL BE 2X4 SPF#2

DIMENSIONS, SUPPORTS AND LOADINGS SPECIFIED BY FABRICATOR TO BE VERIFIED BY BUILDING DESIGNER

BEARINGS

JT	FACTORED GROSS REACTION VERT	HORZ	MAXIMUM FACTORED GROSS REACTION DOWN	HORZ	UPLIFT	INPUT BRG IN-SX	REQRD BRG IN-SX
G	574	0	574	0	0	1-12	1-8
E	570	0	570	0	0	MECHANICAL	

A SUITABLE HANGER/MECHANICAL CONNECTION IS REQUIRED AT JOINT E. MINIMUM BEARING LENGTH AT JOINT E = 1-8.

UNFACTORED REACTIONS

JT	1ST LCASE COMBINED	MAX./MIN. COMPONENT REACTIONS SNOW	LIVE	PERM.LIVE	WIND	DEAD	SOIL
G	409	250 / 0	0 / 0	0 / 0	0 / 0	159 / 0	0 / 0
E	407	248 / 0	0 / 0	0 / 0	0 / 0	158 / 0	0 / 0

BEARING MATERIAL TO BE SPF NO.2 OR BETTER AT JOINT(S) G

BRACING

TOP CHORD TO BE SHEATHED OR MAX. PURLIN SPACING = 6.25 FT.
MAX. UNBRACED BOTTOM CHORD LENGTH = 10.00 FT OR RIGID CEILING DIRECTLY APPLIED.

ALL PITCH BREAKS AND PERIMETER CORNER JOINTS MUST BE LATERALLY RESTRAINED.

1 LATERAL BRACE(S) AT 1/ 2 LENGTH OF D-E, C-F.

END VERTICAL(S) MUST BE SHEATHED OR HAVE BRACES AS INDICATED IN THE MAX. UNBRACED LENGTH COLUMN OF THE TABLE BELOW

LOADING

TOTAL LOAD CASES: (4)

CHORDS

MEMB. FR-TO	MAX. FACTORED FORCE (LBS)	FACTORED VERT. LOAD (PLF) FROM	TO	LC1	MAX CSI (LC)	MAX. UNBRAC LENGTH
A- B	0 / 19	-78.0	-78.0		0.02 (1)	10.00
B- C	-275 / 0	-78.0	-78.0		0.35 (1)	6.25
C- D	-176 / 0	-78.0	-78.0		0.29 (1)	6.25
E- D	-537 / 0	0.0	0.0		0.27 (1)	6.25
G- F	0 / 100	-18.5	-18.5		0.20 (4)	10.00
F- E	0 / 0	-18.5	-18.5		0.19 (4)	10.00

WEBS

MEMB. FR-TO	MAX. FACTORED FORCE (LBS)	MAX CSI (LC)
G- B	-535 / 0	0.08 (1)
B- F	0 / 87	0.02 (1)
F- C	-230 / 0	0.16 (1)
F- D	0 / 372	0.06 (1)

DESIGN CRITERIA

SPECIFIED LOADS:

TOP CH.	LL	=	21.0	PSF
	DL	=	6.0	PSF
BOT CH.	LL	=	0.0	PSF
	DL	=	7.4	PSF
TOTAL LOAD		=	34.4	PSF

SPACING = 24.0 IN. C/C

LOADING IN FLAT SECTION BASED ON A SLOPE OF 2.00/12 MINIMUM

THIS TRUSS IS DESIGNED FOR RESIDENTIAL OR SMALL BUILDING REQUIREMENTS OF PART 9, NBCC 2015

THIS DESIGN COMPLIES WITH:
- PART 9 OF BCBC 2018 , ABC 2019
- PART 9 OF OBC 2012 (2019 AMENDMENT)
- CSA 086-14
- TPIC 2014

(55 % OF 23.0 P.S.F. G.S.L. PLUS 8.4 P.S.F. RAIN LOAD) EQUALS 21.0 P.S.F. SPECIFIED ROOF LIVE LOAD

ALLOWABLE DEFL.(LL)= L/360 (0.39")
CALCULATED VERT. DEFL.(LL) = L/ 999 (0.00")
ALLOWABLE DEFL.(TL)= L/360 (0.39")
CALCULATED VERT. DEFL.(TL) = L/ 999 (0.05")

CSI: TC=0.35/1.00 (B-C:1) , BC=0.20/1.00 (F-G:4) , WB=0.16/1.00 (C-F:1) , SSI=0.16/1.00 (C-D:1)

DOL LUMBER=1.00 NAIL=1.00 LS BEND=1.10 COMP=1.10 SHEAR=1.10 TENS= 1.10

COMPANION LIVE LOAD FACTOR = 1.00

AUTOSOLVE RIGHT HEEL ONLY

TRUSS PLATE MANUFACTURER IS NOT RESPONSIBLE FOR QUALITY CONTROL IN THE TRUSS MANUFACTURING PLANT .

NAIL VALUES

PLATE	GRIP(DRY) (PSI) MAX	MIN	SHEAR (PLI) MAX	MIN	SECTION (PLI) MAX	MIN
MT20	650	371	1747	788	1987	1873

PLATE PLACEMENT TOL. = 0.250 inches

PLATE ROTATION TOL. = 5.0 Deg.

JSI GRIP= 0.61 (D) (INPUT = 0.90)
JSI METAL= 0.12 (D) (INPUT = 1.00)

JOB NAME	TRUSS NAME	QUANTITY	PLY	JOB DESC.		DRWG NO.
336335	H161		1	TRUSS DESC.	JT 45147	E21104171

Alpa Roof Truss, Maple

Version 8.420 S Jan 21 2021 MiTek Industries, Inc. Thu Oct 14 08:53:05 2021 Page 1

ID:hd511hZTz bdeQoS817GKByhVxV-9VjKdV0HySKQ14p7Z1ErxQUZzK6?q0BhZga87tyTZHC

Scale = 1:27.4

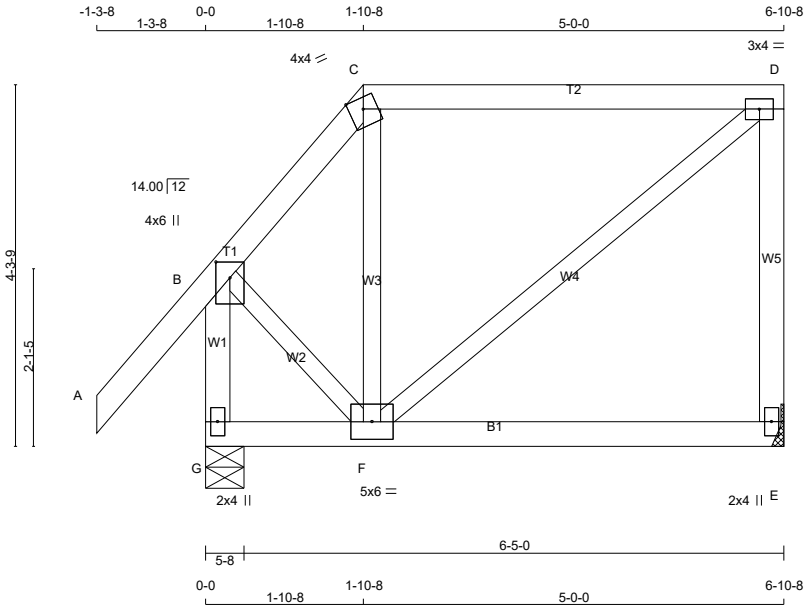

TOTAL WEIGHT = 35 lb

[M]

LUMBER

N. L. G. A. RULES

CHORDS	SIZE		LUMBER	DESCR.
A - C	2x4	DRY	No.2	SPF
C - D	2x4	DRY	No.2	SPF
E - D	2x4	DRY	No.2	SPF
G - B	2x4	DRY	No.2	SPF
G - E	2x4	DRY	No.2	SPF
ALL WEBS EXCEPT	2x3	DRY	No.2	SPF

DRY: SEASONED LUMBER.

PLATES (table is in inches)

JT	TYPE	PLATES	W	LEN	Y	X
B	TMVW+p	MT20	4.0	6.0	2.25	2.00
C	TTW-m	MT20	4.0	4.0	Edge	
D	TMVW-t	MT20	3.0	4.0		
E	BMV1+p	MT20	2.0	4.0		
F	BMWWW-t	MT20	5.0	6.0		
G	BMV1+p	MT20	2.0	4.0		

Edge - INDICATES REFERENCE CORNER OF PLATE TOUCHES EDGE OF CHORD.

LATERAL BRACE(S) SHOWN SHALL BE 2X4 SPF#2

DIMENSIONS, SUPPORTS AND LOADINGS SPECIFIED BY FABRICATOR TO BE VERIFIED BY BUILDING DESIGNER

BEARINGS

JT	FACTORED GROSS REACTION VERT	HORZ	MAXIMUM FACTORED GROSS REACTION DOWN	HORZ	UPLIFT	INPUT BRG IN-SX	REQRD BRG IN-SX
E	320	0	320	0	0	MECHANICAL	
G	452	0	452	0	0	5-8	1-8

A SUITABLE HANGER/MECHANICAL CONNECTION IS REQUIRED AT JOINT E. MINIMUM BEARING LENGTH AT JOINT E = 1-8.

UNFACTORED REACTIONS

JT	1ST LCASE COMBINED	MAX./MIN. COMPONENT REACTIONS SNOW	LIVE	PERM.LIVE	WIND	DEAD	SOIL
E	229	138 / 0	0 / 0	0 / 0	0 / 0	90 / 0	0 / 0
G	320	209 / 0	0 / 0	0 / 0	0 / 0	111 / 0	0 / 0

BEARING MATERIAL TO BE SPF NO.2 OR BETTER AT JOINT(S) G

BRACING

TOP CHORD TO BE SHEATHED OR MAX. PURLIN SPACING = 6.25 FT.
MAX. UNBRACED BOTTOM CHORD LENGTH = 10.00 FT OR RIGID CEILING DIRECTLY APPLIED.

ALL PITCH BREAKS AND PERIMETER CORNER JOINTS MUST BE LATERALLY RESTRAINED.

LOADING

TOTAL LOAD CASES: (4)

CHORDS

MEMB. FR-TO	MAX. FACTORED FORCE (LBS)	FACTORED VERT. LOAD (PLF) FROM	TO	LC1 MAX CSI (LC)	MAX. UNBRAC LENGTH
A- B	0 / 42	-78.0	-78.0	0.11 (1)	10.00
B- C	-204 / 0	-78.0	-78.0	0.11 (1)	6.25
C- D	-109 / 0	-78.0	-78.0	0.33 (1)	6.25
E- D	-283 / 0	0.0	0.0	0.08 (1)	7.81
G- B	-453 / 0	0.0	0.0	0.05 (1)	7.81
G- F	0 / 0	-18.5	-18.5	0.09 (4)	10.00
F- E	0 / 0	-18.5	-18.5	0.09 (4)	10.00

WEBS

MEMB. FR-TO	MAX. FACTORED FORCE (LBS)	MAX CSI (LC)
F- C	-96 / 13	0.03 (1)
F- D	0 / 140	0.03 (1)
B- F	0 / 148	0.03 (1)

DESIGN CRITERIA

SPECIFIED LOADS:

TOP CH.	LL	=	21.0	PSF
	DL	=	6.0	PSF
BOT CH.	LL	=	0.0	PSF
	DL	=	7.4	PSF
TOTAL LOAD		=	34.4	PSF

SPACING = 24.0 IN. C/C

LOADING IN FLAT SECTION BASED ON A SLOPE OF 2.00/12 MINIMUM

THIS TRUSS IS DESIGNED FOR RESIDENTIAL OR SMALL BUILDING REQUIREMENTS OF PART 9, NBCC 2015

THIS DESIGN COMPLIES WITH:
- PART 9 OF BCBC 2018 , ABC 2019
- PART 9 OF OBC 2012 (2019 AMENDMENT)
- CSA 086-14
- TPIC 2014

DESIGN ASSUMPTIONS
-OVERHANG NOT TO BE ALTERED OR CUT OFF.

(55 % OF 23.0 P.S.F. G.S.L. PLUS 8.4 P.S.F. RAIN LOAD) EQUALS 21.0 P.S.F. SPECIFIED ROOF LIVE LOAD

ALLOWABLE DEFL.(LL)= L/360 (0.23")
CALCULATED VERT. DEFL.(LL) = L/ 999 (0.00")
ALLOWABLE DEFL.(TL)= L/360 (0.23")
CALCULATED VERT. DEFL.(TL) = L/ 999 (0.02")

CSI: TC=0.33/1.00 (C-D:1) , BC=0.09/1.00 (F-G:4) , WB=0.03/1.00 (B-F:1) , SSI=0.15/1.00 (C-D:1)

DOL LUMBER=1.00 NAIL=1.00 LS BEND=1.10 COMP=1.10 SHEAR=1.10 TENS= 1.10

COMPANION LIVE LOAD FACTOR = 1.00

TRUSS PLATE MANUFACTURER IS NOT RESPONSIBLE FOR QUALITY CONTROL IN THE TRUSS MANUFACTURING PLANT .

NAIL VALUES

PLATE	GRIP(DRY) (PSI) MAX	MIN	SHEAR (PLI) MAX	MIN	SECTION (PLI) MAX	MIN
MT20	650	371	1747	788	1987	1873

PLATE PLACEMENT TOL. = 0.250 inches

PLATE ROTATION TOL. = 5.0 Deg.

JSI GRIP= 0.27 (D) (INPUT = 0.90)
JSI METAL= 0.11 (B) (INPUT = 1.00)

JOB NAME	TRUSS NAME	QUANTITY	PLY	JOB DESC.		DRWG NO.
336335	H162		1	TRUSS DESC.	JT 45147	E21104172

Alpa Roof Truss, Maple

Version 8.420 S Jan 21 2021 MiTek Industries, Inc. Thu Oct 14 08:53:06 2021 Page 1

ID:hd511hZTz_bdeQoS817GKByhVxV-dhHiqr1vjmTHfEOK7kl4Te0lSkSjZS8roKKhfJyTZHB

Scale = 1:41.0

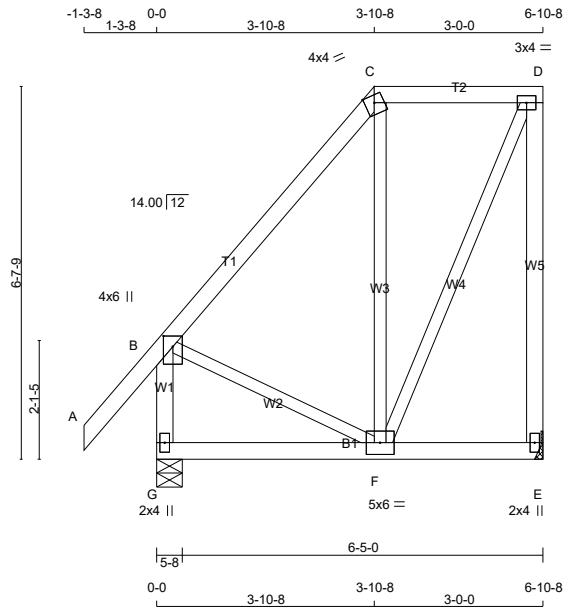

TOTAL WEIGHT = 43 lb

[M][F]

LUMBER

N. L. G. A. RULES

CHORDS	SIZE		LUMBER	DESCR.
A - C	2x4	DRY	No.2	SPF
C - D	2x4	DRY	No.2	SPF
E - D	2x4	DRY	No.2	SPF
G - B	2x4	DRY	No.2	SPF
G - E	2x4	DRY	No.2	SPF
ALL WEBS EXCEPT	2x3	DRY	No.2	SPF

DRY: SEASONED LUMBER.

PLATES (table is in inches)

JT	TYPE	PLATES	W	LEN	Y	X
B	TMVW+p	MT20	4.0	6.0	2.25	2.00
C	TTW-m	MT20	4.0	4.0	Edge	
D	TMVW-t	MT20	3.0	4.0		
E	BMV1+p	MT20	2.0	4.0		
F	BMWWW-t	MT20	5.0	6.0		
G	BMV1+p	MT20	2.0	4.0		

Edge - INDICATES REFERENCE CORNER OF PLATE TOUCHES EDGE OF CHORD.

LATERAL BRACE(S) SHOWN SHALL BE 2X4 SPF#2

DIMENSIONS, SUPPORTS AND LOADINGS SPECIFIED BY FABRICATOR TO BE VERIFIED BY BUILDING DESIGNER

BEARINGS

JT	FACTORED GROSS REACTION VERT	HORZ	MAXIMUM FACTORED GROSS REACTION DOWN	HORZ	UPLIFT	INPUT BRG IN-SX	REQRD BRG IN-SX
E	332	0	332	0	0	MECHANICAL	
G	441	0	441	0	0	5-8	1-8

A SUITABLE HANGER/MECHANICAL CONNECTION IS REQUIRED AT JOINT E. MINIMUM BEARING LENGTH AT JOINT E = 1-8.

UNFACTORED REACTIONS

JT	1ST LCASE COMBINED	MAX./MIN. COMPONENT REACTIONS SNOW	LIVE	PERM.LIVE	WIND	DEAD	SOIL
E	236	144 / 0	0 / 0	0 / 0	0 / 0	92 / 0	0 / 0
G	312	203 / 0	0 / 0	0 / 0	0 / 0	109 / 0	0 / 0

BEARING MATERIAL TO BE SPF NO.2 OR BETTER AT JOINT(S) G

BRACING

TOP CHORD TO BE SHEATHED OR MAX. PURLIN SPACING = 6.25 FT.
MAX. UNBRACED BOTTOM CHORD LENGTH = 10.00 FT OR RIGID CEILING DIRECTLY APPLIED.

ALL PITCH BREAKS AND PERIMETER CORNER JOINTS MUST BE LATERALLY RESTRAINED.

LOADING

TOTAL LOAD CASES: (4)

CHORDS

MEMB. FR-TO	MAX. FACTORED FORCE (LBS)	FACTORED VERT. LOAD LC1 (PLF) FROM	TO	MAX CSI (LC)	MAX. UNBRAC LENGTH
A- B	0 / 42	-78.0	-78.0	0.11 (1)	10.00
B- C	-143 / 0	-78.0	-78.0	0.15 (1)	6.25
C- D	-90 / 0	-78.0	-78.0	0.09 (1)	6.25
E- D	-313 / 0	0.0	0.0	0.29 (1)	7.81
G- B	-410 / 0	0.0	0.0	0.05 (1)	7.81
G- F	0 / 0	-18.5	-18.5	0.06 (4)	10.00
F- E	0 / 0	-18.5	-18.5	0.06 (4)	10.00

WEBS

MEMB. FR-TO	MAX. FACTORED FORCE (LBS)	MAX CSI (LC)
F- C	-160 / 0	0.12 (1)
F- D	0 / 217	0.05 (1)
B- F	0 / 101	0.02 (1)

DESIGN CRITERIA

SPECIFIED LOADS:

TOP CH.	LL	=	21.0	PSF
	DL	=	6.0	PSF
BOT CH.	LL	=	0.0	PSF
	DL	=	7.4	PSF
TOTAL LOAD		=	34.4	PSF

SPACING = 24.0 IN. C/C

LOADING IN FLAT SECTION BASED ON A SLOPE OF 2.00/12 MINIMUM

THIS TRUSS IS DESIGNED FOR RESIDENTIAL OR SMALL BUILDING REQUIREMENTS OF PART 9, NBCC 2015

THIS DESIGN COMPLIES WITH:
- PART 9 OF BCBC 2018 , ABC 2019
- PART 9 OF OBC 2012 (2019 AMENDMENT)
- CSA 086-14
- TPIC 2014

(55 % OF 23.0 P.S.F. G.S.L. PLUS 8.4 P.S.F. RAIN LOAD) EQUALS 21.0 P.S.F. SPECIFIED ROOF LIVE LOAD

ALLOWABLE DEFL.(LL)= L/360 (0.23")
CALCULATED VERT. DEFL.(LL) = L/ 999 (0.00")
ALLOWABLE DEFL.(TL)= L/360 (0.23")
CALCULATED VERT. DEFL.(TL) = L/ 999 (0.01")

CSI: TC=0.29/1.00 (D-E:1) , BC=0.06/1.00 (F-G:4) , WB=0.12/1.00 (C-F:1) , SSI=0.09/1.00 (C-D:1)

DOL LUMBER=1.00 NAIL=1.00 LS BEND=1.10 COMP=1.10 SHEAR=1.10 TENS= 1.10

COMPANION LIVE LOAD FACTOR = 1.00

TRUSS PLATE MANUFACTURER IS NOT RESPONSIBLE FOR QUALITY CONTROL IN THE TRUSS MANUFACTURING PLANT .

NAIL VALUES

PLATE	GRIP(DRY) (PSI) MAX	MIN	SHEAR (PLI) MAX	MIN	SECTION (PLI) MAX	MIN
MT20	650	371	1747	788	1987	1873

PLATE PLACEMENT TOL. = 0.250 inches

PLATE ROTATION TOL. = 5.0 Deg.

JSI GRIP= 0.47 (D) (INPUT = 0.90)
JSI METAL= 0.11 (B) (INPUT = 1.00)

JOB NAME	TRUSS NAME	QUANTITY	PLY	JOB DESC.		DRWG NO.
336335	H163		1	TRUSS DESC.	JT 45147	E21104173

Alpa Roof Truss, Maple

Version 8.420 S Jan 21 2021 MiTek Industries, Inc. Thu Oct 14 08:53:07 2021 Page 1

ID:hd511hZTz bdeQoS817GKByhVxV-5ur42B2XU4b8HOzWhSGJ0rZvJ8kxIvF 0 3FBIyTZHA

Scale = 1:54.2

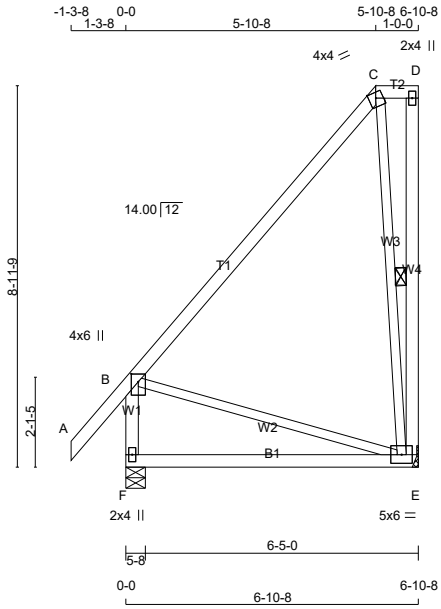

TOTAL WEIGHT = 45 lb

LUMBER

N. L. G. A. RULES

CHORDS	SIZE		LUMBER	DESCR.
A - C	2x4	DRY	No.2	SPF
C - D	2x4	DRY	No.2	SPF
E - D	2x4	DRY	No.2	SPF
F - B	2x4	DRY	No.2	SPF
F - E	2x4	DRY	No.2	SPF
ALL WEBS EXCEPT	2x3	DRY	No.2	SPF

DRY: SEASONED LUMBER.

PLATES (table is in inches)

JT	TYPE	PLATES	W	LEN	Y	X
B	TMVW+p	MT20	4.0	6.0	2.25	2.00
C	TTW-m	MT20	4.0	4.0	Edge	
D	TMV+p	MT20	2.0	4.0		
E	BMVWW1-t	MT20	5.0	6.0		
F	BMV1+p	MT20	2.0	4.0		

Edge - INDICATES REFERENCE CORNER OF PLATE TOUCHES EDGE OF CHORD.

LATERAL BRACE(S) SHOWN SHALL BE 2X4 SPF#2

DIMENSIONS, SUPPORTS AND LOADINGS SPECIFIED BY FABRICATOR TO BE VERIFIED BY BUILDING DESIGNER

BEARINGS

JT	FACTORED GROSS REACTION VERT	HORZ	MAXIMUM FACTORED GROSS REACTION DOWN	HORZ	UPLIFT	INPUT BRG IN-SX	REQRD BRG IN-SX
E	332	0	332	0	0	MECHANICAL	
F	441	0	441	0	0	5-8	1-8

A SUITABLE HANGER/MECHANICAL CONNECTION IS REQUIRED AT JOINT E. MINIMUM BEARING LENGTH AT JOINT E = 1-8.

UNFACTORED REACTIONS

JT	1ST LCASE COMBINED	MAX./MIN. COMPONENT REACTIONS SNOW	LIVE	PERM.LIVE	WIND	DEAD	SOIL
E	236	144 / 0	0 / 0	0 / 0	0 / 0	92 / 0	0 / 0
F	312	203 / 0	0 / 0	0 / 0	0 / 0	109 / 0	0 / 0

BEARING MATERIAL TO BE SPF NO.2 OR BETTER AT JOINT(S) F

BRACING

TOP CHORD TO BE SHEATHED OR MAX. PURLIN SPACING = 6.25 FT.
MAX. UNBRACED BOTTOM CHORD LENGTH = 10.00 FT OR RIGID CEILING DIRECTLY APPLIED.

ALL PITCH BREAKS AND PERIMETER CORNER JOINTS MUST BE LATERALLY RESTRAINED.

1 LATERAL BRACE(S) AT 1/ 2 LENGTH OF D-E, C-E.

END VERTICAL(S) MUST BE SHEATHED OR HAVE BRACES AS INDICATED IN THE MAX. UNBRACED LENGTH COLUMN OF THE TABLE BELOW

LOADING

TOTAL LOAD CASES: (4)

CHORDS MEMB. FR-TO	MAX. FACTORED FORCE (LBS)	FACTORED VERT. LOAD (PLF) FROM	TO	LC1 CSI (LC)	MAX UNBRAC LENGTH	WEBS MEMB. FR-TO	MAX. FACTORED FORCE (LBS)	MAX CSI (LC)
A- B	0 / 42	-78.0	-78.0	0.11 (1)	10.00	C- E	-238 / 0	0.12 (1)
B- C	-42 / 0	-78.0	-78.0	0.34 (1)	6.25	B- E	0 / 28	0.01 (1)
C- D	0 / 0	-78.0	-78.0	0.01 (1)	10.00			
E- D	-39 / 0	0.0	0.0	0.01 (1)	6.25			
F- B	-377 / 0	0.0	0.0	0.04 (1)	7.81			
F- E	0 / 0	-18.5	-18.5	0.26 (4)	10.00			

[M][F]

DESIGN CRITERIA

SPECIFIED LOADS:

TOP	CH.	LL	=	21.0	PSF
		DL	=	6.0	PSF
BOT	CH.	LL	=	0.0	PSF
		DL	=	7.4	PSF
TOTAL	LOAD		=	34.4	PSF

SPACING = 24.0 IN. C/C

LOADING IN FLAT SECTION BASED ON A SLOPE OF 2.00/12 MINIMUM

THIS TRUSS IS DESIGNED FOR RESIDENTIAL OR SMALL BUILDING REQUIREMENTS OF PART 9, NBCC 2015

THIS DESIGN COMPLIES WITH:
- PART 9 OF BCBC 2018 , ABC 2019
- PART 9 OF OBC 2012 (2019 AMENDMENT)
- CSA 086-14
- TPIC 2014

(55 % OF 23.0 P.S.F. G.S.L. PLUS 8.4 P.S.F. RAIN LOAD) EQUALS 21.0 P.S.F. SPECIFIED ROOF LIVE LOAD

ALLOWABLE DEFL.(TL)= L/360 (0.23")
CALCULATED VERT. DEFL.(TL) = L/ 819 (0.10")

CSI: TC=0.34/1.00 (B-C:1) , BC=0.26/1.00 (E-F:4) , WB=0.12/1.00 (C-E:1) , SSI=0.12/1.00 (B-C:1)

DOL LUMBER=1.00 NAIL=1.00 LS BEND=1.10 COMP=1.10 SHEAR=1.10 TENS= 1.10

COMPANION LIVE LOAD FACTOR = 1.00

TRUSS PLATE MANUFACTURER IS NOT RESPONSIBLE FOR QUALITY CONTROL IN THE TRUSS MANUFACTURING PLANT .

NAIL VALUES

PLATE	GRIP(DRY) (PSI) MAX	MIN	SHEAR (PLI) MAX	MIN	SECTION (PLI) MAX	MIN
MT20	650	371	1747	788	1987	1873

PLATE PLACEMENT TOL. = 0.250 inches

PLATE ROTATION TOL. = 5.0 Deg.

JSI GRIP= 0.21 (B) (INPUT = 0.90)
JSI METAL= 0.13 (C) (INPUT = 1.00)

JOB NAME	TRUSS NAME	QUANTITY	PLY	JOB DESC.		DRWG NO.
336335	H200		1	TRUSS DESC.	JT 45147	E21104174

Alpa Roof Truss, Maple

Version 8.420 S Jan 21 2021 MiTek Industries, Inc. Thu Oct 14 08:53:09 2021 Page 1

ID:hd511hZTz bdeQoS817GKByhVxV-2GzrSt3n0hrsWi7vosIn5GeGTxRPmpqHUIYMGeyTZH8

Scale = 1:58.9

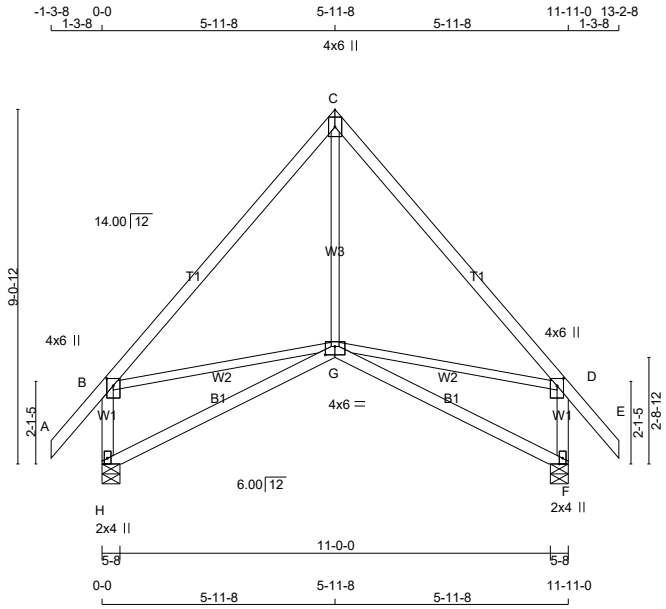

TOTAL WEIGHT = 60 lb

[M][F]

LUMBER

N. L. G. A. RULES

CHORDS	SIZE		LUMBER	DESCR.
A - C	2x4	DRY	1650F 1.5E	SPF
C - E	2x4	DRY	1650F 1.5E	SPF
H - B	2x4	DRY	No.2	SPF
F - D	2x4	DRY	No.2	SPF
H - G	2x4	DRY	No.2	SPF
G - F	2x4	DRY	No.2	SPF
ALL WEBS EXCEPT	2x3	DRY	No.2	SPF

DRY: SEASONED LUMBER.

PLATES (table is in inches)

JT	TYPE	PLATES	W	LEN	Y	X
B	TMVW+p	MT20	4.0	6.0	2.25	2.00
C	TTW+p	MT20	4.0	6.0		
D	TMVW+p	MT20	4.0	6.0	2.25	2.00
F	BMV1+p	MT20	2.0	4.0	Edge	
G	BBWWW-p	MT20	4.0	6.0	2.50	3.00
H	BMV1+p	MT20	2.0	4.0	Edge	

Edge - INDICATES REFERENCE CORNER OF PLATE TOUCHES EDGE OF CHORD.

LATERAL BRACE(S) SHOWN SHALL BE 2X4 SPF#2

DIMENSIONS, SUPPORTS AND LOADINGS SPECIFIED BY FABRICATOR TO BE VERIFIED BY BUILDING DESIGNER

BEARINGS

JT	FACTORED GROSS REACTION VERT	HORZ	MAXIMUM FACTORED GROSS REACTION DOWN	HORZ	UPLIFT	INPUT BRG IN-SX	REQRD BRG IN-SX
H	684	0	684	0	0	5-8	1-8
F	684	0	684	0	0	5-8	1-8

UNFACTORED REACTIONS

JT	1ST LCASE COMBINED	MAX./MIN. COMPONENT REACTIONS SNOW	LIVE	PERM.LIVE	WIND	DEAD	SOIL
H	486	309 / 0	0 / 0	0 / 0	0 / 0	177 / 0	0 / 0
F	486	309 / 0	0 / 0	0 / 0	0 / 0	177 / 0	0 / 0

BEARING MATERIAL TO BE SPF NO.2 OR BETTER AT JOINT(S) H, F

BRACING

TOP CHORD TO BE SHEATHED OR MAX. PURLIN SPACING = 6.25 FT.
MAX. UNBRACED BOTTOM CHORD LENGTH = 10.00 FT OR RIGID CEILING DIRECTLY APPLIED.

ALL PITCH BREAKS AND PERIMETER CORNER JOINTS MUST BE LATERALLY RESTRAINED.

LOADING

TOTAL LOAD CASES: (4)

CHORDS

MEMB. FR-TO	MAX. FACTORED FORCE (LBS)	FACTORED VERT. LOAD (PLF) FROM	TO	LC1 CSI (LC)	MAX. UNBRAC LENGTH
A- B	0 / 42	-78.0	-78.0	0.09 (1)	10.00
B- C	-443 / 0	-78.0	-78.0	0.30 (1)	6.25
C- D	-443 / 0	-78.0	-78.0	0.30 (1)	6.25
D- E	0 / 42	-78.0	-78.0	0.09 (1)	10.00
H- B	-629 / 0	0.0	0.0	0.08 (1)	7.81
F- D	-629 / 0	0.0	0.0	0.08 (1)	7.81
H- G	0 / 0	-18.5	-18.5	0.19 (4)	10.00
G- F	0 / 0	-18.5	-18.5	0.19 (4)	10.00

WEBS

MEMB. FR-TO	MAX. FACTORED FORCE (LBS)	MAX CSI (LC)
G- C	0 / 208	0.06 (4)
B- G	0 / 292	0.07 (1)
G- D	0 / 292	0.07 (1)

DESIGN CRITERIA

SPECIFIED LOADS:

TOP	CH.	LL	=	21.0	PSF
		DL	=	6.0	PSF
BOT	CH.	LL	=	0.0	PSF
		DL	=	7.4	PSF
TOTAL	LOAD		=	34.4	PSF

SPACING = 24.0 IN. C/C

THIS TRUSS IS DESIGNED FOR RESIDENTIAL OR SMALL BUILDING REQUIREMENTS OF PART 9, NBCC 2015

THIS DESIGN COMPLIES WITH:
- PART 9 OF BCBC 2018 , ABC 2019
- PART 9 OF OBC 2012 (2019 AMENDMENT)
- CSA 086-14
- TPIC 2014

(55 % OF 23.0 P.S.F. G.S.L. PLUS 8.4 P.S.F. RAIN LOAD) EQUALS 21.0 P.S.F. SPECIFIED ROOF LIVE LOAD

ALLOWABLE DEFL.(LL)= L/360 (0.40")
CALCULATED VERT. DEFL.(LL) = L/ 999 (0.01")
ALLOWABLE DEFL.(TL)= L/360 (0.40")
CALCULATED VERT. DEFL.(TL) = L/ 999 (0.07")

CSI: TC=0.30/1.00 (C-D:1) , BC=0.19/1.00 (G-H:4) , WB=0.07/1.00 (D-G:1) , SSI=0.12/1.00 (B-C:1)

DOL LUMBER=1.00 NAIL=1.00 LS BEND=1.10 COMP=1.10 SHEAR=1.10 TENS= 1.10

COMPANION LIVE LOAD FACTOR = 1.00

TRUSS PLATE MANUFACTURER IS NOT RESPONSIBLE FOR QUALITY CONTROL IN THE TRUSS MANUFACTURING PLANT .

NAIL VALUES

PLATE	GRIP(DRY) (PSI) MAX	MIN	SHEAR (PLI) MAX	MIN	SECTION (PLI) MAX	MIN
MT20	650	371	1747	788	1987	1873

PLATE PLACEMENT TOL. = 0.250 inches

PLATE ROTATION TOL. = 5.0 Deg.

JSI GRIP= 0.48 (G) (INPUT = 0.90)
JSI METAL= 0.26 (H) (INPUT = 1.00)

JOB NAME	TRUSS NAME	QUANTITY	PLY	JOB DESC.		DRWG NO.
336335	H206		1	TRUSS DESC.	JT 45147	E21104175

Alpa Roof Truss, Maple

Version 8.420 S Jan 21 2021 MiTek Industries, Inc. Thu Oct 14 08:53:10 2021 Page 1

ID:hd511hZTz_bdeQoS817GKByhVxV-WTXDgD4Qn?zj8rh5Maq0eUBLsLmAVCTQjyIvo4yTZH7

Scale = 1:54.0

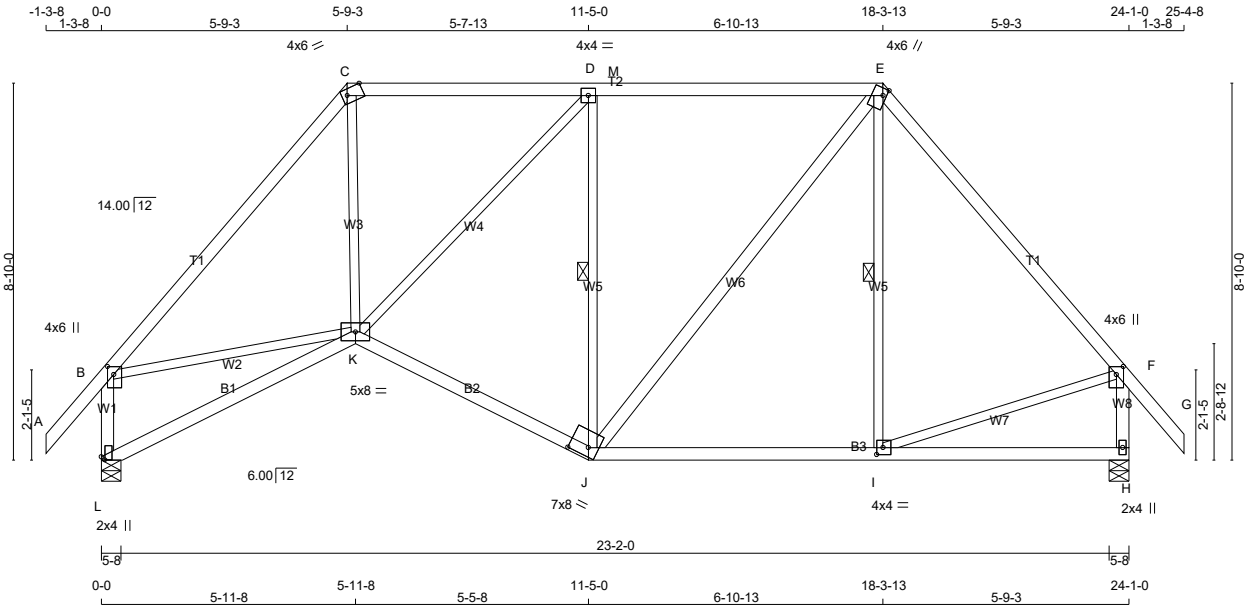

TOTAL WEIGHT = 119 lb

[M]

LUMBER

N. L. G. A. RULES

CHORDS	SIZE		LUMBER	DESCR.
A - C	2x4	DRY	No.2	SPF
C - E	2x4	DRY	No.2	SPF
E - G	2x4	DRY	No.2	SPF
L - B	2x4	DRY	No.2	SPF
H - F	2x4	DRY	No.2	SPF
L - K	2x4	DRY	No.2	SPF
K - J	2x4	DRY	No.2	SPF
J - H	2x4	DRY	No.2	SPF
ALL WEBS	2x3	DRY	No.2	SPF
EXCEPT				
J - E	2x4	DRY	No.2	SPF

DRY: SEASONED LUMBER.

PLATES (table is in inches)

JT	TYPE	PLATES	W	LEN	Y	X
B	TMVW+p	MT20	4.0	6.0	2.25	1.75
C	TTW-m	MT20	4.0	6.0	Edge	4.50
D	TMWW-t	MT20	4.0	4.0		
E	TTWW+m	MT20	4.0	6.0	2.00	1.00
F	TMVW+p	MT20	4.0	6.0	2.25	2.00
H	BMV1+p	MT20	2.0	4.0		
I	BMWW-t	MT20	4.0	4.0	2.00	1.75
J	BBWW-h	MT20	7.0	8.0	2.50	5.25
K	BBWWW-p	MT20	5.0	8.0		
L	BMV1+p	MT20	2.0	4.0	1.00	1.00

Edge - INDICATES REFERENCE CORNER OF PLATE TOUCHES EDGE OF CHORD.

LATERAL BRACE(S) SHOWN SHALL BE 2X4 SPF#2

DIMENSIONS, SUPPORTS AND LOADINGS SPECIFIED BY FABRICATOR TO BE VERIFIED BY BUILDING DESIGNER

BEARINGS

JT	FACTORED GROSS REACTION VERT	HORZ	MAXIMUM FACTORED GROSS REACTION DOWN	HORZ	UPLIFT	INPUT BRG IN-SX	REQRD BRG IN-SX
L	1318	0	1318	0	0	5-8	1-8
H	1318	0	1318	0	0	5-8	1-8

UNFACTORED REACTIONS

JT	1ST LCASE COMBINED	MAX./MIN. COMPONENT REACTIONS SNOW	LIVE	PERM.LIVE	WIND	DEAD	SOIL
L	942	564 / 0	0 / 0	0 / 0	0 / 0	377 / 0	0 / 0
H	942	564 / 0	0 / 0	0 / 0	0 / 0	377 / 0	0 / 0

BEARING MATERIAL TO BE SPF NO.2 OR BETTER AT JOINT(S) L, H

BRACING

FOR SECTION C-E, MAX. PURLIN SPACING = 2.00 FT.
FOR OTHER SECTIONS, TOP CHORD TO BE SHEATHED OR MAX. PURLIN SPACING = 4.79 FT.
MAX. UNBRACED BOTTOM CHORD LENGTH = 10.00 FT OR RIGID CEILING DIRECTLY APPLIED.

ALL PITCH BREAKS AND PERIMETER CORNER JOINTS MUST BE LATERALLY RESTRAINED.

1 LATERAL BRACE(S) AT 1/ 2 LENGTH OF D-J, E-I.

END VERTICAL(S) MUST BE SHEATHED OR HAVE BRACES AS INDICATED IN THE MAX. UNBRACED LENGTH COLUMN OF THE TABLE BELOW

LOADING

TOTAL LOAD CASES: (4)

CHORDS

MEMB. FR-TO	MAX. FACTORED FORCE (LBS)	FACTORED VERT. LOAD LC1 (PLF) FROM	TO	MAX CSI (LC)	MAX. UNBRAC LENGTH
A- B	0 / 42	-78.0	-78.0	0.11 (1)	10.00
B- C	-1426 / 0	-78.0	-78.0	0.64 (1)	4.79
C- D	-947 / 0	-85.5	-85.5	0.62 (1)	2.00
D- M	-920 / 0	-85.5	-85.5	0.64 (1)	2.00
M- E	-920 / 0	-85.5	-85.5	0.64 (1)	2.00
E- F	-991 / 0	-78.0	-78.0	0.56 (1)	5.55
F- G	0 / 42	-78.0	-78.0	0.11 (1)	10.00
L- B	-1263 / 0	0.0	0.0	0.16 (1)	7.16
H- F	-1279 / 0	0.0	0.0	0.15 (1)	7.13
L- K	0 / 0	-18.5	-18.5	0.19 (4)	10.00
K- J	0 / 1020	-18.5	-18.5	0.27 (4)	10.00
J- I	0 / 642	-18.5	-18.5	0.29 (4)	10.00
I- H	0 / 0	-18.5	-18.5	0.22 (4)	10.00

WEBS

MEMB. FR-TO	MAX. FACTORED FORCE (LBS)	MAX CSI (LC)
C- K	0 / 682	0.15 (1)
K- D	0 / 52	0.01 (1)
J- D	-698 / 0	0.35 (1)
J- E	0 / 440	0.07 (1)
I- E	-45 / 80	0.03 (4)
B- K	0 / 938	0.21 (1)
I- F	0 / 671	0.15 (1)

DESIGN CRITERIA

SPECIFIED LOADS:

TOP CH.	LL	=	21.0	PSF
	DL	=	6.0	PSF
BOT CH.	LL	=	0.0	PSF
	DL	=	7.4	PSF
TOTAL LOAD		=	34.4	PSF

SPACING = 24.0 IN. C/C

LOADING IN FLAT SECTION BASED ON PIGGYBACK TRUSS WITH SLOPES OF 6.00/12 AND -6.00/12 AND RESPECTIVE HEEL HEIGHTS OF 0-0 AND 0-0 AND AN ADDITIONAL DEAD LOAD OF 3.0 P.S.F.

THIS TRUSS IS DESIGNED FOR RESIDENTIAL OR SMALL BUILDING REQUIREMENTS OF PART 9, NBCC 2015

THIS DESIGN COMPLIES WITH:
- PART 9 OF BCBC 2018 , ABC 2019
- PART 9 OF OBC 2012 (2019 AMENDMENT)
- CSA 086-14
- TPIC 2014

(55 % OF 23.0 P.S.F. G.S.L. PLUS 8.4 P.S.F. RAIN LOAD) EQUALS 21.0 P.S.F. SPECIFIED ROOF LIVE LOAD

ALLOWABLE DEFL.(LL)= L/360 (0.80")
CALCULATED VERT. DEFL.(LL) = L/ 999 (0.03")
ALLOWABLE DEFL.(TL)= L/360 (0.80")
CALCULATED VERT. DEFL.(TL) = L/ 999 (0.11")

CSI: TC=0.64/1.00 (B-C:1) , BC=0.29/1.00 (I-J:4) , WB=0.35/1.00 (D-J:1) , SSI=0.28/1.00 (D-E:1)

DOL LUMBER=1.00 NAIL=1.00 LS BEND=1.10 COMP=1.10 SHEAR=1.10 TENS= 1.10

COMPANION LIVE LOAD FACTOR = 1.00

TRUSS PLATE MANUFACTURER IS NOT RESPONSIBLE FOR QUALITY CONTROL IN THE TRUSS MANUFACTURING PLANT .

NAIL VALUES

PLATE	GRIP(DRY) (PSI) MAX	MIN	SHEAR (PLI) MAX	MIN	SECTION (PLI) MAX	MIN
MT20	650	371	1747	788	1987	1873

PLATE PLACEMENT TOL. = 0.250 inches

PLATE ROTATION TOL. = 5.0 Deg.

JSI GRIP= 0.80 (B) (INPUT = 0.90)
JSI METAL= 0.53 (B) (INPUT = 1.00)

JOB NAME	TRUSS NAME	QUANTITY	PLY	JOB DESC.		DRWG NO.
336335	H207		1	TRUSS DESC.	JT 45147	E21104176

Alpa Roof Truss, Maple

Version 8.420 S Jan 21 2021 MiTek Industries, Inc. Thu Oct 14 08:53:12 2021 Page 1

ID:hd511hZTz_bdeQoS817GKByhVxV-Srez5u6gJcDRN9rTU?sUjvGiq9SYz6HjAFn0szyTZH5

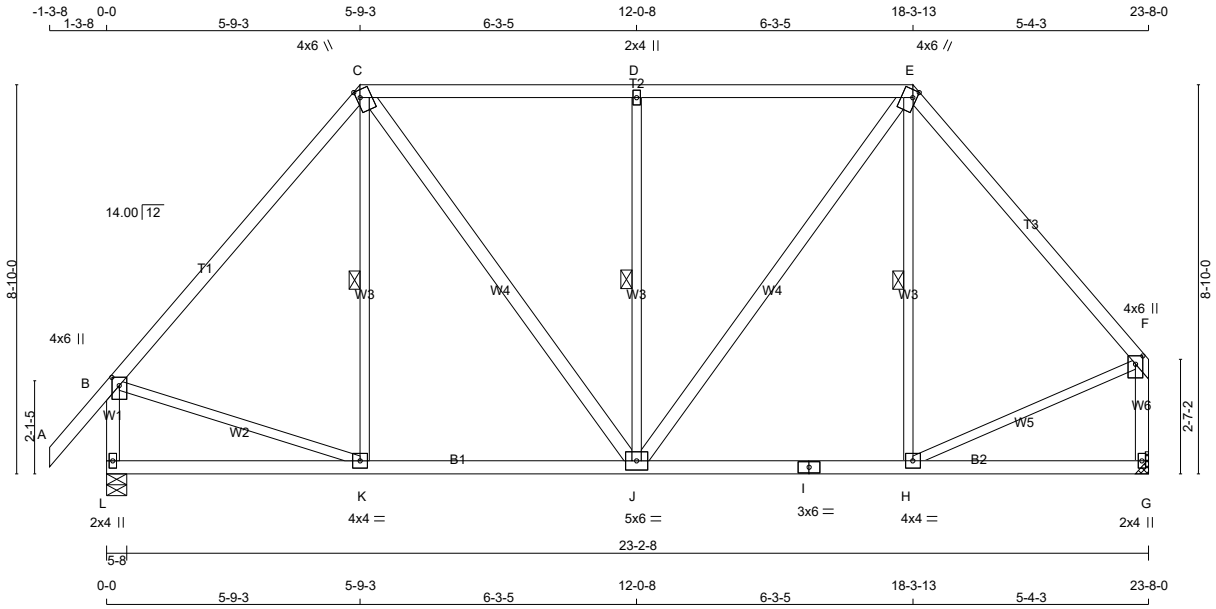

TOTAL WEIGHT = 2 X 121 = 242 lb

[M]

LUMBER

N. L. G. A. RULES

CHORDS	SIZE		LUMBER	DESCR.
A - C	2x4	DRY	No.2	SPF
C - E	2x4	DRY	No.2	SPF
E - F	2x4	DRY	No.2	SPF
L - B	2x4	DRY	No.2	SPF
G - F	2x4	DRY	No.2	SPF
L - I	2x4	DRY	No.2	SPF
I - G	2x4	DRY	No.2	SPF
ALL WEBS	2x3	DRY	No.2	SPF
EXCEPT				
C - J	2x4	DRY	No.2	SPF
J - E	2x4	DRY	No.2	SPF

DRY: SEASONED LUMBER.

PLATES (table is in inches)

JT	TYPE	PLATES	W	LEN	Y	X
B	TMVW+p	MT20	4.0	6.0	2.25	2.00
C	TTWW+m	MT20	4.0	6.0	2.00	1.00
D	TMW+w	MT20	2.0	4.0		
E	TTWW+m	MT20	4.0	6.0	2.00	1.00
F	TMVW+p	MT20	4.0	6.0	2.25	2.00
G	BMV1+p	MT20	2.0	4.0		
H	BMWW-t	MT20	4.0	4.0		
I	BS-t	MT20	3.0	6.0		
J	BMWWW-t	MT20	5.0	6.0		
K	BMWW-t	MT20	4.0	4.0		
L	BMV1+p	MT20	2.0	4.0		

LATERAL BRACE(S) SHOWN SHALL BE 2X4 SPF#2

DIMENSIONS, SUPPORTS AND LOADINGS SPECIFIED BY FABRICATOR TO BE VERIFIED BY BUILDING DESIGNER

BEARINGS

JT	FACTORED GROSS REACTION VERT	HORZ	MAXIMUM FACTORED GROSS REACTION DOWN	HORZ	UPLIFT	INPUT BRG IN-SX	REQRD BRG IN-SX
L	1297	0	1297	0	0	5-8	1-8
G	1189	0	1189	0	0	MECHANICAL	

A SUITABLE HANGER/MECHANICAL CONNECTION IS REQUIRED AT JOINT G. MINIMUM BEARING LENGTH AT JOINT G = 1-8.

UNFACTORED REACTIONS

JT	1ST LCASE COMBINED	MAX./MIN. COMPONENT REACTIONS SNOW	LIVE	PERM.LIVE	WIND	DEAD	SOIL
L	927	556 / 0	0 / 0	0 / 0	0 / 0	371 / 0	0 / 0
G	852	497 / 0	0 / 0	0 / 0	0 / 0	355 / 0	0 / 0

BEARING MATERIAL TO BE SPF NO.2 OR BETTER AT JOINT(S) L

BRACING

FOR SECTION C-E, MAX. PURLIN SPACING = 2.00 FT.
FOR OTHER SECTIONS, TOP CHORD TO BE SHEATHED OR MAX. PURLIN SPACING = 5.60 FT.
MAX. UNBRACED BOTTOM CHORD LENGTH = 10.00 FT OR RIGID CEILING DIRECTLY APPLIED.

ALL PITCH BREAKS AND PERIMETER CORNER JOINTS MUST BE LATERALLY RESTRAINED.

1 LATERAL BRACE(S) AT 1/ 2 LENGTH OF C-K, D-J, E-H.

END VERTICAL(S) MUST BE SHEATHED OR HAVE BRACES AS INDICATED IN THE MAX. UNBRACED LENGTH COLUMN OF THE TABLE BELOW

LOADING

TOTAL LOAD CASES: (4)

CHORDS

MEMB. FR-TO	MAX. FACTORED FORCE (LBS)	FACTORED VERT. LOAD LC1 (PLF) FROM	TO	MAX CSI (LC)	MAX. UNBRAC LENGTH
A- B	0 / 42	-78.0	-78.0	0.11 (1)	10.00
B- C	-965 / 0	-78.0	-78.0	0.55 (1)	5.60
C- D	-892 / 0	-85.5	-85.5	0.61 (1)	2.00
D- E	-892 / 0	-85.5	-85.5	0.61 (1)	2.00
E- F	-918 / 0	-78.0	-78.0	0.46 (1)	5.84
L- B	-1254 / 0	0.0	0.0	0.15 (1)	7.18
G- F	-1151 / 0	0.0	0.0	0.16 (1)	7.42
L- K	0 / 0	-18.5	-18.5	0.16 (4)	10.00
K- J	0 / 625	-18.5	-18.5	0.23 (4)	10.00
J- I	0 / 594	-18.5	-18.5	0.21 (4)	10.00
I- H	0 / 594	-18.5	-18.5	0.21 (4)	10.00
H- G	0 / 0	-18.5	-18.5	0.15 (4)	10.00

WEBS

MEMB. FR-TO	MAX. FACTORED FORCE (LBS)	MAX CSI (LC)
K- C	-60 / 60	0.03 (1)
C- J	0 / 449	0.07 (1)
J- D	-657 / 0	0.33 (1)
J- E	0 / 502	0.08 (1)
H- E	-122 / 30	0.06 (1)
B- K	0 / 653	0.15 (1)
H- F	0 / 643	0.14 (1)

DESIGN CRITERIA

SPECIFIED LOADS:

TOP	CH.	LL	=	21.0	PSF
		DL	=	6.0	PSF
BOT	CH.	LL	=	0.0	PSF
		DL	=	7.4	PSF
TOTAL	LOAD		=	34.4	PSF

SPACING = 24.0 IN. C/C

LOADING IN FLAT SECTION BASED ON PIGGYBACK TRUSS WITH SLOPES OF 6.00/12 AND -6.00/12 AND RESPECTIVE HEEL HEIGHTS OF 0-0 AND 0-0 AND AN ADDITIONAL DEAD LOAD OF 3.0 P.S.F.

THIS TRUSS IS DESIGNED FOR RESIDENTIAL OR SMALL BUILDING REQUIREMENTS OF PART 9, NBCC 2015

THIS DESIGN COMPLIES WITH:
- PART 9 OF BCBC 2018 , ABC 2019
- PART 9 OF OBC 2012 (2019 AMENDMENT)
- CSA 086-14
- TPIC 2014

(55 % OF 23.0 P.S.F. G.S.L. PLUS 8.4 P.S.F. RAIN LOAD) EQUALS 21.0 P.S.F. SPECIFIED ROOF LIVE LOAD

ALLOWABLE DEFL.(LL)= L/360 (0.79")
CALCULATED VERT. DEFL.(LL) = L/ 999 (0.02")
ALLOWABLE DEFL.(TL)= L/360 (0.79")
CALCULATED VERT. DEFL.(TL) = L/ 999 (0.05")

CSI: TC=0.61/1.00 (D-E:1) , BC=0.23/1.00 (J-K:4) , WB=0.33/1.00 (D-J:1) , SSI=0.26/1.00 (C-D:1)

DOL LUMBER=1.00 NAIL=1.00 LS BEND=1.10 COMP=1.10 SHEAR=1.10 TENS= 1.10

COMPANION LIVE LOAD FACTOR = 1.00

TRUSS PLATE MANUFACTURER IS NOT RESPONSIBLE FOR QUALITY CONTROL IN THE TRUSS MANUFACTURING PLANT .

NAIL VALUES

PLATE	GRIP(DRY) (PSI) MAX	MIN	SHEAR (PLI) MAX	MIN	SECTION (PLI) MAX	MIN
MT20	650	371	1747	788	1987	1873

PLATE PLACEMENT TOL. = 0.250 inches

PLATE ROTATION TOL. = 5.0 Deg.

JSI GRIP= 0.80 (K) (INPUT = 0.90)
JSI METAL= 0.41 (B) (INPUT = 1.00)

JOB NAME	TRUSS NAME	QUANTITY	PLY	JOB DESC.		DRWG NO.
336335	H208G		1	TRUSS DESC.	JT 45147	E21104177

Alpa Roof Truss, Maple

Version 8.420 S Jan 21 2021 MiTek Industries, Inc. Thu Oct 14 08:53:14 2021 Page 1

ID:hd511hZTz_bdeQoS817GKByhVxV-OEmkWa7wrDT8dT?sbQuyoKLA8yBKR5U0dZG7xryTZH3

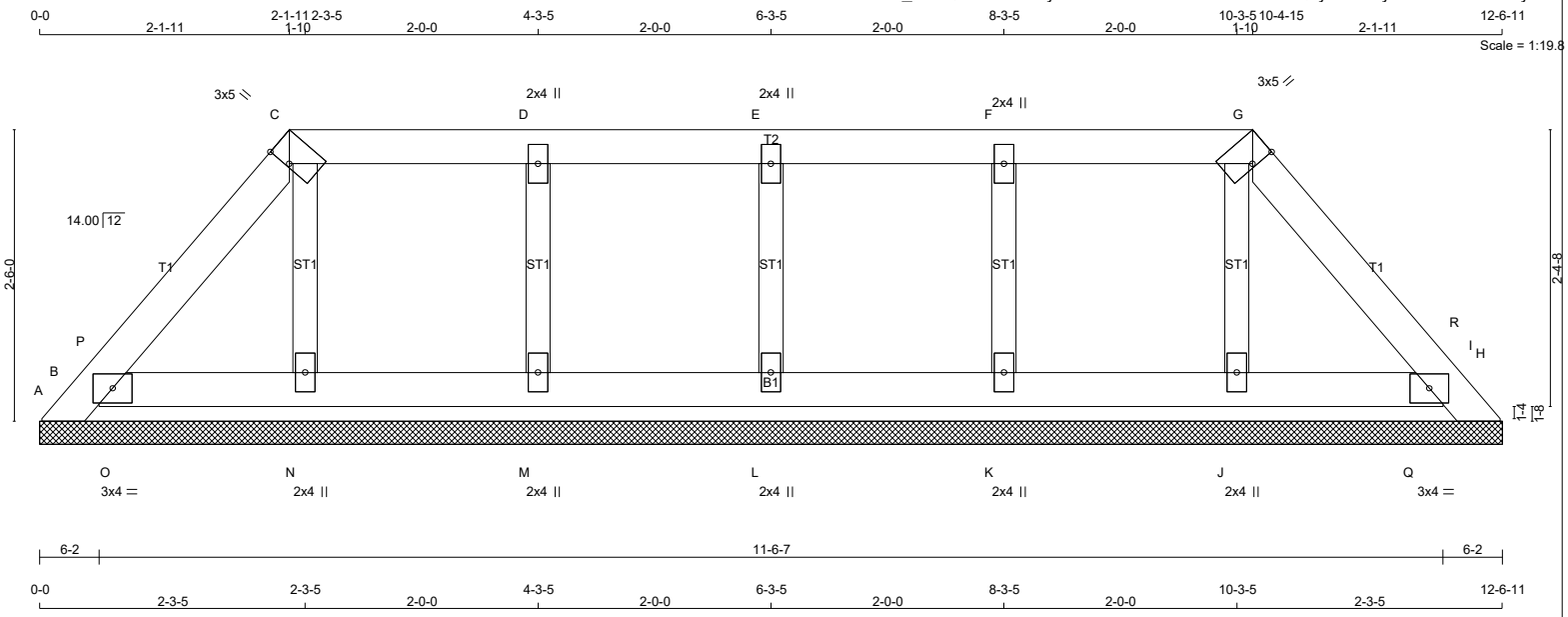

TOTAL WEIGHT = 37 lb [M]

LUMBER

N. L. G. A. RULES

CHORDS	SIZE		LUMBER	DESCR.
A - C	2x4	DRY	No.2	SPF
C - G	2x4	DRY	No.2	SPF
G - I	2x4	DRY	No.2	SPF
B - H	2x4	DRY	No.2	SPF
ALL WEBS	2x3	DRY	No.2	SPF
ALL GABLE WEBS	2x3	DRY	No.2	SPF

DRY: SEASONED LUMBER.

GABLE STUDS SPACED AT 2-0-0 OC.

PLATES (table is in inches)

JT	TYPE	PLATES	W	LEN	Y	X
B	TMB1-I	MT20	3.0	4.0		
C	TTW+h	MT20	3.0	5.0	Edge	0.25
D, E, F						
D	TMW+w	MT20	2.0	4.0		
G	TTW+h	MT20	3.0	5.0	Edge	0.25
H	TMB1-I	MT20	3.0	4.0		
J, K, L, M, N						
J	BMW1+w	MT20	2.0	4.0		

Edge - INDICATES REFERENCE CORNER OF PLATE TOUCHES EDGE OF CHORD.

LATERAL BRACE(S) SHOWN SHALL BE 2X4 SPF#2

DIMENSIONS, SUPPORTS AND LOADINGS SPECIFIED BY FABRICATOR TO BE VERIFIED BY BUILDING DESIGNER

BEARINGS

THIS TRUSS DESIGNED FOR CONTINUOUS BEARINGS.

THIS TRUSS REQUIRES RIGID SHEATHING ON EXPOSED FACE.

BEVELED PLATE OR SHIM REQUIRED TO PROVIDE FULL BEARING SURFACE WITH TRUSS CHORD AT JT(S): L , M , N , K , J

PROVIDE ANCHORAGE AT BEARING JOINT A FOR 150 LBS FACTORED UPLIFT
PROVIDE ANCHORAGE AT BEARING JOINT I FOR 150 LBS FACTORED UPLIFT
BEARING MATERIAL TO BE SPF NO.2 OR BETTER AT JOINT(S)

BRACING

TOP CHORD TO BE SHEATHED OR MAX. PURLIN SPACING = 6.25 FT.
MAX. UNBRACED BOTTOM CHORD LENGTH = 10.00 FT OR RIGID CEILING DIRECTLY APPLIED.

ALL PITCH BREAKS AND PERIMETER CORNER JOINTS MUST BE LATERALLY RESTRAINED.

LOADING

TOTAL LOAD CASES: (4)

CHORDS

MEMB. FR-TO	MAX. FACTORED FORCE (LBS)	FACTORED VERT. LOAD LC1 (PLF) FROM	TO	MAX CSI (LC)	MAX. UNBRAC LENGTH
A- B	0 / 26	-96.5	-96.5	0.02 (1)	10.00
B- P	-62 / 0	-78.0	-78.0	0.02 (1)	6.25
P- C	-42 / 0	-78.0	-78.0	0.02 (1)	6.25
C- D	-17 / 0	-78.0	-78.0	0.05 (1)	6.25
D- E	-17 / 0	-78.0	-78.0	0.05 (1)	6.25
E- F	-17 / 0	-78.0	-78.0	0.05 (1)	6.25
F- G	-17 / 0	-78.0	-78.0	0.05 (1)	6.25
G- R	-42 / 0	-78.0	-78.0	0.02 (1)	6.25
R- H	-62 / 0	-78.0	-78.0	0.02 (1)	6.25
H- I	0 / 26	-96.5	-96.5	0.02 (1)	10.00
B- O	0 / 23	-18.5	-18.5	0.01 (1)	10.00
O- N	0 / 23	-18.5	-18.5	0.02 (4)	10.00
N- M	0 / 17	-18.5	-18.5	0.02 (4)	10.00
M- L	0 / 17	-18.5	-18.5	0.02 (4)	10.00
L- K	0 / 17	-18.5	-18.5	0.02 (4)	10.00
K- J	0 / 17	-18.5	-18.5	0.02 (4)	10.00
J- Q	0 / 23	-18.5	-18.5	0.02 (4)	10.00
Q- H	0 / 23	-18.5	-18.5	0.01 (1)	10.00

WEBS

MEMB. FR-TO	MAX. FACTORED FORCE (LBS)	MAX CSI (LC)
L- E	-142 / 0	0.02 (1)
M- D	-184 / 0	0.03 (1)
N- C	-88 / 0	0.01 (1)
K- F	-184 / 0	0.03 (1)
J- G	-88 / 0	0.01 (1)
O- P	-41 / 8	0.00 (1)
Q- R	-41 / 8	0.00 (1)

DESIGN CRITERIA

SPECIFIED LOADS:

TOP	CH.	LL	=	21.0	PSF
		DL	=	6.0	PSF
BOT	CH.	LL	=	0.0	PSF
		DL	=	7.4	PSF
TOTAL	LOAD		=	34.4	PSF

SPACING = 24.0 IN. C/C

LOADING IN FLAT SECTION BASED ON A SLOPE OF 2.00/12 MINIMUM

THIS TRUSS IS DESIGNED FOR RESIDENTIAL OR SMALL BUILDING REQUIREMENTS OF PART 9, NBCC 2015

THIS DESIGN COMPLIES WITH:
- PART 9 OF BCBC 2018 , ABC 2019
- PART 9 OF OBC 2012 (2019 AMENDMENT)
- CSA 086-14
- TPIC 2014

(55 % OF 23.0 P.S.F. G.S.L. PLUS 8.4 P.S.F. RAIN LOAD) EQUALS 21.0 P.S.F. SPECIFIED ROOF LIVE LOAD

CSI: TC=0.05/1.00 (C-D:1) , BC=0.02/1.00 (N-O:4) , WB=0.03/1.00 (D-M:1) , SSI=0.08/1.00 (C-D:1)

DOL LUMBER=1.00 NAIL=1.00 LS BEND=1.10 COMP=1.10 SHEAR=1.10 TENS= 1.10

COMPANION LIVE LOAD FACTOR = 1.00

TRUSS PLATE MANUFACTURER IS NOT RESPONSIBLE FOR QUALITY CONTROL IN THE TRUSS MANUFACTURING PLANT .

NAIL VALUES

PLATE	GRIP(DRY) (PSI) MAX	MIN	SHEAR (PLI) MAX	MIN	SECTION (PLI) MAX	MIN
MT20	650	371	1747	788	1987	1873

PLATE PLACEMENT TOL. = 0.250 inches

PLATE ROTATION TOL. = 5.0 Deg.

JSI GRIP= 0.12 (B) (INPUT = 0.90)
JSI METAL= 0.04 (D) (INPUT = 1.00)

JOB NAME	TRUSS NAME	QUANTITY	PLY	JOB DESC.		DRWG NO.
336335	H208P		1	TRUSS DESC.	JT 45147	E21104178

Alpa Roof Truss, Maple

Version 8.420 S Jan 21 2021 MiTek Industries, Inc. Thu Oct 14 08:53:15 2021 Page 1

ID:hd511hZTz_bdeQoS817GKByhVxV-sQK6jw8YcXb?Eda297PBLXuIsMW0AYL9sD?gTIyTZH2

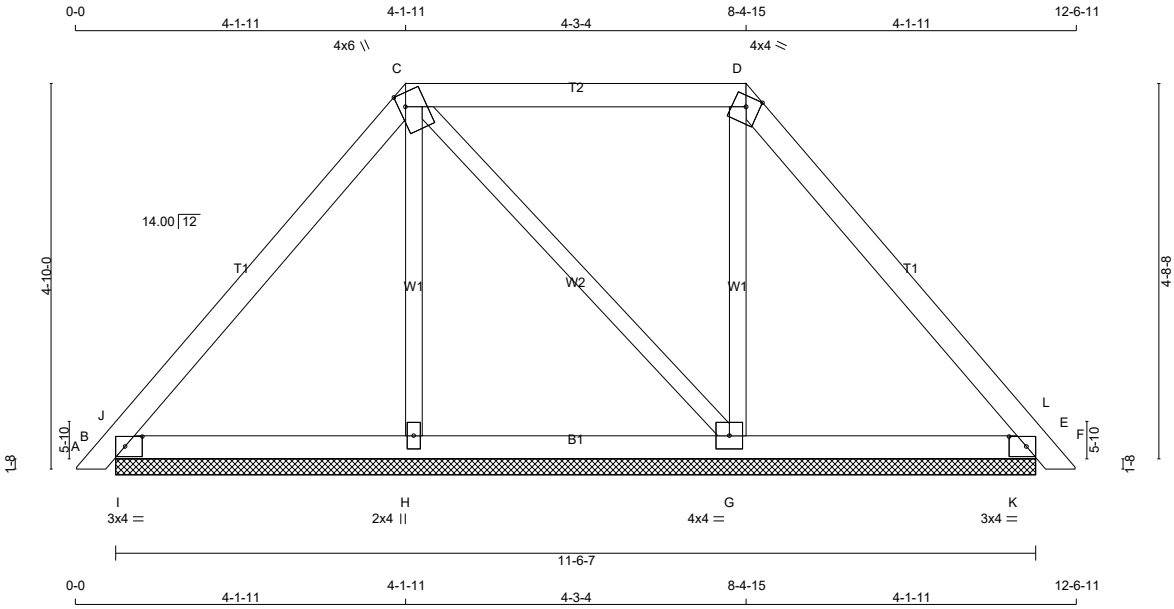

TOTAL WEIGHT = 44 lb

LUMBER

N. L. G. A. RULES

CHORDS	SIZE		LUMBER	DESCR.
A - C	2x4	DRY	No.2	SPF
C - D	2x4	DRY	No.2	SPF
D - F	2x4	DRY	No.2	SPF
B - E	2x4	DRY	No.2	SPF
ALL WEBS	2x3	DRY	No.2	SPF

DRY: SEASONED LUMBER.

PLATES (table is in inches)

JT	TYPE	PLATES	W	LEN	Y	X
B	TMB1-I	MT20	3.0	4.0	1.50	2.50
C	TTWW+m	MT20	4.0	6.0	2.00	1.00
D	TTW-m	MT20	4.0	4.0	Edge	
E	TMB1-I	MT20	3.0	4.0	1.50	2.50
G	BMWW1-t	MT20	4.0	4.0		
H	BMW1+w	MT20	2.0	4.0		

Edge - INDICATES REFERENCE CORNER OF PLATE TOUCHES EDGE OF CHORD.

LATERAL BRACE(S) SHOWN SHALL BE 2X4 SPF#2

DIMENSIONS, SUPPORTS AND LOADINGS SPECIFIED BY FABRICATOR TO BE VERIFIED BY BUILDING DESIGNER

BEARINGS

JT	FACTORED GROSS REACTION VERT	HORZ	MAXIMUM FACTORED GROSS REACTION DOWN	HORZ	UPLIFT	INPUT BRG IN-SX	REQRD BRG IN-SX
B	344	0	344	0	0	11-6-7	1-8
E	319	0	319	0	0	11-6-7	1-8
H	221	0	221	0	0	11-6-7	1-8
G	290	0	290	0	0	11-6-7	1-8

UNFACTORED REACTIONS

JT	1ST LCASE COMBINED	MAX./MIN. COMPONENT REACTIONS SNOW	LIVE	PERM.LIVE	WIND	DEAD	SOIL
B	242	167 / 0	0 / 0	0 / 0	0 / 0	75 / 0	0 / 0
E	225	153 / 0	0 / 0	0 / 0	0 / 0	72 / 0	0 / 0
H	161	79 / 0	0 / 0	0 / 0	0 / 0	81 / 0	0 / 0
G	209	118 / 0	0 / 0	0 / 0	0 / 0	90 / 0	0 / 0

BEARING MATERIAL TO BE SPF NO.2 OR BETTER AT JOINT(S) B, E, H, G

BRACING

TOP CHORD TO BE SHEATHED OR MAX. PURLIN SPACING = 6.25 FT.
MAX. UNBRACED BOTTOM CHORD LENGTH = 10.00 FT OR RIGID CEILING DIRECTLY APPLIED.

ALL PITCH BREAKS AND PERIMETER CORNER JOINTS MUST BE LATERALLY RESTRAINED.

LOADING

TOTAL LOAD CASES: (4)

CHORDS

MEMB. FR-TO	MAX. FACTORED FORCE (LBS)	FACTORED VERT. LOAD LC1 (PLF) FROM	TO	MAX CSI (LC)	MAX. UNBRAC LENGTH
A- B	0 / 10	-78.0	-78.0	0.01 (1)	10.00
B- J	-38 / 26	-78.0	-78.0	0.08 (1)	6.25
J- C	-201 / 0	-78.0	-78.0	0.13 (1)	6.25
C- D	-98 / 0	-78.0	-78.0	0.24 (1)	6.25
D- L	-170 / 0	-78.0	-78.0	0.13 (1)	6.25
L- E	-31 / 64	-78.0	-78.0	0.08 (1)	6.25
E- F	0 / 10	-78.0	-78.0	0.01 (1)	10.00
B- I	0 / 123	-18.5	-18.5	0.12 (1)	10.00
I- H	0 / 123	-18.5	-18.5	0.12 (1)	10.00
H- G	0 / 120	-18.5	-18.5	0.08 (4)	10.00
G- K	0 / 102	-18.5	-18.5	0.11 (1)	10.00
K- E	0 / 102	-18.5	-18.5	0.11 (1)	10.00

WEBS

MEMB. FR-TO	MAX. FACTORED FORCE (LBS)	MAX CSI (LC)
H- C	-119 / 0	0.04 (1)
C- G	-31 / 0	0.02 (1)
G- D	-165 / 0	0.05 (1)
I- J	-403 / 0	0.00 (1)
K- L	-410 / 0	0.00 (1)

DESIGN CRITERIA

SPECIFIED LOADS:

TOP	CH.	LL	=	21.0	PSF
		DL	=	6.0	PSF
BOT	CH.	LL	=	0.0	PSF
		DL	=	7.4	PSF
TOTAL	LOAD		=	34.4	PSF

SPACING = 24.0 IN. C/C

LOADING IN FLAT SECTION BASED ON A SLOPE OF 2.00/12 MINIMUM

THIS TRUSS IS DESIGNED FOR RESIDENTIAL OR SMALL BUILDING REQUIREMENTS OF PART 9, NBCC 2015

THIS DESIGN COMPLIES WITH:
- PART 9 OF BCBC 2018 , ABC 2019
- PART 9 OF OBC 2012 (2019 AMENDMENT)
- CSA 086-14
- TPIC 2014

(55 % OF 23.0 P.S.F. G.S.L. PLUS 8.4 P.S.F. RAIN LOAD) EQUALS 21.0 P.S.F. SPECIFIED ROOF LIVE LOAD

CSI: TC=0.24/1.00 (C-D:1) , BC=0.12/1.00 (H-I:1) , WB=0.05/1.00 (D-G:1) , SSI=0.32/1.00 (E-K:1)

DOL LUMBER=1.00 NAIL=1.00 LS BEND=1.10 COMP=1.10 SHEAR=1.10 TENS= 1.10

COMPANION LIVE LOAD FACTOR = 1.00

TRUSS PLATE MANUFACTURER IS NOT RESPONSIBLE FOR QUALITY CONTROL IN THE TRUSS MANUFACTURING PLANT .

NAIL VALUES

PLATE	GRIP(DRY) (PSI) MAX	MIN	SHEAR (PLI) MAX	MIN	SECTION (PLI) MAX	MIN
MT20	650	371	1747	788	1987	1873

PLATE PLACEMENT TOL. = 0.250 inches

PLATE ROTATION TOL. = 5.0 Deg.

JSI GRIP= 0.40 (B) (INPUT = 0.90)
JSI METAL= 0.09 (B) (INPUT = 1.00)

JOB NAME	TRUSS NAME	QUANTITY	PLY	JOB DESC.		DRWG NO.
336335	H209P		1	TRUSS DESC.	JT 45147	E21104179

Alpa Roof Truss, Maple

Version 8.420 S Jan 21 2021 MiTek Industries, Inc. Thu Oct 14 08:53:17 2021 Page 1

ID:hd511hZTz bdeQoS817GKByhVxV-ppSs8c9p88rjUwkRGYSfQyzc5A9jeSWSKXUnYAyTZH0

Scale = 1:46.1

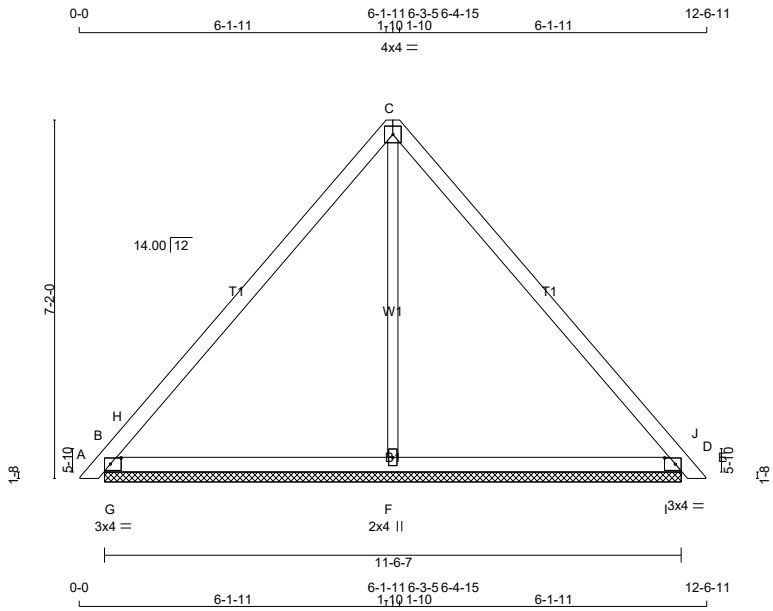

TOTAL WEIGHT = 40 lb

[M]

LUMBER

N. L. G. A. RULES

CHORDS	SIZE		LUMBER	DESCR.
A - C	2x4	DRY	No.2	SPF
C - E	2x4	DRY	No.2	SPF
B - D	2x4	DRY	No.2	SPF
ALL WEBS	2x3	DRY	No.2	SPF

DRY: SEASONED LUMBER.

PLATES (table is in inches)

JT	TYPE	PLATES	W	LEN	Y	X
B	TMB1-I	MT20	3.0	4.0	1.50	2.50
C	TTW-p	MT20	4.0	4.0		
D	TMB1-I	MT20	3.0	4.0	1.50	2.50
F	BMW1+w	MT20	2.0	4.0		

LATERAL BRACE(S) SHOWN SHALL BE 2X4 SPF#2

DIMENSIONS, SUPPORTS AND LOADINGS SPECIFIED BY FABRICATOR TO BE VERIFIED BY BUILDING DESIGNER

BEARINGS

JT	FACTORED GROSS REACTION VERT	HORZ	MAXIMUM FACTORED GROSS REACTION DOWN	HORZ	UPLIFT	INPUT BRG IN-SX	REQRD BRG IN-SX
B	485	0	485	0	0	11-6-7	1-8
D	485	0	485	0	0	11-6-7	1-8
F	203	0	203	0	0	11-6-7	1-8

UNFACTORED REACTIONS

JT	1ST LCASE COMBINED	MAX./MIN. COMPONENT REACTIONS SNOW	LIVE	PERM.LIVE	WIND	DEAD	SOIL
B	342	230 / 0	0 / 0	0 / 0	0 / 0	112 / 0	0 / 0
D	342	230 / 0	0 / 0	0 / 0	0 / 0	112 / 0	0 / 0
F	151	56 / 0	0 / 0	0 / 0	0 / 0	95 / 0	0 / 0

BEARING MATERIAL TO BE SPF NO.2 OR BETTER AT JOINT(S) B, D, F

BRACING

TOP CHORD TO BE SHEATHED OR MAX. PURLIN SPACING = 6.25 FT.
MAX. UNBRACED BOTTOM CHORD LENGTH = 10.00 FT OR RIGID CEILING DIRECTLY APPLIED.

ALL PITCH BREAKS AND PERIMETER CORNER JOINTS MUST BE LATERALLY RESTRAINED.

LOADING

TOTAL LOAD CASES: (4)

CHORDS

MEMB. FR-TO	MAX. FACTORED FORCE (LBS)	FACTORED VERT. LOAD (PLF) FROM	TO	LC1 CSI (LC)	MAX UNBRAC LENGTH
A- B	0 / 10	-78.0	-78.0	0.01 (1)	10.00
B- H	0 / 494	-78.0	-78.0	0.31 (1)	10.00
H- C	-292 / 0	-78.0	-78.0	0.32 (1)	6.25
C- J	-292 / 0	-78.0	-78.0	0.32 (1)	6.25
J- D	0 / 494	-78.0	-78.0	0.31 (1)	10.00
D- E	0 / 10	-78.0	-78.0	0.01 (1)	10.00
B- G	0 / 175	-18.5	-18.5	0.29 (1)	10.00
G- F	0 / 175	-18.5	-18.5	0.29 (1)	10.00
F- I	0 / 175	-18.5	-18.5	0.29 (1)	10.00
I- D	0 / 175	-18.5	-18.5	0.29 (1)	10.00

WEBS

MEMB. FR-TO	MAX. FACTORED FORCE (LBS)	MAX CSI (LC)
F- C	0 / 32	0.01 (4)
G- H	-1130 / 0	0.00 (1)
I- J	-1130 / 0	0.00 (1)

DESIGN CRITERIA

SPECIFIED LOADS:

TOP CH.	LL	=	21.0	PSF
	DL	=	6.0	PSF
BOT CH.	LL	=	0.0	PSF
	DL	=	7.4	PSF
TOTAL LOAD		=	34.4	PSF

SPACING = 24.0 IN. C/C

THIS TRUSS IS DESIGNED FOR RESIDENTIAL OR SMALL BUILDING REQUIREMENTS OF PART 9, NBCC 2015

THIS DESIGN COMPLIES WITH:
- PART 9 OF BCBC 2018 , ABC 2019
- PART 9 OF OBC 2012 (2019 AMENDMENT)
- CSA 086-14
- TPIC 2014

(55 % OF 23.0 P.S.F. G.S.L. PLUS 8.4 P.S.F. RAIN LOAD) EQUALS 21.0 P.S.F. SPECIFIED ROOF LIVE LOAD

CSI: TC=0.32/1.00 (C-J:1) , BC=0.29/1.00 (F-I:1) , WB=0.01/1.00 (C-F:4) , SSI=0.87/1.00 (D-I:1)

DOL LUMBER=1.00 NAIL=1.00 LS BEND=1.10 COMP=1.10 SHEAR=1.10 TENS= 1.10

COMPANION LIVE LOAD FACTOR = 1.00

TRUSS PLATE MANUFACTURER IS NOT RESPONSIBLE FOR QUALITY CONTROL IN THE TRUSS MANUFACTURING PLANT .

NAIL VALUES

PLATE	GRIP(DRY) (PSI) MAX	MIN	SHEAR (PLI) MAX	MIN	SECTION (PLI) MAX	MIN
MT20	650	371	1747	788	1987	1873

PLATE PLACEMENT TOL. = 0.250 inches

PLATE ROTATION TOL. = 5.0 Deg.

JSI GRIP= 0.59 (D) (INPUT = 0.90)
JSI METAL= 0.13 (B) (INPUT = 1.00)

JOB NAME	TRUSS NAME	QUANTITY	PLY	JOB DESC.	DRWG NO.
336335	H223		1	TRUSS DESC. JT 45147	E21104180

Alpa Roof Truss, Maple

Version 8.420 S Jan 21 2021 MiTek Industries, Inc. Thu Oct 14 08:52:36 2021 Page 1

ID:hd511hZTz_bdeQoS817GKByhVxV-WwTMXag5oYhY3d5ZNRD1GJnWye7rXk1Quf36b2yTZHf

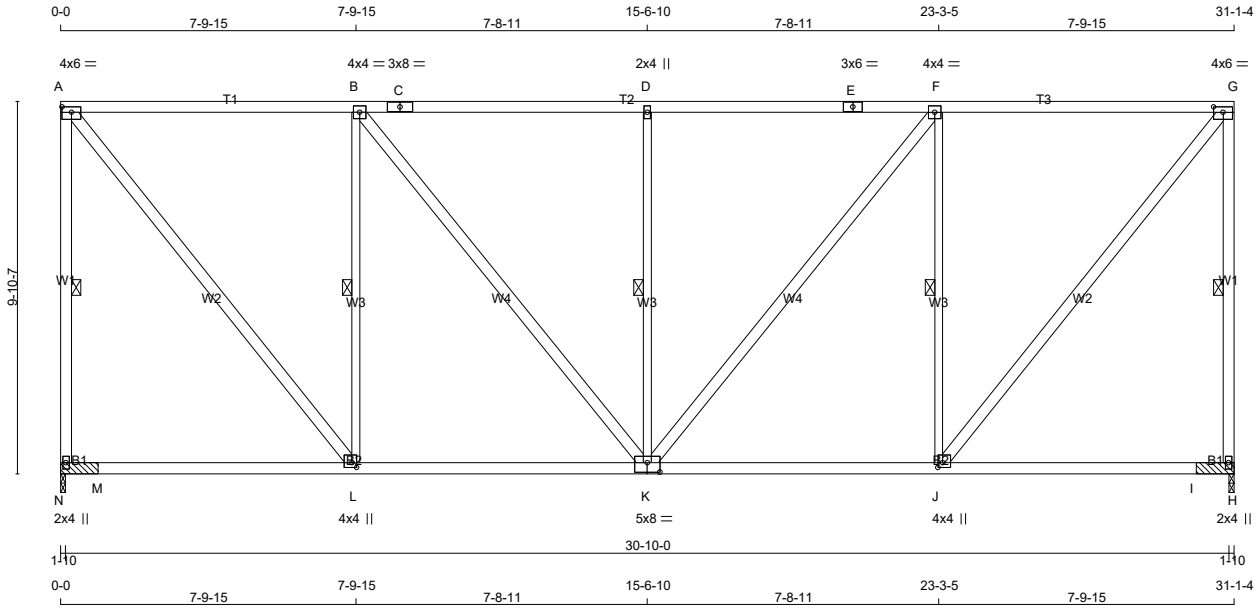

TOTAL WEIGHT = 2 X 171 = 343 lb

[M]

LUMBER

N. L. G. A. RULES

CHORDS	SIZE		LUMBER	DESCR.
N - A	2x4	DRY	No.2	SPF
A - C	2x4	DRY	1650F 1.5E	SPF
C - E	2x4	DRY	1650F 1.5E	SPF
E - G	2x4	DRY	1650F 1.5E	SPF
H - G	2x4	DRY	No.2	SPF
N - K	2x4	DRY	No.2	SPF
K - H	2x4	DRY	No.2	SPF
ALL WEBS	2x4	DRY	No.2	SPF
EXCEPT				
L - B	2x3	DRY	No.2	SPF
K - D	2x3	DRY	No.2	SPF
J - F	2x3	DRY	No.2	SPF

DRY: SEASONED LUMBER.

PLATES (table is in inches)

JT	TYPE	PLATES	W	LEN	Y	X
A	TMVW-t	MT20	4.0	6.0	1.75	3.00
B	TMWW-t	MT20	4.0	4.0		
C	TS-t	MT20	3.0	8.0		
D	TMW+w	MT20	2.0	4.0		
E	TS-t	MT20	3.0	6.0		
F	TMWW-t	MT20	4.0	4.0		
G	TMVW-t	MT20	4.0	6.0	1.75	3.00
H	BMV1+p	MT20	2.0	4.0		
J	BMWW+t	MT20	4.0	4.0	1.50	1.50
K	BSWWW-l	MT20	5.0	8.0	3.00	4.00
L	BMWW+t	MT20	4.0	4.0	1.50	1.50
N	BMV1+p	MT20	2.0	4.0		

LATERAL BRACE(S) SHOWN SHALL BE 2X4 SPF#2

DIMENSIONS, SUPPORTS AND LOADINGS SPECIFIED BY FABRICATOR TO BE VERIFIED BY BUILDING DESIGNER

BEARINGS

JT	FACTORED GROSS REACTION VERT	HORZ	MAXIMUM FACTORED GROSS REACTION DOWN	HORZ	UPLIFT	INPUT BRG IN-SX	REQRD BRG IN-SX
N	1617	0	1617	0	0	1-10	1-10 & BLOCK
H	1617	0	1617	0	0	1-10	1-10 & BLOCK

UNFACTORED REACTIONS

JT	1ST LCASE COMBINED	MAX./MIN. COMPONENT REACTIONS SNOW	LIVE	PERM.LIVE	WIND	DEAD	SOIL
N	1163	653 / 0	0 / 0	0 / 0	0 / 0	510 / 0	0 / 0
H	1163	653 / 0	0 / 0	0 / 0	0 / 0	510 / 0	0 / 0

BEARING MATERIAL TO BE SPF NO.2 OR BETTER AT JOINT(S) N, H

2x4 DRY SPF No.2 BEARING BLOCK 12" LONG AT JT. N ATTACHED TO FRONT SIDE WITH 2 ROWS OF (0.122"X3") SPIRAL NAILS SPACED 3" C.C. 8 NAILS TOTAL.

2x4 DRY SPF No.2 BEARING BLOCK 12" LONG AT JT. H ATTACHED TO FRONT SIDE WITH 2 ROWS OF (0.122"X3") SPIRAL NAILS SPACED 3" C.C. 8 NAILS TOTAL.

BRACING

FOR SECTION A-G, MAX. PURLIN SPACING = 2.00 FT.
FOR OTHER SECTIONS, TOP CHORD TO BE SHEATHED OR MAX. PURLIN SPACING = 0.00 FT.
MAX. UNBRACED BOTTOM CHORD LENGTH = 10.00 FT OR RIGID CEILING DIRECTLY APPLIED.

ALL PITCH BREAKS AND PERIMETER CORNER JOINTS MUST BE LATERALLY RESTRAINED.

1 LATERAL BRACE(S) AT 1/ 2 LENGTH OF A-N, G-H, B-L, D-K, F-J.

END VERTICAL(S) MUST BE SHEATHED OR HAVE BRACES AS INDICATED IN THE MAX. UNBRACED LENGTH COLUMN OF THE TABLE BELOW

LOADING

TOTAL LOAD CASES: (4)

CHORDS

MEMB. FR-TO	MAX. FACTORED FORCE (LBS)	FACTORED VERT. LOAD (PLF) FROM	TO	LC1	MAX CSI (LC)	MAX. UNBRAC LENGTH
N- A	-1562 / 0	0.0	0.0	0.73 (1)	5.27	
A- B	-1060 / 0	-85.5	-85.5	0.71 (1)	2.00	
B- C	-1350 / 0	-85.5	-85.5	0.74 (1)	2.00	
C- D	-1350 / 0	-85.5	-85.5	0.74 (1)	2.00	
D- E	-1350 / 0	-85.5	-85.5	0.74 (1)	2.00	
E- F	-1350 / 0	-85.5	-85.5	0.74 (1)	2.00	
F- G	-1060 / 0	-85.5	-85.5	0.71 (1)	2.00	
H- G	-1562 / 0	0.0	0.0	0.73 (1)	5.27	
N- M	0 / 0	-18.5	-18.5	0.32 (4)	10.00	
M- L	0 / 0	-18.5	-18.5	0.32 (4)	10.00	
L- K	0 / 1060	-18.5	-18.5	0.44 (4)	10.00	
K- J	0 / 1060	-18.5	-18.5	0.44 (4)	10.00	
J- I	0 / 0	-18.5	-18.5	0.32 (4)	10.00	
I- H	0 / 0	-18.5	-18.5	0.32 (4)	10.00	

WEBS

MEMB. FR-TO	MAX. FACTORED FORCE (LBS)	MAX CSI (LC)
A- L	0 / 1676	0.27 (1)
L- B	-1119 / 0	0.74 (1)
B- K	0 / 461	0.07 (1)
K- D	-609 / 0	0.40 (1)
K- F	0 / 461	0.07 (1)
J- F	-1119 / 0	0.74 (1)
J- G	0 / 1676	0.27 (1)

DESIGN CRITERIA

SPECIFIED LOADS:

TOP	CH.	LL	=	21.0	PSF
		DL	=	6.0	PSF
BOT	CH.	LL	=	0.0	PSF
		DL	=	7.4	PSF
TOTAL	LOAD		=	34.4	PSF

SPACING = 24.0 IN. C/C

LOADING IN FLAT SECTION BASED ON PIGGYBACK TRUSS WITH SLOPES OF 6.00/12 AND -6.00/12 AND RESPECTIVE HEEL HEIGHTS OF 0-0 AND 0-0 AND AN ADDITIONAL DEAD LOAD OF 3.0 P.S.F.

THIS TRUSS IS DESIGNED FOR RESIDENTIAL OR SMALL BUILDING REQUIREMENTS OF PART 9, NBCC 2015

THIS DESIGN COMPLIES WITH:
- PART 9 OF BCBC 2018 , ABC 2019
- PART 9 OF OBC 2012 (2019 AMENDMENT)
- CSA 086-14
- TPIC 2014

(55 % OF 23.0 P.S.F. G.S.L. PLUS 8.4 P.S.F. RAIN LOAD) EQUALS 21.0 P.S.F. SPECIFIED ROOF LIVE LOAD

ALLOWABLE DEFL.(LL)= L/360 (1.04")
CALCULATED VERT. DEFL.(LL) = L/ 999 (0.06")
ALLOWABLE DEFL.(TL)= L/360 (1.04")
CALCULATED VERT. DEFL.(TL) = L/ 999 (0.18")

CSI: TC=0.74/1.00 (B-D:1) , BC=0.44/1.00 (K-L:4) , WB=0.74/1.00 (B-L:1) , SSI=0.32/1.00 (A-B:1)

DOL LUMBER=1.00 NAIL=1.00 LS BEND=1.10 COMP=1.10 SHEAR=1.10 TENS= 1.10

COMPANION LIVE LOAD FACTOR = 1.00

TRUSS PLATE MANUFACTURER IS NOT RESPONSIBLE FOR QUALITY CONTROL IN THE TRUSS MANUFACTURING PLANT .

NAIL VALUES

PLATE	GRIP(DRY) (PSI) MAX	MIN	SHEAR (PLI) MAX	MIN	SECTION (PLI) MAX	MIN
MT20	650	371	1747	788	1987	1873

PLATE PLACEMENT TOL. = 0.250 inches

PLATE ROTATION TOL. = 5.0 Deg.

JSI GRIP= 0.87 (J) (INPUT = 0.90)
JSI METAL= 0.47 (L) (INPUT = 1.00)

JOB NAME	TRUSS NAME	QUANTITY	PLY	JOB DESC.	DRWG NO.
336335	H220T		1	TRUSS DESC. JT 45147	E21104181

Alpa Roof Truss, Maple

Version 8.420 S Jan 21 2021 MiTek Industries, Inc. Thu Oct 14 08:53:19 2021 Page 1

ID:hd511hZTz_bdeQoS817GKByhVxV-lCZcZHB3fm5RjEuqOzU7VN3qrzhN67wlnrztc3yTZH_

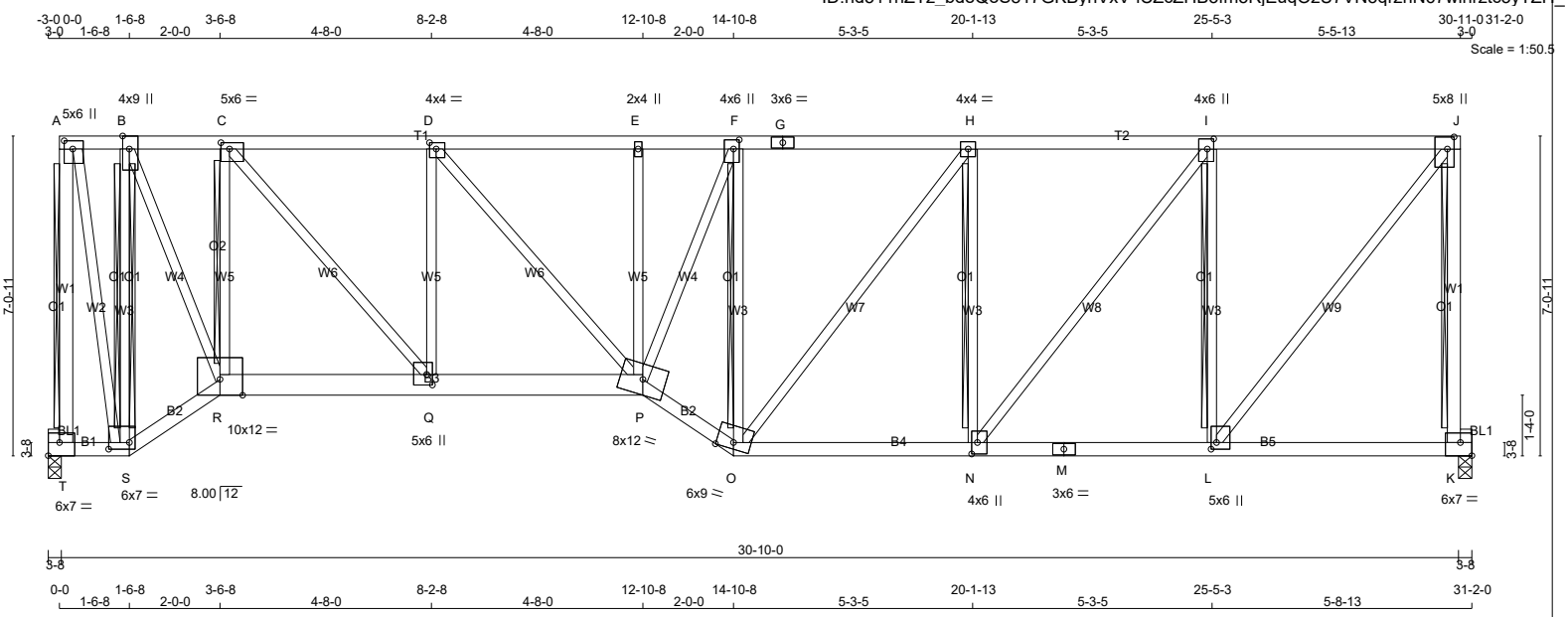

LUMBER

N. L. G. A. RULES

CHORDS	SIZE		LUMBER	DESCR.
T - A	2x4	DRY	No.2	SPF
A - G	2x4	DRY	1650F 1.5E	SPF
G - J	2x4	DRY	1650F 1.5E	SPF
K - J	2x4	DRY	No.2	SPF
T - S	2x4	DRY	No.2	SPF
S - R	2x4	DRY	No.2	SPF
R - P	2x6	DRY	No.2	SPF
P - O	2x4	DRY	No.2	SPF
O - M	2x4	DRY	No.2	SPF
M - K	2x4	DRY	No.2	SPF
BEARING BLOCKS				
BL1	2 - 2x4	DRY	No.2	SPF
ALL WEBS	2x3	DRY	No.2	SPF

DRY: SEASONED LUMBER.

PLATES (table is in inches)

JT	TYPE	PLATES	W	LEN	Y	X
A	TMVW+p	MT20	5.0	6.0	2.25	2.25
B	TMWW+t	MT20	4.0	9.0	Edge	1.75
C	TMWW-t	MT20	5.0	6.0	1.75	2.25
D	TMWW-t	MT20	4.0	4.0	1.75	1.75
E	TMW+w	MT20	2.0	4.0		
F	TMWW+t	MT20	4.0	6.0	2.50	1.50
G	TS-t	MT20	3.0	6.0		
H	TMWW-t	MT20	4.0	4.0		
I	TMWW+t	MT20	4.0	6.0	2.75	1.75
J	TMVW+p	MT20	5.0	8.0	3.25	1.75
K	BMVK1-t	MT20	6.0	7.0	3.50	Edge
L	BMWW+t	MT20	5.0	6.0	1.75	1.50
M	BS-t	MT20	3.0	6.0		
N	BMWW+t	MT20	4.0	6.0	3.00	1.50
O	BBWW-m	MT20	6.0	9.0	Edge	
P	BBWWW-m	MT20	8.0	12.0		
Q	BMWW+t	MT20	5.0	6.0	2.75	1.50
R	BBWW-l	MT20	10.0	12.0	Edge	
S	BBWW-l	MT20	6.0	7.0	1.75	5.50
T	BMVK1-t	MT20	6.0	7.0	3.50	Edge

Edge - INDICATES REFERENCE CORNER OF PLATE TOUCHES EDGE OF CHORD.

LATERAL BRACE(S) SHOWN SHALL BE 2X4 SPF#2

DIMENSIONS, SUPPORTS AND LOADINGS SPECIFIED BY FABRICATOR TO BE VERIFIED BY BUILDING DESIGNER

BEARINGS

JT	FACTORED GROSS REACTION VERT	HORZ	MAXIMUM FACTORED GROSS REACTION DOWN	HORZ	UPLIFT	INPUT BRG IN-SX	REQRD BRG IN-SX
T	3150	0	3150	0	0	3-8	3-8
K	3158	0	3158	0	0	3-8	3-8

UNFACTORED REACTIONS

JT	1ST LCASE COMBINED	MAX./MIN. COMPONENT REACTIONS SNOW	LIVE	PERM.LIVE	WIND	DEAD	SOIL
T	2245	1372 / 0	0 / 0	0 / 0	0 / 0	874 / 0	0 / 0
K	2251	1376 / 0	0 / 0	0 / 0	0 / 0	875 / 0	0 / 0

BEARING MATERIAL TO BE SPF NO.2 OR BETTER AT JOINT(S) T, K
BEARING SIZE FACTOR = 1.15 AT JNT(S) T, K (BASED ON SUPPORT DEPTH = 1-8)

BRACING

TOP CHORD TO BE SHEATHED OR MAX. PURLIN SPACING = 3.36 FT.
MAX. UNBRACED BOTTOM CHORD LENGTH = 6.25 FT OR RIGID CEILING DIRECTLY APPLIED.

ALL PITCH BREAKS AND PERIMETER CORNER JOINTS MUST BE LATERALLY RESTRAINED.

2x4 DRY SPF No.2 T-BRACE AT A-T, J-K, F-O, I-L
2x4 DRY SPF No.2 I-BRACE AT B-S
2x3 DRY SPF No.2 T-BRACE AT C-R, H-N

FASTEN T AND I-BRACES TO NARROW EDGE OF WEB WITH ONE ROW PER PLY OF 3" COMMON WIRE NAILS @ 6" O.C. WITH 3" MINIMUM END DISTANCE. BRACE MUST COVER 90% OF WEB LENGTH.

END VERTICAL(S) MUST BE SHEATHED OR HAVE BRACES AS INDICATED IN THE MAX. UNBRACED LENGTH COLUMN OF THE TABLE BELOW

LOADING

TOTAL LOAD CASES: (4)

CHORDS

MEMB. FR-TO	MAX. FACTORED FORCE (LBS)	FACTORED VERT. LOAD (PLF) FROM	TO	LC1 MAX CSI (LC)	MAX. UNBRAC LENGTH
T- A	-3122 / 0	0.0	0.0	0.88 (1)	7.81
A- B	-596 / 0	-165.7	-165.7	0.18 (1)	6.25
B- C	-1769 / 0	-78.0	-78.0	0.20 (1)	5.36
C- D	-3553 / 0	-78.0	-78.0	0.32 (1)	3.98
D- E	-4333 / 0	-78.0	-78.0	0.37 (1)	3.61
E- F	-4331 / 0	-78.0	-78.0	0.45 (1)	3.44
F- G	-3587 / 0	-165.7	-165.7	0.64 (1)	3.55
G- H	-3587 / 0	-165.7	-165.7	0.64 (1)	3.55
H- I	-3278 / 0	-165.7	-165.7	0.80 (1)	3.36
I- J	-2129 / 0	-165.7	-165.7	0.72 (1)	4.15
K- J	-3073 / 0	0.0	0.0	0.87 (1)	7.81
T- S	-67 / 0	-39.3	-39.3	0.02 (4)	6.25
S- R	0 / 664	-127.0	-127.0	0.21 (1)	10.00
R- Q	0 / 1815	-127.0	-127.0	0.42 (1)	10.00
Q- P	0 / 3553	-127.0	-127.0	0.65 (1)	10.00
P- O	0 / 4305	-127.0	-127.0	0.86 (1)	10.00
O- N	0 / 3278	-39.3	-39.3	0.72 (1)	10.00
N- M	0 / 2129	-39.3	-39.3	0.53 (1)	10.00
M- L	0 / 2129	-39.3	-39.3	0.53 (1)	10.00
L- K	-66 / 0	-39.3	-39.3	0.28 (4)	6.25

WEBS

MEMB. FR-TO	MAX. FACTORED FORCE (LBS)	MAX CSI (LC)
A- S	0 / 2977	0.74 (1)
S- B	-3125 / 0	0.98 (1)
B- R	0 / 3351	0.83 (1)
R- C	-2385 / 0	0.95 (1)
C- Q	0 / 2679	0.66 (1)
Q- D	-1306 / 0	0.63 (1)
D- P	0 / 1190	0.29 (1)
P- E	-113 / 0	0.05 (1)
P- F	0 / 2150	0.53 (1)
O- F	-2612 / 0	0.94 (1)
O- H	0 / 503	0.12 (1)
N- H	-1260 / 0	0.87 (1)
N- I	0 / 1868	0.46 (1)
L- I	-2477 / 0	0.89 (1)
L- J	0 / 3485	0.86 (1)

[M]

DESIGN CRITERIA

SPECIFIED LOADS:

TOP CH.	LL	=	21.0	PSF
	DL	=	6.0	PSF
BOT CH.	LL	=	0.0	PSF
	DL	=	7.4	PSF
TOTAL LOAD		=	34.4	PSF

SPACING = 24.0 IN. C/C

LOADING IN FLAT SECTION BASED ON A SLOPE OF 2.00/12 MINIMUM

GIRDER TYPE: CPrimeHip
SIDE SETBACK = 0-0
END SETBACK = 6-6-0
END WALL WIDTH = 0-0
CORNER FRAMING TYPE: CONVENTIONAL
END JACK TYPE: CONVENTIONAL
APPLIED TO FRONT SIDE
- ADDT'L LOADS BASED ON 55 % OF GSL.
LOADS APPLIED TO FIRST 1-6-8 OF SPAN MEASURED FROM THE LEFT.

GIRDER TYPE: CStdGirder
START DISTANCE = 1-6-8
START SPAN CARRIED = 6-6-0
END DISTANCE = 14-10-8
END SPAN CARRIED = 6-6-0
END WALL WIDTH = 0-0
APPLIED TO FRONT SIDE OF BOTTOM CHORD.
- ADDT'L LOADS BASED ON 55 % OF GSL.

GIRDER TYPE: CPrimeHip
SIDE SETBACK = 0-0
END SETBACK = 6-6-0
END WALL WIDTH = 0-0
CORNER FRAMING TYPE: CONVENTIONAL
END JACK TYPE: CONVENTIONAL
APPLIED TO FRONT SIDE
- ADDT'L LOADS BASED ON 55 % OF GSL.
LOADS APPLIED TO FIRST 16-3-8 OF SPAN MEASURED FROM THE RIGHT.

THIS TRUSS IS DESIGNED FOR RESIDENTIAL OR SMALL BUILDING REQUIREMENTS OF PART 9, NBCC 2015

THIS DESIGN COMPLIES WITH:
- PART 9 OF BCBC 2018 , ABC 2019
- PART 9 OF OBC 2012 (2019 AMENDMENT)
- CSA 086-14
- TPIC 2014

(55 % OF 23.0 P.S.F. G.S.L. PLUS 8.4 P.S.F. RAIN LOAD) EQUALS 21.0 P.S.F. SPECIFIED ROOF LIVE LOAD

ALLOWABLE DEFL.(LL)= L/360 (1.02")
CALCULATED VERT. DEFL.(LL) = L/ 999 (0.25")
ALLOWABLE DEFL.(TL)= L/360 (1.02")
CALCULATED VERT. DEFL.(TL) = L/ 752 (0.49")

CSI: TC=0.88/1.00 (A-T:1) , BC=0.86/1.00 (O-P:1) , WB=0.98/1.00 (B-S:1) , SSI=0.47/1.00 (I-J:1)

DOL LUMBER=1.00 NAIL=1.00 LS BEND=1.00 COMP=1.00 SHEAR=1.00 TENS= 1.00

COMPANION LIVE LOAD FACTOR = 1.00

CONTINUED ON PAGE 2

JOB NAME	TRUSS NAME	QUANTITY	PLY	JOB DESC.	DRWG NO.
336335	H222T		1	TRUSS DESC. JT 45147	E21104182

Alpa Roof Truss, Maple

Version 8.420 S Jan 21 2021 MiTek Industries, Inc. Thu Oct 14 08:53:21 2021 Page 1

ID:hd511hZTz bdeQoS817GKByhVxV-hahN zCJBNL9yY1CVOWbao88cnT a122E9S gxyTZGy

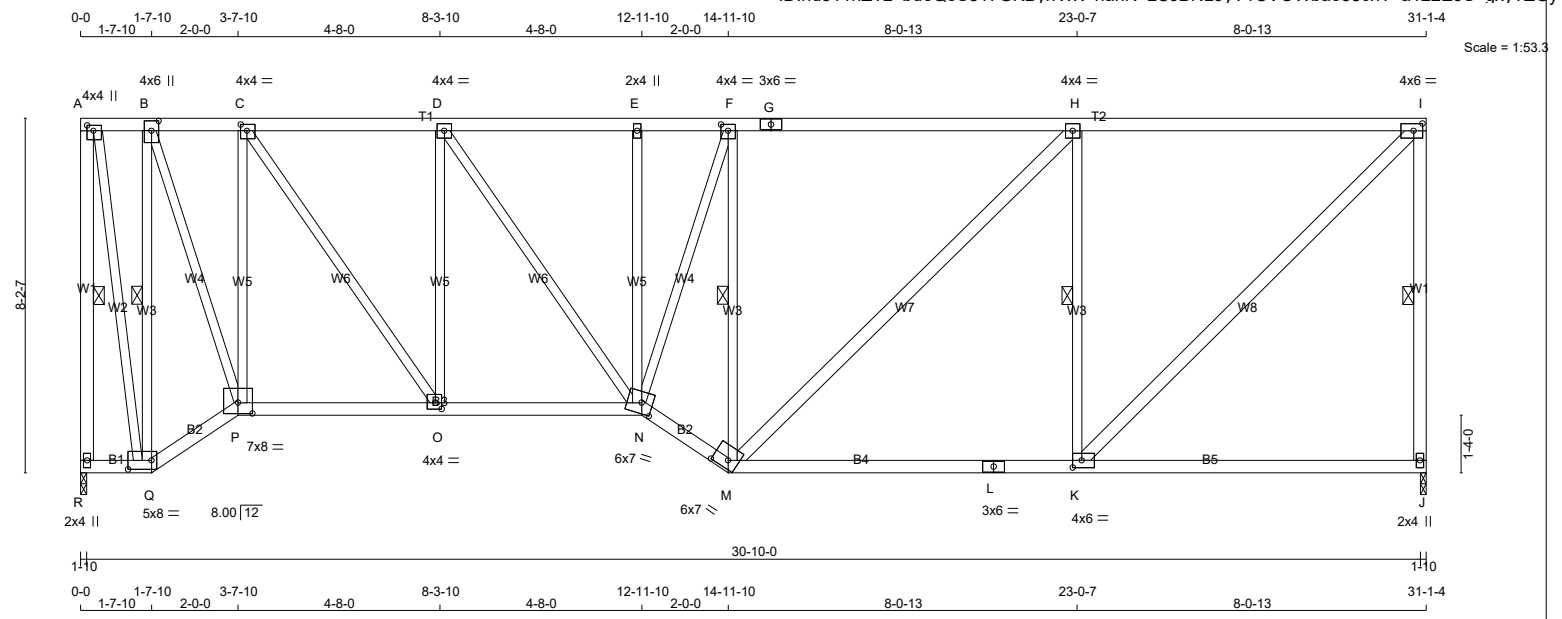

TOTAL WEIGHT = 178 lb

[M]

LUMBER

N. L. G. A. RULES

CHORDS	SIZE		LUMBER	DESCR.
R - A	2x4	DRY	No.2	SPF
A - G	2x4	DRY	No.2	SPF
G - I	2x4	DRY	No.2	SPF
J - I	2x4	DRY	No.2	SPF
R - Q	2x4	DRY	No.2	SPF
Q - P	2x4	DRY	No.2	SPF
P - N	2x4	DRY	No.2	SPF
N - M	2x4	DRY	No.2	SPF
M - L	2x4	DRY	No.2	SPF
L - J	2x4	DRY	No.2	SPF
ALL WEBS EXCEPT	2x3	DRY	No.2	SPF
M - H	2x4	DRY	No.2	SPF
K - I	2x4	DRY	No.2	SPF

DRY: SEASONED LUMBER.

PLATES (table is in inches)

JT	TYPE	PLATES	W	LEN	Y	X
A	TMVW+p	MT20	4.0	4.0	1.50	1.75
B	TMWW+t	MT20	4.0	6.0	2.75	2.00
C	TMWW-t	MT20	4.0	4.0	1.75	1.75
D	TMWW-t	MT20	4.0	4.0		
E	TMW+w	MT20	2.0	4.0		
F	TMWW-t	MT20	4.0	4.0	1.75	2.00
G	TS-t	MT20	3.0	6.0		
H	TMWW-t	MT20	4.0	4.0		
I	TMVW-t	MT20	4.0	6.0	2.00	2.50
J	BMV1+p	MT20	2.0	4.0		
K	BMWW-t	MT20	4.0	6.0	2.00	2.50
L	BS-t	MT20	3.0	6.0		
M	BBWW-h	MT20	6.0	7.0	2.25	4.25
N	BBWWW-m	MT20	6.0	7.0	3.00	3.00
O	BMWW-t	MT20	4.0	4.0	1.75	1.75
P	BBWW-l	MT20	7.0	8.0	3.00	4.00
Q	BBWW-l	MT20	5.0	8.0	2.50	6.50
R	BMV1+p	MT20	2.0	4.0		

LATERAL BRACE(S) SHOWN SHALL BE 2X4 SPF#2

DIMENSIONS, SUPPORTS AND LOADINGS SPECIFIED BY FABRICATOR TO BE VERIFIED BY BUILDING DESIGNER

BEARINGS

JT	FACTORED GROSS REACTION VERT	HORZ	MAXIMUM FACTORED GROSS REACTION DOWN	HORZ	UPLIFT	INPUT BRG IN-SX	REQRD BRG IN-SX
R	1500	0	1500	0	0	1-10	1-10
J	1500	0	1500	0	0	1-10	1-10

UNFACTORED REACTIONS

JT	1ST LCASE COMBINED	MAX./MIN. COMPONENT REACTIONS SNOW	LIVE	PERM.LIVE	WIND	DEAD	SOIL
R	1070	653 / 0	0 / 0	0 / 0	0 / 0	417 / 0	0 / 0
J	1070	653 / 0	0 / 0	0 / 0	0 / 0	417 / 0	0 / 0

BEARING MATERIAL TO BE SPF NO.2 OR BETTER AT JOINT(S) R, J

BRACING

TOP CHORD TO BE SHEATHED OR MAX. PURLIN SPACING = 3.78 FT.
MAX. UNBRACED BOTTOM CHORD LENGTH = 10.00 FT OR RIGID CEILING DIRECTLY APPLIED.

ALL PITCH BREAKS AND PERIMETER CORNER JOINTS MUST BE LATERALLY RESTRAINED.

1 LATERAL BRACE(S) AT 1/ 2 LENGTH OF A-R, I-J, B-Q, F-M, H-K.

END VERTICAL(S) MUST BE SHEATHED OR HAVE BRACES AS INDICATED IN THE MAX. UNBRACED LENGTH COLUMN OF THE TABLE BELOW

LOADING

TOTAL LOAD CASES: (4)

CHORDS

MEMB. FR-TO	MAX. FACTORED FORCE (LBS)	FACTORED VERT. LOAD (PLF) FROM	TO	LC1 CSI (LC)	MAX UNBRAC LENGTH
R- A	-1485 / 0	0.0	0.0	0.45 (1)	5.38
A- B	-288 / 0	-78.0	-78.0	0.08 (1)	6.25
B- C	-744 / 0	-78.0	-78.0	0.12 (1)	6.25
C- D	-1419 / 0	-78.0	-78.0	0.27 (1)	5.18
D- E	-1735 / 0	-78.0	-78.0	0.29 (1)	4.77
E- F	-1733 / 0	-78.0	-78.0	0.41 (1)	4.54
F- G	-1513 / 0	-78.0	-78.0	0.99 (1)	3.78
G- H	-1513 / 0	-78.0	-78.0	0.99 (1)	3.78
H- I	-1221 / 0	-78.0	-78.0	0.94 (1)	4.19
J- I	-1443 / 0	0.0	0.0	0.44 (1)	5.44
R- Q	0 / 0	-18.5	-18.5	0.01 (4)	10.00
Q- P	0 / 321	-18.5	-18.5	0.06 (1)	10.00
P- O	0 / 764	-18.5	-18.5	0.18 (4)	10.00
O- N	0 / 1419	-18.5	-18.5	0.28 (1)	10.00
N- M	0 / 1799	-18.5	-18.5	0.30 (1)	10.00
M- L	0 / 1221	-18.5	-18.5	0.46 (4)	10.00
L- K	0 / 1221	-18.5	-18.5	0.46 (4)	10.00
K- J	0 / 0	-18.5	-18.5	0.35 (4)	10.00

WEBS

MEMB. FR-TO	MAX. FACTORED FORCE (LBS)	MAX CSI (LC)
A- Q	0 / 1418	0.32 (1)
Q- B	-1533 / 0	0.65 (1)
B- P	0 / 1561	0.35 (1)
P- C	-1253 / 0	1.00 (1)
C- O	0 / 1150	0.26 (1)
O- D	-848 / 0	0.68 (1)
D- N	0 / 546	0.12 (1)
N- E	-126 / 0	0.10 (1)
N- F	0 / 773	0.17 (1)
M- F	-1206 / 0	0.51 (1)
M- H	0 / 409	0.07 (1)
K- H	-1015 / 0	0.43 (1)
K- I	0 / 1710	0.27 (1)

DESIGN CRITERIA

SPECIFIED LOADS:

TOP CH.	LL	=	21.0	PSF
	DL	=	6.0	PSF
BOT CH.	LL	=	0.0	PSF
	DL	=	7.4	PSF
TOTAL LOAD		=	34.4	PSF

SPACING = 24.0 IN. C/C

LOADING IN FLAT SECTION BASED ON A SLOPE OF 2.00/12 MINIMUM

THIS TRUSS IS DESIGNED FOR RESIDENTIAL OR SMALL BUILDING REQUIREMENTS OF PART 9, NBCC 2015

THIS DESIGN COMPLIES WITH:
- PART 9 OF BCBC 2018 , ABC 2019
- PART 9 OF OBC 2012 (2019 AMENDMENT)
- CSA 086-14
- TPIC 2014

(55 % OF 23.0 P.S.F. G.S.L. PLUS 8.4 P.S.F. RAIN LOAD) EQUALS 21.0 P.S.F. SPECIFIED ROOF LIVE LOAD

ALLOWABLE DEFL.(LL)= L/360 (1.04")
CALCULATED VERT. DEFL.(LL) = L/ 999 (0.11")
ALLOWABLE DEFL.(TL)= L/360 (1.04")
CALCULATED VERT. DEFL.(TL) = L/ 999 (0.25")

CSI: TC=0.99/1.00 (F-H:1) , BC=0.46/1.00 (K-M:4) , WB=1.00/1.00 (C-P:1) , SSI=0.30/1.00 (H-I:1)

DOL LUMBER=1.00 NAIL=1.00 LS BEND=1.10 COMP=1.10 SHEAR=1.10 TENS= 1.10

COMPANION LIVE LOAD FACTOR = 1.00

TRUSS PLATE MANUFACTURER IS NOT RESPONSIBLE FOR QUALITY CONTROL IN THE TRUSS MANUFACTURING PLANT .

NAIL VALUES

PLATE	GRIP(DRY) (PSI) MAX	MIN	SHEAR (PLI) MAX	MIN	SECTION (PLI) MAX	MIN
MT20	650	371	1747	788	1987	1873

PLATE PLACEMENT TOL. = 0.250 inches

PLATE ROTATION TOL. = 5.0 Deg.

JSI GRIP= 0.89 (A) (INPUT = 0.90)
JSI METAL= 0.35 (M) (INPUT = 1.00)

JOB NAME	TRUSS NAME	QUANTITY	PLY	JOB DESC.		DRWG NO.
336335	H223T		1	TRUSS DESC.	JT 45147	E21104183

Alpa Roof Truss, Maple

Version 8.420 S Jan 21 2021 MiTek Industries, Inc. Thu Oct 14 08:52:38 2021 Page 1

ID:hd511hZTz bdeQoS817GKByhVxV-SJb7yGhLJ9xFIxFxUsFVLksrCRov?ayjMzYDqxyTZHd

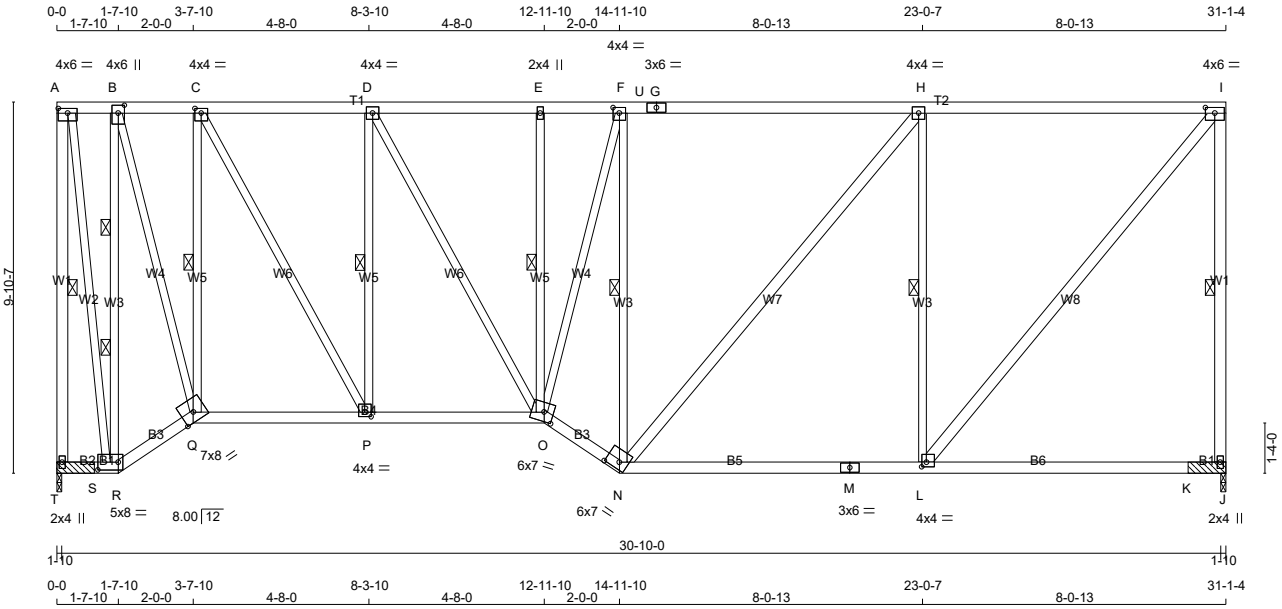

TOTAL WEIGHT = 3 X 201 = 603 lb

[M]

LUMBER

N. L. G. A. RULES

CHORDS	SIZE		LUMBER	DESCR.
T - A	2x4	DRY	No.2	SPF
A - G	2x4	DRY	1650F 1.5E	SPF
G - I	2x4	DRY	1650F 1.5E	SPF
J - I	2x4	DRY	No.2	SPF
T - R	2x4	DRY	No.2	SPF
R - Q	2x4	DRY	No.2	SPF
Q - O	2x4	DRY	No.2	SPF
O - N	2x4	DRY	No.2	SPF
N - M	2x4	DRY	No.2	SPF
M - J	2x4	DRY	No.2	SPF
ALL WEBS	2x3	DRY	No.2	SPF
EXCEPT				
N - H	2x4	DRY	No.2	SPF
L - I	2x4	DRY	No.2	SPF

DRY: SEASONED LUMBER.

PLATES (table is in inches)

JT	TYPE	PLATES	W	LEN	Y	X
A	TMVW-t	MT20	4.0	6.0	1.50	3.00
B	TMWW+t	MT20	4.0	6.0	2.50	2.00
C	TMWW-t	MT20	4.0	4.0	1.50	2.00
D	TMWW-t	MT20	4.0	4.0		
E	TMW+w	MT20	2.0	4.0		
F	TMWW-t	MT20	4.0	4.0	1.75	2.00
G	TS-t	MT20	3.0	6.0		
H	TMWW-t	MT20	4.0	4.0		
I	TMVW-t	MT20	4.0	6.0	1.75	3.00
J	BMV1+p	MT20	2.0	4.0		
L	BMWW-t	MT20	4.0	4.0	1.50	1.50
M	BS-t	MT20	3.0	6.0		
N	BBWW-h	MT20	6.0	7.0	2.25	4.25
O	BBWWW-m	MT20	6.0	7.0	3.00	3.00
P	BMWW-t	MT20	4.0	4.0	1.50	2.00
Q	BBWW-h	MT20	7.0	8.0	Edge	
R	BBWW-l	MT20	5.0	8.0	2.50	6.50
T	BMV1+p	MT20	2.0	4.0		

Edge - INDICATES REFERENCE CORNER OF PLATE TOUCHES EDGE OF CHORD.

LATERAL BRACE(S) SHOWN SHALL BE 2X4 SPF#2

DIMENSIONS, SUPPORTS AND LOADINGS SPECIFIED BY FABRICATOR TO BE VERIFIED BY BUILDING DESIGNER

BEARINGS

JT	FACTORED GROSS REACTION VERT	HORZ	MAXIMUM FACTORED GROSS REACTION DOWN	HORZ	UPLIFT	INPUT BRG IN-SX	REQRD BRG IN-SX
T	1617	0	1617	0	0	1-10	1-10 & BLOCK
J	1617	0	1617	0	0	1-10	1-10 & BLOCK

UNFACTORED REACTIONS

JT	1ST LCASE COMBINED	MAX./MIN. COMPONENT REACTIONS SNOW	LIVE	PERM.LIVE	WIND	DEAD	SOIL
T	1163	653 / 0	0 / 0	0 / 0	0 / 0	510 / 0	0 / 0
J	1163	653 / 0	0 / 0	0 / 0	0 / 0	510 / 0	0 / 0

BEARING MATERIAL TO BE SPF NO.2 OR BETTER AT JOINT(S) T, J

2x4 DRY SPF No.2 BEARING BLOCK 12" LONG AT JT. T ATTACHED TO FRONT SIDE WITH 2 ROWS OF (0.122"X3") SPIRAL NAILS SPACED 3" C.C. 8 NAILS TOTAL.

2x4 DRY SPF No.2 BEARING BLOCK 12" LONG AT JT. J ATTACHED TO FRONT SIDE WITH 2 ROWS OF (0.122"X3") SPIRAL NAILS SPACED 3" C.C. 8 NAILS TOTAL.

BRACING

FOR SECTION A-I, MAX. PURLIN SPACING = 2.00 FT.
FOR OTHER SECTIONS, TOP CHORD TO BE SHEATHED OR MAX. PURLIN SPACING = 0.00 FT.
MAX. UNBRACED BOTTOM CHORD LENGTH = 10.00 FT OR RIGID CEILING DIRECTLY APPLIED.

ALL PITCH BREAKS AND PERIMETER CORNER JOINTS MUST BE LATERALLY RESTRAINED.

1 LATERAL BRACE(S) AT 1/ 2 LENGTH OF A-T, I-J, C-Q, D-P, E-O, F-N, H-L.
2 LATERAL BRACE(S) AT 1/ 3 LENGTH OF B-R.

END VERTICAL(S) MUST BE SHEATHED OR HAVE BRACES AS INDICATED IN THE MAX. UNBRACED LENGTH COLUMN OF THE TABLE BELOW

LOADING

TOTAL LOAD CASES: (4)

CHORDS

MEMB. FR-TO	MAX. FACTORED FORCE (LBS)	FACTORED VERT. LOAD LC1 (PLF) FROM	TO	MAX CSI (LC)	MAX. UNBRAC LENGTH
T- A	-1602 / 0	0.0	0.0	0.75 (1)	5.22
A- B	-255 / 0	-85.5	-85.5	0.09 (1)	2.00
B- C	-639 / 0	-85.5	-85.5	0.10 (1)	2.00
C- D	-1220 / 0	-85.5	-85.5	0.22 (1)	2.00
D- E	-1492 / 0	-85.5	-85.5	0.23 (1)	2.00
E- F	-1490 / 0	-85.5	-85.5	0.35 (1)	2.00
F- U	-1347 / 0	-85.5	-85.5	0.82 (1)	2.00
U- G	-1347 / 0	-85.5	-85.5	0.82 (1)	2.00
G- H	-1347 / 0	-85.5	-85.5	0.82 (1)	2.00
H- I	-1087 / 0	-85.5	-85.5	0.79 (1)	2.00
J- I	-1560 / 0	0.0	0.0	0.73 (1)	5.27
T- S	0 / 0	-18.5	-18.5	0.01 (4)	10.00
S- R	0 / 0	-18.5	-18.5	0.01 (4)	10.00
R- Q	0 / 285	-18.5	-18.5	0.06 (1)	10.00
Q- P	0 / 656	-18.5	-18.5	0.18 (4)	10.00
P- O	0 / 1220	-18.5	-18.5	0.25 (1)	10.00
O- N	0 / 1605	-18.5	-18.5	0.27 (1)	10.00
N- M	0 / 1087	-18.5	-18.5	0.46 (4)	10.00
M- L	0 / 1087	-18.5	-18.5	0.46 (4)	10.00
L- K	0 / 0	-18.5	-18.5	0.35 (4)	10.00
K- J	0 / 0	-18.5	-18.5	0.35 (4)	10.00

WEBS

MEMB. FR-TO	MAX. FACTORED FORCE (LBS)	MAX CSI (LC)
A- R	0 / 1510	0.34 (1)
R- B	-1613 / 0	0.96 (1)
B- Q	0 / 1622	0.37 (1)
Q- C	-1359 / 0	0.63 (1)
C- P	0 / 1166	0.26 (1)
P- D	-922 / 0	0.43 (1)
D- O	0 / 550	0.12 (1)
O- E	-137 / 0	0.06 (1)
O- F	0 / 625	0.14 (1)
N- F	-1121 / 0	0.74 (1)
N- H	0 / 404	0.06 (1)
L- H	-1108 / 0	0.73 (1)
L- I	0 / 1687	0.27 (1)

DESIGN CRITERIA

SPECIFIED LOADS:

TOP CH.	LL	=	21.0	PSF
	DL	=	6.0	PSF
BOT CH.	LL	=	0.0	PSF
	DL	=	7.4	PSF
TOTAL LOAD		=	34.4	PSF

SPACING = 24.0 IN. C/C

LOADING IN FLAT SECTION BASED ON PIGGYBACK TRUSS WITH SLOPES OF 6.00/12 AND -6.00/12 AND RESPECTIVE HEEL HEIGHTS OF 0-0 AND 0-0 AND AN ADDITIONAL DEAD LOAD OF 3.0 P.S.F.

THIS TRUSS IS DESIGNED FOR RESIDENTIAL OR SMALL BUILDING REQUIREMENTS OF PART 9, NBCC 2015

THIS DESIGN COMPLIES WITH:
- PART 9 OF BCBC 2018 , ABC 2019
- PART 9 OF OBC 2012 (2019 AMENDMENT)
- CSA 086-14
- TPIC 2014

(55 % OF 23.0 P.S.F. G.S.L. PLUS 8.4 P.S.F. RAIN LOAD) EQUALS 21.0 P.S.F. SPECIFIED ROOF LIVE LOAD

ALLOWABLE DEFL.(LL)= L/360 (1.04")
CALCULATED VERT. DEFL.(LL) = L/ 999 (0.11")
ALLOWABLE DEFL.(TL)= L/360 (1.04")
CALCULATED VERT. DEFL.(TL) = L/ 999 (0.24")

CSI: TC=0.82/1.00 (F-H:1) , BC=0.46/1.00 (L-N:4) , WB=0.96/1.00 (B-R:1) , SSI=0.33/1.00 (H-I:1)

DOL LUMBER=1.00 NAIL=1.00 LS BEND=1.10 COMP=1.10 SHEAR=1.10 TENS= 1.10

COMPANION LIVE LOAD FACTOR = 1.00

TRUSS PLATE MANUFACTURER IS NOT RESPONSIBLE FOR QUALITY CONTROL IN THE TRUSS MANUFACTURING PLANT .

NAIL VALUES

PLATE	GRIP(DRY) (PSI) MAX	MIN	SHEAR (PLI) MAX	MIN	SECTION (PLI) MAX	MIN
MT20	650	371	1747	788	1987	1873

PLATE PLACEMENT TOL. = 0.250 inches

PLATE ROTATION TOL. = 5.0 Deg.

JSI GRIP= 0.90 (L) (INPUT = 0.90)
JSI METAL= 0.38 (L) (INPUT = 1.00)

JOB NAME	TRUSS NAME	QUANTITY	PLY	JOB DESC.		DRWG NO.
336335	H224P		1	TRUSS DESC.	JT 45147	E21104184

Alpa Roof Truss, Maple

Version 8.420 S Jan 21 2021 MiTek Industries, Inc. Thu Oct 14 08:53:23 2021 Page 1

ID:hd511hZTz_bdeQoS817GKByhVxV-dzp7OfEZj_ctCrBbdpZ3gDDZjaBa28BLiTx5kqyTZGw

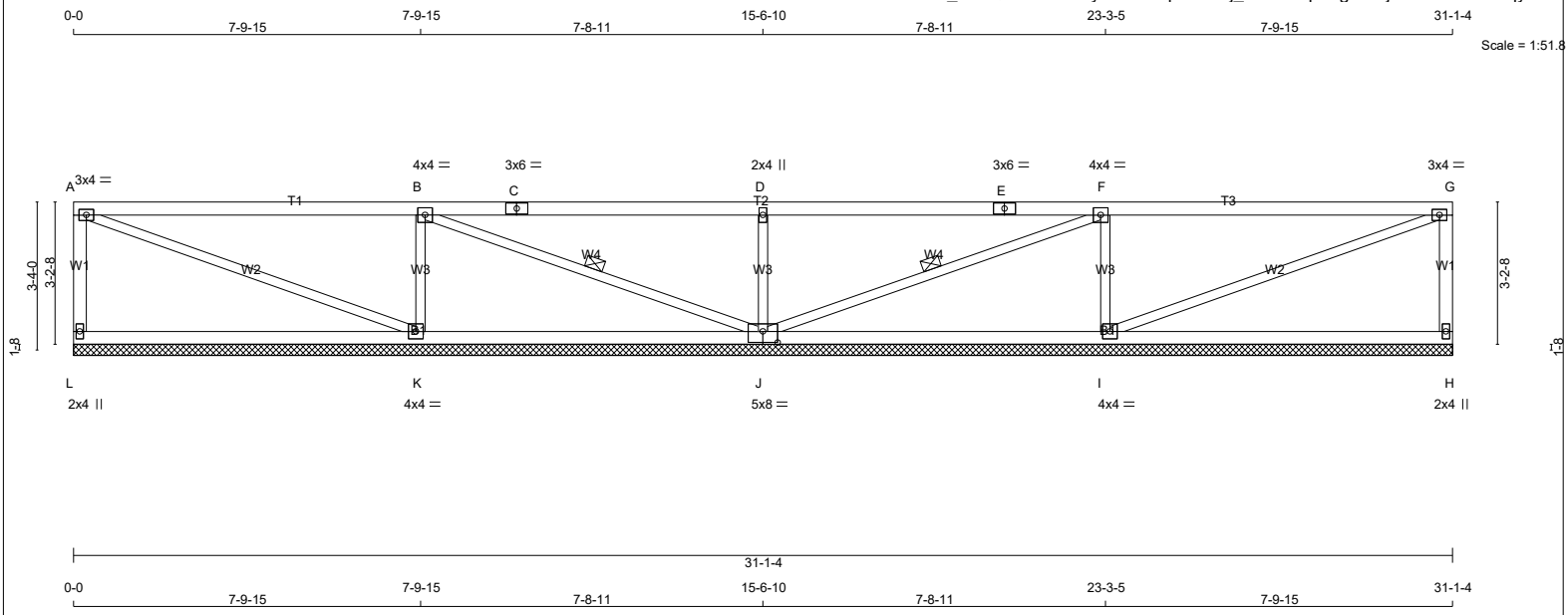

TOTAL WEIGHT = 109 lb

[M]

LUMBER

N. L. G. A. RULES

CHORDS	SIZE		LUMBER	DESCR.
L - A	2x4	DRY	No.2	SPF
A - C	2x4	DRY	No.2	SPF
C - E	2x4	DRY	No.2	SPF
E - G	2x4	DRY	No.2	SPF
H - G	2x4	DRY	No.2	SPF
L - J	2x4	DRY	No.2	SPF
J - H	2x4	DRY	No.2	SPF
ALL WEBS	2x3	DRY	No.2	SPF

DRY: SEASONED LUMBER.

PLATES (table is in inches)

JT	TYPE	PLATES	W	LEN	Y	X
A	TMVW-t	MT20	3.0	4.0		
B	TMWW-t	MT20	4.0	4.0		
C	TS-t	MT20	3.0	6.0		
D	TMW+w	MT20	2.0	4.0		
E	TS-t	MT20	3.0	6.0		
F	TMWW-t	MT20	4.0	4.0		
G	TMVW-t	MT20	3.0	4.0		
H	BMV1+p	MT20	2.0	4.0		
I	BMWW1-t	MT20	4.0	4.0		
J	BSWWW1-l	MT20	5.0	8.0	3.00	4.00
K	BMWW1-t	MT20	4.0	4.0		
L	BMV1+p	MT20	2.0	4.0		

LATERAL BRACE(S) SHOWN SHALL BE 2X4 SPF#2

DIMENSIONS, SUPPORTS AND LOADINGS SPECIFIED BY FABRICATOR TO BE VERIFIED BY BUILDING DESIGNER

BEARINGS

JT	FACTORED GROSS REACTION VERT	HORZ	MAXIMUM FACTORED GROSS REACTION DOWN	HORZ	UPLIFT	INPUT BRG IN-SX	REQRD BRG IN-SX
L	296	0	296	0	0	31-1-4 (15-6-10)	1-8
H	296	0	296	0	0	31-1-4 (15-6-10)	1-8
K	854	0	854	0	0	31-1-4 (15-6-10)	1-8
J	701	0	701	0	0	31-1-4 (15-6-10)	1-8
I	854	0	854	0	0	31-1-4 (15-6-10)	1-8

VALUE IN PARENTHESIS INDICATES EFFECTIVE BEARING LENGTH

UNFACTORED REACTIONS

JT	1ST LCASE COMBINED	MAX./MIN. COMPONENT REACTIONS SNOW	LIVE	PERM.LIVE	WIND	DEAD	SOIL
L	211	130 / 0	0 / 0	0 / 0	0 / 0	81 / 0	0 / 0
H	211	130 / 0	0 / 0	0 / 0	0 / 0	81 / 0	0 / 0
K	610	363 / 0	0 / 0	0 / 0	0 / 0	248 / 0	0 / 0
J	497	320 / 0	0 / 0	0 / 0	0 / 0	177 / 0	0 / 0
I	610	363 / 0	0 / 0	0 / 0	0 / 0	248 / 0	0 / 0

BEARING MATERIAL TO BE SPF NO.2 OR BETTER AT JOINT(S) L, H, K, J, I

BRACING

TOP CHORD TO BE SHEATHED OR MAX. PURLIN SPACING = 10.00 FT.
MAX. UNBRACED BOTTOM CHORD LENGTH = 10.00 FT OR RIGID CEILING DIRECTLY APPLIED.

ALL PITCH BREAKS AND PERIMETER CORNER JOINTS MUST BE LATERALLY RESTRAINED.

1 LATERAL BRACE(S) AT 1/ 2 LENGTH OF B-J, F-J.

END VERTICAL(S) MUST BE SHEATHED OR HAVE BRACES AS INDICATED IN THE MAX. UNBRACED LENGTH COLUMN OF THE TABLE BELOW

LOADING

TOTAL LOAD CASES: (4)

CHORDS

MEMB. FR-TO	MAX. FACTORED FORCE (LBS)	FACTORED VERT. LOAD LC1 (PLF) FROM	TO	MAX CSI (LC)	MAX. UNBRAC LENGTH
L- A	-242 / 0	0.0	0.0	0.04 (1)	7.81
A- B	-4 / 0	-78.0	-78.0	0.69 (1)	10.00
B- C	0 / 47	-78.0	-78.0	0.70 (1)	10.00
C- D	0 / 47	-78.0	-78.0	0.70 (1)	10.00
D- E	0 / 47	-78.0	-78.0	0.70 (1)	10.00
E- F	0 / 47	-78.0	-78.0	0.70 (1)	10.00
F- G	-4 / 0	-78.0	-78.0	0.69 (1)	10.00
H- G	-242 / 0	0.0	0.0	0.04 (1)	7.81
L- K	0 / 0	-18.5	-18.5	0.33 (4)	10.00
K- J	0 / 4	-18.5	-18.5	0.33 (4)	10.00
J- I	0 / 4	-18.5	-18.5	0.33 (4)	10.00
I- H	0 / 0	-18.5	-18.5	0.33 (4)	10.00

WEBS

MEMB. FR-TO	MAX. FACTORED FORCE (LBS)	MAX CSI (LC)
A- K	0 / 4	0.00 (1)
K- B	-675 / 0	0.13 (1)
B- J	-55 / 0	0.03 (1)
J- D	-556 / 0	0.10 (1)
J- F	-55 / 0	0.03 (1)
I- F	-675 / 0	0.13 (1)
I- G	0 / 4	0.00 (1)

DESIGN CRITERIA

SPECIFIED LOADS:

TOP CH.	LL	=	21.0	PSF
	DL	=	6.0	PSF
BOT CH.	LL	=	0.0	PSF
	DL	=	7.4	PSF
TOTAL LOAD		=	34.4	PSF

SPACING = 24.0 IN. C/C

LOADING IN FLAT SECTION BASED ON A SLOPE OF 2.00/12 MINIMUM

THIS TRUSS IS DESIGNED FOR RESIDENTIAL OR SMALL BUILDING REQUIREMENTS OF PART 9, NBCC 2015

THIS DESIGN COMPLIES WITH:
- PART 9 OF BCBC 2018 , ABC 2019
- PART 9 OF OBC 2012 (2019 AMENDMENT)
- CSA 086-14
- TPIC 2014

(55 % OF 23.0 P.S.F. G.S.L. PLUS 8.4 P.S.F. RAIN LOAD) EQUALS 21.0 P.S.F. SPECIFIED ROOF LIVE LOAD

CSI: TC=0.70/1.00 (B-D:1) , BC=0.33/1.00 (K-L:4) , WB=0.13/1.00 (B-K:1) , SSI=0.29/1.00 (A-B:1)

DOL LUMBER=1.00 NAIL=1.00 LS BEND=1.10 COMP=1.10 SHEAR=1.10 TENS= 1.10

COMPANION LIVE LOAD FACTOR = 1.00

TRUSS PLATE MANUFACTURER IS NOT RESPONSIBLE FOR QUALITY CONTROL IN THE TRUSS MANUFACTURING PLANT .

NAIL VALUES

PLATE	GRIP(DRY) (PSI) MAX	MIN	SHEAR (PLI) MAX	MIN	SECTION (PLI) MAX	MIN
MT20	650	371	1747	788	1987	1873

PLATE PLACEMENT TOL. = 0.250 inches

PLATE ROTATION TOL. = 5.0 Deg.

JSI GRIP= 0.82 (G) (INPUT = 0.90)
JSI METAL= 0.30 (J) (INPUT = 1.00)

JOB NAME	TRUSS NAME	QUANTITY	PLY	JOB DESC.		DRWG NO.
336335	H225P		1	TRUSS DESC.	JT 45147	E21104185

Alpa Roof Truss, Maple

Version 8.420 S Jan 21 2021 MiTek Industries, Inc. Thu Oct 14 08:53:24 2021 Page 1

ID:hd511hZTz_bdeQoS817GKByhVxV-69NVc?FCUIkkp?mnBW4ICQmjM_XpnZyUx7heHGyTZGv

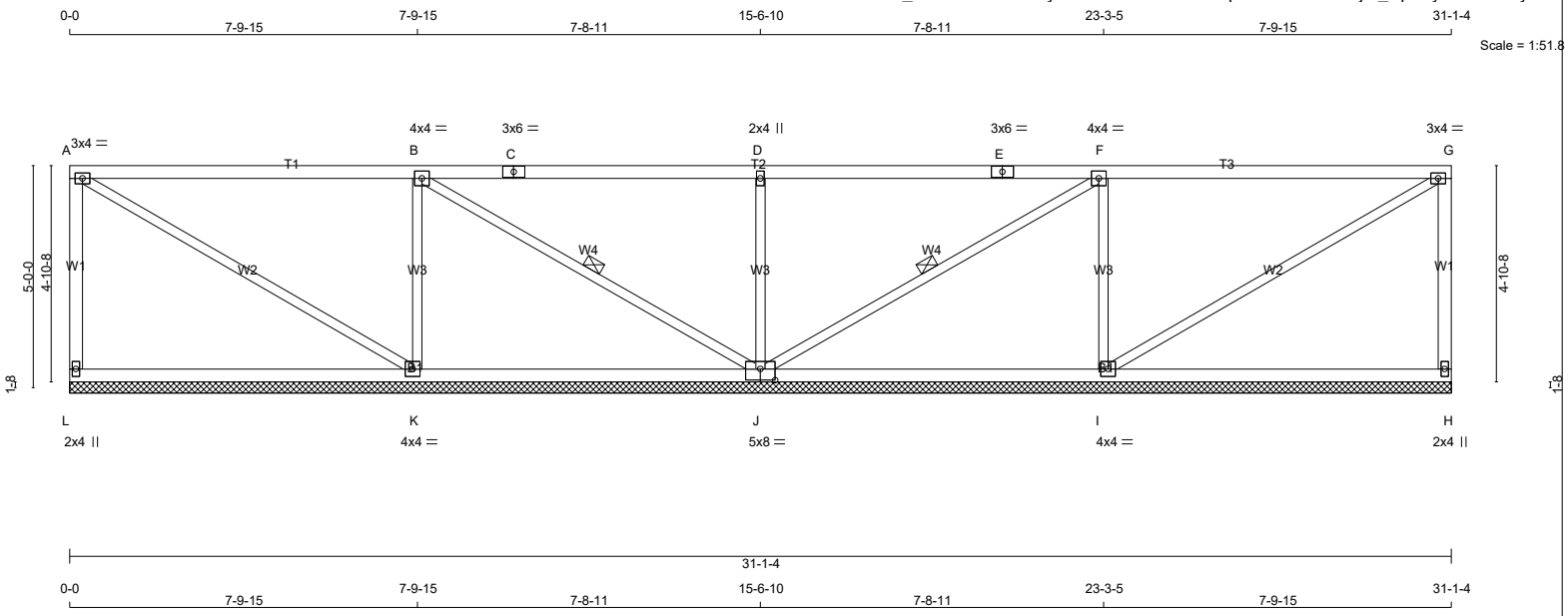

TOTAL WEIGHT = 119 lb

LUMBER

N. L. G. A. RULES

CHORDS	SIZE		LUMBER	DESCR.
L - A	2x4	DRY	No.2	SPF
A - C	2x4	DRY	No.2	SPF
C - E	2x4	DRY	No.2	SPF
E - G	2x4	DRY	No.2	SPF
H - G	2x4	DRY	No.2	SPF
L - J	2x4	DRY	No.2	SPF
J - H	2x4	DRY	No.2	SPF
ALL WEBS	2x3	DRY	No.2	SPF

DRY: SEASONED LUMBER.

PLATES (table is in inches)

JT	TYPE	PLATES	W	LEN	Y	X
A	TMVW-t	MT20	3.0	4.0		
B	TMWW-t	MT20	4.0	4.0		
C	TS-t	MT20	3.0	6.0		
D	TMW+w	MT20	2.0	4.0		
E	TS-t	MT20	3.0	6.0		
F	TMWW-t	MT20	4.0	4.0		
G	TMVW-t	MT20	3.0	4.0		
H	BMV1+p	MT20	2.0	4.0		
I	BMWW1-t	MT20	4.0	4.0		
J	BSWWW1-l	MT20	5.0	8.0	3.00	4.00
K	BMWW1-t	MT20	4.0	4.0		
L	BMV1+p	MT20	2.0	4.0		

LATERAL BRACE(S) SHOWN SHALL BE 2X4 SPF#2

DIMENSIONS, SUPPORTS AND LOADINGS SPECIFIED BY FABRICATOR TO BE VERIFIED BY BUILDING DESIGNER

BEARINGS

JT	FACTORED GROSS REACTION VERT	HORZ	MAXIMUM FACTORED GROSS REACTION DOWN	HORZ	UPLIFT	INPUT BRG IN-SX	REQRD BRG IN-SX
L	297	0	297	0	0	31-1-4 (15-6-10)	108
H	297	0	297	0	0	31-1-4 (15-6-10)	108
K	814	0	814	0	0	31-1-4 (15-6-10)	108
J	780	0	780	0	0	31-1-4 (15-6-10)	108
I	814	0	814	0	0	31-1-4 (15-6-10)	108

VALUE IN PARENTHESIS INDICATES EFFECTIVE BEARING LENGTH

UNFACTORED REACTIONS

JT	1ST LCASE COMBINED	MAX./MIN. COMPONENT REACTIONS SNOW	LIVE	PERM.LIVE	WIND	DEAD	SOIL
L	211	130 / 0	0 / 0	0 / 0	0 / 0	81 / 0	0 / 0
H	211	130 / 0	0 / 0	0 / 0	0 / 0	81 / 0	0 / 0
K	583	341 / 0	0 / 0	0 / 0	0 / 0	241 / 0	0 / 0
J	551	362 / 0	0 / 0	0 / 0	0 / 0	189 / 0	0 / 0
I	583	341 / 0	0 / 0	0 / 0	0 / 0	241 / 0	0 / 0

BEARING MATERIAL TO BE SPF NO.2 OR BETTER AT JOINT(S) L, H, K, J, I

BRACING

TOP CHORD TO BE SHEATHED OR MAX. PURLIN SPACING = 10.00 FT.
MAX. UNBRACED BOTTOM CHORD LENGTH = 10.00 FT OR RIGID CEILING DIRECTLY APPLIED.

ALL PITCH BREAKS AND PERIMETER CORNER JOINTS MUST BE LATERALLY RESTRAINED.

1 LATERAL BRACE(S) AT 1/ 2 LENGTH OF B-J, F-J.

END VERTICAL(S) MUST BE SHEATHED OR HAVE BRACES AS INDICATED IN THE MAX. UNBRACED LENGTH COLUMN OF THE TABLE BELOW

LOADING

TOTAL LOAD CASES: (4)

CHORDS

MEMB. FR-TO	MAX. FACTORED FORCE (LBS)	FACTORED VERT. LOAD LC1 (PLF) FROM	TO	MAX CSI (LC)	MAX. UNBRAC LENGTH
L- A	-242 / 0	0.0	0.0	0.09 (1)	7.81
A- B	-3 / 0	-78.0	-78.0	0.69 (1)	10.00
B- C	0 / 96	-78.0	-78.0	0.71 (1)	10.00
C- D	0 / 96	-78.0	-78.0	0.71 (1)	10.00
D- E	0 / 96	-78.0	-78.0	0.71 (1)	10.00
E- F	0 / 96	-78.0	-78.0	0.71 (1)	10.00
F- G	-3 / 0	-78.0	-78.0	0.69 (1)	10.00
H- G	-242 / 0	0.0	0.0	0.09 (1)	7.81
L- K	0 / 0	-18.5	-18.5	0.33 (4)	10.00
K- J	0 / 3	-18.5	-18.5	0.33 (4)	10.00
J- I	0 / 3	-18.5	-18.5	0.33 (4)	10.00
I- H	0 / 0	-18.5	-18.5	0.33 (4)	10.00

WEBS

MEMB. FR-TO	MAX. FACTORED FORCE (LBS)	MAX CSI (LC)
A- K	0 / 3	0.00 (1)
K- B	-636 / 0	0.22 (1)
B- J	-115 / 0	0.06 (1)
J- D	-556 / 0	0.19 (1)
J- F	-115 / 0	0.06 (1)
I- F	-636 / 0	0.22 (1)
I- G	0 / 3	0.00 (1)

DESIGN CRITERIA

SPECIFIED LOADS:

TOP CH.	LL	=	21.0	PSF
	DL	=	6.0	PSF
BOT CH.	LL	=	0.0	PSF
	DL	=	7.4	PSF
TOTAL LOAD		=	34.4	PSF

SPACING = 24.0 IN. C/C

LOADING IN FLAT SECTION BASED ON A SLOPE OF 2.00/12 MINIMUM

THIS TRUSS IS DESIGNED FOR RESIDENTIAL OR SMALL BUILDING REQUIREMENTS OF PART 9, NBCC 2015

THIS DESIGN COMPLIES WITH:
- PART 9 OF BCBC 2018 , ABC 2019
- PART 9 OF OBC 2012 (2019 AMENDMENT)
- CSA 086-14
- TPIC 2014

(55 % OF 23.0 P.S.F. G.S.L. PLUS 8.4 P.S.F. RAIN LOAD) EQUALS 21.0 P.S.F. SPECIFIED ROOF LIVE LOAD

CSI: TC=0.71/1.00 (B-D:1) , BC=0.33/1.00 (K-L:4) , WB=0.22/1.00 (B-K:1) , SSI=0.29/1.00 (A-B:1)

DOL LUMBER=1.00 NAIL=1.00 LS BEND=1.10 COMP=1.10 SHEAR=1.10 TENS= 1.10

COMPANION LIVE LOAD FACTOR = 1.00

TRUSS PLATE MANUFACTURER IS NOT RESPONSIBLE FOR QUALITY CONTROL IN THE TRUSS MANUFACTURING PLANT .

NAIL VALUES

PLATE	GRIP(DRY) (PSI) MAX	MIN	SHEAR (PLI) MAX	MIN	SECTION (PLI) MAX	MIN
MT20	650	371	1747	788	1987	1873

PLATE PLACEMENT TOL. = 0.250 inches

PLATE ROTATION TOL. = 5.0 Deg.

JSI GRIP= 0.76 (A) (INPUT = 0.90)
JSI METAL= 0.33 (J) (INPUT = 1.00)

JOB NAME	TRUSS NAME	QUANTITY	PLY	JOB DESC.		DRWG NO.
336335	H226P		1	TRUSS DESC.	JT 45147	E21104186

Alpa Roof Truss, Maple

Version 8.420 S Jan 21 2021 MiTek Industries, Inc. Thu Oct 14 08:53:26 2021 Page 1

ID:hd511hZTz_bdeQoS817GKByhVxV-2YUG1hGS0v_S3JwAIx6mHrr3loCHFQUnORAIL9yTZGt

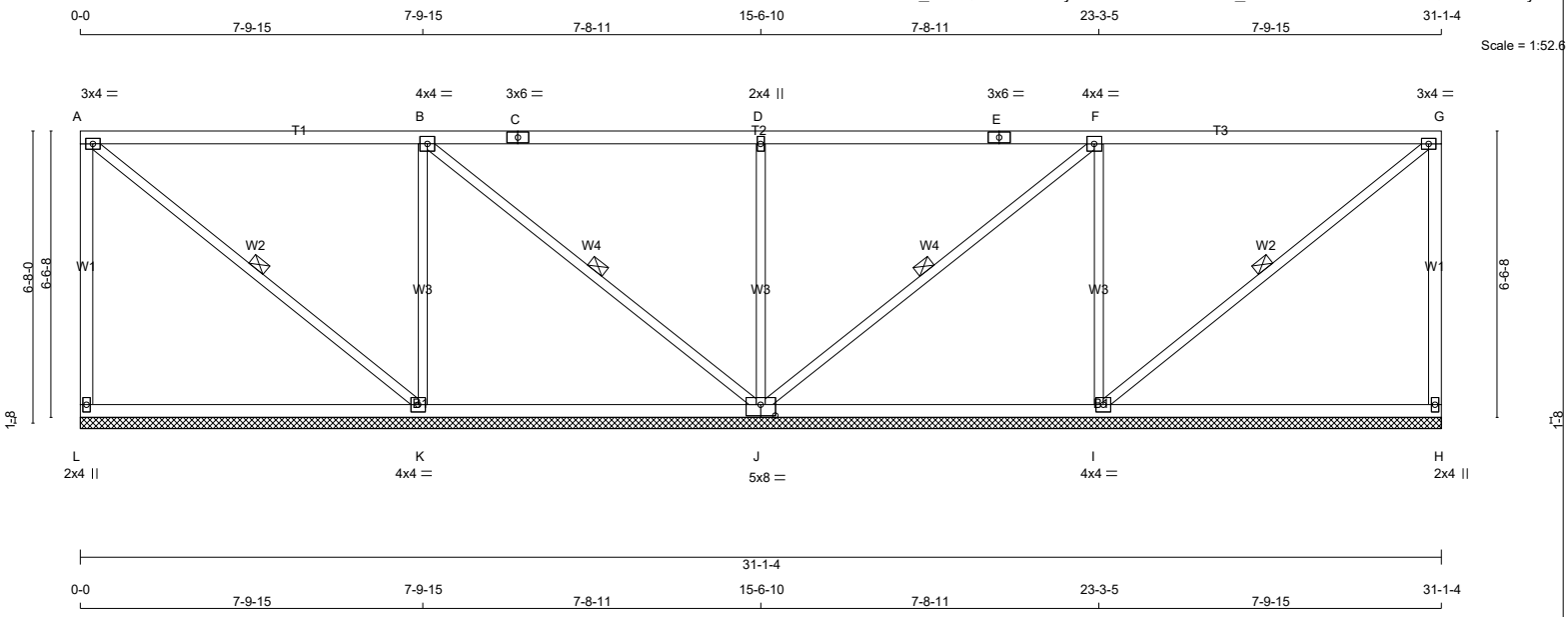

TOTAL WEIGHT = 130 lb

[M]

LUMBER

N. L. G. A. RULES

CHORDS	SIZE		LUMBER	DESCR.
L - A	2x4	DRY	No.2	SPF
A - C	2x4	DRY	No.2	SPF
C - E	2x4	DRY	No.2	SPF
E - G	2x4	DRY	No.2	SPF
H - G	2x4	DRY	No.2	SPF
L - J	2x4	DRY	No.2	SPF
J - H	2x4	DRY	No.2	SPF
ALL WEBS	2x3	DRY	No.2	SPF

DRY: SEASONED LUMBER.

PLATES (table is in inches)

JT	TYPE	PLATES	W	LEN	Y	X
A	TMVW-t	MT20	3.0	4.0		
B	TMWW-t	MT20	4.0	4.0		
C	TS-t	MT20	3.0	6.0		
D	TMW+w	MT20	2.0	4.0		
E	TS-t	MT20	3.0	6.0		
F	TMWW-t	MT20	4.0	4.0		
G	TMVW-t	MT20	3.0	4.0		
H	BMV1+p	MT20	2.0	4.0		
I	BMWW1-t	MT20	4.0	4.0		
J	BSWWW1-l	MT20	5.0	8.0	3.00	4.00
K	BMWW1-t	MT20	4.0	4.0		
L	BMV1+p	MT20	2.0	4.0		

LATERAL BRACE(S) SHOWN SHALL BE 2X4 SPF#2

DIMENSIONS, SUPPORTS AND LOADINGS SPECIFIED BY FABRICATOR TO BE VERIFIED BY BUILDING DESIGNER

BEARINGS

JT	FACTORED GROSS REACTION VERT	HORZ	MAXIMUM FACTORED GROSS REACTION DOWN	HORZ	UPLIFT	INPUT BRG IN-SX	REQRD BRG IN-SX
L	292	0	292	0	0	31-1-4 (15-6-10)	108
H	292	0	292	0	0	31-1-4 (15-6-10)	108
K	768	0	768	0	0	31-1-4 (15-6-10)	108
J	879	0	879	0	0	31-1-4 (15-6-10)	108
I	768	0	768	0	0	31-1-4 (15-6-10)	108

VALUE IN PARENTHESIS INDICATES EFFECTIVE BEARING LENGTH

UNFACTORED REACTIONS

JT	1ST LCASE COMBINED	MAX./MIN. COMPONENT REACTIONS SNOW	LIVE	PERM.LIVE	WIND	DEAD	SOIL
L	208	128 / 0	0 / 0	0 / 0	0 / 0	80 / 0	0 / 0
H	208	128 / 0	0 / 0	0 / 0	0 / 0	80 / 0	0 / 0
K	551	317 / 0	0 / 0	0 / 0	0 / 0	234 / 0	0 / 0
J	620	416 / 0	0 / 0	0 / 0	0 / 0	204 / 0	0 / 0
I	551	317 / 0	0 / 0	0 / 0	0 / 0	234 / 0	0 / 0

BEARING MATERIAL TO BE SPF NO.2 OR BETTER AT JOINT(S) L, H, K, J, I

BRACING

TOP CHORD TO BE SHEATHED OR MAX. PURLIN SPACING = 10.00 FT.
MAX. UNBRACED BOTTOM CHORD LENGTH = 10.00 FT OR RIGID CEILING DIRECTLY APPLIED.

ALL PITCH BREAKS AND PERIMETER CORNER JOINTS MUST BE LATERALLY RESTRAINED.

1 LATERAL BRACE(S) AT 1/ 2 LENGTH OF A-K, B-J, F-J, G-I.

END VERTICAL(S) MUST BE SHEATHED OR HAVE BRACES AS INDICATED IN THE MAX. UNBRACED LENGTH COLUMN OF THE TABLE BELOW

LOADING

TOTAL LOAD CASES: (4)

CHORDS

MEMB. FR-TO	MAX. FACTORED FORCE (LBS)	FACTORED VERT. LOAD LC1 (PLF) FROM	TO	MAX CSI (LC)	MAX. UNBRAC LENGTH
L- A	-238 / 0	0.0	0.0	0.21 (1)	7.81
A- B	0 / 3	-78.0	-78.0	0.69 (1)	10.00
B- C	0 / 137	-78.0	-78.0	0.71 (1)	10.00
C- D	0 / 137	-78.0	-78.0	0.71 (1)	10.00
D- E	0 / 137	-78.0	-78.0	0.71 (1)	10.00
E- F	0 / 137	-78.0	-78.0	0.71 (1)	10.00
F- G	0 / 3	-78.0	-78.0	0.69 (1)	10.00
H- G	-238 / 0	0.0	0.0	0.21 (1)	7.81
L- K	0 / 0	-18.5	-18.5	0.33 (4)	10.00
K- J	-3 / 0	-18.5	-18.5	0.33 (4)	10.00
J- I	-3 / 0	-18.5	-18.5	0.33 (4)	10.00
I- H	0 / 0	-18.5	-18.5	0.33 (4)	10.00

WEBS

MEMB. FR-TO	MAX. FACTORED FORCE (LBS)	MAX CSI (LC)
A- K	-4 / 0	0.00 (1)
K- B	-586 / 0	0.41 (1)
B- J	-173 / 0	0.12 (1)
J- D	-556 / 0	0.39 (1)
J- F	-173 / 0	0.12 (1)
I- F	-586 / 0	0.41 (1)
I- G	-4 / 0	0.00 (1)

DESIGN CRITERIA

SPECIFIED LOADS:

TOP CH.	LL	=	21.0	PSF
	DL	=	6.0	PSF
BOT CH.	LL	=	0.0	PSF
	DL	=	7.4	PSF
TOTAL LOAD		=	34.4	PSF

SPACING = 24.0 IN. C/C

LOADING IN FLAT SECTION BASED ON A SLOPE OF 2.00/12 MINIMUM

THIS TRUSS IS DESIGNED FOR RESIDENTIAL OR SMALL BUILDING REQUIREMENTS OF PART 9, NBCC 2015

THIS DESIGN COMPLIES WITH:
- PART 9 OF BCBC 2018 , ABC 2019
- PART 9 OF OBC 2012 (2019 AMENDMENT)
- CSA 086-14
- TPIC 2014

(55 % OF 23.0 P.S.F. G.S.L. PLUS 8.4 P.S.F. RAIN LOAD) EQUALS 21.0 P.S.F. SPECIFIED ROOF LIVE LOAD

CSI: TC=0.71/1.00 (B-D:1) , BC=0.33/1.00 (K-L:4) , WB=0.41/1.00 (B-K:1) , SSI=0.29/1.00 (A-B:1)

DOL LUMBER=1.00 NAIL=1.00 LS BEND=1.10 COMP=1.10 SHEAR=1.10 TENS= 1.10

COMPANION LIVE LOAD FACTOR = 1.00

TRUSS PLATE MANUFACTURER IS NOT RESPONSIBLE FOR QUALITY CONTROL IN THE TRUSS MANUFACTURING PLANT .

NAIL VALUES

PLATE	GRIP(DRY) (PSI) MAX	MIN	SHEAR (PLI) MAX	MIN	SECTION (PLI) MAX	MIN
MT20	650	371	1747	788	1987	1873

PLATE PLACEMENT TOL. = 0.250 inches

PLATE ROTATION TOL. = 5.0 Deg.

JSI GRIP= 0.75 (A) (INPUT = 0.90)
JSI METAL= 0.38 (J) (INPUT = 1.00)

JOB NAME	TRUSS NAME	QUANTITY	PLY	JOB DESC.	DRWG NO.
336335	H240		1	TRUSS DESC. JT 45147	E21104187

Alpa Roof Truss, Maple

Version 8.420 S Jan 21 2021 MiTek Industries, Inc. Thu Oct 14 08:53:28 2021 Page 1

ID:hd511hZTz_bdeQoS817GKByhVxV-_wc0SMIiYWE9Ic4YQM8ENGwMHblMjBI4slfsQ2yTZGr

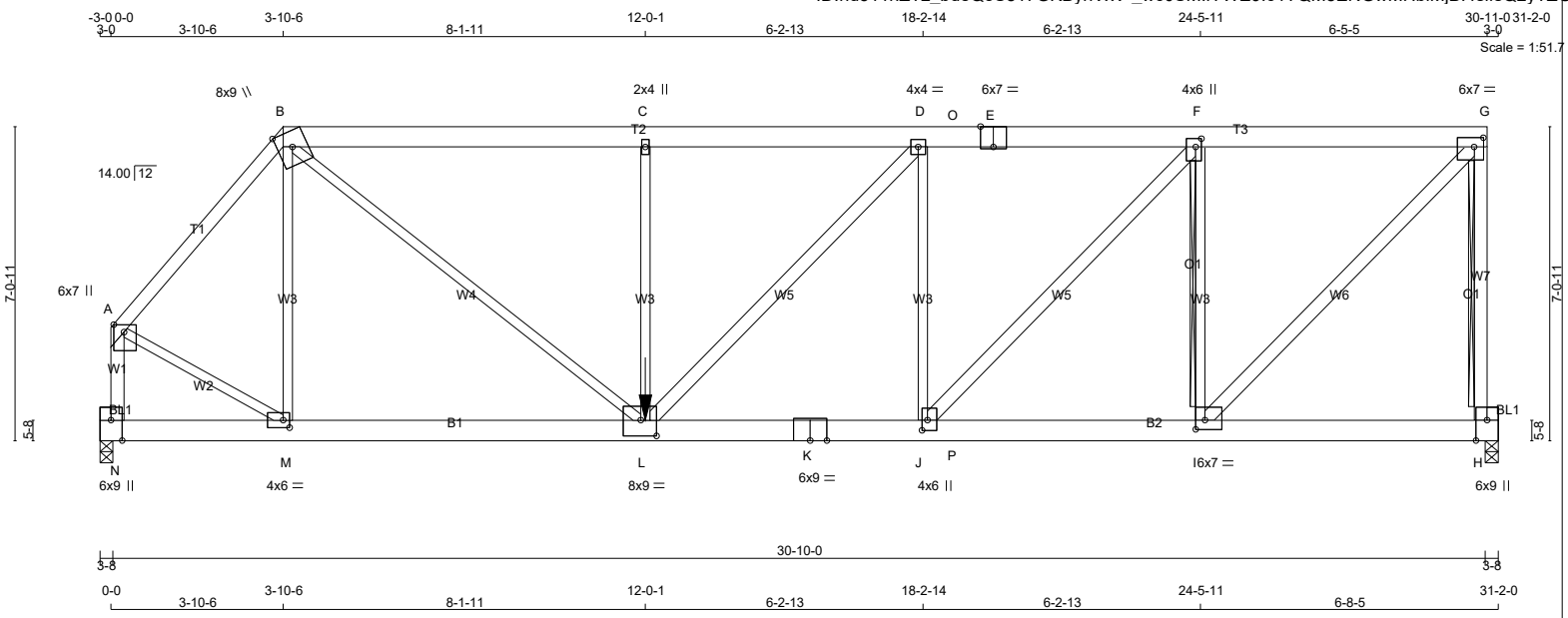

TOTAL WEIGHT = 183 lb

[M]

LUMBER

N. L. G. A. RULES

CHORDS	SIZE		LUMBER	DESCR.
A - B	2x4	DRY	No.2	SPF
B - E	2x6	DRY	No.2	SPF
E - G	2x6	DRY	No.2	SPF
H - G	2x4	DRY	No.2	SPF
N - A	2x4	DRY	No.2	SPF
N - K	2x6	DRY	No.2	SPF
K - H	2x6	DRY	No.2	SPF
BEARING BLOCKS				
BL1	2 - 2x4	DRY	No.2	SPF
ALL WEBS EXCEPT	2x3	DRY	No.2	SPF
L - D	2x4	DRY	No.2	SPF
J - F	2x4	DRY	No.2	SPF
I - G	2x4	DRY	No.2	SPF

DRY: SEASONED LUMBER.

PLATES (table is in inches)

JT	TYPE	PLATES	W	LEN	Y	X
A	TMVW+p	MT20	6.0	7.0	2.00	2.75
B	TTWW+m	MT20	8.0	9.0	Edge	
C	TMW+w	MT20	2.0	4.0		
D	TMWW-t	MT20	4.0	4.0		
E	TS-t	MT20	6.0	7.0	Edge	3.50
F	TMWW+t	MT20	4.0	6.0	2.25	1.50
G	TMVW-t	MT20	6.0	7.0	2.50	2.50
H	BMVK1+t	MT20	6.0	9.0	Edge	3.00
I	BMWW-t	MT20	6.0	7.0	2.50	2.50
J	BMWW+t	MT20	4.0	6.0	2.75	1.50
K	BS-t	MT20	6.0	9.0		
L	BMWWW-t	MT20	8.0	9.0	4.25	4.25
M	BMWW-t	MT20	4.0	6.0	2.00	1.75
N	BMVK1+t	MT20	6.0	9.0	Edge	3.00

Edge - INDICATES REFERENCE CORNER OF PLATE TOUCHES EDGE OF CHORD.

LATERAL BRACE(S) SHOWN SHALL BE 2X4 SPF#2

DIMENSIONS, SUPPORTS AND LOADINGS SPECIFIED BY FABRICATOR TO BE VERIFIED BY BUILDING DESIGNER

BEARINGS

JT	FACTORED GROSS REACTION VERT	HORZ	MAXIMUM FACTORED GROSS REACTION DOWN	HORZ	UPLIFT	INPUT BRG IN-SX	REQRD BRG IN-SX
H	3609	0	3609	0	0	3-8	3-8
N	3163	0	3163	0	0	3-8	3-8

UNFACTORED REACTIONS

JT	1ST LCASE COMBINED	MAX./MIN. COMPONENT REACTIONS SNOW	LIVE	PERM.LIVE	WIND	DEAD	SOIL
H	2573	1573 / 0	0 / 0	0 / 0	0 / 0	1000 / 0	0 / 0
N	2255	1378 / 0	0 / 0	0 / 0	0 / 0	877 / 0	0 / 0

BEARING MATERIAL TO BE SPF NO.2 OR BETTER AT JOINT(S) H, N

BEARING SIZE FACTOR = 1.15 AT JNT(S) H, N (BASED ON SUPPORT DEPTH = 1-8)

BRACING

TOP CHORD TO BE SHEATHED OR MAX. PURLIN SPACING = 3.31 FT.

MAX. UNBRACED BOTTOM CHORD LENGTH = 6.25 FT OR RIGID CEILING DIRECTLY APPLIED.

ALL PITCH BREAKS AND PERIMETER CORNER JOINTS MUST BE LATERALLY RESTRAINED.

2x4 DRY SPF No.2 T-BRACE AT G-H, F-I

FASTEN T AND I-BRACES TO NARROW EDGE OF WEB WITH ONE ROW PER PLY OF 3" COMMON WIRE NAILS @ 6" O.C. WITH 3" MINIMUM END DISTANCE. BRACE MUST COVER 90% OF WEB LENGTH.

END VERTICAL(S) MUST BE SHEATHED OR HAVE BRACES AS INDICATED IN THE MAX. UNBRACED LENGTH COLUMN OF THE TABLE BELOW

LOADING

TOTAL LOAD CASES: (4)

CHORDS

MEMB. FR-TO	MAX. FACTORED FORCE (LBS)	FACTORED VERT. LOAD (PLF) FROM	TO	LC1 CSI (LC)	MAX UNBRAC LENGTH
A- B	-2615 / 0	-78.0	-78.0	0.40 (1)	3.92
B- C	-4719 / 0	-78.0	-78.0	0.61 (1)	3.49
C- D	-4719 / 0	-78.0	-78.0	0.46 (1)	3.61
D- O	-4456 / 0	-78.0	-78.0	0.71 (1)	3.31
O- E	-4456 / 0	-165.7	-165.7	0.71 (1)	3.31
E- F	-4456 / 0	-165.7	-165.7	0.71 (1)	3.31
F- G	-2921 / 0	-165.7	-165.7	0.61 (1)	4.13
H- G	-3497 / 0	0.0	0.0	0.90 (1)	7.81
N- A	-3156 / 0	0.0	0.0	0.44 (1)	4.79
N- M	-219 / 0	-18.5	-18.5	0.10 (4)	6.25
M- L	0 / 1688	-18.5	-18.5	0.36 (1)	10.00
L- K	0 / 4456	-151.1	-151.1	0.93 (1)	10.00
K- J	0 / 4456	-151.1	-151.1	0.93 (1)	10.00
J- P	0 / 2921	-151.1	-151.1	0.62 (1)	10.00
P- I	0 / 2921	-39.3	-39.3	0.62 (1)	10.00
I- H	-77 / 0	-39.3	-39.3	0.17 (4)	6.25

WEBS

MEMB. FR-TO	MAX. FACTORED FORCE (LBS)	MAX CSI (LC)
M- B	-896 / 0	0.69 (1)
B- L	0 / 3903	0.97 (1)
L- C	-623 / 0	0.48 (1)
L- D	0 / 383	0.07 (1)
J- D	-891 / 0	0.68 (1)
J- F	0 / 2236	0.40 (1)
I- F	-2851 / 0	0.94 (1)
I- G	0 / 4291	0.76 (1)
A- M	0 / 2172	0.54 (1)

FACTORED CONCENTRATED LOADS (LBS)

JT	LOC.	LC1	MAX-	MAX+	FACE	DIR.	TYPE	HEEL	CONN.
L	12-0-1	-1578	-1578	---	FRONT	VERT	TOTAL	---	C1

CONNECTION REQUIREMENTS

1) **C1:** A SUITABLE HANGER/MECHANICAL CONNECTION IS REQUIRED.

DESIGN CRITERIA

*** SPECIAL LOADS ANALYSIS ***
GEOMETRY AND/OR BASIC LOADS CHANGED BY USER.
LOADS WERE DERIVED FROM USER INPUT
NO FURTHER MODIFICATIONS WERE MADE

SPECIFIED LOADS:

TOP	CH.	LL =	21.0	PSF
		DL =	6.0	PSF
BOT	CH.	LL =	0.0	PSF
		DL =	7.4	PSF
TOTAL	LOAD	=	34.4	PSF

SPACING = 24.0 IN. C/C

LOADING IN FLAT SECTION BASED ON A SLOPE OF 2.00/12 MINIMUM

GIRDER TYPE: CPrimeHip
LEFT SETBACK = 4-1-6
RIGHT SETBACK = 0-0
END SETBACK = 6-6-0
END WALL WIDTH = 0-0
CORNER FRAMING TYPE: CONVENTIONAL
END JACK TYPE: CONVENTIONAL
APPLIED TO FRONT SIDE
- ADDT'L LOADS BASED ON 55 % OF GSL.
LOADS APPLIED TO FIRST 12-5-8 OF SPAN MEASURED FROM THE RIGHT.

GIRDER TYPE: CStdGirder
START DISTANCE = 12-0-1
START SPAN CARRIED = 7-6-0
END DISTANCE = 18-11-8
END SPAN CARRIED = 7-6-0
END WALL WIDTH = 0-0
APPLIED TO FRONT SIDE OF BOTTOM CHORD.
- ADDT'L LOADS BASED ON 55 % OF GSL.

*** NON STANDARD GIRDER ***
ADDT'L USER-DEFINED LOADS APPLIED TO ALL LOAD CASES.

THIS TRUSS IS DESIGNED FOR RESIDENTIAL OR SMALL BUILDING REQUIREMENTS OF PART 9, NBCC 2015

THIS DESIGN COMPLIES WITH:
- PART 9 OF BCBC 2018 , ABC 2019
- PART 9 OF OBC 2012 (2019 AMENDMENT)
- CSA 086-14
- TPIC 2014

(55 % OF 23.0 P.S.F. G.S.L. PLUS 8.4 P.S.F. RAIN LOAD) EQUALS 21.0 P.S.F. SPECIFIED ROOF LIVE LOAD

ALLOWABLE DEFL.(LL)= L/360 (1.02")
CALCULATED VERT. DEFL.(LL) = L/ 999 (0.20")
ALLOWABLE DEFL.(TL)= L/360 (1.02")
CALCULATED VERT. DEFL.(TL) = L/ 934 (0.39")

CSI: TC=0.90/1.00 (G-H:1) , BC=0.93/1.00 (J-L:1) , WB=0.97/1.00 (B-L:1) , SSI=0.43/1.00 (F-G:1)

DOL LUMBER=1.00 NAIL=1.00 LS BEND=1.00 COMP=1.00 SHEAR=1.00 TENS= 1.00

COMPANION LIVE LOAD FACTOR = 1.00

CONTINUED ON PAGE 2

JOB NAME	TRUSS NAME	QUANTITY	PLY	JOB DESC.		DRWG NO.
336335	H242		1	TRUSS DESC.	JT 45147	E21104188

Alpa Roof Truss, Maple

Version 8.420 S Jan 21 2021 MiTek Industries, Inc. Thu Oct 14 08:53:29 2021 Page 1

ID:hd511hZTz bdeQoS817GKByhVxV-S7AOfiJKJqM0wmelz3fTvUTb2?CrSeXD4POPyUyTZGq

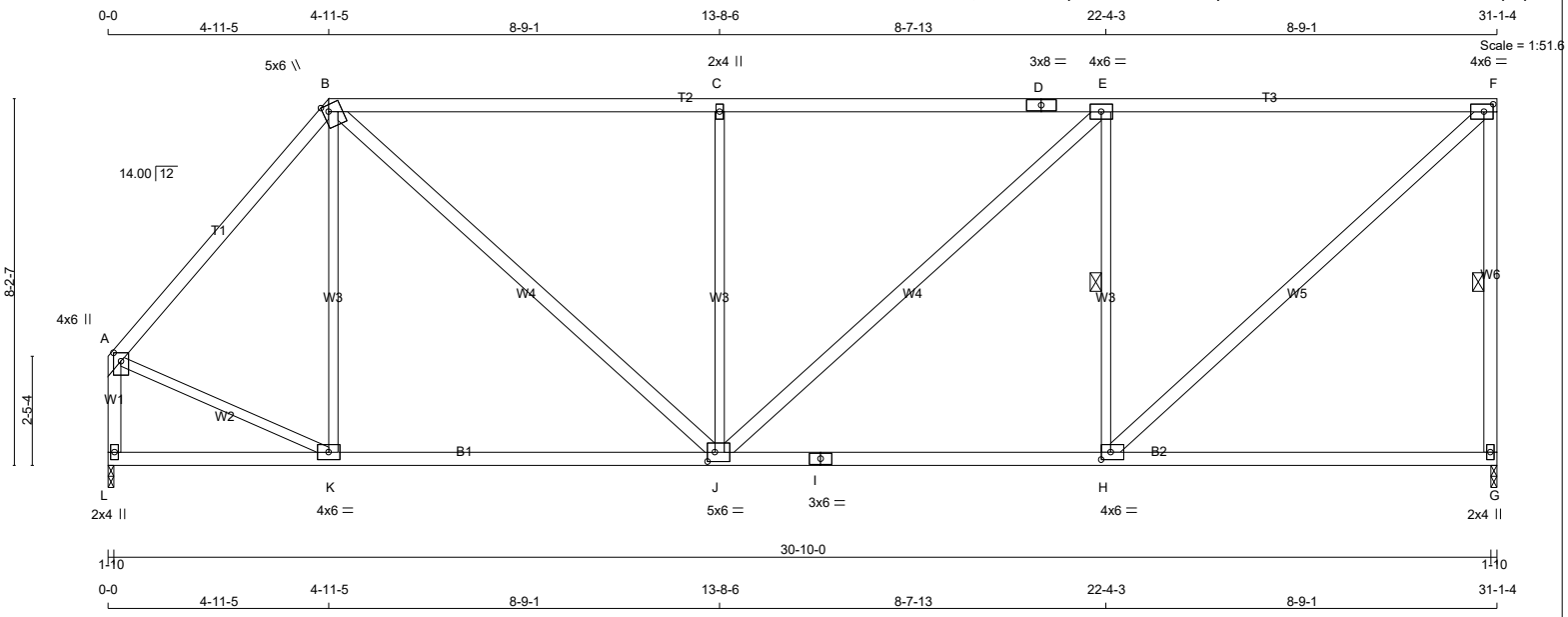

TOTAL WEIGHT = 147 lb [M]

LUMBER

N. L. G. A. RULES

CHORDS	SIZE		LUMBER	DESCR.
A - B	2x4	DRY	No.2	SPF
B - D	2x4	DRY	2100F 1.8E	SPF
D - F	2x4	DRY	2100F 1.8E	SPF
G - F	2x4	DRY	No.2	SPF
L - A	2x4	DRY	No.2	SPF
L - I	2x4	DRY	No.2	SPF
I - G	2x4	DRY	No.2	SPF
ALL WEBS	2x3	DRY	No.2	SPF
EXCEPT				
B - J	2x4	DRY	No.2	SPF
J - E	2x4	DRY	No.2	SPF
H - F	2x4	DRY	No.2	SPF

DRY: SEASONED LUMBER.

PLATES (table is in inches)

JT	TYPE	PLATES	W	LEN	Y	X
A	TMVW+p	MT20	4.0	6.0	2.25	2.00
B	TTWW+m	MT20	5.0	6.0	1.75	1.50
C	TMW+w	MT20	2.0	4.0		
D	TS-t	MT20	3.0	8.0		
E	TMWW-t	MT20	4.0	6.0		
F	TMVW-t	MT20	4.0	6.0	2.00	2.50
G	BMV1+p	MT20	2.0	4.0		
H	BMWW-t	MT20	4.0	6.0	2.00	2.50
I	BS-t	MT20	3.0	6.0		
J	BMWWW-t	MT20	5.0	6.0	2.50	2.00
K	BMWW-t	MT20	4.0	6.0		
L	BMV1+p	MT20	2.0	4.0		

LATERAL BRACE(S) SHOWN SHALL BE 2X4 SPF#2

DIMENSIONS, SUPPORTS AND LOADINGS SPECIFIED BY FABRICATOR TO BE VERIFIED BY BUILDING DESIGNER

BEARINGS

JT	FACTORED GROSS REACTION VERT	HORZ	MAXIMUM FACTORED GROSS REACTION DOWN	HORZ	UPLIFT	INPUT BRG IN-SX	REQRD BRG IN-SX
G	1500	0	1500	0	0	1-10	1-10
L	1500	0	1500	0	0	1-10	1-10

UNFACTORED REACTIONS

JT	1ST LCASE COMBINED	MAX./MIN. COMPONENT REACTIONS SNOW	LIVE	PERM.LIVE	WIND	DEAD	SOIL
G	1070	653 / 0	0 / 0	0 / 0	0 / 0	417 / 0	0 / 0
L	1070	653 / 0	0 / 0	0 / 0	0 / 0	417 / 0	0 / 0

BEARING MATERIAL TO BE SPF NO.2 OR BETTER AT JOINT(S) G, L

BRACING

TOP CHORD TO BE SHEATHED OR MAX. PURLIN SPACING = 5.29 FT.
MAX. UNBRACED BOTTOM CHORD LENGTH = 10.00 FT OR RIGID CEILING DIRECTLY APPLIED.

ALL PITCH BREAKS AND PERIMETER CORNER JOINTS MUST BE LATERALLY RESTRAINED.

1 LATERAL BRACE(S) AT 1/ 2 LENGTH OF F-G, E-H.

END VERTICAL(S) MUST BE SHEATHED OR HAVE BRACES AS INDICATED IN THE MAX. UNBRACED LENGTH COLUMN OF THE TABLE BELOW

LOADING

TOTAL LOAD CASES: (4)

CHORDS

MEMB. FR-TO	MAX. FACTORED FORCE (LBS)	FACTORED VERT. LOAD (PLF) FROM	TO	LC1 CSI (LC)	MAX UNBRAC LENGTH
A- B	-1246 / 0	-78.0	-78.0	0.42 (1)	5.29
B- C	-1540 / 0	-78.0	-78.0	0.64 (1)	5.40
C- D	-1540 / 0	-78.0	-78.0	0.64 (1)	5.40
D- E	-1540 / 0	-78.0	-78.0	0.64 (1)	5.40
E- F	-1285 / 0	-78.0	-78.0	0.62 (1)	5.79
G- F	-1436 / 0	0.0	0.0	0.44 (1)	5.45
L- A	-1472 / 0	0.0	0.0	0.19 (1)	6.74
L- K	0 / 0	-18.5	-18.5	0.22 (4)	10.00
K- J	0 / 805	-18.5	-18.5	0.34 (4)	10.00
J- I	0 / 1285	-18.5	-18.5	0.46 (4)	10.00
I- H	0 / 1285	-18.5	-18.5	0.46 (4)	10.00
H- G	0 / 0	-18.5	-18.5	0.34 (4)	10.00

WEBS

MEMB. FR-TO	MAX. FACTORED FORCE (LBS)	MAX CSI (LC)
K- B	-187 / 29	0.24 (1)
B- J	0 / 989	0.16 (1)
J- C	-738 / 0	0.97 (1)
J- E	0 / 346	0.06 (1)
H- E	-979 / 0	0.42 (1)
H- F	0 / 1732	0.28 (1)
A- K	0 / 873	0.20 (1)

DESIGN CRITERIA

SPECIFIED LOADS:

TOP CH.	LL	=	21.0	PSF
	DL	=	6.0	PSF
BOT CH.	LL	=	0.0	PSF
	DL	=	7.4	PSF
TOTAL LOAD		=	34.4	PSF

SPACING = 24.0 IN. C/C

LOADING IN FLAT SECTION BASED ON A SLOPE OF 2.00/12 MINIMUM

THIS TRUSS IS DESIGNED FOR RESIDENTIAL OR SMALL BUILDING REQUIREMENTS OF PART 9, NBCC 2015

THIS DESIGN COMPLIES WITH:
- PART 9 OF BCBC 2018 , ABC 2019
- PART 9 OF OBC 2012 (2019 AMENDMENT)
- CSA 086-14
- TPIC 2014

(55 % OF 23.0 P.S.F. G.S.L. PLUS 8.4 P.S.F. RAIN LOAD) EQUALS 21.0 P.S.F. SPECIFIED ROOF LIVE LOAD

ALLOWABLE DEFL.(LL)= L/360 (1.04")
CALCULATED VERT. DEFL.(LL) = L/ 999 (0.06")
ALLOWABLE DEFL.(TL)= L/360 (1.04")
CALCULATED VERT. DEFL.(TL) = L/ 999 (0.18")

CSI: TC=0.64/1.00 (B-C:1) , BC=0.46/1.00 (H-J:4) , WB=0.97/1.00 (C-J:1) , SSI=0.32/1.00 (E-F:1)

DOL LUMBER=1.00 NAIL=1.00 LS BEND=1.10 COMP=1.10 SHEAR=1.10 TENS= 1.10

COMPANION LIVE LOAD FACTOR = 1.00

TRUSS PLATE MANUFACTURER IS NOT RESPONSIBLE FOR QUALITY CONTROL IN THE TRUSS MANUFACTURING PLANT .

NAIL VALUES

PLATE	GRIP(DRY) (PSI) MAX	MIN	SHEAR (PLI) MAX	MIN	SECTION (PLI) MAX	MIN
MT20	650	371	1747	788	1987	1873

PLATE PLACEMENT TOL. = 0.250 inches

PLATE ROTATION TOL. = 5.0 Deg.

JSI GRIP= 0.84 (H) (INPUT = 0.90)
JSI METAL= 0.46 (A) (INPUT = 1.00)

JOB NAME	TRUSS NAME	QUANTITY	PLY	JOB DESC.	DRWG NO.
336335	H243		1	TRUSS DESC. JT 45147	E21104189

Alpa Roof Truss, Maple

Version 8.420 S Jan 21 2021 MiTek Industries, Inc. Thu Oct 14 08:52:40 2021 Page 1

ID:hd511hZTz_bdeQoS817GKByhVxV-OhjtNyjbrnBzYEPKcHHzQ9xBCFU_TYH0pH1JkqyTZHb

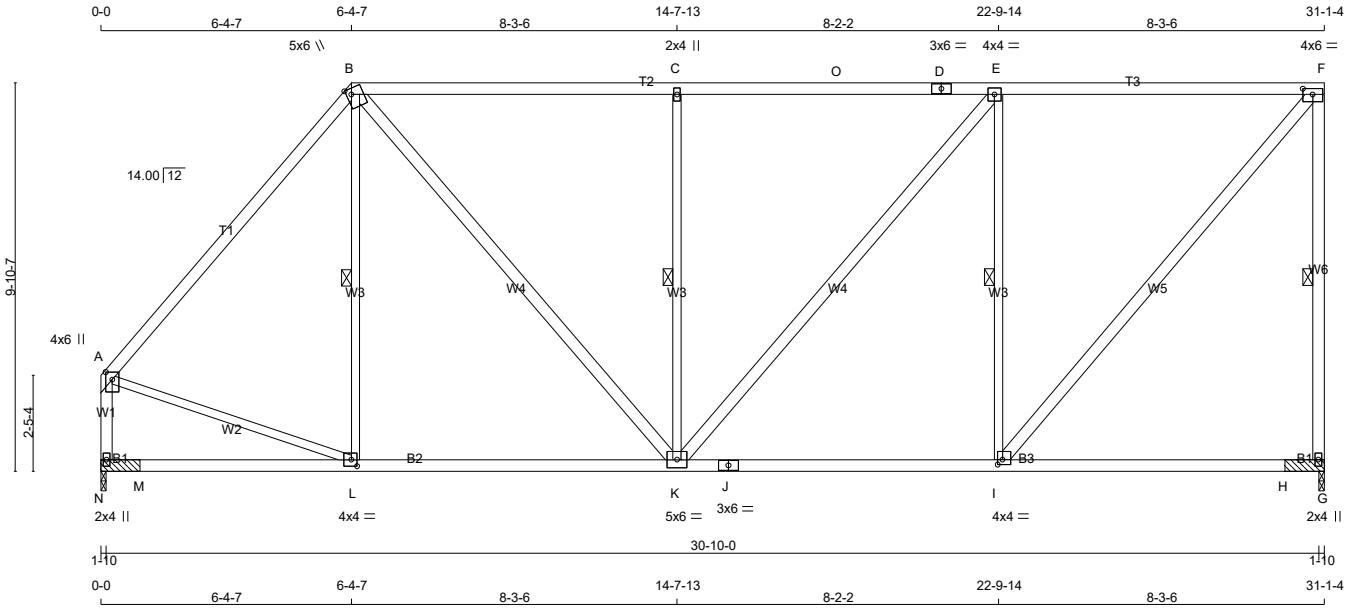

TOTAL WEIGHT = 7 X 160 = 1121 lb

LUMBER

N. L. G. A. RULES

CHORDS	SIZE		LUMBER	DESCR.
A - B	2x4	DRY	2100F 1.8E	SPF
B - D	2x4	DRY	1650F 1.5E	SPF
D - F	2x4	DRY	1650F 1.5E	SPF
G - F	2x4	DRY	No.2	SPF
N - A	2x4	DRY	No.2	SPF
N - J	2x4	DRY	No.2	SPF
J - G	2x4	DRY	No.2	SPF
ALL WEBS	2x3	DRY	No.2	SPF
EXCEPT				
B - K	2x4	DRY	No.2	SPF
K - E	2x4	DRY	No.2	SPF
I - F	2x4	DRY	No.2	SPF

DRY: SEASONED LUMBER.

PLATES (table is in inches)

JT	TYPE	PLATES	W	LEN	Y	X
A	TMVW+p	MT20	4.0	6.0	2.25	2.00
B	TTWW+m	MT20	5.0	6.0	1.75	1.50
C	TMW+w	MT20	2.0	4.0		
D	TS-t	MT20	3.0	6.0		
E	TMWW-t	MT20	4.0	4.0		
F	TMVW-t	MT20	4.0	6.0	1.75	3.00
G	BMV1+p	MT20	2.0	4.0		
I	BMWW-t	MT20	4.0	4.0	1.50	1.50
J	BS-t	MT20	3.0	6.0		
K	BMWWW-t	MT20	5.0	6.0		
L	BMWW-t	MT20	4.0	4.0	2.00	1.75
N	BMV1+p	MT20	2.0	4.0		

LATERAL BRACE(S) SHOWN SHALL BE 2X4 SPF#2

DIMENSIONS, SUPPORTS AND LOADINGS SPECIFIED BY FABRICATOR TO BE VERIFIED BY BUILDING DESIGNER

BEARINGS

JT	FACTORED GROSS REACTION VERT	HORZ	MAXIMUM FACTORED GROSS REACTION DOWN	HORZ	UPLIFT	INPUT BRG IN-SX	REQRD BRG IN-SX
G	1612	0	1612	0	0	1-10	1-10 & BLOCK
N	1574	0	1574	0	0	1-10	1-10 & BLOCK

UNFACTORED REACTIONS

JT	1ST LCASE COMBINED	MAX./MIN. COMPONENT REACTIONS SNOW	LIVE	PERM.LIVE	WIND	DEAD	SOIL
G	1159	653 / 0	0 / 0	0 / 0	0 / 0	506 / 0	0 / 0
N	1129	653 / 0	0 / 0	0 / 0	0 / 0	476 / 0	0 / 0

BEARING MATERIAL TO BE SPF NO.2 OR BETTER AT JOINT(S) G, N

2x4 DRY SPF No.2 BEARING BLOCK 12" LONG AT JT. G ATTACHED TO FRONT SIDE WITH 2 ROWS OF (0.122"X3") SPIRAL NAILS SPACED 3" C.C. 8 NAILS TOTAL.

2x4 DRY SPF No.2 BEARING BLOCK 12" LONG AT JT. N ATTACHED TO FRONT SIDE WITH 2 ROWS OF (0.122"X3") SPIRAL NAILS SPACED 3" C.C. 8 NAILS TOTAL.

BRACING

FOR SECTION B-F, MAX. PURLIN SPACING = 2.00 FT.
FOR OTHER SECTIONS, TOP CHORD TO BE SHEATHED OR MAX. PURLIN SPACING = 6.10 FT.
MAX. UNBRACED BOTTOM CHORD LENGTH = 10.00 FT OR RIGID CEILING DIRECTLY APPLIED.

ALL PITCH BREAKS AND PERIMETER CORNER JOINTS MUST BE LATERALLY RESTRAINED.

1 LATERAL BRACE(S) AT 1/ 2 LENGTH OF F-G, B-L, C-K, E-I.

END VERTICAL(S) MUST BE SHEATHED OR HAVE BRACES AS INDICATED IN THE MAX. UNBRACED LENGTH COLUMN OF THE TABLE BELOW

LOADING

TOTAL LOAD CASES: (4)

CHORDS

MEMB. FR-TO	MAX. FACTORED FORCE (LBS)	FACTORED VERT. LOAD (PLF) FROM	TO	LC1 CSI (LC)	MAX UNBRAC LENGTH
A- B	-1324 / 0	-78.0	-78.0	0.46 (1)	6.10
B- C	-1368 / 0	-85.5	-85.5	0.79 (1)	2.00
C- O	-1369 / 0	-85.5	-85.5	0.79 (1)	2.00
O- D	-1369 / 0	-85.5	-85.5	0.79 (1)	2.00
D- E	-1369 / 0	-85.5	-85.5	0.79 (1)	2.00
E- F	-1095 / 0	-85.5	-85.5	0.76 (1)	2.00
G- F	-1551 / 0	0.0	0.0	0.73 (1)	5.29
N- A	-1530 / 0	0.0	0.0	0.20 (1)	6.65
N- M	0 / 0	-18.5	-18.5	0.24 (4)	10.00
M- L	0 / 0	-18.5	-18.5	0.24 (4)	10.00
L- K	0 / 858	-18.5	-18.5	0.33 (4)	10.00
K- J	0 / 1095	-18.5	-18.5	0.43 (4)	10.00
J- I	0 / 1095	-18.5	-18.5	0.43 (4)	10.00
I- H	0 / 0	-18.5	-18.5	0.31 (4)	10.00
H- G	0 / 0	-18.5	-18.5	0.31 (4)	10.00

WEBS

MEMB. FR-TO	MAX. FACTORED FORCE (LBS)	MAX CSI (LC)
L- B	-121 / 50	0.08 (1)
B- K	0 / 780	0.13 (1)
K- C	-765 / 0	0.50 (1)
K- E	0 / 422	0.07 (1)
I- E	-1094 / 0	0.72 (1)
I- F	0 / 1674	0.27 (1)
A- L	0 / 902	0.20 (1)

[M]

DESIGN CRITERIA

SPECIFIED LOADS:

TOP	CH.	LL	=	21.0	PSF
		DL	=	6.0	PSF
BOT	CH.	LL	=	0.0	PSF
		DL	=	7.4	PSF
TOTAL	LOAD		=	34.4	PSF

SPACING = 24.0 IN. C/C

LOADING IN FLAT SECTION BASED ON PIGGYBACK TRUSS WITH SLOPES OF 6.00/12 AND -6.00/12 AND RESPECTIVE HEEL HEIGHTS OF 0-0 AND 0-0 AND AN ADDITIONAL DEAD LOAD OF 3.0 P.S.F.

THIS TRUSS IS DESIGNED FOR RESIDENTIAL OR SMALL BUILDING REQUIREMENTS OF PART 9, NBCC 2015

THIS DESIGN COMPLIES WITH:
- PART 9 OF BCBC 2018 , ABC 2019
- PART 9 OF OBC 2012 (2019 AMENDMENT)
- CSA 086-14
- TPIC 2014

(55 % OF 23.0 P.S.F. G.S.L. PLUS 8.4 P.S.F. RAIN LOAD) EQUALS 21.0 P.S.F. SPECIFIED ROOF LIVE LOAD

ALLOWABLE DEFL.(LL)= L/360 (1.04")
CALCULATED VERT. DEFL.(LL) = L/ 999 (0.05")
ALLOWABLE DEFL.(TL)= L/360 (1.04")
CALCULATED VERT. DEFL.(TL) = L/ 999 (0.15")

CSI: TC=0.79/1.00 (C-E:1) , BC=0.43/1.00 (I-K:4) , WB=0.72/1.00 (E-I:1) , SSI=0.33/1.00 (E-F:1)

DOL LUMBER=1.00 NAIL=1.00 LS BEND=1.10 COMP=1.10 SHEAR=1.10 TENS= 1.10

COMPANION LIVE LOAD FACTOR = 1.00

TRUSS PLATE MANUFACTURER IS NOT RESPONSIBLE FOR QUALITY CONTROL IN THE TRUSS MANUFACTURING PLANT .

NAIL VALUES

PLATE	GRIP(DRY) (PSI) MAX	MIN	SHEAR (PLI) MAX	MIN	SECTION (PLI) MAX	MIN
MT20	650	371	1747	788	1987	1873

PLATE PLACEMENT TOL. = 0.250 inches

PLATE ROTATION TOL. = 5.0 Deg.

JSI GRIP= 0.89 (I) (INPUT = 0.90)
JSI METAL= 0.50 (A) (INPUT = 1.00)

JOB NAME	TRUSS NAME	QUANTITY	PLY	JOB DESC.		DRWG NO.
336335	H244P		1	TRUSS DESC.	JT 45147	E21104190

Alpa Roof Truss, Maple

Version 8.420 S Jan 21 2021 MiTek Industries, Inc. Thu Oct 14 08:53:31 2021 Page 1

ID:hd511hZTz bdeQoS817GKByhVxV-OVI94OKbrRck94o75Uix vYyopxnwmJWYjtW0MyTZGo

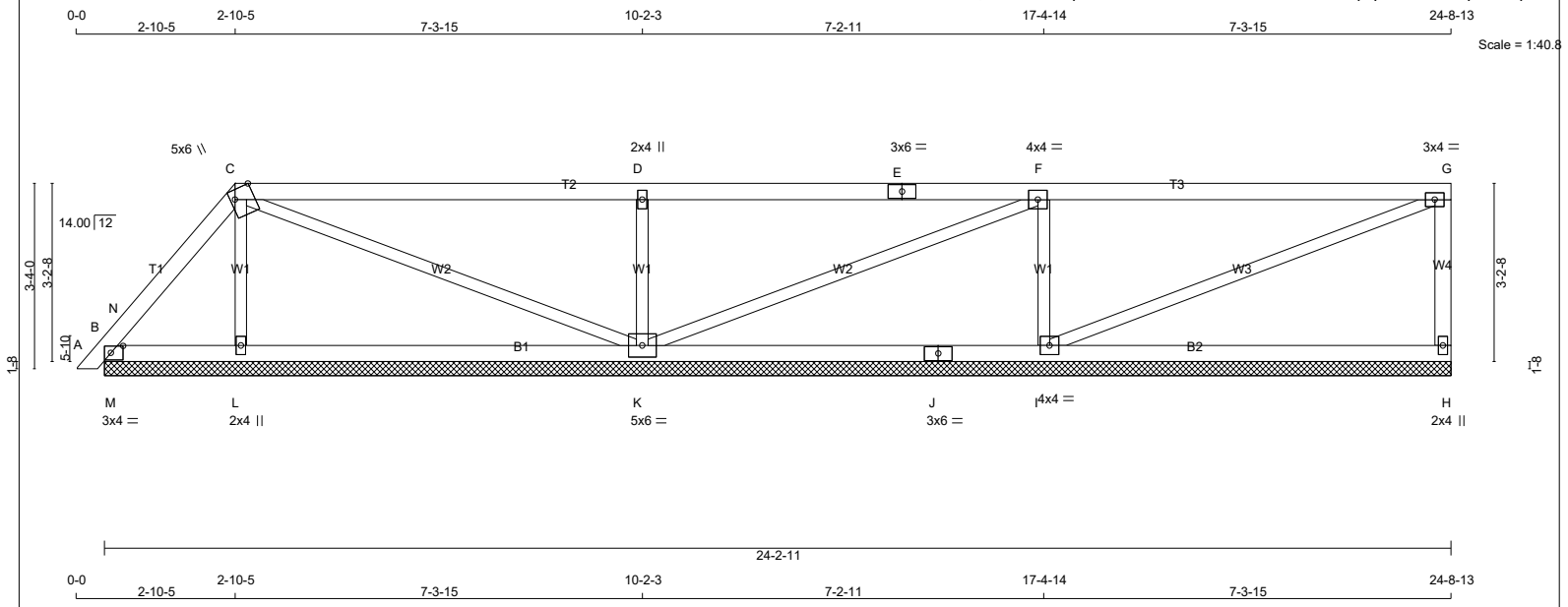

TOTAL WEIGHT = 85 lb [M]

LUMBER

N. L. G. A. RULES

CHORDS	SIZE		LUMBER	DESCR.
A - C	2x4	DRY	No.2	SPF
C - E	2x4	DRY	No.2	SPF
E - G	2x4	DRY	No.2	SPF
H - G	2x4	DRY	No.2	SPF
B - J	2x4	DRY	No.2	SPF
J - H	2x4	DRY	No.2	SPF
ALL WEBS	2x3	DRY	No.2	SPF

DRY: SEASONED LUMBER.

PLATES (table is in inches)

JT	TYPE	PLATES	W	LEN	Y	X
B	TMB1-I	MT20	3.0	4.0	1.50	2.50
C	TTWW+m	MT20	5.0	6.0	Edge	4.00
D	TMW+w	MT20	2.0	4.0		
E	TS-t	MT20	3.0	6.0		
F	TMWW-t	MT20	4.0	4.0		
G	TMVW-t	MT20	3.0	4.0		
H	BMV1+p	MT20	2.0	4.0		
I	BMWW1-t	MT20	4.0	4.0		
J	BS-t	MT20	3.0	6.0		
K	BMWWW1-t	MT20	5.0	6.0		
L	BMW1+w	MT20	2.0	4.0		

Edge - INDICATES REFERENCE CORNER OF PLATE TOUCHES EDGE OF CHORD.

LATERAL BRACE(S) SHOWN SHALL BE 2X4 SPF#2

DIMENSIONS, SUPPORTS AND LOADINGS SPECIFIED BY FABRICATOR TO BE VERIFIED BY BUILDING DESIGNER

BEARINGS

JT	FACTORED GROSS REACTION VERT	HORZ	MAXIMUM FACTORED GROSS REACTION DOWN	HORZ	UPLIFT	INPUT BRG IN-SX	REQRD BRG IN-SX
H	288	0	288	0	0	24-2-11 (9-2-11)	
B	177	0	177	0	0	24-2-11 (9-2-11)	
L	354	0	354	0	0	24-2-11 (9-2-11)	
K	789	0	789	0	0	24-2-11 (9-2-11)	
I	759	0	759	0	0	24-2-11 (9-2-11)	

VALUE IN PARENTHESIS INDICATES EFFECTIVE BEARING LENGTH

UNFACTORED REACTIONS

JT	1ST LCASE COMBINED	MAX./MIN. COMPONENT REACTIONS SNOW	LIVE	PERM.LIVE	WIND	DEAD	SOIL
H	205	126 / 0	0 / 0	0 / 0	0 / 0	79 / 0	0 / 0
B	122	100 / 0	0 / 0	0 / 0	0 / 0	22 / 0	0 / 0
L	258	126 / 0	0 / 0	0 / 0	0 / 0	132 / 0	0 / 0
K	560	354 / 0	0 / 0	0 / 0	0 / 0	206 / 0	0 / 0
I	542	327 / 0	0 / 0	0 / 0	0 / 0	215 / 0	0 / 0

BEARING MATERIAL TO BE SPF NO.2 OR BETTER AT JOINT(S) H, B, L, K, I

BRACING

TOP CHORD TO BE SHEATHED OR MAX. PURLIN SPACING = 6.25 FT.
MAX. UNBRACED BOTTOM CHORD LENGTH = 10.00 FT OR RIGID CEILING DIRECTLY APPLIED.

ALL PITCH BREAKS AND PERIMETER CORNER JOINTS MUST BE LATERALLY RESTRAINED.

LOADING

TOTAL LOAD CASES: (4)

CHORDS

MEMB. FR-TO	MAX. FACTORED FORCE (LBS)	FACTORED VERT. LOAD (PLF) FROM	TO	LC1	MAX CSI (LC)	MAX. UNBRAC LENGTH
A- B	0 / 10	-78.0	-78.0	0.01 (1)		10.00
B- N	0 / 49	-78.0	-78.0	0.05 (1)		10.00
N- C	-87 / 0	-78.0	-78.0	0.04 (1)		6.25
C- D	0 / 16	-78.0	-78.0	0.56 (1)		10.00
D- E	0 / 16	-78.0	-78.0	0.56 (1)		10.00
E- F	0 / 16	-78.0	-78.0	0.56 (1)		10.00
F- G	-13 / 0	-78.0	-78.0	0.56 (1)		6.25
H- G	-235 / 0	0.0	0.0	0.04 (1)		7.81
B- M	0 / 49	-18.5	-18.5	0.06 (1)		10.00
M- L	0 / 49	-18.5	-18.5	0.16 (4)		10.00
L- K	0 / 41	-18.5	-18.5	0.19 (4)		10.00
K- J	0 / 13	-18.5	-18.5	0.24 (4)		10.00
J- I	0 / 13	-18.5	-18.5	0.24 (4)		10.00
I- H	0 / 0	-18.5	-18.5	0.24 (4)		10.00

WEBS

MEMB. FR-TO	MAX. FACTORED FORCE (LBS)	MAX CSI (LC)
L- C	-220 / 0	0.04 (1)
C- K	-62 / 0	0.08 (1)
K- D	-624 / 0	0.12 (1)
K- F	-32 / 0	0.04 (1)
I- F	-612 / 0	0.11 (1)
I- G	0 / 14	0.00 (1)
M- N	-245 / 0	0.00 (1)

DESIGN CRITERIA

SPECIFIED LOADS:

TOP	CH.	LL	=	21.0	PSF
		DL	=	6.0	PSF
BOT	CH.	LL	=	0.0	PSF
		DL	=	7.4	PSF
TOTAL	LOAD		=	34.4	PSF

SPACING = 24.0 IN. C/C

LOADING IN FLAT SECTION BASED ON A SLOPE OF 2.00/12 MINIMUM

THIS TRUSS IS DESIGNED FOR RESIDENTIAL OR SMALL BUILDING REQUIREMENTS OF PART 9, NBCC 2015

THIS DESIGN COMPLIES WITH:
- PART 9 OF BCBC 2018 , ABC 2019
- PART 9 OF OBC 2012 (2019 AMENDMENT)
- CSA 086-14
- TPIC 2014

(55 % OF 23.0 P.S.F. G.S.L. PLUS 8.4 P.S.F. RAIN LOAD) EQUALS 21.0 P.S.F. SPECIFIED ROOF LIVE LOAD

CSI: TC=0.56/1.00 (C-D:1) , BC=0.24/1.00 (I-K:4) , WB=0.12/1.00 (D-K:1) , SSI=0.27/1.00 (F-G:1)

DOL LUMBER=1.00 NAIL=1.00 LS BEND=1.10 COMP=1.10 SHEAR=1.10 TENS= 1.10

COMPANION LIVE LOAD FACTOR = 1.00

TRUSS PLATE MANUFACTURER IS NOT RESPONSIBLE FOR QUALITY CONTROL IN THE TRUSS MANUFACTURING PLANT .

NAIL VALUES

PLATE	GRIP(DRY) (PSI) MAX	MIN	SHEAR (PLI) MAX	MIN	SECTION (PLI) MAX	MIN
MT20	650	371	1747	788	1987	1873

PLATE PLACEMENT TOL. = 0.250 inches

PLATE ROTATION TOL. = 5.0 Deg.

JSI GRIP= 0.85 (K) (INPUT = 0.90)
JSI METAL= 0.14 (E) (INPUT = 1.00)

JOB NAME	TRUSS NAME	QUANTITY	PLY	JOB DESC.		DRWG NO.
336335	H245P		1	TRUSS DESC.	JT 45147	E21104191

Alpa Roof Truss, Maple

Version 8.420 S Jan 21 2021 MiTek Industries, Inc. Thu Oct 14 08:53:32 2021 Page 1

ID:hd511hZTz_bdeQoS817GKByhVxV-tisXHkLDclkbnENJfCDAX658dDHTfBDgmNd3ZpyTZGn

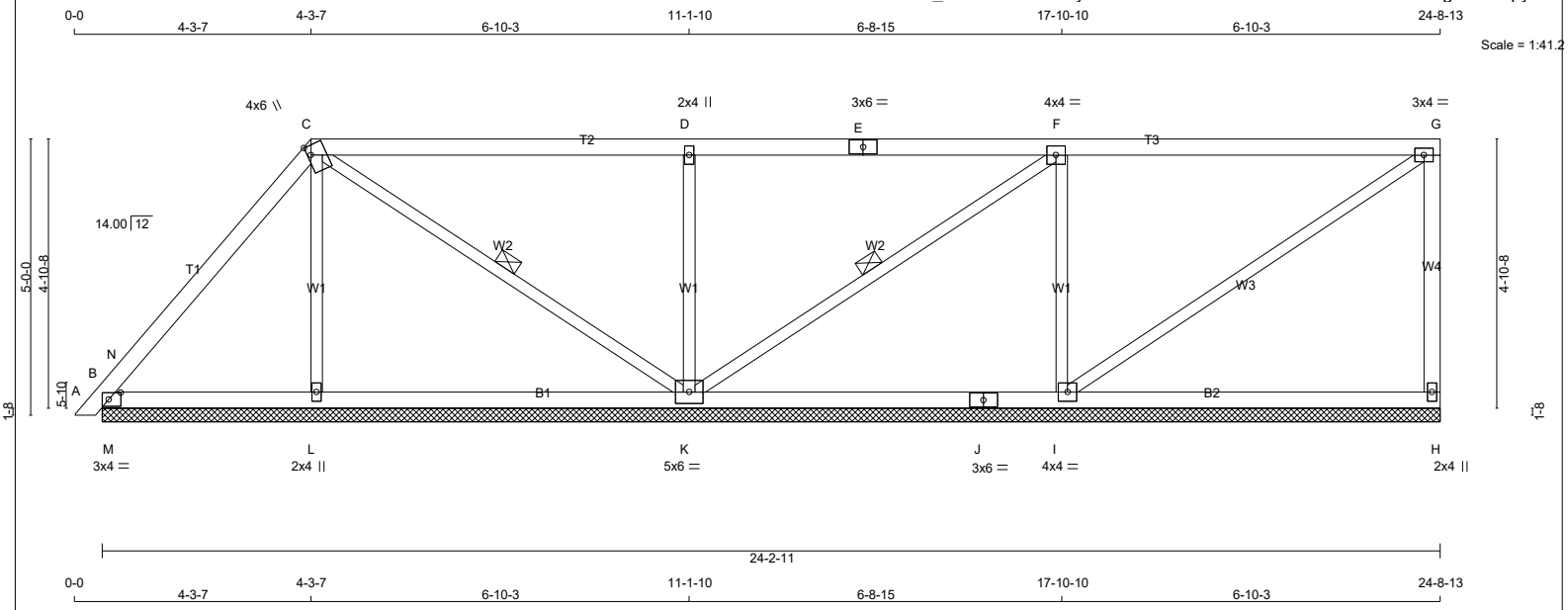

TOTAL WEIGHT = 93 lb [M]

LUMBER

N. L. G. A. RULES

CHORDS	SIZE		LUMBER	DESCR.
A - C	2x4	DRY	No.2	SPF
C - E	2x4	DRY	No.2	SPF
E - G	2x4	DRY	No.2	SPF
H - G	2x4	DRY	No.2	SPF
B - J	2x4	DRY	No.2	SPF
J - H	2x4	DRY	No.2	SPF
ALL WEBS	2x3	DRY	No.2	SPF

DRY: SEASONED LUMBER.

PLATES (table is in inches)

JT	TYPE	PLATES	W	LEN	Y	X
B	TMB1-l	MT20	3.0	4.0	1.50	2.50
C	TTWW+m	MT20	4.0	6.0	2.00	0.75
D	TMW+w	MT20	2.0	4.0		
E	TS-t	MT20	3.0	6.0		
F	TMWW-t	MT20	4.0	4.0		
G	TMVW-t	MT20	3.0	4.0		
H	BMV1+p	MT20	2.0	4.0		
I	BMWW1-t	MT20	4.0	4.0		
J	BS-t	MT20	3.0	6.0		
K	BMWWW1-t	MT20	5.0	6.0		
L	BMW1+w	MT20	2.0	4.0		

LATERAL BRACE(S) SHOWN SHALL BE 2X4 SPF#2

DIMENSIONS, SUPPORTS AND LOADINGS SPECIFIED BY FABRICATOR TO BE VERIFIED BY BUILDING DESIGNER

BEARINGS

JT	FACTORED GROSS REACTION VERT	HORZ	MAXIMUM FACTORED GROSS REACTION DOWN	HORZ	UPLIFT	INPUT BRG IN-SX	REQRD BRG IN-SX
H	280	0	280	0	0	24-2-11 (8-3-3)	8
B	285	0	285	0	0	24-2-11 (8-3-3)	8
L	322	0	322	0	0	24-2-11 (8-3-3)	8
K	809	0	809	0	0	24-2-11 (8-3-3)	8
I	672	0	672	0	0	24-2-11 (8-3-3)	8

VALUE IN PARENTHESIS INDICATES EFFECTIVE BEARING LENGTH

UNFACTORED REACTIONS

JT	1ST LCASE COMBINED	MAX./MIN. COMPONENT REACTIONS SNOW	LIVE	PERM.LIVE	WIND	DEAD	SOIL
H	200	124 / 0	0 / 0	0 / 0	0 / 0	76 / 0	0 / 0
B	200	141 / 0	0 / 0	0 / 0	0 / 0	58 / 0	0 / 0
L	235	114 / 0	0 / 0	0 / 0	0 / 0	120 / 0	0 / 0
K	573	369 / 0	0 / 0	0 / 0	0 / 0	204 / 0	0 / 0
I	480	285 / 0	0 / 0	0 / 0	0 / 0	195 / 0	0 / 0

BEARING MATERIAL TO BE SPF NO.2 OR BETTER AT JOINT(S) H, B, L, K, I

BRACING

TOP CHORD TO BE SHEATHED OR MAX. PURLIN SPACING = 6.25 FT.
MAX. UNBRACED BOTTOM CHORD LENGTH = 10.00 FT OR RIGID CEILING DIRECTLY APPLIED.

ALL PITCH BREAKS AND PERIMETER CORNER JOINTS MUST BE LATERALLY RESTRAINED.

1 LATERAL BRACE(S) AT 1/ 2 LENGTH OF C-K, F-K.

END VERTICAL(S) MUST BE SHEATHED OR HAVE BRACES AS INDICATED IN THE MAX. UNBRACED LENGTH COLUMN OF THE TABLE BELOW

LOADING

TOTAL LOAD CASES: (4)

CHORDS

MEMB. FR-TO	MAX. FACTORED FORCE (LBS)	FACTORED VERT. LOAD (PLF) FROM	TO	LC1	MAX CSI (LC)	MAX. UNBRAC LENGTH
A- B	0 / 10	-78.0	-78.0	0.01 (1)	10.00	
B- N	0 / 167	-78.0	-78.0	0.11 (1)	10.00	
N- C	-129 / 0	-78.0	-78.0	0.13 (1)	6.25	
C- D	0 / 33	-78.0	-78.0	0.50 (1)	10.00	
D- E	0 / 33	-78.0	-78.0	0.50 (1)	10.00	
E- F	0 / 33	-78.0	-78.0	0.50 (1)	10.00	
F- G	-24 / 0	-78.0	-78.0	0.49 (1)	6.25	
H- G	-230 / 0	0.0	0.0	0.09 (1)	7.81	
B- M	0 / 75	-18.5	-18.5	0.13 (1)	10.00	
M- L	0 / 75	-18.5	-18.5	0.15 (4)	10.00	
L- K	0 / 71	-18.5	-18.5	0.16 (4)	10.00	
K- J	0 / 24	-18.5	-18.5	0.21 (4)	10.00	
J- I	0 / 24	-18.5	-18.5	0.21 (4)	10.00	
I- H	0 / 0	-18.5	-18.5	0.21 (4)	10.00	

WEBS

MEMB. FR-TO	MAX. FACTORED FORCE (LBS)	MAX CSI (LC)
L- C	-181 / 0	0.06 (1)
C- K	-124 / 0	0.06 (1)
K- D	-583 / 0	0.20 (1)
K- F	-68 / 0	0.03 (1)
I- F	-544 / 0	0.19 (1)
I- G	0 / 29	0.01 (1)
M- N	-489 / 0	0.00 (1)

DESIGN CRITERIA

SPECIFIED LOADS:

TOP	CH.	LL	=	21.0	PSF
		DL	=	6.0	PSF
BOT	CH.	LL	=	0.0	PSF
		DL	=	7.4	PSF
TOTAL	LOAD		=	34.4	PSF

SPACING = 24.0 IN. C/C

LOADING IN FLAT SECTION BASED ON A SLOPE OF 2.00/12 MINIMUM

THIS TRUSS IS DESIGNED FOR RESIDENTIAL OR SMALL BUILDING REQUIREMENTS OF PART 9, NBCC 2015

THIS DESIGN COMPLIES WITH:
- PART 9 OF BCBC 2018 , ABC 2019
- PART 9 OF OBC 2012 (2019 AMENDMENT)
- CSA 086-14
- TPIC 2014

(55 % OF 23.0 P.S.F. G.S.L. PLUS 8.4 P.S.F. RAIN LOAD) EQUALS 21.0 P.S.F. SPECIFIED ROOF LIVE LOAD

CSI: TC=0.50/1.00 (D-F:1) , BC=0.21/1.00 (I-K:4) , WB=0.20/1.00 (D-K:1) , SSI=0.38/1.00 (B-M:1)

DOL LUMBER=1.00 NAIL=1.00 LS BEND=1.10 COMP=1.10 SHEAR=1.10 TENS= 1.10

COMPANION LIVE LOAD FACTOR = 1.00

TRUSS PLATE MANUFACTURER IS NOT RESPONSIBLE FOR QUALITY CONTROL IN THE TRUSS MANUFACTURING PLANT .

NAIL VALUES

PLATE	GRIP(DRY) (PSI) MAX	MIN	SHEAR (PLI) MAX	MIN	SECTION (PLI) MAX	MIN
MT20	650	371	1747	788	1987	1873

PLATE PLACEMENT TOL. = 0.250 inches

PLATE ROTATION TOL. = 5.0 Deg.

JSI GRIP= 0.89 (C) (INPUT = 0.90)
JSI METAL= 0.23 (E) (INPUT = 1.00)

JOB NAME	TRUSS NAME	QUANTITY	PLY	JOB DESC.		DRWG NO.
336335	H246P		1	TRUSS DESC.	JT 45147	E21104192

Alpa Roof Truss, Maple

Version 8.420 S Jan 21 2021 MiTek Industries, Inc. Thu Oct 14 08:53:34 2021 Page 1

ID:hd511hZTz bdeQoS817GKByhVxV-p4zHiQNT7M J0XXimdFecXAV80zl73yyEq6AdhyTZGl

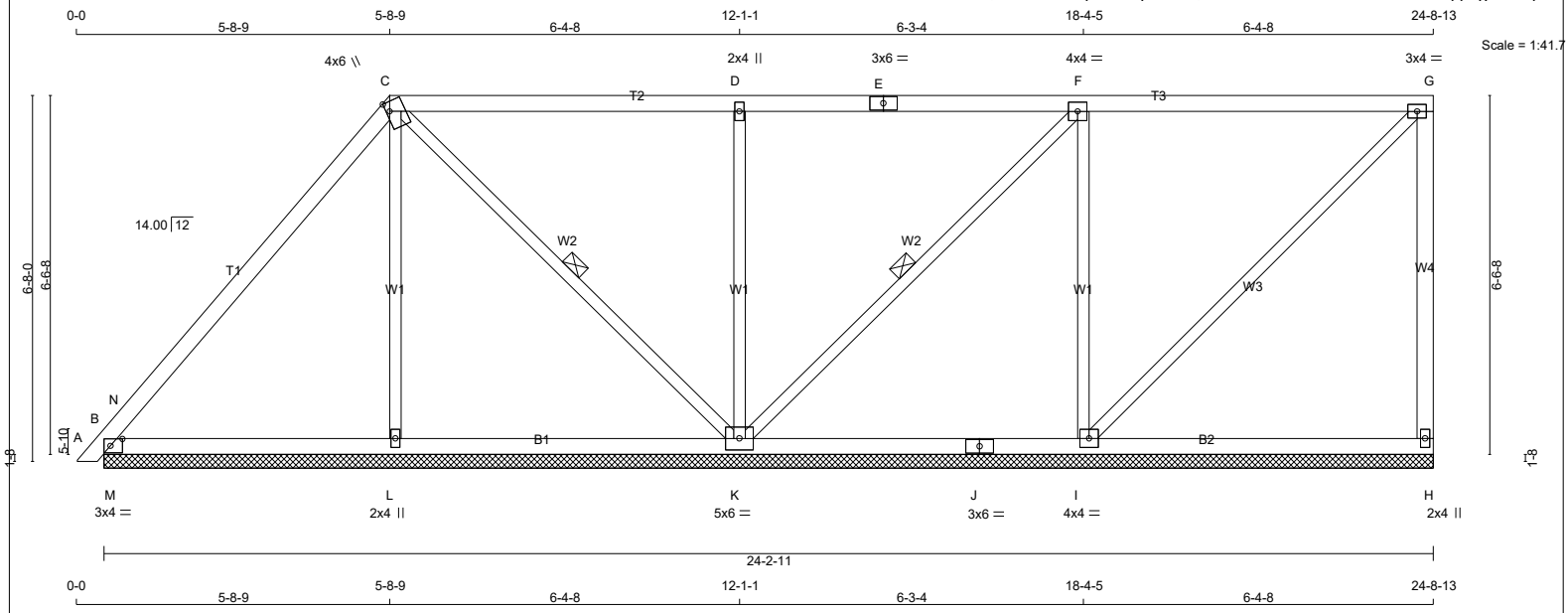

TOTAL WEIGHT = 101 lb

[M]

LUMBER

N. L. G. A. RULES

CHORDS	SIZE		LUMBER	DESCR.
A - C	2x4	DRY	No.2	SPF
C - E	2x4	DRY	No.2	SPF
E - G	2x4	DRY	No.2	SPF
H - G	2x4	DRY	No.2	SPF
B - J	2x4	DRY	No.2	SPF
J - H	2x4	DRY	No.2	SPF
ALL WEBS	2x3	DRY	No.2	SPF

DRY: SEASONED LUMBER.

PLATES (table is in inches)

JT	TYPE	PLATES	W	LEN	Y	X
B	TMB1-I	MT20	3.0	4.0	1.50	2.50
C	TTWW+m	MT20	4.0	6.0	2.00	0.75
D	TMW+w	MT20	2.0	4.0		
E	TS-t	MT20	3.0	6.0		
F	TMWW-t	MT20	4.0	4.0		
G	TMVW-t	MT20	3.0	4.0		
H	BMV1+p	MT20	2.0	4.0		
I	BMWW1-t	MT20	4.0	4.0		
J	BS-t	MT20	3.0	6.0		
K	BMWWW1-t	MT20	5.0	6.0		
L	BMW1+w	MT20	2.0	4.0		

LATERAL BRACE(S) SHOWN SHALL BE 2X4 SPF#2

DIMENSIONS, SUPPORTS AND LOADINGS SPECIFIED BY FABRICATOR TO BE VERIFIED BY BUILDING DESIGNER

BEARINGS

JT	FACTORED GROSS REACTION VERT	HORZ	MAXIMUM FACTORED GROSS REACTION DOWN	HORZ	UPLIFT	INPUT BRG IN-SX	REQRD BRG IN-SX
H	277	0	277	0	0	24-2-11 (8-3-3)	8
B	386	0	386	0	0	24-2-11 (8-3-3)	8
L	287	0	287	0	0	24-2-11 (8-3-3)	8
K	834	0	834	0	0	24-2-11 (8-3-3)	8
I	583	0	583	0	0	24-2-11 (8-3-3)	8

VALUE IN PARENTHESIS INDICATES EFFECTIVE BEARING LENGTH

UNFACTORED REACTIONS

JT	1ST LCASE COMBINED	MAX./MIN. COMPONENT REACTIONS SNOW	LIVE	PERM.LIVE	WIND	DEAD	SOIL
H	197	123 / 0	0 / 0	0 / 0	0 / 0	74 / 0	0 / 0
B	272	183 / 0	0 / 0	0 / 0	0 / 0	89 / 0	0 / 0
L	210	97 / 0	0 / 0	0 / 0	0 / 0	114 / 0	0 / 0
K	590	389 / 0	0 / 0	0 / 0	0 / 0	201 / 0	0 / 0
I	418	242 / 0	0 / 0	0 / 0	0 / 0	176 / 0	0 / 0

BEARING MATERIAL TO BE SPF NO.2 OR BETTER AT JOINT(S) H, B, L, K, I

BRACING

TOP CHORD TO BE SHEATHED OR MAX. PURLIN SPACING = 6.25 FT.
MAX. UNBRACED BOTTOM CHORD LENGTH = 10.00 FT OR RIGID CEILING DIRECTLY APPLIED.

ALL PITCH BREAKS AND PERIMETER CORNER JOINTS MUST BE LATERALLY RESTRAINED.

1 LATERAL BRACE(S) AT 1/ 2 LENGTH OF C-K, F-K.

END VERTICAL(S) MUST BE SHEATHED OR HAVE BRACES AS INDICATED IN THE MAX. UNBRACED LENGTH COLUMN OF THE TABLE BELOW

LOADING

TOTAL LOAD CASES: (4)

CHORDS

MEMB. FR-TO	MAX. FACTORED FORCE (LBS)	FACTORED VERT. LOAD LC1 (PLF) FROM	TO	MAX CSI (LC)	MAX. UNBRAC LENGTH
A- B	0 / 10	-78.0	-78.0	0.01 (1)	10.00
B- N	0 / 410	-78.0	-78.0	0.23 (1)	10.00
N- C	-176 / 0	-78.0	-78.0	0.26 (1)	6.25
C- D	0 / 31	-78.0	-78.0	0.43 (1)	10.00
D- E	0 / 31	-78.0	-78.0	0.43 (1)	10.00
E- F	0 / 31	-78.0	-78.0	0.43 (1)	10.00
F- G	-32 / 0	-78.0	-78.0	0.43 (1)	6.25
H- G	-231 / 0	0.0	0.0	0.20 (1)	7.81
B- M	0 / 102	-18.5	-18.5	0.22 (1)	10.00
M- L	0 / 102	-18.5	-18.5	0.22 (1)	10.00
L- K	0 / 100	-18.5	-18.5	0.17 (4)	10.00
K- J	0 / 32	-18.5	-18.5	0.19 (4)	10.00
J- I	0 / 32	-18.5	-18.5	0.19 (4)	10.00
I- H	0 / 0	-18.5	-18.5	0.19 (4)	10.00

WEBS

MEMB. FR-TO	MAX. FACTORED FORCE (LBS)	MAX CSI (LC)
L- C	-123 / 0	0.09 (1)
C- K	-183 / 0	0.10 (1)
K- D	-542 / 0	0.38 (1)
K- F	-89 / 0	0.05 (1)
I- F	-479 / 0	0.34 (1)
I- G	0 / 45	0.01 (1)
M- N	-879 / 0	0.00 (1)

DESIGN CRITERIA

SPECIFIED LOADS:

TOP	CH.	LL	=	21.0	PSF
		DL	=	6.0	PSF
BOT	CH.	LL	=	0.0	PSF
		DL	=	7.4	PSF
TOTAL	LOAD		=	34.4	PSF

SPACING = 24.0 IN. C/C

LOADING IN FLAT SECTION BASED ON A SLOPE OF 2.00/12 MINIMUM

THIS TRUSS IS DESIGNED FOR RESIDENTIAL OR SMALL BUILDING REQUIREMENTS OF PART 9, NBCC 2015

THIS DESIGN COMPLIES WITH:
- PART 9 OF BCBC 2018 , ABC 2019
- PART 9 OF OBC 2012 (2019 AMENDMENT)
- CSA 086-14
- TPIC 2014

(55 % OF 23.0 P.S.F. G.S.L. PLUS 8.4 P.S.F. RAIN LOAD) EQUALS 21.0 P.S.F. SPECIFIED ROOF LIVE LOAD

CSI: TC=0.43/1.00 (D-F:1) , BC=0.22/1.00 (B-M:1) , WB=0.38/1.00 (D-K:1) , SSI=0.69/1.00 (B-M:1)

DOL LUMBER=1.00 NAIL=1.00 LS BEND=1.10 COMP=1.10 SHEAR=1.10 TENS= 1.10

COMPANION LIVE LOAD FACTOR = 1.00

TRUSS PLATE MANUFACTURER IS NOT RESPONSIBLE FOR QUALITY CONTROL IN THE TRUSS MANUFACTURING PLANT .

NAIL VALUES

PLATE	GRIP(DRY) (PSI) MAX	MIN	SHEAR (PLI) MAX	MIN	SECTION (PLI) MAX	MIN
MT20	650	371	1747	788	1987	1873

PLATE PLACEMENT TOL. = 0.250 inches

PLATE ROTATION TOL. = 5.0 Deg.

JSI GRIP= 0.89 (C) (INPUT = 0.90)
JSI METAL= 0.17 (E) (INPUT = 1.00)

JOB NAME	TRUSS NAME	QUANTITY	PLY	JOB DESC.		DRWG NO.
336335	H247P		1	TRUSS DESC.	JT 45147	E21104193

Alpa Roof Truss, Maple

Version 8.420 S Jan 21 2021 MiTek Industries, Inc. Thu Oct 14 08:53:36 2021 Page 1

ID:hd511hZTz bdeQoS817GKByhVxV-lT5276Ojf E1Frh5u1H6hyGsRqgxbu5Fh bHiayTZGj

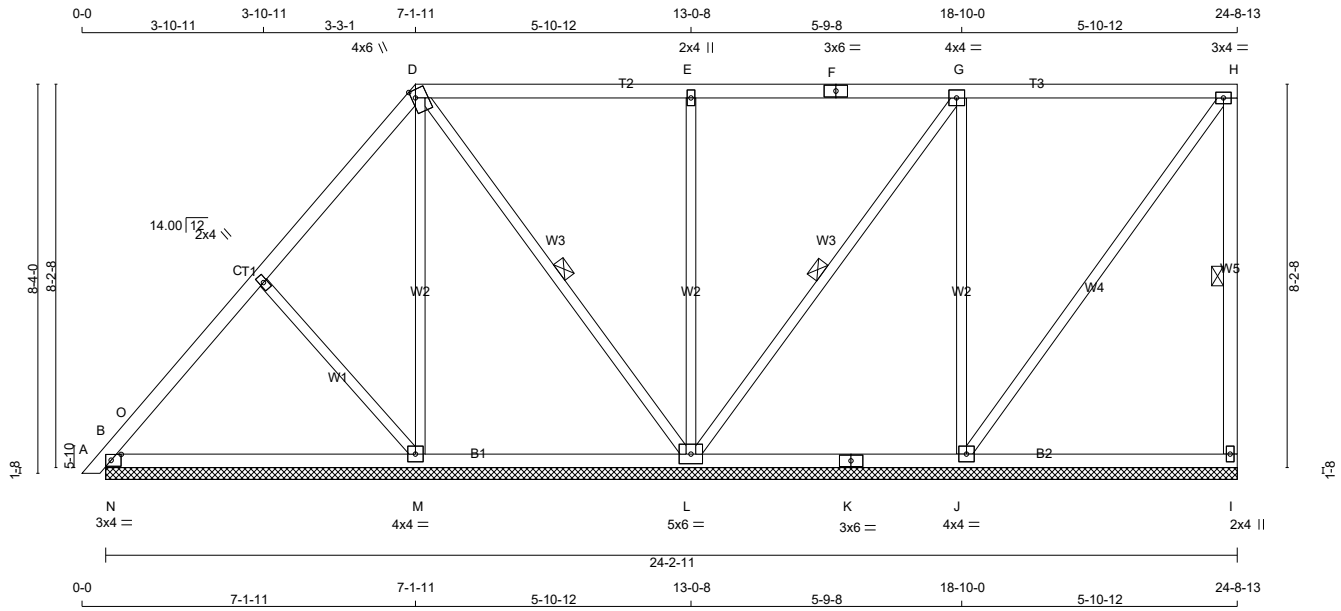

TOTAL WEIGHT = 2 X 115 = 229 lb

LUMBER

N. L. G. A. RULES

CHORDS	SIZE		LUMBER	DESCR.
A - D	2x4	DRY	No.2	SPF
D - F	2x4	DRY	No.2	SPF
F - H	2x4	DRY	No.2	SPF
I - H	2x4	DRY	No.2	SPF
B - K	2x4	DRY	No.2	SPF
K - I	2x4	DRY	No.2	SPF
ALL WEBS	2x3	DRY	No.2	SPF

DRY: SEASONED LUMBER.

PLATES (table is in inches)

JT	TYPE	PLATES	W	LEN	Y	X
B	TMB1-I	MT20	3.0	4.0	1.50	2.50
C	TMW+w	MT20	2.0	4.0		
D	TTWW+m	MT20	4.0	6.0	2.00	1.00
E	TMW+w	MT20	2.0	4.0		
F	TS-t	MT20	3.0	6.0		
G	TMWW-t	MT20	4.0	4.0		
H	TMVW-t	MT20	3.0	4.0		
I	BMV1+p	MT20	2.0	4.0		
J	BMWW1-t	MT20	4.0	4.0		
K	BS-t	MT20	3.0	6.0		
L	BMWWW1-t	MT20	5.0	6.0		
M	BMWW1-t	MT20	4.0	4.0		

LATERAL BRACE(S) SHOWN SHALL BE 2X4 SPF#2

DIMENSIONS, SUPPORTS AND LOADINGS SPECIFIED BY FABRICATOR TO BE VERIFIED BY BUILDING DESIGNER

BEARINGS

JT	FACTORED GROSS REACTION VERT	HORZ	MAXIMUM FACTORED GROSS REACTION DOWN	HORZ	UPLIFT	INPUT BRG IN-SX	REQRD BRG IN-SX
I	228	0	228	0	0	24-2-11 (8-3-3)	8
B	340	0	340	0	0	24-2-11 (8-3-3)	8
M	460	0	460	0	0	24-2-11 (8-3-3)	8
L	842	0	842	0	0	24-2-11 (8-3-3)	8
J	498	0	498	0	0	24-2-11 (8-3-3)	8

VALUE IN PARENTHESIS INDICATES EFFECTIVE BEARING LENGTH

UNFACTORED REACTIONS

JT	1ST LCASE COMBINED	MAX./MIN. COMPONENT REACTIONS SNOW	LIVE	PERM.LIVE	WIND	DEAD	SOIL
I	163	98 / 0	0 / 0	0 / 0	0 / 0	65 / 0	0 / 0
B	242	151 / 0	0 / 0	0 / 0	0 / 0	90 / 0	0 / 0
M	332	181 / 0	0 / 0	0 / 0	0 / 0	150 / 0	0 / 0
L	593	402 / 0	0 / 0	0 / 0	0 / 0	191 / 0	0 / 0
J	358	201 / 0	0 / 0	0 / 0	0 / 0	157 / 0	0 / 0

BEARING MATERIAL TO BE SPF NO.2 OR BETTER AT JOINT(S) I, B, M, L, J

BRACING

TOP CHORD TO BE SHEATHED OR MAX. PURLIN SPACING = 6.25 FT.
MAX. UNBRACED BOTTOM CHORD LENGTH = 10.00 FT OR RIGID CEILING DIRECTLY APPLIED.

ALL PITCH BREAKS AND PERIMETER CORNER JOINTS MUST BE LATERALLY RESTRAINED.

1 LATERAL BRACE(S) AT 1/ 2 LENGTH OF H-I, D-L, G-L.

END VERTICAL(S) MUST BE SHEATHED OR HAVE BRACES AS INDICATED IN THE MAX. UNBRACED LENGTH COLUMN OF THE TABLE BELOW

LOADING

TOTAL LOAD CASES: (4)

CHORDS

MEMB. FR-TO	MAX. FACTORED FORCE (LBS)	FACTORED VERT. LOAD (PLF) FROM	TO	LC1	MAX CSI (LC)	MAX. UNBRAC LENGTH
A- B	0 / 11	-78.0	-78.0	0.01 (1)	10.00	
B- O	-393 / 0	-78.0	-78.0	0.09 (4)	6.25	
O- C	-183 / 0	-78.0	-78.0	0.15 (1)	6.25	
C- D	-21 / 0	-78.0	-78.0	0.15 (1)	6.25	
D- E	0 / 93	-78.0	-78.0	0.38 (1)	10.00	
E- F	0 / 93	-78.0	-78.0	0.38 (1)	10.00	
F- G	0 / 93	-78.0	-78.0	0.38 (1)	10.00	
G- H	-2 / 0	-78.0	-78.0	0.36 (1)	10.00	
I- H	-185 / 0	0.0	0.0	0.06 (1)	6.25	
B- N	0 / 140	-18.5	-18.5	0.08 (4)	10.00	
N- M	0 / 140	-18.5	-18.5	0.18 (4)	10.00	
M- L	-5 / 4	-18.5	-18.5	0.17 (4)	10.00	
L- K	0 / 2	-18.5	-18.5	0.16 (4)	10.00	
K- J	0 / 2	-18.5	-18.5	0.16 (4)	10.00	
J- I	0 / 0	-18.5	-18.5	0.16 (4)	10.00	

WEBS

MEMB. FR-TO	MAX. FACTORED FORCE (LBS)	MAX CSI (LC)
C- M	-215 / 0	0.10 (1)
M- D	-169 / 0	0.22 (1)
D- L	-146 / 0	0.10 (1)
L- E	-501 / 0	0.66 (1)
L- G	-158 / 0	0.11 (1)
J- G	-374 / 0	0.49 (1)
J- H	0 / 4	0.00 (4)
N- O	0 / 257	0.00 (1)

DESIGN CRITERIA

SPECIFIED LOADS:

TOP CH.	LL	=	21.0	PSF
	DL	=	6.0	PSF
BOT CH.	LL	=	0.0	PSF
	DL	=	7.4	PSF
TOTAL LOAD		=	34.4	PSF

SPACING = 24.0 IN. C/C

LOADING IN FLAT SECTION BASED ON A SLOPE OF 2.00/12 MINIMUM

THIS TRUSS IS DESIGNED FOR RESIDENTIAL OR SMALL BUILDING REQUIREMENTS OF PART 9, NBCC 2015

THIS DESIGN COMPLIES WITH:
- PART 9 OF BCBC 2018 , ABC 2019
- PART 9 OF OBC 2012 (2019 AMENDMENT)
- CSA 086-14
- TPIC 2014

(55 % OF 23.0 P.S.F. G.S.L. PLUS 8.4 P.S.F. RAIN LOAD) EQUALS 21.0 P.S.F. SPECIFIED ROOF LIVE LOAD

CSI: TC=0.38/1.00 (E-G:1) , BC=0.18/1.00 (M-N:4) , WB=0.66/1.00 (E-L:1) , SSI=0.24/1.00 (B-N:4)

DOL LUMBER=1.00 NAIL=1.00 LS BEND=1.10 COMP=1.10 SHEAR=1.10 TENS= 1.10

COMPANION LIVE LOAD FACTOR = 1.00

TRUSS PLATE MANUFACTURER IS NOT RESPONSIBLE FOR QUALITY CONTROL IN THE TRUSS MANUFACTURING PLANT .

NAIL VALUES

PLATE	GRIP(DRY) (PSI) MAX	MIN	SHEAR (PLI) MAX	MIN	SECTION (PLI) MAX	MIN
MT20	650	371	1747	788	1987	1873

PLATE PLACEMENT TOL. = 0.250 inches

PLATE ROTATION TOL. = 5.0 Deg.

JSI GRIP= 0.75 (H) (INPUT = 0.90)
JSI METAL= 0.18 (F) (INPUT = 1.00)

JOB NAME	TRUSS NAME	QUANTITY	PLY	JOB DESC.	DRWG NO.
336335	H261T		1	TRUSS DESC. JT 45147	E21104194

Alpha Roof Truss, Maple

Version 8.420 S Jan 21 2021 MiTek Industries, Inc. Thu Oct 14 08:53:38 2021 Page 1

ID:hd511hZTz_bdeQoS817GKByhVxV-hrDoYnQ_BbVlV9qT?SKamNL3PdCo3lQY9I4OmSyTZGh

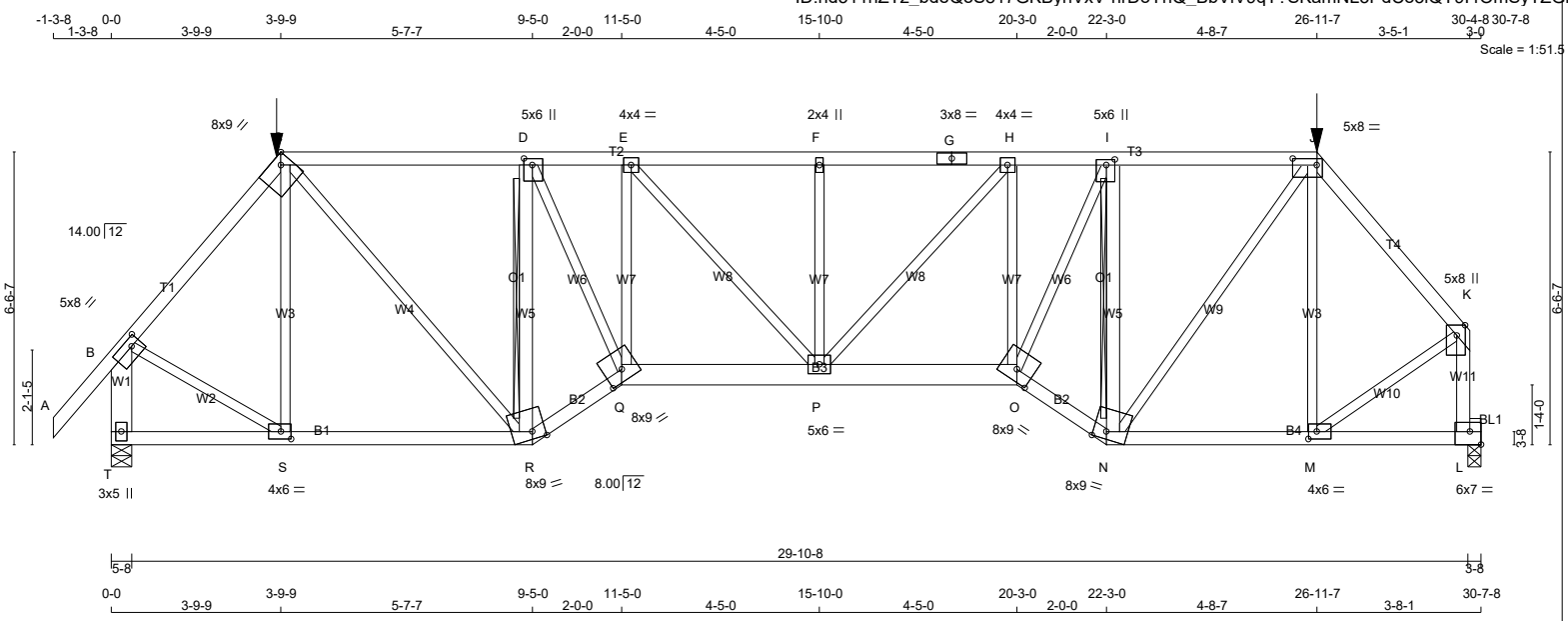

TOTAL WEIGHT = 161 lb

[M]

LUMBER

N. L. G. A. RULES

CHORDS	SIZE		LUMBER	DESCR.
A - C	2x4	DRY	No.2	SPF
C - G	2x4	DRY	No.2	SPF
G - J	2x4	DRY	No.2	SPF
J - K	2x4	DRY	No.2	SPF
T - B	2x6	DRY	No.2	SPF
L - K	2x4	DRY	No.2	SPF
T - R	2x4	DRY	No.2	SPF
R - Q	2x4	DRY	No.2	SPF
Q - O	2x6	DRY	No.2	SPF
O - N	2x4	DRY	No.2	SPF
N - L	2x4	DRY	No.2	SPF
BEARING BLOCKS				
BL1	2x4	DRY	No.2	SPF
ALL WEBS	2x3	DRY	No.2	SPF
EXCEPT				
R - D	2x4	DRY	No.2	SPF
N - I	2x4	DRY	No.2	SPF

DRY: SEASONED LUMBER.

PLATES (table is in inches)

JT	TYPE	PLATES	W	LEN	Y	X
B	TMVW-t	MT20	5.0	8.0	2.00	2.50
C	TTWW-h	MT20	8.0	9.0	Edge	2.75
D	TMWW+t	MT20	5.0	6.0	1.75	2.25
E	TMWW-t	MT20	4.0	4.0		
F	TMW+w	MT20	2.0	4.0		
G	TS-t	MT20	3.0	8.0		
H	TMWW-t	MT20	4.0	4.0		
I	TMWW+t	MT20	5.0	6.0	1.50	2.25
J	TTWW-l	MT20	5.0	8.0	1.75	6.50
K	TMVW+p	MT20	5.0	8.0	2.75	Edge
L	BMVK1-t	MT20	6.0	7.0	3.50	Edge
M	BMWW-t	MT20	4.0	6.0	2.00	2.25
N	BBWW-m	MT20	8.0	9.0	Edge	3.50
O	BBWW-h	MT20	8.0	9.0	3.00	4.50
P	BMWWW-t	MT20	5.0	6.0		
Q	BBWW-h	MT20	8.0	9.0	3.00	4.75
R	BBWW-m	MT20	8.0	9.0	Edge	3.50
S	BMWW-t	MT20	4.0	6.0	2.00	2.75
T	BMV1+p	MT20	3.0	5.0		

LATERAL BRACE(S) SHOWN SHALL BE 2X4 SPF#2

LICENSED PROFESSIONAL ENGINEER
Y. WIDYA
100225448
10/14/2021
PROVINCE OF ONTARIO

DIMENSIONS, SUPPORTS AND LOADINGS SPECIFIED BY FABRICATOR TO BE VERIFIED BY BUILDING DESIGNER

BEARINGS

JT	FACTORED GROSS REACTION VERT	HORZ	MAXIMUM FACTORED GROSS REACTION DOWN	HORZ	UPLIFT	INPUT BRG IN-SX	REQRD BRG IN-SX
T	2899	0	2899	0	0	5-8	3-15
L	2832	0	2832	0	0	3-8	3-8

UNFACTORED REACTIONS

JT	1ST LCASE COMBINED	MAX./MIN. COMPONENT REACTIONS SNOW	LIVE	PERM.LIVE	WIND	DEAD	SOIL
T	2066	1264 / 0	0 / 0	0 / 0	0 / 0	802 / 0	0 / 0
L	2020	1228 / 0	0 / 0	0 / 0	0 / 0	792 / 0	0 / 0

BEARING MATERIAL TO BE SPF NO.2 OR BETTER AT JOINT(S) T, L
BEARING SIZE FACTOR = 1.15 AT JNT(S) L (BASED ON SUPPORT DEPTH = 1-8)

BRACING

TOP CHORD TO BE SHEATHED OR MAX. PURLIN SPACING = 2.08 FT.
MAX. UNBRACED BOTTOM CHORD LENGTH = 6.25 FT OR RIGID CEILING DIRECTLY APPLIED.

ALL PITCH BREAKS AND PERIMETER CORNER JOINTS MUST BE LATERALLY RESTRAINED.

2x4 DRY SPF No.2 T-BRACE AT D-R, I-N

FASTEN T AND I-BRACES TO NARROW EDGE OF WEB WITH ONE ROW PER PLY OF 3" COMMON WIRE NAILS @ 6" O.C. WITH 3" MINIMUM END DISTANCE. BRACE MUST COVER 90% OF WEB LENGTH.

END VERTICAL(S) MUST BE SHEATHED OR HAVE BRACES AS INDICATED IN THE MAX. UNBRACED LENGTH COLUMN OF THE TABLE BELOW

LOADING

TOTAL LOAD CASES: (4)

CHORDS

MEMB. FR-TO	MAX. FACTORED FORCE (LBS)	FACTORED VERT. LOAD (PLF) FROM	TO	LC1 CSI (LC)	MAX. UNBRAC LENGTH
A- B	0 / 42	-78.0	-78.0	0.12 (1)	10.00
B- C	-2473 / 0	-78.0	-78.0	0.37 (1)	4.05
C- D	-3092 / 0	-153.5	-153.5	0.92 (1)	2.82
D- E	-4234 / 0	-78.0	-78.0	0.89 (1)	2.08
E- F	-4583 / 0	-78.0	-78.0	0.63 (1)	2.76
F- G	-4583 / 0	-78.0	-78.0	0.63 (1)	2.76
G- H	-4583 / 0	-78.0	-78.0	0.63 (1)	2.76
H- I	-3989 / 0	-78.0	-78.0	0.64 (1)	2.78
I- J	-2787 / 0	-153.5	-153.5	0.60 (1)	3.48
J- K	-2190 / 0	-78.0	-78.0	0.28 (1)	4.34
T- B	-2856 / 0	0.0	0.0	0.25 (1)	6.16
L- K	-2801 / 0	0.0	0.0	0.41 (1)	5.08
T- S	0 / 0	-36.4	-36.4	0.28 (4)	10.00
S- R	0 / 1593	-36.4	-36.4	0.45 (4)	10.00
R- Q	0 / 3652	-112.0	-112.0	0.73 (1)	10.00
Q- P	0 / 4242	-112.0	-112.0	0.70 (1)	10.00
P- O	0 / 4006	-112.0	-112.0	0.67 (1)	10.00
O- N	0 / 3283	-112.0	-112.0	0.66 (1)	10.00
N- M	0 / 1404	-36.4	-36.4	0.37 (1)	10.00
M- L	-187 / 0	-36.4	-36.4	0.20 (4)	6.25

WEBS

MEMB. FR-TO	MAX. FACTORED FORCE (LBS)	MAX CSI (LC)
S- C	-499 / 0	0.36 (1)
C- R	0 / 2230	0.55 (1)
R- D	-3524 / 0	0.86 (1)
D- Q	0 / 3028	0.75 (1)
Q- E	-399 / 0	0.15 (1)
E- P	0 / 512	0.13 (1)
P- F	-419 / 0	0.16 (1)
P- H	0 / 867	0.21 (1)
O- H	-743 / 0	0.29 (1)
O- I	0 / 3176	0.79 (1)
N- I	-3499 / 0	0.86 (1)
N- J	0 / 2286	0.57 (1)
M- J	-809 / 0	0.58 (1)
B- S	0 / 1753	0.43 (1)
M- K	0 / 1886	0.47 (1)

FACTORED CONCENTRATED LOADS (LBS)

JT	LOC.	LC1	MAX-	MAX+	FACE	DIR.	TYPE	HEEL	CONN.
C	3-9-9	-216	-216	---	FRONT	VERT	TOTAL	---	C1
J	26-11-7	-209	-209	---	FRONT	VERT	TOTAL	---	C1

DESIGN CRITERIA

SPECIFIED LOADS:

TOP	CH.	LL	=	21.0	PSF
		DL	=	6.0	PSF
BOT	CH.	LL	=	0.0	PSF
		DL	=	7.4	PSF
TOTAL	LOAD		=	34.4	PSF

SPACING = 24.0 IN. C/C

LOADING IN FLAT SECTION BASED ON A SLOPE OF 2.00/12 MINIMUM

GIRDER TYPE: CPrimeHip
LEFT SETBACK = 3-9-9
RIGHT SETBACK = 3-8-1
END SETBACK = 5-10-8
END WALL WIDTH = 0-0
CORNER FRAMING TYPE: CONVENTIONAL
END JACK TYPE: CONVENTIONAL
APPLIED TO FRONT SIDE
- ADDT'L LOADS BASED ON 55 % OF GSL.
LOADS APPLIED TO FIRST 9-5-0 OF SPAN MEASURED FROM THE LEFT.

GIRDER TYPE: CStdGirder
START DISTANCE = 9-5-0
START SPAN CARRIED = 5-10-8
END DISTANCE = 22-3-0
END SPAN CARRIED = 5-10-8
END WALL WIDTH = 0-0
APPLIED TO FRONT SIDE OF BOTTOM CHORD.
- ADDT'L LOADS BASED ON 55 % OF GSL.

GIRDER TYPE: CPrimeHip
LEFT SETBACK = 3-9-9
RIGHT SETBACK = 3-8-1
END SETBACK = 5-10-8
END WALL WIDTH = 0-0
CORNER FRAMING TYPE: CONVENTIONAL
END JACK TYPE: CONVENTIONAL
APPLIED TO FRONT SIDE
- ADDT'L LOADS BASED ON 55 % OF GSL.
LOADS APPLIED TO FIRST 8-4-8 OF SPAN MEASURED FROM THE RIGHT.

THIS TRUSS IS DESIGNED FOR RESIDENTIAL OR SMALL BUILDING REQUIREMENTS OF PART 9, NBCC 2015

THIS DESIGN COMPLIES WITH:
- PART 9 OF BCBC 2018 , ABC 2019
- PART 9 OF OBC 2012 (2019 AMENDMENT)
- CSA 086-14
- TPIC 2014

(55 % OF 23.0 P.S.F. G.S.L. PLUS 8.4 P.S.F. RAIN LOAD) EQUALS 21.0 P.S.F. SPECIFIED ROOF LIVE LOAD

ALLOWABLE DEFL.(LL)= L/360 (1.01")
CALCULATED VERT. DEFL.(LL) = L/ 999 (0.23")
ALLOWABLE DEFL.(TL)= L/360 (1.01")
CALCULATED VERT. DEFL.(TL) = L/ 817 (0.44")

CSI: TC=0.92/1.00 (C-D:1) , BC=0.73/1.00 (Q-R:1) , WB=0.86/1.00 (D-R:1) , SSI=0.42/1.00 (C-D:1)

DOL LUMBER=1.00 NAIL=1.00 LS BEND=1.00 COMP=1.00 SHEAR=1.00 TENS= 1.00

COMPANION LIVE LOAD FACTOR = 1.00

CONTINUED ON PAGE 2

JOB NAME	TRUSS NAME	QUANTITY	PLY	JOB DESC.	DRWG NO.
336335	H262T		1	TRUSS DESC. JT 45147	E21104195

Alpa Roof Truss, Maple

Version 8.420 S Jan 21 2021 MiTek Industries, Inc. Thu Oct 14 08:53:40 2021 Page 1

ID:hd511hZTz_bdeQoS817GKByhVxV-eELZzTREjClSkS_s7tM2soQWuRwbXiCrccZVrLyTZGf

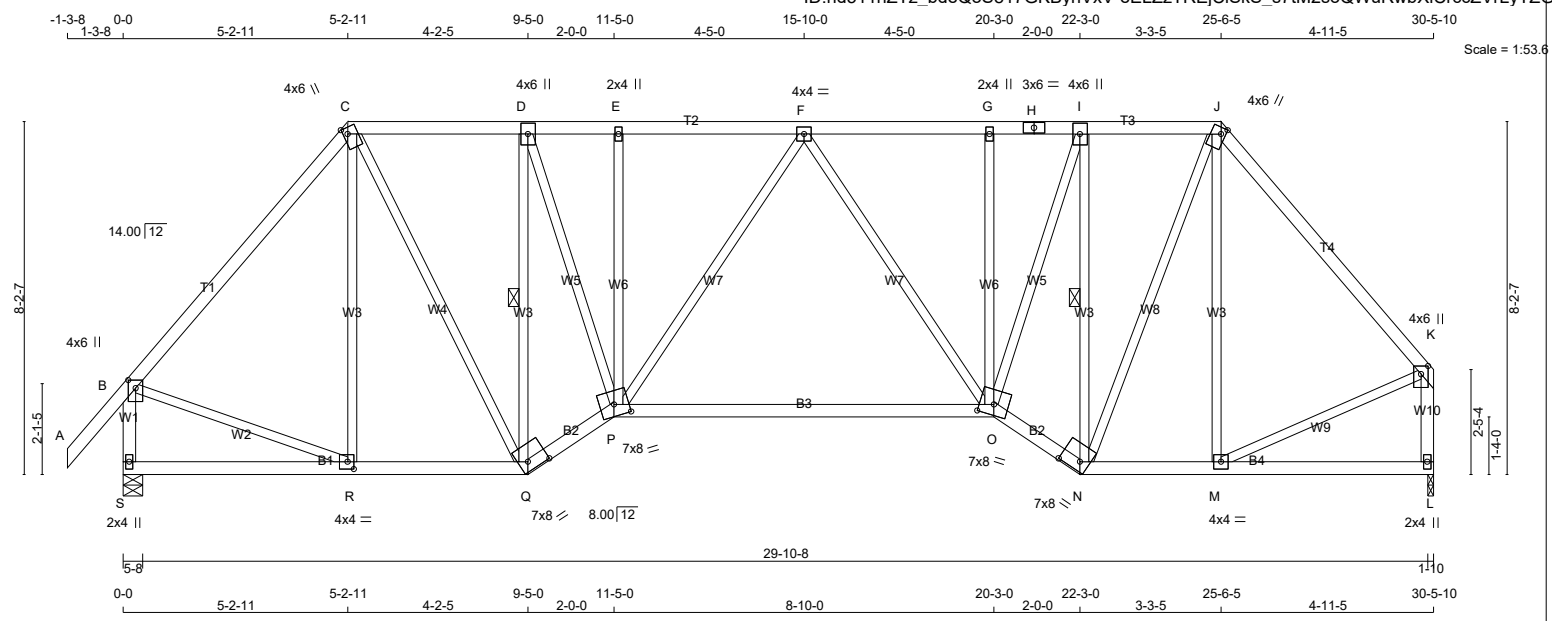

TOTAL WEIGHT = 164 lb

[M]

LUMBER

N. L. G. A. RULES

CHORDS	SIZE		LUMBER	DESCR.
A - C	2x4	DRY	No.2	SPF
C - H	2x4	DRY	No.2	SPF
H - J	2x4	DRY	No.2	SPF
J - K	2x4	DRY	No.2	SPF
S - B	2x4	DRY	No.2	SPF
L - K	2x4	DRY	No.2	SPF
S - Q	2x4	DRY	No.2	SPF
Q - P	2x4	DRY	No.2	SPF
P - O	2x4	DRY	No.2	SPF
O - N	2x4	DRY	No.2	SPF
N - L	2x4	DRY	No.2	SPF
ALL WEBS EXCEPT	2x3	DRY	No.2	SPF

DRY: SEASONED LUMBER.

PLATES (table is in inches)

JT	TYPE	PLATES	W	LEN	Y	X
B	TMVW+p	MT20	4.0	6.0	2.25	2.00
C	TTWW+m	MT20	4.0	6.0	1.75	1.25
D	TMWW+t	MT20	4.0	6.0		
E	TMW+w	MT20	2.0	4.0		
F	TMWW-t	MT20	4.0	4.0		
G	TMW+w	MT20	2.0	4.0		
H	TS-t	MT20	3.0	6.0		
I	TMWW+t	MT20	4.0	6.0		
J	TTWW+m	MT20	4.0	6.0	1.75	1.25
K	TMVW+p	MT20	4.0	6.0	2.25	2.00
L	BMV1+p	MT20	2.0	4.0		
M	BMWW-t	MT20	4.0	4.0		
N	BBWW-h	MT20	7.0	8.0	2.50	5.50
O	BBWWW-m	MT20	7.0	8.0	3.00	4.00
P	BBWWW-m	MT20	7.0	8.0	3.25	4.00
Q	BBWW-h	MT20	7.0	8.0	2.50	5.50
R	BMWW-t	MT20	4.0	4.0	2.00	1.75
S	BMV1+p	MT20	2.0	4.0		

LATERAL BRACE(S) SHOWN SHALL BE 2X4 SPF#2

LICENSED PROFESSIONAL ENGINEER
Y. WIDYA
100225448
10/14/2021
PROVINCE OF ONTARIO

DIMENSIONS, SUPPORTS AND LOADINGS SPECIFIED BY FABRICATOR TO BE VERIFIED BY BUILDING DESIGNER

BEARINGS

JT	FACTORED GROSS REACTION VERT	HORZ	MAXIMUM FACTORED GROSS REACTION DOWN	HORZ	UPLIFT	INPUT BRG IN-SX	REQRD BRG IN-SX
S	1579	0	1579	0	0	5-8	1-11
L	1470	0	1470	0	0	1-10	1-9

UNFACTORED REACTIONS

JT	1ST LCASE COMBINED	MAX./MIN. COMPONENT REACTIONS SNOW	LIVE	PERM.LIVE	WIND	DEAD	SOIL
S	1124	698 / 0	0 / 0	0 / 0	0 / 0	425 / 0	0 / 0
L	1048	640 / 0	0 / 0	0 / 0	0 / 0	408 / 0	0 / 0

BEARING MATERIAL TO BE SPF NO.2 OR BETTER AT JOINT(S) S, L

BRACING

TOP CHORD TO BE SHEATHED OR MAX. PURLIN SPACING = 4.95 FT.
MAX. UNBRACED BOTTOM CHORD LENGTH = 10.00 FT OR RIGID CEILING DIRECTLY APPLIED.

ALL PITCH BREAKS AND PERIMETER CORNER JOINTS MUST BE LATERALLY RESTRAINED.

1 LATERAL BRACE(S) AT 1/ 2 LENGTH OF D-Q, I-N.

END VERTICAL(S) MUST BE SHEATHED OR HAVE BRACES AS INDICATED IN THE MAX. UNBRACED LENGTH COLUMN OF THE TABLE BELOW

LOADING

TOTAL LOAD CASES: (4)

CHORDS

MEMB. FR-TO	MAX. FACTORED FORCE (LBS)	FACTORED VERT. LOAD (PLF) FROM	TO	LC1 CSI (LC)	MAX UNBRAC LENGTH
A- B	0 / 42	-78.0	-78.0	0.11 (1)	10.00
B- C	-1261 / 0	-78.0	-78.0	0.48 (1)	5.19
C- D	-1226 / 0	-78.0	-78.0	0.18 (1)	5.58
D- E	-1604 / 0	-78.0	-78.0	0.17 (1)	5.05
E- F	-1607 / 0	-78.0	-78.0	0.25 (1)	4.95
F- G	-1531 / 0	-78.0	-78.0	0.25 (1)	5.05
G- H	-1527 / 0	-78.0	-78.0	0.10 (1)	5.24
H- I	-1527 / 0	-78.0	-78.0	0.10 (1)	5.24
I- J	-1124 / 0	-78.0	-78.0	0.12 (1)	5.85
J- K	-1207 / 0	-78.0	-78.0	0.41 (1)	5.35
S- B	-1540 / 0	0.0	0.0	0.18 (1)	6.63
L- K	-1433 / 0	0.0	0.0	0.19 (1)	6.82
S- R	0 / 0	-18.5	-18.5	0.12 (4)	10.00
R- Q	0 / 815	-18.5	-18.5	0.20 (1)	10.00
Q- P	0 / 1449	-18.5	-18.5	0.25 (1)	10.00
P- O	0 / 1699	-18.5	-18.5	0.58 (4)	10.00
O- N	0 / 1327	-18.5	-18.5	0.23 (1)	10.00
N- M	0 / 780	-18.5	-18.5	0.19 (1)	10.00
M- L	0 / 0	-18.5	-18.5	0.11 (4)	10.00

WEBS

MEMB. FR-TO	MAX. FACTORED FORCE (LBS)	MAX CSI (LC)
R- C	-160 / 17	0.21 (1)
C- Q	0 / 872	0.20 (1)
Q- D	-1528 / 0	0.65 (1)
D- P	0 / 1304	0.29 (1)
P- E	-201 / 0	0.16 (1)
P- F	-164 / 0	0.21 (1)
F- O	-300 / 0	0.39 (1)
O- G	-233 / 0	0.19 (1)
O- I	0 / 1384	0.31 (1)
N- I	-1527 / 0	0.65 (1)
N- J	0 / 896	0.20 (1)
M- J	-223 / 0	0.29 (1)
B- R	0 / 860	0.19 (1)
M- K	0 / 846	0.19 (1)

DESIGN CRITERIA

SPECIFIED LOADS:

TOP CH.	LL	=	21.0	PSF
	DL	=	6.0	PSF
BOT CH.	LL	=	0.0	PSF
	DL	=	7.4	PSF
TOTAL LOAD		=	34.4	PSF

SPACING = 24.0 IN. C/C

LOADING IN FLAT SECTION BASED ON A SLOPE OF 2.00/12 MINIMUM

THIS TRUSS IS DESIGNED FOR RESIDENTIAL OR SMALL BUILDING REQUIREMENTS OF PART 9, NBCC 2015

THIS DESIGN COMPLIES WITH:
- PART 9 OF BCBC 2018 , ABC 2019
- PART 9 OF OBC 2012 (2019 AMENDMENT)
- CSA 086-14
- TPIC 2014

(55 % OF 23.0 P.S.F. G.S.L. PLUS 8.4 P.S.F. RAIN LOAD) EQUALS 21.0 P.S.F. SPECIFIED ROOF LIVE LOAD

ALLOWABLE DEFL.(LL)= L/360 (1.02")
CALCULATED VERT. DEFL.(LL) = L/ 999 (0.09")
ALLOWABLE DEFL.(TL)= L/360 (1.02")
CALCULATED VERT. DEFL.(TL) = L/ 815 (0.45")

CSI: TC=0.48/1.00 (B-C:1) , BC=0.58/1.00 (O-P:4) , WB=0.65/1.00 (D-Q:1) , SSI=0.15/1.00 (E-F:1)

DOL LUMBER=1.00 NAIL=1.00 LS BEND=1.10 COMP=1.10 SHEAR=1.10 TENS= 1.10

COMPANION LIVE LOAD FACTOR = 1.00

TRUSS PLATE MANUFACTURER IS NOT RESPONSIBLE FOR QUALITY CONTROL IN THE TRUSS MANUFACTURING PLANT .

NAIL VALUES

PLATE	GRIP(DRY) (PSI) MAX	MIN	SHEAR (PLI) MAX	MIN	SECTION (PLI) MAX	MIN
MT20	650	371	1747	788	1987	1873

PLATE PLACEMENT TOL. = 0.250 inches

PLATE ROTATION TOL. = 5.0 Deg.

JSI GRIP= 0.89 (P) (INPUT = 0.90)
JSI METAL= 0.50 (B) (INPUT = 1.00)

JOB NAME	TRUSS NAME	QUANTITY	PLY	JOB DESC.		DRWG NO.
336335	H263T		1	TRUSS DESC.	JT 45147	E21104196

Alpa Roof Truss, Maple

Version 8.420 S Jan 21 2021 MiTek Industries, Inc. Thu Oct 14 08:53:42 2021 Page 1

ID:hd511hZTz bdeQoS817GKByhVxV-adSJO9TUFq?A m8EEIOWxDWttFdZ?YQ84w2bvEyTZGd

Scale = 1:61.3

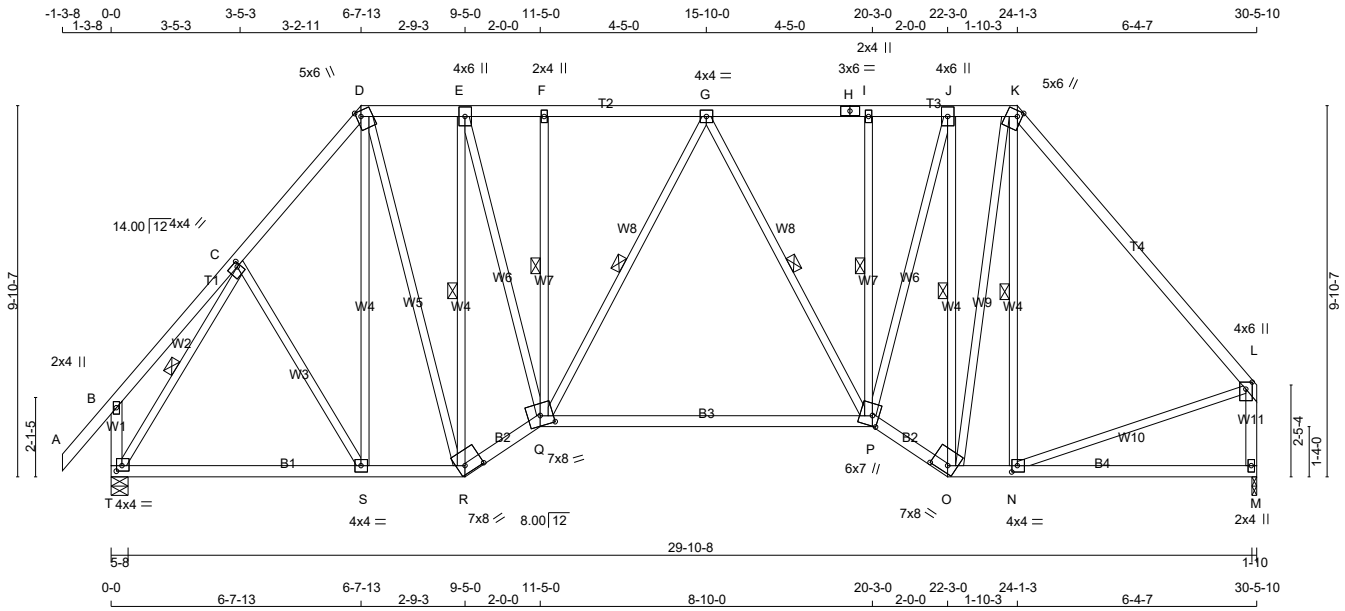

TOTAL WEIGHT = 2 X 188 = 376 lb

[M]

LUMBER

N. L. G. A. RULES

CHORDS	SIZE		LUMBER	DESCR.
A - D	2x4	DRY	No.2	SPF
D - H	2x4	DRY	No.2	SPF
H - K	2x4	DRY	No.2	SPF
K - L	2x4	DRY	2100F 1.8E	SPF
T - B	2x4	DRY	No.2	SPF
M - L	2x4	DRY	No.2	SPF
T - R	2x4	DRY	No.2	SPF
R - Q	2x4	DRY	No.2	SPF
Q - P	2x4	DRY	No.2	SPF
P - O	2x4	DRY	No.2	SPF
O - M	2x4	DRY	No.2	SPF
ALL WEBS EXCEPT	2x3	DRY	No.2	SPF

DRY: SEASONED LUMBER.

PLATES (table is in inches)

JT	TYPE	PLATES	W	LEN	Y	X
B	TMV+p	MT20	2.0	4.0		
C	TMWW-t	MT20	4.0	4.0	1.50	1.00
D	TTWW+m	MT20	5.0	6.0	1.75	1.50
E	TMWW+t	MT20	4.0	6.0		
F	TMW+w	MT20	2.0	4.0		
G	TMWW-t	MT20	4.0	4.0		
H	TS-t	MT20	3.0	6.0		
I	TMW+w	MT20	2.0	4.0		
J	TMWW+t	MT20	4.0	6.0		
K	TTWW+m	MT20	5.0	6.0	1.75	1.50
L	TMVW+p	MT20	4.0	6.0	2.25	2.00
M	BMV1+p	MT20	2.0	4.0		
N	BMWW-t	MT20	4.0	4.0	2.00	1.75
O	BBWW-h	MT20	7.0	8.0	2.25	5.25
P	BBWWW+m	MT20	6.0	7.0	3.25	2.00
Q	BBWWW-m	MT20	7.0	8.0	3.25	4.00
R	BBWW-h	MT20	7.0	8.0	2.50	5.50
S	BMWW-t	MT20	4.0	4.0		
T	BMVW1-t	MT20	4.0	4.0	1.75	1.75

LATERAL BRACE(S) SHOWN SHALL BE 2X4 SPF#2

DIMENSIONS, SUPPORTS AND LOADINGS SPECIFIED BY FABRICATOR TO BE VERIFIED BY BUILDING DESIGNER

BEARINGS

JT	FACTORED GROSS REACTION VERT	HORZ	MAXIMUM FACTORED GROSS REACTION DOWN	HORZ	UPLIFT	INPUT BRG IN-SX	REQRD BRG IN-SX
M	1470	0	1470	0	0	1-10	1-9
T	1579	0	1579	0	0	5-8	1-11

UNFACTORED REACTIONS

JT	1ST LCASE COMBINED	MAX./MIN. COMPONENT REACTIONS SNOW	LIVE	PERM.LIVE	WIND	DEAD	SOIL
M	1048	640 / 0	0 / 0	0 / 0	0 / 0	408 / 0	0 / 0
T	1124	698 / 0	0 / 0	0 / 0	0 / 0	425 / 0	0 / 0

BEARING MATERIAL TO BE SPF NO.2 OR BETTER AT JOINT(S) M, T

BRACING

TOP CHORD TO BE SHEATHED OR MAX. PURLIN SPACING = 5.42 FT.
MAX. UNBRACED BOTTOM CHORD LENGTH = 10.00 FT OR RIGID CEILING DIRECTLY APPLIED.

ALL PITCH BREAKS AND PERIMETER CORNER JOINTS MUST BE LATERALLY RESTRAINED.

1 LATERAL BRACE(S) AT 1/ 2 LENGTH OF E-R, F-Q, G-Q, G-P, I-P, J-O, K-N, C-T.

END VERTICAL(S) MUST BE SHEATHED OR HAVE BRACES AS INDICATED IN THE MAX. UNBRACED LENGTH COLUMN OF THE TABLE BELOW

LOADING

TOTAL LOAD CASES: (4)

CHORDS

MEMB. FR-TO	MAX. FACTORED FORCE (LBS)	FACTORED VERT. LOAD (PLF) FROM	TO	LC1 CSI (LC)	MAX UNBRAC LENGTH
A- B	0 / 42	-78.0	-78.0	0.11 (1)	10.00
B- C	0 / 22	-78.0	-78.0	0.13 (1)	10.00
C- D	-1271 / 0	-78.0	-78.0	0.16 (1)	5.55
D- E	-1003 / 0	-78.0	-78.0	0.09 (1)	6.14
E- F	-1280 / 0	-78.0	-78.0	0.09 (1)	5.61
F- G	-1283 / 0	-78.0	-78.0	0.23 (1)	5.42
G- H	-1222 / 0	-78.0	-78.0	0.23 (1)	5.52
H- I	-1222 / 0	-78.0	-78.0	0.23 (1)	5.52
I- J	-1219 / 0	-78.0	-78.0	0.10 (1)	5.70
J- K	-920 / 0	-78.0	-78.0	0.07 (1)	6.25
K- L	-1214 / 0	-78.0	-78.0	0.45 (1)	6.25
T- B	-208 / 0	0.0	0.0	0.02 (1)	7.81
M- L	-1423 / 0	0.0	0.0	0.19 (1)	6.84
T- S	0 / 777	-18.5	-18.5	0.26 (4)	10.00
S- R	0 / 810	-18.5	-18.5	0.26 (4)	10.00
R- Q	0 / 1189	-18.5	-18.5	0.20 (1)	10.00
Q- P	0 / 1354	-18.5	-18.5	0.55 (4)	10.00
P- O	0 / 1088	-18.5	-18.5	0.19 (1)	10.00
O- N	0 / 786	-18.5	-18.5	0.26 (4)	10.00
N- M	0 / 0	-18.5	-18.5	0.18 (4)	10.00

WEBS

MEMB. FR-TO	MAX. FACTORED FORCE (LBS)	MAX CSI (LC)
C- S	0 / 61	0.02 (4)
S- D	0 / 93	0.03 (4)
D- R	0 / 694	0.16 (1)
R- E	-1308 / 0	0.86 (1)
E- Q	0 / 1174	0.26 (1)
Q- F	-246 / 0	0.11 (1)
Q- G	-150 / 0	0.09 (1)
G- P	-279 / 0	0.17 (1)
P- I	-276 / 0	0.13 (1)
P- J	0 / 1265	0.28 (1)
O- J	-1300 / 0	0.85 (1)
O- K	0 / 700	0.16 (1)
N- K	-118 / 47	0.08 (1)
T- C	-1531 / 0	0.44 (1)
N- L	0 / 827	0.19 (1)

DESIGN CRITERIA

SPECIFIED LOADS:

TOP	CH.	LL	=	21.0	PSF
		DL	=	6.0	PSF
BOT	CH.	LL	=	0.0	PSF
		DL	=	7.4	PSF
TOTAL	LOAD		=	34.4	PSF

SPACING = 24.0 IN. C/C

LOADING IN FLAT SECTION BASED ON A SLOPE OF 2.00/12 MINIMUM

THIS TRUSS IS DESIGNED FOR RESIDENTIAL OR SMALL BUILDING REQUIREMENTS OF PART 9, NBCC 2015

THIS DESIGN COMPLIES WITH:
- PART 9 OF BCBC 2018 , ABC 2019
- PART 9 OF OBC 2012 (2019 AMENDMENT)
- CSA 086-14
- TPIC 2014

(55 % OF 23.0 P.S.F. G.S.L. PLUS 8.4 P.S.F. RAIN LOAD) EQUALS 21.0 P.S.F. SPECIFIED ROOF LIVE LOAD

ALLOWABLE DEFL.(LL)= L/360 (1.02")
CALCULATED VERT. DEFL.(LL) = L/ 999 (0.08")
ALLOWABLE DEFL.(TL)= L/360 (1.02")
CALCULATED VERT. DEFL.(TL) = L/ 853 (0.43")

CSI: TC=0.45/1.00 (K-L:1) , BC=0.55/1.00 (P-Q:4) , WB=0.86/1.00 (E-R:1) , SSI=0.15/1.00 (F-G:1)

DOL LUMBER=1.00 NAIL=1.00 LS BEND=1.10 COMP=1.10 SHEAR=1.10 TENS= 1.10

COMPANION LIVE LOAD FACTOR = 1.00

TRUSS PLATE MANUFACTURER IS NOT RESPONSIBLE FOR QUALITY CONTROL IN THE TRUSS MANUFACTURING PLANT .

NAIL VALUES

PLATE	GRIP(DRY) (PSI) MAX	MIN	SHEAR (PLI) MAX	MIN	SECTION (PLI) MAX	MIN
MT20	650	371	1747	788	1987	1873

PLATE PLACEMENT TOL. = 0.250 inches

PLATE ROTATION TOL. = 5.0 Deg.

JSI GRIP= 0.87 (Q) (INPUT = 0.90)
JSI METAL= 0.51 (C) (INPUT = 1.00)

JOB NAME	TRUSS NAME	QUANTITY	PLY	JOB DESC.	DRWG NO.
336335	H263A		1	TRUSS DESC. JT 45147	E21104197

Alpa Roof Truss, Maple

Version 8.420 S Jan 21 2021 MiTek Industries, Inc. Thu Oct 14 08:52:43 2021 Page 1

ID:hd511hZTz_bdeQoS817GKByhVxV-oGO??_lU8iZYPi7vHPrg2nZidSW9gwOSVFF_L8yTZHY

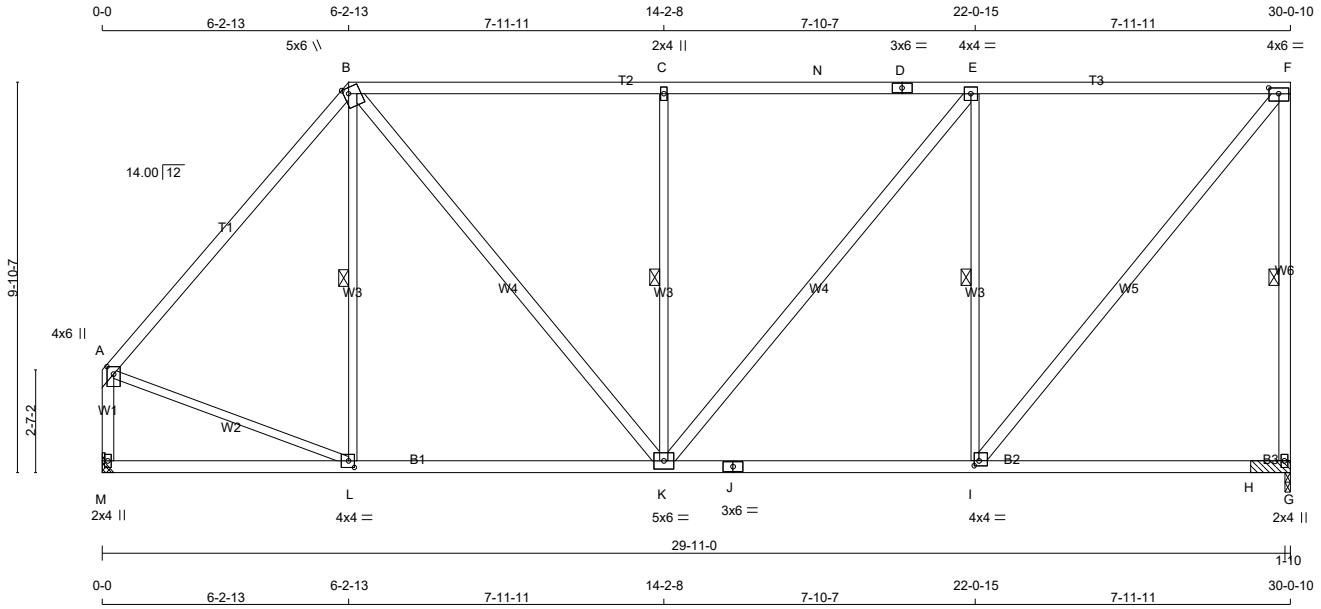

TOTAL WEIGHT = 3 X 156 = 468 lb

[M]

LUMBER

N. L. G. A. RULES

CHORDS	SIZE		LUMBER	DESCR.
A - B	2x4	DRY	2100F 1.8E	SPF
B - D	2x4	DRY	1650F 1.5E	SPF
D - F	2x4	DRY	1650F 1.5E	SPF
G - F	2x4	DRY	No.2	SPF
M - A	2x4	DRY	No.2	SPF
M - J	2x4	DRY	No.2	SPF
J - G	2x4	DRY	No.2	SPF
ALL WEBS EXCEPT	2x3	DRY	No.2	SPF
B - K	2x4	DRY	No.2	SPF
K - E	2x4	DRY	No.2	SPF
I - F	2x4	DRY	No.2	SPF

DRY: SEASONED LUMBER.

PLATES (table is in inches)

JT	TYPE	PLATES	W	LEN	Y	X
A	TMVW+p	MT20	4.0	6.0	2.25	2.00
B	TTWW+m	MT20	5.0	6.0	1.75	1.50
C	TMW+w	MT20	2.0	4.0		
D	TS-t	MT20	3.0	6.0		
E	TMWW-t	MT20	4.0	4.0		
F	TMVW-t	MT20	4.0	6.0	1.75	3.00
G	BMV1+p	MT20	2.0	4.0		
I	BMWW-t	MT20	4.0	4.0	1.50	1.50
J	BS-t	MT20	3.0	6.0		
K	BMWWW-t	MT20	5.0	6.0		
L	BMWW-t	MT20	4.0	4.0	2.00	1.75
M	BMV1+p	MT20	2.0	4.0		

LATERAL BRACE(S) SHOWN SHALL BE 2X4 SPF#2

DIMENSIONS, SUPPORTS AND LOADINGS SPECIFIED BY FABRICATOR TO BE VERIFIED BY BUILDING DESIGNER

BEARINGS

JT	FACTORED GROSS REACTION VERT	HORZ	MAXIMUM FACTORED GROSS REACTION DOWN	HORZ	UPLIFT	INPUT BRG IN-SX	REQRD BRG IN-SX
G	1557	0	1557	0	0	1-10	1-10 & BLOCK
M	1520	0	1520	0	0	MECHANICAL	

A SUITABLE HANGER/MECHANICAL CONNECTION IS REQUIRED AT JOINT M. MINIMUM BEARING LENGTH AT JOINT M = 1-10.

UNFACTORED REACTIONS

JT	1ST LCASE COMBINED	MAX./MIN. COMPONENT REACTIONS SNOW	LIVE	PERM.LIVE	WIND	DEAD	SOIL
G	1120	631 / 0	0 / 0	0 / 0	0 / 0	489 / 0	0 / 0
M	1090	631 / 0	0 / 0	0 / 0	0 / 0	459 / 0	0 / 0

BEARING MATERIAL TO BE SPF NO.2 OR BETTER AT JOINT(S) G

2x4 DRY SPF No.2 BEARING BLOCK 12" LONG AT JT. G ATTACHED TO FRONT SIDE WITH 2 ROWS OF (0.122"X3") SPIRAL NAILS SPACED 3" C.C. 8 NAILS TOTAL.

BRACING

FOR SECTION B-F, MAX. PURLIN SPACING = 2.00 FT.
FOR OTHER SECTIONS, TOP CHORD TO BE SHEATHED OR MAX. PURLIN SPACING = 6.25 FT.
MAX. UNBRACED BOTTOM CHORD LENGTH = 10.00 FT OR RIGID CEILING DIRECTLY APPLIED.

ALL PITCH BREAKS AND PERIMETER CORNER JOINTS MUST BE LATERALLY RESTRAINED.

1 LATERAL BRACE(S) AT 1/ 2 LENGTH OF F-G, B-L, C-K, E-I.

END VERTICAL(S) MUST BE SHEATHED OR HAVE BRACES AS INDICATED IN THE MAX. UNBRACED LENGTH COLUMN OF THE TABLE BELOW

LOADING

TOTAL LOAD CASES: (4)

CHORDS

MEMB. FR-TO	MAX. FACTORED FORCE (LBS)	FACTORED VERT. LOAD (PLF) FROM	TO	LC1 MAX CSI (LC)	MAX. UNBRAC LENGTH
A- B	-1248 / 0	-78.0	-78.0	0.43 (1)	6.25
B- C	-1277 / 0	-85.5	-85.5	0.71 (1)	2.00
C- N	-1277 / 0	-85.5	-85.5	0.71 (1)	2.00
N- D	-1277 / 0	-85.5	-85.5	0.71 (1)	2.00
D- E	-1277 / 0	-85.5	-85.5	0.71 (1)	2.00
E- F	-1020 / 0	-85.5	-85.5	0.69 (1)	2.00
G- F	-1499 / 0	0.0	0.0	0.70 (1)	5.36
M- A	-1477 / 0	0.0	0.0	0.21 (1)	6.74
M- L	0 / 0	-18.5	-18.5	0.22 (4)	10.00
L- K	0 / 808	-18.5	-18.5	0.31 (4)	10.00
K- J	0 / 1020	-18.5	-18.5	0.40 (4)	10.00
J- I	0 / 1020	-18.5	-18.5	0.40 (4)	10.00
I- H	0 / 0	-18.5	-18.5	0.28 (4)	10.00
H- G	0 / 0	-18.5	-18.5	0.28 (4)	10.00

WEBS

MEMB. FR-TO	MAX. FACTORED FORCE (LBS)	MAX CSI (LC)
L- B	-136 / 41	0.09 (1)
B- K	0 / 732	0.12 (1)
K- C	-737 / 0	0.48 (1)
K- E	0 / 406	0.07 (1)
I- E	-1058 / 0	0.70 (1)
I- F	0 / 1594	0.26 (1)
A- L	0 / 858	0.19 (1)

DESIGN CRITERIA

SPECIFIED LOADS:

TOP CH.	LL	=	21.0	PSF
	DL	=	6.0	PSF
BOT CH.	LL	=	0.0	PSF
	DL	=	7.4	PSF
TOTAL LOAD		=	34.4	PSF

SPACING = 24.0 IN. C/C

LOADING IN FLAT SECTION BASED ON PIGGYBACK TRUSS WITH SLOPES OF 6.00/12 AND -6.00/12 AND RESPECTIVE HEEL HEIGHTS OF 0-0 AND 0-0 AND AN ADDITIONAL DEAD LOAD OF 3.0 P.S.F.

THIS TRUSS IS DESIGNED FOR RESIDENTIAL OR SMALL BUILDING REQUIREMENTS OF PART 9, NBCC 2015

THIS DESIGN COMPLIES WITH:
- PART 9 OF BCBC 2018 , ABC 2019
- PART 9 OF OBC 2012 (2019 AMENDMENT)
- CSA 086-14
- TPIC 2014

(55 % OF 23.0 P.S.F. G.S.L. PLUS 8.4 P.S.F. RAIN LOAD) EQUALS 21.0 P.S.F. SPECIFIED ROOF LIVE LOAD

ALLOWABLE DEFL.(LL)= L/360 (1.00")
CALCULATED VERT. DEFL.(LL) = L/ 999 (0.05")
ALLOWABLE DEFL.(TL)= L/360 (1.00")
CALCULATED VERT. DEFL.(TL) = L/ 999 (0.13")

CSI: TC=0.71/1.00 (C-E:1) , BC=0.40/1.00 (I-K:4) , WB=0.70/1.00 (E-I:1) , SSI=0.32/1.00 (E-F:1)

DOL LUMBER=1.00 NAIL=1.00 LS BEND=1.10 COMP=1.10 SHEAR=1.10 TENS= 1.10

COMPANION LIVE LOAD FACTOR = 1.00

TRUSS PLATE MANUFACTURER IS NOT RESPONSIBLE FOR QUALITY CONTROL IN THE TRUSS MANUFACTURING PLANT .

NAIL VALUES

PLATE	GRIP(DRY) (PSI) MAX	MIN	SHEAR (PLI) MAX	MIN	SECTION (PLI) MAX	MIN
MT20	650	371	1747	788	1987	1873

PLATE PLACEMENT TOL. = 0.250 inches

PLATE ROTATION TOL. = 5.0 Deg.

JSI GRIP= 0.85 (I) (INPUT = 0.90)
JSI METAL= 0.48 (A) (INPUT = 1.00)

JOB NAME	TRUSS NAME	QUANTITY	PLY	JOB DESC.		DRWG NO.
336335	H263S		1	TRUSS DESC.	JT 45147	E21104198

Alpa Roof Truss, Maple

Version 8.420 S Jan 21 2021 MiTek Industries, Inc. Thu Oct 14 08:52:45 2021 Page 1

ID:hd511hZTz_bdeQoS817GKByhVxV-lfWmQfnkgJpGe?HHOqt87Ce6BGEg8vGlzZk4P1yTZHW

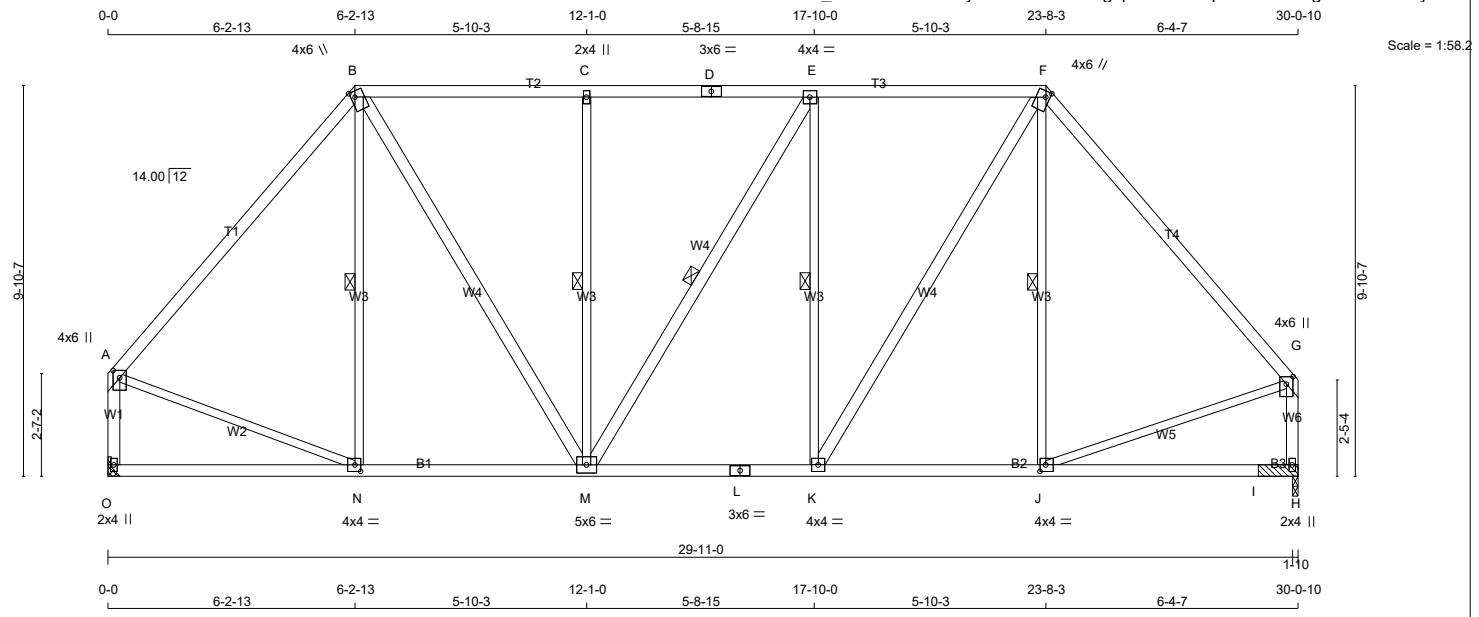

TOTAL WEIGHT = 3 X 161 = 482 lb

[M]

LUMBER

N. L. G. A. RULES

CHORDS	SIZE		LUMBER	DESCR.
A - B	2x4	DRY	2100F 1.8E	SPF
B - D	2x4	DRY	No.2	SPF
D - F	2x4	DRY	No.2	SPF
F - G	2x4	DRY	2100F 1.8E	SPF
O - A	2x4	DRY	No.2	SPF
H - G	2x4	DRY	No.2	SPF
O - L	2x4	DRY	No.2	SPF
L - H	2x4	DRY	No.2	SPF
ALL WEBS	2x3	DRY	No.2	SPF
EXCEPT				
B - M	2x4	DRY	No.2	SPF
M - E	2x4	DRY	No.2	SPF
K - F	2x4	DRY	No.2	SPF

DRY: SEASONED LUMBER.

PLATES (table is in inches)

JT	TYPE	PLATES	W	LEN	Y	X
A	TMVW+p	MT20	4.0	6.0	2.25	2.00
B	TTWW+m	MT20	4.0	6.0	1.75	1.25
C	TMW+w	MT20	2.0	4.0		
D	TS-t	MT20	3.0	6.0		
E	TMWW-t	MT20	4.0	4.0		
F	TTWW+m	MT20	4.0	6.0	1.75	1.25
G	TMVW+p	MT20	4.0	6.0	2.25	2.00
H	BMV1+p	MT20	2.0	4.0		
J	BMWW-t	MT20	4.0	4.0	2.00	1.75
K	BMWW-t	MT20	4.0	4.0		
L	BS-t	MT20	3.0	6.0		
M	BMWWW-t	MT20	5.0	6.0		
N	BMWW-t	MT20	4.0	4.0	2.00	1.75
O	BMV1+p	MT20	2.0	4.0		

LATERAL BRACE(S) SHOWN SHALL BE 2X4 SPF#2

DIMENSIONS, SUPPORTS AND LOADINGS SPECIFIED BY FABRICATOR TO BE VERIFIED BY BUILDING DESIGNER

BEARINGS

JT	FACTORED GROSS REACTION VERT	HORZ	MAXIMUM FACTORED GROSS REACTION DOWN	HORZ	UPLIFT	INPUT BRG IN-SX	REQRD BRG IN-SX
O	1515	0	1515	0	0	MECHANICAL	
H	1515	0	1515	0	0	1-10	1-10 & BLOCK

A SUITABLE HANGER/MECHANICAL CONNECTION IS REQUIRED AT JOINT O. MINIMUM BEARING LENGTH AT JOINT O = 1-10.

UNFACTORED REACTIONS

JT	1ST LCASE COMBINED	MAX./MIN. COMPONENT REACTIONS SNOW	LIVE	PERM.LIVE	WIND	DEAD	SOIL
O	1086	631 / 0	0 / 0	0 / 0	0 / 0	455 / 0	0 / 0
H	1086	631 / 0	0 / 0	0 / 0	0 / 0	455 / 0	0 / 0

BEARING MATERIAL TO BE SPF NO.2 OR BETTER AT JOINT(S) H

2x4 DRY SPF No.2 BEARING BLOCK 12" LONG AT JT. H ATTACHED TO FRONT SIDE WITH 2 ROWS OF (0.122"X3") SPIRAL NAILS SPACED 3" C.C. 8 NAILS TOTAL.

BRACING

FOR SECTION B-F, MAX. PURLIN SPACING = 2.00 FT.
FOR OTHER SECTIONS, TOP CHORD TO BE SHEATHED OR MAX. PURLIN SPACING = 6.21 FT.
MAX. UNBRACED BOTTOM CHORD LENGTH = 10.00 FT OR RIGID CEILING DIRECTLY APPLIED.

ALL PITCH BREAKS AND PERIMETER CORNER JOINTS MUST BE LATERALLY RESTRAINED.

1 LATERAL BRACE(S) AT 1/ 2 LENGTH OF B-N, C-M, E-M, E-K, F-J.

END VERTICAL(S) MUST BE SHEATHED OR HAVE BRACES AS INDICATED IN THE MAX. UNBRACED LENGTH COLUMN OF THE TABLE BELOW

LOADING

TOTAL LOAD CASES: (4)

CHORDS

MEMB. FR-TO	MAX. FACTORED FORCE (LBS)	FACTORED VERT. LOAD LC1 (PLF) FROM	TO	MAX CSI (LC)	MAX. UNBRAC LENGTH
A- B	-1239 / 0	-78.0	-78.0	0.43 (1)	6.25
B- C	-1196 / 0	-85.5	-85.5	0.44 (1)	2.00
C- D	-1196 / 0	-85.5	-85.5	0.44 (1)	2.00
D- E	-1196 / 0	-85.5	-85.5	0.44 (1)	2.00
E- F	-1201 / 0	-85.5	-85.5	0.44 (1)	2.00
F- G	-1258 / 0	-78.0	-78.0	0.45 (1)	6.21
O- A	-1468 / 0	0.0	0.0	0.20 (1)	6.76
H- G	-1466 / 0	0.0	0.0	0.19 (1)	6.76
O- N	0 / 0	-18.5	-18.5	0.17 (4)	10.00
N- M	0 / 802	-18.5	-18.5	0.26 (4)	10.00
M- L	0 / 1201	-18.5	-18.5	0.25 (1)	10.00
L- K	0 / 1201	-18.5	-18.5	0.25 (1)	10.00
K- J	0 / 815	-18.5	-18.5	0.26 (4)	10.00
J- I	0 / 0	-18.5	-18.5	0.18 (4)	10.00
I- H	0 / 0	-18.5	-18.5	0.18 (4)	10.00

WEBS

MEMB. FR-TO	MAX. FACTORED FORCE (LBS)	MAX CSI (LC)
N- B	-152 / 21	0.10 (1)
B- M	0 / 753	0.12 (1)
M- C	-534 / 0	0.35 (1)
M- E	-10 / 0	0.01 (1)
K- E	-528 / 0	0.35 (1)
K- F	0 / 739	0.12 (1)
J- F	-131 / 32	0.09 (1)
A- N	0 / 852	0.19 (1)
J- G	0 / 857	0.19 (1)

DESIGN CRITERIA

SPECIFIED LOADS:

TOP	CH.	LL	=	21.0	PSF
		DL	=	6.0	PSF
BOT	CH.	LL	=	0.0	PSF
		DL	=	7.4	PSF
TOTAL	LOAD		=	34.4	PSF

SPACING = 24.0 IN. C/C

LOADING IN FLAT SECTION BASED ON PIGGYBACK TRUSS WITH SLOPES OF 6.00/12 AND -6.00/12 AND RESPECTIVE HEEL HEIGHTS OF 0-0 AND 0-0 AND AN ADDITIONAL DEAD LOAD OF 3.0 P.S.F.

THIS TRUSS IS DESIGNED FOR RESIDENTIAL OR SMALL BUILDING REQUIREMENTS OF PART 9, NBCC 2015

THIS DESIGN COMPLIES WITH:
- PART 9 OF BCBC 2018 , ABC 2019
- PART 9 OF OBC 2012 (2019 AMENDMENT)
- CSA 086-14
- TPIC 2014

(55 % OF 23.0 P.S.F. G.S.L. PLUS 8.4 P.S.F. RAIN LOAD) EQUALS 21.0 P.S.F. SPECIFIED ROOF LIVE LOAD

ALLOWABLE DEFL.(LL)= L/360 (1.00")
CALCULATED VERT. DEFL.(LL) = L/ 999 (0.04")
ALLOWABLE DEFL.(TL)= L/360 (1.00")
CALCULATED VERT. DEFL.(TL) = L/ 999 (0.09")

CSI: TC=0.45/1.00 (F-G:1) , BC=0.26/1.00 (J-K:4) , WB=0.35/1.00 (C-M:1) , SSI=0.23/1.00 (E-F:1)

DOL LUMBER=1.00 NAIL=1.00 LS BEND=1.10 COMP=1.10 SHEAR=1.10 TENS= 1.10

COMPANION LIVE LOAD FACTOR = 1.00

TRUSS PLATE MANUFACTURER IS NOT RESPONSIBLE FOR QUALITY CONTROL IN THE TRUSS MANUFACTURING PLANT .

NAIL VALUES

PLATE	GRIP(DRY) (PSI) MAX	MIN	SHEAR (PLI) MAX	MIN	SECTION (PLI) MAX	MIN
MT20	650	371	1747	788	1987	1873

PLATE PLACEMENT TOL. = 0.250 inches

PLATE ROTATION TOL. = 5.0 Deg.

JSI GRIP= 0.84 (F) (INPUT = 0.90)
JSI METAL= 0.48 (G) (INPUT = 1.00)

JOB NAME	TRUSS NAME	QUANTITY	PLY	JOB DESC.		DRWG NO.
336335	H263		1	TRUSS DESC.	JT 45147	E21104199

Alpa Roof Truss, Maple

Version 8.420 S Jan 21 2021 MiTek Industries, Inc. Thu Oct 14 08:52:41 2021 Page 1

ID:hd511hZTz bdeQoS817GKByhVxV-suGFaIjDc4Jq9O W9 oCzMUR9fsVC3Z92xmtGGyTZHa

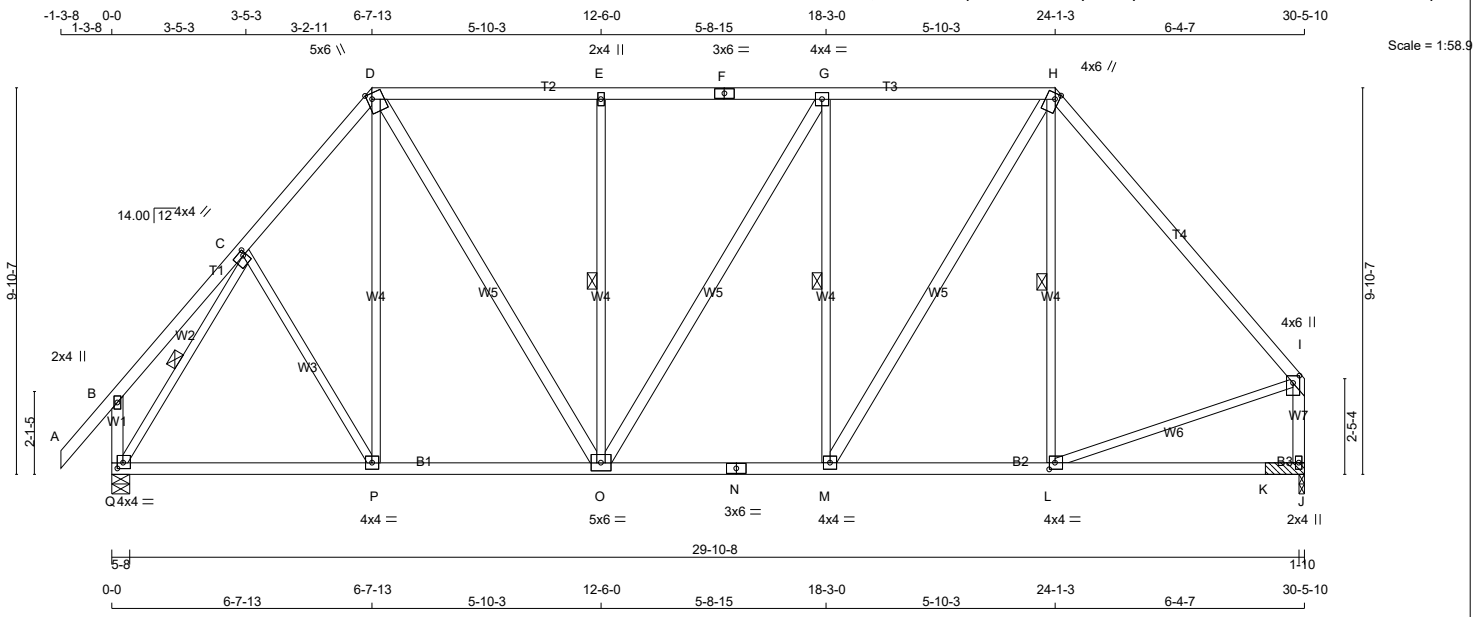

TOTAL WEIGHT = 168 lb

[M]

LUMBER

N. L. G. A. RULES

CHORDS	SIZE		LUMBER	DESCR.
A - D	2x4	DRY	No.2	SPF
D - F	2x4	DRY	No.2	SPF
F - H	2x4	DRY	No.2	SPF
H - I	2x4	DRY	2100F 1.8E	SPF
Q - B	2x4	DRY	No.2	SPF
J - I	2x4	DRY	No.2	SPF
Q - N	2x4	DRY	No.2	SPF
N - J	2x4	DRY	No.2	SPF
ALL WEBS	2x3	DRY	No.2	SPF
EXCEPT				
D - O	2x4	DRY	No.2	SPF
O - G	2x4	DRY	No.2	SPF
M - H	2x4	DRY	No.2	SPF

DRY: SEASONED LUMBER.

PLATES (table is in inches)

JT	TYPE	PLATES	W	LEN	Y	X
B	TMV+p	MT20	2.0	4.0		
C	TMWW-t	MT20	4.0	4.0	1.50	1.00
D	TTWW+m	MT20	5.0	6.0	1.75	1.50
E	TMW+w	MT20	2.0	4.0		
F	TS-t	MT20	3.0	6.0		
G	TMWW-t	MT20	4.0	4.0		
H	TTWW+m	MT20	4.0	6.0	1.75	1.25
I	TMVW+p	MT20	4.0	6.0	2.25	2.00
J	BMV1+p	MT20	2.0	4.0		
L	BMWW-t	MT20	4.0	4.0	2.00	1.75
M	BMWW-t	MT20	4.0	4.0		
N	BS-t	MT20	3.0	6.0		
O	BMWWW-t	MT20	5.0	6.0		
P	BMWW-t	MT20	4.0	4.0		
Q	BMVW1-t	MT20	4.0	4.0	1.75	1.75

LATERAL BRACE(S) SHOWN SHALL BE 2X4 SPF#2

DIMENSIONS, SUPPORTS AND LOADINGS SPECIFIED BY FABRICATOR TO BE VERIFIED BY BUILDING DESIGNER

BEARINGS

JT	FACTORED GROSS REACTION VERT	HORZ	MAXIMUM FACTORED GROSS REACTION DOWN	HORZ	UPLIFT	INPUT BRG IN-SX	REQRD BRG IN-SX
Q	1644	0	1644	0	0	5-8	1-13
J	1536	0	1536	0	0	1-10	1-10 & BLOCK

UNFACTORED REACTIONS

JT	1ST LCASE COMBINED	MAX./MIN. COMPONENT REACTIONS SNOW	LIVE	PERM.LIVE	WIND	DEAD	SOIL
Q	1175	698 / 0	0 / 0	0 / 0	0 / 0	477 / 0	0 / 0
J	1101	640 / 0	0 / 0	0 / 0	0 / 0	461 / 0	0 / 0

BEARING MATERIAL TO BE SPF NO.2 OR BETTER AT JOINT(S) Q, J

2x4 DRY SPF No.2 BEARING BLOCK 12" LONG AT JT. J ATTACHED TO FRONT SIDE WITH 2 ROWS OF (0.122"X3") SPIRAL NAILS SPACED 3" C.C. 8 NAILS TOTAL.

BRACING

FOR SECTION D-H, MAX. PURLIN SPACING = 2.00 FT.
FOR OTHER SECTIONS, TOP CHORD TO BE SHEATHED OR MAX. PURLIN SPACING = 5.44 FT.
MAX. UNBRACED BOTTOM CHORD LENGTH = 10.00 FT OR RIGID CEILING DIRECTLY APPLIED.

ALL PITCH BREAKS AND PERIMETER CORNER JOINTS MUST BE LATERALLY RESTRAINED.

1 LATERAL BRACE(S) AT 1/ 2 LENGTH OF E-O, G-M, H-L, C-Q.

END VERTICAL(S) MUST BE SHEATHED OR HAVE BRACES AS INDICATED IN THE MAX. UNBRACED LENGTH COLUMN OF THE TABLE BELOW

LOADING

TOTAL LOAD CASES: (4)

CHORDS MEMB. FR-TO	MAX. FACTORED FORCE (LBS)	FACTORED VERT. LOAD (PLF) FROM	TO	LC1 MAX CSI (LC)	MAX. UNBRAC LENGTH	WEBS MEMB. FR-TO	MAX. FACTORED FORCE (LBS)	MAX CSI (LC)
A- B	0 / 42	-78.0	-78.0	0.11 (1)	10.00	C- P	0 / 74	0.03 (4)
B- C	0 / 21	-78.0	-78.0	0.13 (1)	10.00	P- D	0 / 88	0.03 (4)
C- D	-1341 / 0	-78.0	-78.0	0.16 (1)	5.44	D- O	0 / 727	0.12 (1)
D- E	-1235 / 0	-85.5	-85.5	0.44 (1)	2.00	O- E	-534 / 0	0.35 (1)
E- F	-1235 / 0	-85.5	-85.5	0.44 (1)	2.00	O- G	0 / 14	0.00 (1)
F- G	-1235 / 0	-85.5	-85.5	0.44 (1)	2.00	M- G	-549 / 0	0.36 (1)
G- H	-1228 / 0	-85.5	-85.5	0.45 (1)	2.00	M- H	0 / 764	0.12 (1)
H- I	-1280 / 0	-78.0	-78.0	0.45 (1)	6.18	L- H	-135 / 30	0.09 (1)
Q- B	-209 / 0	0.0	0.0	0.02 (1)	7.81	Q- C	-1606 / 0	0.46 (1)
J- I	-1487 / 0	0.0	0.0	0.19 (1)	6.72	L- I	0 / 872	0.20 (1)
Q- P	0 / 815	-18.5	-18.5	0.27 (4)	10.00			
P- O	0 / 855	-18.5	-18.5	0.28 (4)	10.00			
O- N	0 / 1228	-18.5	-18.5	0.26 (1)	10.00			
N- M	0 / 1228	-18.5	-18.5	0.26 (1)	10.00			
M- L	0 / 829	-18.5	-18.5	0.27 (4)	10.00			
L- K	0 / 0	-18.5	-18.5	0.18 (4)	10.00			
K- J	0 / 0	-18.5	-18.5	0.18 (4)	10.00			

DESIGN CRITERIA

SPECIFIED LOADS:

TOP	CH.	LL	=	21.0	PSF
		DL	=	6.0	PSF
BOT	CH.	LL	=	0.0	PSF
		DL	=	7.4	PSF
TOTAL	LOAD		=	34.4	PSF

SPACING = 24.0 IN. C/C

LOADING IN FLAT SECTION BASED ON PIGGYBACK TRUSS WITH SLOPES OF 6.00/12 AND -6.00/12 AND RESPECTIVE HEEL HEIGHTS OF 0-0 AND 0-0 AND AN ADDITIONAL DEAD LOAD OF 3.0 P.S.F.

THIS TRUSS IS DESIGNED FOR RESIDENTIAL OR SMALL BUILDING REQUIREMENTS OF PART 9, NBCC 2015

THIS DESIGN COMPLIES WITH:
- PART 9 OF BCBC 2018 , ABC 2019
- PART 9 OF OBC 2012 (2019 AMENDMENT)
- CSA 086-14
- TPIC 2014

(55 % OF 23.0 P.S.F. G.S.L. PLUS 8.4 P.S.F. RAIN LOAD) EQUALS 21.0 P.S.F. SPECIFIED ROOF LIVE LOAD

ALLOWABLE DEFL.(LL)= L/360 (1.02")
CALCULATED VERT. DEFL.(LL) = L/ 999 (0.04")
ALLOWABLE DEFL.(TL)= L/360 (1.02")
CALCULATED VERT. DEFL.(TL) = L/ 999 (0.10")

CSI: TC=0.45/1.00 (H-I:1) , BC=0.28/1.00 (O-P:4) , WB=0.46/1.00 (C-Q:1) , SSI=0.23/1.00 (G-H:1)

DOL LUMBER=1.00 NAIL=1.00 LS BEND=1.10 COMP=1.10 SHEAR=1.10 TENS= 1.10

COMPANION LIVE LOAD FACTOR = 1.00

TRUSS PLATE MANUFACTURER IS NOT RESPONSIBLE FOR QUALITY CONTROL IN THE TRUSS MANUFACTURING PLANT .

NAIL VALUES

PLATE	GRIP(DRY) (PSI) MAX	MIN	SHEAR (PLI) MAX	MIN	SECTION (PLI) MAX	MIN
MT20	650	371	1747	788	1987	1873

PLATE PLACEMENT TOL. = 0.250 inches

PLATE ROTATION TOL. = 5.0 Deg.

JSI GRIP= 0.90 (C) (INPUT = 0.90)
JSI METAL= 0.53 (C) (INPUT = 1.00)

JOB NAME	TRUSS NAME	QUANTITY	PLY	JOB DESC.	DRWG NO.
336335	H264		1	TRUSS DESC. JT 45147	E21104200

Alpa Roof Truss, Maple

Version 8.420 S Jan 21 2021 MiTek Industries, Inc. Thu Oct 14 08:54:12 2021 Page 1

ID:hd511hZTz_bdeQoS817GKByhVxV-iOGfhPqJB2nwaNR?_bxY9YlyYKur16wYzbJBzUyTZG9

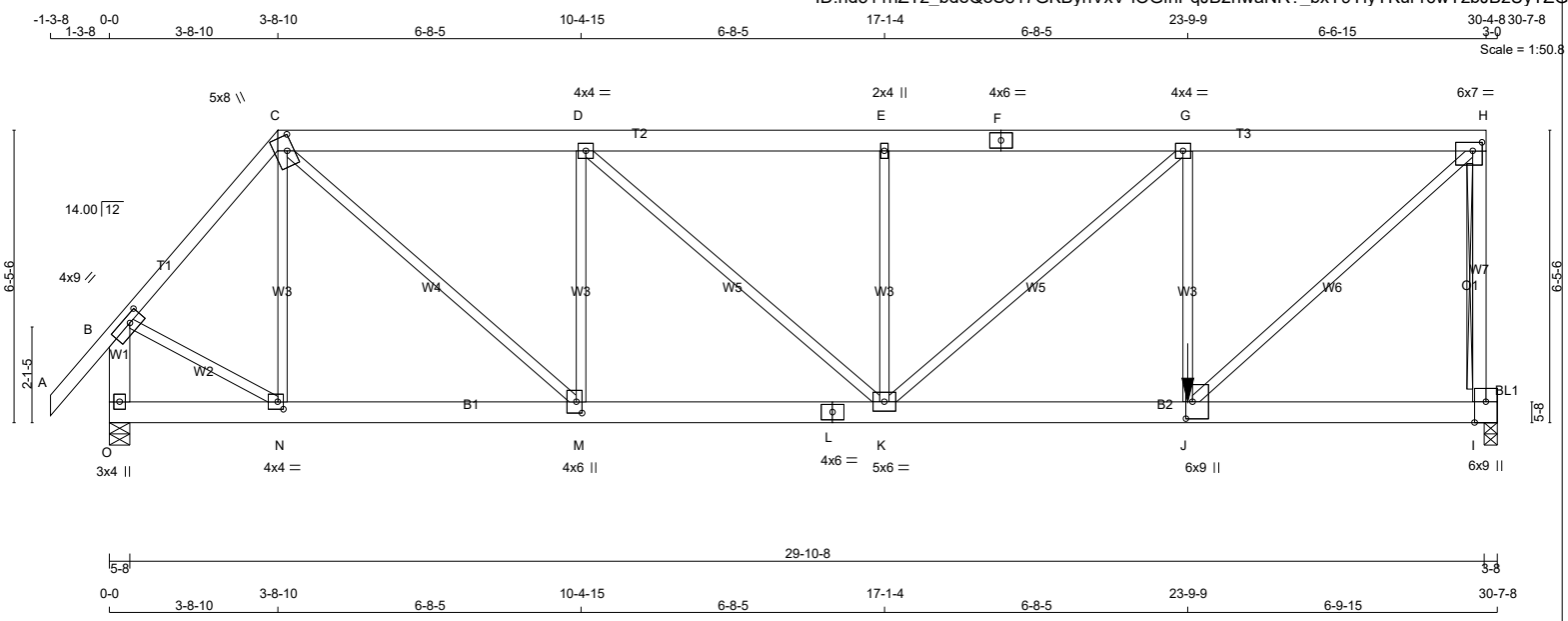

TOTAL WEIGHT = 170 lb

LUMBER

N. L. G. A. RULES

CHORDS	SIZE		LUMBER	DESCR.
A - C	2x4	DRY	No.2	SPF
C - F	2x6	DRY	No.2	SPF
F - H	2x6	DRY	No.2	SPF
I - H	2x4	DRY	No.2	SPF
O - B	2x6	DRY	No.2	SPF
O - L	2x6	DRY	No.2	SPF
L - I	2x6	DRY	No.2	SPF
BEARING BLOCKS				
BL1	2x4	DRY	No.2	SPF
ALL WEBS EXCEPT	2x3	DRY	No.2	SPF

DRY: SEASONED LUMBER.

PLATES (table is in inches)

JT	TYPE	PLATES	W	LEN	Y	X
B	TMVW-t	MT20	4.0	9.0	1.75	3.50
C	TTWW+m	MT20	5.0	8.0	4.00	1.75
D	TMWW-t	MT20	4.0	4.0		
E	TMW+w	MT20	2.0	4.0		
F	TS-t	MT20	4.0	6.0		
G	TMWW-t	MT20	4.0	4.0		
H	TMVW-t	MT20	6.0	7.0	2.25	2.50
I	BMVK1+t	MT20	6.0	9.0	Edge	3.00
J	BMWW+t	MT20	6.0	9.0	4.50	1.75
K	BMWWW-t	MT20	5.0	6.0		
L	BS-t	MT20	4.0	6.0		
M	BMWW+t	MT20	4.0	6.0	3.00	1.50
N	BMWW-t	MT20	4.0	4.0	2.00	1.50
O	BMV1+p	MT20	3.0	4.0		

Edge - INDICATES REFERENCE CORNER OF PLATE TOUCHES EDGE OF CHORD.

LATERAL BRACE(S) SHOWN SHALL BE 2X4 SPF#2

LICENSED PROFESSIONAL ENGINEER
Y. WIDYA
100225448
10/14/2021
PROVINCE OF ONTARIO

DIMENSIONS, SUPPORTS AND LOADINGS SPECIFIED BY FABRICATOR TO BE VERIFIED BY BUILDING DESIGNER

BEARINGS

JT	FACTORED GROSS REACTION VERT	HORZ	MAXIMUM FACTORED GROSS REACTION DOWN	HORZ	UPLIFT	INPUT BRG IN-SX	REQRD BRG IN-SX
I	2951	0	2951	0	0	3-8	3-8
O	1912	0	1912	0	0	5-8	2-1

UNFACTORED REACTIONS

JT	1ST LCASE COMBINED	MAX./MIN. COMPONENT REACTIONS SNOW	LIVE	PERM.LIVE	WIND	DEAD	SOIL
I	2103	1286 / 0	0 / 0	0 / 0	0 / 0	817 / 0	0 / 0
O	1361	843 / 0	0 / 0	0 / 0	0 / 0	518 / 0	0 / 0

BEARING MATERIAL TO BE SPF NO.2 OR BETTER AT JOINT(S) I, O
BEARING SIZE FACTOR = 1.15 AT JNT(S) I (BASED ON SUPPORT DEPTH = 1-8)

BRACING

TOP CHORD TO BE SHEATHED OR MAX. PURLIN SPACING = 4.55 FT.
MAX. UNBRACED BOTTOM CHORD LENGTH = 6.25 FT OR RIGID CEILING DIRECTLY APPLIED.

ALL PITCH BREAKS AND PERIMETER CORNER JOINTS MUST BE LATERALLY RESTRAINED.

2x4 DRY SPF No.2 T-BRACE AT H-I

FASTEN T AND I-BRACES TO NARROW EDGE OF WEB WITH ONE ROW PER PLY OF 3" COMMON WIRE NAILS @ 6" O.C. WITH 3" MINIMUM END DISTANCE. BRACE MUST COVER 90% OF WEB LENGTH.

END VERTICAL(S) MUST BE SHEATHED OR HAVE BRACES AS INDICATED IN THE MAX. UNBRACED LENGTH COLUMN OF THE TABLE BELOW

LOADING

TOTAL LOAD CASES: (4)

CHORDS

MEMB. FR-TO	MAX. FACTORED FORCE (LBS)	FACTORED VERT. LOAD (PLF) FROM	TO	LC1 CSI (LC)	MAX UNBRAC LENGTH
A- B	0 / 42	-78.0	-78.0	0.12 (1)	10.00
B- C	-1576 / 0	-78.0	-78.0	0.27 (1)	4.96
C- D	-2325 / 0	-78.0	-78.0	0.31 (1)	5.04
D- E	-2830 / 0	-78.0	-78.0	0.33 (1)	4.64
E- F	-2830 / 0	-78.0	-78.0	0.40 (1)	4.55
F- G	-2830 / 0	-78.0	-78.0	0.40 (1)	4.55
G- H	-2676 / 0	-128.1	-128.1	0.44 (1)	4.58
I- H	-2858 / 0	0.0	0.0	0.62 (1)	7.81
O- B	-1896 / 0	0.0	0.0	0.16 (1)	7.25
O- N	0 / 0	-18.5	-18.5	0.07 (4)	10.00
N- M	0 / 1021	-18.5	-18.5	0.19 (1)	10.00
M- L	0 / 2325	-18.5	-18.5	0.35 (1)	10.00
L- K	0 / 2325	-18.5	-18.5	0.35 (1)	10.00
K- J	0 / 2676	-18.5	-18.5	0.40 (1)	10.00
J- I	-70 / 0	-30.4	-30.4	0.15 (4)	6.25

WEBS

MEMB. FR-TO	MAX. FACTORED FORCE (LBS)	MAX CSI (LC)
N- C	-325 / 0	0.20 (1)
C- M	0 / 1750	0.43 (1)
M- D	-1048 / 0	0.63 (1)
D- K	0 / 678	0.17 (1)
K- E	-466 / 0	0.28 (1)
K- G	0 / 206	0.05 (1)
J- G	-918 / 0	0.55 (1)
J- H	0 / 3714	0.92 (1)
B- N	0 / 1118	0.28 (1)

FACTORED CONCENTRATED LOADS (LBS)

JT	LOC.	LC1	MAX-	MAX+	FACE	DIR.	TYPE	HEEL	CONN.
J	23-9-9	-1419	-1419	---	FRONT	VERT	TOTAL	---	C1

CONNECTION REQUIREMENTS

1) **C1:** A SUITABLE HANGER/MECHANICAL CONNECTION IS REQUIRED.

[M]

DESIGN CRITERIA

*** SPECIAL LOADS ANALYSIS ***
GEOMETRY AND/OR BASIC LOADS CHANGED BY USER.
LOADS WERE DERIVED FROM USER INPUT
NO FURTHER MODIFICATIONS WERE MADE

SPECIFIED LOADS:

TOP	CH.	LL =	21.0	PSF
		DL =	6.0	PSF
BOT	CH.	LL =	0.0	PSF
		DL =	7.4	PSF
TOTAL	LOAD	=	34.4	PSF

SPACING = 24.0 IN. C/C

LOADING IN FLAT SECTION BASED ON A SLOPE OF 2.00/12 MINIMUM

GIRDER TYPE: CPrimeHip
LEFT SETBACK = 3-8-10
RIGHT SETBACK = 0-0
END SETBACK = 4-6-14
END WALL WIDTH = 0-0
CORNER FRAMING TYPE: CONVENTIONAL
END JACK TYPE: CONVENTIONAL
APPLIED TO FRONT SIDE
- ADDT'L LOADS BASED ON 55 % OF GSL.
LOADS APPLIED TO FIRST 6-9-15 OF SPAN MEASURED FROM THE RIGHT.

*** NON STANDARD GIRDER ***
ADDT'L USER-DEFINED LOADS APPLIED TO ALL LOAD CASES.

THIS TRUSS IS DESIGNED FOR RESIDENTIAL OR SMALL BUILDING REQUIREMENTS OF PART 9, NBCC 2015

THIS DESIGN COMPLIES WITH:
- PART 9 OF BCBC 2018 , ABC 2019
- PART 9 OF OBC 2012 (2019 AMENDMENT)
- CSA 086-14
- TPIC 2014

(55 % OF 23.0 P.S.F. G.S.L. PLUS 8.4 P.S.F. RAIN LOAD) EQUALS 21.0 P.S.F. SPECIFIED ROOF LIVE LOAD

ALLOWABLE DEFL.(LL)= L/360 (1.01")
CALCULATED VERT. DEFL.(LL) = L/ 999 (0.11")
ALLOWABLE DEFL.(TL)= L/360 (1.01")
CALCULATED VERT. DEFL.(TL) = L/ 999 (0.21")

CSI: TC=0.62/1.00 (H-I:1) , BC=0.40/1.00 (J-K:1) , WB=0.92/1.00 (H-J:1) , SSI=0.32/1.00 (G-H:1)

DOL LUMBER=1.00 NAIL=1.00 LS BEND=1.00 COMP=1.00 SHEAR=1.00 TENS= 1.00

COMPANION LIVE LOAD FACTOR = 1.00

AUTOSOLVE RIGHT HEEL ONLY

TRUSS PLATE MANUFACTURER IS NOT RESPONSIBLE FOR QUALITY CONTROL IN THE TRUSS MANUFACTURING PLANT .

CONTINUED ON PAGE 2

JOB NAME	TRUSS NAME	QUANTITY	PLY	JOB DESC.	DRWG NO.
336335	H265		1	TRUSS DESC. JT 45147	E21104201

Alpa Roof Truss, Maple

Version 8.420 S Jan 21 2021 MiTek Industries, Inc. Thu Oct 14 08:54:14 2021 Page 1

ID:hd511hZTz_bdeQoS817GKByhVxV-enOP65sZif1ephbO60z0EzqCb8azV8urQvoI2NyTZG7

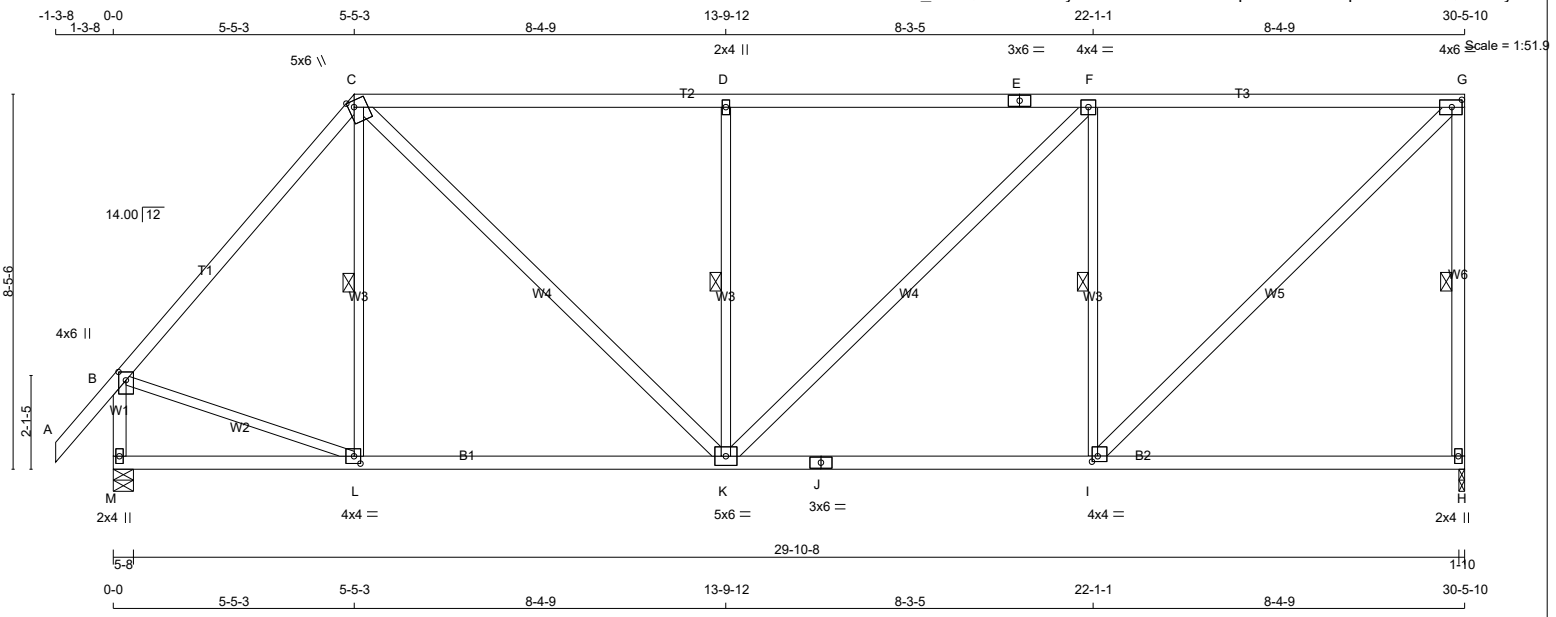

TOTAL WEIGHT = 148 lb

LUMBER

N. L. G. A. RULES

CHORDS	SIZE		LUMBER	DESCR.
A - C	2x4	DRY	No.2	SPF
C - E	2x4	DRY	No.2	SPF
E - G	2x4	DRY	No.2	SPF
H - G	2x4	DRY	No.2	SPF
M - B	2x4	DRY	No.2	SPF
M - J	2x4	DRY	No.2	SPF
J - H	2x4	DRY	No.2	SPF
ALL WEBS	2x3	DRY	No.2	SPF
EXCEPT				
C - K	2x4	DRY	No.2	SPF
K - F	2x4	DRY	No.2	SPF
I - G	2x4	DRY	No.2	SPF

DRY: SEASONED LUMBER.

PLATES (table is in inches)

JT	TYPE	PLATES	W	LEN	Y	X
B	TMVW+p	MT20	4.0	6.0	2.25	2.00
C	TTWW+m	MT20	5.0	6.0	1.75	1.50
D	TMW+w	MT20	2.0	4.0		
E	TS-t	MT20	3.0	6.0		
F	TMWW-t	MT20	4.0	4.0		
G	TMVW-t	MT20	4.0	6.0	2.00	2.75
H	BMV1+p	MT20	2.0	4.0		
I	BMWW-t	MT20	4.0	4.0	1.50	1.50
J	BS-t	MT20	3.0	6.0		
K	BMWWW-t	MT20	5.0	6.0		
L	BMWW-t	MT20	4.0	4.0	2.00	1.75
M	BMV1+p	MT20	2.0	4.0		

LATERAL BRACE(S) SHOWN SHALL BE 2X4 SPF#2

DIMENSIONS, SUPPORTS AND LOADINGS SPECIFIED BY FABRICATOR TO BE VERIFIED BY BUILDING DESIGNER

BEARINGS

JT	FACTORED GROSS REACTION VERT	HORZ	MAXIMUM FACTORED GROSS REACTION DOWN	HORZ	UPLIFT	INPUT BRG IN-SX	REQRD BRG IN-SX
H	1470	0	1470	0	0	1-10	1-9
M	1579	0	1579	0	0	5-8	1-11

UNFACTORED REACTIONS

JT	1ST LCASE COMBINED	MAX./MIN. COMPONENT REACTIONS SNOW	LIVE	PERM.LIVE	WIND	DEAD	SOIL
H	1048	640 / 0	0 / 0	0 / 0	0 / 0	408 / 0	0 / 0
M	1124	698 / 0	0 / 0	0 / 0	0 / 0	425 / 0	0 / 0

BEARING MATERIAL TO BE SPF NO.2 OR BETTER AT JOINT(S) H, M

BRACING

TOP CHORD TO BE SHEATHED OR MAX. PURLIN SPACING = 3.97 FT.
MAX. UNBRACED BOTTOM CHORD LENGTH = 10.00 FT OR RIGID CEILING DIRECTLY APPLIED.

ALL PITCH BREAKS AND PERIMETER CORNER JOINTS MUST BE LATERALLY RESTRAINED.

1 LATERAL BRACE(S) AT 1/ 2 LENGTH OF G-H, C-L, D-K, F-I.

END VERTICAL(S) MUST BE SHEATHED OR HAVE BRACES AS INDICATED IN THE MAX. UNBRACED LENGTH COLUMN OF THE TABLE BELOW

LOADING

TOTAL LOAD CASES: (4)

CHORDS

MEMB. FR-TO	MAX. FACTORED FORCE (LBS)	FACTORED VERT. LOAD (PLF) FROM	TO	LC1 CSI (LC)	MAX UNBRAC LENGTH
A- B	0 / 42	-78.0	-78.0	0.11 (1)	10.00
B- C	-1268 / 0	-78.0	-78.0	0.53 (1)	5.13
C- D	-1437 / 0	-78.0	-78.0	0.97 (1)	3.98
D- E	-1437 / 0	-78.0	-78.0	0.97 (1)	3.97
E- F	-1437 / 0	-78.0	-78.0	0.97 (1)	3.97
F- G	-1177 / 0	-78.0	-78.0	0.91 (1)	4.35
H- G	-1408 / 0	0.0	0.0	0.46 (1)	5.49
M- B	-1544 / 0	0.0	0.0	0.18 (1)	6.62
M- L	0 / 0	-18.5	-18.5	0.22 (4)	10.00
L- K	0 / 821	-18.5	-18.5	0.31 (4)	10.00
K- J	0 / 1177	-18.5	-18.5	0.43 (4)	10.00
J- I	0 / 1177	-18.5	-18.5	0.43 (4)	10.00
I- H	0 / 0	-18.5	-18.5	0.31 (4)	10.00

WEBS

MEMB. FR-TO	MAX. FACTORED FORCE (LBS)	MAX CSI (LC)
L- C	-114 / 58	0.05 (1)
C- K	0 / 859	0.14 (1)
K- D	-706 / 0	0.32 (1)
K- F	0 / 366	0.06 (1)
I- F	-971 / 0	0.44 (1)
I- G	0 / 1642	0.26 (1)
B- L	0 / 862	0.19 (1)

[M]

DESIGN CRITERIA

SPECIFIED LOADS:

TOP CH.	LL	=	21.0	PSF
	DL	=	6.0	PSF
BOT CH.	LL	=	0.0	PSF
	DL	=	7.4	PSF
TOTAL LOAD		=	34.4	PSF

SPACING = 24.0 IN. C/C

LOADING IN FLAT SECTION BASED ON A SLOPE OF 2.00/12 MINIMUM

THIS TRUSS IS DESIGNED FOR RESIDENTIAL OR SMALL BUILDING REQUIREMENTS OF PART 9, NBCC 2015

THIS DESIGN COMPLIES WITH:
- PART 9 OF BCBC 2018 , ABC 2019
- PART 9 OF OBC 2012 (2019 AMENDMENT)
- CSA 086-14
- TPIC 2014

(55 % OF 23.0 P.S.F. G.S.L. PLUS 8.4 P.S.F. RAIN LOAD) EQUALS 21.0 P.S.F. SPECIFIED ROOF LIVE LOAD

ALLOWABLE DEFL.(LL)= L/360 (1.02")
CALCULATED VERT. DEFL.(LL) = L/ 999 (0.06")
ALLOWABLE DEFL.(TL)= L/360 (1.02")
CALCULATED VERT. DEFL.(TL) = L/ 999 (0.16")

CSI: TC=0.97/1.00 (C-D:1) , BC=0.43/1.00 (I-K:4) , WB=0.44/1.00 (F-I:1) , SSI=0.30/1.00 (F-G:1)

DOL LUMBER=1.00 NAIL=1.00 LS BEND=1.10 COMP=1.10 SHEAR=1.10 TENS= 1.10

COMPANION LIVE LOAD FACTOR = 1.00

TRUSS PLATE MANUFACTURER IS NOT RESPONSIBLE FOR QUALITY CONTROL IN THE TRUSS MANUFACTURING PLANT .

NAIL VALUES

PLATE	GRIP(DRY) (PSI) MAX	MIN	SHEAR (PLI) MAX	MIN	SECTION (PLI) MAX	MIN
MT20	650	371	1747	788	1987	1873

PLATE PLACEMENT TOL. = 0.250 inches

PLATE ROTATION TOL. = 5.0 Deg.

JSI GRIP= 0.87 (B) (INPUT = 0.90)
JSI METAL= 0.50 (B) (INPUT = 1.00)

JOB NAME	TRUSS NAME	QUANTITY	PLY	JOB DESC.		DRWG NO.
336335	H266S		1	TRUSS DESC.	JT 45147	E21104202

Alpa Roof Truss, Maple

Version 8.420 S Jan 21 2021 MiTek Industries, Inc. Thu Oct 14 08:54:16 2021 Page 1

ID:hd511hZTz bdeQoS817GKByhVxV-a9WAWntpEGHL3 knDR?UJOwcMyGTzzb8uDHP6FyTZG5

Scale = 1:61.3

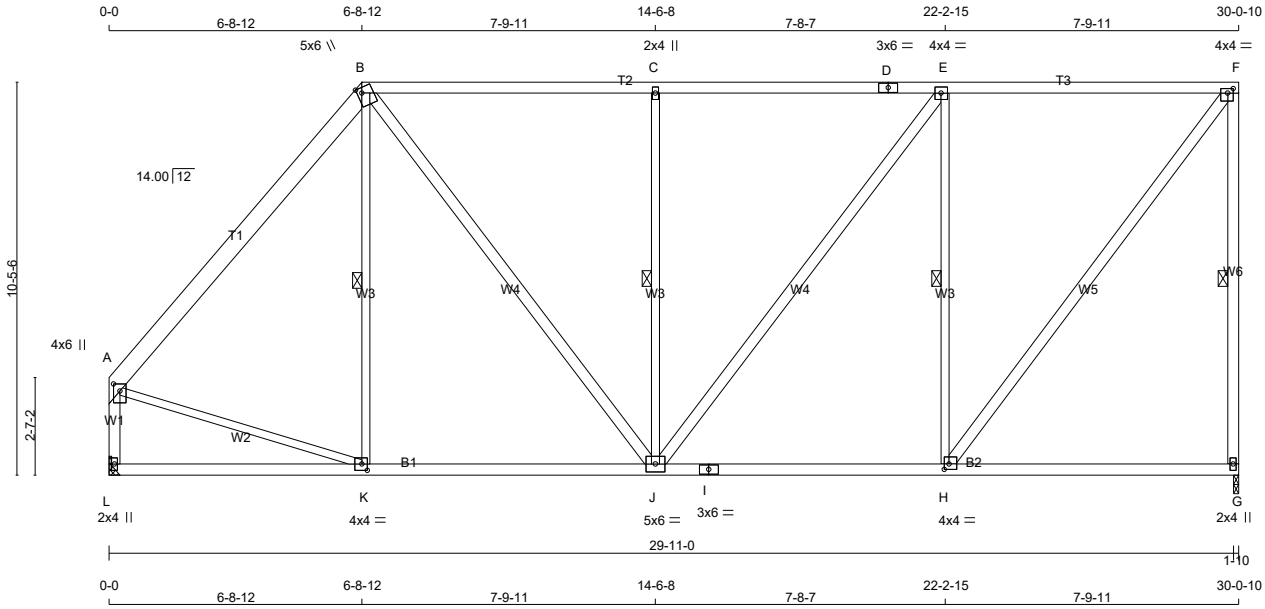

TOTAL WEIGHT = 166 lb

[M]

LUMBER

N. L. G. A. RULES

CHORDS	SIZE		LUMBER	DESCR.
A - B	2x6	DRY	No.2	SPF
B - D	2x4	DRY	No.2	SPF
D - F	2x4	DRY	No.2	SPF
G - F	2x4	DRY	No.2	SPF
L - A	2x4	DRY	No.2	SPF
L - I	2x4	DRY	No.2	SPF
I - G	2x4	DRY	No.2	SPF
ALL WEBS EXCEPT	2x3	DRY	No.2	SPF
B - J	2x4	DRY	No.2	SPF
J - E	2x4	DRY	No.2	SPF
H - F	2x4	DRY	No.2	SPF

DRY: SEASONED LUMBER.

PLATES (table is in inches)

JT	TYPE	PLATES	W	LEN	Y	X
A	TMVW+p	MT20	4.0	6.0	2.25	2.00
B	TTWW+m	MT20	5.0	6.0	1.75	1.50
C	TMW+w	MT20	2.0	4.0		
D	TS-t	MT20	3.0	6.0		
E	TMWW-t	MT20	4.0	4.0		
F	TMVW-t	MT20	4.0	4.0	1.50	1.75
G	BMV1+p	MT20	2.0	4.0		
H	BMWW-t	MT20	4.0	4.0	1.75	1.50
I	BS-t	MT20	3.0	6.0		
J	BMWWW-t	MT20	5.0	6.0		
K	BMWW-t	MT20	4.0	4.0	2.00	1.75
L	BMV1+p	MT20	2.0	4.0		

LATERAL BRACE(S) SHOWN SHALL BE 2X4 SPF#2

DIMENSIONS, SUPPORTS AND LOADINGS SPECIFIED BY FABRICATOR TO BE VERIFIED BY BUILDING DESIGNER

BEARINGS

JT	FACTORED GROSS REACTION VERT	HORZ	MAXIMUM FACTORED GROSS REACTION DOWN	HORZ	UPLIFT	INPUT BRG IN-SX	REQRD BRG IN-SX
G	1450	0	1450	0	0	1-10	1-9
L	1450	0	1450	0	0	MECHANICAL	

A SUITABLE HANGER/MECHANICAL CONNECTION IS REQUIRED AT JOINT L. MINIMUM BEARING LENGTH AT JOINT L = 1-9.

UNFACTORED REACTIONS

JT	1ST LCASE COMBINED	MAX./MIN. COMPONENT REACTIONS SNOW	LIVE	PERM.LIVE	WIND	DEAD	SOIL
G	1033	631 / 0	0 / 0	0 / 0	0 / 0	403 / 0	0 / 0
L	1033	631 / 0	0 / 0	0 / 0	0 / 0	403 / 0	0 / 0

BEARING MATERIAL TO BE SPF NO.2 OR BETTER AT JOINT(S) G

BRACING

TOP CHORD TO BE SHEATHED OR MAX. PURLIN SPACING = 4.79 FT.
MAX. UNBRACED BOTTOM CHORD LENGTH = 10.00 FT OR RIGID CEILING DIRECTLY APPLIED.

ALL PITCH BREAKS AND PERIMETER CORNER JOINTS MUST BE LATERALLY RESTRAINED.

1 LATERAL BRACE(S) AT 1/ 2 LENGTH OF F-G, B-K, C-J, E-H.

END VERTICAL(S) MUST BE SHEATHED OR HAVE BRACES AS INDICATED IN THE MAX. UNBRACED LENGTH COLUMN OF THE TABLE BELOW

LOADING

TOTAL LOAD CASES: (4)

CHORDS

MEMB. FR-TO	MAX. FACTORED FORCE (LBS)	FACTORED VERT. LOAD (PLF) FROM	TO	LC1 CSI (LC)	MAX UNBRAC LENGTH
A- B	-1184 / 0	-78.0	-78.0	0.33 (1)	6.25
B- C	-1123 / 0	-78.0	-78.0	0.76 (1)	4.80
C- D	-1124 / 0	-78.0	-78.0	0.76 (1)	4.79
D- E	-1124 / 0	-78.0	-78.0	0.76 (1)	4.79
E- F	-882 / 0	-78.0	-78.0	0.73 (1)	5.29
G- F	-1392 / 0	0.0	0.0	0.76 (1)	5.52
L- A	-1401 / 0	0.0	0.0	0.18 (1)	6.88
L- K	0 / 0	-18.5	-18.5	0.24 (4)	10.00
K- J	0 / 764	-18.5	-18.5	0.31 (4)	10.00
J- I	0 / 882	-18.5	-18.5	0.36 (4)	10.00
I- H	0 / 882	-18.5	-18.5	0.36 (4)	10.00
H- G	0 / 0	-18.5	-18.5	0.27 (4)	10.00

WEBS

MEMB. FR-TO	MAX. FACTORED FORCE (LBS)	MAX CSI (LC)
K- B	-82 / 77	0.06 (1)
B- J	0 / 587	0.09 (1)
J- C	-649 / 0	0.49 (1)
J- E	0 / 400	0.06 (1)
H- E	-984 / 0	0.75 (1)
H- F	0 / 1447	0.23 (1)
A- K	0 / 800	0.18 (1)

DESIGN CRITERIA

SPECIFIED LOADS:

TOP CH.	LL	=	21.0	PSF
	DL	=	6.0	PSF
BOT CH.	LL	=	0.0	PSF
	DL	=	7.4	PSF
TOTAL LOAD		=	34.4	PSF

SPACING = 24.0 IN. C/C

LOADING IN FLAT SECTION BASED ON A SLOPE OF 2.00/12 MINIMUM

THIS TRUSS IS DESIGNED FOR RESIDENTIAL OR SMALL BUILDING REQUIREMENTS OF PART 9, NBCC 2015

THIS DESIGN COMPLIES WITH:
- PART 9 OF BCBC 2018 , ABC 2019
- PART 9 OF OBC 2012 (2019 AMENDMENT)
- CSA 086-14
- TPIC 2014

(55 % OF 23.0 P.S.F. G.S.L. PLUS 8.4 P.S.F. RAIN LOAD) EQUALS 21.0 P.S.F. SPECIFIED ROOF LIVE LOAD

ALLOWABLE DEFL.(LL)= L/360 (1.00")
CALCULATED VERT. DEFL.(LL) = L/ 999 (0.05")
ALLOWABLE DEFL.(TL)= L/360 (1.00")
CALCULATED VERT. DEFL.(TL) = L/ 999 (0.12")

CSI: TC=0.76/1.00 (C-E:1) , BC=0.36/1.00 (H-J:4) , WB=0.75/1.00 (E-H:1) , SSI=0.28/1.00 (E-F:1)

DOL LUMBER=1.00 NAIL=1.00 LS BEND=1.10 COMP=1.10 SHEAR=1.10 TENS= 1.10

COMPANION LIVE LOAD FACTOR = 1.00

TRUSS PLATE MANUFACTURER IS NOT RESPONSIBLE FOR QUALITY CONTROL IN THE TRUSS MANUFACTURING PLANT .

NAIL VALUES

PLATE	GRIP(DRY) (PSI) MAX	MIN	SHEAR (PLI) MAX	MIN	SECTION (PLI) MAX	MIN
MT20	650	371	1747	788	1987	1873

PLATE PLACEMENT TOL. = 0.250 inches

PLATE ROTATION TOL. = 5.0 Deg.

JSI GRIP= 0.90 (H) (INPUT = 0.90)
JSI METAL= 0.46 (A) (INPUT = 1.00)

JOB NAME	TRUSS NAME	QUANTITY	PLY	JOB DESC.		DRWG NO.
336335	H267P		1	TRUSS DESC.	JT 45147	E21104203

Alpa Roof Truss, Maple

Version 8.420 S Jan 21 2021 MiTek Industries, Inc. Thu Oct 14 08:54:17 2021 Page 1

ID:hd511hZTz bdeQoS817GKByhVxV-2M4Yk7uR?aPCq8Jzn8XjscSquLfBiZsH7t0yeiyTZG4

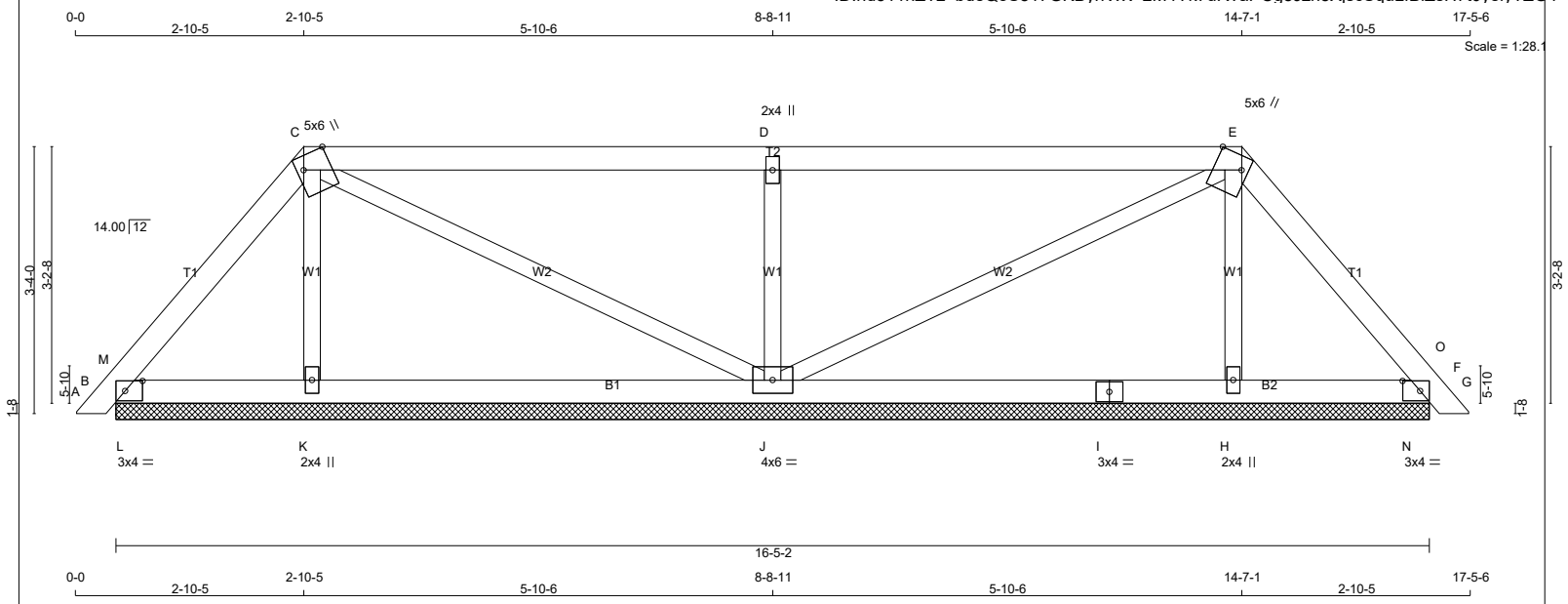

TOTAL WEIGHT = 59 lb [M]

LUMBER

N. L. G. A. RULES

CHORDS	SIZE		LUMBER	DESCR.
A - C	2x4	DRY	No.2	SPF
C - E	2x4	DRY	No.2	SPF
E - G	2x4	DRY	No.2	SPF
B - I	2x4	DRY	No.2	SPF
I - F	2x4	DRY	No.2	SPF
ALL WEBS	2x3	DRY	No.2	SPF

DRY: SEASONED LUMBER.

PLATES (table is in inches)

JT	TYPE	PLATES	W	LEN	Y	X
B	TMB1-I	MT20	3.0	4.0	1.50	2.50
C	TTWW+m	MT20	5.0	6.0	Edge	4.00
D	TMW+w	MT20	2.0	4.0		
E	TTWW+m	MT20	5.0	6.0	Edge	4.00
F	TMB1-I	MT20	3.0	4.0	1.50	2.50
H	BMW1+w	MT20	2.0	4.0		
I	BS-t	MT20	3.0	4.0		
J	BMWWW1-t	MT20	4.0	6.0		
K	BMW1+w	MT20	2.0	4.0		

Edge - INDICATES REFERENCE CORNER OF PLATE TOUCHES EDGE OF CHORD.

LATERAL BRACE(S) SHOWN SHALL BE 2X4 SPF#2

DIMENSIONS, SUPPORTS AND LOADINGS SPECIFIED BY FABRICATOR TO BE VERIFIED BY BUILDING DESIGNER

BEARINGS

JT	FACTORED GROSS REACTION VERT	HORZ	MAXIMUM FACTORED GROSS REACTION DOWN	HORZ	UPLIFT	INPUT BRG IN-SX	REQRD BRG IN-SX
B	198	0	198	0	0	16-5-2 (4-0-0)	1-8
K	267	0	267	0	0	16-5-2 (4-0-0)	1-8
J	716	0	716	0	0	16-5-2 (4-0-0)	1-8
H	267	0	267	0	0	16-5-2 (4-0-0)	1-8
F	198	0	198	0	0	16-5-2 (4-0-0)	1-8

VALUE IN PARENTHESIS INDICATES EFFECTIVE BEARING LENGTH

UNFACTORED REACTIONS

JT	1ST LCASE COMBINED	MAX./MIN. COMPONENT REACTIONS SNOW	LIVE	PERM.LIVE	WIND	DEAD	SOIL
B	138	104 / 0	0 / 0	0 / 0	0 / 0	34 / 0	0 / 0
K	194	95 / 0	0 / 0	0 / 0	0 / 0	99 / 0	0 / 0
J	508	324 / 0	0 / 0	0 / 0	0 / 0	183 / 0	0 / 0
H	194	95 / 0	0 / 0	0 / 0	0 / 0	99 / 0	0 / 0
F	138	104 / 0	0 / 0	0 / 0	0 / 0	34 / 0	0 / 0

BEARING MATERIAL TO BE SPF NO.2 OR BETTER AT JOINT(S) B, K, J, H, F

BRACING

TOP CHORD TO BE SHEATHED OR MAX. PURLIN SPACING = 6.25 FT.
MAX. UNBRACED BOTTOM CHORD LENGTH = 10.00 FT OR RIGID CEILING DIRECTLY APPLIED.

ALL PITCH BREAKS AND PERIMETER CORNER JOINTS MUST BE LATERALLY RESTRAINED.

LOADING

TOTAL LOAD CASES: (4)

CHORDS

MEMB. FR-TO	MAX. FACTORED FORCE (LBS)	FACTORED VERT. LOAD LC1 (PLF) FROM	TO	MAX CSI (LC)	MAX. UNBRAC LENGTH
A- B	0 / 10	-78.0	-78.0	0.01 (1)	10.00
B- M	0 / 12	-78.0	-78.0	0.03 (1)	10.00
M- C	-98 / 0	-78.0	-78.0	0.05 (1)	6.25
C- D	-17 / 0	-78.0	-78.0	0.46 (1)	6.25
D- E	-17 / 0	-78.0	-78.0	0.46 (1)	6.25
E- O	-98 / 0	-78.0	-78.0	0.05 (1)	6.25
O- F	0 / 12	-78.0	-78.0	0.03 (1)	10.00
F- G	0 / 10	-78.0	-78.0	0.01 (1)	10.00
B- L	0 / 58	-18.5	-18.5	0.06 (1)	10.00
L- K	0 / 58	-18.5	-18.5	0.09 (4)	10.00
K- J	0 / 52	-18.5	-18.5	0.14 (4)	10.00
J- I	0 / 52	-18.5	-18.5	0.14 (4)	10.00
I- H	0 / 52	-18.5	-18.5	0.14 (4)	10.00
H- N	0 / 58	-18.5	-18.5	0.09 (4)	10.00
N- F	0 / 58	-18.5	-18.5	0.06 (1)	10.00

WEBS

MEMB. FR-TO	MAX. FACTORED FORCE (LBS)	MAX CSI (LC)
K- C	-160 / 0	0.03 (1)
C- J	-39 / 0	0.03 (1)
J- D	-571 / 0	0.11 (1)
J- E	-39 / 0	0.03 (1)
H- E	-160 / 0	0.03 (1)
L- M	-209 / 0	0.00 (1)
N- O	-209 / 0	0.00 (1)

DESIGN CRITERIA

SPECIFIED LOADS:

TOP CH.	LL	=	21.0	PSF
	DL	=	6.0	PSF
BOT CH.	LL	=	0.0	PSF
	DL	=	7.4	PSF
TOTAL LOAD		=	34.4	PSF

SPACING = 24.0 IN. C/C

LOADING IN FLAT SECTION BASED ON A SLOPE OF 2.00/12 MINIMUM

THIS TRUSS IS DESIGNED FOR RESIDENTIAL OR SMALL BUILDING REQUIREMENTS OF PART 9, NBCC 2015

THIS DESIGN COMPLIES WITH:
- PART 9 OF BCBC 2018 , ABC 2019
- PART 9 OF OBC 2012 (2019 AMENDMENT)
- CSA 086-14
- TPIC 2014

(55 % OF 23.0 P.S.F. G.S.L. PLUS 8.4 P.S.F. RAIN LOAD) EQUALS 21.0 P.S.F. SPECIFIED ROOF LIVE LOAD

CSI: TC=0.46/1.00 (C-D:1) , BC=0.14/1.00 (J-K:4) , WB=0.11/1.00 (D-J:1) , SSI=0.22/1.00 (C-D:1)

DOL LUMBER=1.00 NAIL=1.00 LS BEND=1.10 COMP=1.10 SHEAR=1.10 TENS= 1.10

COMPANION LIVE LOAD FACTOR = 1.00

TRUSS PLATE MANUFACTURER IS NOT RESPONSIBLE FOR QUALITY CONTROL IN THE TRUSS MANUFACTURING PLANT .

NAIL VALUES

PLATE	GRIP(DRY) (PSI) MAX	MIN	SHEAR (PLI) MAX	MIN	SECTION (PLI) MAX	MIN
MT20	650	371	1747	788	1987	1873

PLATE PLACEMENT TOL. = 0.250 inches

PLATE ROTATION TOL. = 5.0 Deg.

JSI GRIP= 0.74 (J) (INPUT = 0.90)
JSI METAL= 0.12 (D) (INPUT = 1.00)

JOB NAME	TRUSS NAME	QUANTITY	PLY	JOB DESC.		DRWG NO.
336335	H268P		1	TRUSS DESC.	JT 45147	E21104204

Alpa Roof Truss, Maple

Version 8.420 S Jan 21 2021 MiTek Industries, Inc. Thu Oct 14 08:54:19 2021 Page 1

ID:hd511hZTz bdeQoS817GKByhVxV-?kBI9pviXBfwwSTMvZZBx1YDV9KwARiaaBV3jayTZG2

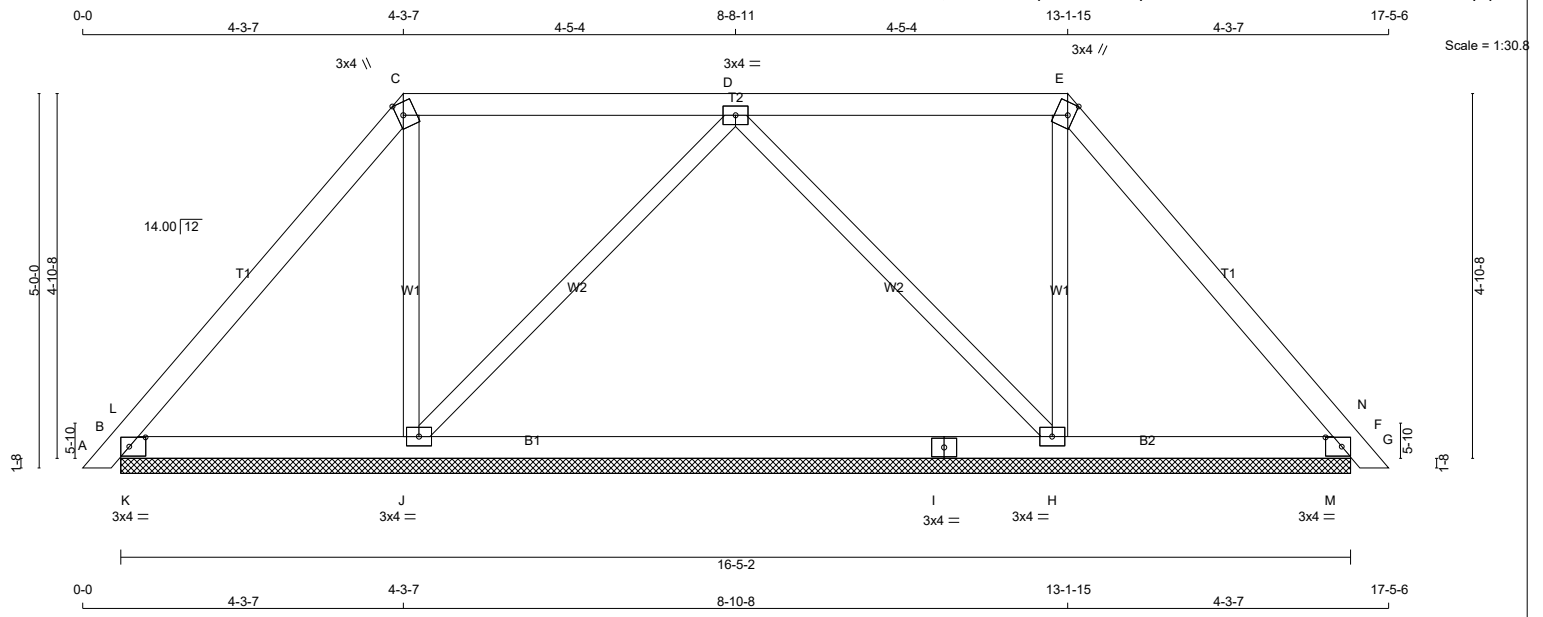

TOTAL WEIGHT = 61 lb

[M]

LUMBER

N. L. G. A. RULES

CHORDS	SIZE		LUMBER	DESCR.
A - C	2x4	DRY	No.2	SPF
C - E	2x4	DRY	No.2	SPF
E - G	2x4	DRY	No.2	SPF
B - I	2x4	DRY	No.2	SPF
I - F	2x4	DRY	No.2	SPF
ALL WEBS	2x3	DRY	No.2	SPF

DRY: SEASONED LUMBER.

PLATES (table is in inches)

JT	TYPE	PLATES	W	LEN	Y	X
B	TMB1-I	MT20	3.0	4.0	1.50	2.50
C	TTW+m	MT20	3.0	4.0	2.00	1.00
D	TMWW-t	MT20	3.0	4.0		
E	TTW+m	MT20	3.0	4.0	2.00	1.00
F	TMB1-I	MT20	3.0	4.0	1.50	2.50
H	BMWW1-t	MT20	3.0	4.0		
I	BS-t	MT20	3.0	4.0		
J	BMWW1-t	MT20	3.0	4.0		

LATERAL BRACE(S) SHOWN SHALL BE 2X4 SPF#2

DIMENSIONS, SUPPORTS AND LOADINGS SPECIFIED BY FABRICATOR TO BE VERIFIED BY BUILDING DESIGNER

BEARINGS

JT	FACTORED GROSS REACTION VERT	HORZ	MAXIMUM FACTORED GROSS REACTION DOWN	HORZ	UPLIFT	INPUT BRG IN-SX	REQRD BRG IN-SX
B	267	0	267	0	0	16-5-2 (5-5-2)	1-8
J	556	0	556	0	0	16-5-2 (5-5-2)	1-8
H	556	0	556	0	0	16-5-2 (5-5-2)	1-8
F	267	0	267	0	0	16-5-2 (5-5-2)	1-8

VALUE IN PARENTHESIS INDICATES EFFECTIVE BEARING LENGTH

UNFACTORED REACTIONS

JT	1ST LCASE COMBINED	MAX./MIN. COMPONENT REACTIONS SNOW	LIVE	PERM.LIVE	WIND	DEAD	SOIL
B	186	141 / 0	0 / 0	0 / 0	0 / 0	45 / 0	0 / 0
J	401	221 / 0	0 / 0	0 / 0	0 / 0	180 / 0	0 / 0
H	401	221 / 0	0 / 0	0 / 0	0 / 0	180 / 0	0 / 0
F	186	141 / 0	0 / 0	0 / 0	0 / 0	45 / 0	0 / 0

BEARING MATERIAL TO BE SPF NO.2 OR BETTER AT JOINT(S) B, J, H, F

BRACING

TOP CHORD TO BE SHEATHED OR MAX. PURLIN SPACING = 6.25 FT.
MAX. UNBRACED BOTTOM CHORD LENGTH = 10.00 FT OR RIGID CEILING DIRECTLY APPLIED.

ALL PITCH BREAKS AND PERIMETER CORNER JOINTS MUST BE LATERALLY RESTRAINED.

LOADING

TOTAL LOAD CASES: (4)

CHORDS MEMB. FR-TO	MAX. FACTORED FORCE (LBS)	FACTORED VERT. LOAD LC1 (PLF) FROM	TO	MAX CSI (LC)	MAX. UNBRAC LENGTH	WEBS MEMB. FR-TO	MAX. FACTORED FORCE (LBS)	MAX CSI (LC)
A- B	0 / 11	-78.0	-78.0	0.01 (1)	10.00	J- C	-174 / 0	0.06 (1)
B- L	0 / 215	-78.0	-78.0	0.13 (1)	10.00	J- D	-296 / 0	0.21 (1)
L- C	-118 / 0	-78.0	-78.0	0.13 (1)	6.25	D- H	-296 / 0	0.21 (1)
C- D	-62 / 0	-78.0	-78.0	0.26 (1)	6.25	H- E	-174 / 0	0.06 (1)
D- E	-62 / 0	-78.0	-78.0	0.26 (1)	6.25	K- L	-531 / 0	0.00 (1)
E- N	-118 / 0	-78.0	-78.0	0.13 (1)	6.25	M- N	-531 / 0	0.00 (1)
N- F	0 / 215	-78.0	-78.0	0.13 (1)	10.00			
F- G	0 / 11	-78.0	-78.0	0.01 (1)	10.00			
B- K	0 / 66	-18.5	-18.5	0.13 (1)	10.00			
K- J	0 / 66	-18.5	-18.5	0.24 (4)	10.00			
J- I	0 / 266	-18.5	-18.5	0.25 (4)	10.00			
I- H	0 / 266	-18.5	-18.5	0.25 (4)	10.00			
H- M	0 / 66	-18.5	-18.5	0.24 (4)	10.00			
M- F	0 / 66	-18.5	-18.5	0.13 (1)	10.00			

DESIGN CRITERIA

SPECIFIED LOADS:

TOP CH.	LL	=	21.0	PSF
	DL	=	6.0	PSF
BOT CH.	LL	=	0.0	PSF
	DL	=	7.4	PSF
TOTAL LOAD		=	34.4	PSF

SPACING = 24.0 IN. C/C

LOADING IN FLAT SECTION BASED ON A SLOPE OF 2.00/12 MINIMUM

THIS TRUSS IS DESIGNED FOR RESIDENTIAL OR SMALL BUILDING REQUIREMENTS OF PART 9, NBCC 2015

THIS DESIGN COMPLIES WITH:
- PART 9 OF BCBC 2018 , ABC 2019
- PART 9 OF OBC 2012 (2019 AMENDMENT)
- CSA 086-14
- TPIC 2014

(55 % OF 23.0 P.S.F. G.S.L. PLUS 8.4 P.S.F. RAIN LOAD) EQUALS 21.0 P.S.F. SPECIFIED ROOF LIVE LOAD

CSI: TC=0.26/1.00 (C-D:1) , BC=0.25/1.00 (H-J:4) , WB=0.21/1.00 (D-J:1) , SSI=0.40/1.00 (B-K:1)

DOL LUMBER=1.00 NAIL=1.00 LS BEND=1.10 COMP=1.10 SHEAR=1.10 TENS= 1.10

COMPANION LIVE LOAD FACTOR = 1.00

TRUSS PLATE MANUFACTURER IS NOT RESPONSIBLE FOR QUALITY CONTROL IN THE TRUSS MANUFACTURING PLANT .

NAIL VALUES

PLATE	GRIP(DRY) (PSI) MAX	MIN	SHEAR (PLI) MAX	MIN	SECTION (PLI) MAX	MIN
MT20	650	371	1747	788	1987	1873

PLATE PLACEMENT TOL. = 0.250 inches

PLATE ROTATION TOL. = 5.0 Deg.

JSI GRIP= 0.75 (J) (INPUT = 0.90)
JSI METAL= 0.09 (I) (INPUT = 1.00)

JOB NAME	TRUSS NAME	QUANTITY	PLY	JOB DESC.		DRWG NO.
336335	H269P		1	TRUSS DESC.	JT 45147	E21104205

Alpa Roof Truss, Maple

Version 8.420 S Jan 21 2021 MiTek Industries, Inc. Thu Oct 14 08:54:20 2021 Page 1

ID:hd511hZTz bdeQoS817GKByhVxV-TxlgM8wKIVnnXc2YSH4QTE4LGZqXvv7kprFcF1yTZG1

Scale = 1:38.9

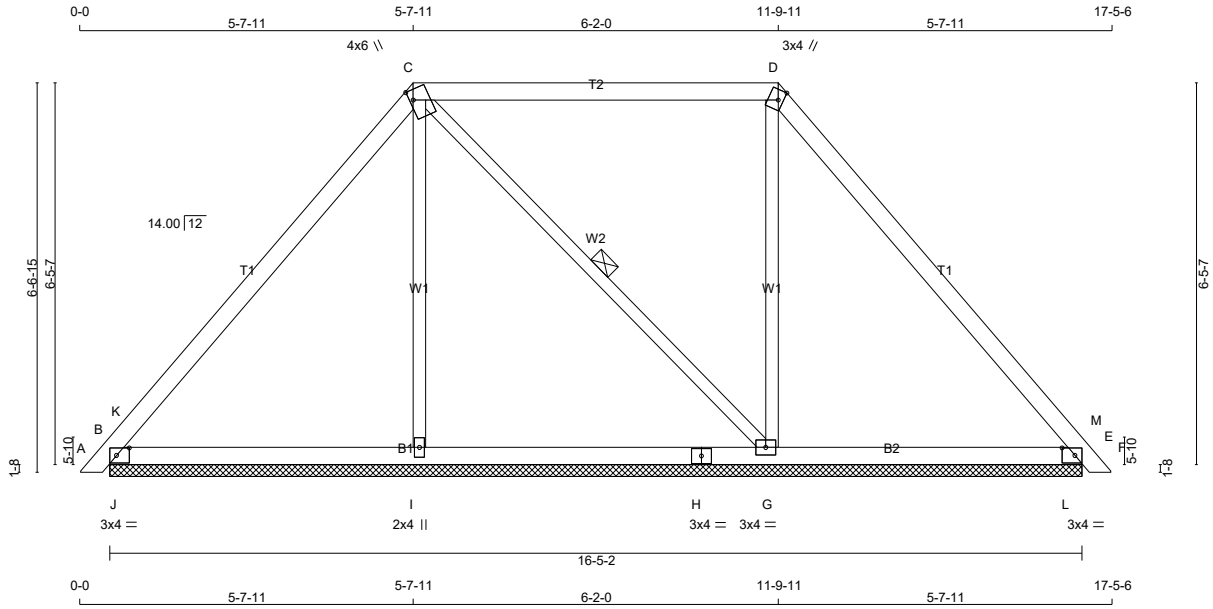

TOTAL WEIGHT = 2 X 62 = 124 lb

[M]

LUMBER

N. L. G. A. RULES

CHORDS	SIZE		LUMBER	DESCR.
A - C	2x4	DRY	No.2	SPF
C - D	2x4	DRY	No.2	SPF
D - F	2x4	DRY	No.2	SPF
B - H	2x4	DRY	No.2	SPF
H - E	2x4	DRY	No.2	SPF
ALL WEBS	2x3	DRY	No.2	SPF

DRY: SEASONED LUMBER.

PLATES (table is in inches)

JT	TYPE	PLATES	W	LEN	Y	X
B	TMB1-l	MT20	3.0	4.0	1.50	2.50
C	TTWW+m	MT20	4.0	6.0	2.00	0.75
D	TTW+m	MT20	3.0	4.0	2.00	1.00
E	TMB1-l	MT20	3.0	4.0	1.50	2.50
G	BMWW1-t	MT20	3.0	4.0		
H	BS-t	MT20	3.0	4.0		
I	BMW1+w	MT20	2.0	4.0		

LATERAL BRACE(S) SHOWN SHALL BE 2X4 SPF#2

DIMENSIONS, SUPPORTS AND LOADINGS SPECIFIED BY FABRICATOR TO BE VERIFIED BY BUILDING DESIGNER

BEARINGS

JT	FACTORED GROSS REACTION VERT	HORZ	MAXIMUM FACTORED GROSS REACTION DOWN	HORZ	UPLIFT	INPUT BRG IN-SX	REQRD BRG IN-SX
B	502	0	502	0	0	16-5-2 (6-5-2)	1-8
I	295	0	295	0	0	16-5-2 (6-5-2)	1-8
G	377	0	377	0	0	16-5-2 (6-5-2)	1-8
E	472	0	472	0	0	16-5-2 (6-5-2)	1-8

VALUE IN PARENTHESIS INDICATES EFFECTIVE BEARING LENGTH

UNFACTORED REACTIONS

JT	1ST LCASE COMBINED	MAX./MIN. COMPONENT REACTIONS SNOW	LIVE	PERM.LIVE	WIND	DEAD	SOIL
B	353	243 / 0	0 / 0	0 / 0	0 / 0	110 / 0	0 / 0
I	215	104 / 0	0 / 0	0 / 0	0 / 0	111 / 0	0 / 0
G	271	150 / 0	0 / 0	0 / 0	0 / 0	121 / 0	0 / 0
E	333	226 / 0	0 / 0	0 / 0	0 / 0	107 / 0	0 / 0

BEARING MATERIAL TO BE SPF NO.2 OR BETTER AT JOINT(S) B, I, G, E

BRACING

TOP CHORD TO BE SHEATHED OR MAX. PURLIN SPACING = 6.25 FT.
MAX. UNBRACED BOTTOM CHORD LENGTH = 10.00 FT OR RIGID CEILING DIRECTLY APPLIED.

ALL PITCH BREAKS AND PERIMETER CORNER JOINTS MUST BE LATERALLY RESTRAINED.

1 LATERAL BRACE(S) AT 1/ 2 LENGTH OF C-G.

LOADING

TOTAL LOAD CASES: (4)

CHORDS MEMB. FR-TO	MAX. FACTORED FORCE (LBS)	FACTORED VERT. LOAD LC1 (PLF) FROM	TO	MAX CSI (LC)	MAX. UNBRAC LENGTH
A- B	0 / 10	-78.0	-78.0	0.01 (1)	10.00
B- K	-39 / 200	-78.0	-78.0	0.20 (1)	6.25
K- C	-327 / 0	-78.0	-78.0	0.26 (1)	6.25
C- D	-172 / 0	-78.0	-78.0	0.51 (1)	6.25
D- M	-288 / 0	-78.0	-78.0	0.26 (1)	6.25
M- E	-32 / 246	-78.0	-78.0	0.20 (1)	6.25
E- F	0 / 10	-78.0	-78.0	0.01 (1)	10.00
B- J	0 / 200	-18.5	-18.5	0.22 (1)	10.00
J- I	0 / 200	-18.5	-18.5	0.22 (1)	10.00
I- H	0 / 197	-18.5	-18.5	0.16 (4)	10.00
H- G	0 / 197	-18.5	-18.5	0.16 (4)	10.00
G- L	0 / 175	-18.5	-18.5	0.22 (1)	10.00
L- E	0 / 175	-18.5	-18.5	0.22 (1)	10.00

WEBS MEMB. FR-TO	MAX. FACTORED FORCE (LBS)	MAX CSI (LC)
I- C	-149 / 0	0.10 (1)
C- G	-37 / 0	0.02 (1)
G- D	-204 / 0	0.14 (1)
J- K	-805 / 0	0.00 (1)
L- M	-814 / 0	0.00 (1)

DESIGN CRITERIA

SPECIFIED LOADS:

TOP	CH.	LL	=	21.0	PSF
		DL	=	6.0	PSF
BOT	CH.	LL	=	0.0	PSF
		DL	=	7.4	PSF
TOTAL	LOAD		=	34.4	PSF

SPACING = 24.0 IN. C/C

LOADING IN FLAT SECTION BASED ON A SLOPE OF 2.00/12 MINIMUM

THIS TRUSS IS DESIGNED FOR RESIDENTIAL OR SMALL BUILDING REQUIREMENTS OF PART 9, NBCC 2015

THIS DESIGN COMPLIES WITH:
- PART 9 OF BCBC 2018 , ABC 2019
- PART 9 OF OBC 2012 (2019 AMENDMENT)
- CSA 086-14
- TPIC 2014

(55 % OF 23.0 P.S.F. G.S.L. PLUS 8.4 P.S.F. RAIN LOAD) EQUALS 21.0 P.S.F. SPECIFIED ROOF LIVE LOAD

CSI: TC=0.51/1.00 (C-D:1) , BC=0.22/1.00 (I-J:1) , WB=0.14/1.00 (D-G:1) , SSI=0.64/1.00 (E-L:1)

DOL LUMBER=1.00 NAIL=1.00 LS BEND=1.10 COMP=1.10 SHEAR=1.10 TENS= 1.10

COMPANION LIVE LOAD FACTOR = 1.00

TRUSS PLATE MANUFACTURER IS NOT RESPONSIBLE FOR QUALITY CONTROL IN THE TRUSS MANUFACTURING PLANT .

NAIL VALUES

PLATE	GRIP(DRY) (PSI) MAX	MIN	SHEAR (PLI) MAX	MIN	SECTION (PLI) MAX	MIN
MT20	650	371	1747	788	1987	1873

PLATE PLACEMENT TOL. = 0.250 inches

PLATE ROTATION TOL. = 5.0 Deg.

JSI GRIP= 0.89 (C) (INPUT = 0.90)
JSI METAL= 0.14 (H) (INPUT = 1.00)

JOB NAME	TRUSS NAME	QUANTITY	PLY	JOB DESC.		DRWG NO.
336335	H270P		1	TRUSS DESC.	JT 45147	E21104206

Alpa Roof Truss, Maple

Version 8.420 S Jan 21 2021 MiTek Industries, Inc. Thu Oct 14 08:54:22 2021 Page 1

ID:hd511hZTz bdeQoS817GKByhVxV-PJtRnqyaq61VnvCwai6uZfAq9MLoNqG1G8kjKvyTZG?

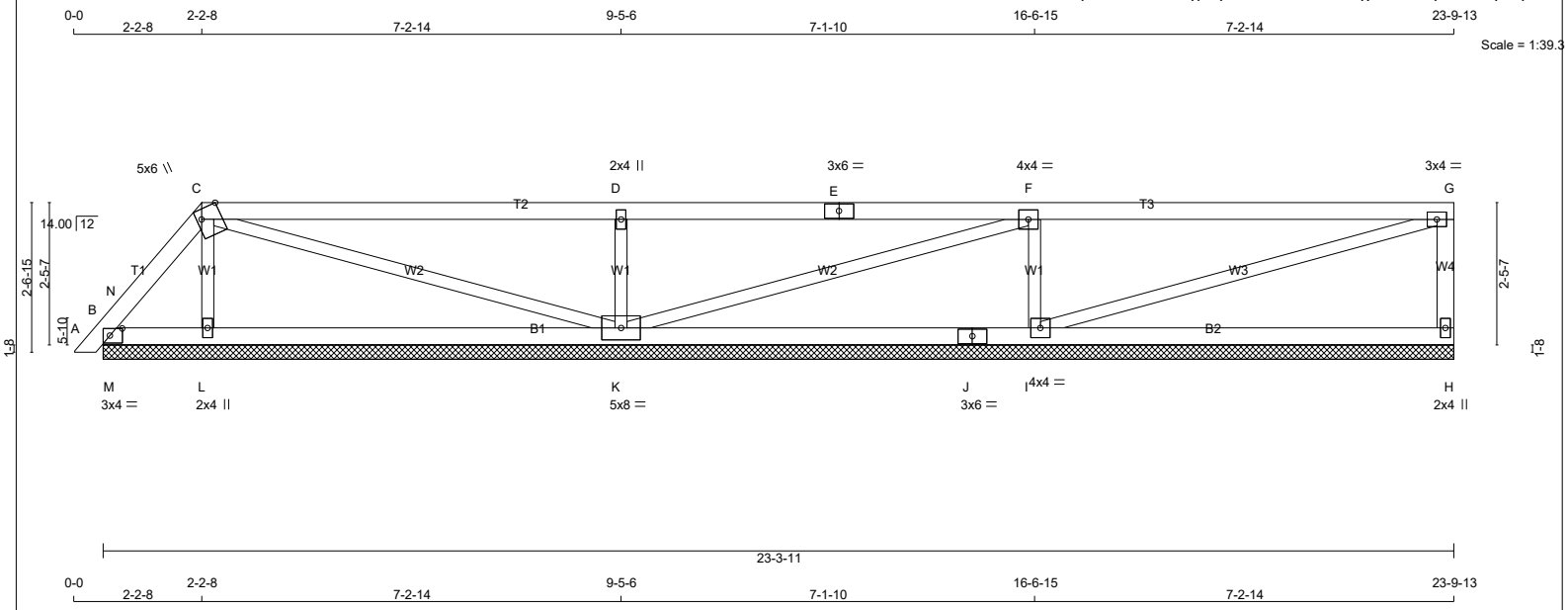

TOTAL WEIGHT = 79 lb [M]

LUMBER

N. L. G. A. RULES

CHORDS	SIZE		LUMBER	DESCR.
A - C	2x4	DRY	No.2	SPF
C - E	2x4	DRY	No.2	SPF
E - G	2x4	DRY	No.2	SPF
H - G	2x4	DRY	No.2	SPF
B - J	2x4	DRY	No.2	SPF
J - H	2x4	DRY	No.2	SPF
ALL WEBS	2x3	DRY	No.2	SPF

DRY: SEASONED LUMBER.

PLATES (table is in inches)

JT	TYPE	PLATES	W	LEN	Y	X
B	TMB1-l	MT20	3.0	4.0	1.50	2.50
C	TTWW+m	MT20	5.0	6.0	Edge	4.00
D	TMW+w	MT20	2.0	4.0		
E	TS-t	MT20	3.0	6.0		
F	TMWW-t	MT20	4.0	4.0		
G	TMVW-t	MT20	3.0	4.0		
H	BMV1+p	MT20	2.0	4.0		
I	BMWW1-t	MT20	4.0	4.0		
J	BS-t	MT20	3.0	6.0		
K	BMWWW1-t	MT20	5.0	8.0		
L	BMW1+w	MT20	2.0	4.0		

Edge - INDICATES REFERENCE CORNER OF PLATE TOUCHES EDGE OF CHORD.

LATERAL BRACE(S) SHOWN SHALL BE 2X4 SPF#2

DIMENSIONS, SUPPORTS AND LOADINGS SPECIFIED BY FABRICATOR TO BE VERIFIED BY BUILDING DESIGNER

BEARINGS

JT	FACTORED GROSS REACTION VERT	HORZ	MAXIMUM FACTORED GROSS REACTION DOWN	HORZ	UPLIFT	INPUT BRG IN-SX	REQRD BRG IN-SX
H	282	0	282	0	0	23-3-11 (8-3-11)	
B	125	0	125	0	0	23-3-11 (8-3-11)	
L	352	0	352	0	0	23-3-11 (8-3-11)	
K	761	0	761	0	0	23-3-11 (8-3-11)	
I	759	0	759	0	0	23-3-11 (8-3-11)	

VALUE IN PARENTHESIS INDICATES EFFECTIVE BEARING LENGTH

UNFACTORED REACTIONS

JT	1ST LCASE COMBINED	MAX./MIN. COMPONENT REACTIONS SNOW	LIVE	PERM.LIVE	WIND	DEAD	SOIL
H	201	123 / 0	0 / 0	0 / 0	0 / 0	78 / 0	0 / 0
B	84	81 / 0	0 / 0	0 / 0	0 / 0	3 / 0	0 / 0
L	257	123 / 0	0 / 0	0 / 0	0 / 0	134 / 0	0 / 0
K	541	340 / 0	0 / 0	0 / 0	0 / 0	201 / 0	0 / 0
I	541	328 / 0	0 / 0	0 / 0	0 / 0	214 / 0	0 / 0

BEARING MATERIAL TO BE SPF NO.2 OR BETTER AT JOINT(S) H, B, L, K, I

BRACING

TOP CHORD TO BE SHEATHED OR MAX. PURLIN SPACING = 6.25 FT.
MAX. UNBRACED BOTTOM CHORD LENGTH = 10.00 FT OR RIGID CEILING DIRECTLY APPLIED.

ALL PITCH BREAKS AND PERIMETER CORNER JOINTS MUST BE LATERALLY RESTRAINED.

LOADING

TOTAL LOAD CASES: (4)

CHORDS

MEMB. FR-TO	MAX. FACTORED FORCE (LBS)	FACTORED VERT. LOAD LC1 (PLF) FROM	TO	MAX CSI (LC)	MAX. UNBRAC LENGTH
A- B	0 / 10	-78.0	-78.0	0.01 (1)	10.00
B- N	0 / 58	-78.0	-78.0	0.04 (4)	10.00
N- C	-71 / 0	-78.0	-78.0	0.03 (4)	6.25
C- D	0 / 9	-78.0	-78.0	0.55 (1)	10.00
D- E	0 / 8	-78.0	-78.0	0.55 (1)	10.00
E- F	0 / 8	-78.0	-78.0	0.55 (1)	10.00
F- G	-9 / 0	-78.0	-78.0	0.55 (1)	10.00
H- G	-229 / 0	0.0	0.0	0.03 (1)	7.81
B- M	0 / 39	-18.5	-18.5	0.04 (1)	10.00
M- L	0 / 39	-18.5	-18.5	0.16 (4)	10.00
L- K	0 / 28	-18.5	-18.5	0.18 (4)	10.00
K- J	0 / 9	-18.5	-18.5	0.24 (4)	10.00
J- I	0 / 9	-18.5	-18.5	0.24 (4)	10.00
I- H	0 / 0	-18.5	-18.5	0.24 (4)	10.00

WEBS

MEMB. FR-TO	MAX. FACTORED FORCE (LBS)	MAX CSI (LC)
L- C	-216 / 0	0.03 (1)
C- K	-38 / 0	0.04 (1)
K- D	-616 / 0	0.10 (1)
K- F	-18 / 0	0.02 (1)
I- F	-611 / 0	0.10 (1)
I- G	0 / 9	0.00 (1)
M- N	-176 / 0	0.00 (1)

DESIGN CRITERIA

SPECIFIED LOADS:

TOP	CH.	LL	=	21.0	PSF
		DL	=	6.0	PSF
BOT	CH.	LL	=	0.0	PSF
		DL	=	7.4	PSF
TOTAL	LOAD		=	34.4	PSF

SPACING = 24.0 IN. C/C

LOADING IN FLAT SECTION BASED ON A SLOPE OF 2.00/12 MINIMUM

THIS TRUSS IS DESIGNED FOR RESIDENTIAL OR SMALL BUILDING REQUIREMENTS OF PART 9, NBCC 2015

THIS DESIGN COMPLIES WITH:
- PART 9 OF BCBC 2018 , ABC 2019
- PART 9 OF OBC 2012 (2019 AMENDMENT)
- CSA 086-14
- TPIC 2014

(55 % OF 23.0 P.S.F. G.S.L. PLUS 8.4 P.S.F. RAIN LOAD) EQUALS 21.0 P.S.F. SPECIFIED ROOF LIVE LOAD

CSI: TC=0.55/1.00 (C-D:1) , BC=0.24/1.00 (I-K:4) , WB=0.10/1.00 (D-K:1) , SSI=0.26/1.00 (F-G:1)

DOL LUMBER=1.00 NAIL=1.00 LS BEND=1.10 COMP=1.10 SHEAR=1.10 TENS= 1.10

COMPANION LIVE LOAD FACTOR = 1.00

TRUSS PLATE MANUFACTURER IS NOT RESPONSIBLE FOR QUALITY CONTROL IN THE TRUSS MANUFACTURING PLANT .

NAIL VALUES

PLATE	GRIP(DRY) (PSI) MAX	MIN	SHEAR (PLI) MAX	MIN	SECTION (PLI) MAX	MIN
MT20	650	371	1747	788	1987	1873

PLATE PLACEMENT TOL. = 0.250 inches

PLATE ROTATION TOL. = 5.0 Deg.

JSI GRIP= 0.84 (G) (INPUT = 0.90)
JSI METAL= 0.25 (E) (INPUT = 1.00)

JOB NAME	TRUSS NAME	QUANTITY	PLY	JOB DESC.		DRWG NO.
336335	H271P		1	TRUSS DESC.	JT 45147	E21104207

Alpa Roof Truss, Maple

Version 8.420 S Jan 21 2021 MiTek Industries, Inc. Thu Oct 14 08:54:24 2021 Page 1

ID:hd511hZTz bdeQoS817GKByhVxV-Li?BCWzqMkHD0DMJh79Me4F1vA1qrjfJkSDqNoyTZFz

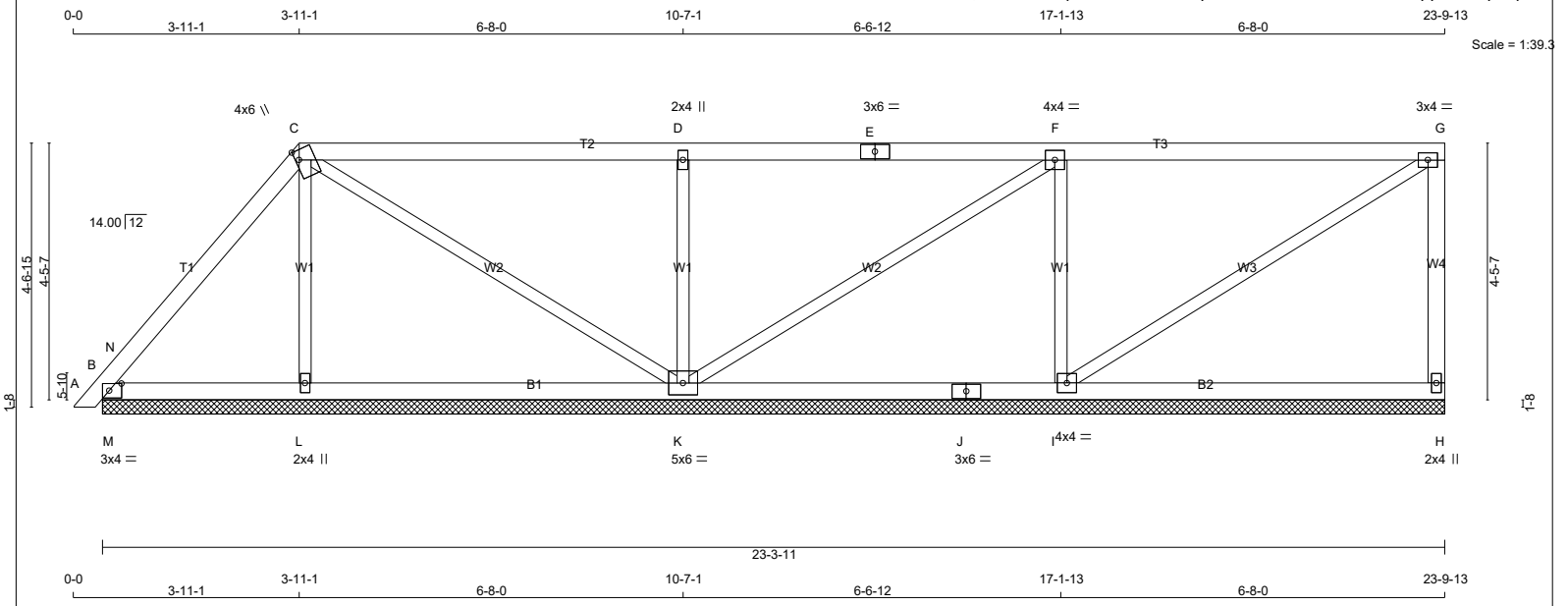

TOTAL WEIGHT = 88 lb [M]

LUMBER

N. L. G. A. RULES

CHORDS	SIZE		LUMBER	DESCR.
A - C	2x4	DRY	No.2	SPF
C - E	2x4	DRY	No.2	SPF
E - G	2x4	DRY	No.2	SPF
H - G	2x4	DRY	No.2	SPF
B - J	2x4	DRY	No.2	SPF
J - H	2x4	DRY	No.2	SPF
ALL WEBS	2x3	DRY	No.2	SPF

DRY: SEASONED LUMBER.

PLATES (table is in inches)

JT	TYPE	PLATES	W	LEN	Y	X
B	TMB1-I	MT20	3.0	4.0	1.50	2.50
C	TTWW+m	MT20	4.0	6.0	2.00	0.75
D	TMW+w	MT20	2.0	4.0		
E	TS-t	MT20	3.0	6.0		
F	TMWW-t	MT20	4.0	4.0		
G	TMVW-t	MT20	3.0	4.0		
H	BMV1+p	MT20	2.0	4.0		
I	BMWW1-t	MT20	4.0	4.0		
J	BS-t	MT20	3.0	6.0		
K	BMWWW1-t	MT20	5.0	6.0		
L	BMW1+w	MT20	2.0	4.0		

LATERAL BRACE(S) SHOWN SHALL BE 2X4 SPF#2

DIMENSIONS, SUPPORTS AND LOADINGS SPECIFIED BY FABRICATOR TO BE VERIFIED BY BUILDING DESIGNER

BEARINGS

JT	FACTORED GROSS REACTION VERT	HORZ	MAXIMUM FACTORED GROSS REACTION DOWN	HORZ	UPLIFT	INPUT BRG IN-SX	REQRD BRG IN-SX
H	271	0	271	0	0	23-3-11 (8-3-11)	
B	259	0	259	0	0	23-3-11 (8-3-11)	
L	316	0	316	0	0	23-3-11 (8-3-11)	
K	774	0	774	0	0	23-3-11 (8-3-11)	
I	660	0	660	0	0	23-3-11 (8-3-11)	

VALUE IN PARENTHESIS INDICATES EFFECTIVE BEARING LENGTH

UNFACTORED REACTIONS

JT	1ST LCASE COMBINED	MAX./MIN. COMPONENT REACTIONS SNOW	LIVE	PERM.LIVE	WIND	DEAD	SOIL
H	193	119 / 0	0 / 0	0 / 0	0 / 0	73 / 0	0 / 0
B	181	130 / 0	0 / 0	0 / 0	0 / 0	51 / 0	0 / 0
L	230	113 / 0	0 / 0	0 / 0	0 / 0	117 / 0	0 / 0
K	549	352 / 0	0 / 0	0 / 0	0 / 0	197 / 0	0 / 0
I	472	281 / 0	0 / 0	0 / 0	0 / 0	191 / 0	0 / 0

BEARING MATERIAL TO BE SPF NO.2 OR BETTER AT JOINT(S) H, B, L, K, I

BRACING

TOP CHORD TO BE SHEATHED OR MAX. PURLIN SPACING = 6.25 FT.
MAX. UNBRACED BOTTOM CHORD LENGTH = 10.00 FT OR RIGID CEILING DIRECTLY APPLIED.

ALL PITCH BREAKS AND PERIMETER CORNER JOINTS MUST BE LATERALLY RESTRAINED.

LOADING

TOTAL LOAD CASES: (4)

CHORDS

MEMB. FR-TO	MAX. FACTORED FORCE (LBS)	FACTORED VERT. LOAD LC1 (PLF) FROM	TO	MAX CSI (LC)	MAX. UNBRAC LENGTH
A- B	0 / 10	-78.0	-78.0	0.01 (1)	10.00
B- N	0 / 123	-78.0	-78.0	0.09 (1)	10.00
N- C	-116 / 0	-78.0	-78.0	0.11 (1)	6.25
C- D	0 / 31	-78.0	-78.0	0.47 (1)	10.00
D- E	0 / 30	-78.0	-78.0	0.47 (1)	10.00
E- F	0 / 30	-78.0	-78.0	0.47 (1)	10.00
F- G	-21 / 0	-78.0	-78.0	0.47 (1)	6.25
H- G	-222 / 0	0.0	0.0	0.07 (1)	7.81
B- M	0 / 67	-18.5	-18.5	0.11 (1)	10.00
M- L	0 / 67	-18.5	-18.5	0.14 (4)	10.00
L- K	0 / 62	-18.5	-18.5	0.15 (4)	10.00
K- J	0 / 21	-18.5	-18.5	0.20 (4)	10.00
J- I	0 / 21	-18.5	-18.5	0.20 (4)	10.00
I- H	0 / 0	-18.5	-18.5	0.20 (4)	10.00

WEBS

MEMB. FR-TO	MAX. FACTORED FORCE (LBS)	MAX CSI (LC)
L- C	-183 / 0	0.05 (1)
C- K	-109 / 0	0.13 (1)
K- D	-567 / 0	0.17 (1)
K- F	-61 / 0	0.08 (1)
I- F	-534 / 0	0.16 (1)
I- G	0 / 25	0.01 (1)
M- N	-408 / 0	0.00 (1)

DESIGN CRITERIA

SPECIFIED LOADS:

TOP CH.	LL	=	21.0	PSF
	DL	=	6.0	PSF
BOT CH.	LL	=	0.0	PSF
	DL	=	7.4	PSF
TOTAL LOAD		=	34.4	PSF

SPACING = 24.0 IN. C/C

LOADING IN FLAT SECTION BASED ON A SLOPE OF 2.00/12 MINIMUM

THIS TRUSS IS DESIGNED FOR RESIDENTIAL OR SMALL BUILDING REQUIREMENTS OF PART 9, NBCC 2015

THIS DESIGN COMPLIES WITH:
- PART 9 OF BCBC 2018 , ABC 2019
- PART 9 OF OBC 2012 (2019 AMENDMENT)
- CSA 086-14
- TPIC 2014

(55 % OF 23.0 P.S.F. G.S.L. PLUS 8.4 P.S.F. RAIN LOAD) EQUALS 21.0 P.S.F. SPECIFIED ROOF LIVE LOAD

CSI: TC=0.47/1.00 (D-F:1) , BC=0.20/1.00 (I-K:4) , WB=0.17/1.00 (D-K:1) , SSI=0.31/1.00 (B-M:1)

DOL LUMBER=1.00 NAIL=1.00 LS BEND=1.10 COMP=1.10 SHEAR=1.10 TENS= 1.10

COMPANION LIVE LOAD FACTOR = 1.00

TRUSS PLATE MANUFACTURER IS NOT RESPONSIBLE FOR QUALITY CONTROL IN THE TRUSS MANUFACTURING PLANT .

NAIL VALUES

PLATE	GRIP(DRY) (PSI) MAX	MIN	SHEAR (PLI) MAX	MIN	SECTION (PLI) MAX	MIN
MT20	650	371	1747	788	1987	1873

PLATE PLACEMENT TOL. = 0.250 inches

PLATE ROTATION TOL. = 5.0 Deg.

JSI GRIP= 0.89 (C) (INPUT = 0.90)
JSI METAL= 0.22 (E) (INPUT = 1.00)

JOB NAME	TRUSS NAME	QUANTITY	PLY	JOB DESC.		DRWG NO.
336335	H272P		1	TRUSS DESC.	JT 45147	E21104208

Alpa Roof Truss, Maple

Version 8.420 S Jan 21 2021 MiTek Industries, Inc. Thu Oct 14 08:54:25 2021 Page 1

ID:hd511hZTz_bdeQoS817GKByhVxV-puZZPs_S71Q4eNwVFqgbAIoDsaNoa72Ty6yNwEyTZFy

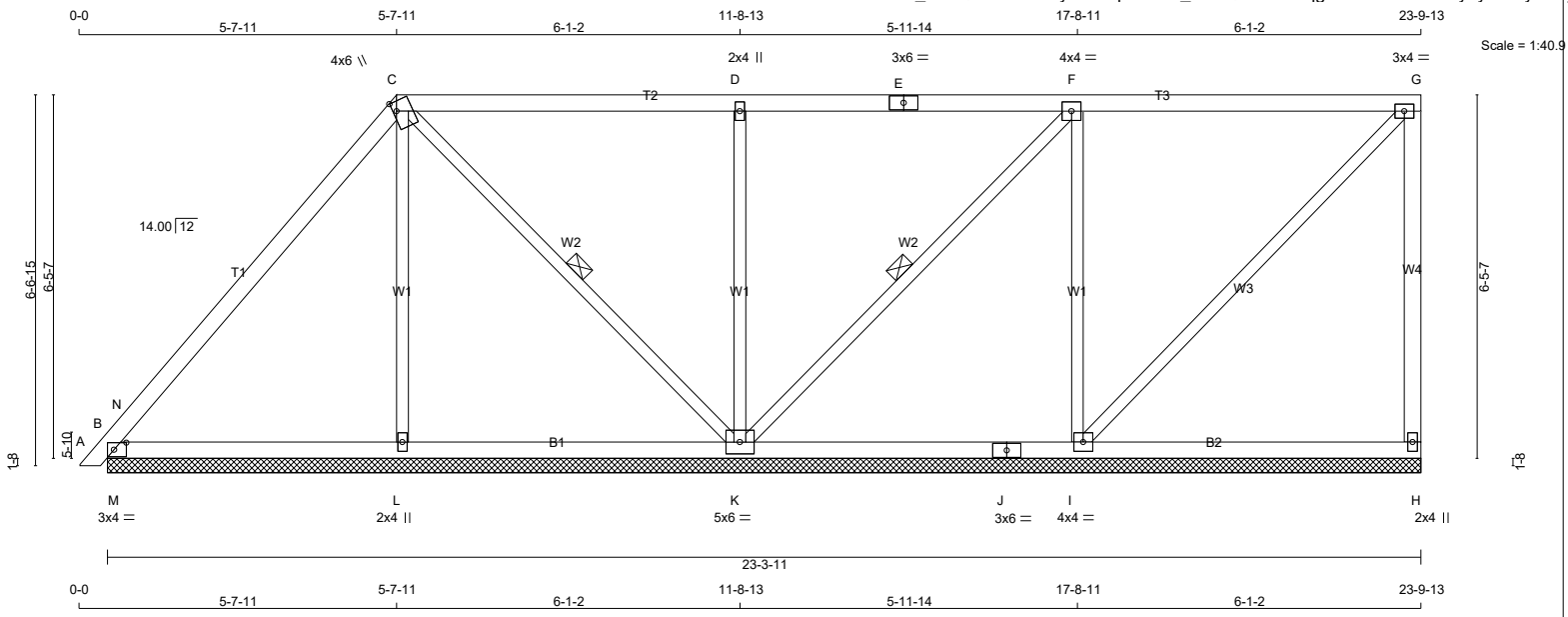

TOTAL WEIGHT = 98 lb [M]

LUMBER

N. L. G. A. RULES

CHORDS	SIZE		LUMBER	DESCR.
A - C	2x4	DRY	No.2	SPF
C - E	2x4	DRY	No.2	SPF
E - G	2x4	DRY	No.2	SPF
H - G	2x4	DRY	No.2	SPF
B - J	2x4	DRY	No.2	SPF
J - H	2x4	DRY	No.2	SPF
ALL WEBS	2x3	DRY	No.2	SPF

DRY: SEASONED LUMBER.

PLATES (table is in inches)

JT	TYPE	PLATES	W	LEN	Y	X
B	TMB1-l	MT20	3.0	4.0	1.50	2.50
C	TTWW+m	MT20	4.0	6.0	2.00	0.75
D	TMW+w	MT20	2.0	4.0		
E	TS-t	MT20	3.0	6.0		
F	TMWW-t	MT20	4.0	4.0		
G	TMVW-t	MT20	3.0	4.0		
H	BMV1+p	MT20	2.0	4.0		
I	BMWW1-t	MT20	4.0	4.0		
J	BS-t	MT20	3.0	6.0		
K	BMWWW1-t	MT20	5.0	6.0		
L	BMW1+w	MT20	2.0	4.0		

LATERAL BRACE(S) SHOWN SHALL BE 2X4 SPF#2

DIMENSIONS, SUPPORTS AND LOADINGS SPECIFIED BY FABRICATOR TO BE VERIFIED BY BUILDING DESIGNER

BEARINGS

JT	FACTORED GROSS REACTION VERT	HORZ	MAXIMUM FACTORED GROSS REACTION DOWN	HORZ	UPLIFT	INPUT BRG IN-SX	REQRD BRG IN-SX
H	266	0	266	0	0	23-3-11 (7-4-3)	8
B	378	0	378	0	0	23-3-11 (7-4-3)	8
L	277	0	277	0	0	23-3-11 (7-4-3)	8
K	804	0	804	0	0	23-3-11 (7-4-3)	8
I	553	0	553	0	0	23-3-11 (7-4-3)	8

VALUE IN PARENTHESIS INDICATES EFFECTIVE BEARING LENGTH

UNFACTORED REACTIONS

JT	1ST LCASE COMBINED	MAX./MIN. COMPONENT REACTIONS SNOW	LIVE	PERM.LIVE	WIND	DEAD	SOIL
H	189	118 / 0	0 / 0	0 / 0	0 / 0	71 / 0	0 / 0
B	267	179 / 0	0 / 0	0 / 0	0 / 0	88 / 0	0 / 0
L	203	93 / 0	0 / 0	0 / 0	0 / 0	110 / 0	0 / 0
K	568	375 / 0	0 / 0	0 / 0	0 / 0	192 / 0	0 / 0
I	397	229 / 0	0 / 0	0 / 0	0 / 0	168 / 0	0 / 0

BEARING MATERIAL TO BE SPF NO.2 OR BETTER AT JOINT(S) H, B, L, K, I

BRACING

TOP CHORD TO BE SHEATHED OR MAX. PURLIN SPACING = 6.25 FT.
MAX. UNBRACED BOTTOM CHORD LENGTH = 10.00 FT OR RIGID CEILING DIRECTLY APPLIED.

ALL PITCH BREAKS AND PERIMETER CORNER JOINTS MUST BE LATERALLY RESTRAINED.

1 LATERAL BRACE(S) AT 1/ 2 LENGTH OF C-K, F-K.

END VERTICAL(S) MUST BE SHEATHED OR HAVE BRACES AS INDICATED IN THE MAX. UNBRACED LENGTH COLUMN OF THE TABLE BELOW

LOADING

TOTAL LOAD CASES: (4)

CHORDS

MEMB. FR-TO	MAX. FACTORED FORCE (LBS)	FACTORED VERT. LOAD (PLF) FROM	TO	LC1	MAX CSI (LC)	MAX. UNBRAC LENGTH
A- B	0 / 10	-78.0	-78.0	0.01 (1)	10.00	
B- N	0 / 396	-78.0	-78.0	0.23 (1)	10.00	
N- C	-170 / 0	-78.0	-78.0	0.26 (1)	6.25	
C- D	0 / 31	-78.0	-78.0	0.39 (1)	10.00	
D- E	0 / 30	-78.0	-78.0	0.39 (1)	10.00	
E- F	0 / 30	-78.0	-78.0	0.39 (1)	10.00	
F- G	-31 / 0	-78.0	-78.0	0.39 (1)	6.25	
H- G	-222 / 0	0.0	0.0	0.19 (1)	7.81	
B- M	0 / 98	-18.5	-18.5	0.22 (1)	10.00	
M- L	0 / 98	-18.5	-18.5	0.22 (1)	10.00	
L- K	0 / 96	-18.5	-18.5	0.16 (4)	10.00	
K- J	0 / 31	-18.5	-18.5	0.17 (4)	10.00	
J- I	0 / 31	-18.5	-18.5	0.17 (4)	10.00	
I- H	0 / 0	-18.5	-18.5	0.17 (4)	10.00	

WEBS

MEMB. FR-TO	MAX. FACTORED FORCE (LBS)	MAX CSI (LC)
L- C	-117 / 0	0.08 (1)
C- K	-180 / 0	0.09 (1)
K- D	-518 / 0	0.35 (1)
K- F	-88 / 0	0.04 (1)
I- F	-455 / 0	0.31 (1)
I- G	0 / 44	0.01 (1)
M- N	-853 / 0	0.00 (1)

DESIGN CRITERIA

SPECIFIED LOADS:

TOP CH.	LL	=	21.0	PSF
	DL	=	6.0	PSF
BOT CH.	LL	=	0.0	PSF
	DL	=	7.4	PSF
TOTAL LOAD		=	34.4	PSF

SPACING = 24.0 IN. C/C

LOADING IN FLAT SECTION BASED ON A SLOPE OF 2.00/12 MINIMUM

THIS TRUSS IS DESIGNED FOR RESIDENTIAL OR SMALL BUILDING REQUIREMENTS OF PART 9, NBCC 2015

THIS DESIGN COMPLIES WITH:
- PART 9 OF BCBC 2018 , ABC 2019
- PART 9 OF OBC 2012 (2019 AMENDMENT)
- CSA 086-14
- TPIC 2014

(55 % OF 23.0 P.S.F. G.S.L. PLUS 8.4 P.S.F. RAIN LOAD) EQUALS 21.0 P.S.F. SPECIFIED ROOF LIVE LOAD

CSI: TC=0.39/1.00 (D-F:1) , BC=0.22/1.00 (B-M:1) , WB=0.35/1.00 (D-K:1) , SSI=0.67/1.00 (B-M:1)

DOL LUMBER=1.00 NAIL=1.00 LS BEND=1.10 COMP=1.10 SHEAR=1.10 TENS= 1.10

COMPANION LIVE LOAD FACTOR = 1.00

TRUSS PLATE MANUFACTURER IS NOT RESPONSIBLE FOR QUALITY CONTROL IN THE TRUSS MANUFACTURING PLANT .

NAIL VALUES

PLATE	GRIP(DRY) (PSI) MAX	MIN	SHEAR (PLI) MAX	MIN	SECTION (PLI) MAX	MIN
MT20	650	371	1747	788	1987	1873

PLATE PLACEMENT TOL. = 0.250 inches

PLATE ROTATION TOL. = 5.0 Deg.

JSI GRIP= 0.89 (C) (INPUT = 0.90)
JSI METAL= 0.18 (E) (INPUT = 1.00)

JOB NAME	TRUSS NAME	QUANTITY	PLY	JOB DESC.		DRWG NO.
336335	H273		2	TRUSS DESC.	JT 45147	E21104209

Alpa Roof Truss, Maple

Version 8.420 S Jan 21 2021 MiTek Industries, Inc. Thu Oct 14 08:54:27 2021 Page 1

ID:hd511hZTz bdeQoS817GKByhVxV-mHqKqY0jffqoth4uNFi3GjtYhNwa2 xmQQRU 7yTZFw

Scale = 1:58.3

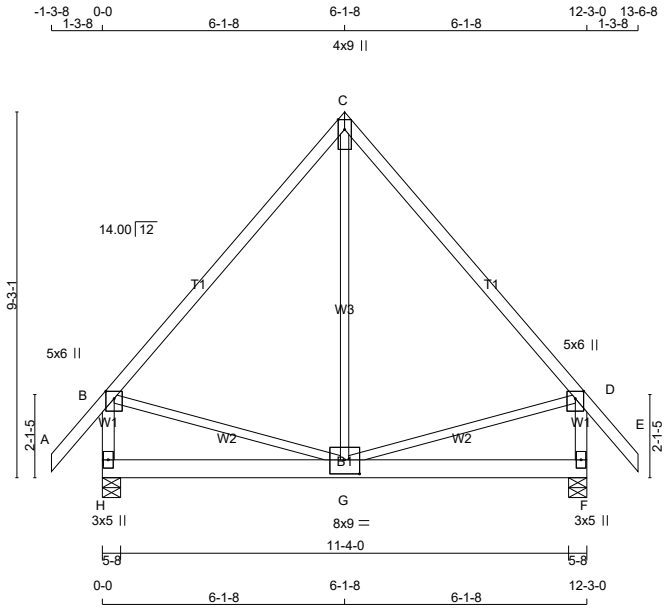

TOTAL WEIGHT = 2 X 69 = 137 lb

[M]

LUMBER

N. L. G. A. RULES

CHORDS	SIZE		LUMBER	DESCR.
A - C	2x4	DRY	No.2	SPF
C - E	2x4	DRY	No.2	SPF
H - B	2x4	DRY	No.2	SPF
F - D	2x4	DRY	No.2	SPF
H - F	2x6	DRY	1650F 1.5E	SPF
ALL WEBS EXCEPT	2x3	DRY	No.2	SPF

DRY: SEASONED LUMBER.

DESIGN CONSISTS OF 2 TRUSSES BUILT SEPARATELY THEN FASTENED TOGETHER AS FOLLOWS:

CHORDS #ROWS	SURFACE SPACING (IN)		LOAD(PLF)
TOP CHORDS : (0.122"X3") SPIRAL NAILS			
A- C	1	12	TOP
C- E	1	12	TOP
H- B	1	12	TOP
F- D	1	12	TOP
BOTTOM CHORDS : (0.122"X3") SPIRAL NAILS			
H- F	2	8	SIDE(338.3)
WEBS : (0.122"X3") SPIRAL NAILS			
2x3	1	6	

NAILS TO BE DRIVEN FROM ONE SIDE ONLY.

TOP - COMPONENTS ARE LOADED FROM THE TOP AND MUST BE PLACED ON TOP EDGE OF ALL PLIES FOR THE LOAD TO BE TRANSFERRED TO EACH PLY.

SIDE - PLF SHOWN IS THE EQUIVALENT UDL APPLIED TO ONE SIDE THAT THE CORRESPONDING NAILING PATTERN SHALL BE CAPABLE OF TRANSFERING. REMAINING PLF MUST BE APPLIED ON THE OPPOSITE SIDE OR ON THE TOP.

PLATES (table is in inches)

JT	TYPE	PLATES	W	LEN	Y	X
B	TMVW+p	MT20	5.0	6.0	2.25	2.50
C	TTW+p	MT20	4.0	9.0	3.00	Edge
D	TMVW+p	MT20	5.0	6.0	2.25	2.50
F	BMV1+p	MT20	3.0	5.0		
G	BMWWW-t	MT20	8.0	9.0	4.25	4.50

LATERAL BRACE(S) SHOWN SHALL BE 2X4 SPF#2

DIMENSIONS, SUPPORTS AND LOADINGS SPECIFIED BY FABRICATOR TO BE VERIFIED BY BUILDING DESIGNER

BEARINGS

JT	FACTORED GROSS REACTION VERT	HORZ	MAXIMUM FACTORED GROSS REACTION DOWN	HORZ	UPLIFT	INPUT BRG IN-SX	REQRD BRG IN-SX
H	4844	0	4844	0	0	5-8	4-6
F	4844	0	4844	0	0	5-8	4-6

UNFACTORED REACTIONS

JT	1ST LCASE COMBINED	MAX./MIN. COMPONENT REACTIONS SNOW	LIVE	PERM.LIVE	WIND	DEAD	SOIL
H	3451	2119 / 0	0 / 0	0 / 0	0 / 0	1332 / 0	0 / 0
F	3451	2119 / 0	0 / 0	0 / 0	0 / 0	1332 / 0	0 / 0

BEARING MATERIAL TO BE SPF NO.2 OR BETTER AT JOINT(S) H, F

BRACING

TOP CHORD TO BE SHEATHED OR MAX. PURLIN SPACING = 4.91 FT.
MAX. UNBRACED BOTTOM CHORD LENGTH = 10.00 FT OR RIGID CEILING DIRECTLY APPLIED.

ALL PITCH BREAKS AND PERIMETER CORNER JOINTS MUST BE LATERALLY RESTRAINED.

LOADING

TOTAL LOAD CASES: (4)

CHORDS

MEMB. FR-TO	MAX. FACTORED FORCE (LBS)	FACTORED VERT. LOAD (PLF) FROM	TO	LC1 CSI (LC)	MAX. UNBRAC LENGTH
A- B	0 / 42	-78.0	-78.0	0.06 (1)	10.00
B- C	-3062 / 0	-78.0	-78.0	0.50 (1)	4.91
C- D	-3062 / 0	-78.0	-78.0	0.50 (1)	4.91
D- E	0 / 42	-78.0	-78.0	0.06 (1)	10.00
H- B	-3212 / 0	0.0	0.0	0.20 (1)	6.48
F- D	-3212 / 0	0.0	0.0	0.20 (1)	6.48
H- G	0 / 0	-695.0	-695.0	0.77 (1)	10.00
G- F	0 / 0	-695.0	-695.0	0.77 (1)	10.00

WEBS

MEMB. FR-TO	MAX. FACTORED FORCE (LBS)	MAX CSI (LC)
G- C	0 / 4173	0.52 (1)
B- G	0 / 2065	0.26 (1)
G- D	0 / 2065	0.26 (1)

DESIGN CRITERIA

SPECIFIED LOADS:

TOP	CH.	LL	=	21.0	PSF
		DL	=	6.0	PSF
BOT	CH.	LL	=	0.0	PSF
		DL	=	7.4	PSF
TOTAL	LOAD		=	34.4	PSF

SPACING = 24.0 IN. C/C

GIRDER TYPE: CStdGirder
START DISTANCE = 0-0
START SPAN CARRIED = 30-0-10
END DISTANCE = 12-3-0
END SPAN CARRIED = 30-0-10
END WALL WIDTH = 0-0
APPLIED TO FRONT SIDE OF BOTTOM CHORD.
- ADDT'L LOADS BASED ON 55 % OF GSL.

THIS TRUSS IS DESIGNED FOR RESIDENTIAL OR SMALL BUILDING REQUIREMENTS OF PART 9, NBCC 2015

THIS DESIGN COMPLIES WITH:
- PART 9 OF BCBC 2018 , ABC 2019
- PART 9 OF OBC 2012 (2019 AMENDMENT)
- CSA 086-14
- TPIC 2014

(55 % OF 23.0 P.S.F. G.S.L. PLUS 8.4 P.S.F. RAIN LOAD) EQUALS 21.0 P.S.F. SPECIFIED ROOF LIVE LOAD

ALLOWABLE DEFL.(LL)= L/360 (0.41")
CALCULATED VERT. DEFL.(LL) = L/ 999 (0.08")
ALLOWABLE DEFL.(TL)= L/360 (0.41")
CALCULATED VERT. DEFL.(TL) = L/ 882 (0.17")

CSI: TC=0.50/1.00 (B-C:1) , BC=0.77/1.00 (G-H:1) , WB=0.52/1.00 (C-G:1) , SSI=0.87/1.00 (G-H:1)

DOL LUMBER=1.00 NAIL=1.00 LS BEND=1.00 COMP=1.00 SHEAR=1.00 TENS= 1.00

COMPANION LIVE LOAD FACTOR = 1.00

TRUSS PLATE MANUFACTURER IS NOT RESPONSIBLE FOR QUALITY CONTROL IN THE TRUSS MANUFACTURING PLANT .

NAIL VALUES

PLATE	GRIP(DRY) (PSI) MAX	MIN	SHEAR (PLI) MAX	MIN	SECTION (PLI) MAX	MIN
MT20	650	371	1747	788	1987	1873

PLATE PLACEMENT TOL. = 0.250 inches

PLATE ROTATION TOL. = 5.0 Deg.

JSI GRIP= 0.81 (B) (INPUT = 0.90)
JSI METAL= 0.44 (D) (INPUT = 1.00)

CONTINUED ON PAGE 2

JOB NAME	TRUSS NAME	QUANTITY	PLY	JOB DESC.		DRWG NO.
336335	H273G		1	TRUSS DESC.	JT 45147	E21104210

Alpa Roof Truss, Maple

Version 8.420 S Jan 21 2021 MiTek Industries, Inc. Thu Oct 14 08:54:29 2021 Page 1

ID:hd511hZTz bdeQoS817GKByhVxV-ifo4FD1zAGwV6 EHUgkXL8y FBnrWzP2tkwb3?yTZFu

Scale = 1:54.0

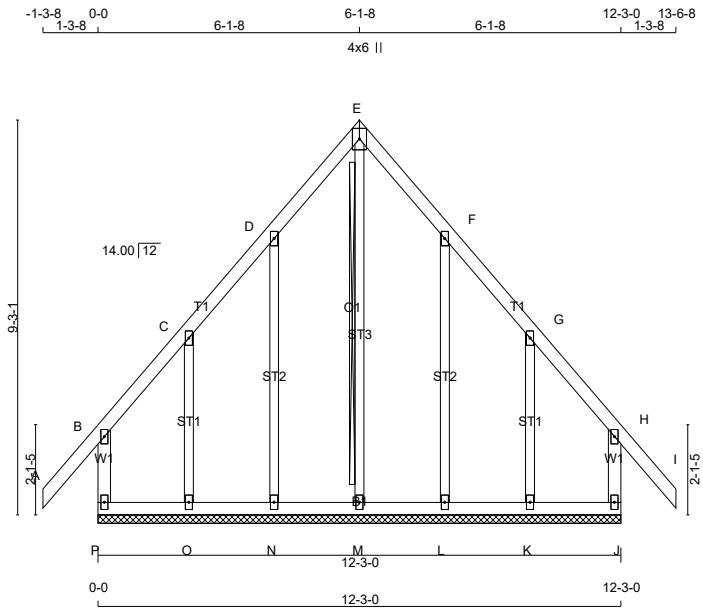

TOTAL WEIGHT = 68 lb

LUMBER

N. L. G. A. RULES

CHORDS	SIZE		LUMBER	DESCR.
P - B	2x4	DRY	No.2	SPF
A - E	2x4	DRY	No.2	SPF
E - I	2x4	DRY	No.2	SPF
J - H	2x4	DRY	No.2	SPF
P - J	2x4	DRY	No.2	SPF
ALL WEBS	2x3	DRY	No.2	SPF
ALL GABLE WEBS	2x3	DRY	No.2	SPF

DRY: SEASONED LUMBER.

GABLE STUDS SPACED AT 2-0-0 OC.

PLATES (table is in inches)

JT	TYPE	PLATES	W	LEN	Y	X
B	TMV+p	MT20	2.0	4.0		
C, D, F, G						
C	TMW+w	MT20	2.0	4.0		
E	TTW+p	MT20	4.0	6.0		
H	TMV+p	MT20	2.0	4.0		
J	BMV1+p	MT20	2.0	4.0		
K, L, M, N, O						
K	BMW1+w	MT20	2.0	4.0		
P	BMV1+p	MT20	2.0	4.0		

LATERAL BRACE(S) SHOWN SHALL BE 2X4 SPF#2

DIMENSIONS, SUPPORTS AND LOADINGS SPECIFIED BY FABRICATOR TO BE VERIFIED BY BUILDING DESIGNER

BEARINGS

THIS TRUSS DESIGNED FOR CONTINUOUS BEARINGS.

THIS TRUSS REQUIRES RIGID SHEATHING ON EXPOSED FACE.

BEARING MATERIAL TO BE SPF NO.2 OR BETTER AT JOINT(S)

BRACING

TOP CHORD TO BE SHEATHED OR MAX. PURLIN SPACING = 6.25 FT.
MAX. UNBRACED BOTTOM CHORD LENGTH = 10.00 FT OR RIGID CEILING DIRECTLY APPLIED.

ALL PITCH BREAKS AND PERIMETER CORNER JOINTS MUST BE LATERALLY RESTRAINED.

2x3 DRY SPF No.2 T-BRACE AT E-M

FASTEN T AND I-BRACES TO NARROW EDGE OF WEB WITH ONE ROW PER PLY OF 3" COMMON WIRE NAILS @ 6" O.C. WITH 3" MINIMUM END DISTANCE. BRACE MUST COVER 90% OF WEB LENGTH.

END VERTICAL(S) MUST BE SHEATHED OR HAVE BRACES AS INDICATED IN THE MAX. UNBRACED LENGTH COLUMN OF THE TABLE BELOW

LOADING

TOTAL LOAD CASES: (4)

CHORDS

MEMB. FR-TO	MAX. FORCE (LBS)	FACTORED VERT. LOAD LC1 (PLF) FROM	TO	MAX CSI (LC)	MAX. UNBRAC LENGTH
P- B	-208 / 0	0.0	0.0	0.02 (1)	7.81
A- B	0 / 42	-78.0	-78.0	0.11 (1)	10.00
B- C	-25 / 0	-78.0	-78.0	0.04 (1)	6.25
C- D	-17 / 0	-78.0	-78.0	0.04 (1)	6.25
D- E	-13 / 0	-78.0	-78.0	0.04 (1)	6.25
E- F	-13 / 0	-78.0	-78.0	0.04 (1)	6.25
F- G	-17 / 0	-78.0	-78.0	0.04 (1)	6.25
G- H	-25 / 0	-78.0	-78.0	0.04 (1)	6.25
H- I	0 / 42	-78.0	-78.0	0.11 (1)	10.00
J- H	-208 / 0	0.0	0.0	0.02 (1)	7.81
P- O	0 / 16	-18.5	-18.5	0.02 (1)	10.00
O- N	0 / 12	-18.5	-18.5	0.02 (4)	10.00
N- M	0 / 9	-18.5	-18.5	0.02 (4)	10.00
M- L	0 / 9	-18.5	-18.5	0.02 (4)	10.00
L- K	0 / 12	-18.5	-18.5	0.02 (4)	10.00
K- J	0 / 16	-18.5	-18.5	0.02 (1)	10.00

WEBS

MEMB. FR-TO	MAX. FORCE (LBS)	MAX CSI (LC)
M- E	-145 / 0	0.20 (1)
N- D	-158 / 0	0.13 (1)
O- C	-149 / 0	0.05 (1)
L- F	-158 / 0	0.13 (1)
K- G	-149 / 0	0.05 (1)

[M]

DESIGN CRITERIA

SPECIFIED LOADS:

TOP	CH.	LL	=	21.0	PSF
		DL	=	6.0	PSF
BOT	CH.	LL	=	0.0	PSF
		DL	=	7.4	PSF
TOTAL	LOAD		=	34.4	PSF

SPACING = 24.0 IN. C/C

THIS TRUSS IS DESIGNED FOR RESIDENTIAL OR SMALL BUILDING REQUIREMENTS OF PART 9, NBCC 2015

THIS DESIGN COMPLIES WITH:
- PART 9 OF BCBC 2018 , ABC 2019
- PART 9 OF OBC 2012 (2019 AMENDMENT)
- CSA 086-14
- TPIC 2014

DESIGN ASSUMPTIONS
-OVERHANG NOT TO BE ALTERED OR CUT OFF.

(55 % OF 23.0 P.S.F. G.S.L. PLUS 8.4 P.S.F. RAIN LOAD) EQUALS 21.0 P.S.F. SPECIFIED ROOF LIVE LOAD

CSI: TC=0.11/1.00 (H-I:1) , BC=0.02/1.00 (J-K:1) , WB=0.20/1.00 (E-M:1) , SSI=0.06/1.00 (H-I:1)

DOL LUMBER=1.00 NAIL=1.00 LS BEND=1.10 COMP=1.10 SHEAR=1.10 TENS= 1.10

COMPANION LIVE LOAD FACTOR = 1.00

TRUSS PLATE MANUFACTURER IS NOT RESPONSIBLE FOR QUALITY CONTROL IN THE TRUSS MANUFACTURING PLANT .

NAIL VALUES

PLATE	GRIP(DRY) (PSI) MAX	MIN	SHEAR (PLI) MAX	MIN	SECTION (PLI) MAX	MIN
MT20	650	371	1747	788	1987	1873

PLATE PLACEMENT TOL. = 0.250 inches

PLATE ROTATION TOL. = 5.0 Deg.

JSI GRIP= 0.18 (B) (INPUT = 0.90)
JSI METAL= 0.11 (B) (INPUT = 1.00)

JOB NAME	TRUSS NAME	QUANTITY	PLY	JOB DESC.	DRWG NO.
336335	H280		2	TRUSS DESC. JT 45147	E21104211

Alpa Roof Truss, Maple

Version 8.420 S Jan 21 2021 MiTek Industries, Inc. Thu Oct 14 08:54:31 2021 Page 1

ID:hd511hZTz_bdeQoS817GKByhVxV-e2wrgv3DitADMIOfc5n?QZ16F?LY_hqLL2Ph7uyTZFs

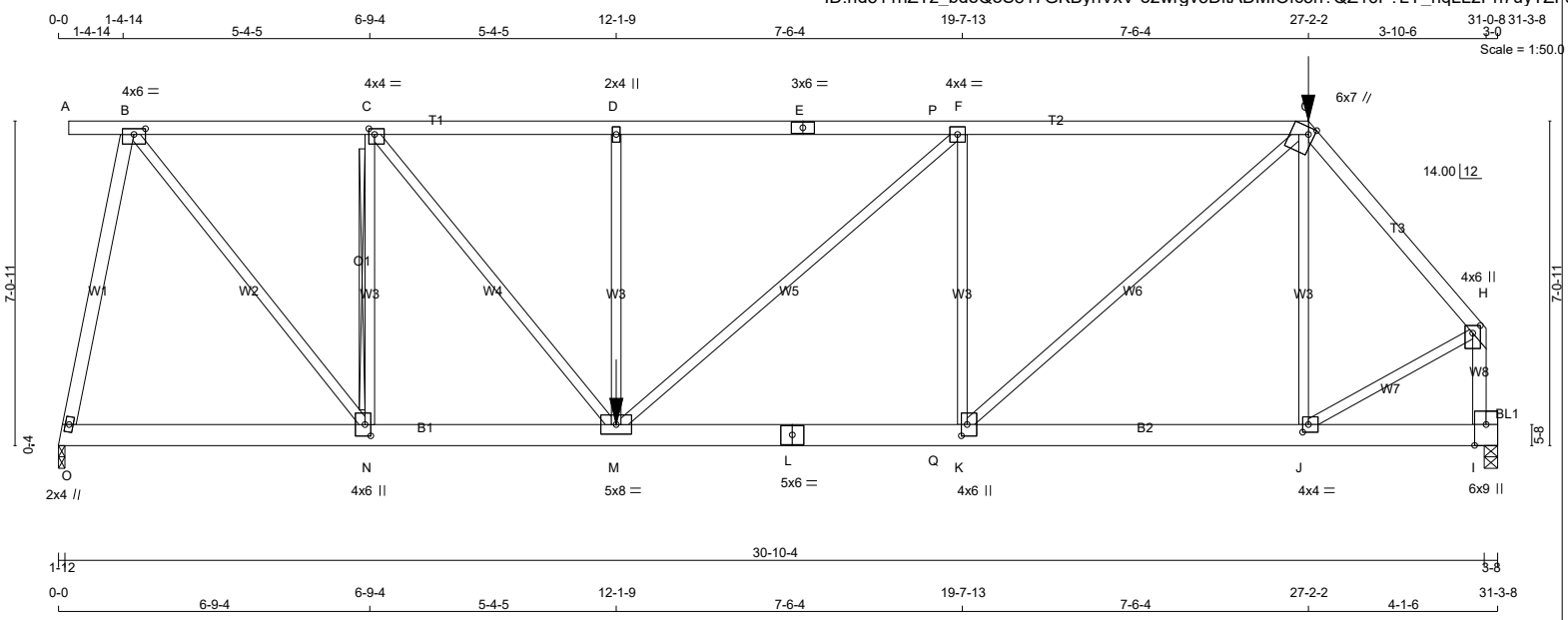

TOTAL WEIGHT = 2 X 157 = 313 lb

[M]

LUMBER

N. L. G. A. RULES

CHORDS	SIZE		LUMBER	DESCR.
A - E	2x4	DRY	No.2	SPF
E - G	2x4	DRY	No.2	SPF
G - H	2x4	DRY	No.2	SPF
I - H	2x4	DRY	No.2	SPF
O - L	2x6	DRY	No.2	SPF
L - I	2x6	DRY	No.2	SPF

BEARING BLOCKS

BL1	2x4	DRY	No.2	SPF
ALL WEBS EXCEPT	2x3	DRY	No.2	SPF
O - B	2x4	DRY	No.2	SPF

DRY: SEASONED LUMBER.

DESIGN CONSISTS OF 2 TRUSSES BUILT SEPARATELY THEN FASTENED TOGETHER AS FOLLOWS:

CHORDS	#ROWS	SURFACE SPACING (IN)	LOAD(PLF)
TOP CHORDS : (0.122"X3") SPIRAL NAILS			
A- E	1	12	TOP
E- G	1	12	SIDE(43.9)
G- H	1	12	SIDE(61.0)
I- H	1	12	TOP
BOTTOM CHORDS : (0.122"X3") SPIRAL NAILS			
O- L	2	12	SIDE(131.2)
L- I	2	12	SIDE(66.3)
WEBS : (0.122"X3") SPIRAL NAILS			
J- G	1	6	SIDE(25.9)
D- M	1	6	SIDE(269.2)
2x3	1	6	
2x4	1	6	

NAILS TO BE DRIVEN FROM ONE SIDE ONLY.

GIRDER NAILING ASSUMES NAILED HANGERS ARE FASTENED WITH MIN. 3-0 INCH NAILS.

TOP - COMPONENTS ARE LOADED FROM THE TOP AND MUST BE PLACED ON TOP EDGE OF ALL PLIES FOR THE LOAD TO BE TRANSFERRED TO EACH PLY.

LATERAL BRACE(S) SHOWN SHALL BE 2X4 SPF#2

LICENSED PROFESSIONAL ENGINEER
Y. WIDYA
100225448
10/14/2021
PROVINCE OF ONTARIO

DIMENSIONS, SUPPORTS AND LOADINGS SPECIFIED BY FABRICATOR TO BE VERIFIED BY BUILDING DESIGNER

BEARINGS

JT	FACTORED GROSS REACTION VERT	HORZ	MAXIMUM FACTORED GROSS REACTION DOWN	HORZ	UPLIFT	INPUT BRG IN-SX	REQRD BRG IN-SX
O	3102	0	3102	0	0	1-12	1-11
I	3492	0	3492	0	0	3-8	2-8

UNFACTORED REACTIONS

JT	1ST LCASE COMBINED	MAX./MIN. COMPONENT REACTIONS SNOW	LIVE	PERM.LIVE	WIND	DEAD	SOIL
O	2212	1351 / 0	0 / 0	0 / 0	0 / 0	861 / 0	0 / 0
I	2491	1514 / 0	0 / 0	0 / 0	0 / 0	977 / 0	0 / 0

BEARING MATERIAL TO BE SPF NO.2 OR BETTER AT JOINT(S) O, I

BRACING

TOP CHORD TO BE SHEATHED OR MAX. PURLIN SPACING = 3.42 FT.
MAX. UNBRACED BOTTOM CHORD LENGTH = 6.25 FT OR RIGID CEILING DIRECTLY APPLIED.

ALL PITCH BREAKS AND PERIMETER CORNER JOINTS MUST BE LATERALLY RESTRAINED.

2x4 DRY SPF No.2 T-BRACE AT C-N

FASTEN T AND I-BRACES TO NARROW EDGE OF WEB WITH ONE ROW PER PLY OF 3" COMMON WIRE NAILS @ 6" O.C. WITH 3" MINIMUM END DISTANCE. BRACE MUST COVER 90% OF WEB LENGTH.

END VERTICAL(S) MUST BE SHEATHED OR HAVE BRACES AS INDICATED IN THE MAX. UNBRACED LENGTH COLUMN OF THE TABLE BELOW

LOADING

TOTAL LOAD CASES: (4)

CHORDS

MEMB. FR-TO	MAX. FACTORED FORCE (LBS)	FACTORED VERT. LOAD (PLF) FROM	TO	LC1	MAX CSI (LC)	MAX. UNBRAC LENGTH
A- B	0 / 0	-78.0	-78.0	0.05 (1)	10.00	
B- C	-2766 / 0	-78.0	-78.0	0.22 (1)	5.28	
C- D	-4581 / 0	-78.0	-78.0	0.30 (1)	4.25	
D- E	-4581 / 0	-78.0	-78.0	0.97 (1)	3.42	
E- P	-4581 / 0	-78.0	-78.0	0.97 (1)	3.42	
P- F	-4581 / 0	-165.7	-165.7	0.97 (1)	3.42	
F- G	-4267 / 0	-165.7	-165.7	0.93 (1)	3.56	
G- H	-2860 / 0	-78.0	-78.0	0.16 (1)	5.29	
I- H	-3441 / 0	0.0	0.0	0.24 (1)	6.30	
O- N	0 / 587	-18.5	-18.5	0.08 (1)	10.00	
N- M	0 / 2766	-18.5	-18.5	0.31 (1)	10.00	
M- L	0 / 4268	-151.1	-151.1	0.52 (1)	10.00	
L- Q	0 / 4268	-151.1	-151.1	0.52 (1)	10.00	
Q- K	0 / 4268	-39.3	-39.3	0.52 (1)	10.00	
K- J	0 / 1838	-39.3	-39.3	0.29 (1)	10.00	
J- I	-239 / 0	-39.3	-39.3	0.07 (4)	6.25	

WEBS

MEMB. FR-TO	MAX. FACTORED FORCE (LBS)	MAX CSI (LC)
O- B	-3097 / 0	0.97 (1)
B- N	0 / 3530	0.44 (1)
N- C	-2736 / 0	0.58 (1)
C- M	0 / 2900	0.36 (1)
M- D	-395 / 0	0.16 (1)
M- F	0 / 419	0.05 (1)
K- F	-1420 / 0	0.58 (1)
K- G	0 / 3242	0.40 (1)
J- G	-922 / 0	0.38 (1)
J- H	0 / 2364	0.29 (1)

FACTORED CONCENTRATED LOADS (LBS)

JT	LOC.	LC1	MAX-	MAX+	FACE	DIR.	TYPE	HEEL	CONN.
G	27-2-2	-267	-267	---	FRONT	VERT	TOTAL	---	C1
M	12-1-9	-1480	-1480	---	FRONT	VERT	TOTAL	---	C1

CONNECTION REQUIREMENTS

1) **C1:** A SUITABLE HANGER/MECHANICAL CONNECTION IS REQUIRED.

DESIGN CRITERIA

*** SPECIAL LOADS ANALYSIS ***
GEOMETRY AND/OR BASIC LOADS CHANGED BY USER.
LOADS WERE DERIVED FROM USER INPUT
NO FURTHER MODIFICATIONS WERE MADE

SPECIFIED LOADS:

TOP	CH.	LL	=	21.0	PSF
		DL	=	6.0	PSF
BOT	CH.	LL	=	0.0	PSF
		DL	=	7.4	PSF
TOTAL	LOAD		=	34.4	PSF

SPACING = 24.0 IN. C/C

LOADING IN FLAT SECTION BASED ON A SLOPE OF 2.00/12 MINIMUM

GIRDER TYPE: CStdGirder
START DISTANCE = 12-1-9
START SPAN CARRIED = 7-6-0
END DISTANCE = 19-1-0
END SPAN CARRIED = 7-6-0
END WALL WIDTH = 0-0
APPLIED TO FRONT SIDE OF BOTTOM CHORD.
- ADDT'L LOADS BASED ON 55 % OF GSL.

GIRDER TYPE: CPrimeHip
LEFT SETBACK = 1-4-14
RIGHT SETBACK = 4-1-6
END SETBACK = 6-6-0
END WALL WIDTH = 0-0
CORNER FRAMING TYPE: CONVENTIONAL
END JACK TYPE: CONVENTIONAL
APPLIED TO FRONT SIDE
- ADDT'L LOADS BASED ON 55 % OF GSL.
LOADS APPLIED TO FIRST 12-2-8 OF SPAN MEASURED FROM THE RIGHT.

*** NON STANDARD GIRDER ***
ADDT'L USER-DEFINED LOADS APPLIED TO ALL LOAD CASES.

THIS TRUSS IS DESIGNED FOR RESIDENTIAL OR SMALL BUILDING REQUIREMENTS OF PART 9, NBCC 2015

THIS DESIGN COMPLIES WITH:
- PART 9 OF BCBC 2018 , ABC 2019
- PART 9 OF OBC 2012 (2019 AMENDMENT)
- CSA 086-14
- TPIC 2014

(55 % OF 23.0 P.S.F. G.S.L. PLUS 8.4 P.S.F. RAIN LOAD) EQUALS 21.0 P.S.F. SPECIFIED ROOF LIVE LOAD

ALLOWABLE DEFL.(LL)= L/360 (1.02")
CALCULATED VERT. DEFL.(LL) = L/ 999 (0.13")
ALLOWABLE DEFL.(TL)= L/360 (1.02")
CALCULATED VERT. DEFL.(TL) = L/ 999 (0.25")

CSI: TC=0.97/1.00 (D-F:1) , BC=0.52/1.00 (K-M:1) , WB=0.97/1.00 (B-O:1) , SSI=0.31/1.00 (F-G:1)

DOL LUMBER=1.00 NAIL=1.00 LS BEND=1.00 COMP=1.00 SHEAR=1.00 TENS= 1.00

COMPANION LIVE LOAD FACTOR = 1.00

CONTINUED ON PAGE 2

PLATES (table is in inches)

JT	TYPE	PLATES	W	LEN	Y	X
B	TMWW-t	MT20	4.0	6.0	1.50	3.00
C	TMWW-t	MT20	4.0	4.0	1.50	1.50
D	TMW+w	MT20	2.0	4.0		
E	TS-t	MT20	3.0	6.0		
F	TMWW-t	MT20	4.0	4.0		
G	TTWW+m	MT20	6.0	7.0	Edge	1.50
H	TMVW+p	MT20	4.0	6.0	2.00	2.00
I	BMVK1+p	MT20	6.0	9.0	Edge	3.00
J	BMWW-t	MT20	4.0	4.0	2.00	1.50
K	BMWW+t	MT20	4.0	6.0	3.00	1.50
L	BS-t	MT20	5.0	6.0		
M	BMWWW-t	MT20	5.0	8.0		
N	BMWW+t	MT20	4.0	6.0	3.00	1.50
O	BMW1+w	MT20	2.0	4.0		

Edge - INDICATES REFERENCE CORNER OF PLATE TOUCHES EDGE OF CHORD.

TRUSS PLATE MANUFACTURER IS NOT RESPONSIBLE FOR QUALITY CONTROL IN THE TRUSS MANUFACTURING PLANT .

NAIL VALUES

PLATE	GRIP(DRY) (PSI)		SHEAR (PLI)		SECTION (PLI)	
	MAX	MIN	MAX	MIN	MAX	MIN
MT20	650	371	1747	788	1987	1873

PLATE PLACEMENT TOL. = 0.250 inches

PLATE ROTATION TOL. = 5.0 Deg.

JSI GRIP= 0.89 (H) (INPUT = 0.90)
JSI METAL= 0.67 (L) (INPUT = 1.00)

LATERAL BRACE(S) SHOWN SHALL BE 2X4 SPF#2

JOB NAME	TRUSS NAME	QUANTITY	PLY	JOB DESC.	DRWG NO.
336335	H280T		2	TRUSS DESC. JT 45147	E21104212

Alpa Roof Truss, Maple

Version 8.420 S Jan 21 2021 MiTek Industries, Inc. Thu Oct 14 08:54:33 2021 Page 1

ID:hd511hZTz_bdeQoS817GKByhVxV-aR2b5b4UEVQxbcY2jWpTV_7Wso1ISg6eoMuoCmyTZFq

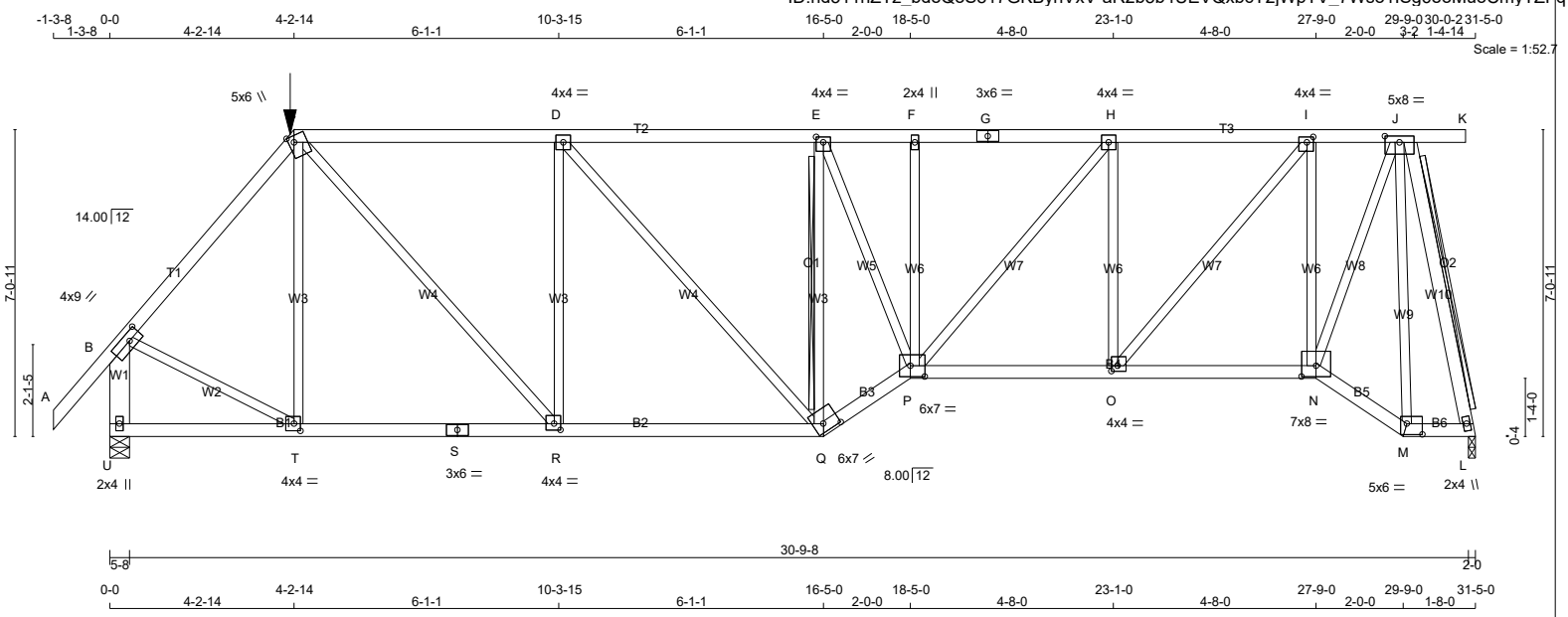

TOTAL WEIGHT = 2 X 160 = 320 lb

LUMBER

N. L. G. A. RULES

CHORDS	SIZE		LUMBER	DESCR.
A - C	2x4	DRY	No.2	SPF
C - G	2x4	DRY	No.2	SPF
G - K	2x4	DRY	No.2	SPF
U - B	2x6	DRY	No.2	SPF
U - S	2x4	DRY	No.2	SPF
S - Q	2x4	DRY	No.2	SPF
Q - P	2x4	DRY	No.2	SPF
P - N	2x4	DRY	No.2	SPF
N - M	2x4	DRY	No.2	SPF
M - L	2x4	DRY	No.2	SPF
ALL WEBS EXCEPT	2x3	DRY	No.2	SPF
J - L	2x4	DRY	No.2	SPF

DRY: SEASONED LUMBER.

DESIGN CONSISTS OF 2 TRUSSES BUILT SEPARATELY THEN FASTENED TOGETHER AS FOLLOWS:

CHORDS	#ROWS	SURFACE SPACING (IN)	LOAD(PLF)
TOP CHORDS : (0.122"X3") SPIRAL NAILS			
A- C	1	12	SIDE(61.0)
C- G	1	12	SIDE(43.9)
G- K	1	12	SIDE(44.7)
U- B	2	12	TOP
BOTTOM CHORDS : (0.122"X3") SPIRAL NAILS			
U- S	1	12	SIDE(11.7)
S- Q	1	12	SIDE(11.7)
Q- P	1	12	SIDE(45.2)
P- N	1	12	SIDE(54.3)
N- M	1	12	SIDE(45.3)
M- L	1	12	SIDE(11.7)
WEBS : (0.122"X3") SPIRAL NAILS			
T- C	1	6	SIDE(28.1)
2x3	1	6	
2x4	1	6	

NAILS TO BE DRIVEN FROM ONE SIDE ONLY.

GIRDER NAILING ASSUMES NAILED HANGERS ARE FASTENED WITH MIN. 3-0 INCH NAILS.

LATERAL BRACE(S) SHOWN SHALL BE 2X4 SPF#2

DIMENSIONS, SUPPORTS AND LOADINGS SPECIFIED BY FABRICATOR TO BE VERIFIED BY BUILDING DESIGNER

BEARINGS

JT	FACTORED GROSS REACTION VERT	HORZ	MAXIMUM FACTORED GROSS REACTION DOWN	HORZ	UPLIFT	INPUT BRG IN-SX	REQRD BRG IN-SX
L	3216	0	3216	0	0	2-0	1-12
U	3196	0	3196	0	0	5-8	1-12

UNFACTORED REACTIONS

JT	1ST LCASE COMBINED	MAX./MIN. COMPONENT REACTIONS SNOW	LIVE	PERM.LIVE	WIND	DEAD	SOIL
L	2293	1401 / 0	0 / 0	0 / 0	0 / 0	892 / 0	0 / 0
U	2279	1391 / 0	0 / 0	0 / 0	0 / 0	888 / 0	0 / 0

BEARING MATERIAL TO BE SPF NO.2 OR BETTER AT JOINT(S) L, U

BRACING

TOP CHORD TO BE SHEATHED OR MAX. PURLIN SPACING = 4.08 FT.
MAX. UNBRACED BOTTOM CHORD LENGTH = 10.00 FT OR RIGID CEILING DIRECTLY APPLIED.

ALL PITCH BREAKS AND PERIMETER CORNER JOINTS MUST BE LATERALLY RESTRAINED.

2x4 DRY SPF No.2 T-BRACE AT J-L, E-Q

FASTEN T AND I-BRACES TO NARROW EDGE OF WEB WITH ONE ROW PER PLY OF 3" COMMON WIRE NAILS @ 6" O.C. WITH 3" MINIMUM END DISTANCE. BRACE MUST COVER 90% OF WEB LENGTH.

END VERTICAL(S) MUST BE SHEATHED OR HAVE BRACES AS INDICATED IN THE MAX. UNBRACED LENGTH COLUMN OF THE TABLE BELOW

LOADING

TOTAL LOAD CASES: (4)

CHORDS

MEMB. FR-TO	MAX. FACTORED FORCE (LBS)	FACTORED VERT. LOAD (PLF) FROM	TO	LC1	MAX CSI (LC)	MAX. UNBRAC LENGTH
A- B	0 / 42	-78.0	-78.0	0.06 (1)	10.00	
B- C	-2800 / 0	-78.0	-78.0	0.19 (1)	5.30	
C- D	-3418 / 0	-165.7	-165.7	0.63 (1)	4.27	
D- E	-3757 / 0	-165.7	-165.7	0.65 (1)	4.08	
E- F	-4478 / 0	-78.0	-78.0	0.30 (1)	4.22	
F- G	-4479 / 0	-78.0	-78.0	0.23 (1)	4.35	
G- H	-4479 / 0	-78.0	-78.0	0.23 (1)	4.35	
H- I	-3645 / 0	-78.0	-78.0	0.20 (1)	4.76	
I- J	-1830 / 0	-78.0	-78.0	0.16 (1)	6.23	
J- K	0 / 0	-167.5	-167.5	0.15 (1)	10.00	
U- B	-3134 / 0	0.0	0.0	0.13 (1)	7.80	
U- T	0 / 0	-39.3	-39.3	0.12 (4)	10.00	
T- S	0 / 1806	-39.3	-39.3	0.29 (4)	10.00	
S- R	0 / 1806	-39.3	-39.3	0.29 (4)	10.00	
R- Q	0 / 3418	-39.3	-39.3	0.40 (1)	10.00	
Q- P	0 / 4466	-127.0	-127.0	0.44 (1)	10.00	
P- O	0 / 3645	-127.0	-127.0	0.56 (1)	10.00	
O- N	0 / 1873	-127.0	-127.0	0.40 (1)	10.00	
N- M	0 / 883	-127.0	-127.0	0.13 (1)	10.00	
M- L	0 / 731	-39.3	-39.3	0.07 (1)	10.00	

WEBS

MEMB. FR-TO	MAX. FACTORED FORCE (LBS)	MAX CSI (LC)
J- L	-3271 / 0	0.64 (1)
T- C	-506 / 0	0.22 (1)
C- R	0 / 2402	0.30 (1)
R- D	-1524 / 0	0.66 (1)
D- Q	0 / 505	0.06 (1)
Q- E	-2620 / 0	0.59 (1)
E- P	0 / 2103	0.26 (1)
P- F	-85 / 0	0.02 (1)
P- H	0 / 1278	0.16 (1)
O- H	-1398 / 0	0.36 (1)
O- I	0 / 2756	0.34 (1)
N- I	-2245 / 0	0.58 (1)
B- T	0 / 1954	0.24 (1)
J- M	-329 / 0	0.14 (1)
N- J	0 / 3282	0.41 (1)

FACTORED CONCENTRATED LOADS (LBS)

JT	LOC.	LC1	MAX-	MAX+	FACE	DIR.	TYPE	HEEL	CONN.
C	4-2-14	-275	-275	---	FRONT	VERT	TOTAL	---	C1

[M]

DESIGN CRITERIA

*** SPECIAL LOADS ANALYSIS ***
GEOMETRY AND/OR BASIC LOADS CHANGED BY USER.
LOADS WERE DERIVED FROM USER INPUT
NO FURTHER MODIFICATIONS WERE MADE

SPECIFIED LOADS:

TOP	CH.	LL =	21.0	PSF
		DL =	6.0	PSF
BOT	CH.	LL =	0.0	PSF
		DL =	7.4	PSF
TOTAL	LOAD	=	34.4	PSF

SPACING = 24.0 IN. C/C

LOADING IN FLAT SECTION BASED ON A SLOPE OF 2.00/12 MINIMUM

GIRDER TYPE: CPrimeHip
LEFT SETBACK = 4-2-14
RIGHT SETBACK = 0-0
END SETBACK = 6-6-0
END WALL WIDTH = 0-0
CORNER FRAMING TYPE: CONVENTIONAL
END JACK TYPE: CONVENTIONAL
APPLIED TO FRONT SIDE
- ADDT'L LOADS BASED ON 55 % OF GSL.
LOADS APPLIED TO FIRST 16-5-0 OF SPAN MEASURED FROM THE LEFT.

GIRDER TYPE: CStdGirder
START DISTANCE = 16-5-0
START SPAN CARRIED = 6-6-0
END DISTANCE = 29-9-0
END SPAN CARRIED = 6-6-0
END WALL WIDTH = 0-0
APPLIED TO FRONT SIDE OF BOTTOM CHORD.
- ADDT'L LOADS BASED ON 55 % OF GSL.

GIRDER TYPE: CPrimeHip
LEFT SETBACK = 4-2-14
RIGHT SETBACK = 0-0
END SETBACK = 6-6-0
END WALL WIDTH = 0-0
CORNER FRAMING TYPE: CONVENTIONAL
END JACK TYPE: CONVENTIONAL
APPLIED TO FRONT SIDE
- ADDT'L LOADS BASED ON 55 % OF GSL.
LOADS APPLIED TO FIRST 1-8-0 OF SPAN MEASURED FROM THE RIGHT.

*** NON STANDARD GIRDER ***
ADDT'L USER-DEFINED LOADS APPLIED TO ALL LOAD CASES.

THIS TRUSS IS DESIGNED FOR RESIDENTIAL OR SMALL BUILDING REQUIREMENTS OF PART 9, NBCC 2015

THIS DESIGN COMPLIES WITH:
- PART 9 OF BCBC 2018 , ABC 2019
- PART 9 OF OBC 2012 (2019 AMENDMENT)
- CSA 086-14
- TPIC 2014

DESIGN ASSUMPTIONS
-OVERHANG NOT TO BE ALTERED OR CUT OFF.

(55 % OF 23.0 P.S.F. G.S.L. PLUS 8.4 P.S.F. RAIN LOAD) EQUALS 21.0 P.S.F. SPECIFIED ROOF LIVE LOAD

CONTINUED ON PAGE 2

PLATES (table is in inches)

JT	TYPE	PLATES	W	LEN	Y	X
B	TMVW-t	MT20	4.0	9.0	2.00	3.50
C	TTWW+m	MT20	5.0	6.0	1.75	1.50
D	TMWW-t	MT20	4.0	4.0		
E	TMWW-t	MT20	4.0	4.0	1.50	2.00
F	TMW+w	MT20	2.0	4.0		
G	TS-t	MT20	3.0	6.0		
H	TMWW-t	MT20	4.0	4.0		
I	TMWW-t	MT20	4.0	4.0	1.50	1.75
J	TMWWW-t	MT20	5.0	8.0	1.75	4.00
L	BMW1+w	MT20	2.0	4.0		
M	BBW-l	MT20	5.0	6.0	3.00	4.25
N	BBWW-l	MT20	7.0	8.0	3.00	4.00
O	BMWW-t	MT20	4.0	4.0	1.50	1.75
P	BBWWW-p	MT20	6.0	7.0	3.00	4.00
Q	BBWW-h	MT20	6.0	7.0	2.25	4.25
R	BMWW-t	MT20	4.0	4.0	1.75	1.75
S	BS-t	MT20	3.0	6.0		
T	BMWW-t	MT20	4.0	4.0	2.00	1.75
U	BMV1+p	MT20	2.0	4.0		

LATERAL BRACE(S) SHOWN SHALL BE
2X4 SPF#2

ALLOWABLE DEFL.(LL)= L/360 (1.04")
CALCULATED VERT. DEFL.(LL) = L/ 999 (0.12")
ALLOWABLE DEFL.(TL)= L/360 (1.04")
CALCULATED VERT. DEFL.(TL) = L/ 999 (0.24")

CSI: TC=0.65/1.00 (D-E:1) , BC=0.56/1.00 (O-P:1) , WB=0.66/1.00 (D-R:1) , SSI=0.26/1.00 (C-D:1)

DOL LUMBER=1.00 NAIL=1.00 LS BEND=1.00 COMP=1.00 SHEAR=1.00 TENS= 1.00

COMPANION LIVE LOAD FACTOR = 1.00

AUTOSOLVE RIGHT HEEL ONLY

TRUSS PLATE MANUFACTURER IS NOT RESPONSIBLE FOR QUALITY CONTROL IN THE TRUSS MANUFACTURING PLANT .

NAIL VALUES

PLATE	GRIP(DRY) (PSI)		SHEAR (PLI)		SECTION (PLI)	
	MAX	MIN	MAX	MIN	MAX	MIN
MT20	650	371	1747	788	1987	1873

PLATE PLACEMENT TOL. = 0.250 inches

PLATE ROTATION TOL. = 5.0 Deg.

JSI GRIP= 0.90 (B) (INPUT = 0.90)
JSI METAL= 0.42 (Q) (INPUT = 1.00)

JOB NAME	TRUSS NAME	QUANTITY	PLY	JOB DESC.		DRWG NO.
336335	H282		1	TRUSS DESC.	JT 45147	E21104213

Alpa Roof Truss, Maple

Version 8.420 S Jan 21 2021 MiTek Industries, Inc. Thu Oct 14 08:54:35 2021 Page 1

ID:hd511hZTz bdeQoS817GKByhVxV-Xp9LWH6km6qfqvhQrwrxaPCohciTwVnxGqNvGfyTZFo

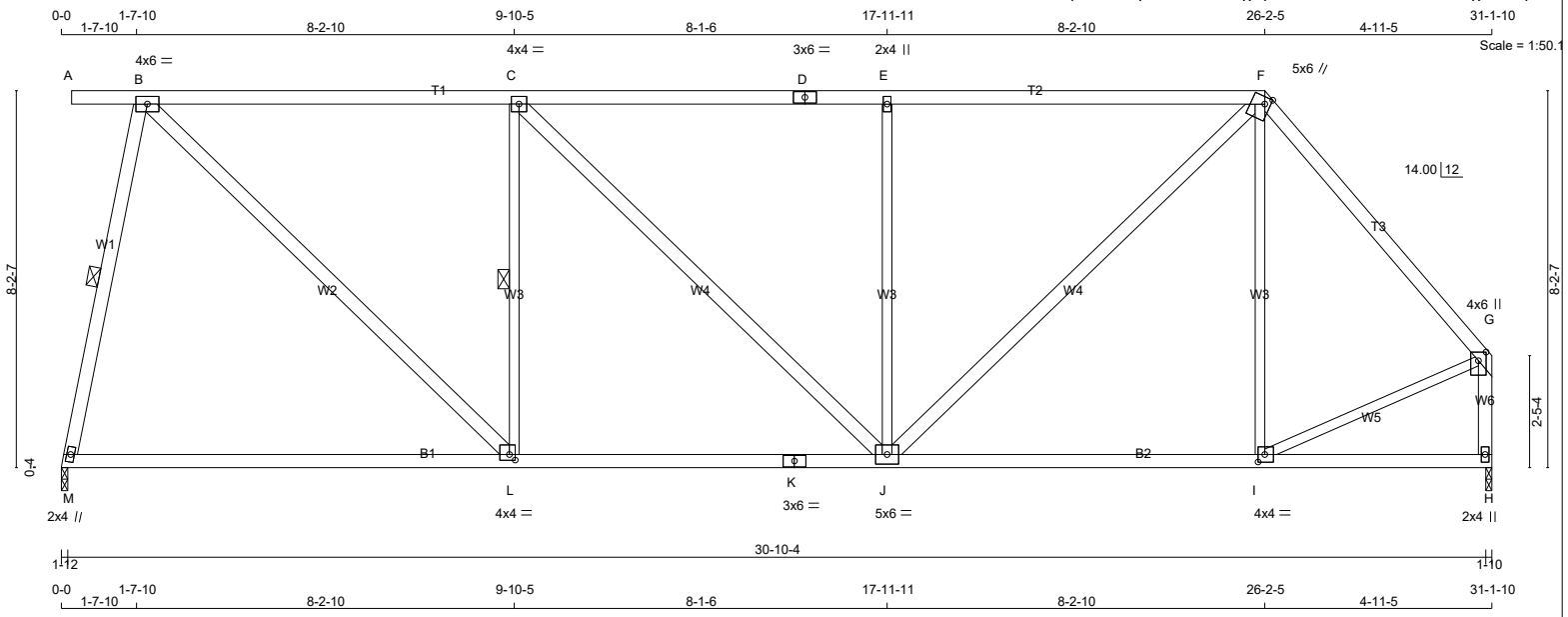

TOTAL WEIGHT = 146 lb

LUMBER

N. L. G. A. RULES

CHORDS	SIZE		LUMBER	DESCR.
A - D	2x4	DRY	No.2	SPF
D - F	2x4	DRY	No.2	SPF
F - G	2x4	DRY	No.2	SPF
H - G	2x4	DRY	No.2	SPF
M - K	2x4	DRY	No.2	SPF
K - H	2x4	DRY	No.2	SPF
ALL WEBS	2x4	DRY	No.2	SPF
EXCEPT				
L - C	2x3	DRY	No.2	SPF
J - E	2x3	DRY	No.2	SPF
I - F	2x3	DRY	No.2	SPF
I - G	2x3	DRY	No.2	SPF

DRY: SEASONED LUMBER.

PLATES (table is in inches)

JT	TYPE	PLATES	W	LEN	Y	X
B	TMWW-t	MT20	4.0	6.0		
C	TMWW-t	MT20	4.0	4.0		
D	TS-t	MT20	3.0	6.0		
E	TMW+w	MT20	2.0	4.0		
F	TTWW+m	MT20	5.0	6.0	1.75	1.50
G	TMVW+p	MT20	4.0	6.0	2.25	2.00
H	BMV1+p	MT20	2.0	4.0		
I	BMWW-t	MT20	4.0	4.0	2.00	1.75
J	BMWWW-t	MT20	5.0	6.0		
K	BS-t	MT20	3.0	6.0		
L	BMWW-t	MT20	4.0	4.0	1.50	1.50
M	BMW1+w	MT20	2.0	4.0		

LATERAL BRACE(S) SHOWN SHALL BE 2X4 SPF#2

DIMENSIONS, SUPPORTS AND LOADINGS SPECIFIED BY FABRICATOR TO BE VERIFIED BY BUILDING DESIGNER

BEARINGS

JT	FACTORED GROSS REACTION VERT	HORZ	MAXIMUM FACTORED GROSS REACTION DOWN	HORZ	UPLIFT	INPUT BRG IN-SX	REQRD BRG IN-SX
M	1487	0	1487	0	0	1-12	1-10
H	1495	0	1495	0	0	1-10	1-10

UNFACTORED REACTIONS

JT	1ST LCASE COMBINED	MAX./MIN. COMPONENT REACTIONS SNOW	LIVE	PERM.LIVE	WIND	DEAD	SOIL
M	1060	647 / 0	0 / 0	0 / 0	0 / 0	414 / 0	0 / 0
H	1066	651 / 0	0 / 0	0 / 0	0 / 0	415 / 0	0 / 0

BEARING MATERIAL TO BE SPF NO.2 OR BETTER AT JOINT(S) M, H

BRACING

TOP CHORD TO BE SHEATHED OR MAX. PURLIN SPACING = 3.99 FT.
MAX. UNBRACED BOTTOM CHORD LENGTH = 10.00 FT OR RIGID CEILING DIRECTLY APPLIED.

ALL PITCH BREAKS AND PERIMETER CORNER JOINTS MUST BE LATERALLY RESTRAINED.

1 LATERAL BRACE(S) AT 1/ 2 LENGTH OF B-M, C-L.

END VERTICAL(S) MUST BE SHEATHED OR HAVE BRACES AS INDICATED IN THE MAX. UNBRACED LENGTH COLUMN OF THE TABLE BELOW

LOADING

TOTAL LOAD CASES: (4)

CHORDS

MEMB. FR-TO	MAX. FACTORED FORCE (LBS)	FACTORED VERT. LOAD (PLF) FROM	TO	LC1 CSI (LC)	MAX UNBRAC LENGTH
A- B	0 / 0	-78.0	-78.0	0.12 (1)	10.00
B- C	-1345 / 0	-78.0	-78.0	0.88 (1)	4.26
C- D	-1506 / 0	-78.0	-78.0	0.94 (1)	3.99
D- E	-1506 / 0	-78.0	-78.0	0.94 (1)	3.99
E- F	-1506 / 0	-78.0	-78.0	0.95 (1)	3.99
F- G	-1240 / 0	-78.0	-78.0	0.42 (1)	5.30
H- G	-1466 / 0	0.0	0.0	0.19 (1)	6.76
M- L	0 / 278	-18.5	-18.5	0.41 (4)	10.00
L- K	0 / 1345	-18.5	-18.5	0.52 (4)	10.00
K- J	0 / 1345	-18.5	-18.5	0.52 (4)	10.00
J- I	0 / 801	-18.5	-18.5	0.29 (4)	10.00
I- H	0 / 0	-18.5	-18.5	0.21 (4)	10.00

WEBS

MEMB. FR-TO	MAX. FACTORED FORCE (LBS)	MAX CSI (LC)
M- B	-1442 / 0	0.46 (1)
B- L	0 / 1491	0.24 (1)
L- C	-851 / 0	0.36 (1)
C- J	0 / 226	0.04 (1)
J- E	-694 / 0	0.91 (1)
J- F	0 / 976	0.16 (1)
I- F	-189 / 25	0.25 (1)
I- G	0 / 869	0.20 (1)

[M]

DESIGN CRITERIA

SPECIFIED LOADS:

TOP CH.	LL	=	21.0	PSF
	DL	=	6.0	PSF
BOT CH.	LL	=	0.0	PSF
	DL	=	7.4	PSF
TOTAL LOAD		=	34.4	PSF

SPACING = 24.0 IN. C/C

LOADING IN FLAT SECTION BASED ON A SLOPE OF 2.00/12 MINIMUM

THIS TRUSS IS DESIGNED FOR RESIDENTIAL OR SMALL BUILDING REQUIREMENTS OF PART 9, NBCC 2015

THIS DESIGN COMPLIES WITH:
- PART 9 OF BCBC 2018 , ABC 2019
- PART 9 OF OBC 2012 (2019 AMENDMENT)
- CSA 086-14
- TPIC 2014

(55 % OF 23.0 P.S.F. G.S.L. PLUS 8.4 P.S.F. RAIN LOAD) EQUALS 21.0 P.S.F. SPECIFIED ROOF LIVE LOAD

ALLOWABLE DEFL.(LL)= L/360 (1.03")
CALCULATED VERT. DEFL.(LL) = L/ 999 (0.06")
ALLOWABLE DEFL.(TL)= L/360 (1.03")
CALCULATED VERT. DEFL.(TL) = L/ 999 (0.26")

CSI: TC=0.95/1.00 (E-F:1) , BC=0.52/1.00 (J-L:4) , WB=0.91/1.00 (E-J:1) , SSI=0.30/1.00 (E-F:1)

DOL LUMBER=1.00 NAIL=1.00 LS BEND=1.10 COMP=1.10 SHEAR=1.10 TENS= 1.10

COMPANION LIVE LOAD FACTOR = 1.00

TRUSS PLATE MANUFACTURER IS NOT RESPONSIBLE FOR QUALITY CONTROL IN THE TRUSS MANUFACTURING PLANT .

NAIL VALUES

PLATE	GRIP(DRY) (PSI) MAX	MIN	SHEAR (PLI) MAX	MIN	SECTION (PLI) MAX	MIN
MT20	650	371	1747	788	1987	1873

PLATE PLACEMENT TOL. = 0.250 inches

PLATE ROTATION TOL. = 5.0 Deg.

JSI GRIP= 0.85 (J) (INPUT = 0.90)
JSI METAL= 0.46 (G) (INPUT = 1.00)

JOB NAME	TRUSS NAME	QUANTITY	PLY	JOB DESC.	DRWG NO.
336335	H282T		1	TRUSS DESC. JT 45147	E21104214

Alpa Roof Truss, Maple

Version 8.420 S Jan 21 2021 MiTek Industries, Inc. Thu Oct 14 08:54:37 2021 Page 1

ID:hd511hZTz_bdeQoS817GKByhVxV-TCH6wy7_IjwN4DrpyLuPfqHGEPSPOPFEj_s0LYyTZFm

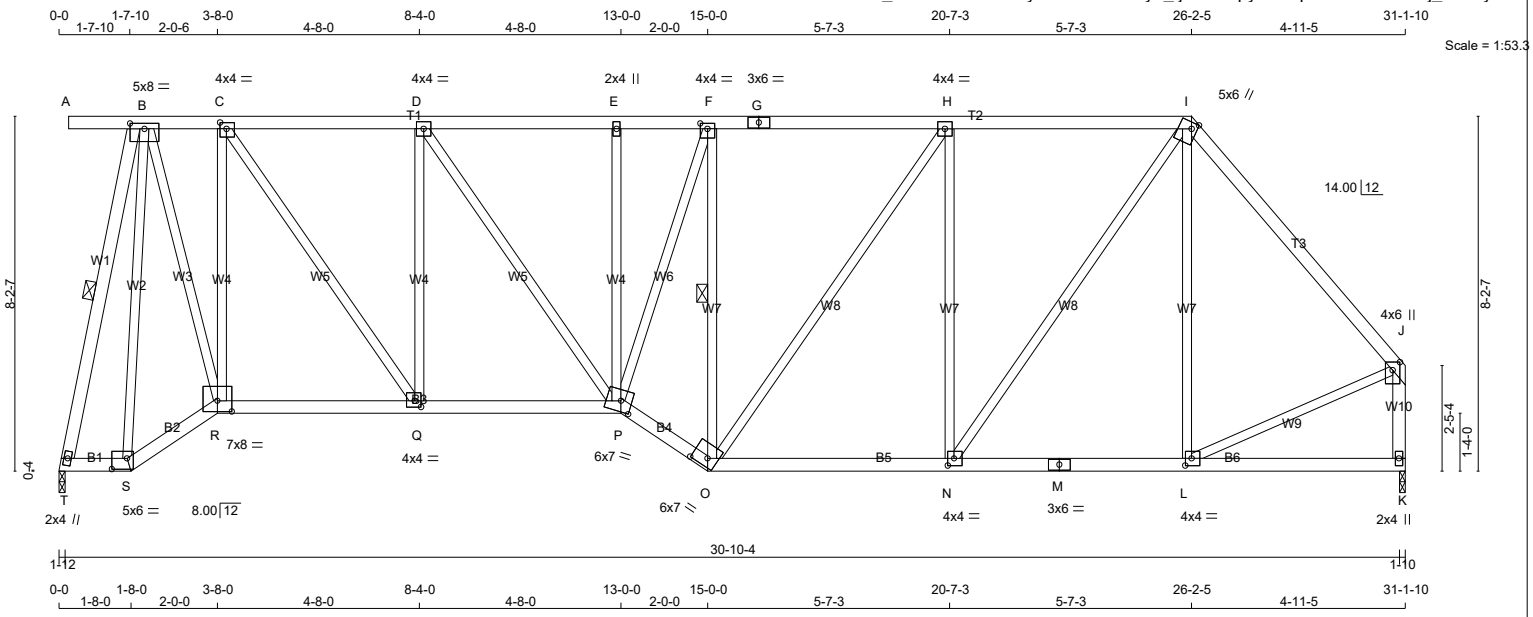

TOTAL WEIGHT = 169 lb

LUMBER

N. L. G. A. RULES

CHORDS	SIZE		LUMBER	DESCR.
A - G	2x4	DRY	No.2	SPF
G - I	2x4	DRY	No.2	SPF
I - J	2x4	DRY	No.2	SPF
K - J	2x4	DRY	No.2	SPF
T - S	2x4	DRY	No.2	SPF
S - R	2x4	DRY	No.2	SPF
R - P	2x4	DRY	No.2	SPF
P - O	2x4	DRY	No.2	SPF
O - M	2x4	DRY	No.2	SPF
M - K	2x4	DRY	No.2	SPF
ALL WEBS EXCEPT	2x3	DRY	No.2	SPF
T - B	2x4	DRY	No.2	SPF

DRY: SEASONED LUMBER.

PLATES (table is in inches)

JT	TYPE	PLATES	W	LEN	Y	X
B	TMWWW-t	MT20	5.0	8.0	1.50	4.00
C	TMWW-t	MT20	4.0	4.0	1.75	1.75
D	TMWW-t	MT20	4.0	4.0		
E	TMW+w	MT20	2.0	4.0		
F	TMWW-t	MT20	4.0	4.0	1.50	2.00
G	TS-t	MT20	3.0	6.0		
H	TMWW-t	MT20	4.0	4.0		
I	TTWW+m	MT20	5.0	6.0	1.75	1.50
J	TMVW+p	MT20	4.0	6.0	2.25	2.00
K	BMV1+p	MT20	2.0	4.0		
L	BMWW-t	MT20	4.0	4.0	2.00	1.75
M	BS-t	MT20	3.0	6.0		
N	BMWW-t	MT20	4.0	4.0	2.00	1.75
O	BBWW-h	MT20	6.0	7.0	2.25	4.25
P	BBWWW-m	MT20	6.0	7.0	3.00	3.00
Q	BMWW-t	MT20	4.0	4.0	1.75	1.75
R	BBWW-l	MT20	7.0	8.0	3.00	4.00
S	BBW-l	MT20	5.0	6.0	3.00	4.25
T	BMW1+w	MT20	2.0	4.0		

LATERAL BRACE(S) SHOWN SHALL BE 2X4 SPF#2

DIMENSIONS, SUPPORTS AND LOADINGS SPECIFIED BY FABRICATOR TO BE VERIFIED BY BUILDING DESIGNER

BEARINGS

JT	FACTORED GROSS REACTION VERT	HORZ	MAXIMUM FACTORED GROSS REACTION DOWN	HORZ	UPLIFT	INPUT BRG IN-SX	REQRD BRG IN-SX
T	1490	0	1490	0	0	1-12	1-10
K	1492	0	1492	0	0	1-10	1-10

UNFACTORED REACTIONS

JT	1ST LCASE COMBINED	MAX./MIN. COMPONENT REACTIONS SNOW	LIVE	PERM.LIVE	WIND	DEAD	SOIL
T	1062	648 / 0	0 / 0	0 / 0	0 / 0	414 / 0	0 / 0
K	1064	649 / 0	0 / 0	0 / 0	0 / 0	414 / 0	0 / 0

BEARING MATERIAL TO BE SPF NO.2 OR BETTER AT JOINT(S) T, K

BRACING

TOP CHORD TO BE SHEATHED OR MAX. PURLIN SPACING = 4.79 FT.
MAX. UNBRACED BOTTOM CHORD LENGTH = 10.00 FT OR RIGID CEILING DIRECTLY APPLIED.

ALL PITCH BREAKS AND PERIMETER CORNER JOINTS MUST BE LATERALLY RESTRAINED.

1 LATERAL BRACE(S) AT 1/ 2 LENGTH OF B-T, F-O.

END VERTICAL(S) MUST BE SHEATHED OR HAVE BRACES AS INDICATED IN THE MAX. UNBRACED LENGTH COLUMN OF THE TABLE BELOW

LOADING

TOTAL LOAD CASES: (4)

CHORDS

MEMB. FR-TO	MAX. FACTORED FORCE (LBS)	FACTORED VERT. LOAD (PLF) FROM	TO	LC1 CSI (LC)	MAX. UNBRAC LENGTH
A- B	0 / 0	-78.0	-78.0	0.16 (1)	10.00
B- C	-706 / 0	-78.0	-78.0	0.17 (1)	6.25
C- D	-1391 / 0	-78.0	-78.0	0.27 (1)	5.21
D- E	-1716 / 0	-78.0	-78.0	0.29 (1)	4.79
E- F	-1712 / 0	-78.0	-78.0	0.20 (1)	4.88
F- G	-1476 / 0	-78.0	-78.0	0.43 (1)	4.88
G- H	-1476 / 0	-78.0	-78.0	0.43 (1)	4.88
H- I	-1350 / 0	-78.0	-78.0	0.42 (1)	5.05
I- J	-1229 / 0	-78.0	-78.0	0.42 (1)	5.32
K- J	-1455 / 0	0.0	0.0	0.19 (1)	6.77
T- S	0 / 333	-18.5	-18.5	0.06 (1)	10.00
S- R	0 / 410	-18.5	-18.5	0.08 (1)	10.00
R- Q	0 / 724	-18.5	-18.5	0.18 (4)	10.00
Q- P	0 / 1391	-18.5	-18.5	0.28 (1)	10.00
P- O	0 / 1756	-18.5	-18.5	0.29 (1)	10.00
O- N	0 / 1350	-18.5	-18.5	0.29 (1)	10.00
N- M	0 / 794	-18.5	-18.5	0.21 (4)	10.00
M- L	0 / 794	-18.5	-18.5	0.21 (4)	10.00
L- K	0 / 0	-18.5	-18.5	0.12 (4)	10.00

WEBS

MEMB. FR-TO	MAX. FACTORED FORCE (LBS)	MAX CSI (LC)
T- B	-1514 / 0	0.49 (1)
R- C	-1141 / 0	0.91 (1)
C- Q	0 / 1170	0.26 (1)
Q- D	-865 / 0	0.69 (1)
D- P	0 / 560	0.13 (1)
P- E	-208 / 0	0.17 (1)
P- F	0 / 822	0.18 (1)
O- F	-1087 / 0	0.46 (1)
O- H	0 / 217	0.05 (1)
N- H	-674 / 0	0.88 (1)
N- I	0 / 960	0.22 (1)
L- I	-219 / 0	0.29 (1)
L- J	0 / 861	0.19 (1)
S- B	-194 / 0	0.26 (1)
B- R	0 / 1468	0.33 (1)

DESIGN CRITERIA

SPECIFIED LOADS:

TOP	CH.	LL	=	21.0	PSF
		DL	=	6.0	PSF
BOT	CH.	LL	=	0.0	PSF
		DL	=	7.4	PSF
TOTAL	LOAD		=	34.4	PSF

SPACING = 24.0 IN. C/C

LOADING IN FLAT SECTION BASED ON A SLOPE OF 2.00/12 MINIMUM

THIS TRUSS IS DESIGNED FOR RESIDENTIAL OR SMALL BUILDING REQUIREMENTS OF PART 9, NBCC 2015

THIS DESIGN COMPLIES WITH:
- PART 9 OF BCBC 2018 , ABC 2019
- PART 9 OF OBC 2012 (2019 AMENDMENT)
- CSA 086-14
- TPIC 2014

DESIGN ASSUMPTIONS
-OVERHANG NOT TO BE ALTERED OR CUT OFF.

(55 % OF 23.0 P.S.F. G.S.L. PLUS 8.4 P.S.F. RAIN LOAD) EQUALS 21.0 P.S.F. SPECIFIED ROOF LIVE LOAD

ALLOWABLE DEFL.(LL)= L/360 (1.03")
CALCULATED VERT. DEFL.(LL) = L/ 999 (0.09")
ALLOWABLE DEFL.(TL)= L/360 (1.03")
CALCULATED VERT. DEFL.(TL) = L/ 999 (0.18")

CSI: TC=0.43/1.00 (F-H:1) , BC=0.29/1.00 (O-P:1) , WB=0.91/1.00 (C-R:1) , SSI=0.21/1.00 (H-I:1)

DOL LUMBER=1.00 NAIL=1.00 LS BEND=1.10 COMP=1.10 SHEAR=1.10 TENS= 1.10

COMPANION LIVE LOAD FACTOR = 1.00

TRUSS PLATE MANUFACTURER IS NOT RESPONSIBLE FOR QUALITY CONTROL IN THE TRUSS MANUFACTURING PLANT .

NAIL VALUES

PLATE	GRIP(DRY) (PSI) MAX	MIN	SHEAR (PLI) MAX	MIN	SECTION (PLI) MAX	MIN
MT20	650	371	1747	788	1987	1873

PLATE PLACEMENT TOL. = 0.250 inches

PLATE ROTATION TOL. = 5.0 Deg.

JSI GRIP= 0.89 (Q) (INPUT = 0.90)
JSI METAL= 0.46 (J) (INPUT = 1.00)

JOB NAME	TRUSS NAME	QUANTITY	PLY	JOB DESC.		DRWG NO.
336335	H283T		1	TRUSS DESC.	JT 45147	E21104215

Alpa Roof Truss, Maple

ID:hd511hZTz bdeQoS817GKByhVxV-9ECu2hpczEBrVT0s4yQrlrGdKTFPL8oBfWzk0MyTZHT

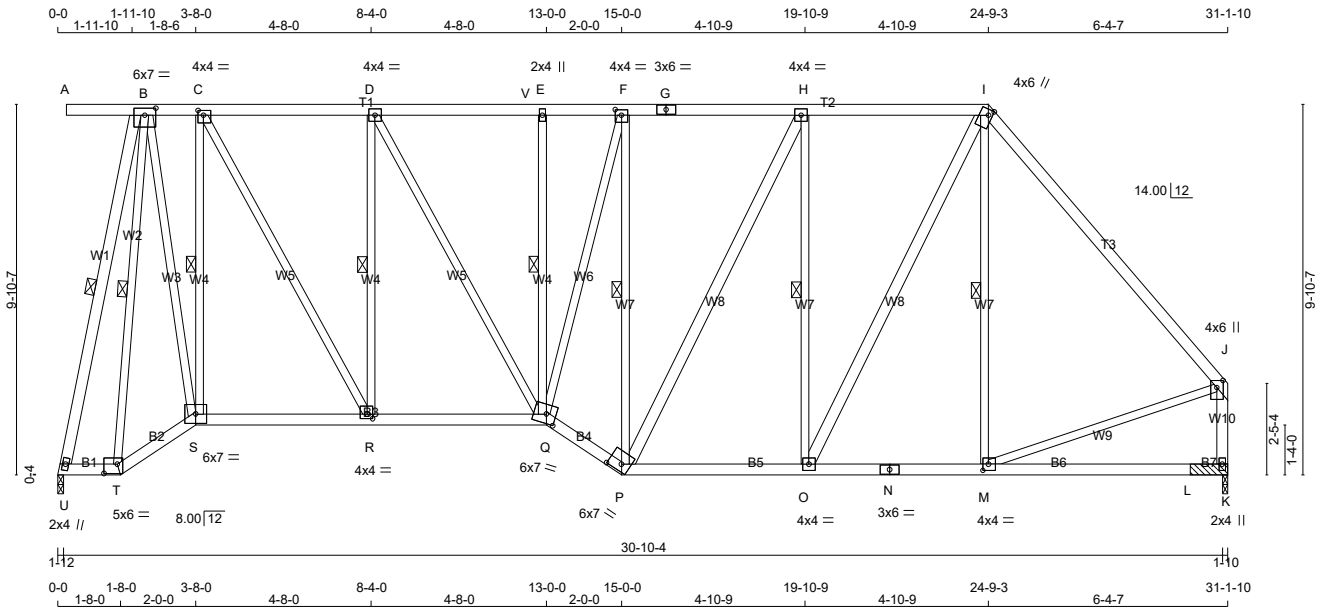

TOTAL WEIGHT = 3 X 197 = 592 lb

[M]

LUMBER

N. L. G. A. RULES

CHORDS	SIZE		LUMBER	DESCR.
A - G	2x4	DRY	No.2	SPF
G - I	2x4	DRY	No.2	SPF
I - J	2x4	DRY	2100F 1.8E	SPF
K - J	2x4	DRY	No.2	SPF
U - T	2x4	DRY	No.2	SPF
T - S	2x4	DRY	No.2	SPF
S - Q	2x4	DRY	No.2	SPF
Q - P	2x4	DRY	No.2	SPF
P - N	2x4	DRY	No.2	SPF
N - K	2x4	DRY	No.2	SPF
ALL WEBS EXCEPT	2x4	DRY	No.2	SPF
S - C	2x3	DRY	No.2	SPF
C - R	2x3	DRY	No.2	SPF
R - D	2x3	DRY	No.2	SPF
D - Q	2x3	DRY	No.2	SPF
Q - E	2x3	DRY	No.2	SPF
Q - F	2x3	DRY	No.2	SPF
P - F	2x3	DRY	No.2	SPF
O - H	2x3	DRY	No.2	SPF
M - I	2x3	DRY	No.2	SPF
M - J	2x3	DRY	No.2	SPF
T - B	2x3	DRY	No.2	SPF
B - S	2x3	DRY	No.2	SPF

DRY: SEASONED LUMBER.

PLATES (table is in inches)

JT	TYPE	PLATES	W	LEN	Y	X
B	TMWWW-t	MT20	6.0	7.0	2.25	3.50
C	TMWW-t	MT20	4.0	4.0	1.50	1.75
D	TMWW-t	MT20	4.0	4.0		
E	TMW+w	MT20	2.0	4.0		
F	TMWW-t	MT20	4.0	4.0	1.75	2.00
G	TS-t	MT20	3.0	6.0		
H	TMWW-t	MT20	4.0	4.0		
I	TTWW+m	MT20	4.0	6.0	1.75	1.25
J	TMVW+p	MT20	4.0	6.0	2.25	2.00
K	BMV1+p	MT20	2.0	4.0		
M	BMWW-t	MT20	4.0	4.0	2.00	1.75
N	BS-t	MT20	3.0	6.0		
O	BMWW-t	MT20	4.0	4.0		
P	BBWW-h	MT20	6.0	7.0	2.25	4.25

LATERAL BRACE(S) SHOWN SHALL BE 2X4 SPF#2

DIMENSIONS, SUPPORTS AND LOADINGS SPECIFIED BY FABRICATOR TO BE VERIFIED BY BUILDING DESIGNER

BEARINGS

JT	FACTORED GROSS REACTION VERT	HORZ	MAXIMUM FACTORED GROSS REACTION DOWN	HORZ	UPLIFT	INPUT BRG IN-SX	REQRD BRG IN-SX
U	1601	0	1601	0	0	1-12	1-12
K	1565	0	1565	0	0	1-10	1-10 & BLOCK

UNFACTORED REACTIONS

JT	1ST LCASE COMBINED	MAX./MIN. COMPONENT REACTIONS SNOW	LIVE	PERM.LIVE	WIND	DEAD	SOIL
U	1151	648 / 0	0 / 0	0 / 0	0 / 0	503 / 0	0 / 0
K	1122	649 / 0	0 / 0	0 / 0	0 / 0	473 / 0	0 / 0

BEARING MATERIAL TO BE SPF NO.2 OR BETTER AT JOINT(S) U, K

2x4 DRY SPF No.2 BEARING BLOCK 12" LONG AT JT. K ATTACHED TO FRONT SIDE WITH 2 ROWS OF (0.122"X3") SPIRAL NAILS SPACED 3" C.C. 8 NAILS TOTAL.

BRACING

FOR SECTION A-I, MAX. PURLIN SPACING = 2.00 FT.
FOR OTHER SECTIONS, TOP CHORD TO BE SHEATHED OR MAX. PURLIN SPACING = 6.12 FT.
MAX. UNBRACED BOTTOM CHORD LENGTH = 10.00 FT OR RIGID CEILING DIRECTLY APPLIED.

ALL PITCH BREAKS AND PERIMETER CORNER JOINTS MUST BE LATERALLY RESTRAINED.

1 LATERAL BRACE(S) AT 1/ 2 LENGTH OF B-U, C-S, D-R, E-Q, F-P, H-O, I-M, B-T.

END VERTICAL(S) MUST BE SHEATHED OR HAVE BRACES AS INDICATED IN THE MAX. UNBRACED LENGTH COLUMN OF THE TABLE BELOW

LOADING

TOTAL LOAD CASES: (4)

CHORDS

MEMB. FR-TO	MAX. FACTORED FORCE (LBS)	FACTORED VERT. LOAD (PLF) FROM	TO	LC1	MAX CSI (LC)	MAX. UNBRAC LENGTH
A- B	0 / 0	-85.5	-85.5	0.26 (1)	10.00	
B- C	-603 / 0	-85.5	-85.5	0.26 (1)	2.00	
C- D	-1192 / 0	-85.5	-85.5	0.29 (1)	2.00	
D- V	-1468 / 0	-85.5	-85.5	0.30 (1)	2.00	
V- E	-1468 / 0	-85.5	-85.5	0.30 (1)	2.00	
E- F	-1465 / 0	-85.5	-85.5	0.16 (1)	2.00	
F- G	-1302 / 0	-85.5	-85.5	0.34 (1)	2.00	
G- H	-1302 / 0	-85.5	-85.5	0.34 (1)	2.00	
H- I	-1218 / 0	-85.5	-85.5	0.34 (1)	2.00	
I- J	-1309 / 0	-78.0	-78.0	0.46 (1)	6.12	
K- J	-1516 / 0	0.0	0.0	0.20 (1)	6.67	
U- T	0 / 352	-18.5	-18.5	0.06 (1)	10.00	
T- S	0 / 440	-18.5	-18.5	0.08 (1)	10.00	
S- R	0 / 617	-18.5	-18.5	0.18 (4)	10.00	
R- Q	0 / 1192	-18.5	-18.5	0.25 (1)	10.00	
Q- P	0 / 1552	-18.5	-18.5	0.26 (1)	10.00	
P- O	0 / 1218	-18.5	-18.5	0.25 (1)	10.00	
O- N	0 / 848	-18.5	-18.5	0.25 (4)	10.00	
N- M	0 / 848	-18.5	-18.5	0.25 (4)	10.00	
M- L	0 / 0	-18.5	-18.5	0.16 (4)	10.00	
L- K	0 / 0	-18.5	-18.5	0.16 (4)	10.00	

WEBS

MEMB. FR-TO	MAX. FACTORED FORCE (LBS)	MAX CSI (LC)
U- B	-1626 / 0	0.81 (1)
S- C	-1148 / 0	0.53 (1)
C- R	0 / 1187	0.27 (1)
R- D	-940 / 0	0.44 (1)
D- Q	0 / 559	0.13 (1)
Q- E	-245 / 0	0.11 (1)
Q- F	0 / 698	0.16 (1)
P- F	-965 / 0	0.63 (1)
P- H	0 / 184	0.03 (1)
O- H	-639 / 0	0.42 (1)
O- I	0 / 813	0.13 (1)
M- I	-149 / 18	0.10 (1)
M- J	0 / 892	0.20 (1)
T- B	-211 / 0	0.14 (1)
B- S	0 / 1464	0.33 (1)

DESIGN CRITERIA

SPECIFIED LOADS:

TOP CH.	LL	=	21.0	PSF
	DL	=	6.0	PSF
BOT CH.	LL	=	0.0	PSF
	DL	=	7.4	PSF
TOTAL LOAD		=	34.4	PSF

SPACING = 24.0 IN. C/C

LOADING IN FLAT SECTION BASED ON PIGGYBACK TRUSS WITH SLOPES OF 6.00/12 AND -6.00/12 AND RESPECTIVE HEEL HEIGHTS OF 0-0 AND 0-0 AND AN ADDITIONAL DEAD LOAD OF 3.0 P.S.F.

THIS TRUSS IS DESIGNED FOR RESIDENTIAL OR SMALL BUILDING REQUIREMENTS OF PART 9, NBCC 2015

THIS DESIGN COMPLIES WITH:
- PART 9 OF BCBC 2018 , ABC 2019
- PART 9 OF OBC 2012 (2019 AMENDMENT)
- CSA 086-14
- TPIC 2014

DESIGN ASSUMPTIONS
-OVERHANG NOT TO BE ALTERED OR CUT OFF.

(55 % OF 23.0 P.S.F. G.S.L. PLUS 8.4 P.S.F. RAIN LOAD) EQUALS 21.0 P.S.F. SPECIFIED ROOF LIVE LOAD

ALLOWABLE DEFL.(LL)= L/360 (1.03")
CALCULATED VERT. DEFL.(LL) = L/ 999 (0.08")
ALLOWABLE DEFL.(TL)= L/360 (1.03")
CALCULATED VERT. DEFL.(TL) = L/ 999 (0.17")

CSI: TC=0.46/1.00 (I-J:1) , BC=0.26/1.00 (P-Q:1) , WB=0.81/1.00 (B-U:1) , SSI=0.20/1.00 (H-I:1)

DOL LUMBER=1.00 NAIL=1.00 LS BEND=1.10 COMP=1.10 SHEAR=1.10 TENS= 1.10

COMPANION LIVE LOAD FACTOR = 1.00

TRUSS PLATE MANUFACTURER IS NOT RESPONSIBLE FOR QUALITY CONTROL IN THE TRUSS MANUFACTURING PLANT .

NAIL VALUES

PLATE	GRIP(DRY) (PSI) MAX	MIN	SHEAR (PLI) MAX	MIN	SECTION (PLI) MAX	MIN
MT20	650	371	1747	788	1987	1873

PLATE PLACEMENT TOL. = 0.250 inches

PLATE ROTATION TOL. = 5.0 Deg.

JSI GRIP= 0.88 (I) (INPUT = 0.90)
JSI METAL= 0.50 (J) (INPUT = 1.00)

CONTINUED ON PAGE 2

PLATES (table is in inches)

JT	TYPE	PLATES	W	LEN	Y	X
Q	BBWWW-m	MT20	6.0	7.0	3.00	3.00
R	BMWW-t	MT20	4.0	4.0	1.50	1.75
S	BBWW-l	MT20	6.0	7.0		
T	BBW-l	MT20	5.0	6.0	3.00	4.25
U	BMW1+w	MT20	2.0	4.0		

LATERAL BRACE(S) SHOWN SHALL BE
2X4 SPF#2

JOB NAME	TRUSS NAME	QUANTITY	PLY	JOB DESC.		DRWG NO.
336335	H283		1	TRUSS DESC.	JT 45147	E21104216

Alpa Roof Truss, Maple

Version 8.420 S Jan 21 2021 MiTek Industries, Inc. Thu Oct 14 08:52:46 2021 Page 1

ID:hd511hZTz bdeQoS817GKByhVxV-Dr48d?nMRdx7G9sUyXONqQBC2qXMtEtuBDUeyTyTZHV

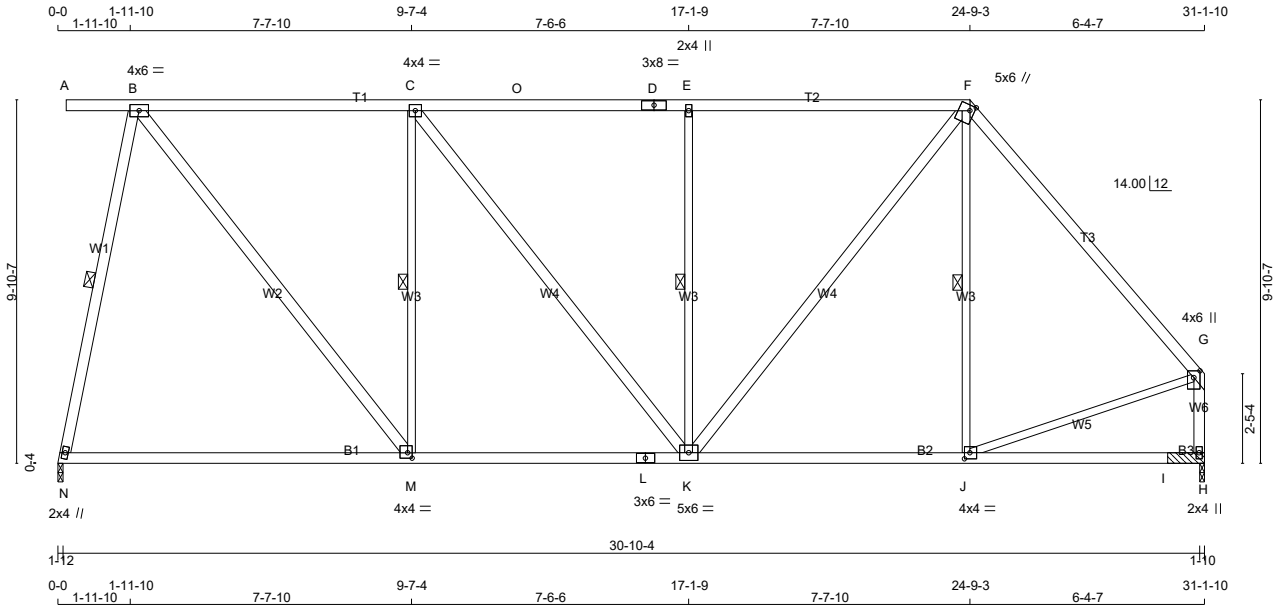

TOTAL WEIGHT = 9 X 158 = 1419 lb

LUMBER

N. L. G. A. RULES

CHORDS	SIZE		LUMBER	DESCR.
A - D	2x4	DRY	No.2	SPF
D - F	2x4	DRY	No.2	SPF
F - G	2x4	DRY	2100F 1.8E	SPF
H - G	2x4	DRY	No.2	SPF
N - L	2x4	DRY	No.2	SPF
L - H	2x4	DRY	No.2	SPF
ALL WEBS	2x4	DRY	No.2	SPF
EXCEPT				
M - C	2x3	DRY	No.2	SPF
K - E	2x3	DRY	No.2	SPF
J - F	2x3	DRY	No.2	SPF
J - G	2x3	DRY	No.2	SPF

DRY: SEASONED LUMBER.

PLATES (table is in inches)

JT	TYPE	PLATES	W	LEN	Y	X
B	TMWW-t	MT20	4.0	6.0		
C	TMWW-t	MT20	4.0	4.0		
D	TS-t	MT20	3.0	8.0		
E	TMW+w	MT20	2.0	4.0		
F	TTWW+m	MT20	5.0	6.0	1.75	1.50
G	TMVW+p	MT20	4.0	6.0	2.25	2.00
H	BMV1+p	MT20	2.0	4.0		
J	BMWW-t	MT20	4.0	4.0	2.00	1.75
K	BMWWW-t	MT20	5.0	6.0		
L	BS-t	MT20	3.0	6.0		
M	BMWW-t	MT20	4.0	4.0	1.75	1.50
N	BMW1+w	MT20	2.0	4.0		

LATERAL BRACE(S) SHOWN SHALL BE 2X4 SPF#2

DIMENSIONS, SUPPORTS AND LOADINGS SPECIFIED BY FABRICATOR TO BE VERIFIED BY BUILDING DESIGNER

BEARINGS

JT	FACTORED GROSS REACTION VERT	HORZ	MAXIMUM FACTORED GROSS REACTION DOWN	HORZ	UPLIFT	INPUT BRG IN-SX	REQRD BRG IN-SX
N	1596	0	1596	0	0	1-12	1-12
H	1570	0	1570	0	0	1-10	1-10 & BLOCK

UNFACTORED REACTIONS

JT	1ST LCASE COMBINED	MAX./MIN. COMPONENT REACTIONS SNOW	LIVE	PERM.LIVE	WIND	DEAD	SOIL
N	1148	646 / 0	0 / 0	0 / 0	0 / 0	502 / 0	0 / 0
H	1126	652 / 0	0 / 0	0 / 0	0 / 0	474 / 0	0 / 0

BEARING MATERIAL TO BE SPF NO.2 OR BETTER AT JOINT(S) N, H

2x4 DRY SPF No.2 BEARING BLOCK 12" LONG AT JT. H ATTACHED TO FRONT SIDE WITH 2 ROWS OF (0.122"X3") SPIRAL NAILS SPACED 3" C.C. 8 NAILS TOTAL.

BRACING

FOR SECTION A-F, MAX. PURLIN SPACING = 2.00 FT.
FOR OTHER SECTIONS, TOP CHORD TO BE SHEATHED OR MAX. PURLIN SPACING = 6.10 FT.
MAX. UNBRACED BOTTOM CHORD LENGTH = 10.00 FT OR RIGID CEILING DIRECTLY APPLIED.

ALL PITCH BREAKS AND PERIMETER CORNER JOINTS MUST BE LATERALLY RESTRAINED.

1 LATERAL BRACE(S) AT 1/ 2 LENGTH OF B-N, C-M, E-K, F-J.

END VERTICAL(S) MUST BE SHEATHED OR HAVE BRACES AS INDICATED IN THE MAX. UNBRACED LENGTH COLUMN OF THE TABLE BELOW

LOADING

TOTAL LOAD CASES: (4)

CHORDS

MEMB. FR-TO	MAX. FACTORED FORCE (LBS)	FACTORED VERT. LOAD (PLF) FROM	TO	LC1	MAX CSI (LC)	MAX. UNBRAC LENGTH
A- B	0 / 0	-85.5	-85.5	0.20 (1)		10.00
B- C	-1170 / 0	-85.5	-85.5	0.78 (1)		2.00
C- O	-1342 / 0	-85.5	-85.5	0.82 (1)		2.00
O- D	-1342 / 0	-85.5	-85.5	0.82 (1)		2.00
D- E	-1342 / 0	-85.5	-85.5	0.82 (1)		2.00
E- F	-1342 / 0	-85.5	-85.5	0.83 (1)		2.00
F- G	-1319 / 0	-78.0	-78.0	0.46 (1)		6.10
H- G	-1525 / 0	0.0	0.0	0.20 (1)		6.65
N- M	0 / 300	-18.5	-18.5	0.39 (4)		10.00
M- L	0 / 1170	-18.5	-18.5	0.49 (4)		10.00
L- K	0 / 1170	-18.5	-18.5	0.49 (4)		10.00
K- J	0 / 854	-18.5	-18.5	0.32 (4)		10.00
J- I	0 / 0	-18.5	-18.5	0.23 (4)		10.00
I- H	0 / 0	-18.5	-18.5	0.23 (4)		10.00

WEBS

MEMB. FR-TO	MAX. FACTORED FORCE (LBS)	MAX CSI (LC)
N- B	-1555 / 0	0.78 (1)
B- M	0 / 1409	0.23 (1)
M- C	-923 / 0	0.61 (1)
C- K	0 / 278	0.04 (1)
K- E	-706 / 0	0.46 (1)
K- F	0 / 781	0.13 (1)
J- F	-124 / 47	0.08 (1)
J- G	0 / 898	0.20 (1)

[M]

DESIGN CRITERIA

SPECIFIED LOADS:

TOP	CH.	LL	=	21.0	PSF
		DL	=	6.0	PSF
BOT	CH.	LL	=	0.0	PSF
		DL	=	7.4	PSF
TOTAL	LOAD		=	34.4	PSF

SPACING = 24.0 IN. C/C

LOADING IN FLAT SECTION BASED ON PIGGYBACK TRUSS WITH SLOPES OF 6.00/12 AND -6.00/12 AND RESPECTIVE HEEL HEIGHTS OF 0-0 AND 0-0 AND AN ADDITIONAL DEAD LOAD OF 3.0 P.S.F.

THIS TRUSS IS DESIGNED FOR RESIDENTIAL OR SMALL BUILDING REQUIREMENTS OF PART 9, NBCC 2015

THIS DESIGN COMPLIES WITH:
- PART 9 OF BCBC 2018 , ABC 2019
- PART 9 OF OBC 2012 (2019 AMENDMENT)
- CSA 086-14
- TPIC 2014

(55 % OF 23.0 P.S.F. G.S.L. PLUS 8.4 P.S.F. RAIN LOAD) EQUALS 21.0 P.S.F. SPECIFIED ROOF LIVE LOAD

ALLOWABLE DEFL.(LL)= L/360 (1.03")
CALCULATED VERT. DEFL.(LL) = L/ 999 (0.05")
ALLOWABLE DEFL.(TL)= L/360 (1.03")
CALCULATED VERT. DEFL.(TL) = L/ 999 (0.23")

CSI: TC=0.83/1.00 (E-F:1) , BC=0.49/1.00 (K-M:4) , WB=0.78/1.00 (B-N:1) , SSI=0.30/1.00 (E-F:1)

DOL LUMBER=1.00 NAIL=1.00 LS BEND=1.10 COMP=1.10 SHEAR=1.10 TENS= 1.10

COMPANION LIVE LOAD FACTOR = 1.00

TRUSS PLATE MANUFACTURER IS NOT RESPONSIBLE FOR QUALITY CONTROL IN THE TRUSS MANUFACTURING PLANT .

NAIL VALUES

PLATE	GRIP(DRY) (PSI) MAX	MIN	SHEAR (PLI) MAX	MIN	SECTION (PLI) MAX	MIN
MT20	650	371	1747	788	1987	1873

PLATE PLACEMENT TOL. = 0.250 inches

PLATE ROTATION TOL. = 5.0 Deg.

JSI GRIP= 0.87 (M) (INPUT = 0.90)
JSI METAL= 0.50 (G) (INPUT = 1.00)

JOB NAME	TRUSS NAME	QUANTITY	PLY	JOB DESC.		DRWG NO.
336335	H284P		1	TRUSS DESC.	JT 45147	E21104217

Alpa Roof Truss, Maple

Version 8.420 S Jan 21 2021 MiTek Industries, Inc. Thu Oct 14 08:54:39 2021 Page 1

ID:hd511hZTz_bdeQoS817GKByhVxV-PbPsLe9EqLA5JX?C4mwtlFNcZD9AsWNXAIL6PQyTZFk

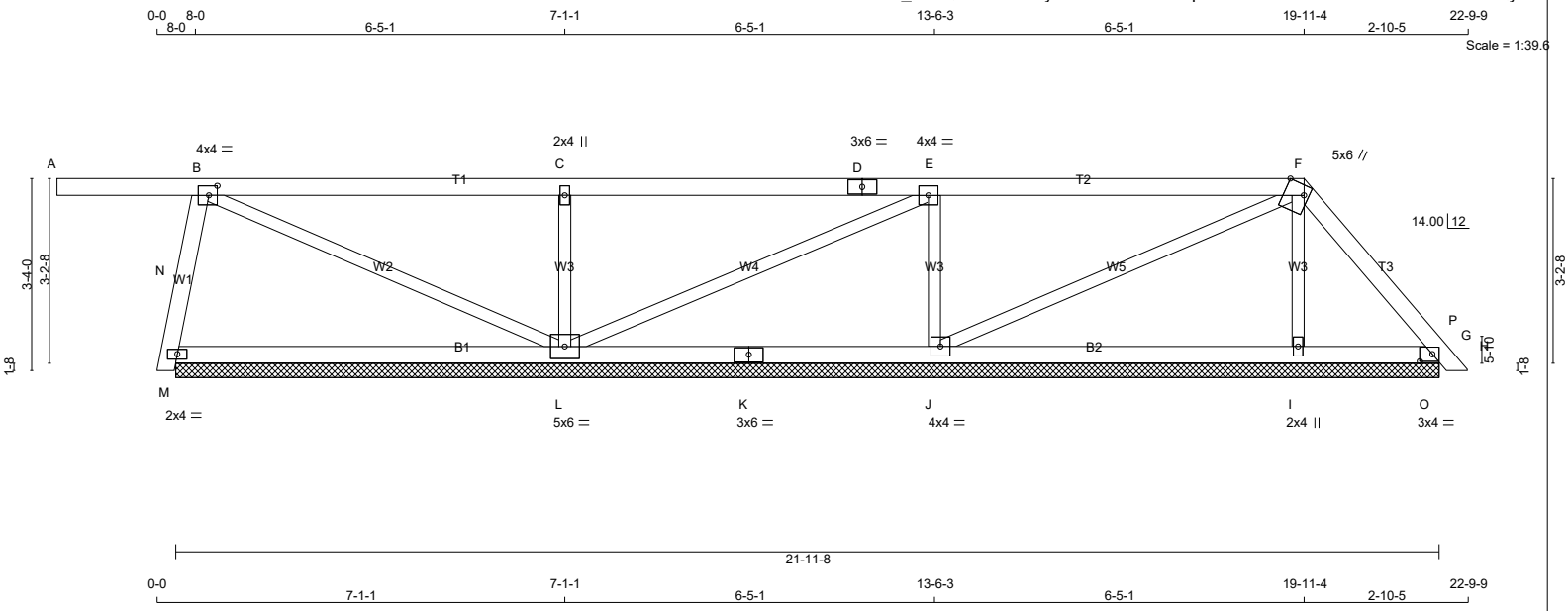

TOTAL WEIGHT = 2 X 81 = 162 lb [M]

LUMBER

N. L. G. A. RULES

CHORDS	SIZE		LUMBER	DESCR.
A - D	2x4	DRY	No.2	SPF
D - F	2x4	DRY	No.2	SPF
F - H	2x4	DRY	No.2	SPF
M - K	2x4	DRY	No.2	SPF
K - G	2x4	DRY	No.2	SPF
ALL WEBS	2x4	DRY	No.2	SPF
EXCEPT				
B - L	2x3	DRY	No.2	SPF
L - C	2x3	DRY	No.2	SPF
L - E	2x3	DRY	No.2	SPF
J - E	2x3	DRY	No.2	SPF
J - F	2x3	DRY	No.2	SPF
I - F	2x3	DRY	No.2	SPF

DRY: SEASONED LUMBER.

PLATES (table is in inches)

JT	TYPE	PLATES	W	LEN	Y	X
B	TMWW-t	MT20	4.0	4.0	2.00	1.75
C	TMW+w	MT20	2.0	4.0		
D	TS-t	MT20	3.0	6.0		
E	TMWW-t	MT20	4.0	4.0		
F	TTWW+m	MT20	5.0	6.0	Edge	4.00
G	TMB1-l	MT20	3.0	4.0	1.50	2.50
I	BMW1+w	MT20	2.0	4.0		
J	BMWW1-t	MT20	4.0	4.0		
K	BS-t	MT20	3.0	6.0		
L	BMWWW1-t	MT20	5.0	6.0		
M	BWM1-l	MT20	2.0	4.0		

Edge - INDICATES REFERENCE CORNER OF PLATE TOUCHES EDGE OF CHORD.

LATERAL BRACE(S) SHOWN SHALL BE 2X4 SPF#2

DIMENSIONS, SUPPORTS AND LOADINGS SPECIFIED BY FABRICATOR TO BE VERIFIED BY BUILDING DESIGNER

BEARINGS

JT	FACTORED GROSS REACTION VERT	HORZ	MAXIMUM FACTORED GROSS REACTION DOWN	HORZ	UPLIFT	INPUT BRG IN-SX	REQRD BRG IN-SX
M	407	0	407	0	0	21-11-8 (12-0-0)	1-0-0
L	742	0	742	0	0	21-11-8 (12-0-0)	1-0-0
J	658	0	658	0	0	21-11-8 (12-0-0)	1-0-0
I	301	0	301	0	0	21-11-8 (12-0-0)	1-0-0
G	205	0	205	0	0	21-11-8 (12-0-0)	1-0-0

VALUE IN PARENTHESIS INDICATES EFFECTIVE BEARING LENGTH

UNFACTORED REACTIONS

JT	1ST LCASE COMBINED	MAX./MIN. COMPONENT REACTIONS SNOW	LIVE	PERM.LIVE	WIND	DEAD	SOIL
M	287	192 / 0	0 / 0	0 / 0	0 / 0	95 / 0	0 / 0
L	529	324 / 0	0 / 0	0 / 0	0 / 0	205 / 0	0 / 0
J	468	292 / 0	0 / 0	0 / 0	0 / 0	175 / 0	0 / 0
I	219	107 / 0	0 / 0	0 / 0	0 / 0	113 / 0	0 / 0
G	142	110 / 0	0 / 0	0 / 0	0 / 0	31 / 0	0 / 0

BEARING MATERIAL TO BE SPF NO.2 OR BETTER AT JOINT(S) M, L, J, I, G

BRACING

TOP CHORD TO BE SHEATHED OR MAX. PURLIN SPACING = 6.25 FT.
MAX. UNBRACED BOTTOM CHORD LENGTH = 10.00 FT OR RIGID CEILING DIRECTLY APPLIED.

MAX. UNBRACED INTERIOR CHORD LENGTH = 7.81 FT

ALL PITCH BREAKS AND PERIMETER CORNER JOINTS MUST BE LATERALLY RESTRAINED.

LOADING

TOTAL LOAD CASES: (4)

CHORDS

MEMB. FR-TO	MAX. FACTORED FORCE (LBS)	FACTORED VERT. LOAD LC1 (PLF) FROM	TO	MAX CSI (LC)	MAX. UNBRAC LENGTH
A- B	0 / 0	-78.0	-78.0	0.34 (1)	10.00
B- C	0 / 9	-78.0	-78.0	0.43 (1)	10.00
C- D	0 / 9	-78.0	-78.0	0.44 (1)	10.00
D- E	0 / 9	-78.0	-78.0	0.44 (1)	10.00
E- F	-35 / 0	-78.0	-78.0	0.44 (1)	6.25
F- P	-113 / 0	-78.0	-78.0	0.05 (1)	6.25
P- G	-1 / 23	-78.0	-78.0	0.04 (1)	10.00
G- H	0 / 10	-78.0	-78.0	0.01 (1)	10.00
M- L	0 / 71	-18.5	-18.5	0.21 (4)	10.00
L- K	0 / 35	-18.5	-18.5	0.21 (4)	10.00
K- J	0 / 35	-18.5	-18.5	0.21 (4)	10.00
J- I	0 / 60	-18.5	-18.5	0.14 (4)	10.00
I- O	0 / 67	-18.5	-18.5	0.12 (4)	10.00
O- G	0 / 67	-18.5	-18.5	0.06 (1)	10.00

WEBS

MEMB. FR-TO	MAX. FACTORED FORCE (LBS)	MAX CSI (LC)
N- M	0 / 0	0.00 (1)
M- B	-363 / 0	0.05 (1)
B- L	-88 / 0	0.08 (1)
L- C	-544 / 0	0.10 (1)
L- E	-48 / 0	0.05 (1)
J- E	-533 / 0	0.10 (1)
J- F	-28 / 0	0.03 (1)
I- F	-182 / 0	0.03 (1)
O- P	-220 / 0	0.00 (1)

DESIGN CRITERIA

SPECIFIED LOADS:

TOP CH.	LL	=	21.0	PSF
	DL	=	6.0	PSF
BOT CH.	LL	=	0.0	PSF
	DL	=	7.4	PSF
TOTAL LOAD		=	34.4	PSF

SPACING = 24.0 IN. C/C

LOADING IN FLAT SECTION BASED ON A SLOPE OF 2.00/12 MINIMUM

THIS TRUSS IS DESIGNED FOR RESIDENTIAL OR SMALL BUILDING REQUIREMENTS OF PART 9, NBCC 2015

THIS DESIGN COMPLIES WITH:
- PART 9 OF BCBC 2018 , ABC 2019
- PART 9 OF OBC 2012 (2019 AMENDMENT)
- CSA 086-14
- TPIC 2014

(55 % OF 23.0 P.S.F. G.S.L. PLUS 8.4 P.S.F. RAIN LOAD) EQUALS 21.0 P.S.F. SPECIFIED ROOF LIVE LOAD

CSI: TC=0.44/1.00 (C-E:1) , BC=0.21/1.00 (L-M:4) , WB=0.10/1.00 (C-L:1) , SSI=0.23/1.00 (E-F:1)

DOL LUMBER=1.00 NAIL=1.00 LS BEND=1.10 COMP=1.10 SHEAR=1.10 TENS= 1.10

COMPANION LIVE LOAD FACTOR = 1.00

TRUSS PLATE MANUFACTURER IS NOT RESPONSIBLE FOR QUALITY CONTROL IN THE TRUSS MANUFACTURING PLANT .

NAIL VALUES

PLATE	GRIP(DRY) (PSI) MAX	MIN	SHEAR (PLI) MAX	MIN	SECTION (PLI) MAX	MIN
MT20	650	371	1747	788	1987	1873

PLATE PLACEMENT TOL. = 0.250 inches

PLATE ROTATION TOL. = 5.0 Deg.

JSI GRIP= 0.79 (L) (INPUT = 0.90)
JSI METAL= 0.27 (M) (INPUT = 1.00)

JOB NAME	TRUSS NAME	QUANTITY	PLY	JOB DESC.		DRWG NO.
336335	H285P		1	TRUSS DESC.	JT 45147	E21104218

Alpa Roof Truss, Maple

Version 8.420 S Jan 21 2021 MiTek Industries, Inc. Thu Oct 14 08:54:40 2021 Page 1

ID:hd511hZTz bdeQoS817GKByhVxV-tnzEZ AtbelyxhaOdUR6HSvnQdWxbyKqPy5qysyTZFj

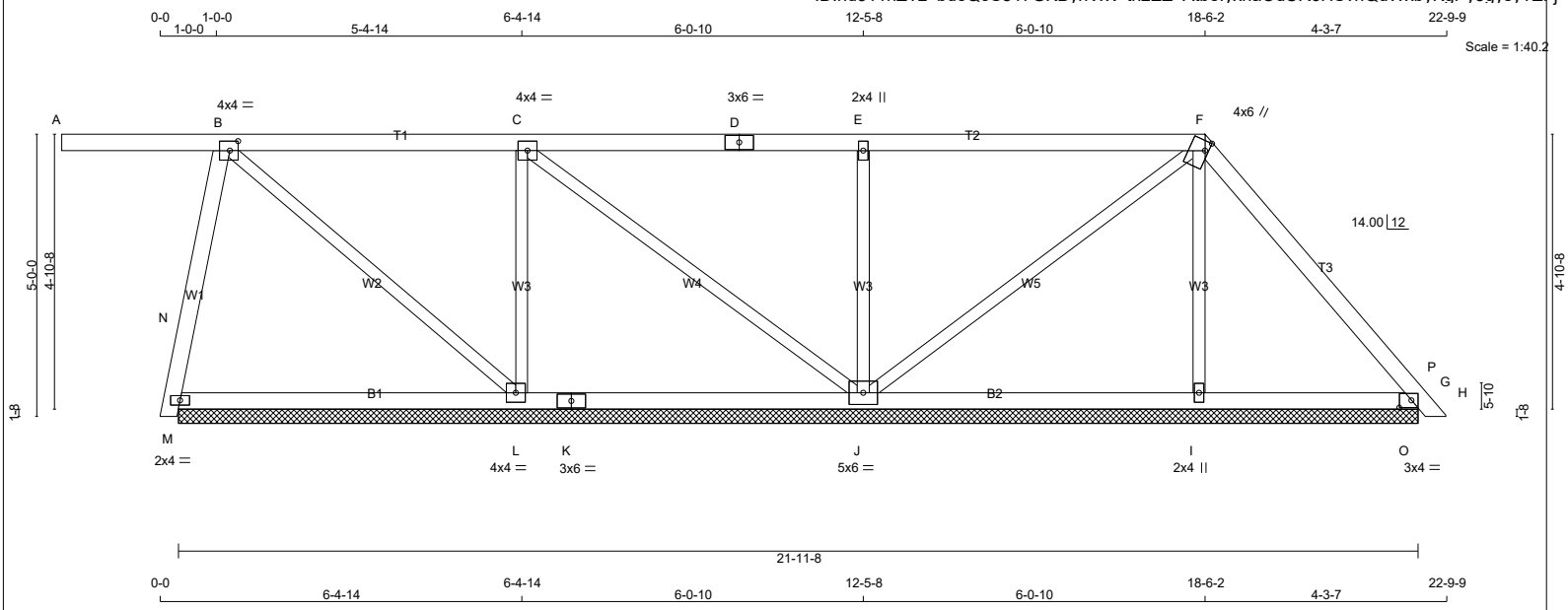

TOTAL WEIGHT = 2 X 89 = 178 lb

[M]

LUMBER

N. L. G. A. RULES

CHORDS	SIZE		LUMBER	DESCR.
A - D	2x4	DRY	No.2	SPF
D - F	2x4	DRY	No.2	SPF
F - H	2x4	DRY	No.2	SPF
M - K	2x4	DRY	No.2	SPF
K - G	2x4	DRY	No.2	SPF
ALL WEBS	2x4	DRY	No.2	SPF
EXCEPT				
B - L	2x3	DRY	No.2	SPF
L - C	2x3	DRY	No.2	SPF
C - J	2x3	DRY	No.2	SPF
J - E	2x3	DRY	No.2	SPF
J - F	2x3	DRY	No.2	SPF
I - F	2x3	DRY	No.2	SPF

DRY: SEASONED LUMBER.

PLATES (table is in inches)

JT	TYPE	PLATES	W	LEN	Y	X
B	TMWW-t	MT20	4.0	4.0	2.00	1.75
C	TMWW-t	MT20	4.0	4.0		
D	TS-t	MT20	3.0	6.0		
E	TMW+w	MT20	2.0	4.0		
F	TTWW+m	MT20	4.0	6.0	2.00	0.75
G	TMB1-l	MT20	3.0	4.0	1.50	2.50
I	BMW1+w	MT20	2.0	4.0		
J	BMWWW1-t	MT20	5.0	6.0		
K	BS-t	MT20	3.0	6.0		
L	BMWW1-t	MT20	4.0	4.0		
M	BWM1-l	MT20	2.0	4.0		

LATERAL BRACE(S) SHOWN SHALL BE 2X4 SPF#2

DIMENSIONS, SUPPORTS AND LOADINGS SPECIFIED BY FABRICATOR TO BE VERIFIED BY BUILDING DESIGNER

BEARINGS

JT	FACTORED GROSS REACTION VERT	HORZ	MAXIMUM FACTORED GROSS REACTION DOWN	HORZ	UPLIFT	INPUT BRG IN-SX	REQRD BRG IN-SX
M	397	0	397	0	0	21-11-8 (15-0-0)	1-8
L	597	0	597	0	0	21-11-8 (15-0-0)	1-8
J	748	0	748	0	0	21-11-8 (15-0-0)	1-8
I	283	0	283	0	0	21-11-8 (15-0-0)	1-8
G	287	0	287	0	0	21-11-8 (15-0-0)	1-8

VALUE IN PARENTHESIS INDICATES EFFECTIVE BEARING LENGTH

UNFACTORED REACTIONS

JT	1ST LCASE COMBINED	MAX./MIN. COMPONENT REACTIONS SNOW	LIVE	PERM.LIVE	WIND	DEAD	SOIL
M	280	189 / 0	0 / 0	0 / 0	0 / 0	91 / 0	0 / 0
L	427	252 / 0	0 / 0	0 / 0	0 / 0	175 / 0	0 / 0
J	530	344 / 0	0 / 0	0 / 0	0 / 0	186 / 0	0 / 0
I	207	100 / 0	0 / 0	0 / 0	0 / 0	107 / 0	0 / 0
G	202	140 / 0	0 / 0	0 / 0	0 / 0	62 / 0	0 / 0

BEARING MATERIAL TO BE SPF NO.2 OR BETTER AT JOINT(S) M, L, J, I, G

BRACING

TOP CHORD TO BE SHEATHED OR MAX. PURLIN SPACING = 6.25 FT.
MAX. UNBRACED BOTTOM CHORD LENGTH = 10.00 FT OR RIGID CEILING DIRECTLY APPLIED.

MAX. UNBRACED INTERIOR CHORD LENGTH = 7.81 FT

ALL PITCH BREAKS AND PERIMETER CORNER JOINTS MUST BE LATERALLY RESTRAINED.

LOADING

TOTAL LOAD CASES: (4)

CHORDS

MEMB. FR-TO	MAX. FORCE (LBS)	FACTORED VERT. LOAD (PLF) FROM	TO	LC1	MAX CSI (LC)	MAX. UNBRAC LENGTH
A- B	0 / 0	-78.0	-78.0	0.43 (1)	10.00	
B- C	-33 / 0	-78.0	-78.0	0.32 (1)	6.25	
C- D	0 / 23	-78.0	-78.0	0.41 (1)	10.00	
D- E	0 / 23	-78.0	-78.0	0.41 (1)	10.00	
E- F	0 / 24	-78.0	-78.0	0.41 (1)	10.00	
F- P	-128 / 0	-78.0	-78.0	0.13 (1)	6.25	
P- G	0 / 158	-78.0	-78.0	0.11 (1)	10.00	
G- H	0 / 10	-78.0	-78.0	0.01 (1)	10.00	
M- L	0 / 70	-18.5	-18.5	0.18 (4)	10.00	
L- K	0 / 33	-18.5	-18.5	0.18 (4)	10.00	
K- J	0 / 33	-18.5	-18.5	0.18 (4)	10.00	
J- I	0 / 71	-18.5	-18.5	0.13 (4)	10.00	
I- O	0 / 74	-18.5	-18.5	0.12 (1)	10.00	
O- G	0 / 74	-18.5	-18.5	0.12 (1)	10.00	

WEBS

MEMB. FR-TO	MAX. FORCE (LBS)	MAX CSI (LC)
N- M	0 / 0	0.00 (1)
M- B	-359 / 0	0.11 (1)
B- L	-49 / 0	0.04 (1)
L- C	-435 / 0	0.15 (1)
C- J	-71 / 0	0.08 (1)
J- E	-531 / 0	0.19 (1)
J- F	-118 / 0	0.13 (1)
I- F	-152 / 0	0.05 (1)
O- P	-477 / 0	0.00 (1)

DESIGN CRITERIA

SPECIFIED LOADS:

TOP CH.	LL	=	21.0	PSF
	DL	=	6.0	PSF
BOT CH.	LL	=	0.0	PSF
	DL	=	7.4	PSF
TOTAL LOAD		=	34.4	PSF

SPACING = 24.0 IN. C/C

LOADING IN FLAT SECTION BASED ON A SLOPE OF 2.00/12 MINIMUM

THIS TRUSS IS DESIGNED FOR RESIDENTIAL OR SMALL BUILDING REQUIREMENTS OF PART 9, NBCC 2015

THIS DESIGN COMPLIES WITH:
- PART 9 OF BCBC 2018 , ABC 2019
- PART 9 OF OBC 2012 (2019 AMENDMENT)
- CSA 086-14
- TPIC 2014

(55 % OF 23.0 P.S.F. G.S.L. PLUS 8.4 P.S.F. RAIN LOAD) EQUALS 21.0 P.S.F. SPECIFIED ROOF LIVE LOAD

CSI: TC=0.43/1.00 (A-B:1) , BC=0.18/1.00 (L-M:4) , WB=0.19/1.00 (E-J:1) , SSI=0.37/1.00 (G-O:1)

DOL LUMBER=1.00 NAIL=1.00 LS BEND=1.10 COMP=1.10 SHEAR=1.10 TENS= 1.10

COMPANION LIVE LOAD FACTOR = 1.00

TRUSS PLATE MANUFACTURER IS NOT RESPONSIBLE FOR QUALITY CONTROL IN THE TRUSS MANUFACTURING PLANT .

NAIL VALUES

PLATE	GRIP(DRY) (PSI) MAX	MIN	SHEAR (PLI) MAX	MIN	SECTION (PLI) MAX	MIN
MT20	650	371	1747	788	1987	1873

PLATE PLACEMENT TOL. = 0.250 inches

PLATE ROTATION TOL. = 5.0 Deg.

JSI GRIP= 0.89 (F) (INPUT = 0.90)
JSI METAL= 0.27 (M) (INPUT = 1.00)

JOB NAME	TRUSS NAME	QUANTITY	PLY	JOB DESC.		DRWG NO.
336335	H286P		1	TRUSS DESC.	JT 45147	E21104219

Alpa Roof Truss, Maple

Version 8.420 S Jan 21 2021 MiTek Industries, Inc. Thu Oct 14 08:54:42 2021 Page 1

ID:hd511hZTz bdeQoS817GKByhVxV-p94? gB76GZfA kmlvTaMt?10Q8Z3mPztGan0lyTZFh

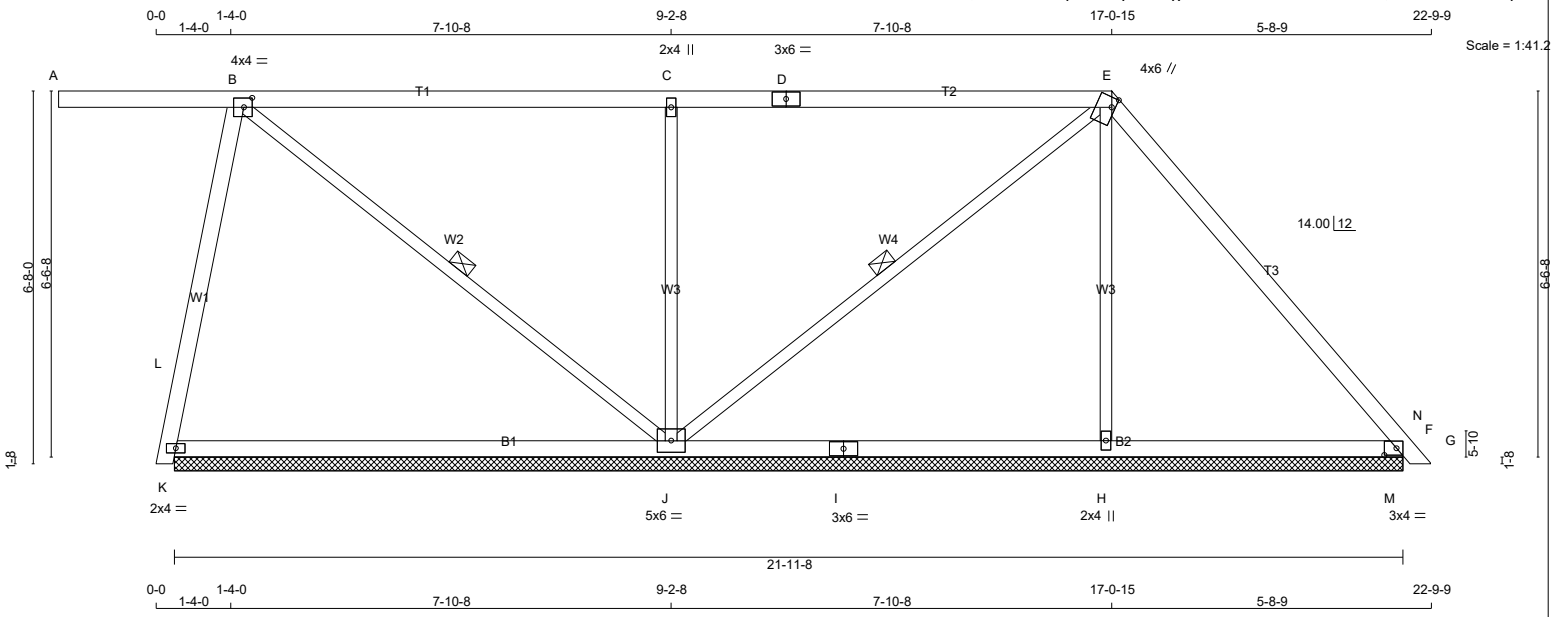

TOTAL WEIGHT = 2 X 89 = 179 lb

[M]

LUMBER

N. L. G. A. RULES

CHORDS	SIZE		LUMBER	DESCR.
A - D	2x4	DRY	No.2	SPF
D - E	2x4	DRY	No.2	SPF
E - G	2x4	DRY	No.2	SPF
K - I	2x4	DRY	No.2	SPF
I - F	2x4	DRY	No.2	SPF
ALL WEBS	2x4	DRY	No.2	SPF
EXCEPT				
B - J	2x3	DRY	No.2	SPF
J - C	2x3	DRY	No.2	SPF
J - E	2x3	DRY	No.2	SPF
H - E	2x3	DRY	No.2	SPF

DRY: SEASONED LUMBER.

PLATES (table is in inches)

JT	TYPE	PLATES	W	LEN	Y	X
B	TMWW-t	MT20	4.0	4.0	2.00	1.75
C	TMW+w	MT20	2.0	4.0		
D	TS-t	MT20	3.0	6.0		
E	TTWW+m	MT20	4.0	6.0	2.00	0.75
F	TMB1-l	MT20	3.0	4.0	1.50	2.50
H	BMW1+w	MT20	2.0	4.0		
I	BS-t	MT20	3.0	6.0		
J	BMWWW1-t	MT20	5.0	6.0		
K	BWM1-l	MT20	2.0	4.0		

LATERAL BRACE(S) SHOWN SHALL BE 2X4 SPF#2

DIMENSIONS, SUPPORTS AND LOADINGS SPECIFIED BY FABRICATOR TO BE VERIFIED BY BUILDING DESIGNER

BEARINGS

JT	FACTORED GROSS REACTION VERT	HORZ	MAXIMUM FACTORED GROSS REACTION DOWN	HORZ	UPLIFT	INPUT BRG IN-SX	REQRD BRG IN-SX
K	506	0	506	0	0	21-11-8 (10-0-0)	1-0-0
J	1050	0	1050	0	0	21-11-8 (10-0-0)	1-0-0
H	322	0	322	0	0	21-11-8 (10-0-0)	1-0-0
F	434	0	434	0	0	21-11-8 (10-0-0)	1-0-0

VALUE IN PARENTHESIS INDICATES EFFECTIVE BEARING LENGTH

UNFACTORED REACTIONS

JT	1ST LCASE COMBINED	MAX./MIN. COMPONENT REACTIONS SNOW	LIVE	PERM.LIVE	WIND	DEAD	SOIL
K	358	235 / 0	0 / 0	0 / 0	0 / 0	123 / 0	0 / 0
J	746	466 / 0	0 / 0	0 / 0	0 / 0	280 / 0	0 / 0
H	235	114 / 0	0 / 0	0 / 0	0 / 0	121 / 0	0 / 0
F	306	209 / 0	0 / 0	0 / 0	0 / 0	97 / 0	0 / 0

BEARING MATERIAL TO BE SPF NO.2 OR BETTER AT JOINT(S) K, J, H, F

BRACING

TOP CHORD TO BE SHEATHED OR MAX. PURLIN SPACING = 6.25 FT.
MAX. UNBRACED BOTTOM CHORD LENGTH = 10.00 FT OR RIGID CEILING DIRECTLY APPLIED.

MAX. UNBRACED INTERIOR CHORD LENGTH = 7.81 FT

ALL PITCH BREAKS AND PERIMETER CORNER JOINTS MUST BE LATERALLY RESTRAINED.

1 LATERAL BRACE(S) AT 1/ 2 LENGTH OF B-J, E-J.

LOADING

TOTAL LOAD CASES: (4)

CHORDS

MEMB. FR-TO	MAX. FACTORED FORCE (LBS)	FACTORED VERT. LOAD (PLF) FROM	TO	LC1	MAX CSI (LC)	MAX. UNBRAC LENGTH
A- B	0 / 0	-78.0	-78.0	0.54 (1)		10.00
B- C	-43 / 0	-78.0	-78.0	0.81 (1)		6.25
C- D	-44 / 0	-78.0	-78.0	0.81 (1)		6.25
D- E	-44 / 0	-78.0	-78.0	0.81 (1)		6.25
E- N	-238 / 0	-78.0	-78.0	0.27 (1)		6.25
N- F	-1 / 334	-78.0	-78.0	0.22 (1)		10.00
F- G	0 / 10	-78.0	-78.0	0.01 (1)		10.00
K- J	0 / 88	-18.5	-18.5	0.36 (4)		10.00
J- I	0 / 139	-18.5	-18.5	0.36 (4)		10.00
I- H	0 / 139	-18.5	-18.5	0.36 (4)		10.00
H- M	0 / 142	-18.5	-18.5	0.23 (1)		10.00
M- F	0 / 142	-18.5	-18.5	0.23 (1)		10.00

WEBS

MEMB. FR-TO	MAX. FACTORED FORCE (LBS)	MAX CSI (LC)
L- K	0 / 0	0.00 (1)
K- B	-447 / 0	0.26 (1)
B- J	-57 / 0	0.04 (1)
J- C	-761 / 0	0.53 (1)
J- E	-123 / 0	0.09 (1)
H- E	-161 / 0	0.11 (1)
M- N	-862 / 0	0.00 (1)

DESIGN CRITERIA

SPECIFIED LOADS:

TOP CH.	LL	=	21.0	PSF
	DL	=	6.0	PSF
BOT CH.	LL	=	0.0	PSF
	DL	=	7.4	PSF
TOTAL LOAD		=	34.4	PSF

SPACING = 24.0 IN. C/C

LOADING IN FLAT SECTION BASED ON A SLOPE OF 2.00/12 MINIMUM

THIS TRUSS IS DESIGNED FOR RESIDENTIAL OR SMALL BUILDING REQUIREMENTS OF PART 9, NBCC 2015

THIS DESIGN COMPLIES WITH:
- PART 9 OF BCBC 2018 , ABC 2019
- PART 9 OF OBC 2012 (2019 AMENDMENT)
- CSA 086-14
- TPIC 2014

(55 % OF 23.0 P.S.F. G.S.L. PLUS 8.4 P.S.F. RAIN LOAD) EQUALS 21.0 P.S.F. SPECIFIED ROOF LIVE LOAD

CSI: TC=0.81/1.00 (C-E:1) , BC=0.36/1.00 (H-J:4) , WB=0.53/1.00 (C-J:1) , SSI=0.67/1.00 (F-M:1)

DOL LUMBER=1.00 NAIL=1.00 LS BEND=1.10 COMP=1.10 SHEAR=1.10 TENS= 1.10

COMPANION LIVE LOAD FACTOR = 1.00

TRUSS PLATE MANUFACTURER IS NOT RESPONSIBLE FOR QUALITY CONTROL IN THE TRUSS MANUFACTURING PLANT .

NAIL VALUES

PLATE	GRIP(DRY) (PSI) MAX	MIN	SHEAR (PLI) MAX	MIN	SECTION (PLI) MAX	MIN
MT20	650	371	1747	788	1987	1873

PLATE PLACEMENT TOL. = 0.250 inches

PLATE ROTATION TOL. = 5.0 Deg.

JSI GRIP= 0.89 (E) (INPUT = 0.90)
JSI METAL= 0.33 (K) (INPUT = 1.00)

JOB NAME	TRUSS NAME	QUANTITY	PLY	JOB DESC.		DRWG NO.
336335	H287P		1	TRUSS DESC.	JT 45147	E21104220

Alpa Roof Truss, Maple

Version 8.420 S Jan 21 2021 MiTek Industries, Inc. Thu Oct 14 08:54:44 2021 Page 1

ID:hd511hZTz bdeQoS817GKByhVxV-mYClOMDNetpNQIt9sJW2SI4PuErzXbLGKZ3t5eyTZFf

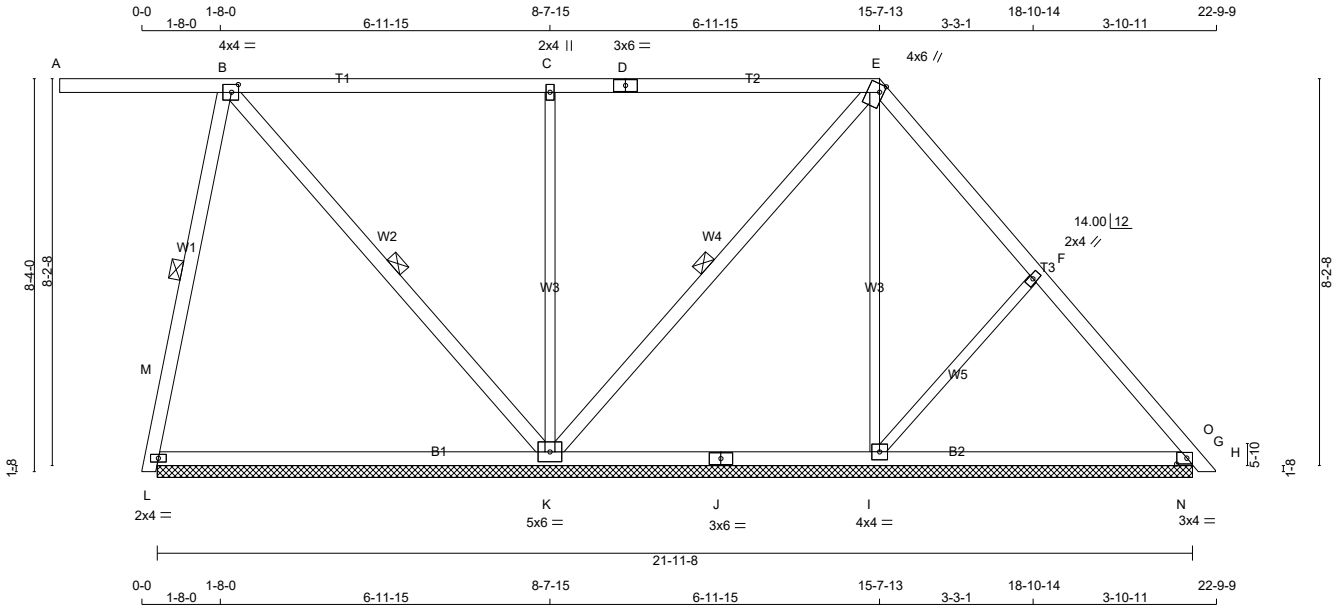

TOTAL WEIGHT = 2 X 106 = 213 lb

[M]

LUMBER

N. L. G. A. RULES

CHORDS	SIZE		LUMBER	DESCR.
A - D	2x4	DRY	No.2	SPF
D - E	2x4	DRY	No.2	SPF
E - H	2x4	DRY	No.2	SPF
L - J	2x4	DRY	No.2	SPF
J - G	2x4	DRY	No.2	SPF
ALL WEBS	2x4	DRY	No.2	SPF
EXCEPT				
K - C	2x3	DRY	No.2	SPF
I - E	2x3	DRY	No.2	SPF
I - F	2x3	DRY	No.2	SPF

DRY: SEASONED LUMBER.

PLATES (table is in inches)

JT	TYPE	PLATES	W	LEN	Y	X
B	TMWW-t	MT20	4.0	4.0	2.00	1.75
C	TMW+w	MT20	2.0	4.0		
D	TS-t	MT20	3.0	6.0		
E	TTWW+m	MT20	4.0	6.0	2.00	1.00
F	TMW+w	MT20	2.0	4.0		
G	TMB1-l	MT20	3.0	4.0	1.50	2.50
I	BMWW1-t	MT20	4.0	4.0		
J	BS-t	MT20	3.0	6.0		
K	BMWWW1-t	MT20	5.0	6.0		
L	BWM1-l	MT20	2.0	4.0		

LATERAL BRACE(S) SHOWN SHALL BE 2X4 SPF#2

DIMENSIONS, SUPPORTS AND LOADINGS SPECIFIED BY FABRICATOR TO BE VERIFIED BY BUILDING DESIGNER

BEARINGS

JT	FACTORED GROSS REACTION VERT	HORZ	MAXIMUM FACTORED GROSS REACTION DOWN	HORZ	UPLIFT	INPUT BRG IN-SX	REQRD BRG IN-SX
L	410	0	410	0	0	21-11-8 (10-0-0)	1-8
K	1053	0	1053	0	0	21-11-8 (10-0-0)	1-8
I	464	0	464	0	0	21-11-8 (10-0-0)	1-8
G	386	0	386	0	0	21-11-8 (10-0-0)	1-8

VALUE IN PARENTHESIS INDICATES EFFECTIVE BEARING LENGTH

UNFACTORED REACTIONS

JT	1ST LCASE COMBINED	MAX./MIN. COMPONENT REACTIONS SNOW	LIVE	PERM.LIVE	WIND	DEAD	SOIL
L	291	184 / 0	0 / 0	0 / 0	0 / 0	107 / 0	0 / 0
K	747	479 / 0	0 / 0	0 / 0	0 / 0	267 / 0	0 / 0
I	334	187 / 0	0 / 0	0 / 0	0 / 0	147 / 0	0 / 0
G	273	175 / 0	0 / 0	0 / 0	0 / 0	98 / 0	0 / 0

BEARING MATERIAL TO BE SPF NO.2 OR BETTER AT JOINT(S) L, K, I, G

BRACING

TOP CHORD TO BE SHEATHED OR MAX. PURLIN SPACING = 6.25 FT.
MAX. UNBRACED BOTTOM CHORD LENGTH = 10.00 FT OR RIGID CEILING DIRECTLY APPLIED.

MAX. UNBRACED INTERIOR CHORD LENGTH = 6.25 FT

ALL PITCH BREAKS AND PERIMETER CORNER JOINTS MUST BE LATERALLY RESTRAINED.

1 LATERAL BRACE(S) AT 1/ 2 LENGTH OF B-L, B-K, E-K.

LOADING

TOTAL LOAD CASES: (4)

CHORDS

MEMB. FR-TO	MAX. FACTORED FORCE (LBS)	FACTORED VERT. LOAD LC1 (PLF) FROM	TO	MAX CSI (LC)	MAX. UNBRAC LENGTH
A- B	0 / 0	-78.0	-78.0	0.66 (1)	10.00
B- C	0 / 42	-78.0	-78.0	0.64 (1)	10.00
C- D	0 / 41	-78.0	-78.0	0.64 (1)	10.00
D- E	0 / 41	-78.0	-78.0	0.64 (1)	10.00
E- F	-79 / 0	-78.0	-78.0	0.15 (1)	6.25
F- O	-241 / 0	-78.0	-78.0	0.15 (1)	6.25
O- G	-467 / 0	-78.0	-78.0	0.09 (4)	6.25
G- H	0 / 10	-78.0	-78.0	0.01 (1)	10.00
L- K	0 / 69	-18.5	-18.5	0.30 (4)	10.00
K- J	0 / 33	-18.5	-18.5	0.30 (4)	10.00
J- I	0 / 33	-18.5	-18.5	0.30 (4)	10.00
I- N	0 / 178	-18.5	-18.5	0.17 (4)	10.00
N- G	0 / 178	-18.5	-18.5	0.09 (4)	10.00

WEBS

MEMB. FR-TO	MAX. FACTORED FORCE (LBS)	MAX CSI (LC)
M- L	0 / 0	0.00 (1)
L- B	-354 / 0	0.12 (1)
B- K	-170 / 0	0.10 (1)
K- C	-675 / 0	0.89 (1)
K- E	-113 / 0	0.07 (1)
I- E	-178 / 0	0.23 (1)
I- F	-215 / 0	0.10 (1)
N- O	0 / 272	0.00 (1)

DESIGN CRITERIA

SPECIFIED LOADS:

TOP CH.	LL	=	21.0	PSF
	DL	=	6.0	PSF
BOT CH.	LL	=	0.0	PSF
	DL	=	7.4	PSF
TOTAL LOAD		=	34.4	PSF

SPACING = 24.0 IN. C/C

LOADING IN FLAT SECTION BASED ON A SLOPE OF 2.00/12 MINIMUM

THIS TRUSS IS DESIGNED FOR RESIDENTIAL OR SMALL BUILDING REQUIREMENTS OF PART 9, NBCC 2015

THIS DESIGN COMPLIES WITH:
- PART 9 OF BCBC 2018 , ABC 2019
- PART 9 OF OBC 2012 (2019 AMENDMENT)
- CSA 086-14
- TPIC 2014

(55 % OF 23.0 P.S.F. G.S.L. PLUS 8.4 P.S.F. RAIN LOAD) EQUALS 21.0 P.S.F. SPECIFIED ROOF LIVE LOAD

CSI: TC=0.66/1.00 (A-B:1) , BC=0.30/1.00 (K-L:4) , WB=0.89/1.00 (C-K:1) , SSI=0.26/1.00 (C-E:1)

DOL LUMBER=1.00 NAIL=1.00 LS BEND=1.10 COMP=1.10 SHEAR=1.10 TENS= 1.10

COMPANION LIVE LOAD FACTOR = 1.00

TRUSS PLATE MANUFACTURER IS NOT RESPONSIBLE FOR QUALITY CONTROL IN THE TRUSS MANUFACTURING PLANT .

NAIL VALUES

PLATE	GRIP(DRY) (PSI) MAX	MIN	SHEAR (PLI) MAX	MIN	SECTION (PLI) MAX	MIN
MT20	650	371	1747	788	1987	1873

PLATE PLACEMENT TOL. = 0.250 inches

PLATE ROTATION TOL. = 5.0 Deg.

JSI GRIP= 0.55 (E) (INPUT = 0.90)
JSI METAL= 0.26 (L) (INPUT = 1.00)

JOB NAME	TRUSS NAME	QUANTITY	PLY	JOB DESC.		DRWG NO.
336335	H291		2	TRUSS DESC.	JT 45147	E21104221

Alpha Roof Truss, Maple

Version 8.420 S Jan 21 2021 MiTek Industries, Inc. Thu Oct 14 08:54:46 2021 Page 1

ID:hd511hZTz_bdeQoS817GKByhVxV-ixKVp1EdAU35fc1Y_kYWXj9pQ2VE?W0ZntY_9WyTZFd

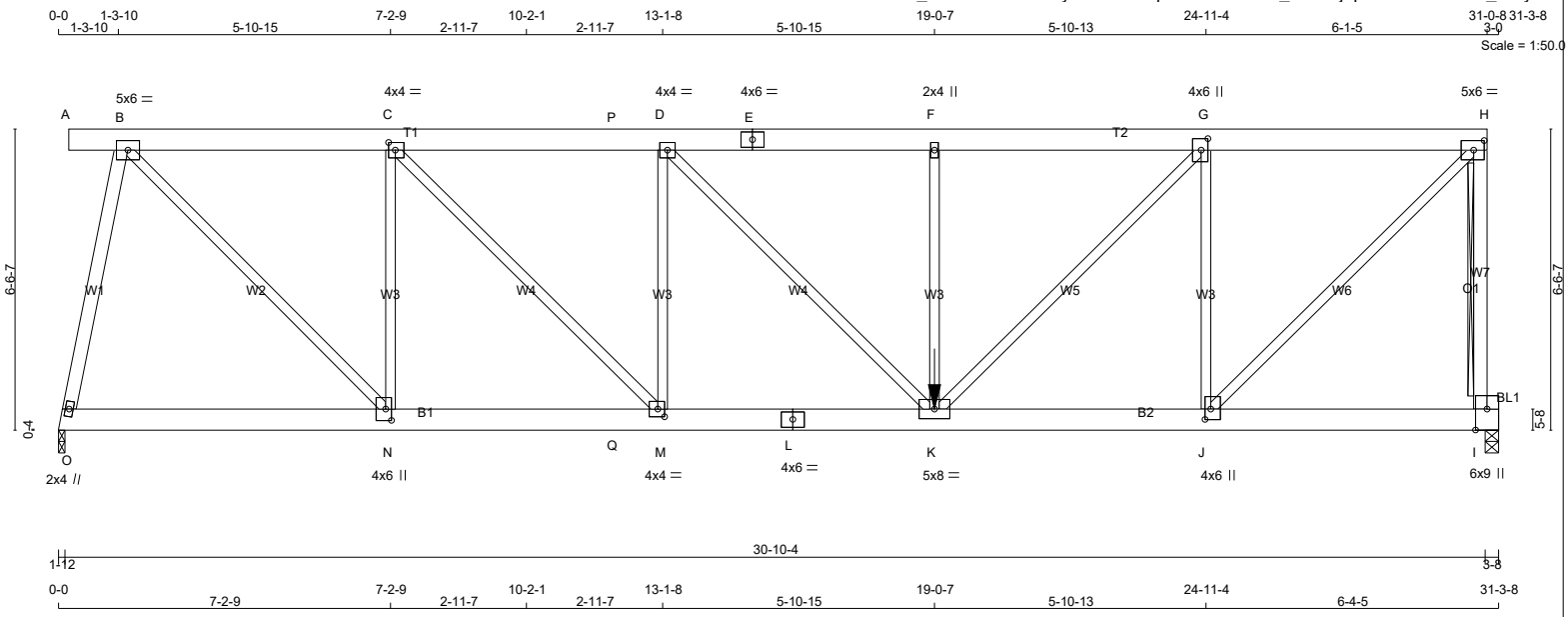

TOTAL WEIGHT = 2 X 175 = 351 lb

[M]

LUMBER

N. L. G. A. RULES

CHORDS	SIZE		LUMBER	DESCR.
A - E	2x6	DRY	No.2	SPF
E - H	2x6	DRY	No.2	SPF
I - H	2x4	DRY	No.2	SPF
O - L	2x6	DRY	No.2	SPF
L - I	2x6	DRY	No.2	SPF

BEARING BLOCKS

BL1	2x4	DRY	No.2	SPF

ALL WEBS	2x3	DRY	No.2	SPF
EXCEPT				
O - B	2x4	DRY	No.2	SPF

DRY: SEASONED LUMBER.

DESIGN CONSISTS OF 2 TRUSSES BUILT SEPARATELY THEN FASTENED TOGETHER AS FOLLOWS:

CHORDS	#ROWS	SURFACE SPACING (IN)	LOAD(PLF)
TOP CHORDS : (0.122"X3") SPIRAL NAILS			
A- E	2	12	SIDE(37.8)
E- H	2	12	TOP
H- I	1	12	TOP
BOTTOM CHORDS : (0.122"X3") SPIRAL NAILS			
O- L	2	12	SIDE(58.8)
L- I	2	12	SIDE(137.1)
WEBS : (0.122"X3") SPIRAL NAILS			
F- K	1	6	SIDE(229.1)
2x3	1	6	
2x4	1	6	

NAILS TO BE DRIVEN FROM ONE SIDE ONLY.

GIRDER NAILING ASSUMES NAILED HANGERS ARE FASTENED WITH MIN. 3-0 INCH NAILS.

TOP - COMPONENTS ARE LOADED FROM THE TOP AND MUST BE PLACED ON TOP EDGE OF ALL PLIES FOR THE LOAD TO BE TRANSFERRED TO EACH PLY.

SIDE - PLF SHOWN IS THE EQUIVALENT UDL APPLIED TO ONE SIDE THAT THE CORRESPONDING NAILING PATTERN SHALL BE CAPABLE OF TRANSFERING. REMAINING PLF MUST BE APPLIED ON THE OPPOSITE SIDE OR ON THE TOP.

LATERAL BRACE(S) SHOWN SHALL BE 2X4 SPF#2

DIMENSIONS, SUPPORTS AND LOADINGS SPECIFIED BY FABRICATOR TO BE VERIFIED BY BUILDING DESIGNER

BEARINGS

JT	FACTORED GROSS REACTION VERT	HORZ	MAXIMUM FACTORED GROSS REACTION DOWN	HORZ	UPLIFT	INPUT BRG IN-SX	REQRD BRG IN-SX
O	3217	0	3217	0	0	1-12	1-12
I	2944	0	2944	0	0	3-8	2-8

UNFACTORED REACTIONS

JT	1ST LCASE COMBINED	MAX./MIN. COMPONENT REACTIONS SNOW	LIVE	PERM.LIVE	WIND	DEAD	SOIL
O	2296	1391 / 0	0 / 0	0 / 0	0 / 0	905 / 0	0 / 0
I	2098	1282 / 0	0 / 0	0 / 0	0 / 0	816 / 0	0 / 0

BEARING MATERIAL TO BE SPF NO.2 OR BETTER AT JOINT(S) O, I

BRACING

TOP CHORD TO BE SHEATHED OR MAX. PURLIN SPACING = 5.20 FT.
MAX. UNBRACED BOTTOM CHORD LENGTH = 6.25 FT OR RIGID CEILING DIRECTLY APPLIED.

ALL PITCH BREAKS AND PERIMETER CORNER JOINTS MUST BE LATERALLY RESTRAINED.

2x4 DRY SPF No.2 T-BRACE AT H-I

FASTEN T AND I-BRACES TO NARROW EDGE OF WEB WITH ONE ROW PER PLY OF 3" COMMON WIRE NAILS @ 6" O.C. WITH 3" MINIMUM END DISTANCE. BRACE MUST COVER 90% OF WEB LENGTH.

END VERTICAL(S) MUST BE SHEATHED OR HAVE BRACES AS INDICATED IN THE MAX. UNBRACED LENGTH COLUMN OF THE TABLE BELOW

LOADING

TOTAL LOAD CASES: (4)

CHORDS

MEMB. FR-TO	MAX. FACTORED FORCE (LBS)	FACTORED VERT. LOAD (PLF) FROM	TO	LC1	MAX CSI (LC)	MAX. UNBRAC LENGTH
A- B	0 / 0	-78.0	-78.0	0.02 (1)	10.00	
B- C	-3135 / 0	-153.5	-153.5	0.21 (1)	5.99	
C- P	-4495 / 0	-153.5	-153.5	0.23 (1)	5.20	
P- D	-4495 / 0	-78.0	-78.0	0.23 (1)	5.20	
D- E	-4644 / 0	-78.0	-78.0	0.14 (1)	5.25	
E- F	-4644 / 0	-78.0	-78.0	0.14 (1)	5.25	
F- G	-4644 / 0	-78.0	-78.0	0.14 (1)	5.25	
G- H	-2639 / 0	-78.0	-78.0	0.11 (1)	6.25	
I- H	-2891 / 0	0.0	0.0	0.40 (1)	7.81	
O- N	0 / 598	-36.4	-36.4	0.12 (4)	10.00	
N- Q	0 / 3135	-36.4	-36.4	0.29 (1)	10.00	
Q- M	0 / 3135	-136.1	-136.1	0.29 (1)	10.00	
M- L	0 / 4495	-136.1	-136.1	0.44 (1)	10.00	
L- K	0 / 4495	-136.1	-136.1	0.44 (1)	10.00	
K- J	0 / 2639	-18.5	-18.5	0.22 (1)	10.00	
J- I	-69 / 0	-18.5	-18.5	0.04 (4)	6.25	

WEBS

MEMB. FR-TO	MAX. FACTORED FORCE (LBS)	MAX CSI (LC)
O- B	-3163 / 0	0.75 (1)
K- F	-405 / 0	0.13 (1)
K- G	0 / 2880	0.36 (1)
J- G	-2606 / 0	0.81 (1)
J- H	0 / 3821	0.47 (1)
B- N	0 / 3672	0.45 (1)
N- C	-2419 / 0	0.75 (1)
C- M	0 / 1951	0.24 (1)
M- D	-752 / 0	0.23 (1)
D- K	0 / 214	0.03 (1)

FACTORED CONCENTRATED LOADS (LBS)

JT	LOC.	LC1	MAX-	MAX+	FACE	DIR.	TYPE	HEEL	CONN.
K	19-0-7	-1355	-1355	---	FRONT	VERT	TOTAL	---	C1

CONNECTION REQUIREMENTS

1) **C1:** A SUITABLE HANGER/MECHANICAL CONNECTION IS REQUIRED.

DESIGN CRITERIA

*** SPECIAL LOADS ANALYSIS ***
GEOMETRY AND/OR BASIC LOADS CHANGED BY USER.
LOADS WERE DERIVED FROM USER INPUT
NO FURTHER MODIFICATIONS WERE MADE

SPECIFIED LOADS:

TOP	CH.	LL	=	21.0	PSF
		DL	=	6.0	PSF
BOT	CH.	LL	=	0.0	PSF
		DL	=	7.4	PSF
TOTAL	LOAD		=	34.4	PSF

SPACING = 24.0 IN. C/C

LOADING IN FLAT SECTION BASED ON A SLOPE OF 2.00/12 MINIMUM

GIRDER TYPE: CPrimeHip
SIDE SETBACK = 0-0
END SETBACK = 5-10-8
END WALL WIDTH = 0-0
CORNER FRAMING TYPE: CONVENTIONAL
END JACK TYPE: CONVENTIONAL
APPLIED TO FRONT SIDE
- ADDT'L LOADS BASED ON 55 % OF GSL.
LOADS APPLIED TO FIRST 12-1-0 OF SPAN MEASURED FROM THE LEFT.

GIRDER TYPE: CStdGirder
START DISTANCE = 12-1-0
START SPAN CARRIED = 6-10-8
END DISTANCE = 19-0-7
END SPAN CARRIED = 6-10-8
END WALL WIDTH = 0-0
APPLIED TO FRONT SIDE OF BOTTOM CHORD.
- ADDT'L LOADS BASED ON 55 % OF GSL.

*** NON STANDARD GIRDER ***
ADDT'L USER-DEFINED LOADS APPLIED TO ALL LOAD CASES.

THIS TRUSS IS DESIGNED FOR RESIDENTIAL OR SMALL BUILDING REQUIREMENTS OF PART 9, NBCC 2015

THIS DESIGN COMPLIES WITH:
- PART 9 OF BCBC 2018 , ABC 2019
- PART 9 OF OBC 2012 (2019 AMENDMENT)
- CSA 086-14
- TPIC 2014

(55 % OF 23.0 P.S.F. G.S.L. PLUS 8.4 P.S.F. RAIN LOAD) EQUALS 21.0 P.S.F. SPECIFIED ROOF LIVE LOAD

ALLOWABLE DEFL.(LL)= L/360 (1.02")
CALCULATED VERT. DEFL.(LL) = L/ 999 (0.10")
ALLOWABLE DEFL.(TL)= L/360 (1.02")
CALCULATED VERT. DEFL.(TL) = L/ 999 (0.20")

CSI: TC=0.40/1.00 (H-I:1) , BC=0.44/1.00 (K-M:1) , WB=0.81/1.00 (G-J:1) , SSI=0.18/1.00 (B-C:1)

DOL LUMBER=1.00 NAIL=1.00 LS BEND=1.00 COMP=1.00 SHEAR=1.00 TENS= 1.00

COMPANION LIVE LOAD FACTOR = 1.00

CONTINUED ON PAGE 2

PLATES (table is in inches)

JT	TYPE	PLATES	W	LEN	Y	X
B	TMWW-t	MT20	5.0	6.0		
C	TMWW-t	MT20	4.0	4.0	2.00	1.75
D	TMWW-t	MT20	4.0	4.0		
E	TS-t	MT20	4.0	6.0		
F	TMW+w	MT20	2.0	4.0		
G	TMWW+t	MT20	4.0	6.0	3.00	1.75
H	TMVW-t	MT20	5.0	6.0	2.50	2.75
I	BMVK1+p	MT20	6.0	9.0	Edge	3.00
J	BMWW+t	MT20	4.0	6.0	2.75	1.50
K	BMWWW-t	MT20	5.0	8.0		
L	BS-t	MT20	4.0	6.0		
M	BMWW-t	MT20	4.0	4.0	2.00	1.75
N	BMWW+t	MT20	4.0	6.0	3.00	1.50
O	BMW1+w	MT20	2.0	4.0		

Edge - INDICATES REFERENCE CORNER OF PLATE TOUCHES EDGE OF CHORD.

TRUSS PLATE MANUFACTURER IS NOT RESPONSIBLE FOR QUALITY CONTROL IN THE TRUSS MANUFACTURING PLANT .

NAIL VALUES

PLATE	GRIP(DRY) (PSI) MAX	MIN	SHEAR (PLI) MAX	MIN	SECTION (PLI) MAX	MIN
MT20	650	371	1747	788	1987	1873

PLATE PLACEMENT TOL. = 0.250 inches

PLATE ROTATION TOL. = 5.0 Deg.

JSI GRIP= 0.88 (N) (INPUT = 0.90)
JSI METAL= 0.77 (L) (INPUT = 1.00)

LATERAL BRACE(S) SHOWN SHALL BE 2X4 SPF#2

JOB NAME	TRUSS NAME	QUANTITY	PLY	JOB DESC.		DRWG NO.
336335	H291T		2	TRUSS DESC.	JT 45147	E21104222

Alpa Roof Truss, Maple

Version 8.420 S Jan 21 2021 MiTek Industries, Inc. Thu Oct 14 08:54:48 2021 Page 1

ID:hd511hZTz bdeQoS817GKByhVxV-eJSGEjGui6JpuvBw59a c8F8Ar8LTPErFB15EPyTZFb

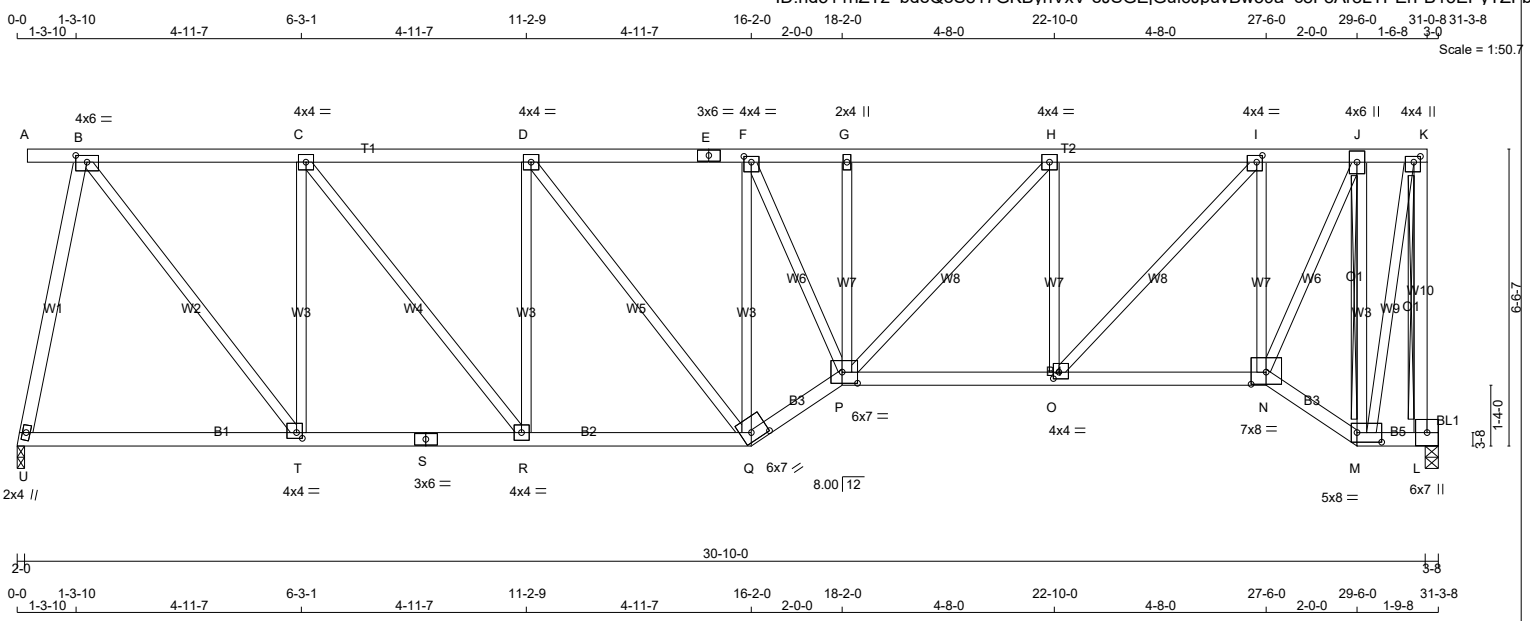

TOTAL WEIGHT = 2 X 159 = 318 lb

[M]

LUMBER

N. L. G. A. RULES

CHORDS	SIZE		LUMBER	DESCR.
A - E	2x4	DRY	No.2	SPF
E - K	2x4	DRY	No.2	SPF
L - K	2x4	DRY	No.2	SPF
U - S	2x4	DRY	No.2	SPF
S - Q	2x4	DRY	No.2	SPF
Q - P	2x4	DRY	No.2	SPF
P - N	2x4	DRY	No.2	SPF
N - M	2x4	DRY	No.2	SPF
M - L	2x4	DRY	No.2	SPF
BEARING BLOCKS				
BL1	2x4	DRY	No.2	SPF
ALL WEBS EXCEPT	2x3	DRY	No.2	SPF
U - B	2x4	DRY	No.2	SPF

DRY: SEASONED LUMBER.

DESIGN CONSISTS OF 2 TRUSSES BUILT SEPARATELY THEN FASTENED TOGETHER AS FOLLOWS:

CHORDS	#ROWS	SURFACE SPACING (IN)	LOAD(PLF)
TOP CHORDS : (0.122"X3") SPIRAL NAILS			
A- E	1	12	SIDE(37.8)
E- K	1	12	SIDE(37.8)
K- L	1	12	TOP
BOTTOM CHORDS : (0.122"X3") SPIRAL NAILS			
U- S	1	12	SIDE(10.0)
S- Q	1	12	SIDE(10.0)
Q- P	1	12	SIDE(38.9)
P- N	1	12	SIDE(46.7)
N- M	1	12	SIDE(38.9)
M- L	1	12	SIDE(10.0)
WEBS : (0.122"X3") SPIRAL NAILS			
2x3	1	6	
2x4	1	6	

NAILS TO BE DRIVEN FROM ONE SIDE ONLY.

TOP - COMPONENTS ARE LOADED FROM THE TOP AND MUST BE PLACED ON TOP EDGE OF ALL PLIES FOR THE LOAD TO BE TRANSFERRED TO EACH PLY.

LATERAL BRACE(S) SHOWN SHALL BE 2X4 SPF#2

LICENSED PROFESSIONAL ENGINEER
Y. WIDYA
100225448
10/14/2021
PROVINCE OF ONTARIO

DIMENSIONS, SUPPORTS AND LOADINGS SPECIFIED BY FABRICATOR TO BE VERIFIED BY BUILDING DESIGNER

BEARINGS

JT	FACTORED GROSS REACTION VERT	HORZ	MAXIMUM FACTORED GROSS REACTION DOWN	HORZ	UPLIFT	INPUT BRG IN-SX	REQRD BRG IN-SX
U	2816	0	2816	0	0	2-0	1-8
L	2925	0	2925	0	0	3-8	2-8

UNFACTORED REACTIONS

JT	1ST LCASE COMBINED	MAX./MIN. COMPONENT REACTIONS SNOW	LIVE	PERM.LIVE	WIND	DEAD	SOIL
U	2010	1215 / 0	0 / 0	0 / 0	0 / 0	795 / 0	0 / 0
L	2086	1274 / 0	0 / 0	0 / 0	0 / 0	811 / 0	0 / 0

BEARING MATERIAL TO BE SPF NO.2 OR BETTER AT JOINT(S) U, L

BRACING

TOP CHORD TO BE SHEATHED OR MAX. PURLIN SPACING = 4.35 FT.
MAX. UNBRACED BOTTOM CHORD LENGTH = 6.25 FT OR RIGID CEILING DIRECTLY APPLIED.

ALL PITCH BREAKS AND PERIMETER CORNER JOINTS MUST BE LATERALLY RESTRAINED.

2x4 DRY SPF No.2 T-BRACE AT K-L, J-M

FASTEN T AND I-BRACES TO NARROW EDGE OF WEB WITH ONE ROW PER PLY OF 3" COMMON WIRE NAILS @ 6" O.C. WITH 3" MINIMUM END DISTANCE. BRACE MUST COVER 90% OF WEB LENGTH.

END VERTICAL(S) MUST BE SHEATHED OR HAVE BRACES AS INDICATED IN THE MAX. UNBRACED LENGTH COLUMN OF THE TABLE BELOW

LOADING

TOTAL LOAD CASES: (4)

CHORDS

MEMB. FR-TO	MAX. FACTORED FORCE (LBS)	FACTORED VERT. LOAD (PLF) FROM	TO	LC1	MAX CSI (LC)	MAX. UNBRAC LENGTH
A- B	0 / 0	-78.0	-78.0	0.04 (1)	10.00	
B- C	-2341 / 0	-153.5	-153.5	0.31 (1)	5.48	
C- D	-3347 / 0	-153.5	-153.5	0.35 (1)	4.73	
D- E	-3611 / 0	-153.5	-153.5	0.31 (1)	4.64	
E- F	-3611 / 0	-153.5	-153.5	0.31 (1)	4.64	
F- G	-4425 / 0	-78.0	-78.0	0.23 (1)	4.35	
G- H	-4428 / 0	-78.0	-78.0	0.21 (1)	4.39	
H- I	-3606 / 0	-78.0	-78.0	0.18 (1)	4.80	
I- J	-1806 / 0	-78.0	-78.0	0.10 (1)	6.25	
J- K	-603 / 0	-153.5	-153.5	0.09 (1)	6.25	
L- K	-2900 / 0	0.0	0.0	0.45 (1)	7.81	
U- T	0 / 532	-36.4	-36.4	0.18 (4)	10.00	
T- S	0 / 2341	-36.4	-36.4	0.30 (1)	10.00	
S- R	0 / 2341	-36.4	-36.4	0.30 (1)	10.00	
R- Q	0 / 3347	-36.4	-36.4	0.36 (1)	10.00	
Q- P	0 / 4289	-112.0	-112.0	0.42 (1)	10.00	
P- O	0 / 3606	-112.0	-112.0	0.53 (1)	10.00	
O- N	0 / 1853	-112.0	-112.0	0.37 (1)	10.00	
N- M	0 / 665	-112.0	-112.0	0.10 (1)	10.00	
M- L	-68 / 0	-36.4	-36.4	0.01 (4)	6.25	

WEBS

MEMB. FR-TO	MAX. FACTORED FORCE (LBS)	MAX CSI (LC)
U- B	-2777 / 0	0.76 (1)
B- T	0 / 2955	0.37 (1)
T- C	-2104 / 0	0.75 (1)
C- R	0 / 1618	0.20 (1)
R- D	-1097 / 0	0.39 (1)
D- Q	0 / 425	0.05 (1)
Q- F	-2512 / 0	0.89 (1)
F- P	0 / 2168	0.27 (1)
P- G	-149 / 0	0.03 (1)
P- H	0 / 1191	0.15 (1)
O- H	-1263 / 0	0.26 (1)
O- I	0 / 2576	0.32 (1)
N- I	-2227 / 0	0.46 (1)
N- J	0 / 3172	0.39 (1)
M- J	-2941 / 0	0.56 (1)
M- K	0 / 2790	0.35 (1)

DESIGN CRITERIA

SPECIFIED LOADS:

TOP CH.	LL	=	21.0	PSF
	DL	=	6.0	PSF
BOT CH.	LL	=	0.0	PSF
	DL	=	7.4	PSF
TOTAL LOAD		=	34.4	PSF

SPACING = 24.0 IN. C/C

LOADING IN FLAT SECTION BASED ON A SLOPE OF 2.00/12 MINIMUM

GIRDER TYPE: CPrimeHip
SIDE SETBACK = 0-0
END SETBACK = 5-10-8
END WALL WIDTH = 0-0
CORNER FRAMING TYPE: CONVENTIONAL
END JACK TYPE: CONVENTIONAL
APPLIED TO FRONT SIDE
- ADDT'L LOADS BASED ON 55 % OF GSL.
LOADS APPLIED TO FIRST 16-2-0 OF SPAN MEASURED FROM THE LEFT.

GIRDER TYPE: CStdGirder
START DISTANCE = 16-2-0
START SPAN CARRIED = 5-10-8
END DISTANCE = 29-6-0
END SPAN CARRIED = 5-10-8
END WALL WIDTH = 0-0
APPLIED TO FRONT SIDE OF BOTTOM CHORD.
- ADDT'L LOADS BASED ON 55 % OF GSL.

GIRDER TYPE: CPrimeHip
SIDE SETBACK = 0-0
END SETBACK = 5-10-8
END WALL WIDTH = 0-0
CORNER FRAMING TYPE: CONVENTIONAL
END JACK TYPE: CONVENTIONAL
APPLIED TO FRONT SIDE
- ADDT'L LOADS BASED ON 55 % OF GSL.
LOADS APPLIED TO FIRST 1-9-8 OF SPAN MEASURED FROM THE RIGHT.

THIS TRUSS IS DESIGNED FOR RESIDENTIAL OR SMALL BUILDING REQUIREMENTS OF PART 9, NBCC 2015

THIS DESIGN COMPLIES WITH:
- PART 9 OF BCBC 2018 , ABC 2019
- PART 9 OF OBC 2012 (2019 AMENDMENT)
- CSA 086-14
- TPIC 2014

(55 % OF 23.0 P.S.F. G.S.L. PLUS 8.4 P.S.F. RAIN LOAD) EQUALS 21.0 P.S.F. SPECIFIED ROOF LIVE LOAD

ALLOWABLE DEFL.(LL)= L/360 (1.02")
CALCULATED VERT. DEFL.(LL) = L/ 999 (0.13")
ALLOWABLE DEFL.(TL)= L/360 (1.02")
CALCULATED VERT. DEFL.(TL) = L/ 999 (0.26")

CSI: TC=0.45/1.00 (K-L:1) , BC=0.53/1.00 (O-P:1) , WB=0.89/1.00 (F-Q:1) , SSI=0.19/1.00 (B-C:1)

DOL LUMBER=1.00 NAIL=1.00 LS BEND=1.00 COMP=1.00 SHEAR=1.00 TENS= 1.00

COMPANION LIVE LOAD FACTOR = 1.00

CONTINUED ON PAGE 2

JOB NAME	TRUSS NAME	QUANTITY	PLY	JOB DESC.	DRWG NO.
336335	H291T		2	TRUSS DESC. JT 45147	E21104222(2)

PLATES (table is in inches)

JT	TYPE	PLATES	W	LEN	Y	X
B	TMWW-t	MT20	4.0	6.0	1.75	3.00
C, D, H						
C	TMWW-t	MT20	4.0	4.0		
E	TS-t	MT20	3.0	6.0		
F	TMWW-t	MT20	4.0	4.0	1.50	2.00
G	TMW+w	MT20	2.0	4.0		
I	TMWW-t	MT20	4.0	4.0	1.75	1.50
J	TMWW+t	MT20	4.0	6.0		
K	TMVW+p	MT20	4.0	4.0	1.50	1.75
L	BMVK1+p	MT20	6.0	7.0		
M	BBWW-l	MT20	5.0	8.0	2.50	6.50
N	BBWW-l	MT20	7.0	8.0	3.25	4.00
O	BMWW-t	MT20	4.0	4.0	1.75	1.50
P	BBWWW-p	MT20	6.0	7.0	3.00	4.00
Q	BBWW-h	MT20	6.0	7.0	2.25	4.25
R	BMWW-t	MT20	4.0	4.0		
S	BS-t	MT20	3.0	6.0		
T	BMWW-t	MT20	4.0	4.0	1.50	1.50
U	BMW1+w	MT20	2.0	4.0		

TRUSS PLATE MANUFACTURER IS NOT RESPONSIBLE FOR QUALITY CONTROL IN THE TRUSS MANUFACTURING PLANT .

NAIL VALUES

PLATE	GRIP(DRY) (PSI)		SHEAR (PLI)		SECTION (PLI)	
	MAX	MIN	MAX	MIN	MAX	MIN
MT20	650	371	1747	788	1987	1873

PLATE PLACEMENT TOL. = 0.250 inches

PLATE ROTATION TOL. = 5.0 Deg.

JSI GRIP= 0.89 (J) (INPUT = 0.90)
JSI METAL= 0.49 (P) (INPUT = 1.00)

LATERAL BRACE(S) SHOWN SHALL BE 2X4 SPF#2

JOB NAME	TRUSS NAME	QUANTITY	PLY	JOB DESC.		DRWG NO.
336335	H292		1	TRUSS DESC.	JT 45147	E21104223

Alpa Roof Truss, Maple

Version 8.420 S Jan 21 2021 MiTek Industries, Inc. Thu Oct 14 08:54:49 2021 Page 1

ID:hd511hZTz_bdeQoS817GKByhVxV-6W?eS3HWTPRgW3m7ft5D9MnDgFVlCvd?UrnemryTZFa

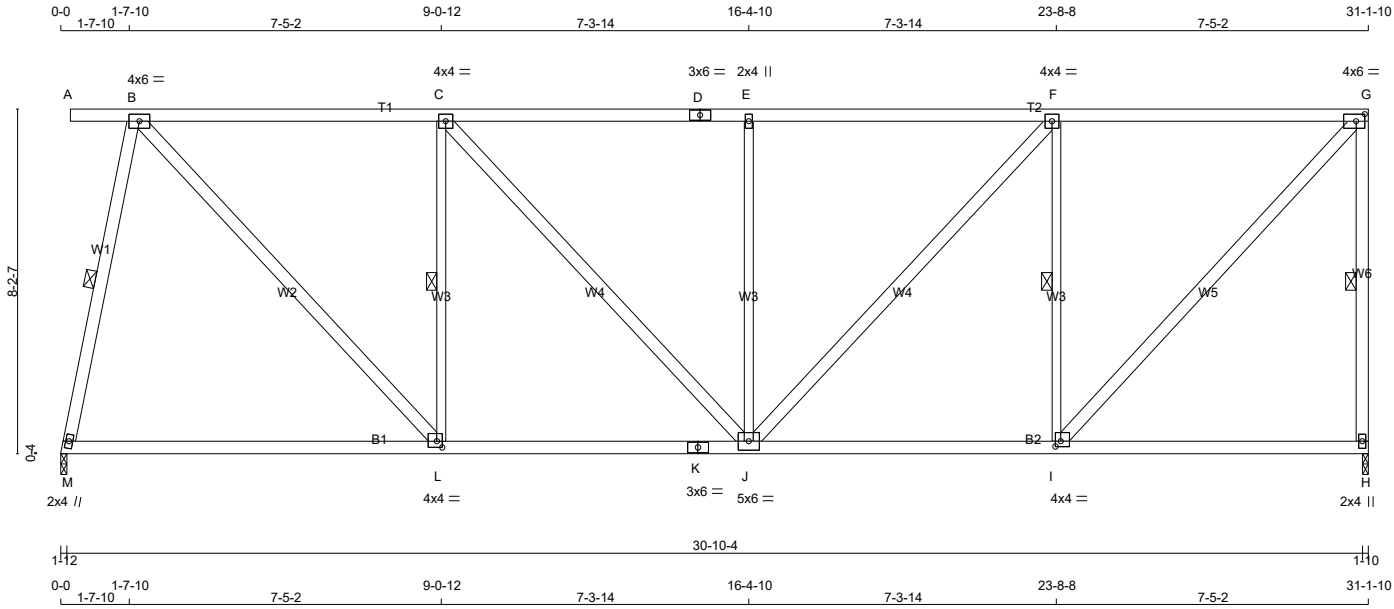

TOTAL WEIGHT = 154 lb

LUMBER

N. L. G. A. RULES

CHORDS	SIZE		LUMBER	DESCR.
A - D	2x4	DRY	No.2	SPF
D - G	2x4	DRY	No.2	SPF
H - G	2x4	DRY	No.2	SPF
M - K	2x4	DRY	No.2	SPF
K - H	2x4	DRY	No.2	SPF
ALL WEBS	2x4	DRY	No.2	SPF
EXCEPT				
L - C	2x3	DRY	No.2	SPF
J - E	2x3	DRY	No.2	SPF
I - F	2x3	DRY	No.2	SPF

DRY: SEASONED LUMBER.

PLATES (table is in inches)

JT	TYPE	PLATES	W	LEN	Y	X
B	TMWW-t	MT20	4.0	6.0		
C	TMWW-t	MT20	4.0	4.0		
D	TS-t	MT20	3.0	6.0		
E	TMW+w	MT20	2.0	4.0		
F	TMWW-t	MT20	4.0	4.0		
G	TMVW-t	MT20	4.0	6.0	2.00	2.50
H	BMV1+p	MT20	2.0	4.0		
I	BMWW-t	MT20	4.0	4.0	1.50	1.50
J	BMWWW-t	MT20	5.0	6.0		
K	BS-t	MT20	3.0	6.0		
L	BMWW-t	MT20	4.0	4.0	1.75	1.50
M	BMW1+w	MT20	2.0	4.0		

LATERAL BRACE(S) SHOWN SHALL BE 2X4 SPF#2

DIMENSIONS, SUPPORTS AND LOADINGS SPECIFIED BY FABRICATOR TO BE VERIFIED BY BUILDING DESIGNER

BEARINGS

JT	FACTORED GROSS REACTION VERT	HORZ	MAXIMUM FACTORED GROSS REACTION DOWN	HORZ	UPLIFT	INPUT BRG IN-SX	REQRD BRG IN-SX
M	1487	0	1487	0	0	1-12	1-10
H	1495	0	1495	0	0	1-10	1-10

UNFACTORED REACTIONS

JT	1ST LCASE COMBINED	MAX./MIN. COMPONENT REACTIONS SNOW	LIVE	PERM.LIVE	WIND	DEAD	SOIL
M	1060	647 / 0	0 / 0	0 / 0	0 / 0	414 / 0	0 / 0
H	1066	651 / 0	0 / 0	0 / 0	0 / 0	415 / 0	0 / 0

BEARING MATERIAL TO BE SPF NO.2 OR BETTER AT JOINT(S) M, H

BRACING

TOP CHORD TO BE SHEATHED OR MAX. PURLIN SPACING = 4.27 FT.
MAX. UNBRACED BOTTOM CHORD LENGTH = 10.00 FT OR RIGID CEILING DIRECTLY APPLIED.

ALL PITCH BREAKS AND PERIMETER CORNER JOINTS MUST BE LATERALLY RESTRAINED.

1 LATERAL BRACE(S) AT 1/ 2 LENGTH OF B-M, G-H, C-L, F-I.

END VERTICAL(S) MUST BE SHEATHED OR HAVE BRACES AS INDICATED IN THE MAX. UNBRACED LENGTH COLUMN OF THE TABLE BELOW

LOADING

TOTAL LOAD CASES: (4)

CHORDS

MEMB. FR-TO	MAX. FACTORED FORCE (LBS)	FACTORED VERT. LOAD (PLF) FROM	TO	LC1 CSI (LC)	MAX. UNBRAC LENGTH
A- B	0 / 0	-78.0	-78.0	0.12 (1)	10.00
B- C	-1274 / 0	-78.0	-78.0	0.73 (1)	4.64
C- D	-1504 / 0	-78.0	-78.0	0.77 (1)	4.31
D- E	-1504 / 0	-78.0	-78.0	0.77 (1)	4.31
E- F	-1504 / 0	-78.0	-78.0	0.78 (1)	4.27
F- G	-1138 / 0	-78.0	-78.0	0.73 (1)	4.82
H- G	-1441 / 0	0.0	0.0	0.44 (1)	5.44
M- L	0 / 279	-18.5	-18.5	0.35 (4)	10.00
L- K	0 / 1274	-18.5	-18.5	0.45 (4)	10.00
K- J	0 / 1274	-18.5	-18.5	0.45 (4)	10.00
J- I	0 / 1138	-18.5	-18.5	0.36 (4)	10.00
I- H	0 / 0	-18.5	-18.5	0.26 (4)	10.00

WEBS

MEMB. FR-TO	MAX. FACTORED FORCE (LBS)	MAX CSI (LC)
M- B	-1448 / 0	0.47 (1)
B- L	0 / 1466	0.24 (1)
L- C	-900 / 0	0.38 (1)
C- J	0 / 339	0.05 (1)
J- E	-529 / 0	0.69 (1)
J- F	0 / 540	0.09 (1)
I- F	-1053 / 0	0.45 (1)
I- G	0 / 1662	0.27 (1)

[M]

DESIGN CRITERIA

SPECIFIED LOADS:

TOP CH.	LL	=	21.0	PSF
	DL	=	6.0	PSF
BOT CH.	LL	=	0.0	PSF
	DL	=	7.4	PSF
TOTAL LOAD		=	34.4	PSF

SPACING = 24.0 IN. C/C

LOADING IN FLAT SECTION BASED ON A SLOPE OF 2.00/12 MINIMUM

THIS TRUSS IS DESIGNED FOR RESIDENTIAL OR SMALL BUILDING REQUIREMENTS OF PART 9, NBCC 2015

THIS DESIGN COMPLIES WITH:
- PART 9 OF BCBC 2018 , ABC 2019
- PART 9 OF OBC 2012 (2019 AMENDMENT)
- CSA 086-14
- TPIC 2014

(55 % OF 23.0 P.S.F. G.S.L. PLUS 8.4 P.S.F. RAIN LOAD) EQUALS 21.0 P.S.F. SPECIFIED ROOF LIVE LOAD

ALLOWABLE DEFL.(LL)= L/360 (1.03")
CALCULATED VERT. DEFL.(LL) = L/ 999 (0.07")
ALLOWABLE DEFL.(TL)= L/360 (1.03")
CALCULATED VERT. DEFL.(TL) = L/ 999 (0.20")

CSI: TC=0.78/1.00 (E-F:1) , BC=0.45/1.00 (J-L:4) , WB=0.69/1.00 (E-J:1) , SSI=0.27/1.00 (F-G:1)

DOL LUMBER=1.00 NAIL=1.00 LS BEND=1.10 COMP=1.10 SHEAR=1.10 TENS= 1.10

COMPANION LIVE LOAD FACTOR = 1.00

TRUSS PLATE MANUFACTURER IS NOT RESPONSIBLE FOR QUALITY CONTROL IN THE TRUSS MANUFACTURING PLANT .

NAIL VALUES

PLATE	GRIP(DRY) (PSI) MAX	MIN	SHEAR (PLI) MAX	MIN	SECTION (PLI) MAX	MIN
MT20	650	371	1747	788	1987	1873

PLATE PLACEMENT TOL. = 0.250 inches

PLATE ROTATION TOL. = 5.0 Deg.

JSI GRIP= 0.90 (L) (INPUT = 0.90)
JSI METAL= 0.39 (I) (INPUT = 1.00)

JOB NAME	TRUSS NAME	QUANTITY	PLY	JOB DESC.	DRWG NO.
336335	H292T		1	TRUSS DESC. JT 45147	E21104224

Alpa Roof Truss, Maple

Version 8.420 S Jan 21 2021 MiTek Industries, Inc. Thu Oct 14 08:54:51 2021 Page 1

ID:hd511hZTz_bdeQoS817GKByhVxV-3u7OtIlm?1hOlNwVnH8hEnsad3BxgkOIx9GlqkyTZFY

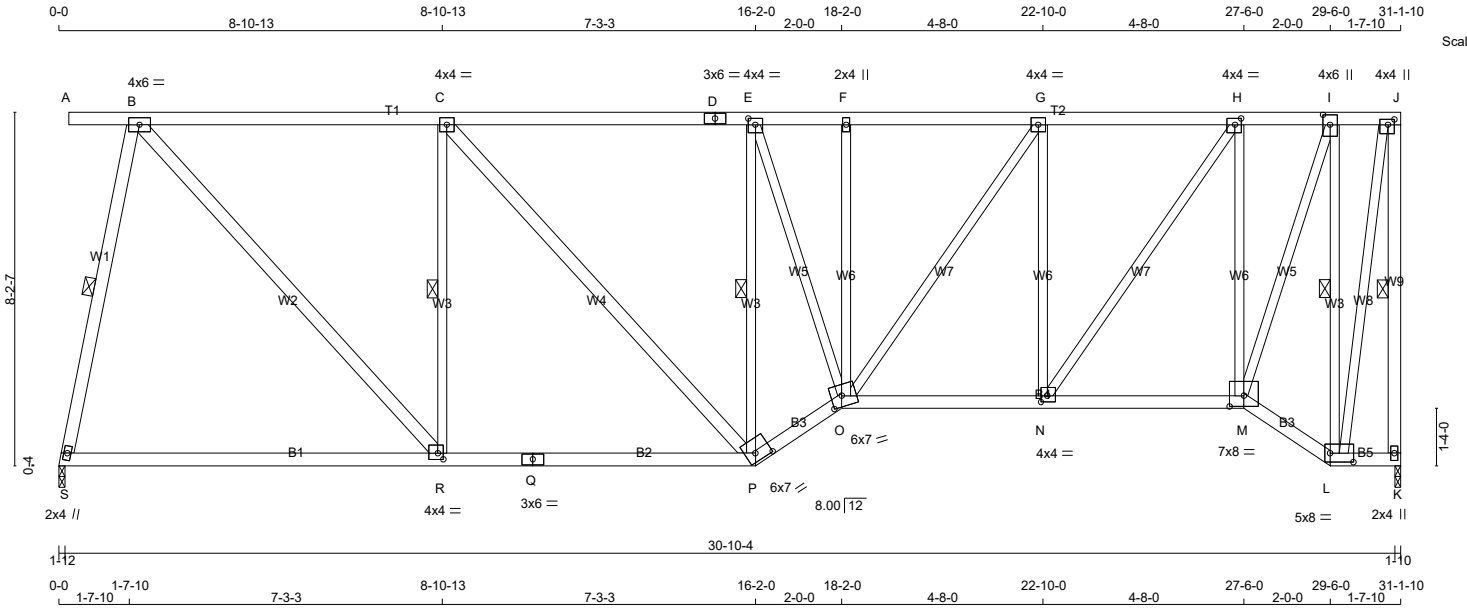

TOTAL WEIGHT = 177 lb

[M]

LUMBER

N. L. G. A. RULES

CHORDS	SIZE		LUMBER	DESCR.
A - D	2x4	DRY	No.2	SPF
D - J	2x4	DRY	No.2	SPF
K - J	2x4	DRY	No.2	SPF
S - Q	2x4	DRY	No.2	SPF
Q - P	2x4	DRY	No.2	SPF
P - O	2x4	DRY	No.2	SPF
O - M	2x4	DRY	No.2	SPF
M - L	2x4	DRY	No.2	SPF
L - K	2x4	DRY	No.2	SPF
ALL WEBS	2x4	DRY	No.2	SPF
EXCEPT				
R - C	2x3	DRY	No.2	SPF
P - E	2x3	DRY	No.2	SPF
E - O	2x3	DRY	No.2	SPF
O - F	2x3	DRY	No.2	SPF
O - G	2x3	DRY	No.2	SPF
N - G	2x3	DRY	No.2	SPF
N - H	2x3	DRY	No.2	SPF
M - H	2x3	DRY	No.2	SPF
M - I	2x3	DRY	No.2	SPF
L - I	2x3	DRY	No.2	SPF
L - J	2x3	DRY	No.2	SPF

DRY: SEASONED LUMBER.

PLATES (table is in inches)

JT	TYPE	PLATES	W	LEN	Y	X
B	TMWW-t	MT20	4.0	6.0		
C	TMWW-t	MT20	4.0	4.0		
D	TS-t	MT20	3.0	6.0		
E	TMWW-t	MT20	4.0	4.0	1.75	2.00
F	TMW+w	MT20	2.0	4.0		
G	TMWW-t	MT20	4.0	4.0		
H	TMWW-t	MT20	4.0	4.0	1.75	1.75
I	TMWW+t	MT20	4.0	6.0	2.75	2.00
J	TMVW+p	MT20	4.0	4.0	1.50	1.75
K	BMV1+p	MT20	2.0	4.0		
L	BBWW-l	MT20	5.0	8.0	2.50	6.50
M	BBWW-l	MT20	7.0	8.0	3.00	4.00
N	BMWW-t	MT20	4.0	4.0	1.75	1.75
O	BBWWW-m	MT20	6.0	7.0	3.00	3.00
P	BBWW-h	MT20	6.0	7.0	2.25	4.25
Q	BS-t	MT20	3.0	6.0		

LATERAL BRACE(S) SHOWN SHALL BE 2X4 SPF#2

DIMENSIONS, SUPPORTS AND LOADINGS SPECIFIED BY FABRICATOR TO BE VERIFIED BY BUILDING DESIGNER

BEARINGS

JT	FACTORED GROSS REACTION VERT	HORZ	MAXIMUM FACTORED GROSS REACTION DOWN	HORZ	UPLIFT	INPUT BRG IN-SX	REQRD BRG IN-SX
S	1487	0	1487	0	0	1-12	1-10
K	1495	0	1495	0	0	1-10	1-10

UNFACTORED REACTIONS

JT	1ST LCASE COMBINED	MAX./MIN. COMPONENT REACTIONS SNOW	LIVE	PERM.LIVE	WIND	DEAD	SOIL
S	1060	647 / 0	0 / 0	0 / 0	0 / 0	414 / 0	0 / 0
K	1066	651 / 0	0 / 0	0 / 0	0 / 0	415 / 0	0 / 0

BEARING MATERIAL TO BE SPF NO.2 OR BETTER AT JOINT(S) S, K

BRACING

TOP CHORD TO BE SHEATHED OR MAX. PURLIN SPACING = 4.33 FT.
MAX. UNBRACED BOTTOM CHORD LENGTH = 10.00 FT OR RIGID CEILING DIRECTLY APPLIED.

ALL PITCH BREAKS AND PERIMETER CORNER JOINTS MUST BE LATERALLY RESTRAINED.

1 LATERAL BRACE(S) AT 1/ 2 LENGTH OF B-S, J-K, C-R, E-P, I-L.

END VERTICAL(S) MUST BE SHEATHED OR HAVE BRACES AS INDICATED IN THE MAX. UNBRACED LENGTH COLUMN OF THE TABLE BELOW

LOADING

TOTAL LOAD CASES: (4)

CHORDS

MEMB. FR-TO	MAX. FACTORED FORCE (LBS)	FACTORED VERT. LOAD (PLF) FROM	TO	LC1 CSI (LC)	MAX. UNBRAC LENGTH
A- B	0 / 0	-78.0	-78.0	0.12 (1)	10.00
B- C	-1261 / 0	-78.0	-78.0	0.72 (1)	4.66
C- D	-1496 / 0	-78.0	-78.0	0.76 (1)	4.33
D- E	-1496 / 0	-78.0	-78.0	0.76 (1)	4.33
E- F	-1724 / 0	-78.0	-78.0	0.34 (1)	4.68
F- G	-1726 / 0	-78.0	-78.0	0.28 (1)	4.79
G- H	-1412 / 0	-78.0	-78.0	0.26 (1)	5.19
H- I	-741 / 0	-78.0	-78.0	0.12 (1)	6.25
I- J	-286 / 0	-78.0	-78.0	0.08 (1)	6.25
K- J	-1480 / 0	0.0	0.0	0.45 (1)	5.39
S- R	0 / 279	-18.5	-18.5	0.37 (4)	10.00
R- Q	0 / 1261	-18.5	-18.5	0.47 (4)	10.00
Q- P	0 / 1261	-18.5	-18.5	0.47 (4)	10.00
P- O	0 / 1779	-18.5	-18.5	0.30 (1)	10.00
O- N	0 / 1412	-18.5	-18.5	0.28 (1)	10.00
N- M	0 / 761	-18.5	-18.5	0.18 (4)	10.00
M- L	0 / 320	-18.5	-18.5	0.06 (1)	10.00
L- K	0 / 0	-18.5	-18.5	0.01 (4)	10.00

WEBS

MEMB. FR-TO	MAX. FACTORED FORCE (LBS)	MAX CSI (LC)
S- B	-1450 / 0	0.47 (1)
B- R	0 / 1464	0.24 (1)
R- C	-905 / 0	0.39 (1)
C- P	0 / 347	0.06 (1)
P- E	-1174 / 0	0.50 (1)
E- O	0 / 796	0.18 (1)
O- F	-156 / 0	0.12 (1)
O- G	0 / 542	0.12 (1)
N- G	-842 / 0	0.67 (1)
N- H	0 / 1142	0.26 (1)
M- H	-1248 / 0	1.00 (1)
M- I	0 / 1555	0.35 (1)
L- I	-1527 / 0	0.65 (1)
L- J	0 / 1413	0.32 (1)

DESIGN CRITERIA

SPECIFIED LOADS:

TOP	CH.	LL	=	21.0	PSF
		DL	=	6.0	PSF
BOT	CH.	LL	=	0.0	PSF
		DL	=	7.4	PSF
TOTAL	LOAD		=	34.4	PSF

SPACING = 24.0 IN. C/C

LOADING IN FLAT SECTION BASED ON A SLOPE OF 2.00/12 MINIMUM

THIS TRUSS IS DESIGNED FOR RESIDENTIAL OR SMALL BUILDING REQUIREMENTS OF PART 9, NBCC 2015

THIS DESIGN COMPLIES WITH:
- PART 9 OF BCBC 2018 , ABC 2019
- PART 9 OF OBC 2012 (2019 AMENDMENT)
- CSA 086-14
- TPIC 2014

(55 % OF 23.0 P.S.F. G.S.L. PLUS 8.4 P.S.F. RAIN LOAD) EQUALS 21.0 P.S.F. SPECIFIED ROOF LIVE LOAD

ALLOWABLE DEFL.(LL)= L/360 (1.03")
CALCULATED VERT. DEFL.(LL) = L/ 999 (0.11")
ALLOWABLE DEFL.(TL)= L/360 (1.03")
CALCULATED VERT. DEFL.(TL) = L/ 999 (0.21")

CSI: TC=0.76/1.00 (C-E:1) , BC=0.47/1.00 (P-R:4) , WB=1.00/1.00 (H-M:1) , SSI=0.27/1.00 (B-C:1)

DOL LUMBER=1.00 NAIL=1.00 LS BEND=1.10 COMP=1.10 SHEAR=1.10 TENS= 1.10

COMPANION LIVE LOAD FACTOR = 1.00

TRUSS PLATE MANUFACTURER IS NOT RESPONSIBLE FOR QUALITY CONTROL IN THE TRUSS MANUFACTURING PLANT .

NAIL VALUES

PLATE	GRIP(DRY) (PSI) MAX	MIN	SHEAR (PLI) MAX	MIN	SECTION (PLI) MAX	MIN
MT20	650	371	1747	788	1987	1873

PLATE PLACEMENT TOL. = 0.250 inches

PLATE ROTATION TOL. = 5.0 Deg.

JSI GRIP= 0.90 (R) (INPUT = 0.90)
JSI METAL= 0.37 (Q) (INPUT = 1.00)

CONTINUED ON PAGE 2

JOB NAME	TRUSS NAME	QUANTITY	PLY	JOB DESC.		DRWG NO.
336335	H293T		1	TRUSS DESC.	JT 45147	E21104225

Alpa Roof Truss, Maple

Version 8.420 S Jan 21 2021 MiTek Industries, Inc. Thu Oct 14 08:52:52 2021 Page 1

ID:hd511hZTz bdeQoS817GKByhVxV-2?RPu3s70TiG 4JdJoVnvhRFe5a?HvQna8xy97yTZHP

Scale = 1:61.3

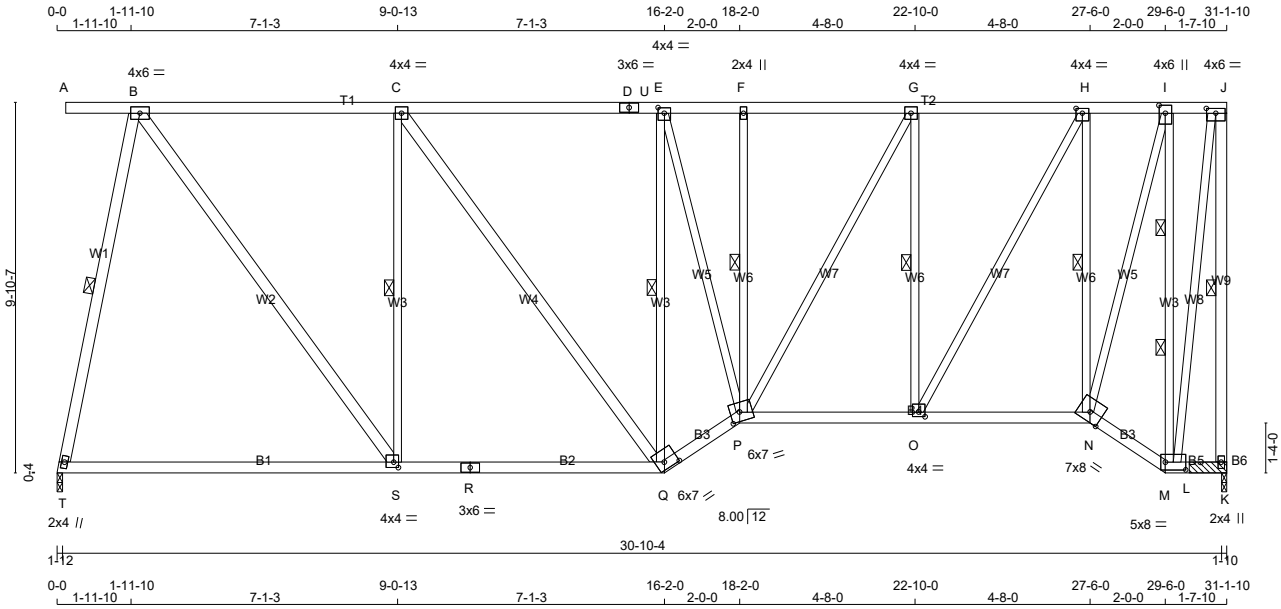

TOTAL WEIGHT = 3 X 199 = 596 lb

[M]

LUMBER

N. L. G. A. RULES

CHORDS	SIZE		LUMBER	DESCR.
A - D	2x4	DRY	No.2	SPF
D - J	2x4	DRY	No.2	SPF
K - J	2x4	DRY	No.2	SPF
T - R	2x4	DRY	No.2	SPF
R - Q	2x4	DRY	No.2	SPF
Q - P	2x4	DRY	No.2	SPF
P - N	2x4	DRY	No.2	SPF
N - M	2x4	DRY	No.2	SPF
M - K	2x4	DRY	No.2	SPF
ALL WEBS	2x4	DRY	No.2	SPF
EXCEPT				
S - C	2x3	DRY	No.2	SPF
Q - E	2x3	DRY	No.2	SPF
E - P	2x3	DRY	No.2	SPF
P - F	2x3	DRY	No.2	SPF
P - G	2x3	DRY	No.2	SPF
O - G	2x3	DRY	No.2	SPF
O - H	2x3	DRY	No.2	SPF
N - H	2x3	DRY	No.2	SPF
N - I	2x3	DRY	No.2	SPF
M - I	2x3	DRY	No.2	SPF
M - J	2x3	DRY	No.2	SPF

DRY: SEASONED LUMBER.

PLATES (table is in inches)

JT	TYPE	PLATES	W	LEN	Y	X
B	TMWW-t	MT20	4.0	6.0		
C	TMWW-t	MT20	4.0	4.0		
D	TS-t	MT20	3.0	6.0		
E	TMWW-t	MT20	4.0	4.0	1.75	2.00
F	TMW+w	MT20	2.0	4.0		
G	TMWW-t	MT20	4.0	4.0		
H	TMWW-t	MT20	4.0	4.0	1.50	2.00
I	TMWW+t	MT20	4.0	6.0	2.50	2.00
J	TMVW-t	MT20	4.0	6.0	1.50	3.00
K	BMV1+p	MT20	2.0	4.0		
M	BBWW-l	MT20	5.0	8.0	2.50	6.50
N	BBWW-h	MT20	7.0	8.0	Edge	
O	BMWW-t	MT20	4.0	4.0	1.50	2.00
P	BBWWW-m	MT20	6.0	7.0	3.00	3.00
Q	BBWW-h	MT20	6.0	7.0	2.25	4.25
R	BS-t	MT20	3.0	6.0		

LATERAL BRACE(S) SHOWN SHALL BE 2X4 SPF#2

DIMENSIONS, SUPPORTS AND LOADINGS SPECIFIED BY FABRICATOR TO BE VERIFIED BY BUILDING DESIGNER

BEARINGS

JT	FACTORED GROSS REACTION VERT	HORZ	MAXIMUM FACTORED GROSS REACTION DOWN	HORZ	UPLIFT	INPUT BRG IN-SX	REQRD BRG IN-SX
T	1601	0	1601	0	0	1-12	1-12
K	1613	0	1613	0	0	1-10	1-10 & BLOCK

UNFACTORED REACTIONS

JT	1ST LCASE COMBINED	MAX./MIN. COMPONENT REACTIONS SNOW	LIVE	PERM.LIVE	WIND	DEAD	SOIL
T	1152	646 / 0	0 / 0	0 / 0	0 / 0	506 / 0	0 / 0
K	1160	652 / 0	0 / 0	0 / 0	0 / 0	508 / 0	0 / 0

BEARING MATERIAL TO BE SPF NO.2 OR BETTER AT JOINT(S) T, K

2x4 DRY SPF No.2 BEARING BLOCK 12" LONG AT JT. K ATTACHED TO FRONT SIDE WITH 2 ROWS OF (0.122"X3") SPIRAL NAILS SPACED 3" C.C. 8 NAILS TOTAL.

BRACING

FOR SECTION A-J, MAX. PURLIN SPACING = 2.00 FT.
FOR OTHER SECTIONS, TOP CHORD TO BE SHEATHED OR MAX. PURLIN SPACING = 10.00 FT.
MAX. UNBRACED BOTTOM CHORD LENGTH = 10.00 FT OR RIGID CEILING DIRECTLY APPLIED.

ALL PITCH BREAKS AND PERIMETER CORNER JOINTS MUST BE LATERALLY RESTRAINED.

1 LATERAL BRACE(S) AT 1/ 2 LENGTH OF B-T, J-K, C-S, E-Q, F-P, G-O, H-N.
2 LATERAL BRACE(S) AT 1/ 3 LENGTH OF I-M.

END VERTICAL(S) MUST BE SHEATHED OR HAVE BRACES AS INDICATED IN THE MAX. UNBRACED LENGTH COLUMN OF THE TABLE BELOW

LOADING

TOTAL LOAD CASES: (4)

CHORDS

MEMB. FR-TO	MAX. FACTORED FORCE (LBS)	FACTORED VERT. LOAD (PLF) FROM	TO	LC1 CSI (LC)	MAX. UNBRAC LENGTH
A- B	0 / 0	-85.5	-85.5	0.20 (1)	10.00
B- C	-1136 / 0	-85.5	-85.5	0.73 (1)	2.00
C- D	-1333 / 0	-85.5	-85.5	0.76 (1)	2.00
D- U	-1333 / 0	-85.5	-85.5	0.76 (1)	2.00
U- E	-1333 / 0	-85.5	-85.5	0.76 (1)	2.00
E- F	-1484 / 0	-85.5	-85.5	0.34 (1)	2.00
F- G	-1487 / 0	-85.5	-85.5	0.29 (1)	2.00
G- H	-1216 / 0	-85.5	-85.5	0.28 (1)	2.00
H- I	-637 / 0	-85.5	-85.5	0.12 (1)	2.00
I- J	-254 / 0	-85.5	-85.5	0.10 (1)	2.00
K- J	-1598 / 0	0.0	0.0	0.75 (1)	5.22
T- S	0 / 302	-18.5	-18.5	0.38 (4)	10.00
S- R	0 / 1136	-18.5	-18.5	0.48 (4)	10.00
R- Q	0 / 1136	-18.5	-18.5	0.48 (4)	10.00
Q- P	0 / 1588	-18.5	-18.5	0.27 (1)	10.00
P- O	0 / 1216	-18.5	-18.5	0.25 (1)	10.00
O- N	0 / 654	-18.5	-18.5	0.18 (4)	10.00
N- M	0 / 285	-18.5	-18.5	0.06 (1)	10.00
M- L	0 / 0	-18.5	-18.5	0.01 (4)	10.00
L- K	0 / 0	-18.5	-18.5	0.01 (4)	10.00

WEBS

MEMB. FR-TO	MAX. FACTORED FORCE (LBS)	MAX CSI (LC)
T- B	-1565 / 0	0.78 (1)
B- S	0 / 1416	0.23 (1)
S- C	-962 / 0	0.63 (1)
C- Q	0 / 331	0.05 (1)
Q- E	-1081 / 0	0.71 (1)
E- P	0 / 658	0.15 (1)
P- F	-177 / 0	0.08 (1)
P- G	0 / 549	0.12 (1)
O- G	-917 / 0	0.43 (1)
O- H	0 / 1160	0.26 (1)
N- H	-1353 / 0	0.63 (1)
N- I	0 / 1616	0.36 (1)
M- I	-1613 / 0	0.96 (1)
M- J	0 / 1510	0.34 (1)

DESIGN CRITERIA

SPECIFIED LOADS:

TOP CH.	LL	=	21.0	PSF
	DL	=	6.0	PSF
BOT CH.	LL	=	0.0	PSF
	DL	=	7.4	PSF
TOTAL LOAD		=	34.4	PSF

SPACING = 24.0 IN. C/C

LOADING IN FLAT SECTION BASED ON PIGGYBACK TRUSS WITH SLOPES OF 6.00/12 AND -6.00/12 AND RESPECTIVE HEEL HEIGHTS OF 0-0 AND 0-0 AND AN ADDITIONAL DEAD LOAD OF 3.0 P.S.F.

THIS TRUSS IS DESIGNED FOR RESIDENTIAL OR SMALL BUILDING REQUIREMENTS OF PART 9, NBCC 2015

THIS DESIGN COMPLIES WITH:
- PART 9 OF BCBC 2018 , ABC 2019
- PART 9 OF OBC 2012 (2019 AMENDMENT)
- CSA 086-14
- TPIC 2014

(55 % OF 23.0 P.S.F. G.S.L. PLUS 8.4 P.S.F. RAIN LOAD) EQUALS 21.0 P.S.F. SPECIFIED ROOF LIVE LOAD

ALLOWABLE DEFL.(LL)= L/360 (1.03")
CALCULATED VERT. DEFL.(LL) = L/ 999 (0.11")
ALLOWABLE DEFL.(TL)= L/360 (1.03")
CALCULATED VERT. DEFL.(TL) = L/ 999 (0.22")

CSI: TC=0.76/1.00 (C-E:1) , BC=0.48/1.00 (Q-S:4) , WB=0.96/1.00 (I-M:1) , SSI=0.28/1.00 (B-C:1)

DOL LUMBER=1.00 NAIL=1.00 LS BEND=1.10 COMP=1.10 SHEAR=1.10 TENS= 1.10

COMPANION LIVE LOAD FACTOR = 1.00

TRUSS PLATE MANUFACTURER IS NOT RESPONSIBLE FOR QUALITY CONTROL IN THE TRUSS MANUFACTURING PLANT .

NAIL VALUES

PLATE	GRIP(DRY) (PSI) MAX	MIN	SHEAR (PLI) MAX	MIN	SECTION (PLI) MAX	MIN
MT20	650	371	1747	788	1987	1873

PLATE PLACEMENT TOL. = 0.250 inches

PLATE ROTATION TOL. = 5.0 Deg.

JSI GRIP= 0.90 (J) (INPUT = 0.90)
JSI METAL= 0.37 (R) (INPUT = 1.00)

CONTINUED ON PAGE 2

JOB NAME	TRUSS NAME	QUANTITY	PLY	JOB DESC.		DRWG NO.
336335	H293		1	TRUSS DESC.	JT 45147	E21104226

Alpa Roof Truss, Maple

Version 8.420 S Jan 21 2021 MiTek Industries, Inc. Thu Oct 14 08:52:51 2021 Page 1

ID:hd511hZTz bdeQoS817GKByhVxV-Zpt1hjrVF9aPMwlRl5 YNTu37hEsYV2dLUBPdhyTZHQ

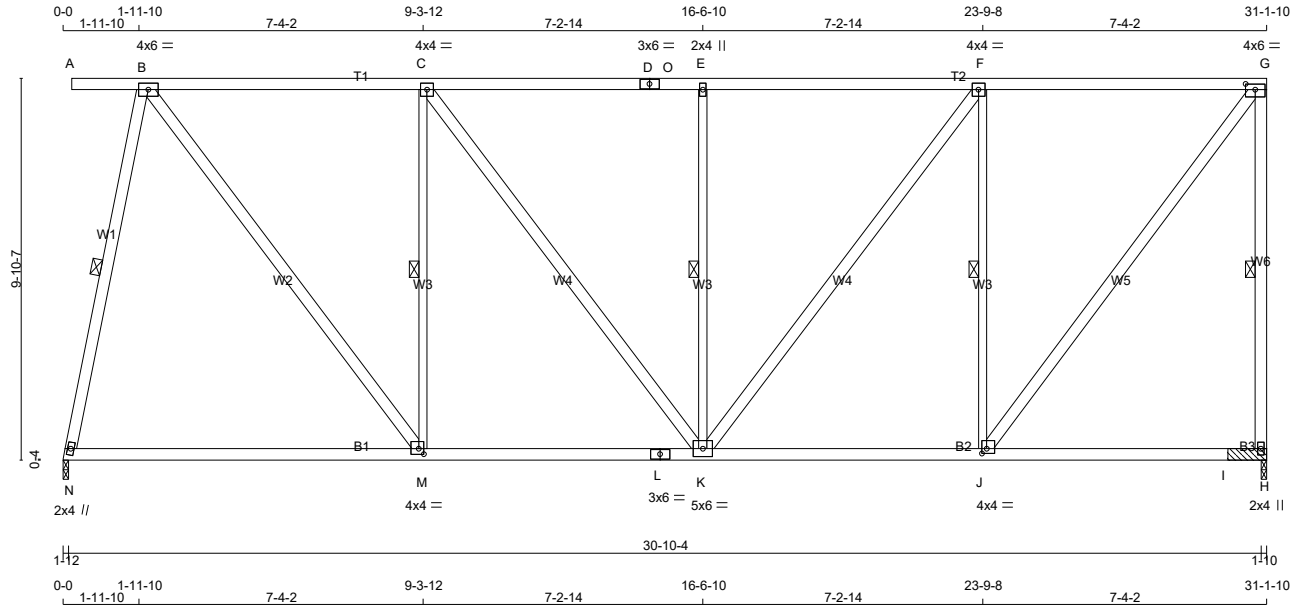

TOTAL WEIGHT = 9 X 169 = 1522 lb

[M]

LUMBER

N. L. G. A. RULES

CHORDS	SIZE		LUMBER	DESCR.
A - D	2x4	DRY	No.2	SPF
D - G	2x4	DRY	No.2	SPF
H - G	2x4	DRY	No.2	SPF
N - L	2x4	DRY	No.2	SPF
L - H	2x4	DRY	No.2	SPF
ALL WEBS	2x4	DRY	No.2	SPF
EXCEPT				
M - C	2x3	DRY	No.2	SPF
K - E	2x3	DRY	No.2	SPF
J - F	2x3	DRY	No.2	SPF

DRY: SEASONED LUMBER.

PLATES (table is in inches)

JT	TYPE	PLATES	W	LEN	Y	X
B	TMWW-t	MT20	4.0	6.0		
C	TMWW-t	MT20	4.0	4.0		
D	TS-t	MT20	3.0	6.0		
E	TMW+w	MT20	2.0	4.0		
F	TMWW-t	MT20	4.0	4.0		
G	TMVW-t	MT20	4.0	6.0	1.75	3.00
H	BMV1+p	MT20	2.0	4.0		
J	BMWW-t	MT20	4.0	4.0	1.50	1.50
K	BMWWW-t	MT20	5.0	6.0		
L	BS-t	MT20	3.0	6.0		
M	BMWW-t	MT20	4.0	4.0	1.75	1.50
N	BMW1+w	MT20	2.0	4.0		

LATERAL BRACE(S) SHOWN SHALL BE 2X4 SPF#2

DIMENSIONS, SUPPORTS AND LOADINGS SPECIFIED BY FABRICATOR TO BE VERIFIED BY BUILDING DESIGNER

BEARINGS

JT	FACTORED GROSS REACTION VERT	HORZ	MAXIMUM FACTORED GROSS REACTION DOWN	HORZ	UPLIFT	INPUT BRG IN-SX	REQRD BRG IN-SX
N	1601	0	1601	0	0	1-12	1-12
H	1613	0	1613	0	0	1-10	1-10 & BLOCK

UNFACTORED REACTIONS

JT	1ST LCASE COMBINED	MAX./MIN. COMPONENT REACTIONS SNOW	LIVE	PERM.LIVE	WIND	DEAD	SOIL
N	1152	646 / 0	0 / 0	0 / 0	0 / 0	506 / 0	0 / 0
H	1160	652 / 0	0 / 0	0 / 0	0 / 0	508 / 0	0 / 0

BEARING MATERIAL TO BE SPF NO.2 OR BETTER AT JOINT(S) N, H

2x4 DRY SPF No.2 BEARING BLOCK 12" LONG AT JT. H ATTACHED TO FRONT SIDE WITH 2 ROWS OF (0.122"X3") SPIRAL NAILS SPACED 3" C.C. 8 NAILS TOTAL.

BRACING

FOR SECTION A-G, MAX. PURLIN SPACING = 2.00 FT.
FOR OTHER SECTIONS, TOP CHORD TO BE SHEATHED OR MAX. PURLIN SPACING = 10.00 FT.
MAX. UNBRACED BOTTOM CHORD LENGTH = 10.00 FT OR RIGID CEILING DIRECTLY APPLIED.

ALL PITCH BREAKS AND PERIMETER CORNER JOINTS MUST BE LATERALLY RESTRAINED.

1 LATERAL BRACE(S) AT 1/ 2 LENGTH OF B-N, G-H, C-M, E-K, F-J.

END VERTICAL(S) MUST BE SHEATHED OR HAVE BRACES AS INDICATED IN THE MAX. UNBRACED LENGTH COLUMN OF THE TABLE BELOW

LOADING

TOTAL LOAD CASES: (4)

CHORDS

MEMB. FR-TO	MAX. FACTORED FORCE (LBS)	FACTORED VERT. LOAD (PLF) FROM	TO	LC1 MAX CSI (LC)	MAX. UNBRAC LENGTH
A- B	0 / 0	-85.5	-85.5	0.20 (1)	10.00
B- C	-1155 / 0	-85.5	-85.5	0.76 (1)	2.00
C- D	-1339 / 0	-85.5	-85.5	0.79 (1)	2.00
D- O	-1339 / 0	-85.5	-85.5	0.79 (1)	2.00
O- E	-1339 / 0	-85.5	-85.5	0.79 (1)	2.00
E- F	-1339 / 0	-85.5	-85.5	0.81 (1)	2.00
F- G	-1005 / 0	-85.5	-85.5	0.76 (1)	2.00
H- G	-1559 / 0	0.0	0.0	0.73 (1)	5.28
N- M	0 / 302	-18.5	-18.5	0.37 (4)	10.00
M- L	0 / 1155	-18.5	-18.5	0.47 (4)	10.00
L- K	0 / 1155	-18.5	-18.5	0.47 (4)	10.00
K- J	0 / 1005	-18.5	-18.5	0.36 (4)	10.00
J- I	0 / 0	-18.5	-18.5	0.25 (4)	10.00
I- H	0 / 0	-18.5	-18.5	0.25 (4)	10.00

WEBS

MEMB. FR-TO	MAX. FACTORED FORCE (LBS)	MAX CSI (LC)
N- B	-1562 / 0	0.78 (1)
B- M	0 / 1416	0.23 (1)
M- C	-950 / 0	0.62 (1)
C- K	0 / 305	0.05 (1)
K- E	-573 / 0	0.38 (1)
K- F	0 / 553	0.09 (1)
J- F	-1154 / 0	0.76 (1)
J- G	0 / 1652	0.27 (1)

DESIGN CRITERIA

SPECIFIED LOADS:

TOP CH.	LL	=	21.0	PSF
	DL	=	6.0	PSF
BOT CH.	LL	=	0.0	PSF
	DL	=	7.4	PSF
TOTAL LOAD		=	34.4	PSF

SPACING = 24.0 IN. C/C

LOADING IN FLAT SECTION BASED ON PIGGYBACK TRUSS WITH SLOPES OF 6.00/12 AND -6.00/12 AND RESPECTIVE HEEL HEIGHTS OF 0-0 AND 0-0 AND AN ADDITIONAL DEAD LOAD OF 3.0 P.S.F.

THIS TRUSS IS DESIGNED FOR RESIDENTIAL OR SMALL BUILDING REQUIREMENTS OF PART 9, NBCC 2015

THIS DESIGN COMPLIES WITH:
- PART 9 OF BCBC 2018 , ABC 2019
- PART 9 OF OBC 2012 (2019 AMENDMENT)
- CSA 086-14
- TPIC 2014

(55 % OF 23.0 P.S.F. G.S.L. PLUS 8.4 P.S.F. RAIN LOAD) EQUALS 21.0 P.S.F. SPECIFIED ROOF LIVE LOAD

ALLOWABLE DEFL.(LL)= L/360 (1.03")
CALCULATED VERT. DEFL.(LL) = L/ 999 (0.06")
ALLOWABLE DEFL.(TL)= L/360 (1.03")
CALCULATED VERT. DEFL.(TL) = L/ 999 (0.21")

CSI: TC=0.81/1.00 (E-F:1) , BC=0.47/1.00 (K-M:4) , WB=0.78/1.00 (B-N:1) , SSI=0.30/1.00 (F-G:1)

DOL LUMBER=1.00 NAIL=1.00 LS BEND=1.10 COMP=1.10 SHEAR=1.10 TENS= 1.10

COMPANION LIVE LOAD FACTOR = 1.00

TRUSS PLATE MANUFACTURER IS NOT RESPONSIBLE FOR QUALITY CONTROL IN THE TRUSS MANUFACTURING PLANT .

NAIL VALUES

PLATE	GRIP(DRY) (PSI) MAX	MIN	SHEAR (PLI) MAX	MIN	SECTION (PLI) MAX	MIN
MT20	650	371	1747	788	1987	1873

PLATE PLACEMENT TOL. = 0.250 inches

PLATE ROTATION TOL. = 5.0 Deg.

JSI GRIP= 0.89 (J) (INPUT = 0.90)
JSI METAL= 0.37 (J) (INPUT = 1.00)

JOB NAME	TRUSS NAME	QUANTITY	PLY	JOB DESC.		DRWG NO.
336335	H294P		1	TRUSS DESC.	JT 45147	E21104227

Alpa Roof Truss, Maple

Version 8.420 S Jan 21 2021 MiTek Industries, Inc. Thu Oct 14 08:54:53 2021 Page 1

ID:hd511hZTz_bdeQoS817GKByhVxV-?HF9HRK1Xex5?g3uuiA9JCyybswi8sdbOTlsvcyTZFW

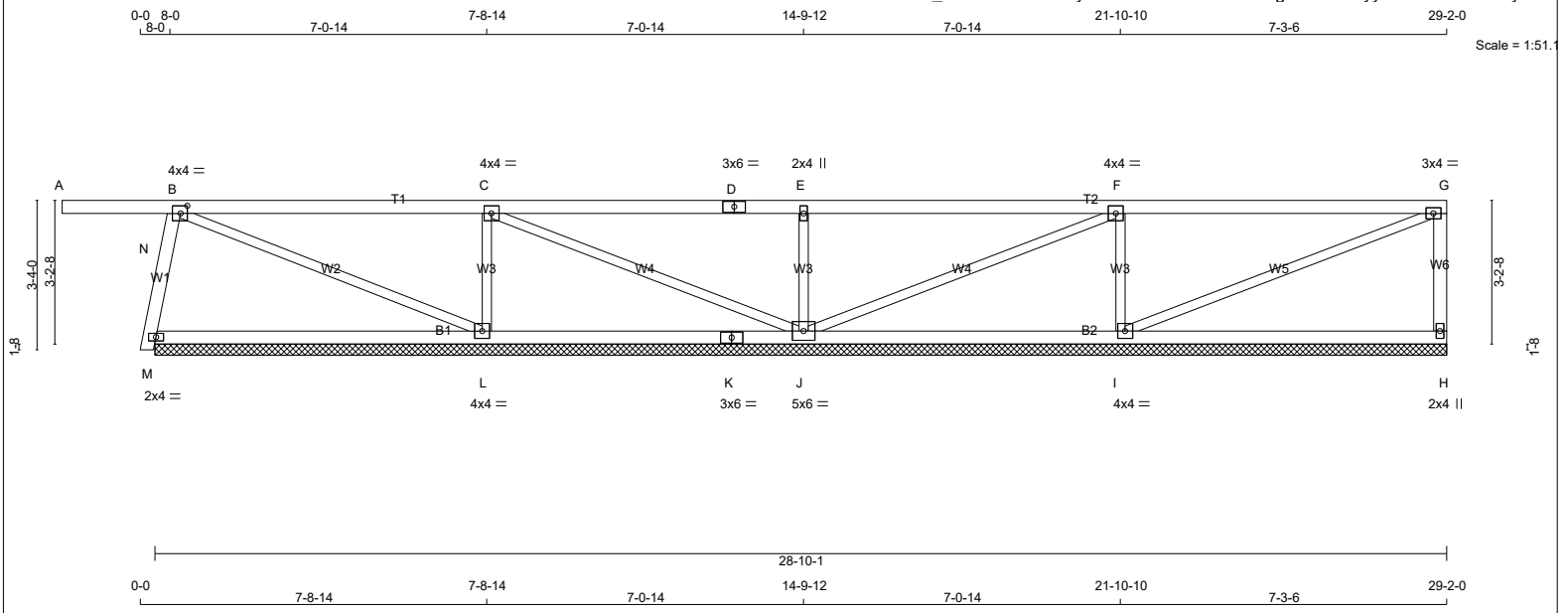

TOTAL WEIGHT = 2 X 105 = 210 lb [M]

LUMBER

N. L. G. A. RULES

CHORDS	SIZE		LUMBER	DESCR.
A - D	2x4	DRY	No.2	SPF
D - G	2x4	DRY	No.2	SPF
H - G	2x4	DRY	No.2	SPF
M - K	2x4	DRY	No.2	SPF
K - H	2x4	DRY	No.2	SPF
ALL WEBS	2x3	DRY	No.2	SPF
EXCEPT				
N - B	2x4	DRY	No.2	SPF

DRY: SEASONED LUMBER.

PLATES (table is in inches)

JT	TYPE	PLATES	W	LEN	Y	X
B	TMWW-t	MT20	4.0	4.0	2.00	1.75
C	TMWW-t	MT20	4.0	4.0		
D	TS-t	MT20	3.0	6.0		
E	TMW+w	MT20	2.0	4.0		
F	TMWW-t	MT20	4.0	4.0		
G	TMVW-t	MT20	3.0	4.0		
H	BMV1+p	MT20	2.0	4.0		
I	BMWW1-t	MT20	4.0	4.0		
J	BMWWW1-t	MT20	5.0	6.0		
K	BS-t	MT20	3.0	6.0		
L	BMWW1-t	MT20	4.0	4.0		
M	BWM1-l	MT20	2.0	4.0		

LATERAL BRACE(S) SHOWN SHALL BE 2X4 SPF#2

DIMENSIONS, SUPPORTS AND LOADINGS SPECIFIED BY FABRICATOR TO BE VERIFIED BY BUILDING DESIGNER

BEARINGS

JT	FACTORED GROSS REACTION VERT	HORZ	MAXIMUM FACTORED GROSS REACTION DOWN	HORZ	UPLIFT	INPUT BRG IN-SX	REQRD BRG IN-SX
H	280	0	280	0	0	28-10-1 (15-11-8)	
M	441	0	441	0	0	28-10-1 (15-11-8)	
L	777	0	777	0	0	28-10-1 (15-11-8)	
J	676	0	676	0	0	28-10-1 (15-11-8)	
I	771	0	771	0	0	28-10-1 (15-11-8)	

VALUE IN PARENTHESIS INDICATES EFFECTIVE BEARING LENGTH

UNFACTORED REACTIONS

JT	1ST LCASE COMBINED	MAX./MIN. COMPONENT REACTIONS SNOW	LIVE	PERM.LIVE	WIND	DEAD	SOIL
H	199	122 / 0	0 / 0	0 / 0	0 / 0	77 / 0	0 / 0
M	311	208 / 0	0 / 0	0 / 0	0 / 0	104 / 0	0 / 0
L	554	334 / 0	0 / 0	0 / 0	0 / 0	220 / 0	0 / 0
J	481	300 / 0	0 / 0	0 / 0	0 / 0	181 / 0	0 / 0
I	550	333 / 0	0 / 0	0 / 0	0 / 0	217 / 0	0 / 0

BEARING MATERIAL TO BE SPF NO.2 OR BETTER AT JOINT(S) H, M, L, J, I

BRACING

TOP CHORD TO BE SHEATHED OR MAX. PURLIN SPACING = 6.25 FT.
MAX. UNBRACED BOTTOM CHORD LENGTH = 10.00 FT OR RIGID CEILING DIRECTLY APPLIED.

MAX. UNBRACED INTERIOR CHORD LENGTH = 7.81 FT

ALL PITCH BREAKS AND PERIMETER CORNER JOINTS MUST BE LATERALLY RESTRAINED.

LOADING

TOTAL LOAD CASES: (4)

CHORDS

MEMB. FR-TO	MAX. FACTORED FORCE (LBS)	FACTORED VERT. LOAD LC1 (PLF) FROM	TO	MAX CSI (LC)	MAX. UNBRAC LENGTH
A- B	0 / 0	-78.0	-78.0	0.34 (1)	10.00
B- C	-22 / 0	-78.0	-78.0	0.56 (1)	6.25
C- D	0 / 43	-78.0	-78.0	0.56 (1)	10.00
D- E	0 / 43	-78.0	-78.0	0.56 (1)	10.00
E- F	0 / 43	-78.0	-78.0	0.60 (1)	10.00
F- G	-6 / 0	-78.0	-78.0	0.59 (1)	10.00
H- G	-227 / 0	0.0	0.0	0.04 (1)	7.81
M- L	0 / 77	-18.5	-18.5	0.26 (4)	10.00
L- K	0 / 22	-18.5	-18.5	0.26 (4)	10.00
K- J	0 / 22	-18.5	-18.5	0.26 (4)	10.00
J- I	0 / 6	-18.5	-18.5	0.24 (4)	10.00
I- H	0 / 0	-18.5	-18.5	0.24 (4)	10.00

WEBS

MEMB. FR-TO	MAX. FACTORED FORCE (LBS)	MAX CSI (LC)
N- M	0 / 0	0.00 (1)
M- B	-394 / 0	0.06 (1)
B- L	-60 / 0	0.07 (1)
L- C	-597 / 0	0.11 (1)
C- J	-71 / 0	0.08 (1)
J- E	-511 / 0	0.10 (1)
J- F	-53 / 0	0.06 (1)
I- F	-621 / 0	0.12 (1)
I- G	0 / 6	0.00 (1)

DESIGN CRITERIA

SPECIFIED LOADS:

TOP CH.	LL	=	21.0	PSF
	DL	=	6.0	PSF
BOT CH.	LL	=	0.0	PSF
	DL	=	7.4	PSF
TOTAL LOAD		=	34.4	PSF

SPACING = 24.0 IN. C/C

LOADING IN FLAT SECTION BASED ON A SLOPE OF 2.00/12 MINIMUM

THIS TRUSS IS DESIGNED FOR RESIDENTIAL OR SMALL BUILDING REQUIREMENTS OF PART 9, NBCC 2015

THIS DESIGN COMPLIES WITH:
- PART 9 OF BCBC 2018 , ABC 2019
- PART 9 OF OBC 2012 (2019 AMENDMENT)
- CSA 086-14
- TPIC 2014

(55 % OF 23.0 P.S.F. G.S.L. PLUS 8.4 P.S.F. RAIN LOAD) EQUALS 21.0 P.S.F. SPECIFIED ROOF LIVE LOAD

CSI: TC=0.60/1.00 (E-F:1) , BC=0.26/1.00 (L-M:4) , WB=0.12/1.00 (F-I:1) , SSI=0.27/1.00 (F-G:1)

DOL LUMBER=1.00 NAIL=1.00 LS BEND=1.10 COMP=1.10 SHEAR=1.10 TENS= 1.10

COMPANION LIVE LOAD FACTOR = 1.00

TRUSS PLATE MANUFACTURER IS NOT RESPONSIBLE FOR QUALITY CONTROL IN THE TRUSS MANUFACTURING PLANT .

NAIL VALUES

PLATE	GRIP(DRY) (PSI) MAX	MIN	SHEAR (PLI) MAX	MIN	SECTION (PLI) MAX	MIN
MT20	650	371	1747	788	1987	1873

PLATE PLACEMENT TOL. = 0.250 inches

PLATE ROTATION TOL. = 5.0 Deg.

JSI GRIP= 0.84 (J) (INPUT = 0.90)
JSI METAL= 0.29 (M) (INPUT = 1.00)

JOB NAME	TRUSS NAME	QUANTITY	PLY	JOB DESC.		DRWG NO.
336335	H295P		1	TRUSS DESC.	JT 45147	E21104228

Alpa Roof Truss, Maple

Version 8.420 S Jan 21 2021 MiTek Industries, Inc. Thu Oct 14 08:54:54 2021 Page 1

ID:hd511hZTz bdeQoS817GKByhVxV-TTpXVmLfIy3ycqe4SQhOsPU7RGFmtGakd7UPR2yTZFV

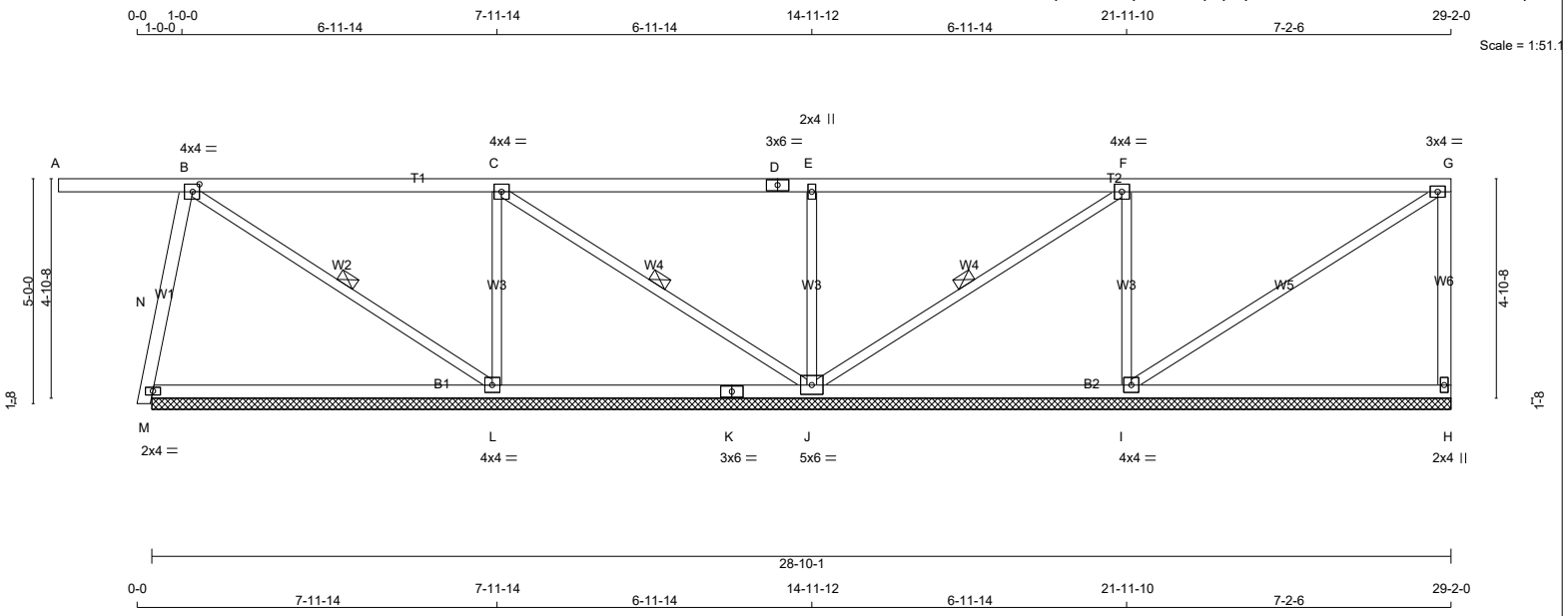

TOTAL WEIGHT = 2 X 115 = 230 lb

[M]

LUMBER

N. L. G. A. RULES

CHORDS	SIZE		LUMBER	DESCR.
A - D	2x4	DRY	No.2	SPF
D - G	2x4	DRY	No.2	SPF
H - G	2x4	DRY	No.2	SPF
M - K	2x4	DRY	No.2	SPF
K - H	2x4	DRY	No.2	SPF
ALL WEBS	2x3	DRY	No.2	SPF
EXCEPT				
N - B	2x4	DRY	No.2	SPF

DRY: SEASONED LUMBER.

PLATES (table is in inches)

JT	TYPE	PLATES	W	LEN	Y	X
B	TMWW-t	MT20	4.0	4.0	2.00	1.75
C	TMWW-t	MT20	4.0	4.0		
D	TS-t	MT20	3.0	6.0		
E	TMW+w	MT20	2.0	4.0		
F	TMWW-t	MT20	4.0	4.0		
G	TMVW-t	MT20	3.0	4.0		
H	BMV1+p	MT20	2.0	4.0		
I	BMWW1-t	MT20	4.0	4.0		
J	BMWWW1-t	MT20	5.0	6.0		
K	BS-t	MT20	3.0	6.0		
L	BMWW1-t	MT20	4.0	4.0		
M	BWM1-l	MT20	2.0	4.0		

LATERAL BRACE(S) SHOWN SHALL BE 2X4 SPF#2

DIMENSIONS, SUPPORTS AND LOADINGS SPECIFIED BY FABRICATOR TO BE VERIFIED BY BUILDING DESIGNER

BEARINGS

JT	FACTORED GROSS REACTION VERT	HORZ	MAXIMUM FACTORED GROSS REACTION DOWN	HORZ	UPLIFT	INPUT BRG IN-SX	REQRD BRG IN-SX
H	277	0	277	0	0	28-10-1 (15-11-8)	
M	449	0	449	0	0	28-10-1 (15-11-8)	
L	747	0	747	0	0	28-10-1 (15-11-8)	
J	754	0	754	0	0	28-10-1 (15-11-8)	
I	719	0	719	0	0	28-10-1 (15-11-8)	

VALUE IN PARENTHESIS INDICATES EFFECTIVE BEARING LENGTH

UNFACTORED REACTIONS

JT	1ST LCASE COMBINED	MAX./MIN. COMPONENT REACTIONS SNOW	LIVE	PERM.LIVE	WIND	DEAD	SOIL
H	197	121 / 0	0 / 0	0 / 0	0 / 0	77 / 0	0 / 0
M	317	211 / 0	0 / 0	0 / 0	0 / 0	106 / 0	0 / 0
L	534	316 / 0	0 / 0	0 / 0	0 / 0	218 / 0	0 / 0
J	534	344 / 0	0 / 0	0 / 0	0 / 0	191 / 0	0 / 0
I	514	306 / 0	0 / 0	0 / 0	0 / 0	209 / 0	0 / 0

BEARING MATERIAL TO BE SPF NO.2 OR BETTER AT JOINT(S) H, M, L, J, I

BRACING

TOP CHORD TO BE SHEATHED OR MAX. PURLIN SPACING = 6.25 FT.
MAX. UNBRACED BOTTOM CHORD LENGTH = 10.00 FT OR RIGID CEILING DIRECTLY APPLIED.

MAX. UNBRACED INTERIOR CHORD LENGTH = 7.81 FT

ALL PITCH BREAKS AND PERIMETER CORNER JOINTS MUST BE LATERALLY RESTRAINED.

1 LATERAL BRACE(S) AT 1/ 2 LENGTH OF B-L, C-J, F-J.

END VERTICAL(S) MUST BE SHEATHED OR HAVE BRACES AS INDICATED IN THE MAX. UNBRACED LENGTH COLUMN OF THE TABLE BELOW

LOADING

TOTAL LOAD CASES: (4)

CHORDS

MEMB. FR-TO	MAX. FACTORED FORCE (LBS)	FACTORED VERT. LOAD (PLF) FROM	TO	LC1	MAX CSI (LC)	MAX. UNBRAC LENGTH
A- B	0 / 0	-78.0	-78.0	0.43 (1)	10.00	
B- C	-16 / 0	-78.0	-78.0	0.54 (1)	6.25	
C- D	0 / 92	-78.0	-78.0	0.56 (1)	10.00	
D- E	0 / 92	-78.0	-78.0	0.56 (1)	10.00	
E- F	0 / 92	-78.0	-78.0	0.59 (1)	10.00	
F- G	-4 / 0	-78.0	-78.0	0.58 (1)	10.00	
H- G	-225 / 0	0.0	0.0	0.09 (1)	7.81	
M- L	0 / 78	-18.5	-18.5	0.27 (4)	10.00	
L- K	0 / 16	-18.5	-18.5	0.27 (4)	10.00	
K- J	0 / 16	-18.5	-18.5	0.27 (4)	10.00	
J- I	0 / 4	-18.5	-18.5	0.24 (4)	10.00	
I- H	0 / 0	-18.5	-18.5	0.24 (4)	10.00	

WEBS

MEMB. FR-TO	MAX. FACTORED FORCE (LBS)	MAX CSI (LC)
N- M	0 / 0	0.00 (1)
M- B	-399 / 0	0.12 (1)
B- L	-75 / 0	0.03 (1)
L- C	-546 / 0	0.19 (1)
C- J	-129 / 0	0.06 (1)
J- E	-505 / 0	0.18 (1)
J- F	-115 / 0	0.05 (1)
I- F	-571 / 0	0.20 (1)
I- G	0 / 5	0.00 (1)

DESIGN CRITERIA

SPECIFIED LOADS:

TOP CH.	LL	=	21.0	PSF
	DL	=	6.0	PSF
BOT CH.	LL	=	0.0	PSF
	DL	=	7.4	PSF
TOTAL LOAD		=	34.4	PSF

SPACING = 24.0 IN. C/C

LOADING IN FLAT SECTION BASED ON A SLOPE OF 2.00/12 MINIMUM

THIS TRUSS IS DESIGNED FOR RESIDENTIAL OR SMALL BUILDING REQUIREMENTS OF PART 9, NBCC 2015

THIS DESIGN COMPLIES WITH:
- PART 9 OF BCBC 2018 , ABC 2019
- PART 9 OF OBC 2012 (2019 AMENDMENT)
- CSA 086-14
- TPIC 2014

(55 % OF 23.0 P.S.F. G.S.L. PLUS 8.4 P.S.F. RAIN LOAD) EQUALS 21.0 P.S.F. SPECIFIED ROOF LIVE LOAD

CSI: TC=0.59/1.00 (E-F:1) , BC=0.27/1.00 (L-M:4) , WB=0.20/1.00 (F-I:1) , SSI=0.26/1.00 (F-G:1)

DOL LUMBER=1.00 NAIL=1.00 LS BEND=1.10 COMP=1.10 SHEAR=1.10 TENS= 1.10

COMPANION LIVE LOAD FACTOR = 1.00

TRUSS PLATE MANUFACTURER IS NOT RESPONSIBLE FOR QUALITY CONTROL IN THE TRUSS MANUFACTURING PLANT .

NAIL VALUES

PLATE	GRIP(DRY) (PSI) MAX	MIN	SHEAR (PLI) MAX	MIN	SECTION (PLI) MAX	MIN
MT20	650	371	1747	788	1987	1873

PLATE PLACEMENT TOL. = 0.250 inches

PLATE ROTATION TOL. = 5.0 Deg.

JSI GRIP= 0.76 (G) (INPUT = 0.90)
JSI METAL= 0.30 (D) (INPUT = 1.00)

JOB NAME	TRUSS NAME	QUANTITY	PLY	JOB DESC.		DRWG NO.
336335	H296P		1	TRUSS DESC.	JT 45147	E21104229

Alpa Roof Truss, Maple

Version 8.420 S Jan 21 2021 MiTek Industries, Inc. Thu Oct 14 08:54:56 2021 Page 1

ID:hd511hZTz bdeQoS817GKByhVxV-PswHwSMvpZJqs8oTZrjsxqaUD4xyK8d15RzWWxyTZFT

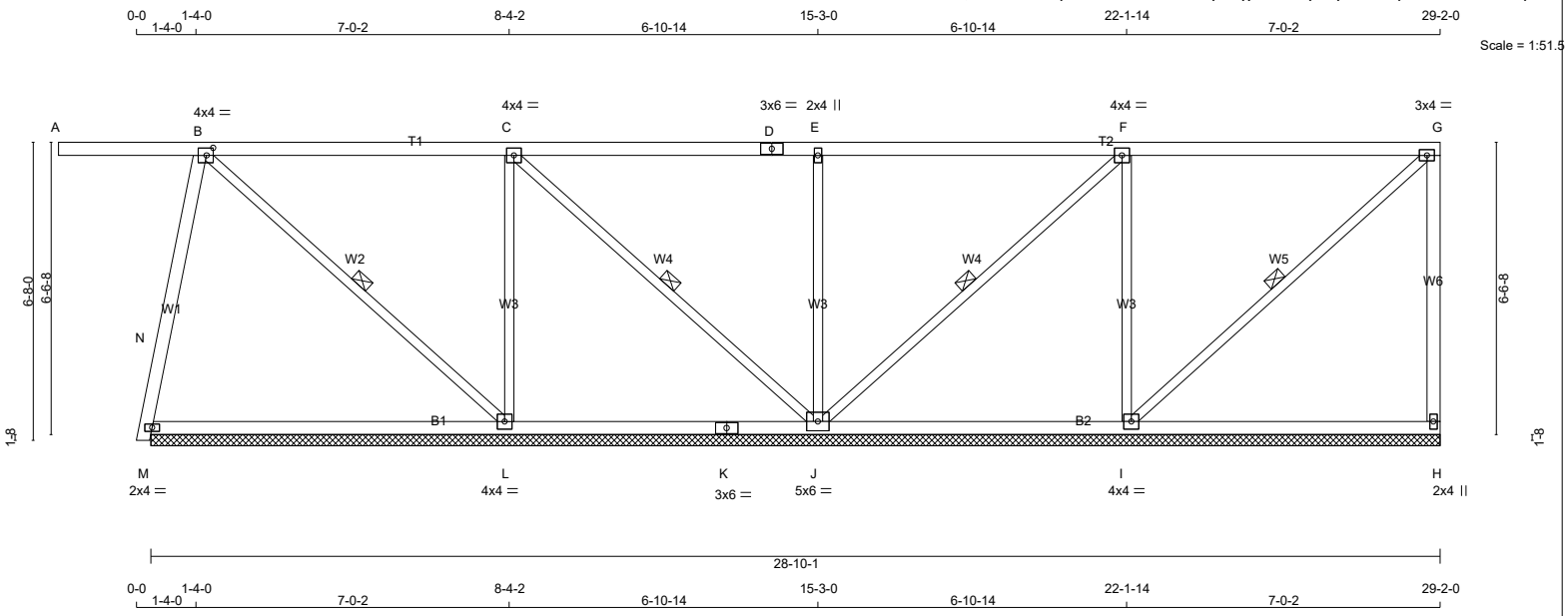

TOTAL WEIGHT = 2 X 126 = 252 lb [M]

LUMBER

N. L. G. A. RULES

CHORDS	SIZE		LUMBER	DESCR.
A - D	2x4	DRY	No.2	SPF
D - G	2x4	DRY	No.2	SPF
H - G	2x4	DRY	No.2	SPF
M - K	2x4	DRY	No.2	SPF
K - H	2x4	DRY	No.2	SPF
ALL WEBS	2x3	DRY	No.2	SPF
EXCEPT				
N - B	2x4	DRY	No.2	SPF

DRY: SEASONED LUMBER.

PLATES (table is in inches)

JT	TYPE	PLATES	W	LEN	Y	X
B	TMWW-t	MT20	4.0	4.0	2.00	1.75
C	TMWW-t	MT20	4.0	4.0		
D	TS-t	MT20	3.0	6.0		
E	TMW+w	MT20	2.0	4.0		
F	TMWW-t	MT20	4.0	4.0		
G	TMVW-t	MT20	3.0	4.0		
H	BMV1+p	MT20	2.0	4.0		
I	BMWW1-t	MT20	4.0	4.0		
J	BMWWW1-t	MT20	5.0	6.0		
K	BS-t	MT20	3.0	6.0		
L	BMWW1-t	MT20	4.0	4.0		
M	BWM1-l	MT20	2.0	4.0		

LATERAL BRACE(S) SHOWN SHALL BE 2X4 SPF#2

DIMENSIONS, SUPPORTS AND LOADINGS SPECIFIED BY FABRICATOR TO BE VERIFIED BY BUILDING DESIGNER

BEARINGS

JT	FACTORED GROSS REACTION VERT	HORZ	MAXIMUM FACTORED GROSS REACTION DOWN	HORZ	UPLIFT	INPUT BRG IN-SX	REQRD BRG IN-SX
H	263	0	263	0	0	28-10-1 (15-11-8)	
M	454	0	454	0	0	28-10-1 (15-11-8)	
L	723	0	723	0	0	28-10-1 (15-11-8)	
J	846	0	846	0	0	28-10-1 (15-11-8)	
I	660	0	660	0	0	28-10-1 (15-11-8)	

VALUE IN PARENTHESIS INDICATES EFFECTIVE BEARING LENGTH

UNFACTORED REACTIONS

JT	1ST LCASE COMBINED	MAX./MIN. COMPONENT REACTIONS SNOW	LIVE	PERM.LIVE	WIND	DEAD	SOIL
H	188	114 / 0	0 / 0	0 / 0	0 / 0	73 / 0	0 / 0
M	321	212 / 0	0 / 0	0 / 0	0 / 0	109 / 0	0 / 0
L	518	301 / 0	0 / 0	0 / 0	0 / 0	217 / 0	0 / 0
J	597	395 / 0	0 / 0	0 / 0	0 / 0	203 / 0	0 / 0
I	473	275 / 0	0 / 0	0 / 0	0 / 0	198 / 0	0 / 0

BEARING MATERIAL TO BE SPF NO.2 OR BETTER AT JOINT(S) H, M, L, J, I

BRACING

TOP CHORD TO BE SHEATHED OR MAX. PURLIN SPACING = 10.00 FT.
MAX. UNBRACED BOTTOM CHORD LENGTH = 10.00 FT OR RIGID CEILING DIRECTLY APPLIED.

MAX. UNBRACED INTERIOR CHORD LENGTH = 7.81 FT

ALL PITCH BREAKS AND PERIMETER CORNER JOINTS MUST BE LATERALLY RESTRAINED.

1 LATERAL BRACE(S) AT 1/ 2 LENGTH OF B-L, C-J, F-J, G-I.

END VERTICAL(S) MUST BE SHEATHED OR HAVE BRACES AS INDICATED IN THE MAX. UNBRACED LENGTH COLUMN OF THE TABLE BELOW

LOADING

TOTAL LOAD CASES: (4)

CHORDS

MEMB. FR-TO	MAX. FACTORED FORCE (LBS)	FACTORED VERT. LOAD LC1 (PLF) FROM	TO	MAX CSI (LC)	MAX. UNBRAC LENGTH
A- B	0 / 0	-78.0	-78.0	0.54 (1)	10.00
B- C	-6 / 0	-78.0	-78.0	0.54 (1)	10.00
C- D	0 / 128	-78.0	-78.0	0.56 (1)	10.00
D- E	0 / 128	-78.0	-78.0	0.56 (1)	10.00
E- F	0 / 128	-78.0	-78.0	0.57 (1)	10.00
F- G	0 / 3	-78.0	-78.0	0.55 (1)	10.00
H- G	-212 / 0	0.0	0.0	0.19 (1)	7.81
M- L	0 / 79	-18.5	-18.5	0.29 (4)	10.00
L- K	0 / 6	-18.5	-18.5	0.28 (4)	10.00
K- J	0 / 6	-18.5	-18.5	0.28 (4)	10.00
J- I	-3 / 0	-18.5	-18.5	0.23 (4)	10.00
I- H	0 / 0	-18.5	-18.5	0.23 (4)	10.00

WEBS

MEMB. FR-TO	MAX. FACTORED FORCE (LBS)	MAX CSI (LC)
N- M	0 / 0	0.00 (1)
M- B	-402 / 0	0.24 (1)
B- L	-98 / 0	0.06 (1)
L- C	-493 / 0	0.35 (1)
C- J	-181 / 0	0.11 (1)
J- E	-499 / 0	0.35 (1)
J- F	-169 / 0	0.10 (1)
I- F	-508 / 0	0.36 (1)
I- G	-5 / 0	0.00 (1)

DESIGN CRITERIA

SPECIFIED LOADS:

TOP	CH.	LL	=	21.0	PSF
		DL	=	6.0	PSF
BOT	CH.	LL	=	0.0	PSF
		DL	=	7.4	PSF
TOTAL	LOAD		=	34.4	PSF

SPACING = 24.0 IN. C/C

LOADING IN FLAT SECTION BASED ON A SLOPE OF 2.00/12 MINIMUM

THIS TRUSS IS DESIGNED FOR RESIDENTIAL OR SMALL BUILDING REQUIREMENTS OF PART 9, NBCC 2015

THIS DESIGN COMPLIES WITH:
- PART 9 OF BCBC 2018 , ABC 2019
- PART 9 OF OBC 2012 (2019 AMENDMENT)
- CSA 086-14
- TPIC 2014

(55 % OF 23.0 P.S.F. G.S.L. PLUS 8.4 P.S.F. RAIN LOAD) EQUALS 21.0 P.S.F. SPECIFIED ROOF LIVE LOAD

CSI: TC=0.57/1.00 (E-F:1) , BC=0.29/1.00 (L-M:4) , WB=0.36/1.00 (F-I:1) , SSI=0.26/1.00 (F-G:1)

DOL LUMBER=1.00 NAIL=1.00 LS BEND=1.10 COMP=1.10 SHEAR=1.10 TENS= 1.10

COMPANION LIVE LOAD FACTOR = 1.00

TRUSS PLATE MANUFACTURER IS NOT RESPONSIBLE FOR QUALITY CONTROL IN THE TRUSS MANUFACTURING PLANT .

NAIL VALUES

PLATE	GRIP(DRY) (PSI) MAX	MIN	SHEAR (PLI) MAX	MIN	SECTION (PLI) MAX	MIN
MT20	650	371	1747	788	1987	1873

PLATE PLACEMENT TOL. = 0.250 inches

PLATE ROTATION TOL. = 5.0 Deg.

JSI GRIP= 0.75 (G) (INPUT = 0.90)
JSI METAL= 0.30 (M) (INPUT = 1.00)

JOB NAME	TRUSS NAME	QUANTITY	PLY	JOB DESC.		DRWG NO.
336335	H297P		1	TRUSS DESC.	JT 45147	E21104230

Alpa Roof Truss, Maple

Version 8.420 S Jan 21 2021 MiTek Industries, Inc. Thu Oct 14 08:54:58 2021 Page 1

ID:hd511hZTz bdeQoS817GKByhVxV-LE22L8O9LAaO5SyrhGmK0FfoMtdDozaKYlSdaqyTZFR

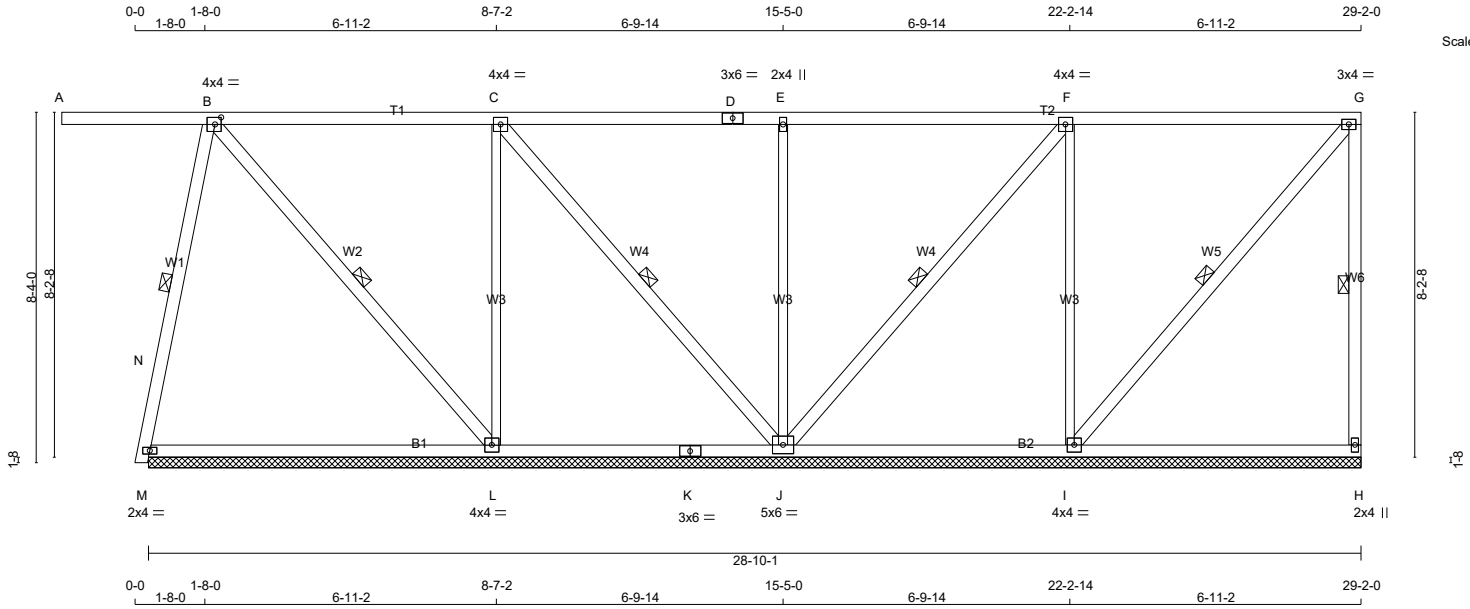

TOTAL WEIGHT = 2 X 151 = 302 lb

[M]

LUMBER

N. L. G. A. RULES

CHORDS	SIZE		LUMBER	DESCR.
A - D	2x4	DRY	No.2	SPF
D - G	2x4	DRY	No.2	SPF
H - G	2x4	DRY	No.2	SPF
M - K	2x4	DRY	No.2	SPF
K - H	2x4	DRY	No.2	SPF
ALL WEBS	2x4	DRY	No.2	SPF
EXCEPT				
L - C	2x3	DRY	No.2	SPF
J - E	2x3	DRY	No.2	SPF
I - F	2x3	DRY	No.2	SPF

DRY: SEASONED LUMBER.

PLATES (table is in inches)

JT	TYPE	PLATES	W	LEN	Y	X
B	TMWW-t	MT20	4.0	4.0	2.00	1.75
C	TMWW-t	MT20	4.0	4.0		
D	TS-t	MT20	3.0	6.0		
E	TMW+w	MT20	2.0	4.0		
F	TMWW-t	MT20	4.0	4.0		
G	TMVW-t	MT20	3.0	4.0		
H	BMV1+p	MT20	2.0	4.0		
I	BMWW1-t	MT20	4.0	4.0		
J	BMWWW1-t	MT20	5.0	6.0		
K	BS-t	MT20	3.0	6.0		
L	BMWW1-t	MT20	4.0	4.0		
M	BWM1-l	MT20	2.0	4.0		

LATERAL BRACE(S) SHOWN SHALL BE 2X4 SPF#2

DIMENSIONS, SUPPORTS AND LOADINGS SPECIFIED BY FABRICATOR TO BE VERIFIED BY BUILDING DESIGNER

BEARINGS

JT	FACTORED GROSS REACTION VERT	HORZ	MAXIMUM FACTORED GROSS REACTION DOWN	HORZ	UPLIFT	INPUT BRG IN-SX	REQRD BRG IN-SX
H	248	0	248	0	0	28-10-1 (15-11-8)	
M	443	0	443	0	0	28-10-1 (15-11-8)	
L	683	0	683	0	0	28-10-1 (15-11-8)	
J	991	0	991	0	0	28-10-1 (15-11-8)	
I	582	0	582	0	0	28-10-1 (15-11-8)	

VALUE IN PARENTHESIS INDICATES EFFECTIVE BEARING LENGTH

UNFACTORED REACTIONS

JT	1ST LCASE COMBINED	MAX./MIN. COMPONENT REACTIONS SNOW	LIVE	PERM.LIVE	WIND	DEAD	SOIL
H	177	106 / 0	0 / 0	0 / 0	0 / 0	71 / 0	0 / 0
M	313	205 / 0	0 / 0	0 / 0	0 / 0	109 / 0	0 / 0
L	491	278 / 0	0 / 0	0 / 0	0 / 0	213 / 0	0 / 0
J	697	475 / 0	0 / 0	0 / 0	0 / 0	223 / 0	0 / 0
I	419	234 / 0	0 / 0	0 / 0	0 / 0	185 / 0	0 / 0

BEARING MATERIAL TO BE SPF NO.2 OR BETTER AT JOINT(S) H, M, L, J, I

BRACING

TOP CHORD TO BE SHEATHED OR MAX. PURLIN SPACING = 10.00 FT.
MAX. UNBRACED BOTTOM CHORD LENGTH = 6.25 FT OR RIGID CEILING DIRECTLY APPLIED.

MAX. UNBRACED INTERIOR CHORD LENGTH = 6.25 FT

ALL PITCH BREAKS AND PERIMETER CORNER JOINTS MUST BE LATERALLY RESTRAINED.

1 LATERAL BRACE(S) AT 1/ 2 LENGTH OF B-M, G-H, B-L, C-J, F-J, G-I.

END VERTICAL(S) MUST BE SHEATHED OR HAVE BRACES AS INDICATED IN THE MAX. UNBRACED LENGTH COLUMN OF THE TABLE BELOW

LOADING

TOTAL LOAD CASES: (4)

CHORDS

MEMB. FR-TO	MAX. FACTORED FORCE (LBS)	FACTORED VERT. LOAD LC1 (PLF) FROM	TO	MAX CSI (LC)	MAX. UNBRAC LENGTH
A- B	0 / 0	-78.0	-78.0	0.66 (1)	10.00
B- C	0 / 13	-78.0	-78.0	0.53 (1)	10.00
C- D	0 / 181	-78.0	-78.0	0.56 (1)	10.00
D- E	0 / 181	-78.0	-78.0	0.56 (1)	10.00
E- F	0 / 181	-78.0	-78.0	0.57 (1)	10.00
F- G	0 / 13	-78.0	-78.0	0.54 (1)	10.00
H- G	-198 / 0	0.0	0.0	0.06 (1)	6.25
M- L	0 / 76	-18.5	-18.5	0.30 (4)	10.00
L- K	-13 / 0	-18.5	-18.5	0.30 (4)	6.25
K- J	-13 / 0	-18.5	-18.5	0.30 (4)	6.25
J- I	-13 / 0	-18.5	-18.5	0.23 (4)	6.25
I- H	0 / 0	-18.5	-18.5	0.23 (4)	10.00

WEBS

MEMB. FR-TO	MAX. FACTORED FORCE (LBS)	MAX CSI (LC)
N- M	0 / 0	0.00 (1)
M- B	-387 / 0	0.13 (1)
B- L	-136 / 0	0.08 (1)
L- C	-413 / 0	0.54 (1)
C- J	-257 / 0	0.15 (1)
J- E	-492 / 0	0.65 (1)
J- F	-257 / 0	0.15 (1)
I- F	-419 / 0	0.55 (1)
I- G	-20 / 0	0.01 (1)

DESIGN CRITERIA

SPECIFIED LOADS:

TOP	CH.	LL	=	21.0	PSF
		DL	=	6.0	PSF
BOT	CH.	LL	=	0.0	PSF
		DL	=	7.4	PSF
TOTAL	LOAD		=	34.4	PSF

SPACING = 24.0 IN. C/C

LOADING IN FLAT SECTION BASED ON A SLOPE OF 2.00/12 MINIMUM

THIS TRUSS IS DESIGNED FOR RESIDENTIAL OR SMALL BUILDING REQUIREMENTS OF PART 9, NBCC 2015

THIS DESIGN COMPLIES WITH:
- PART 9 OF BCBC 2018 , ABC 2019
- PART 9 OF OBC 2012 (2019 AMENDMENT)
- CSA 086-14
- TPIC 2014

(55 % OF 23.0 P.S.F. G.S.L. PLUS 8.4 P.S.F. RAIN LOAD) EQUALS 21.0 P.S.F. SPECIFIED ROOF LIVE LOAD

CSI: TC=0.66/1.00 (A-B:1) , BC=0.30/1.00 (L-M:4) , WB=0.65/1.00 (E-J:1) , SSI=0.26/1.00 (F-G:1)

DOL LUMBER=1.00 NAIL=1.00 LS BEND=1.10 COMP=1.10 SHEAR=1.10 TENS= 1.10

COMPANION LIVE LOAD FACTOR = 1.00

TRUSS PLATE MANUFACTURER IS NOT RESPONSIBLE FOR QUALITY CONTROL IN THE TRUSS MANUFACTURING PLANT .

NAIL VALUES

PLATE	GRIP(DRY) (PSI) MAX	MIN	SHEAR (PLI) MAX	MIN	SECTION (PLI) MAX	MIN
MT20	650	371	1747	788	1987	1873

PLATE PLACEMENT TOL. = 0.250 inches

PLATE ROTATION TOL. = 5.0 Deg.

JSI GRIP= 0.71 (G) (INPUT = 0.90)
JSI METAL= 0.29 (M) (INPUT = 1.00)

JOB NAME	TRUSS NAME	QUANTITY	PLY	JOB DESC.		DRWG NO.
336335	J01		1	TRUSS DESC.	JT 45147	E21104231

Alpa Roof Truss, Maple

Version 8.420 S Jan 21 2021 MiTek Industries, Inc. Thu Oct 14 08:54:59 2021 Page 1

ID:hd511hZTz_bdeQoS817GKByhVxV-qRcQYUOn6UiFjbX2FzHZZTC0EH?1XawTnPCA6GyTZFQ

Scale = 1:39.3

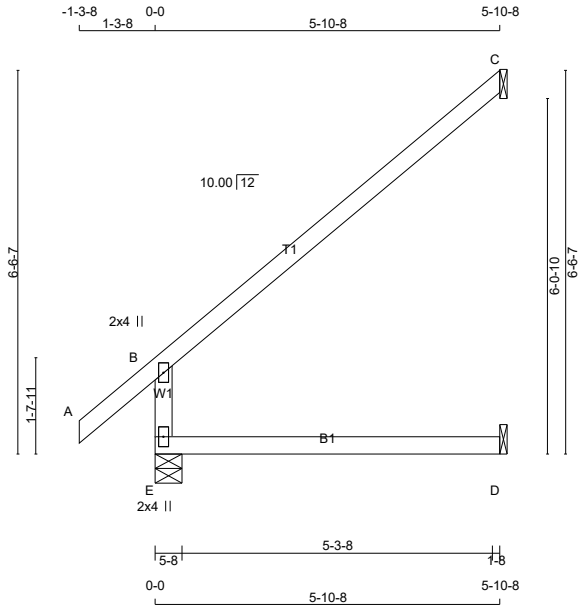

TOTAL WEIGHT = 28 X 19 = 532 lb

LUMBER

N. L. G. A. RULES

CHORDS	SIZE		LUMBER	DESCR.
E - B	2x4	DRY	No.2	SPF
A - C	2x4	DRY	No.2	SPF
E - D	2x4	DRY	No.2	SPF

DRY: SEASONED LUMBER.

PLATES (table is in inches)

JT	TYPE	PLATES	W	LEN	Y	X
B	TMV+p	MT20	2.0	4.0		
E	BMV1+p	MT20	2.0	4.0		

LATERAL BRACE(S) SHOWN SHALL BE 2X4 SPF#2

DIMENSIONS, SUPPORTS AND LOADINGS SPECIFIED BY FABRICATOR TO BE VERIFIED BY BUILDING DESIGNER

BEARINGS

JT	FACTORED GROSS REACTION VERT	HORZ	MAXIMUM FACTORED GROSS REACTION DOWN	HORZ	UPLIFT	INPUT BRG IN-SX	REQRD BRG IN-SX
E	457	0	457	0	0	5-8	1-8
C	172	0	172	0	0	1-8	1-8
D	46	0	52	0	0	1-8	1-8

SEE MITEK STANDARD DETAIL B97791H FOR CONNECTION TO JOINT(S) C , D

UNFACTORED REACTIONS

JT	1ST LCASE COMBINED	MAX./MIN. COMPONENT REACTIONS SNOW	LIVE	PERM.LIVE	WIND	DEAD	SOIL
E	323	212 / 0	0 / 0	0 / 0	0 / 0	111 / 0	0 / 0
C	119	93 / 0	0 / 0	0 / 0	0 / 0	26 / 0	0 / 0
D	37	0 / 0	0 / 0	0 / 0	0 / 0	37 / 0	0 / 0

BEARING MATERIAL TO BE SPF NO.2 OR BETTER AT JOINT(S) E

BRACING

TOP CHORD TO BE SHEATHED OR MAX. PURLIN SPACING = 6.25 FT.
MAX. UNBRACED BOTTOM CHORD LENGTH = 10.00 FT OR RIGID CEILING DIRECTLY APPLIED.

ALL PITCH BREAKS AND PERIMETER CORNER JOINTS MUST BE LATERALLY RESTRAINED.

LOADING

TOTAL LOAD CASES: (4)

CHORDS MEMB. FR-TO	MAX. FACTORED FORCE (LBS)	FACTORED VERT. LOAD (PLF) FROM	TO	LC1 MAX CSI (LC)	MAX. UNBRAC LENGTH
E- B	-394 / 0	0.0	0.0	0.11 (4)	7.81
A- B	0 / 35	-78.0	-78.0	0.11 (1)	10.00
B- C	-37 / 0	-78.0	-78.0	0.46 (1)	6.25
E- D	0 / 0	-18.5	-18.5	0.14 (4)	10.00

WEBS MEMB. FR-TO	MAX. FACTORED FORCE (LBS)	MAX CSI (LC)

[M]

DESIGN CRITERIA

SPECIFIED LOADS:

TOP CH.	LL	=	21.0	PSF
	DL	=	6.0	PSF
BOT CH.	LL	=	0.0	PSF
	DL	=	7.4	PSF
TOTAL LOAD		=	34.4	PSF

SPACING = 24.0 IN. C/C

THIS TRUSS IS DESIGNED FOR RESIDENTIAL OR SMALL BUILDING REQUIREMENTS OF PART 9, NBCC 2015

THIS DESIGN COMPLIES WITH:
- PART 9 OF BCBC 2018 , ABC 2019
- PART 9 OF OBC 2012 (2019 AMENDMENT)
- CSA 086-14
- TPIC 2014

DESIGN ASSUMPTIONS
-OVERHANG NOT TO BE ALTERED OR CUT OFF.

(55 % OF 23.0 P.S.F. G.S.L. PLUS 8.4 P.S.F. RAIN LOAD) EQUALS 21.0 P.S.F. SPECIFIED ROOF LIVE LOAD

ALLOWABLE DEFL.(LL)= L/360 (0.20")
CALCULATED VERT. DEFL.(LL) = L/ 999 (0.00")
ALLOWABLE DEFL.(TL)= L/360 (0.20")
CALCULATED VERT. DEFL.(TL) = L/ 999 (0.03")

CSI: TC=0.46/1.00 (B-C:1) , BC=0.14/1.00 (D-E:4) , WB=0.00/1.00 (n/a:0) , SSI=0.17/1.00 (B-C:1)

DOL LUMBER=1.00 NAIL=1.00 LS BEND=1.10 COMP=1.10 SHEAR=1.10 TENS= 1.10

COMPANION LIVE LOAD FACTOR = 1.00

AUTOSOLVE RIGHT HEEL ONLY

TRUSS PLATE MANUFACTURER IS NOT RESPONSIBLE FOR QUALITY CONTROL IN THE TRUSS MANUFACTURING PLANT .

NAIL VALUES

PLATE	GRIP(DRY) (PSI) MAX	MIN	SHEAR (PLI) MAX	MIN	SECTION (PLI) MAX	MIN
MT20	650	371	1747	788	1987	1873

PLATE PLACEMENT TOL. = 0.250 inches

PLATE ROTATION TOL. = 5.0 Deg.

JSI GRIP= 0.27 (B) (INPUT = 0.90)
JSI METAL= 0.21 (B) (INPUT = 1.00)

JOB NAME	TRUSS NAME	QUANTITY	PLY	JOB DESC.		DRWG NO.
336335	J01T		1	TRUSS DESC.	JT 45147	E21104232

Alpa Roof Truss, Maple

Version 8.420 S Jan 21 2021 MiTek Industries, Inc. Thu Oct 14 08:55:01 2021 Page 1

ID:hd511hZTz_bdeQoS817GKByhVxV-mpkAzAQ2e5yzyvhQMOJ1euHSD5i3?UZmEjhHB9yTZFO

Scale = 1:38.6

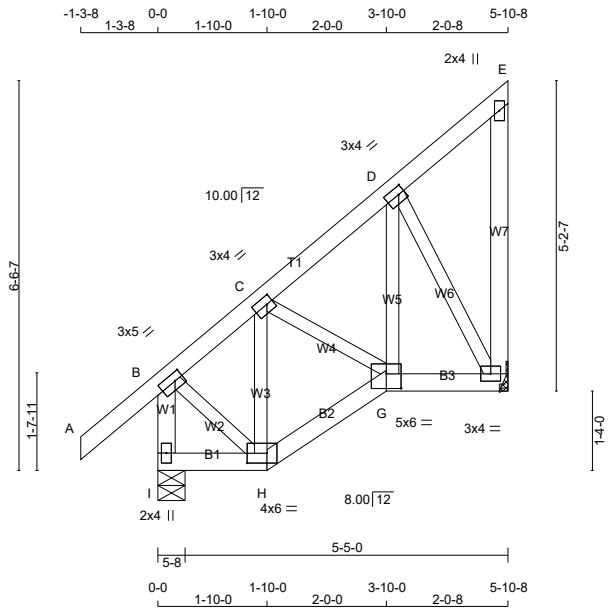

TOTAL WEIGHT = 12 X 35 = 425 lb

LUMBER

N. L. G. A. RULES

CHORDS	SIZE		LUMBER	DESCR.
I - B	2x4	DRY	No.2	SPF
A - E	2x4	DRY	No.2	SPF
F - E	2x4	DRY	No.2	SPF
I - H	2x4	DRY	No.2	SPF
H - G	2x4	DRY	No.2	SPF
G - F	2x4	DRY	No.2	SPF
ALL WEBS	2x3	DRY	No.2	SPF

DRY: SEASONED LUMBER.

PLATES (table is in inches)

JT	TYPE	PLATES	W	LEN	Y	X
B	TMVW-t	MT20	3.0	5.0	1.50	1.75
C	TMWW-t	MT20	3.0	4.0	1.50	1.25
D	TMWW-t	MT20	3.0	4.0	1.50	1.25
E	TMV+p	MT20	2.0	4.0		
F	BMVW1-t	MT20	3.0	4.0		
G	BBWW-l	MT20	5.0	6.0	3.00	3.00
H	BBWW-l	MT20	4.0	6.0	2.00	4.00
I	BMV1+p	MT20	2.0	4.0		

LATERAL BRACE(S) SHOWN SHALL BE 2X4 SPF#2

DIMENSIONS, SUPPORTS AND LOADINGS SPECIFIED BY FABRICATOR TO BE VERIFIED BY BUILDING DESIGNER

BEARINGS

JT	FACTORED GROSS REACTION VERT	HORZ	MAXIMUM FACTORED GROSS REACTION DOWN	HORZ	UPLIFT	INPUT BRG IN-SX	REQRD BRG IN-SX
I	404	0	404	0	0	5-8	1-8
F	271	0	271	0	0	MECHANICAL	

A SUITABLE HANGER/MECHANICAL CONNECTION IS REQUIRED AT JOINT F. MINIMUM BEARING LENGTH AT JOINT F = 1-8.

UNFACTORED REACTIONS

JT	1ST LCASE COMBINED	MAX./MIN. COMPONENT REACTIONS SNOW	LIVE	PERM.LIVE	WIND	DEAD	SOIL
I	286	188 / 0	0 / 0	0 / 0	0 / 0	97 / 0	0 / 0
F	193	116 / 0	0 / 0	0 / 0	0 / 0	77 / 0	0 / 0

BEARING MATERIAL TO BE SPF NO.2 OR BETTER AT JOINT(S) I

BRACING

TOP CHORD TO BE SHEATHED OR MAX. PURLIN SPACING = 6.25 FT.
MAX. UNBRACED BOTTOM CHORD LENGTH = 10.00 FT OR RIGID CEILING DIRECTLY APPLIED.

ALL PITCH BREAKS AND PERIMETER CORNER JOINTS MUST BE LATERALLY RESTRAINED.

LOADING

TOTAL LOAD CASES: (4)

CHORDS

MEMB. FR-TO	MAX. FACTORED FORCE (LBS)	FACTORED VERT. LOAD LC1 (PLF) FROM	TO	MAX CSI (LC)	MAX. UNBRAC LENGTH
I- B	-387 / 0	0.0	0.0	0.04 (1)	7.81
A- B	0 / 35	-78.0	-78.0	0.11 (1)	10.00
B- C	-171 / 0	-78.0	-78.0	0.10 (1)	6.25
C- D	-148 / 0	-78.0	-78.0	0.05 (1)	6.25
D- E	-12 / 0	-78.0	-78.0	0.05 (1)	6.25
F- E	-56 / 0	0.0	0.0	0.02 (1)	7.81
I- H	0 / 0	-18.5	-18.5	0.02 (4)	10.00
H- G	0 / 130	-18.5	-18.5	0.04 (4)	10.00
G- F	0 / 117	-18.5	-18.5	0.03 (4)	10.00

WEBS

MEMB. FR-TO	MAX. FACTORED FORCE (LBS)	MAX CSI (LC)
B- H	0 / 138	0.03 (1)
H- C	-116 / 0	0.02 (1)
C- G	0 / 14	0.00 (1)
G- D	0 / 103	0.02 (4)
D- F	-229 / 0	0.06 (1)

DESIGN CRITERIA

SPECIFIED LOADS:

TOP CH.	LL	=	21.0	PSF
	DL	=	6.0	PSF
BOT CH.	LL	=	0.0	PSF
	DL	=	7.4	PSF
TOTAL LOAD		=	34.4	PSF

SPACING = 24.0 IN. C/C

THIS TRUSS IS DESIGNED FOR RESIDENTIAL OR SMALL BUILDING REQUIREMENTS OF PART 9, NBCC 2015

THIS DESIGN COMPLIES WITH:
- PART 9 OF BCBC 2018 , ABC 2019
- PART 9 OF OBC 2012 (2019 AMENDMENT)
- CSA 086-14
- TPIC 2014

DESIGN ASSUMPTIONS
-OVERHANG NOT TO BE ALTERED OR CUT OFF.

(55 % OF 23.0 P.S.F. G.S.L. PLUS 8.4 P.S.F. RAIN LOAD) EQUALS 21.0 P.S.F. SPECIFIED ROOF LIVE LOAD

ALLOWABLE DEFL.(LL)= L/360 (0.20")
CALCULATED VERT. DEFL.(LL) = L/ 999 (0.00")
ALLOWABLE DEFL.(TL)= L/360 (0.20")
CALCULATED VERT. DEFL.(TL) = L/ 999 (0.00")

CSI: TC=0.11/1.00 (A-B:1) , BC=0.04/1.00 (G-H:4) , WB=0.06/1.00 (D-F:1) , SSI=0.06/1.00 (A-B:1)

DOL LUMBER=1.00 NAIL=1.00 LS BEND=1.10 COMP=1.10 SHEAR=1.10 TENS= 1.10

COMPANION LIVE LOAD FACTOR = 1.00

TRUSS PLATE MANUFACTURER IS NOT RESPONSIBLE FOR QUALITY CONTROL IN THE TRUSS MANUFACTURING PLANT .

NAIL VALUES

PLATE	GRIP(DRY) (PSI) MAX	MIN	SHEAR (PLI) MAX	MIN	SECTION (PLI) MAX	MIN
MT20	650	371	1747	788	1987	1873

PLATE PLACEMENT TOL. = 0.250 inches

PLATE ROTATION TOL. = 5.0 Deg.

JSI GRIP= 0.33 (B) (INPUT = 0.90)
JSI METAL= 0.08 (I) (INPUT = 1.00)

JOB NAME	TRUSS NAME	QUANTITY	PLY	JOB DESC.		DRWG NO.
336335	J02		1	TRUSS DESC.	JT 45147	E21104233

Alpa Roof Truss, Maple

Version 8.420 S Jan 21 2021 MiTek Industries, Inc. Thu Oct 14 08:55:03 2021 Page 1

ID:hd511hZTz_bdeQoS817GKByhVxV-iCsxOrRIAjChBDqpUpLWjJMjVuMXTOv3i1AOG1yTZFM

Scale = 1:41.5

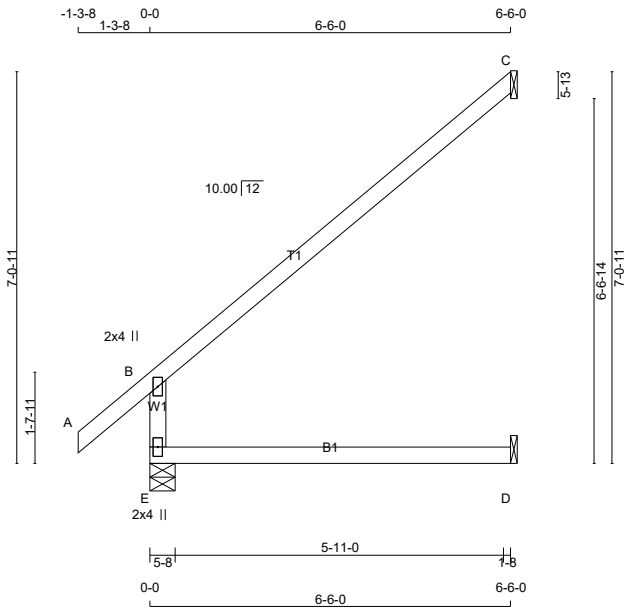

TOTAL WEIGHT = 36 X 21 = 743 lb

[M][F]

LUMBER

N. L. G. A. RULES

CHORDS	SIZE		LUMBER	DESCR.
E - B	2x4	DRY	No.2	SPF
A - C	2x4	DRY	No.2	SPF
E - D	2x4	DRY	No.2	SPF

DRY: SEASONED LUMBER.

PLATES (table is in inches)

JT	TYPE	PLATES	W	LEN	Y	X
B	TMV+p	MT20	2.0	4.0		
E	BMV1+p	MT20	2.0	4.0		

LATERAL BRACE(S) SHOWN SHALL BE 2X4 SPF#2

DIMENSIONS, SUPPORTS AND LOADINGS SPECIFIED BY FABRICATOR TO BE VERIFIED BY BUILDING DESIGNER

BEARINGS

JT	FACTORED GROSS REACTION VERT	HORZ	MAXIMUM FACTORED GROSS REACTION DOWN	HORZ	UPLIFT	INPUT BRG IN-SX	REQRD BRG IN-SX
E	494	0	494	0	0	5-8	1-8
C	190	0	190	0	0	1-8	1-8
D	51	0	57	0	0	1-8	1-8

SEE MITEK STANDARD DETAIL B97791H FOR CONNECTION TO JOINT(S) C , D

UNFACTORED REACTIONS

JT	1ST LCASE COMBINED	MAX./MIN. COMPONENT REACTIONS SNOW	LIVE	PERM.LIVE	WIND	DEAD	SOIL
E	350	229 / 0	0 / 0	0 / 0	0 / 0	121 / 0	0 / 0
C	132	102 / 0	0 / 0	0 / 0	0 / 0	29 / 0	0 / 0
D	41	0 / 0	0 / 0	0 / 0	0 / 0	41 / 0	0 / 0

BEARING MATERIAL TO BE SPF NO.2 OR BETTER AT JOINT(S) E

BRACING

TOP CHORD TO BE SHEATHED OR MAX. PURLIN SPACING = 6.25 FT.
MAX. UNBRACED BOTTOM CHORD LENGTH = 10.00 FT OR RIGID CEILING DIRECTLY APPLIED.

ALL PITCH BREAKS AND PERIMETER CORNER JOINTS MUST BE LATERALLY RESTRAINED.

LOADING

TOTAL LOAD CASES: (4)

CHORDS MEMB. FR-TO	MAX. FACTORED FORCE (LBS)	FACTORED VERT. LOAD (PLF) FROM	TO	LC1 MAX CSI (LC)	MAX. UNBRAC LENGTH
E- B	-425 / 0	0.0	0.0	0.13 (4)	7.81
A- B	0 / 35	-78.0	-78.0	0.11 (1)	10.00
B- C	-41 / 0	-78.0	-78.0	0.44 (1)	6.25
E- D	0 / 0	-18.5	-18.5	0.16 (4)	10.00

WEBS MEMB. FR-TO	MAX. FACTORED FORCE (LBS)	MAX CSI (LC)

DESIGN CRITERIA

SPECIFIED LOADS:

TOP CH.	LL	=	21.0	PSF
	DL	=	6.0	PSF
BOT CH.	LL	=	0.0	PSF
	DL	=	7.4	PSF
TOTAL LOAD		=	34.4	PSF

SPACING = 24.0 IN. C/C

THIS TRUSS IS DESIGNED FOR RESIDENTIAL OR SMALL BUILDING REQUIREMENTS OF PART 9, NBCC 2015

THIS DESIGN COMPLIES WITH:
- PART 9 OF BCBC 2018 , ABC 2019
- PART 9 OF OBC 2012 (2019 AMENDMENT)
- CSA 086-14
- TPIC 2014

DESIGN ASSUMPTIONS
-OVERHANG NOT TO BE ALTERED OR CUT OFF.

(55 % OF 23.0 P.S.F. G.S.L. PLUS 8.4 P.S.F. RAIN LOAD) EQUALS 21.0 P.S.F. SPECIFIED ROOF LIVE LOAD

ALLOWABLE DEFL.(LL)= L/360 (0.22")
CALCULATED VERT. DEFL.(LL) = L/ 999 (0.00")
ALLOWABLE DEFL.(TL)= L/360 (0.22")
CALCULATED VERT. DEFL.(TL) = L/ 999 (0.05")

CSI: TC=0.44/1.00 (B-C:1) , BC=0.16/1.00 (D-E:4) , WB=0.00/1.00 (n/a:0) , SSI=0.19/1.00 (B-C:1)

DOL LUMBER=1.00 NAIL=1.00 LS BEND=1.10 COMP=1.10 SHEAR=1.10 TENS= 1.10

COMPANION LIVE LOAD FACTOR = 1.00

AUTOSOLVE RIGHT HEEL ONLY

TRUSS PLATE MANUFACTURER IS NOT RESPONSIBLE FOR QUALITY CONTROL IN THE TRUSS MANUFACTURING PLANT .

NAIL VALUES

PLATE	GRIP(DRY) (PSI) MAX	MIN	SHEAR (PLI) MAX	MIN	SECTION (PLI) MAX	MIN
MT20	650	371	1747	788	1987	1873

PLATE PLACEMENT TOL. = 0.250 inches

PLATE ROTATION TOL. = 5.0 Deg.

JSI GRIP= 0.29 (B) (INPUT = 0.90)
JSI METAL= 0.23 (B) (INPUT = 1.00)

JOB NAME	TRUSS NAME	QUANTITY	PLY	JOB DESC.		DRWG NO.
336335	J02T		1	TRUSS DESC.	JT 45147	E21104234

Alpa Roof Truss, Maple

Version 8.420 S Jan 21 2021 MiTek Industries, Inc. Thu Oct 14 08:55:05 2021 Page 1

ID:hd511hZTz_bdeQoS817GKByhVxV-ebzhpXTYiKSPRW_BbEO_okS7Di4jxHKM9LfUKwyTZFK

Scale = 1:41.7

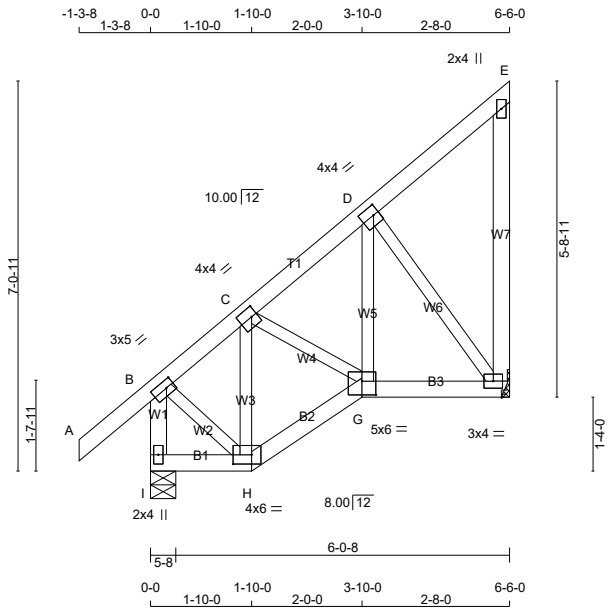

TOTAL WEIGHT = 12 X 38 = 455 lb

LUMBER

N. L. G. A. RULES

CHORDS	SIZE		LUMBER	DESCR.
I - B	2x4	DRY	No.2	SPF
A - E	2x4	DRY	No.2	SPF
F - E	2x4	DRY	No.2	SPF
I - H	2x4	DRY	No.2	SPF
H - G	2x4	DRY	No.2	SPF
G - F	2x4	DRY	No.2	SPF
ALL WEBS	2x3	DRY	No.2	SPF

DRY: SEASONED LUMBER.

PLATES (table is in inches)

JT	TYPE	PLATES	W	LEN	Y	X
B	TMVW-t	MT20	3.0	5.0	1.50	1.75
C	TMWW-t	MT20	4.0	4.0	2.00	1.25
D	TMWW-t	MT20	4.0	4.0	2.00	1.25
E	TMV+p	MT20	2.0	4.0		
F	BMVW1-t	MT20	3.0	4.0		
G	BBWW-l	MT20	5.0	6.0	3.00	3.00
H	BBWW-l	MT20	4.0	6.0	2.00	4.00
I	BMV1+p	MT20	2.0	4.0		

LATERAL BRACE(S) SHOWN SHALL BE 2X4 SPF#2

DIMENSIONS, SUPPORTS AND LOADINGS SPECIFIED BY FABRICATOR TO BE VERIFIED BY BUILDING DESIGNER

BEARINGS

JT	FACTORED GROSS REACTION VERT	HORZ	MAXIMUM FACTORED GROSS REACTION DOWN	HORZ	UPLIFT	INPUT BRG IN-SX	REQRD BRG IN-SX
I	433	0	433	0	0	5-8	1-8
F	302	0	302	0	0	MECHANICAL	

A SUITABLE HANGER/MECHANICAL CONNECTION IS REQUIRED AT JOINT F. MINIMUM BEARING LENGTH AT JOINT F = 1-8.

UNFACTORED REACTIONS

JT	1ST LCASE COMBINED	MAX./MIN. COMPONENT REACTIONS SNOW	LIVE	PERM.LIVE	WIND	DEAD	SOIL
I	306	201 / 0	0 / 0	0 / 0	0 / 0	105 / 0	0 / 0
F	216	130 / 0	0 / 0	0 / 0	0 / 0	85 / 0	0 / 0

BEARING MATERIAL TO BE SPF NO.2 OR BETTER AT JOINT(S) I

BRACING

TOP CHORD TO BE SHEATHED OR MAX. PURLIN SPACING = 6.25 FT.
MAX. UNBRACED BOTTOM CHORD LENGTH = 10.00 FT OR RIGID CEILING DIRECTLY APPLIED.

ALL PITCH BREAKS AND PERIMETER CORNER JOINTS MUST BE LATERALLY RESTRAINED.

LOADING

TOTAL LOAD CASES: (4)

CHORDS

MEMB. FR-TO	MAX. FACTORED FORCE (LBS)	FACTORED VERT. LOAD LC1 (PLF) FROM	TO	MAX CSI (LC)	MAX. UNBRAC LENGTH
I- B	-416 / 0	0.0	0.0	0.04 (1)	7.81
A- B	0 / 35	-78.0	-78.0	0.11 (1)	10.00
B- C	-195 / 0	-78.0	-78.0	0.08 (1)	6.25
C- D	-194 / 0	-78.0	-78.0	0.06 (1)	6.25
D- E	-13 / 0	-78.0	-78.0	0.06 (1)	6.25
F- E	-79 / 0	0.0	0.0	0.05 (1)	7.81
I- H	0 / 0	-18.5	-18.5	0.02 (4)	10.00
H- G	0 / 150	-18.5	-18.5	0.04 (4)	10.00
G- F	0 / 157	-18.5	-18.5	0.05 (4)	10.00

WEBS

MEMB. FR-TO	MAX. FACTORED FORCE (LBS)	MAX CSI (LC)
B- H	0 / 159	0.04 (1)
H- C	-139 / 0	0.03 (1)
C- G	0 / 43	0.01 (1)
G- D	0 / 104	0.03 (4)
D- F	-253 / 0	0.07 (1)

[M][F]

DESIGN CRITERIA

SPECIFIED LOADS:

TOP CH.	LL	=	21.0	PSF
	DL	=	6.0	PSF
BOT CH.	LL	=	0.0	PSF
	DL	=	7.4	PSF
TOTAL LOAD		=	34.4	PSF

SPACING = 24.0 IN. C/C

THIS TRUSS IS DESIGNED FOR RESIDENTIAL OR SMALL BUILDING REQUIREMENTS OF PART 9, NBCC 2015

THIS DESIGN COMPLIES WITH:
- PART 9 OF BCBC 2018 , ABC 2019
- PART 9 OF OBC 2012 (2019 AMENDMENT)
- CSA 086-14
- TPIC 2014

DESIGN ASSUMPTIONS
-OVERHANG NOT TO BE ALTERED OR CUT OFF.

(55 % OF 23.0 P.S.F. G.S.L. PLUS 8.4 P.S.F. RAIN LOAD) EQUALS 21.0 P.S.F. SPECIFIED ROOF LIVE LOAD

ALLOWABLE DEFL.(LL)= L/360 (0.22")
CALCULATED VERT. DEFL.(LL) = L/ 999 (0.00")
ALLOWABLE DEFL.(TL)= L/360 (0.22")
CALCULATED VERT. DEFL.(TL) = L/ 999 (0.00")

CSI: TC=0.11/1.00 (A-B:1) , BC=0.05/1.00 (F-G:4) , WB=0.07/1.00 (D-F:1) , SSI=0.07/1.00 (D-E:1)

DOL LUMBER=1.00 NAIL=1.00 LS BEND=1.10 COMP=1.10 SHEAR=1.10 TENS= 1.10

COMPANION LIVE LOAD FACTOR = 1.00

TRUSS PLATE MANUFACTURER IS NOT RESPONSIBLE FOR QUALITY CONTROL IN THE TRUSS MANUFACTURING PLANT .

NAIL VALUES

PLATE	GRIP(DRY) (PSI) MAX	MIN	SHEAR (PLI) MAX	MIN	SECTION (PLI) MAX	MIN
MT20	650	371	1747	788	1987	1873

PLATE PLACEMENT TOL. = 0.250 inches

PLATE ROTATION TOL. = 5.0 Deg.

JSI GRIP= 0.35 (B) (INPUT = 0.90)
JSI METAL= 0.09 (B) (INPUT = 1.00)

JOB NAME	TRUSS NAME	QUANTITY	PLY	JOB DESC.		DRWG NO.
336335	J04		1	TRUSS DESC.	JT 45147	E21104235

Alpa Roof Truss, Maple

Version 8.420 S Jan 21 2021 MiTek Industries, Inc. Thu Oct 14 08:55:06 2021 Page 1

ID:hd511hZTz bdeQoS817GKByhVxV-6nX30tUATeaF3qZO9xvDLx CU6OkqlfVO?O2sMyTZFJ

Scale = 1:31.4

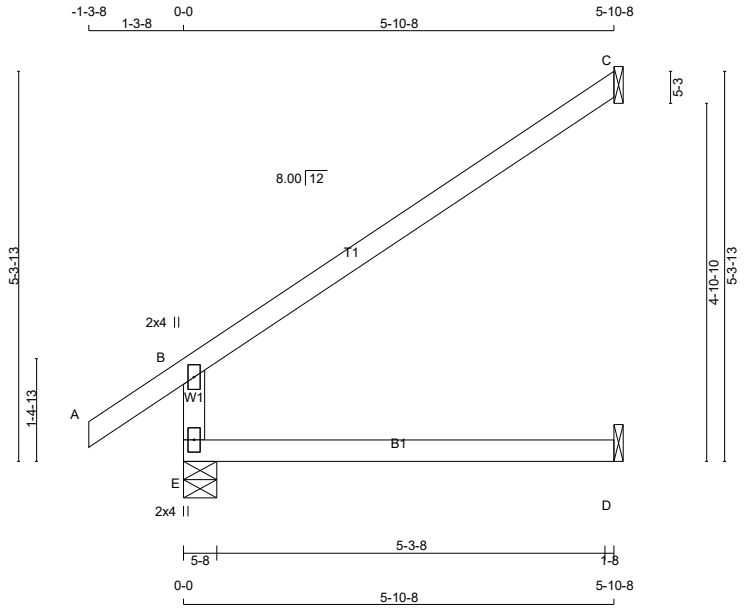

TOTAL WEIGHT = 6 X 18 = 107 lb

[M]

LUMBER

N. L. G. A. RULES

CHORDS	SIZE		LUMBER	DESCR.
E - B	2x4	DRY	No.2	SPF
A - C	2x4	DRY	No.2	SPF
E - D	2x4	DRY	No.2	SPF

DRY: SEASONED LUMBER.

PLATES (table is in inches)

JT	TYPE	PLATES	W	LEN	Y	X
B	TMV+p	MT20	2.0	4.0		
E	BMV1+p	MT20	2.0	4.0		

LATERAL BRACE(S) SHOWN SHALL BE 2X4 SPF#2

DIMENSIONS, SUPPORTS AND LOADINGS SPECIFIED BY FABRICATOR TO BE VERIFIED BY BUILDING DESIGNER

BEARINGS

JT	FACTORED GROSS REACTION VERT	HORZ	MAXIMUM FACTORED GROSS REACTION DOWN	HORZ	UPLIFT	INPUT BRG IN-SX	REQRD BRG IN-SX
E	456	0	456	0	0	5-8	1-8
C	172	0	172	0	0	1-8	1-8
D	46	0	51	0	0	1-8	1-8

SEE MITEK STANDARD DETAIL B97791H FOR CONNECTION TO JOINT(S) C , D

UNFACTORED REACTIONS

JT	1ST LCASE COMBINED	MAX./MIN. COMPONENT REACTIONS SNOW	LIVE	PERM.LIVE	WIND	DEAD	SOIL
E	323	212 / 0	0 / 0	0 / 0	0 / 0	111 / 0	0 / 0
C	119	93 / 0	0 / 0	0 / 0	0 / 0	26 / 0	0 / 0
D	36	0 / 0	0 / 0	0 / 0	0 / 0	36 / 0	0 / 0

BEARING MATERIAL TO BE SPF NO.2 OR BETTER AT JOINT(S) E

BRACING

TOP CHORD TO BE SHEATHED OR MAX. PURLIN SPACING = 6.25 FT.
MAX. UNBRACED BOTTOM CHORD LENGTH = 10.00 FT OR RIGID CEILING DIRECTLY APPLIED.

ALL PITCH BREAKS AND PERIMETER CORNER JOINTS MUST BE LATERALLY RESTRAINED.

LOADING

TOTAL LOAD CASES: (4)

CHORDS MEMB. FR-TO	MAX. FACTORED FORCE (LBS)	FACTORED VERT. LOAD (PLF) FROM	TO	LC1 MAX CSI (LC)	MAX. UNBRAC LENGTH
E- B	-393 / 0	0.0	0.0	0.12 (4)	7.81
A- B	0 / 30	-78.0	-78.0	0.10 (1)	10.00
B- C	-32 / 0	-78.0	-78.0	0.46 (1)	6.25
E- D	0 / 0	-18.5	-18.5	0.13 (4)	10.00

WEBS MEMB. FR-TO	MAX. FACTORED FORCE (LBS)	MAX CSI (LC)

DESIGN CRITERIA

SPECIFIED LOADS:

TOP CH.	LL	=	21.0	PSF
	DL	=	6.0	PSF
BOT CH.	LL	=	0.0	PSF
	DL	=	7.4	PSF
TOTAL LOAD		=	34.4	PSF

SPACING = 24.0 IN. C/C

THIS TRUSS IS DESIGNED FOR RESIDENTIAL OR SMALL BUILDING REQUIREMENTS OF PART 9, NBCC 2015

THIS DESIGN COMPLIES WITH:
- PART 9 OF BCBC 2018 , ABC 2019
- PART 9 OF OBC 2012 (2019 AMENDMENT)
- CSA 086-14
- TPIC 2014

DESIGN ASSUMPTIONS
-OVERHANG NOT TO BE ALTERED OR CUT OFF.

(55 % OF 23.0 P.S.F. G.S.L. PLUS 8.4 P.S.F. RAIN LOAD) EQUALS 21.0 P.S.F. SPECIFIED ROOF LIVE LOAD

ALLOWABLE DEFL.(LL)= L/360 (0.20")
CALCULATED VERT. DEFL.(LL) = L/ 999 (0.00")
ALLOWABLE DEFL.(TL)= L/360 (0.20")
CALCULATED VERT. DEFL.(TL) = L/ 999 (0.03")

CSI: TC=0.46/1.00 (B-C:1) , BC=0.13/1.00 (D-E:4) , WB=0.00/1.00 (n/a:0) , SSI=0.19/1.00 (B-C:1)

DOL LUMBER=1.00 NAIL=1.00 LS BEND=1.10 COMP=1.10 SHEAR=1.10 TENS= 1.10

COMPANION LIVE LOAD FACTOR = 1.00

AUTOSOLVE RIGHT HEEL ONLY

TRUSS PLATE MANUFACTURER IS NOT RESPONSIBLE FOR QUALITY CONTROL IN THE TRUSS MANUFACTURING PLANT .

NAIL VALUES

PLATE	GRIP(DRY) (PSI) MAX	MIN	SHEAR (PLI) MAX	MIN	SECTION (PLI) MAX	MIN
MT20	650	371	1747	788	1987	1873

PLATE PLACEMENT TOL. = 0.250 inches

PLATE ROTATION TOL. = 5.0 Deg.

JSI GRIP= 0.24 (B) (INPUT = 0.90)
JSI METAL= 0.20 (B) (INPUT = 1.00)

JOB NAME	TRUSS NAME	QUANTITY	PLY	JOB DESC.		DRWG NO.
336335	J08		1	TRUSS DESC.	JT 45147	E21104236

Alpa Roof Truss, Maple

Version 8.420 S Jan 21 2021 MiTek Industries, Inc. Thu Oct 14 08:55:08 2021 Page 1

ID:hd511hZTz_bdeQoS817GKByhVxV-3AfqRZVR?FqzI_jmGMxhQM4dlv5M8f9orIt9xFyTZFH

Scale = 1:22.4

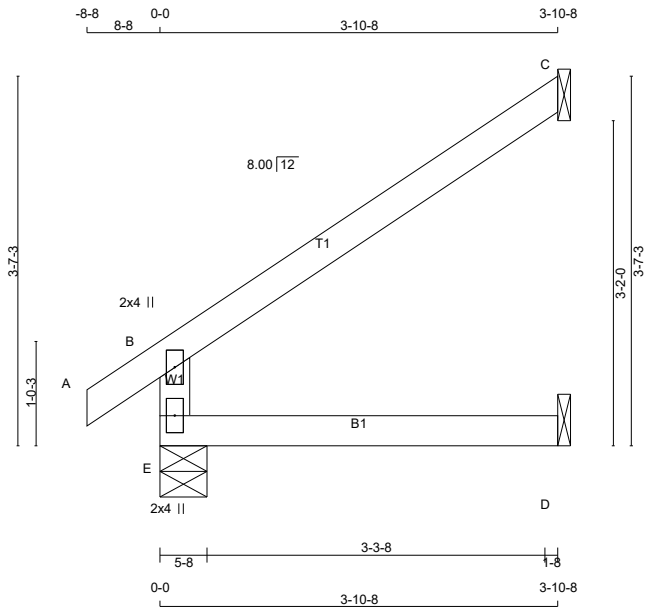

TOTAL WEIGHT = 2 X 12 = 23 lb

[M][F]

LUMBER

N. L. G. A. RULES

CHORDS	SIZE		LUMBER	DESCR.
E - B	2x4	DRY	No.2	SPF
A - C	2x4	DRY	No.2	SPF
E - D	2x4	DRY	No.2	SPF

DRY: SEASONED LUMBER.

PLATES (table is in inches)

JT	TYPE	PLATES	W	LEN	Y	X
B	TMV+p	MT20	2.0	4.0		
E	BMV1+p	MT20	2.0	4.0		

LATERAL BRACE(S) SHOWN SHALL BE 2X4 SPF#2

DIMENSIONS, SUPPORTS AND LOADINGS SPECIFIED BY FABRICATOR TO BE VERIFIED BY BUILDING DESIGNER

BEARINGS

JT	FACTORED GROSS REACTION VERT	HORZ	MAXIMUM FACTORED GROSS REACTION DOWN	HORZ	UPLIFT	INPUT BRG IN-SX	REQRD BRG IN-SX
E	292	0	292	0	0	5-8	1-8
C	113	0	113	0	0	1-8	1-8
D	30	0	34	0	0	1-8	1-8

SEE MITEK STANDARD DETAIL B97791H FOR CONNECTION TO JOINT(S) C , D

UNFACTORED REACTIONS

JT	1ST LCASE COMBINED	MAX./MIN. COMPONENT REACTIONS SNOW	LIVE	PERM.LIVE	WIND	DEAD	SOIL
E	207	135 / 0	0 / 0	0 / 0	0 / 0	72 / 0	0 / 0
C	78	61 / 0	0 / 0	0 / 0	0 / 0	17 / 0	0 / 0
D	24	0 / 0	0 / 0	0 / 0	0 / 0	24 / 0	0 / 0

BEARING MATERIAL TO BE SPF NO.2 OR BETTER AT JOINT(S) E

BRACING

TOP CHORD TO BE SHEATHED OR MAX. PURLIN SPACING = 6.25 FT.
MAX. UNBRACED BOTTOM CHORD LENGTH = 10.00 FT OR RIGID CEILING DIRECTLY APPLIED.

ALL PITCH BREAKS AND PERIMETER CORNER JOINTS MUST BE LATERALLY RESTRAINED.

LOADING

TOTAL LOAD CASES: (4)

CHORDS MEMB. FR-TO	MAX. FACTORED FORCE (LBS)	FACTORED VERT. LOAD (PLF) FROM	TO	LC1 MAX CSI (LC)	MAX. UNBRAC LENGTH	WEBS MEMB. FR-TO	MAX. FACTORED FORCE (LBS)	MAX CSI (LC)
E- B	-250 / 0	0.0	0.0	0.04 (4)	7.81			
A- B	0 / 17	-78.0	-78.0	0.04 (1)	10.00			
B- C	-21 / 0	-78.0	-78.0	0.15 (1)	6.25			
E- D	0 / 0	-18.5	-18.5	0.06 (4)	10.00			

DESIGN CRITERIA

SPECIFIED LOADS:

TOP	CH.	LL	=	21.0	PSF
		DL	=	6.0	PSF
BOT	CH.	LL	=	0.0	PSF
		DL	=	7.4	PSF
TOTAL	LOAD		=	34.4	PSF

SPACING = 24.0 IN. C/C

THIS TRUSS IS DESIGNED FOR RESIDENTIAL OR SMALL BUILDING REQUIREMENTS OF PART 9, NBCC 2015

THIS DESIGN COMPLIES WITH:
- PART 9 OF BCBC 2018 , ABC 2019
- PART 9 OF OBC 2012 (2019 AMENDMENT)
- CSA 086-14
- TPIC 2014

DESIGN ASSUMPTIONS
-OVERHANG NOT TO BE ALTERED OR CUT OFF.

(55 % OF 23.0 P.S.F. G.S.L. PLUS 8.4 P.S.F. RAIN LOAD) EQUALS 21.0 P.S.F. SPECIFIED ROOF LIVE LOAD

ALLOWABLE DEFL.(LL)= L/360 (0.19")
CALCULATED VERT. DEFL.(LL) = L/ 999 (0.00")
ALLOWABLE DEFL.(TL)= L/360 (0.19")
CALCULATED VERT. DEFL.(TL) = L/ 999 (0.01")

CSI: TC=0.15/1.00 (B-C:1) , BC=0.06/1.00 (D-E:4) , WB=0.00/1.00 (n/a:0) , SSI=0.12/1.00 (B-C:1)

DOL LUMBER=1.00 NAIL=1.00 LS BEND=1.10 COMP=1.10 SHEAR=1.10 TENS= 1.10

COMPANION LIVE LOAD FACTOR = 1.00

AUTOSOLVE RIGHT HEEL ONLY

TRUSS PLATE MANUFACTURER IS NOT RESPONSIBLE FOR QUALITY CONTROL IN THE TRUSS MANUFACTURING PLANT .

NAIL VALUES

PLATE	GRIP(DRY) (PSI) MAX	MIN	SHEAR (PLI) MAX	MIN	SECTION (PLI) MAX	MIN
MT20	650	371	1747	788	1987	1873

PLATE PLACEMENT TOL. = 0.250 inches

PLATE ROTATION TOL. = 5.0 Deg.

JSI GRIP= 0.15 (B) (INPUT = 0.90)
JSI METAL= 0.13 (B) (INPUT = 1.00)

JOB NAME	TRUSS NAME	QUANTITY	PLY	JOB DESC.		DRWG NO.
336335	J09		1	TRUSS DESC.	JT 45147	E21104237

Alpa Roof Truss, Maple

Version 8.420 S Jan 21 2021 MiTek Industries, Inc. Thu Oct 14 08:55:09 2021 Page 1

ID:hd511hZTz bdeQoS817GKByhVxV-XMDCevW3mZyqw8Izq3SwyacmYJQ8t6Ox4ydiThyTZFG

Scale = 1:37.9

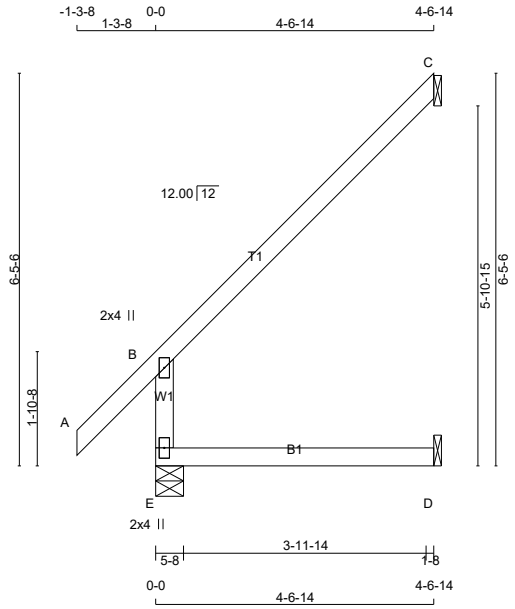

TOTAL WEIGHT = 4 X 17 = 67 lb

LUMBER

N. L. G. A. RULES

CHORDS	SIZE		LUMBER	DESCR.
E - B	2x4	DRY	No.2	SPF
A - C	2x4	DRY	No.2	SPF
E - D	2x4	DRY	No.2	SPF

DRY: SEASONED LUMBER.

PLATES (table is in inches)

JT	TYPE	PLATES	W	LEN	Y	X
B	TMV+p	MT20	2.0	4.0		
E	BMV1+p	MT20	2.0	4.0		

LATERAL BRACE(S) SHOWN SHALL BE 2X4 SPF#2

DIMENSIONS, SUPPORTS AND LOADINGS SPECIFIED BY FABRICATOR TO BE VERIFIED BY BUILDING DESIGNER

BEARINGS

JT	FACTORED GROSS REACTION VERT	HORZ	MAXIMUM FACTORED GROSS REACTION DOWN	HORZ	UPLIFT	INPUT BRG IN-SX	REQRD BRG IN-SX
E	379	0	379	0	0	5-8	1-8
C	134	0	134	0	0	1-8	1-8
D	37	0	41	0	0	1-8	1-8

SEE MITEK STANDARD DETAIL B97791H FOR CONNECTION TO JOINT(S) C , D

UNFACTORED REACTIONS

JT	1ST LCASE COMBINED	MAX./MIN. COMPONENT REACTIONS SNOW	LIVE	PERM.LIVE	WIND	DEAD	SOIL
E	268	178 / 0	0 / 0	0 / 0	0 / 0	89 / 0	0 / 0
C	93	72 / 0	0 / 0	0 / 0	0 / 0	21 / 0	0 / 0
D	30	0 / 0	0 / 0	0 / 0	0 / 0	30 / 0	0 / 0

BEARING MATERIAL TO BE SPF NO.2 OR BETTER AT JOINT(S) E

BRACING

TOP CHORD TO BE SHEATHED OR MAX. PURLIN SPACING = 6.25 FT.
MAX. UNBRACED BOTTOM CHORD LENGTH = 10.00 FT OR RIGID CEILING DIRECTLY APPLIED.

ALL PITCH BREAKS AND PERIMETER CORNER JOINTS MUST BE LATERALLY RESTRAINED.

LOADING

TOTAL LOAD CASES: (4)

CHORDS MEMB. FR-TO	MAX. FACTORED FORCE (LBS)	VERT. LOAD (PLF) FROM	TO	LC1 MAX CSI (LC)	WEBS MEMB. FR-TO	MAX. UNBRAC LENGTH	MAX. FACTORED FORCE (LBS)	MAX CSI (LC)
E- B	-331 / 0	0.0	0.0	0.06 (4)		7.81		
A- B	0 / 38	-78.0	-78.0	0.11 (1)		10.00		
B- C	-31 / 0	-78.0	-78.0	0.28 (1)		6.25		
E- D	0 / 0	-18.5	-18.5	0.09 (4)		10.00		

DESIGN CRITERIA

SPECIFIED LOADS:

TOP	CH.	LL	=	21.0	PSF
		DL	=	6.0	PSF
BOT	CH.	LL	=	0.0	PSF
		DL	=	7.4	PSF
TOTAL	LOAD		=	34.4	PSF

SPACING = 24.0 IN. C/C

THIS TRUSS IS DESIGNED FOR RESIDENTIAL OR SMALL BUILDING REQUIREMENTS OF PART 9, NBCC 2015

THIS DESIGN COMPLIES WITH:
- PART 9 OF BCBC 2018 , ABC 2019
- PART 9 OF OBC 2012 (2019 AMENDMENT)
- CSA 086-14
- TPIC 2014

DESIGN ASSUMPTIONS
-OVERHANG NOT TO BE ALTERED OR CUT OFF.

(55 % OF 23.0 P.S.F. G.S.L. PLUS 8.4 P.S.F. RAIN LOAD) EQUALS 21.0 P.S.F. SPECIFIED ROOF LIVE LOAD

ALLOWABLE DEFL.(LL)= L/360 (0.19")
CALCULATED VERT. DEFL.(LL) = L/ 999 (0.00")
ALLOWABLE DEFL.(TL)= L/360 (0.19")
CALCULATED VERT. DEFL.(TL) = L/ 999 (0.01")

CSI: TC=0.28/1.00 (B-C:1) , BC=0.09/1.00 (D-E:4) , WB=0.00/1.00 (n/a:0) , SSI=0.12/1.00 (B-C:1)

DOL LUMBER=1.00 NAIL=1.00 LS BEND=1.10 COMP=1.10 SHEAR=1.10 TENS= 1.10

COMPANION LIVE LOAD FACTOR = 1.00

TRUSS PLATE MANUFACTURER IS NOT RESPONSIBLE FOR QUALITY CONTROL IN THE TRUSS MANUFACTURING PLANT .

NAIL VALUES

PLATE	GRIP(DRY) (PSI) MAX	MIN	SHEAR (PLI) MAX	MIN	SECTION (PLI) MAX	MIN
MT20	650	371	1747	788	1987	1873

PLATE PLACEMENT TOL. = 0.250 inches

PLATE ROTATION TOL. = 5.0 Deg.

JSI GRIP= 0.25 (B) (INPUT = 0.90)
JSI METAL= 0.17 (B) (INPUT = 1.00)

JOB NAME	TRUSS NAME	QUANTITY	PLY	JOB DESC.		DRWG NO.
336335	P04		1	TRUSS DESC.	JT 45147	E21104238

Alpa Roof Truss, Maple

Version 8.420 S Jan 21 2021 MiTek Industries, Inc. Thu Oct 14 08:55:11 2021 Page 1

ID:hd511hZTz_bdeQoS817GKByhVxV-TlLy3aYJHACY9RSLyUVO2?h6176dL0uEXG6pYZyTZFE

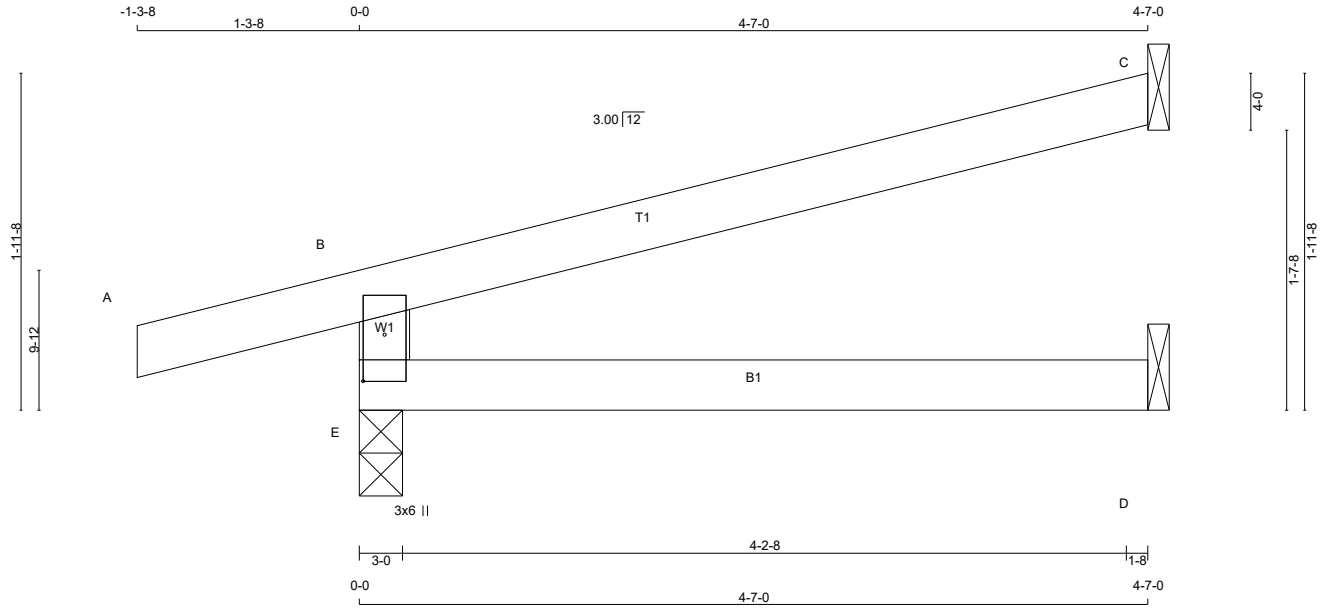

TOTAL WEIGHT = 9 X 13 = 113 lb

[M]

LUMBER

N. L. G. A. RULES

CHORDS	SIZE		LUMBER	DESCR.
E - B	2x4	DRY	No.2	SPF
A - C	2x4	DRY	No.2	SPF
E - D	2x4	DRY	No.2	SPF

DRY: SEASONED LUMBER.

PLATES (table is in inches)

JT	TYPE	PLATES	W	LEN	Y	X
B						
E						
E	TMBMV1+p	MT20	3.0	6.0	3.25	1.50

LATERAL BRACE(S) SHOWN SHALL BE 2X4 SPF#2

DIMENSIONS, SUPPORTS AND LOADINGS SPECIFIED BY FABRICATOR TO BE VERIFIED BY BUILDING DESIGNER

BEARINGS

JT	FACTORED GROSS REACTION VERT	HORZ	MAXIMUM FACTORED GROSS REACTION DOWN	HORZ	UPLIFT	INPUT BRG IN-SX	REQRD BRG IN-SX
E	377	0	377	0	0	3-0	1-8
C	134	0	134	0	0	1-8	1-8
D	34	0	39	0	0	1-8	1-8

SEE MITEK STANDARD DETAIL B97791H FOR CONNECTION TO JOINT(S) C , D

UNFACTORED REACTIONS

JT	1ST LCASE COMBINED	MAX./MIN. COMPONENT REACTIONS SNOW	LIVE	PERM.LIVE	WIND	DEAD	SOIL
E	266	176 / 0	0 / 0	0 / 0	0 / 0	91 / 0	0 / 0
C	93	72 / 0	0 / 0	0 / 0	0 / 0	21 / 0	0 / 0
D	28	0 / 0	0 / 0	0 / 0	0 / 0	28 / 0	0 / 0

BEARING MATERIAL TO BE SPF NO.2 OR BETTER AT JOINT(S) E

BRACING

TOP CHORD TO BE SHEATHED OR MAX. PURLIN SPACING = 6.25 FT.
MAX. UNBRACED BOTTOM CHORD LENGTH = 10.00 FT OR RIGID CEILING DIRECTLY APPLIED.

ALL PITCH BREAKS AND PERIMETER CORNER JOINTS MUST BE LATERALLY RESTRAINED.

LOADING

TOTAL LOAD CASES: (4)

CHORDS MEMB. FR-TO	MAX. FACTORED FORCE (LBS)	FACTORED VERT. LOAD (PLF) FROM	TO	LC1 MAX CSI (LC)	MAX. UNBRAC LENGTH	WEBS MEMB. FR-TO	MAX. FACTORED FORCE (LBS)	MAX CSI (LC)
E- B	-327 / 0	0.0	0.0	0.09 (4)	7.81			
A- B	0 / 13	-78.0	-78.0	0.10 (1)	10.00			
B- C	-11 / 0	-78.0	-78.0	0.28 (1)	6.25			
E- D	0 / 0	-18.5	-18.5	0.09 (4)	10.00			

DESIGN CRITERIA

SPECIFIED LOADS:

TOP	CH.	LL	=	21.0	PSF
		DL	=	6.0	PSF
BOT	CH.	LL	=	0.0	PSF
		DL	=	7.4	PSF
TOTAL	LOAD		=	34.4	PSF

SPACING = 24.0 IN. C/C

THIS TRUSS IS DESIGNED FOR RESIDENTIAL OR SMALL BUILDING REQUIREMENTS OF PART 9, NBCC 2015

THIS DESIGN COMPLIES WITH:
- PART 9 OF BCBC 2018 , ABC 2019
- PART 9 OF OBC 2012 (2019 AMENDMENT)
- CSA 086-14
- TPIC 2014

DESIGN ASSUMPTIONS
-OVERHANG NOT TO BE ALTERED OR CUT OFF.

(55 % OF 23.0 P.S.F. G.S.L. PLUS 8.4 P.S.F. RAIN LOAD) EQUALS 21.0 P.S.F. SPECIFIED ROOF LIVE LOAD

ALLOWABLE DEFL.(LL)= L/360 (0.19")
CALCULATED VERT. DEFL.(LL) = L/ 999 (0.00")
ALLOWABLE DEFL.(TL)= L/360 (0.19")
CALCULATED VERT. DEFL.(TL) = L/ 999 (0.01")

CSI: TC=0.28/1.00 (B-C:1) , BC=0.09/1.00 (D-E:4) , WB=0.00/1.00 (n/a:0) , SSI=0.17/1.00 (B-C:1)

DOL LUMBER=1.00 NAIL=1.00 LS BEND=1.10 COMP=1.10 SHEAR=1.10 TENS= 1.10

COMPANION LIVE LOAD FACTOR = 1.00

TRUSS PLATE MANUFACTURER IS NOT RESPONSIBLE FOR QUALITY CONTROL IN THE TRUSS MANUFACTURING PLANT .

NAIL VALUES

PLATE	GRIP(DRY) (PSI) MAX	MIN	SHEAR (PLI) MAX	MIN	SECTION (PLI) MAX	MIN
MT20	650	371	1747	788	1987	1873

PLATE PLACEMENT TOL. = 0.250 inches

PLATE ROTATION TOL. = 5.0 Deg.

JSI GRIP= 0.20 (E) (INPUT = 0.90)
JSI METAL= 0.05 (E) (INPUT = 1.00)

TECHNICAL BULLETIN

LUS – Double Shear Joist Hangers

SIMPSON Strong-Tie®

All LUS hangers have double shear nailing. This patented innovation distributes the load through two points on each joist nail for greater strength. It also allows the use of fewer nails, faster installation and the use of common nails for all connections.

Material: 18 gauge

Finish: G90 galvanized

Design:

- Factored resistances are in accordance with CSA O86-14.
- Uplift resistances have been increased 15%. No further increase is permitted.
- Wood shear is not considered in the factored resistances given. The specifier must ensure that the joist and header capacities are capable of withstanding these loads.

Installation:

- Use all specified fasteners.
- Nails: 16d = 0.162" dia. x 3½" long common wire, 10d = 0.148" x 3" long common wire.
- Double shear nails must be driven at an angle through the joist or truss into the header to achieve the table loads.
- Not designed for welded or nailer applications.

Options:

- These hangers cannot be modified

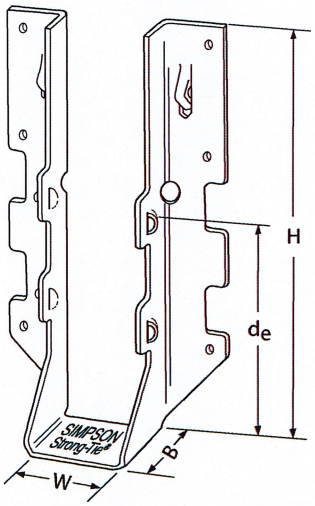

LUS28

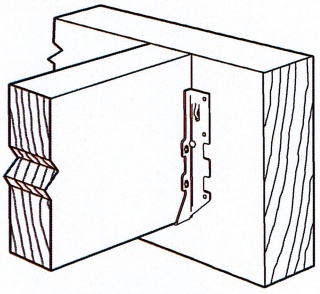

Typical LUS Installation

Model No.	Ga.	Dimensions (in.)				Fasteners		Factored Resistance (lb.)			
								D.Fir-L		S-P-F	
		W	H	B	d_e[1]	Face	Joist	Uplift (K_D=1.15)	Normal (K_D=1.00)	Uplift (K_D=1.15)	Normal (K_D=1.00)
LUS24	18	1 9/16	3 1/8	1 3/4	1 15/16	(4) 10d	(2) 10d	710	1630	645	1155
LUS24-2	18	3 1/8	3 1/8	2	1 13/16	(4) 16d	(2) 16d	835	2020	590	1435
LUS26	18	1 9/16	4 3/4	1 3/4	3 5/8	(4) 10d	(4) 10d	1420	2170	1290	1630
LUS26-2	18	3 1/8	4 7/8	2	4	(4) 16d	(4) 16d	1720	2595	1545	1920
LUS26-3	18	4 5/8	4 3/16	2	3 1/4	(4) 16d	(4) 16d	1720	2595	1545	2340
LUS28	18	1 9/16	6 5/8	1 3/4	3 3/4	(6) 10d	(6) 10d	1420	2520	1290	1790
LUS28-2	18	3 1/8	7	2	4	(6) 16d	(4) 16d	1720	3325	1545	2575
LUS28-3	18	4 5/8	6 1/4	2	3 1/4	(6) 16d	(4) 16d	1720	3325	1545	2375
LUS210	18	1 9/16	7 13/16	1 3/4	3 7/8	(8) 10d	(4) 10d	1420	2785	1290	2210
LUS210-2	18	3 1/8	9	2	6	(8) 16d	(6) 16d	2580	4500	2320	3195
LUS210-3	18	4 5/8	8 3/16	2	5 1/4	(8) 16d	(6) 16d	2580	3345	2320	2375

1. d_e is the distance from the seat of the hanger to the highest joist nail.

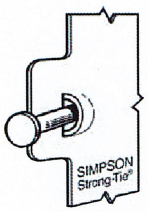

Dome Double Shear Nailing prevents tabs breaking off (available on some models).

U.S. Patent 5,603,580

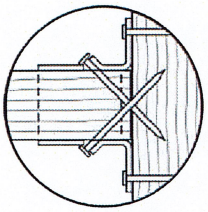

Double Shear Nailing Top View.

LICENSED PROFESSIONAL ENGINEER
04/01/2020
B. D. BUNTING
PROVINCE OF ONTARIO

LIMIT STATES DESIGN

This technical bulletin is effective until June 30, 2022, and reflects information available as of April 1, 2020. This information is updated periodically and should not be relied upon after June 30, 2022. Contact Simpson Strong-Tie for current information and limited warranty or see strongtie.com.

© 2020 Simpson Strong-Tie Company Inc.

(800) 999-5099
strongtie.com

TECHNICAL BULLETIN

HUS/LJS – Double Shear Joist Hangers

SIMPSON Strong-Tie®

All hangers have double shear nailing. This patented innovation distributes the load through two points on each joist nail for greater strength. It also allows the use of fewer nails, faster installation and the use of common nails for all connections. Do not bend or remove tabs.

Material: See table

Finish: G90 galvanized

Design:

- Factored resistances are in accordance with CSA O86 -14.
- Uplift resistances have been increased 15%. No further increase is permitted.
- Wood shear is not considered in the factored resistances given. The specifier must ensure that the joist and header capacities are capable of withstanding these loads.

Installation:

- Use all specified fasteners
- Nails: 16d = 0.162" dia. x 3½" long common wire
- Double shear nails must be driven at an angle through the joist or truss into the header to achieve the table loads
- Not designed for welded or nailer applications

Options:

- See current catalogue for options

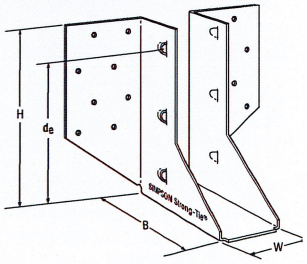

LJS26DS

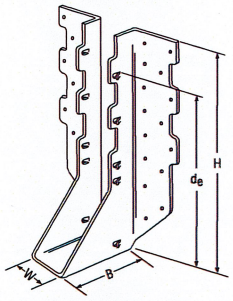

HUS210
(HUS26, HUS28, similar)

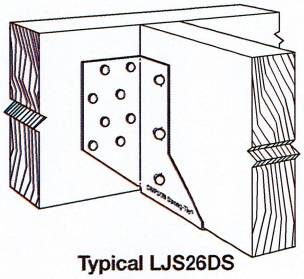

Typical LJS26DS Installation

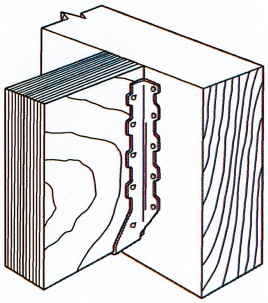

Typical HUS Installation

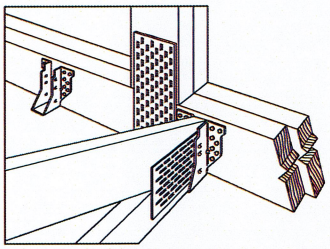

Typical HUS Installation
(Truss Designer to provide fastener quantity for connecting multiple members together)

Model No.	Ga.	Dimensions (in.)				Fasteners		Factored Resistance (lb.)			
								D.Fir-L		S-P-F	
		W	H	B	d_e[1]	Face	Joist	Uplift (K_D=1.15) lb.	Normal (K_D=1.00) lb.	Uplift (K_D=1.15) lb.	Normal (K_D=1.00) lb.
LJS26DS	18	1 9/16	5	3½	4⅝	(16) 16d	(6) 16d	2055	4265	1460	4115
HUS26	16	1⅝	5⅜	3	3 15/16	(14) 16d	(6) 16d	2705	4940	2065	3875
HUS28	16	1⅝	7 3/32	3	6 3/32	(22) 16d	(8) 16d	3605	5365	2675	4345
HUS210	16	1⅝	9 3/32	3	7 31/32	(30) 16d	(10) 16d	4505	5795	4010	4740
HUS1.81/10	16	1 13/16	9	3	8	(30) 16d	(10) 16d	4505	6450	4010	5200

1. d_e is the distance from the seat of the hanger to the highest joist nail.

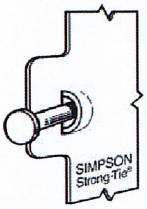

Dome Double Shear Nailing prevents tabs breaking off (available on some models).

U.S. Patent 5,603,580

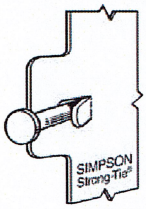

Double Shear Nailing Side View. Do not bend tab back.

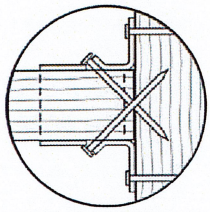

Double Shear Nailing Top View.

LICENSED PROFESSIONAL ENGINEER
04/01/2020
B. D. BUNTING
PROVINCE OF ONTARIO

LIMIT STATES DESIGN

This technical bulletin is effective until June 30, 2022, and reflects information available as of April 1, 2020. This information is updated periodically and should not be relied upon after June 30, 2022. Contact Simpson Strong-Tie for current information and limited warranty or see strongtie.com.

© 2020 Simpson Strong-Tie Company Inc.

(800) 999-5099
strongtie.com

TECHNICAL BULLETIN

HHUS – Double Shear Joist Hangers

SIMPSON Strong-Tie®

All HHUS hangers have double shear nailing. This patented innovation distributes the load through two points on each joist nail for greater strength. It also allows the use of fewer nails, faster installation and the use of common nails for all connections. Do not bend or remove tabs.

Material: 14 gauge

Finish: G90 galvanized

Design:

- Factored resistances are in accordance with CSA O86-14.
- Uplift resistances have been increased 15%. No further increase is permitted.
- Wood shear is not considered in the factored resistances given. The specifier must ensure that the joist and header capacities are capable of withstanding these loads.

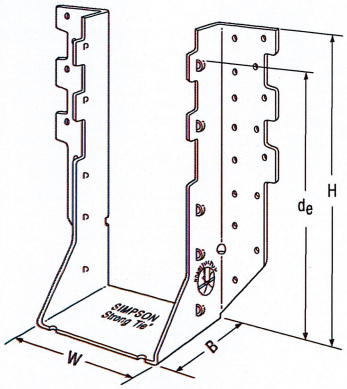

HHUS410

Installation:

- Use all specified fasteners
- Nails: 16d = 0.162" dia. x 3½" long common wire
- Double shear nails must be driven at an angle through the joist or truss into the header to achieve the table loads
- Not designed for welded or nailer applications

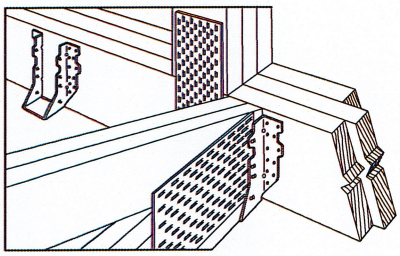

Typical HHUS Installation (Truss Designer to provide fastener quantity for connecting multiple members together)

Options:

- See current catalogue for options

Model No.	Ga.	Dimensions (in.)				Fasteners		Factored Resistance (lb.)			
								D.Fir-L		S-P-F	
		W	H	B	d_e[1]	Face	Joist	Uplift (K_D=1.15)	Normal (K_D=1.00)	Uplift (K_D=1.15)	Normal (K_D=1.00)
HHUS26-2	14	3 5/16	5 13/16	3	3 15/16	(14) 16d	(6) 16d	2850	7335	2065	5205
HHUS28-2	14	3 5/16	7 7/32	3	6 5/32	(22) 16d	(8) 16d	3765	8940	2675	6345
HHUS210-2	14	3 5/16	9 3/32	3	8	(30) 16d	(10) 16d	4670	9660	4235	7000
HHUS210-3	14	4 11/16	9	3	7 15/16	(30) 16d	(10) 16d	4670	9670	4235	6865
HHUS210-4	14	6 1/8	8 29/32	3	7 27/32	(30) 16d	(10) 16d	4670	10155	4235	7210
HHUS46	14	3 5/8	5 13/32	3	3 15/16	(14) 16d	(6) 16d	2540	7335	2065	5205
HHUS48	14	3 5/8	7 1/8	3	6 1/8	(22) 16d	(8) 16d	3765	8940	2675	6345
HHUS410	14	3 5/8	9	3	8	(30) 16d	(10) 16d	4670	9855	4235	7000
HHUS5.50/10	14	5 1/2	9	3	8	(30) 16d	(10) 16d	4670	10155	4235	7210
HHUS7.25/10	14	7 1/4	9	3 5/16	7 29/32	(30) 16d	(10) 16d	4670	10155	3370	7210

1. d_e is the distance from the seat of the hanger to the highest joist nail.

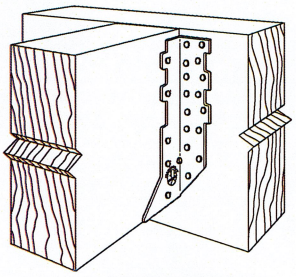

Typical HHUS Installation

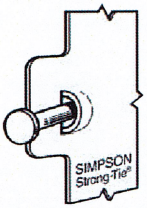

Dome Double Shear Nailing prevents tabs breaking off (available on some models).

U.S. Patent 5,603,580

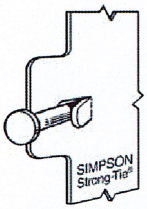

Double Shear Nailing Side View. Do not bend tab back.

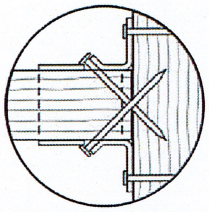

Double Shear Nailing Top View.

LIMIT STATES DESIGN

This technical bulletin is effective until June 30, 2022, and reflects information available as of April 1, 2020. This information is updated periodically and should not be relied upon after June 30, 2022. Contact Simpson Strong-Tie for current information and limited warranty or see strongtie.com.

© 2020 Simpson Strong-Tie Company Inc.

T-SPECHHUS20 3/20 exp. 6/22

(800) 999-5099
strongtie.com

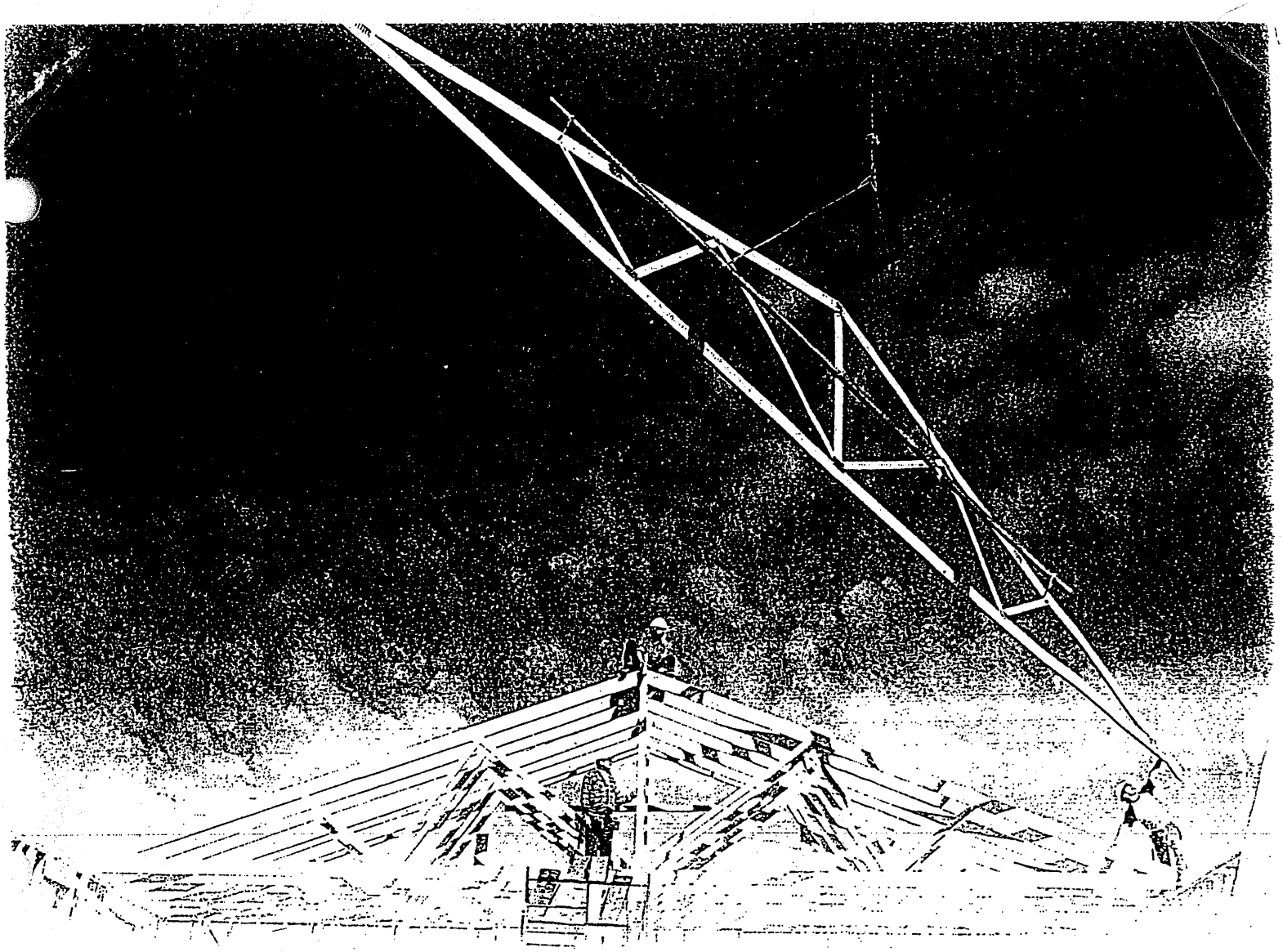

Wood Truss Installation

A Guide to proper handling, erecting and bracing metal plate connected wood trusses

Table of Content

Warning.....4

1 Unloading & Lifting.....5

2 Job Site Handling.....5

3 Hoisting.....6

4 Beginning the Erection Process.....7

5 Erection Tolerance.....8

6 Bracing.....8

7 Bracing Requirements for 3 Planes of Roof.....9

8 Stacking Materials.....10

Caution Notes.....11

Warning

General

Familiarity with the **Construction Design Documents**, the **Truss Design Drawings**, and **Truss Placement Plans** (if required by the **Construction Design Documents**) is required to properly erect, brace, and connect the trusses to the building system.

All of the care and quality involved in the design and manufacture of wood trusses can be jeopardized if the trusses are not properly handled, erected, and braced.

The consequences of improper handling, erecting, and bracing may be a collapse of the structure, which at best is a substantial loss of time and materials, and at worst is a loss of life. The majority of truss accidents occur during truss installation and not as a result of improper design or manufacture.

Prior to truss erection, the builder/erector shall meet with the erection crew for a safety and planning meeting, making sure each crew member understands his or her roles and responsibilities during the erection process.

Temporary Erection Bracing

Trusses are not marked in any way to identify the frequency, or location of temporary erection bracing.

All temporary bracing shall comply with the latest edition of *Commentary and Recommendations for Handling, Installing & Bracing Metal Plate Connected Wood Trusses* (HIB), published by the Truss Plate Institute, and/or as specified in the **Construction Design Documents** prepared by the building designer.

Permanent Truss Bracing

Permanent bracing for the roof or floor trusses is the responsibility of the building designer and should be shown on the **Construction Design Documents**. Permanent bracing locations for individual compression members of a wood truss are shown on the **Truss Design Drawings**, and shall be installed by the building or erection contractor. This bracing is needed for the proper performance of individual trusses within the roof or floor system. The design and connection of the bracing to the truss and then to the overall building system is the responsibility of the building designer, and is in addition to the permanent bracing plan, which is also specified by the building designer.

Special Design Requirements

Special design requirements, such as wind bracing, portal bracing, seismic bracing, diaphragms, shear walls, or other load transfer elements and their connections to wood trusses must be considered separately by the building designer, who shall determine size, location, and method of connections for all bracing as needed to resist these forces.

1 Unloading & Lifting

Never handle trusses flat

Beginning with the unloading process, and throughout all phases of construction, care must be taken to avoid **lateral bending** of trusses, which can cause damage to the lumber and metal connector plates at the joints.

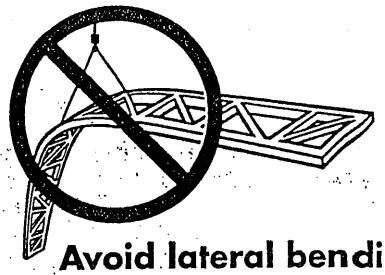

Avoid lateral bending

- **Use special care in windy weather.**
- **If using a crane within 10 feet of an electric line, contact the local power company.**
- **If using a crane within 5 miles of an airport, contact the airport 30 days prior to erection to learn about any safety regulations that must be followed.**

2 Job Site Handling

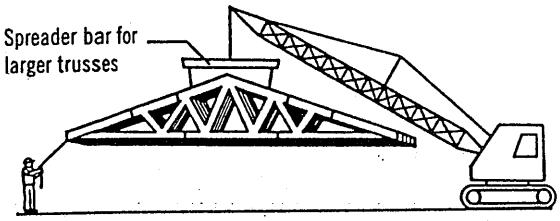

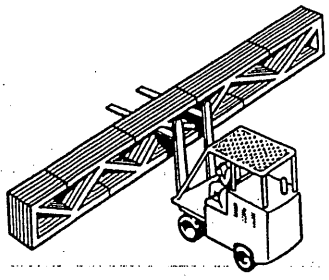

All trusses should be picked up at the top chords in a vertical position only

Proper banding and smooth ground allow for unloading of trusses without damage. This should be done as close to the building site as possible to minimize handling. **Do not** break banding until installation begins. Hand erection of trusses is allowed, provided excessive lateral bending is prevented.

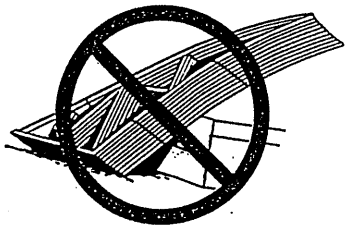

Do not store unbraced bundles upright

If trusses are stored vertically they shall be braced in a manner that will prevent tipping or topping. Generally cuting of the banding is done just prior to installation.

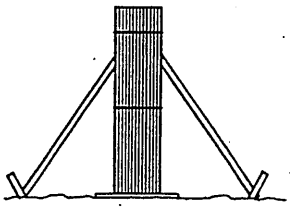

Do not store on uneven ground

If trusses are stored horizontally, blocking should be used on eight to ten foot centers, or as required, to minimize lateral bending and moisture gain.

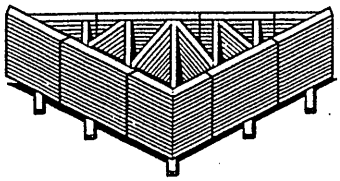

Care should be exercised when removing banding to avoid damaging trusses.

During long term storage, trusses shall be protected from the environment in a manner that provides for adequate ventilation of the trusses. If tarpaulins or other material is used, the ends shall be left open for ventilation. Plastic is not recommended, since it can trap moisture.

3 Hoisting

All trusses that are erected one at a time shall be held safely in position by the erection equipment until such time as all necessary bracing has been installed and the ends of the trusses are securely fastened to the building.

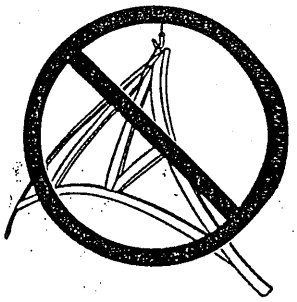

Avoid lateral bending

L ≤ 30'

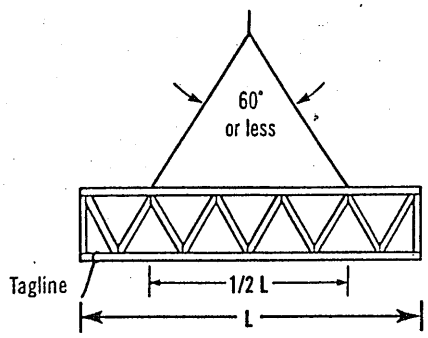

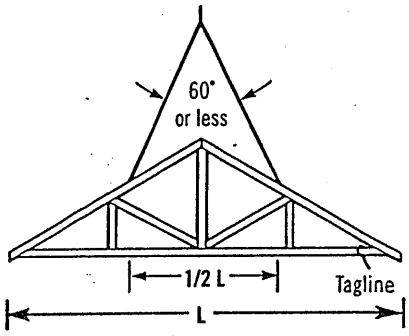

Truss sling is acceptable where these criteria are met.

30' < L ≤ 60'

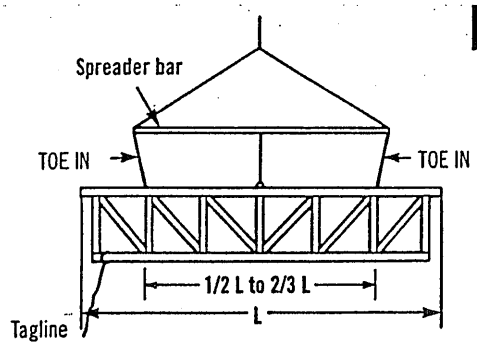

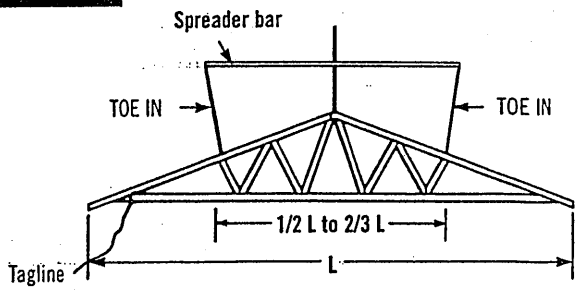

Use spreader bar in all other cases. It should be noted that the lines from the ends of the spreader bar "**TOE IN**"; if these lines should "**TOE OUT**" the truss may fold in half.

L > 60'

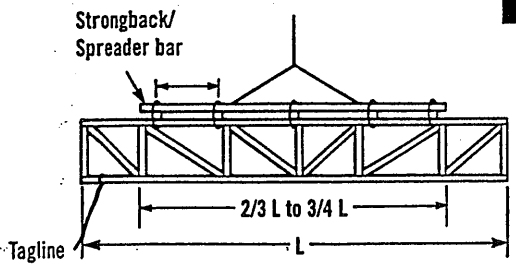

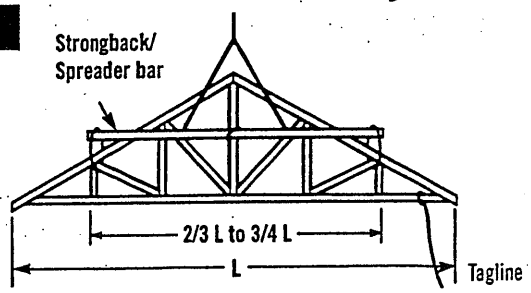

For lifting trusses with spans in excess of 60 feet, it is recommended that a strongback/spreader bar be used as illustrated. The strongback/spreader bar should be attached to the top chord and web members at intervals of approximately 10 feet. Further, the strongback/spreader bar should be at or above the mid-height of the truss to prevent overturning. The strongback/spreader bar can be of any material with sufficient strength to safely carry the weight of the truss and sufficient rigidity to adequately resist bending of the truss.

4 Beginning the Erection Process

It is important for the builder or erection contractor to provide substantial bracing for the first truss erected. The two or more trusses making up the rest of the first set are tied to and rely upon the first truss for stability. Likewise, after this first set of trusses is adequately cross-braced, the remaining trusses installed rely upon this first set for stability. Thus, the performance of the truss bracing system depends to a great extent on how well the first group of trusses is braced.

Ground Brace – Exterior

One satisfactory method ties the first unit of trusses off to a series of braces that are attached to a stake driven into the ground and securely anchored. The ground brace itself should be supported as shown below or it is apt to buckle. Additional ground braces in the opposite direction, inside the building, are also recommended.

Ground Brace – Interior

Another satisfactory method where height of building or ground conditions prohibit bracing from the exterior is to tie the first truss rigidly in place from the interior at the floor level, provided the floor is substantially completed and capable of supporting the ground bracing forces. Securely fasten the first truss to the middle of the building. Brace the bracing similar to exterior ground bracing shown at left. Set trusses from the middle toward the end of the building. Properly cross-brace the first set of trusses before removing floor braces and setting remaining trusses.

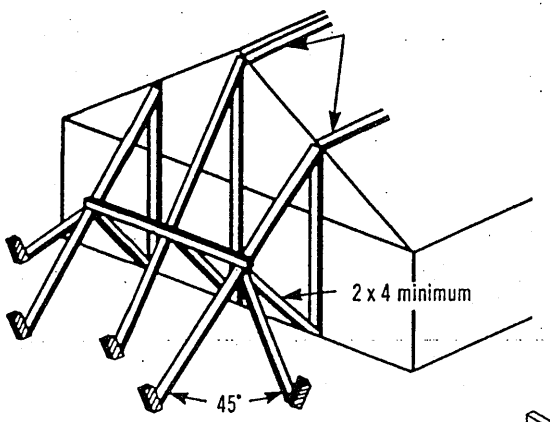

Note: Locate ground braces for first truss directly in line with all rows of top chord continuous lateral bracing (either temporary or permanent).

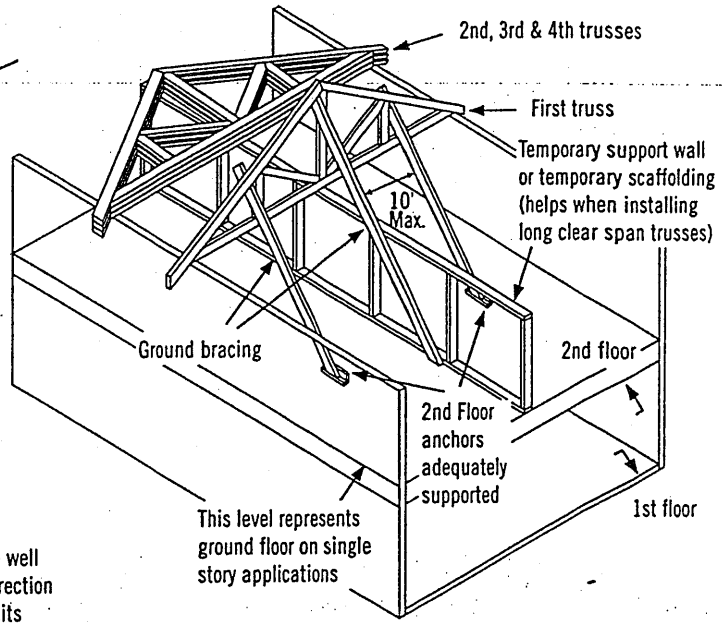

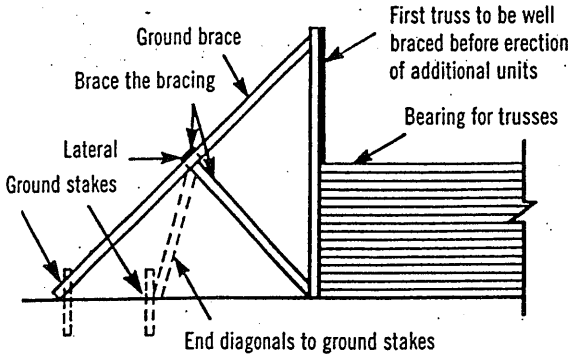

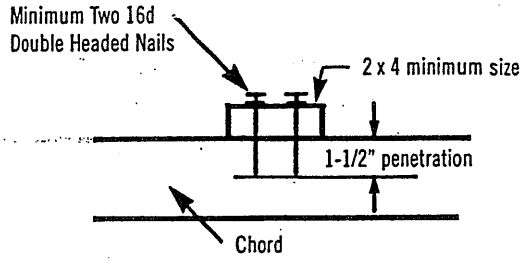

Inadequate size of bracing material or inadequate fastening is a major cause of erection dominoing.

5 Erection Tolerance

Complying with erection tolerances is critical to achieving an acceptable roof or floor line, and to accomplishing effective bracing. Setting trusses within tolerance the first time will prevent the need for the hazardous practice of respacing or adjusting trusses when roof sheathing or roof purlins are installed. Trusses leaning or bowing can cause nails to miss the top chords when sheathing is applied, and create cumulative stresses on the bracing, which is a frequent cause of dominoing.

When sheathing, make sure nails are driven into the top chord of the trusses.

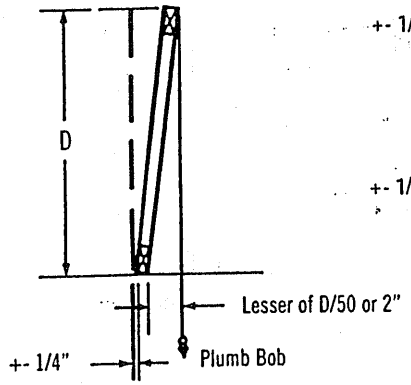

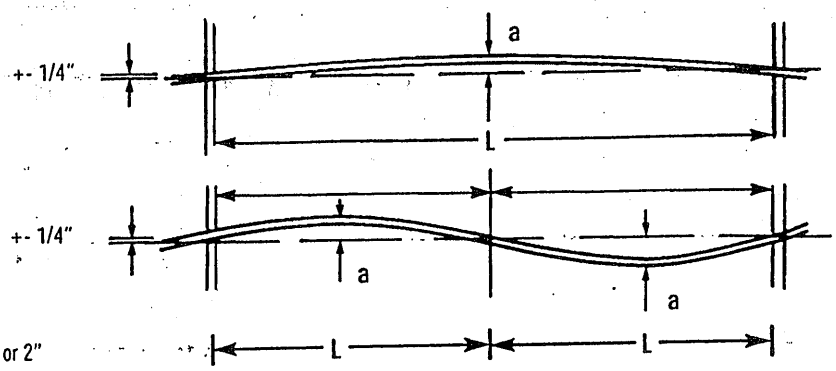

L = 16' to 32', a = 1"
L = 32' & over, a = 2"

6 Bracing

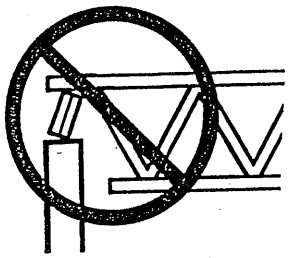

Do not install trusses on temporarily connected supports

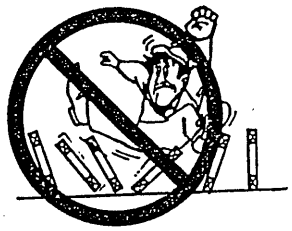

Do not walk on unbraced trusses

Do not walk on trusses or gable ends lying flat

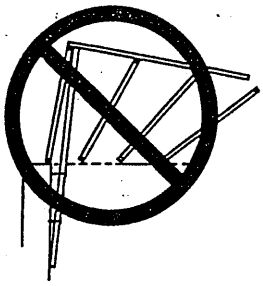

Nails in withdrawal (parallel to force)

All anchors, hangers, tie-downs, seats, bearing ledgers, etc., that are part of the supporting structure shall be accurately and properly placed and permanently attached before truss installation begins. No trusses shall ever be installed on anchors or ties that have temporary connections to the supporting structure.

Nailing scabs to the end of the building to brace the first truss is not recommended.
All nailing of bracing should be done so that nails are driven perpendicular to the direction of force, as shown at right.

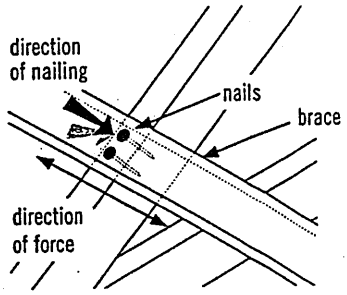

Well nailed (perpendicular to force)

7 Bracing Requirements for 3 Planes of Roof

Temporary erection bracing must be applied to three planes of the roof system to ensure stability: Plane 1) **Top Chord** (sheathing), Plane 2) **Bottom Chord** (ceiling plane), and Plane 3) **Web Member** plane or vertical plane perpendicular to trusses.

1) Top Chord Plane

Most important to the builder or erection contractor is bracing in the plane of the top chord. Truss top chords are susceptible to lateral buckling before they are braced or sheathed.

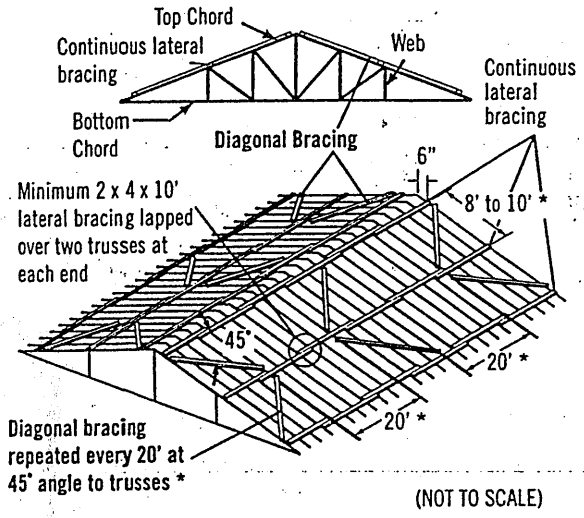

(NOT TO SCALE)

Exact spacing between trusses should be maintained as bracing is installed to avoid the hazardous practice of removing bracing to adjust spacing. This act of "adjusting spacing" can cause trusses to topple if connections are removed at the wrong time.

2) Bottom Chord Plane

In order to hold proper spacing on the bottom chord, temporary bracing is recommended on the top of the bottom chord.

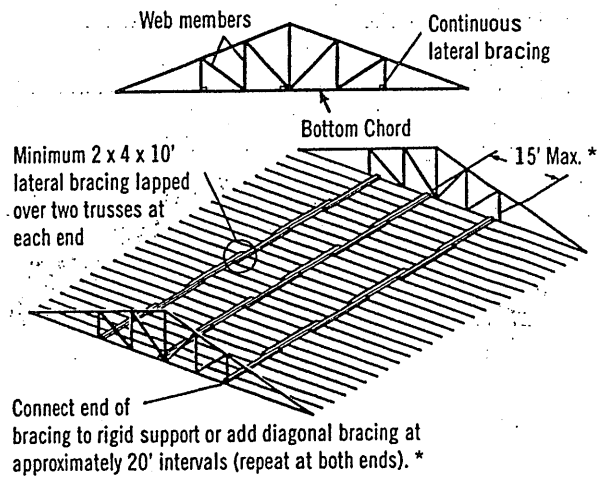

* Long spans, heavy loads or other spacing configurations may require closer spacing between lateral bracing and closer intervals between diagonals. Consult the building designer or HIB and DSB (*Recommended Design Specification for Temporary Bracing of Metal-Plate Connected Wood Trusses*) for details.

Diagonal or cross-bracing is very important!

3) Web Member Plane

"X" bracing, as shown, is critical in preventing trusses from leaning or dominoing. Repeat as shown to create a succession of rigid units.

X-bracing should be installed on vertical web members wherever possible, at or near lateral bracing. Plywood or OSB may be substituted for X-bracing.

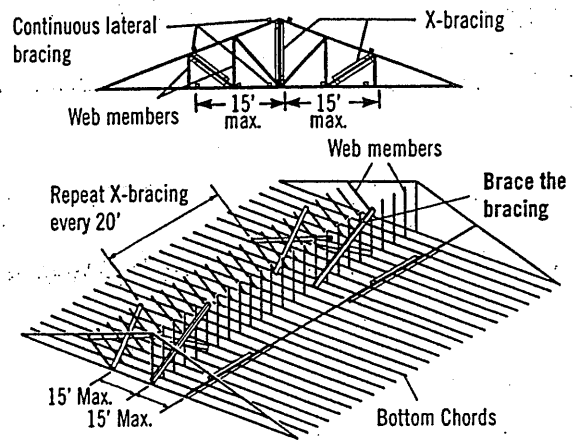

Note: Top chords and some web members are not shown, in order to make drawings more readable.

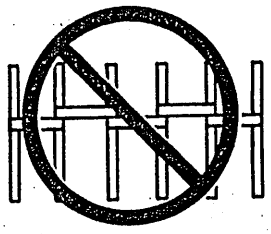

Do not use short blocks to brace individual trusses without a specific bracing plan detailing their use

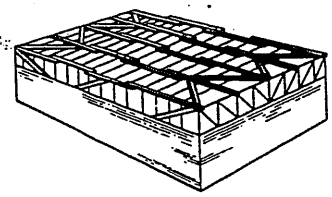

Bracing requirements using the same principles apply to parallel chord trusses

8 Stacking Materials

Do not proceed with building completion until all bracing is securely and properly in place

Never stack materials on unbraced or inadequately braced trusses

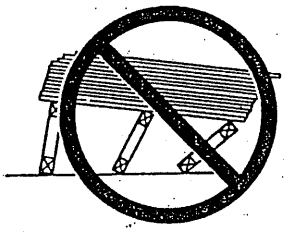

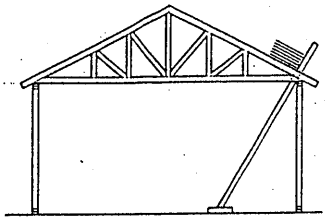

Proper distribution of construction materials is a must during construction.

Never stack materials near a peak

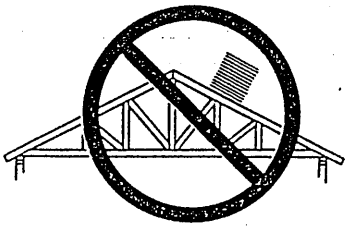

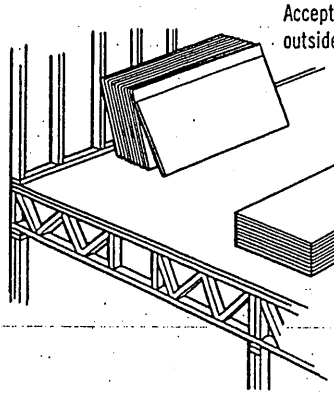

Never stack materials on the cantilever of a truss

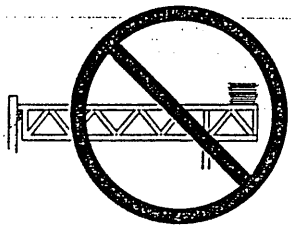

Always stack materials over two or more trusses.

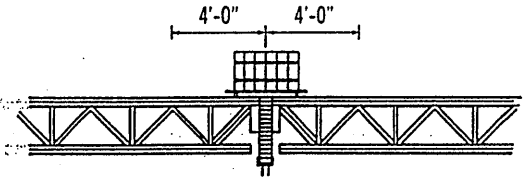

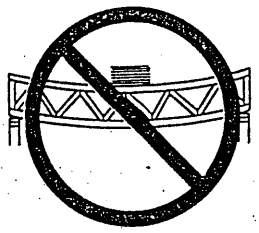

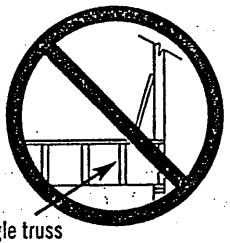

Roofing and mechanical contractors are cautioned to stack materials only along outside supporting members or directly over inside supporting members. Trusses are not designed for dynamic loads (i.e., moving vehicles). Extreme care should be taken when loading and stacking construction materials (rolled roofing, mechanical equipment, etc.) on the roof or floor system.

Never overload small groups or single trusses. Position load over as many trusses as possible.

Never cut any structural member of a truss.

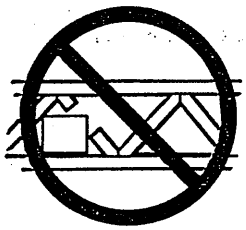

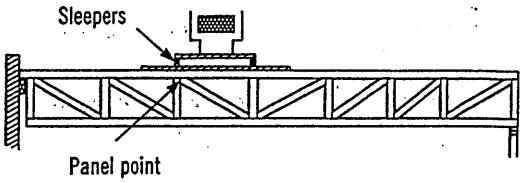

Sleepers for mechanical equipment should be located at panel points (joints) or over main supporting members, and only on trusses that have been designed for such loads.

Caution Notes

Errors in building lines and/or dimensions, or errors by others shall be corrected by the contractor or responsible construction trade subcontractor or supplier **before** erection of trusses begins.

Cutting of nonstructural overhangs is considered a part of normal erection and shall be done by the builder or erection contractor.

Any field modification that involves the cutting, drilling, or relocation of any structural truss member or connector plate shall not be done without the approval of the truss manufacturer or a licensed design professional.

The methods and procedures outlined are intended to ensure that the overall construction techniques employed will put floor and roof trusses **safely** in place in a completed structure. These recommendations for bracing wood trusses originate from the collective experience of leading technical personnel in the wood truss industry, but must, due to the nature of responsibilities involved, be presented only as a **guide** for use by a qualified building designer, builder, or erection contractor. Thus, the Wood Truss Council of America expressly disclaims any responsibility for damages arising from the use, application, or reliance on the recommendations and information contained herein.

[Selected text and figures referenced or reproduced from HIB and DSB by permission of the Truss Plate Institute, Madison, WI.]

THE CANADIAN WOOD TRUSS ASSOCIATION

L'ASSOCIATION CANADIENNE DES FABRICANTS DE FERMES DE BOIS

1400 Blair Place, Suite 210, Ottawa, ON K1J 9B8
Tel.: 613-747-5544 Fax: 613-747-6264

Wood Truss Council of America

One WTCA Center
6300 Enterprise Lane, Madison, WI 53719-1140
Tel.: 608-274-4849 Fax: 608-274-3329
wtca@woodtruss.com www.woodtruss.com