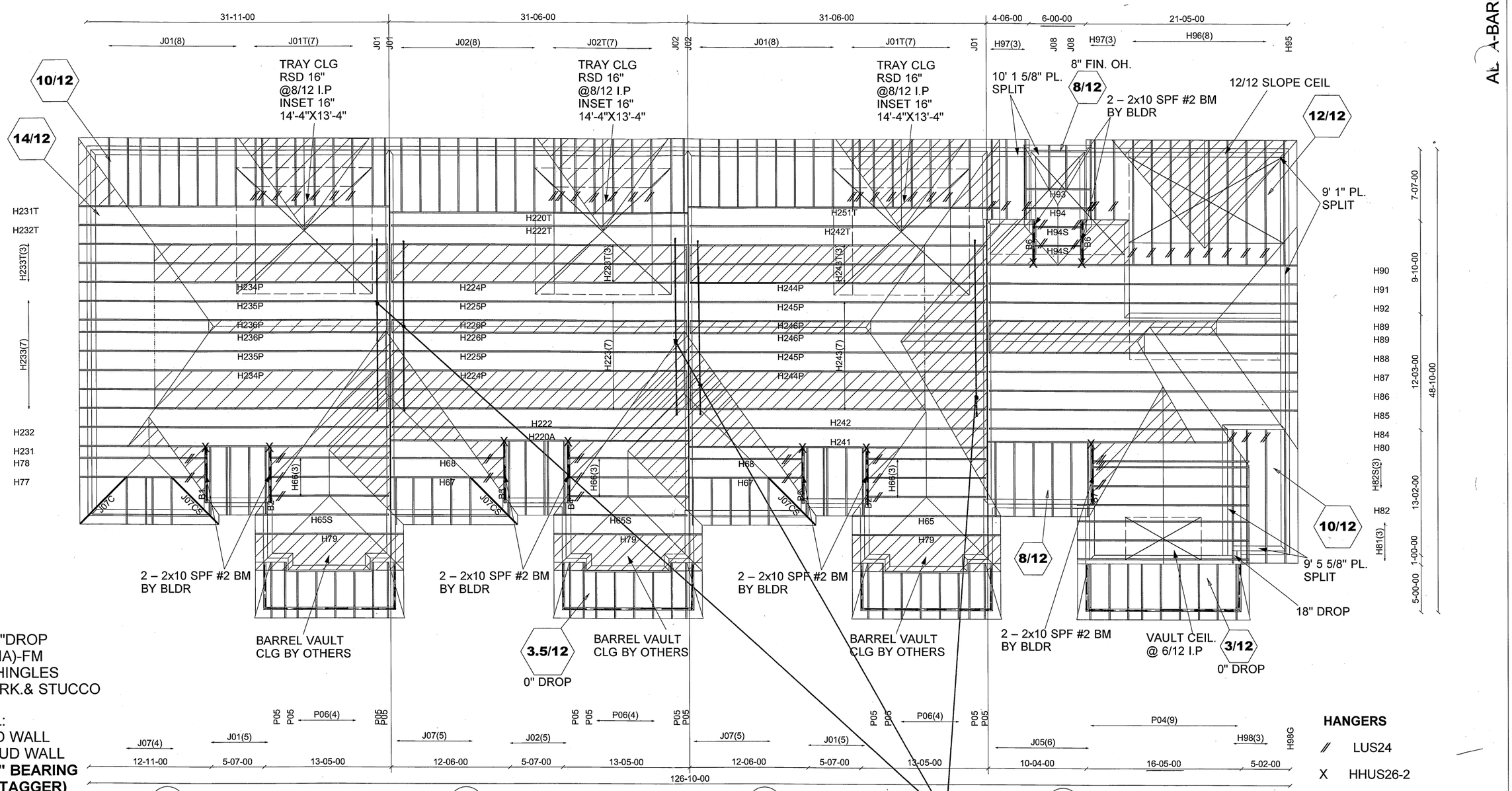

12" FIN. OH.
RSD HEEL-0"DROP
(2"X6" FASCIA)-FM
ASPHALT SHINGLES
2"X6"BRG./BRK.& STUCCO

PARTYWALL:
2-2"x4" STUD WALL
w/1-2"x4" STUD WALL
(G.T. = 3 1/2" BEARING
w/ MIN. 4" STAGGER)

PIGGYBACK TRS
PURLINS BY OTHERS

HANGERS

// LUS24

X HHUS26-2

1 UNIT 3102-END 2
ELEV. 'B' (REV)

2 UNIT 3102
ELEV. 'B' (REV)

3 UNIT 3102
ELEV. 'B' (REV)

4 UNIT 3104- END
ELEV. 'A' (REV)

E21104078 - E21104080
E21104082 - E21104098
E21104163
E21104180 - E21104186
E21104188 - E21104192

E21104231 - E21104234
E21104266 - E21104269
E21104281 - E21104283
E21104305 - E21104326

BEARING WALLS REQUIRED
SEE SHOP DRAWINGS.

PL: 111206(TYP.), 114170E

Mitek V. 8 2.0

ALL CONVENTIONAL FRAMING TO CONFORM WITH PART 9 O.B.C. LATEST EDITION. ROOF RAFTERS THAT CROSS OVER TRUSSES TO BE 2X4 SPF #2 @ 24" O.C WITH A VERT. POST TO THE TRUSS UNDERNEATH AT EACH CROSS POINT. VERT. POSTS LONGER THAN 6' TO HAVE LATERAL BRACING SO THAT THE DISTANCE BETWEEN END POINTS & BETWEEN ROWS OF BRACING DOES NOT EXCEED 6'

CONVENTIONAL FRAMING OTHERS

Job Track: **45147**	Builder / Location: **GOLD PARK HOMES / VAUGHAN**	Model / Elevation: **BLOCK 13 / UNIT 1-4**	
Layout ID: **336333**	Project: **PINE VALLEY**		
Plan Log: **113188**	Date: **9/28/2021**	Designer: **JBURROWS/C**	

THESE DRAWINGS CONSTITUTE THE PROPERTY OF ALPA ROOF TRUSSES INC., SHALL NOT BE REPRODUCED, PUBLISHED, OR REDISTRIBUTED IN ANY MANNER OR UTILIZED FOR ANY PURPOSE OTHER THAN THE MANUFACTURE OF TRUSSES BY ALPA ROOF TRUSSES INC AND WILL BE RETRACTED BY ALPA ROOF TRUSSES INC IF UTLILZED FOR ANY OTHER PURPOSE.

AL A-BARRIE

EWP DESIGN INC.

(905) 832-2250 FAX (905) 832-0286

RESPONSIBILITIES AND SPECIFICATIONS

RESPONSIBILITIES

1. EWP DESIGN INC. is responsible for the design of trusses as individual components.
2. It is the responsibility of others to ascertain that the design loads utilized on each drawing meet or exceed the actual dead load imposed by the structure, the live load imposed by the intended use and the snow load imposed by local building code or authorities with jurisdictions.
3. All dimensions are to be verified by the owner, contractor, architect or other authorities with jurisdictions before truss fabrication.
4. EWP DESIGN INC. bears no responsibility for the erection of trusses. Persons erecting trusses are cautioned to seek professional advice regarding the temporary and permanent bracing for the system. Bracing shown on EWP DESIGN INC. drawing is specified for the truss as a component only and forms an integral part of the truss design.
5. It is the truss manufacturer's responsibility to ensure that trusses are manufactured in conformance with specifications of EWP DESIGN INC. as outlined below.

SPECIFICATIONS

1. Trusses designed by EWP DESIGN INC. conform to the relevant section of the Ontario Building Code of Canada (Part 9 or Part 4) or to the Canadian code for farm buildings, whichever applies to the building type, as indicated on the EWP DESIGN INC. drawings, and conform to the design procedures established by the Truss Plate Institute of Canada. Unit stresses used for truss designs are as per the edition of CSA-O86 shown on EWP DESIGN INC. drawings.
2. Lumber is to be the size, species and grade as specified on EWP DESIGN INC. drawings.
3. Moisture content of lumber shall not exceed 19% in service unless specified otherwise.
4. Metal connector plates shall be applied to both faces of truss at each joint and shall be positioned as specified.
5. Top chords of trusses are assumed to be continuously braced laterally by roof sheathing or by purlins at intervals not exceeding 12.5 times the thickness of top chord member.
6. Bottom chords shall be laterally braced at intervals not exceeding 3M (10') o.c., where rigid ceiling is not applied directly to the underside of chords.

THESE DRAWINGS CONSTITUTE THE PROPERTY OF EWP DESIGN INC., SHALL NOT BE REPRODUCED, PUBLISHED, OR REDISTRIBUTED IN ANY MANNER OR UTILIZED FOR ANY PURPOSE OTHER THAN THE MANUFACTURE OF TRUSSES BY THE ALPA LUMBER GROUP, AND WILL BE RETRACTED BY EWP DESIGN INC. IF UTILIZED FOR ANY OTHER PURPOSE.

JOB NAME	TRUSS NAME	QUANTITY	PLY	JOB DESC.		DRWG NO.
336324	H81		1	TRUSS DESC.	JT 45147	E21104078

Alpa Roof Truss, Maple

Version 8.420 S Jan 21 2021 MiTek Industries, Inc. Wed Oct 13 14:51:43 2021 Page 1

ID:hd511hZTz bdeQoS817GKByhVxV-tGIFJ5p4mSuQ46kKieCmJ7Gkd?yvsuRdzJittXyTp7_

Scale = 1:64.7

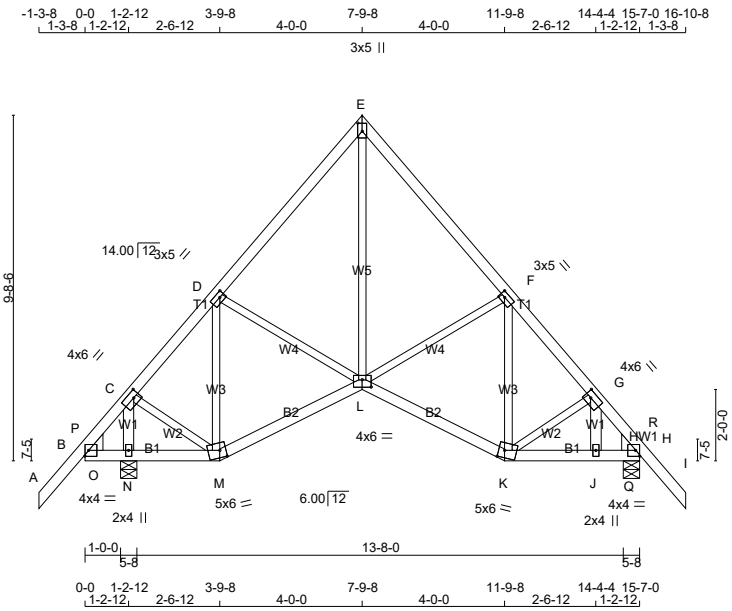

TOTAL WEIGHT = 3 X 81 = 243 lb

[M][F]

LUMBER

N. L. G. A. RULES

CHORDS	SIZE		LUMBER	DESCR.
A - E	2x4	DRY	No.2	SPF
E - I	2x4	DRY	No.2	SPF
B - M	2x4	DRY	No.2	SPF
M - L	2x4	DRY	No.2	SPF
L - K	2x4	DRY	No.2	SPF
K - H	2x4	DRY	No.2	SPF
ALL WEBS	2x3	DRY	No.2	SPF
EXCEPT				
J - G	2x4	DRY	No.2	SPF
N - C	2x4	DRY	No.2	SPF

DRY: SEASONED LUMBER.

PLATES (table is in inches)

JT	TYPE	PLATES	W	LEN	Y	X
B	TMBH-I	MT20	4.0	4.0		Edge
C	TMWW-t	MT20	4.0	6.0	2.00	2.00
D	TMWW-t	MT20	3.0	5.0	1.50	1.75
E	TTW+p	MT20	3.0	5.0	2.75	1.50
F	TMWW-t	MT20	3.0	5.0	1.50	1.75
G	TMWW-t	MT20	4.0	6.0	2.00	2.00
H	TMBH1-I	MT20	4.0	4.0		Edge
J	BMW+w	MT20	2.0	4.0		
K	BBWW-m	MT20	5.0	6.0	2.50	2.00
L	BBWWW-p	MT20	4.0	6.0	2.50	3.00
M	BBWW-m	MT20	5.0	6.0	2.50	2.00
N	BMW1+w	MT20	2.0	4.0		

Edge - INDICATES REFERENCE CORNER OF PLATE TOUCHES EDGE OF CHORD.

LATERAL BRACE(S) SHOWN SHALL BE 2X4 SPF#2

LICENSED PROFESSIONAL ENGINEER
V. WIDYA
100225448
10/13/2021
PROVINCE OF ONTARIO

DIMENSIONS, SUPPORTS AND LOADINGS SPECIFIED BY FABRICATOR TO BE VERIFIED BY BUILDING DESIGNER

BEARINGS

JT	FACTORED GROSS REACTION VERT	HORZ	MAXIMUM FACTORED GROSS REACTION DOWN	HORZ	UPLIFT	INPUT BRG IN-SX	REQRD BRG IN-SX	HEEL WEDGE
H	787	0	787	0	0	5-8	1-8	2x6 R
N	935	0	935	0	0	5-8	1-8	2x6 L

UNFACTORED REACTIONS

JT	1ST LCASE COMBINED	MAX./MIN. COMPONENT REACTIONS SNOW	LIVE	PERM.LIVE	WIND	DEAD	SOIL
H	559	353 / 0	0 / 0	0 / 0	0 / 0	206 / 0	0 / 0
N	664	419 / 0	0 / 0	0 / 0	0 / 0	245 / 0	0 / 0

BEARING MATERIAL TO BE SPF NO.2 OR BETTER AT JOINT(S) H, N

BRACING

TOP CHORD TO BE SHEATHED OR MAX. PURLIN SPACING = 6.25 FT.
MAX. UNBRACED BOTTOM CHORD LENGTH = 6.25 FT OR RIGID CEILING DIRECTLY APPLIED.

ALL PITCH BREAKS AND PERIMETER CORNER JOINTS MUST BE LATERALLY RESTRAINED.

LOADING

TOTAL LOAD CASES: (4)

CHORDS

MEMB. FR-TO	MAX. FACTORED FORCE (LBS)	FACTORED VERT. LOAD (PLF) FROM	TO	LC1 CSI (LC)	MAX. UNBRAC LENGTH
A- B	0 / 39	-78.0	-78.0	0.11 (1)	10.00
B- P	0 / 145	-78.0	-78.0	0.13 (1)	10.00
P- C	0 / 215	-78.0	-78.0	0.06 (1)	10.00
C- D	-409 / 0	-78.0	-78.0	0.12 (1)	6.25
D- E	-500 / 0	-78.0	-78.0	0.15 (1)	6.25
E- F	-501 / 0	-78.0	-78.0	0.15 (1)	6.25
F- G	-596 / 0	-78.0	-78.0	0.13 (1)	6.25
G- R	-652 / 0	-78.0	-78.0	0.06 (1)	6.25
R- H	-960 / 0	-78.0	-78.0	0.09 (1)	6.25
H- I	0 / 39	-78.0	-78.0	0.11 (1)	10.00
B- O	-147 / 0	-18.5	-18.5	0.01 (1)	6.25
O- N	-147 / 0	-18.5	-18.5	0.03 (1)	6.25
N- M	-147 / 0	-18.5	-18.5	0.03 (1)	6.25
M- L	0 / 313	-18.5	-18.5	0.12 (4)	10.00
L- K	0 / 462	-18.5	-18.5	0.13 (4)	10.00
K- J	0 / 387	-18.5	-18.5	0.10 (1)	10.00
J- Q	0 / 387	-18.5	-18.5	0.14 (1)	10.00
Q- H	0 / 387	-18.5	-18.5	0.14 (1)	10.00

WEBS

MEMB. FR-TO	MAX. FACTORED FORCE (LBS)	MAX CSI (LC)
L- E	0 / 465	0.10 (1)
L- F	-119 / 0	0.05 (1)
K- F	-158 / 0	0.06 (1)
K- G	-4 / 36	0.01 (1)
J- G	-54 / 19	0.01 (1)
D- L	0 / 37	0.01 (1)
M- D	-375 / 0	0.13 (1)
C- M	0 / 519	0.12 (1)
N- C	-865 / 0	0.09 (1)
O- P	-6 / 20	0.00 (1)
Q- R	0 / 305	0.00 (1)

DESIGN CRITERIA

SPECIFIED LOADS:

TOP CH.	LL	=	21.0	PSF
	DL	=	6.0	PSF
BOT CH.	LL	=	0.0	PSF
	DL	=	7.4	PSF
TOTAL LOAD		=	34.4	PSF

SPACING = 24.0 IN. C/C

THIS TRUSS IS DESIGNED FOR RESIDENTIAL OR SMALL BUILDING REQUIREMENTS OF PART 9, NBCC 2015

THIS DESIGN COMPLIES WITH:
- PART 9 OF BCBC 2018 , ABC 2019
- PART 9 OF OBC 2012 (2019 AMENDMENT)
- CSA 086-14
- TPIC 2014

DESIGN ASSUMPTIONS
-OVERHANG NOT TO BE ALTERED OR CUT OFF.

(55 % OF 23.0 P.S.F. G.S.L. PLUS 8.4 P.S.F. RAIN LOAD) EQUALS 21.0 P.S.F. SPECIFIED ROOF LIVE LOAD

ALLOWABLE DEFL.(LL)= L/360 (0.48")
CALCULATED VERT. DEFL.(LL) = L/ 999 (0.01")
ALLOWABLE DEFL.(TL)= L/360 (0.48")
CALCULATED VERT. DEFL.(TL) = L/ 999 (0.03")

CANTILEVER DEFLECTION:
ALLOWABLE DEFL.(LL)= L/120 (0.19")
CALCULATED VERT. DEFL.(LL) = L/ 999 (0.00")
ALLOWABLE DEFL.(TL)= L/120 (0.19")
CALCULATED VERT. DEFL.(TL) = L/ 999 (0.00")

CSI: TC=0.15/1.00 (D-E:1) , BC=0.14/1.00 (J-Q:1) , WB=0.13/1.00 (D-M:1) , SSI=0.17/1.00 (H-Q:1)

DOL LUMBER=1.00 NAIL=1.00 LS BEND=1.10 COMP=1.10 SHEAR=1.10 TENS= 1.10

COMPANION LIVE LOAD FACTOR = 1.00

TRUSS PLATE MANUFACTURER IS NOT RESPONSIBLE FOR QUALITY CONTROL IN THE TRUSS MANUFACTURING PLANT .

NAIL VALUES

PLATE	GRIP(DRY) (PSI) MAX	MIN	SHEAR (PLI) MAX	MIN	SECTION (PLI) MAX	MIN
MT20	650	371	1747	788	1987	1873

PLATE PLACEMENT TOL. = 0.250 inches

PLATE ROTATION TOL. = 5.0 Deg.

JSI GRIP= 0.73 (M) (INPUT = 0.90)
JSI METAL= 0.31 (B) (INPUT = 1.00)

JOB NAME	TRUSS NAME	QUANTITY	PLY	JOB DESC.		DRWG NO.
336324	H82		1	TRUSS DESC.	JT 45147	E21104079

Alpa Roof Truss, Maple

Version 8.420 S Jan 21 2021 MiTek Industries, Inc. Wed Oct 13 14:51:45 2021 Page 1

ID:hd511hZTz_bdeQoS817GKByhVxV-qfQ0knrKI488JQtjp3EEOYL_TpbrKlxwQdB_xQyTp6y

Scale = 1:64.7

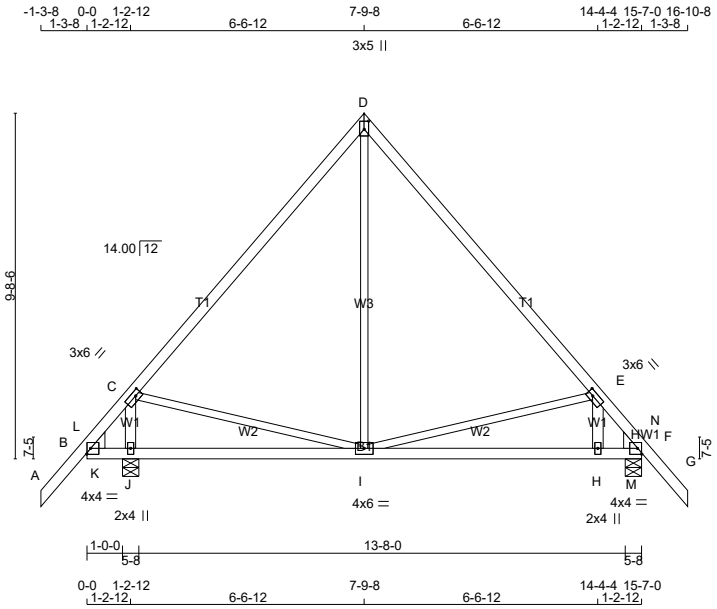

TOTAL WEIGHT = 73 lb

[M][F]

LUMBER

N. L. G. A. RULES

CHORDS	SIZE		LUMBER	DESCR.
A - D	2x4	DRY	No.2	SPF
D - G	2x4	DRY	No.2	SPF
B - F	2x4	DRY	No.2	SPF
ALL WEBS	2x3	DRY	No.2	SPF
EXCEPT				
H - E	2x4	DRY	No.2	SPF
J - C	2x4	DRY	No.2	SPF

DRY: SEASONED LUMBER.

PLATES (table is in inches)

JT	TYPE	PLATES	W	LEN	Y	X
B	TMBH-I	MT20	4.0	4.0		Edge
C	TMWW-t	MT20	3.0	6.0	1.50	2.00
D	TTW+p	MT20	3.0	5.0	2.75	1.50
E	TMWW-t	MT20	3.0	6.0	1.50	2.00
F	TMBH1-I	MT20	4.0	4.0		Edge
H	BMW+w	MT20	2.0	4.0		
I	BMWWW-t	MT20	4.0	6.0		
J	BMW1+w	MT20	2.0	4.0		

Edge - INDICATES REFERENCE CORNER OF PLATE TOUCHES EDGE OF CHORD.

LATERAL BRACE(S) SHOWN SHALL BE 2X4 SPF#2

DIMENSIONS, SUPPORTS AND LOADINGS SPECIFIED BY FABRICATOR TO BE VERIFIED BY BUILDING DESIGNER

BEARINGS

JT	FACTORED GROSS REACTION VERT	HORZ	MAXIMUM FACTORED GROSS REACTION DOWN	HORZ	UPLIFT	INPUT BRG IN-SX	REQRD BRG IN-SX	HEEL WEDGE
F	787	0	787	0	0	5-8	1-8	2x6 R
J	935	0	935	0	0	5-8	1-8	2x6 L

UNFACTORED REACTIONS

JT	1ST LCASE COMBINED	MAX./MIN. COMPONENT REACTIONS SNOW	LIVE	PERM.LIVE	WIND	DEAD	SOIL
F	559	353 / 0	0 / 0	0 / 0	0 / 0	206 / 0	0 / 0
J	664	419 / 0	0 / 0	0 / 0	0 / 0	245 / 0	0 / 0

BEARING MATERIAL TO BE SPF NO.2 OR BETTER AT JOINT(S) F, J

BRACING

TOP CHORD TO BE SHEATHED OR MAX. PURLIN SPACING = 5.24 FT.
MAX. UNBRACED BOTTOM CHORD LENGTH = 10.00 FT OR RIGID CEILING DIRECTLY APPLIED.

ALL PITCH BREAKS AND PERIMETER CORNER JOINTS MUST BE LATERALLY RESTRAINED.

LOADING

TOTAL LOAD CASES: (4)

CHORDS

MEMB. FR-TO	MAX. FACTORED FORCE (LBS)	FACTORED VERT. LOAD (PLF) FROM	TO	LC1 MAX CSI (LC)	MAX. UNBRAC LENGTH
A- B	0 / 39	-78.0	-78.0	0.11 (1)	10.00
B- L	-391 / 0	-78.0	-78.0	0.08 (1)	6.25
L- C	-4 / 177	-78.0	-78.0	0.52 (1)	10.00
C- D	-431 / 0	-78.0	-78.0	0.43 (1)	6.25
D- E	-429 / 0	-78.0	-78.0	0.43 (1)	6.25
E- N	-709 / 0	-78.0	-78.0	0.36 (1)	6.25
N- F	-1521 / 0	-78.0	-78.0	0.10 (1)	5.24
F- G	0 / 39	-78.0	-78.0	0.11 (1)	10.00
B- K	0 / 67	-18.5	-18.5	0.20 (1)	10.00
K- J	0 / 67	-18.5	-18.5	0.20 (1)	10.00
J- I	0 / 67	-18.5	-18.5	0.18 (4)	10.00
I- H	0 / 617	-18.5	-18.5	0.23 (4)	10.00
H- M	0 / 617	-18.5	-18.5	0.37 (1)	10.00
M- F	0 / 617	-18.5	-18.5	0.37 (1)	10.00

WEBS

MEMB. FR-TO	MAX. FACTORED FORCE (LBS)	MAX CSI (LC)
I- D	0 / 186	0.06 (4)
I- E	-375 / 0	0.32 (1)
H- E	-142 / 66	0.02 (4)
C- I	0 / 192	0.04 (1)
J- C	-981 / 0	0.10 (1)
K- L	0 / 645	0.00 (1)
M- N	0 / 939	0.00 (1)

DESIGN CRITERIA

SPECIFIED LOADS:

TOP CH.	LL	=	21.0	PSF
	DL	=	6.0	PSF
BOT CH.	LL	=	0.0	PSF
	DL	=	7.4	PSF
TOTAL LOAD		=	34.4	PSF

SPACING = 24.0 IN. C/C

THIS TRUSS IS DESIGNED FOR RESIDENTIAL OR SMALL BUILDING REQUIREMENTS OF PART 9, NBCC 2015

THIS DESIGN COMPLIES WITH:
- PART 9 OF BCBC 2018 , ABC 2019
- PART 9 OF OBC 2012 (2019 AMENDMENT)
- CSA 086-14
- TPIC 2014

DESIGN ASSUMPTIONS
-OVERHANG NOT TO BE ALTERED OR CUT OFF.

(55 % OF 23.0 P.S.F. G.S.L. PLUS 8.4 P.S.F. RAIN LOAD) EQUALS 21.0 P.S.F. SPECIFIED ROOF LIVE LOAD

ALLOWABLE DEFL.(LL)= L/360 (0.48")
CALCULATED VERT. DEFL.(LL) = L/ 999 (0.02")
ALLOWABLE DEFL.(TL)= L/360 (0.48")
CALCULATED VERT. DEFL.(TL) = L/ 999 (0.06")

CANTILEVER DEFLECTION:
ALLOWABLE DEFL.(LL)= L/120 (0.19")
CALCULATED VERT. DEFL.(LL) = L/ 999 (0.00")
ALLOWABLE DEFL.(TL)= L/120 (0.19")
CALCULATED VERT. DEFL.(TL) = L/ 999 (0.00")

CSI: TC=0.52/1.00 (C-L:1) , BC=0.37/1.00 (F-M:1) , WB=0.32/1.00 (E-I:1) , SSI=0.57/1.00 (F-M:1)

DOL LUMBER=1.00 NAIL=1.00 LS BEND=1.10 COMP=1.10 SHEAR=1.10 TENS= 1.10

COMPANION LIVE LOAD FACTOR = 1.00

TRUSS PLATE MANUFACTURER IS NOT RESPONSIBLE FOR QUALITY CONTROL IN THE TRUSS MANUFACTURING PLANT .

NAIL VALUES

PLATE	GRIP(DRY) (PSI) MAX	MIN	SHEAR (PLI) MAX	MIN	SECTION (PLI) MAX	MIN
MT20	650	371	1747	788	1987	1873

PLATE PLACEMENT TOL. = 0.250 inches

PLATE ROTATION TOL. = 5.0 Deg.

JSI GRIP= 0.68 (E) (INPUT = 0.90)
JSI METAL= 0.33 (F) (INPUT = 1.00)

JOB NAME	TRUSS NAME	QUANTITY	PLY	JOB DESC.		DRWG NO.
336324	H82S		1	TRUSS DESC.	JT 45147	E21104080

Alpa Roof Truss, Maple

Version 8.420 S Jan 21 2021 MiTek Industries, Inc. Wed Oct 13 14:51:47 2021 Page 1

ID:hd511hZTz_bdeQoS817GKByhVxV-m2Ym9TsbqhOsZj15xUHiTzQLbclhogLDuxg4?lyTp6w

Scale = 1:65.3

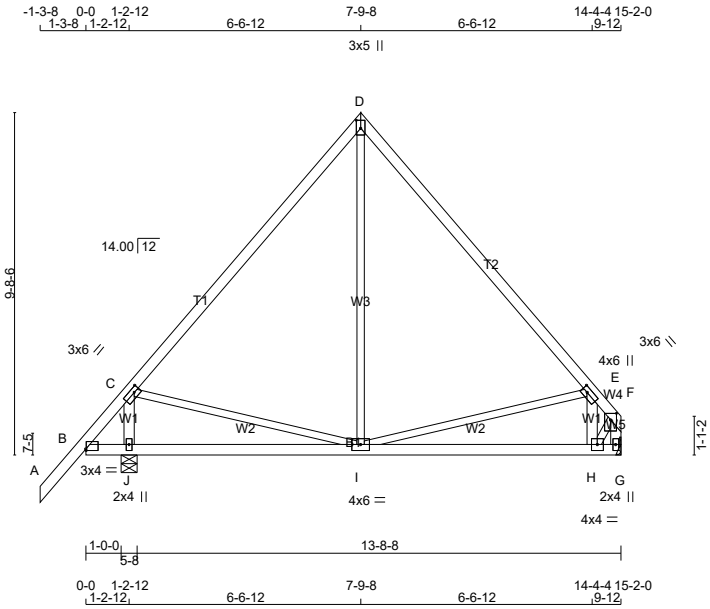

TOTAL WEIGHT = 2 X 70 = 139 lb

[M][F]

LUMBER

N. L. G. A. RULES

CHORDS	SIZE		LUMBER	DESCR.
A - D	2x4	DRY	No.2	SPF
D - F	2x4	DRY	No.2	SPF
G - F	2x4	DRY	No.2	SPF
B - G	2x4	DRY	No.2	SPF
ALL WEBS	2x3	DRY	No.2	SPF
EXCEPT				
J - C	2x4	DRY	No.2	SPF
H - E	2x4	DRY	No.2	SPF

DRY: SEASONED LUMBER.

PLATES (table is in inches)

JT	TYPE	PLATES	W	LEN	Y	X
B	TMB-I	MT20	3.0	4.0	0.50	0.25
C	TMWW-t	MT20	3.0	6.0	1.50	2.00
D	TTW+p	MT20	3.0	5.0	2.75	1.50
E	TMWW-t	MT20	3.0	6.0	1.50	2.00
F	TMVW+p	MT20	4.0	6.0	2.25	2.00
G	BMV1+p	MT20	2.0	4.0		
H	BMWW-t	MT20	4.0	4.0		
I	BMWWW-t	MT20	4.0	6.0		
J	BMW1+w	MT20	2.0	4.0		

LATERAL BRACE(S) SHOWN SHALL BE 2X4 SPF#2

DIMENSIONS, SUPPORTS AND LOADINGS SPECIFIED BY FABRICATOR TO BE VERIFIED BY BUILDING DESIGNER

BEARINGS

JT	FACTORED GROSS REACTION VERT	HORZ	MAXIMUM FACTORED GROSS REACTION DOWN	HORZ	UPLIFT	INPUT BRG IN-SX	REQRD BRG IN-SX
G	652	0	652	0	0	MECHANICAL	
J	921	0	921	0	0	5-8	1-8

A SUITABLE HANGER/MECHANICAL CONNECTION IS REQUIRED AT JOINT G. MINIMUM BEARING LENGTH AT JOINT G = 1-8.

UNFACTORED REACTIONS

JT	1ST LCASE COMBINED	MAX./MIN. COMPONENT REACTIONS SNOW	LIVE	PERM.LIVE	WIND	DEAD	SOIL
G	465	282 / 0	0 / 0	0 / 0	0 / 0	183 / 0	0 / 0
J	654	413 / 0	0 / 0	0 / 0	0 / 0	240 / 0	0 / 0

BEARING MATERIAL TO BE SPF NO.2 OR BETTER AT JOINT(S) J

BRACING

TOP CHORD TO BE SHEATHED OR MAX. PURLIN SPACING = 6.25 FT.
MAX. UNBRACED BOTTOM CHORD LENGTH = 10.00 FT OR RIGID CEILING DIRECTLY APPLIED.

ALL PITCH BREAKS AND PERIMETER CORNER JOINTS MUST BE LATERALLY RESTRAINED.

LOADING

TOTAL LOAD CASES: (4)

CHORDS MEMB. FR-TO	MAX. FACTORED FORCE (LBS)	FACTORED VERT. LOAD LC1 (PLF) FROM	TO	MAX CSI (LC)	MAX. UNBRAC LENGTH	WEBS MEMB. FR-TO	MAX. FACTORED FORCE (LBS)	MAX CSI (LC)
A- B	0 / 39	-78.0	-78.0	0.11 (1)	10.00	J- C	-801 / 0	0.08 (1)
B- C	-25 / 54	-78.0	-78.0	0.48 (1)	6.25	C- I	0 / 175	0.04 (1)
C- D	-411 / 0	-78.0	-78.0	0.43 (1)	6.25	I- D	0 / 160	0.05 (4)
D- E	-413 / 0	-78.0	-78.0	0.43 (1)	6.25	I- E	-307 / 0	0.26 (1)
E- F	-489 / 0	-78.0	-78.0	0.38 (1)	6.25	H- E	-367 / 0	0.04 (1)
G- F	-696 / 0	0.0	0.0	0.07 (1)	7.81	H- F	0 / 723	0.16 (1)
B- J	0 / 72	-18.5	-18.5	0.14 (4)	10.00			
J- I	0 / 72	-18.5	-18.5	0.18 (4)	10.00			
I- H	0 / 539	-18.5	-18.5	0.22 (4)	10.00			
H- G	0 / 0	-18.5	-18.5	0.12 (4)	10.00			

DESIGN CRITERIA

SPECIFIED LOADS:

TOP	CH.	LL	=	21.0	PSF
		DL	=	6.0	PSF
BOT	CH.	LL	=	0.0	PSF
		DL	=	7.4	PSF
TOTAL	LOAD		=	34.4	PSF

SPACING = 24.0 IN. C/C

THIS TRUSS IS DESIGNED FOR RESIDENTIAL OR SMALL BUILDING REQUIREMENTS OF PART 9, NBCC 2015

THIS DESIGN COMPLIES WITH:
- PART 9 OF BCBC 2018 , ABC 2019
- PART 9 OF OBC 2012 (2019 AMENDMENT)
- CSA 086-14
- TPIC 2014

DESIGN ASSUMPTIONS
-OVERHANG NOT TO BE ALTERED OR CUT OFF.

(55 % OF 23.0 P.S.F. G.S.L. PLUS 8.4 P.S.F. RAIN LOAD) EQUALS 21.0 P.S.F. SPECIFIED ROOF LIVE LOAD

ALLOWABLE DEFL.(LL)= L/360 (0.46")
CALCULATED VERT. DEFL.(LL) = L/ 999 (0.01")
ALLOWABLE DEFL.(TL)= L/360 (0.46")
CALCULATED VERT. DEFL.(TL) = L/ 999 (0.04")

CANTILEVER DEFLECTION:
ALLOWABLE DEFL.(LL)= L/120 (0.19")
CALCULATED VERT. DEFL.(LL) = L/ 999 (0.00")
ALLOWABLE DEFL.(TL)= L/120 (0.19")
CALCULATED VERT. DEFL.(TL) = L/ 999 (0.00")

CSI: TC=0.48/1.00 (B-C:1) , BC=0.22/1.00 (H-I:4) , WB=0.26/1.00 (E-I:1) , SSI=0.24/1.00 (E-F:1)

DOL LUMBER=1.00 NAIL=1.00 LS BEND=1.10 COMP=1.10 SHEAR=1.10 TENS= 1.10

COMPANION LIVE LOAD FACTOR = 1.00

TRUSS PLATE MANUFACTURER IS NOT RESPONSIBLE FOR QUALITY CONTROL IN THE TRUSS MANUFACTURING PLANT .

NAIL VALUES

PLATE	GRIP(DRY) (PSI) MAX	MIN	SHEAR (PLI) MAX	MIN	SECTION (PLI) MAX	MIN
MT20	650	371	1747	788	1987	1873

PLATE PLACEMENT TOL. = 0.250 inches

PLATE ROTATION TOL. = 5.0 Deg.

JSI GRIP= 0.78 (H) (INPUT = 0.90)
JSI METAL= 0.20 (H) (INPUT = 1.00)

JOB NAME	TRUSS NAME	QUANTITY	PLY	JOB DESC.	DRWG NO.
336324	H84		1	TRUSS DESC. JT 45147	E21104082

Alpa Roof Truss, Maple

Version 8.420 S Jan 21 2021 MiTek Industries, Inc. Wed Oct 13 14:51:50 2021 Page 1

ID:hd511hZTz bdeQoS817GKByhVxV-AdDunUvT6cmRQBmqcdqP5b2qmqJp?y9fauvlcdyTp6t

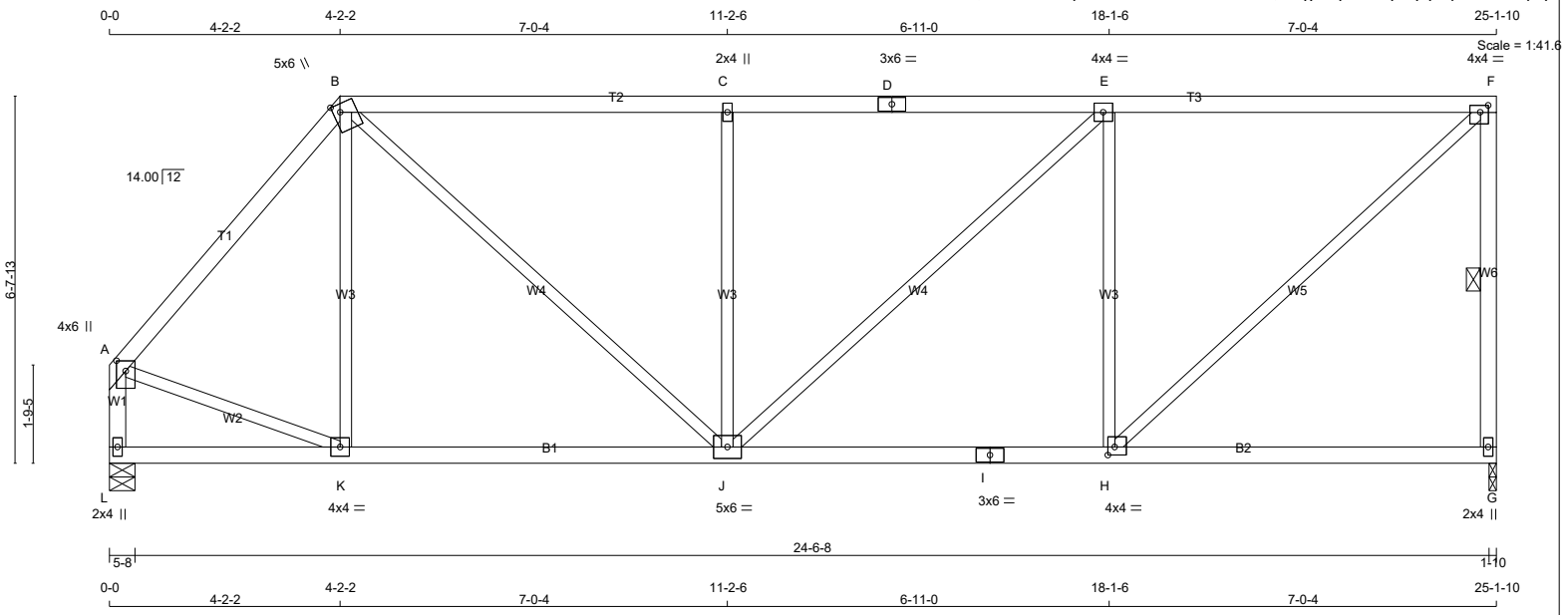

TOTAL WEIGHT = 109 lb [M]

LUMBER

N. L. G. A. RULES

CHORDS	SIZE		LUMBER	DESCR.
A - B	2x4	DRY	No.2	SPF
B - D	2x4	DRY	No.2	SPF
D - F	2x4	DRY	No.2	SPF
G - F	2x4	DRY	No.2	SPF
L - A	2x4	DRY	No.2	SPF
L - I	2x4	DRY	No.2	SPF
I - G	2x4	DRY	No.2	SPF
ALL WEBS EXCEPT	2x3	DRY	No.2	SPF

DRY: SEASONED LUMBER.

PLATES (table is in inches)

JT	TYPE	PLATES	W	LEN	Y	X
A	TMVW+p	MT20	4.0	6.0	2.25	2.00
B	TTWW+m	MT20	5.0	6.0	1.75	1.50
C	TMW+w	MT20	2.0	4.0		
D	TS-t	MT20	3.0	6.0		
E	TMWW-t	MT20	4.0	4.0		
F	TMVW-t	MT20	4.0	4.0	1.50	1.75
G	BMV1+p	MT20	2.0	4.0		
H	BMWW-t	MT20	4.0	4.0	1.75	1.50
I	BS-t	MT20	3.0	6.0		
J	BMWWW-t	MT20	5.0	6.0		
K	BMWW-t	MT20	4.0	4.0		
L	BMV1+p	MT20	2.0	4.0		

LATERAL BRACE(S) SHOWN SHALL BE 2X4 SPF#2

DIMENSIONS, SUPPORTS AND LOADINGS SPECIFIED BY FABRICATOR TO BE VERIFIED BY BUILDING DESIGNER

BEARINGS

JT	FACTORED GROSS REACTION VERT	HORZ	MAXIMUM FACTORED GROSS REACTION DOWN	HORZ	UPLIFT	INPUT BRG IN-SX	REQRD BRG IN-SX
G	1212	0	1212	0	0	1-10	1-8
L	1212	0	1212	0	0	5-8	1-8

UNFACTORED REACTIONS

JT	1ST LCASE COMBINED	MAX./MIN. COMPONENT REACTIONS SNOW	LIVE	PERM.LIVE	WIND	DEAD	SOIL
G	864	528 / 0	0 / 0	0 / 0	0 / 0	337 / 0	0 / 0
L	864	528 / 0	0 / 0	0 / 0	0 / 0	337 / 0	0 / 0

BEARING MATERIAL TO BE SPF NO.2 OR BETTER AT JOINT(S) G, L

BRACING

TOP CHORD TO BE SHEATHED OR MAX. PURLIN SPACING = 4.91 FT.
MAX. UNBRACED BOTTOM CHORD LENGTH = 10.00 FT OR RIGID CEILING DIRECTLY APPLIED.

ALL PITCH BREAKS AND PERIMETER CORNER JOINTS MUST BE LATERALLY RESTRAINED.

1 LATERAL BRACE(S) AT 1/ 2 LENGTH OF F-G.

END VERTICAL(S) MUST BE SHEATHED OR HAVE BRACES AS INDICATED IN THE MAX. UNBRACED LENGTH COLUMN OF THE TABLE BELOW

LOADING

TOTAL LOAD CASES: (4)

CHORDS

MEMB. FR-TO	MAX. FACTORED FORCE (LBS)	FACTORED VERT. LOAD (PLF) FROM	TO	LC1 CSI (LC)	MAX UNBRAC LENGTH
A- B	-1052 / 0	-78.0	-78.0	0.27 (1)	5.80
B- C	-1251 / 0	-78.0	-78.0	0.61 (1)	4.92
C- D	-1252 / 0	-78.0	-78.0	0.61 (1)	4.91
D- E	-1252 / 0	-78.0	-78.0	0.61 (1)	4.91
E- F	-1037 / 0	-78.0	-78.0	0.59 (1)	5.30
G- F	-1160 / 0	0.0	0.0	0.24 (1)	5.91
L- A	-1188 / 0	0.0	0.0	0.13 (1)	7.32
L- K	0 / 0	-18.5	-18.5	0.15 (4)	10.00
K- J	0 / 679	-18.5	-18.5	0.23 (4)	10.00
J- I	0 / 1037	-18.5	-18.5	0.32 (4)	10.00
I- H	0 / 1037	-18.5	-18.5	0.32 (4)	10.00
H- G	0 / 0	-18.5	-18.5	0.22 (4)	10.00

WEBS

MEMB. FR-TO	MAX. FACTORED FORCE (LBS)	MAX CSI (LC)
K- B	-105 / 42	0.08 (1)
B- J	0 / 770	0.17 (1)
J- C	-589 / 0	0.43 (1)
J- E	0 / 291	0.07 (1)
H- E	-794 / 0	0.58 (1)
H- F	0 / 1399	0.31 (1)
A- K	0 / 717	0.16 (1)

DESIGN CRITERIA

SPECIFIED LOADS:

TOP CH.	LL	=	21.0	PSF
	DL	=	6.0	PSF
BOT CH.	LL	=	0.0	PSF
	DL	=	7.4	PSF
TOTAL LOAD		=	34.4	PSF

SPACING = 24.0 IN. C/C

LOADING IN FLAT SECTION BASED ON A SLOPE OF 2.00/12 MINIMUM

THIS TRUSS IS DESIGNED FOR RESIDENTIAL OR SMALL BUILDING REQUIREMENTS OF PART 9, NBCC 2015

THIS DESIGN COMPLIES WITH:
- PART 9 OF BCBC 2018 , ABC 2019
- PART 9 OF OBC 2012 (2019 AMENDMENT)
- CSA 086-14
- TPIC 2014

(55 % OF 23.0 P.S.F. G.S.L. PLUS 8.4 P.S.F. RAIN LOAD) EQUALS 21.0 P.S.F. SPECIFIED ROOF LIVE LOAD

ALLOWABLE DEFL.(LL)= L/360 (0.84")
CALCULATED VERT. DEFL.(LL) = L/ 999 (0.05")
ALLOWABLE DEFL.(TL)= L/360 (0.84")
CALCULATED VERT. DEFL.(TL) = L/ 999 (0.10")

CSI: TC=0.61/1.00 (C-E:1) , BC=0.32/1.00 (H-J:4) , WB=0.58/1.00 (E-H:1) , SSI=0.26/1.00 (E-F:1)

DOL LUMBER=1.00 NAIL=1.00 LS BEND=1.10 COMP=1.10 SHEAR=1.10 TENS= 1.10

COMPANION LIVE LOAD FACTOR = 1.00

TRUSS PLATE MANUFACTURER IS NOT RESPONSIBLE FOR QUALITY CONTROL IN THE TRUSS MANUFACTURING PLANT .

NAIL VALUES

PLATE	GRIP(DRY) (PSI) MAX	MIN	SHEAR (PLI) MAX	MIN	SECTION (PLI) MAX	MIN
MT20	650	371	1747	788	1987	1873

PLATE PLACEMENT TOL. = 0.250 inches

PLATE ROTATION TOL. = 5.0 Deg.

JSI GRIP= 0.90 (F) (INPUT = 0.90)
JSI METAL= 0.39 (A) (INPUT = 1.00)

JOB NAME	TRUSS NAME	QUANTITY	PLY	JOB DESC.	DRWG NO.
336324	H85		1	TRUSS DESC. JT 45147	E21104083

Alpa Roof Truss, Maple

Version 8.420 S Jan 21 2021 MiTek Industries, Inc. Wed Oct 13 14:51:52 2021 Page 1

ID:hd511hZTz bdeQoS817GKByhVxV-7?LfCAwjeD08fUw3k1ttA087Idy7TrOy2COrqWyTp6r

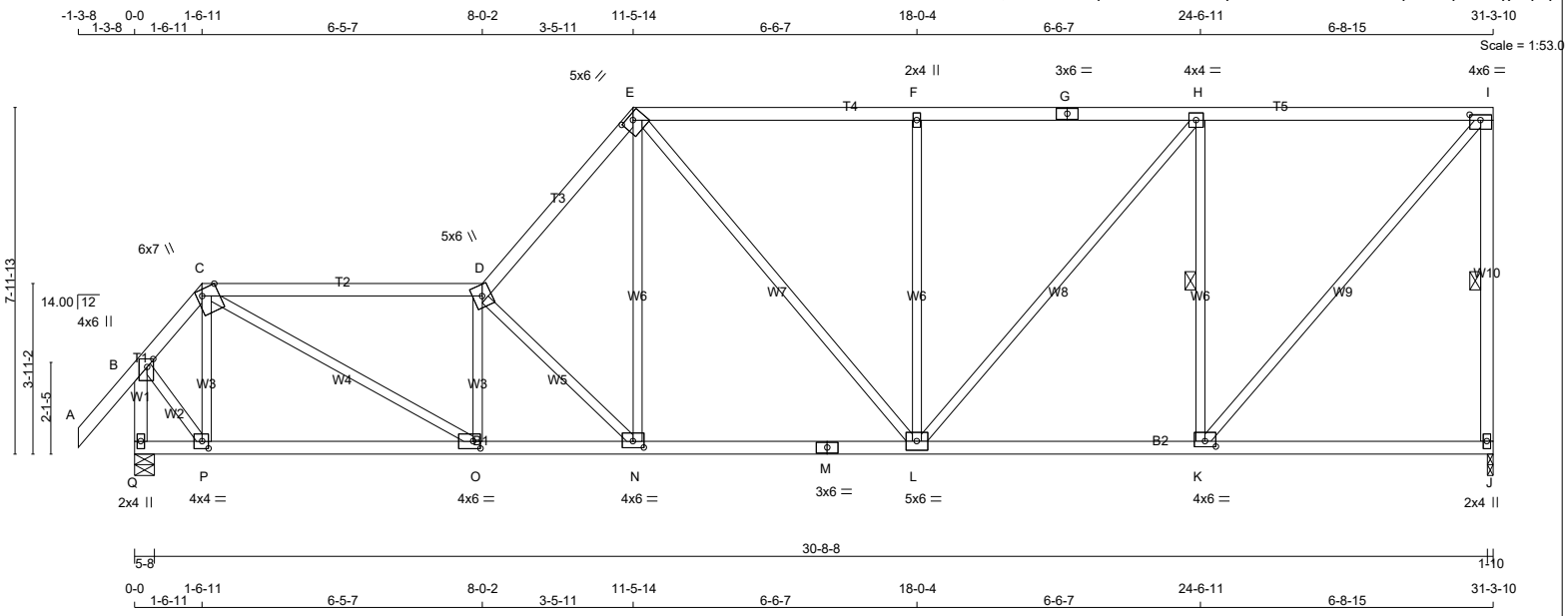

TOTAL WEIGHT = 146 lb

[M]

LUMBER

N. L. G. A. RULES

CHORDS	SIZE		LUMBER	DESCR.
A - C	2x4	DRY	No.2	SPF
C - D	2x4	DRY	No.2	SPF
D - E	2x4	DRY	No.2	SPF
E - G	2x4	DRY	No.2	SPF
G - I	2x4	DRY	No.2	SPF
J - I	2x4	DRY	No.2	SPF
Q - B	2x4	DRY	No.2	SPF
Q - M	2x4	DRY	No.2	SPF
M - J	2x4	DRY	No.2	SPF
ALL WEBS EXCEPT	2x3	DRY	No.2	SPF

DRY: SEASONED LUMBER.

PLATES (table is in inches)

JT	TYPE	PLATES	W	LEN	Y	X
B	TMVW+p	MT20	4.0	6.0	2.25	1.75
C	TTWW+m	MT20	6.0	7.0	Edge	4.50
D	TTWW+m	MT20	5.0	6.0		
E	TTWW-h	MT20	5.0	6.0	1.50	3.00
F	TMW+w	MT20	2.0	4.0		
G	TS-t	MT20	3.0	6.0		
H	TMWW-t	MT20	4.0	4.0		
I	TMVW-t	MT20	4.0	6.0	1.50	3.00
J	BMV1+p	MT20	2.0	4.0		
K	BMWW-t	MT20	4.0	6.0	1.50	3.00
L	BMWWW-t	MT20	5.0	6.0		
M	BS-t	MT20	3.0	6.0		
N	BMWW-t	MT20	4.0	6.0	1.75	3.00
O	BMWW-t	MT20	4.0	6.0	2.00	2.00
P	BMWW-t	MT20	4.0	4.0	2.00	1.75
Q	BMV1+p	MT20	2.0	4.0		

Edge - INDICATES REFERENCE CORNER OF PLATE TOUCHES EDGE OF CHORD.

LATERAL BRACE(S) SHOWN SHALL BE 2X4 SPF#2

DIMENSIONS, SUPPORTS AND LOADINGS SPECIFIED BY FABRICATOR TO BE VERIFIED BY BUILDING DESIGNER

BEARINGS

JT	FACTORED GROSS REACTION VERT	HORZ	MAXIMUM FACTORED GROSS REACTION DOWN	HORZ	UPLIFT	INPUT BRG IN-SX	REQRD BRG IN-SX
J	1507	0	1507	0	0	1-10	1-10
Q	1622	0	1622	0	0	5-8	1-12

UNFACTORED REACTIONS

JT	1ST LCASE COMBINED	MAX./MIN. COMPONENT REACTIONS SNOW	LIVE	PERM.LIVE	WIND	DEAD	SOIL
J	1075	656 / 0	0 / 0	0 / 0	0 / 0	419 / 0	0 / 0
Q	1154	717 / 0	0 / 0	0 / 0	0 / 0	437 / 0	0 / 0

BEARING MATERIAL TO BE SPF NO.2 OR BETTER AT JOINT(S) J, Q

BRACING

TOP CHORD TO BE SHEATHED OR MAX. PURLIN SPACING = 3.50 FT.
MAX. UNBRACED BOTTOM CHORD LENGTH = 10.00 FT OR RIGID CEILING DIRECTLY APPLIED.

ALL PITCH BREAKS AND PERIMETER CORNER JOINTS MUST BE LATERALLY RESTRAINED.

1 LATERAL BRACE(S) AT 1/ 2 LENGTH OF I-J, H-K.

END VERTICAL(S) MUST BE SHEATHED OR HAVE BRACES AS INDICATED IN THE MAX. UNBRACED LENGTH COLUMN OF THE TABLE BELOW

LOADING

TOTAL LOAD CASES: (4)

CHORDS

MEMB. FR-TO	MAX. FACTORED FORCE (LBS)	FACTORED VERT. LOAD LC1 (PLF) FROM	TO	MAX CSI (LC)	MAX. UNBRAC LENGTH
A- B	0 / 42	-78.0	-78.0	0.11 (1)	10.00
B- C	-1036 / 0	-78.0	-78.0	0.12 (1)	6.03
C- D	-2457 / 0	-78.0	-78.0	0.80 (1)	3.50
D- E	-2179 / 0	-78.0	-78.0	0.25 (1)	4.41
E- F	-1545 / 0	-78.0	-78.0	0.55 (1)	4.64
F- G	-1546 / 0	-78.0	-78.0	0.58 (1)	4.58
G- H	-1546 / 0	-78.0	-78.0	0.58 (1)	4.58
H- I	-1091 / 0	-78.0	-78.0	0.54 (1)	5.29
J- I	-1457 / 0	0.0	0.0	0.42 (1)	5.42
Q- B	-1655 / 0	0.0	0.0	0.20 (1)	6.44
Q- P	0 / 0	-18.5	-18.5	0.15 (4)	10.00
P- O	0 / 626	-18.5	-18.5	0.21 (4)	10.00
O- N	0 / 2485	-18.5	-18.5	0.45 (1)	10.00
N- M	0 / 1434	-18.5	-18.5	0.31 (1)	10.00
M- L	0 / 1434	-18.5	-18.5	0.31 (1)	10.00
L- K	0 / 1091	-18.5	-18.5	0.30 (4)	10.00
K- J	0 / 0	-18.5	-18.5	0.20 (4)	10.00

WEBS

MEMB. FR-TO	MAX. FACTORED FORCE (LBS)	MAX CSI (LC)
P- C	-536 / 0	0.13 (1)
C- O	0 / 2104	0.47 (1)
O- D	-970 / 0	0.23 (1)
D- N	-1512 / 0	0.63 (1)
N- E	0 / 1174	0.26 (1)
E- L	0 / 171	0.04 (1)
L- F	-546 / 0	0.66 (1)
L- H	0 / 702	0.16 (1)
K- H	-1107 / 0	0.44 (1)
K- I	0 / 1655	0.37 (1)
B- P	0 / 929	0.21 (1)

DESIGN CRITERIA

SPECIFIED LOADS:

TOP	CH.	LL	=	21.0	PSF
		DL	=	6.0	PSF
BOT	CH.	LL	=	0.0	PSF
		DL	=	7.4	PSF
TOTAL	LOAD		=	34.4	PSF

SPACING = 24.0 IN. C/C

LOADING IN ALL FLAT SECTIONS BASED ON A SLOPE OF 2.00/12 MINIMUM

THIS TRUSS IS DESIGNED FOR RESIDENTIAL OR SMALL BUILDING REQUIREMENTS OF PART 9, NBCC 2015

THIS DESIGN COMPLIES WITH:
- PART 9 OF BCBC 2018 , ABC 2019
- PART 9 OF OBC 2012 (2019 AMENDMENT)
- CSA 086-14
- TPIC 2014

DESIGN ASSUMPTIONS
-OVERHANG NOT TO BE ALTERED OR CUT OFF.

(55 % OF 23.0 P.S.F. G.S.L. PLUS 8.4 P.S.F. RAIN LOAD) EQUALS 21.0 P.S.F. SPECIFIED ROOF LIVE LOAD

ALLOWABLE DEFL.(LL)= L/360 (1.04")
CALCULATED VERT. DEFL.(LL) = L/ 999 (0.12")
ALLOWABLE DEFL.(TL)= L/360 (1.04")
CALCULATED VERT. DEFL.(TL) = L/ 999 (0.25")

CSI: TC=0.80/1.00 (C-D:1) , BC=0.45/1.00 (N-O:1) , WB=0.66/1.00 (F-L:1) , SSI=0.24/1.00 (H-I:1)

DOL LUMBER=1.00 NAIL=1.00 LS BEND=1.10 COMP=1.10 SHEAR=1.10 TENS= 1.10

COMPANION LIVE LOAD FACTOR = 1.00

TRUSS PLATE MANUFACTURER IS NOT RESPONSIBLE FOR QUALITY CONTROL IN THE TRUSS MANUFACTURING PLANT .

NAIL VALUES

PLATE	GRIP(DRY) (PSI) MAX	MIN	SHEAR (PLI) MAX	MIN	SECTION (PLI) MAX	MIN
MT20	650	371	1747	788	1987	1873

PLATE PLACEMENT TOL. = 0.250 inches

PLATE ROTATION TOL. = 5.0 Deg.

JSI GRIP= 0.88 (C) (INPUT = 0.90)
JSI METAL= 0.48 (M) (INPUT = 1.00)

JOB NAME	TRUSS NAME	QUANTITY	PLY	JOB DESC.	DRWG NO.
336324	H86		1	TRUSS DESC. JT 45147	E21104084

Alpa Roof Truss, Maple

Version 8.420 S Jan 21 2021 MiTek Industries, Inc. Wed Oct 13 14:51:53 2021 Page 1

ID:hd511hZTz bdeQoS817GKByhVxV-bCv1PWxLPX8?HeUFHIO6jEqJM1J5CGH5Gs7PDyyTp6q

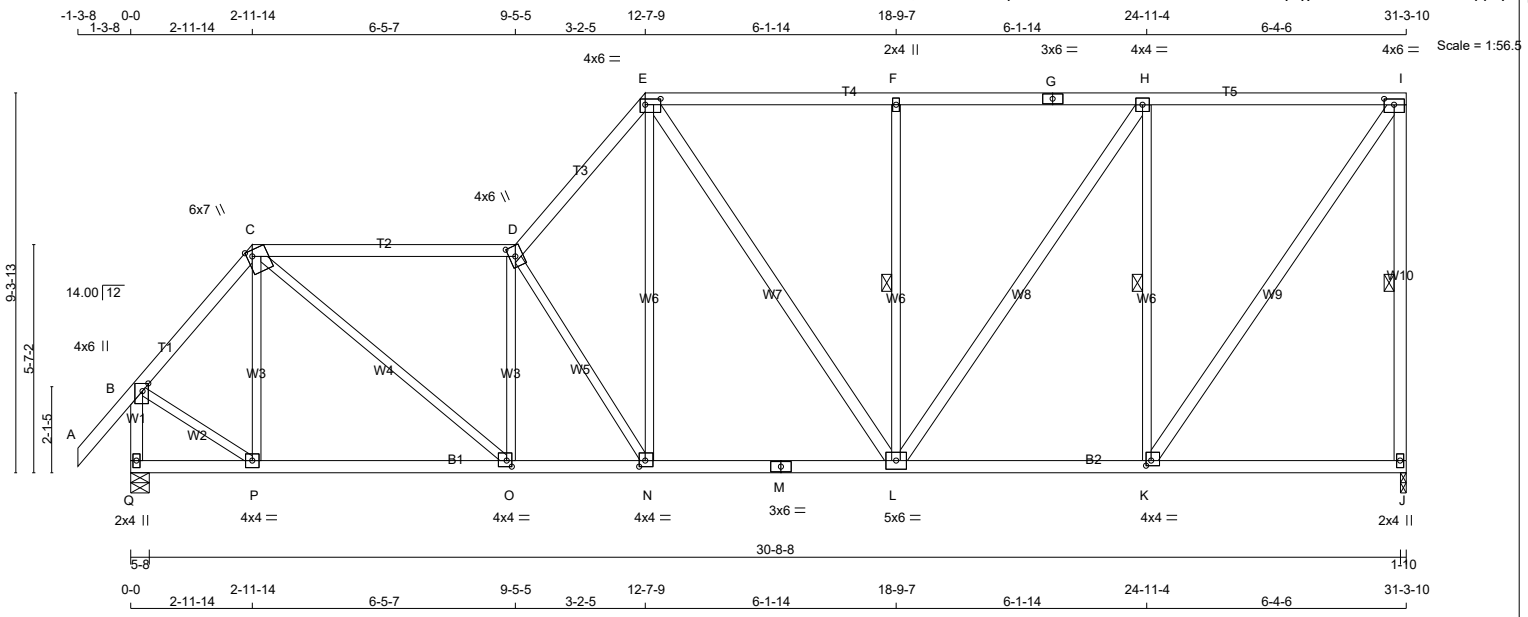

TOTAL WEIGHT = 169 lb

[M]

LUMBER

N. L. G. A. RULES

CHORDS	SIZE		LUMBER	DESCR.
A - C	2x4	DRY	No.2	SPF
C - D	2x4	DRY	No.2	SPF
D - E	2x4	DRY	No.2	SPF
E - G	2x4	DRY	No.2	SPF
G - I	2x4	DRY	No.2	SPF
J - I	2x4	DRY	No.2	SPF
Q - B	2x4	DRY	No.2	SPF
Q - M	2x4	DRY	No.2	SPF
M - J	2x4	DRY	No.2	SPF
ALL WEBS	2x3	DRY	No.2	SPF
EXCEPT				
E - L	2x4	DRY	No.2	SPF
L - H	2x4	DRY	No.2	SPF
K - I	2x4	DRY	No.2	SPF

DRY: SEASONED LUMBER.

PLATES (table is in inches)

JT	TYPE	PLATES	W	LEN	Y	X
B	TMVW+p	MT20	4.0	6.0	2.25	1.75
C	TTWW+m	MT20	6.0	7.0	Edge	1.50
D	TTWW+m	MT20	4.0	6.0	3.00	1.75
E	TTWW-l	MT20	4.0	6.0	1.75	4.50
F	TMW+w	MT20	2.0	4.0		
G	TS-t	MT20	3.0	6.0		
H	TMWW-t	MT20	4.0	4.0		
I	TMVW-t	MT20	4.0	6.0	1.75	3.00
J	BMV1+p	MT20	2.0	4.0		
K	BMWW-t	MT20	4.0	4.0	1.50	1.50
L	BMWWW-t	MT20	5.0	6.0		
M	BS-t	MT20	3.0	6.0		
N	BMWW-t	MT20	4.0	4.0	1.75	1.75
O	BMWW-t	MT20	4.0	4.0	1.75	1.50
P	BMWW-t	MT20	4.0	4.0		
Q	BMV1+p	MT20	2.0	4.0		

Edge - INDICATES REFERENCE CORNER OF PLATE TOUCHES EDGE OF CHORD.

LATERAL BRACE(S) SHOWN SHALL BE 2X4 SPF#2

DIMENSIONS, SUPPORTS AND LOADINGS SPECIFIED BY FABRICATOR TO BE VERIFIED BY BUILDING DESIGNER

BEARINGS

JT	FACTORED GROSS REACTION VERT	HORZ	MAXIMUM FACTORED GROSS REACTION DOWN	HORZ	UPLIFT	INPUT BRG IN-SX	REQRD BRG IN-SX
J	1510	0	1510	0	0	1-10	1-10
Q	1619	0	1619	0	0	5-8	1-12

UNFACTORED REACTIONS

JT	1ST LCASE COMBINED	MAX./MIN. COMPONENT REACTIONS SNOW	LIVE	PERM.LIVE	WIND	DEAD	SOIL
J	1076	657 / 0	0 / 0	0 / 0	0 / 0	419 / 0	0 / 0
Q	1152	716 / 0	0 / 0	0 / 0	0 / 0	436 / 0	0 / 0

BEARING MATERIAL TO BE SPF NO.2 OR BETTER AT JOINT(S) J, Q

BRACING

TOP CHORD TO BE SHEATHED OR MAX. PURLIN SPACING = 4.00 FT.
MAX. UNBRACED BOTTOM CHORD LENGTH = 10.00 FT OR RIGID CEILING DIRECTLY APPLIED.

ALL PITCH BREAKS AND PERIMETER CORNER JOINTS MUST BE LATERALLY RESTRAINED.

1 LATERAL BRACE(S) AT 1/ 2 LENGTH OF I-J, F-L, H-K.

END VERTICAL(S) MUST BE SHEATHED OR HAVE BRACES AS INDICATED IN THE MAX. UNBRACED LENGTH COLUMN OF THE TABLE BELOW

LOADING

TOTAL LOAD CASES: (4)

CHORDS

MEMB. FR-TO	MAX. FACTORED FORCE (LBS)	FACTORED VERT. LOAD (PLF) FROM	TO	LC1 CSI (LC)	MAX UNBRAC LENGTH
A- B	0 / 42	-78.0	-78.0	0.11 (1)	10.00
B- C	-1229 / 0	-78.0	-78.0	0.14 (1)	5.63
C- D	-1878 / 0	-78.0	-78.0	0.71 (1)	4.00
D- E	-1931 / 0	-78.0	-78.0	0.20 (1)	4.68
E- F	-1294 / 0	-78.0	-78.0	0.46 (1)	5.10
F- G	-1294 / 0	-78.0	-78.0	0.49 (1)	5.04
G- H	-1294 / 0	-78.0	-78.0	0.49 (1)	5.04
H- I	-890 / 0	-78.0	-78.0	0.46 (1)	5.83
J- I	-1462 / 0	0.0	0.0	0.60 (1)	5.41
Q- B	-1611 / 0	0.0	0.0	0.19 (1)	6.52
Q- P	0 / 0	-18.5	-18.5	0.13 (4)	10.00
P- O	0 / 788	-18.5	-18.5	0.21 (1)	10.00
O- N	0 / 1894	-18.5	-18.5	0.34 (1)	10.00
N- M	0 / 1270	-18.5	-18.5	0.28 (1)	10.00
M- L	0 / 1270	-18.5	-18.5	0.28 (1)	10.00
L- K	0 / 890	-18.5	-18.5	0.26 (4)	10.00
K- J	0 / 0	-18.5	-18.5	0.18 (4)	10.00

WEBS

MEMB. FR-TO	MAX. FACTORED FORCE (LBS)	MAX CSI (LC)
P- C	-334 / 0	0.16 (1)
C- O	0 / 1416	0.32 (1)
O- D	-823 / 0	0.39 (1)
D- N	-1202 / 0	0.81 (1)
N- E	0 / 1104	0.25 (1)
E- L	0 / 43	0.01 (1)
L- F	-514 / 0	0.29 (1)
L- H	0 / 717	0.12 (1)
K- H	-1132 / 0	0.65 (1)
K- I	0 / 1544	0.25 (1)
B- P	0 / 912	0.21 (1)

DESIGN CRITERIA

SPECIFIED LOADS:

TOP CH.	LL	=	21.0	PSF
	DL	=	6.0	PSF
BOT CH.	LL	=	0.0	PSF
	DL	=	7.4	PSF
TOTAL LOAD		=	34.4	PSF

SPACING = 24.0 IN. C/C

LOADING IN ALL FLAT SECTIONS BASED ON A SLOPE OF 2.00/12 MINIMUM

THIS TRUSS IS DESIGNED FOR RESIDENTIAL OR SMALL BUILDING REQUIREMENTS OF PART 9, NBCC 2015

THIS DESIGN COMPLIES WITH:
- PART 9 OF BCBC 2018 , ABC 2019
- PART 9 OF OBC 2012 (2019 AMENDMENT)
- CSA 086-14
- TPIC 2014

(55 % OF 23.0 P.S.F. G.S.L. PLUS 8.4 P.S.F. RAIN LOAD) EQUALS 21.0 P.S.F. SPECIFIED ROOF LIVE LOAD

ALLOWABLE DEFL.(LL)= L/360 (1.04")
CALCULATED VERT. DEFL.(LL) = L/ 999 (0.09")
ALLOWABLE DEFL.(TL)= L/360 (1.04")
CALCULATED VERT. DEFL.(TL) = L/ 999 (0.19")

CSI: TC=0.71/1.00 (C-D:1) , BC=0.34/1.00 (N-O:1) , WB=0.81/1.00 (D-N:1) , SSI=0.23/1.00 (H-I:1)

DOL LUMBER=1.00 NAIL=1.00 LS BEND=1.10 COMP=1.10 SHEAR=1.10 TENS= 1.10

COMPANION LIVE LOAD FACTOR = 1.00

TRUSS PLATE MANUFACTURER IS NOT RESPONSIBLE FOR QUALITY CONTROL IN THE TRUSS MANUFACTURING PLANT .

NAIL VALUES

PLATE	GRIP(DRY) (PSI) MAX	MIN	SHEAR (PLI) MAX	MIN	SECTION (PLI) MAX	MIN
MT20	650	371	1747	788	1987	1873

PLATE PLACEMENT TOL. = 0.250 inches

PLATE ROTATION TOL. = 5.0 Deg.

JSI GRIP= 0.90 (N) (INPUT = 0.90)
JSI METAL= 0.59 (E) (INPUT = 1.00)

JOB NAME	TRUSS NAME	QUANTITY	PLY	JOB DESC.		DRWG NO.
336324	H87		1	TRUSS DESC.	JT 45147	E21104085

Alpa Roof Truss, Maple

Version 8.420 S Jan 21 2021 MiTek Industries, Inc. Wed Oct 13 14:51:55 2021 Page 1

ID:hd511hZTz_bdeQoS817GKByhVxV-Xa1nqCycx8PjWyeePAQaoflcxr0RgC9OkAcWHqyTp6o

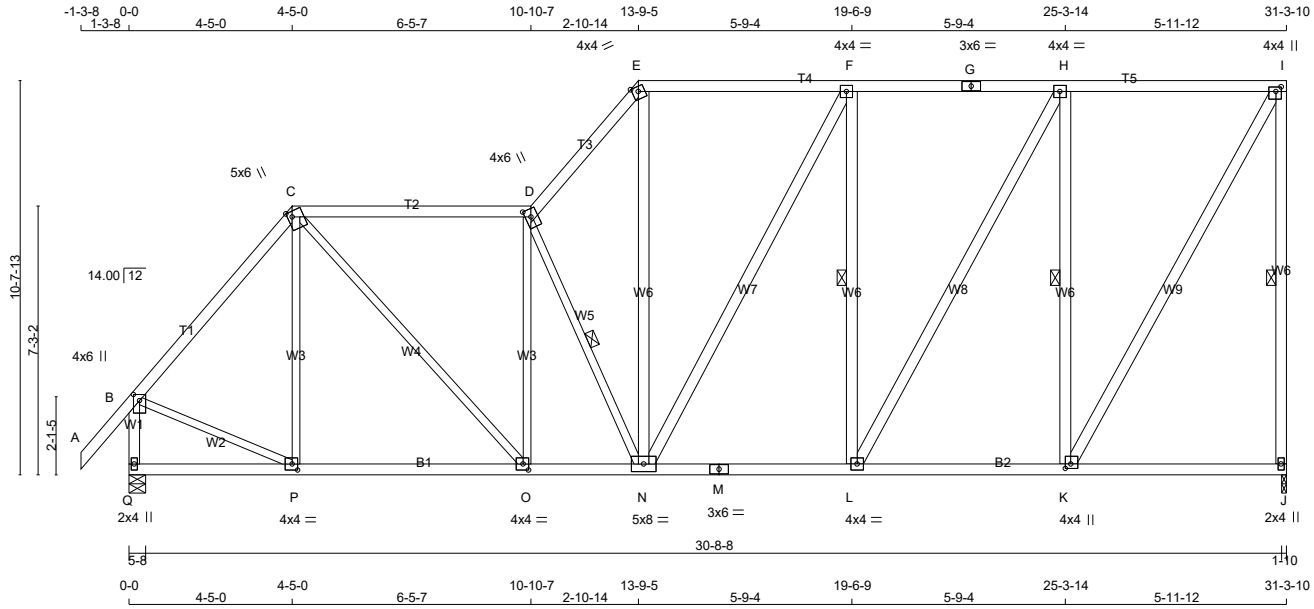

TOTAL WEIGHT = 194 lb

LUMBER

N. L. G. A. RULES

CHORDS	SIZE		LUMBER	DESCR.
A - C	2x4	DRY	No.2	SPF
C - D	2x4	DRY	No.2	SPF
D - E	2x4	DRY	No.2	SPF
E - G	2x4	DRY	No.2	SPF
G - I	2x4	DRY	No.2	SPF
J - I	2x4	DRY	No.2	SPF
Q - B	2x4	DRY	No.2	SPF
Q - M	2x4	DRY	No.2	SPF
M - J	2x4	DRY	No.2	SPF
ALL WEBS	2x4	DRY	No.2	SPF
EXCEPT				
P - C	2x3	DRY	No.2	SPF
C - O	2x3	DRY	No.2	SPF
O - D	2x3	DRY	No.2	SPF
D - N	2x3	DRY	No.2	SPF
B - P	2x3	DRY	No.2	SPF

DRY: SEASONED LUMBER.

PLATES (table is in inches)

JT	TYPE	PLATES	W	LEN	Y	X
B	TMVW+p	MT20	4.0	6.0	2.00	2.00
C	TTWW+m	MT20	5.0	6.0	1.75	1.50
D	TTWW+m	MT20	4.0	6.0	2.50	1.75
E	TTW-m	MT20	4.0	4.0	Edge	
F	TMWW-t	MT20	4.0	4.0		
G	TS-t	MT20	3.0	6.0		
H	TMWW-t	MT20	4.0	4.0		
I	TMVW+p	MT20	4.0	4.0	1.50	1.75
J	BMV1+p	MT20	2.0	4.0		
K	BMWW+t	MT20	4.0	4.0	1.50	1.75
L	BMWW-t	MT20	4.0	4.0		
M	BS-t	MT20	3.0	6.0		
N	BMWWW-t	MT20	5.0	8.0		
O	BMWW-t	MT20	4.0	4.0	2.00	1.75
P	BMWW-t	MT20	4.0	4.0	2.00	1.75
Q	BMV1+p	MT20	2.0	4.0		

Edge - INDICATES REFERENCE CORNER OF PLATE TOUCHES EDGE OF CHORD.

LATERAL BRACE(S) SHOWN SHALL BE 2X4 SPF#2

DIMENSIONS, SUPPORTS AND LOADINGS SPECIFIED BY FABRICATOR TO BE VERIFIED BY BUILDING DESIGNER

BEARINGS

JT	FACTORED GROSS REACTION VERT	HORZ	MAXIMUM FACTORED GROSS REACTION DOWN	HORZ	UPLIFT	INPUT BRG IN-SX	REQRD BRG IN-SX
J	1510	0	1510	0	0	1-10	1-10
Q	1619	0	1619	0	0	5-8	1-12

UNFACTORED REACTIONS

JT	1ST LCASE COMBINED	MAX./MIN. COMPONENT REACTIONS SNOW	LIVE	PERM.LIVE	WIND	DEAD	SOIL
J	1076	657 / 0	0 / 0	0 / 0	0 / 0	419 / 0	0 / 0
Q	1152	716 / 0	0 / 0	0 / 0	0 / 0	436 / 0	0 / 0

BEARING MATERIAL TO BE SPF NO.2 OR BETTER AT JOINT(S) J, Q

BRACING

TOP CHORD TO BE SHEATHED OR MAX. PURLIN SPACING = 4.39 FT.
MAX. UNBRACED BOTTOM CHORD LENGTH = 10.00 FT OR RIGID CEILING DIRECTLY APPLIED.

ALL PITCH BREAKS AND PERIMETER CORNER JOINTS MUST BE LATERALLY RESTRAINED.

1 LATERAL BRACE(S) AT 1/ 2 LENGTH OF I-J, D-N, F-L, H-K.

END VERTICAL(S) MUST BE SHEATHED OR HAVE BRACES AS INDICATED IN THE MAX. UNBRACED LENGTH COLUMN OF THE TABLE BELOW

LOADING

TOTAL LOAD CASES: (4)

CHORDS

MEMB. FR-TO	MAX. FACTORED FORCE (LBS)	FACTORED VERT. LOAD (PLF) FROM	TO	LC1 CSI (LC)	MAX UNBRAC LENGTH
A- B	0 / 42	-78.0	-78.0	0.11 (1)	10.00
B- C	-1296 / 0	-78.0	-78.0	0.33 (1)	5.31
C- D	-1538 / 0	-78.0	-78.0	0.67 (1)	4.39
D- E	-1716 / 0	-78.0	-78.0	0.16 (1)	4.94
E- F	-1131 / 0	-78.0	-78.0	0.38 (1)	5.47
F- G	-1098 / 0	-78.0	-78.0	0.41 (1)	5.47
G- H	-1098 / 0	-78.0	-78.0	0.41 (1)	5.47
H- I	-737 / 0	-78.0	-78.0	0.40 (1)	6.25
J- I	-1465 / 0	0.0	0.0	0.84 (1)	5.41
Q- B	-1591 / 0	0.0	0.0	0.19 (1)	6.55
Q- P	0 / 0	-18.5	-18.5	0.14 (4)	10.00
P- O	0 / 836	-18.5	-18.5	0.22 (4)	10.00
O- N	0 / 1549	-18.5	-18.5	0.29 (1)	10.00
N- M	0 / 1098	-18.5	-18.5	0.24 (1)	10.00
M- L	0 / 1098	-18.5	-18.5	0.24 (1)	10.00
L- K	0 / 737	-18.5	-18.5	0.23 (4)	10.00
K- J	0 / 0	-18.5	-18.5	0.15 (4)	10.00

WEBS

MEMB. FR-TO	MAX. FACTORED FORCE (LBS)	MAX CSI (LC)
P- C	-203 / 3	0.19 (1)
C- O	0 / 1039	0.23 (1)
O- D	-686 / 0	0.64 (1)
D- N	-1072 / 0	0.41 (1)
N- E	0 / 1000	0.16 (1)
N- F	0 / 69	0.01 (1)
L- F	-542 / 0	0.31 (1)
L- H	0 / 741	0.12 (1)
K- H	-1155 / 0	0.66 (1)
K- I	0 / 1475	0.24 (1)
B- P	0 / 900	0.20 (1)

[M]

DESIGN CRITERIA

SPECIFIED LOADS:

TOP CH.	LL	=	21.0	PSF
	DL	=	6.0	PSF
BOT CH.	LL	=	0.0	PSF
	DL	=	7.4	PSF
TOTAL LOAD		=	34.4	PSF

SPACING = 24.0 IN. C/C

LOADING IN ALL FLAT SECTIONS BASED ON A SLOPE OF 2.00/12 MINIMUM

THIS TRUSS IS DESIGNED FOR RESIDENTIAL OR SMALL BUILDING REQUIREMENTS OF PART 9, NBCC 2015

THIS DESIGN COMPLIES WITH:
- PART 9 OF BCBC 2018 , ABC 2019
- PART 9 OF OBC 2012 (2019 AMENDMENT)
- CSA 086-14
- TPIC 2014

(55 % OF 23.0 P.S.F. G.S.L. PLUS 8.4 P.S.F. RAIN LOAD) EQUALS 21.0 P.S.F. SPECIFIED ROOF LIVE LOAD

ALLOWABLE DEFL.(LL)= L/360 (1.04")
CALCULATED VERT. DEFL.(LL) = L/ 999 (0.07")
ALLOWABLE DEFL.(TL)= L/360 (1.04")
CALCULATED VERT. DEFL.(TL) = L/ 999 (0.15")

CSI: TC=0.84/1.00 (I-J:1) , BC=0.29/1.00 (N-O:1) , WB=0.66/1.00 (H-K:1) , SSI=0.22/1.00 (H-I:1)

DOL LUMBER=1.00 NAIL=1.00 LS BEND=1.10 COMP=1.10 SHEAR=1.10 TENS= 1.10

COMPANION LIVE LOAD FACTOR = 1.00

TRUSS PLATE MANUFACTURER IS NOT RESPONSIBLE FOR QUALITY CONTROL IN THE TRUSS MANUFACTURING PLANT .

NAIL VALUES

PLATE	GRIP(DRY) (PSI) MAX	MIN	SHEAR (PLI) MAX	MIN	SECTION (PLI) MAX	MIN
MT20	650	371	1747	788	1987	1873

PLATE PLACEMENT TOL. = 0.250 inches

PLATE ROTATION TOL. = 5.0 Deg.

JSI GRIP= 0.89 (O) (INPUT = 0.90)
JSI METAL= 0.52 (D) (INPUT = 1.00)

JOB NAME	TRUSS NAME	QUANTITY	PLY	JOB DESC.		DRWG NO.
336324	H88		1	TRUSS DESC.	JT 45147	E21104086

Alpa Roof Truss, Maple

Version 8.420 S Jan 21 2021 MiTek Industries, Inc. Wed Oct 13 14:51:57 2021 Page 1

ID:hd511hZTz bdeQoS817GKByhVxV-Tz8YFt sTmfRmGo0WbS2t4r?OeiJ81XhBU5cMjyTp6m

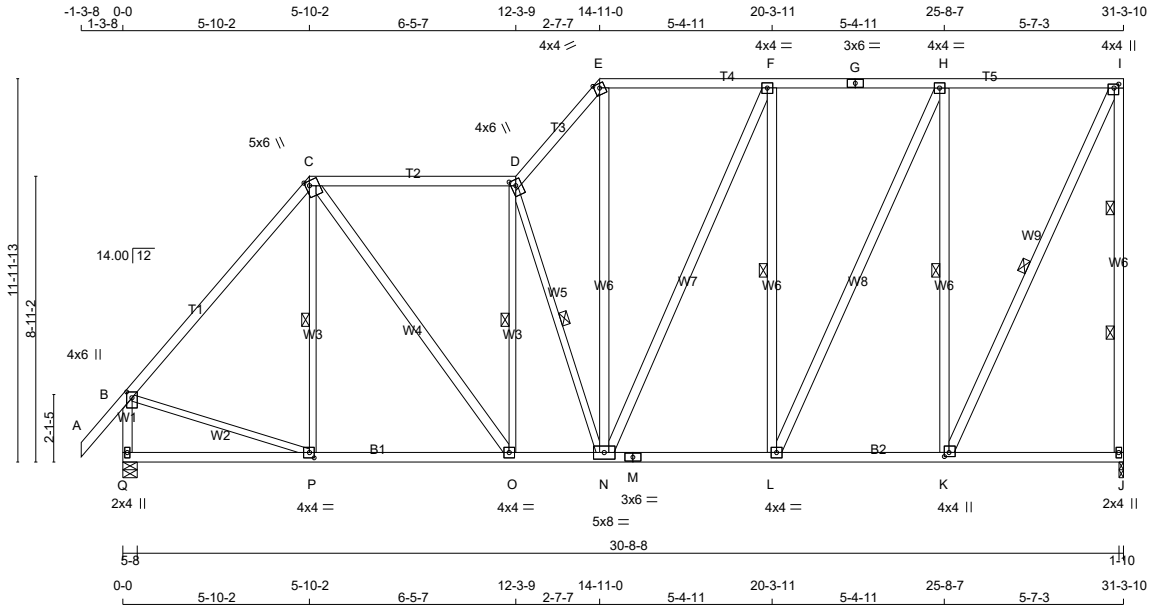

TOTAL WEIGHT = 213 lb

LUMBER

N. L. G. A. RULES

CHORDS	SIZE		LUMBER	DESCR.
A - C	2x4	DRY	No.2	SPF
C - D	2x4	DRY	No.2	SPF
D - E	2x4	DRY	No.2	SPF
E - G	2x4	DRY	No.2	SPF
G - I	2x4	DRY	No.2	SPF
J - I	2x4	DRY	No.2	SPF
Q - B	2x4	DRY	No.2	SPF
Q - M	2x4	DRY	No.2	SPF
M - J	2x4	DRY	No.2	SPF
ALL WEBS	2x4	DRY	No.2	SPF
EXCEPT				
P - C	2x3	DRY	No.2	SPF
O - D	2x3	DRY	No.2	SPF
D - N	2x3	DRY	No.2	SPF
B - P	2x3	DRY	No.2	SPF

DRY: SEASONED LUMBER.

PLATES (table is in inches)

JT	TYPE	PLATES	W	LEN	Y	X
B	TMVW+p	MT20	4.0	6.0	2.25	2.00
C	TTWW+m	MT20	5.0	6.0	1.75	1.50
D	TTWW+m	MT20	4.0	6.0	2.25	1.75
E	TTW-m	MT20	4.0	4.0	Edge	
F	TMWW-t	MT20	4.0	4.0		
G	TS-t	MT20	3.0	6.0		
H	TMWW-t	MT20	4.0	4.0		
I	TMVW+p	MT20	4.0	4.0	1.50	1.75
J	BMV1+p	MT20	2.0	4.0		
K	BMWW+t	MT20	4.0	4.0	1.50	1.75
L	BMWW-t	MT20	4.0	4.0		
M	BS-t	MT20	3.0	6.0		
N	BMWWW-t	MT20	5.0	8.0		
O	BMWW-t	MT20	4.0	4.0		
P	BMWW-t	MT20	4.0	4.0	2.00	1.75
Q	BMV1+p	MT20	2.0	4.0		

Edge - INDICATES REFERENCE CORNER OF PLATE TOUCHES EDGE OF CHORD.

LATERAL BRACE(S) SHOWN SHALL BE 2X4 SPF#2

DIMENSIONS, SUPPORTS AND LOADINGS SPECIFIED BY FABRICATOR TO BE VERIFIED BY BUILDING DESIGNER

BEARINGS

JT	FACTORED GROSS REACTION VERT	HORZ	MAXIMUM FACTORED GROSS REACTION DOWN	HORZ	UPLIFT	INPUT BRG IN-SX	REQRD BRG IN-SX
J	1510	0	1510	0	0	1-10	1-10
Q	1619	0	1619	0	0	5-8	1-12

UNFACTORED REACTIONS

JT	1ST LCASE COMBINED	MAX./MIN. COMPONENT REACTIONS SNOW	LIVE	PERM.LIVE	WIND	DEAD	SOIL
J	1076	657 / 0	0 / 0	0 / 0	0 / 0	419 / 0	0 / 0
Q	1152	716 / 0	0 / 0	0 / 0	0 / 0	436 / 0	0 / 0

BEARING MATERIAL TO BE SPF NO.2 OR BETTER AT JOINT(S) J, Q

BRACING

TOP CHORD TO BE SHEATHED OR MAX. PURLIN SPACING = 4.71 FT.
MAX. UNBRACED BOTTOM CHORD LENGTH = 10.00 FT OR RIGID CEILING DIRECTLY APPLIED.

ALL PITCH BREAKS AND PERIMETER CORNER JOINTS MUST BE LATERALLY RESTRAINED.

2 LATERAL BRACE(S) AT 1/ 3 LENGTH OF I-J.
1 LATERAL BRACE(S) AT 1/ 2 LENGTH OF C-P, D-O, D-N, F-L, H-K, I-K.

END VERTICAL(S) MUST BE SHEATHED OR HAVE BRACES AS INDICATED IN THE MAX. UNBRACED LENGTH COLUMN OF THE TABLE BELOW

LOADING

TOTAL LOAD CASES: (4)

CHORDS

MEMB. FR-TO	MAX. FACTORED FORCE (LBS)	FACTORED VERT. LOAD (PLF) FROM	TO	LC1	MAX CSI (LC)	MAX. UNBRAC LENGTH
A- B	0 / 42	-78.0	-78.0	0.11 (1)	10.00	
B- C	-1304 / 0	-78.0	-78.0	0.64 (1)	4.94	
C- D	-1307 / 0	-78.0	-78.0	0.65 (1)	4.71	
D- E	-1538 / 0	-78.0	-78.0	0.12 (1)	5.19	
E- F	-1012 / 0	-78.0	-78.0	0.32 (1)	5.79	
F- G	-943 / 0	-78.0	-78.0	0.35 (1)	5.90	
G- H	-943 / 0	-78.0	-78.0	0.35 (1)	5.90	
H- I	-619 / 0	-78.0	-78.0	0.34 (1)	6.25	
J- I	-1468 / 0	0.0	0.0	0.48 (1)	5.41	
Q- B	-1577 / 0	0.0	0.0	0.19 (1)	6.57	
Q- P	0 / 0	-18.5	-18.5	0.18 (4)	10.00	
P- O	0 / 844	-18.5	-18.5	0.26 (4)	10.00	
O- N	0 / 1314	-18.5	-18.5	0.24 (1)	10.00	
N- M	0 / 943	-18.5	-18.5	0.20 (1)	10.00	
M- L	0 / 943	-18.5	-18.5	0.20 (1)	10.00	
L- K	0 / 619	-18.5	-18.5	0.19 (4)	10.00	
K- J	0 / 0	-18.5	-18.5	0.14 (4)	10.00	

WEBS

MEMB. FR-TO	MAX. FACTORED FORCE (LBS)	MAX CSI (LC)
P- C	-113 / 50	0.06 (1)
C- O	0 / 779	0.13 (1)
O- D	-550 / 0	0.28 (1)
D- N	-1021 / 0	0.57 (1)
N- E	0 / 888	0.14 (1)
N- F	0 / 170	0.03 (1)
L- F	-604 / 0	0.47 (1)
L- H	0 / 773	0.12 (1)
K- H	-1177 / 0	0.92 (1)
K- I	0 / 1432	0.23 (1)
B- P	0 / 881	0.20 (1)

[M]

DESIGN CRITERIA

SPECIFIED LOADS:

TOP CH.	LL	=	21.0	PSF
	DL	=	6.0	PSF
BOT CH.	LL	=	0.0	PSF
	DL	=	7.4	PSF
TOTAL LOAD		=	34.4	PSF

SPACING = 24.0 IN. C/C

LOADING IN ALL FLAT SECTIONS BASED ON A SLOPE OF 2.00/12 MINIMUM

THIS TRUSS IS DESIGNED FOR RESIDENTIAL OR SMALL BUILDING REQUIREMENTS OF PART 9, NBCC 2015

THIS DESIGN COMPLIES WITH:
- PART 9 OF BCBC 2018 , ABC 2019
- PART 9 OF OBC 2012 (2019 AMENDMENT)
- CSA 086-14
- TPIC 2014

(55 % OF 23.0 P.S.F. G.S.L. PLUS 8.4 P.S.F. RAIN LOAD) EQUALS 21.0 P.S.F. SPECIFIED ROOF LIVE LOAD

ALLOWABLE DEFL.(LL)= L/360 (1.04")
CALCULATED VERT. DEFL.(LL) = L/ 999 (0.07")
ALLOWABLE DEFL.(TL)= L/360 (1.04")
CALCULATED VERT. DEFL.(TL) = L/ 999 (0.14")

CSI: TC=0.65/1.00 (C-D:1) , BC=0.26/1.00 (O-P:4) , WB=0.92/1.00 (H-K:1) , SSI=0.20/1.00 (H-I:1)

DOL LUMBER=1.00 NAIL=1.00 LS BEND=1.10 COMP=1.10 SHEAR=1.10 TENS= 1.10

COMPANION LIVE LOAD FACTOR = 1.00

TRUSS PLATE MANUFACTURER IS NOT RESPONSIBLE FOR QUALITY CONTROL IN THE TRUSS MANUFACTURING PLANT .

NAIL VALUES

PLATE	GRIP(DRY) (PSI) MAX	MIN	SHEAR (PLI) MAX	MIN	SECTION (PLI) MAX	MIN
MT20	650	371	1747	788	1987	1873

PLATE PLACEMENT TOL. = 0.250 inches

PLATE ROTATION TOL. = 5.0 Deg.

JSI GRIP= 0.89 (B) (INPUT = 0.90)
JSI METAL= 0.52 (B) (INPUT = 1.00)

JOB NAME	TRUSS NAME	QUANTITY	PLY	JOB DESC.		DRWG NO.
336324	H89		1	TRUSS DESC.	JT 45147	E21104087

Alpa Roof Truss, Maple

Version 8.420 S Jan 21 2021 MiTek Industries, Inc. Wed Oct 13 14:51:59 2021 Page 1

ID:hd511hZTz bdeQoS817GKByhVxV-PLGIqZ06?Nv9?ZyPe0VWyVwJ0SMtc0O foajQcyTp6k

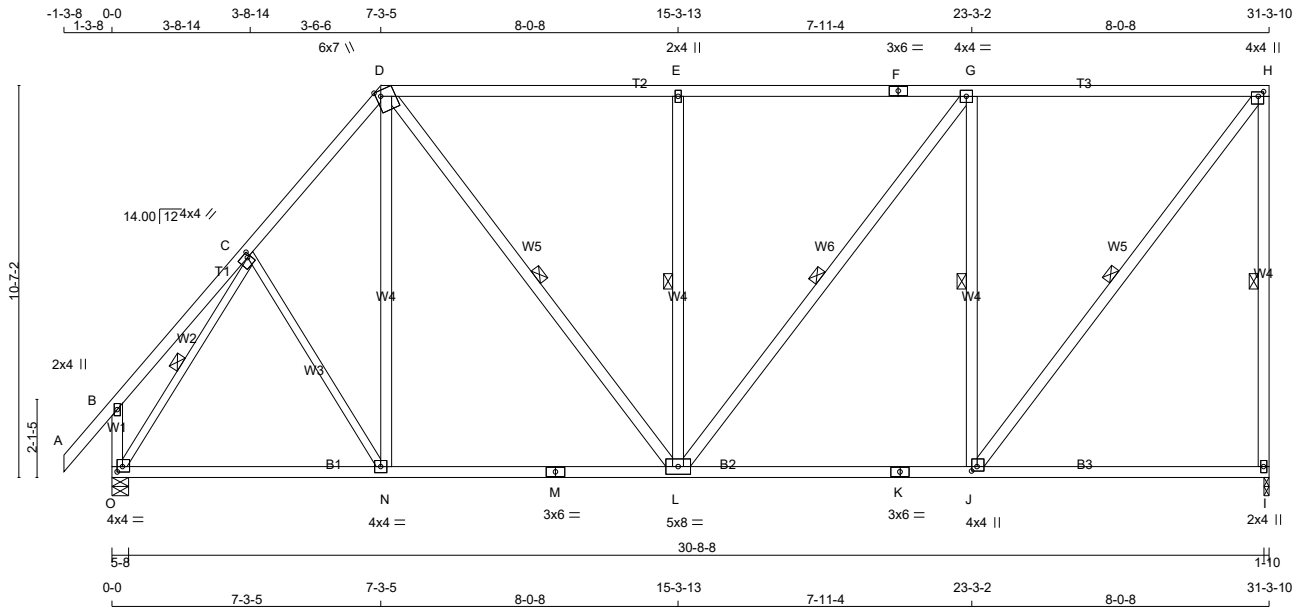

TOTAL WEIGHT = 2 X 180 = 360 lb

[M]

LUMBER

N. L. G. A. RULES

CHORDS	SIZE		LUMBER	DESCR.
A - D	2x4	DRY	No.2	SPF
D - F	2x4	DRY	No.2	SPF
F - H	2x4	DRY	No.2	SPF
I - H	2x4	DRY	No.2	SPF
O - B	2x4	DRY	No.2	SPF
O - M	2x4	DRY	No.2	SPF
M - K	2x4	DRY	No.2	SPF
K - I	2x4	DRY	No.2	SPF
ALL WEBS	2x4	DRY	No.2	SPF
EXCEPT				
C - N	2x3	DRY	No.2	SPF
O - C	2x3	DRY	No.2	SPF

DRY: SEASONED LUMBER.

PLATES (table is in inches)

JT	TYPE	PLATES	W	LEN	Y	X
B	TMV+p	MT20	2.0	4.0		
C	TMWW-t	MT20	4.0	4.0	1.50	1.00
D	TTWW+m	MT20	6.0	7.0	Edge	1.50
E	TMW+w	MT20	2.0	4.0		
F	TS-t	MT20	3.0	6.0		
G	TMWW-t	MT20	4.0	4.0		
H	TMVW+p	MT20	4.0	4.0	1.50	1.75
I	BMV1+p	MT20	2.0	4.0		
J	BMWW+t	MT20	4.0	4.0	1.50	1.75
K	BS-t	MT20	3.0	6.0		
L	BMWWW-t	MT20	5.0	8.0		
M	BS-t	MT20	3.0	6.0		
N	BMWW-t	MT20	4.0	4.0		
O	BMVW1-t	MT20	4.0	4.0	1.75	1.75

Edge - INDICATES REFERENCE CORNER OF PLATE TOUCHES EDGE OF CHORD.

LATERAL BRACE(S) SHOWN SHALL BE 2X4 SPF#2

DIMENSIONS, SUPPORTS AND LOADINGS SPECIFIED BY FABRICATOR TO BE VERIFIED BY BUILDING DESIGNER

BEARINGS

JT	FACTORED GROSS REACTION VERT	HORZ	MAXIMUM FACTORED GROSS REACTION DOWN	HORZ	UPLIFT	INPUT BRG IN-SX	REQRD BRG IN-SX
I	1510	0	1510	0	0	1-10	1-10
O	1619	0	1619	0	0	5-8	1-12

UNFACTORED REACTIONS

JT	1ST LCASE COMBINED	MAX./MIN. COMPONENT REACTIONS SNOW	LIVE	PERM.LIVE	WIND	DEAD	SOIL
I	1076	657 / 0	0 / 0	0 / 0	0 / 0	419 / 0	0 / 0
O	1152	716 / 0	0 / 0	0 / 0	0 / 0	436 / 0	0 / 0

BEARING MATERIAL TO BE SPF NO.2 OR BETTER AT JOINT(S) I, O

BRACING

TOP CHORD TO BE SHEATHED OR MAX. PURLIN SPACING = 4.53 FT.
MAX. UNBRACED BOTTOM CHORD LENGTH = 10.00 FT OR RIGID CEILING DIRECTLY APPLIED.

ALL PITCH BREAKS AND PERIMETER CORNER JOINTS MUST BE LATERALLY RESTRAINED.

1 LATERAL BRACE(S) AT 1/ 2 LENGTH OF H-I, D-L, E-L, G-L, G-J, H-J, C-O.

END VERTICAL(S) MUST BE SHEATHED OR HAVE BRACES AS INDICATED IN THE MAX. UNBRACED LENGTH COLUMN OF THE TABLE BELOW

LOADING

TOTAL LOAD CASES: (4)

CHORDS

MEMB. FR-TO	MAX. FACTORED FORCE (LBS)	FACTORED VERT. LOAD (PLF) FROM	TO	LC1 CSI (LC)	MAX UNBRAC LENGTH
A- B	0 / 42	-78.0	-78.0	0.11 (1)	10.00
B- C	0 / 24	-78.0	-78.0	0.16 (1)	10.00
C- D	-1308 / 0	-78.0	-78.0	0.20 (1)	5.45
D- E	-1201 / 0	-78.0	-78.0	0.83 (1)	4.54
E- F	-1202 / 0	-78.0	-78.0	0.83 (1)	4.53
F- G	-1202 / 0	-78.0	-78.0	0.83 (1)	4.53
G- H	-936 / 0	-78.0	-78.0	0.79 (1)	5.03
I- H	-1451 / 0	0.0	0.0	0.82 (1)	5.43
O- B	-217 / 0	0.0	0.0	0.03 (1)	7.81
O- N	0 / 816	-18.5	-18.5	0.34 (4)	10.00
N- M	0 / 833	-18.5	-18.5	0.35 (4)	10.00
M- L	0 / 833	-18.5	-18.5	0.35 (4)	10.00
L- K	0 / 936	-18.5	-18.5	0.38 (4)	10.00
K- J	0 / 936	-18.5	-18.5	0.38 (4)	10.00
J- I	0 / 0	-18.5	-18.5	0.29 (4)	10.00

WEBS

MEMB. FR-TO	MAX. FACTORED FORCE (LBS)	MAX CSI (LC)
C- N	0 / 48	0.02 (4)
N- D	0 / 139	0.03 (4)
D- L	0 / 597	0.10 (1)
L- E	-678 / 0	0.38 (1)
L- G	0 / 436	0.07 (1)
J- G	-1030 / 0	0.58 (1)
J- H	0 / 1521	0.24 (1)
O- C	-1576 / 0	0.51 (1)

DESIGN CRITERIA

SPECIFIED LOADS:

TOP CH.	LL	=	21.0	PSF
	DL	=	6.0	PSF
BOT CH.	LL	=	0.0	PSF
	DL	=	7.4	PSF
TOTAL LOAD		=	34.4	PSF

SPACING = 24.0 IN. C/C

LOADING IN FLAT SECTION BASED ON A SLOPE OF 2.00/12 MINIMUM

THIS TRUSS IS DESIGNED FOR RESIDENTIAL OR SMALL BUILDING REQUIREMENTS OF PART 9, NBCC 2015

THIS DESIGN COMPLIES WITH:
- PART 9 OF BCBC 2018 , ABC 2019
- PART 9 OF OBC 2012 (2019 AMENDMENT)
- CSA 086-14
- TPIC 2014

(55 % OF 23.0 P.S.F. G.S.L. PLUS 8.4 P.S.F. RAIN LOAD) EQUALS 21.0 P.S.F. SPECIFIED ROOF LIVE LOAD

ALLOWABLE DEFL.(LL)= L/360 (1.04")
CALCULATED VERT. DEFL.(LL) = L/ 999 (0.05")
ALLOWABLE DEFL.(TL)= L/360 (1.04")
CALCULATED VERT. DEFL.(TL) = L/ 999 (0.13")

CSI: TC=0.83/1.00 (D-E:1) , BC=0.38/1.00 (J-L:4) , WB=0.58/1.00 (G-J:1) , SSI=0.29/1.00 (G-H:1)

DOL LUMBER=1.00 NAIL=1.00 LS BEND=1.10 COMP=1.10 SHEAR=1.10 TENS= 1.10

COMPANION LIVE LOAD FACTOR = 1.00

TRUSS PLATE MANUFACTURER IS NOT RESPONSIBLE FOR QUALITY CONTROL IN THE TRUSS MANUFACTURING PLANT .

NAIL VALUES

PLATE	GRIP(DRY) (PSI) MAX	MIN	SHEAR (PLI) MAX	MIN	SECTION (PLI) MAX	MIN
MT20	650	371	1747	788	1987	1873

PLATE PLACEMENT TOL. = 0.250 inches

PLATE ROTATION TOL. = 5.0 Deg.

JSI GRIP= 0.90 (H) (INPUT = 0.90)
JSI METAL= 0.53 (C) (INPUT = 1.00)

JOB NAME	TRUSS NAME	QUANTITY	PLY	JOB DESC.		DRWG NO.
336324	H90		1	TRUSS DESC.	JT 45147	E21104088

Alpa Roof Truss, Maple

Version 8.420 S Jan 21 2021 MiTek Industries, Inc. Wed Oct 13 14:52:01 2021 Page 1

ID:hd511hZTz_bdeQoS817GKByhVxV-MkO35F1NX_9tEt6nlQX_2w?hwFxP4qJH663qVUyTp6i

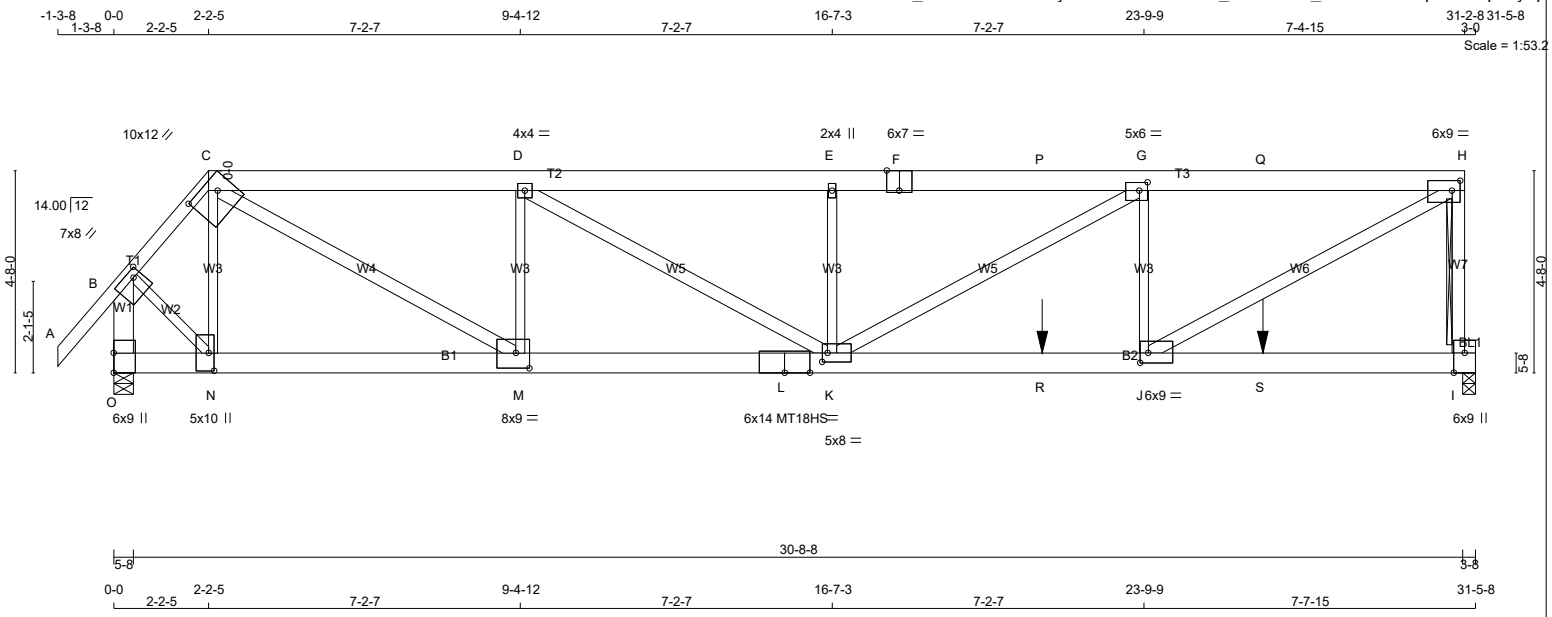

TOTAL WEIGHT = 173 lb

[M]

LUMBER

N. L. G. A. RULES

CHORDS	SIZE		LUMBER	DESCR.
A - C	2x4	DRY	No.2	SPF
C - F	2x6	DRY	1650F 1.5E	SPF
F - H	2x6	DRY	1650F 1.5E	SPF
I - H	2x4	DRY	No.2	SPF
O - B	2x6	DRY	No.2	SPF
O - L	2x6	DRY	2100F 1.8E	SPF
L - I	2x6	DRY	2100F 1.8E	SPF
BEARING BLOCKS				
BL1	2x4	DRY	No.2	SPF
ALL WEBS EXCEPT	2x3	DRY	No.2	SPF
C - M	2x4	DRY	No.2	SPF
D - K	2x4	DRY	1650F 1.5E	SPF
K - G	2x4	DRY	1650F 1.5E	SPF
J - H	2x4	DRY	1650F 1.5E	SPF

DRY: SEASONED LUMBER.

PLATES (table is in inches)

JT	TYPE	PLATES	W	LEN	Y	X
B	TMVW-t	MT20	7.0	8.0	2.00	2.25
C	TTWW-h	MT20	10.0	12.0	3.75	8.00
D	TMWW-t	MT20	4.0	4.0		
E	TMW+w	MT20	2.0	4.0		
F	TS-t	MT20	6.0	7.0	Edge	3.50
G	TMWW-t	MT20	5.0	6.0	2.25	2.25
H	TMVW-t	MT20	6.0	9.0	2.75	2.25
I	BMVK1+t	MT20	6.0	9.0	Edge	3.00
J	BMWW-t	MT20	6.0	9.0	2.75	2.25
K	BMWWW-t	MT20	5.0	8.0	2.50	1.50
L	BS-t	MT18HS	6.0	14.0		
M	BMWW-t	MT20	8.0	9.0	4.25	3.75
N	BMWW+t	MT20	5.0	10.0	5.00	1.50
O	BMV1+t	MT20	6.0	9.0	5.50	

Edge - INDICATES REFERENCE CORNER OF PLATE TOUCHES EDGE OF CHORD.

LATERAL BRACE(S) SHOWN SHALL BE 2X4 SPF#2

LICENSED PROFESSIONAL ENGINEER
V. WIDYA
100225448
10/13/2021
PROVINCE OF ONTARIO

DIMENSIONS, SUPPORTS AND LOADINGS SPECIFIED BY FABRICATOR TO BE VERIFIED BY BUILDING DESIGNER

BEARINGS

JT	FACTORED GROSS REACTION VERT	HORZ	MAXIMUM FACTORED GROSS REACTION DOWN	HORZ	UPLIFT	INPUT BRG IN-SX	REQRD BRG IN-SX
I	3675	0	3675	0	0	3-8	3-8
O	4844	0	4844	0	0	5-8	5-8

UNFACTORED REACTIONS

JT	1ST LCASE COMBINED	MAX./MIN. COMPONENT REACTIONS SNOW	LIVE	PERM.LIVE	WIND	DEAD	SOIL
I	2620	1600 / 0	0 / 0	0 / 0	0 / 0	1020 / 0	0 / 0
O	3452	2119 / 0	0 / 0	0 / 0	0 / 0	1333 / 0	0 / 0

BEARING MATERIAL TO BE SPF NO.2 OR BETTER AT JOINT(S) I, O
BEARING SIZE FACTOR = 1.15 AT JNT(S) I, O (BASED ON SUPPORT DEPTH = 1-8)

BRACING

TOP CHORD TO BE SHEATHED OR MAX. PURLIN SPACING = 3.23 FT.
MAX. UNBRACED BOTTOM CHORD LENGTH = 6.25 FT OR RIGID CEILING DIRECTLY APPLIED.

ALL PITCH BREAKS AND PERIMETER CORNER JOINTS MUST BE LATERALLY RESTRAINED.

2x3 DRY SPF No.2 T-BRACE AT H-I

FASTEN T AND I-BRACES TO NARROW EDGE OF WEB WITH ONE ROW PER PLY OF 3" COMMON WIRE NAILS @ 6" O.C. WITH 3" MINIMUM END DISTANCE. BRACE MUST COVER 90% OF WEB LENGTH.

END VERTICAL(S) MUST BE SHEATHED OR HAVE BRACES AS INDICATED IN THE MAX. UNBRACED LENGTH COLUMN OF THE TABLE BELOW

LOADING

TOTAL LOAD CASES: (4)

CHORDS

MEMB. FR-TO	MAX. FACTORED FORCE (LBS)	FACTORED VERT. LOAD (PLF) FROM	TO	LC1 CSI (LC)	MAX UNBRAC LENGTH
A- B	0 / 42	-78.0	-78.0	0.12 (1)	10.00
B- C	-3851 / 0	-78.0	-78.0	0.27 (1)	3.36
C- D	-7387 / 0	-78.0	-78.0	0.41 (1)	3.49
D- E	-7922 / 0	-78.0	-78.0	0.39 (1)	3.41
E- F	-7922 / 0	-137.2	-137.2	0.57 (1)	3.23
F- P	-7922 / 0	-137.2	-137.2	0.57 (1)	3.23
P- G	-7922 / 0	-78.0	-78.0	0.57 (1)	3.23
G- Q	-5342 / 0	-78.0	-78.0	0.43 (1)	3.95
Q- H	-5342 / 0	-130.8	-130.8	0.43 (1)	3.95
I- H	-3483 / 0	0.0	0.0	0.68 (1)	6.00
O- B	-4925 / 0	0.0	0.0	0.40 (1)	4.81
O- N	0 / 0	-256.7	-256.7	0.35 (1)	10.00
N- M	0 / 2502	-256.7	-256.7	0.57 (1)	10.00
M- L	0 / 7387	-256.7	-256.7	0.83 (1)	10.00
L- K	0 / 7387	-256.7	-256.7	0.83 (1)	10.00
K- R	0 / 5342	-33.5	-33.5	0.50 (1)	10.00
R- J	0 / 5342	-18.5	-18.5	0.50 (1)	10.00
J- S	-121 / 0	-18.5	-18.5	0.22 (1)	6.25
S- I	-121 / 0	-31.0	-31.0	0.22 (1)	6.25

WEBS

MEMB. FR-TO	MAX. FACTORED FORCE (LBS)	MAX CSI (LC)
N- C	-260 / 0	0.08 (1)
C- M	0 / 5660	1.00 (1)
M- D	-914 / 0	0.27 (1)
D- K	0 / 619	0.08 (1)
K- E	-713 / 0	0.21 (1)
K- G	0 / 2988	0.38 (1)
J- G	-2372 / 0	0.70 (1)
J- H	0 / 6282	0.80 (1)
B- N	0 / 3092	0.77 (1)

FACTORED CONCENTRATED LOADS (LBS)

JT	LOC.	LC1	MAX-	MAX+	FACE	DIR.	TYPE	HEEL	CONN.
R	21-5-7	-393	-393	---	FRONT	VERT	TOTAL	---	C1
S	26-6-9	-393	-393	---	FRONT	VERT	TOTAL	---	C1

CONNECTION REQUIREMENTS

1) **C1:** A SUITABLE HANGER/MECHANICAL CONNECTION IS REQUIRED.

DESIGN CRITERIA

*** SPECIAL LOADS ANALYSIS ***
GEOMETRY AND/OR BASIC LOADS CHANGED BY USER.
LOADS WERE DERIVED FROM USER INPUT
NO FURTHER MODIFICATIONS WERE MADE

SPECIFIED LOADS:

TOP CH.	LL	=	21.0	PSF
	DL	=	6.0	PSF
BOT CH.	LL	=	0.0	PSF
	DL	=	7.4	PSF
TOTAL LOAD		=	34.4	PSF

SPACING = 24.0 IN. C/C

LOADING IN FLAT SECTION BASED ON A SLOPE OF 2.00/12 MINIMUM

GIRDER TYPE: CStdGirder
START DISTANCE = 0-0
START SPAN CARRIED = 11-10-8
END DISTANCE = 16-6-0
END SPAN CARRIED = 11-10-8
END WALL WIDTH = 0-0
APPLIED TO FRONT SIDE OF BOTTOM CHORD.
- ADDT'L LOADS BASED ON 55 % OF GSL.

GIRDER TYPE: CPrimeHip
LEFT SETBACK = 2-2-5
RIGHT SETBACK = 0-0
END SETBACK = 4-8-8
END WALL WIDTH = 0-0
CORNER FRAMING TYPE: CONVENTIONAL
END JACK TYPE: CONVENTIONAL
APPLIED TO FRONT SIDE
- ADDT'L LOADS BASED ON 55 % OF GSL.
LOADS APPLIED TO FIRST 4-10-15 OF SPAN MEASURED FROM THE RIGHT.

*** NON STANDARD GIRDER ***
ADDT'L USER-DEFINED LOADS APPLIED TO ALL LOAD CASES.

THIS TRUSS IS DESIGNED FOR RESIDENTIAL OR SMALL BUILDING REQUIREMENTS OF PART 9, NBCC 2015

THIS DESIGN COMPLIES WITH:
- PART 9 OF BCBC 2018 , ABC 2019
- PART 9 OF OBC 2012 (2019 AMENDMENT)
- CSA 086-14
- TPIC 2014

(55 % OF 23.0 P.S.F. G.S.L. PLUS 8.4 P.S.F. RAIN LOAD) EQUALS 21.0 P.S.F. SPECIFIED ROOF LIVE LOAD

ALLOWABLE DEFL.(LL)= L/360 (1.04")
CALCULATED VERT. DEFL.(LL) = L/ 999 (0.33")
ALLOWABLE DEFL.(TL)= L/360 (1.04")
CALCULATED VERT. DEFL.(TL) = L/ 581 (0.64")

CSI: TC=0.68/1.00 (H-I:1) , BC=0.83/1.00 (K-M:1) , WB=1.00/1.00 (C-M:1) , SSI=0.66/1.00 (K-M:1)

DOL LUMBER=1.00 NAIL=1.00 LS BEND=1.00 COMP=1.00 SHEAR=1.00 TENS= 1.00

COMPANION LIVE LOAD FACTOR = 1.00

CONTINUED ON PAGE 2

JOB NAME	TRUSS NAME	QUANTITY	PLY	JOB DESC.	DRWG NO.
336324	H91		1	TRUSS DESC. JT 45147	E21104089

Alpa Roof Truss, Maple

Version 8.420 S Jan 21 2021 MiTek Industries, Inc. Wed Oct 13 14:52:02 2021 Page 1

ID:hd511hZTz bdeQoS817GKByhVxV-qwyRIb2?HIHks1q J82Da7Yr9fOipKWQLmpN1xyTp6h

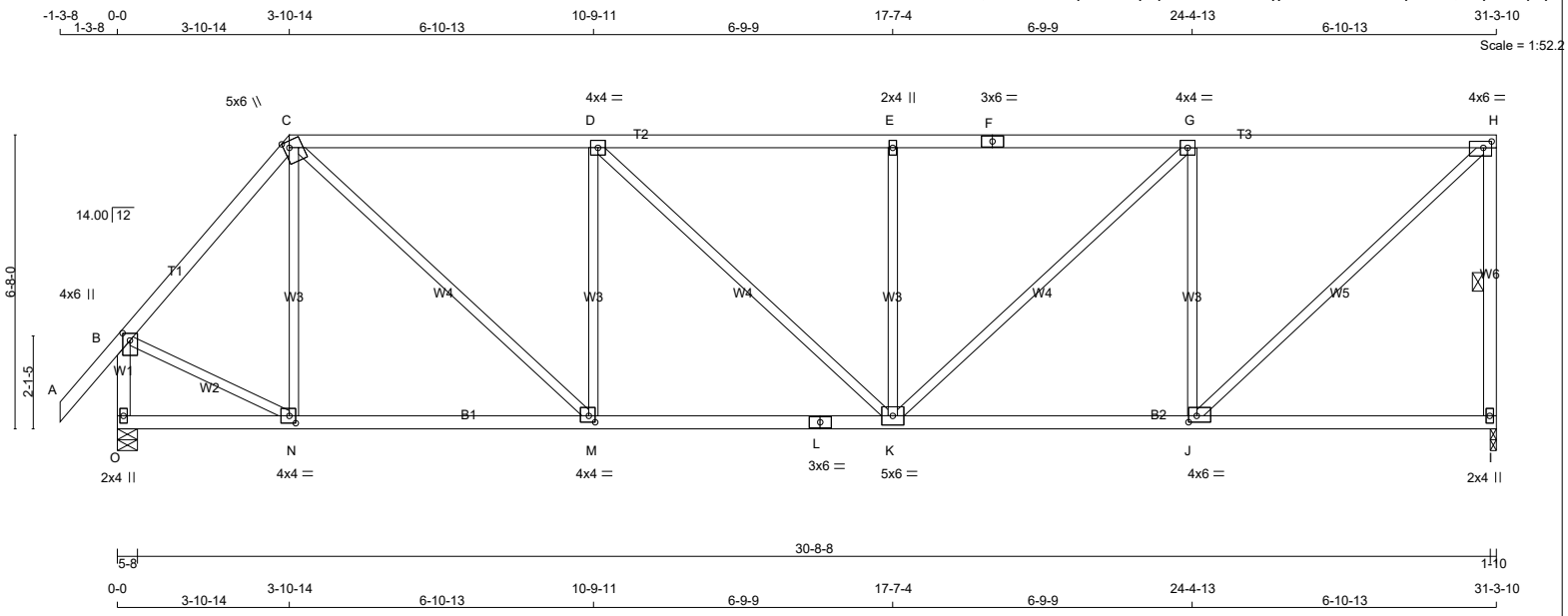

TOTAL WEIGHT = 138 lb

[M]

LUMBER

N. L. G. A. RULES

CHORDS	SIZE		LUMBER	DESCR.
A - C	2x4	DRY	No.2	SPF
C - F	2x4	DRY	No.2	SPF
F - H	2x4	DRY	No.2	SPF
I - H	2x4	DRY	No.2	SPF
O - B	2x4	DRY	No.2	SPF
O - L	2x4	DRY	No.2	SPF
L - I	2x4	DRY	No.2	SPF
ALL WEBS EXCEPT	2x3	DRY	No.2	SPF

DRY: SEASONED LUMBER.

PLATES (table is in inches)

JT	TYPE	PLATES	W	LEN	Y	X
B	TMVW+p	MT20	4.0	6.0	2.00	2.00
C	TTWW+m	MT20	5.0	6.0	1.75	1.50
D	TMWW-t	MT20	4.0	4.0		
E	TMW+w	MT20	2.0	4.0		
F	TS-t	MT20	3.0	6.0		
G	TMWW-t	MT20	4.0	4.0		
H	TMVW-t	MT20	4.0	6.0	1.75	2.25
I	BMV1+p	MT20	2.0	4.0		
J	BMWW-t	MT20	4.0	6.0	1.75	2.25
K	BMWWW-t	MT20	5.0	6.0		
L	BS-t	MT20	3.0	6.0		
M	BMWW-t	MT20	4.0	4.0	1.75	1.75
N	BMWW-t	MT20	4.0	4.0	2.00	1.75
O	BMV1+p	MT20	2.0	4.0		

LATERAL BRACE(S) SHOWN SHALL BE 2X4 SPF#2

LICENSED PROFESSIONAL ENGINEER
V. WIDYA
100225448
10/13/2021
PROVINCE OF ONTARIO

DIMENSIONS, SUPPORTS AND LOADINGS SPECIFIED BY FABRICATOR TO BE VERIFIED BY BUILDING DESIGNER

BEARINGS

JT	FACTORED GROSS REACTION VERT	HORZ	MAXIMUM FACTORED GROSS REACTION DOWN	HORZ	UPLIFT	INPUT BRG IN-SX	REQRD BRG IN-SX
I	1510	0	1510	0	0	1-10	1-10
O	1619	0	1619	0	0	5-8	1-12

UNFACTORED REACTIONS

JT	1ST LCASE COMBINED	MAX./MIN. COMPONENT REACTIONS SNOW	LIVE	PERM.LIVE	WIND	DEAD	SOIL
I	1076	657 / 0	0 / 0	0 / 0	0 / 0	419 / 0	0 / 0
O	1152	716 / 0	0 / 0	0 / 0	0 / 0	436 / 0	0 / 0

BEARING MATERIAL TO BE SPF NO.2 OR BETTER AT JOINT(S) I, O

BRACING

TOP CHORD TO BE SHEATHED OR MAX. PURLIN SPACING = 4.08 FT.
MAX. UNBRACED BOTTOM CHORD LENGTH = 10.00 FT OR RIGID CEILING DIRECTLY APPLIED.

ALL PITCH BREAKS AND PERIMETER CORNER JOINTS MUST BE LATERALLY RESTRAINED.

1 LATERAL BRACE(S) AT 1/ 2 LENGTH OF H-I.

END VERTICAL(S) MUST BE SHEATHED OR HAVE BRACES AS INDICATED IN THE MAX. UNBRACED LENGTH COLUMN OF THE TABLE BELOW

LOADING

TOTAL LOAD CASES: (4)

CHORDS

MEMB. FR-TO	MAX. FACTORED FORCE (LBS)	FACTORED VERT. LOAD (PLF) FROM	TO	LC1 CSI (LC)	MAX UNBRAC LENGTH
A- B	0 / 42	-78.0	-78.0	0.11 (1)	10.00
B- C	-1280 / 0	-78.0	-78.0	0.25 (1)	5.43
C- D	-1746 / 0	-78.0	-78.0	0.70 (1)	4.21
D- E	-1871 / 0	-78.0	-78.0	0.71 (1)	4.08
E- F	-1871 / 0	-78.0	-78.0	0.71 (1)	4.08
F- G	-1871 / 0	-78.0	-78.0	0.71 (1)	4.08
G- H	-1348 / 0	-78.0	-78.0	0.64 (1)	4.72
I- H	-1458 / 0	0.0	0.0	0.30 (1)	5.42
O- B	-1597 / 0	0.0	0.0	0.19 (1)	6.54
O- N	0 / 0	-18.5	-18.5	0.13 (4)	10.00
N- M	0 / 825	-18.5	-18.5	0.25 (4)	10.00
M- L	0 / 1747	-18.5	-18.5	0.37 (1)	10.00
L- K	0 / 1747	-18.5	-18.5	0.37 (1)	10.00
K- J	0 / 1348	-18.5	-18.5	0.34 (4)	10.00
J- I	0 / 0	-18.5	-18.5	0.21 (4)	10.00

WEBS

MEMB. FR-TO	MAX. FACTORED FORCE (LBS)	MAX CSI (LC)
N- C	-246 / 0	0.18 (1)
C- M	0 / 1251	0.28 (1)
M- D	-717 / 0	0.53 (1)
D- K	0 / 170	0.04 (1)
K- E	-489 / 0	0.36 (1)
K- G	0 / 718	0.16 (1)
J- G	-1102 / 0	0.81 (1)
J- H	0 / 1835	0.41 (1)
B- N	0 / 904	0.20 (1)

DESIGN CRITERIA

SPECIFIED LOADS:

TOP CH.	LL	=	21.0	PSF
	DL	=	6.0	PSF
BOT CH.	LL	=	0.0	PSF
	DL	=	7.4	PSF
TOTAL LOAD		=	34.4	PSF

SPACING = 24.0 IN. C/C

LOADING IN FLAT SECTION BASED ON A SLOPE OF 2.00/12 MINIMUM

THIS TRUSS IS DESIGNED FOR RESIDENTIAL OR SMALL BUILDING REQUIREMENTS OF PART 9, NBCC 2015

THIS DESIGN COMPLIES WITH:
- PART 9 OF BCBC 2018 , ABC 2019
- PART 9 OF OBC 2012 (2019 AMENDMENT)
- CSA 086-14
- TPIC 2014

(55 % OF 23.0 P.S.F. G.S.L. PLUS 8.4 P.S.F. RAIN LOAD) EQUALS 21.0 P.S.F. SPECIFIED ROOF LIVE LOAD

ALLOWABLE DEFL.(LL)= L/360 (1.04")
CALCULATED VERT. DEFL.(LL) = L/ 999 (0.09")
ALLOWABLE DEFL.(TL)= L/360 (1.04")
CALCULATED VERT. DEFL.(TL) = L/ 999 (0.19")

CSI: TC=0.71/1.00 (E-G:1) , BC=0.37/1.00 (K-M:1) , WB=0.81/1.00 (G-J:1) , SSI=0.25/1.00 (G-H:1)

DOL LUMBER=1.00 NAIL=1.00 LS BEND=1.10 COMP=1.10 SHEAR=1.10 TENS= 1.10

COMPANION LIVE LOAD FACTOR = 1.00

TRUSS PLATE MANUFACTURER IS NOT RESPONSIBLE FOR QUALITY CONTROL IN THE TRUSS MANUFACTURING PLANT .

NAIL VALUES

PLATE	GRIP(DRY) (PSI) MAX	MIN	SHEAR (PLI) MAX	MIN	SECTION (PLI) MAX	MIN
MT20	650	371	1747	788	1987	1873

PLATE PLACEMENT TOL. = 0.250 inches

PLATE ROTATION TOL. = 5.0 Deg.

JSI GRIP= 0.90 (H) (INPUT = 0.90)
JSI METAL= 0.54 (L) (INPUT = 1.00)

JOB NAME	TRUSS NAME	QUANTITY	PLY	JOB DESC.		DRWG NO.
336324	H92		1	TRUSS DESC.	JT 45147	E21104090

Alpa Roof Truss, Maple

Version 8.420 S Jan 21 2021 MiTek Industries, Inc. Wed Oct 13 14:52:04 2021 Page 1

ID:hd511hZTz bdeQoS817GKByhVxV-mJ3BjH3FpvXS5KqMRZ4hfYdDhT5KHIDjo4IU6pyTp6f

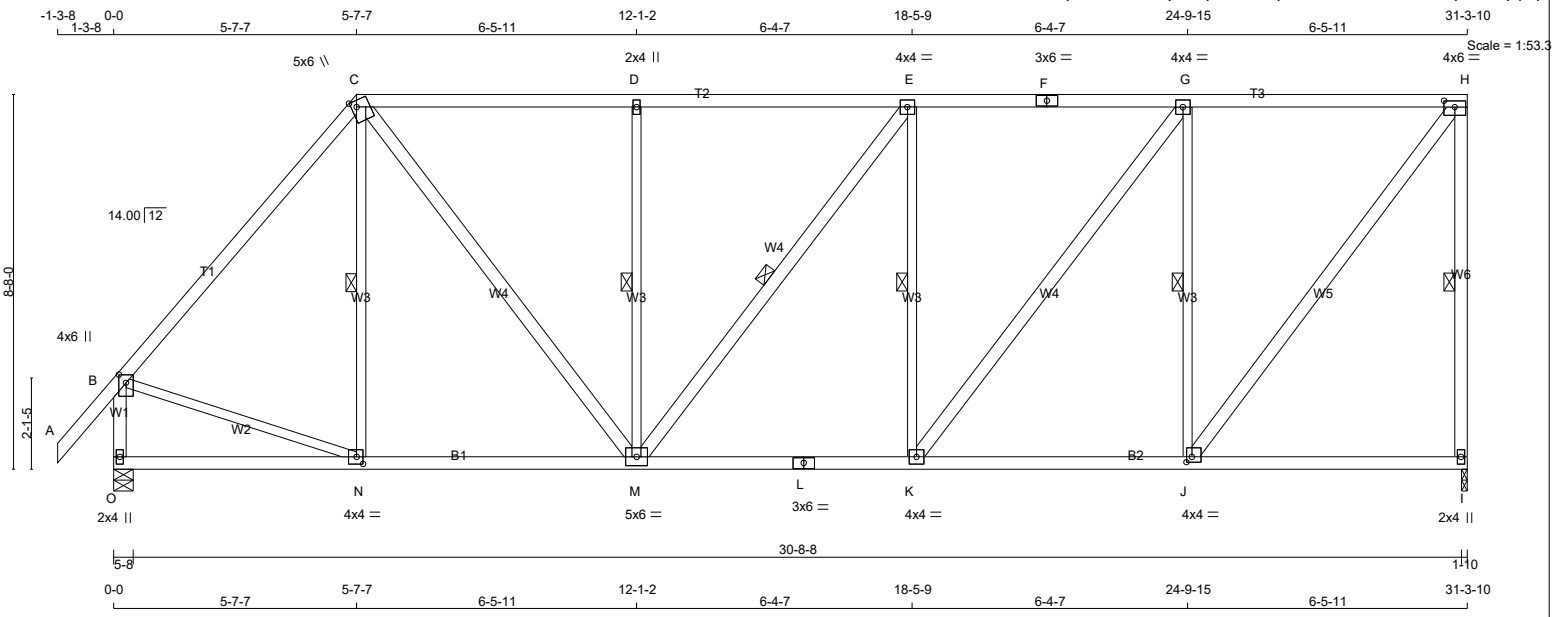

TOTAL WEIGHT = 166 lb

LUMBER

N. L. G. A. RULES

CHORDS	SIZE		LUMBER	DESCR.
A - C	2x4	DRY	No.2	SPF
C - F	2x4	DRY	No.2	SPF
F - H	2x4	DRY	No.2	SPF
I - H	2x4	DRY	No.2	SPF
O - B	2x4	DRY	No.2	SPF
O - L	2x4	DRY	No.2	SPF
L - I	2x4	DRY	No.2	SPF
ALL WEBS	2x3	DRY	No.2	SPF
EXCEPT				
C - M	2x4	DRY	No.2	SPF
M - E	2x4	DRY	No.2	SPF
K - G	2x4	DRY	No.2	SPF
J - H	2x4	DRY	No.2	SPF

DRY: SEASONED LUMBER.

PLATES (table is in inches)

JT	TYPE	PLATES	W	LEN	Y	X
B	TMVW+p	MT20	4.0	6.0	2.25	2.00
C	TTWW+m	MT20	5.0	6.0	1.75	1.50
D	TMW+w	MT20	2.0	4.0		
E	TMWW-t	MT20	4.0	4.0		
F	TS-t	MT20	3.0	6.0		
G	TMWW-t	MT20	4.0	4.0		
H	TMVW-t	MT20	4.0	6.0	1.75	3.00
I	BMV1+p	MT20	2.0	4.0		
J	BMWW-t	MT20	4.0	4.0	1.50	1.50
K	BMWW-t	MT20	4.0	4.0		
L	BS-t	MT20	3.0	6.0		
M	BMWWW-t	MT20	5.0	6.0		
N	BMWW-t	MT20	4.0	4.0	2.00	1.75
O	BMV1+p	MT20	2.0	4.0		

LATERAL BRACE(S) SHOWN SHALL BE 2X4 SPF#2

DIMENSIONS, SUPPORTS AND LOADINGS SPECIFIED BY FABRICATOR TO BE VERIFIED BY BUILDING DESIGNER

BEARINGS

JT	FACTORED GROSS REACTION VERT	HORZ	MAXIMUM FACTORED GROSS REACTION DOWN	HORZ	UPLIFT	INPUT BRG IN-SX	REQRD BRG IN-SX
I	1510	0	1510	0	0	1-10	1-10
O	1619	0	1619	0	0	5-8	1-12

UNFACTORED REACTIONS

JT	1ST LCASE COMBINED	MAX./MIN. COMPONENT REACTIONS SNOW	LIVE	PERM.LIVE	WIND	DEAD	SOIL
I	1076	657 / 0	0 / 0	0 / 0	0 / 0	419 / 0	0 / 0
O	1152	716 / 0	0 / 0	0 / 0	0 / 0	436 / 0	0 / 0

BEARING MATERIAL TO BE SPF NO.2 OR BETTER AT JOINT(S) I, O

BRACING

TOP CHORD TO BE SHEATHED OR MAX. PURLIN SPACING = 4.79 FT.
MAX. UNBRACED BOTTOM CHORD LENGTH = 10.00 FT OR RIGID CEILING DIRECTLY APPLIED.

ALL PITCH BREAKS AND PERIMETER CORNER JOINTS MUST BE LATERALLY RESTRAINED.

1 LATERAL BRACE(S) AT 1/ 2 LENGTH OF H-I, C-N, D-M, E-M, E-K, G-J.

END VERTICAL(S) MUST BE SHEATHED OR HAVE BRACES AS INDICATED IN THE MAX. UNBRACED LENGTH COLUMN OF THE TABLE BELOW

LOADING

TOTAL LOAD CASES: (4)

CHORDS

MEMB. FR-TO	MAX. FORCE (LBS)	FACTORED VERT. LOAD (PLF) FROM	TO	LC1 CSI (LC)	MAX UNBRAC LENGTH
A- B	0 / 42	-78.0	-78.0	0.11 (1)	10.00
B- C	-1304 / 0	-78.0	-78.0	0.58 (1)	5.02
C- D	-1384 / 0	-78.0	-78.0	0.56 (1)	4.81
D- E	-1385 / 0	-78.0	-78.0	0.55 (1)	4.81
E- F	-1398 / 0	-78.0	-78.0	0.56 (1)	4.79
F- G	-1398 / 0	-78.0	-78.0	0.56 (1)	4.79
G- H	-975 / 0	-78.0	-78.0	0.52 (1)	5.54
I- H	-1462 / 0	0.0	0.0	0.50 (1)	5.41
O- B	-1578 / 0	0.0	0.0	0.19 (1)	6.57
O- N	0 / 0	-18.5	-18.5	0.16 (4)	10.00
N- M	0 / 844	-18.5	-18.5	0.24 (4)	10.00
M- L	0 / 1398	-18.5	-18.5	0.30 (1)	10.00
L- K	0 / 1398	-18.5	-18.5	0.30 (1)	10.00
K- J	0 / 975	-18.5	-18.5	0.28 (4)	10.00
J- I	0 / 0	-18.5	-18.5	0.19 (4)	10.00

WEBS

MEMB. FR-TO	MAX. FORCE (LBS)	MAX CSI (LC)
N- C	-131 / 38	0.06 (1)
C- M	0 / 881	0.14 (1)
M- D	-563 / 0	0.27 (1)
M- E	-22 / 0	0.01 (1)
K- E	-442 / 0	0.21 (1)
K- G	0 / 698	0.11 (1)
J- G	-1127 / 0	0.54 (1)
J- H	0 / 1595	0.26 (1)
B- N	0 / 884	0.20 (1)

DESIGN CRITERIA

SPECIFIED LOADS:

TOP CH.	LL	=	21.0	PSF
	DL	=	6.0	PSF
BOT CH.	LL	=	0.0	PSF
	DL	=	7.4	PSF
TOTAL LOAD		=	34.4	PSF

SPACING = 24.0 IN. C/C

LOADING IN FLAT SECTION BASED ON A SLOPE OF 2.00/12 MINIMUM

THIS TRUSS IS DESIGNED FOR RESIDENTIAL OR SMALL BUILDING REQUIREMENTS OF PART 9, NBCC 2015

THIS DESIGN COMPLIES WITH:
- PART 9 OF BCBC 2018 , ABC 2019
- PART 9 OF OBC 2012 (2019 AMENDMENT)
- CSA 086-14
- TPIC 2014

(55 % OF 23.0 P.S.F. G.S.L. PLUS 8.4 P.S.F. RAIN LOAD) EQUALS 21.0 P.S.F. SPECIFIED ROOF LIVE LOAD

ALLOWABLE DEFL.(LL)= L/360 (1.04")
CALCULATED VERT. DEFL.(LL) = L/ 999 (0.06")
ALLOWABLE DEFL.(TL)= L/360 (1.04")
CALCULATED VERT. DEFL.(TL) = L/ 999 (0.13")

CSI: TC=0.58/1.00 (B-C:1) , BC=0.30/1.00 (K-M:1) , WB=0.54/1.00 (G-J:1) , SSI=0.24/1.00 (G-H:1)

DOL LUMBER=1.00 NAIL=1.00 LS BEND=1.10 COMP=1.10 SHEAR=1.10 TENS= 1.10

COMPANION LIVE LOAD FACTOR = 1.00

TRUSS PLATE MANUFACTURER IS NOT RESPONSIBLE FOR QUALITY CONTROL IN THE TRUSS MANUFACTURING PLANT .

NAIL VALUES

PLATE	GRIP(DRY) (PSI) MAX	MIN	SHEAR (PLI) MAX	MIN	SECTION (PLI) MAX	MIN
MT20	650	371	1747	788	1987	1873

PLATE PLACEMENT TOL. = 0.250 inches

PLATE ROTATION TOL. = 5.0 Deg.

JSI GRIP= 0.89 (B) (INPUT = 0.90)
JSI METAL= 0.52 (B) (INPUT = 1.00)

JOB NAME	TRUSS NAME	QUANTITY	PLY	JOB DESC.		DRWG NO.
336324	H93		1	TRUSS DESC.	JT 45147	E21104091

Alpa Roof Truss, Maple

Version 8.420 S Jan 21 2021 MiTek Industries, Inc. Wed Oct 13 14:52:06 2021 Page 1

ID:hd511hZTz_bdeQoS817GKByhVxV-iiBy8y5VLXn9Le_IY_79IzjhzGqtlKQ0GOnbAiyTp6d

Scale: 1/2"=1'

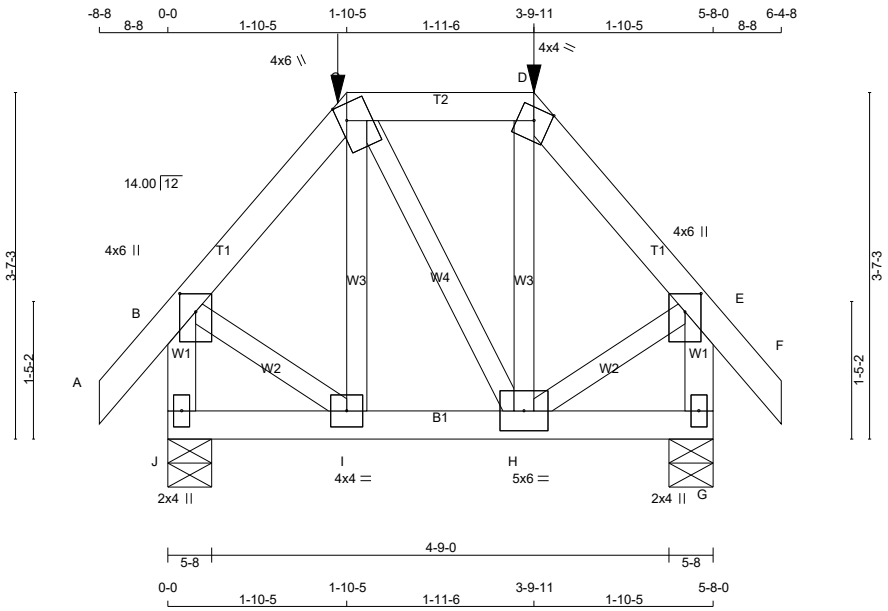

TOTAL WEIGHT = 32 lb

[M]

LUMBER

N. L. G. A. RULES

CHORDS	SIZE		LUMBER	DESCR.
A - C	2x4	DRY	No.2	SPF
C - D	2x4	DRY	No.2	SPF
D - F	2x4	DRY	No.2	SPF
J - B	2x4	DRY	No.2	SPF
G - E	2x4	DRY	No.2	SPF
J - G	2x4	DRY	No.2	SPF
ALL WEBS EXCEPT	2x3	DRY	No.2	SPF

DRY: SEASONED LUMBER.

PLATES (table is in inches)

JT	TYPE	PLATES	W	LEN	Y	X
B	TMVW+p	MT20	4.0	6.0	2.25	2.00
C	TTWW+m	MT20	4.0	6.0	2.00	1.00
D	TTW-m	MT20	4.0	4.0	Edge	
E	TMVW+p	MT20	4.0	6.0	2.25	2.00
G	BMV1+p	MT20	2.0	4.0		
H	BMWWW-t	MT20	5.0	6.0		
I	BMWW-t	MT20	4.0	4.0		
J	BMV1+p	MT20	2.0	4.0		

Edge - INDICATES REFERENCE CORNER OF PLATE TOUCHES EDGE OF CHORD.

LATERAL BRACE(S) SHOWN SHALL BE 2X4 SPF#2

DIMENSIONS, SUPPORTS AND LOADINGS SPECIFIED BY FABRICATOR TO BE VERIFIED BY BUILDING DESIGNER

BEARINGS

JT	FACTORED GROSS REACTION VERT	HORZ	MAXIMUM FACTORED GROSS REACTION DOWN	HORZ	UPLIFT	INPUT BRG IN-SX	REQRD BRG IN-SX
J	455	0	455	0	0	5-8	1-8
G	455	0	455	0	0	5-8	1-8

UNFACTORED REACTIONS

JT	1ST LCASE COMBINED	MAX./MIN. COMPONENT REACTIONS SNOW	LIVE	PERM.LIVE	WIND	DEAD	SOIL
J	323	203 / 0	0 / 0	0 / 0	0 / 0	120 / 0	0 / 0
G	323	203 / 0	0 / 0	0 / 0	0 / 0	120 / 0	0 / 0

BEARING MATERIAL TO BE SPF NO.2 OR BETTER AT JOINT(S) J, G

BRACING

TOP CHORD TO BE SHEATHED OR MAX. PURLIN SPACING = 6.25 FT.
MAX. UNBRACED BOTTOM CHORD LENGTH = 10.00 FT OR RIGID CEILING DIRECTLY APPLIED.

ALL PITCH BREAKS AND PERIMETER CORNER JOINTS MUST BE LATERALLY RESTRAINED.

LOADING

TOTAL LOAD CASES: (4)

CHORDS

MEMB. FR-TO	MAX. FACTORED FORCE (LBS)	FACTORED VERT. LOAD (PLF) FROM	TO	LC1	MAX CSI (LC)	MAX. UNBRAC LENGTH
A- B	0 / 24	-78.0	-78.0	0.04 (1)	10.00	
B- C	-265 / 0	-78.0	-78.0	0.05 (1)	6.25	
C- D	-169 / 0	-114.5	-114.5	0.08 (1)	6.25	
D- E	-265 / 0	-78.0	-78.0	0.05 (1)	6.25	
E- F	0 / 24	-78.0	-78.0	0.04 (1)	10.00	
J- B	-431 / 0	0.0	0.0	0.05 (1)	7.81	
G- E	-431 / 0	0.0	0.0	0.05 (1)	7.81	
J- I	0 / 0	-27.2	-27.2	0.02 (4)	10.00	
I- H	0 / 170	-27.2	-27.2	0.04 (4)	10.00	
H- G	0 / 0	-27.2	-27.2	0.02 (4)	10.00	

WEBS

MEMB. FR-TO	MAX. FACTORED FORCE (LBS)	MAX CSI (LC)
I- C	-38 / 25	0.01 (4)
C- H	0 / 0	0.00 (1)
H- D	-39 / 26	0.01 (4)
B- I	0 / 194	0.05 (1)
H- E	0 / 194	0.05 (1)

FACTORED CONCENTRATED LOADS (LBS)

JT	LOC.	LC1	MAX-	MAX+	FACE	DIR.	TYPE	HEEL	CONN.
C	1-10-5	-57	-57	---	FRONT	VERT	TOTAL	---	C1
D	3-9-11	-57	-57	---	FRONT	VERT	TOTAL	---	C1

DESIGN CRITERIA

SPECIFIED LOADS:

TOP CH.	LL	=	21.0	PSF
	DL	=	6.0	PSF
BOT CH.	LL	=	0.0	PSF
	DL	=	7.4	PSF
TOTAL LOAD		=	34.4	PSF

SPACING = 24.0 IN. C/C

LOADING IN FLAT SECTION BASED ON A SLOPE OF 2.00/12 MINIMUM

GIRDER TYPE: CPrimeHip
SIDE SETBACK = 1-10-5
END SETBACK = 3-10-8
END WALL WIDTH = 0-0
CORNER FRAMING TYPE: CONVENTIONAL
END JACK TYPE: CONVENTIONAL
APPLIED TO FRONT SIDE
- ADDT'L LOADS BASED ON 55 % OF GSL.

THIS TRUSS IS DESIGNED FOR RESIDENTIAL OR SMALL BUILDING REQUIREMENTS OF PART 9, NBCC 2015

THIS DESIGN COMPLIES WITH:
- PART 9 OF BCBC 2018 , ABC 2019
- PART 9 OF OBC 2012 (2019 AMENDMENT)
- CSA 086-14
- TPIC 2014

(55 % OF 23.0 P.S.F. G.S.L. PLUS 8.4 P.S.F. RAIN LOAD) EQUALS 21.0 P.S.F. SPECIFIED ROOF LIVE LOAD

ALLOWABLE DEFL.(LL)= L/360 (0.19")
CALCULATED VERT. DEFL.(LL) = L/ 999 (0.00")
ALLOWABLE DEFL.(TL)= L/360 (0.19")
CALCULATED VERT. DEFL.(TL) = L/ 999 (0.00")

CSI: TC=0.08/1.00 (C-D:1) , BC=0.04/1.00 (H-I:4) , WB=0.05/1.00 (B-I:1) , SSI=0.10/1.00 (C-D:1)

DOL LUMBER=1.00 NAIL=1.00 LS BEND=1.00 COMP=1.00 SHEAR=1.00 TENS= 1.00

COMPANION LIVE LOAD FACTOR = 1.00

TRUSS PLATE MANUFACTURER IS NOT RESPONSIBLE FOR QUALITY CONTROL IN THE TRUSS MANUFACTURING PLANT .

NAIL VALUES

PLATE	GRIP(DRY) (PSI) MAX	MIN	SHEAR (PLI) MAX	MIN	SECTION (PLI) MAX	MIN
MT20	650	371	1747	788	1987	1873

PLATE PLACEMENT TOL. = 0.250 inches

PLATE ROTATION TOL. = 5.0 Deg.

JSI GRIP= 0.24 (B) (INPUT = 0.90)
JSI METAL= 0.12 (B) (INPUT = 1.00)

JOB NAME	TRUSS NAME	QUANTITY	PLY	JOB DESC.		DRWG NO.
336324	H94		1	TRUSS DESC.	JT 45147	E21104092

Alpa Roof Truss, Maple

Version 8.420 S Jan 21 2021 MiTek Industries, Inc. Wed Oct 13 14:52:07 2021 Page 1

ID:hd511hZTz bdeQoS817GKByhVxV-AulKLl676qv0yoZx6heOHBFskqA6Un49U2W8i8yTp6c

Scale = 1:32.6

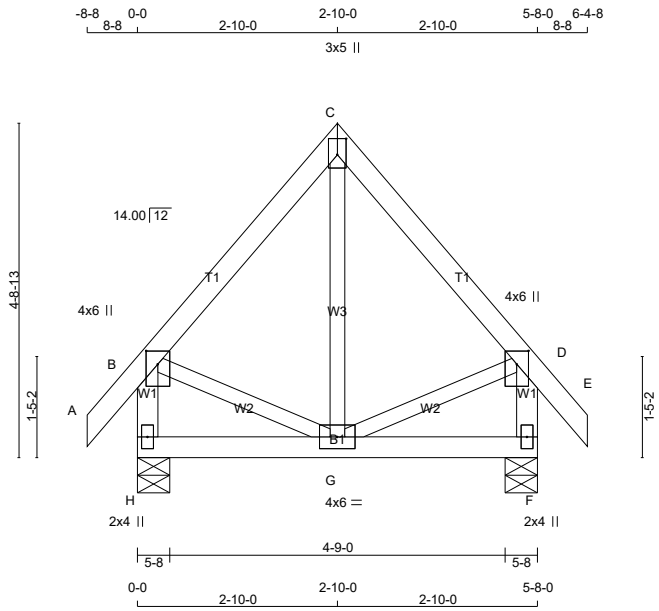

TOTAL WEIGHT = 30 lb

[M][F]

LUMBER

N. L. G. A. RULES

CHORDS	SIZE		LUMBER	DESCR.
A - C	2x4	DRY	No.2	SPF
C - E	2x4	DRY	No.2	SPF
H - B	2x4	DRY	No.2	SPF
F - D	2x4	DRY	No.2	SPF
H - F	2x4	DRY	No.2	SPF
ALL WEBS EXCEPT	2x3	DRY	No.2	SPF

DRY: SEASONED LUMBER.

PLATES (table is in inches)

JT	TYPE	PLATES	W	LEN	Y	X
B	TMVW+p	MT20	4.0	6.0	2.25	2.00
C	TTW+p	MT20	3.0	5.0	2.75	1.50
D	TMVW+p	MT20	4.0	6.0	2.25	2.00
F	BMV1+p	MT20	2.0	4.0		
G	BMWWW-t	MT20	4.0	6.0		
H	BMV1+p	MT20	2.0	4.0		

LATERAL BRACE(S) SHOWN SHALL BE 2X4 SPF#2

DIMENSIONS, SUPPORTS AND LOADINGS SPECIFIED BY FABRICATOR TO BE VERIFIED BY BUILDING DESIGNER

BEARINGS

JT	FACTORED GROSS REACTION VERT	HORZ	MAXIMUM FACTORED GROSS REACTION DOWN	HORZ	UPLIFT	INPUT BRG IN-SX	REQRD BRG IN-SX
H	337	0	337	0	0	5-8	1-8
F	337	0	337	0	0	5-8	1-8

UNFACTORED REACTIONS

JT	1ST LCASE COMBINED	MAX./MIN. COMPONENT REACTIONS SNOW	LIVE	PERM.LIVE	WIND	DEAD	SOIL
H	239	153 / 0	0 / 0	0 / 0	0 / 0	86 / 0	0 / 0
F	239	153 / 0	0 / 0	0 / 0	0 / 0	86 / 0	0 / 0

BEARING MATERIAL TO BE SPF NO.2 OR BETTER AT JOINT(S) H, F

BRACING

TOP CHORD TO BE SHEATHED OR MAX. PURLIN SPACING = 6.25 FT.
MAX. UNBRACED BOTTOM CHORD LENGTH = 10.00 FT OR RIGID CEILING DIRECTLY APPLIED.

ALL PITCH BREAKS AND PERIMETER CORNER JOINTS MUST BE LATERALLY RESTRAINED.

LOADING

TOTAL LOAD CASES: (4)

CHORDS

MEMB. FR-TO	MAX. FACTORED FORCE (LBS)	FACTORED VERT. LOAD LC1 (PLF) FROM	TO	MAX CSI (LC)	MAX. UNBRAC LENGTH
A- B	0 / 24	-78.0	-78.0	0.04 (1)	10.00
B- C	-142 / 0	-78.0	-78.0	0.08 (1)	6.25
C- D	-142 / 0	-78.0	-78.0	0.08 (1)	6.25
D- E	0 / 24	-78.0	-78.0	0.04 (1)	10.00
H- B	-316 / 0	0.0	0.0	0.03 (1)	7.81
F- D	-316 / 0	0.0	0.0	0.03 (1)	7.81
H- G	0 / 0	-18.5	-18.5	0.04 (4)	10.00
G- F	0 / 0	-18.5	-18.5	0.04 (4)	10.00

WEBS

MEMB. FR-TO	MAX. FACTORED FORCE (LBS)	MAX CSI (LC)
G- C	-6 / 43	0.01 (4)
B- G	0 / 98	0.02 (1)
G- D	0 / 98	0.02 (1)

DESIGN CRITERIA

SPECIFIED LOADS:

TOP CH.	LL	=	21.0	PSF
	DL	=	6.0	PSF
BOT CH.	LL	=	0.0	PSF
	DL	=	7.4	PSF
TOTAL LOAD		=	34.4	PSF

SPACING = 24.0 IN. C/C

THIS TRUSS IS DESIGNED FOR RESIDENTIAL OR SMALL BUILDING REQUIREMENTS OF PART 9, NBCC 2015

THIS DESIGN COMPLIES WITH:
- PART 9 OF BCBC 2018 , ABC 2019
- PART 9 OF OBC 2012 (2019 AMENDMENT)
- CSA 086-14
- TPIC 2014

(55 % OF 23.0 P.S.F. G.S.L. PLUS 8.4 P.S.F. RAIN LOAD) EQUALS 21.0 P.S.F. SPECIFIED ROOF LIVE LOAD

ALLOWABLE DEFL.(LL)= L/360 (0.19")
CALCULATED VERT. DEFL.(LL) = L/ 999 (0.00")
ALLOWABLE DEFL.(TL)= L/360 (0.19")
CALCULATED VERT. DEFL.(TL) = L/ 999 (0.00")

CSI: TC=0.08/1.00 (C-D:1) , BC=0.04/1.00 (F-G:4) , WB=0.02/1.00 (B-G:1) , SSI=0.06/1.00 (C-D:1)

DOL LUMBER=1.00 NAIL=1.00 LS BEND=1.10 COMP=1.10 SHEAR=1.10 TENS= 1.10

COMPANION LIVE LOAD FACTOR = 1.00

TRUSS PLATE MANUFACTURER IS NOT RESPONSIBLE FOR QUALITY CONTROL IN THE TRUSS MANUFACTURING PLANT .

NAIL VALUES

PLATE	GRIP(DRY) (PSI) MAX	MIN	SHEAR (PLI) MAX	MIN	SECTION (PLI) MAX	MIN
MT20	650	371	1747	788	1987	1873

PLATE PLACEMENT TOL. = 0.250 inches

PLATE ROTATION TOL. = 5.0 Deg.

JSI GRIP= 0.18 (D) (INPUT = 0.90)
JSI METAL= 0.09 (B) (INPUT = 1.00)

JOB NAME	TRUSS NAME	QUANTITY	PLY	JOB DESC.		DRWG NO.
336324	H94S		1	TRUSS DESC.	JT 45147	E21104093

Alpa Roof Truss, Maple

Version 8.420 S Jan 21 2021 MiTek Industries, Inc. Wed Oct 13 14:52:08 2021 Page 1

ID:hd511hZTz_bdeQoS817GKByhVxV-f4JiZe6mt81tay88gO9dqOo2q4WWDEPJjiGiFayTp6b

Scale = 1:28.5

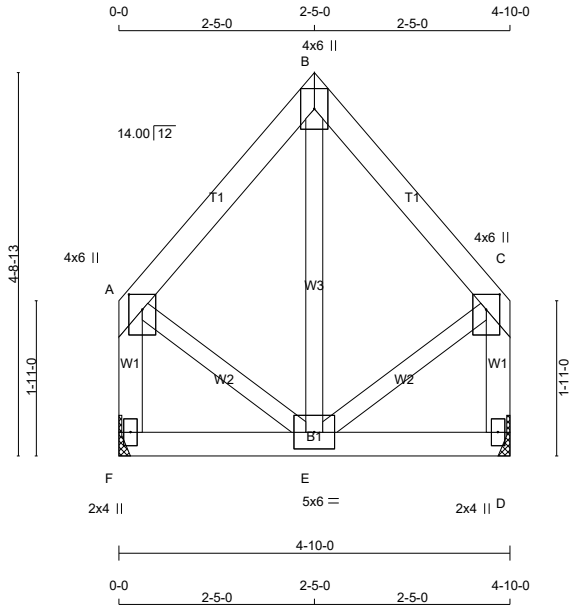

TOTAL WEIGHT = 2 X 26 = 51 lb

LUMBER

N. L. G. A. RULES

CHORDS	SIZE		LUMBER	DESCR.
A - B	2x4	DRY	No.2	SPF
B - C	2x4	DRY	No.2	SPF
F - A	2x4	DRY	No.2	SPF
D - C	2x4	DRY	No.2	SPF
F - D	2x4	DRY	No.2	SPF
ALL WEBS EXCEPT	2x3	DRY	No.2	SPF

DRY: SEASONED LUMBER.

PLATES (table is in inches)

JT	TYPE	PLATES	W	LEN	Y	X
A	TMVW+p	MT20	4.0	6.0	2.25	2.00
B	TTW+p	MT20	4.0	6.0		
C	TMVW+p	MT20	4.0	6.0	2.25	2.00
D	BMV1+p	MT20	2.0	4.0		
E	BMWWW-t	MT20	5.0	6.0		
F	BMV1+p	MT20	2.0	4.0		

LATERAL BRACE(S) SHOWN SHALL BE 2X4 SPF#2

DIMENSIONS, SUPPORTS AND LOADINGS SPECIFIED BY FABRICATOR TO BE VERIFIED BY BUILDING DESIGNER

BEARINGS

JT	FACTORED GROSS REACTION VERT	HORZ	MAXIMUM FACTORED GROSS REACTION DOWN	HORZ	UPLIFT	INPUT BRG IN-SX	REQRD BRG IN-SX
F	233	0	233	0	0	MECHANICAL	
D	233	0	233	0	0	MECHANICAL	

A SUITABLE HANGER/MECHANICAL CONNECTION IS REQUIRED AT JOINT F, D. MINIMUM BEARING LENGTH AT JOINT F = 1-8, JOINT D = 1-8.

UNFACTORED REACTIONS

JT	1ST LCASE COMBINED	MAX./MIN. COMPONENT REACTIONS SNOW	LIVE	PERM.LIVE	WIND	DEAD	SOIL
F	166	101 / 0	0 / 0	0 / 0	0 / 0	65 / 0	0 / 0
D	166	101 / 0	0 / 0	0 / 0	0 / 0	65 / 0	0 / 0

BRACING

TOP CHORD TO BE SHEATHED OR MAX. PURLIN SPACING = 6.25 FT.
MAX. UNBRACED BOTTOM CHORD LENGTH = 10.00 FT OR RIGID CEILING DIRECTLY APPLIED.

ALL PITCH BREAKS AND PERIMETER CORNER JOINTS MUST BE LATERALLY RESTRAINED.

LOADING

TOTAL LOAD CASES: (4)

CHORDS

MEMB. FR-TO	MAX. FACTORED FORCE (LBS)	FACTORED VERT. LOAD (PLF) FROM	TO	LC1 MAX CSI (LC)	MAX. UNBRAC LENGTH
A- B	-103 / 0	-78.0	-78.0	0.06 (1)	6.25
B- C	-103 / 0	-78.0	-78.0	0.06 (1)	6.25
F- A	-215 / 0	0.0	0.0	0.02 (1)	7.81
D- C	-215 / 0	0.0	0.0	0.02 (1)	7.81
F- E	0 / 0	-18.5	-18.5	0.03 (4)	10.00
E- D	0 / 0	-18.5	-18.5	0.03 (4)	10.00

WEBS

MEMB. FR-TO	MAX. FACTORED FORCE (LBS)	MAX CSI (LC)
E- B	-32 / 25	0.01 (1)
A- E	0 / 80	0.02 (1)
E- C	0 / 80	0.02 (1)

DESIGN CRITERIA

SPECIFIED LOADS:

TOP	CH.	LL	=	21.0	PSF
		DL	=	6.0	PSF
BOT	CH.	LL	=	0.0	PSF
		DL	=	7.4	PSF
TOTAL	LOAD		=	34.4	PSF

SPACING = 24.0 IN. C/C

THIS TRUSS IS DESIGNED FOR RESIDENTIAL OR SMALL BUILDING REQUIREMENTS OF PART 9, NBCC 2015

THIS DESIGN COMPLIES WITH:
- PART 9 OF BCBC 2018 , ABC 2019
- PART 9 OF OBC 2012 (2019 AMENDMENT)
- CSA 086-14
- TPIC 2014

(55 % OF 23.0 P.S.F. G.S.L. PLUS 8.4 P.S.F. RAIN LOAD) EQUALS 21.0 P.S.F. SPECIFIED ROOF LIVE LOAD

ALLOWABLE DEFL.(LL)= L/360 (0.19")
CALCULATED VERT. DEFL.(LL) = L/ 999 (0.00")
ALLOWABLE DEFL.(TL)= L/360 (0.19")
CALCULATED VERT. DEFL.(TL) = L/ 999 (0.00")

CSI: TC=0.06/1.00 (A-B:1) , BC=0.03/1.00 (E-F:4) , WB=0.02/1.00 (C-E:1) , SSI=0.05/1.00 (A-B:1)

DOL LUMBER=1.00 NAIL=1.00 LS BEND=1.10 COMP=1.10 SHEAR=1.10 TENS= 1.10

COMPANION LIVE LOAD FACTOR = 1.00

TRUSS PLATE MANUFACTURER IS NOT RESPONSIBLE FOR QUALITY CONTROL IN THE TRUSS MANUFACTURING PLANT .

NAIL VALUES

PLATE	GRIP(DRY) (PSI) MAX	MIN	SHEAR (PLI) MAX	MIN	SECTION (PLI) MAX	MIN
MT20	650	371	1747	788	1987	1873

PLATE PLACEMENT TOL. = 0.250 inches

PLATE ROTATION TOL. = 5.0 Deg.

JSI GRIP= 0.12 (C) (INPUT = 0.90)
JSI METAL= 0.06 (A) (INPUT = 1.00)

JOB NAME	TRUSS NAME	QUANTITY	PLY	JOB DESC.	DRWG NO.
336324	H95		1	TRUSS DESC. JT 45147	E21104094

Alpa Roof Truss, Maple

Version 8.420 S Jan 21 2021 MiTek Industries, Inc. Wed Oct 13 14:52:10 2021 Page 1

ID:hd511hZTz_bdeQoS817GKByhVxV-bTRS_K80PlHbpFIWnpB5vptKZu92h4bcA0loJTyTp6Z

Scale = 1:69.2

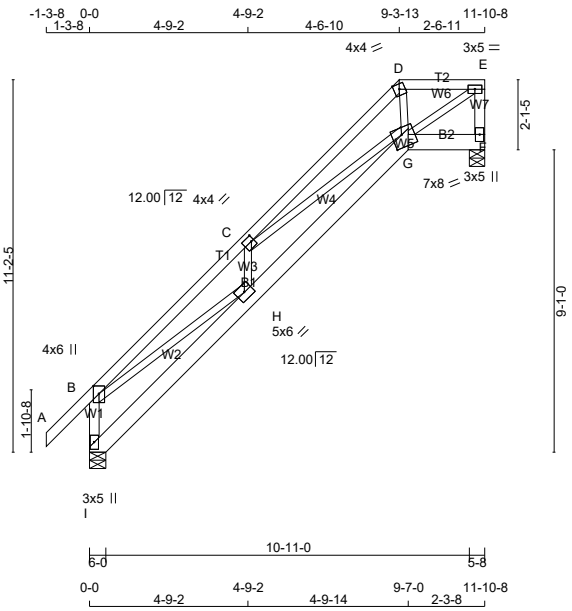

TOTAL WEIGHT = 66 lb

[M][F]

LUMBER

N. L. G. A. RULES

CHORDS	SIZE		LUMBER	DESCR.
I - B	2x4	DRY	No.2	SPF
A - D	2x4	DRY	No.2	SPF
D - E	2x4	DRY	No.2	SPF
F - E	2x4	DRY	No.2	SPF
I - G	2x6	DRY	No.2	SPF
G - F	2x6	DRY	No.2	SPF
ALL WEBS	2x3	DRY	No.2	SPF

DRY: SEASONED LUMBER.

PLATES (table is in inches)

JT	TYPE	PLATES	W	LEN	Y	X
B	TMVW+p	MT20	4.0	6.0	2.75	2.00
C	TMWW-t	MT20	4.0	4.0	2.00	1.00
D	TTW-m	MT20	4.0	4.0	Edge	
E	TMVW-t	MT20	3.0	5.0		
F	BMV1+p	MT20	3.0	5.0		
G	BBWWW-m	MT20	7.0	8.0	4.50	3.50
H	BMWW-t	MT20	5.0	6.0		
I	BMV1+p	MT20	3.0	5.0		

Edge - INDICATES REFERENCE CORNER OF PLATE TOUCHES EDGE OF CHORD.

LATERAL BRACE(S) SHOWN SHALL BE 2X4 SPF#2

DIMENSIONS, SUPPORTS AND LOADINGS SPECIFIED BY FABRICATOR TO BE VERIFIED BY BUILDING DESIGNER

BEARINGS

JT	FACTORED GROSS REACTION VERT	HORZ	MAXIMUM FACTORED GROSS REACTION DOWN	HORZ	UPLIFT	INPUT BRG IN-SX	REQRD BRG IN-SX
I	682	0	682	0	0	6-0	1-8
F	573	0	573	0	0	5-8	1-8

UNFACTORED REACTIONS

JT	1ST LCASE COMBINED	MAX./MIN. COMPONENT REACTIONS SNOW	LIVE	PERM.LIVE	WIND	DEAD	SOIL
I	484	308 / 0	0 / 0	0 / 0	0 / 0	176 / 0	0 / 0
F	408	249 / 0	0 / 0	0 / 0	0 / 0	159 / 0	0 / 0

BEARING MATERIAL TO BE SPF NO.2 OR BETTER AT JOINT(S) I, F

BRACING

TOP CHORD TO BE SHEATHED OR MAX. PURLIN SPACING = 5.31 FT.
MAX. UNBRACED BOTTOM CHORD LENGTH = 10.00 FT OR RIGID CEILING DIRECTLY APPLIED.

ALL PITCH BREAKS AND PERIMETER CORNER JOINTS MUST BE LATERALLY RESTRAINED.

LOADING

TOTAL LOAD CASES: (4)

CHORDS

MEMB. FR-TO	MAX. FACTORED FORCE (LBS)	FACTORED VERT. LOAD (PLF) FROM	TO	LC1 CSI (LC)	MAX. UNBRAC LENGTH
I- B	-623 / 0	0.0	0.0	0.07 (1)	7.81
A- B	0 / 38	-78.0	-78.0	0.11 (1)	10.00
B- C	-1379 / 0	-78.0	-78.0	0.23 (1)	5.31
C- D	-839 / 0	-78.0	-78.0	0.21 (1)	6.25
D- E	-624 / 0	-78.0	-78.0	0.07 (1)	6.25
F- E	-552 / 0	0.0	0.0	0.06 (1)	7.81
I- H	-9 / 2	-18.5	-18.5	0.07 (1)	10.00
H- G	0 / 1342	-18.5	-18.5	0.22 (1)	10.00
G- F	0 / 0	-18.5	-18.5	0.01 (4)	10.00

WEBS

MEMB. FR-TO	MAX. FACTORED FORCE (LBS)	MAX CSI (LC)
B- H	0 / 1174	0.26 (1)
H- C	-257 / 0	0.04 (1)
C- G	-440 / 0	0.29 (1)
D- G	0 / 329	0.07 (1)
G- E	0 / 775	0.17 (1)

DESIGN CRITERIA

SPECIFIED LOADS:

TOP	CH.	LL	=	21.0	PSF
		DL	=	6.0	PSF
BOT	CH.	LL	=	0.0	PSF
		DL	=	7.4	PSF
TOTAL	LOAD		=	34.4	PSF

SPACING = 24.0 IN. C/C

LOADING IN FLAT SECTION BASED ON A SLOPE OF 2.00/12 MINIMUM

THIS TRUSS IS DESIGNED FOR RESIDENTIAL OR SMALL BUILDING REQUIREMENTS OF PART 9, NBCC 2015

THIS DESIGN COMPLIES WITH:
- PART 9 OF BCBC 2018 , ABC 2019
- PART 9 OF OBC 2012 (2019 AMENDMENT)
- CSA 086-14
- TPIC 2014

(55 % OF 23.0 P.S.F. G.S.L. PLUS 8.4 P.S.F. RAIN LOAD) EQUALS 21.0 P.S.F. SPECIFIED ROOF LIVE LOAD

ALLOWABLE DEFL.(LL)= L/360 (0.40")
CALCULATED VERT. DEFL.(LL) = L/ 999 (0.05")
ALLOWABLE DEFL.(TL)= L/360 (0.40")
CALCULATED VERT. DEFL.(TL) = L/ 999 (0.09")

CSI: TC=0.23/1.00 (B-C:1) , BC=0.22/1.00 (G-H:1) , WB=0.29/1.00 (C-G:1) , SSI=0.12/1.00 (C-D:1)

DOL LUMBER=1.00 NAIL=1.00 LS BEND=1.10 COMP=1.10 SHEAR=1.10 TENS= 1.10

COMPANION LIVE LOAD FACTOR = 1.00

TRUSS PLATE MANUFACTURER IS NOT RESPONSIBLE FOR QUALITY CONTROL IN THE TRUSS MANUFACTURING PLANT .

NAIL VALUES

PLATE	GRIP(DRY) (PSI) MAX	MIN	SHEAR (PLI) MAX	MIN	SECTION (PLI) MAX	MIN
MT20	650	371	1747	788	1987	1873

PLATE PLACEMENT TOL. = 0.250 inches

PLATE ROTATION TOL. = 5.0 Deg.

JSI GRIP= 0.81 (E) (INPUT = 0.90)
JSI METAL= 0.59 (B) (INPUT = 1.00)

JOB NAME	TRUSS NAME	QUANTITY	PLY	JOB DESC.	DRWG NO.
336324	H96		1	TRUSS DESC. JT 45147	E21104095

Alpa Roof Truss, Maple

Version 8.420 S Jan 21 2021 MiTek Industries, Inc. Wed Oct 13 14:52:12 2021 Page 1

ID:hd511hZTz_bdeQoS817GKByhVxV-XrYDO0AGxNYJ3ZRvvEEZ_EzgvhqX9_9ueKEvOLyTp6X

Scale = 1:83.8

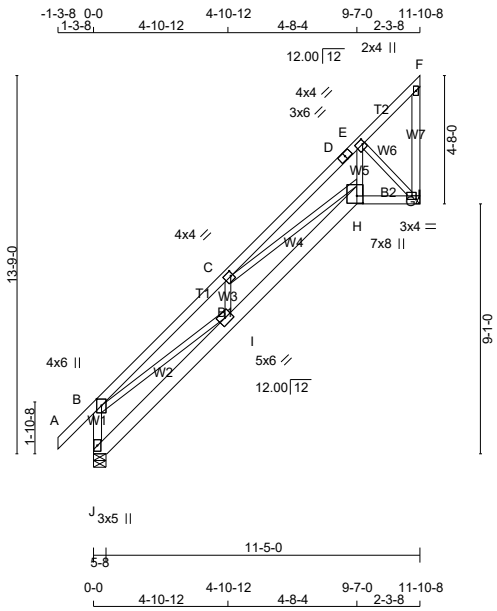

TOTAL WEIGHT = 8 X 69 = 556 lb

[M][F]

LUMBER

N. L. G. A. RULES

CHORDS	SIZE		LUMBER	DESCR.
J - B	2x4	DRY	No.2	SPF
A - D	2x4	DRY	No.2	SPF
D - F	2x4	DRY	No.2	SPF
G - F	2x4	DRY	No.2	SPF
J - H	2x6	DRY	No.2	SPF
H - G	2x4	DRY	No.2	SPF
ALL WEBS	2x3	DRY	No.2	SPF

DRY: SEASONED LUMBER.

PLATES (table is in inches)

JT	TYPE	PLATES	W	LEN	Y	X
B	TMVW+p	MT20	4.0	6.0	2.75	2.00
C	TMWW-t	MT20	4.0	4.0	2.00	1.00
D	TS-t	MT20	3.0	6.0		
E	TMWW-t	MT20	4.0	4.0	2.00	1.00
F	TMV+p	MT20	2.0	4.0		
G	BMVW1-t	MT20	3.0	4.0	1.50	1.75
H	BBWW+p	MT20	7.0	8.0	3.25	2.75
I	BMWW-t	MT20	5.0	6.0		
J	BMV1+p	MT20	3.0	5.0		

LATERAL BRACE(S) SHOWN SHALL BE 2X4 SPF#2

DIMENSIONS, SUPPORTS AND LOADINGS SPECIFIED BY FABRICATOR TO BE VERIFIED BY BUILDING DESIGNER

BEARINGS

JT	FACTORED GROSS REACTION VERT	HORZ	MAXIMUM FACTORED GROSS REACTION DOWN	HORZ	UPLIFT	INPUT BRG	REQRD BRG
J	682	0	682	0	0	5-8	1-8
G	573	0	573	0	0	MECHANICAL	

A SUITABLE HANGER/MECHANICAL CONNECTION IS REQUIRED AT JOINT G. MINIMUM BEARING LENGTH AT JOINT G = 1-8.

UNFACTORED REACTIONS

JT	1ST LCASE COMBINED	MAX./MIN. COMPONENT REACTIONS SNOW	LIVE	PERM.LIVE	WIND	DEAD	SOIL
J	484	308 / 0	0 / 0	0 / 0	0 / 0	176 / 0	0 / 0
G	408	249 / 0	0 / 0	0 / 0	0 / 0	159 / 0	0 / 0

BEARING MATERIAL TO BE SPF NO.2 OR BETTER AT JOINT(S) J

BRACING

TOP CHORD TO BE SHEATHED OR MAX. PURLIN SPACING = 5.29 FT.
MAX. UNBRACED BOTTOM CHORD LENGTH = 10.00 FT OR RIGID CEILING DIRECTLY APPLIED.

ALL PITCH BREAKS AND PERIMETER CORNER JOINTS MUST BE LATERALLY RESTRAINED.

LOADING

TOTAL LOAD CASES: (4)

CHORDS

MEMB. FR-TO	MAX. FACTORED FORCE (LBS)	FACTORED VERT. LOAD (PLF) FROM	TO	LC1 MAX CSI (LC)	MAX. UNBRAC LENGTH
J- B	-622 / 0	0.0	0.0	0.07 (1)	7.81
A- B	0 / 38	-78.0	-78.0	0.11 (1)	10.00
B- C	-1383 / 0	-78.0	-78.0	0.24 (1)	5.29
C- D	-850 / 0	-78.0	-78.0	0.19 (1)	6.25
D- E	-850 / 0	-78.0	-78.0	0.19 (1)	6.25
E- F	-35 / 0	-78.0	-78.0	0.11 (1)	6.25
G- F	-36 / 0	0.0	0.0	0.01 (1)	7.81
J- I	-9 / 2	-18.5	-18.5	0.07 (1)	10.00
I- H	0 / 1342	-18.5	-18.5	0.22 (1)	10.00
H- G	0 / 553	-18.5	-18.5	0.11 (1)	10.00

WEBS

MEMB. FR-TO	MAX. FACTORED FORCE (LBS)	MAX CSI (LC)
B- I	0 / 1181	0.27 (1)
I- C	-242 / 0	0.04 (1)
C- H	-416 / 0	0.29 (1)
H- E	0 / 819	0.18 (1)
E- G	-770 / 0	0.14 (1)

DESIGN CRITERIA

SPECIFIED LOADS:

TOP	CH.	LL	=	21.0	PSF
		DL	=	6.0	PSF
BOT	CH.	LL	=	0.0	PSF
		DL	=	7.4	PSF
TOTAL	LOAD		=	34.4	PSF

SPACING = 24.0 IN. C/C

THIS TRUSS IS DESIGNED FOR RESIDENTIAL OR SMALL BUILDING REQUIREMENTS OF PART 9, NBCC 2015

THIS DESIGN COMPLIES WITH:
- PART 9 OF BCBC 2018 , ABC 2019
- PART 9 OF OBC 2012 (2019 AMENDMENT)
- CSA 086-14
- TPIC 2014

(55 % OF 23.0 P.S.F. G.S.L. PLUS 8.4 P.S.F. RAIN LOAD) EQUALS 21.0 P.S.F. SPECIFIED ROOF LIVE LOAD

ALLOWABLE DEFL.(LL)= L/360 (0.40")
CALCULATED VERT. DEFL.(LL) = L/ 999 (0.05")
ALLOWABLE DEFL.(TL)= L/360 (0.40")
CALCULATED VERT. DEFL.(TL) = L/ 999 (0.09")

CSI: TC=0.24/1.00 (B-C:1) , BC=0.22/1.00 (H-I:1) , WB=0.29/1.00 (C-H:1) , SSI=0.12/1.00 (B-C:1)

DOL LUMBER=1.00 NAIL=1.00 LS BEND=1.10 COMP=1.10 SHEAR=1.10 TENS= 1.10

COMPANION LIVE LOAD FACTOR = 1.00

TRUSS PLATE MANUFACTURER IS NOT RESPONSIBLE FOR QUALITY CONTROL IN THE TRUSS MANUFACTURING PLANT .

NAIL VALUES

PLATE	GRIP(DRY) (PSI) MAX	MIN	SHEAR (PLI) MAX	MIN	SECTION (PLI) MAX	MIN
MT20	650	371	1747	788	1987	1873

PLATE PLACEMENT TOL. = 0.250 inches

PLATE ROTATION TOL. = 5.0 Deg.

JSI GRIP= 0.83 (E) (INPUT = 0.90)
JSI METAL= 0.59 (B) (INPUT = 1.00)

JOB NAME	TRUSS NAME	QUANTITY	PLY	JOB DESC.		DRWG NO.
336324	H97		1	TRUSS DESC.	JT 45147	E21104096

Alpa Roof Truss, Maple

Version 8.420 S Jan 21 2021 MiTek Industries, Inc. Wed Oct 13 14:52:13 2021 Page 1

ID:hd511hZTz bdeQoS817GKByhVxV-?26bcMAuigqAgj05SyloXSVso59iuT?2tzzTwoyTp6W

Scale = 1:60.0

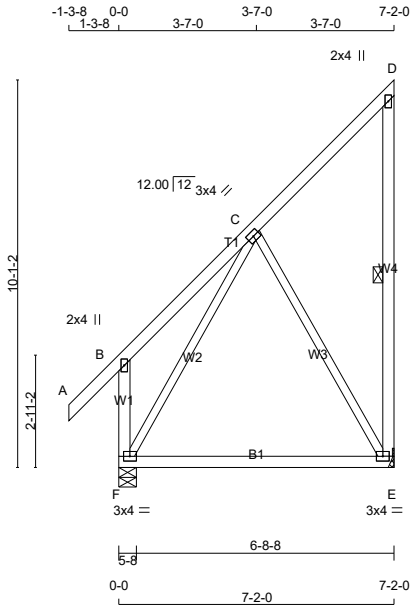

TOTAL WEIGHT = 6 X 47 = 279 lb

[M][F]

LUMBER

N. L. G. A. RULES

CHORDS	SIZE		LUMBER	DESCR.
A - D	2x4	DRY	No.2	SPF
E - D	2x4	DRY	No.2	SPF
F - B	2x4	DRY	No.2	SPF
F - E	2x4	DRY	No.2	SPF
ALL WEBS EXCEPT	2x3	DRY	No.2	SPF

DRY: SEASONED LUMBER.

PLATES (table is in inches)

JT	TYPE	PLATES	W	LEN Y	X
B	TMV+p	MT20	2.0	4.0	
C	TMWW-t	MT20	3.0	4.0	
D	TMV+p	MT20	2.0	4.0	
E	BMVW1-t	MT20	3.0	4.0	
F	BMVW1-t	MT20	3.0	4.0	

LATERAL BRACE(S) SHOWN SHALL BE 2X4 SPF#2

DIMENSIONS, SUPPORTS AND LOADINGS SPECIFIED BY FABRICATOR TO BE VERIFIED BY BUILDING DESIGNER

BEARINGS

JT	FACTORED GROSS REACTION VERT	HORZ	MAXIMUM FACTORED GROSS REACTION DOWN	HORZ	UPLIFT	INPUT BRG IN-SX	REQRD BRG IN-SX
E	346	0	346	0	0	MECHANICAL	
F	454	0	454	0	0	5-8	1-8

A SUITABLE HANGER/MECHANICAL CONNECTION IS REQUIRED AT JOINT E. MINIMUM BEARING LENGTH AT JOINT E = 1-8.

UNFACTORED REACTIONS

JT	1ST LCASE COMBINED	MAX./MIN. COMPONENT REACTIONS SNOW	LIVE	PERM.LIVE	WIND	DEAD	SOIL
E	246	150 / 0	0 / 0	0 / 0	0 / 0	96 / 0	0 / 0
F	322	209 / 0	0 / 0	0 / 0	0 / 0	113 / 0	0 / 0

BEARING MATERIAL TO BE SPF NO.2 OR BETTER AT JOINT(S) F

BRACING

TOP CHORD TO BE SHEATHED OR MAX. PURLIN SPACING = 6.25 FT.
MAX. UNBRACED BOTTOM CHORD LENGTH = 10.00 FT OR RIGID CEILING DIRECTLY APPLIED.

ALL PITCH BREAKS AND PERIMETER CORNER JOINTS MUST BE LATERALLY RESTRAINED.

1 LATERAL BRACE(S) AT 1/ 2 LENGTH OF D-E.

END VERTICAL(S) MUST BE SHEATHED OR HAVE BRACES AS INDICATED IN THE MAX. UNBRACED LENGTH COLUMN OF THE TABLE BELOW

LOADING

TOTAL LOAD CASES: (4)

CHORDS

MEMB. FR-TO	MAX. FACTORED FORCE (LBS)	FACTORED VERT. LOAD (PLF) FROM	TO	LC1 CSI (LC)	MAX UNBRAC LENGTH
A- B	0 / 38	-78.0	-78.0	0.11 (1)	10.00
B- C	0 / 25	-78.0	-78.0	0.17 (1)	10.00
C- D	-24 / 0	-78.0	-78.0	0.13 (1)	6.25
E- D	-109 / 0	0.0	0.0	0.05 (1)	6.25
F- B	-210 / 0	0.0	0.0	0.03 (1)	7.81
F- E	0 / 102	-18.5	-18.5	0.28 (4)	10.00

WEBS

MEMB. FR-TO	MAX. FACTORED FORCE (LBS)	MAX CSI (LC)
C- E	-199 / 0	0.19 (1)
F- C	-205 / 0	0.18 (1)

DESIGN CRITERIA

SPECIFIED LOADS:

TOP CH.	LL	=	21.0	PSF
	DL	=	6.0	PSF
BOT CH.	LL	=	0.0	PSF
	DL	=	7.4	PSF
TOTAL LOAD		=	34.4	PSF

SPACING = 24.0 IN. C/C

THIS TRUSS IS DESIGNED FOR RESIDENTIAL OR SMALL BUILDING REQUIREMENTS OF PART 9, NBCC 2015

THIS DESIGN COMPLIES WITH:
- PART 9 OF BCBC 2018 , ABC 2019
- PART 9 OF OBC 2012 (2019 AMENDMENT)
- CSA 086-14
- TPIC 2014

(55 % OF 23.0 P.S.F. G.S.L. PLUS 8.4 P.S.F. RAIN LOAD) EQUALS 21.0 P.S.F. SPECIFIED ROOF LIVE LOAD

ALLOWABLE DEFL.(TL)= L/360 (0.24")
CALCULATED VERT. DEFL.(TL) = L/ 723 (0.12")

CSI: TC=0.17/1.00 (B-C:1) , BC=0.28/1.00 (E-F:4) , WB=0.19/1.00 (C-E:1) , SSI=0.10/1.00 (C-D:1)

DOL LUMBER=1.00 NAIL=1.00 LS BEND=1.10 COMP=1.10 SHEAR=1.10 TENS= 1.10

COMPANION LIVE LOAD FACTOR = 1.00

TRUSS PLATE MANUFACTURER IS NOT RESPONSIBLE FOR QUALITY CONTROL IN THE TRUSS MANUFACTURING PLANT .

NAIL VALUES

PLATE	GRIP(DRY) (PSI) MAX	MIN	SHEAR (PLI) MAX	MIN	SECTION (PLI) MAX	MIN
MT20	650	371	1747	788	1987	1873

PLATE PLACEMENT TOL. = 0.250 inches

PLATE ROTATION TOL. = 5.0 Deg.

JSI GRIP= 0.32 (C) (INPUT = 0.90)
JSI METAL= 0.11 (B) (INPUT = 1.00)

JOB NAME	TRUSS NAME	QUANTITY	PLY	JOB DESC.		DRWG NO.
336324	H98		1	TRUSS DESC.	JT 45147	E21104097

Alpa Roof Truss, Maple

Version 8.420 S Jan 21 2021 MiTek Industries, Inc. Wed Oct 13 14:52:15 2021 Page 1

ID:hd511hZTz bdeQoS817GKByhVxV-xQEL11C9Elwuw1AUaNnGcta8GvsfMKwLKHSZ gyTp6U

Scale = 1:67.8

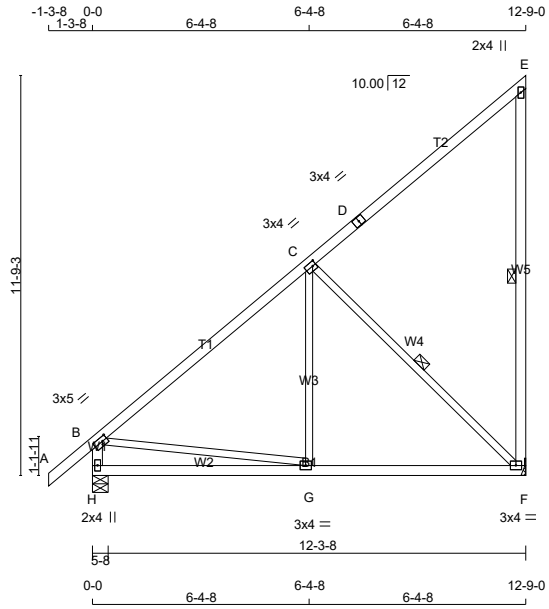

TOTAL WEIGHT = 3 X 66 = 197 lb

[M][F]

LUMBER

N. L. G. A. RULES

CHORDS	SIZE		LUMBER	DESCR.
A - D	2x4	DRY	No.2	SPF
D - E	2x4	DRY	No.2	SPF
F - E	2x4	DRY	No.2	SPF
H - B	2x4	DRY	No.2	SPF
H - F	2x4	DRY	No.2	SPF
ALL WEBS EXCEPT	2x3	DRY	No.2	SPF

DRY: SEASONED LUMBER.

PLATES (table is in inches)

JT	TYPE	PLATES	W	LEN	Y	X
B	TMVW-t	MT20	3.0	5.0	1.50	1.75
C	TMWW-t	MT20	3.0	4.0	1.50	1.25
D	TS-t	MT20	3.0	4.0		
E	TMV+p	MT20	2.0	4.0		
F	BMVW1-t	MT20	3.0	4.0		
G	BMWW-t	MT20	3.0	4.0		
H	BMV1+p	MT20	2.0	4.0		

LATERAL BRACE(S) SHOWN SHALL BE 2X4 SPF#2

DIMENSIONS, SUPPORTS AND LOADINGS SPECIFIED BY FABRICATOR TO BE VERIFIED BY BUILDING DESIGNER

BEARINGS

JT	FACTORED GROSS REACTION VERT	HORZ	MAXIMUM FACTORED GROSS REACTION DOWN	HORZ	UPLIFT	INPUT BRG IN-SX	REQRD BRG IN-SX
F	615	0	615	0	0	MECHANICAL	
H	723	0	723	0	0	5-8	1-8

A SUITABLE HANGER/MECHANICAL CONNECTION IS REQUIRED AT JOINT F. MINIMUM BEARING LENGTH AT JOINT F = 1-8.

UNFACTORED REACTIONS

JT	1ST LCASE COMBINED	MAX./MIN. COMPONENT REACTIONS SNOW	LIVE	PERM.LIVE	WIND	DEAD	SOIL
F	438	268 / 0	0 / 0	0 / 0	0 / 0	171 / 0	0 / 0
H	513	326 / 0	0 / 0	0 / 0	0 / 0	187 / 0	0 / 0

BEARING MATERIAL TO BE SPF NO.2 OR BETTER AT JOINT(S) H

BRACING

TOP CHORD TO BE SHEATHED OR MAX. PURLIN SPACING = 6.25 FT.
MAX. UNBRACED BOTTOM CHORD LENGTH = 10.00 FT OR RIGID CEILING DIRECTLY APPLIED.

ALL PITCH BREAKS AND PERIMETER CORNER JOINTS MUST BE LATERALLY RESTRAINED.

1 LATERAL BRACE(S) AT 1/ 2 LENGTH OF E-F, C-F.

END VERTICAL(S) MUST BE SHEATHED OR HAVE BRACES AS INDICATED IN THE MAX. UNBRACED LENGTH COLUMN OF THE TABLE BELOW

LOADING

TOTAL LOAD CASES: (4)

CHORDS

MEMB. FR-TO	MAX. FACTORED FORCE (LBS)	FACTORED VERT. LOAD (PLF) FROM	TO	LC1 MAX CSI (LC)	MAX. UNBRAC LENGTH
A- B	0 / 35	-78.0	-78.0	0.11 (1)	10.00
B- C	-480 / 0	-78.0	-78.0	0.43 (1)	6.25
C- D	-39 / 0	-78.0	-78.0	0.42 (1)	6.25
D- E	-39 / 0	-78.0	-78.0	0.42 (1)	6.25
F- E	-187 / 0	0.0	0.0	0.14 (1)	6.25
H- B	-678 / 0	0.0	0.0	0.07 (1)	7.81
H- G	0 / 0	-18.5	-18.5	0.21 (4)	10.00
G- F	0 / 399	-18.5	-18.5	0.25 (4)	10.00

WEBS

MEMB. FR-TO	MAX. FACTORED FORCE (LBS)	MAX CSI (LC)
G- C	0 / 145	0.05 (4)
C- F	-553 / 0	0.29 (1)
B- G	0 / 402	0.09 (1)

DESIGN CRITERIA

SPECIFIED LOADS:

TOP CH.	LL	=	21.0	PSF
	DL	=	6.0	PSF
BOT CH.	LL	=	0.0	PSF
	DL	=	7.4	PSF
TOTAL LOAD		=	34.4	PSF

SPACING = 24.0 IN. C/C

THIS TRUSS IS DESIGNED FOR RESIDENTIAL OR SMALL BUILDING REQUIREMENTS OF PART 9, NBCC 2015

THIS DESIGN COMPLIES WITH:
- PART 9 OF BCBC 2018 , ABC 2019
- PART 9 OF OBC 2012 (2019 AMENDMENT)
- CSA 086-14
- TPIC 2014

(55 % OF 23.0 P.S.F. G.S.L. PLUS 8.4 P.S.F. RAIN LOAD) EQUALS 21.0 P.S.F. SPECIFIED ROOF LIVE LOAD

ALLOWABLE DEFL.(LL)= L/360 (0.42")
CALCULATED VERT. DEFL.(LL) = L/ 999 (0.01")
ALLOWABLE DEFL.(TL)= L/360 (0.42")
CALCULATED VERT. DEFL.(TL) = L/ 999 (0.04")

CSI: TC=0.43/1.00 (B-C:1) , BC=0.25/1.00 (F-G:4) , WB=0.29/1.00 (C-F:1) , SSI=0.19/1.00 (B-C:1)

DOL LUMBER=1.00 NAIL=1.00 LS BEND=1.10 COMP=1.10 SHEAR=1.10 TENS= 1.10

COMPANION LIVE LOAD FACTOR = 1.00

TRUSS PLATE MANUFACTURER IS NOT RESPONSIBLE FOR QUALITY CONTROL IN THE TRUSS MANUFACTURING PLANT .

NAIL VALUES

PLATE	GRIP(DRY) (PSI) MAX	MIN	SHEAR (PLI) MAX	MIN	SECTION (PLI) MAX	MIN
MT20	650	371	1747	788	1987	1873

PLATE PLACEMENT TOL. = 0.250 inches

PLATE ROTATION TOL. = 5.0 Deg.

JSI GRIP= 0.68 (C) (INPUT = 0.90)
JSI METAL= 0.20 (B) (INPUT = 1.00)

JOB NAME	TRUSS NAME	QUANTITY	PLY	JOB DESC.		DRWG NO.
336324	H98G		1	TRUSS DESC.	JT 45147	E21104098

Alpa Roof Truss, Maple

Version 8.420 S Jan 21 2021 MiTek Industries, Inc. Wed Oct 13 14:52:16 2021 Page 1

ID:hd511hZTz bdeQoS817GKByhVxV-QdokENDn b2lXAlg84lV847O1IFI5p1UZxC7X7yTp6T

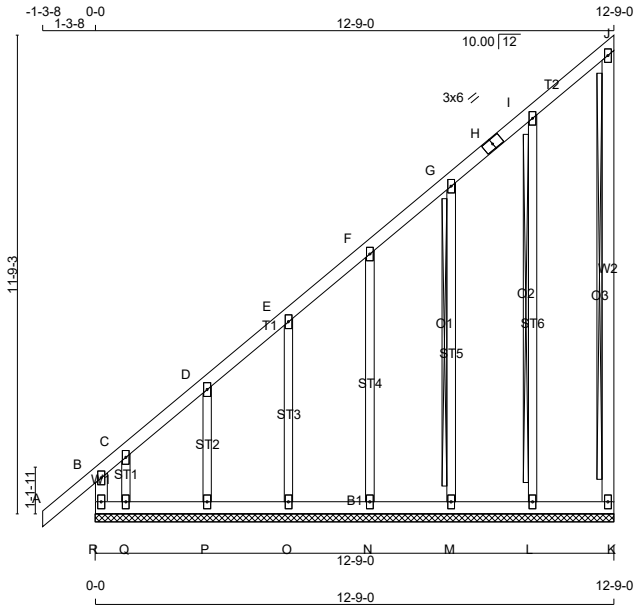

TOTAL WEIGHT = 75 lb

[M]

LUMBER

N. L. G. A. RULES

CHORDS	SIZE		LUMBER	DESCR.
R - B	2x4	DRY	No.2	SPF
A - H	2x4	DRY	No.2	SPF
H - J	2x4	DRY	No.2	SPF
K - J	2x4	DRY	No.2	SPF
R - K	2x4	DRY	No.2	SPF
ALL WEBS	2x3	DRY	No.2	SPF
ALL GABLE WEBS	2x3	DRY	No.2	SPF

DRY: SEASONED LUMBER.

GABLE STUDS SPACED AT 2-0-0 OC.

PLATES (table is in inches)

JT	TYPE	PLATES	W	LEN	Y	X
B	TMV+p	MT20	2.0	4.0		
C, D, E, F, G, I						
C	TMW+w	MT20	2.0	4.0		
H	TS-t	MT20	3.0	6.0		
J	TMV+p	MT20	2.0	4.0		
K	BMV1+p	MT20	2.0	4.0		
L, M, N, O, P, Q						
L	BMW1+w	MT20	2.0	4.0		
R	BMV1+p	MT20	2.0	4.0		

LATERAL BRACE(S) SHOWN SHALL BE 2X4 SPF#2

DIMENSIONS, SUPPORTS AND LOADINGS SPECIFIED BY FABRICATOR TO BE VERIFIED BY BUILDING DESIGNER

BEARINGS

THIS TRUSS DESIGNED FOR CONTINUOUS BEARINGS.

THIS TRUSS REQUIRES RIGID SHEATHING ON EXPOSED FACE.

BEARING MATERIAL TO BE SPF NO.2 OR BETTER AT JOINT(S)

BRACING

TOP CHORD TO BE SHEATHED OR MAX. PURLIN SPACING = 6.25 FT.
MAX. UNBRACED BOTTOM CHORD LENGTH = 10.00 FT OR RIGID CEILING DIRECTLY APPLIED.

ALL PITCH BREAKS AND PERIMETER CORNER JOINTS MUST BE LATERALLY RESTRAINED.

2x4 DRY SPF No.2 T-BRACE AT J-K, I-L
2x3 DRY SPF No.2 T-BRACE AT G-M

FASTEN T AND I-BRACES TO NARROW EDGE OF WEB WITH ONE ROW PER PLY OF 3" COMMON WIRE NAILS @ 6" O.C. WITH 3" MINIMUM END DISTANCE. BRACE MUST COVER 90% OF WEB LENGTH.

END VERTICAL(S) MUST BE SHEATHED OR HAVE BRACES AS INDICATED IN THE MAX. UNBRACED LENGTH COLUMN OF THE TABLE BELOW

LOADING

TOTAL LOAD CASES: (4)

CHORDS

MEMB. FR-TO	MAX. FACTORED FORCE (LBS)	FACTORED VERT. LOAD (PLF) FROM	TO	LC1	MAX CSI (LC)	MAX. UNBRAC LENGTH
R- B	-223 / 0	0.0	0.0	0.03 (1)	7.81	
A- B	0 / 35	-78.0	-78.0	0.11 (1)	10.00	
B- C	-70 / 0	-78.0	-78.0	0.09 (1)	6.25	
C- D	-15 / 0	-78.0	-78.0	0.04 (1)	6.25	
D- E	-14 / 0	-78.0	-78.0	0.04 (1)	6.25	
E- F	-9 / 0	-78.0	-78.0	0.04 (1)	10.00	
F- G	-6 / 0	-78.0	-78.0	0.04 (1)	10.00	
G- H	-3 / 0	-78.0	-78.0	0.04 (1)	10.00	
H- I	-3 / 0	-78.0	-78.0	0.04 (1)	10.00	
I- J	-8 / 0	-78.0	-78.0	0.04 (1)	10.00	
K- J	-71 / 0	0.0	0.0	0.02 (1)	7.81	
R- Q	0 / 16	-18.5	-18.5	0.03 (1)	10.00	
Q- P	0 / 15	-18.5	-18.5	0.02 (4)	10.00	
P- O	0 / 10	-18.5	-18.5	0.02 (4)	10.00	
O- N	0 / 7	-18.5	-18.5	0.02 (4)	10.00	
N- M	0 / 4	-18.5	-18.5	0.02 (4)	10.00	
M- L	0 / 3	-18.5	-18.5	0.02 (4)	10.00	
L- K	0 / 1	-18.5	-18.5	0.02 (4)	10.00	

WEBS

MEMB. FR-TO	MAX. FACTORED FORCE (LBS)	MAX CSI (LC)
L- I	-169 / 0	0.13 (1)
M- G	-153 / 0	0.17 (1)
N- F	-155 / 0	0.12 (1)
O- E	-152 / 0	0.06 (1)
P- D	-161 / 0	0.03 (1)
Q- C	-19 / 0	0.00 (1)

DESIGN CRITERIA

SPECIFIED LOADS:

TOP	CH.	LL	=	21.0	PSF
		DL	=	6.0	PSF
BOT	CH.	LL	=	0.0	PSF
		DL	=	7.4	PSF
TOTAL	LOAD		=	34.4	PSF

SPACING = 24.0 IN. C/C

THIS TRUSS IS DESIGNED FOR RESIDENTIAL OR SMALL BUILDING REQUIREMENTS OF PART 9, NBCC 2015

THIS DESIGN COMPLIES WITH:
- PART 9 OF BCBC 2018 , ABC 2019
- PART 9 OF OBC 2012 (2019 AMENDMENT)
- CSA 086-14
- TPIC 2014

DESIGN ASSUMPTIONS
-OVERHANG NOT TO BE ALTERED OR CUT OFF.

(55 % OF 23.0 P.S.F. G.S.L. PLUS 8.4 P.S.F. RAIN LOAD) EQUALS 21.0 P.S.F. SPECIFIED ROOF LIVE LOAD

CSI: TC=0.11/1.00 (A-B:1) , BC=0.03/1.00 (Q-R:1) , WB=0.17/1.00 (G-M:1) , SSI=0.06/1.00 (A-B:1)

DOL LUMBER=1.00 NAIL=1.00 LS BEND=1.10 COMP=1.10 SHEAR=1.10 TENS= 1.10

COMPANION LIVE LOAD FACTOR = 1.00

TRUSS PLATE MANUFACTURER IS NOT RESPONSIBLE FOR QUALITY CONTROL IN THE TRUSS MANUFACTURING PLANT .

NAIL VALUES

PLATE	GRIP(DRY) (PSI) MAX	MIN	SHEAR (PLI) MAX	MIN	SECTION (PLI) MAX	MIN
MT20	650	371	1747	788	1987	1873

PLATE PLACEMENT TOL. = 0.250 inches

PLATE ROTATION TOL. = 5.0 Deg.

JSI GRIP= 0.17 (B) (INPUT = 0.90)
JSI METAL= 0.13 (B) (INPUT = 1.00)

JOB NAME	TRUSS NAME	QUANTITY	PLY	JOB DESC.	DRWG NO.
336332	H80		1	TRUSS DESC. JT 45147	E21104163

Alpa Roof Truss, Maple

Version 8.420 S Jan 21 2021 MiTek Industries, Inc. Wed Oct 13 16:30:49 2021 Page 1

ID:hd511hZTz_bdeQoS817GKByhVxV-nBa4FEmoTN0lQtH61Pt7I0XhutFa1vjqFO3VZuyTng4

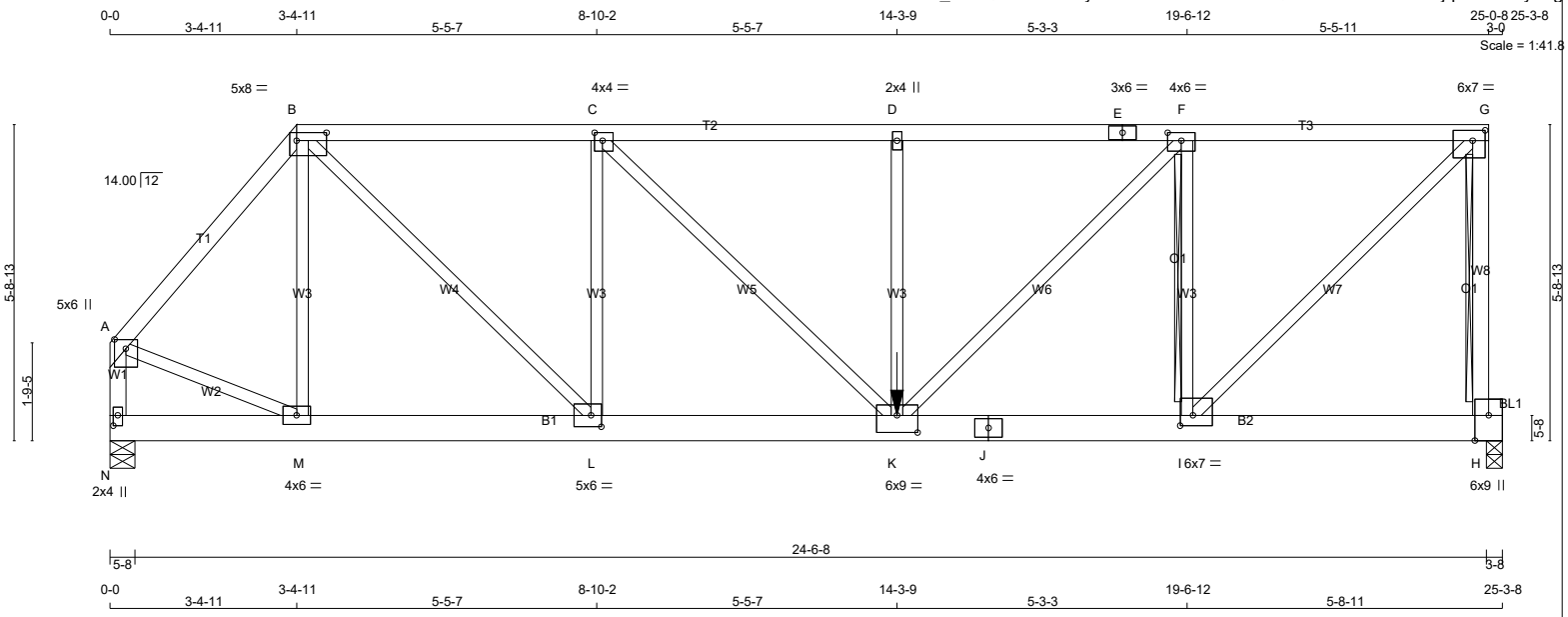

TOTAL WEIGHT = 126 lb

[M]

LUMBER

N. L. G. A. RULES

CHORDS	SIZE		LUMBER	DESCR.
A - B	2x4	DRY	No.2	SPF
B - E	2x4	DRY	1650F 1.5E	SPF
E - G	2x4	DRY	1650F 1.5E	SPF
H - G	2x4	DRY	No.2	SPF
N - A	2x4	DRY	No.2	SPF
N - J	2x6	DRY	No.2	SPF
J - H	2x6	DRY	No.2	SPF
BEARING BLOCKS				
BL1	2x4	DRY	No.2	SPF
ALL WEBS EXCEPT	2x3	DRY	No.2	SPF

DRY: SEASONED LUMBER.

PLATES (table is in inches)

JT	TYPE	PLATES	W	LEN	Y	X
A	TMVW+p	MT20	5.0	6.0	2.00	2.50
B	TTWW-l	MT20	5.0	8.0	1.75	6.50
C	TMWW-t	MT20	4.0	4.0	1.75	1.75
D	TMW+w	MT20	2.0	4.0		
E	TS-t	MT20	3.0	6.0		
F	TMWW-t	MT20	4.0	6.0	1.75	3.00
G	TMVW-t	MT20	6.0	7.0	2.25	2.75
H	BMVK1+t	MT20	6.0	9.0	Edge	3.00
I	BMWW-t	MT20	6.0	7.0	2.25	2.75
J	BS-t	MT20	4.0	6.0		
K	BMWWW-t	MT20	6.0	9.0	3.75	4.50
L	BMWW-t	MT20	5.0	6.0	2.50	2.25
M	BMWW-t	MT20	4.0	6.0		
N	BMV1+p	MT20	2.0	4.0	2.25	1.00

Edge - INDICATES REFERENCE CORNER OF PLATE TOUCHES EDGE OF CHORD.

LATERAL BRACE(S) SHOWN SHALL BE 2X4 SPF#2

DIMENSIONS, SUPPORTS AND LOADINGS SPECIFIED BY FABRICATOR TO BE VERIFIED BY BUILDING DESIGNER

BEARINGS

JT	FACTORED GROSS REACTION VERT	HORZ	MAXIMUM FACTORED GROSS REACTION DOWN	HORZ	UPLIFT	INPUT BRG IN-SX	REQRD BRG IN-SX
H	2904	0	2904	0	0	3-8	3-8
N	2019	0	2019	0	0	5-8	3-1

UNFACTORED REACTIONS

JT	1ST LCASE COMBINED	MAX./MIN. COMPONENT REACTIONS SNOW	LIVE	PERM.LIVE	WIND	DEAD	SOIL
H	2070	1266 / 0	0 / 0	0 / 0	0 / 0	804 / 0	0 / 0
N	1439	879 / 0	0 / 0	0 / 0	0 / 0	561 / 0	0 / 0

BEARING MATERIAL TO BE SPF NO.2 OR BETTER AT JOINT(S) H, N
BEARING SIZE FACTOR = 1.15 AT JNT(S) H (BASED ON SUPPORT DEPTH = 1-8)

BRACING

TOP CHORD TO BE SHEATHED OR MAX. PURLIN SPACING = 3.08 FT.
MAX. UNBRACED BOTTOM CHORD LENGTH = 6.25 FT OR RIGID CEILING DIRECTLY APPLIED.

ALL PITCH BREAKS AND PERIMETER CORNER JOINTS MUST BE LATERALLY RESTRAINED.

2x3 DRY SPF No.2 T-BRACE AT G-H, F-I

FASTEN T AND I-BRACES TO NARROW EDGE OF WEB WITH ONE ROW PER PLY OF 3" COMMON WIRE NAILS @ 6" O.C. WITH 3" MINIMUM END DISTANCE. BRACE MUST COVER 90% OF WEB LENGTH.

END VERTICAL(S) MUST BE SHEATHED OR HAVE BRACES AS INDICATED IN THE MAX. UNBRACED LENGTH COLUMN OF THE TABLE BELOW

LOADING

TOTAL LOAD CASES: (4)

CHORDS

MEMB. FR-TO	MAX. FACTORED FORCE (LBS)	FACTORED VERT. LOAD (PLF) FROM	TO	LC1 CSI (LC)	MAX. UNBRAC LENGTH
A- B	-1856 / 0	-78.0	-78.0	0.24 (1)	4.68
B- C	-2675 / 0	-78.0	-78.0	0.37 (1)	4.39
C- D	-3570 / 0	-78.0	-78.0	0.44 (1)	3.86
D- E	-3570 / 0	-165.7	-165.7	0.87 (1)	3.08
E- F	-3570 / 0	-165.7	-165.7	0.87 (1)	3.08
F- G	-2434 / 0	-165.7	-165.7	0.78 (1)	3.78
H- G	-2816 / 0	0.0	0.0	0.87 (1)	6.68
N- A	-2002 / 0	0.0	0.0	0.23 (1)	5.91
N- M	0 / 0	-18.5	-18.5	0.05 (4)	10.00
M- L	0 / 1194	-18.5	-18.5	0.19 (1)	10.00
L- K	0 / 2675	-18.5	-18.5	0.42 (1)	10.00
K- J	0 / 2434	-39.3	-39.3	0.42 (1)	10.00
J- I	0 / 2434	-39.3	-39.3	0.42 (1)	10.00
I- H	-77 / 0	-39.3	-39.3	0.14 (4)	6.25

WEBS

MEMB. FR-TO	MAX. FACTORED FORCE (LBS)	MAX CSI (LC)
M- B	-354 / 0	0.17 (1)
B- L	0 / 2070	0.51 (1)
L- C	-1328 / 0	0.64 (1)
C- K	0 / 1255	0.31 (1)
K- D	-588 / 0	0.28 (1)
K- F	0 / 1621	0.40 (1)
I- F	-2201 / 0	0.88 (1)
I- G	0 / 3513	0.87 (1)
A- M	0 / 1284	0.32 (1)

FACTORED CONCENTRATED LOADS (LBS)

JT	LOC.	LC1	MAX-	MAX+	FACE	DIR.	TYPE	HEEL	CONN.
K	14-3-9	-1346	-1346	---	FRONT	VERT	TOTAL	---	C1

CONNECTION REQUIREMENTS

1) **C1:** A SUITABLE HANGER/MECHANICAL CONNECTION IS REQUIRED.

DESIGN CRITERIA

*** SPECIAL LOADS ANALYSIS ***
GEOMETRY AND/OR BASIC LOADS CHANGED BY USER.
LOADS WERE DERIVED FROM USER INPUT
NO FURTHER MODIFICATIONS WERE MADE

SPECIFIED LOADS:

TOP	CH.	LL =	21.0	PSF
		DL =	6.0	PSF
BOT	CH.	LL =	0.0	PSF
		DL =	7.4	PSF
TOTAL	LOAD	=	34.4	PSF

SPACING = 24.0 IN. C/C

LOADING IN FLAT SECTION BASED ON A SLOPE OF 2.00/12 MINIMUM

GIRDER TYPE: CPrimeHip
LEFT SETBACK = 3-4-11
RIGHT SETBACK = 0-0
END SETBACK = 6-6-0
END WALL WIDTH = 0-0
CORNER FRAMING TYPE: CONVENTIONAL
END JACK TYPE: CONVENTIONAL
APPLIED TO FRONT SIDE
- ADDT'L LOADS BASED ON 55 % OF GSL.
LOADS APPLIED TO FIRST 10-11-15 OF SPAN MEASURED FROM THE RIGHT.

*** NON STANDARD GIRDER ***
ADDT'L USER-DEFINED LOADS APPLIED TO ALL LOAD CASES.

THIS TRUSS IS DESIGNED FOR RESIDENTIAL OR SMALL BUILDING REQUIREMENTS OF PART 9, NBCC 2015

THIS DESIGN COMPLIES WITH:
- PART 9 OF BCBC 2018 , ABC 2019
- PART 9 OF OBC 2012 (2019 AMENDMENT)
- CSA 086-14
- TPIC 2014

(55 % OF 23.0 P.S.F. G.S.L. PLUS 8.4 P.S.F. RAIN LOAD) EQUALS 21.0 P.S.F. SPECIFIED ROOF LIVE LOAD

ALLOWABLE DEFL.(LL)= L/360 (0.83")
CALCULATED VERT. DEFL.(LL) = L/ 999 (0.12")
ALLOWABLE DEFL.(TL)= L/360 (0.83")
CALCULATED VERT. DEFL.(TL) = L/ 999 (0.23")

CSI: TC=0.87/1.00 (G-H:1) , BC=0.42/1.00 (K-L:1) , WB=0.88/1.00 (F-I:1) , SSI=0.47/1.00 (F-G:1)

DOL LUMBER=1.00 NAIL=1.00 LS BEND=1.00 COMP=1.00 SHEAR=1.00 TENS= 1.00

COMPANION LIVE LOAD FACTOR = 1.00

TRUSS PLATE MANUFACTURER IS NOT RESPONSIBLE FOR QUALITY CONTROL IN THE TRUSS MANUFACTURING PLANT .

NAIL VALUES

PLATE	GRIP(DRY) (PSI) MAX	MIN	SHEAR (PLI) MAX	MIN	SECTION (PLI) MAX	MIN
MT20	650	371	1747	788	1987	1873

CONTINUED ON PAGE 2

JOB NAME	TRUSS NAME	QUANTITY	PLY	JOB DESC.	DRWG NO.
336335	H223		1	TRUSS DESC. JT 45147	E21104180

Alpa Roof Truss, Maple

Version 8.420 S Jan 21 2021 MiTek Industries, Inc. Thu Oct 14 08:52:36 2021 Page 1

ID:hd511hZTz_bdeQoS817GKByhVxV-WwTMXag5oYhY3d5ZNRD1GJnWye7rXk1Quf36b2yTZHf

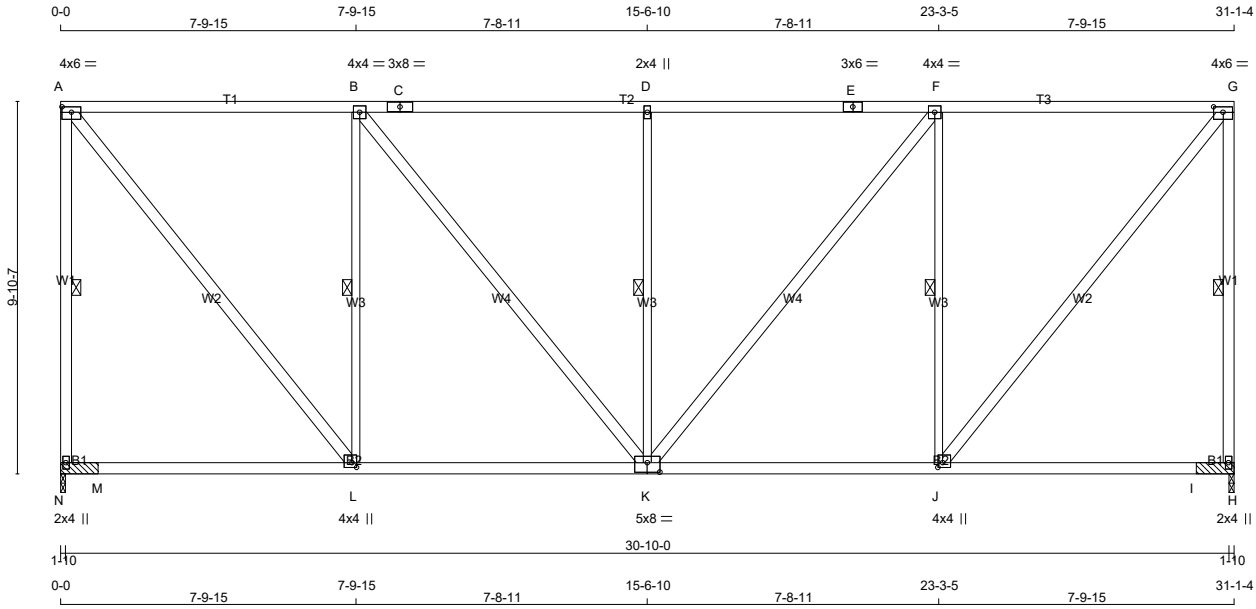

TOTAL WEIGHT = 2 X 171 = 343 lb

[M]

LUMBER

N. L. G. A. RULES

CHORDS	SIZE		LUMBER	DESCR.
N - A	2x4	DRY	No.2	SPF
A - C	2x4	DRY	1650F 1.5E	SPF
C - E	2x4	DRY	1650F 1.5E	SPF
E - G	2x4	DRY	1650F 1.5E	SPF
H - G	2x4	DRY	No.2	SPF
N - K	2x4	DRY	No.2	SPF
K - H	2x4	DRY	No.2	SPF
ALL WEBS	2x4	DRY	No.2	SPF
EXCEPT				
L - B	2x3	DRY	No.2	SPF
K - D	2x3	DRY	No.2	SPF
J - F	2x3	DRY	No.2	SPF

DRY: SEASONED LUMBER.

PLATES (table is in inches)

JT	TYPE	PLATES	W	LEN	Y	X
A	TMVW-t	MT20	4.0	6.0	1.75	3.00
B	TMWW-t	MT20	4.0	4.0		
C	TS-t	MT20	3.0	8.0		
D	TMW+w	MT20	2.0	4.0		
E	TS-t	MT20	3.0	6.0		
F	TMWW-t	MT20	4.0	4.0		
G	TMVW-t	MT20	4.0	6.0	1.75	3.00
H	BMV1+p	MT20	2.0	4.0		
J	BMWW+t	MT20	4.0	4.0	1.50	1.50
K	BSWWW-l	MT20	5.0	8.0	3.00	4.00
L	BMWW+t	MT20	4.0	4.0	1.50	1.50
N	BMV1+p	MT20	2.0	4.0		

LATERAL BRACE(S) SHOWN SHALL BE 2X4 SPF#2

DIMENSIONS, SUPPORTS AND LOADINGS SPECIFIED BY FABRICATOR TO BE VERIFIED BY BUILDING DESIGNER

BEARINGS

JT	FACTORED GROSS REACTION VERT	HORZ	MAXIMUM FACTORED GROSS REACTION DOWN	HORZ	UPLIFT	INPUT BRG IN-SX	REQRD BRG IN-SX
N	1617	0	1617	0	0	1-10	1-10 & BLOCK
H	1617	0	1617	0	0	1-10	1-10 & BLOCK

UNFACTORED REACTIONS

JT	1ST LCASE COMBINED	MAX./MIN. COMPONENT REACTIONS SNOW	LIVE	PERM.LIVE	WIND	DEAD	SOIL
N	1163	653 / 0	0 / 0	0 / 0	0 / 0	510 / 0	0 / 0
H	1163	653 / 0	0 / 0	0 / 0	0 / 0	510 / 0	0 / 0

BEARING MATERIAL TO BE SPF NO.2 OR BETTER AT JOINT(S) N, H

2x4 DRY SPF No.2 BEARING BLOCK 12" LONG AT JT. N ATTACHED TO FRONT SIDE WITH 2 ROWS OF (0.122"X3") SPIRAL NAILS SPACED 3" C.C. 8 NAILS TOTAL.

2x4 DRY SPF No.2 BEARING BLOCK 12" LONG AT JT. H ATTACHED TO FRONT SIDE WITH 2 ROWS OF (0.122"X3") SPIRAL NAILS SPACED 3" C.C. 8 NAILS TOTAL.

BRACING

FOR SECTION A-G, MAX. PURLIN SPACING = 2.00 FT.
FOR OTHER SECTIONS, TOP CHORD TO BE SHEATHED OR MAX. PURLIN SPACING = 0.00 FT.
MAX. UNBRACED BOTTOM CHORD LENGTH = 10.00 FT OR RIGID CEILING DIRECTLY APPLIED.

ALL PITCH BREAKS AND PERIMETER CORNER JOINTS MUST BE LATERALLY RESTRAINED.

1 LATERAL BRACE(S) AT 1/ 2 LENGTH OF A-N, G-H, B-L, D-K, F-J.

END VERTICAL(S) MUST BE SHEATHED OR HAVE BRACES AS INDICATED IN THE MAX. UNBRACED LENGTH COLUMN OF THE TABLE BELOW

LOADING

TOTAL LOAD CASES: (4)

CHORDS

MEMB. FR-TO	MAX. FACTORED FORCE (LBS)	FACTORED VERT. LOAD (PLF) FROM	TO	LC1	MAX CSI (LC)	MAX. UNBRAC LENGTH
N- A	-1562 / 0	0.0	0.0	0.73 (1)	5.27	
A- B	-1060 / 0	-85.5	-85.5	0.71 (1)	2.00	
B- C	-1350 / 0	-85.5	-85.5	0.74 (1)	2.00	
C- D	-1350 / 0	-85.5	-85.5	0.74 (1)	2.00	
D- E	-1350 / 0	-85.5	-85.5	0.74 (1)	2.00	
E- F	-1350 / 0	-85.5	-85.5	0.74 (1)	2.00	
F- G	-1060 / 0	-85.5	-85.5	0.71 (1)	2.00	
H- G	-1562 / 0	0.0	0.0	0.73 (1)	5.27	
N- M	0 / 0	-18.5	-18.5	0.32 (4)	10.00	
M- L	0 / 0	-18.5	-18.5	0.32 (4)	10.00	
L- K	0 / 1060	-18.5	-18.5	0.44 (4)	10.00	
K- J	0 / 1060	-18.5	-18.5	0.44 (4)	10.00	
J- I	0 / 0	-18.5	-18.5	0.32 (4)	10.00	
I- H	0 / 0	-18.5	-18.5	0.32 (4)	10.00	

WEBS

MEMB. FR-TO	MAX. FACTORED FORCE (LBS)	MAX CSI (LC)
A- L	0 / 1676	0.27 (1)
L- B	-1119 / 0	0.74 (1)
B- K	0 / 461	0.07 (1)
K- D	-609 / 0	0.40 (1)
K- F	0 / 461	0.07 (1)
J- F	-1119 / 0	0.74 (1)
J- G	0 / 1676	0.27 (1)

DESIGN CRITERIA

SPECIFIED LOADS:

TOP	CH.	LL	=	21.0	PSF
		DL	=	6.0	PSF
BOT	CH.	LL	=	0.0	PSF
		DL	=	7.4	PSF
TOTAL	LOAD		=	34.4	PSF

SPACING = 24.0 IN. C/C

LOADING IN FLAT SECTION BASED ON PIGGYBACK TRUSS WITH SLOPES OF 6.00/12 AND -6.00/12 AND RESPECTIVE HEEL HEIGHTS OF 0-0 AND 0-0 AND AN ADDITIONAL DEAD LOAD OF 3.0 P.S.F.

THIS TRUSS IS DESIGNED FOR RESIDENTIAL OR SMALL BUILDING REQUIREMENTS OF PART 9, NBCC 2015

THIS DESIGN COMPLIES WITH:
- PART 9 OF BCBC 2018 , ABC 2019
- PART 9 OF OBC 2012 (2019 AMENDMENT)
- CSA 086-14
- TPIC 2014

(55 % OF 23.0 P.S.F. G.S.L. PLUS 8.4 P.S.F. RAIN LOAD) EQUALS 21.0 P.S.F. SPECIFIED ROOF LIVE LOAD

ALLOWABLE DEFL.(LL)= L/360 (1.04")
CALCULATED VERT. DEFL.(LL) = L/ 999 (0.06")
ALLOWABLE DEFL.(TL)= L/360 (1.04")
CALCULATED VERT. DEFL.(TL) = L/ 999 (0.18")

CSI: TC=0.74/1.00 (B-D:1) , BC=0.44/1.00 (K-L:4) , WB=0.74/1.00 (B-L:1) , SSI=0.32/1.00 (A-B:1)

DOL LUMBER=1.00 NAIL=1.00 LS BEND=1.10 COMP=1.10 SHEAR=1.10 TENS= 1.10

COMPANION LIVE LOAD FACTOR = 1.00

TRUSS PLATE MANUFACTURER IS NOT RESPONSIBLE FOR QUALITY CONTROL IN THE TRUSS MANUFACTURING PLANT .

NAIL VALUES

PLATE	GRIP(DRY) (PSI) MAX	MIN	SHEAR (PLI) MAX	MIN	SECTION (PLI) MAX	MIN
MT20	650	371	1747	788	1987	1873

PLATE PLACEMENT TOL. = 0.250 inches

PLATE ROTATION TOL. = 5.0 Deg.

JSI GRIP= 0.87 (J) (INPUT = 0.90)
JSI METAL= 0.47 (L) (INPUT = 1.00)

JOB NAME	TRUSS NAME	QUANTITY	PLY	JOB DESC.	DRWG NO.
336335	H220T		1	TRUSS DESC. JT 45147	E21104181

Alpa Roof Truss, Maple

Version 8.420 S Jan 21 2021 MiTek Industries, Inc. Thu Oct 14 08:53:19 2021 Page 1

ID:hd511hZTz_bdeQoS817GKByhVxV-lCZcZHB3fm5RjEuqOzU7VN3qrzhN67wlnrztc3yTZH_

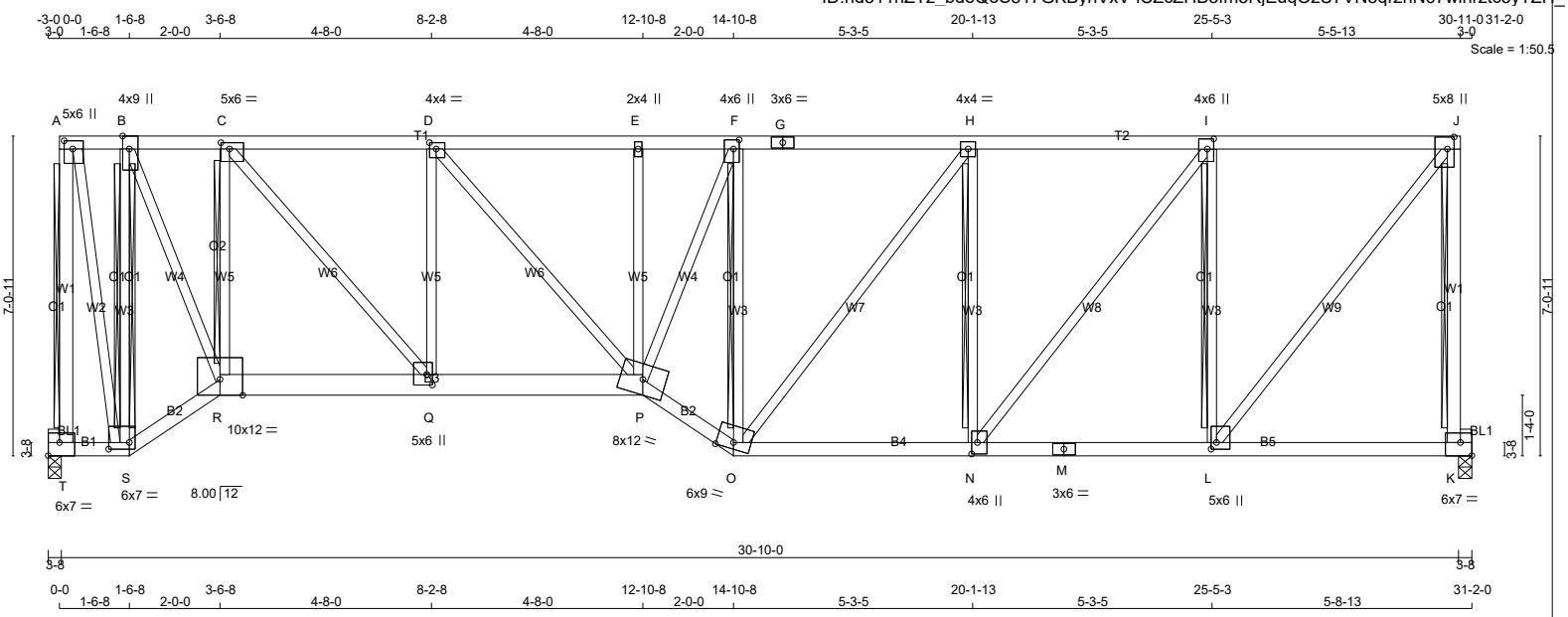

LUMBER

N. L. G. A. RULES

CHORDS	SIZE		LUMBER	DESCR.
T - A	2x4	DRY	No.2	SPF
A - G	2x4	DRY	1650F 1.5E	SPF
G - J	2x4	DRY	1650F 1.5E	SPF
K - J	2x4	DRY	No.2	SPF
T - S	2x4	DRY	No.2	SPF
S - R	2x4	DRY	No.2	SPF
R - P	2x6	DRY	No.2	SPF
P - O	2x4	DRY	No.2	SPF
O - M	2x4	DRY	No.2	SPF
M - K	2x4	DRY	No.2	SPF
BEARING BLOCKS				
BL1	2 - 2x4	DRY	No.2	SPF
ALL WEBS	2x3	DRY	No.2	SPF

DRY: SEASONED LUMBER.

PLATES (table is in inches)

JT	TYPE	PLATES	W	LEN	Y	X
A	TMVW+p	MT20	5.0	6.0	2.25	2.25
B	TMWW+t	MT20	4.0	9.0	Edge	1.75
C	TMWW-t	MT20	5.0	6.0	1.75	2.25
D	TMWW-t	MT20	4.0	4.0	1.75	1.75
E	TMW+w	MT20	2.0	4.0		
F	TMWW+t	MT20	4.0	6.0	2.50	1.50
G	TS-t	MT20	3.0	6.0		
H	TMWW-t	MT20	4.0	4.0		
I	TMWW+t	MT20	4.0	6.0	2.75	1.75
J	TMVW+p	MT20	5.0	8.0	3.25	1.75
K	BMVK1-t	MT20	6.0	7.0	3.50	Edge
L	BMWW+t	MT20	5.0	6.0	1.75	1.50
M	BS-t	MT20	3.0	6.0		
N	BMWW+t	MT20	4.0	6.0	3.00	1.50
O	BBWW-m	MT20	6.0	9.0	Edge	
P	BBWWW-m	MT20	8.0	12.0		
Q	BMWW+t	MT20	5.0	6.0	2.75	1.50
R	BBWW-l	MT20	10.0	12.0	Edge	
S	BBWW-l	MT20	6.0	7.0	1.75	5.50
T	BMVK1-t	MT20	6.0	7.0	3.50	Edge

Edge - INDICATES REFERENCE CORNER OF PLATE TOUCHES EDGE OF CHORD.

LATERAL BRACE(S) SHOWN SHALL BE 2X4 SPF#2

DIMENSIONS, SUPPORTS AND LOADINGS SPECIFIED BY FABRICATOR TO BE VERIFIED BY BUILDING DESIGNER

BEARINGS

JT	FACTORED GROSS REACTION VERT	HORZ	MAXIMUM FACTORED GROSS REACTION DOWN	HORZ	UPLIFT	INPUT BRG IN-SX	REQRD BRG IN-SX
T	3150	0	3150	0	0	3-8	3-8
K	3158	0	3158	0	0	3-8	3-8

UNFACTORED REACTIONS

JT	1ST LCASE COMBINED	MAX./MIN. COMPONENT REACTIONS SNOW	LIVE	PERM.LIVE	WIND	DEAD	SOIL
T	2245	1372 / 0	0 / 0	0 / 0	0 / 0	874 / 0	0 / 0
K	2251	1376 / 0	0 / 0	0 / 0	0 / 0	875 / 0	0 / 0

BEARING MATERIAL TO BE SPF NO.2 OR BETTER AT JOINT(S) T, K
BEARING SIZE FACTOR = 1.15 AT JNT(S) T, K (BASED ON SUPPORT DEPTH = 1-8)

BRACING

TOP CHORD TO BE SHEATHED OR MAX. PURLIN SPACING = 3.36 FT.
MAX. UNBRACED BOTTOM CHORD LENGTH = 6.25 FT OR RIGID CEILING DIRECTLY APPLIED.

ALL PITCH BREAKS AND PERIMETER CORNER JOINTS MUST BE LATERALLY RESTRAINED.

2x4 DRY SPF No.2 T-BRACE AT A-T, J-K, F-O, I-L
2x4 DRY SPF No.2 I-BRACE AT B-S
2x3 DRY SPF No.2 T-BRACE AT C-R, H-N

FASTEN T AND I-BRACES TO NARROW EDGE OF WEB WITH ONE ROW PER PLY OF 3" COMMON WIRE NAILS @ 6" O.C. WITH 3" MINIMUM END DISTANCE. BRACE MUST COVER 90% OF WEB LENGTH.

END VERTICAL(S) MUST BE SHEATHED OR HAVE BRACES AS INDICATED IN THE MAX. UNBRACED LENGTH COLUMN OF THE TABLE BELOW

LOADING

TOTAL LOAD CASES: (4)

CHORDS

MEMB. FR-TO	MAX. FACTORED FORCE (LBS)	FACTORED VERT. LOAD (PLF) FROM	TO	LC1 MAX CSI (LC)	MAX. UNBRAC LENGTH
T- A	-3122 / 0	0.0	0.0	0.88 (1)	7.81
A- B	-596 / 0	-165.7	-165.7	0.18 (1)	6.25
B- C	-1769 / 0	-78.0	-78.0	0.20 (1)	5.36
C- D	-3553 / 0	-78.0	-78.0	0.32 (1)	3.98
D- E	-4333 / 0	-78.0	-78.0	0.37 (1)	3.61
E- F	-4331 / 0	-78.0	-78.0	0.45 (1)	3.44
F- G	-3587 / 0	-165.7	-165.7	0.64 (1)	3.55
G- H	-3587 / 0	-165.7	-165.7	0.64 (1)	3.55
H- I	-3278 / 0	-165.7	-165.7	0.80 (1)	3.36
I- J	-2129 / 0	-165.7	-165.7	0.72 (1)	4.15
K- J	-3073 / 0	0.0	0.0	0.87 (1)	7.81
T- S	-67 / 0	-39.3	-39.3	0.02 (4)	6.25
S- R	0 / 664	-127.0	-127.0	0.21 (1)	10.00
R- Q	0 / 1815	-127.0	-127.0	0.42 (1)	10.00
Q- P	0 / 3553	-127.0	-127.0	0.65 (1)	10.00
P- O	0 / 4305	-127.0	-127.0	0.86 (1)	10.00
O- N	0 / 3278	-39.3	-39.3	0.72 (1)	10.00
N- M	0 / 2129	-39.3	-39.3	0.53 (1)	10.00
M- L	0 / 2129	-39.3	-39.3	0.53 (1)	10.00
L- K	-66 / 0	-39.3	-39.3	0.28 (4)	6.25

WEBS

MEMB. FR-TO	MAX. FACTORED FORCE (LBS)	MAX CSI (LC)
A- S	0 / 2977	0.74 (1)
S- B	-3125 / 0	0.98 (1)
B- R	0 / 3351	0.83 (1)
R- C	-2385 / 0	0.95 (1)
C- Q	0 / 2679	0.66 (1)
Q- D	-1306 / 0	0.63 (1)
D- P	0 / 1190	0.29 (1)
P- E	-113 / 0	0.05 (1)
P- F	0 / 2150	0.53 (1)
O- F	-2612 / 0	0.94 (1)
O- H	0 / 503	0.12 (1)
N- H	-1260 / 0	0.87 (1)
N- I	0 / 1868	0.46 (1)
L- I	-2477 / 0	0.89 (1)
L- J	0 / 3485	0.86 (1)

[M]

DESIGN CRITERIA

SPECIFIED LOADS:

TOP CH.	LL	=	21.0	PSF
	DL	=	6.0	PSF
BOT CH.	LL	=	0.0	PSF
	DL	=	7.4	PSF
TOTAL LOAD		=	34.4	PSF

SPACING = 24.0 IN. C/C

LOADING IN FLAT SECTION BASED ON A SLOPE OF 2.00/12 MINIMUM

GIRDER TYPE: CPrimeHip
SIDE SETBACK = 0-0
END SETBACK = 6-6-0
END WALL WIDTH = 0-0
CORNER FRAMING TYPE: CONVENTIONAL
END JACK TYPE: CONVENTIONAL
APPLIED TO FRONT SIDE
- ADDT'L LOADS BASED ON 55 % OF GSL.
LOADS APPLIED TO FIRST 1-6-8 OF SPAN MEASURED FROM THE LEFT.

GIRDER TYPE: CStdGirder
START DISTANCE = 1-6-8
START SPAN CARRIED = 6-6-0
END DISTANCE = 14-10-8
END SPAN CARRIED = 6-6-0
END WALL WIDTH = 0-0
APPLIED TO FRONT SIDE OF BOTTOM CHORD.
- ADDT'L LOADS BASED ON 55 % OF GSL.

GIRDER TYPE: CPrimeHip
SIDE SETBACK = 0-0
END SETBACK = 6-6-0
END WALL WIDTH = 0-0
CORNER FRAMING TYPE: CONVENTIONAL
END JACK TYPE: CONVENTIONAL
APPLIED TO FRONT SIDE
- ADDT'L LOADS BASED ON 55 % OF GSL.
LOADS APPLIED TO FIRST 16-3-8 OF SPAN MEASURED FROM THE RIGHT.

THIS TRUSS IS DESIGNED FOR RESIDENTIAL OR SMALL BUILDING REQUIREMENTS OF PART 9, NBCC 2015

THIS DESIGN COMPLIES WITH:
- PART 9 OF BCBC 2018 , ABC 2019
- PART 9 OF OBC 2012 (2019 AMENDMENT)
- CSA 086-14
- TPIC 2014

(55 % OF 23.0 P.S.F. G.S.L. PLUS 8.4 P.S.F. RAIN LOAD) EQUALS 21.0 P.S.F. SPECIFIED ROOF LIVE LOAD

ALLOWABLE DEFL.(LL)= L/360 (1.02")
CALCULATED VERT. DEFL.(LL) = L/ 999 (0.25")
ALLOWABLE DEFL.(TL)= L/360 (1.02")
CALCULATED VERT. DEFL.(TL) = L/ 752 (0.49")

CSI: TC=0.88/1.00 (A-T:1) , BC=0.86/1.00 (O-P:1) , WB=0.98/1.00 (B-S:1) , SSI=0.47/1.00 (I-J:1)

DOL LUMBER=1.00 NAIL=1.00 LS BEND=1.00 COMP=1.00 SHEAR=1.00 TENS= 1.00

COMPANION LIVE LOAD FACTOR = 1.00

CONTINUED ON PAGE 2

JOB NAME	TRUSS NAME	QUANTITY	PLY	JOB DESC.	DRWG NO.
336335	H222T		1	TRUSS DESC. JT 45147	E21104182

Alpa Roof Truss, Maple

Version 8.420 S Jan 21 2021 MiTek Industries, Inc. Thu Oct 14 08:53:21 2021 Page 1

ID:hd511hZTz bdeQoS817GKByhVxV-hahN zCJBNL9yY1CVOWbao88cnT a122E9S gxyTZGy

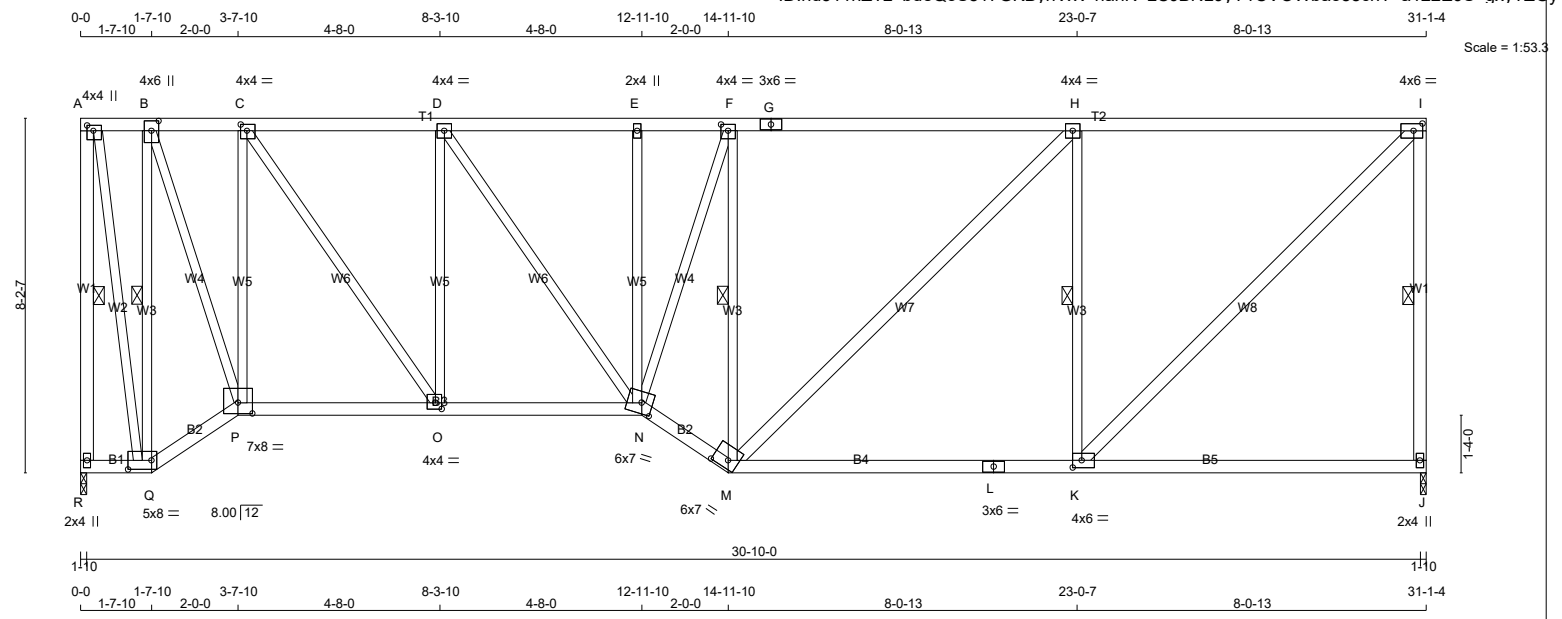

TOTAL WEIGHT = 178 lb

[M]

LUMBER

N. L. G. A. RULES

CHORDS	SIZE		LUMBER	DESCR.
R - A	2x4	DRY	No.2	SPF
A - G	2x4	DRY	No.2	SPF
G - I	2x4	DRY	No.2	SPF
J - I	2x4	DRY	No.2	SPF
R - Q	2x4	DRY	No.2	SPF
Q - P	2x4	DRY	No.2	SPF
P - N	2x4	DRY	No.2	SPF
N - M	2x4	DRY	No.2	SPF
M - L	2x4	DRY	No.2	SPF
L - J	2x4	DRY	No.2	SPF
ALL WEBS EXCEPT	2x3	DRY	No.2	SPF
M - H	2x4	DRY	No.2	SPF
K - I	2x4	DRY	No.2	SPF

DRY: SEASONED LUMBER.

PLATES (table is in inches)

JT	TYPE	PLATES	W	LEN	Y	X
A	TMVW+p	MT20	4.0	4.0	1.50	1.75
B	TMWW+t	MT20	4.0	6.0	2.75	2.00
C	TMWW-t	MT20	4.0	4.0	1.75	1.75
D	TMWW-t	MT20	4.0	4.0		
E	TMW+w	MT20	2.0	4.0		
F	TMWW-t	MT20	4.0	4.0	1.75	2.00
G	TS-t	MT20	3.0	6.0		
H	TMWW-t	MT20	4.0	4.0		
I	TMVW-t	MT20	4.0	6.0	2.00	2.50
J	BMV1+p	MT20	2.0	4.0		
K	BMWW-t	MT20	4.0	6.0	2.00	2.50
L	BS-t	MT20	3.0	6.0		
M	BBWW-h	MT20	6.0	7.0	2.25	4.25
N	BBWWW-m	MT20	6.0	7.0	3.00	3.00
O	BMWW-t	MT20	4.0	4.0	1.75	1.75
P	BBWW-l	MT20	7.0	8.0	3.00	4.00
Q	BBWW-l	MT20	5.0	8.0	2.50	6.50
R	BMV1+p	MT20	2.0	4.0		

LATERAL BRACE(S) SHOWN SHALL BE 2X4 SPF#2

DIMENSIONS, SUPPORTS AND LOADINGS SPECIFIED BY FABRICATOR TO BE VERIFIED BY BUILDING DESIGNER

BEARINGS

JT	FACTORED GROSS REACTION VERT	HORZ	MAXIMUM FACTORED GROSS REACTION DOWN	HORZ	UPLIFT	INPUT BRG IN-SX	REQRD BRG IN-SX
R	1500	0	1500	0	0	1-10	1-10
J	1500	0	1500	0	0	1-10	1-10

UNFACTORED REACTIONS

JT	1ST LCASE COMBINED	MAX./MIN. COMPONENT REACTIONS SNOW	LIVE	PERM.LIVE	WIND	DEAD	SOIL
R	1070	653 / 0	0 / 0	0 / 0	0 / 0	417 / 0	0 / 0
J	1070	653 / 0	0 / 0	0 / 0	0 / 0	417 / 0	0 / 0

BEARING MATERIAL TO BE SPF NO.2 OR BETTER AT JOINT(S) R, J

BRACING

TOP CHORD TO BE SHEATHED OR MAX. PURLIN SPACING = 3.78 FT.
MAX. UNBRACED BOTTOM CHORD LENGTH = 10.00 FT OR RIGID CEILING DIRECTLY APPLIED.

ALL PITCH BREAKS AND PERIMETER CORNER JOINTS MUST BE LATERALLY RESTRAINED.

1 LATERAL BRACE(S) AT 1/ 2 LENGTH OF A-R, I-J, B-Q, F-M, H-K.

END VERTICAL(S) MUST BE SHEATHED OR HAVE BRACES AS INDICATED IN THE MAX. UNBRACED LENGTH COLUMN OF THE TABLE BELOW

LOADING

TOTAL LOAD CASES: (4)

CHORDS

MEMB. FR-TO	MAX. FACTORED FORCE (LBS)	FACTORED VERT. LOAD (PLF) FROM	TO	LC1 CSI (LC)	MAX UNBRAC LENGTH
R- A	-1485 / 0	0.0	0.0	0.45 (1)	5.38
A- B	-288 / 0	-78.0	-78.0	0.08 (1)	6.25
B- C	-744 / 0	-78.0	-78.0	0.12 (1)	6.25
C- D	-1419 / 0	-78.0	-78.0	0.27 (1)	5.18
D- E	-1735 / 0	-78.0	-78.0	0.29 (1)	4.77
E- F	-1733 / 0	-78.0	-78.0	0.41 (1)	4.54
F- G	-1513 / 0	-78.0	-78.0	0.99 (1)	3.78
G- H	-1513 / 0	-78.0	-78.0	0.99 (1)	3.78
H- I	-1221 / 0	-78.0	-78.0	0.94 (1)	4.19
J- I	-1443 / 0	0.0	0.0	0.44 (1)	5.44
R- Q	0 / 0	-18.5	-18.5	0.01 (4)	10.00
Q- P	0 / 321	-18.5	-18.5	0.06 (1)	10.00
P- O	0 / 764	-18.5	-18.5	0.18 (4)	10.00
O- N	0 / 1419	-18.5	-18.5	0.28 (1)	10.00
N- M	0 / 1799	-18.5	-18.5	0.30 (1)	10.00
M- L	0 / 1221	-18.5	-18.5	0.46 (4)	10.00
L- K	0 / 1221	-18.5	-18.5	0.46 (4)	10.00
K- J	0 / 0	-18.5	-18.5	0.35 (4)	10.00

WEBS

MEMB. FR-TO	MAX. FACTORED FORCE (LBS)	MAX CSI (LC)
A- Q	0 / 1418	0.32 (1)
Q- B	-1533 / 0	0.65 (1)
B- P	0 / 1561	0.35 (1)
P- C	-1253 / 0	1.00 (1)
C- O	0 / 1150	0.26 (1)
O- D	-848 / 0	0.68 (1)
D- N	0 / 546	0.12 (1)
N- E	-126 / 0	0.10 (1)
N- F	0 / 773	0.17 (1)
M- F	-1206 / 0	0.51 (1)
M- H	0 / 409	0.07 (1)
K- H	-1015 / 0	0.43 (1)
K- I	0 / 1710	0.27 (1)

DESIGN CRITERIA

SPECIFIED LOADS:

TOP CH.	LL	=	21.0	PSF
	DL	=	6.0	PSF
BOT CH.	LL	=	0.0	PSF
	DL	=	7.4	PSF
TOTAL LOAD		=	34.4	PSF

SPACING = 24.0 IN. C/C

LOADING IN FLAT SECTION BASED ON A SLOPE OF 2.00/12 MINIMUM

THIS TRUSS IS DESIGNED FOR RESIDENTIAL OR SMALL BUILDING REQUIREMENTS OF PART 9, NBCC 2015

THIS DESIGN COMPLIES WITH:
- PART 9 OF BCBC 2018 , ABC 2019
- PART 9 OF OBC 2012 (2019 AMENDMENT)
- CSA 086-14
- TPIC 2014

(55 % OF 23.0 P.S.F. G.S.L. PLUS 8.4 P.S.F. RAIN LOAD) EQUALS 21.0 P.S.F. SPECIFIED ROOF LIVE LOAD

ALLOWABLE DEFL.(LL)= L/360 (1.04")
CALCULATED VERT. DEFL.(LL) = L/ 999 (0.11")
ALLOWABLE DEFL.(TL)= L/360 (1.04")
CALCULATED VERT. DEFL.(TL) = L/ 999 (0.25")

CSI: TC=0.99/1.00 (F-H:1) , BC=0.46/1.00 (K-M:4) , WB=1.00/1.00 (C-P:1) , SSI=0.30/1.00 (H-I:1)

DOL LUMBER=1.00 NAIL=1.00 LS BEND=1.10 COMP=1.10 SHEAR=1.10 TENS= 1.10

COMPANION LIVE LOAD FACTOR = 1.00

TRUSS PLATE MANUFACTURER IS NOT RESPONSIBLE FOR QUALITY CONTROL IN THE TRUSS MANUFACTURING PLANT .

NAIL VALUES

PLATE	GRIP(DRY) (PSI) MAX	MIN	SHEAR (PLI) MAX	MIN	SECTION (PLI) MAX	MIN
MT20	650	371	1747	788	1987	1873

PLATE PLACEMENT TOL. = 0.250 inches

PLATE ROTATION TOL. = 5.0 Deg.

JSI GRIP= 0.89 (A) (INPUT = 0.90)
JSI METAL= 0.35 (M) (INPUT = 1.00)

JOB NAME	TRUSS NAME	QUANTITY	PLY	JOB DESC.		DRWG NO.
336335	H223T		1	TRUSS DESC.	JT 45147	E21104183

Alpa Roof Truss, Maple

Version 8.420 S Jan 21 2021 MiTek Industries, Inc. Thu Oct 14 08:52:38 2021 Page 1

ID:hd511hZTz bdeQoS817GKByhVxV-SJb7yGhLJ9xFIxFxUsFVLksrCRov?ayjMzYDqxyTZHd

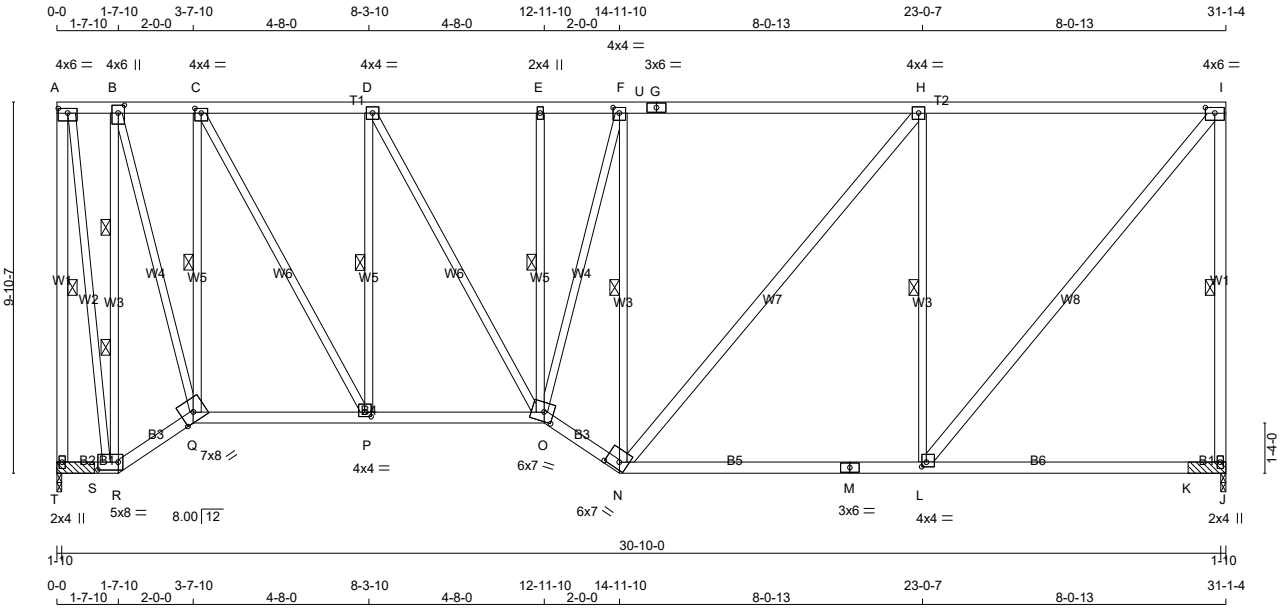

TOTAL WEIGHT = 3 X 201 = 603 lb

[M]

LUMBER

N. L. G. A. RULES

CHORDS	SIZE		LUMBER	DESCR.
T - A	2x4	DRY	No.2	SPF
A - G	2x4	DRY	1650F 1.5E	SPF
G - I	2x4	DRY	1650F 1.5E	SPF
J - I	2x4	DRY	No.2	SPF
T - R	2x4	DRY	No.2	SPF
R - Q	2x4	DRY	No.2	SPF
Q - O	2x4	DRY	No.2	SPF
O - N	2x4	DRY	No.2	SPF
N - M	2x4	DRY	No.2	SPF
M - J	2x4	DRY	No.2	SPF
ALL WEBS	2x3	DRY	No.2	SPF
EXCEPT				
N - H	2x4	DRY	No.2	SPF
L - I	2x4	DRY	No.2	SPF

DRY: SEASONED LUMBER.

PLATES (table is in inches)

JT	TYPE	PLATES	W	LEN	Y	X
A	TMVW-t	MT20	4.0	6.0	1.50	3.00
B	TMWW+t	MT20	4.0	6.0	2.50	2.00
C	TMWW-t	MT20	4.0	4.0	1.50	2.00
D	TMWW-t	MT20	4.0	4.0		
E	TMW+w	MT20	2.0	4.0		
F	TMWW-t	MT20	4.0	4.0	1.75	2.00
G	TS-t	MT20	3.0	6.0		
H	TMWW-t	MT20	4.0	4.0		
I	TMVW-t	MT20	4.0	6.0	1.75	3.00
J	BMV1+p	MT20	2.0	4.0		
L	BMWW-t	MT20	4.0	4.0	1.50	1.50
M	BS-t	MT20	3.0	6.0		
N	BBWW-h	MT20	6.0	7.0	2.25	4.25
O	BBWWW-m	MT20	6.0	7.0	3.00	3.00
P	BMWW-t	MT20	4.0	4.0	1.50	2.00
Q	BBWW-h	MT20	7.0	8.0	Edge	
R	BBWW-l	MT20	5.0	8.0	2.50	6.50
T	BMV1+p	MT20	2.0	4.0		

Edge - INDICATES REFERENCE CORNER OF PLATE TOUCHES EDGE OF CHORD.

LATERAL BRACE(S) SHOWN SHALL BE 2X4 SPF#2

DIMENSIONS, SUPPORTS AND LOADINGS SPECIFIED BY FABRICATOR TO BE VERIFIED BY BUILDING DESIGNER

BEARINGS

JT	FACTORED GROSS REACTION VERT	HORZ	MAXIMUM FACTORED GROSS REACTION DOWN	HORZ	UPLIFT	INPUT BRG IN-SX	REQRD BRG IN-SX
T	1617	0	1617	0	0	1-10	1-10 & BLOCK
J	1617	0	1617	0	0	1-10	1-10 & BLOCK

UNFACTORED REACTIONS

JT	1ST LCASE COMBINED	MAX./MIN. COMPONENT REACTIONS SNOW	LIVE	PERM.LIVE	WIND	DEAD	SOIL
T	1163	653 / 0	0 / 0	0 / 0	0 / 0	510 / 0	0 / 0
J	1163	653 / 0	0 / 0	0 / 0	0 / 0	510 / 0	0 / 0

BEARING MATERIAL TO BE SPF NO.2 OR BETTER AT JOINT(S) T, J

2x4 DRY SPF No.2 BEARING BLOCK 12" LONG AT JT. T ATTACHED TO FRONT SIDE WITH 2 ROWS OF (0.122"X3") SPIRAL NAILS SPACED 3" C.C. 8 NAILS TOTAL.

2x4 DRY SPF No.2 BEARING BLOCK 12" LONG AT JT. J ATTACHED TO FRONT SIDE WITH 2 ROWS OF (0.122"X3") SPIRAL NAILS SPACED 3" C.C. 8 NAILS TOTAL.

BRACING

FOR SECTION A-I, MAX. PURLIN SPACING = 2.00 FT.
FOR OTHER SECTIONS, TOP CHORD TO BE SHEATHED OR MAX. PURLIN SPACING = 0.00 FT.
MAX. UNBRACED BOTTOM CHORD LENGTH = 10.00 FT OR RIGID CEILING DIRECTLY APPLIED.

ALL PITCH BREAKS AND PERIMETER CORNER JOINTS MUST BE LATERALLY RESTRAINED.

1 LATERAL BRACE(S) AT 1/ 2 LENGTH OF A-T, I-J, C-Q, D-P, E-O, F-N, H-L.
2 LATERAL BRACE(S) AT 1/ 3 LENGTH OF B-R.

END VERTICAL(S) MUST BE SHEATHED OR HAVE BRACES AS INDICATED IN THE MAX. UNBRACED LENGTH COLUMN OF THE TABLE BELOW

LOADING

TOTAL LOAD CASES: (4)

CHORDS

MEMB. FR-TO	MAX. FACTORED FORCE (LBS)	FACTORED VERT. LOAD LC1 (PLF) FROM	TO	MAX CSI (LC)	MAX. UNBRAC LENGTH
T- A	-1602 / 0	0.0	0.0	0.75 (1)	5.22
A- B	-255 / 0	-85.5	-85.5	0.09 (1)	2.00
B- C	-639 / 0	-85.5	-85.5	0.10 (1)	2.00
C- D	-1220 / 0	-85.5	-85.5	0.22 (1)	2.00
D- E	-1492 / 0	-85.5	-85.5	0.23 (1)	2.00
E- F	-1490 / 0	-85.5	-85.5	0.35 (1)	2.00
F- U	-1347 / 0	-85.5	-85.5	0.82 (1)	2.00
U- G	-1347 / 0	-85.5	-85.5	0.82 (1)	2.00
G- H	-1347 / 0	-85.5	-85.5	0.82 (1)	2.00
H- I	-1087 / 0	-85.5	-85.5	0.79 (1)	2.00
J- I	-1560 / 0	0.0	0.0	0.73 (1)	5.27
T- S	0 / 0	-18.5	-18.5	0.01 (4)	10.00
S- R	0 / 0	-18.5	-18.5	0.01 (4)	10.00
R- Q	0 / 285	-18.5	-18.5	0.06 (1)	10.00
Q- P	0 / 656	-18.5	-18.5	0.18 (4)	10.00
P- O	0 / 1220	-18.5	-18.5	0.25 (1)	10.00
O- N	0 / 1605	-18.5	-18.5	0.27 (1)	10.00
N- M	0 / 1087	-18.5	-18.5	0.46 (4)	10.00
M- L	0 / 1087	-18.5	-18.5	0.46 (4)	10.00
L- K	0 / 0	-18.5	-18.5	0.35 (4)	10.00
K- J	0 / 0	-18.5	-18.5	0.35 (4)	10.00

WEBS

MEMB. FR-TO	MAX. FACTORED FORCE (LBS)	MAX CSI (LC)
A- R	0 / 1510	0.34 (1)
R- B	-1613 / 0	0.96 (1)
B- Q	0 / 1622	0.37 (1)
Q- C	-1359 / 0	0.63 (1)
C- P	0 / 1166	0.26 (1)
P- D	-922 / 0	0.43 (1)
D- O	0 / 550	0.12 (1)
O- E	-137 / 0	0.06 (1)
O- F	0 / 625	0.14 (1)
N- F	-1121 / 0	0.74 (1)
N- H	0 / 404	0.06 (1)
L- H	-1108 / 0	0.73 (1)
L- I	0 / 1687	0.27 (1)

DESIGN CRITERIA

SPECIFIED LOADS:

TOP CH.	LL	=	21.0	PSF
	DL	=	6.0	PSF
BOT CH.	LL	=	0.0	PSF
	DL	=	7.4	PSF
TOTAL LOAD		=	34.4	PSF

SPACING = 24.0 IN. C/C

LOADING IN FLAT SECTION BASED ON PIGGYBACK TRUSS WITH SLOPES OF 6.00/12 AND -6.00/12 AND RESPECTIVE HEEL HEIGHTS OF 0-0 AND 0-0 AND AN ADDITIONAL DEAD LOAD OF 3.0 P.S.F.

THIS TRUSS IS DESIGNED FOR RESIDENTIAL OR SMALL BUILDING REQUIREMENTS OF PART 9, NBCC 2015

THIS DESIGN COMPLIES WITH:
- PART 9 OF BCBC 2018 , ABC 2019
- PART 9 OF OBC 2012 (2019 AMENDMENT)
- CSA 086-14
- TPIC 2014

(55 % OF 23.0 P.S.F. G.S.L. PLUS 8.4 P.S.F. RAIN LOAD) EQUALS 21.0 P.S.F. SPECIFIED ROOF LIVE LOAD

ALLOWABLE DEFL.(LL)= L/360 (1.04")
CALCULATED VERT. DEFL.(LL) = L/ 999 (0.11")
ALLOWABLE DEFL.(TL)= L/360 (1.04")
CALCULATED VERT. DEFL.(TL) = L/ 999 (0.24")

CSI: TC=0.82/1.00 (F-H:1) , BC=0.46/1.00 (L-N:4) , WB=0.96/1.00 (B-R:1) , SSI=0.33/1.00 (H-I:1)

DOL LUMBER=1.00 NAIL=1.00 LS BEND=1.10 COMP=1.10 SHEAR=1.10 TENS= 1.10

COMPANION LIVE LOAD FACTOR = 1.00

TRUSS PLATE MANUFACTURER IS NOT RESPONSIBLE FOR QUALITY CONTROL IN THE TRUSS MANUFACTURING PLANT .

NAIL VALUES

PLATE	GRIP(DRY) (PSI) MAX	MIN	SHEAR (PLI) MAX	MIN	SECTION (PLI) MAX	MIN
MT20	650	371	1747	788	1987	1873

PLATE PLACEMENT TOL. = 0.250 inches

PLATE ROTATION TOL. = 5.0 Deg.

JSI GRIP= 0.90 (L) (INPUT = 0.90)
JSI METAL= 0.38 (L) (INPUT = 1.00)

JOB NAME	TRUSS NAME	QUANTITY	PLY	JOB DESC.		DRWG NO.
336335	H224P		1	TRUSS DESC.	JT 45147	E21104184

Alpa Roof Truss, Maple

Version 8.420 S Jan 21 2021 MiTek Industries, Inc. Thu Oct 14 08:53:23 2021 Page 1

ID:hd511hZTz_bdeQoS817GKByhVxV-dzp7OfEZj_ctCrBbdpZ3gDDZjaBa28BLiTx5kqyTZGw

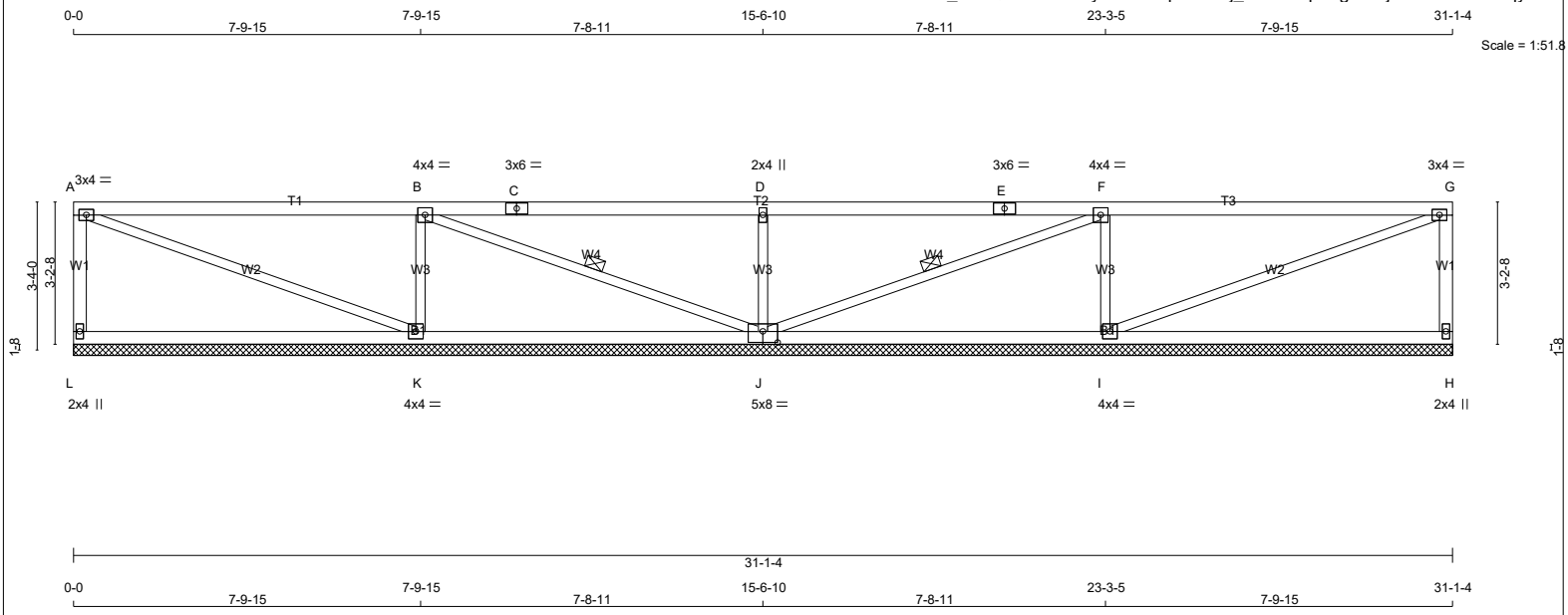

TOTAL WEIGHT = 109 lb

[M]

LUMBER

N. L. G. A. RULES

CHORDS	SIZE		LUMBER	DESCR.
L - A	2x4	DRY	No.2	SPF
A - C	2x4	DRY	No.2	SPF
C - E	2x4	DRY	No.2	SPF
E - G	2x4	DRY	No.2	SPF
H - G	2x4	DRY	No.2	SPF
L - J	2x4	DRY	No.2	SPF
J - H	2x4	DRY	No.2	SPF
ALL WEBS	2x3	DRY	No.2	SPF

DRY: SEASONED LUMBER.

PLATES (table is in inches)

JT	TYPE	PLATES	W	LEN	Y	X
A	TMVW-t	MT20	3.0	4.0		
B	TMWW-t	MT20	4.0	4.0		
C	TS-t	MT20	3.0	6.0		
D	TMW+w	MT20	2.0	4.0		
E	TS-t	MT20	3.0	6.0		
F	TMWW-t	MT20	4.0	4.0		
G	TMVW-t	MT20	3.0	4.0		
H	BMV1+p	MT20	2.0	4.0		
I	BMWW1-t	MT20	4.0	4.0		
J	BSWWW1-l	MT20	5.0	8.0	3.00	4.00
K	BMWW1-t	MT20	4.0	4.0		
L	BMV1+p	MT20	2.0	4.0		

LATERAL BRACE(S) SHOWN SHALL BE 2X4 SPF#2

DIMENSIONS, SUPPORTS AND LOADINGS SPECIFIED BY FABRICATOR TO BE VERIFIED BY BUILDING DESIGNER

BEARINGS

JT	FACTORED GROSS REACTION VERT	HORZ	MAXIMUM FACTORED GROSS REACTION DOWN	HORZ	UPLIFT	INPUT BRG IN-SX	REQRD BRG IN-SX
L	296	0	296	0	0	31-1-4 (15-6-10)	1-8
H	296	0	296	0	0	31-1-4 (15-6-10)	1-8
K	854	0	854	0	0	31-1-4 (15-6-10)	1-8
J	701	0	701	0	0	31-1-4 (15-6-10)	1-8
I	854	0	854	0	0	31-1-4 (15-6-10)	1-8

VALUE IN PARENTHESIS INDICATES EFFECTIVE BEARING LENGTH

UNFACTORED REACTIONS

JT	1ST LCASE COMBINED	MAX./MIN. COMPONENT REACTIONS SNOW	LIVE	PERM.LIVE	WIND	DEAD	SOIL
L	211	130 / 0	0 / 0	0 / 0	0 / 0	81 / 0	0 / 0
H	211	130 / 0	0 / 0	0 / 0	0 / 0	81 / 0	0 / 0
K	610	363 / 0	0 / 0	0 / 0	0 / 0	248 / 0	0 / 0
J	497	320 / 0	0 / 0	0 / 0	0 / 0	177 / 0	0 / 0
I	610	363 / 0	0 / 0	0 / 0	0 / 0	248 / 0	0 / 0

BEARING MATERIAL TO BE SPF NO.2 OR BETTER AT JOINT(S) L, H, K, J, I

BRACING

TOP CHORD TO BE SHEATHED OR MAX. PURLIN SPACING = 10.00 FT.
MAX. UNBRACED BOTTOM CHORD LENGTH = 10.00 FT OR RIGID CEILING DIRECTLY APPLIED.

ALL PITCH BREAKS AND PERIMETER CORNER JOINTS MUST BE LATERALLY RESTRAINED.

1 LATERAL BRACE(S) AT 1/ 2 LENGTH OF B-J, F-J.

END VERTICAL(S) MUST BE SHEATHED OR HAVE BRACES AS INDICATED IN THE MAX. UNBRACED LENGTH COLUMN OF THE TABLE BELOW

LOADING

TOTAL LOAD CASES: (4)

CHORDS

MEMB. FR-TO	MAX. FACTORED FORCE (LBS)	FACTORED VERT. LOAD LC1 (PLF) FROM	TO	MAX CSI (LC)	MAX. UNBRAC LENGTH
L- A	-242 / 0	0.0	0.0	0.04 (1)	7.81
A- B	-4 / 0	-78.0	-78.0	0.69 (1)	10.00
B- C	0 / 47	-78.0	-78.0	0.70 (1)	10.00
C- D	0 / 47	-78.0	-78.0	0.70 (1)	10.00
D- E	0 / 47	-78.0	-78.0	0.70 (1)	10.00
E- F	0 / 47	-78.0	-78.0	0.70 (1)	10.00
F- G	-4 / 0	-78.0	-78.0	0.69 (1)	10.00
H- G	-242 / 0	0.0	0.0	0.04 (1)	7.81
L- K	0 / 0	-18.5	-18.5	0.33 (4)	10.00
K- J	0 / 4	-18.5	-18.5	0.33 (4)	10.00
J- I	0 / 4	-18.5	-18.5	0.33 (4)	10.00
I- H	0 / 0	-18.5	-18.5	0.33 (4)	10.00

WEBS

MEMB. FR-TO	MAX. FACTORED FORCE (LBS)	MAX CSI (LC)
A- K	0 / 4	0.00 (1)
K- B	-675 / 0	0.13 (1)
B- J	-55 / 0	0.03 (1)
J- D	-556 / 0	0.10 (1)
J- F	-55 / 0	0.03 (1)
I- F	-675 / 0	0.13 (1)
I- G	0 / 4	0.00 (1)

DESIGN CRITERIA

SPECIFIED LOADS:

TOP CH.	LL	=	21.0	PSF
	DL	=	6.0	PSF
BOT CH.	LL	=	0.0	PSF
	DL	=	7.4	PSF
TOTAL LOAD		=	34.4	PSF

SPACING = 24.0 IN. C/C

LOADING IN FLAT SECTION BASED ON A SLOPE OF 2.00/12 MINIMUM

THIS TRUSS IS DESIGNED FOR RESIDENTIAL OR SMALL BUILDING REQUIREMENTS OF PART 9, NBCC 2015

THIS DESIGN COMPLIES WITH:
- PART 9 OF BCBC 2018 , ABC 2019
- PART 9 OF OBC 2012 (2019 AMENDMENT)
- CSA 086-14
- TPIC 2014

(55 % OF 23.0 P.S.F. G.S.L. PLUS 8.4 P.S.F. RAIN LOAD) EQUALS 21.0 P.S.F. SPECIFIED ROOF LIVE LOAD

CSI: TC=0.70/1.00 (B-D:1) , BC=0.33/1.00 (K-L:4) , WB=0.13/1.00 (B-K:1) , SSI=0.29/1.00 (A-B:1)

DOL LUMBER=1.00 NAIL=1.00 LS BEND=1.10 COMP=1.10 SHEAR=1.10 TENS= 1.10

COMPANION LIVE LOAD FACTOR = 1.00

TRUSS PLATE MANUFACTURER IS NOT RESPONSIBLE FOR QUALITY CONTROL IN THE TRUSS MANUFACTURING PLANT .

NAIL VALUES

PLATE	GRIP(DRY) (PSI) MAX	MIN	SHEAR (PLI) MAX	MIN	SECTION (PLI) MAX	MIN
MT20	650	371	1747	788	1987	1873

PLATE PLACEMENT TOL. = 0.250 inches

PLATE ROTATION TOL. = 5.0 Deg.

JSI GRIP= 0.82 (G) (INPUT = 0.90)
JSI METAL= 0.30 (J) (INPUT = 1.00)

JOB NAME	TRUSS NAME	QUANTITY	PLY	JOB DESC.		DRWG NO.
336335	H225P		1	TRUSS DESC.	JT 45147	E21104185

Alpa Roof Truss, Maple

Version 8.420 S Jan 21 2021 MiTek Industries, Inc. Thu Oct 14 08:53:24 2021 Page 1

ID:hd511hZTz_bdeQoS817GKByhVxV-69NVc?FCUIkkp?mnBW4ICQmjM_XpnZyUx7heHGyTZGv

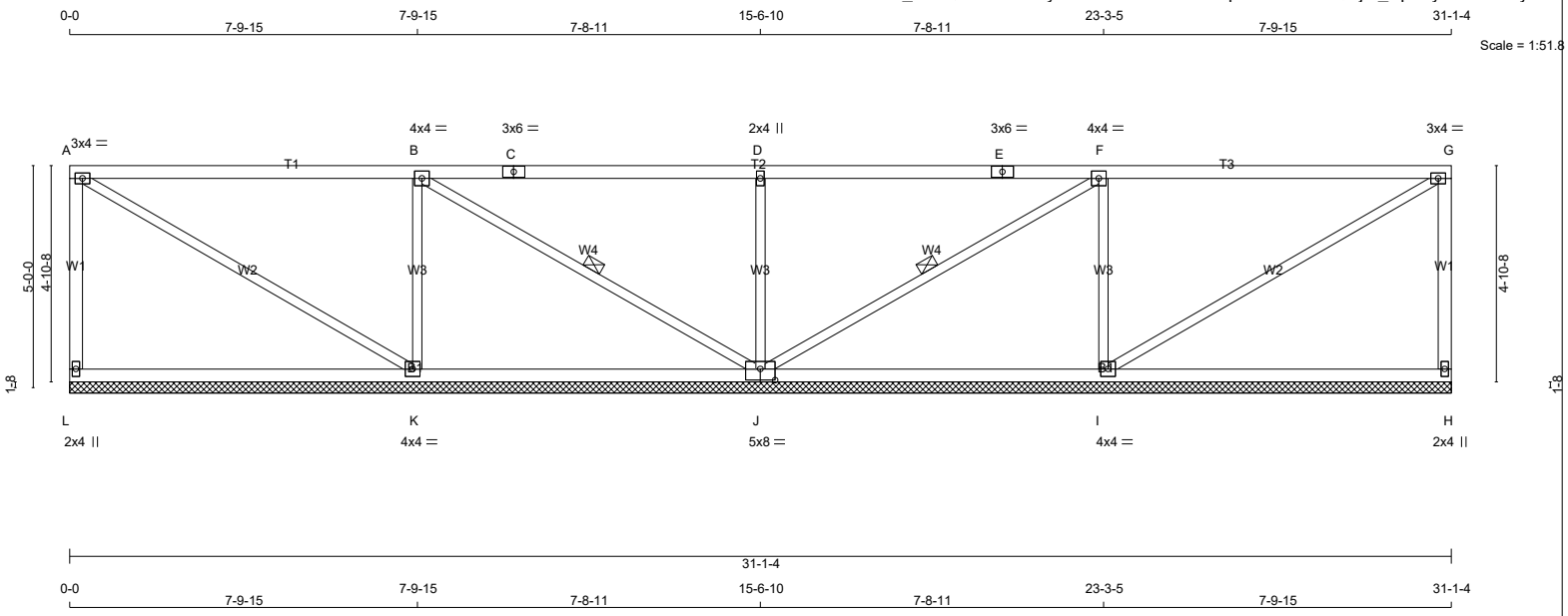

TOTAL WEIGHT = 119 lb

LUMBER

N. L. G. A. RULES

CHORDS	SIZE		LUMBER	DESCR.
L - A	2x4	DRY	No.2	SPF
A - C	2x4	DRY	No.2	SPF
C - E	2x4	DRY	No.2	SPF
E - G	2x4	DRY	No.2	SPF
H - G	2x4	DRY	No.2	SPF
L - J	2x4	DRY	No.2	SPF
J - H	2x4	DRY	No.2	SPF
ALL WEBS	2x3	DRY	No.2	SPF

DRY: SEASONED LUMBER.

PLATES (table is in inches)

JT	TYPE	PLATES	W	LEN	Y	X
A	TMVW-t	MT20	3.0	4.0		
B	TMWW-t	MT20	4.0	4.0		
C	TS-t	MT20	3.0	6.0		
D	TMW+w	MT20	2.0	4.0		
E	TS-t	MT20	3.0	6.0		
F	TMWW-t	MT20	4.0	4.0		
G	TMVW-t	MT20	3.0	4.0		
H	BMV1+p	MT20	2.0	4.0		
I	BMWW1-t	MT20	4.0	4.0		
J	BSWWW1-l	MT20	5.0	8.0	3.00	4.00
K	BMWW1-t	MT20	4.0	4.0		
L	BMV1+p	MT20	2.0	4.0		

LATERAL BRACE(S) SHOWN SHALL BE 2X4 SPF#2

DIMENSIONS, SUPPORTS AND LOADINGS SPECIFIED BY FABRICATOR TO BE VERIFIED BY BUILDING DESIGNER

BEARINGS

JT	FACTORED GROSS REACTION VERT	HORZ	MAXIMUM FACTORED GROSS REACTION DOWN	HORZ	UPLIFT	INPUT BRG IN-SX	REQRD BRG IN-SX
L	297	0	297	0	0	31-1-4 (15-6-10)	108
H	297	0	297	0	0	31-1-4 (15-6-10)	108
K	814	0	814	0	0	31-1-4 (15-6-10)	108
J	780	0	780	0	0	31-1-4 (15-6-10)	108
I	814	0	814	0	0	31-1-4 (15-6-10)	108

VALUE IN PARENTHESIS INDICATES EFFECTIVE BEARING LENGTH

UNFACTORED REACTIONS

JT	1ST LCASE COMBINED	MAX./MIN. COMPONENT REACTIONS SNOW	LIVE	PERM.LIVE	WIND	DEAD	SOIL
L	211	130 / 0	0 / 0	0 / 0	0 / 0	81 / 0	0 / 0
H	211	130 / 0	0 / 0	0 / 0	0 / 0	81 / 0	0 / 0
K	583	341 / 0	0 / 0	0 / 0	0 / 0	241 / 0	0 / 0
J	551	362 / 0	0 / 0	0 / 0	0 / 0	189 / 0	0 / 0
I	583	341 / 0	0 / 0	0 / 0	0 / 0	241 / 0	0 / 0

BEARING MATERIAL TO BE SPF NO.2 OR BETTER AT JOINT(S) L, H, K, J, I

BRACING

TOP CHORD TO BE SHEATHED OR MAX. PURLIN SPACING = 10.00 FT.
MAX. UNBRACED BOTTOM CHORD LENGTH = 10.00 FT OR RIGID CEILING DIRECTLY APPLIED.

ALL PITCH BREAKS AND PERIMETER CORNER JOINTS MUST BE LATERALLY RESTRAINED.

1 LATERAL BRACE(S) AT 1/ 2 LENGTH OF B-J, F-J.

END VERTICAL(S) MUST BE SHEATHED OR HAVE BRACES AS INDICATED IN THE MAX. UNBRACED LENGTH COLUMN OF THE TABLE BELOW

LOADING

TOTAL LOAD CASES: (4)

CHORDS

MEMB. FR-TO	MAX. FACTORED FORCE (LBS)	FACTORED VERT. LOAD LC1 (PLF) FROM	TO	MAX CSI (LC)	MAX. UNBRAC LENGTH
L- A	-242 / 0	0.0	0.0	0.09 (1)	7.81
A- B	-3 / 0	-78.0	-78.0	0.69 (1)	10.00
B- C	0 / 96	-78.0	-78.0	0.71 (1)	10.00
C- D	0 / 96	-78.0	-78.0	0.71 (1)	10.00
D- E	0 / 96	-78.0	-78.0	0.71 (1)	10.00
E- F	0 / 96	-78.0	-78.0	0.71 (1)	10.00
F- G	-3 / 0	-78.0	-78.0	0.69 (1)	10.00
H- G	-242 / 0	0.0	0.0	0.09 (1)	7.81
L- K	0 / 0	-18.5	-18.5	0.33 (4)	10.00
K- J	0 / 3	-18.5	-18.5	0.33 (4)	10.00
J- I	0 / 3	-18.5	-18.5	0.33 (4)	10.00
I- H	0 / 0	-18.5	-18.5	0.33 (4)	10.00

WEBS

MEMB. FR-TO	MAX. FACTORED FORCE (LBS)	MAX CSI (LC)
A- K	0 / 3	0.00 (1)
K- B	-636 / 0	0.22 (1)
B- J	-115 / 0	0.06 (1)
J- D	-556 / 0	0.19 (1)
J- F	-115 / 0	0.06 (1)
I- F	-636 / 0	0.22 (1)
I- G	0 / 3	0.00 (1)

DESIGN CRITERIA

SPECIFIED LOADS:

TOP CH.	LL	=	21.0	PSF
	DL	=	6.0	PSF
BOT CH.	LL	=	0.0	PSF
	DL	=	7.4	PSF
TOTAL LOAD		=	34.4	PSF

SPACING = 24.0 IN. C/C

LOADING IN FLAT SECTION BASED ON A SLOPE OF 2.00/12 MINIMUM

THIS TRUSS IS DESIGNED FOR RESIDENTIAL OR SMALL BUILDING REQUIREMENTS OF PART 9, NBCC 2015

THIS DESIGN COMPLIES WITH:
- PART 9 OF BCBC 2018 , ABC 2019
- PART 9 OF OBC 2012 (2019 AMENDMENT)
- CSA 086-14
- TPIC 2014

(55 % OF 23.0 P.S.F. G.S.L. PLUS 8.4 P.S.F. RAIN LOAD) EQUALS 21.0 P.S.F. SPECIFIED ROOF LIVE LOAD

CSI: TC=0.71/1.00 (B-D:1) , BC=0.33/1.00 (K-L:4) , WB=0.22/1.00 (B-K:1) , SSI=0.29/1.00 (A-B:1)

DOL LUMBER=1.00 NAIL=1.00 LS BEND=1.10 COMP=1.10 SHEAR=1.10 TENS= 1.10

COMPANION LIVE LOAD FACTOR = 1.00

TRUSS PLATE MANUFACTURER IS NOT RESPONSIBLE FOR QUALITY CONTROL IN THE TRUSS MANUFACTURING PLANT .

NAIL VALUES

PLATE	GRIP(DRY) (PSI) MAX	MIN	SHEAR (PLI) MAX	MIN	SECTION (PLI) MAX	MIN
MT20	650	371	1747	788	1987	1873

PLATE PLACEMENT TOL. = 0.250 inches

PLATE ROTATION TOL. = 5.0 Deg.

JSI GRIP= 0.76 (A) (INPUT = 0.90)
JSI METAL= 0.33 (J) (INPUT = 1.00)

JOB NAME	TRUSS NAME	QUANTITY	PLY	JOB DESC.		DRWG NO.
336335	H226P		1	TRUSS DESC.	JT 45147	E21104186

Alpa Roof Truss, Maple

Version 8.420 S Jan 21 2021 MiTek Industries, Inc. Thu Oct 14 08:53:26 2021 Page 1

ID:hd511hZTz_bdeQoS817GKByhVxV-2YUG1hGS0v_S3JwAIx6mHrr3loCHFQUnORAIL9yTZGt

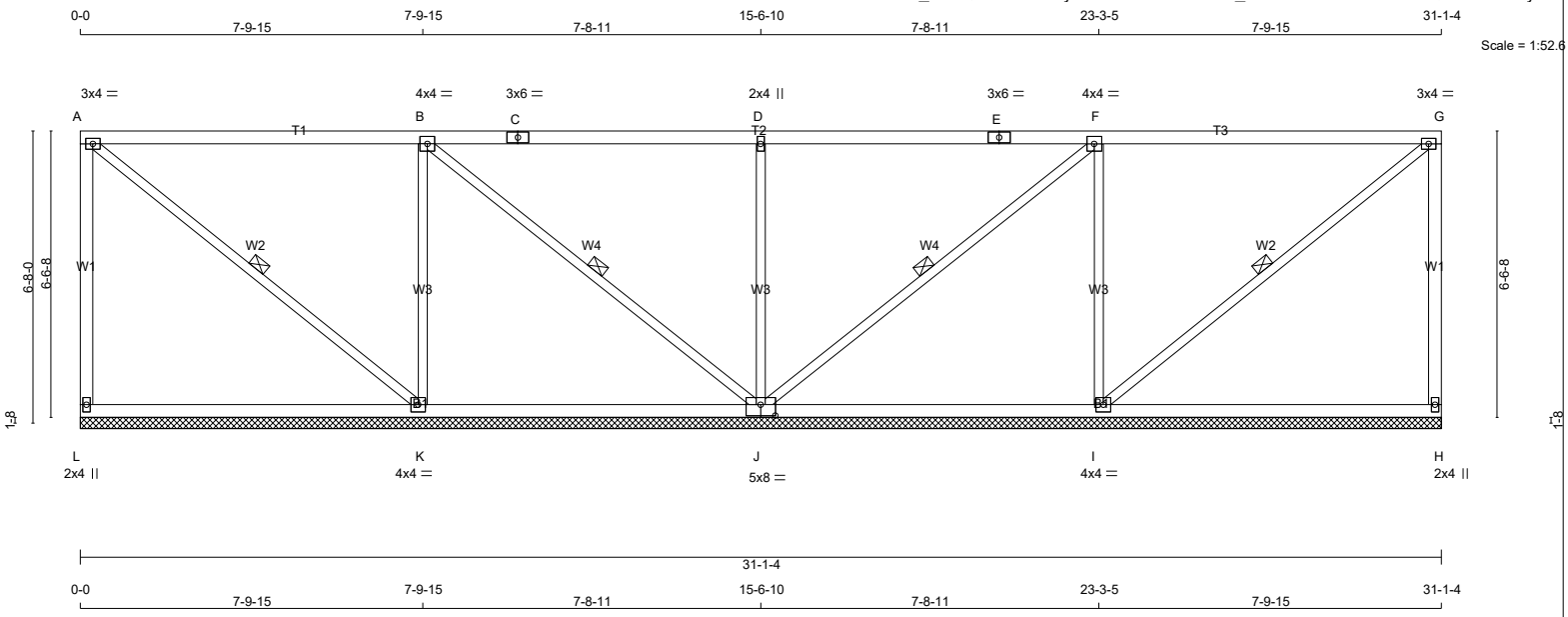

TOTAL WEIGHT = 130 lb

[M]

LUMBER

N. L. G. A. RULES

CHORDS	SIZE		LUMBER	DESCR.
L - A	2x4	DRY	No.2	SPF
A - C	2x4	DRY	No.2	SPF
C - E	2x4	DRY	No.2	SPF
E - G	2x4	DRY	No.2	SPF
H - G	2x4	DRY	No.2	SPF
L - J	2x4	DRY	No.2	SPF
J - H	2x4	DRY	No.2	SPF
ALL WEBS	2x3	DRY	No.2	SPF

DRY: SEASONED LUMBER.

PLATES (table is in inches)

JT	TYPE	PLATES	W	LEN	Y	X
A	TMVW-t	MT20	3.0	4.0		
B	TMWW-t	MT20	4.0	4.0		
C	TS-t	MT20	3.0	6.0		
D	TMW+w	MT20	2.0	4.0		
E	TS-t	MT20	3.0	6.0		
F	TMWW-t	MT20	4.0	4.0		
G	TMVW-t	MT20	3.0	4.0		
H	BMV1+p	MT20	2.0	4.0		
I	BMWW1-t	MT20	4.0	4.0		
J	BSWWW1-l	MT20	5.0	8.0	3.00	4.00
K	BMWW1-t	MT20	4.0	4.0		
L	BMV1+p	MT20	2.0	4.0		

LATERAL BRACE(S) SHOWN SHALL BE 2X4 SPF#2

DIMENSIONS, SUPPORTS AND LOADINGS SPECIFIED BY FABRICATOR TO BE VERIFIED BY BUILDING DESIGNER

BEARINGS

JT	FACTORED GROSS REACTION VERT	HORZ	MAXIMUM FACTORED GROSS REACTION DOWN	HORZ	UPLIFT	INPUT BRG IN-SX	REQRD BRG IN-SX
L	292	0	292	0	0	31-1-4 (15-6-10)	108
H	292	0	292	0	0	31-1-4 (15-6-10)	108
K	768	0	768	0	0	31-1-4 (15-6-10)	108
J	879	0	879	0	0	31-1-4 (15-6-10)	108
I	768	0	768	0	0	31-1-4 (15-6-10)	108

VALUE IN PARENTHESIS INDICATES EFFECTIVE BEARING LENGTH

UNFACTORED REACTIONS

JT	1ST LCASE COMBINED	MAX./MIN. COMPONENT REACTIONS SNOW	LIVE	PERM.LIVE	WIND	DEAD	SOIL
L	208	128 / 0	0 / 0	0 / 0	0 / 0	80 / 0	0 / 0
H	208	128 / 0	0 / 0	0 / 0	0 / 0	80 / 0	0 / 0
K	551	317 / 0	0 / 0	0 / 0	0 / 0	234 / 0	0 / 0
J	620	416 / 0	0 / 0	0 / 0	0 / 0	204 / 0	0 / 0
I	551	317 / 0	0 / 0	0 / 0	0 / 0	234 / 0	0 / 0

BEARING MATERIAL TO BE SPF NO.2 OR BETTER AT JOINT(S) L, H, K, J, I

BRACING

TOP CHORD TO BE SHEATHED OR MAX. PURLIN SPACING = 10.00 FT.
MAX. UNBRACED BOTTOM CHORD LENGTH = 10.00 FT OR RIGID CEILING DIRECTLY APPLIED.

ALL PITCH BREAKS AND PERIMETER CORNER JOINTS MUST BE LATERALLY RESTRAINED.

1 LATERAL BRACE(S) AT 1/ 2 LENGTH OF A-K, B-J, F-J, G-I.

END VERTICAL(S) MUST BE SHEATHED OR HAVE BRACES AS INDICATED IN THE MAX. UNBRACED LENGTH COLUMN OF THE TABLE BELOW

LOADING

TOTAL LOAD CASES: (4)

CHORDS

MEMB. FR-TO	MAX. FACTORED FORCE (LBS)	FACTORED VERT. LOAD LC1 (PLF) FROM	TO	MAX CSI (LC)	MAX. UNBRAC LENGTH
L- A	-238 / 0	0.0	0.0	0.21 (1)	7.81
A- B	0 / 3	-78.0	-78.0	0.69 (1)	10.00
B- C	0 / 137	-78.0	-78.0	0.71 (1)	10.00
C- D	0 / 137	-78.0	-78.0	0.71 (1)	10.00
D- E	0 / 137	-78.0	-78.0	0.71 (1)	10.00
E- F	0 / 137	-78.0	-78.0	0.71 (1)	10.00
F- G	0 / 3	-78.0	-78.0	0.69 (1)	10.00
H- G	-238 / 0	0.0	0.0	0.21 (1)	7.81
L- K	0 / 0	-18.5	-18.5	0.33 (4)	10.00
K- J	-3 / 0	-18.5	-18.5	0.33 (4)	10.00
J- I	-3 / 0	-18.5	-18.5	0.33 (4)	10.00
I- H	0 / 0	-18.5	-18.5	0.33 (4)	10.00

WEBS

MEMB. FR-TO	MAX. FACTORED FORCE (LBS)	MAX CSI (LC)
A- K	-4 / 0	0.00 (1)
K- B	-586 / 0	0.41 (1)
B- J	-173 / 0	0.12 (1)
J- D	-556 / 0	0.39 (1)
J- F	-173 / 0	0.12 (1)
I- F	-586 / 0	0.41 (1)
I- G	-4 / 0	0.00 (1)

DESIGN CRITERIA

SPECIFIED LOADS:

TOP CH.	LL	=	21.0	PSF
	DL	=	6.0	PSF
BOT CH.	LL	=	0.0	PSF
	DL	=	7.4	PSF
TOTAL LOAD		=	34.4	PSF

SPACING = 24.0 IN. C/C

LOADING IN FLAT SECTION BASED ON A SLOPE OF 2.00/12 MINIMUM

THIS TRUSS IS DESIGNED FOR RESIDENTIAL OR SMALL BUILDING REQUIREMENTS OF PART 9, NBCC 2015

THIS DESIGN COMPLIES WITH:
- PART 9 OF BCBC 2018 , ABC 2019
- PART 9 OF OBC 2012 (2019 AMENDMENT)
- CSA 086-14
- TPIC 2014

(55 % OF 23.0 P.S.F. G.S.L. PLUS 8.4 P.S.F. RAIN LOAD) EQUALS 21.0 P.S.F. SPECIFIED ROOF LIVE LOAD

CSI: TC=0.71/1.00 (B-D:1) , BC=0.33/1.00 (K-L:4) , WB=0.41/1.00 (B-K:1) , SSI=0.29/1.00 (A-B:1)

DOL LUMBER=1.00 NAIL=1.00 LS BEND=1.10 COMP=1.10 SHEAR=1.10 TENS= 1.10

COMPANION LIVE LOAD FACTOR = 1.00

TRUSS PLATE MANUFACTURER IS NOT RESPONSIBLE FOR QUALITY CONTROL IN THE TRUSS MANUFACTURING PLANT .

NAIL VALUES

PLATE	GRIP(DRY) (PSI) MAX	MIN	SHEAR (PLI) MAX	MIN	SECTION (PLI) MAX	MIN
MT20	650	371	1747	788	1987	1873

PLATE PLACEMENT TOL. = 0.250 inches

PLATE ROTATION TOL. = 5.0 Deg.

JSI GRIP= 0.75 (A) (INPUT = 0.90)
JSI METAL= 0.38 (J) (INPUT = 1.00)

JOB NAME	TRUSS NAME	QUANTITY	PLY	JOB DESC.		DRWG NO.
336335	H242		1	TRUSS DESC.	JT 45147	E21104188

Alpa Roof Truss, Maple

Version 8.420 S Jan 21 2021 MiTek Industries, Inc. Thu Oct 14 08:53:29 2021 Page 1

ID:hd511hZTz bdeQoS817GKByhVxV-S7AOfiJKJqM0wmelz3fTvUTb2?CrSeXD4POPyUyTZGq

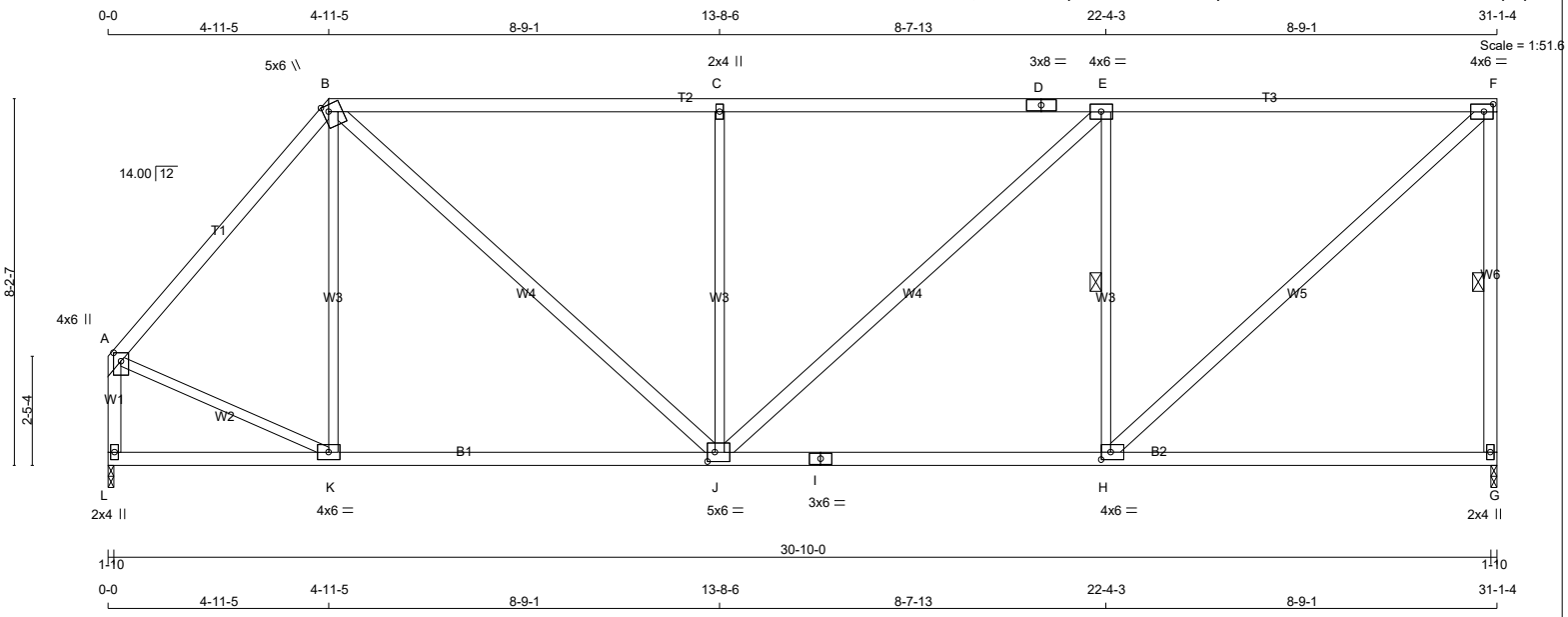

TOTAL WEIGHT = 147 lb [M]

LUMBER

N. L. G. A. RULES

CHORDS	SIZE		LUMBER	DESCR.
A - B	2x4	DRY	No.2	SPF
B - D	2x4	DRY	2100F 1.8E	SPF
D - F	2x4	DRY	2100F 1.8E	SPF
G - F	2x4	DRY	No.2	SPF
L - A	2x4	DRY	No.2	SPF
L - I	2x4	DRY	No.2	SPF
I - G	2x4	DRY	No.2	SPF
ALL WEBS	2x3	DRY	No.2	SPF
EXCEPT				
B - J	2x4	DRY	No.2	SPF
J - E	2x4	DRY	No.2	SPF
H - F	2x4	DRY	No.2	SPF

DRY: SEASONED LUMBER.

PLATES (table is in inches)

JT	TYPE	PLATES	W	LEN	Y	X
A	TMVW+p	MT20	4.0	6.0	2.25	2.00
B	TTWW+m	MT20	5.0	6.0	1.75	1.50
C	TMW+w	MT20	2.0	4.0		
D	TS-t	MT20	3.0	8.0		
E	TMWW-t	MT20	4.0	6.0		
F	TMVW-t	MT20	4.0	6.0	2.00	2.50
G	BMV1+p	MT20	2.0	4.0		
H	BMWW-t	MT20	4.0	6.0	2.00	2.50
I	BS-t	MT20	3.0	6.0		
J	BMWWW-t	MT20	5.0	6.0	2.50	2.00
K	BMWW-t	MT20	4.0	6.0		
L	BMV1+p	MT20	2.0	4.0		

LATERAL BRACE(S) SHOWN SHALL BE 2X4 SPF#2

DIMENSIONS, SUPPORTS AND LOADINGS SPECIFIED BY FABRICATOR TO BE VERIFIED BY BUILDING DESIGNER

BEARINGS

JT	FACTORED GROSS REACTION VERT	HORZ	MAXIMUM FACTORED GROSS REACTION DOWN	HORZ	UPLIFT	INPUT BRG IN-SX	REQRD BRG IN-SX
G	1500	0	1500	0	0	1-10	1-10
L	1500	0	1500	0	0	1-10	1-10

UNFACTORED REACTIONS

JT	1ST LCASE COMBINED	MAX./MIN. COMPONENT REACTIONS SNOW	LIVE	PERM.LIVE	WIND	DEAD	SOIL
G	1070	653 / 0	0 / 0	0 / 0	0 / 0	417 / 0	0 / 0
L	1070	653 / 0	0 / 0	0 / 0	0 / 0	417 / 0	0 / 0

BEARING MATERIAL TO BE SPF NO.2 OR BETTER AT JOINT(S) G, L

BRACING

TOP CHORD TO BE SHEATHED OR MAX. PURLIN SPACING = 5.29 FT.
MAX. UNBRACED BOTTOM CHORD LENGTH = 10.00 FT OR RIGID CEILING DIRECTLY APPLIED.

ALL PITCH BREAKS AND PERIMETER CORNER JOINTS MUST BE LATERALLY RESTRAINED.

1 LATERAL BRACE(S) AT 1/ 2 LENGTH OF F-G, E-H.

END VERTICAL(S) MUST BE SHEATHED OR HAVE BRACES AS INDICATED IN THE MAX. UNBRACED LENGTH COLUMN OF THE TABLE BELOW

LOADING

TOTAL LOAD CASES: (4)

CHORDS

MEMB. FR-TO	MAX. FACTORED FORCE (LBS)	FACTORED VERT. LOAD (PLF) FROM	TO	LC1 CSI (LC)	MAX UNBRAC LENGTH
A- B	-1246 / 0	-78.0	-78.0	0.42 (1)	5.29
B- C	-1540 / 0	-78.0	-78.0	0.64 (1)	5.40
C- D	-1540 / 0	-78.0	-78.0	0.64 (1)	5.40
D- E	-1540 / 0	-78.0	-78.0	0.64 (1)	5.40
E- F	-1285 / 0	-78.0	-78.0	0.62 (1)	5.79
G- F	-1436 / 0	0.0	0.0	0.44 (1)	5.45
L- A	-1472 / 0	0.0	0.0	0.19 (1)	6.74
L- K	0 / 0	-18.5	-18.5	0.22 (4)	10.00
K- J	0 / 805	-18.5	-18.5	0.34 (4)	10.00
J- I	0 / 1285	-18.5	-18.5	0.46 (4)	10.00
I- H	0 / 1285	-18.5	-18.5	0.46 (4)	10.00
H- G	0 / 0	-18.5	-18.5	0.34 (4)	10.00

WEBS

MEMB. FR-TO	MAX. FACTORED FORCE (LBS)	MAX CSI (LC)
K- B	-187 / 29	0.24 (1)
B- J	0 / 989	0.16 (1)
J- C	-738 / 0	0.97 (1)
J- E	0 / 346	0.06 (1)
H- E	-979 / 0	0.42 (1)
H- F	0 / 1732	0.28 (1)
A- K	0 / 873	0.20 (1)

DESIGN CRITERIA

SPECIFIED LOADS:

TOP CH.	LL	=	21.0	PSF
	DL	=	6.0	PSF
BOT CH.	LL	=	0.0	PSF
	DL	=	7.4	PSF
TOTAL LOAD		=	34.4	PSF

SPACING = 24.0 IN. C/C

LOADING IN FLAT SECTION BASED ON A SLOPE OF 2.00/12 MINIMUM

THIS TRUSS IS DESIGNED FOR RESIDENTIAL OR SMALL BUILDING REQUIREMENTS OF PART 9, NBCC 2015

THIS DESIGN COMPLIES WITH:
- PART 9 OF BCBC 2018 , ABC 2019
- PART 9 OF OBC 2012 (2019 AMENDMENT)
- CSA 086-14
- TPIC 2014

(55 % OF 23.0 P.S.F. G.S.L. PLUS 8.4 P.S.F. RAIN LOAD) EQUALS 21.0 P.S.F. SPECIFIED ROOF LIVE LOAD

ALLOWABLE DEFL.(LL)= L/360 (1.04")
CALCULATED VERT. DEFL.(LL) = L/ 999 (0.06")
ALLOWABLE DEFL.(TL)= L/360 (1.04")
CALCULATED VERT. DEFL.(TL) = L/ 999 (0.18")

CSI: TC=0.64/1.00 (B-C:1) , BC=0.46/1.00 (H-J:4) , WB=0.97/1.00 (C-J:1) , SSI=0.32/1.00 (E-F:1)

DOL LUMBER=1.00 NAIL=1.00 LS BEND=1.10 COMP=1.10 SHEAR=1.10 TENS= 1.10

COMPANION LIVE LOAD FACTOR = 1.00

TRUSS PLATE MANUFACTURER IS NOT RESPONSIBLE FOR QUALITY CONTROL IN THE TRUSS MANUFACTURING PLANT .

NAIL VALUES

PLATE	GRIP(DRY) (PSI) MAX	MIN	SHEAR (PLI) MAX	MIN	SECTION (PLI) MAX	MIN
MT20	650	371	1747	788	1987	1873

PLATE PLACEMENT TOL. = 0.250 inches

PLATE ROTATION TOL. = 5.0 Deg.

JSI GRIP= 0.84 (H) (INPUT = 0.90)
JSI METAL= 0.46 (A) (INPUT = 1.00)

JOB NAME	TRUSS NAME	QUANTITY	PLY	JOB DESC.	DRWG NO.
336335	H243		1	TRUSS DESC. JT 45147	E21104189

Alpa Roof Truss, Maple

Version 8.420 S Jan 21 2021 MiTek Industries, Inc. Thu Oct 14 08:52:40 2021 Page 1

ID:hd511hZTz_bdeQoS817GKByhVxV-OhjtNyjbrnBzYEPKcHHzQ9xBCFU_TYH0pH1JkqyTZHb

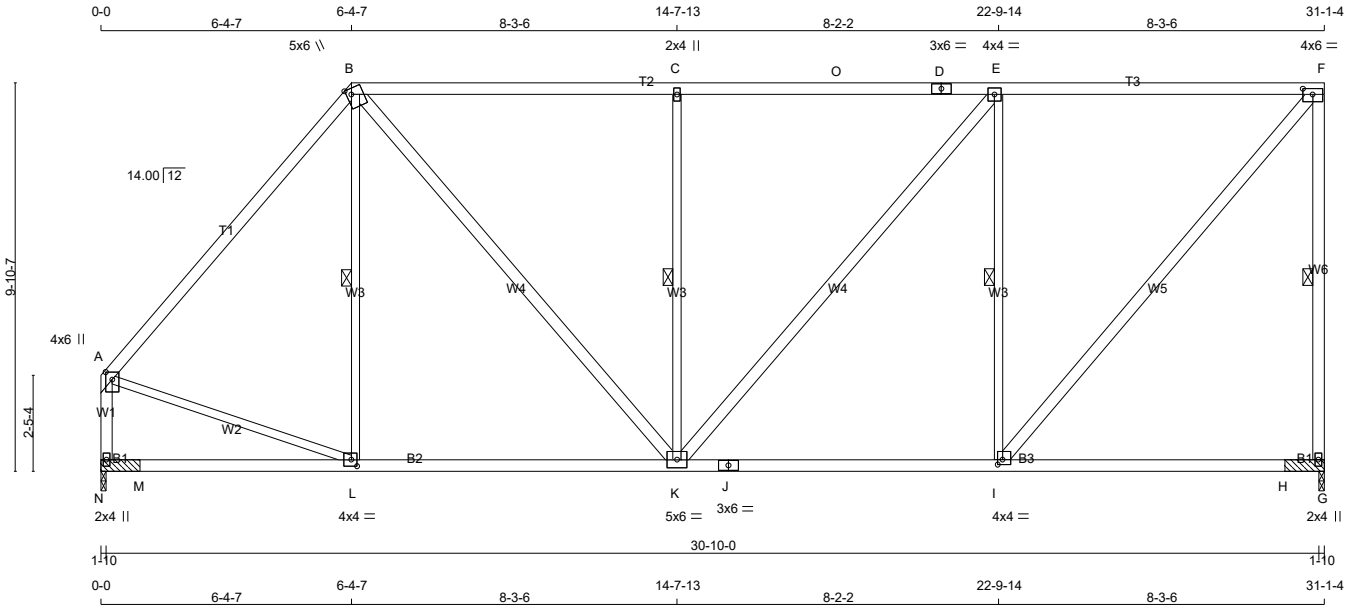

TOTAL WEIGHT = 7 X 160 = 1121 lb

LUMBER

N. L. G. A. RULES

CHORDS	SIZE		LUMBER	DESCR.
A - B	2x4	DRY	2100F 1.8E	SPF
B - D	2x4	DRY	1650F 1.5E	SPF
D - F	2x4	DRY	1650F 1.5E	SPF
G - F	2x4	DRY	No.2	SPF
N - A	2x4	DRY	No.2	SPF
N - J	2x4	DRY	No.2	SPF
J - G	2x4	DRY	No.2	SPF
ALL WEBS	2x3	DRY	No.2	SPF
EXCEPT				
B - K	2x4	DRY	No.2	SPF
K - E	2x4	DRY	No.2	SPF
I - F	2x4	DRY	No.2	SPF

DRY: SEASONED LUMBER.

PLATES (table is in inches)

JT	TYPE	PLATES	W	LEN	Y	X
A	TMVW+p	MT20	4.0	6.0	2.25	2.00
B	TTWW+m	MT20	5.0	6.0	1.75	1.50
C	TMW+w	MT20	2.0	4.0		
D	TS-t	MT20	3.0	6.0		
E	TMWW-t	MT20	4.0	4.0		
F	TMVW-t	MT20	4.0	6.0	1.75	3.00
G	BMV1+p	MT20	2.0	4.0		
I	BMWW-t	MT20	4.0	4.0	1.50	1.50
J	BS-t	MT20	3.0	6.0		
K	BMWWW-t	MT20	5.0	6.0		
L	BMWW-t	MT20	4.0	4.0	2.00	1.75
N	BMV1+p	MT20	2.0	4.0		

LATERAL BRACE(S) SHOWN SHALL BE 2X4 SPF#2

DIMENSIONS, SUPPORTS AND LOADINGS SPECIFIED BY FABRICATOR TO BE VERIFIED BY BUILDING DESIGNER

BEARINGS

JT	FACTORED GROSS REACTION VERT	HORZ	MAXIMUM FACTORED GROSS REACTION DOWN	HORZ	UPLIFT	INPUT BRG IN-SX	REQRD BRG IN-SX
G	1612	0	1612	0	0	1-10	1-10 & BLOCK
N	1574	0	1574	0	0	1-10	1-10 & BLOCK

UNFACTORED REACTIONS

JT	1ST LCASE COMBINED	MAX./MIN. COMPONENT REACTIONS SNOW	LIVE	PERM.LIVE	WIND	DEAD	SOIL
G	1159	653 / 0	0 / 0	0 / 0	0 / 0	506 / 0	0 / 0
N	1129	653 / 0	0 / 0	0 / 0	0 / 0	476 / 0	0 / 0

BEARING MATERIAL TO BE SPF NO.2 OR BETTER AT JOINT(S) G, N

2x4 DRY SPF No.2 BEARING BLOCK 12" LONG AT JT. G ATTACHED TO FRONT SIDE WITH 2 ROWS OF (0.122"X3") SPIRAL NAILS SPACED 3" C.C. 8 NAILS TOTAL.

2x4 DRY SPF No.2 BEARING BLOCK 12" LONG AT JT. N ATTACHED TO FRONT SIDE WITH 2 ROWS OF (0.122"X3") SPIRAL NAILS SPACED 3" C.C. 8 NAILS TOTAL.

BRACING

FOR SECTION B-F, MAX. PURLIN SPACING = 2.00 FT.
FOR OTHER SECTIONS, TOP CHORD TO BE SHEATHED OR MAX. PURLIN SPACING = 6.10 FT.
MAX. UNBRACED BOTTOM CHORD LENGTH = 10.00 FT OR RIGID CEILING DIRECTLY APPLIED.

ALL PITCH BREAKS AND PERIMETER CORNER JOINTS MUST BE LATERALLY RESTRAINED.

1 LATERAL BRACE(S) AT 1/ 2 LENGTH OF F-G, B-L, C-K, E-I.

END VERTICAL(S) MUST BE SHEATHED OR HAVE BRACES AS INDICATED IN THE MAX. UNBRACED LENGTH COLUMN OF THE TABLE BELOW

LOADING

TOTAL LOAD CASES: (4)

CHORDS

MEMB. FR-TO	MAX. FACTORED FORCE (LBS)	FACTORED VERT. LOAD (PLF) FROM	TO	LC1 CSI (LC)	MAX UNBRAC LENGTH
A- B	-1324 / 0	-78.0	-78.0	0.46 (1)	6.10
B- C	-1368 / 0	-85.5	-85.5	0.79 (1)	2.00
C- O	-1369 / 0	-85.5	-85.5	0.79 (1)	2.00
O- D	-1369 / 0	-85.5	-85.5	0.79 (1)	2.00
D- E	-1369 / 0	-85.5	-85.5	0.79 (1)	2.00
E- F	-1095 / 0	-85.5	-85.5	0.76 (1)	2.00
G- F	-1551 / 0	0.0	0.0	0.73 (1)	5.29
N- A	-1530 / 0	0.0	0.0	0.20 (1)	6.65
N- M	0 / 0	-18.5	-18.5	0.24 (4)	10.00
M- L	0 / 0	-18.5	-18.5	0.24 (4)	10.00
L- K	0 / 858	-18.5	-18.5	0.33 (4)	10.00
K- J	0 / 1095	-18.5	-18.5	0.43 (4)	10.00
J- I	0 / 1095	-18.5	-18.5	0.43 (4)	10.00
I- H	0 / 0	-18.5	-18.5	0.31 (4)	10.00
H- G	0 / 0	-18.5	-18.5	0.31 (4)	10.00

WEBS

MEMB. FR-TO	MAX. FACTORED FORCE (LBS)	MAX CSI (LC)
L- B	-121 / 50	0.08 (1)
B- K	0 / 780	0.13 (1)
K- C	-765 / 0	0.50 (1)
K- E	0 / 422	0.07 (1)
I- E	-1094 / 0	0.72 (1)
I- F	0 / 1674	0.27 (1)
A- L	0 / 902	0.20 (1)

[M]

DESIGN CRITERIA

SPECIFIED LOADS:

TOP	CH.	LL	=	21.0	PSF
		DL	=	6.0	PSF
BOT	CH.	LL	=	0.0	PSF
		DL	=	7.4	PSF
TOTAL	LOAD		=	34.4	PSF

SPACING = 24.0 IN. C/C

LOADING IN FLAT SECTION BASED ON PIGGYBACK TRUSS WITH SLOPES OF 6.00/12 AND -6.00/12 AND RESPECTIVE HEEL HEIGHTS OF 0-0 AND 0-0 AND AN ADDITIONAL DEAD LOAD OF 3.0 P.S.F.

THIS TRUSS IS DESIGNED FOR RESIDENTIAL OR SMALL BUILDING REQUIREMENTS OF PART 9, NBCC 2015

THIS DESIGN COMPLIES WITH:
- PART 9 OF BCBC 2018 , ABC 2019
- PART 9 OF OBC 2012 (2019 AMENDMENT)
- CSA 086-14
- TPIC 2014

(55 % OF 23.0 P.S.F. G.S.L. PLUS 8.4 P.S.F. RAIN LOAD) EQUALS 21.0 P.S.F. SPECIFIED ROOF LIVE LOAD

ALLOWABLE DEFL.(LL)= L/360 (1.04")
CALCULATED VERT. DEFL.(LL) = L/ 999 (0.05")
ALLOWABLE DEFL.(TL)= L/360 (1.04")
CALCULATED VERT. DEFL.(TL) = L/ 999 (0.15")

CSI: TC=0.79/1.00 (C-E:1) , BC=0.43/1.00 (I-K:4) , WB=0.72/1.00 (E-I:1) , SSI=0.33/1.00 (E-F:1)

DOL LUMBER=1.00 NAIL=1.00 LS BEND=1.10 COMP=1.10 SHEAR=1.10 TENS= 1.10

COMPANION LIVE LOAD FACTOR = 1.00

TRUSS PLATE MANUFACTURER IS NOT RESPONSIBLE FOR QUALITY CONTROL IN THE TRUSS MANUFACTURING PLANT .

NAIL VALUES

PLATE	GRIP(DRY) (PSI) MAX	MIN	SHEAR (PLI) MAX	MIN	SECTION (PLI) MAX	MIN
MT20	650	371	1747	788	1987	1873

PLATE PLACEMENT TOL. = 0.250 inches

PLATE ROTATION TOL. = 5.0 Deg.

JSI GRIP= 0.89 (I) (INPUT = 0.90)
JSI METAL= 0.50 (A) (INPUT = 1.00)

JOB NAME	TRUSS NAME	QUANTITY	PLY	JOB DESC.		DRWG NO.
336335	H244P		1	TRUSS DESC.	JT 45147	E21104190

Alpa Roof Truss, Maple

Version 8.420 S Jan 21 2021 MiTek Industries, Inc. Thu Oct 14 08:53:31 2021 Page 1

ID:hd511hZTz bdeQoS817GKByhVxV-OVI94OKbrRck94o75Uix vYyopxnwmJWYjtW0MyTZGo

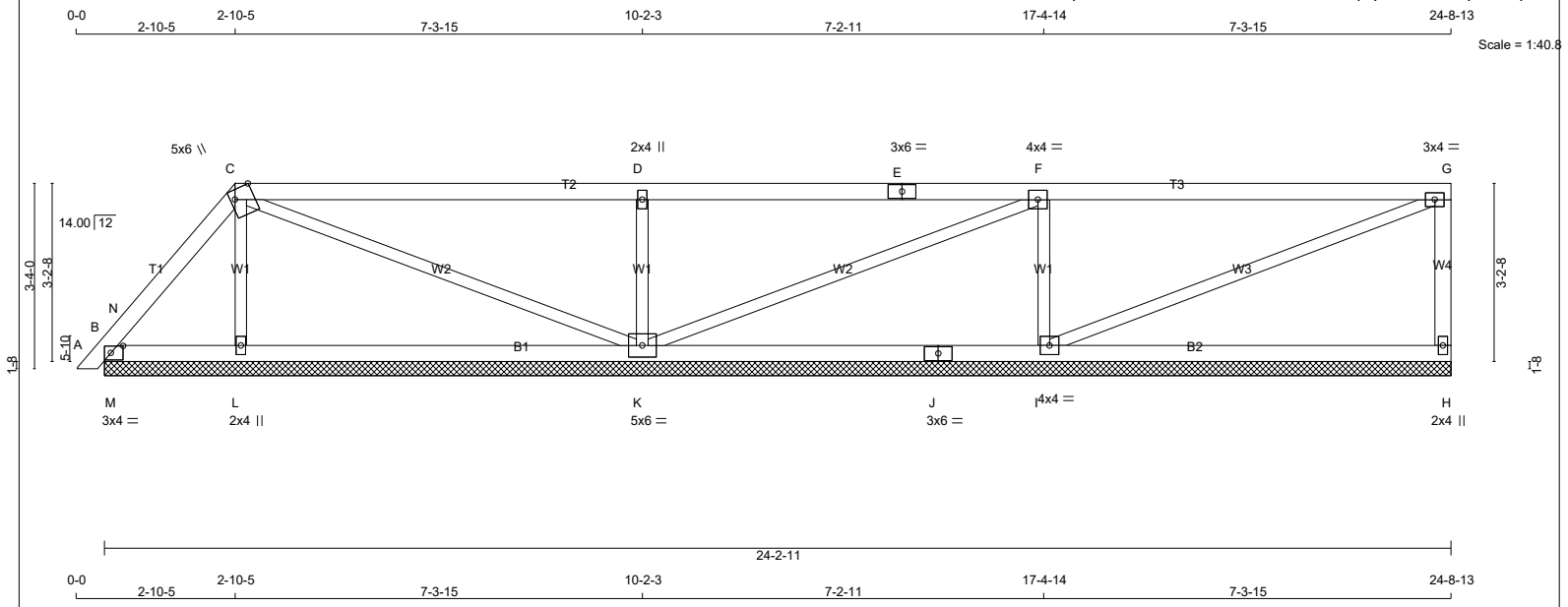

TOTAL WEIGHT = 85 lb [M]

LUMBER

N. L. G. A. RULES

CHORDS	SIZE		LUMBER	DESCR.
A - C	2x4	DRY	No.2	SPF
C - E	2x4	DRY	No.2	SPF
E - G	2x4	DRY	No.2	SPF
H - G	2x4	DRY	No.2	SPF
B - J	2x4	DRY	No.2	SPF
J - H	2x4	DRY	No.2	SPF
ALL WEBS	2x3	DRY	No.2	SPF

DRY: SEASONED LUMBER.

PLATES (table is in inches)

JT	TYPE	PLATES	W	LEN	Y	X
B	TMB1-I	MT20	3.0	4.0	1.50	2.50
C	TTWW+m	MT20	5.0	6.0	Edge	4.00
D	TMW+w	MT20	2.0	4.0		
E	TS-t	MT20	3.0	6.0		
F	TMWW-t	MT20	4.0	4.0		
G	TMVW-t	MT20	3.0	4.0		
H	BMV1+p	MT20	2.0	4.0		
I	BMWW1-t	MT20	4.0	4.0		
J	BS-t	MT20	3.0	6.0		
K	BMWWW1-t	MT20	5.0	6.0		
L	BMW1+w	MT20	2.0	4.0		

Edge - INDICATES REFERENCE CORNER OF PLATE TOUCHES EDGE OF CHORD.

LATERAL BRACE(S) SHOWN SHALL BE 2X4 SPF#2

DIMENSIONS, SUPPORTS AND LOADINGS SPECIFIED BY FABRICATOR TO BE VERIFIED BY BUILDING DESIGNER

BEARINGS

JT	FACTORED GROSS REACTION VERT	HORZ	MAXIMUM FACTORED GROSS REACTION DOWN	HORZ	UPLIFT	INPUT BRG IN-SX	REQRD BRG IN-SX
H	288	0	288	0	0	24-2-11 (9-2-11)	
B	177	0	177	0	0	24-2-11 (9-2-11)	
L	354	0	354	0	0	24-2-11 (9-2-11)	
K	789	0	789	0	0	24-2-11 (9-2-11)	
I	759	0	759	0	0	24-2-11 (9-2-11)	

VALUE IN PARENTHESIS INDICATES EFFECTIVE BEARING LENGTH

UNFACTORED REACTIONS

JT	1ST LCASE COMBINED	MAX./MIN. COMPONENT REACTIONS SNOW	LIVE	PERM.LIVE	WIND	DEAD	SOIL
H	205	126 / 0	0 / 0	0 / 0	0 / 0	79 / 0	0 / 0
B	122	100 / 0	0 / 0	0 / 0	0 / 0	22 / 0	0 / 0
L	258	126 / 0	0 / 0	0 / 0	0 / 0	132 / 0	0 / 0
K	560	354 / 0	0 / 0	0 / 0	0 / 0	206 / 0	0 / 0
I	542	327 / 0	0 / 0	0 / 0	0 / 0	215 / 0	0 / 0

BEARING MATERIAL TO BE SPF NO.2 OR BETTER AT JOINT(S) H, B, L, K, I

BRACING

TOP CHORD TO BE SHEATHED OR MAX. PURLIN SPACING = 6.25 FT.
MAX. UNBRACED BOTTOM CHORD LENGTH = 10.00 FT OR RIGID CEILING DIRECTLY APPLIED.

ALL PITCH BREAKS AND PERIMETER CORNER JOINTS MUST BE LATERALLY RESTRAINED.

LOADING

TOTAL LOAD CASES: (4)

CHORDS

MEMB. FR-TO	MAX. FACTORED FORCE (LBS)	FACTORED VERT. LOAD (PLF) FROM	TO	LC1	MAX CSI (LC)	MAX. UNBRAC LENGTH
A- B	0 / 10	-78.0	-78.0	0.01 (1)		10.00
B- N	0 / 49	-78.0	-78.0	0.05 (1)		10.00
N- C	-87 / 0	-78.0	-78.0	0.04 (1)		6.25
C- D	0 / 16	-78.0	-78.0	0.56 (1)		10.00
D- E	0 / 16	-78.0	-78.0	0.56 (1)		10.00
E- F	0 / 16	-78.0	-78.0	0.56 (1)		10.00
F- G	-13 / 0	-78.0	-78.0	0.56 (1)		6.25
H- G	-235 / 0	0.0	0.0	0.04 (1)		7.81
B- M	0 / 49	-18.5	-18.5	0.06 (1)		10.00
M- L	0 / 49	-18.5	-18.5	0.16 (4)		10.00
L- K	0 / 41	-18.5	-18.5	0.19 (4)		10.00
K- J	0 / 13	-18.5	-18.5	0.24 (4)		10.00
J- I	0 / 13	-18.5	-18.5	0.24 (4)		10.00
I- H	0 / 0	-18.5	-18.5	0.24 (4)		10.00

WEBS

MEMB. FR-TO	MAX. FACTORED FORCE (LBS)	MAX CSI (LC)
L- C	-220 / 0	0.04 (1)
C- K	-62 / 0	0.08 (1)
K- D	-624 / 0	0.12 (1)
K- F	-32 / 0	0.04 (1)
I- F	-612 / 0	0.11 (1)
I- G	0 / 14	0.00 (1)
M- N	-245 / 0	0.00 (1)

DESIGN CRITERIA

SPECIFIED LOADS:

TOP	CH.	LL	=	21.0	PSF
		DL	=	6.0	PSF
BOT	CH.	LL	=	0.0	PSF
		DL	=	7.4	PSF
TOTAL	LOAD		=	34.4	PSF

SPACING = 24.0 IN. C/C

LOADING IN FLAT SECTION BASED ON A SLOPE OF 2.00/12 MINIMUM

THIS TRUSS IS DESIGNED FOR RESIDENTIAL OR SMALL BUILDING REQUIREMENTS OF PART 9, NBCC 2015

THIS DESIGN COMPLIES WITH:
- PART 9 OF BCBC 2018 , ABC 2019
- PART 9 OF OBC 2012 (2019 AMENDMENT)
- CSA 086-14
- TPIC 2014

(55 % OF 23.0 P.S.F. G.S.L. PLUS 8.4 P.S.F. RAIN LOAD) EQUALS 21.0 P.S.F. SPECIFIED ROOF LIVE LOAD

CSI: TC=0.56/1.00 (C-D:1) , BC=0.24/1.00 (I-K:4) , WB=0.12/1.00 (D-K:1) , SSI=0.27/1.00 (F-G:1)

DOL LUMBER=1.00 NAIL=1.00 LS BEND=1.10 COMP=1.10 SHEAR=1.10 TENS= 1.10

COMPANION LIVE LOAD FACTOR = 1.00

TRUSS PLATE MANUFACTURER IS NOT RESPONSIBLE FOR QUALITY CONTROL IN THE TRUSS MANUFACTURING PLANT .

NAIL VALUES

PLATE	GRIP(DRY) (PSI) MAX	MIN	SHEAR (PLI) MAX	MIN	SECTION (PLI) MAX	MIN
MT20	650	371	1747	788	1987	1873

PLATE PLACEMENT TOL. = 0.250 inches

PLATE ROTATION TOL. = 5.0 Deg.

JSI GRIP= 0.85 (K) (INPUT = 0.90)
JSI METAL= 0.14 (E) (INPUT = 1.00)

JOB NAME	TRUSS NAME	QUANTITY	PLY	JOB DESC.		DRWG NO.
336335	H245P		1	TRUSS DESC.	JT 45147	E21104191

Alpa Roof Truss, Maple

Version 8.420 S Jan 21 2021 MiTek Industries, Inc. Thu Oct 14 08:53:32 2021 Page 1

ID:hd511hZTz_bdeQoS817GKByhVxV-tisXHkLDclkbnENJfCDAX658dDHTfBDgmNd3ZpyTZGn

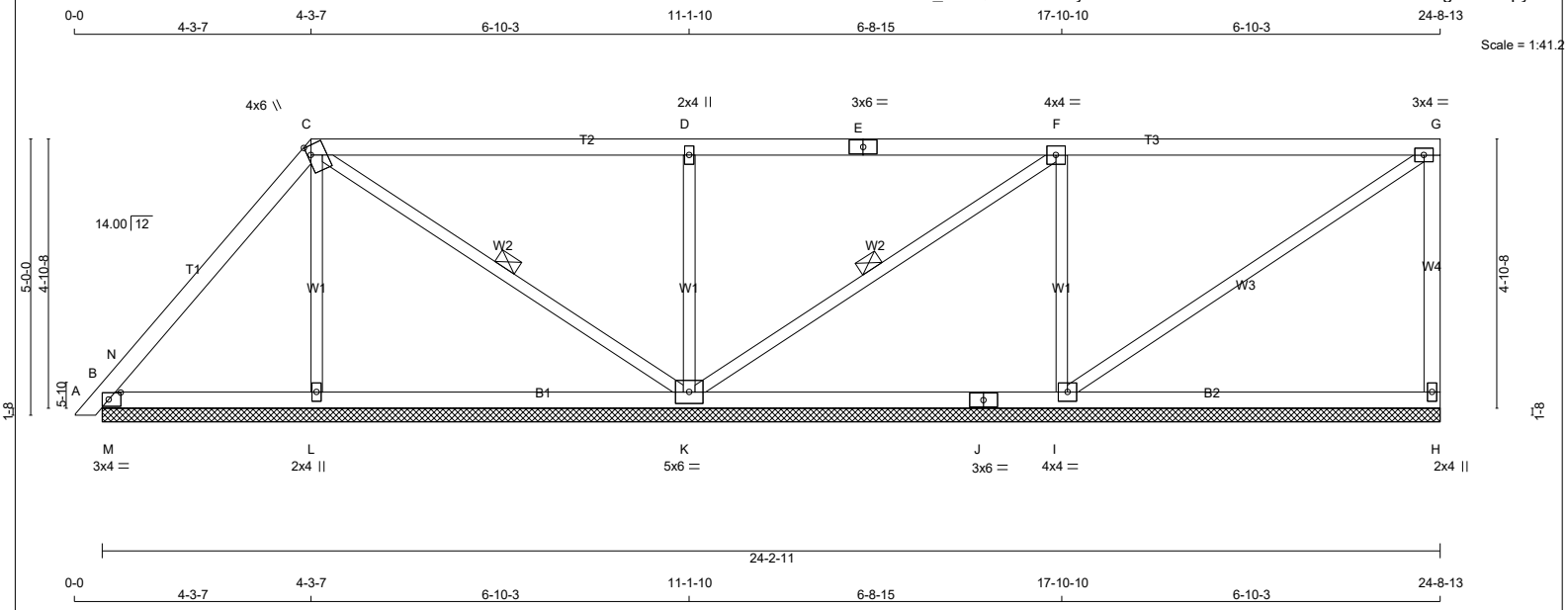

TOTAL WEIGHT = 93 lb [M]

LUMBER

N. L. G. A. RULES

CHORDS	SIZE		LUMBER	DESCR.
A - C	2x4	DRY	No.2	SPF
C - E	2x4	DRY	No.2	SPF
E - G	2x4	DRY	No.2	SPF
H - G	2x4	DRY	No.2	SPF
B - J	2x4	DRY	No.2	SPF
J - H	2x4	DRY	No.2	SPF
ALL WEBS	2x3	DRY	No.2	SPF

DRY: SEASONED LUMBER.

PLATES (table is in inches)

JT	TYPE	PLATES	W	LEN	Y	X
B	TMB1-l	MT20	3.0	4.0	1.50	2.50
C	TTWW+m	MT20	4.0	6.0	2.00	0.75
D	TMW+w	MT20	2.0	4.0		
E	TS-t	MT20	3.0	6.0		
F	TMWW-t	MT20	4.0	4.0		
G	TMVW-t	MT20	3.0	4.0		
H	BMV1+p	MT20	2.0	4.0		
I	BMWW1-t	MT20	4.0	4.0		
J	BS-t	MT20	3.0	6.0		
K	BMWWW1-t	MT20	5.0	6.0		
L	BMW1+w	MT20	2.0	4.0		

LATERAL BRACE(S) SHOWN SHALL BE 2X4 SPF#2

DIMENSIONS, SUPPORTS AND LOADINGS SPECIFIED BY FABRICATOR TO BE VERIFIED BY BUILDING DESIGNER

BEARINGS

JT	FACTORED GROSS REACTION VERT	HORZ	MAXIMUM FACTORED GROSS REACTION DOWN	HORZ	UPLIFT	INPUT BRG IN-SX	REQRD BRG IN-SX
H	280	0	280	0	0	24-2-11 (8-3-3)	8
B	285	0	285	0	0	24-2-11 (8-3-3)	8
L	322	0	322	0	0	24-2-11 (8-3-3)	8
K	809	0	809	0	0	24-2-11 (8-3-3)	8
I	672	0	672	0	0	24-2-11 (8-3-3)	8

VALUE IN PARENTHESIS INDICATES EFFECTIVE BEARING LENGTH

UNFACTORED REACTIONS

JT	1ST LCASE COMBINED	MAX./MIN. COMPONENT REACTIONS SNOW	LIVE	PERM.LIVE	WIND	DEAD	SOIL
H	200	124 / 0	0 / 0	0 / 0	0 / 0	76 / 0	0 / 0
B	200	141 / 0	0 / 0	0 / 0	0 / 0	58 / 0	0 / 0
L	235	114 / 0	0 / 0	0 / 0	0 / 0	120 / 0	0 / 0
K	573	369 / 0	0 / 0	0 / 0	0 / 0	204 / 0	0 / 0
I	480	285 / 0	0 / 0	0 / 0	0 / 0	195 / 0	0 / 0

BEARING MATERIAL TO BE SPF NO.2 OR BETTER AT JOINT(S) H, B, L, K, I

BRACING

TOP CHORD TO BE SHEATHED OR MAX. PURLIN SPACING = 6.25 FT.
MAX. UNBRACED BOTTOM CHORD LENGTH = 10.00 FT OR RIGID CEILING DIRECTLY APPLIED.

ALL PITCH BREAKS AND PERIMETER CORNER JOINTS MUST BE LATERALLY RESTRAINED.

1 LATERAL BRACE(S) AT 1/ 2 LENGTH OF C-K, F-K.

END VERTICAL(S) MUST BE SHEATHED OR HAVE BRACES AS INDICATED IN THE MAX. UNBRACED LENGTH COLUMN OF THE TABLE BELOW

LOADING

TOTAL LOAD CASES: (4)

CHORDS

MEMB. FR-TO	MAX. FACTORED FORCE (LBS)	FACTORED VERT. LOAD (PLF) FROM	TO	LC1	MAX CSI (LC)	MAX. UNBRAC LENGTH
A- B	0 / 10	-78.0	-78.0	0.01 (1)	10.00	
B- N	0 / 167	-78.0	-78.0	0.11 (1)	10.00	
N- C	-129 / 0	-78.0	-78.0	0.13 (1)	6.25	
C- D	0 / 33	-78.0	-78.0	0.50 (1)	10.00	
D- E	0 / 33	-78.0	-78.0	0.50 (1)	10.00	
E- F	0 / 33	-78.0	-78.0	0.50 (1)	10.00	
F- G	-24 / 0	-78.0	-78.0	0.49 (1)	6.25	
H- G	-230 / 0	0.0	0.0	0.09 (1)	7.81	
B- M	0 / 75	-18.5	-18.5	0.13 (1)	10.00	
M- L	0 / 75	-18.5	-18.5	0.15 (4)	10.00	
L- K	0 / 71	-18.5	-18.5	0.16 (4)	10.00	
K- J	0 / 24	-18.5	-18.5	0.21 (4)	10.00	
J- I	0 / 24	-18.5	-18.5	0.21 (4)	10.00	
I- H	0 / 0	-18.5	-18.5	0.21 (4)	10.00	

WEBS

MEMB. FR-TO	MAX. FACTORED FORCE (LBS)	MAX CSI (LC)
L- C	-181 / 0	0.06 (1)
C- K	-124 / 0	0.06 (1)
K- D	-583 / 0	0.20 (1)
K- F	-68 / 0	0.03 (1)
I- F	-544 / 0	0.19 (1)
I- G	0 / 29	0.01 (1)
M- N	-489 / 0	0.00 (1)

DESIGN CRITERIA

SPECIFIED LOADS:

TOP	CH.	LL	=	21.0	PSF
		DL	=	6.0	PSF
BOT	CH.	LL	=	0.0	PSF
		DL	=	7.4	PSF
TOTAL	LOAD		=	34.4	PSF

SPACING = 24.0 IN. C/C

LOADING IN FLAT SECTION BASED ON A SLOPE OF 2.00/12 MINIMUM

THIS TRUSS IS DESIGNED FOR RESIDENTIAL OR SMALL BUILDING REQUIREMENTS OF PART 9, NBCC 2015

THIS DESIGN COMPLIES WITH:
- PART 9 OF BCBC 2018 , ABC 2019
- PART 9 OF OBC 2012 (2019 AMENDMENT)
- CSA 086-14
- TPIC 2014

(55 % OF 23.0 P.S.F. G.S.L. PLUS 8.4 P.S.F. RAIN LOAD) EQUALS 21.0 P.S.F. SPECIFIED ROOF LIVE LOAD

CSI: TC=0.50/1.00 (D-F:1) , BC=0.21/1.00 (I-K:4) , WB=0.20/1.00 (D-K:1) , SSI=0.38/1.00 (B-M:1)

DOL LUMBER=1.00 NAIL=1.00 LS BEND=1.10 COMP=1.10 SHEAR=1.10 TENS= 1.10

COMPANION LIVE LOAD FACTOR = 1.00

TRUSS PLATE MANUFACTURER IS NOT RESPONSIBLE FOR QUALITY CONTROL IN THE TRUSS MANUFACTURING PLANT .

NAIL VALUES

PLATE	GRIP(DRY) (PSI) MAX	MIN	SHEAR (PLI) MAX	MIN	SECTION (PLI) MAX	MIN
MT20	650	371	1747	788	1987	1873

PLATE PLACEMENT TOL. = 0.250 inches

PLATE ROTATION TOL. = 5.0 Deg.

JSI GRIP= 0.89 (C) (INPUT = 0.90)
JSI METAL= 0.23 (E) (INPUT = 1.00)

JOB NAME	TRUSS NAME	QUANTITY	PLY	JOB DESC.		DRWG NO.
336335	H246P		1	TRUSS DESC.	JT 45147	E21104192

Alpa Roof Truss, Maple

Version 8.420 S Jan 21 2021 MiTek Industries, Inc. Thu Oct 14 08:53:34 2021 Page 1

ID:hd511hZTz bdeQoS817GKByhVxV-p4zHiQNT7M J0XXimdFecXAV80zl73yyEq6AdhyTZGl

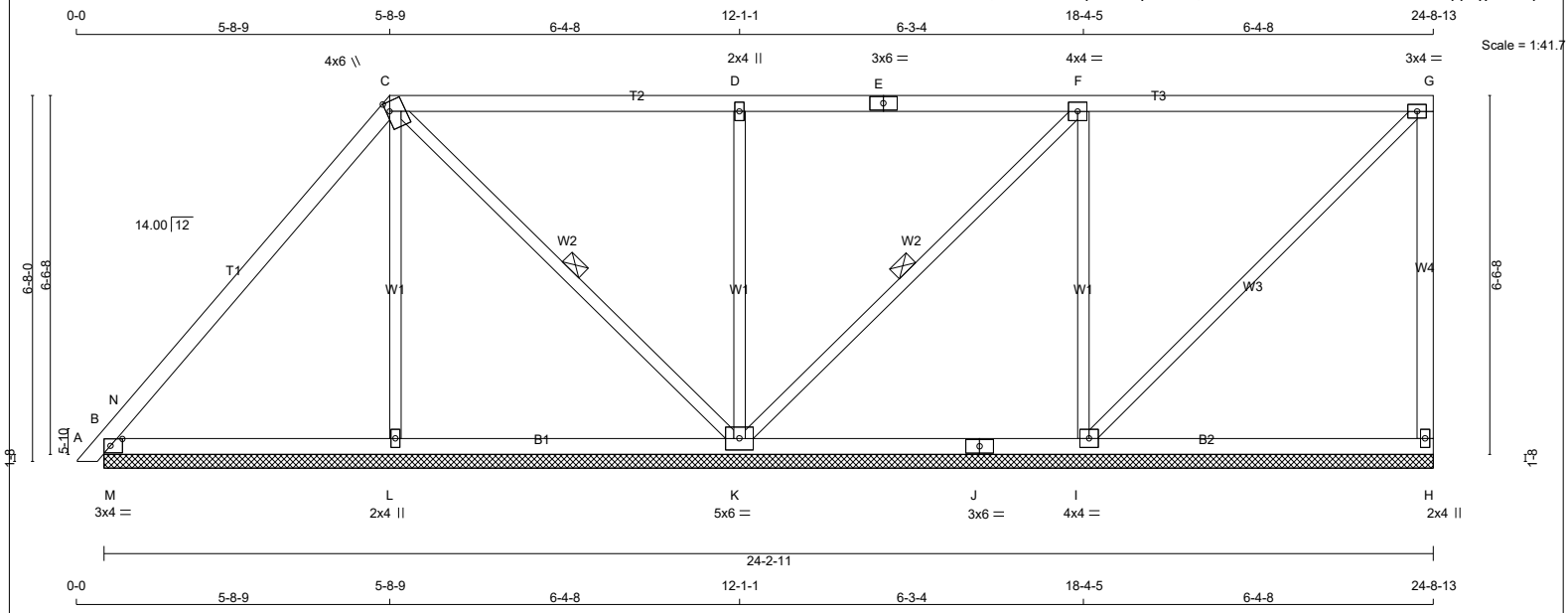

TOTAL WEIGHT = 101 lb

[M]

LUMBER

N. L. G. A. RULES

CHORDS	SIZE		LUMBER	DESCR.
A - C	2x4	DRY	No.2	SPF
C - E	2x4	DRY	No.2	SPF
E - G	2x4	DRY	No.2	SPF
H - G	2x4	DRY	No.2	SPF
B - J	2x4	DRY	No.2	SPF
J - H	2x4	DRY	No.2	SPF
ALL WEBS	2x3	DRY	No.2	SPF

DRY: SEASONED LUMBER.

PLATES (table is in inches)

JT	TYPE	PLATES	W	LEN	Y	X
B	TMB1-I	MT20	3.0	4.0	1.50	2.50
C	TTWW+m	MT20	4.0	6.0	2.00	0.75
D	TMW+w	MT20	2.0	4.0		
E	TS-t	MT20	3.0	6.0		
F	TMWW-t	MT20	4.0	4.0		
G	TMVW-t	MT20	3.0	4.0		
H	BMV1+p	MT20	2.0	4.0		
I	BMWW1-t	MT20	4.0	4.0		
J	BS-t	MT20	3.0	6.0		
K	BMWWW1-t	MT20	5.0	6.0		
L	BMW1+w	MT20	2.0	4.0		

LATERAL BRACE(S) SHOWN SHALL BE 2X4 SPF#2

DIMENSIONS, SUPPORTS AND LOADINGS SPECIFIED BY FABRICATOR TO BE VERIFIED BY BUILDING DESIGNER

BEARINGS

JT	FACTORED GROSS REACTION VERT	HORZ	MAXIMUM FACTORED GROSS REACTION DOWN	HORZ	UPLIFT	INPUT BRG IN-SX	REQRD BRG IN-SX
H	277	0	277	0	0	24-2-11 (8-3-3)	8
B	386	0	386	0	0	24-2-11 (8-3-3)	8
L	287	0	287	0	0	24-2-11 (8-3-3)	8
K	834	0	834	0	0	24-2-11 (8-3-3)	8
I	583	0	583	0	0	24-2-11 (8-3-3)	8

VALUE IN PARENTHESIS INDICATES EFFECTIVE BEARING LENGTH

UNFACTORED REACTIONS

JT	1ST LCASE COMBINED	MAX./MIN. COMPONENT REACTIONS SNOW	LIVE	PERM.LIVE	WIND	DEAD	SOIL
H	197	123 / 0	0 / 0	0 / 0	0 / 0	74 / 0	0 / 0
B	272	183 / 0	0 / 0	0 / 0	0 / 0	89 / 0	0 / 0
L	210	97 / 0	0 / 0	0 / 0	0 / 0	114 / 0	0 / 0
K	590	389 / 0	0 / 0	0 / 0	0 / 0	201 / 0	0 / 0
I	418	242 / 0	0 / 0	0 / 0	0 / 0	176 / 0	0 / 0

BEARING MATERIAL TO BE SPF NO.2 OR BETTER AT JOINT(S) H, B, L, K, I

BRACING

TOP CHORD TO BE SHEATHED OR MAX. PURLIN SPACING = 6.25 FT.
MAX. UNBRACED BOTTOM CHORD LENGTH = 10.00 FT OR RIGID CEILING DIRECTLY APPLIED.

ALL PITCH BREAKS AND PERIMETER CORNER JOINTS MUST BE LATERALLY RESTRAINED.

1 LATERAL BRACE(S) AT 1/ 2 LENGTH OF C-K, F-K.

END VERTICAL(S) MUST BE SHEATHED OR HAVE BRACES AS INDICATED IN THE MAX. UNBRACED LENGTH COLUMN OF THE TABLE BELOW

LOADING

TOTAL LOAD CASES: (4)

CHORDS

MEMB. FR-TO	MAX. FACTORED FORCE (LBS)	FACTORED VERT. LOAD LC1 (PLF) FROM	TO	MAX CSI (LC)	MAX. UNBRAC LENGTH
A- B	0 / 10	-78.0	-78.0	0.01 (1)	10.00
B- N	0 / 410	-78.0	-78.0	0.23 (1)	10.00
N- C	-176 / 0	-78.0	-78.0	0.26 (1)	6.25
C- D	0 / 31	-78.0	-78.0	0.43 (1)	10.00
D- E	0 / 31	-78.0	-78.0	0.43 (1)	10.00
E- F	0 / 31	-78.0	-78.0	0.43 (1)	10.00
F- G	-32 / 0	-78.0	-78.0	0.43 (1)	6.25
H- G	-231 / 0	0.0	0.0	0.20 (1)	7.81
B- M	0 / 102	-18.5	-18.5	0.22 (1)	10.00
M- L	0 / 102	-18.5	-18.5	0.22 (1)	10.00
L- K	0 / 100	-18.5	-18.5	0.17 (4)	10.00
K- J	0 / 32	-18.5	-18.5	0.19 (4)	10.00
J- I	0 / 32	-18.5	-18.5	0.19 (4)	10.00
I- H	0 / 0	-18.5	-18.5	0.19 (4)	10.00

WEBS

MEMB. FR-TO	MAX. FACTORED FORCE (LBS)	MAX CSI (LC)
L- C	-123 / 0	0.09 (1)
C- K	-183 / 0	0.10 (1)
K- D	-542 / 0	0.38 (1)
K- F	-89 / 0	0.05 (1)
I- F	-479 / 0	0.34 (1)
I- G	0 / 45	0.01 (1)
M- N	-879 / 0	0.00 (1)

DESIGN CRITERIA

SPECIFIED LOADS:

TOP	CH.	LL	=	21.0	PSF
		DL	=	6.0	PSF
BOT	CH.	LL	=	0.0	PSF
		DL	=	7.4	PSF
TOTAL	LOAD		=	34.4	PSF

SPACING = 24.0 IN. C/C

LOADING IN FLAT SECTION BASED ON A SLOPE OF 2.00/12 MINIMUM

THIS TRUSS IS DESIGNED FOR RESIDENTIAL OR SMALL BUILDING REQUIREMENTS OF PART 9, NBCC 2015

THIS DESIGN COMPLIES WITH:
- PART 9 OF BCBC 2018 , ABC 2019
- PART 9 OF OBC 2012 (2019 AMENDMENT)
- CSA 086-14
- TPIC 2014

(55 % OF 23.0 P.S.F. G.S.L. PLUS 8.4 P.S.F. RAIN LOAD) EQUALS 21.0 P.S.F. SPECIFIED ROOF LIVE LOAD

CSI: TC=0.43/1.00 (D-F:1) , BC=0.22/1.00 (B-M:1) , WB=0.38/1.00 (D-K:1) , SSI=0.69/1.00 (B-M:1)

DOL LUMBER=1.00 NAIL=1.00 LS BEND=1.10 COMP=1.10 SHEAR=1.10 TENS= 1.10

COMPANION LIVE LOAD FACTOR = 1.00

TRUSS PLATE MANUFACTURER IS NOT RESPONSIBLE FOR QUALITY CONTROL IN THE TRUSS MANUFACTURING PLANT .

NAIL VALUES

PLATE	GRIP(DRY) (PSI) MAX	MIN	SHEAR (PLI) MAX	MIN	SECTION (PLI) MAX	MIN
MT20	650	371	1747	788	1987	1873

PLATE PLACEMENT TOL. = 0.250 inches

PLATE ROTATION TOL. = 5.0 Deg.

JSI GRIP= 0.89 (C) (INPUT = 0.90)
JSI METAL= 0.17 (E) (INPUT = 1.00)

JOB NAME	TRUSS NAME	QUANTITY	PLY	JOB DESC.		DRWG NO.
336335	J01		1	TRUSS DESC.	JT 45147	E21104231

Alpa Roof Truss, Maple

Version 8.420 S Jan 21 2021 MiTek Industries, Inc. Thu Oct 14 08:54:59 2021 Page 1

ID:hd511hZTz_bdeQoS817GKByhVxV-qRcQYUOn6UiFjbX2FzHZZTC0EH?1XawTnPCA6GyTZFQ

Scale = 1:39.3

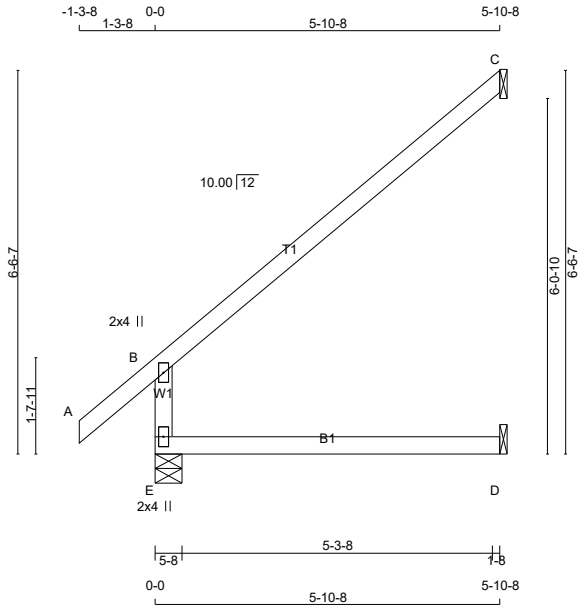

TOTAL WEIGHT = 28 X 19 = 532 lb

LUMBER

N. L. G. A. RULES

CHORDS	SIZE		LUMBER	DESCR.
E - B	2x4	DRY	No.2	SPF
A - C	2x4	DRY	No.2	SPF
E - D	2x4	DRY	No.2	SPF

DRY: SEASONED LUMBER.

PLATES (table is in inches)

JT	TYPE	PLATES	W	LEN	Y	X
B	TMV+p	MT20	2.0	4.0		
E	BMV1+p	MT20	2.0	4.0		

LATERAL BRACE(S) SHOWN SHALL BE 2X4 SPF#2

DIMENSIONS, SUPPORTS AND LOADINGS SPECIFIED BY FABRICATOR TO BE VERIFIED BY BUILDING DESIGNER

BEARINGS

JT	FACTORED GROSS REACTION VERT	HORZ	MAXIMUM FACTORED GROSS REACTION DOWN	HORZ	UPLIFT	INPUT BRG IN-SX	REQRD BRG IN-SX
E	457	0	457	0	0	5-8	1-8
C	172	0	172	0	0	1-8	1-8
D	46	0	52	0	0	1-8	1-8

SEE MITEK STANDARD DETAIL B97791H FOR CONNECTION TO JOINT(S) C , D

UNFACTORED REACTIONS

JT	1ST LCASE COMBINED	MAX./MIN. COMPONENT REACTIONS SNOW	LIVE	PERM.LIVE	WIND	DEAD	SOIL
E	323	212 / 0	0 / 0	0 / 0	0 / 0	111 / 0	0 / 0
C	119	93 / 0	0 / 0	0 / 0	0 / 0	26 / 0	0 / 0
D	37	0 / 0	0 / 0	0 / 0	0 / 0	37 / 0	0 / 0

BEARING MATERIAL TO BE SPF NO.2 OR BETTER AT JOINT(S) E

BRACING

TOP CHORD TO BE SHEATHED OR MAX. PURLIN SPACING = 6.25 FT.
MAX. UNBRACED BOTTOM CHORD LENGTH = 10.00 FT OR RIGID CEILING DIRECTLY APPLIED.

ALL PITCH BREAKS AND PERIMETER CORNER JOINTS MUST BE LATERALLY RESTRAINED.

LOADING

TOTAL LOAD CASES: (4)

CHORDS MEMB. FR-TO	MAX. FACTORED FORCE (LBS)	FACTORED VERT. LOAD (PLF) FROM	TO	LC1 MAX CSI (LC)	MAX. UNBRAC LENGTH
E- B	-394 / 0	0.0	0.0	0.11 (4)	7.81
A- B	0 / 35	-78.0	-78.0	0.11 (1)	10.00
B- C	-37 / 0	-78.0	-78.0	0.46 (1)	6.25
E- D	0 / 0	-18.5	-18.5	0.14 (4)	10.00

WEBS MEMB. FR-TO	MAX. FACTORED FORCE (LBS)	MAX CSI (LC)

[M]

DESIGN CRITERIA

SPECIFIED LOADS:

TOP CH.	LL	=	21.0	PSF
	DL	=	6.0	PSF
BOT CH.	LL	=	0.0	PSF
	DL	=	7.4	PSF
TOTAL LOAD		=	34.4	PSF

SPACING = 24.0 IN. C/C

THIS TRUSS IS DESIGNED FOR RESIDENTIAL OR SMALL BUILDING REQUIREMENTS OF PART 9, NBCC 2015

THIS DESIGN COMPLIES WITH:
- PART 9 OF BCBC 2018 , ABC 2019
- PART 9 OF OBC 2012 (2019 AMENDMENT)
- CSA 086-14
- TPIC 2014

DESIGN ASSUMPTIONS
-OVERHANG NOT TO BE ALTERED OR CUT OFF.

(55 % OF 23.0 P.S.F. G.S.L. PLUS 8.4 P.S.F. RAIN LOAD) EQUALS 21.0 P.S.F. SPECIFIED ROOF LIVE LOAD

ALLOWABLE DEFL.(LL)= L/360 (0.20")
CALCULATED VERT. DEFL.(LL) = L/ 999 (0.00")
ALLOWABLE DEFL.(TL)= L/360 (0.20")
CALCULATED VERT. DEFL.(TL) = L/ 999 (0.03")

CSI: TC=0.46/1.00 (B-C:1) , BC=0.14/1.00 (D-E:4) , WB=0.00/1.00 (n/a:0) , SSI=0.17/1.00 (B-C:1)

DOL LUMBER=1.00 NAIL=1.00 LS BEND=1.10 COMP=1.10 SHEAR=1.10 TENS= 1.10

COMPANION LIVE LOAD FACTOR = 1.00

AUTOSOLVE RIGHT HEEL ONLY

TRUSS PLATE MANUFACTURER IS NOT RESPONSIBLE FOR QUALITY CONTROL IN THE TRUSS MANUFACTURING PLANT .

NAIL VALUES

PLATE	GRIP(DRY) (PSI) MAX	MIN	SHEAR (PLI) MAX	MIN	SECTION (PLI) MAX	MIN
MT20	650	371	1747	788	1987	1873

PLATE PLACEMENT TOL. = 0.250 inches

PLATE ROTATION TOL. = 5.0 Deg.

JSI GRIP= 0.27 (B) (INPUT = 0.90)
JSI METAL= 0.21 (B) (INPUT = 1.00)

JOB NAME	TRUSS NAME	QUANTITY	PLY	JOB DESC.		DRWG NO.
336335	J01T		1	TRUSS DESC.	JT 45147	E21104232

Alpa Roof Truss, Maple

Version 8.420 S Jan 21 2021 MiTek Industries, Inc. Thu Oct 14 08:55:01 2021 Page 1

ID:hd511hZTz_bdeQoS817GKByhVxV-mpkAzAQ2e5yzyvhQMOJ1euHSD5i3?UZmEjhHB9yTZFO

Scale = 1:38.6

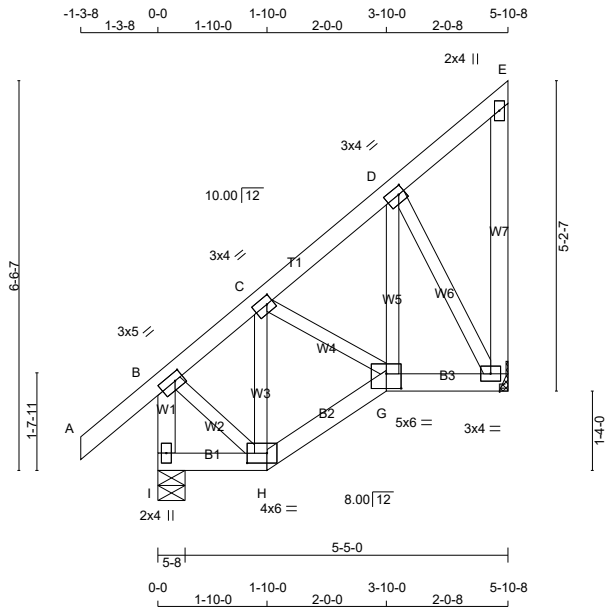

TOTAL WEIGHT = 12 X 35 = 425 lb

LUMBER

N. L. G. A. RULES

CHORDS	SIZE		LUMBER	DESCR.
I - B	2x4	DRY	No.2	SPF
A - E	2x4	DRY	No.2	SPF
F - E	2x4	DRY	No.2	SPF
I - H	2x4	DRY	No.2	SPF
H - G	2x4	DRY	No.2	SPF
G - F	2x4	DRY	No.2	SPF
ALL WEBS	2x3	DRY	No.2	SPF

DRY: SEASONED LUMBER.

PLATES (table is in inches)

JT	TYPE	PLATES	W	LEN	Y	X
B	TMVW-t	MT20	3.0	5.0	1.50	1.75
C	TMWW-t	MT20	3.0	4.0	1.50	1.25
D	TMWW-t	MT20	3.0	4.0	1.50	1.25
E	TMV+p	MT20	2.0	4.0		
F	BMVW1-t	MT20	3.0	4.0		
G	BBWW-l	MT20	5.0	6.0	3.00	3.00
H	BBWW-l	MT20	4.0	6.0	2.00	4.00
I	BMV1+p	MT20	2.0	4.0		

LATERAL BRACE(S) SHOWN SHALL BE 2X4 SPF#2

DIMENSIONS, SUPPORTS AND LOADINGS SPECIFIED BY FABRICATOR TO BE VERIFIED BY BUILDING DESIGNER

BEARINGS

JT	FACTORED GROSS REACTION VERT	HORZ	MAXIMUM FACTORED GROSS REACTION DOWN	HORZ	UPLIFT	INPUT BRG IN-SX	REQRD BRG IN-SX
I	404	0	404	0	0	5-8	1-8
F	271	0	271	0	0	MECHANICAL	

A SUITABLE HANGER/MECHANICAL CONNECTION IS REQUIRED AT JOINT F. MINIMUM BEARING LENGTH AT JOINT F = 1-8.

UNFACTORED REACTIONS

JT	1ST LCASE COMBINED	MAX./MIN. COMPONENT REACTIONS SNOW	LIVE	PERM.LIVE	WIND	DEAD	SOIL
I	286	188 / 0	0 / 0	0 / 0	0 / 0	97 / 0	0 / 0
F	193	116 / 0	0 / 0	0 / 0	0 / 0	77 / 0	0 / 0

BEARING MATERIAL TO BE SPF NO.2 OR BETTER AT JOINT(S) I

BRACING

TOP CHORD TO BE SHEATHED OR MAX. PURLIN SPACING = 6.25 FT.
MAX. UNBRACED BOTTOM CHORD LENGTH = 10.00 FT OR RIGID CEILING DIRECTLY APPLIED.

ALL PITCH BREAKS AND PERIMETER CORNER JOINTS MUST BE LATERALLY RESTRAINED.

LOADING

TOTAL LOAD CASES: (4)

CHORDS

MEMB. FR-TO	MAX. FACTORED FORCE (LBS)	FACTORED VERT. LOAD LC1 (PLF) FROM	TO	MAX CSI (LC)	MAX. UNBRAC LENGTH
I- B	-387 / 0	0.0	0.0	0.04 (1)	7.81
A- B	0 / 35	-78.0	-78.0	0.11 (1)	10.00
B- C	-171 / 0	-78.0	-78.0	0.10 (1)	6.25
C- D	-148 / 0	-78.0	-78.0	0.05 (1)	6.25
D- E	-12 / 0	-78.0	-78.0	0.05 (1)	6.25
F- E	-56 / 0	0.0	0.0	0.02 (1)	7.81
I- H	0 / 0	-18.5	-18.5	0.02 (4)	10.00
H- G	0 / 130	-18.5	-18.5	0.04 (4)	10.00
G- F	0 / 117	-18.5	-18.5	0.03 (4)	10.00

WEBS

MEMB. FR-TO	MAX. FACTORED FORCE (LBS)	MAX CSI (LC)
B- H	0 / 138	0.03 (1)
H- C	-116 / 0	0.02 (1)
C- G	0 / 14	0.00 (1)
G- D	0 / 103	0.02 (4)
D- F	-229 / 0	0.06 (1)

DESIGN CRITERIA

SPECIFIED LOADS:

TOP CH.	LL	=	21.0	PSF
	DL	=	6.0	PSF
BOT CH.	LL	=	0.0	PSF
	DL	=	7.4	PSF
TOTAL LOAD		=	34.4	PSF

SPACING = 24.0 IN. C/C

THIS TRUSS IS DESIGNED FOR RESIDENTIAL OR SMALL BUILDING REQUIREMENTS OF PART 9, NBCC 2015

THIS DESIGN COMPLIES WITH:
- PART 9 OF BCBC 2018 , ABC 2019
- PART 9 OF OBC 2012 (2019 AMENDMENT)
- CSA 086-14
- TPIC 2014

DESIGN ASSUMPTIONS
-OVERHANG NOT TO BE ALTERED OR CUT OFF.

(55 % OF 23.0 P.S.F. G.S.L. PLUS 8.4 P.S.F. RAIN LOAD) EQUALS 21.0 P.S.F. SPECIFIED ROOF LIVE LOAD

ALLOWABLE DEFL.(LL)= L/360 (0.20")
CALCULATED VERT. DEFL.(LL) = L/ 999 (0.00")
ALLOWABLE DEFL.(TL)= L/360 (0.20")
CALCULATED VERT. DEFL.(TL) = L/ 999 (0.00")

CSI: TC=0.11/1.00 (A-B:1) , BC=0.04/1.00 (G-H:4) , WB=0.06/1.00 (D-F:1) , SSI=0.06/1.00 (A-B:1)

DOL LUMBER=1.00 NAIL=1.00 LS BEND=1.10 COMP=1.10 SHEAR=1.10 TENS= 1.10

COMPANION LIVE LOAD FACTOR = 1.00

TRUSS PLATE MANUFACTURER IS NOT RESPONSIBLE FOR QUALITY CONTROL IN THE TRUSS MANUFACTURING PLANT .

NAIL VALUES

PLATE	GRIP(DRY) (PSI) MAX	MIN	SHEAR (PLI) MAX	MIN	SECTION (PLI) MAX	MIN
MT20	650	371	1747	788	1987	1873

PLATE PLACEMENT TOL. = 0.250 inches

PLATE ROTATION TOL. = 5.0 Deg.

JSI GRIP= 0.33 (B) (INPUT = 0.90)
JSI METAL= 0.08 (I) (INPUT = 1.00)

JOB NAME	TRUSS NAME	QUANTITY	PLY	JOB DESC.		DRWG NO.
336335	J02		1	TRUSS DESC.	JT 45147	E21104233

Alpa Roof Truss, Maple

Version 8.420 S Jan 21 2021 MiTek Industries, Inc. Thu Oct 14 08:55:03 2021 Page 1

ID:hd511hZTz_bdeQoS817GKByhVxV-iCsxOrRIAjChBDqpUpLWjJMjVuMXTOv3i1AOG1yTZFM

Scale = 1:41.5

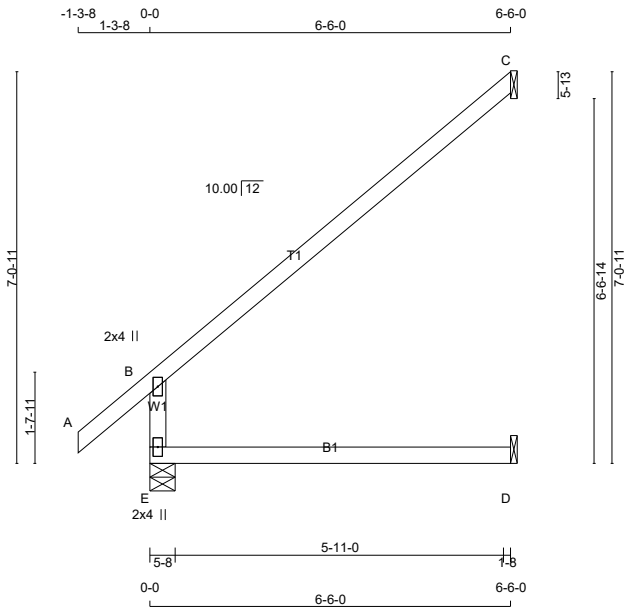

TOTAL WEIGHT = 36 X 21 = 743 lb

[M][F]

LUMBER

N. L. G. A. RULES

CHORDS	SIZE		LUMBER	DESCR.
E - B	2x4	DRY	No.2	SPF
A - C	2x4	DRY	No.2	SPF
E - D	2x4	DRY	No.2	SPF

DRY: SEASONED LUMBER.

PLATES (table is in inches)

JT	TYPE	PLATES	W	LEN	Y	X
B	TMV+p	MT20	2.0	4.0		
E	BMV1+p	MT20	2.0	4.0		

LATERAL BRACE(S) SHOWN SHALL BE 2X4 SPF#2

DIMENSIONS, SUPPORTS AND LOADINGS SPECIFIED BY FABRICATOR TO BE VERIFIED BY BUILDING DESIGNER

BEARINGS

JT	FACTORED GROSS REACTION VERT	HORZ	MAXIMUM FACTORED GROSS REACTION DOWN	HORZ	UPLIFT	INPUT BRG IN-SX	REQRD BRG IN-SX
E	494	0	494	0	0	5-8	1-8
C	190	0	190	0	0	1-8	1-8
D	51	0	57	0	0	1-8	1-8

SEE MITEK STANDARD DETAIL B97791H FOR CONNECTION TO JOINT(S) C , D

UNFACTORED REACTIONS

JT	1ST LCASE COMBINED	MAX./MIN. COMPONENT REACTIONS SNOW	LIVE	PERM.LIVE	WIND	DEAD	SOIL
E	350	229 / 0	0 / 0	0 / 0	0 / 0	121 / 0	0 / 0
C	132	102 / 0	0 / 0	0 / 0	0 / 0	29 / 0	0 / 0
D	41	0 / 0	0 / 0	0 / 0	0 / 0	41 / 0	0 / 0

BEARING MATERIAL TO BE SPF NO.2 OR BETTER AT JOINT(S) E

BRACING

TOP CHORD TO BE SHEATHED OR MAX. PURLIN SPACING = 6.25 FT.
MAX. UNBRACED BOTTOM CHORD LENGTH = 10.00 FT OR RIGID CEILING DIRECTLY APPLIED.

ALL PITCH BREAKS AND PERIMETER CORNER JOINTS MUST BE LATERALLY RESTRAINED.

LOADING

TOTAL LOAD CASES: (4)

CHORDS MEMB. FR-TO	MAX. FACTORED FORCE (LBS)	FACTORED VERT. LOAD (PLF) FROM	TO	LC1 MAX CSI (LC)	MAX. UNBRAC LENGTH
E- B	-425 / 0	0.0	0.0	0.13 (4)	7.81
A- B	0 / 35	-78.0	-78.0	0.11 (1)	10.00
B- C	-41 / 0	-78.0	-78.0	0.44 (1)	6.25
E- D	0 / 0	-18.5	-18.5	0.16 (4)	10.00

WEBS MEMB. FR-TO	MAX. FACTORED FORCE (LBS)	MAX CSI (LC)

DESIGN CRITERIA

SPECIFIED LOADS:

TOP CH.	LL	=	21.0	PSF
	DL	=	6.0	PSF
BOT CH.	LL	=	0.0	PSF
	DL	=	7.4	PSF
TOTAL LOAD		=	34.4	PSF

SPACING = 24.0 IN. C/C

THIS TRUSS IS DESIGNED FOR RESIDENTIAL OR SMALL BUILDING REQUIREMENTS OF PART 9, NBCC 2015

THIS DESIGN COMPLIES WITH:
- PART 9 OF BCBC 2018 , ABC 2019
- PART 9 OF OBC 2012 (2019 AMENDMENT)
- CSA 086-14
- TPIC 2014

DESIGN ASSUMPTIONS
-OVERHANG NOT TO BE ALTERED OR CUT OFF.

(55 % OF 23.0 P.S.F. G.S.L. PLUS 8.4 P.S.F. RAIN LOAD) EQUALS 21.0 P.S.F. SPECIFIED ROOF LIVE LOAD

ALLOWABLE DEFL.(LL)= L/360 (0.22")
CALCULATED VERT. DEFL.(LL) = L/ 999 (0.00")
ALLOWABLE DEFL.(TL)= L/360 (0.22")
CALCULATED VERT. DEFL.(TL) = L/ 999 (0.05")

CSI: TC=0.44/1.00 (B-C:1) , BC=0.16/1.00 (D-E:4) , WB=0.00/1.00 (n/a:0) , SSI=0.19/1.00 (B-C:1)

DOL LUMBER=1.00 NAIL=1.00 LS BEND=1.10 COMP=1.10 SHEAR=1.10 TENS= 1.10

COMPANION LIVE LOAD FACTOR = 1.00

AUTOSOLVE RIGHT HEEL ONLY

TRUSS PLATE MANUFACTURER IS NOT RESPONSIBLE FOR QUALITY CONTROL IN THE TRUSS MANUFACTURING PLANT .

NAIL VALUES

PLATE	GRIP(DRY) (PSI) MAX	MIN	SHEAR (PLI) MAX	MIN	SECTION (PLI) MAX	MIN
MT20	650	371	1747	788	1987	1873

PLATE PLACEMENT TOL. = 0.250 inches

PLATE ROTATION TOL. = 5.0 Deg.

JSI GRIP= 0.29 (B) (INPUT = 0.90)
JSI METAL= 0.23 (B) (INPUT = 1.00)

JOB NAME	TRUSS NAME	QUANTITY	PLY	JOB DESC.		DRWG NO.
336335	J02T		1	TRUSS DESC.	JT 45147	E21104234

Alpa Roof Truss, Maple

Version 8.420 S Jan 21 2021 MiTek Industries, Inc. Thu Oct 14 08:55:05 2021 Page 1

ID:hd511hZTz_bdeQoS817GKByhVxV-ebzhpXTYiKSPRW_BbEO_okS7Di4jxHKM9LfUKwyTZFK

Scale = 1:41.7

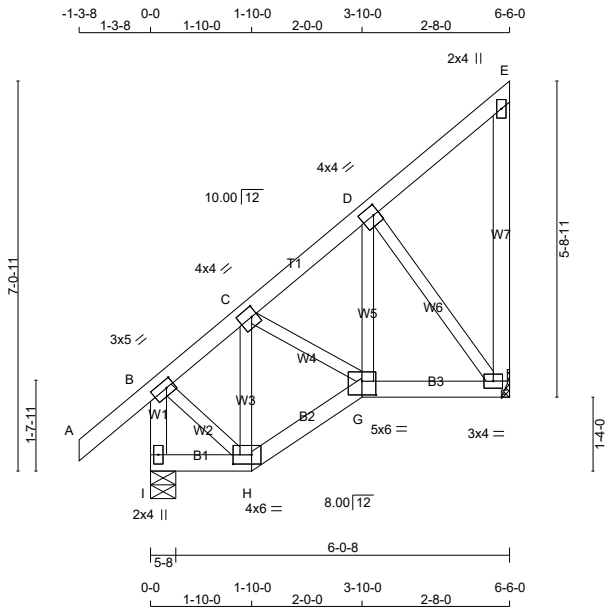

TOTAL WEIGHT = 12 X 38 = 455 lb

LUMBER

N. L. G. A. RULES

CHORDS	SIZE		LUMBER	DESCR.
I - B	2x4	DRY	No.2	SPF
A - E	2x4	DRY	No.2	SPF
F - E	2x4	DRY	No.2	SPF
I - H	2x4	DRY	No.2	SPF
H - G	2x4	DRY	No.2	SPF
G - F	2x4	DRY	No.2	SPF
ALL WEBS	2x3	DRY	No.2	SPF

DRY: SEASONED LUMBER.

PLATES (table is in inches)

JT	TYPE	PLATES	W	LEN	Y	X
B	TMVW-t	MT20	3.0	5.0	1.50	1.75
C	TMWW-t	MT20	4.0	4.0	2.00	1.25
D	TMWW-t	MT20	4.0	4.0	2.00	1.25
E	TMV+p	MT20	2.0	4.0		
F	BMVW1-t	MT20	3.0	4.0		
G	BBWW-l	MT20	5.0	6.0	3.00	3.00
H	BBWW-l	MT20	4.0	6.0	2.00	4.00
I	BMV1+p	MT20	2.0	4.0		

LATERAL BRACE(S) SHOWN SHALL BE 2X4 SPF#2

DIMENSIONS, SUPPORTS AND LOADINGS SPECIFIED BY FABRICATOR TO BE VERIFIED BY BUILDING DESIGNER

BEARINGS

JT	FACTORED GROSS REACTION VERT	HORZ	MAXIMUM FACTORED GROSS REACTION DOWN	HORZ	UPLIFT	INPUT BRG IN-SX	REQRD BRG IN-SX
I	433	0	433	0	0	5-8	1-8
F	302	0	302	0	0	MECHANICAL	

A SUITABLE HANGER/MECHANICAL CONNECTION IS REQUIRED AT JOINT F. MINIMUM BEARING LENGTH AT JOINT F = 1-8.

UNFACTORED REACTIONS

JT	1ST LCASE COMBINED	MAX./MIN. COMPONENT REACTIONS SNOW	LIVE	PERM.LIVE	WIND	DEAD	SOIL
I	306	201 / 0	0 / 0	0 / 0	0 / 0	105 / 0	0 / 0
F	216	130 / 0	0 / 0	0 / 0	0 / 0	85 / 0	0 / 0

BEARING MATERIAL TO BE SPF NO.2 OR BETTER AT JOINT(S) I

BRACING

TOP CHORD TO BE SHEATHED OR MAX. PURLIN SPACING = 6.25 FT.
MAX. UNBRACED BOTTOM CHORD LENGTH = 10.00 FT OR RIGID CEILING DIRECTLY APPLIED.

ALL PITCH BREAKS AND PERIMETER CORNER JOINTS MUST BE LATERALLY RESTRAINED.

LOADING

TOTAL LOAD CASES: (4)

CHORDS

MEMB. FR-TO	MAX. FACTORED FORCE (LBS)	FACTORED VERT. LOAD LC1 (PLF) FROM	TO	MAX CSI (LC)	MAX. UNBRAC LENGTH
I- B	-416 / 0	0.0	0.0	0.04 (1)	7.81
A- B	0 / 35	-78.0	-78.0	0.11 (1)	10.00
B- C	-195 / 0	-78.0	-78.0	0.08 (1)	6.25
C- D	-194 / 0	-78.0	-78.0	0.06 (1)	6.25
D- E	-13 / 0	-78.0	-78.0	0.06 (1)	6.25
F- E	-79 / 0	0.0	0.0	0.05 (1)	7.81
I- H	0 / 0	-18.5	-18.5	0.02 (4)	10.00
H- G	0 / 150	-18.5	-18.5	0.04 (4)	10.00
G- F	0 / 157	-18.5	-18.5	0.05 (4)	10.00

WEBS

MEMB. FR-TO	MAX. FACTORED FORCE (LBS)	MAX CSI (LC)
B- H	0 / 159	0.04 (1)
H- C	-139 / 0	0.03 (1)
C- G	0 / 43	0.01 (1)
G- D	0 / 104	0.03 (4)
D- F	-253 / 0	0.07 (1)

[M][F]

DESIGN CRITERIA

SPECIFIED LOADS:

TOP CH.	LL	=	21.0	PSF
	DL	=	6.0	PSF
BOT CH.	LL	=	0.0	PSF
	DL	=	7.4	PSF
TOTAL LOAD		=	34.4	PSF

SPACING = 24.0 IN. C/C

THIS TRUSS IS DESIGNED FOR RESIDENTIAL OR SMALL BUILDING REQUIREMENTS OF PART 9, NBCC 2015

THIS DESIGN COMPLIES WITH:
- PART 9 OF BCBC 2018 , ABC 2019
- PART 9 OF OBC 2012 (2019 AMENDMENT)
- CSA 086-14
- TPIC 2014

DESIGN ASSUMPTIONS
-OVERHANG NOT TO BE ALTERED OR CUT OFF.

(55 % OF 23.0 P.S.F. G.S.L. PLUS 8.4 P.S.F. RAIN LOAD) EQUALS 21.0 P.S.F. SPECIFIED ROOF LIVE LOAD

ALLOWABLE DEFL.(LL)= L/360 (0.22")
CALCULATED VERT. DEFL.(LL) = L/ 999 (0.00")
ALLOWABLE DEFL.(TL)= L/360 (0.22")
CALCULATED VERT. DEFL.(TL) = L/ 999 (0.00")

CSI: TC=0.11/1.00 (A-B:1) , BC=0.05/1.00 (F-G:4) , WB=0.07/1.00 (D-F:1) , SSI=0.07/1.00 (D-E:1)

DOL LUMBER=1.00 NAIL=1.00 LS BEND=1.10 COMP=1.10 SHEAR=1.10 TENS= 1.10

COMPANION LIVE LOAD FACTOR = 1.00

TRUSS PLATE MANUFACTURER IS NOT RESPONSIBLE FOR QUALITY CONTROL IN THE TRUSS MANUFACTURING PLANT .

NAIL VALUES

PLATE	GRIP(DRY) (PSI) MAX	MIN	SHEAR (PLI) MAX	MIN	SECTION (PLI) MAX	MIN
MT20	650	371	1747	788	1987	1873

PLATE PLACEMENT TOL. = 0.250 inches

PLATE ROTATION TOL. = 5.0 Deg.

JSI GRIP= 0.35 (B) (INPUT = 0.90)
JSI METAL= 0.09 (B) (INPUT = 1.00)

JOB NAME	TRUSS NAME	QUANTITY	PLY	JOB DESC.		DRWG NO.
336322	H65S		1	TRUSS DESC.	JT 45147	E21104266

Alpa Roof Truss, Maple

Version 8.420 S Jan 21 2021 MiTek Industries, Inc. Thu Oct 14 10:15:24 2021 Page 1

ID:hd511hZTz bdeQoS817GKByhVxV-2hfTCJnLpzbe45uMPpL2cyXeYGnJYnQgHaV?z5yTY41

Scale = 1:44.5

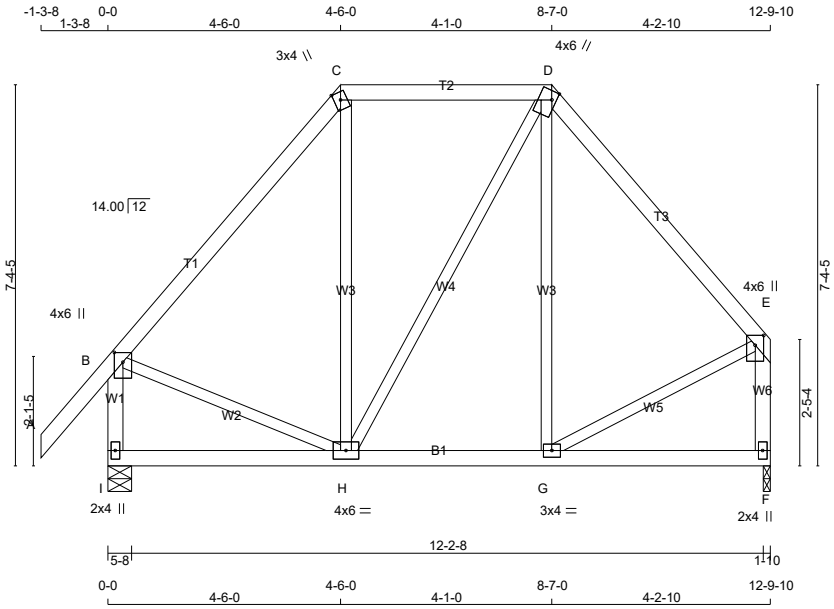

TOTAL WEIGHT = 3 X 66 = 199 lb

[M][F]

LUMBER

N. L. G. A. RULES

CHORDS	SIZE		LUMBER	DESCR.
A - C	2x4	DRY	No.2	SPF
C - D	2x4	DRY	No.2	SPF
D - E	2x4	DRY	No.2	SPF
I - B	2x4	DRY	No.2	SPF
F - E	2x4	DRY	No.2	SPF
I - F	2x4	DRY	No.2	SPF
ALL WEBS EXCEPT	2x3	DRY	No.2	SPF

DRY: SEASONED LUMBER.

PLATES (table is in inches)

JT	TYPE	PLATES	W	LEN	Y	X
B	TMVW+p	MT20	4.0	6.0	2.25	2.00
C	TTW+m	MT20	3.0	4.0	Edge	
D	TTWW+m	MT20	4.0	6.0	2.00	1.00
E	TMVW+p	MT20	4.0	6.0	2.25	2.00
F	BMV1+p	MT20	2.0	4.0		
G	BMWW-t	MT20	3.0	4.0		
H	BMWWW-t	MT20	4.0	6.0		
I	BMV1+p	MT20	2.0	4.0		

Edge - INDICATES REFERENCE CORNER OF PLATE TOUCHES EDGE OF CHORD.

LATERAL BRACE(S) SHOWN SHALL BE 2X4 SPF#2

DIMENSIONS, SUPPORTS AND LOADINGS SPECIFIED BY FABRICATOR TO BE VERIFIED BY BUILDING DESIGNER

BEARINGS

JT	FACTORED GROSS REACTION VERT	HORZ	MAXIMUM FACTORED GROSS REACTION DOWN	HORZ	UPLIFT	INPUT BRG IN-SX	REQRD BRG IN-SX
I	727	0	727	0	0	5-8	1-8
F	618	0	618	0	0	1-10	1-8

UNFACTORED REACTIONS

JT	1ST LCASE COMBINED	MAX./MIN. COMPONENT REACTIONS SNOW	LIVE	PERM.LIVE	WIND	DEAD	SOIL
I	516	328 / 0	0 / 0	0 / 0	0 / 0	188 / 0	0 / 0
F	440	269 / 0	0 / 0	0 / 0	0 / 0	172 / 0	0 / 0

BEARING MATERIAL TO BE SPF NO.2 OR BETTER AT JOINT(S) I, F

BRACING

TOP CHORD TO BE SHEATHED OR MAX. PURLIN SPACING = 6.25 FT.
MAX. UNBRACED BOTTOM CHORD LENGTH = 10.00 FT OR RIGID CEILING DIRECTLY APPLIED.

ALL PITCH BREAKS AND PERIMETER CORNER JOINTS MUST BE LATERALLY RESTRAINED.

LOADING

TOTAL LOAD CASES: (4)

CHORDS

MEMB. FR-TO	MAX. FACTORED FORCE (LBS)	FACTORED VERT. LOAD (PLF) FROM	TO	LC1	MAX CSI (LC)	MAX. UNBRAC LENGTH
A- B	0 / 42	-78.0	-78.0	0.11 (1)	10.00	
B- C	-404 / 0	-78.0	-78.0	0.21 (1)	6.25	
C- D	-261 / 0	-78.0	-78.0	0.17 (1)	6.25	
D- E	-392 / 0	-78.0	-78.0	0.18 (1)	6.25	
I- B	-691 / 0	0.0	0.0	0.08 (1)	7.81	
F- E	-584 / 0	0.0	0.0	0.08 (1)	7.81	
I- H	0 / 0	-18.5	-18.5	0.08 (4)	10.00	
H- G	0 / 253	-18.5	-18.5	0.11 (4)	10.00	
G- F	0 / 0	-18.5	-18.5	0.07 (4)	10.00	

WEBS

MEMB. FR-TO	MAX. FACTORED FORCE (LBS)	MAX CSI (LC)
H- C	-27 / 51	0.03 (1)
H- D	0 / 17	0.00 (1)
G- D	-40 / 43	0.04 (1)
B- H	0 / 280	0.06 (1)
G- E	0 / 281	0.06 (1)

DESIGN CRITERIA

SPECIFIED LOADS:

TOP	CH.	LL	=	21.0	PSF
		DL	=	6.0	PSF
BOT	CH.	LL	=	0.0	PSF
		DL	=	7.4	PSF
TOTAL	LOAD		=	34.4	PSF

SPACING = 24.0 IN. C/C

LOADING IN FLAT SECTION BASED ON A SLOPE OF 2.00/12 MINIMUM

THIS TRUSS IS DESIGNED FOR RESIDENTIAL OR SMALL BUILDING REQUIREMENTS OF PART 9, NBCC 2015

THIS DESIGN COMPLIES WITH:
- PART 9 OF BCBC 2018 , ABC 2019
- PART 9 OF OBC 2012 (2019 AMENDMENT)
- CSA 086-14
- TPIC 2014

(55 % OF 23.0 P.S.F. G.S.L. PLUS 8.4 P.S.F. RAIN LOAD) EQUALS 21.0 P.S.F. SPECIFIED ROOF LIVE LOAD

ALLOWABLE DEFL.(LL)= L/360 (0.43")
CALCULATED VERT. DEFL.(LL) = L/ 999 (0.00")
ALLOWABLE DEFL.(TL)= L/360 (0.43")
CALCULATED VERT. DEFL.(TL) = L/ 999 (0.02")

CSI: TC=0.21/1.00 (B-C:1) , BC=0.11/1.00 (G-H:4) , WB=0.06/1.00 (E-G:1) , SSI=0.12/1.00 (C-D:1)

DOL LUMBER=1.00 NAIL=1.00 LS BEND=1.10 COMP=1.10 SHEAR=1.10 TENS= 1.10

COMPANION LIVE LOAD FACTOR = 1.00

TRUSS PLATE MANUFACTURER IS NOT RESPONSIBLE FOR QUALITY CONTROL IN THE TRUSS MANUFACTURING PLANT .

NAIL VALUES

PLATE	GRIP(DRY) (PSI) MAX	MIN	SHEAR (PLI) MAX	MIN	SECTION (PLI) MAX	MIN
MT20	650	371	1747	788	1987	1873

PLATE PLACEMENT TOL. = 0.250 inches

PLATE ROTATION TOL. = 5.0 Deg.

JSI GRIP= 0.73 (C) (INPUT = 0.90)
JSI METAL= 0.21 (B) (INPUT = 1.00)

JOB NAME	TRUSS NAME	QUANTITY	PLY	JOB DESC.		DRWG NO.
336322	H66		1	TRUSS DESC.	JT 45147	E21104267

Alpa Roof Truss, Maple

Version 8.420 S Jan 21 2021 MiTek Industries, Inc. Thu Oct 14 10:15:25 2021 Page 1

ID:hd511hZTz bdeQoS817GKByhVxV-WtDrQfozaGjVhFTZyWsH9A4oRq40HEtpWEEYVYyTY40

Scale = 1:61.2

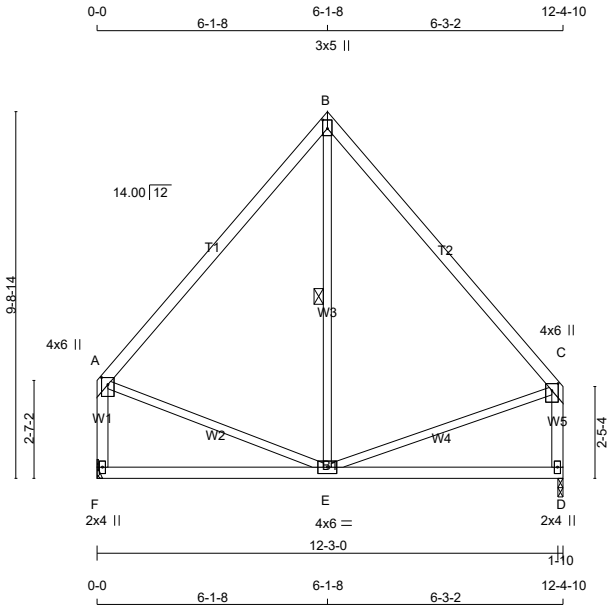

TOTAL WEIGHT = 9 X 59 = 529 lb

LUMBER

N. L. G. A. RULES

CHORDS	SIZE		LUMBER	DESCR.
A - B	2x4	DRY	2100F 1.8E	SPF
B - C	2x4	DRY	2100F 1.8E	SPF
F - A	2x4	DRY	No.2	SPF
D - C	2x4	DRY	No.2	SPF
F - D	2x4	DRY	No.2	SPF
ALL WEBS EXCEPT	2x3	DRY	No.2	SPF

DRY: SEASONED LUMBER.

PLATES (table is in inches)

JT	TYPE	PLATES	W	LEN	Y	X
A	TMVW+p	MT20	4.0	6.0	2.25	2.00
B	TTW+p	MT20	3.0	5.0	2.75	1.50
C	TMVW+p	MT20	4.0	6.0	2.25	2.00
D	BMV1+p	MT20	2.0	4.0		
E	BMWWW-t	MT20	4.0	6.0		
F	BMV1+p	MT20	2.0	4.0		

LATERAL BRACE(S) SHOWN SHALL BE 2X4 SPF#2

DIMENSIONS, SUPPORTS AND LOADINGS SPECIFIED BY FABRICATOR TO BE VERIFIED BY BUILDING DESIGNER

BEARINGS

JT	FACTORED GROSS REACTION VERT	HORZ	MAXIMUM FACTORED GROSS REACTION DOWN	HORZ	UPLIFT	INPUT BRG IN-SX	REQRD BRG IN-SX
F	597	0	597	0	0	MECHANICAL	
D	597	0	597	0	0	1-10	1-8

A SUITABLE HANGER/MECHANICAL CONNECTION IS REQUIRED AT JOINT F. MINIMUM BEARING LENGTH AT JOINT F = 1-8.

UNFACTORED REACTIONS

JT	1ST LCASE COMBINED	MAX./MIN. COMPONENT REACTIONS SNOW	LIVE	PERM.LIVE	WIND	DEAD	SOIL
F	426	260 / 0	0 / 0	0 / 0	0 / 0	166 / 0	0 / 0
D	426	260 / 0	0 / 0	0 / 0	0 / 0	166 / 0	0 / 0

BEARING MATERIAL TO BE SPF NO.2 OR BETTER AT JOINT(S) D

BRACING

TOP CHORD TO BE SHEATHED OR MAX. PURLIN SPACING = 6.25 FT.
MAX. UNBRACED BOTTOM CHORD LENGTH = 10.00 FT OR RIGID CEILING DIRECTLY APPLIED.

ALL PITCH BREAKS AND PERIMETER CORNER JOINTS MUST BE LATERALLY RESTRAINED.

1 LATERAL BRACE(S) AT 1/ 2 LENGTH OF B-E.

END VERTICAL(S) MUST BE SHEATHED OR HAVE BRACES AS INDICATED IN THE MAX. UNBRACED LENGTH COLUMN OF THE TABLE BELOW

LOADING

TOTAL LOAD CASES: (4)

CHORDS MEMB. FR-TO	MAX. FACTORED FORCE (LBS)	FACTORED VERT. LOAD LC1 (PLF) FROM	TO	MAX CSI (LC)	MAX. UNBRAC LENGTH	WEBS MEMB. FR-TO	MAX. FACTORED FORCE (LBS)	MAX CSI (LC)
A- B	-317 / 0	-78.0	-78.0	0.25 (1)	6.25	E- B	0 / 99	0.03 (4)
B- C	-317 / 0	-78.0	-78.0	0.26 (1)	6.25	A- E	0 / 220	0.05 (1)
F- A	-555 / 0	0.0	0.0	0.08 (1)	7.81	E- C	0 / 218	0.05 (1)
D- C	-553 / 0	0.0	0.0	0.07 (1)	7.81			
F- E	0 / 0	-18.5	-18.5	0.20 (4)	10.00			
E- D	0 / 0	-18.5	-18.5	0.20 (4)	10.00			

[M][F]

DESIGN CRITERIA

SPECIFIED LOADS:

TOP	CH.	LL	=	21.0	PSF
		DL	=	6.0	PSF
BOT	CH.	LL	=	0.0	PSF
		DL	=	7.4	PSF
TOTAL	LOAD		=	34.4	PSF

SPACING = 24.0 IN. C/C

THIS TRUSS IS DESIGNED FOR RESIDENTIAL OR SMALL BUILDING REQUIREMENTS OF PART 9, NBCC 2015

THIS DESIGN COMPLIES WITH:
- PART 9 OF BCBC 2018 , ABC 2019
- PART 9 OF OBC 2012 (2019 AMENDMENT)
- CSA 086-14
- TPIC 2014

(55 % OF 23.0 P.S.F. G.S.L. PLUS 8.4 P.S.F. RAIN LOAD) EQUALS 21.0 P.S.F. SPECIFIED ROOF LIVE LOAD

ALLOWABLE DEFL.(LL)= L/360 (0.41")
CALCULATED VERT. DEFL.(LL) = L/ 999 (0.00")
ALLOWABLE DEFL.(TL)= L/360 (0.41")
CALCULATED VERT. DEFL.(TL) = L/ 999 (0.03")

CSI: TC=0.26/1.00 (B-C:1) , BC=0.20/1.00 (E-F:4) , WB=0.05/1.00 (A-E:1) , SSI=0.12/1.00 (B-C:1)

DOL LUMBER=1.00 NAIL=1.00 LS BEND=1.10 COMP=1.10 SHEAR=1.10 TENS= 1.10

COMPANION LIVE LOAD FACTOR = 1.00

TRUSS PLATE MANUFACTURER IS NOT RESPONSIBLE FOR QUALITY CONTROL IN THE TRUSS MANUFACTURING PLANT .

NAIL VALUES

PLATE	GRIP(DRY) (PSI) MAX	MIN	SHEAR (PLI) MAX	MIN	SECTION (PLI) MAX	MIN
MT20	650	371	1747	788	1987	1873

PLATE PLACEMENT TOL. = 0.250 inches

PLATE ROTATION TOL. = 5.0 Deg.

JSI GRIP= 0.33 (E) (INPUT = 0.90)
JSI METAL= 0.17 (C) (INPUT = 1.00)

JOB NAME	TRUSS NAME	QUANTITY	PLY	JOB DESC.		DRWG NO.
336322	H67		1	TRUSS DESC.	JT 45147	E21104268

Alpha Roof Truss, Maple

Version 8.420 S Jan 21 2021 MiTek Industries, Inc. Thu Oct 14 10:15:27 2021 Page 1

ID:hd511hZTz_bdeQoS817GKByhVxV-SGLcrLqD6uzDxZdx4xulEb91sUnQl3F6zYjfaQyTY4_

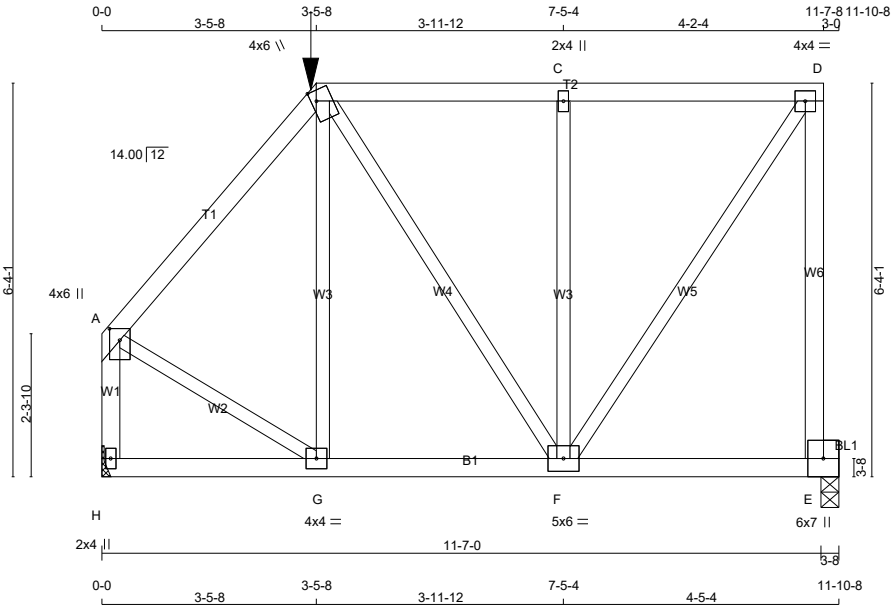

Scale = 1:37.1

TOTAL WEIGHT = 2 X 62 = 124 lb

[M]

LUMBER

N. L. G. A. RULES

CHORDS	SIZE		LUMBER	DESCR.
A - B	2x4	DRY	No.2	SPF
B - D	2x4	DRY	No.2	SPF
E - D	2x4	DRY	No.2	SPF
H - A	2x4	DRY	No.2	SPF
H - E	2x4	DRY	No.2	SPF

BEARING BLOCKS

BL1	2x4	DRY	No.2	SPF

ALL WEBS	2x3	DRY	No.2	SPF

EXCEPT

DRY: SEASONED LUMBER.

PLATES (table is in inches)

JT	TYPE	PLATES	W	LEN	Y	X
A	TMVW+p	MT20	4.0	6.0	2.25	2.00
B	TTWW+m	MT20	4.0	6.0	2.00	1.00
C	TMW+w	MT20	2.0	4.0		
D	TMVW-t	MT20	4.0	4.0		
E	BMVK1+p	MT20	6.0	7.0		
F	BMWWW-t	MT20	5.0	6.0		
G	BMWW-t	MT20	4.0	4.0		
H	BMV1+p	MT20	2.0	4.0		

LATERAL BRACE(S) SHOWN SHALL BE 2X4 SPF#2

DIMENSIONS, SUPPORTS AND LOADINGS SPECIFIED BY FABRICATOR TO BE VERIFIED BY BUILDING DESIGNER

BEARINGS

JT	FACTORED GROSS REACTION VERT	HORZ	MAXIMUM FACTORED GROSS REACTION DOWN	HORZ	UPLIFT	INPUT BRG IN-SX	REQRD BRG IN-SX
E	843	0	843	0	0	3-8	2-8
H	780	0	780	0	0	MECHANICAL	

A SUITABLE HANGER/MECHANICAL CONNECTION IS REQUIRED AT JOINT H. MINIMUM BEARING LENGTH AT JOINT H = 1-8.

UNFACTORED REACTIONS

JT	1ST LCASE COMBINED	MAX./MIN. COMPONENT REACTIONS SNOW	LIVE	PERM.LIVE	WIND	DEAD	SOIL
E	601	370 / 0	0 / 0	0 / 0	0 / 0	231 / 0	0 / 0
H	557	336 / 0	0 / 0	0 / 0	0 / 0	221 / 0	0 / 0

BEARING MATERIAL TO BE SPF NO.2 OR BETTER AT JOINT(S) E

BRACING

TOP CHORD TO BE SHEATHED OR MAX. PURLIN SPACING = 6.25 FT.
MAX. UNBRACED BOTTOM CHORD LENGTH = 6.25 FT OR RIGID CEILING DIRECTLY APPLIED.

ALL PITCH BREAKS AND PERIMETER CORNER JOINTS MUST BE LATERALLY RESTRAINED.

LOADING

TOTAL LOAD CASES: (4)

CHORDS

MEMB. FR-TO	MAX. FACTORED FORCE (LBS)	FACTORED VERT. LOAD (PLF) FROM	TO	LC1	MAX CSI (LC)	MAX. UNBRAC LENGTH
A- B	-545 / 0	-78.0	-78.0	0.18 (1)	6.25	
B- C	-403 / 0	-114.5	-114.5	0.34 (1)	6.25	
C- D	-403 / 0	-114.5	-114.5	0.34 (1)	6.25	
E- D	-797 / 0	0.0	0.0	0.65 (1)	7.81	
H- A	-742 / 0	0.0	0.0	0.10 (1)	7.81	
H- G	0 / 0	-27.2	-27.2	0.09 (4)	10.00	
G- F	0 / 351	-27.2	-27.2	0.14 (4)	10.00	
F- E	-19 / 0	-27.2	-27.2	0.11 (4)	6.25	

WEBS

MEMB. FR-TO	MAX. FACTORED FORCE (LBS)	MAX CSI (LC)
G- B	-80 / 47	0.05 (1)
B- F	0 / 94	0.02 (1)
F- C	-574 / 0	0.38 (1)
F- D	0 / 742	0.18 (1)
A- G	0 / 401	0.10 (1)

FACTORED CONCENTRATED LOADS (LBS)

JT	LOC.	LC1	MAX-	MAX+	FACE	DIR.	TYPE	HEEL	CONN.
B	3-5-8	-107	-107	---	FRONT	VERT	TOTAL	---	C1

CONNECTION REQUIREMENTS

1) **C1:** A SUITABLE HANGER/MECHANICAL CONNECTION IS REQUIRED.

DESIGN CRITERIA

SPECIFIED LOADS:

TOP CH.	LL	=	21.0	PSF
	DL	=	6.0	PSF
BOT CH.	LL	=	0.0	PSF
	DL	=	7.4	PSF
TOTAL LOAD		=	34.4	PSF

SPACING = 24.0 IN. C/C

LOADING IN FLAT SECTION BASED ON A SLOPE OF 2.00/12 MINIMUM

GIRDER TYPE: CPrimeHip
LEFT SETBACK = 3-5-8
RIGHT SETBACK = 0-0
END SETBACK = 3-10-8
END WALL WIDTH = 0-0
CORNER FRAMING TYPE: CONVENTIONAL
END JACK TYPE: CONVENTIONAL
APPLIED TO FRONT SIDE
- ADDT'L LOADS BASED ON 55 % OF GSL.

THIS TRUSS IS DESIGNED FOR RESIDENTIAL OR SMALL BUILDING REQUIREMENTS OF PART 9, NBCC 2015

THIS DESIGN COMPLIES WITH:
- PART 9 OF BCBC 2018 , ABC 2019
- PART 9 OF OBC 2012 (2019 AMENDMENT)
- CSA 086-14
- TPIC 2014

(55 % OF 23.0 P.S.F. G.S.L. PLUS 8.4 P.S.F. RAIN LOAD) EQUALS 21.0 P.S.F. SPECIFIED ROOF LIVE LOAD

ALLOWABLE DEFL.(LL)= L/360 (0.38")
CALCULATED VERT. DEFL.(LL) = L/ 999 (0.01")
ALLOWABLE DEFL.(TL)= L/360 (0.38")
CALCULATED VERT. DEFL.(TL) = L/ 999 (0.02")

CSI: TC=0.65/1.00 (D-E:1) , BC=0.14/1.00 (F-G:4) , WB=0.38/1.00 (C-F:1) , SSI=0.25/1.00 (C-D:1)

DOL LUMBER=1.00 NAIL=1.00 LS BEND=1.00 COMP=1.00 SHEAR=1.00 TENS= 1.00

COMPANION LIVE LOAD FACTOR = 1.00

TRUSS PLATE MANUFACTURER IS NOT RESPONSIBLE FOR QUALITY CONTROL IN THE TRUSS MANUFACTURING PLANT .

NAIL VALUES

PLATE	GRIP(DRY) (PSI) MAX	MIN	SHEAR (PLI) MAX	MIN	SECTION (PLI) MAX	MIN
MT20	650	371	1747	788	1987	1873

PLATE PLACEMENT TOL. = 0.250 inches

PLATE ROTATION TOL. = 5.0 Deg.

JSI GRIP= 0.76 (D) (INPUT = 0.90)
JSI METAL= 0.22 (A) (INPUT = 1.00)

JOB NAME	TRUSS NAME	QUANTITY	PLY	JOB DESC.		DRWG NO.
336322	H68		1	TRUSS DESC.	JT 45147	E21104269

Alpa Roof Truss, Maple

Version 8.420 S Jan 21 2021 MiTek Industries, Inc. Thu Oct 14 10:15:28 2021 Page 1

ID:hd511hZTz bdeQoS817GKByhVxV-xSu 2hrrtB54ZjB8eeP moiEUt72UanFCCTC5tyTY3z

Scale = 1:50.8

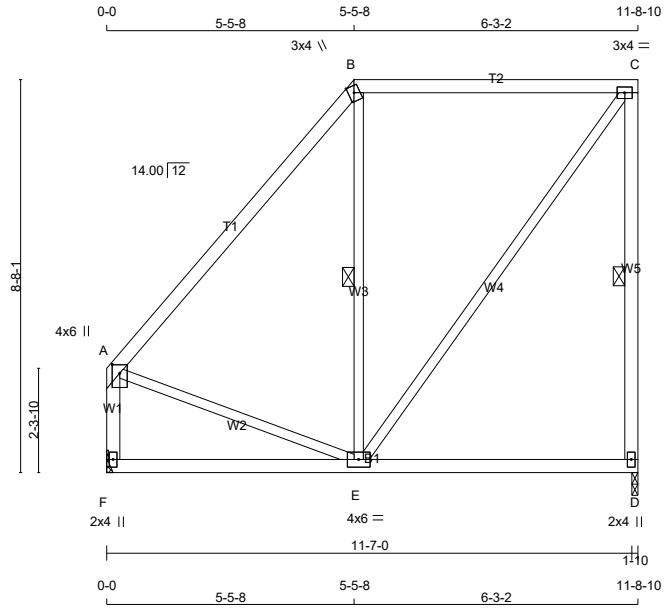

TOTAL WEIGHT = 2 X 61 = 122 lb

[M]

LUMBER

N. L. G. A. RULES

CHORDS	SIZE		LUMBER	DESCR.
A - B	2x4	DRY	No.2	SPF
B - C	2x4	DRY	No.2	SPF
D - C	2x4	DRY	No.2	SPF
F - A	2x4	DRY	No.2	SPF
F - D	2x4	DRY	No.2	SPF
ALL WEBS EXCEPT	2x3	DRY	No.2	SPF

DRY: SEASONED LUMBER.

PLATES (table is in inches)

JT	TYPE	PLATES	W	LEN	Y	X
A	TMVW+p	MT20	4.0	6.0	2.25	2.00
B	TTW+m	MT20	3.0	4.0	Edge	
C	TMVW-t	MT20	3.0	4.0		
D	BMV1+p	MT20	2.0	4.0		
E	BMWWW-t	MT20	4.0	6.0		
F	BMV1+p	MT20	2.0	4.0		

Edge - INDICATES REFERENCE CORNER OF PLATE TOUCHES EDGE OF CHORD.

LATERAL BRACE(S) SHOWN SHALL BE 2X4 SPF#2

LICENSED PROFESSIONAL ENGINEER
Y. WIDYA
100225448
10/14/2021
PROVINCE OF ONTARIO

DIMENSIONS, SUPPORTS AND LOADINGS SPECIFIED BY FABRICATOR TO BE VERIFIED BY BUILDING DESIGNER

BEARINGS

JT	FACTORED GROSS REACTION VERT	HORZ	MAXIMUM FACTORED GROSS REACTION DOWN	HORZ	UPLIFT	INPUT BRG IN-SX	REQRD BRG IN-SX
D	565	0	565	0	0	1-10	1-8
F	565	0	565	0	0	MECHANICAL	

A SUITABLE HANGER/MECHANICAL CONNECTION IS REQUIRED AT JOINT F. MINIMUM BEARING LENGTH AT JOINT F = 1-8.

UNFACTORED REACTIONS

JT	1ST LCASE COMBINED	MAX./MIN. COMPONENT REACTIONS SNOW	LIVE	PERM.LIVE	WIND	DEAD	SOIL
D	403	246 / 0	0 / 0	0 / 0	0 / 0	157 / 0	0 / 0
F	403	246 / 0	0 / 0	0 / 0	0 / 0	157 / 0	0 / 0

BEARING MATERIAL TO BE SPF NO.2 OR BETTER AT JOINT(S) D

BRACING

TOP CHORD TO BE SHEATHED OR MAX. PURLIN SPACING = 6.25 FT.
MAX. UNBRACED BOTTOM CHORD LENGTH = 10.00 FT OR RIGID CEILING DIRECTLY APPLIED.

ALL PITCH BREAKS AND PERIMETER CORNER JOINTS MUST BE LATERALLY RESTRAINED.

1 LATERAL BRACE(S) AT 1/ 2 LENGTH OF C-D, B-E.

END VERTICAL(S) MUST BE SHEATHED OR HAVE BRACES AS INDICATED IN THE MAX. UNBRACED LENGTH COLUMN OF THE TABLE BELOW

LOADING

TOTAL LOAD CASES: (4)

CHORDS

MEMB. FR-TO	MAX. FACTORED FORCE (LBS)	FACTORED VERT. LOAD (PLF) FROM	TO	LC1	MAX CSI (LC)	MAX. UNBRAC LENGTH
A- B	-319 / 0	-78.0	-78.0	0.42 (1)	6.25	
B- C	-204 / 0	-78.0	-78.0	0.53 (1)	6.25	
D- C	-521 / 0	0.0	0.0	0.18 (1)	6.25	
F- A	-527 / 0	0.0	0.0	0.07 (1)	7.81	
F- E	0 / 0	-18.5	-18.5	0.18 (4)	10.00	
E- D	0 / 0	-18.5	-18.5	0.18 (4)	10.00	

WEBS

MEMB. FR-TO	MAX. FACTORED FORCE (LBS)	MAX CSI (LC)
E- B	-215 / 3	0.10 (1)
E- C	0 / 345	0.08 (1)
A- E	0 / 219	0.05 (1)

DESIGN CRITERIA

SPECIFIED LOADS:

TOP CH.	LL	=	21.0	PSF
	DL	=	6.0	PSF
BOT CH.	LL	=	0.0	PSF
	DL	=	7.4	PSF
TOTAL LOAD		=	34.4	PSF

SPACING = 24.0 IN. C/C

LOADING IN FLAT SECTION BASED ON A SLOPE OF 2.00/12 MINIMUM

THIS TRUSS IS DESIGNED FOR RESIDENTIAL OR SMALL BUILDING REQUIREMENTS OF PART 9, NBCC 2015

THIS DESIGN COMPLIES WITH:
- PART 9 OF BCBC 2018 , ABC 2019
- PART 9 OF OBC 2012 (2019 AMENDMENT)
- CSA 086-14
- TPIC 2014

(55 % OF 23.0 P.S.F. G.S.L. PLUS 8.4 P.S.F. RAIN LOAD) EQUALS 21.0 P.S.F. SPECIFIED ROOF LIVE LOAD

ALLOWABLE DEFL.(LL)= L/360 (0.39")
CALCULATED VERT. DEFL.(LL) = L/ 999 (0.00")
ALLOWABLE DEFL.(TL)= L/360 (0.39")
CALCULATED VERT. DEFL.(TL) = L/ 999 (0.04")

CSI: TC=0.53/1.00 (B-C:1) , BC=0.18/1.00 (D-E:4) , WB=0.10/1.00 (B-E:1) , SSI=0.19/1.00 (B-C:1)

DOL LUMBER=1.00 NAIL=1.00 LS BEND=1.10 COMP=1.10 SHEAR=1.10 TENS= 1.10

COMPANION LIVE LOAD FACTOR = 1.00

TRUSS PLATE MANUFACTURER IS NOT RESPONSIBLE FOR QUALITY CONTROL IN THE TRUSS MANUFACTURING PLANT .

NAIL VALUES

PLATE	GRIP(DRY) (PSI) MAX	MIN	SHEAR (PLI) MAX	MIN	SECTION (PLI) MAX	MIN
MT20	650	371	1747	788	1987	1873

PLATE PLACEMENT TOL. = 0.250 inches

PLATE ROTATION TOL. = 5.0 Deg.

JSI GRIP= 0.64 (B) (INPUT = 0.90)
JSI METAL= 0.16 (A) (INPUT = 1.00)

JOB NAME	TRUSS NAME	QUANTITY	PLY	JOB DESC.		DRWG NO.
336322	H77		1	TRUSS DESC.	JT 45147	E21104281

Alpa Roof Truss, Maple

Version 8.420 S Jan 21 2021 MiTek Industries, Inc. Thu Oct 14 10:15:50 2021 Page 1

ID:hd511hZTz bdeQoS817GKByhVxV-HhElqC6fiytyB5tMwGp8fRc0CleWeWAVGdoNtbyTY3d

Scale = 1:38.7

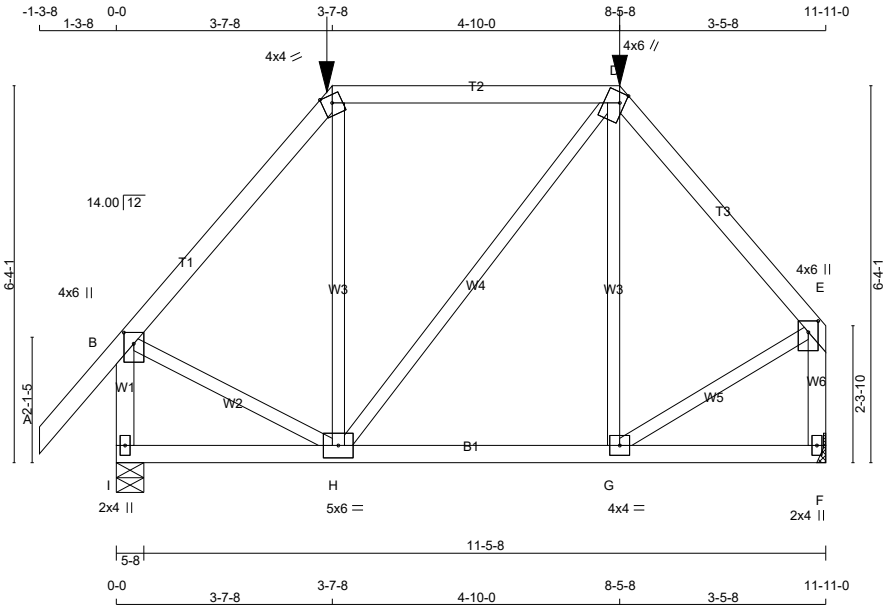

TOTAL WEIGHT = 60 lb

[M]

LUMBER

N. L. G. A. RULES

CHORDS	SIZE		LUMBER	DESCR.
A - C	2x4	DRY	No.2	SPF
C - D	2x4	DRY	No.2	SPF
D - E	2x4	DRY	No.2	SPF
I - B	2x4	DRY	No.2	SPF
F - E	2x4	DRY	No.2	SPF
I - F	2x4	DRY	No.2	SPF
ALL WEBS EXCEPT	2x3	DRY	No.2	SPF

DRY: SEASONED LUMBER.

PLATES (table is in inches)

JT	TYPE	PLATES	W	LEN	Y	X
B	TMVW+p	MT20	4.0	6.0	2.25	2.00
C	TTW-m	MT20	4.0	4.0	Edge	
D	TTWW+m	MT20	4.0	6.0	2.00	1.00
E	TMVW+p	MT20	4.0	6.0	2.25	2.00
F	BMV1+p	MT20	2.0	4.0		
G	BMWW-t	MT20	4.0	4.0		
H	BMWWW-t	MT20	5.0	6.0		
I	BMV1+p	MT20	2.0	4.0		

Edge - INDICATES REFERENCE CORNER OF PLATE TOUCHES EDGE OF CHORD.

LATERAL BRACE(S) SHOWN SHALL BE 2X4 SPF#2

DIMENSIONS, SUPPORTS AND LOADINGS SPECIFIED BY FABRICATOR TO BE VERIFIED BY BUILDING DESIGNER

BEARINGS

JT	FACTORED GROSS REACTION VERT	HORZ	MAXIMUM FACTORED GROSS REACTION DOWN	HORZ	UPLIFT	INPUT BRG IN-SX	REQRD BRG IN-SX
I	932	0	932	0	0	5-8	1-8
F	826	0	826	0	0	MECHANICAL	

A SUITABLE HANGER/MECHANICAL CONNECTION IS REQUIRED AT JOINT F. MINIMUM BEARING LENGTH AT JOINT F = 1-8.

UNFACTORED REACTIONS

JT	1ST LCASE COMBINED	MAX./MIN. COMPONENT REACTIONS SNOW	LIVE	PERM.LIVE	WIND	DEAD	SOIL
I	662	414 / 0	0 / 0	0 / 0	0 / 0	248 / 0	0 / 0
F	589	357 / 0	0 / 0	0 / 0	0 / 0	232 / 0	0 / 0

BEARING MATERIAL TO BE SPF NO.2 OR BETTER AT JOINT(S) I

BRACING

TOP CHORD TO BE SHEATHED OR MAX. PURLIN SPACING = 6.25 FT.
MAX. UNBRACED BOTTOM CHORD LENGTH = 10.00 FT OR RIGID CEILING DIRECTLY APPLIED.

ALL PITCH BREAKS AND PERIMETER CORNER JOINTS MUST BE LATERALLY RESTRAINED.

LOADING

TOTAL LOAD CASES: (4)

CHORDS

MEMB. FR-TO	MAX. FACTORED FORCE (LBS)	FACTORED VERT. LOAD (PLF) FROM	TO	LC1 MAX CSI (LC)	MAX. UNBRAC LENGTH
A- B	0 / 42	-78.0	-78.0	0.12 (1)	10.00
B- C	-603 / 0	-78.0	-78.0	0.21 (1)	6.25
C- D	-389 / 0	-114.5	-114.5	0.51 (1)	6.25
D- E	-588 / 0	-78.0	-78.0	0.19 (1)	6.25
I- B	-893 / 0	0.0	0.0	0.11 (1)	7.81
F- E	-790 / 0	0.0	0.0	0.11 (1)	7.81
I- H	0 / 0	-27.2	-27.2	0.12 (4)	10.00
H- G	0 / 379	-27.2	-27.2	0.16 (4)	10.00
G- F	0 / 0	-27.2	-27.2	0.11 (4)	10.00

WEBS

MEMB. FR-TO	MAX. FACTORED FORCE (LBS)	MAX CSI (LC)
H- C	-70 / 65	0.05 (1)
H- D	0 / 17	0.00 (1)
G- D	-83 / 57	0.05 (1)
B- H	0 / 431	0.11 (1)
G- E	0 / 433	0.11 (1)

FACTORED CONCENTRATED LOADS (LBS)

JT	LOC.	LC1	MAX-	MAX+	FACE	DIR.	TYPE	HEEL	CONN.
C	3-7-8	-112	-112	---	FRONT	VERT	TOTAL	---	C1
D	8-5-8	-107	-107	---	FRONT	VERT	TOTAL	---	C1

DESIGN CRITERIA

SPECIFIED LOADS:

TOP	CH.	LL	=	21.0	PSF
		DL	=	6.0	PSF
BOT	CH.	LL	=	0.0	PSF
		DL	=	7.4	PSF
TOTAL	LOAD		=	34.4	PSF

SPACING = 24.0 IN. C/C

LOADING IN FLAT SECTION BASED ON A SLOPE OF 2.00/12 MINIMUM

GIRDER TYPE: CPrimeHip
LEFT SETBACK = 3-7-8
RIGHT SETBACK = 3-5-8
END SETBACK = 3-10-8
END WALL WIDTH = 0-0
CORNER FRAMING TYPE: CONVENTIONAL
END JACK TYPE: CONVENTIONAL
APPLIED TO FRONT SIDE
- ADDT'L LOADS BASED ON 55 % OF GSL.

THIS TRUSS IS DESIGNED FOR RESIDENTIAL OR SMALL BUILDING REQUIREMENTS OF PART 9, NBCC 2015

THIS DESIGN COMPLIES WITH:
- PART 9 OF BCBC 2018 , ABC 2019
- PART 9 OF OBC 2012 (2019 AMENDMENT)
- CSA 086-14
- TPIC 2014

(55 % OF 23.0 P.S.F. G.S.L. PLUS 8.4 P.S.F. RAIN LOAD) EQUALS 21.0 P.S.F. SPECIFIED ROOF LIVE LOAD

ALLOWABLE DEFL.(LL)= L/360 (0.40")
CALCULATED VERT. DEFL.(LL) = L/ 999 (0.01")
ALLOWABLE DEFL.(TL)= L/360 (0.40")
CALCULATED VERT. DEFL.(TL) = L/ 999 (0.02")

CSI: TC=0.51/1.00 (C-D:1) , BC=0.16/1.00 (G-H:4) , WB=0.11/1.00 (E-G:1) , SSI=0.24/1.00 (C-D:1)

DOL LUMBER=1.00 NAIL=1.00 LS BEND=1.00 COMP=1.00 SHEAR=1.00 TENS= 1.00

COMPANION LIVE LOAD FACTOR = 1.00

TRUSS PLATE MANUFACTURER IS NOT RESPONSIBLE FOR QUALITY CONTROL IN THE TRUSS MANUFACTURING PLANT .

NAIL VALUES

PLATE	GRIP(DRY) (PSI) MAX	MIN	SHEAR (PLI) MAX	MIN	SECTION (PLI) MAX	MIN
MT20	650	371	1747	788	1987	1873

PLATE PLACEMENT TOL. = 0.250 inches

PLATE ROTATION TOL. = 5.0 Deg.

JSI GRIP= 0.56 (C) (INPUT = 0.90)
JSI METAL= 0.27 (B) (INPUT = 1.00)

JOB NAME	TRUSS NAME	QUANTITY	PLY	JOB DESC.		DRWG NO.
336322	H78		1	TRUSS DESC.	JT 45147	E21104282

Alpa Roof Truss, Maple

Version 8.420 S Jan 21 2021 MiTek Industries, Inc. Thu Oct 14 10:15:51 2021 Page 1

ID:hd511hZTz bdeQoS817GKByhVxV-ltnqtY6HSG?ppFSZUzKNCf9Ez9zZN IeVHXwP1yTY3c

Scale = 1:53.4

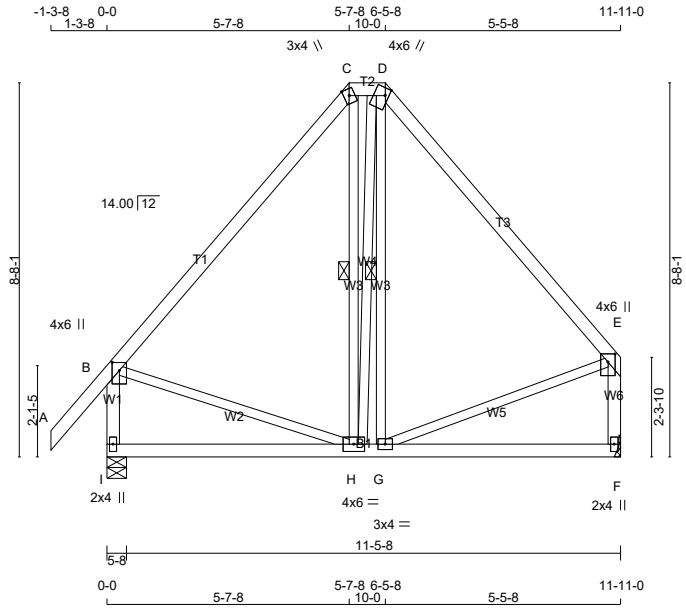

TOTAL WEIGHT = 70 lb

[M][F]

LUMBER

N. L. G. A. RULES

CHORDS	SIZE		LUMBER	DESCR.
A - C	2x4	DRY	No.2	SPF
C - D	2x4	DRY	No.2	SPF
D - E	2x4	DRY	No.2	SPF
I - B	2x4	DRY	No.2	SPF
F - E	2x4	DRY	No.2	SPF
I - F	2x4	DRY	No.2	SPF
ALL WEBS EXCEPT	2x3	DRY	No.2	SPF

DRY: SEASONED LUMBER.

PLATES (table is in inches)

JT	TYPE	PLATES	W	LEN	Y	X
B	TMVW+p	MT20	4.0	6.0	2.25	2.00
C	TTW+m	MT20	3.0	4.0	Edge	
D	TTWW+m	MT20	4.0	6.0	2.00	1.00
E	TMVW+p	MT20	4.0	6.0	2.25	2.00
F	BMV1+p	MT20	2.0	4.0		
G	BMWW-t	MT20	3.0	4.0		
H	BMWWW-t	MT20	4.0	6.0		
I	BMV1+p	MT20	2.0	4.0		

Edge - INDICATES REFERENCE CORNER OF PLATE TOUCHES EDGE OF CHORD.

LATERAL BRACE(S) SHOWN SHALL BE 2X4 SPF#2

LICENSED PROFESSIONAL ENGINEER
Y. WIDYA
100225448
10/14/2021
PROVINCE OF ONTARIO

DIMENSIONS, SUPPORTS AND LOADINGS SPECIFIED BY FABRICATOR TO BE VERIFIED BY BUILDING DESIGNER

BEARINGS

JT	FACTORED GROSS REACTION VERT	HORZ	MAXIMUM FACTORED GROSS REACTION DOWN	HORZ	UPLIFT	INPUT BRG IN-SX	REQRD BRG IN-SX
I	684	0	684	0	0	5-8	1-8
F	575	0	575	0	0	MECHANICAL	

A SUITABLE HANGER/MECHANICAL CONNECTION IS REQUIRED AT JOINT F. MINIMUM BEARING LENGTH AT JOINT F = 1-8.

UNFACTORED REACTIONS

JT	1ST LCASE COMBINED	MAX./MIN. COMPONENT REACTIONS SNOW	LIVE	PERM.LIVE	WIND	DEAD	SOIL
I	486	309 / 0	0 / 0	0 / 0	0 / 0	177 / 0	0 / 0
F	410	250 / 0	0 / 0	0 / 0	0 / 0	160 / 0	0 / 0

BEARING MATERIAL TO BE SPF NO.2 OR BETTER AT JOINT(S) I

BRACING

TOP CHORD TO BE SHEATHED OR MAX. PURLIN SPACING = 6.25 FT.
MAX. UNBRACED BOTTOM CHORD LENGTH = 10.00 FT OR RIGID CEILING DIRECTLY APPLIED.

ALL PITCH BREAKS AND PERIMETER CORNER JOINTS MUST BE LATERALLY RESTRAINED.

1 LATERAL BRACE(S) AT 1/ 2 LENGTH OF C-H, D-G.

END VERTICAL(S) MUST BE SHEATHED OR HAVE BRACES AS INDICATED IN THE MAX. UNBRACED LENGTH COLUMN OF THE TABLE BELOW

LOADING

TOTAL LOAD CASES: (4)

CHORDS

MEMB. FR-TO	MAX. FACTORED FORCE (LBS)	FACTORED VERT. LOAD (PLF) FROM	TO	LC1 MAX CSI (LC)	MAX. UNBRAC LENGTH
A- B	0 / 42	-78.0	-78.0	0.11 (1)	10.00
B- C	-327 / 0	-78.0	-78.0	0.32 (1)	6.25
C- D	-212 / 0	-78.0	-78.0	0.01 (1)	6.25
D- E	-326 / 0	-78.0	-78.0	0.30 (1)	6.25
I- B	-642 / 0	0.0	0.0	0.08 (1)	7.81
F- E	-534 / 0	0.0	0.0	0.07 (1)	7.81
I- H	0 / 0	-18.5	-18.5	0.15 (4)	10.00
H- G	0 / 211	-18.5	-18.5	0.17 (4)	10.00
G- F	0 / 0	-18.5	-18.5	0.14 (4)	10.00

WEBS

MEMB. FR-TO	MAX. FACTORED FORCE (LBS)	MAX CSI (LC)
H- C	-3 / 49	0.02 (4)
H- D	0 / 15	0.01 (4)
G- D	-8 / 34	0.01 (4)
B- H	0 / 222	0.05 (1)
G- E	0 / 224	0.05 (1)

DESIGN CRITERIA

SPECIFIED LOADS:

TOP CH.	LL	=	21.0	PSF
	DL	=	6.0	PSF
BOT CH.	LL	=	0.0	PSF
	DL	=	7.4	PSF
TOTAL LOAD		=	34.4	PSF

SPACING = 24.0 IN. C/C

LOADING IN FLAT SECTION BASED ON A SLOPE OF 2.00/12 MINIMUM

THIS TRUSS IS DESIGNED FOR RESIDENTIAL OR SMALL BUILDING REQUIREMENTS OF PART 9, NBCC 2015

THIS DESIGN COMPLIES WITH:
- PART 9 OF BCBC 2018 , ABC 2019
- PART 9 OF OBC 2012 (2019 AMENDMENT)
- CSA 086-14
- TPIC 2014

(55 % OF 23.0 P.S.F. G.S.L. PLUS 8.4 P.S.F. RAIN LOAD) EQUALS 21.0 P.S.F. SPECIFIED ROOF LIVE LOAD

ALLOWABLE DEFL.(LL)= L/360 (0.40")
CALCULATED VERT. DEFL.(LL) = L/ 999 (0.00")
ALLOWABLE DEFL.(TL)= L/360 (0.40")
CALCULATED VERT. DEFL.(TL) = L/ 999 (0.03")

CSI: TC=0.32/1.00 (B-C:1) , BC=0.17/1.00 (G-H:4) , WB=0.05/1.00 (E-G:1) , SSI=0.11/1.00 (B-C:1)

DOL LUMBER=1.00 NAIL=1.00 LS BEND=1.10 COMP=1.10 SHEAR=1.10 TENS= 1.10

COMPANION LIVE LOAD FACTOR = 1.00

TRUSS PLATE MANUFACTURER IS NOT RESPONSIBLE FOR QUALITY CONTROL IN THE TRUSS MANUFACTURING PLANT .

NAIL VALUES

PLATE	GRIP(DRY) (PSI) MAX	MIN	SHEAR (PLI) MAX	MIN	SECTION (PLI) MAX	MIN
MT20	650	371	1747	788	1987	1873

PLATE PLACEMENT TOL. = 0.250 inches

PLATE ROTATION TOL. = 5.0 Deg.

JSI GRIP= 0.37 (C) (INPUT = 0.90)
JSI METAL= 0.19 (B) (INPUT = 1.00)

JOB NAME	TRUSS NAME	QUANTITY	PLY	JOB DESC.	DRWG NO.
336322	H79		1	TRUSS DESC. JT 45147	E21104283

Alpa Roof Truss, Maple

Version 8.420 S Jan 21 2021 MiTek Industries, Inc. Thu Oct 14 10:15:53 2021 Page 1

ID:hd511hZTz_bdeQoS817GKByhVxV-iGvRIE8X_tFX2ZcxbOMrH4EZBygQrrWxyb01UwyTY3a

Scale = 1:31.3

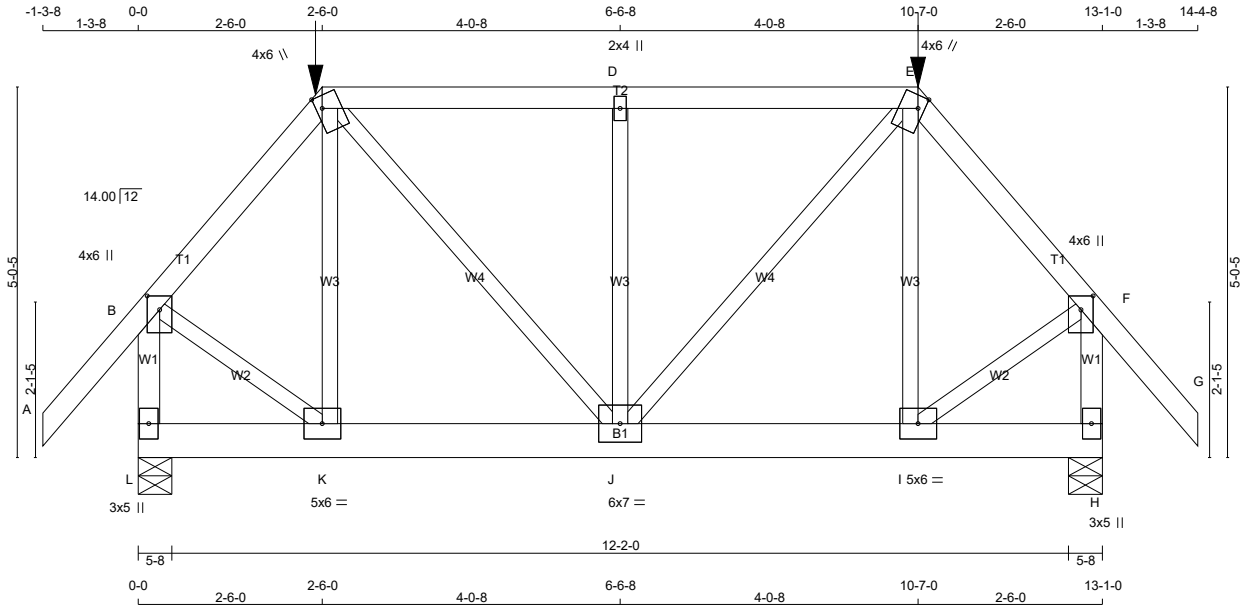

TOTAL WEIGHT = 2 X 74 = 149 lb

[M]

LUMBER

N. L. G. A. RULES

CHORDS	SIZE		LUMBER	DESCR.
A - C	2x4	DRY	No.2	SPF
C - E	2x4	DRY	No.2	SPF
E - G	2x4	DRY	No.2	SPF
L - B	2x4	DRY	No.2	SPF
H - F	2x4	DRY	No.2	SPF
L - H	2x6	DRY	No.2	SPF
ALL WEBS EXCEPT	2x3	DRY	No.2	SPF

DRY: SEASONED LUMBER.

PLATES (table is in inches)

JT	TYPE	PLATES	W	LEN	Y	X
B	TMVW+p	MT20	4.0	6.0	2.25	2.00
C	TTWW+m	MT20	4.0	6.0	2.00	1.00
D	TMW+w	MT20	2.0	4.0		
E	TTWW+m	MT20	4.0	6.0	2.00	1.00
F	TMVW+p	MT20	4.0	6.0	2.25	2.00
H	BMV1+p	MT20	3.0	5.0		
I	BMWW-t	MT20	5.0	6.0		
J	BMWWW-t	MT20	6.0	7.0		
K	BMWW-t	MT20	5.0	6.0		
L	BMV1+p	MT20	3.0	5.0		

LATERAL BRACE(S) SHOWN SHALL BE 2X4 SPF#2

DIMENSIONS, SUPPORTS AND LOADINGS SPECIFIED BY FABRICATOR TO BE VERIFIED BY BUILDING DESIGNER

BEARINGS

JT	FACTORED GROSS REACTION VERT	HORZ	MAXIMUM FACTORED GROSS REACTION DOWN	HORZ	UPLIFT	INPUT BRG IN-SX	REQRD BRG IN-SX
L	1004	0	1004	0	0	5-8	1-8
H	1004	0	1004	0	0	5-8	1-8

UNFACTORED REACTIONS

JT	1ST LCASE COMBINED	MAX./MIN. COMPONENT REACTIONS SNOW	LIVE	PERM.LIVE	WIND	DEAD	SOIL
L	714	447 / 0	0 / 0	0 / 0	0 / 0	267 / 0	0 / 0
H	714	447 / 0	0 / 0	0 / 0	0 / 0	267 / 0	0 / 0

BEARING MATERIAL TO BE SPF NO.2 OR BETTER AT JOINT(S) L, H

BRACING

TOP CHORD TO BE SHEATHED OR MAX. PURLIN SPACING = 6.25 FT.
MAX. UNBRACED BOTTOM CHORD LENGTH = 10.00 FT OR RIGID CEILING DIRECTLY APPLIED.

ALL PITCH BREAKS AND PERIMETER CORNER JOINTS MUST BE LATERALLY RESTRAINED.

LOADING

TOTAL LOAD CASES: (4)

CHORDS

MEMB. FR-TO	MAX. FACTORED FORCE (LBS)	FACTORED VERT. LOAD (PLF) FROM	TO	LC1 CSI (LC)	MAX. UNBRAC LENGTH
A- B	0 / 42	-78.0	-78.0	0.12 (1)	10.00
B- C	-662 / 0	-78.0	-78.0	0.10 (1)	6.25
C- D	-698 / 0	-112.1	-112.1	0.34 (1)	6.25
D- E	-698 / 0	-112.1	-112.1	0.34 (1)	6.25
E- F	-662 / 0	-78.0	-78.0	0.10 (1)	6.25
F- G	0 / 42	-78.0	-78.0	0.12 (1)	10.00
L- B	-984 / 0	0.0	0.0	0.12 (1)	7.81
H- F	-984 / 0	0.0	0.0	0.12 (1)	7.81
L- K	0 / 0	-26.6	-26.6	0.04 (4)	10.00
K- J	0 / 424	-26.6	-26.6	0.09 (1)	10.00
J- I	0 / 424	-26.6	-26.6	0.09 (1)	10.00
I- H	0 / 0	-26.6	-26.6	0.04 (4)	10.00

WEBS

MEMB. FR-TO	MAX. FACTORED FORCE (LBS)	MAX CSI (LC)
K- C	-159 / 4	0.06 (1)
C- J	0 / 417	0.10 (1)
J- D	-546 / 0	0.20 (1)
J- E	0 / 417	0.10 (1)
I- E	-159 / 4	0.06 (1)
B- K	0 / 506	0.13 (1)
I- F	0 / 506	0.13 (1)

FACTORED CONCENTRATED LOADS (LBS)

JT	LOC.	LC1	MAX-	MAX+	FACE	DIR.	TYPE	HEEL	CONN.
C	2-6-0	-73	-73	---	FRONT	VERT	TOTAL	---	C1
E	10-7-0	-73	-73	---	FRONT	VERT	TOTAL	---	C1

DESIGN CRITERIA

SPECIFIED LOADS:

TOP CH.	LL	=	21.0	PSF
	DL	=	6.0	PSF
BOT CH.	LL	=	0.0	PSF
	DL	=	7.4	PSF
TOTAL LOAD		=	34.4	PSF

SPACING = 24.0 IN. C/C

LOADING IN FLAT SECTION BASED ON A SLOPE OF 2.00/12 MINIMUM

GIRDER TYPE: CPrimeHip
SIDE SETBACK = 2-6-0
END SETBACK = 3-9-0
END WALL WIDTH = 0-0
CORNER FRAMING TYPE: CONVENTIONAL
END JACK TYPE: CONVENTIONAL
APPLIED TO FRONT SIDE
- ADDT'L LOADS BASED ON 55 % OF GSL.

THIS TRUSS IS DESIGNED FOR RESIDENTIAL OR SMALL BUILDING REQUIREMENTS OF PART 9, NBCC 2015

THIS DESIGN COMPLIES WITH:
- PART 9 OF BCBC 2018 , ABC 2019
- PART 9 OF OBC 2012 (2019 AMENDMENT)
- CSA 086-14
- TPIC 2014

(55 % OF 23.0 P.S.F. G.S.L. PLUS 8.4 P.S.F. RAIN LOAD) EQUALS 21.0 P.S.F. SPECIFIED ROOF LIVE LOAD

ALLOWABLE DEFL.(LL)= L/360 (0.44")
CALCULATED VERT. DEFL.(LL) = L/ 999 (0.01")
ALLOWABLE DEFL.(TL)= L/360 (0.44")
CALCULATED VERT. DEFL.(TL) = L/ 999 (0.02")

CSI: TC=0.34/1.00 (D-E:1) , BC=0.09/1.00 (I-J:1) , WB=0.20/1.00 (D-J:1) , SSI=0.24/1.00 (C-D:1)

DOL LUMBER=1.00 NAIL=1.00 LS BEND=1.00 COMP=1.00 SHEAR=1.00 TENS= 1.00

COMPANION LIVE LOAD FACTOR = 1.00

TRUSS PLATE MANUFACTURER IS NOT RESPONSIBLE FOR QUALITY CONTROL IN THE TRUSS MANUFACTURING PLANT .

NAIL VALUES

PLATE	GRIP(DRY) (PSI) MAX	MIN	SHEAR (PLI) MAX	MIN	SECTION (PLI) MAX	MIN
MT20	650	371	1747	788	1987	1873

PLATE PLACEMENT TOL. = 0.250 inches

PLATE ROTATION TOL. = 5.0 Deg.

JSI GRIP= 0.56 (B) (INPUT = 0.90)
JSI METAL= 0.27 (B) (INPUT = 1.00)

JOB NAME	TRUSS NAME	QUANTITY	PLY	JOB DESC.		DRWG NO.
336333	H65		1	TRUSS DESC.	JT 45147	E21104305

Alpa Roof Truss, Maple

Version 8.420 S Jan 21 2021 MiTek Industries, Inc. Thu Oct 14 10:56:49 2021 Page 1

ID:hd511hZTz_bdeQoS817GKByhVxV-nmJvI1s5bUh2i_MzTCQoq?yIQ_vhHfaRiiy_hZyTXTC

Scale = 1:44.2

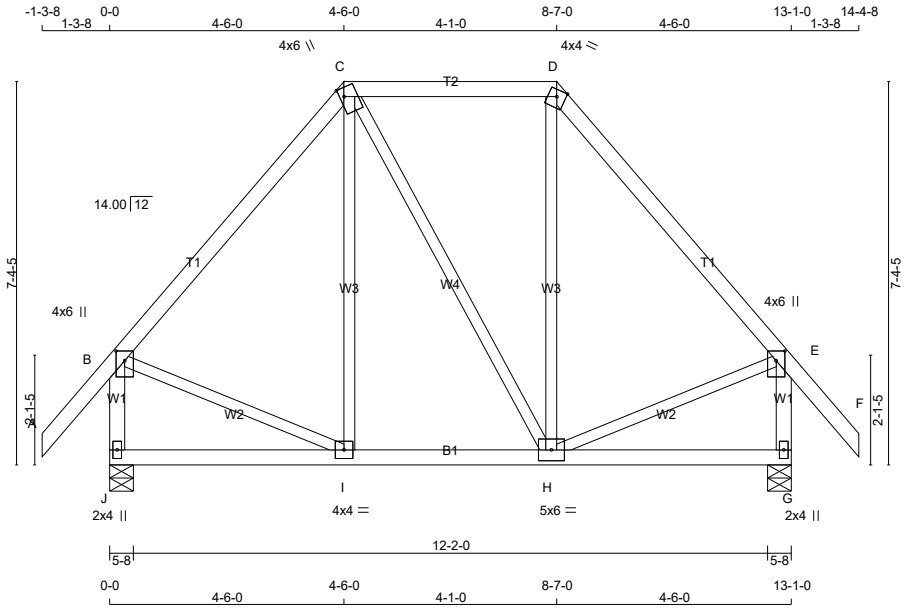

TOTAL WEIGHT = 69 lb

[M][F]

LUMBER

N. L. G. A. RULES

CHORDS	SIZE		LUMBER	DESCR.
A - C	2x4	DRY	No.2	SPF
C - D	2x4	DRY	No.2	SPF
D - F	2x4	DRY	No.2	SPF
J - B	2x4	DRY	No.2	SPF
G - E	2x4	DRY	No.2	SPF
J - G	2x4	DRY	No.2	SPF
ALL WEBS EXCEPT	2x3	DRY	No.2	SPF

DRY: SEASONED LUMBER.

PLATES (table is in inches)

JT	TYPE	PLATES	W	LEN	Y	X
B	TMVW+p	MT20	4.0	6.0	2.25	2.00
C	TTWW+m	MT20	4.0	6.0	2.00	1.00
D	TTW-m	MT20	4.0	4.0	Edge	
E	TMVW+p	MT20	4.0	6.0	2.25	2.00
G	BMV1+p	MT20	2.0	4.0		
H	BMWWW-t	MT20	5.0	6.0		
I	BMWW-t	MT20	4.0	4.0		
J	BMV1+p	MT20	2.0	4.0		

Edge - INDICATES REFERENCE CORNER OF PLATE TOUCHES EDGE OF CHORD.

LATERAL BRACE(S) SHOWN SHALL BE 2X4 SPF#2

DIMENSIONS, SUPPORTS AND LOADINGS SPECIFIED BY FABRICATOR TO BE VERIFIED BY BUILDING DESIGNER

BEARINGS

JT	FACTORED GROSS REACTION VERT	HORZ	MAXIMUM FACTORED GROSS REACTION DOWN	HORZ	UPLIFT	INPUT BRG IN-SX	REQRD BRG IN-SX
J	740	0	740	0	0	5-8	1-8
G	740	0	740	0	0	5-8	1-8

UNFACTORED REACTIONS

JT	1ST LCASE COMBINED	MAX./MIN. COMPONENT REACTIONS SNOW	LIVE	PERM.LIVE	WIND	DEAD	SOIL
J	526	333 / 0	0 / 0	0 / 0	0 / 0	192 / 0	0 / 0
G	526	333 / 0	0 / 0	0 / 0	0 / 0	192 / 0	0 / 0

BEARING MATERIAL TO BE SPF NO.2 OR BETTER AT JOINT(S) J, G

BRACING

TOP CHORD TO BE SHEATHED OR MAX. PURLIN SPACING = 6.25 FT.
MAX. UNBRACED BOTTOM CHORD LENGTH = 10.00 FT OR RIGID CEILING DIRECTLY APPLIED.

ALL PITCH BREAKS AND PERIMETER CORNER JOINTS MUST BE LATERALLY RESTRAINED.

LOADING

TOTAL LOAD CASES: (4)

CHORDS

MEMB. FR-TO	MAX. FACTORED FORCE (LBS)	FACTORED VERT. LOAD (PLF) FROM	TO	LC1 CSI (LC)	MAX. UNBRAC LENGTH
A- B	0 / 42	-78.0	-78.0	0.11 (1)	10.00
B- C	-417 / 0	-78.0	-78.0	0.21 (1)	6.25
C- D	-270 / 0	-78.0	-78.0	0.17 (1)	6.25
D- E	-417 / 0	-78.0	-78.0	0.21 (1)	6.25
E- F	0 / 42	-78.0	-78.0	0.11 (1)	10.00
J- B	-705 / 0	0.0	0.0	0.08 (1)	7.81
G- E	-705 / 0	0.0	0.0	0.08 (1)	7.81
J- I	0 / 0	-18.5	-18.5	0.08 (4)	10.00
I- H	0 / 270	-18.5	-18.5	0.11 (4)	10.00
H- G	0 / 0	-18.5	-18.5	0.08 (4)	10.00

WEBS

MEMB. FR-TO	MAX. FACTORED FORCE (LBS)	MAX CSI (LC)
I- C	-17 / 55	0.02 (4)
C- H	0 / 0	0.00 (1)
H- D	-17 / 55	0.02 (4)
B- I	0 / 289	0.07 (1)
H- E	0 / 289	0.07 (1)

DESIGN CRITERIA

SPECIFIED LOADS:

TOP CH.	LL	=	21.0	PSF
	DL	=	6.0	PSF
BOT CH.	LL	=	0.0	PSF
	DL	=	7.4	PSF
TOTAL LOAD		=	34.4	PSF

SPACING = 24.0 IN. C/C

LOADING IN FLAT SECTION BASED ON A SLOPE OF 2.00/12 MINIMUM

THIS TRUSS IS DESIGNED FOR RESIDENTIAL OR SMALL BUILDING REQUIREMENTS OF PART 9, NBCC 2015

THIS DESIGN COMPLIES WITH:
- PART 9 OF BCBC 2018 , ABC 2019
- PART 9 OF OBC 2012 (2019 AMENDMENT)
- CSA 086-14
- TPIC 2014

(55 % OF 23.0 P.S.F. G.S.L. PLUS 8.4 P.S.F. RAIN LOAD) EQUALS 21.0 P.S.F. SPECIFIED ROOF LIVE LOAD

ALLOWABLE DEFL.(LL)= L/360 (0.44")
CALCULATED VERT. DEFL.(LL) = L/ 999 (0.00")
ALLOWABLE DEFL.(TL)= L/360 (0.44")
CALCULATED VERT. DEFL.(TL) = L/ 999 (0.02")

CSI: TC=0.21/1.00 (B-C:1) , BC=0.11/1.00 (H-I:4) , WB=0.07/1.00 (B-I:1) , SSI=0.12/1.00 (C-D:1)

DOL LUMBER=1.00 NAIL=1.00 LS BEND=1.10 COMP=1.10 SHEAR=1.10 TENS= 1.10

COMPANION LIVE LOAD FACTOR = 1.00

TRUSS PLATE MANUFACTURER IS NOT RESPONSIBLE FOR QUALITY CONTROL IN THE TRUSS MANUFACTURING PLANT .

NAIL VALUES

PLATE	GRIP(DRY) (PSI) MAX	MIN	SHEAR (PLI) MAX	MIN	SECTION (PLI) MAX	MIN
MT20	650	371	1747	788	1987	1873

PLATE PLACEMENT TOL. = 0.250 inches

PLATE ROTATION TOL. = 5.0 Deg.

JSI GRIP= 0.41 (H) (INPUT = 0.90)
JSI METAL= 0.21 (B) (INPUT = 1.00)

JOB NAME	TRUSS NAME	QUANTITY	PLY	JOB DESC.		DRWG NO.
336333	H220A		1	TRUSS DESC.	JT 45147	E21104306

Alpa Roof Truss, Maple

Version 8.420 S Jan 21 2021 MiTek Industries, Inc. Thu Oct 14 10:56:51 2021 Page 1

ID:hd511hZTz bdeQoS817GKByhVxV-k8RfAiuL75xmxIWLbdSGvQ1VboOblKrkA?R5mSyTXTA

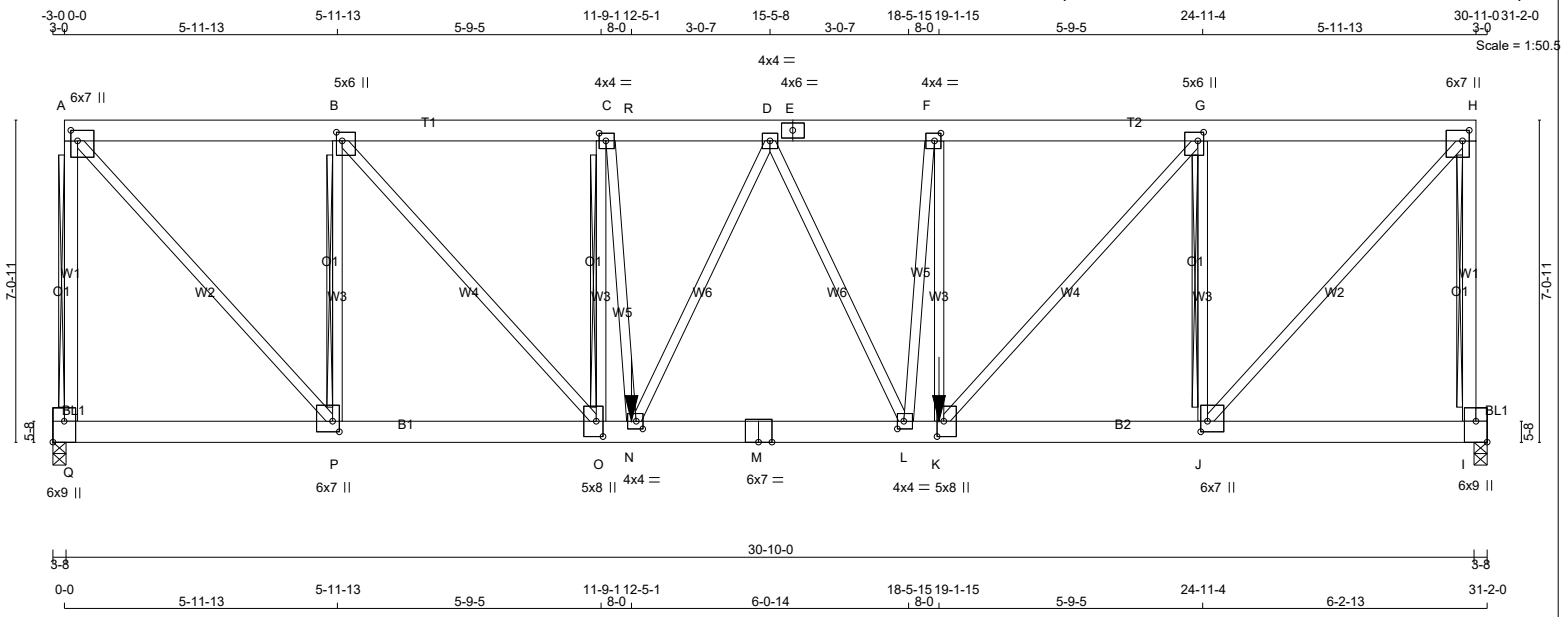

LUMBER

N. L. G. A. RULES

CHORDS	SIZE		LUMBER	DESCR.
Q - A	2x4	DRY	No.2	SPF
A - E	2x6	DRY	No.2	SPF
E - H	2x6	DRY	No.2	SPF
I - H	2x4	DRY	No.2	SPF
Q - M	2x6	DRY	No.2	SPF
M - I	2x6	DRY	No.2	SPF

BEARING BLOCKS

BL1	2 - 2x4	DRY	No.2	SPF

ALL WEBS	2x3	DRY	No.2	SPF

DRY: SEASONED LUMBER.

PLATES (table is in inches)

JT	TYPE	PLATES	W	LEN	Y	X
A	TMVW+p	MT20	6.0	7.0	2.75	1.75
B	TMWW+t	MT20	5.0	6.0	2.25	1.50
C	TMWW-t	MT20	4.0	4.0	2.00	1.75
D	TMWW-t	MT20	4.0	4.0		
E	TS-t	MT20	4.0	6.0		
F	TMWW-t	MT20	4.0	4.0	2.00	1.75
G	TMWW+t	MT20	5.0	6.0	2.25	1.50
H	TMVW+p	MT20	6.0	7.0	2.75	1.75
I	BMVK1+t	MT20	6.0	9.0	5.50	Edge
J	BMWW+t	MT20	6.0	7.0	2.75	1.75
K	BMWW+t	MT20	5.0	8.0	4.00	1.75
L	BMWW-t	MT20	4.0	4.0	2.00	1.75
M	BS-t	MT20	6.0	7.0		
N	BMWW-t	MT20	4.0	4.0	2.00	1.75
O	BMWW+t	MT20	5.0	8.0	4.00	1.75
P	BMWW+t	MT20	6.0	7.0	2.75	1.75
Q	BMVK1+t	MT20	6.0	9.0	5.50	Edge

Edge - INDICATES REFERENCE CORNER OF PLATE TOUCHES EDGE OF CHORD.

LATERAL BRACE(S) SHOWN SHALL BE 2X4 SPF#2

DIMENSIONS, SUPPORTS AND LOADINGS SPECIFIED BY FABRICATOR TO BE VERIFIED BY BUILDING DESIGNER

BEARINGS

JT	FACTORED GROSS REACTION VERT	HORZ	MAXIMUM FACTORED GROSS REACTION DOWN	HORZ	UPLIFT	INPUT BRG IN-SX	REQRD BRG IN-SX
Q	3042	0	3042	0	0	3-8	3-8
I	3158	0	3158	0	0	3-8	3-8

UNFACTORED REACTIONS

JT	1ST LCASE COMBINED	MAX./MIN. COMPONENT REACTIONS SNOW	LIVE	PERM.LIVE	WIND	DEAD	SOIL
Q	2169	1324 / 0	0 / 0	0 / 0	0 / 0	845 / 0	0 / 0
I	2252	1374 / 0	0 / 0	0 / 0	0 / 0	878 / 0	0 / 0

BEARING MATERIAL TO BE SPF NO.2 OR BETTER AT JOINT(S) Q, I
BEARING SIZE FACTOR = 1.15 AT JNT(S) Q, I (BASED ON SUPPORT DEPTH = 1-8)

BRACING

TOP CHORD TO BE SHEATHED OR MAX. PURLIN SPACING = 3.78 FT.
MAX. UNBRACED BOTTOM CHORD LENGTH = 6.25 FT OR RIGID CEILING DIRECTLY APPLIED.

ALL PITCH BREAKS AND PERIMETER CORNER JOINTS MUST BE LATERALLY RESTRAINED.

2x4 DRY SPF No.2 T-BRACE AT A-Q, H-I, B-P, G-J
2x3 DRY SPF No.2 T-BRACE AT C-O

FASTEN T AND I-BRACES TO NARROW EDGE OF WEB WITH ONE ROW PER PLY OF 3" COMMON WIRE NAILS @ 6" O.C. WITH 3" MINIMUM END DISTANCE. BRACE MUST COVER 90% OF WEB LENGTH.

END VERTICAL(S) MUST BE SHEATHED OR HAVE BRACES AS INDICATED IN THE MAX. UNBRACED LENGTH COLUMN OF THE TABLE BELOW

LOADING

TOTAL LOAD CASES: (4)

CHORDS

MEMB. FR-TO	MAX. FACTORED FORCE (LBS)	FACTORED VERT. LOAD (PLF) FROM	TO	LC1	MAX CSI (LC)	MAX. UNBRAC LENGTH
Q- A	-2985 / 0	0.0	0.0	0.77 (1)	7.81	
A- B	-2468 / 0	-78.0	-78.0	0.25 (1)	4.99	
B- C	-4399 / 0	-78.0	-78.0	0.36 (1)	3.85	
C- R	-4501 / 0	-78.0	-78.0	0.25 (1)	3.91	
R- D	-4501 / 0	-167.5	-167.5	0.25 (1)	3.91	
D- E	-4617 / 0	-167.5	-167.5	0.26 (1)	3.85	
E- F	-4617 / 0	-167.5	-167.5	0.26 (1)	3.85	
F- G	-4568 / 0	-78.0	-78.0	0.37 (1)	3.78	
G- H	-2578 / 0	-78.0	-78.0	0.25 (1)	4.91	
I- H	-3110 / 0	0.0	0.0	0.80 (1)	7.81	
Q- P	-66 / 0	-18.5	-18.5	0.08 (4)	6.25	
P- O	0 / 2468	-18.5	-18.5	0.52 (1)	10.00	
O- N	0 / 4438	-18.5	-18.5	0.78 (1)	10.00	
N- M	0 / 4692	-39.8	-39.8	0.85 (1)	10.00	
M- L	0 / 4692	-39.8	-39.8	0.85 (1)	10.00	
L- K	0 / 4593	-39.8	-39.8	0.63 (1)	10.00	
K- J	0 / 2578	-18.5	-18.5	0.37 (1)	10.00	
J- I	-69 / 0	-18.5	-18.5	0.07 (4)	6.25	

WEBS

MEMB. FR-TO	MAX. FACTORED FORCE (LBS)	MAX CSI (LC)
A- P	0 / 3773	0.93 (1)
P- B	-2742 / 0	0.90 (1)
B- O	0 / 2933	0.73 (1)
O- C	-1319 / 0	0.81 (1)
K- F	-833 / 0	0.64 (1)
K- G	0 / 3023	0.75 (1)
J- G	-2810 / 0	0.93 (1)
J- H	0 / 3940	0.98 (1)
C- N	0 / 854	0.21 (1)
N- D	-458 / 0	0.45 (1)
D- L	-179 / 0	0.18 (1)
L- F	0 / 331	0.08 (4)

FACTORED CONCENTRATED LOADS (LBS)

JT	LOC.	LC1	MAX-	MAX+	FACE	DIR.	TYPE	HEEL	CONN.
K	19-1-15	-1356	-1356	---	FRONT	VERT	TOTAL	---	C1
N	12-5-1	-1137	-1137	---	FRONT	VERT	TOTAL	---	C1

CONNECTION REQUIREMENTS

1) **C1:** A SUITABLE HANGER/MECHANICAL CONNECTION IS REQUIRED.

DESIGN CRITERIA

*** SPECIAL LOADS ANALYSIS ***
GEOMETRY AND/OR BASIC LOADS CHANGED BY USER.
LOADS WERE DERIVED FROM USER INPUT
NO FURTHER MODIFICATIONS WERE MADE

SPECIFIED LOADS:

TOP	CH.	LL	=	21.0	PSF
		DL	=	6.0	PSF
BOT	CH.	LL	=	0.0	PSF
		DL	=	7.4	PSF
TOTAL	LOAD		=	34.4	PSF

SPACING = 24.0 IN. C/C

LOADING IN FLAT SECTION BASED ON A SLOPE OF 2.00/12 MINIMUM

*** NON STANDARD GIRDER ***
ADDT'L USER-DEFINED LOADS APPLIED TO ALL LOAD CASES.

THIS TRUSS IS DESIGNED FOR RESIDENTIAL OR SMALL BUILDING REQUIREMENTS OF PART 9, NBCC 2015

THIS DESIGN COMPLIES WITH:
- PART 9 OF BCBC 2018 , ABC 2019
- PART 9 OF OBC 2012 (2019 AMENDMENT)
- CSA 086-14
- TPIC 2014

(55 % OF 23.0 P.S.F. G.S.L. PLUS 8.4 P.S.F. RAIN LOAD) EQUALS 21.0 P.S.F. SPECIFIED ROOF LIVE LOAD

ALLOWABLE DEFL.(LL)= L/360 (1.02")
CALCULATED VERT. DEFL.(LL) = L/ 999 (0.21")
ALLOWABLE DEFL.(TL)= L/360 (1.02")
CALCULATED VERT. DEFL.(TL) = L/ 851 (0.43")

CSI: TC=0.80/1.00 (H-I:1) , BC=0.85/1.00 (L-N:1) , WB=0.98/1.00 (H-J:1) , SSI=0.52/1.00 (N-O:1)

DOL LUMBER=1.00 NAIL=1.00 LS BEND=1.00 COMP=1.00 SHEAR=1.00 TENS= 1.00

COMPANION LIVE LOAD FACTOR = 1.00

TRUSS PLATE MANUFACTURER IS NOT RESPONSIBLE FOR QUALITY CONTROL IN THE TRUSS MANUFACTURING PLANT .

NAIL VALUES

PLATE	GRIP(DRY) (PSI) MAX	MIN	SHEAR (PLI) MAX	MIN	SECTION (PLI) MAX	MIN
MT20	650	371	1747	788	1987	1873

PLATE PLACEMENT TOL. = 0.250 inches

PLATE ROTATION TOL. = 5.0 Deg.

JSI GRIP= 0.90 (C) (INPUT = 0.90)
JSI METAL= 0.88 (M) (INPUT = 1.00)

JOB NAME	TRUSS NAME	QUANTITY	PLY	JOB DESC.		DRWG NO.
336333	H222		1	TRUSS DESC.	JT 45147	E21104307

Alpa Roof Truss, Maple

Version 8.420 S Jan 21 2021 MiTek Industries, Inc. Thu Oct 14 10:56:52 2021 Page 1

ID:hd511hZTz bdeQoS817GKByhVxV-CK 1O2vzuP3dZS5Y9K VSdafuCrDUrytPfBeluyTXT9

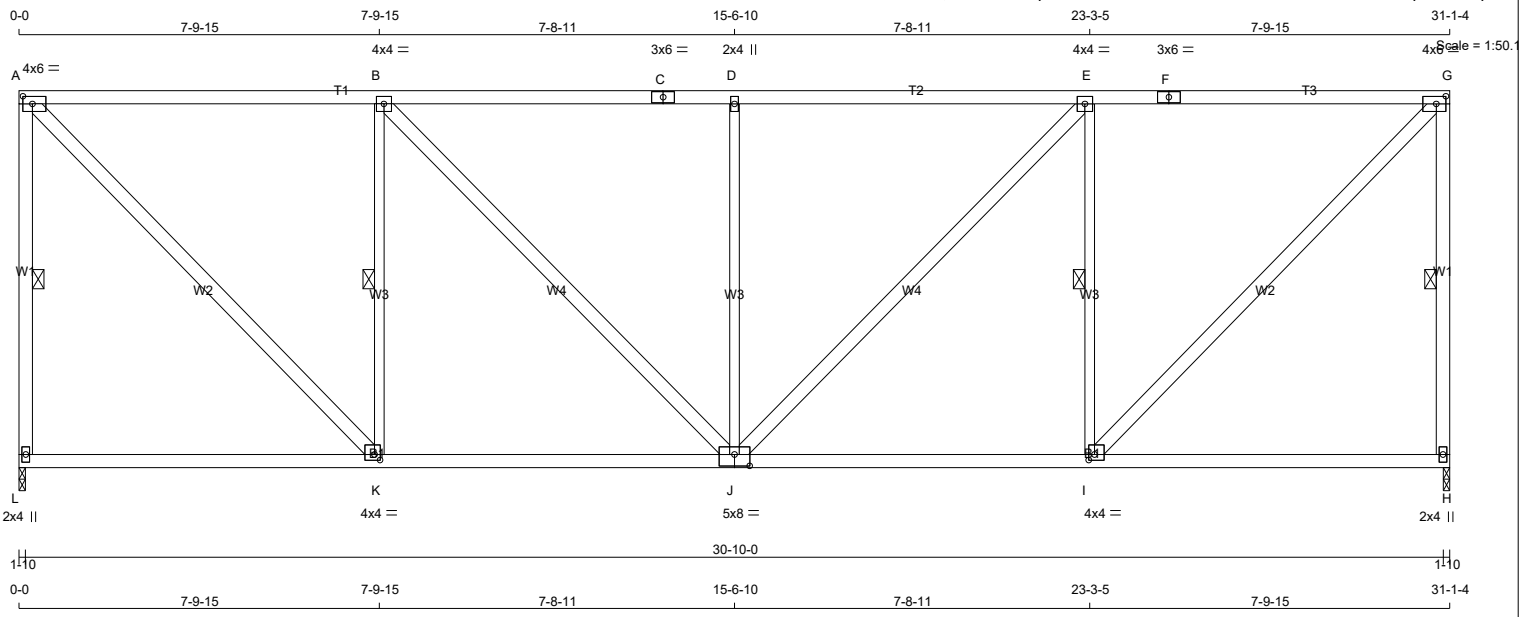

TOTAL WEIGHT = 156 lb

[M]

LUMBER

N. L. G. A. RULES

CHORDS	SIZE		LUMBER	DESCR.
L - A	2x4	DRY	No.2	SPF
A - C	2x4	DRY	No.2	SPF
C - F	2x4	DRY	No.2	SPF
F - G	2x4	DRY	No.2	SPF
H - G	2x4	DRY	No.2	SPF
L - J	2x4	DRY	No.2	SPF
J - H	2x4	DRY	No.2	SPF
ALL WEBS	2x4	DRY	No.2	SPF
EXCEPT				
K - B	2x3	DRY	No.2	SPF
J - D	2x3	DRY	No.2	SPF
I - E	2x3	DRY	No.2	SPF

DRY: SEASONED LUMBER.

PLATES (table is in inches)

JT	TYPE	PLATES	W	LEN	Y	X
A	TMVW-t	MT20	4.0	6.0	2.00	2.50
B	TMWW-t	MT20	4.0	4.0		
C	TS-t	MT20	3.0	6.0		
D	TMW+w	MT20	2.0	4.0		
E	TMWW-t	MT20	4.0	4.0		
F	TS-t	MT20	3.0	6.0		
G	TMVW-t	MT20	4.0	6.0	2.00	2.50
H	BMV1+p	MT20	2.0	4.0		
I	BMWW-t	MT20	4.0	4.0	1.50	1.50
J	BSWWW-l	MT20	5.0	8.0	3.00	4.00
K	BMWW-t	MT20	4.0	4.0	1.50	1.50
L	BMV1+p	MT20	2.0	4.0		

LATERAL BRACE(S) SHOWN SHALL BE 2X4 SPF#2

DIMENSIONS, SUPPORTS AND LOADINGS SPECIFIED BY FABRICATOR TO BE VERIFIED BY BUILDING DESIGNER

BEARINGS

JT	FACTORED GROSS REACTION VERT	HORZ	MAXIMUM FACTORED GROSS REACTION DOWN	HORZ	UPLIFT	INPUT BRG IN-SX	REQRD BRG IN-SX
L	1500	0	1500	0	0	1-10	1-10
H	1500	0	1500	0	0	1-10	1-10

UNFACTORED REACTIONS

JT	1ST LCASE COMBINED	MAX./MIN. COMPONENT REACTIONS SNOW	LIVE	PERM.LIVE	WIND	DEAD	SOIL
L	1070	653 / 0	0 / 0	0 / 0	0 / 0	417 / 0	0 / 0
H	1070	653 / 0	0 / 0	0 / 0	0 / 0	417 / 0	0 / 0

BEARING MATERIAL TO BE SPF NO.2 OR BETTER AT JOINT(S) L, H

BRACING

TOP CHORD TO BE SHEATHED OR MAX. PURLIN SPACING = 4.04 FT.
MAX. UNBRACED BOTTOM CHORD LENGTH = 10.00 FT OR RIGID CEILING DIRECTLY APPLIED.

ALL PITCH BREAKS AND PERIMETER CORNER JOINTS MUST BE LATERALLY RESTRAINED.

1 LATERAL BRACE(S) AT 1/ 2 LENGTH OF A-L, G-H, B-K, E-I.

END VERTICAL(S) MUST BE SHEATHED OR HAVE BRACES AS INDICATED IN THE MAX. UNBRACED LENGTH COLUMN OF THE TABLE BELOW

LOADING

TOTAL LOAD CASES: (4)

CHORDS

MEMB. FR-TO	MAX. FACTORED FORCE (LBS)	FACTORED VERT. LOAD (PLF) FROM	TO	LC1 CSI (LC)	MAX UNBRAC LENGTH
L- A	-1445 / 0	0.0	0.0	0.44 (1)	5.44
A- B	-1191 / 0	-78.0	-78.0	0.84 (1)	4.50
B- C	-1515 / 0	-78.0	-78.0	0.89 (1)	4.04
C- D	-1515 / 0	-78.0	-78.0	0.89 (1)	4.04
D- E	-1515 / 0	-78.0	-78.0	0.89 (1)	4.04
E- F	-1191 / 0	-78.0	-78.0	0.84 (1)	4.50
F- G	-1191 / 0	-78.0	-78.0	0.84 (1)	4.50
H- G	-1445 / 0	0.0	0.0	0.44 (1)	5.44
L- K	0 / 0	-18.5	-18.5	0.32 (4)	10.00
K- J	0 / 1191	-18.5	-18.5	0.44 (4)	10.00
J- I	0 / 1191	-18.5	-18.5	0.44 (4)	10.00
I- H	0 / 0	-18.5	-18.5	0.32 (4)	10.00

WEBS

MEMB. FR-TO	MAX. FACTORED FORCE (LBS)	MAX CSI (LC)
A- K	0 / 1694	0.27 (1)
K- B	-1026 / 0	0.44 (1)
B- J	0 / 464	0.07 (1)
J- D	-555 / 0	0.73 (1)
J- E	0 / 464	0.07 (1)
I- E	-1026 / 0	0.44 (1)
I- G	0 / 1694	0.27 (1)

DESIGN CRITERIA

SPECIFIED LOADS:

TOP	CH.	LL	=	21.0	PSF
		DL	=	6.0	PSF
BOT	CH.	LL	=	0.0	PSF
		DL	=	7.4	PSF
TOTAL	LOAD		=	34.4	PSF

SPACING = 24.0 IN. C/C

LOADING IN FLAT SECTION BASED ON A SLOPE OF 2.00/12 MINIMUM

THIS TRUSS IS DESIGNED FOR RESIDENTIAL OR SMALL BUILDING REQUIREMENTS OF PART 9, NBCC 2015

THIS DESIGN COMPLIES WITH:
- PART 9 OF BCBC 2018 , ABC 2019
- PART 9 OF OBC 2012 (2019 AMENDMENT)
- CSA 086-14
- TPIC 2014

(55 % OF 23.0 P.S.F. G.S.L. PLUS 8.4 P.S.F. RAIN LOAD) EQUALS 21.0 P.S.F. SPECIFIED ROOF LIVE LOAD

ALLOWABLE DEFL.(LL)= L/360 (1.04")
CALCULATED VERT. DEFL.(LL) = L/ 999 (0.07")
ALLOWABLE DEFL.(TL)= L/360 (1.04")
CALCULATED VERT. DEFL.(TL) = L/ 999 (0.19")

CSI: TC=0.89/1.00 (B-D:1) , BC=0.44/1.00 (J-K:4) , WB=0.73/1.00 (D-J:1) , SSI=0.29/1.00 (A-B:1)

DOL LUMBER=1.00 NAIL=1.00 LS BEND=1.10 COMP=1.10 SHEAR=1.10 TENS= 1.10

COMPANION LIVE LOAD FACTOR = 1.00

TRUSS PLATE MANUFACTURER IS NOT RESPONSIBLE FOR QUALITY CONTROL IN THE TRUSS MANUFACTURING PLANT .

NAIL VALUES

PLATE	GRIP(DRY) (PSI) MAX	MIN	SHEAR (PLI) MAX	MIN	SECTION (PLI) MAX	MIN
MT20	650	371	1747	788	1987	1873

PLATE PLACEMENT TOL. = 0.250 inches

PLATE ROTATION TOL. = 5.0 Deg.

JSI GRIP= 0.89 (K) (INPUT = 0.90)
JSI METAL= 0.41 (K) (INPUT = 1.00)

JOB NAME	TRUSS NAME	QUANTITY	PLY	JOB DESC.		DRWG NO.
336333	H231		1	TRUSS DESC.	JT 45147	E21104308

Alpa Roof Truss, Maple

Version 8.420 S Jan 21 2021 MiTek Industries, Inc. Thu Oct 14 10:56:54 2021 Page 1

ID:hd511hZTz_bdeQoS817GKByhVxV-8j6ookwEQ0JLomFwGl0zX2f1I?SiyixAszgIMnyTXT7

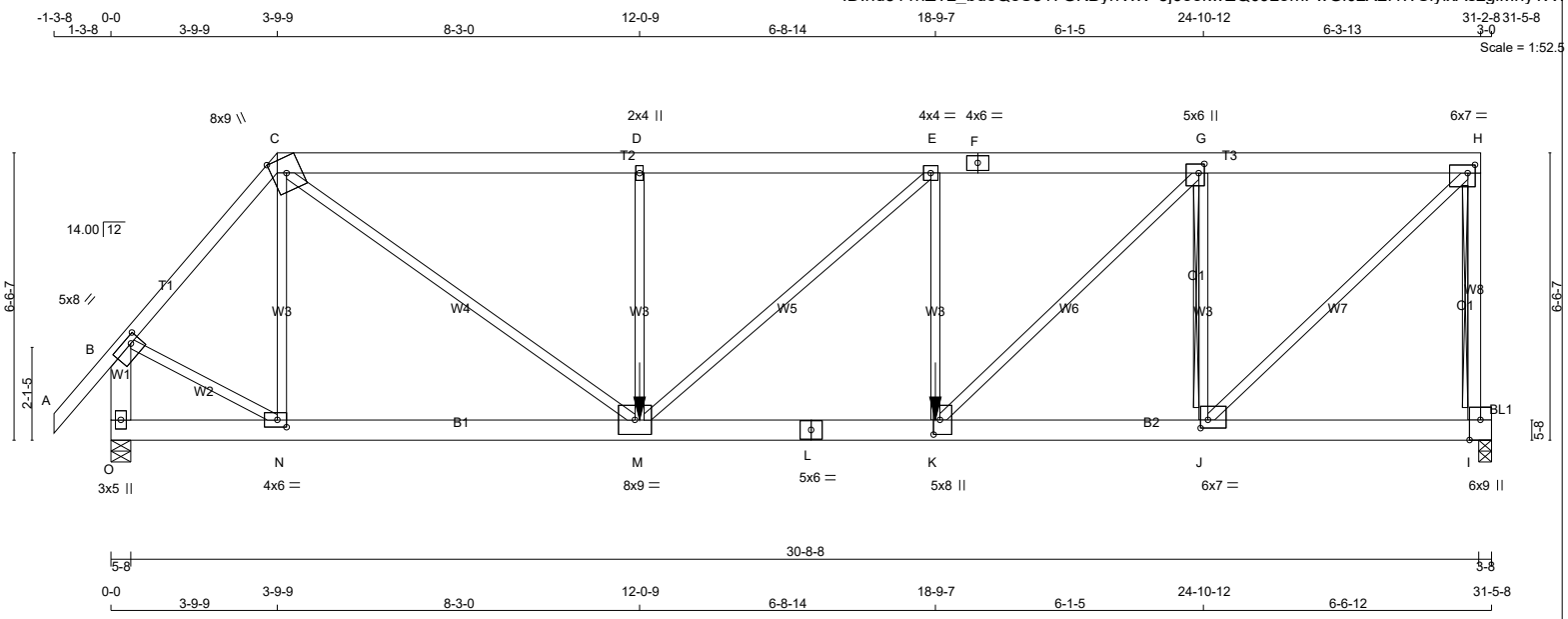

TOTAL WEIGHT = 174 lb

[M]

LUMBER

N. L. G. A. RULES

CHORDS	SIZE		LUMBER	DESCR.
A - C	2x4	DRY	No.2	SPF
C - F	2x6	DRY	No.2	SPF
F - H	2x6	DRY	No.2	SPF
I - H	2x4	DRY	No.2	SPF
O - B	2x6	DRY	No.2	SPF
O - L	2x6	DRY	No.2	SPF
L - I	2x6	DRY	No.2	SPF
BEARING BLOCKS				
BL1	2x4	DRY	No.2	SPF
ALL WEBS EXCEPT	2x3	DRY	No.2	SPF

DRY: SEASONED LUMBER.

PLATES (table is in inches)

JT	TYPE	PLATES	W	LEN	Y	X
B	TMVW-t	MT20	5.0	8.0	1.75	2.50
C	TTWW+m	MT20	8.0	9.0	Edge	
D	TMW+w	MT20	2.0	4.0		
E	TMWW-t	MT20	4.0	4.0		
F	TS-t	MT20	4.0	6.0		
G	TMWW+t	MT20	5.0	6.0	2.50	1.50
H	TMVW-t	MT20	6.0	7.0	2.25	2.00
I	BMVK1+t	MT20	6.0	9.0	Edge	3.00
J	BMWW-t	MT20	6.0	7.0	2.25	2.00
K	BMWW+t	MT20	5.0	8.0	4.00	1.75
L	BS-t	MT20	5.0	6.0		
M	BMWWW-t	MT20	8.0	9.0		
N	BMWW-t	MT20	4.0	6.0	2.00	2.50
O	BMV1+p	MT20	3.0	5.0		

Edge - INDICATES REFERENCE CORNER OF PLATE TOUCHES EDGE OF CHORD.

LATERAL BRACE(S) SHOWN SHALL BE 2X4 SPF#2

DIMENSIONS, SUPPORTS AND LOADINGS SPECIFIED BY FABRICATOR TO BE VERIFIED BY BUILDING DESIGNER

BEARINGS

JT	FACTORED GROSS REACTION VERT	HORZ	MAXIMUM FACTORED GROSS REACTION DOWN	HORZ	UPLIFT	INPUT BRG IN-SX	REQRD BRG IN-SX
I	2930	0	2930	0	0	3-8	3-8
O	3092	0	3092	0	0	5-8	4-9

UNFACTORED REACTIONS

JT	1ST LCASE COMBINED	MAX./MIN. COMPONENT REACTIONS SNOW	LIVE	PERM.LIVE	WIND	DEAD	SOIL
I	2089	1276 / 0	0 / 0	0 / 0	0 / 0	813 / 0	0 / 0
O	2202	1356 / 0	0 / 0	0 / 0	0 / 0	846 / 0	0 / 0

BEARING MATERIAL TO BE SPF NO.2 OR BETTER AT JOINT(S) I, O
BEARING SIZE FACTOR = 1.15 AT JNT(S) I (BASED ON SUPPORT DEPTH = 1-8)

BRACING

TOP CHORD TO BE SHEATHED OR MAX. PURLIN SPACING = 3.31 FT.
MAX. UNBRACED BOTTOM CHORD LENGTH = 6.25 FT OR RIGID CEILING DIRECTLY APPLIED.

ALL PITCH BREAKS AND PERIMETER CORNER JOINTS MUST BE LATERALLY RESTRAINED.

2x4 DRY SPF No.2 T-BRACE AT H-I, G-J

FASTEN T AND I-BRACES TO NARROW EDGE OF WEB WITH ONE ROW PER PLY OF 3" COMMON WIRE NAILS @ 6" O.C. WITH 3" MINIMUM END DISTANCE. BRACE MUST COVER 90% OF WEB LENGTH.

END VERTICAL(S) MUST BE SHEATHED OR HAVE BRACES AS INDICATED IN THE MAX. UNBRACED LENGTH COLUMN OF THE TABLE BELOW

LOADING

TOTAL LOAD CASES: (4)

CHORDS

MEMB. FR-TO	MAX. FACTORED FORCE (LBS)	FACTORED VERT. LOAD (PLF) FROM	TO	LC1 CSI (LC)	MAX UNBRAC LENGTH
A- B	0 / 42	-78.0	-78.0	0.12 (1)	10.00
B- C	-2737 / 0	-78.0	-78.0	0.40 (1)	3.85
C- D	-4856 / 0	-78.0	-78.0	0.71 (1)	3.31
D- E	-4856 / 0	-156.0	-156.0	0.65 (1)	3.31
E- F	-4760 / 0	-78.0	-78.0	0.44 (1)	3.62
F- G	-4760 / 0	-78.0	-78.0	0.44 (1)	3.62
G- H	-2706 / 0	-78.0	-78.0	0.27 (1)	4.79
I- H	-2880 / 0	0.0	0.0	0.64 (1)	7.81
O- B	-3092 / 0	0.0	0.0	0.25 (1)	5.96
O- N	0 / 0	-18.5	-18.5	0.12 (4)	10.00
N- M	0 / 1772	-18.5	-18.5	0.33 (1)	10.00
M- L	0 / 4760	-37.3	-37.3	0.76 (1)	10.00
L- K	0 / 4760	-37.3	-37.3	0.76 (1)	10.00
K- J	0 / 2706	-18.5	-18.5	0.39 (1)	10.00
J- I	-69 / 0	-18.5	-18.5	0.08 (4)	6.25

WEBS

MEMB. FR-TO	MAX. FACTORED FORCE (LBS)	MAX CSI (LC)
N- C	-594 / 0	0.37 (1)
C- M	0 / 3831	0.95 (1)
M- D	-951 / 0	0.59 (1)
M- E	0 / 130	0.03 (1)
K- E	-834 / 0	0.52 (1)
K- G	0 / 2898	0.72 (1)
J- G	-2549 / 0	0.74 (1)
J- H	0 / 3851	0.95 (1)
B- N	0 / 1936	0.48 (1)

FACTORED CONCENTRATED LOADS (LBS)

JT	LOC.	LC1	MAX-	MAX+	FACE	DIR.	TYPE	HEEL	CONN.
K	18-9-7	-1028	-1028	---	FRONT	VERT	TOTAL	---	C1
M	12-0-9	-1224	-1224	---	FRONT	VERT	TOTAL	---	C1

CONNECTION REQUIREMENTS

1) **C1:** A SUITABLE HANGER/MECHANICAL CONNECTION IS REQUIRED.

DESIGN CRITERIA

*** SPECIAL LOADS ANALYSIS ***
GEOMETRY AND/OR BASIC LOADS CHANGED BY USER.
LOADS WERE DERIVED FROM USER INPUT
NO FURTHER MODIFICATIONS WERE MADE

SPECIFIED LOADS:

TOP CH.	LL	=	21.0	PSF
	DL	=	6.0	PSF
BOT CH.	LL	=	0.0	PSF
	DL	=	7.4	PSF
TOTAL LOAD		=	34.4	PSF

SPACING = 24.0 IN. C/C

LOADING IN FLAT SECTION BASED ON A SLOPE OF 2.00/12 MINIMUM

*** NON STANDARD GIRDER ***
ADDT'L USER-DEFINED LOADS APPLIED TO ALL LOAD CASES.

THIS TRUSS IS DESIGNED FOR RESIDENTIAL OR SMALL BUILDING REQUIREMENTS OF PART 9, NBCC 2015

THIS DESIGN COMPLIES WITH:
- PART 9 OF BCBC 2018 , ABC 2019
- PART 9 OF OBC 2012 (2019 AMENDMENT)
- CSA 086-14
- TPIC 2014

(55 % OF 23.0 P.S.F. G.S.L. PLUS 8.4 P.S.F. RAIN LOAD) EQUALS 21.0 P.S.F. SPECIFIED ROOF LIVE LOAD

ALLOWABLE DEFL.(LL)= L/360 (1.04")
CALCULATED VERT. DEFL.(LL) = L/ 999 (0.19")
ALLOWABLE DEFL.(TL)= L/360 (1.04")
CALCULATED VERT. DEFL.(TL) = L/ 977 (0.38")

CSI: TC=0.71/1.00 (C-D:1) , BC=0.76/1.00 (K-M:1) , WB=0.95/1.00 (H-J:1) , SSI=0.37/1.00 (D-E:1)

DOL LUMBER=1.00 NAIL=1.00 LS BEND=1.00 COMP=1.00 SHEAR=1.00 TENS= 1.00

COMPANION LIVE LOAD FACTOR = 1.00

AUTOSOLVE RIGHT HEEL ONLY

TRUSS PLATE MANUFACTURER IS NOT RESPONSIBLE FOR QUALITY CONTROL IN THE TRUSS MANUFACTURING PLANT .

NAIL VALUES

PLATE	GRIP(DRY) (PSI) MAX	MIN	SHEAR (PLI) MAX	MIN	SECTION (PLI) MAX	MIN
MT20	650	371	1747	788	1987	1873

PLATE PLACEMENT TOL. = 0.250 inches

PLATE ROTATION TOL. = 5.0 Deg.

JSI GRIP= 0.90 (J) (INPUT = 0.90)
JSI METAL= 0.97 (L) (INPUT = 1.00)

JOB NAME	TRUSS NAME	QUANTITY	PLY	JOB DESC.	DRWG NO.
336333	H232		1	TRUSS DESC. JT 45147	E21104309

Alpa Roof Truss, Maple

Version 8.420 S Jan 21 2021 MiTek Industries, Inc. Thu Oct 14 10:56:58 2021 Page 1

ID:hd511hZTz bdeQoS817GKByhVxV-1UMJe6zkUFpmHNYhVb4vhuql9cwVuYImnbeyVYyTXT3

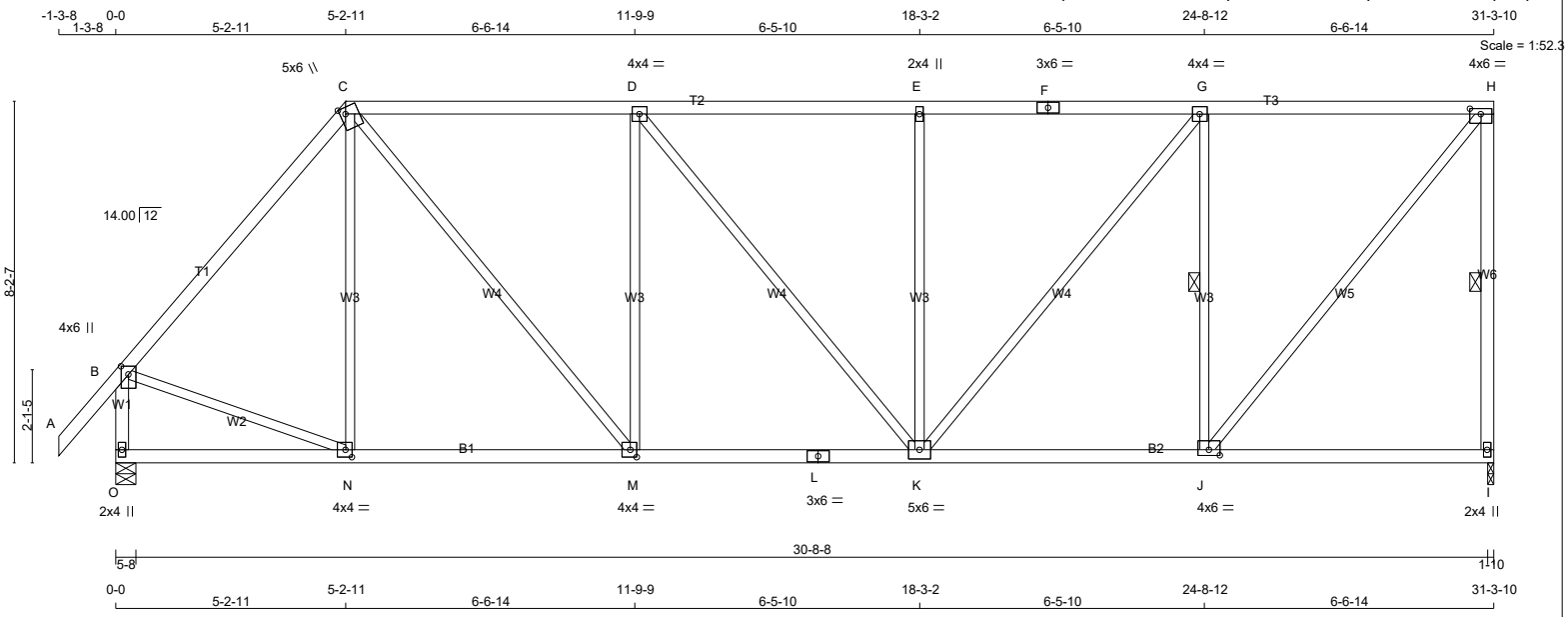

TOTAL WEIGHT = 149 lb

[M]

LUMBER

N. L. G. A. RULES

CHORDS	SIZE		LUMBER	DESCR.
A - C	2x4	DRY	No.2	SPF
C - F	2x4	DRY	No.2	SPF
F - H	2x4	DRY	No.2	SPF
I - H	2x4	DRY	No.2	SPF
O - B	2x4	DRY	No.2	SPF
O - L	2x4	DRY	No.2	SPF
L - I	2x4	DRY	No.2	SPF
ALL WEBS EXCEPT	2x3	DRY	No.2	SPF

DRY: SEASONED LUMBER.

PLATES (table is in inches)

JT	TYPE	PLATES	W	LEN	Y	X
B	TMVW+p	MT20	4.0	6.0	2.25	2.00
C	TTWW+m	MT20	5.0	6.0	1.75	1.50
D	TMWW-t	MT20	4.0	4.0		
E	TMW+w	MT20	2.0	4.0		
F	TS-t	MT20	3.0	6.0		
G	TMWW-t	MT20	4.0	4.0		
H	TMVW-t	MT20	4.0	6.0	1.50	3.00
I	BMV1+p	MT20	2.0	4.0		
J	BMWW-t	MT20	4.0	6.0	1.50	3.00
K	BMWWW-t	MT20	5.0	6.0		
L	BS-t	MT20	3.0	6.0		
M	BMWW-t	MT20	4.0	4.0	2.00	1.75
N	BMWW-t	MT20	4.0	4.0	2.00	1.75
O	BMV1+p	MT20	2.0	4.0		

LATERAL BRACE(S) SHOWN SHALL BE 2X4 SPF#2

DIMENSIONS, SUPPORTS AND LOADINGS SPECIFIED BY FABRICATOR TO BE VERIFIED BY BUILDING DESIGNER

BEARINGS

JT	FACTORED GROSS REACTION VERT	HORZ	MAXIMUM FACTORED GROSS REACTION DOWN	HORZ	UPLIFT	INPUT BRG IN-SX	REQRD BRG IN-SX
I	1510	0	1510	0	0	1-10	1-10
O	1619	0	1619	0	0	5-8	1-12

UNFACTORED REACTIONS

JT	1ST LCASE COMBINED	MAX./MIN. COMPONENT REACTIONS SNOW	LIVE	PERM.LIVE	WIND	DEAD	SOIL
I	1076	657 / 0	0 / 0	0 / 0	0 / 0	419 / 0	0 / 0
O	1152	716 / 0	0 / 0	0 / 0	0 / 0	436 / 0	0 / 0

BEARING MATERIAL TO BE SPF NO.2 OR BETTER AT JOINT(S) I, O

BRACING

TOP CHORD TO BE SHEATHED OR MAX. PURLIN SPACING = 4.63 FT.
MAX. UNBRACED BOTTOM CHORD LENGTH = 10.00 FT OR RIGID CEILING DIRECTLY APPLIED.

ALL PITCH BREAKS AND PERIMETER CORNER JOINTS MUST BE LATERALLY RESTRAINED.

1 LATERAL BRACE(S) AT 1/ 2 LENGTH OF H-I, G-J.

END VERTICAL(S) MUST BE SHEATHED OR HAVE BRACES AS INDICATED IN THE MAX. UNBRACED LENGTH COLUMN OF THE TABLE BELOW

LOADING

TOTAL LOAD CASES: (4)

CHORDS

MEMB. FR-TO	MAX. FACTORED FORCE (LBS)	FACTORED VERT. LOAD (PLF) FROM	TO	LC1 CSI (LC)	MAX UNBRAC LENGTH
A- B	0 / 42	-78.0	-78.0	0.11 (1)	10.00
B- C	-1304 / 0	-78.0	-78.0	0.48 (1)	5.12
C- D	-1455 / 0	-78.0	-78.0	0.59 (1)	4.68
D- E	-1486 / 0	-78.0	-78.0	0.59 (1)	4.63
E- F	-1486 / 0	-78.0	-78.0	0.59 (1)	4.63
F- G	-1486 / 0	-78.0	-78.0	0.59 (1)	4.63
G- H	-1045 / 0	-78.0	-78.0	0.54 (1)	5.35
I- H	-1461 / 0	0.0	0.0	0.44 (1)	5.41
O- B	-1582 / 0	0.0	0.0	0.19 (1)	6.56
O- N	0 / 0	-18.5	-18.5	0.15 (4)	10.00
N- M	0 / 844	-18.5	-18.5	0.23 (4)	10.00
M- L	0 / 1455	-18.5	-18.5	0.32 (1)	10.00
L- K	0 / 1455	-18.5	-18.5	0.32 (1)	10.00
K- J	0 / 1045	-18.5	-18.5	0.29 (4)	10.00
J- I	0 / 0	-18.5	-18.5	0.19 (4)	10.00

WEBS

MEMB. FR-TO	MAX. FACTORED FORCE (LBS)	MAX CSI (LC)
N- C	-155 / 26	0.20 (1)
C- M	0 / 954	0.21 (1)
M- D	-611 / 0	0.80 (1)
D- K	0 / 49	0.01 (1)
K- E	-465 / 0	0.61 (1)
K- G	0 / 697	0.16 (1)
J- G	-1121 / 0	0.48 (1)
J- H	0 / 1636	0.37 (1)
B- N	0 / 890	0.20 (1)

DESIGN CRITERIA

SPECIFIED LOADS:

TOP CH.	LL	=	21.0	PSF
	DL	=	6.0	PSF
BOT CH.	LL	=	0.0	PSF
	DL	=	7.4	PSF
TOTAL LOAD		=	34.4	PSF

SPACING = 24.0 IN. C/C

LOADING IN FLAT SECTION BASED ON A SLOPE OF 2.00/12 MINIMUM

THIS TRUSS IS DESIGNED FOR RESIDENTIAL OR SMALL BUILDING REQUIREMENTS OF PART 9, NBCC 2015

THIS DESIGN COMPLIES WITH:
- PART 9 OF BCBC 2018 , ABC 2019
- PART 9 OF OBC 2012 (2019 AMENDMENT)
- CSA 086-14
- TPIC 2014

(55 % OF 23.0 P.S.F. G.S.L. PLUS 8.4 P.S.F. RAIN LOAD) EQUALS 21.0 P.S.F. SPECIFIED ROOF LIVE LOAD

ALLOWABLE DEFL.(LL)= L/360 (1.04")
CALCULATED VERT. DEFL.(LL) = L/ 999 (0.07")
ALLOWABLE DEFL.(TL)= L/360 (1.04")
CALCULATED VERT. DEFL.(TL) = L/ 999 (0.15")

CSI: TC=0.59/1.00 (D-E:1) , BC=0.32/1.00 (K-M:1) , WB=0.80/1.00 (D-M:1) , SSI=0.24/1.00 (C-D:1)

DOL LUMBER=1.00 NAIL=1.00 LS BEND=1.10 COMP=1.10 SHEAR=1.10 TENS= 1.10

COMPANION LIVE LOAD FACTOR = 1.00

TRUSS PLATE MANUFACTURER IS NOT RESPONSIBLE FOR QUALITY CONTROL IN THE TRUSS MANUFACTURING PLANT .

NAIL VALUES

PLATE	GRIP(DRY) (PSI) MAX	MIN	SHEAR (PLI) MAX	MIN	SECTION (PLI) MAX	MIN
MT20	650	371	1747	788	1987	1873

PLATE PLACEMENT TOL. = 0.250 inches

PLATE ROTATION TOL. = 5.0 Deg.

JSI GRIP= 0.90 (B) (INPUT = 0.90)
JSI METAL= 0.51 (B) (INPUT = 1.00)

JOB NAME	TRUSS NAME	QUANTITY	PLY	JOB DESC.		DRWG NO.
336333	H233		1	TRUSS DESC.	JT 45147	E21104310

Alpa Roof Truss, Maple

Version 8.420 S Jan 21 2021 MiTek Industries, Inc. Thu Oct 14 10:56:43 2021 Page 1

ID:hd511hZTz bdeQoS817GKByhVxV-zcyeVzoK0ewu 3vp7xJOaki9aZpRtmQZKmVqUvyTXTI

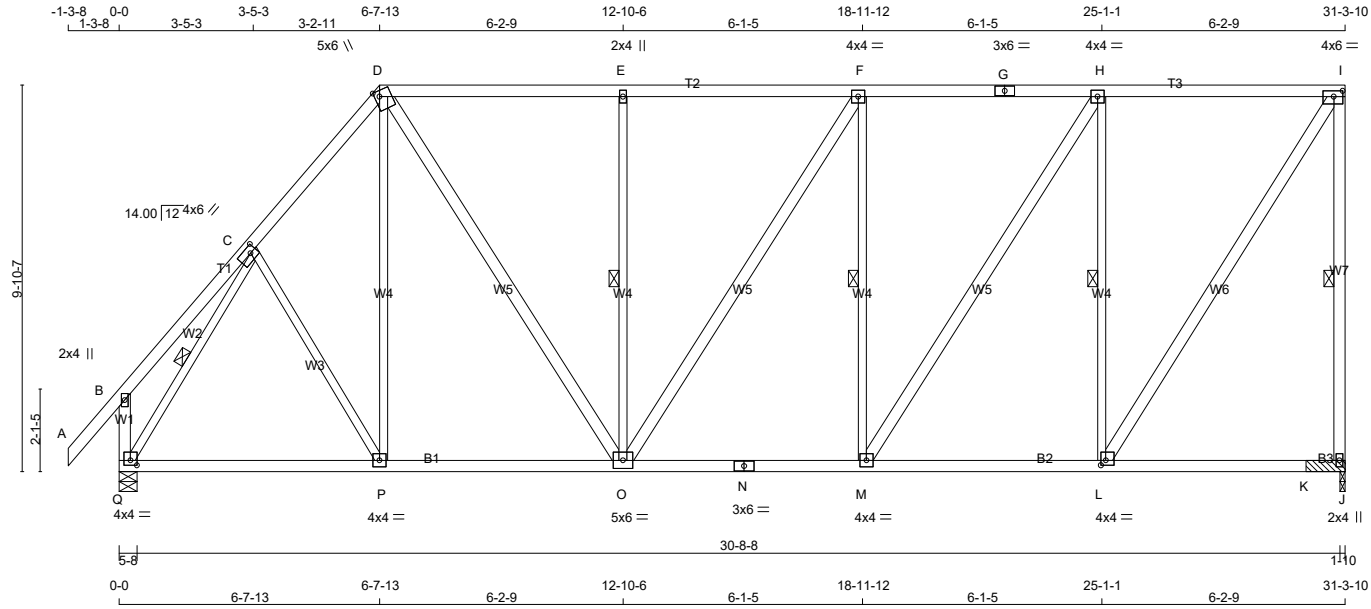

TOTAL WEIGHT = 7 X 182 = 1276 lb

LUMBER

N. L. G. A. RULES

CHORDS	SIZE		LUMBER	DESCR.
A - D	2x4	DRY	No.2	SPF
D - G	2x4	DRY	No.2	SPF
G - I	2x4	DRY	No.2	SPF
J - I	2x4	DRY	No.2	SPF
Q - B	2x4	DRY	No.2	SPF
Q - N	2x4	DRY	No.2	SPF
N - J	2x4	DRY	No.2	SPF
ALL WEBS	2x3	DRY	No.2	SPF
EXCEPT				
D - O	2x4	DRY	No.2	SPF
O - F	2x4	DRY	No.2	SPF
M - H	2x4	DRY	No.2	SPF
L - I	2x4	DRY	No.2	SPF

DRY: SEASONED LUMBER.

PLATES (table is in inches)

JT	TYPE	PLATES	W	LEN	Y	X
B	TMV+p	MT20	2.0	4.0		
C	TMWW-t	MT20	4.0	6.0	2.00	2.00
D	TTWW+m	MT20	5.0	6.0	1.75	1.50
E	TMW+w	MT20	2.0	4.0		
F	TMWW-t	MT20	4.0	4.0		
G	TS-t	MT20	3.0	6.0		
H	TMWW-t	MT20	4.0	4.0		
I	TMVW-t	MT20	4.0	6.0	1.75	2.75
J	BMV1+p	MT20	2.0	4.0		
L	BMWW-t	MT20	4.0	4.0	1.50	1.50
M	BMWW-t	MT20	4.0	4.0		
N	BS-t	MT20	3.0	6.0		
O	BMWWW-t	MT20	5.0	6.0		
P	BMWW-t	MT20	4.0	4.0		
Q	BMVW1-t	MT20	4.0	4.0	1.50	2.00

LATERAL BRACE(S) SHOWN SHALL BE 2X4 SPF#2

DIMENSIONS, SUPPORTS AND LOADINGS SPECIFIED BY FABRICATOR TO BE VERIFIED BY BUILDING DESIGNER

BEARINGS

JT	FACTORED GROSS REACTION VERT	HORZ	MAXIMUM FACTORED GROSS REACTION DOWN	HORZ	UPLIFT	INPUT BRG IN-SX	REQRD BRG IN-SX
J	1622	0	1622	0	0	1-10	1-10 & BLOCK
Q	1692	0	1692	0	0	5-8	1-13

UNFACTORED REACTIONS

JT	1ST LCASE COMBINED	MAX./MIN. COMPONENT REACTIONS SNOW	LIVE	PERM.LIVE	WIND	DEAD	SOIL
J	1166	657 / 0	0 / 0	0 / 0	0 / 0	509 / 0	0 / 0
Q	1210	716 / 0	0 / 0	0 / 0	0 / 0	495 / 0	0 / 0

BEARING MATERIAL TO BE SPF NO.2 OR BETTER AT JOINT(S) J, Q

2x4 DRY SPF No.2 BEARING BLOCK 12" LONG AT JT. J ATTACHED TO FRONT SIDE WITH 2 ROWS OF (0.122"X3") SPIRAL NAILS SPACED 3" C.C. 8 NAILS TOTAL.

BRACING

FOR SECTION D-I, MAX. PURLIN SPACING = 2.00 FT.
FOR OTHER SECTIONS, TOP CHORD TO BE SHEATHED OR MAX. PURLIN SPACING = 5.36 FT.
MAX. UNBRACED BOTTOM CHORD LENGTH = 10.00 FT OR RIGID CEILING DIRECTLY APPLIED.

ALL PITCH BREAKS AND PERIMETER CORNER JOINTS MUST BE LATERALLY RESTRAINED.

1 LATERAL BRACE(S) AT 1/ 2 LENGTH OF I-J, E-O, F-M, H-L, C-Q.

END VERTICAL(S) MUST BE SHEATHED OR HAVE BRACES AS INDICATED IN THE MAX. UNBRACED LENGTH COLUMN OF THE TABLE BELOW

LOADING

TOTAL LOAD CASES: (4)

CHORDS

MEMB. FR-TO	MAX. FACTORED FORCE (LBS)	FACTORED VERT. LOAD (PLF) FROM	TO	LC1	MAX CSI (LC)	MAX. UNBRAC LENGTH
A- B	0 / 42	-78.0	-78.0	0.11 (1)	10.00	
B- C	0 / 21	-78.0	-78.0	0.13 (1)	10.00	
C- D	-1393 / 0	-78.0	-78.0	0.16 (1)	5.36	
D- E	-1317 / 0	-85.5	-85.5	0.55 (1)	2.00	
E- F	-1318 / 0	-85.5	-85.5	0.54 (1)	2.00	
F- G	-1291 / 0	-85.5	-85.5	0.55 (1)	2.00	
G- H	-1291 / 0	-85.5	-85.5	0.55 (1)	2.00	
H- I	-886 / 0	-85.5	-85.5	0.51 (1)	2.00	
J- I	-1576 / 0	0.0	0.0	0.74 (1)	5.26	
Q- B	-209 / 0	0.0	0.0	0.02 (1)	7.81	
Q- P	0 / 843	-18.5	-18.5	0.28 (4)	10.00	
P- O	0 / 889	-18.5	-18.5	0.29 (4)	10.00	
O- N	0 / 1291	-18.5	-18.5	0.27 (1)	10.00	
N- M	0 / 1291	-18.5	-18.5	0.27 (1)	10.00	
M- L	0 / 886	-18.5	-18.5	0.27 (4)	10.00	
L- K	0 / 0	-18.5	-18.5	0.17 (4)	10.00	
K- J	0 / 0	-18.5	-18.5	0.17 (4)	10.00	

WEBS

MEMB. FR-TO	MAX. FACTORED FORCE (LBS)	MAX CSI (LC)
C- P	0 / 84	0.03 (4)
P- D	0 / 87	0.03 (4)
D- O	0 / 785	0.13 (1)
O- E	-592 / 0	0.39 (1)
O- F	0 / 49	0.01 (1)
M- F	-525 / 0	0.35 (1)
M- H	0 / 753	0.12 (1)
L- H	-1236 / 0	0.81 (1)
L- I	0 / 1628	0.26 (1)
Q- C	-1662 / 0	0.48 (1)

[M]

DESIGN CRITERIA

SPECIFIED LOADS:

TOP	CH.	LL	=	21.0	PSF
		DL	=	6.0	PSF
BOT	CH.	LL	=	0.0	PSF
		DL	=	7.4	PSF
TOTAL	LOAD		=	34.4	PSF

SPACING = 24.0 IN. C/C

LOADING IN FLAT SECTION BASED ON PIGGYBACK TRUSS WITH SLOPES OF 6.00/12 AND -6.00/12 AND RESPECTIVE HEEL HEIGHTS OF 0-0 AND 0-0 AND AN ADDITIONAL DEAD LOAD OF 3.0 P.S.F.

THIS TRUSS IS DESIGNED FOR RESIDENTIAL OR SMALL BUILDING REQUIREMENTS OF PART 9, NBCC 2015

THIS DESIGN COMPLIES WITH:
- PART 9 OF BCBC 2018 , ABC 2019
- PART 9 OF OBC 2012 (2019 AMENDMENT)
- CSA 086-14
- TPIC 2014

(55 % OF 23.0 P.S.F. G.S.L. PLUS 8.4 P.S.F. RAIN LOAD) EQUALS 21.0 P.S.F. SPECIFIED ROOF LIVE LOAD

ALLOWABLE DEFL.(LL)= L/360 (1.04")
CALCULATED VERT. DEFL.(LL) = L/ 999 (0.06")
ALLOWABLE DEFL.(TL)= L/360 (1.04")
CALCULATED VERT. DEFL.(TL) = L/ 999 (0.13")

CSI: TC=0.74/1.00 (I-J:1) , BC=0.29/1.00 (O-P:4) , WB=0.81/1.00 (H-L:1) , SSI=0.25/1.00 (H-I:1)

DOL LUMBER=1.00 NAIL=1.00 LS BEND=1.10 COMP=1.10 SHEAR=1.10 TENS= 1.10

COMPANION LIVE LOAD FACTOR = 1.00

TRUSS PLATE MANUFACTURER IS NOT RESPONSIBLE FOR QUALITY CONTROL IN THE TRUSS MANUFACTURING PLANT .

NAIL VALUES

PLATE	GRIP(DRY) (PSI) MAX	MIN	SHEAR (PLI) MAX	MIN	SECTION (PLI) MAX	MIN
MT20	650	371	1747	788	1987	1873

PLATE PLACEMENT TOL. = 0.250 inches

PLATE ROTATION TOL. = 5.0 Deg.

JSI GRIP= 0.90 (I) (INPUT = 0.90)
JSI METAL= 0.46 (N) (INPUT = 1.00)

JOB NAME	TRUSS NAME	QUANTITY	PLY	JOB DESC.	DRWG NO.
336333	H231T		1	TRUSS DESC. JT 45147	E21104311

Alpha Roof Truss, Maple

ID:hd511hZTz bdeQoS817GKByhVxV-46EYDQyUydZ223OJOA2RcTlO7p6AQdqTJH9sRfyTXT5

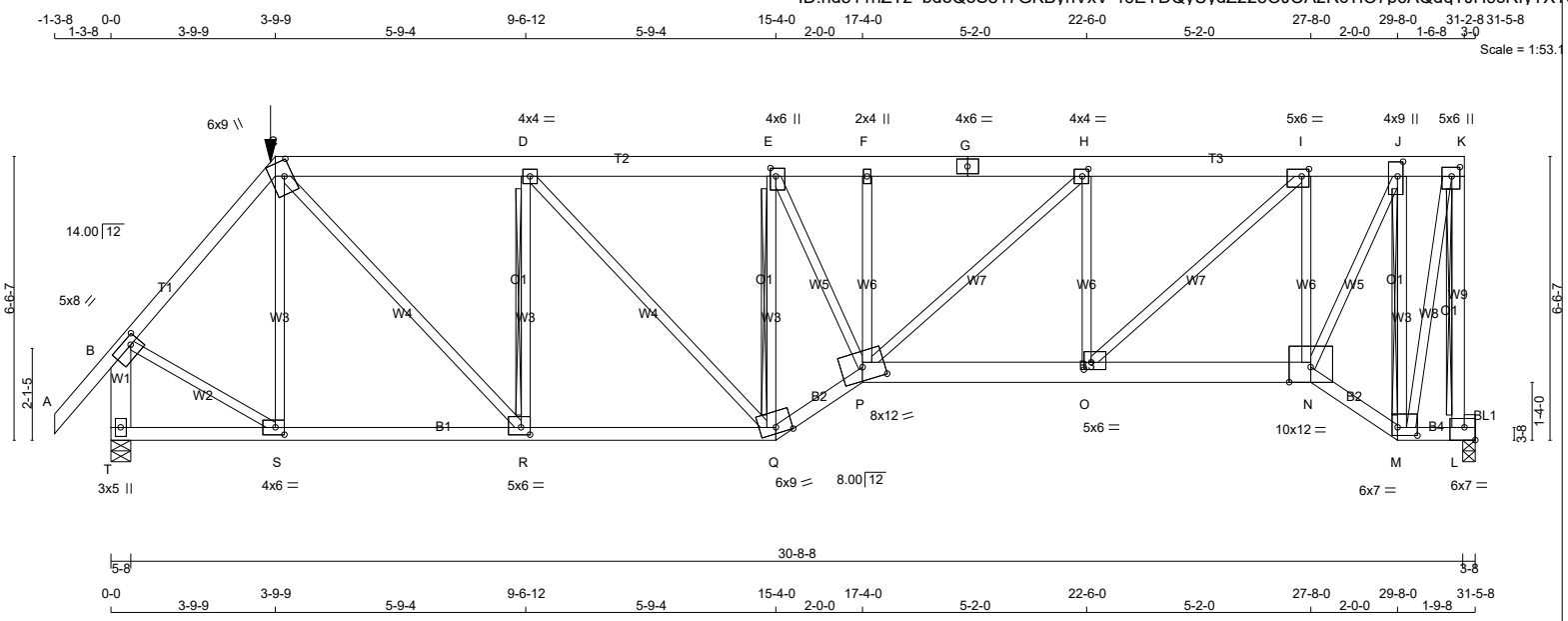

TOTAL WEIGHT = 181 lb

[M]

LUMBER

N. L. G. A. RULES

CHORDS	SIZE		LUMBER	DESCR.
A - C	2x4	DRY	No.2	SPF
C - G	2x6	DRY	No.2	SPF
G - K	2x6	DRY	No.2	SPF
L - K	2x4	DRY	No.2	SPF
T - B	2x6	DRY	No.2	SPF
T - Q	2x4	DRY	No.2	SPF
Q - P	2x4	DRY	No.2	SPF
P - N	2x6	DRY	No.2	SPF
N - M	2x4	DRY	No.2	SPF
M - L	2x4	DRY	No.2	SPF

BEARING BLOCKS

BL1	2x4	DRY	No.2	SPF

ALL WEBS EXCEPT	2x3	DRY	No.2	SPF

DRY: SEASONED LUMBER.

PLATES (table is in inches)

JT	TYPE	PLATES	W	LEN	Y	X
B	TMVW-t	MT20	5.0	8.0	2.00	2.50
C	TTWW+m	MT20	6.0	9.0	4.25	2.25
D	TMWW-t	MT20	4.0	4.0		
E	TMWW+t	MT20	4.0	6.0	2.25	1.50
F	TMW+w	MT20	2.0	4.0		
G	TS-t	MT20	4.0	6.0		
H	TMWW-t	MT20	4.0	4.0	2.00	1.75
I	TMWW-t	MT20	5.0	6.0	2.00	2.00
J	TMWW+t	MT20	4.0	9.0	4.00	1.50
K	TMVW+p	MT20	5.0	6.0	2.50	2.25
L	BMVK1-t	MT20	6.0	7.0	3.50	Edge
M	BBWW-l	MT20	6.0	7.0	2.25	5.50
N	BBWW-l	MT20	10.0	12.0	Edge	
O	BMWW-t	MT20	5.0	6.0	2.00	2.00
P	BBWWW-m	MT20	8.0	12.0	3.75	6.00
Q	BBWW-m	MT20	6.0	9.0	Edge	
R	BMWW-t	MT20	5.0	6.0	2.00	2.50
S	BMWW-t	MT20	4.0	6.0	2.00	2.50
T	BMV1+p	MT20	3.0	5.0		

Edge - INDICATES REFERENCE CORNER OF PLATE TOUCHES EDGE OF CHORD.

LATERAL BRACE(S) SHOWN SHALL BE 2X4 SPF#2

DIMENSIONS, SUPPORTS AND LOADINGS SPECIFIED BY FABRICATOR TO BE VERIFIED BY BUILDING DESIGNER

BEARINGS

JT	FACTORED GROSS REACTION VERT	HORZ	MAXIMUM FACTORED GROSS REACTION DOWN	HORZ	UPLIFT	INPUT BRG IN-SX	REQRD BRG IN-SX
L	2970	0	2970	0	0	3-8	3-8
T	2975	0	2975	0	0	5-8	4-3

UNFACTORED REACTIONS

JT	1ST LCASE COMBINED	MAX./MIN. COMPONENT REACTIONS SNOW	LIVE	PERM.LIVE	WIND	DEAD	SOIL
L	2117	1294 / 0	0 / 0	0 / 0	0 / 0	823 / 0	0 / 0
T	2121	1297 / 0	0 / 0	0 / 0	0 / 0	823 / 0	0 / 0

BEARING MATERIAL TO BE SPF NO.2 OR BETTER AT JOINT(S) L, T
BEARING SIZE FACTOR = 1.15 AT JNT(S) L (BASED ON SUPPORT DEPTH = 1-8)

BRACING

TOP CHORD TO BE SHEATHED OR MAX. PURLIN SPACING = 3.74 FT.
MAX. UNBRACED BOTTOM CHORD LENGTH = 6.25 FT OR RIGID CEILING DIRECTLY APPLIED.

ALL PITCH BREAKS AND PERIMETER CORNER JOINTS MUST BE LATERALLY RESTRAINED.

2x4 DRY SPF No.2 T-BRACE AT K-L, E-Q, J-M
2x3 DRY SPF No.2 T-BRACE AT D-R

FASTEN T AND I-BRACES TO NARROW EDGE OF WEB WITH ONE ROW PER PLY OF 3" COMMON WIRE NAILS @ 6" O.C. WITH 3" MINIMUM END DISTANCE. BRACE MUST COVER 90% OF WEB LENGTH.

END VERTICAL(S) MUST BE SHEATHED OR HAVE BRACES AS INDICATED IN THE MAX. UNBRACED LENGTH COLUMN OF THE TABLE BELOW

LOADING

TOTAL LOAD CASES: (4)

CHORDS

MEMB. FR-TO	MAX. FACTORED FORCE (LBS)	FACTORED VERT. LOAD (PLF) FROM	TO	LC1	MAX CSI (LC)	MAX. UNBRAC LENGTH
A- B	0 / 42	-78.0	-78.0	0.12 (1)	10.00	
B- C	-2542 / 0	-78.0	-78.0	0.38 (1)	3.99	
C- D	-3295 / 0	-153.5	-153.5	0.48 (1)	4.14	
D- E	-3779 / 0	-153.5	-153.5	0.51 (1)	3.87	
E- F	-4730 / 0	-78.0	-78.0	0.31 (1)	3.75	
F- G	-4732 / 0	-78.0	-78.0	0.34 (1)	3.74	
G- H	-4732 / 0	-78.0	-78.0	0.34 (1)	3.74	
H- I	-3957 / 0	-78.0	-78.0	0.24 (1)	4.14	
I- J	-1877 / 0	-78.0	-78.0	0.34 (1)	5.40	
J- K	-567 / 0	-153.5	-153.5	0.31 (1)	6.25	
L- K	-2944 / 0	0.0	0.0	0.69 (1)	7.81	
T- B	-2925 / 0	0.0	0.0	0.25 (1)	6.10	
T- S	0 / 0	-36.4	-36.4	0.20 (4)	10.00	
S- R	0 / 1646	-36.4	-36.4	0.50 (4)	10.00	
R- Q	0 / 3295	-36.4	-36.4	0.75 (1)	10.00	
Q- P	0 / 4527	-112.0	-112.0	0.88 (1)	10.00	
P- O	0 / 3957	-112.0	-112.0	0.72 (1)	10.00	
O- N	0 / 1929	-112.0	-112.0	0.46 (1)	10.00	
N- M	0 / 631	-112.0	-112.0	0.20 (1)	10.00	
M- L	-70 / 0	-36.4	-36.4	0.02 (4)	6.25	

WEBS

MEMB. FR-TO	MAX. FACTORED FORCE (LBS)	MAX CSI (LC)
S- C	-548 / 0	0.37 (1)
C- R	0 / 2414	0.60 (1)
R- D	-1538 / 0	0.83 (1)
D- Q	0 / 707	0.17 (1)
Q- E	-2875 / 0	0.86 (1)
E- P	0 / 2478	0.61 (1)
P- F	-93 / 0	0.03 (1)
P- H	0 / 1056	0.26 (1)
O- H	-1183 / 0	0.43 (1)
O- I	0 / 2779	0.69 (1)
N- I	-2382 / 0	0.86 (1)
N- J	0 / 3362	0.83 (1)
M- J	-2761 / 0	0.83 (1)
M- K	0 / 2618	0.65 (1)
B- S	0 / 1812	0.45 (1)

FACTORED CONCENTRATED LOADS (LBS)

JT	LOC.	LC1	MAX-	MAX+	FACE	DIR.	TYPE	HEEL	CONN.
C	3-9-9	-216	-216	---	FRONT	VERT	TOTAL	---	C1

CONNECTION REQUIREMENTS

1) **C1:** A SUITABLE HANGER/MECHANICAL CONNECTION IS REQUIRED.

DESIGN CRITERIA

SPECIFIED LOADS:

TOP	CH.	LL	=	21.0	PSF
		DL	=	6.0	PSF
BOT	CH.	LL	=	0.0	PSF
		DL	=	7.4	PSF
TOTAL	LOAD		=	34.4	PSF

SPACING = 24.0 IN. C/C

LOADING IN FLAT SECTION BASED ON A SLOPE OF 2.00/12 MINIMUM

GIRDER TYPE: CPrimeHip
LEFT SETBACK = 3-9-9
RIGHT SETBACK = 0-0
END SETBACK = 5-10-8
END WALL WIDTH = 0-0
CORNER FRAMING TYPE: CONVENTIONAL
END JACK TYPE: CONVENTIONAL
APPLIED TO FRONT SIDE
- ADDT'L LOADS BASED ON 55 % OF GSL.
LOADS APPLIED TO FIRST 15-4-0 OF SPAN MEASURED FROM THE LEFT.

GIRDER TYPE: CStdGirder
START DISTANCE = 15-4-0
START SPAN CARRIED = 5-10-8
END DISTANCE = 29-8-0
END SPAN CARRIED = 5-10-8
END WALL WIDTH = 0-0
APPLIED TO FRONT SIDE OF BOTTOM CHORD.
- ADDT'L LOADS BASED ON 55 % OF GSL.

GIRDER TYPE: CPrimeHip
LEFT SETBACK = 3-9-9
RIGHT SETBACK = 0-0
END SETBACK = 5-10-8
END WALL WIDTH = 0-0
CORNER FRAMING TYPE: CONVENTIONAL
END JACK TYPE: CONVENTIONAL
APPLIED TO FRONT SIDE
- ADDT'L LOADS BASED ON 55 % OF GSL.
LOADS APPLIED TO FIRST 1-9-8 OF SPAN MEASURED FROM THE RIGHT.

THIS TRUSS IS DESIGNED FOR RESIDENTIAL OR SMALL BUILDING REQUIREMENTS OF PART 9, NBCC 2015

THIS DESIGN COMPLIES WITH:
- PART 9 OF BCBC 2018 , ABC 2019
- PART 9 OF OBC 2012 (2019 AMENDMENT)
- CSA 086-14
- TPIC 2014

(55 % OF 23.0 P.S.F. G.S.L. PLUS 8.4 P.S.F. RAIN LOAD) EQUALS 21.0 P.S.F. SPECIFIED ROOF LIVE LOAD

ALLOWABLE DEFL.(LL)= L/360 (1.04")
CALCULATED VERT. DEFL.(LL) = L/ 999 (0.23")
ALLOWABLE DEFL.(TL)= L/360 (1.04")
CALCULATED VERT. DEFL.(TL) = L/ 835 (0.45")

CSI: TC=0.69/1.00 (K-L:1) , BC=0.88/1.00 (P-Q:1) , WB=0.86/1.00 (E-Q:1) , SSI=0.35/1.00 (C-D:1)

DOL LUMBER=1.00 NAIL=1.00 LS BEND=1.00 COMP=1.00 SHEAR=1.00 TENS= 1.00

COMPANION LIVE LOAD FACTOR = 1.00

CONTINUED ON PAGE 2

JOB NAME	TRUSS NAME	QUANTITY	PLY	JOB DESC.	DRWG NO.
336333	H232T		1	TRUSS DESC. JT 45147	E21104312

Alpa Roof Truss, Maple

Version 8.420 S Jan 21 2021 MiTek Industries, Inc. Thu Oct 14 10:57:00 2021 Page 1

ID:hd511hZTz bdeQoS817GKByhVxV-ztT33n???s3UWhi4d07NmJv7IQc5MQ13Ev73aQyTXT1

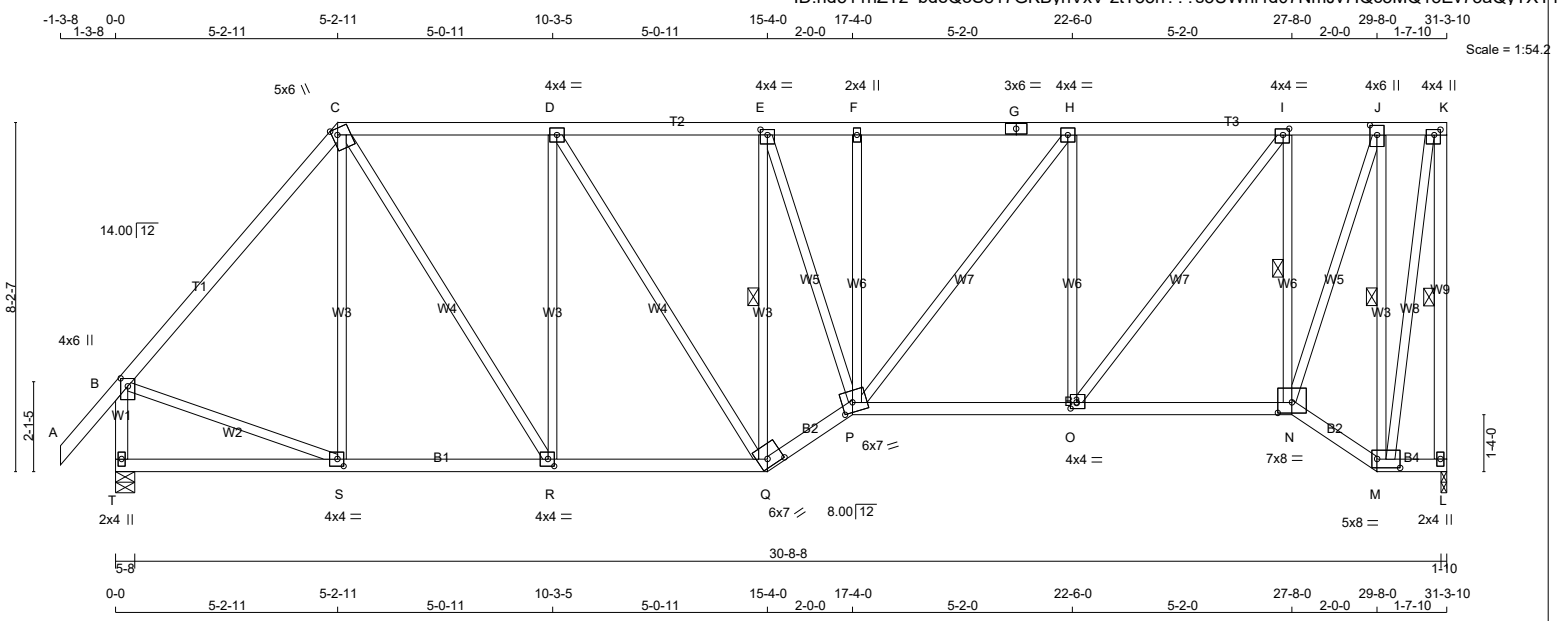

TOTAL WEIGHT = 178 lb

[M]

LUMBER

N. L. G. A. RULES

CHORDS	SIZE		LUMBER	DESCR.
A - C	2x4	DRY	No.2	SPF
C - G	2x4	DRY	No.2	SPF
G - K	2x4	DRY	No.2	SPF
L - K	2x4	DRY	No.2	SPF
T - B	2x4	DRY	No.2	SPF
T - Q	2x4	DRY	No.2	SPF
Q - P	2x4	DRY	No.2	SPF
P - N	2x4	DRY	No.2	SPF
N - M	2x4	DRY	No.2	SPF
M - L	2x4	DRY	No.2	SPF
ALL WEBS EXCEPT	2x3	DRY	No.2	SPF

DRY: SEASONED LUMBER.

PLATES (table is in inches)

JT	TYPE	PLATES	W	LEN	Y	X
B	TMVW+p	MT20	4.0	6.0	2.25	2.00
C	TTWW+m	MT20	5.0	6.0	1.75	1.50
D	TMWW-t	MT20	4.0	4.0		
E	TMWW-t	MT20	4.0	4.0	1.50	2.00
F	TMW+w	MT20	2.0	4.0		
G	TS-t	MT20	3.0	6.0		
H	TMWW-t	MT20	4.0	4.0		
I	TMWW-t	MT20	4.0	4.0	1.75	1.75
J	TMWW+t	MT20	4.0	6.0	2.75	2.00
K	TMVW+p	MT20	4.0	4.0	1.50	1.75
L	BMV1+p	MT20	2.0	4.0		
M	BBWW-l	MT20	5.0	8.0	2.50	6.50
N	BBWW-l	MT20	7.0	8.0	3.00	4.00
O	BMWW-t	MT20	4.0	4.0	1.75	1.75
P	BBWWW-m	MT20	6.0	7.0	2.75	3.00
Q	BBWW-h	MT20	6.0	7.0	2.25	4.25
R	BMWW-t	MT20	4.0	4.0	2.00	1.75
S	BMWW-t	MT20	4.0	4.0	2.00	1.75
T	BMV1+p	MT20	2.0	4.0		

LATERAL BRACE(S) SHOWN SHALL BE 2X4 SPF#2

DIMENSIONS, SUPPORTS AND LOADINGS SPECIFIED BY FABRICATOR TO BE VERIFIED BY BUILDING DESIGNER

BEARINGS

JT	FACTORED GROSS REACTION VERT	HORZ	MAXIMUM FACTORED GROSS REACTION DOWN	HORZ	UPLIFT	INPUT BRG IN-SX	REQRD BRG IN-SX
L	1510	0	1510	0	0	1-10	1-10
T	1619	0	1619	0	0	5-8	1-12

UNFACTORED REACTIONS

JT	1ST LCASE COMBINED	MAX./MIN. COMPONENT REACTIONS SNOW	LIVE	PERM.LIVE	WIND	DEAD	SOIL
L	1076	657 / 0	0 / 0	0 / 0	0 / 0	419 / 0	0 / 0
T	1152	716 / 0	0 / 0	0 / 0	0 / 0	436 / 0	0 / 0

BEARING MATERIAL TO BE SPF NO.2 OR BETTER AT JOINT(S) L, T

BRACING

TOP CHORD TO BE SHEATHED OR MAX. PURLIN SPACING = 4.64 FT.
MAX. UNBRACED BOTTOM CHORD LENGTH = 10.00 FT OR RIGID CEILING DIRECTLY APPLIED.

ALL PITCH BREAKS AND PERIMETER CORNER JOINTS MUST BE LATERALLY RESTRAINED.

1 LATERAL BRACE(S) AT 1/ 2 LENGTH OF K-L, E-Q, I-N, J-M.

END VERTICAL(S) MUST BE SHEATHED OR HAVE BRACES AS INDICATED IN THE MAX. UNBRACED LENGTH COLUMN OF THE TABLE BELOW

LOADING

TOTAL LOAD CASES: (4)

CHORDS

MEMB. FR-TO	MAX. FACTORED FORCE (LBS)	FACTORED VERT. LOAD (PLF) FROM	TO	LC1 CSI (LC)	MAX. UNBRAC LENGTH
A- B	0 / 42	-78.0	-78.0	0.11 (1)	10.00
B- C	-1302 / 0	-78.0	-78.0	0.48 (1)	5.13
C- D	-1350 / 0	-78.0	-78.0	0.34 (1)	5.17
D- E	-1509 / 0	-78.0	-78.0	0.35 (1)	4.94
E- F	-1790 / 0	-78.0	-78.0	0.16 (1)	4.85
F- G	-1794 / 0	-78.0	-78.0	0.34 (1)	4.64
G- H	-1794 / 0	-78.0	-78.0	0.34 (1)	4.64
H- I	-1489 / 0	-78.0	-78.0	0.32 (1)	5.02
I- J	-753 / 0	-78.0	-78.0	0.15 (1)	6.25
J- K	-289 / 0	-78.0	-78.0	0.09 (1)	6.25
L- K	-1495 / 0	0.0	0.0	0.45 (1)	5.37
T- B	-1579 / 0	0.0	0.0	0.19 (1)	6.56
T- S	0 / 0	-18.5	-18.5	0.12 (4)	10.00
S- R	0 / 842	-18.5	-18.5	0.20 (1)	10.00
R- Q	0 / 1350	-18.5	-18.5	0.27 (1)	10.00
Q- P	0 / 1795	-18.5	-18.5	0.30 (1)	10.00
P- O	0 / 1489	-18.5	-18.5	0.31 (1)	10.00
O- N	0 / 773	-18.5	-18.5	0.21 (4)	10.00
N- M	0 / 322	-18.5	-18.5	0.06 (1)	10.00
M- L	0 / 0	-18.5	-18.5	0.01 (4)	10.00

WEBS

MEMB. FR-TO	MAX. FACTORED FORCE (LBS)	MAX CSI (LC)
S- C	-169 / 10	0.22 (1)
C- R	0 / 940	0.21 (1)
R- D	-697 / 0	0.91 (1)
D- Q	0 / 295	0.07 (1)
Q- E	-1183 / 0	0.50 (1)
E- P	0 / 973	0.22 (1)
P- F	-258 / 0	0.21 (1)
P- H	0 / 494	0.11 (1)
O- H	-822 / 0	0.66 (1)
O- I	0 / 1174	0.26 (1)
N- I	-1274 / 0	0.38 (1)
N- J	0 / 1587	0.36 (1)
M- J	-1539 / 0	0.66 (1)
M- K	0 / 1423	0.32 (1)
B- S	0 / 888	0.20 (1)

DESIGN CRITERIA

SPECIFIED LOADS:

TOP CH.	LL	=	21.0	PSF
	DL	=	6.0	PSF
BOT CH.	LL	=	0.0	PSF
	DL	=	7.4	PSF
TOTAL LOAD		=	34.4	PSF

SPACING = 24.0 IN. C/C

LOADING IN FLAT SECTION BASED ON A SLOPE OF 2.00/12 MINIMUM

THIS TRUSS IS DESIGNED FOR RESIDENTIAL OR SMALL BUILDING REQUIREMENTS OF PART 9, NBCC 2015

THIS DESIGN COMPLIES WITH:
- PART 9 OF BCBC 2018 , ABC 2019
- PART 9 OF OBC 2012 (2019 AMENDMENT)
- CSA 086-14
- TPIC 2014

(55 % OF 23.0 P.S.F. G.S.L. PLUS 8.4 P.S.F. RAIN LOAD) EQUALS 21.0 P.S.F. SPECIFIED ROOF LIVE LOAD

ALLOWABLE DEFL.(LL)= L/360 (1.04")
CALCULATED VERT. DEFL.(LL) = L/ 999 (0.11")
ALLOWABLE DEFL.(TL)= L/360 (1.04")
CALCULATED VERT. DEFL.(TL) = L/ 999 (0.22")

CSI: TC=0.48/1.00 (B-C:1) , BC=0.31/1.00 (O-P:1) , WB=0.91/1.00 (D-R:1) , SSI=0.19/1.00 (C-D:1)

DOL LUMBER=1.00 NAIL=1.00 LS BEND=1.10 COMP=1.10 SHEAR=1.10 TENS= 1.10

COMPANION LIVE LOAD FACTOR = 1.00

TRUSS PLATE MANUFACTURER IS NOT RESPONSIBLE FOR QUALITY CONTROL IN THE TRUSS MANUFACTURING PLANT .

NAIL VALUES

PLATE	GRIP(DRY) (PSI) MAX	MIN	SHEAR (PLI) MAX	MIN	SECTION (PLI) MAX	MIN
MT20	650	371	1747	788	1987	1873

PLATE PLACEMENT TOL. = 0.250 inches

PLATE ROTATION TOL. = 5.0 Deg.

JSI GRIP= 0.90 (E) (INPUT = 0.90)
JSI METAL= 0.51 (B) (INPUT = 1.00)

JOB NAME	TRUSS NAME	QUANTITY	PLY	JOB DESC.		DRWG NO.
336333	H233T		1	TRUSS DESC.	JT 45147	E21104313

Alpa Roof Truss, Maple

Version 8.420 S Jan 21 2021 MiTek Industries, Inc. Thu Oct 14 10:56:45 2021 Page 1

ID:hd511hZTz_bdeQoS817GKByhVxV-v_3OwfpaYFAcDN3BEMMsf9oVrNRKLdUro4_mYoyTXTG

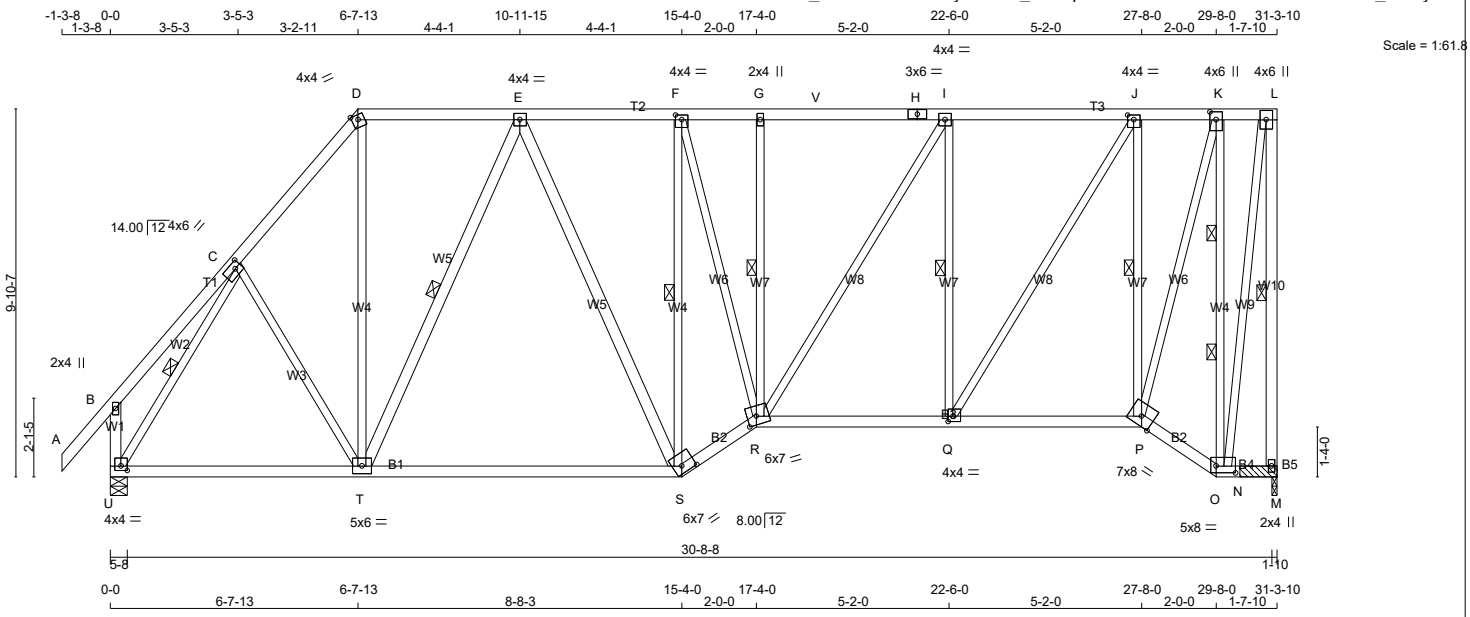

LUMBER

N. L. G. A. RULES

CHORDS	SIZE		LUMBER	DESCR.
A - D	2x4	DRY	No.2	SPF
D - H	2x4	DRY	No.2	SPF
H - L	2x4	DRY	No.2	SPF
M - L	2x4	DRY	No.2	SPF
U - B	2x4	DRY	No.2	SPF
U - S	2x4	DRY	No.2	SPF
S - R	2x4	DRY	No.2	SPF
R - P	2x4	DRY	No.2	SPF
P - O	2x4	DRY	No.2	SPF
O - M	2x4	DRY	No.2	SPF
ALL WEBS	2x3	DRY	No.2	SPF
EXCEPT				
T - E	2x4	DRY	No.2	SPF
E - S	2x4	DRY	No.2	SPF

DRY: SEASONED LUMBER.

PLATES (table is in inches)

JT	TYPE	PLATES	W	LEN	Y	X
B	TMV+p	MT20	2.0	4.0		
C	TMWW-t	MT20	4.0	6.0	2.00	2.00
D	TTW-m	MT20	4.0	4.0	Edge	
E	TMWW-t	MT20	4.0	4.0		
F	TMWW-t	MT20	4.0	4.0	1.50	2.00
G	TMW+w	MT20	2.0	4.0		
H	TS-t	MT20	3.0	6.0		
I	TMWW-t	MT20	4.0	4.0		
J	TMWW-t	MT20	4.0	4.0	1.50	2.00
K	TMWW+t	MT20	4.0	6.0	2.50	2.00
L	TMVW+p	MT20	4.0	6.0		
M	BMV1+p	MT20	2.0	4.0		
O	BBWW-l	MT20	5.0	8.0	2.25	6.25
P	BBWW-h	MT20	7.0	8.0	Edge	
Q	BMWW-t	MT20	4.0	4.0	1.75	1.50
R	BBWWW-m	MT20	6.0	7.0	2.75	3.00
S	BBWW-h	MT20	6.0	7.0	2.25	4.25
T	BMWWW-t	MT20	5.0	6.0		
U	BMVW1-t	MT20	4.0	4.0	1.50	2.00

Edge - INDICATES REFERENCE CORNER OF PLATE TOUCHES EDGE OF CHORD.

LATERAL BRACE(S) SHOWN SHALL BE 2X4 SPF#2

DIMENSIONS, SUPPORTS AND LOADINGS SPECIFIED BY FABRICATOR TO BE VERIFIED BY BUILDING DESIGNER

BEARINGS

JT	FACTORED GROSS REACTION VERT	HORZ	MAXIMUM FACTORED GROSS REACTION DOWN	HORZ	UPLIFT	INPUT BRG IN-SX	REQRD BRG IN-SX
M	1622	0	1622	0	0	1-10	1-10 & BLOCK
U	1692	0	1692	0	0	5-8	1-13

UNFACTORED REACTIONS

JT	1ST LCASE COMBINED	MAX./MIN. COMPONENT REACTIONS SNOW	LIVE	PERM.LIVE	WIND	DEAD	SOIL
M	1166	657 / 0	0 / 0	0 / 0	0 / 0	509 / 0	0 / 0
U	1210	716 / 0	0 / 0	0 / 0	0 / 0	495 / 0	0 / 0

BEARING MATERIAL TO BE SPF NO.2 OR BETTER AT JOINT(S) M, U

2x4 DRY SPF No.2 BEARING BLOCK 12" LONG AT JT. M ATTACHED TO FRONT SIDE WITH 2 ROWS OF (0.122"X3") SPIRAL NAILS SPACED 3" C.C. 8 NAILS TOTAL.

BRACING

FOR SECTION D-L, MAX. PURLIN SPACING = 2.00 FT.
FOR OTHER SECTIONS, TOP CHORD TO BE SHEATHED OR MAX. PURLIN SPACING = 5.36 FT.
MAX. UNBRACED BOTTOM CHORD LENGTH = 10.00 FT OR RIGID CEILING DIRECTLY APPLIED.

ALL PITCH BREAKS AND PERIMETER CORNER JOINTS MUST BE LATERALLY RESTRAINED.

1 LATERAL BRACE(S) AT 1/ 2 LENGTH OF L-M, E-T, F-S, G-R, I-Q, J-P, C-U.
2 LATERAL BRACE(S) AT 1/ 3 LENGTH OF K-O.

END VERTICAL(S) MUST BE SHEATHED OR HAVE BRACES AS INDICATED IN THE MAX. UNBRACED LENGTH COLUMN OF THE TABLE BELOW

LOADING

TOTAL LOAD CASES: (4)

CHORDS

MEMB. FR-TO	MAX. FACTORED FORCE (LBS)	FACTORED VERT. LOAD (PLF) FROM	TO	LC1 CSI (LC)	MAX UNBRAC LENGTH
A- B	0 / 42	-78.0	-78.0	0.11 (1)	10.00
B- C	0 / 20	-78.0	-78.0	0.12 (1)	10.00
C- D	-1401 / 0	-78.0	-78.0	0.15 (1)	5.36
D- E	-902 / 0	-85.5	-85.5	0.26 (1)	2.00
E- F	-1331 / 0	-85.5	-85.5	0.28 (1)	2.00
F- G	-1530 / 0	-85.5	-85.5	0.16 (1)	2.00
G- V	-1534 / 0	-85.5	-85.5	0.35 (1)	2.00
V- H	-1534 / 0	-85.5	-85.5	0.35 (1)	2.00
H- I	-1534 / 0	-85.5	-85.5	0.35 (1)	2.00
I- J	-1275 / 0	-85.5	-85.5	0.33 (1)	2.00
J- K	-644 / 0	-85.5	-85.5	0.16 (1)	2.00
K- L	-255 / 0	-85.5	-85.5	0.10 (1)	2.00
M- L	-1607 / 0	0.0	0.0	0.75 (1)	5.21
U- B	-211 / 0	0.0	0.0	0.02 (1)	7.81
U- T	0 / 847	-18.5	-18.5	0.41 (4)	10.00
T- S	0 / 1209	-18.5	-18.5	0.45 (4)	10.00
S- R	0 / 1586	-18.5	-18.5	0.27 (1)	10.00
R- Q	0 / 1275	-18.5	-18.5	0.28 (1)	10.00
Q- P	0 / 662	-18.5	-18.5	0.21 (4)	10.00
P- O	0 / 286	-18.5	-18.5	0.06 (1)	10.00
O- N	0 / 0	-18.5	-18.5	0.01 (4)	10.00
N- M	0 / 0	-18.5	-18.5	0.01 (4)	10.00

WEBS

MEMB. FR-TO	MAX. FACTORED FORCE (LBS)	MAX CSI (LC)
C- T	0 / 88	0.03 (4)
T- D	0 / 794	0.18 (1)
T- E	-758 / 0	0.44 (1)
E- S	0 / 295	0.05 (1)
S- F	-1064 / 0	0.70 (1)
F- R	0 / 852	0.19 (1)
R- G	-299 / 0	0.14 (1)
R- I	0 / 487	0.11 (1)
Q- I	-889 / 0	0.41 (1)
Q- J	0 / 1172	0.26 (1)
P- J	-1374 / 0	0.64 (1)
P- K	0 / 1642	0.37 (1)
O- K	-1618 / 0	0.97 (1)
O- L	0 / 1514	0.34 (1)
U- C	-1670 / 0	0.48 (1)

DESIGN CRITERIA

SPECIFIED LOADS:

TOP	CH.	LL	=	21.0	PSF
		DL	=	6.0	PSF
BOT	CH.	LL	=	0.0	PSF
		DL	=	7.4	PSF
TOTAL	LOAD		=	34.4	PSF

SPACING = 24.0 IN. C/C

LOADING IN FLAT SECTION BASED ON PIGGYBACK TRUSS WITH SLOPES OF 6.00/12 AND -6.00/12 AND RESPECTIVE HEEL HEIGHTS OF 0-0 AND 0-0 AND AN ADDITIONAL DEAD LOAD OF 3.0 P.S.F.

THIS TRUSS IS DESIGNED FOR RESIDENTIAL OR SMALL BUILDING REQUIREMENTS OF PART 9, NBCC 2015

THIS DESIGN COMPLIES WITH:
- PART 9 OF BCBC 2018 , ABC 2019
- PART 9 OF OBC 2012 (2019 AMENDMENT)
- CSA 086-14
- TPIC 2014

(55 % OF 23.0 P.S.F. G.S.L. PLUS 8.4 P.S.F. RAIN LOAD) EQUALS 21.0 P.S.F. SPECIFIED ROOF LIVE LOAD

ALLOWABLE DEFL.(LL)= L/360 (1.04")
CALCULATED VERT. DEFL.(LL) = L/ 999 (0.10")
ALLOWABLE DEFL.(TL)= L/360 (1.04")
CALCULATED VERT. DEFL.(TL) = L/ 999 (0.28")

CSI: TC=0.75/1.00 (L-M:1) , BC=0.45/1.00 (S-T:4) , WB=0.97/1.00 (K-O:1) , SSI=0.19/1.00 (G-I:1)

DOL LUMBER=1.00 NAIL=1.00 LS BEND=1.10 COMP=1.10 SHEAR=1.10 TENS= 1.10

COMPANION LIVE LOAD FACTOR = 1.00

TRUSS PLATE MANUFACTURER IS NOT RESPONSIBLE FOR QUALITY CONTROL IN THE TRUSS MANUFACTURING PLANT .

NAIL VALUES

PLATE	GRIP(DRY) (PSI) MAX	MIN	SHEAR (PLI) MAX	MIN	SECTION (PLI) MAX	MIN
MT20	650	371	1747	788	1987	1873

PLATE PLACEMENT TOL. = 0.250 inches

PLATE ROTATION TOL. = 5.0 Deg.

JSI GRIP= 0.89 (C) (INPUT = 0.90)
JSI METAL= 0.37 (C) (INPUT = 1.00)

JOB NAME	TRUSS NAME	QUANTITY	PLY	JOB DESC.		DRWG NO.
336333	H234P		1	TRUSS DESC.	JT 45147	E21104314

Alpa Roof Truss, Maple

Version 8.420 S Jan 21 2021 MiTek Industries, Inc. Thu Oct 14 10:57:02 2021 Page 1

ID:hd511hZTz bdeQoS817GKByhVxV-vGbpUT0FXTJCm sTkR9rsk?SbEJeqX?LiDcAeJyTXT?

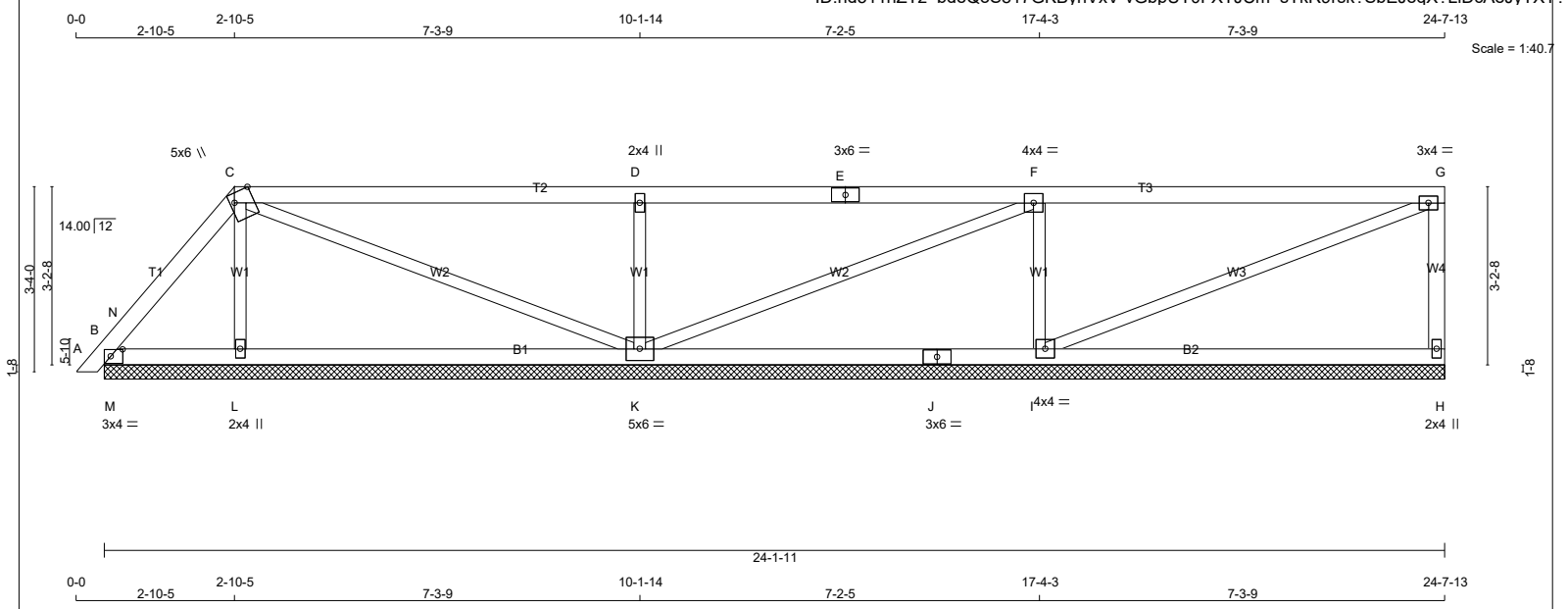

TOTAL WEIGHT = 2 X 85 = 170 lb [M]

LUMBER

N. L. G. A. RULES

CHORDS	SIZE		LUMBER	DESCR.
A - C	2x4	DRY	No.2	SPF
C - E	2x4	DRY	No.2	SPF
E - G	2x4	DRY	No.2	SPF
H - G	2x4	DRY	No.2	SPF
B - J	2x4	DRY	No.2	SPF
J - H	2x4	DRY	No.2	SPF
ALL WEBS	2x3	DRY	No.2	SPF

DRY: SEASONED LUMBER.

PLATES (table is in inches)

JT	TYPE	PLATES	W	LEN	Y	X
B	TMB1-I	MT20	3.0	4.0	1.50	2.50
C	TTWW+m	MT20	5.0	6.0	Edge	4.00
D	TMW+w	MT20	2.0	4.0		
E	TS-t	MT20	3.0	6.0		
F	TMWW-t	MT20	4.0	4.0		
G	TMVW-t	MT20	3.0	4.0		
H	BMV1+p	MT20	2.0	4.0		
I	BMWW1-t	MT20	4.0	4.0		
J	BS-t	MT20	3.0	6.0		
K	BMWWW1-t	MT20	5.0	6.0		
L	BMW1+w	MT20	2.0	4.0		

Edge - INDICATES REFERENCE CORNER OF PLATE TOUCHES EDGE OF CHORD.

LATERAL BRACE(S) SHOWN SHALL BE 2X4 SPF#2

DIMENSIONS, SUPPORTS AND LOADINGS SPECIFIED BY FABRICATOR TO BE VERIFIED BY BUILDING DESIGNER

BEARINGS

JT	FACTORED GROSS REACTION VERT	HORZ	MAXIMUM FACTORED GROSS REACTION DOWN	HORZ	UPLIFT	INPUT BRG IN-SX	REQRD BRG IN-SX
H	287	0	287	0	0	24-1-11 (9-1-11)	9-1-11
B	178	0	178	0	0	24-1-11 (9-1-11)	9-1-11
L	353	0	353	0	0	24-1-11 (9-1-11)	9-1-11
K	786	0	786	0	0	24-1-11 (9-1-11)	9-1-11
I	756	0	756	0	0	24-1-11 (9-1-11)	9-1-11

VALUE IN PARENTHESIS INDICATES EFFECTIVE BEARING LENGTH

UNFACTORED REACTIONS

JT	1ST LCASE COMBINED	MAX./MIN. COMPONENT REACTIONS SNOW	LIVE	PERM.LIVE	WIND	DEAD	SOIL
H	205	126 / 0	0 / 0	0 / 0	0 / 0	79 / 0	0 / 0
B	122	100 / 0	0 / 0	0 / 0	0 / 0	22 / 0	0 / 0
L	257	126 / 0	0 / 0	0 / 0	0 / 0	131 / 0	0 / 0
K	559	353 / 0	0 / 0	0 / 0	0 / 0	206 / 0	0 / 0
I	539	325 / 0	0 / 0	0 / 0	0 / 0	214 / 0	0 / 0

BEARING MATERIAL TO BE SPF NO.2 OR BETTER AT JOINT(S) H, B, L, K, I

BRACING

TOP CHORD TO BE SHEATHED OR MAX. PURLIN SPACING = 6.25 FT.
MAX. UNBRACED BOTTOM CHORD LENGTH = 10.00 FT OR RIGID CEILING DIRECTLY APPLIED.

ALL PITCH BREAKS AND PERIMETER CORNER JOINTS MUST BE LATERALLY RESTRAINED.

LOADING

TOTAL LOAD CASES: (4)

CHORDS

MEMB. FR-TO	MAX. FACTORED FORCE (LBS)	FACTORED VERT. LOAD (PLF) FROM	TO	LC1	MAX CSI (LC)	MAX. UNBRAC LENGTH
A- B	0 / 10	-78.0	-78.0	0.01 (1)	10.00	
B- N	0 / 49	-78.0	-78.0	0.05 (1)	10.00	
N- C	-87 / 0	-78.0	-78.0	0.04 (1)	6.25	
C- D	0 / 16	-78.0	-78.0	0.56 (1)	10.00	
D- E	0 / 16	-78.0	-78.0	0.56 (1)	10.00	
E- F	0 / 16	-78.0	-78.0	0.56 (1)	10.00	
F- G	-13 / 0	-78.0	-78.0	0.56 (1)	6.25	
H- G	-234 / 0	0.0	0.0	0.04 (1)	7.81	
B- M	0 / 49	-18.5	-18.5	0.06 (1)	10.00	
M- L	0 / 49	-18.5	-18.5	0.16 (4)	10.00	
L- K	0 / 41	-18.5	-18.5	0.18 (4)	10.00	
K- J	0 / 13	-18.5	-18.5	0.24 (4)	10.00	
J- I	0 / 13	-18.5	-18.5	0.24 (4)	10.00	
I- H	0 / 0	-18.5	-18.5	0.24 (4)	10.00	

WEBS

MEMB. FR-TO	MAX. FACTORED FORCE (LBS)	MAX CSI (LC)
L- C	-219 / 0	0.04 (1)
C- K	-62 / 0	0.08 (1)
K- D	-621 / 0	0.12 (1)
K- F	-32 / 0	0.04 (1)
I- F	-609 / 0	0.11 (1)
I- G	0 / 14	0.00 (1)
M- N	-245 / 0	0.00 (1)

DESIGN CRITERIA

SPECIFIED LOADS:

TOP CH.	LL	=	21.0	PSF
	DL	=	6.0	PSF
BOT CH.	LL	=	0.0	PSF
	DL	=	7.4	PSF
TOTAL LOAD		=	34.4	PSF

SPACING = 24.0 IN. C/C

LOADING IN FLAT SECTION BASED ON A SLOPE OF 2.00/12 MINIMUM

THIS TRUSS IS DESIGNED FOR RESIDENTIAL OR SMALL BUILDING REQUIREMENTS OF PART 9, NBCC 2015

THIS DESIGN COMPLIES WITH:
- PART 9 OF BCBC 2018 , ABC 2019
- PART 9 OF OBC 2012 (2019 AMENDMENT)
- CSA 086-14
- TPIC 2014

(55 % OF 23.0 P.S.F. G.S.L. PLUS 8.4 P.S.F. RAIN LOAD) EQUALS 21.0 P.S.F. SPECIFIED ROOF LIVE LOAD

CSI: TC=0.56/1.00 (C-D:1) , BC=0.24/1.00 (I-K:4) , WB=0.12/1.00 (D-K:1) , SSI=0.27/1.00 (F-G:1)

DOL LUMBER=1.00 NAIL=1.00 LS BEND=1.10 COMP=1.10 SHEAR=1.10 TENS= 1.10

COMPANION LIVE LOAD FACTOR = 1.00

TRUSS PLATE MANUFACTURER IS NOT RESPONSIBLE FOR QUALITY CONTROL IN THE TRUSS MANUFACTURING PLANT .

NAIL VALUES

PLATE	GRIP(DRY) (PSI) MAX	MIN	SHEAR (PLI) MAX	MIN	SECTION (PLI) MAX	MIN
MT20	650	371	1747	788	1987	1873

PLATE PLACEMENT TOL. = 0.250 inches

PLATE ROTATION TOL. = 5.0 Deg.

JSI GRIP= 0.85 (K) (INPUT = 0.90)
JSI METAL= 0.26 (E) (INPUT = 1.00)

JOB NAME	TRUSS NAME	QUANTITY	PLY	JOB DESC.		DRWG NO.
336333	H235P		1	TRUSS DESC.	JT 45147	E21104315

Alpa Roof Truss, Maple

Version 8.420 S Jan 21 2021 MiTek Industries, Inc. Thu Oct 14 10:57:03 2021 Page 1

ID:hd511hZTz_bdeQoS817GKByhVxV-NS9Chp1tInR3N8Rfl8g4OyXdQdfKZyuVwtLjBlyTXT_

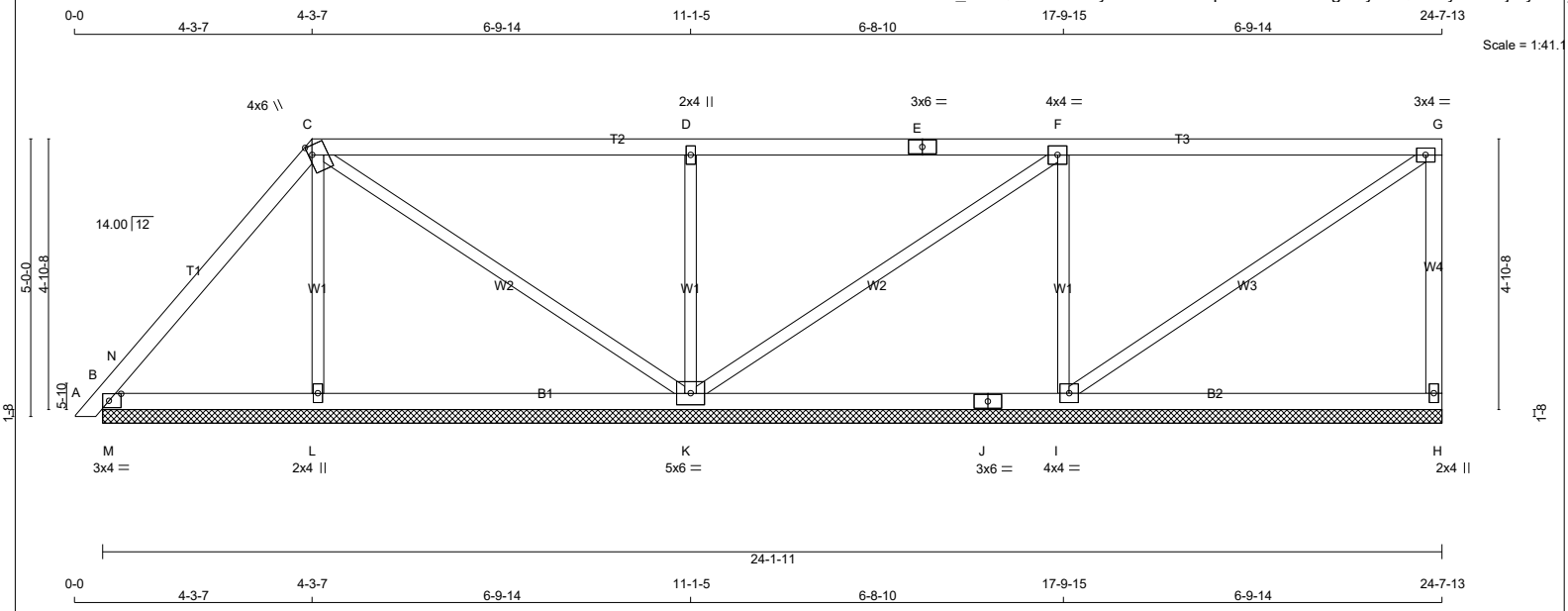

TOTAL WEIGHT = 2 X 93 = 185 lb

[M]

LUMBER

N. L. G. A. RULES

CHORDS	SIZE		LUMBER	DESCR.
A - C	2x4	DRY	No.2	SPF
C - E	2x4	DRY	No.2	SPF
E - G	2x4	DRY	No.2	SPF
H - G	2x4	DRY	No.2	SPF
B - J	2x4	DRY	No.2	SPF
J - H	2x4	DRY	No.2	SPF
ALL WEBS	2x3	DRY	No.2	SPF

DRY: SEASONED LUMBER.

PLATES (table is in inches)

JT	TYPE	PLATES	W	LEN	Y	X
B	TMB1-I	MT20	3.0	4.0	1.50	2.50
C	TTWW+m	MT20	4.0	6.0	2.00	0.75
D	TMW+w	MT20	2.0	4.0		
E	TS-t	MT20	3.0	6.0		
F	TMWW-t	MT20	4.0	4.0		
G	TMVW-t	MT20	3.0	4.0		
H	BMV1+p	MT20	2.0	4.0		
I	BMWW1-t	MT20	4.0	4.0		
J	BS-t	MT20	3.0	6.0		
K	BMWWW1-t	MT20	5.0	6.0		
L	BMW1+w	MT20	2.0	4.0		

LATERAL BRACE(S) SHOWN SHALL BE 2X4 SPF#2

DIMENSIONS, SUPPORTS AND LOADINGS SPECIFIED BY FABRICATOR TO BE VERIFIED BY BUILDING DESIGNER

BEARINGS

JT	FACTORED GROSS REACTION VERT	HORZ	MAXIMUM FACTORED GROSS REACTION DOWN	HORZ	UPLIFT	INPUT BRG IN-SX	REQRD BRG IN-SX
H	279	0	279	0	0	24-1-11 (8-2-3)	8
B	285	0	285	0	0	24-1-11 (8-2-3)	8
L	320	0	320	0	0	24-1-11 (8-2-3)	8
K	806	0	806	0	0	24-1-11 (8-2-3)	8
I	668	0	668	0	0	24-1-11 (8-2-3)	8

VALUE IN PARENTHESIS INDICATES EFFECTIVE BEARING LENGTH

UNFACTORED REACTIONS

JT	1ST LCASE COMBINED	MAX./MIN. COMPONENT REACTIONS SNOW	LIVE	PERM.LIVE	WIND	DEAD	SOIL
H	199	123 / 0	0 / 0	0 / 0	0 / 0	75 / 0	0 / 0
B	200	141 / 0	0 / 0	0 / 0	0 / 0	59 / 0	0 / 0
L	234	114 / 0	0 / 0	0 / 0	0 / 0	120 / 0	0 / 0
K	571	368 / 0	0 / 0	0 / 0	0 / 0	204 / 0	0 / 0
I	478	284 / 0	0 / 0	0 / 0	0 / 0	194 / 0	0 / 0

BEARING MATERIAL TO BE SPF NO.2 OR BETTER AT JOINT(S) H, B, L, K, I

BRACING

TOP CHORD TO BE SHEATHED OR MAX. PURLIN SPACING = 6.25 FT.
MAX. UNBRACED BOTTOM CHORD LENGTH = 10.00 FT OR RIGID CEILING DIRECTLY APPLIED.

ALL PITCH BREAKS AND PERIMETER CORNER JOINTS MUST BE LATERALLY RESTRAINED.

LOADING

TOTAL LOAD CASES: (4)

CHORDS

MEMB. FR-TO	MAX. FACTORED FORCE (LBS)	FACTORED VERT. LOAD LC1 (PLF) FROM	TO	MAX CSI (LC)	MAX. UNBRAC LENGTH
A- B	0 / 10	-78.0	-78.0	0.01 (1)	10.00
B- N	0 / 167	-78.0	-78.0	0.11 (1)	10.00
N- C	-129 / 0	-78.0	-78.0	0.13 (1)	6.25
C- D	0 / 33	-78.0	-78.0	0.49 (1)	10.00
D- E	0 / 33	-78.0	-78.0	0.49 (1)	10.00
E- F	0 / 33	-78.0	-78.0	0.49 (1)	10.00
F- G	-24 / 0	-78.0	-78.0	0.49 (1)	6.25
H- G	-230 / 0	0.0	0.0	0.09 (1)	7.81
B- M	0 / 75	-18.5	-18.5	0.13 (1)	10.00
M- L	0 / 75	-18.5	-18.5	0.15 (4)	10.00
L- K	0 / 71	-18.5	-18.5	0.16 (4)	10.00
K- J	0 / 24	-18.5	-18.5	0.21 (4)	10.00
J- I	0 / 24	-18.5	-18.5	0.21 (4)	10.00
I- H	0 / 0	-18.5	-18.5	0.21 (4)	10.00

WEBS

MEMB. FR-TO	MAX. FACTORED FORCE (LBS)	MAX CSI (LC)
L- C	-180 / 0	0.06 (1)
C- K	-124 / 0	0.17 (1)
K- D	-580 / 0	0.20 (1)
K- F	-68 / 0	0.10 (1)
I- F	-542 / 0	0.19 (1)
I- G	0 / 29	0.01 (1)
M- N	-489 / 0	0.00 (1)

DESIGN CRITERIA

SPECIFIED LOADS:

TOP	CH.	LL	=	21.0	PSF
		DL	=	6.0	PSF
BOT	CH.	LL	=	0.0	PSF
		DL	=	7.4	PSF
TOTAL	LOAD		=	34.4	PSF

SPACING = 24.0 IN. C/C

LOADING IN FLAT SECTION BASED ON A SLOPE OF 2.00/12 MINIMUM

THIS TRUSS IS DESIGNED FOR RESIDENTIAL OR SMALL BUILDING REQUIREMENTS OF PART 9, NBCC 2015

THIS DESIGN COMPLIES WITH:
- PART 9 OF BCBC 2018 , ABC 2019
- PART 9 OF OBC 2012 (2019 AMENDMENT)
- CSA 086-14
- TPIC 2014

(55 % OF 23.0 P.S.F. G.S.L. PLUS 8.4 P.S.F. RAIN LOAD) EQUALS 21.0 P.S.F. SPECIFIED ROOF LIVE LOAD

CSI: TC=0.49/1.00 (D-F:1) , BC=0.21/1.00 (I-K:4) , WB=0.20/1.00 (D-K:1) , SSI=0.38/1.00 (B-M:1)

DOL LUMBER=1.00 NAIL=1.00 LS BEND=1.10 COMP=1.10 SHEAR=1.10 TENS= 1.10

COMPANION LIVE LOAD FACTOR = 1.00

TRUSS PLATE MANUFACTURER IS NOT RESPONSIBLE FOR QUALITY CONTROL IN THE TRUSS MANUFACTURING PLANT .

NAIL VALUES

PLATE	GRIP(DRY) (PSI) MAX	MIN	SHEAR (PLI) MAX	MIN	SECTION (PLI) MAX	MIN
MT20	650	371	1747	788	1987	1873

PLATE PLACEMENT TOL. = 0.250 inches

PLATE ROTATION TOL. = 5.0 Deg.

JSI GRIP= 0.89 (C) (INPUT = 0.90)
JSI METAL= 0.16 (E) (INPUT = 1.00)

JOB NAME	TRUSS NAME	QUANTITY	PLY	JOB DESC.		DRWG NO.
336333	H236P		1	TRUSS DESC.	JT 45147	E21104316

Alpa Roof Truss, Maple

Version 8.420 S Jan 21 2021 MiTek Industries, Inc. Thu Oct 14 10:57:05 2021 Page 1

ID:hd511hZTz_bdeQoS817GKByhVxV-JrHy6V37qOindSa2PZiYTNd_xRKa1qfoOBqqEeyTXSy

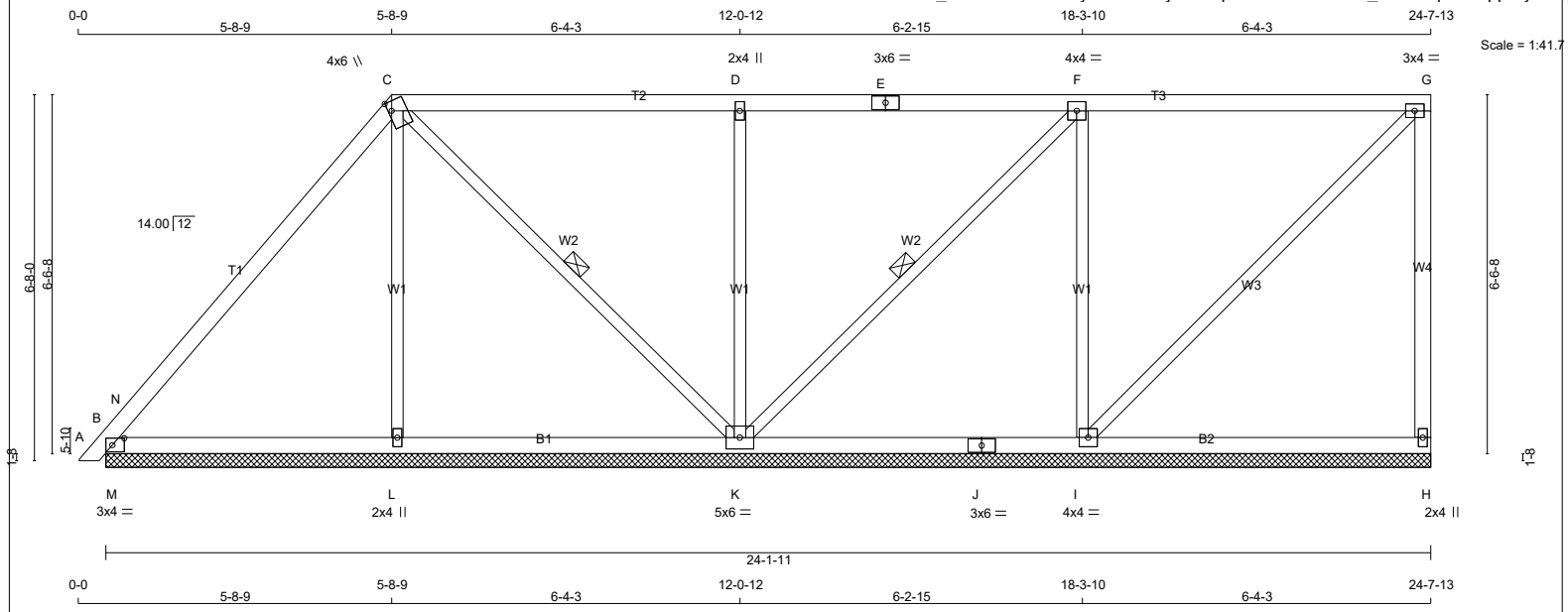

TOTAL WEIGHT = 2 X 101 = 202 lb [M]

LUMBER

N. L. G. A. RULES

CHORDS	SIZE		LUMBER	DESCR.
A - C	2x4	DRY	No.2	SPF
C - E	2x4	DRY	No.2	SPF
E - G	2x4	DRY	No.2	SPF
H - G	2x4	DRY	No.2	SPF
B - J	2x4	DRY	No.2	SPF
J - H	2x4	DRY	No.2	SPF
ALL WEBS	2x3	DRY	No.2	SPF

DRY: SEASONED LUMBER.

PLATES (table is in inches)

JT	TYPE	PLATES	W	LEN	Y	X
B	TMB1-I	MT20	3.0	4.0	1.50	2.50
C	TTWW+m	MT20	4.0	6.0	2.00	0.75
D	TMW+w	MT20	2.0	4.0		
E	TS-t	MT20	3.0	6.0		
F	TMWW-t	MT20	4.0	4.0		
G	TMVW-t	MT20	3.0	4.0		
H	BMV1+p	MT20	2.0	4.0		
I	BMWW1-t	MT20	4.0	4.0		
J	BS-t	MT20	3.0	6.0		
K	BMWWW1-t	MT20	5.0	6.0		
L	BMW1+w	MT20	2.0	4.0		

LATERAL BRACE(S) SHOWN SHALL BE 2X4 SPF#2

DIMENSIONS, SUPPORTS AND LOADINGS SPECIFIED BY FABRICATOR TO BE VERIFIED BY BUILDING DESIGNER

BEARINGS

JT	FACTORED GROSS REACTION VERT	HORZ	MAXIMUM FACTORED GROSS REACTION DOWN	HORZ	UPLIFT	INPUT BRG IN-SX	REQRD BRG IN-SX
H	276	0	276	0	0	24-1-11 (8-2-3)	8
B	386	0	386	0	0	24-1-11 (8-2-3)	8
L	286	0	286	0	0	24-1-11 (8-2-3)	8
K	831	0	831	0	0	24-1-11 (8-2-3)	8
I	580	0	580	0	0	24-1-11 (8-2-3)	8

VALUE IN PARENTHESIS INDICATES EFFECTIVE BEARING LENGTH

UNFACTORED REACTIONS

JT	1ST LCASE COMBINED	MAX./MIN. COMPONENT REACTIONS SNOW	LIVE	PERM.LIVE	WIND	DEAD	SOIL
H	197	123 / 0	0 / 0	0 / 0	0 / 0	74 / 0	0 / 0
B	272	183 / 0	0 / 0	0 / 0	0 / 0	89 / 0	0 / 0
L	210	96 / 0	0 / 0	0 / 0	0 / 0	113 / 0	0 / 0
K	588	388 / 0	0 / 0	0 / 0	0 / 0	200 / 0	0 / 0
I	416	241 / 0	0 / 0	0 / 0	0 / 0	175 / 0	0 / 0

BEARING MATERIAL TO BE SPF NO.2 OR BETTER AT JOINT(S) H, B, L, K, I

BRACING

TOP CHORD TO BE SHEATHED OR MAX. PURLIN SPACING = 6.25 FT.
MAX. UNBRACED BOTTOM CHORD LENGTH = 10.00 FT OR RIGID CEILING DIRECTLY APPLIED.

ALL PITCH BREAKS AND PERIMETER CORNER JOINTS MUST BE LATERALLY RESTRAINED.

1 LATERAL BRACE(S) AT 1/ 2 LENGTH OF C-K, F-K.

END VERTICAL(S) MUST BE SHEATHED OR HAVE BRACES AS INDICATED IN THE MAX. UNBRACED LENGTH COLUMN OF THE TABLE BELOW

LOADING

TOTAL LOAD CASES: (4)

CHORDS

MEMB. FR-TO	MAX. FACTORED FORCE (LBS)	FACTORED VERT. LOAD (PLF) FROM	TO	LC1	MAX CSI (LC)	MAX. UNBRAC LENGTH
A- B	0 / 10	-78.0	-78.0	0.01 (1)	10.00	
B- N	0 / 410	-78.0	-78.0	0.23 (1)	10.00	
N- C	-176 / 0	-78.0	-78.0	0.26 (1)	6.25	
C- D	0 / 31	-78.0	-78.0	0.42 (1)	10.00	
D- E	0 / 31	-78.0	-78.0	0.43 (1)	10.00	
E- F	0 / 31	-78.0	-78.0	0.43 (1)	10.00	
F- G	-32 / 0	-78.0	-78.0	0.42 (1)	6.25	
H- G	-230 / 0	0.0	0.0	0.20 (1)	7.81	
B- M	0 / 102	-18.5	-18.5	0.22 (1)	10.00	
M- L	0 / 102	-18.5	-18.5	0.22 (1)	10.00	
L- K	0 / 100	-18.5	-18.5	0.17 (4)	10.00	
K- J	0 / 32	-18.5	-18.5	0.19 (4)	10.00	
J- I	0 / 32	-18.5	-18.5	0.19 (4)	10.00	
I- H	0 / 0	-18.5	-18.5	0.18 (4)	10.00	

WEBS

MEMB. FR-TO	MAX. FACTORED FORCE (LBS)	MAX CSI (LC)
L- C	-122 / 0	0.09 (1)
C- K	-183 / 0	0.10 (1)
K- D	-539 / 0	0.38 (1)
K- F	-89 / 0	0.05 (1)
I- F	-476 / 0	0.33 (1)
I- G	0 / 45	0.01 (1)
M- N	-879 / 0	0.00 (1)

DESIGN CRITERIA

SPECIFIED LOADS:

TOP	CH.	LL	=	21.0	PSF
		DL	=	6.0	PSF
BOT	CH.	LL	=	0.0	PSF
		DL	=	7.4	PSF
TOTAL	LOAD		=	34.4	PSF

SPACING = 24.0 IN. C/C

LOADING IN FLAT SECTION BASED ON A SLOPE OF 2.00/12 MINIMUM

THIS TRUSS IS DESIGNED FOR RESIDENTIAL OR SMALL BUILDING REQUIREMENTS OF PART 9, NBCC 2015

THIS DESIGN COMPLIES WITH:
- PART 9 OF BCBC 2018 , ABC 2019
- PART 9 OF OBC 2012 (2019 AMENDMENT)
- CSA 086-14
- TPIC 2014

(55 % OF 23.0 P.S.F. G.S.L. PLUS 8.4 P.S.F. RAIN LOAD) EQUALS 21.0 P.S.F. SPECIFIED ROOF LIVE LOAD

CSI: TC=0.43/1.00 (D-F:1) , BC=0.22/1.00 (B-M:1) , WB=0.38/1.00 (D-K:1) , SSI=0.69/1.00 (B-M:1)

DOL LUMBER=1.00 NAIL=1.00 LS BEND=1.10 COMP=1.10 SHEAR=1.10 TENS= 1.10

COMPANION LIVE LOAD FACTOR = 1.00

TRUSS PLATE MANUFACTURER IS NOT RESPONSIBLE FOR QUALITY CONTROL IN THE TRUSS MANUFACTURING PLANT .

NAIL VALUES

PLATE	GRIP(DRY) (PSI) MAX	MIN	SHEAR (PLI) MAX	MIN	SECTION (PLI) MAX	MIN
MT20	650	371	1747	788	1987	1873

PLATE PLACEMENT TOL. = 0.250 inches

PLATE ROTATION TOL. = 5.0 Deg.

JSI GRIP= 0.89 (C) (INPUT = 0.90)
JSI METAL= 0.18 (E) (INPUT = 1.00)

JOB NAME	TRUSS NAME	QUANTITY	PLY	JOB DESC.	DRWG NO.
336333	H241		1	TRUSS DESC. JT 45147	E21104317

Alpha Roof Truss, Maple

Version 8.420 S Jan 21 2021 MiTek Industries, Inc. Thu Oct 14 10:57:07 2021 Page 1

ID:hd511hZTz bdeQoS817GKByhVxV-GDOiXA4OM0yUslkQX l0YoiGrFuqVbC5rVJxJWyTXSw

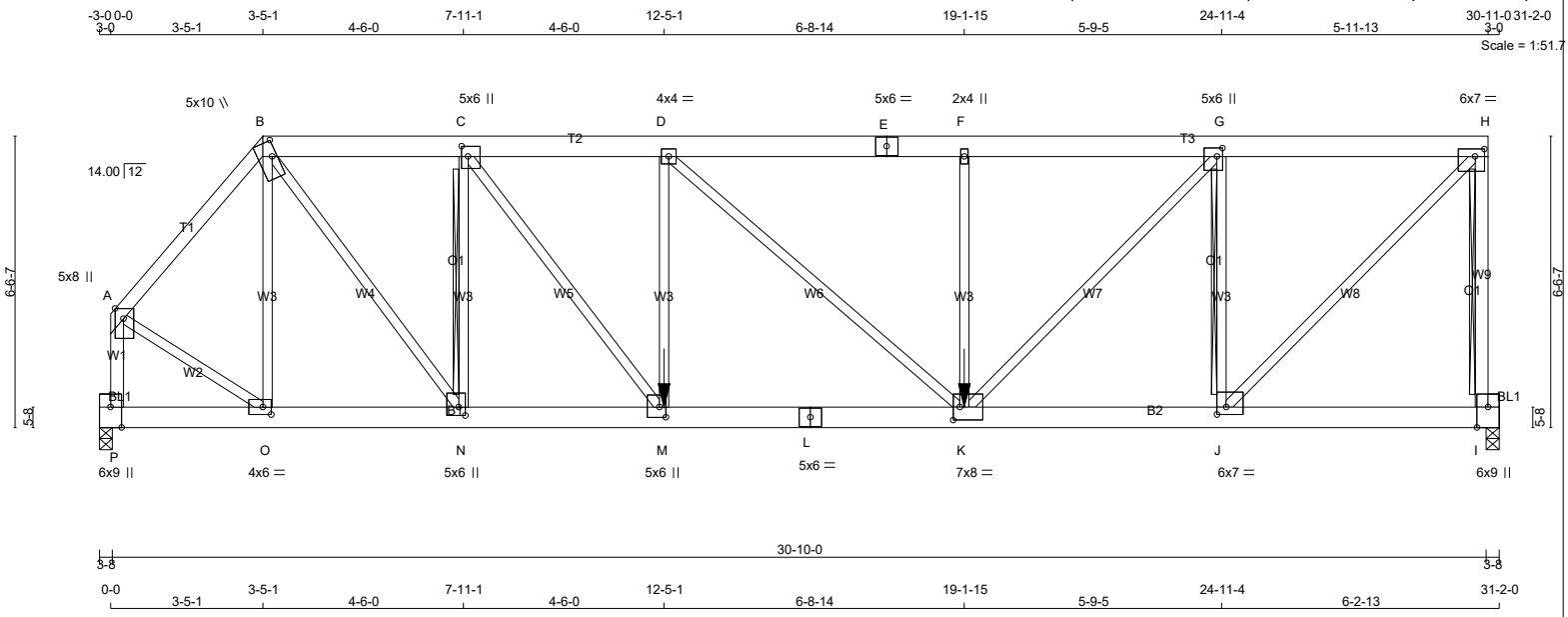

TOTAL WEIGHT = 178 lb

LUMBER

N. L. G. A. RULES

CHORDS	SIZE		LUMBER	DESCR.
A - B	2x4	DRY	No.2	SPF
B - E	2x6	DRY	No.2	SPF
E - H	2x6	DRY	No.2	SPF
I - H	2x4	DRY	No.2	SPF
P - A	2x4	DRY	No.2	SPF
P - L	2x6	DRY	No.2	SPF
L - I	2x6	DRY	No.2	SPF
BEARING BLOCKS				
BL1	2 - 2x4	DRY	No.2	SPF
ALL WEBS EXCEPT	2x3	DRY	No.2	SPF

DRY: SEASONED LUMBER.

PLATES (table is in inches)

JT	TYPE	PLATES	W	LEN	Y	X
A	TMVW+p	MT20	5.0	8.0	2.75	Edge
B	TTWW+m	MT20	5.0	10.0	4.25	1.25
C	TMWW+t	MT20	5.0	6.0	2.75	1.75
D	TMWW-t	MT20	4.0	4.0		
E	TS-t	MT20	5.0	6.0		
F	TMW+w	MT20	2.0	4.0		
G	TMWW+t	MT20	5.0	6.0	2.25	1.50
H	TMVW-t	MT20	6.0	7.0	2.00	2.50
I	BMVK1+t	MT20	6.0	9.0	Edge	3.00
J	BMWW-t	MT20	6.0	7.0	2.00	2.50
K	BMWWW-t	MT20	7.0	8.0	3.50	1.75
L	BS-t	MT20	5.0	6.0		
M	BMWW+t	MT20	5.0	6.0	2.75	1.75
N	BMWW+t	MT20	5.0	6.0	2.25	1.75
O	BMWW-t	MT20	4.0	6.0	2.00	2.25
P	BMVK1+t	MT20	6.0	9.0	Edge	3.00

Edge - INDICATES REFERENCE CORNER OF PLATE TOUCHES EDGE OF CHORD.

LATERAL BRACE(S) SHOWN SHALL BE 2X4 SPF#2

DIMENSIONS, SUPPORTS AND LOADINGS SPECIFIED BY FABRICATOR TO BE VERIFIED BY BUILDING DESIGNER

BEARINGS

JT	FACTORED GROSS REACTION VERT	HORZ	MAXIMUM FACTORED GROSS REACTION DOWN	HORZ	UPLIFT	INPUT BRG IN-SX	REQRD BRG IN-SX
I	2985	0	2985	0	0	3-8	3-8
P	2882	0	2882	0	0	3-8	3-8

UNFACTORED REACTIONS

JT	1ST LCASE COMBINED	MAX./MIN. COMPONENT REACTIONS SNOW	LIVE	PERM.LIVE	WIND	DEAD	SOIL
I	2128	1300 / 0	0 / 0	0 / 0	0 / 0	828 / 0	0 / 0
P	2055	1255 / 0	0 / 0	0 / 0	0 / 0	800 / 0	0 / 0

BEARING MATERIAL TO BE SPF NO.2 OR BETTER AT JOINT(S) I, P
BEARING SIZE FACTOR = 1.15 AT JNT(S) I, P (BASED ON SUPPORT DEPTH = 1-8)

BRACING

TOP CHORD TO BE SHEATHED OR MAX. PURLIN SPACING = 3.47 FT.
MAX. UNBRACED BOTTOM CHORD LENGTH = 6.25 FT OR RIGID CEILING DIRECTLY APPLIED.

ALL PITCH BREAKS AND PERIMETER CORNER JOINTS MUST BE LATERALLY RESTRAINED.

2x4 DRY SPF No.2 T-BRACE AT H-I, C-N, G-J

FASTEN T AND I-BRACES TO NARROW EDGE OF WEB WITH ONE ROW PER PLY OF 3" COMMON WIRE NAILS @ 6" O.C. WITH 3" MINIMUM END DISTANCE. BRACE MUST COVER 90% OF WEB LENGTH.

END VERTICAL(S) MUST BE SHEATHED OR HAVE BRACES AS INDICATED IN THE MAX. UNBRACED LENGTH COLUMN OF THE TABLE BELOW

LOADING

TOTAL LOAD CASES: (4)

CHORDS

MEMB. FR-TO	MAX. FACTORED FORCE (LBS)	FACTORED VERT. LOAD (PLF) FROM	TO	LC1 CSI (LC)	MAX. UNBRAC LENGTH
A- B	-2288 / 0	-78.0	-78.0	0.28 (1)	4.25
B- C	-3199 / 0	-78.0	-78.0	0.21 (1)	4.55
C- D	-4672 / 0	-78.0	-78.0	0.46 (1)	3.59
D- E	-4672 / 0	-156.0	-156.0	0.58 (1)	3.47
E- F	-4672 / 0	-156.0	-156.0	0.58 (1)	3.47
F- G	-4672 / 0	-78.0	-78.0	0.45 (1)	3.63
G- H	-2623 / 0	-78.0	-78.0	0.25 (1)	4.88
I- H	-2939 / 0	0.0	0.0	0.66 (1)	7.81
P- A	-2881 / 0	0.0	0.0	0.40 (1)	5.01
P- O	-200 / 0	-18.5	-18.5	0.06 (4)	6.25
O- N	0 / 1474	-18.5	-18.5	0.25 (1)	10.00
N- M	0 / 3199	-18.5	-18.5	0.44 (1)	10.00
M- L	0 / 4672	-37.3	-37.3	0.75 (1)	10.00
L- K	0 / 4672	-37.3	-37.3	0.75 (1)	10.00
K- J	0 / 2623	-18.5	-18.5	0.38 (1)	10.00
J- I	-70 / 0	-18.5	-18.5	0.07 (4)	6.25

WEBS

MEMB. FR-TO	MAX. FACTORED FORCE (LBS)	MAX CSI (LC)
O- B	-892 / 0	0.56 (1)
B- N	0 / 2898	0.72 (1)
N- C	-2269 / 0	0.65 (1)
C- M	0 / 2475	0.61 (1)
M- D	-786 / 0	0.49 (1)
D- K	0 / 1	0.00 (4)
K- F	-777 / 0	0.48 (1)
K- G	0 / 2976	0.74 (1)
J- G	-2617 / 0	0.75 (1)
J- H	0 / 3840	0.95 (1)
A- O	0 / 1966	0.49 (1)

FACTORED CONCENTRATED LOADS (LBS)

JT	LOC.	LC1	MAX-	MAX+	FACE	DIR.	TYPE	HEEL	CONN.
K	19-1-15	-1210	-1210	---	FRONT	VERT	TOTAL	---	C1
M	12-5-1	-1028	-1028	---	FRONT	VERT	TOTAL	---	C1

CONNECTION REQUIREMENTS

1) **C1:** A SUITABLE HANGER/MECHANICAL CONNECTION IS REQUIRED.

[M]

DESIGN CRITERIA

*** SPECIAL LOADS ANALYSIS ***
GEOMETRY AND/OR BASIC LOADS CHANGED BY USER.
LOADS WERE DERIVED FROM USER INPUT
NO FURTHER MODIFICATIONS WERE MADE

SPECIFIED LOADS:

TOP CH.	LL	=	21.0	PSF
	DL	=	6.0	PSF
BOT CH.	LL	=	0.0	PSF
	DL	=	7.4	PSF
TOTAL LOAD		=	34.4	PSF

SPACING = 24.0 IN. C/C

LOADING IN FLAT SECTION BASED ON A SLOPE OF 2.00/12 MINIMUM

*** NON STANDARD GIRDER ***
ADDT'L USER-DEFINED LOADS APPLIED TO ALL LOAD CASES.

THIS TRUSS IS DESIGNED FOR RESIDENTIAL OR SMALL BUILDING REQUIREMENTS OF PART 9, NBCC 2015

THIS DESIGN COMPLIES WITH:
- PART 9 OF BCBC 2018 , ABC 2019
- PART 9 OF OBC 2012 (2019 AMENDMENT)
- CSA 086-14
- TPIC 2014

(55 % OF 23.0 P.S.F. G.S.L. PLUS 8.4 P.S.F. RAIN LOAD) EQUALS 21.0 P.S.F. SPECIFIED ROOF LIVE LOAD

ALLOWABLE DEFL.(LL)= L/360 (1.02")
CALCULATED VERT. DEFL.(LL) = L/ 999 (0.18")
ALLOWABLE DEFL.(TL)= L/360 (1.02")
CALCULATED VERT. DEFL.(TL) = L/ 996 (0.37")

CSI: TC=0.66/1.00 (H-I:1) , BC=0.75/1.00 (K-M:1) , WB=0.95/1.00 (H-J:1) , SSI=0.35/1.00 (D-F:1)

DOL LUMBER=1.00 NAIL=1.00 LS BEND=1.00 COMP=1.00 SHEAR=1.00 TENS= 1.00

COMPANION LIVE LOAD FACTOR = 1.00

TRUSS PLATE MANUFACTURER IS NOT RESPONSIBLE FOR QUALITY CONTROL IN THE TRUSS MANUFACTURING PLANT .

NAIL VALUES

PLATE	GRIP(DRY) (PSI) MAX	MIN	SHEAR (PLI) MAX	MIN	SECTION (PLI) MAX	MIN
MT20	650	371	1747	788	1987	1873

PLATE PLACEMENT TOL. = 0.250 inches

PLATE ROTATION TOL. = 5.0 Deg.

JSI GRIP= 0.90 (O) (INPUT = 0.90)
JSI METAL= 0.97 (L) (INPUT = 1.00)

JOB NAME	TRUSS NAME	QUANTITY	PLY	JOB DESC.	DRWG NO.
336333	H242T		1	TRUSS DESC. JT 45147	E21104318

Alpha Roof Truss, Maple

Version 8.420 S Jan 21 2021 MiTek Industries, Inc. Thu Oct 14 10:57:09 2021 Page 1

ID:hd511hZTz_bdeQoS817GKByhVxV-CcWTys6eudCC63upePnUeDnZJ2fWzZGNJpo2NPyTXSu

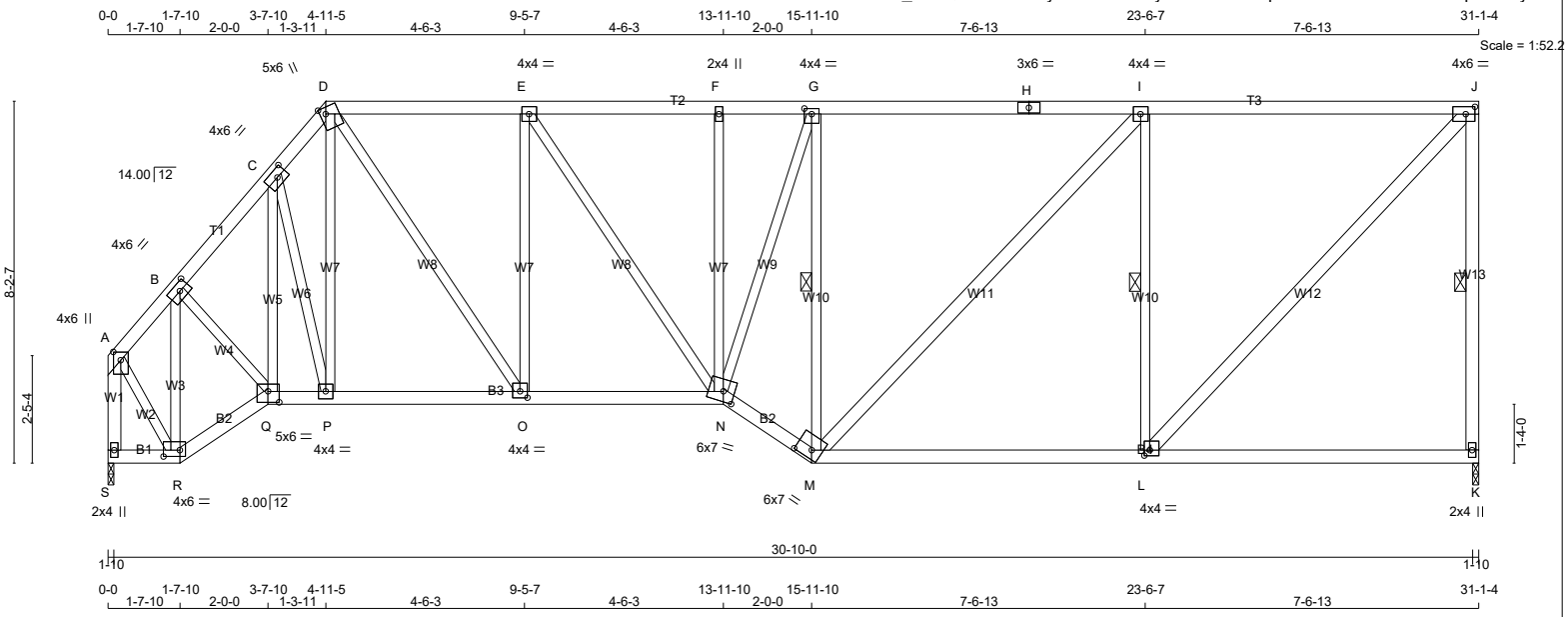

TOTAL WEIGHT = 171 lb

[M]

LUMBER

N. L. G. A. RULES

CHORDS	SIZE		LUMBER	DESCR.
A - D	2x4	DRY	No.2	SPF
D - H	2x4	DRY	No.2	SPF
H - J	2x4	DRY	No.2	SPF
K - J	2x4	DRY	No.2	SPF
S - A	2x4	DRY	No.2	SPF
S - R	2x4	DRY	No.2	SPF
R - Q	2x4	DRY	No.2	SPF
Q - N	2x4	DRY	No.2	SPF
N - M	2x4	DRY	No.2	SPF
M - K	2x4	DRY	No.2	SPF
ALL WEBS EXCEPT	2x3	DRY	No.2	SPF
M - I	2x4	DRY	No.2	SPF
L - J	2x4	DRY	No.2	SPF

DRY: SEASONED LUMBER.

PLATES (table is in inches)

JT	TYPE	PLATES	W	LEN	Y	X
A	TMVW+p	MT20	4.0	6.0	2.25	2.00
B	TMWW-t	MT20	4.0	6.0	2.00	2.75
C	TMWW-t	MT20	4.0	6.0	2.00	2.75
D	TTWW+m	MT20	5.0	6.0	1.75	1.50
E	TMWW-t	MT20	4.0	4.0		
F	TMW+w	MT20	2.0	4.0		
G	TMWW-t	MT20	4.0	4.0	1.50	2.00
H	TS-t	MT20	3.0	6.0		
I	TMWW-t	MT20	4.0	4.0		
J	TMVW-t	MT20	4.0	6.0	2.00	2.50
K	BMV1+p	MT20	2.0	4.0		
L	BMWW-t	MT20	4.0	4.0	1.50	1.50
M	BBWW-h	MT20	6.0	7.0	2.25	4.25
N	BBWWW-m	MT20	6.0	7.0	2.75	3.00
O	BMWW-t	MT20	4.0	4.0	1.75	2.00
P	BMWW-t	MT20	4.0	4.0		
Q	BBWW-l	MT20	5.0	6.0	3.00	3.00
R	BBWW-l	MT20	4.0	6.0	1.75	4.50
S	BMV1+p	MT20	2.0	4.0		

LATERAL BRACE(S) SHOWN SHALL BE 2X4 SPF#2

DIMENSIONS, SUPPORTS AND LOADINGS SPECIFIED BY FABRICATOR TO BE VERIFIED BY BUILDING DESIGNER

BEARINGS

JT	FACTORED GROSS REACTION VERT	HORZ	MAXIMUM FACTORED GROSS REACTION DOWN	HORZ	UPLIFT	INPUT BRG IN-SX	REQRD BRG IN-SX
K	1500	0	1500	0	0	1-10	1-10
S	1500	0	1500	0	0	1-10	1-10

UNFACTORED REACTIONS

JT	1ST LCASE COMBINED	MAX./MIN. COMPONENT REACTIONS SNOW	LIVE	PERM.LIVE	WIND	DEAD	SOIL
K	1070	653 / 0	0 / 0	0 / 0	0 / 0	417 / 0	0 / 0
S	1070	653 / 0	0 / 0	0 / 0	0 / 0	417 / 0	0 / 0

BEARING MATERIAL TO BE SPF NO.2 OR BETTER AT JOINT(S) K, S

BRACING

TOP CHORD TO BE SHEATHED OR MAX. PURLIN SPACING = 4.12 FT.
MAX. UNBRACED BOTTOM CHORD LENGTH = 10.00 FT OR RIGID CEILING DIRECTLY APPLIED.

ALL PITCH BREAKS AND PERIMETER CORNER JOINTS MUST BE LATERALLY RESTRAINED.

1 LATERAL BRACE(S) AT 1/ 2 LENGTH OF J-K, G-M, I-L.

END VERTICAL(S) MUST BE SHEATHED OR HAVE BRACES AS INDICATED IN THE MAX. UNBRACED LENGTH COLUMN OF THE TABLE BELOW

LOADING

TOTAL LOAD CASES: (4)

CHORDS

MEMB. FR-TO	MAX. FACTORED FORCE (LBS)	FACTORED VERT. LOAD (PLF) FROM	TO	LC1 CSI (LC)	MAX. UNBRAC LENGTH
A- B	-903 / 0	-78.0	-78.0	0.03 (1)	6.25
B- C	-1494 / 0	-78.0	-78.0	0.07 (1)	5.32
C- D	-1502 / 0	-78.0	-78.0	0.04 (1)	5.33
D- E	-1533 / 0	-78.0	-78.0	0.29 (1)	4.99
E- F	-1764 / 0	-78.0	-78.0	0.30 (1)	4.71
F- G	-1762 / 0	-78.0	-78.0	0.36 (1)	4.59
G- H	-1509 / 0	-78.0	-78.0	0.85 (1)	4.12
H- I	-1509 / 0	-78.0	-78.0	0.85 (1)	4.12
I- J	-1163 / 0	-78.0	-78.0	0.80 (1)	4.63
K- J	-1447 / 0	0.0	0.0	0.44 (1)	5.43
S- A	-1485 / 0	0.0	0.0	0.19 (1)	6.73
S- R	0 / 0	-18.5	-18.5	0.01 (4)	10.00
R- Q	0 / 676	-18.5	-18.5	0.12 (1)	10.00
Q- P	0 / 974	-18.5	-18.5	0.19 (1)	10.00
P- O	0 / 958	-18.5	-18.5	0.20 (1)	10.00
O- N	0 / 1533	-18.5	-18.5	0.29 (1)	10.00
N- M	0 / 1794	-18.5	-18.5	0.30 (1)	10.00
M- L	0 / 1163	-18.5	-18.5	0.42 (4)	10.00
L- K	0 / 0	-18.5	-18.5	0.30 (4)	10.00

WEBS

MEMB. FR-TO	MAX. FACTORED FORCE (LBS)	MAX CSI (LC)
R- B	-1086 / 0	0.29 (1)
B- Q	0 / 636	0.14 (1)
Q- C	-89 / 0	0.04 (1)
C- P	-71 / 0	0.03 (1)
P- D	0 / 129	0.03 (4)
D- O	0 / 1012	0.23 (1)
O- E	-746 / 0	0.59 (1)
E- N	0 / 408	0.09 (1)
N- F	-124 / 0	0.10 (1)
N- G	0 / 883	0.20 (1)
M- G	-1282 / 0	0.55 (1)
M- I	0 / 500	0.08 (1)
L- I	-1045 / 0	0.45 (1)
L- J	0 / 1683	0.27 (1)
A- R	0 / 951	0.21 (1)

DESIGN CRITERIA

SPECIFIED LOADS:

TOP CH.	LL	=	21.0	PSF
	DL	=	6.0	PSF
BOT CH.	LL	=	0.0	PSF
	DL	=	7.4	PSF
TOTAL LOAD		=	34.4	PSF

SPACING = 24.0 IN. C/C

LOADING IN FLAT SECTION BASED ON A SLOPE OF 2.00/12 MINIMUM

THIS TRUSS IS DESIGNED FOR RESIDENTIAL OR SMALL BUILDING REQUIREMENTS OF PART 9, NBCC 2015

THIS DESIGN COMPLIES WITH:
- PART 9 OF BCBC 2018 , ABC 2019
- PART 9 OF OBC 2012 (2019 AMENDMENT)
- CSA 086-14
- TPIC 2014

(55 % OF 23.0 P.S.F. G.S.L. PLUS 8.4 P.S.F. RAIN LOAD) EQUALS 21.0 P.S.F. SPECIFIED ROOF LIVE LOAD

ALLOWABLE DEFL.(LL)= L/360 (1.04")
CALCULATED VERT. DEFL.(LL) = L/ 999 (0.09")
ALLOWABLE DEFL.(TL)= L/360 (1.04")
CALCULATED VERT. DEFL.(TL) = L/ 999 (0.20")

CSI: TC=0.85/1.00 (G-I:1) , BC=0.42/1.00 (L-M:4) , WB=0.59/1.00 (E-O:1) , SSI=0.28/1.00 (I-J:1)

DOL LUMBER=1.00 NAIL=1.00 LS BEND=1.10 COMP=1.10 SHEAR=1.10 TENS= 1.10

COMPANION LIVE LOAD FACTOR = 1.00

TRUSS PLATE MANUFACTURER IS NOT RESPONSIBLE FOR QUALITY CONTROL IN THE TRUSS MANUFACTURING PLANT .

NAIL VALUES

PLATE	GRIP(DRY) (PSI) MAX	MIN	SHEAR (PLI) MAX	MIN	SECTION (PLI) MAX	MIN
MT20	650	371	1747	788	1987	1873

PLATE PLACEMENT TOL. = 0.250 inches

PLATE ROTATION TOL. = 5.0 Deg.

JSI GRIP= 0.89 (D) (INPUT = 0.90)
JSI METAL= 0.40 (L) (INPUT = 1.00)

JOB NAME	TRUSS NAME	QUANTITY	PLY	JOB DESC.	DRWG NO.
336333	H243T		1	TRUSS DESC. JT 45147	E21104319

Alpa Roof Truss, Maple

Version 8.420 S Jan 21 2021 MiTek Industries, Inc. Thu Oct 14 10:56:47 2021 Page 1

ID:hd511hZTz_bdeQoS817GKByhVxV-rNB8KLrr3sQKThCaMnOKlatnwB8Mpay8FOTtdhyTXTE

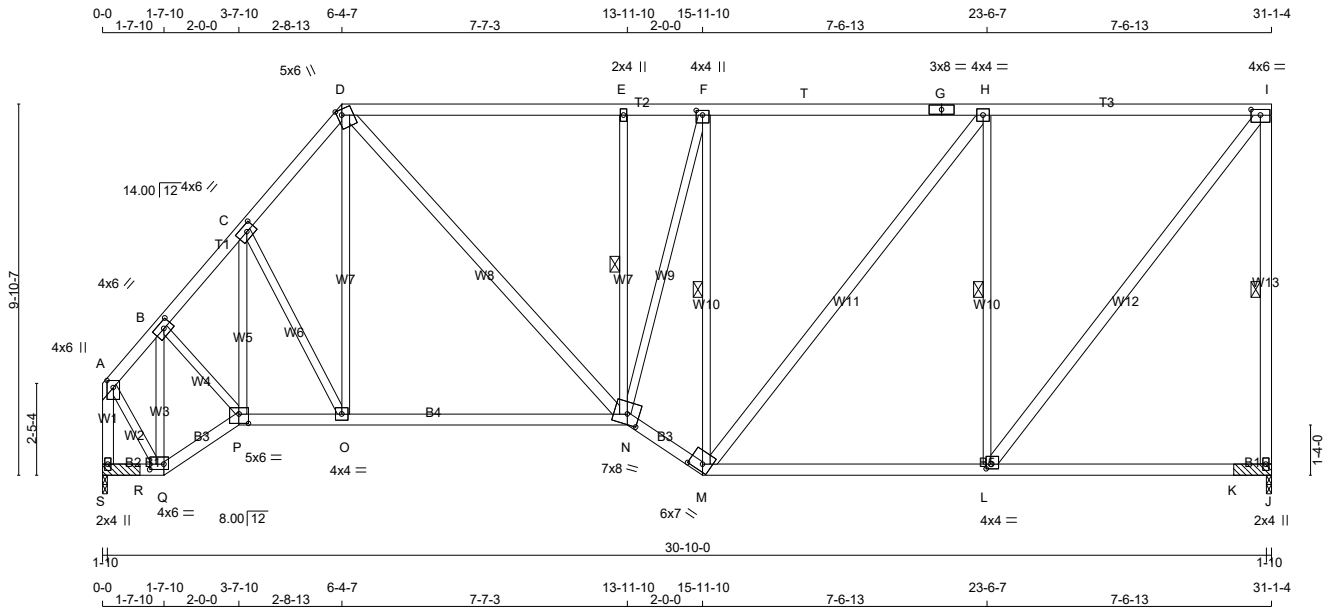

TOTAL WEIGHT = 3 X 181 = 544 lb

[M]

LUMBER

N. L. G. A. RULES

CHORDS	SIZE		LUMBER	DESCR.
A - D	2x4	DRY	No.2	SPF
D - G	2x4	DRY	No.2	SPF
G - I	2x4	DRY	No.2	SPF
J - I	2x4	DRY	No.2	SPF
S - A	2x4	DRY	No.2	SPF
S - Q	2x4	DRY	No.2	SPF
Q - P	2x4	DRY	No.2	SPF
P - N	2x4	DRY	No.2	SPF
N - M	2x4	DRY	No.2	SPF
M - J	2x4	DRY	No.2	SPF
ALL WEBS EXCEPT	2x3	DRY	No.2	SPF
D - N	2x4	DRY	No.2	SPF
M - H	2x4	DRY	No.2	SPF
L - I	2x4	DRY	No.2	SPF

DRY: SEASONED LUMBER.

PLATES (table is in inches)

JT	TYPE	PLATES	W	LEN	Y	X
A	TMVW+p	MT20	4.0	6.0	2.25	2.00
B	TMWW-t	MT20	4.0	6.0	2.00	2.75
C	TMWW-t	MT20	4.0	6.0	2.00	2.75
D	TTWW+m	MT20	5.0	6.0	1.75	1.50
E	TMW+w	MT20	2.0	4.0		
F	TMWW+t	MT20	4.0	4.0	1.50	2.00
G	TS-t	MT20	3.0	8.0		
H	TMWW-t	MT20	4.0	4.0		
I	TMVW-t	MT20	4.0	6.0	1.75	3.00
J	BMV1+p	MT20	2.0	4.0		
L	BMWW-t	MT20	4.0	4.0	1.50	1.50
M	BBWW-h	MT20	6.0	7.0	2.25	4.25
N	BBWWW-m	MT20	7.0	8.0	3.25	3.75
O	BMWW-t	MT20	4.0	4.0		
P	BBWW-l	MT20	5.0	6.0	3.00	3.00
Q	BBWW-l	MT20	4.0	6.0	1.75	4.50
S	BMV1+p	MT20	2.0	4.0		

LATERAL BRACE(S) SHOWN SHALL BE 2X4 SPF#2

DIMENSIONS, SUPPORTS AND LOADINGS SPECIFIED BY FABRICATOR TO BE VERIFIED BY BUILDING DESIGNER

BEARINGS

JT	FACTORED GROSS REACTION VERT	HORZ	MAXIMUM FACTORED GROSS REACTION DOWN	HORZ	UPLIFT	INPUT BRG IN-SX	REQRD BRG IN-SX
J	1612	0	1612	0	0	1-10	1-10 & BLOCK
S	1574	0	1574	0	0	1-10	1-10 & BLOCK

UNFACTORED REACTIONS

JT	1ST LCASE COMBINED	MAX./MIN. COMPONENT REACTIONS SNOW	LIVE	PERM.LIVE	WIND	DEAD	SOIL
J	1159	653 / 0	0 / 0	0 / 0	0 / 0	506 / 0	0 / 0
S	1129	653 / 0	0 / 0	0 / 0	0 / 0	476 / 0	0 / 0

BEARING MATERIAL TO BE SPF NO.2 OR BETTER AT JOINT(S) J, S

2x4 DRY SPF No.2 BEARING BLOCK 12" LONG AT JT. J ATTACHED TO FRONT SIDE WITH 2 ROWS OF (0.122"X3") SPIRAL NAILS SPACED 3" C.C. 8 NAILS TOTAL.

2x4 DRY SPF No.2 BEARING BLOCK 12" LONG AT JT. S ATTACHED TO FRONT SIDE WITH 2 ROWS OF (0.122"X3") SPIRAL NAILS SPACED 3" C.C. 8 NAILS TOTAL.

BRACING

FOR SECTION D-I, MAX. PURLIN SPACING = 2.00 FT.
FOR OTHER SECTIONS, TOP CHORD TO BE SHEATHED OR MAX. PURLIN SPACING = 5.19 FT.
MAX. UNBRACED BOTTOM CHORD LENGTH = 10.00 FT OR RIGID CEILING DIRECTLY APPLIED.

ALL PITCH BREAKS AND PERIMETER CORNER JOINTS MUST BE LATERALLY RESTRAINED.

1 LATERAL BRACE(S) AT 1/ 2 LENGTH OF I-J, E-N, F-M, H-L.

END VERTICAL(S) MUST BE SHEATHED OR HAVE BRACES AS INDICATED IN THE MAX. UNBRACED LENGTH COLUMN OF THE TABLE BELOW

LOADING

TOTAL LOAD CASES: (4)

CHORDS

MEMB. FR-TO	MAX. FACTORED FORCE (LBS)	FACTORED VERT. LOAD (PLF) FROM	TO	LC1 MAX CSI (LC)	MAX. UNBRAC LENGTH
A- B	-951 / 0	-78.0	-78.0	0.04 (1)	6.25
B- C	-1572 / 0	-78.0	-78.0	0.09 (1)	5.19
C- D	-1551 / 0	-78.0	-78.0	0.10 (1)	5.21
D- E	-1558 / 0	-85.5	-85.5	0.76 (1)	2.00
E- F	-1551 / 0	-85.5	-85.5	0.61 (1)	2.00
F- T	-1332 / 0	-85.5	-85.5	0.91 (1)	2.00
T- G	-1332 / 0	-85.5	-85.5	0.91 (1)	2.00
G- H	-1332 / 0	-85.5	-85.5	0.91 (1)	2.00
H- I	-1033 / 0	-85.5	-85.5	0.86 (1)	2.00
J- I	-1559 / 0	0.0	0.0	0.73 (1)	5.28
S- A	-1559 / 0	0.0	0.0	0.20 (1)	6.60
S- R	0 / 0	-18.5	-18.5	0.01 (4)	10.00
R- Q	0 / 0	-18.5	-18.5	0.01 (4)	10.00
Q- P	0 / 708	-18.5	-18.5	0.13 (1)	10.00
P- O	0 / 1034	-18.5	-18.5	0.34 (4)	10.00
O- N	0 / 996	-18.5	-18.5	0.34 (4)	10.00
N- M	0 / 1585	-18.5	-18.5	0.27 (1)	10.00
M- L	0 / 1033	-18.5	-18.5	0.42 (4)	10.00
L- K	0 / 0	-18.5	-18.5	0.30 (4)	10.00
K- J	0 / 0	-18.5	-18.5	0.30 (4)	10.00

WEBS

MEMB. FR-TO	MAX. FACTORED FORCE (LBS)	MAX CSI (LC)
Q- B	-1138 / 0	0.30 (1)
B- P	0 / 688	0.15 (1)
P- C	-118 / 0	0.05 (1)
C- O	-86 / 0	0.05 (1)
O- D	0 / 211	0.06 (4)
D- N	0 / 826	0.13 (1)
N- E	-557 / 0	0.26 (1)
N- F	0 / 937	0.21 (1)
M- F	-1183 / 0	0.78 (1)
M- H	0 / 481	0.08 (1)
L- H	-1136 / 0	0.75 (1)
L- I	0 / 1666	0.27 (1)
A- Q	0 / 995	0.22 (1)

DESIGN CRITERIA

SPECIFIED LOADS:

TOP CH.	LL	=	21.0	PSF
	DL	=	6.0	PSF
BOT CH.	LL	=	0.0	PSF
	DL	=	7.4	PSF
TOTAL LOAD		=	34.4	PSF

SPACING = 24.0 IN. C/C

LOADING IN FLAT SECTION BASED ON PIGGYBACK TRUSS WITH SLOPES OF 6.00/12 AND -6.00/12 AND RESPECTIVE HEEL HEIGHTS OF 0-0 AND 0-0 AND AN ADDITIONAL DEAD LOAD OF 3.0 P.S.F.

THIS TRUSS IS DESIGNED FOR RESIDENTIAL OR SMALL BUILDING REQUIREMENTS OF PART 9, NBCC 2015

THIS DESIGN COMPLIES WITH:
- PART 9 OF BCBC 2018 , ABC 2019
- PART 9 OF OBC 2012 (2019 AMENDMENT)
- CSA 086-14
- TPIC 2014

(55 % OF 23.0 P.S.F. G.S.L. PLUS 8.4 P.S.F. RAIN LOAD) EQUALS 21.0 P.S.F. SPECIFIED ROOF LIVE LOAD

ALLOWABLE DEFL.(LL)= L/360 (1.04")
CALCULATED VERT. DEFL.(LL) = L/ 999 (0.08")
ALLOWABLE DEFL.(TL)= L/360 (1.04")
CALCULATED VERT. DEFL.(TL) = L/ 999 (0.21")

CSI: TC=0.91/1.00 (F-H:1) , BC=0.42/1.00 (L-M:4) , WB=0.78/1.00 (F-M:1) , SSI=0.31/1.00 (H-I:1)

DOL LUMBER=1.00 NAIL=1.00 LS BEND=1.10 COMP=1.10 SHEAR=1.10 TENS= 1.10

COMPANION LIVE LOAD FACTOR = 1.00

TRUSS PLATE MANUFACTURER IS NOT RESPONSIBLE FOR QUALITY CONTROL IN THE TRUSS MANUFACTURING PLANT .

NAIL VALUES

PLATE	GRIP(DRY) (PSI) MAX	MIN	SHEAR (PLI) MAX	MIN	SECTION (PLI) MAX	MIN
MT20	650	371	1747	788	1987	1873

PLATE PLACEMENT TOL. = 0.250 inches

PLATE ROTATION TOL. = 5.0 Deg.

JSI GRIP= 0.90 (B) (INPUT = 0.90)
JSI METAL= 0.37 (L) (INPUT = 1.00)

JOB NAME	TRUSS NAME	QUANTITY	PLY	JOB DESC.		DRWG NO.
336333	H251T		1	TRUSS DESC.	JT 45147	E21104320

Alpa Roof Truss, Maple

ID:hd511hZTz_bdeQoS817GKByhVxV-8_eDNY7uQESwLN2BmppyjetvZsCkRO5gm7H8SIyTXSs

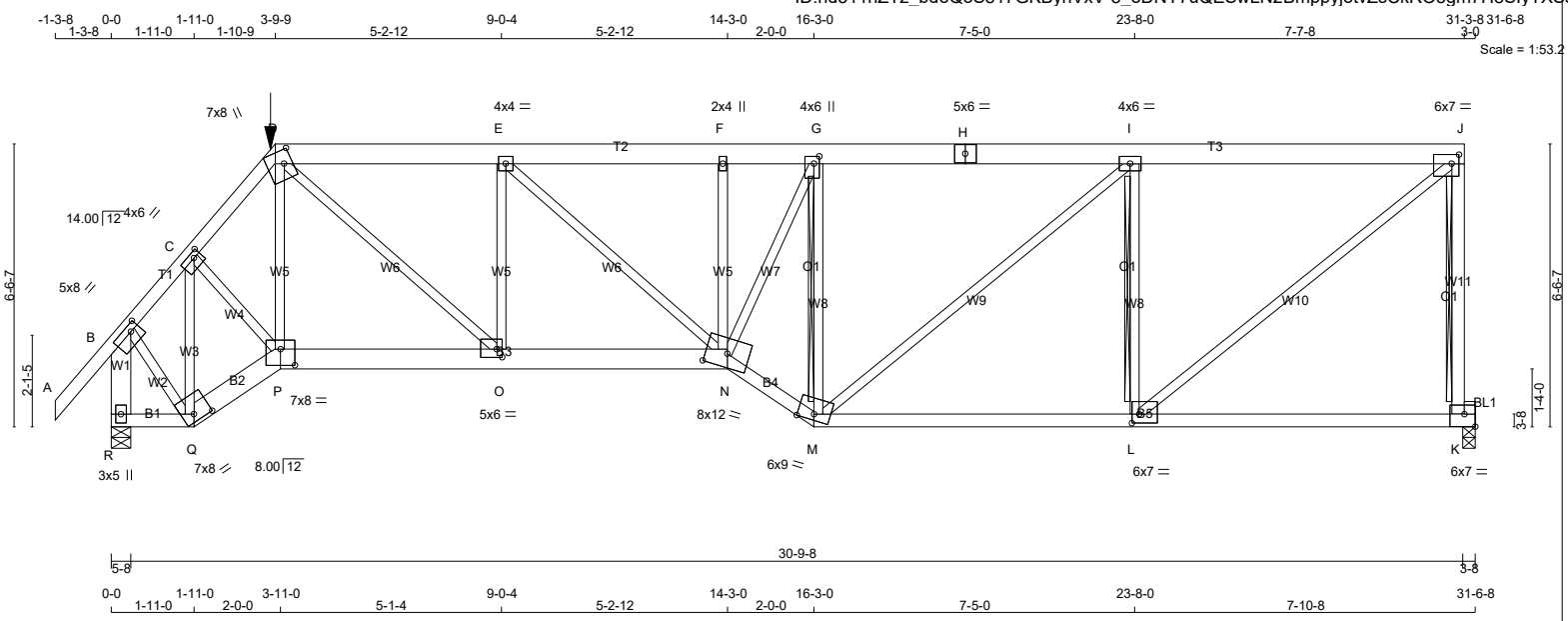

TOTAL WEIGHT = 171 lb

LUMBER

N. L. G. A. RULES

CHORDS	SIZE		LUMBER	DESCR.
A - D	2x4	DRY	No.2	SPF
D - H	2x6	DRY	No.2	SPF
H - J	2x6	DRY	No.2	SPF
K - J	2x4	DRY	No.2	SPF
R - B	2x6	DRY	No.2	SPF
R - Q	2x4	DRY	No.2	SPF
Q - P	2x6	DRY	No.2	SPF
P - N	2x6	DRY	No.2	SPF
N - M	2x4	DRY	No.2	SPF
M - K	2x4	DRY	No.2	SPF
BEARING BLOCKS				
BL1	2x4	DRY	No.2	SPF
ALL WEBS EXCEPT	2x3	DRY	No.2	SPF

DRY: SEASONED LUMBER.

PLATES (table is in inches)

JT	TYPE	PLATES	W	LEN	Y	X
B	TMVW-t	MT20	5.0	8.0	1.75	2.50
C	TMWW-t	MT20	4.0	6.0	1.50	2.00
D	TTWW+m	MT20	7.0	8.0	3.75	2.25
E	TMWW-t	MT20	4.0	4.0		
F	TMW+w	MT20	2.0	4.0		
G	TMWW+t	MT20	4.0	6.0	2.00	1.50
H	TS-t	MT20	5.0	6.0		
I	TMWW-t	MT20	4.0	6.0		
J	TMVW-t	MT20	6.0	7.0	2.50	2.00
K	BMVK1-t	MT20	6.0	7.0	3.50	Edge
L	BMWW-t	MT20	6.0	7.0	2.50	2.00
M	BBWW-m	MT20	6.0	9.0	Edge	
N	BBWWW-m	MT20	8.0	12.0	3.75	6.00
O	BMWW-t	MT20	5.0	6.0	2.25	1.50
P	BBWW-l	MT20	7.0	8.0	4.50	4.00
Q	BBWW-h	MT20	7.0	8.0	2.00	4.75
R	BMV1+p	MT20	3.0	5.0		

Edge - INDICATES REFERENCE CORNER OF PLATE TOUCHES EDGE OF CHORD.

LATERAL BRACE(S) SHOWN SHALL BE 2X4 SPF#2

DIMENSIONS, SUPPORTS AND LOADINGS SPECIFIED BY FABRICATOR TO BE VERIFIED BY BUILDING DESIGNER

BEARINGS

JT	FACTORED GROSS REACTION VERT	HORZ	MAXIMUM FACTORED GROSS REACTION DOWN	HORZ	UPLIFT	INPUT BRG IN-SX	REQRD BRG IN-SX
K	2999	0	2999	0	0	3-8	3-8
R	3147	0	3147	0	0	5-8	4-12

UNFACTORED REACTIONS

JT	1ST LCASE COMBINED	MAX./MIN. COMPONENT REACTIONS SNOW	LIVE	PERM.LIVE	WIND	DEAD	SOIL
K	2138	1307 / 0	0 / 0	0 / 0	0 / 0	830 / 0	0 / 0
R	2244	1372 / 0	0 / 0	0 / 0	0 / 0	872 / 0	0 / 0

BEARING MATERIAL TO BE SPF NO.2 OR BETTER AT JOINT(S) K, R
BEARING SIZE FACTOR = 1.15 AT JNT(S) K (BASED ON SUPPORT DEPTH = 1-8)

BRACING

TOP CHORD TO BE SHEATHED OR MAX. PURLIN SPACING = 3.19 FT.
MAX. UNBRACED BOTTOM CHORD LENGTH = 6.25 FT OR RIGID CEILING DIRECTLY APPLIED.

ALL PITCH BREAKS AND PERIMETER CORNER JOINTS MUST BE LATERALLY RESTRAINED.

2x4 DRY SPF No.2 T-BRACE AT J-K, G-M, I-L

FASTEN T AND I-BRACES TO NARROW EDGE OF WEB WITH ONE ROW PER PLY OF 3" COMMON WIRE NAILS @ 6" O.C. WITH 3" MINIMUM END DISTANCE. BRACE MUST COVER 90% OF WEB LENGTH.

END VERTICAL(S) MUST BE SHEATHED OR HAVE BRACES AS INDICATED IN THE MAX. UNBRACED LENGTH COLUMN OF THE TABLE BELOW

LOADING

TOTAL LOAD CASES: (4)

CHORDS

MEMB. FR-TO	MAX. FACTORED FORCE (LBS)	FACTORED VERT. LOAD (PLF) FROM	TO	LC1 CSI (LC)	MAX UNBRAC LENGTH
A- B	0 / 42	-78.0	-78.0	0.12 (1)	10.00
B- C	-2209 / 0	-78.0	-78.0	0.18 (1)	4.39
C- D	-3391 / 0	-78.0	-78.0	0.23 (1)	3.61
D- E	-4197 / 0	-78.0	-78.0	0.28 (1)	4.00
E- F	-4839 / 0	-78.0	-78.0	0.36 (1)	3.68
F- G	-4839 / 0	-78.0	-78.0	0.45 (1)	3.53
G- H	-3857 / 0	-153.5	-153.5	0.86 (1)	3.19
H- I	-3857 / 0	-153.5	-153.5	0.86 (1)	3.19
I- J	-2936 / 0	-153.5	-153.5	0.80 (1)	3.72
K- J	-2894 / 0	0.0	0.0	0.68 (1)	7.81
R- B	-3112 / 0	0.0	0.0	0.27 (1)	5.94
R- Q	0 / 0	-36.4	-36.4	0.04 (4)	10.00
Q- P	0 / 1646	-129.9	-129.9	0.26 (1)	10.00
P- O	0 / 2221	-112.0	-112.0	0.51 (1)	10.00
O- N	0 / 4198	-112.0	-112.0	0.77 (1)	10.00
N- M	0 / 4615	-112.0	-112.0	0.90 (1)	10.00
M- L	0 / 2936	-36.4	-36.4	0.94 (4)	10.00
L- K	-68 / 0	-36.4	-36.4	0.63 (4)	6.25

WEBS

MEMB. FR-TO	MAX. FACTORED FORCE (LBS)	MAX CSI (LC)
Q- C	-2001 / 0	0.56 (1)
C- P	0 / 1304	0.32 (1)
P- D	0 / 317	0.08 (1)
D- O	0 / 2670	0.66 (1)
O- E	-1089 / 0	0.39 (1)
E- N	0 / 868	0.21 (1)
N- F	0 / 17	0.01 (4)
N- G	0 / 2567	0.64 (1)
M- G	-3157 / 0	0.95 (1)
M- I	0 / 1196	0.30 (1)
L- I	-2100 / 0	0.63 (1)
L- J	0 / 3863	0.96 (1)
B- Q	0 / 1874	0.46 (1)

FACTORED CONCENTRATED LOADS (LBS)

JT	LOC.	LC1	MAX-	MAX+	FACE	DIR.	TYPE	HEEL	CONN.
D	3-9-9	-216	-216	---	FRONT	VERT	TOTAL	---	C1

CONNECTION REQUIREMENTS

1) **C1:** A SUITABLE HANGER/MECHANICAL CONNECTION IS REQUIRED.

[M]

DESIGN CRITERIA

SPECIFIED LOADS:

TOP	CH.	LL	=	21.0	PSF
		DL	=	6.0	PSF
BOT	CH.	LL	=	0.0	PSF
		DL	=	7.4	PSF
TOTAL	LOAD		=	34.4	PSF

SPACING = 24.0 IN. C/C

LOADING IN FLAT SECTION BASED ON A SLOPE OF 2.00/12 MINIMUM

GIRDER TYPE: CPrimeHip
LEFT SETBACK = 3-9-9
RIGHT SETBACK = 0-0
END SETBACK = 5-10-8
END WALL WIDTH = 0-0
CORNER FRAMING TYPE: CONVENTIONAL
END JACK TYPE: CONVENTIONAL
APPLIED TO FRONT SIDE
- ADDT'L LOADS BASED ON 55 % OF GSL.
LOADS APPLIED TO FIRST 3-9-9 OF SPAN MEASURED FROM THE LEFT.

GIRDER TYPE: CStdGirder
START DISTANCE = 1-11-0
START SPAN CARRIED = 5-10-8
END DISTANCE = 16-3-0
END SPAN CARRIED = 5-10-8
END WALL WIDTH = 0-0
APPLIED TO FRONT SIDE OF BOTTOM CHORD.
- ADDT'L LOADS BASED ON 55 % OF GSL.

GIRDER TYPE: CPrimeHip
LEFT SETBACK = 3-9-9
RIGHT SETBACK = 0-0
END SETBACK = 5-10-8
END WALL WIDTH = 0-0
CORNER FRAMING TYPE: CONVENTIONAL
END JACK TYPE: CONVENTIONAL
APPLIED TO FRONT SIDE
- ADDT'L LOADS BASED ON 55 % OF GSL.
LOADS APPLIED TO FIRST 15-3-8 OF SPAN MEASURED FROM THE RIGHT.

THIS TRUSS IS DESIGNED FOR RESIDENTIAL OR SMALL BUILDING REQUIREMENTS OF PART 9, NBCC 2015

THIS DESIGN COMPLIES WITH:
- PART 9 OF BCBC 2018 , ABC 2019
- PART 9 OF OBC 2012 (2019 AMENDMENT)
- CSA 086-14
- TPIC 2014

DESIGN ASSUMPTIONS
-OVERHANG NOT TO BE ALTERED OR CUT OFF.

(55 % OF 23.0 P.S.F. G.S.L. PLUS 8.4 P.S.F. RAIN LOAD) EQUALS 21.0 P.S.F. SPECIFIED ROOF LIVE LOAD

ALLOWABLE DEFL.(LL)= L/360 (1.04")
CALCULATED VERT. DEFL.(LL) = L/ 999 (0.22")
ALLOWABLE DEFL.(TL)= L/360 (1.04")
CALCULATED VERT. DEFL.(TL) = L/ 825 (0.45")

CSI: TC=0.86/1.00 (G-I:1) , BC=0.94/1.00 (L-M:4) , WB=0.96/1.00 (J-L:1) , SSI=0.47/1.00 (I-J:1)

CONTINUED ON PAGE 2

JOB NAME	TRUSS NAME	QUANTITY	PLY	JOB DESC.		DRWG NO.
336333	J05		1	TRUSS DESC.	JT 45147	E21104321

Alpa Roof Truss, Maple

Version 8.420 S Jan 21 2021 MiTek Industries, Inc. Thu Oct 14 10:57:12 2021 Page 1

ID:hd511hZTz bdeQoS817GKByhVxV-cBCbau8WBYanzXdOKXLBFrPB0GkEA3Hq?n1i kyTXSr

Scale = 1:33.5

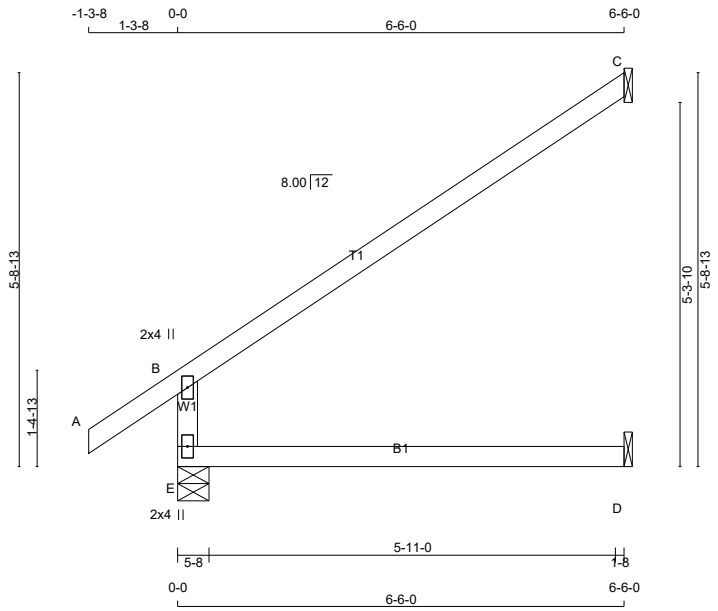

TOTAL WEIGHT = 6 X 19 = 116 lb

LUMBER

N. L. G. A. RULES

CHORDS	SIZE		LUMBER	DESCR.
E - B	2x4	DRY	No.2	SPF
A - C	2x4	DRY	No.2	SPF
E - D	2x4	DRY	No.2	SPF

DRY: SEASONED LUMBER.

PLATES (table is in inches)

JT	TYPE	PLATES	W	LEN	Y	X
B	TMV+p	MT20	2.0	4.0		
E	BMV1+p	MT20	2.0	4.0		

LATERAL BRACE(S) SHOWN SHALL BE 2X4 SPF#2

DIMENSIONS, SUPPORTS AND LOADINGS SPECIFIED BY FABRICATOR TO BE VERIFIED BY BUILDING DESIGNER

BEARINGS

JT	FACTORED GROSS REACTION VERT	HORZ	MAXIMUM FACTORED GROSS REACTION DOWN	HORZ	UPLIFT	INPUT BRG IN-SX	REQRD BRG IN-SX
E	494	0	494	0	0	5-8	1-8
C	190	0	190	0	0	1-8	1-8
D	50	0	56	0	0	1-8	1-8

SEE MITEK STANDARD DETAIL B97791H FOR CONNECTION TO JOINT(S) C , D

UNFACTORED REACTIONS

JT	1ST LCASE COMBINED	MAX./MIN. COMPONENT REACTIONS SNOW	LIVE	PERM.LIVE	WIND	DEAD	SOIL
E	349	228 / 0	0 / 0	0 / 0	0 / 0	121 / 0	0 / 0
C	132	102 / 0	0 / 0	0 / 0	0 / 0	29 / 0	0 / 0
D	40	0 / 0	0 / 0	0 / 0	0 / 0	40 / 0	0 / 0

BEARING MATERIAL TO BE SPF NO.2 OR BETTER AT JOINT(S) E

BRACING

TOP CHORD TO BE SHEATHED OR MAX. PURLIN SPACING = 6.25 FT.
MAX. UNBRACED BOTTOM CHORD LENGTH = 10.00 FT OR RIGID CEILING DIRECTLY APPLIED.

ALL PITCH BREAKS AND PERIMETER CORNER JOINTS MUST BE LATERALLY RESTRAINED.

LOADING

TOTAL LOAD CASES: (4)

CHORDS MEMB. FR-TO	MAX. FACTORED FORCE (LBS)	FACTORED VERT. LOAD (PLF) FROM	TO	LC1 MAX CSI (LC)	MAX. UNBRAC LENGTH	WEBS MEMB. FR-TO	MAX. FACTORED FORCE (LBS)	MAX CSI (LC)
E- B	-424 / 0	0.0	0.0	0.13 (4)	7.81			
A- B	0 / 30	-78.0	-78.0	0.10 (1)	10.00			
B- C	-35 / 0	-78.0	-78.0	0.44 (1)	6.25			
E- D	0 / 0	-18.5	-18.5	0.16 (4)	10.00			

[M][F]

DESIGN CRITERIA

SPECIFIED LOADS:

TOP CH.	LL	=	21.0	PSF
	DL	=	6.0	PSF
BOT CH.	LL	=	0.0	PSF
	DL	=	7.4	PSF
TOTAL LOAD		=	34.4	PSF

SPACING = 24.0 IN. C/C

THIS TRUSS IS DESIGNED FOR RESIDENTIAL OR SMALL BUILDING REQUIREMENTS OF PART 9, NBCC 2015

THIS DESIGN COMPLIES WITH:
- PART 9 OF BCBC 2018 , ABC 2019
- PART 9 OF OBC 2012 (2019 AMENDMENT)
- CSA 086-14
- TPIC 2014

DESIGN ASSUMPTIONS
-OVERHANG NOT TO BE ALTERED OR CUT OFF.

(55 % OF 23.0 P.S.F. G.S.L. PLUS 8.4 P.S.F. RAIN LOAD) EQUALS 21.0 P.S.F. SPECIFIED ROOF LIVE LOAD

ALLOWABLE DEFL.(LL)= L/360 (0.22")
CALCULATED VERT. DEFL.(LL) = L/ 999 (0.00")
ALLOWABLE DEFL.(TL)= L/360 (0.22")
CALCULATED VERT. DEFL.(TL) = L/ 999 (0.05")

CSI: TC=0.44/1.00 (B-C:1) , BC=0.16/1.00 (D-E:4) , WB=0.00/1.00 (n/a:0) , SSI=0.21/1.00 (B-C:1)

DOL LUMBER=1.00 NAIL=1.00 LS BEND=1.10 COMP=1.10 SHEAR=1.10 TENS= 1.10

COMPANION LIVE LOAD FACTOR = 1.00

AUTOSOLVE RIGHT HEEL ONLY

TRUSS PLATE MANUFACTURER IS NOT RESPONSIBLE FOR QUALITY CONTROL IN THE TRUSS MANUFACTURING PLANT .

NAIL VALUES

PLATE	GRIP(DRY) (PSI) MAX	MIN	SHEAR (PLI) MAX	MIN	SECTION (PLI) MAX	MIN
MT20	650	371	1747	788	1987	1873

PLATE PLACEMENT TOL. = 0.250 inches

PLATE ROTATION TOL. = 5.0 Deg.

JSI GRIP= 0.26 (B) (INPUT = 0.90)
JSI METAL= 0.22 (B) (INPUT = 1.00)

JOB NAME	TRUSS NAME	QUANTITY	PLY	JOB DESC.		DRWG NO.
336333	J07		1	TRUSS DESC.	JT 45147	E21104322

Alpa Roof Truss, Maple

Version 8.420 S Jan 21 2021 MiTek Industries, Inc. Thu Oct 14 10:57:14 2021 Page 1

ID:hd511hZTz bdeQoS817GKByhVxV-ZZJM?aAni9qVCqmmRyNfLGUaD3SCezn7S4Wp3cyTXSp

Scale = 1:37.4

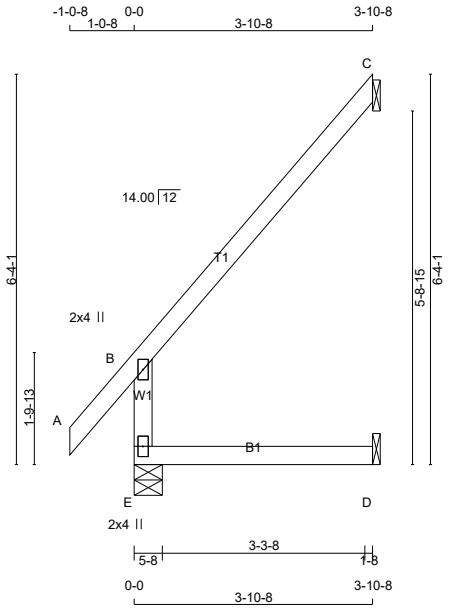

TOTAL WEIGHT = 14 X 15 = 211 lb

LUMBER

N. L. G. A. RULES

CHORDS	SIZE		LUMBER	DESCR.
E - B	2x4	DRY	No.2	SPF
A - C	2x4	DRY	No.2	SPF
E - D	2x4	DRY	No.2	SPF

DRY: SEASONED LUMBER.

PLATES (table is in inches)

JT	TYPE	PLATES	W	LEN	Y	X
B	TMV+p	MT20	2.0	4.0		
E	BMV1+p	MT20	2.0	4.0		

LATERAL BRACE(S) SHOWN SHALL BE 2X4 SPF#2

DIMENSIONS, SUPPORTS AND LOADINGS SPECIFIED BY FABRICATOR TO BE VERIFIED BY BUILDING DESIGNER

BEARINGS

JT	FACTORED GROSS REACTION VERT	HORZ	MAXIMUM FACTORED GROSS REACTION DOWN	HORZ	UPLIFT	INPUT BRG IN-SX	REQRD BRG IN-SX
E	319	0	319	0	0	5-8	1-8
C	113	0	113	0	0	1-8	1-8
D	32	0	35	0	0	1-8	1-8

SEE MITEK STANDARD DETAIL B97791H FOR CONNECTION TO JOINT(S) C , D

UNFACTORED REACTIONS

JT	1ST LCASE COMBINED	MAX./MIN. COMPONENT REACTIONS SNOW	LIVE	PERM.LIVE	WIND	DEAD	SOIL
E	225	150 / 0	0 / 0	0 / 0	0 / 0	75 / 0	0 / 0
C	79	61 / 0	0 / 0	0 / 0	0 / 0	17 / 0	0 / 0
D	25	0 / 0	0 / 0	0 / 0	0 / 0	25 / 0	0 / 0

BEARING MATERIAL TO BE SPF NO.2 OR BETTER AT JOINT(S) E

BRACING

TOP CHORD TO BE SHEATHED OR MAX. PURLIN SPACING = 6.25 FT.
MAX. UNBRACED BOTTOM CHORD LENGTH = 10.00 FT OR RIGID CEILING DIRECTLY APPLIED.

ALL PITCH BREAKS AND PERIMETER CORNER JOINTS MUST BE LATERALLY RESTRAINED.

LOADING

TOTAL LOAD CASES: (4)

CHORDS MEMB.	MAX. FACTORED FORCE (LBS)	FACTORED VERT. LOAD (PLF) FROM	TO	LC1 MAX CSI (LC)	MAX. UNBRAC LENGTH	WEBS MEMB. FR-TO	MAX. FACTORED FORCE (LBS)	MAX CSI (LC)
FR-TO								
E- B	-279 / 0	0.0	0.0	0.04 (4)	7.81			
A- B	0 / 34	-78.0	-78.0	0.08 (1)	10.00			
B- C	-29 / 0	-78.0	-78.0	0.20 (1)	6.25			
E- D	0 / 0	-18.5	-18.5	0.06 (4)	10.00			

[M]

DESIGN CRITERIA

SPECIFIED LOADS:

TOP CH.	LL	=	21.0	PSF
	DL	=	6.0	PSF
BOT CH.	LL	=	0.0	PSF
	DL	=	7.4	PSF
TOTAL LOAD		=	34.4	PSF

SPACING = 24.0 IN. C/C

THIS TRUSS IS DESIGNED FOR RESIDENTIAL OR SMALL BUILDING REQUIREMENTS OF PART 9, NBCC 2015

THIS DESIGN COMPLIES WITH:
- PART 9 OF BCBC 2018 , ABC 2019
- PART 9 OF OBC 2012 (2019 AMENDMENT)
- CSA 086-14
- TPIC 2014

DESIGN ASSUMPTIONS
-OVERHANG NOT TO BE ALTERED OR CUT OFF.

(55 % OF 23.0 P.S.F. G.S.L. PLUS 8.4 P.S.F. RAIN LOAD) EQUALS 21.0 P.S.F. SPECIFIED ROOF LIVE LOAD

ALLOWABLE DEFL.(LL)= L/360 (0.19")
CALCULATED VERT. DEFL.(LL) = L/ 999 (0.00")
ALLOWABLE DEFL.(TL)= L/360 (0.19")
CALCULATED VERT. DEFL.(TL) = L/ 999 (0.01")

CSI: TC=0.20/1.00 (B-C:1) , BC=0.06/1.00 (D-E:4) , WB=0.00/1.00 (n/a:0) , SSI=0.10/1.00 (B-C:1)

DOL LUMBER=1.00 NAIL=1.00 LS BEND=1.10 COMP=1.10 SHEAR=1.10 TENS= 1.10

COMPANION LIVE LOAD FACTOR = 1.00

AUTOSOLVE RIGHT HEEL ONLY

TRUSS PLATE MANUFACTURER IS NOT RESPONSIBLE FOR QUALITY CONTROL IN THE TRUSS MANUFACTURING PLANT .

NAIL VALUES

PLATE	GRIP(DRY) (PSI) MAX	MIN	SHEAR (PLI) MAX	MIN	SECTION (PLI) MAX	MIN
MT20	650	371	1747	788	1987	1873

PLATE PLACEMENT TOL. = 0.250 inches

PLATE ROTATION TOL. = 5.0 Deg.

JSI GRIP= 0.22 (B) (INPUT = 0.90)
JSI METAL= 0.14 (B) (INPUT = 1.00)

JOB NAME	TRUSS NAME	QUANTITY	PLY	JOB DESC.		DRWG NO.
336333	J08		1	TRUSS DESC.	JT 45147	E21104323

Alpa Roof Truss, Maple

Version 8.420 S Jan 21 2021 MiTek Industries, Inc. Thu Oct 14 10:57:15 2021 Page 1

ID:hd511hZTz_bdeQoS817GKByhVxV-1mtkDwAPTTyMq_Lz?fuutU1mhToXNQ1GhkFMb3yTXSo

Scale = 1:22.4

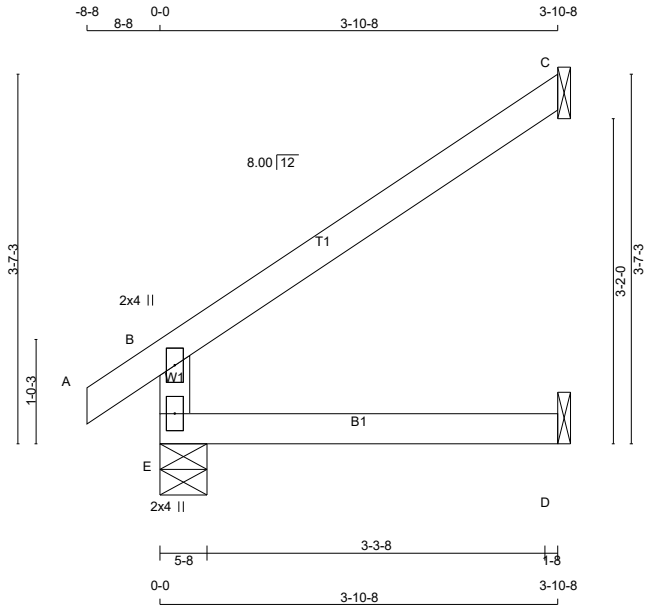

TOTAL WEIGHT = 2 X 12 = 23 lb

[M][F]

LUMBER

N. L. G. A. RULES

CHORDS	SIZE		LUMBER	DESCR.
E - B	2x4	DRY	No.2	SPF
A - C	2x4	DRY	No.2	SPF
E - D	2x4	DRY	No.2	SPF

DRY: SEASONED LUMBER.

PLATES (table is in inches)

JT	TYPE	PLATES	W	LEN	Y	X
B	TMV+p	MT20	2.0	4.0		
E	BMV1+p	MT20	2.0	4.0		

LATERAL BRACE(S) SHOWN SHALL BE 2X4 SPF#2

DIMENSIONS, SUPPORTS AND LOADINGS SPECIFIED BY FABRICATOR TO BE VERIFIED BY BUILDING DESIGNER

BEARINGS

JT	FACTORED GROSS REACTION VERT	HORZ	MAXIMUM FACTORED GROSS REACTION DOWN	HORZ	UPLIFT	INPUT BRG IN-SX	REQRD BRG IN-SX
E	292	0	292	0	0	5-8	1-8
C	113	0	113	0	0	1-8	1-8
D	30	0	34	0	0	1-8	1-8

SEE MITEK STANDARD DETAIL B97791H FOR CONNECTION TO JOINT(S) C , D

UNFACTORED REACTIONS

JT	1ST LCASE COMBINED	MAX./MIN. COMPONENT REACTIONS SNOW	LIVE	PERM.LIVE	WIND	DEAD	SOIL
E	207	135 / 0	0 / 0	0 / 0	0 / 0	72 / 0	0 / 0
C	78	61 / 0	0 / 0	0 / 0	0 / 0	17 / 0	0 / 0
D	24	0 / 0	0 / 0	0 / 0	0 / 0	24 / 0	0 / 0

BEARING MATERIAL TO BE SPF NO.2 OR BETTER AT JOINT(S) E

BRACING

TOP CHORD TO BE SHEATHED OR MAX. PURLIN SPACING = 6.25 FT.
MAX. UNBRACED BOTTOM CHORD LENGTH = 10.00 FT OR RIGID CEILING DIRECTLY APPLIED.

ALL PITCH BREAKS AND PERIMETER CORNER JOINTS MUST BE LATERALLY RESTRAINED.

LOADING

TOTAL LOAD CASES: (4)

CHORDS MEMB. FR-TO	MAX. FACTORED FORCE (LBS)	FACTORED VERT. LOAD (PLF) FROM	TO	LC1 MAX CSI (LC)	MAX. UNBRAC LENGTH	WEBS MEMB. FR-TO	MAX. FACTORED FORCE (LBS)	MAX CSI (LC)
E- B	-250 / 0	0.0	0.0	0.04 (4)	7.81			
A- B	0 / 17	-78.0	-78.0	0.04 (1)	10.00			
B- C	-21 / 0	-78.0	-78.0	0.15 (1)	6.25			
E- D	0 / 0	-18.5	-18.5	0.06 (4)	10.00			

DESIGN CRITERIA

SPECIFIED LOADS:

TOP	CH.	LL	=	21.0	PSF
		DL	=	6.0	PSF
BOT	CH.	LL	=	0.0	PSF
		DL	=	7.4	PSF
TOTAL	LOAD		=	34.4	PSF

SPACING = 24.0 IN. C/C

THIS TRUSS IS DESIGNED FOR RESIDENTIAL OR SMALL BUILDING REQUIREMENTS OF PART 9, NBCC 2015

THIS DESIGN COMPLIES WITH:
- PART 9 OF BCBC 2018 , ABC 2019
- PART 9 OF OBC 2012 (2019 AMENDMENT)
- CSA 086-14
- TPIC 2014

DESIGN ASSUMPTIONS
-OVERHANG NOT TO BE ALTERED OR CUT OFF.

(55 % OF 23.0 P.S.F. G.S.L. PLUS 8.4 P.S.F. RAIN LOAD) EQUALS 21.0 P.S.F. SPECIFIED ROOF LIVE LOAD

ALLOWABLE DEFL.(LL)= L/360 (0.19")
CALCULATED VERT. DEFL.(LL) = L/ 999 (0.00")
ALLOWABLE DEFL.(TL)= L/360 (0.19")
CALCULATED VERT. DEFL.(TL) = L/ 999 (0.01")

CSI: TC=0.15/1.00 (B-C:1) , BC=0.06/1.00 (D-E:4) , WB=0.00/1.00 (n/a:0) , SSI=0.12/1.00 (B-C:1)

DOL LUMBER=1.00 NAIL=1.00 LS BEND=1.10 COMP=1.10 SHEAR=1.10 TENS= 1.10

COMPANION LIVE LOAD FACTOR = 1.00

AUTOSOLVE RIGHT HEEL ONLY

TRUSS PLATE MANUFACTURER IS NOT RESPONSIBLE FOR QUALITY CONTROL IN THE TRUSS MANUFACTURING PLANT .

NAIL VALUES

PLATE	GRIP(DRY) (PSI) MAX	MIN	SHEAR (PLI) MAX	MIN	SECTION (PLI) MAX	MIN
MT20	650	371	1747	788	1987	1873

PLATE PLACEMENT TOL. = 0.250 inches

PLATE ROTATION TOL. = 5.0 Deg.

JSI GRIP= 0.15 (B) (INPUT = 0.90)
JSI METAL= 0.13 (B) (INPUT = 1.00)

JOB NAME	TRUSS NAME	QUANTITY	PLY	JOB DESC.		DRWG NO.
336333	P04		1	TRUSS DESC.	JT 45147	E21104324

Alpa Roof Truss, Maple

Version 8.420 S Jan 21 2021 MiTek Industries, Inc. Thu Oct 14 10:57:17 2021 Page 1

ID:hd511hZTz bdeQoS817GKByhVxV-z8?UdbCf?4C43IVL64wMyv64CHSZrKWZ82kTfxyTXSm

Scale = 1:13.4

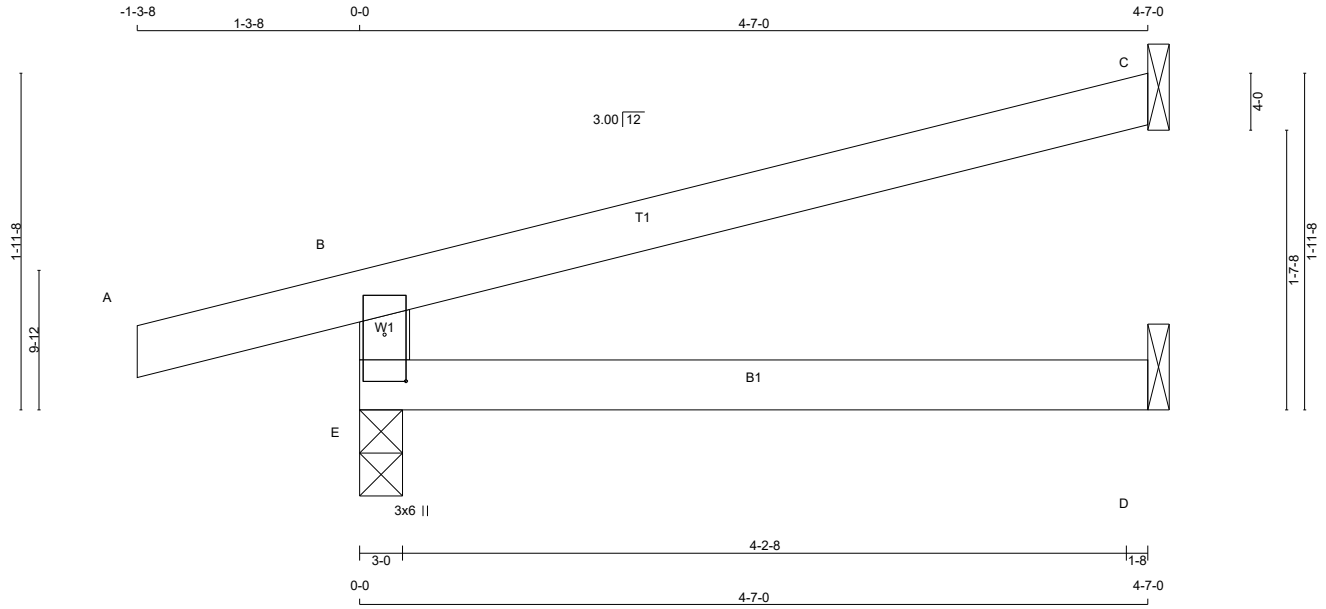

TOTAL WEIGHT = 9 X 13 = 113 lb

LUMBER

N. L. G. A. RULES

CHORDS	SIZE		LUMBER	DESCR.
E - B	2x4	DRY	No.2	SPF
A - C	2x4	DRY	No.2	SPF
E - D	2x4	DRY	No.2	SPF

DRY: SEASONED LUMBER.

PLATES (table is in inches)

JT	TYPE	PLATES	W	LEN	Y	X
B						
E						
E	TMBMV1+p	MT20	3.0	6.0	3.25	1.50

LATERAL BRACE(S) SHOWN SHALL BE 2X4 SPF#2

DIMENSIONS, SUPPORTS AND LOADINGS SPECIFIED BY FABRICATOR TO BE VERIFIED BY BUILDING DESIGNER

BEARINGS

JT	FACTORED GROSS REACTION VERT	HORZ	MAXIMUM FACTORED GROSS REACTION DOWN	HORZ	UPLIFT	INPUT BRG IN-SX	REQRD BRG IN-SX
E	377	0	377	0	0	3-0	1-8
C	134	0	134	0	0	1-8	1-8
D	34	0	39	0	0	1-8	1-8

SEE MITEK STANDARD DETAIL B97791H FOR CONNECTION TO JOINT(S) C , D

UNFACTORED REACTIONS

JT	1ST LCASE COMBINED	MAX./MIN. COMPONENT REACTIONS SNOW	LIVE	PERM.LIVE	WIND	DEAD	SOIL
E	266	176 / 0	0 / 0	0 / 0	0 / 0	91 / 0	0 / 0
C	93	72 / 0	0 / 0	0 / 0	0 / 0	21 / 0	0 / 0
D	28	0 / 0	0 / 0	0 / 0	0 / 0	28 / 0	0 / 0

BEARING MATERIAL TO BE SPF NO.2 OR BETTER AT JOINT(S) E

BRACING

TOP CHORD TO BE SHEATHED OR MAX. PURLIN SPACING = 6.25 FT.
MAX. UNBRACED BOTTOM CHORD LENGTH = 10.00 FT OR RIGID CEILING DIRECTLY APPLIED.

ALL PITCH BREAKS AND PERIMETER CORNER JOINTS MUST BE LATERALLY RESTRAINED.

LOADING

TOTAL LOAD CASES: (4)

CHORDS MEMB. FR-TO	MAX. FACTORED FORCE (LBS)	FACTORED VERT. LOAD (PLF) FROM	TO	LC1 MAX CSI (LC)	MAX. UNBRAC LENGTH	WEBS MEMB. FR-TO	MAX. FACTORED FORCE (LBS)	MAX CSI (LC)
E- B	-327 / 0	0.0	0.0	0.09 (4)	7.81			
A- B	0 / 13	-78.0	-78.0	0.10 (1)	10.00			
B- C	-11 / 0	-78.0	-78.0	0.28 (1)	6.25			
E- D	0 / 0	-18.5	-18.5	0.09 (4)	10.00			

[M]

DESIGN CRITERIA

SPECIFIED LOADS:

TOP	CH.	LL	=	21.0	PSF
		DL	=	6.0	PSF
BOT	CH.	LL	=	0.0	PSF
		DL	=	7.4	PSF
TOTAL	LOAD		=	34.4	PSF

SPACING = 24.0 IN. C/C

THIS TRUSS IS DESIGNED FOR RESIDENTIAL OR SMALL BUILDING REQUIREMENTS OF PART 9, NBCC 2015

THIS DESIGN COMPLIES WITH:
- PART 9 OF BCBC 2018 , ABC 2019
- PART 9 OF OBC 2012 (2019 AMENDMENT)
- CSA 086-14
- TPIC 2014

DESIGN ASSUMPTIONS
-OVERHANG NOT TO BE ALTERED OR CUT OFF.

(55 % OF 23.0 P.S.F. G.S.L. PLUS 8.4 P.S.F. RAIN LOAD) EQUALS 21.0 P.S.F. SPECIFIED ROOF LIVE LOAD

ALLOWABLE DEFL.(LL)= L/360 (0.19")
CALCULATED VERT. DEFL.(LL) = L/ 999 (0.00")
ALLOWABLE DEFL.(TL)= L/360 (0.19")
CALCULATED VERT. DEFL.(TL) = L/ 999 (0.01")

CSI: TC=0.28/1.00 (B-C:1) , BC=0.09/1.00 (D-E:4) , WB=0.00/1.00 (n/a:0) , SSI=0.17/1.00 (B-C:1)

DOL LUMBER=1.00 NAIL=1.00 LS BEND=1.10 COMP=1.10 SHEAR=1.10 TENS= 1.10

COMPANION LIVE LOAD FACTOR = 1.00

TRUSS PLATE MANUFACTURER IS NOT RESPONSIBLE FOR QUALITY CONTROL IN THE TRUSS MANUFACTURING PLANT .

NAIL VALUES

PLATE	GRIP(DRY) (PSI) MAX	MIN	SHEAR (PLI) MAX	MIN	SECTION (PLI) MAX	MIN
MT20	650	371	1747	788	1987	1873

PLATE PLACEMENT TOL. = 0.250 inches

PLATE ROTATION TOL. = 5.0 Deg.

JSI GRIP= 0.20 (E) (INPUT = 0.90)
JSI METAL= 0.05 (E) (INPUT = 1.00)

JOB NAME	TRUSS NAME	QUANTITY	PLY	JOB DESC.	DRWG NO.
336333	P05		1	TRUSS DESC. JT 45147	E21104325

Alpa Roof Truss, Maple

Version 8.420 S Jan 21 2021 MiTek Industries, Inc. Thu Oct 14 10:57:18 2021 Page 1

ID:hd511hZTz_bdeQoS817GKByhVxV-RLZsrxDHmOKxhS4XgoRbV6fFygoranmiNiU0COyTXSl

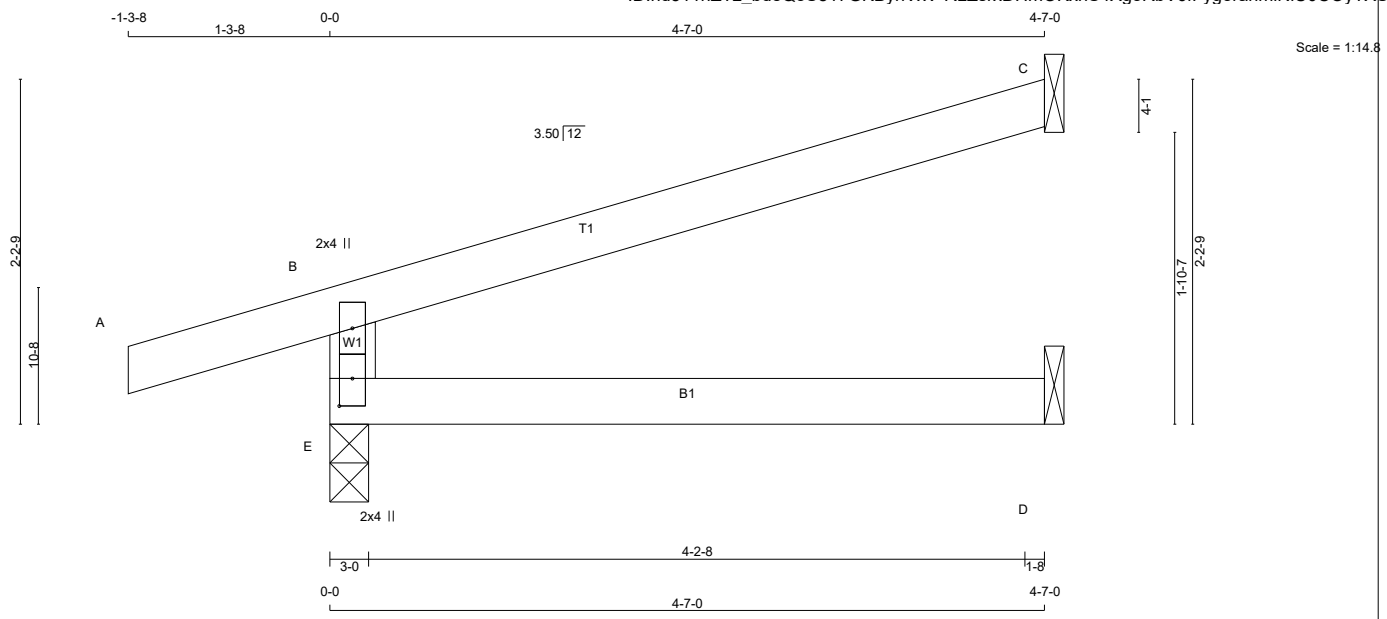

TOTAL WEIGHT = 12 X 13 = 153 lb

[M]

LUMBER

N. L. G. A. RULES

CHORDS	SIZE		LUMBER	DESCR.
E - B	2x4	DRY	No.2	SPF
A - C	2x4	DRY	No.2	SPF
E - D	2x4	DRY	No.2	SPF

DRY: SEASONED LUMBER.

PLATES (table is in inches)

JT	TYPE	PLATES	W	LEN	Y	X
B	TMV+p	MT20	2.0	4.0		
E	BMV1+p	MT20	2.0	4.0	2.00	1.00

LATERAL BRACE(S) SHOWN SHALL BE 2X4 SPF#2

DIMENSIONS, SUPPORTS AND LOADINGS SPECIFIED BY FABRICATOR TO BE VERIFIED BY BUILDING DESIGNER

BEARINGS

JT	FACTORED GROSS REACTION VERT	HORZ	MAXIMUM FACTORED GROSS REACTION DOWN	HORZ	UPLIFT	INPUT BRG IN-SX	REQRD BRG IN-SX
E	377	0	377	0	0	3-0	1-8
C	134	0	134	0	0	1-8	1-8
D	35	0	39	0	0	1-8	1-8

SEE MITEK STANDARD DETAIL B97791H FOR CONNECTION TO JOINT(S) C , D

UNFACTORED REACTIONS

JT	1ST LCASE COMBINED	MAX./MIN. COMPONENT REACTIONS SNOW	LIVE	PERM.LIVE	WIND	DEAD	SOIL
E	267	176 / 0	0 / 0	0 / 0	0 / 0	90 / 0	0 / 0
C	93	72 / 0	0 / 0	0 / 0	0 / 0	21 / 0	0 / 0
D	28	0 / 0	0 / 0	0 / 0	0 / 0	28 / 0	0 / 0

BEARING MATERIAL TO BE SPF NO.2 OR BETTER AT JOINT(S) E

BRACING

TOP CHORD TO BE SHEATHED OR MAX. PURLIN SPACING = 6.25 FT.
MAX. UNBRACED BOTTOM CHORD LENGTH = 10.00 FT OR RIGID CEILING DIRECTLY APPLIED.

ALL PITCH BREAKS AND PERIMETER CORNER JOINTS MUST BE LATERALLY RESTRAINED.

LOADING

TOTAL LOAD CASES: (4)

CHORDS

MEMB. FR-TO	MAX. FACTORED FORCE (LBS)	FACTORED VERT. LOAD (PLF) FROM	TO	LC1 MAX CSI (LC)	MAX. UNBRAC LENGTH
E- B	-327 / 0	0.0	0.0	0.08 (4)	7.81
A- B	0 / 15	-78.0	-78.0	0.10 (1)	10.00
B- C	-12 / 0	-78.0	-78.0	0.28 (1)	6.25
E- D	0 / 0	-18.5	-18.5	0.08 (4)	10.00

WEBS

MEMB. FR-TO	MAX. FACTORED FORCE (LBS)	MAX CSI (LC)

DESIGN CRITERIA

SPECIFIED LOADS:

TOP CH.	LL	=	21.0	PSF
	DL	=	6.0	PSF
BOT CH.	LL	=	0.0	PSF
	DL	=	7.4	PSF
TOTAL LOAD		=	34.4	PSF

SPACING = 24.0 IN. C/C

THIS TRUSS IS DESIGNED FOR RESIDENTIAL OR SMALL BUILDING REQUIREMENTS OF PART 9, NBCC 2015

THIS DESIGN COMPLIES WITH:
- PART 9 OF BCBC 2018 , ABC 2019
- PART 9 OF OBC 2012 (2019 AMENDMENT)
- CSA 086-14
- TPIC 2014

DESIGN ASSUMPTIONS
-OVERHANG NOT TO BE ALTERED OR CUT OFF.

(55 % OF 23.0 P.S.F. G.S.L. PLUS 8.4 P.S.F. RAIN LOAD) EQUALS 21.0 P.S.F. SPECIFIED ROOF LIVE LOAD

ALLOWABLE DEFL.(LL)= L/360 (0.19")
CALCULATED VERT. DEFL.(LL) = L/ 999 (0.00")
ALLOWABLE DEFL.(TL)= L/360 (0.19")
CALCULATED VERT. DEFL.(TL) = L/ 999 (0.01")

CSI: TC=0.28/1.00 (B-C:1) , BC=0.08/1.00 (D-E:4) , WB=0.00/1.00 (n/a:0) , SSI=0.17/1.00 (B-C:1)

DOL LUMBER=1.00 NAIL=1.00 LS BEND=1.10 COMP=1.10 SHEAR=1.10 TENS= 1.10

COMPANION LIVE LOAD FACTOR = 1.00

AUTOSOLVE RIGHT HEEL ONLY

TRUSS PLATE MANUFACTURER IS NOT RESPONSIBLE FOR QUALITY CONTROL IN THE TRUSS MANUFACTURING PLANT .

NAIL VALUES

PLATE	GRIP(DRY) (PSI) MAX	MIN	SHEAR (PLI) MAX	MIN	SECTION (PLI) MAX	MIN
MT20	650	371	1747	788	1987	1873

PLATE PLACEMENT TOL. = 0.250 inches

PLATE ROTATION TOL. = 5.0 Deg.

JSI GRIP= 0.17 (B) (INPUT = 0.90)
JSI METAL= 0.09 (B) (INPUT = 1.00)

JOB NAME	TRUSS NAME	QUANTITY	PLY	JOB DESC.		DRWG NO.
336333	P06		1	TRUSS DESC.	JT 45147	E21104326

Alpa Roof Truss, Maple

Version 8.420 S Jan 21 2021 MiTek Industries, Inc. Thu Oct 14 10:57:20 2021 Page 1

ID:hd511hZTz_bdeQoS817GKByhVxV-NjhdGdEXI?bewlEwoCU3aXkc8UVr2hG?r0z7GGyTXSj

Scale = 1:13.3

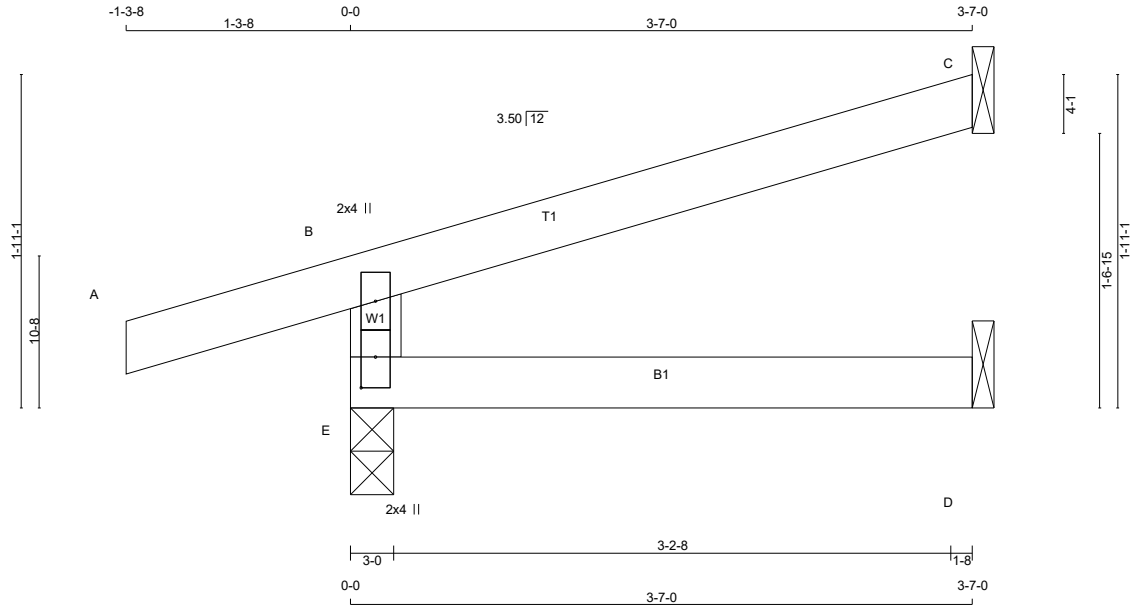

TOTAL WEIGHT = 12 X 10 = 125 lb

[M]

LUMBER

N. L. G. A. RULES

CHORDS	SIZE		LUMBER	DESCR.
E - B	2x4	DRY	No.2	SPF
A - C	2x4	DRY	No.2	SPF
E - D	2x4	DRY	No.2	SPF

DRY: SEASONED LUMBER.

PLATES (table is in inches)

JT	TYPE	PLATES	W	LEN	Y	X
B	TMV+p	MT20	2.0	4.0		
E	BMV1+p	MT20	2.0	4.0	2.00	1.00

LATERAL BRACE(S) SHOWN SHALL BE 2X4 SPF#2

DIMENSIONS, SUPPORTS AND LOADINGS SPECIFIED BY FABRICATOR TO BE VERIFIED BY BUILDING DESIGNER

BEARINGS

JT	FACTORED GROSS REACTION VERT	HORZ	MAXIMUM FACTORED GROSS REACTION DOWN	HORZ	UPLIFT	INPUT BRG IN-SX	REQRD BRG IN-SX
E	317	0	317	0	0	3-0	1-8
C	105	0	105	0	0	1-8	1-8
D	28	0	31	0	0	1-8	1-8

SEE MITEK STANDARD DETAIL B97791H FOR CONNECTION TO JOINT(S) C , D

UNFACTORED REACTIONS

JT	1ST LCASE COMBINED	MAX./MIN. COMPONENT REACTIONS SNOW	LIVE	PERM.LIVE	WIND	DEAD	SOIL
E	224	150 / 0	0 / 0	0 / 0	0 / 0	74 / 0	0 / 0
C	73	56 / 0	0 / 0	0 / 0	0 / 0	16 / 0	0 / 0
D	22	0 / 0	0 / 0	0 / 0	0 / 0	22 / 0	0 / 0

BEARING MATERIAL TO BE SPF NO.2 OR BETTER AT JOINT(S) E

BRACING

TOP CHORD TO BE SHEATHED OR MAX. PURLIN SPACING = 10.00 FT.
MAX. UNBRACED BOTTOM CHORD LENGTH = 10.00 FT OR RIGID CEILING DIRECTLY APPLIED.

ALL PITCH BREAKS AND PERIMETER CORNER JOINTS MUST BE LATERALLY RESTRAINED.

LOADING

TOTAL LOAD CASES: (7)

CHORDS MEMB.	MAX. FACTORED FORCE (LBS)	FACTORED VERT. LOAD (PLF) FROM	TO	LC1 MAX CSI (LC)	WEBS MAX. UNBRAC LENGTH	MEMB. FR-TO	MAX. FACTORED FORCE (LBS)	MAX CSI (LC)
FR-TO								
E- B	-278 / 0	0.0	0.0	0.05 (4)	7.81			
A- B	0 / 15	-78.0	-78.0	0.11 (5)	10.00			
B- C	-10 / 0	-78.0	-78.0	0.17 (6)	10.00			
E- D	0 / 0	-18.5	-18.5	0.05 (4)	10.00			

CANTILEVER ANALYSIS HAS BEEN CONSIDERED IN THIS DESIGN

PATTERN-LOADING CHECK APPLIED TO THIS TRUSS.

DESIGN CRITERIA

SPECIFIED LOADS:

TOP CH.	LL	=	21.0	PSF
	DL	=	6.0	PSF
BOT CH.	LL	=	0.0	PSF
	DL	=	7.4	PSF
TOTAL LOAD		=	34.4	PSF

SPACING = 24.0 IN. C/C

THIS TRUSS IS DESIGNED FOR RESIDENTIAL OR SMALL BUILDING REQUIREMENTS OF PART 9, NBCC 2015

THIS DESIGN COMPLIES WITH:
- PART 9 OF BCBC 2018 , ABC 2019
- PART 9 OF OBC 2012 (2019 AMENDMENT)
- CSA 086-14
- TPIC 2014

DESIGN ASSUMPTIONS
-OVERHANG NOT TO BE ALTERED OR CUT OFF.

(55 % OF 23.0 P.S.F. G.S.L. PLUS 8.4 P.S.F. RAIN LOAD) EQUALS 21.0 P.S.F. SPECIFIED ROOF LIVE LOAD

ALLOWABLE DEFL.(LL)= L/360 (0.19")
CALCULATED VERT. DEFL.(LL) = L/ 999 (0.00")
ALLOWABLE DEFL.(TL)= L/360 (0.19")
CALCULATED VERT. DEFL.(TL) = L/ 999 (0.00")

CSI: TC=0.17/1.00 (B-C:6) , BC=0.05/1.00 (D-E:4) , WB=0.00/1.00 (n/a:0) , SSI=0.13/1.00 (B-C:6)

DOL LUMBER=1.00 NAIL=1.00 LS BEND=1.10 COMP=1.10 SHEAR=1.10 TENS= 1.10

COMPANION LIVE LOAD FACTOR = 1.00

TRUSS PLATE MANUFACTURER IS NOT RESPONSIBLE FOR QUALITY CONTROL IN THE TRUSS MANUFACTURING PLANT .

NAIL VALUES

PLATE	GRIP(DRY) (PSI) MAX	MIN	SHEAR (PLI) MAX	MIN	SECTION (PLI) MAX	MIN
MT20	650	371	1747	788	1987	1873

PLATE PLACEMENT TOL. = 0.250 inches

PLATE ROTATION TOL. = 5.0 Deg.

JSI GRIP= 0.15 (B) (INPUT = 0.90)
JSI METAL= 0.07 (B) (INPUT = 1.00)

TECHNICAL BULLETIN

LUS – Double Shear Joist Hangers

SIMPSON Strong-Tie®

All LUS hangers have double shear nailing. This patented innovation distributes the load through two points on each joist nail for greater strength. It also allows the use of fewer nails, faster installation and the use of common nails for all connections.

Material: 18 gauge

Finish: G90 galvanized

Design:

- Factored resistances are in accordance with CSA O86-14.
- Uplift resistances have been increased 15%. No further increase is permitted.
- Wood shear is not considered in the factored resistances given. The specifier must ensure that the joist and header capacities are capable of withstanding these loads.

Installation:

- Use all specified fasteners.
- Nails: 16d = 0.162" dia. x 3½" long common wire, 10d = 0.148" x 3" long common wire.
- Double shear nails must be driven at an angle through the joist or truss into the header to achieve the table loads.
- Not designed for welded or nailer applications.

Options:

- These hangers cannot be modified

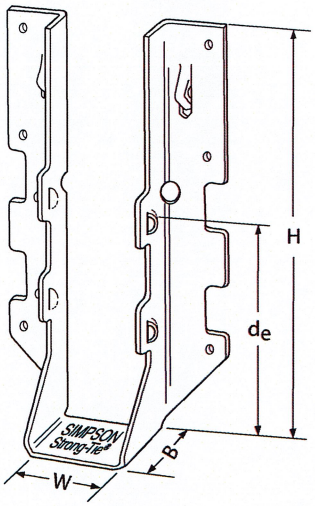

LUS28

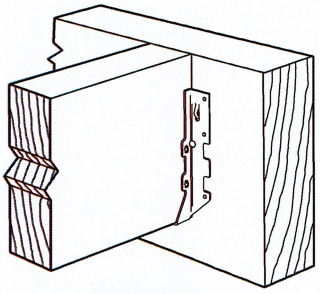

Typical LUS Installation

Model No.	Ga.	Dimensions (in.)				Fasteners		Factored Resistance (lb.)			
								D.Fir-L		S-P-F	
		W	H	B	d_e[1]	Face	Joist	Uplift (K_D=1.15)	Normal (K_D=1.00)	Uplift (K_D=1.15)	Normal (K_D=1.00)
LUS24	18	1 9/16	3 1/8	1 3/4	1 15/16	(4) 10d	(2) 10d	710	1630	645	1155
LUS24-2	18	3 1/8	3 1/8	2	1 13/16	(4) 16d	(2) 16d	835	2020	590	1435
LUS26	18	1 9/16	4 3/4	1 3/4	3 5/8	(4) 10d	(4) 10d	1420	2170	1290	1630
LUS26-2	18	3 1/8	4 7/8	2	4	(4) 16d	(4) 16d	1720	2595	1545	1920
LUS26-3	18	4 5/8	4 3/16	2	3 1/4	(4) 16d	(4) 16d	1720	2595	1545	2340
LUS28	18	1 9/16	6 5/8	1 3/4	3 3/4	(6) 10d	(6) 10d	1420	2520	1290	1790
LUS28-2	18	3 1/8	7	2	4	(6) 16d	(4) 16d	1720	3325	1545	2575
LUS28-3	18	4 5/8	6 1/4	2	3 1/4	(6) 16d	(4) 16d	1720	3325	1545	2375
LUS210	18	1 9/16	7 13/16	1 3/4	3 7/8	(8) 10d	(4) 10d	1420	2785	1290	2210
LUS210-2	18	3 1/8	9	2	6	(8) 16d	(6) 16d	2580	4500	2320	3195
LUS210-3	18	4 5/8	8 3/16	2	5 1/4	(8) 16d	(6) 16d	2580	3345	2320	2375

1. d_e is the distance from the seat of the hanger to the highest joist nail.

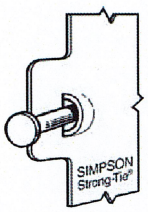

Dome Double Shear Nailing prevents tabs breaking off (available on some models).

U.S. Patent 5,603,580

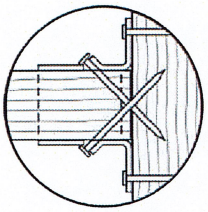

Double Shear Nailing Top View.

LICENSED PROFESSIONAL ENGINEER
04/01/2020
B. D. BUNTING
PROVINCE OF ONTARIO

LIMIT STATES DESIGN

This technical bulletin is effective until June 30, 2022, and reflects information available as of April 1, 2020. This information is updated periodically and should not be relied upon after June 30, 2022. Contact Simpson Strong-Tie for current information and limited warranty or see strongtie.com.

© 2020 Simpson Strong-Tie Company Inc.

(800) 999-5099
strongtie.com

TECHNICAL BULLETIN

HHUS – Double Shear Joist Hangers

SIMPSON Strong-Tie®

All HHUS hangers have double shear nailing. This patented innovation distributes the load through two points on each joist nail for greater strength. It also allows the use of fewer nails, faster installation and the use of common nails for all connections. Do not bend or remove tabs.

Material: 14 gauge

Finish: G90 galvanized

Design:

- Factored resistances are in accordance with CSA O86-14.
- Uplift resistances have been increased 15%. No further increase is permitted.
- Wood shear is not considered in the factored resistances given. The specifier must ensure that the joist and header capacities are capable of withstanding these loads.

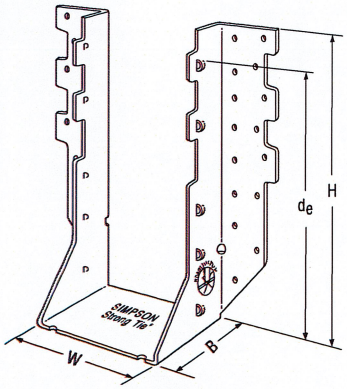

HHUS410

Installation:

- Use all specified fasteners
- Nails: 16d = 0.162" dia. x 3½" long common wire
- Double shear nails must be driven at an angle through the joist or truss into the header to achieve the table loads
- Not designed for welded or nailer applications

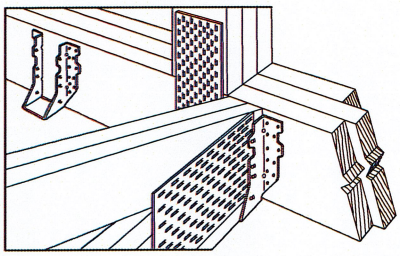

Typical HHUS Installation (Truss Designer to provide fastener quantity for connecting multiple members together)

Options:

- See current catalogue for options

Model No.	Ga.	Dimensions (in.)				Fasteners		Factored Resistance (lb.)			
								D.Fir-L		S-P-F	
		W	H	B	d_e[1]	Face	Joist	Uplift (K_D=1.15)	Normal (K_D=1.00)	Uplift (K_D=1.15)	Normal (K_D=1.00)
HHUS26-2	14	3 5/16	5 13/16	3	3 15/16	(14) 16d	(6) 16d	2850	7335	2065	5205
HHUS28-2	14	3 5/16	7 7/32	3	6 5/32	(22) 16d	(8) 16d	3765	8940	2675	6345
HHUS210-2	14	3 5/16	9 3/32	3	8	(30) 16d	(10) 16d	4670	9660	4235	7000
HHUS210-3	14	4 11/16	9	3	7 15/16	(30) 16d	(10) 16d	4670	9670	4235	6865
HHUS210-4	14	6 1/8	8 29/32	3	7 27/32	(30) 16d	(10) 16d	4670	10155	4235	7210
HHUS46	14	3 5/8	5 13/32	3	3 15/16	(14) 16d	(6) 16d	2540	7335	2065	5205
HHUS48	14	3 5/8	7 1/8	3	6 1/8	(22) 16d	(8) 16d	3765	8940	2675	6345
HHUS410	14	3 5/8	9	3	8	(30) 16d	(10) 16d	4670	9855	4235	7000
HHUS5.50/10	14	5 1/2	9	3	8	(30) 16d	(10) 16d	4670	10155	4235	7210
HHUS7.25/10	14	7 1/4	9	3 5/16	7 29/32	(30) 16d	(10) 16d	4670	10155	3370	7210

1. d_e is the distance from the seat of the hanger to the highest joist nail.

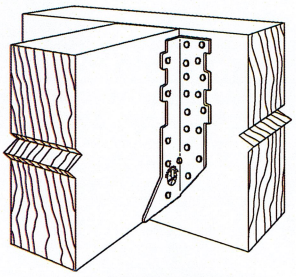

Typical HHUS Installation

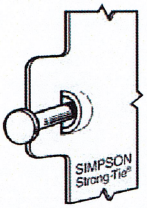

Dome Double Shear Nailing prevents tabs breaking off (available on some models).

U.S. Patent 5,603,580

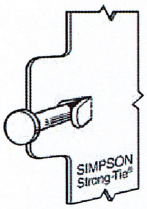

Double Shear Nailing Side View. Do not bend tab back.

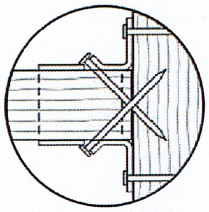

Double Shear Nailing Top View.

LIMIT STATES DESIGN

This technical bulletin is effective until June 30, 2022, and reflects information available as of April 1, 2020. This information is updated periodically and should not be relied upon after June 30, 2022. Contact Simpson Strong-Tie for current information and limited warranty or see strongtie.com.

© 2020 Simpson Strong-Tie Company Inc.

T-SPECHHUS20 3/20 exp. 6/22

(800) 999-5099
strongtie.com

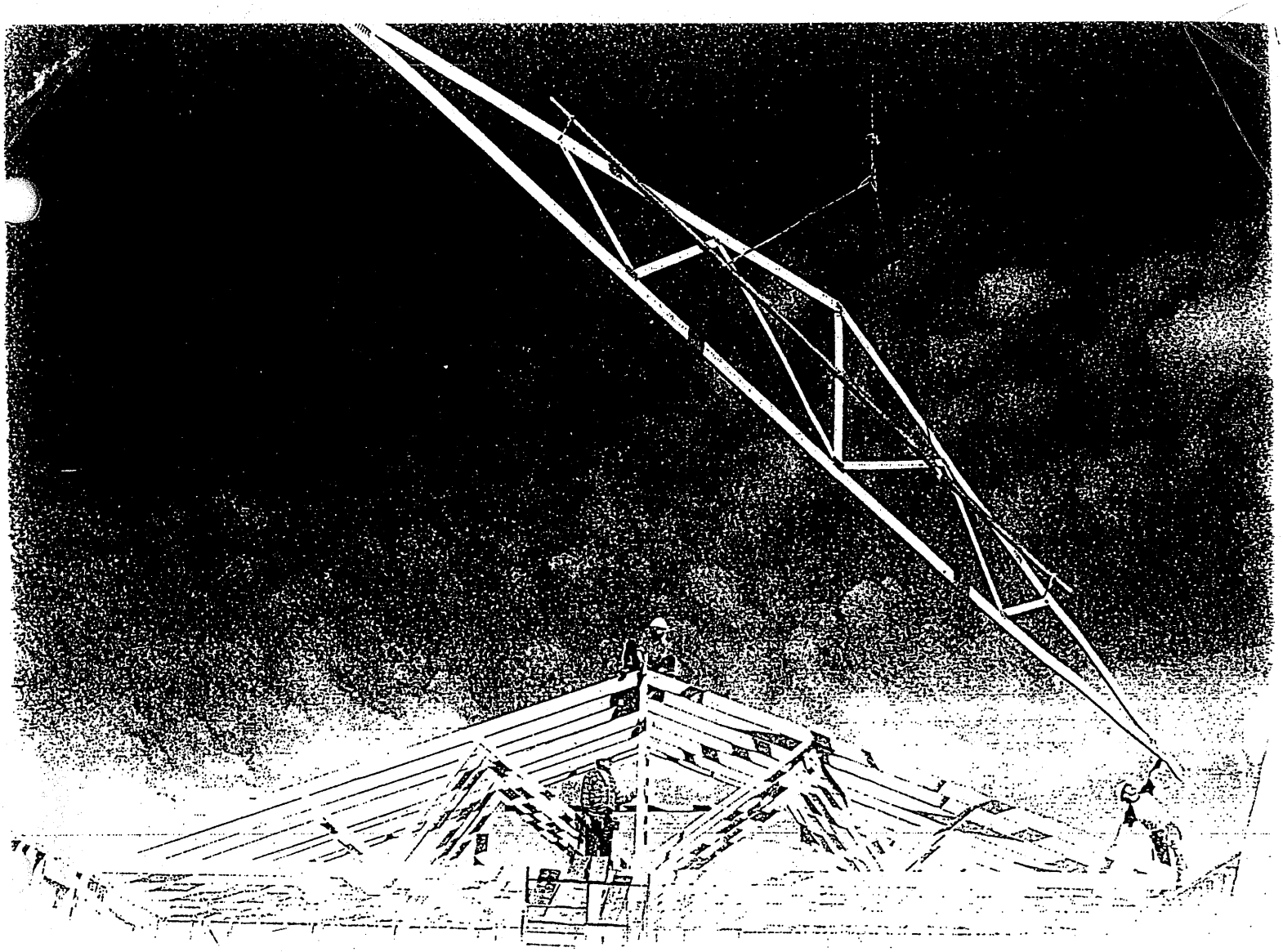

Wood Truss Installation

A Guide to proper handling, erecting and bracing metal plate connected wood trusses

Table of Content

Warning.....4

1 Unloading & Lifting.....5

2 Job Site Handling.....5

3 Hoisting.....6

4 Beginning the Erection Process.....7

5 Erection Tolerance.....8

6 Bracing.....8

7 Bracing Requirements for 3 Planes of Roof.....9

8 Stacking Materials.....10

Caution Notes.....11

Warning

General

Familiarity with the **Construction Design Documents**, the **Truss Design Drawings**, and **Truss Placement Plans** (if required by the **Construction Design Documents**) is required to properly erect, brace, and connect the trusses to the building system.

All of the care and quality involved in the design and manufacture of wood trusses can be jeopardized if the trusses are not properly handled, erected, and braced.

The consequences of improper handling, erecting, and bracing may be a collapse of the structure, which at best is a substantial loss of time and materials, and at worst is a loss of life. The majority of truss accidents occur during truss installation and not as a result of improper design or manufacture.

Prior to truss erection, the builder/erector shall meet with the erection crew for a safety and planning meeting, making sure each crew member understands his or her roles and responsibilities during the erection process.

Temporary Erection Bracing

Trusses are not marked in any way to identify the frequency, or location of temporary erection bracing.

All temporary bracing shall comply with the latest edition of *Commentary and Recommendations for Handling, Installing & Bracing Metal Plate Connected Wood Trusses* (HIB), published by the Truss Plate Institute, and/or as specified in the **Construction Design Documents** prepared by the building designer.

Permanent Truss Bracing

Permanent bracing for the roof or floor trusses is the responsibility of the building designer and should be shown on the **Construction Design Documents**. Permanent bracing locations for individual compression members of a wood truss are shown on the **Truss Design Drawings**, and shall be installed by the building or erection contractor. This bracing is needed for the proper performance of individual trusses within the roof or floor system. The design and connection of the bracing to the truss and then to the overall building system is the responsibility of the building designer, and is in addition to the permanent bracing plan, which is also specified by the building designer.

Special Design Requirements

Special design requirements, such as wind bracing, portal bracing, seismic bracing, diaphragms, shear walls, or other load transfer elements and their connections to wood trusses must be considered separately by the building designer, who shall determine size, location, and method of connections for all bracing as needed to resist these forces.

1 Unloading & Lifting

Never handle trusses flat

Beginning with the unloading process, and throughout all phases of construction, care must be taken to avoid **lateral bending** of trusses, which can cause damage to the lumber and metal connector plates at the joints.

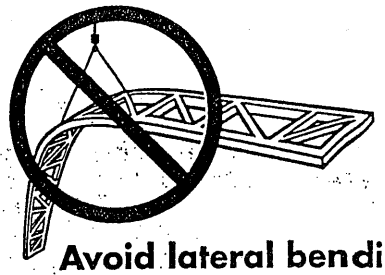

Avoid lateral bending

- **Use special care in windy weather.**
- **If using a crane within 10 feet of an electric line, contact the local power company.**
- **If using a crane within 5 miles of an airport, contact the airport 30 days prior to erection to learn about any safety regulations that must be followed.**

2 Job Site Handling

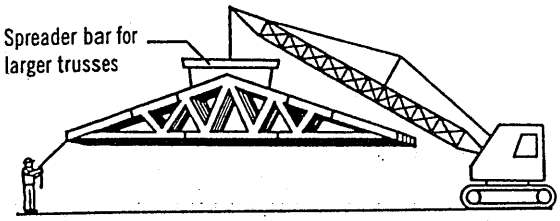

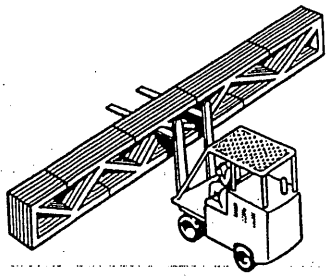

All trusses should be picked up at the top chords in a vertical position only

Proper banding and smooth ground allow for unloading of trusses without damage. This should be done as close to the building site as possible to minimize handling. **Do not** break banding until installation begins. Hand erection of trusses is allowed, provided excessive lateral bending is prevented.

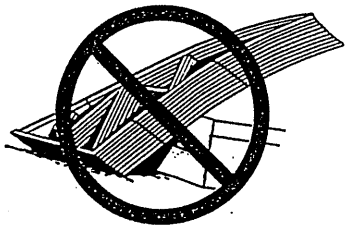

Do not store unbraced bundles upright

If trusses are stored vertically they shall be braced in a manner that will prevent tipping or topping. Generally cuting of the banding is done just prior to installation.

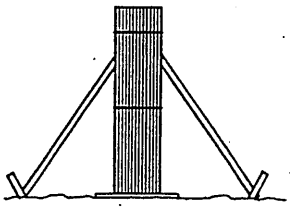

Do not store on uneven ground

If trusses are stored horizontally, blocking should be used on eight to ten foot centers, or as required, to minimize lateral bending and moisture gain.

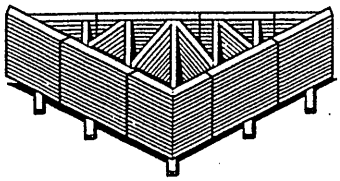

Care should be exercised when removing banding to avoid damaging trusses.

During long term storage, trusses shall be protected from the environment in a manner that provides for adequate ventilation of the trusses. If tarpaulins or other material is used, the ends shall be left open for ventilation. Plastic is not recommended, since it can trap moisture.

3 Hoisting

All trusses that are erected one at a time shall be held safely in position by the erection equipment until such time as all necessary bracing has been installed and the ends of the trusses are securely fastened to the building.

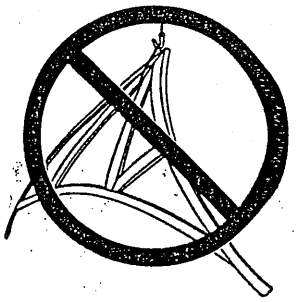

Avoid lateral bending

L ≤ 30'

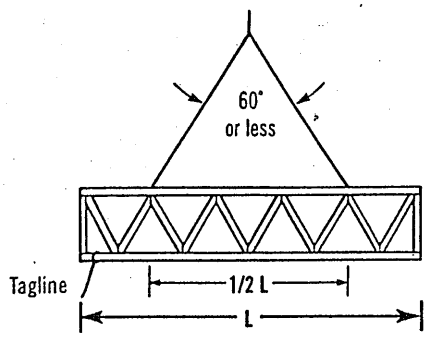

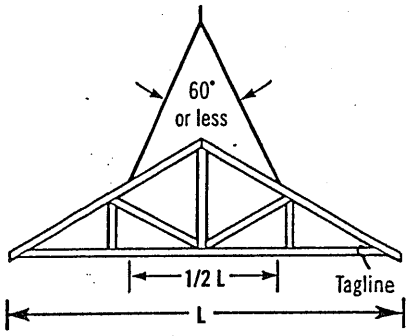

Truss sling is acceptable where these criteria are met.

30' < L ≤ 60'

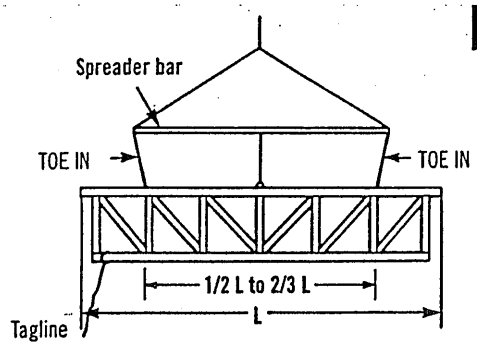

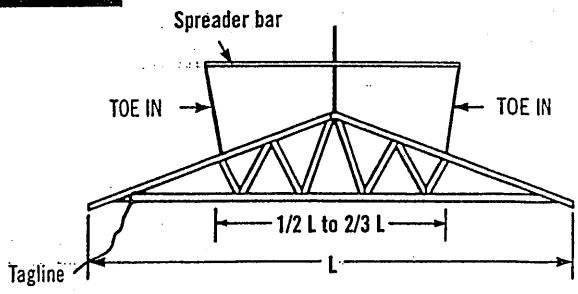

Use spreader bar in all other cases. It should be noted that the lines from the ends of the spreader bar "**TOE IN**"; if these lines should "**TOE OUT**" the truss may fold in half.

L > 60'

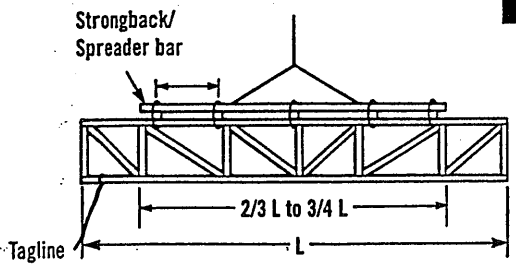

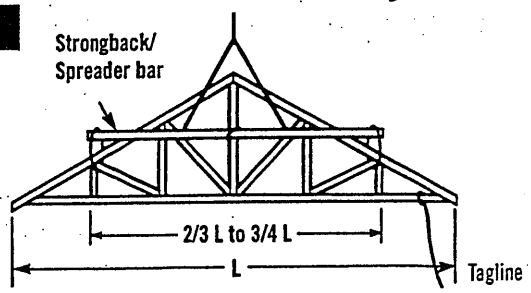

For lifting trusses with spans in excess of 60 feet, it is recommended that a strongback/spreader bar be used as illustrated. The strongback/spreader bar should be attached to the top chord and web members at intervals of approximately 10 feet. Further, the strongback/spreader bar should be at or above the mid-height of the truss to prevent overturning. The strongback/spreader bar can be of any material with sufficient strength to safely carry the weight of the truss and sufficient rigidity to adequately resist bending of the truss.

4 Beginning the Erection Process

It is important for the builder or erection contractor to provide substantial bracing for the first truss erected. The two or more trusses making up the rest of the first set are tied to and rely upon the first truss for stability. Likewise, after this first set of trusses is adequately cross-braced, the remaining trusses installed rely upon this first set for stability. Thus, the performance of the truss bracing system depends to a great extent on how well the first group of trusses is braced.

Ground Brace – Exterior

One satisfactory method ties the first unit of trusses off to a series of braces that are attached to a stake driven into the ground and securely anchored. The ground brace itself should be supported as shown below or it is apt to buckle. Additional ground braces in the opposite direction, inside the building, are also recommended.

Ground Brace – Interior

Another satisfactory method where height of building or ground conditions prohibit bracing from the exterior is to tie the first truss rigidly in place from the interior at the floor level, provided the floor is substantially completed and capable of supporting the ground bracing forces. Securely fasten the first truss to the middle of the building. Brace the bracing similar to exterior ground bracing shown at left. Set trusses from the middle toward the end of the building. Properly cross-brace the first set of trusses before removing floor braces and setting remaining trusses.

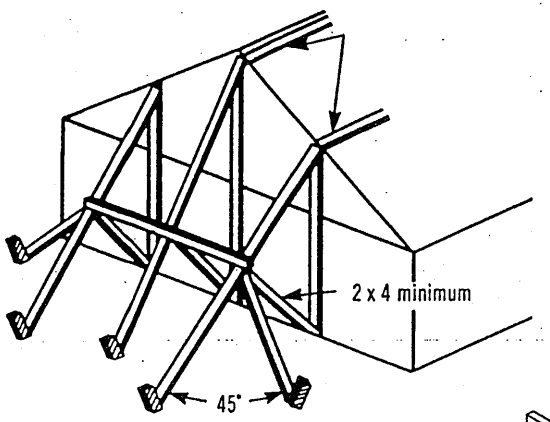

Note: Locate ground braces for first truss directly in line with all rows of top chord continuous lateral bracing (either temporary or permanent).

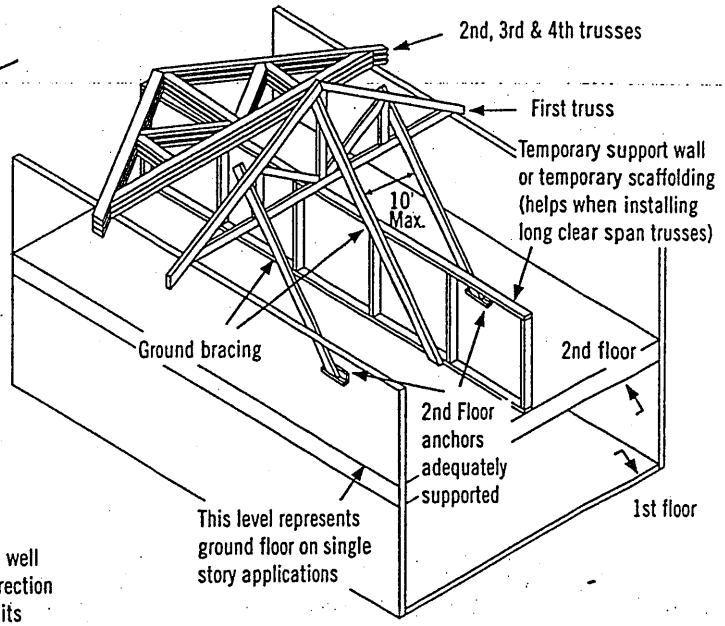

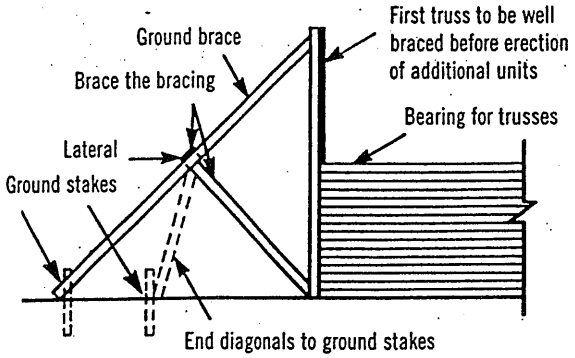

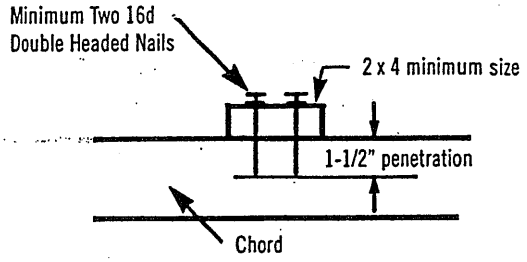

Inadequate size of bracing material or inadequate fastening is a major cause of erection dominoing.

5 Erection Tolerance

Complying with erection tolerances is critical to achieving an acceptable roof or floor line, and to accomplishing effective bracing. Setting trusses within tolerance the first time will prevent the need for the hazardous practice of respacing or adjusting trusses when roof sheathing or roof purlins are installed. Trusses leaning or bowing can cause nails to miss the top chords when sheathing is applied, and create cumulative stresses on the bracing, which is a frequent cause of dominoing.

When sheathing, make sure nails are driven into the top chord of the trusses.

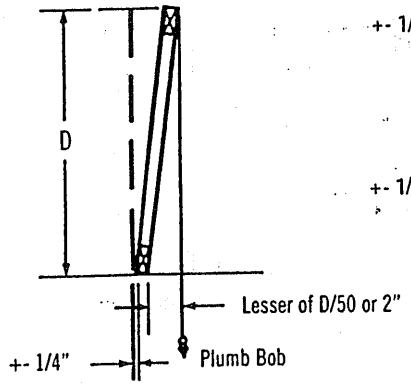

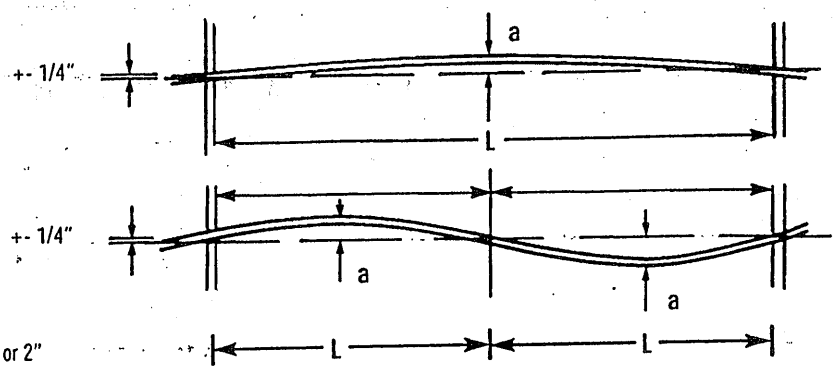

L = 16' to 32', a = 1"
L = 32' & over, a = 2"

6 Bracing

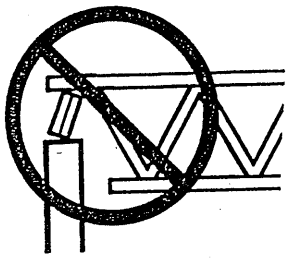

Do not install trusses on temporarily connected supports

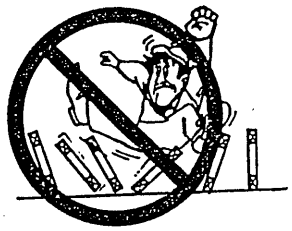

Do not walk on unbraced trusses

Do not walk on trusses or gable ends lying flat

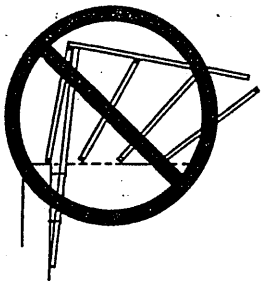

Nails in withdrawal (parallel to force)

All anchors, hangers, tie-downs, seats, bearing ledgers, etc., that are part of the supporting structure shall be accurately and properly placed and permanently attached before truss installation begins. No trusses shall ever be installed on anchors or ties that have temporary connections to the supporting structure.

Nailing scabs to the end of the building to brace the first truss is not recommended.
All nailing of bracing should be done so that nails are driven perpendicular to the direction of force, as shown at right.

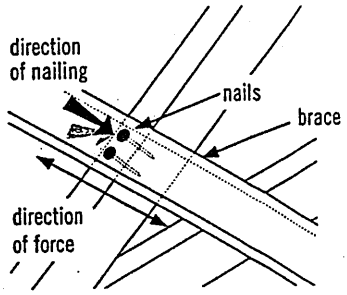

Well nailed (perpendicular to force)

7 Bracing Requirements for 3 Planes of Roof

Temporary erection bracing must be applied to three planes of the roof system to ensure stability: Plane 1) **Top Chord** (sheathing), Plane 2) **Bottom Chord** (ceiling plane), and Plane 3) **Web Member** plane or vertical plane perpendicular to trusses.

1) Top Chord Plane

Most important to the builder or erection contractor is bracing in the plane of the top chord. Truss top chords are susceptible to lateral buckling before they are braced or sheathed.

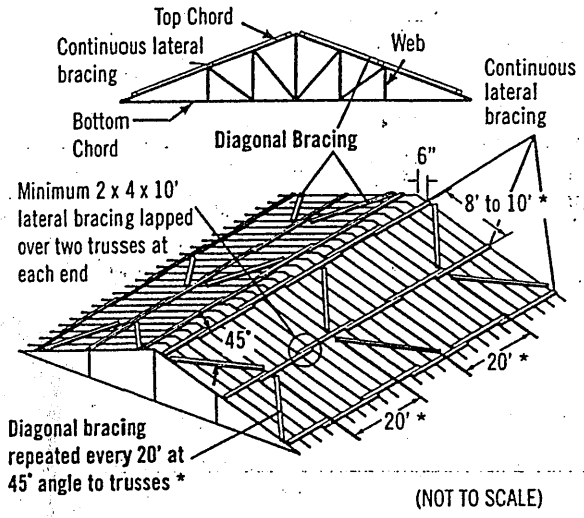

(NOT TO SCALE)

Exact spacing between trusses should be maintained as bracing is installed to avoid the hazardous practice of removing bracing to adjust spacing. This act of "adjusting spacing" can cause trusses to topple if connections are removed at the wrong time.

2) Bottom Chord Plane

In order to hold proper spacing on the bottom chord, temporary bracing is recommended on the top of the bottom chord.

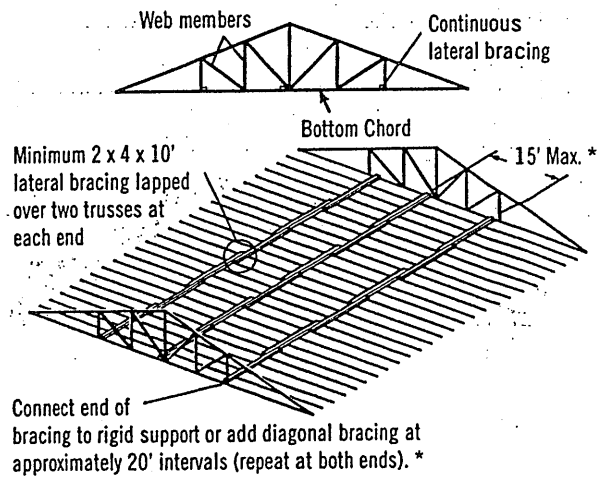

* Long spans, heavy loads or other spacing configurations may require closer spacing between lateral bracing and closer intervals between diagonals. Consult the building designer or HIB and DSB (*Recommended Design Specification for Temporary Bracing of Metal-Plate Connected Wood Trusses*) for details.

Diagonal or cross-bracing is very important!

3) Web Member Plane

"X" bracing, as shown, is critical in preventing trusses from leaning or dominoing. Repeat as shown to create a succession of rigid units.

X-bracing should be installed on vertical web members wherever possible, at or near lateral bracing. Plywood or OSB may be substituted for X-bracing.

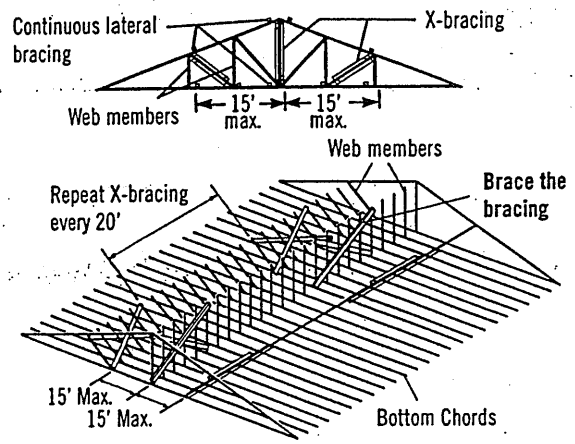

Note: Top chords and some web members are not shown, in order to make drawings more readable.

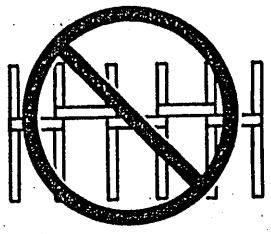

Do not use short blocks to brace individual trusses without a specific bracing plan detailing their use

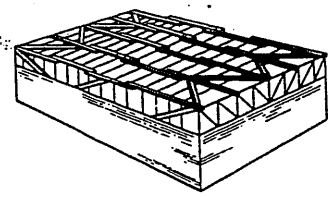

Bracing requirements using the same principles apply to parallel chord trusses

8 Stacking Materials

Do not proceed with building completion until all bracing is securely and properly in place

Never stack materials on unbraced or inadequately braced trusses

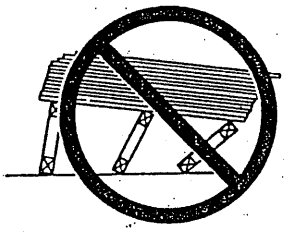

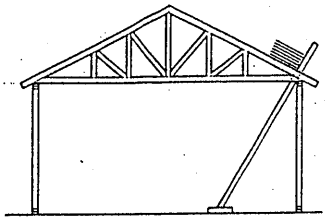

Proper distribution of construction materials is a must during construction.

Never stack materials near a peak

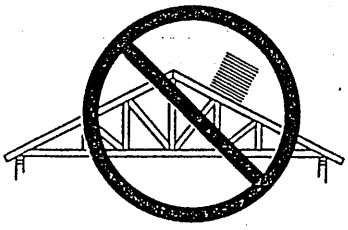

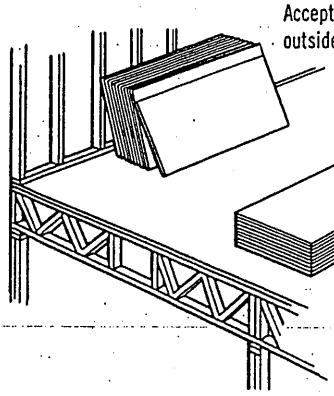

Never stack materials on the cantilever of a truss

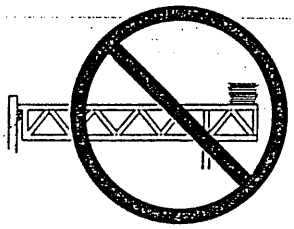

Always stack materials over two or more trusses.

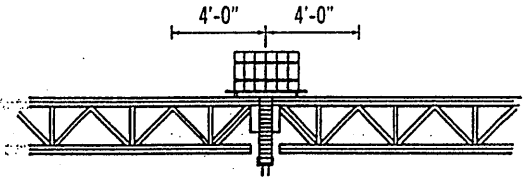

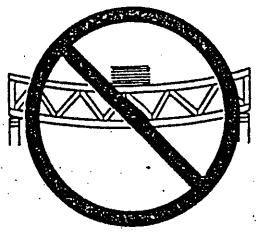

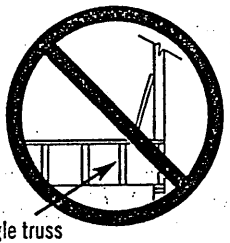

Roofing and mechanical contractors are cautioned to stack materials only along outside supporting members or directly over inside supporting members. Trusses are not designed for dynamic loads (i.e., moving vehicles). Extreme care should be taken when loading and stacking construction materials (rolled roofing, mechanical equipment, etc.) on the roof or floor system.

Never overload small groups or single trusses. Position load over as many trusses as possible.

Never cut any structural member of a truss.

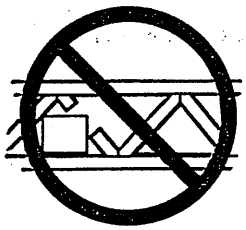

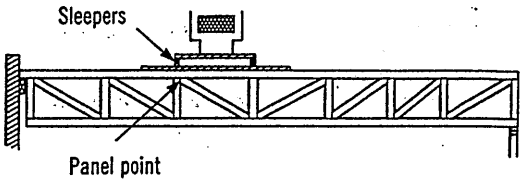

Sleepers for mechanical equipment should be located at panel points (joints) or over main supporting members, and only on trusses that have been designed for such loads.

Caution Notes

Errors in building lines and/or dimensions, or errors by others shall be corrected by the contractor or responsible construction trade subcontractor or supplier **before** erection of trusses begins.

Cutting of nonstructural overhangs is considered a part of normal erection and shall be done by the builder or erection contractor.

Any field modification that involves the cutting, drilling, or relocation of any structural truss member or connector plate shall not be done without the approval of the truss manufacturer or a licensed design professional.

The methods and procedures outlined are intended to ensure that the overall construction techniques employed will put floor and roof trusses **safely** in place in a completed structure. These recommendations for bracing wood trusses originate from the collective experience of leading technical personnel in the wood truss industry, but must, due to the nature of responsibilities involved, be presented only as a **guide** for use by a qualified building designer, builder, or erection contractor. Thus, the Wood Truss Council of America expressly disclaims any responsibility for damages arising from the use, application, or reliance on the recommendations and information contained herein.

[Selected text and figures referenced or reproduced from HIB and DSB by permission of the Truss Plate Institute, Madison, WI.]

THE CANADIAN WOOD TRUSS ASSOCIATION

L'ASSOCIATION CANADIENNE DES FABRICANTS DE FERMES DE BOIS

1400 Blair Place, Suite 210, Ottawa, ON K1J 9B8
Tel.: 613-747-5544 Fax: 613-747-6264

Wood Truss Council of America

One WTCA Center
6300 Enterprise Lane, Madison, WI 53719-1140
Tel.: 608-274-4849 Fax: 608-274-3329
wtca@woodtruss.com www.woodtruss.com