AL. A-BARRIE

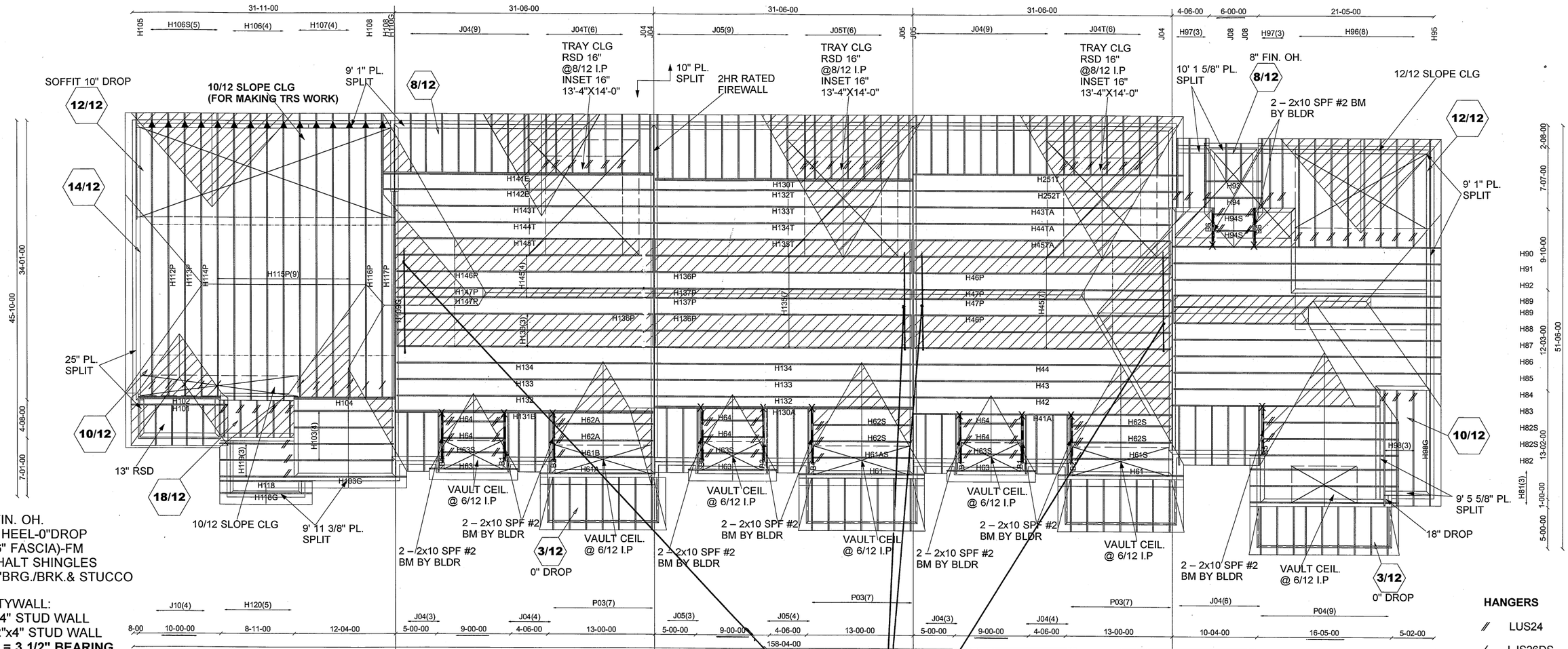

E21103987 – E21103989
E21104056 – E21104061
E21104063 – E21104066
E21104018 – E21104020
E21104024 – E21104033
E21104072 – E21104138
E21104153

BEARING SCAB REQ'D
SEE SHOP DRAWINGS.

Mitek V. 8.2.0

PL: 111206(TYP.), 114170E

ALL CONVENTIONAL FRAMING TO CONFORM WITH PART 9 O.B.C. LATEST EDITION. ROOF RAFTERS THAT CROSS OVER TRUSSES TO BE 2X4 SPF #2 @ 24" O.C WITH A VERT. POST TO THE TRUSS UNDERNEATH AT EACH CROSS POINT. VERT. POSTS LONGER THAN 6' TO HAVE LATERAL BRACING SO THAT THE DISTANCE BETWEEN END POINTS & BETWEEN ROWS OF BRACING DOES NOT EXCEED 6'

CONVEN FRAMING OTHERS

Job Track: 45147	Builder / Location: GOLD PARK HOMES / VAUGHAN	Model / Elevation: BLOCK 4 / UNIT 1-5	
Layout ID: 336324	Project: PINE VALLEY		
Plan Log: 113123	Date: 9/28/2021	Designer: JBURROWS/C	

THESE DRAWINGS CONSTITUTE THE PROPERTY OF ALPA ROOF TRUSSES INC., SHALL NOT BE REPRODUCED, PUBLISHED, OR REDISTRIBUTED IN ANY MANNER OR UTILIZED FOR ANY PURPOSE OTHER THAN THE MANUFACTURE OF TRUSSES BY ALPA ROOF TRUSSES INC AND WILL BE RETRACTED BY ALPA ROOF TRUSSES INC IF UTLILZED FOR ANY OTHER PURPOSE.

EWP DESIGN INC.

(905) 832-2250 FAX (905) 832-0286

RESPONSIBILITIES AND SPECIFICATIONS

RESPONSIBILITIES

1. EWP DESIGN INC. is responsible for the design of trusses as individual components.
2. It is the responsibility of others to ascertain that the design loads utilized on each drawing meet or exceed the actual dead load imposed by the structure, the live load imposed by the intended use and the snow load imposed by local building code or authorities with jurisdictions.
3. All dimensions are to be verified by the owner, contractor, architect or other authorities with jurisdictions before truss fabrication.
4. EWP DESIGN INC. bears no responsibility for the erection of trusses. Persons erecting trusses are cautioned to seek professional advice regarding the temporary and permanent bracing for the system. Bracing shown on EWP DESIGN INC. drawing is specified for the truss as a component only and forms an integral part of the truss design.
5. It is the truss manufacturer's responsibility to ensure that trusses are manufactured in conformance with specifications of EWP DESIGN INC. as outlined below.

SPECIFICATIONS

1. Trusses designed by EWP DESIGN INC. conform to the relevant section of the Ontario Building Code of Canada (Part 9 or Part 4) or to the Canadian code for farm buildings, whichever applies to the building type, as indicated on the EWP DESIGN INC. drawings, and conform to the design procedures established by the Truss Plate Institute of Canada. Unit stresses used for truss designs are as per the edition of CSA-O86 shown on EWP DESIGN INC. drawings.
2. Lumber is to be the size, species and grade as specified on EWP DESIGN INC. drawings.
3. Moisture content of lumber shall not exceed 19% in service unless specified otherwise.
4. Metal connector plates shall be applied to both faces of truss at each joint and shall be positioned as specified.
5. Top chords of trusses are assumed to be continuously braced laterally by roof sheathing or by purlins at intervals not exceeding 12.5 times the thickness of top chord member.
6. Bottom chords shall be laterally braced at intervals not exceeding 3M (10') o.c., where rigid ceiling is not applied directly to the underside of chords.

THESE DRAWINGS CONSTITUTE THE PROPERTY OF EWP DESIGN INC., SHALL NOT BE REPRODUCED, PUBLISHED, OR REDISTRIBUTED IN ANY MANNER OR UTILIZED FOR ANY PURPOSE OTHER THAN THE MANUFACTURE OF TRUSSES BY THE ALPA LUMBER GROUP, AND WILL BE RETRACTED BY EWP DESIGN INC. IF UTILIZED FOR ANY OTHER PURPOSE.

JOB NAME	TRUSS NAME	QUANTITY	PLY	JOB DESC.	DRWG NO.
336321	H42		1	TRUSS DESC. JT 45147	E21103987

Alpha Roof Truss, Maple

Version 8.420 S Jan 21 2021 MiTek Industries, Inc. Wed Oct 13 10:30:51 2021 Page 1

ID:hd511hZTz_bdeQoS817GKByhVxV-A4Y9I7O7qNvGIkA8nSPJyR?nuavUaqDooACeWlyTsxY

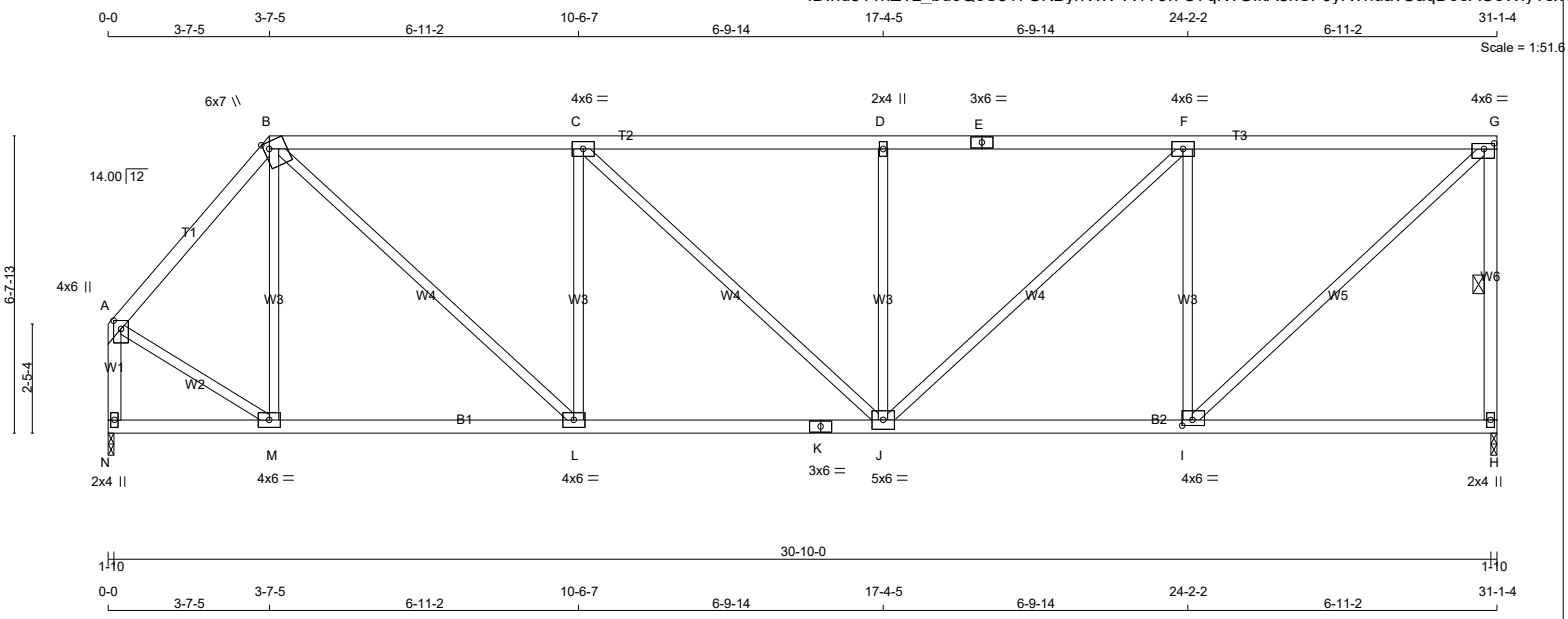

TOTAL WEIGHT = 135 lb [M]

LUMBER

N. L. G. A. RULES

CHORDS	SIZE		LUMBER	DESCR.
A - B	2x4	DRY	No.2	SPF
B - E	2x4	DRY	No.2	SPF
E - G	2x4	DRY	No.2	SPF
H - G	2x4	DRY	No.2	SPF
N - A	2x4	DRY	No.2	SPF
N - K	2x4	DRY	No.2	SPF
K - H	2x4	DRY	No.2	SPF
ALL WEBS EXCEPT	2x3	DRY	No.2	SPF

DRY: SEASONED LUMBER.

PLATES (table is in inches)

JT	TYPE	PLATES	W	LEN	Y	X
A	TMVW+p	MT20	4.0	6.0	2.25	2.00
B	TTWW+m	MT20	6.0	7.0	Edge	1.50
C	TMWW-t	MT20	4.0	6.0		
D	TMW+w	MT20	2.0	4.0		
E	TS-t	MT20	3.0	6.0		
F	TMWW-t	MT20	4.0	6.0		
G	TMVW-t	MT20	4.0	6.0	1.50	2.75
H	BMV1+p	MT20	2.0	4.0		
I	BMWW-t	MT20	4.0	6.0	1.50	2.75
J	BMWWW-t	MT20	5.0	6.0		
K	BS-t	MT20	3.0	6.0		
L	BMWW-t	MT20	4.0	6.0		
M	BMWW-t	MT20	4.0	6.0		
N	BMV1+p	MT20	2.0	4.0		

Edge - INDICATES REFERENCE CORNER OF PLATE TOUCHES EDGE OF CHORD.

LATERAL BRACE(S) SHOWN SHALL BE 2X4 SPF#2

DIMENSIONS, SUPPORTS AND LOADINGS SPECIFIED BY FABRICATOR TO BE VERIFIED BY BUILDING DESIGNER

BEARINGS

JT	FACTORED GROSS REACTION VERT	HORZ	MAXIMUM FACTORED GROSS REACTION DOWN	HORZ	UPLIFT	INPUT BRG IN-SX	REQRD BRG IN-SX
H	1500	0	1500	0	0	1-10	1-10
N	1500	0	1500	0	0	1-10	1-10

UNFACTORED REACTIONS

JT	1ST LCASE COMBINED	MAX./MIN. COMPONENT REACTIONS SNOW	LIVE	PERM.LIVE	WIND	DEAD	SOIL
H	1070	653 / 0	0 / 0	0 / 0	0 / 0	417 / 0	0 / 0
N	1070	653 / 0	0 / 0	0 / 0	0 / 0	417 / 0	0 / 0

BEARING MATERIAL TO BE SPF NO.2 OR BETTER AT JOINT(S) H, N

BRACING

TOP CHORD TO BE SHEATHED OR MAX. PURLIN SPACING = 4.08 FT.
MAX. UNBRACED BOTTOM CHORD LENGTH = 10.00 FT OR RIGID CEILING DIRECTLY APPLIED.

ALL PITCH BREAKS AND PERIMETER CORNER JOINTS MUST BE LATERALLY RESTRAINED.

1 LATERAL BRACE(S) AT 1/ 2 LENGTH OF G-H.

END VERTICAL(S) MUST BE SHEATHED OR HAVE BRACES AS INDICATED IN THE MAX. UNBRACED LENGTH COLUMN OF THE TABLE BELOW

LOADING

TOTAL LOAD CASES: (4)

CHORDS

MEMB. FR-TO	MAX. FACTORED FORCE (LBS)	FACTORED VERT. LOAD (PLF) FROM	TO	LC1 CSI (LC)	MAX UNBRAC LENGTH
A- B	-1195 / 0	-78.0	-78.0	0.21 (1)	5.62
B- C	-1715 / 0	-78.0	-78.0	0.70 (1)	4.24
C- D	-1857 / 0	-78.0	-78.0	0.71 (1)	4.09
D- E	-1857 / 0	-78.0	-78.0	0.71 (1)	4.08
E- F	-1857 / 0	-78.0	-78.0	0.71 (1)	4.08
F- G	-1345 / 0	-78.0	-78.0	0.65 (1)	4.71
H- G	-1449 / 0	0.0	0.0	0.29 (1)	5.43
N- A	-1482 / 0	0.0	0.0	0.19 (1)	6.73
N- M	0 / 0	-18.5	-18.5	0.13 (4)	10.00
M- L	0 / 768	-18.5	-18.5	0.25 (4)	10.00
L- K	0 / 1716	-18.5	-18.5	0.37 (1)	10.00
K- J	0 / 1716	-18.5	-18.5	0.37 (1)	10.00
J- I	0 / 1345	-18.5	-18.5	0.34 (4)	10.00
I- H	0 / 0	-18.5	-18.5	0.21 (4)	10.00

WEBS

MEMB. FR-TO	MAX. FACTORED FORCE (LBS)	MAX CSI (LC)
M- B	-318 / 0	0.23 (1)
B- L	0 / 1283	0.29 (1)
L- C	-735 / 0	0.54 (1)
C- J	0 / 194	0.04 (1)
J- D	-490 / 0	0.36 (1)
J- F	0 / 701	0.16 (1)
I- F	-1091 / 0	0.80 (1)
I- G	0 / 1826	0.41 (1)
A- M	0 / 885	0.20 (1)

DESIGN CRITERIA

SPECIFIED LOADS:

TOP CH.	LL	=	21.0	PSF
	DL	=	6.0	PSF
BOT CH.	LL	=	0.0	PSF
	DL	=	7.4	PSF
TOTAL LOAD		=	34.4	PSF

SPACING = 24.0 IN. C/C

LOADING IN FLAT SECTION BASED ON A SLOPE OF 2.00/12 MINIMUM

THIS TRUSS IS DESIGNED FOR RESIDENTIAL OR SMALL BUILDING REQUIREMENTS OF PART 9, NBCC 2015

THIS DESIGN COMPLIES WITH:
- PART 9 OF BCBC 2018 , ABC 2019
- PART 9 OF OBC 2012 (2019 AMENDMENT)
- CSA 086-14
- TPIC 2014

(55 % OF 23.0 P.S.F. G.S.L. PLUS 8.4 P.S.F. RAIN LOAD) EQUALS 21.0 P.S.F. SPECIFIED ROOF LIVE LOAD

ALLOWABLE DEFL.(LL)= L/360 (1.04")
CALCULATED VERT. DEFL.(LL) = L/ 999 (0.09")
ALLOWABLE DEFL.(TL)= L/360 (1.04")
CALCULATED VERT. DEFL.(TL) = L/ 999 (0.19")

CSI: TC=0.71/1.00 (D-F:1) , BC=0.37/1.00 (J-L:1) , WB=0.80/1.00 (F-I:1) , SSI=0.25/1.00 (F-G:1)

DOL LUMBER=1.00 NAIL=1.00 LS BEND=1.10 COMP=1.10 SHEAR=1.10 TENS= 1.10

COMPANION LIVE LOAD FACTOR = 1.00

TRUSS PLATE MANUFACTURER IS NOT RESPONSIBLE FOR QUALITY CONTROL IN THE TRUSS MANUFACTURING PLANT .

NAIL VALUES

PLATE	GRIP(DRY) (PSI) MAX	MIN	SHEAR (PLI) MAX	MIN	SECTION (PLI) MAX	MIN
MT20	650	371	1747	788	1987	1873

PLATE PLACEMENT TOL. = 0.250 inches

PLATE ROTATION TOL. = 5.0 Deg.

JSI GRIP= 0.84 (A) (INPUT = 0.90)
JSI METAL= 0.51 (K) (INPUT = 1.00)

JOB NAME	TRUSS NAME	QUANTITY	PLY	JOB DESC.	DRWG NO.
336321	H43		1	TRUSS DESC. JT 45147	E21103988

Alpa Roof Truss, Maple

Version 8.420 S Jan 21 2021 MiTek Industries, Inc. Wed Oct 13 10:30:55 2021 Page 1

ID:hd511hZTz_bdeQoS817GKByhVxV-2snf8VReucPhnLTv0HTF6HAVdCG7WgjNjnAsfWyTsxU

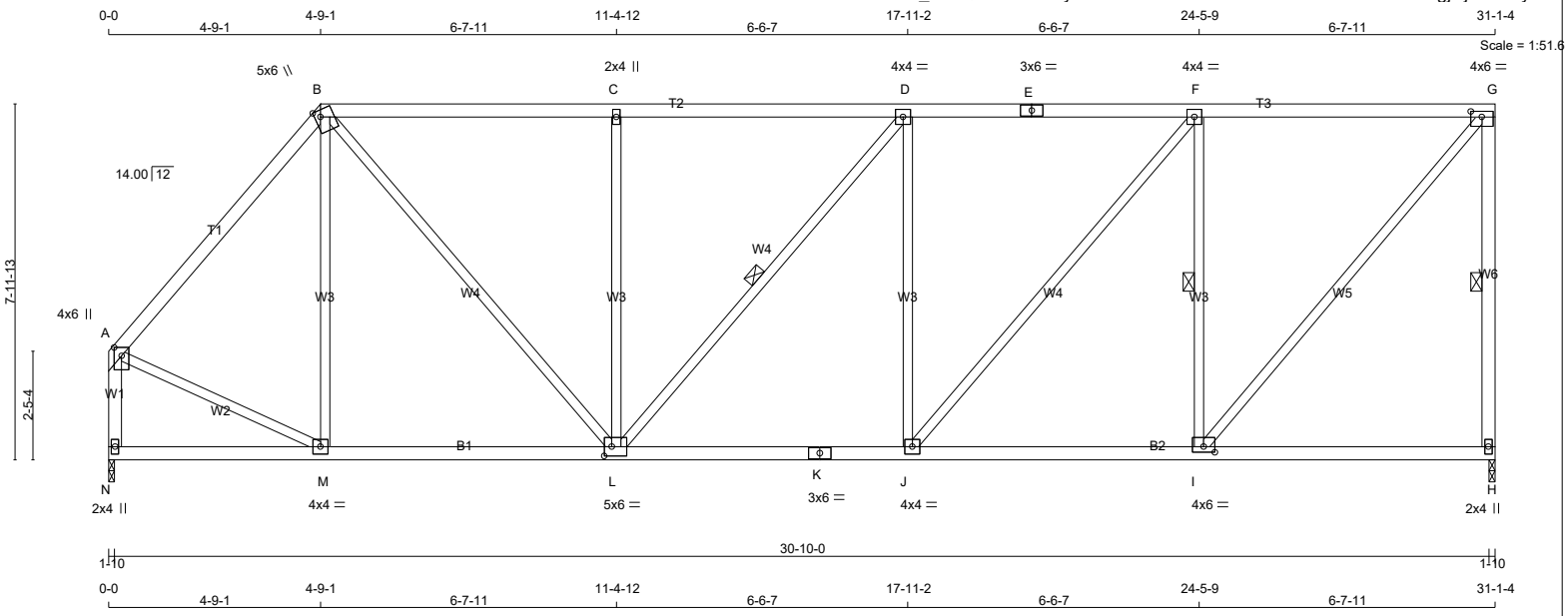

TOTAL WEIGHT = 145 lb

LUMBER

N. L. G. A. RULES

CHORDS	SIZE		LUMBER	DESCR.
A - B	2x4	DRY	No.2	SPF
B - E	2x4	DRY	No.2	SPF
E - G	2x4	DRY	No.2	SPF
H - G	2x4	DRY	No.2	SPF
N - A	2x4	DRY	No.2	SPF
N - K	2x4	DRY	No.2	SPF
K - H	2x4	DRY	No.2	SPF
ALL WEBS EXCEPT	2x3	DRY	No.2	SPF

DRY: SEASONED LUMBER.

PLATES (table is in inches)

JT	TYPE	PLATES	W	LEN	Y	X
A	TMVW+p	MT20	4.0	6.0	2.25	2.00
B	TTWW+m	MT20	5.0	6.0	1.75	1.50
C	TMW+w	MT20	2.0	4.0		
D	TMWW-t	MT20	4.0	4.0		
E	TS-t	MT20	3.0	6.0		
F	TMWW-t	MT20	4.0	4.0		
G	TMVW-t	MT20	4.0	6.0	1.50	3.00
H	BMV1+p	MT20	2.0	4.0		
I	BMWW-t	MT20	4.0	6.0	1.50	3.00
J	BMWW-t	MT20	4.0	4.0		
K	BS-t	MT20	3.0	6.0		
L	BMWWW-t	MT20	5.0	6.0	2.50	2.00
M	BMWW-t	MT20	4.0	4.0		
N	BMV1+p	MT20	2.0	4.0		

LATERAL BRACE(S) SHOWN SHALL BE 2X4 SPF#2

DIMENSIONS, SUPPORTS AND LOADINGS SPECIFIED BY FABRICATOR TO BE VERIFIED BY BUILDING DESIGNER

BEARINGS

JT	FACTORED GROSS REACTION VERT	HORZ	MAXIMUM FACTORED GROSS REACTION DOWN	HORZ	UPLIFT	INPUT BRG IN-SX	REQRD BRG IN-SX
H	1500	0	1500	0	0	1-10	1-10
N	1500	0	1500	0	0	1-10	1-10

UNFACTORED REACTIONS

JT	1ST LCASE COMBINED	MAX./MIN. COMPONENT REACTIONS SNOW	LIVE	PERM.LIVE	WIND	DEAD	SOIL
H	1070	653 / 0	0 / 0	0 / 0	0 / 0	417 / 0	0 / 0
N	1070	653 / 0	0 / 0	0 / 0	0 / 0	417 / 0	0 / 0

BEARING MATERIAL TO BE SPF NO.2 OR BETTER AT JOINT(S) H, N

BRACING

TOP CHORD TO BE SHEATHED OR MAX. PURLIN SPACING = 4.57 FT.
MAX. UNBRACED BOTTOM CHORD LENGTH = 10.00 FT OR RIGID CEILING DIRECTLY APPLIED.

ALL PITCH BREAKS AND PERIMETER CORNER JOINTS MUST BE LATERALLY RESTRAINED.

1 LATERAL BRACE(S) AT 1/ 2 LENGTH OF G-H, D-L, F-I.

END VERTICAL(S) MUST BE SHEATHED OR HAVE BRACES AS INDICATED IN THE MAX. UNBRACED LENGTH COLUMN OF THE TABLE BELOW

LOADING

TOTAL LOAD CASES: (4)

CHORDS

MEMB. FR-TO	MAX. FACTORED FORCE (LBS)	FACTORED VERT. LOAD (PLF) FROM	TO	LC1 CSI (LC)	MAX UNBRAC LENGTH
A- B	-1237 / 0	-78.0	-78.0	0.38 (1)	5.34
B- C	-1462 / 0	-78.0	-78.0	0.60 (1)	4.65
C- D	-1462 / 0	-78.0	-78.0	0.59 (1)	4.65
D- E	-1518 / 0	-78.0	-78.0	0.60 (1)	4.57
E- F	-1518 / 0	-78.0	-78.0	0.60 (1)	4.57
F- G	-1075 / 0	-78.0	-78.0	0.56 (1)	5.27
H- G	-1451 / 0	0.0	0.0	0.42 (1)	5.43
N- A	-1468 / 0	0.0	0.0	0.19 (1)	6.76
N- M	0 / 0	-18.5	-18.5	0.14 (4)	10.00
M- L	0 / 798	-18.5	-18.5	0.23 (4)	10.00
L- K	0 / 1518	-18.5	-18.5	0.33 (1)	10.00
K- J	0 / 1518	-18.5	-18.5	0.33 (1)	10.00
J- I	0 / 1075	-18.5	-18.5	0.30 (4)	10.00
I- H	0 / 0	-18.5	-18.5	0.20 (4)	10.00

WEBS

MEMB. FR-TO	MAX. FACTORED FORCE (LBS)	MAX CSI (LC)
M- B	-223 / 0	0.27 (1)
B- L	0 / 1012	0.23 (1)
L- C	-577 / 0	0.70 (1)
L- D	-87 / 0	0.06 (1)
J- D	-405 / 0	0.49 (1)
J- F	0 / 684	0.15 (1)
I- F	-1108 / 0	0.45 (1)
I- G	0 / 1646	0.37 (1)
A- M	0 / 871	0.20 (1)

DESIGN CRITERIA

SPECIFIED LOADS:

TOP CH.	LL	=	21.0	PSF
	DL	=	6.0	PSF
BOT CH.	LL	=	0.0	PSF
	DL	=	7.4	PSF
TOTAL LOAD		=	34.4	PSF

SPACING = 24.0 IN. C/C

LOADING IN FLAT SECTION BASED ON A SLOPE OF 2.00/12 MINIMUM

THIS TRUSS IS DESIGNED FOR RESIDENTIAL OR SMALL BUILDING REQUIREMENTS OF PART 9, NBCC 2015

THIS DESIGN COMPLIES WITH:
- PART 9 OF BCBC 2018 , ABC 2019
- PART 9 OF OBC 2012 (2019 AMENDMENT)
- CSA 086-14
- TPIC 2014

(55 % OF 23.0 P.S.F. G.S.L. PLUS 8.4 P.S.F. RAIN LOAD) EQUALS 21.0 P.S.F. SPECIFIED ROOF LIVE LOAD

ALLOWABLE DEFL.(LL)= L/360 (1.04")
CALCULATED VERT. DEFL.(LL) = L/ 999 (0.07")
ALLOWABLE DEFL.(TL)= L/360 (1.04")
CALCULATED VERT. DEFL.(TL) = L/ 999 (0.15")

CSI: TC=0.60/1.00 (D-F:1) , BC=0.33/1.00 (J-L:1) , WB=0.70/1.00 (C-L:1) , SSI=0.24/1.00 (F-G:1)

DOL LUMBER=1.00 NAIL=1.00 LS BEND=1.10 COMP=1.10 SHEAR=1.10 TENS= 1.10

COMPANION LIVE LOAD FACTOR = 1.00

TRUSS PLATE MANUFACTURER IS NOT RESPONSIBLE FOR QUALITY CONTROL IN THE TRUSS MANUFACTURING PLANT .

NAIL VALUES

PLATE	GRIP(DRY) (PSI) MAX	MIN	SHEAR (PLI) MAX	MIN	SECTION (PLI) MAX	MIN
MT20	650	371	1747	788	1987	1873

PLATE PLACEMENT TOL. = 0.250 inches

PLATE ROTATION TOL. = 5.0 Deg.

JSI GRIP= 0.90 (M) (INPUT = 0.90)
JSI METAL= 0.50 (K) (INPUT = 1.00)

JOB NAME	TRUSS NAME	QUANTITY	PLY	JOB DESC.	DRWG NO.
336321	H44		1	TRUSS DESC. JT 45147	E21103989

Alpa Roof Truss, Maple

Version 8.420 S Jan 21 2021 MiTek Industries, Inc. Wed Oct 13 10:30:59 2021 Page 1

ID:hd511hZTz_bdeQoS817GKByhVxV-xd1A_tU8yrv7FyngF7YBG6K9?perSUezeP83oHyTsxQ

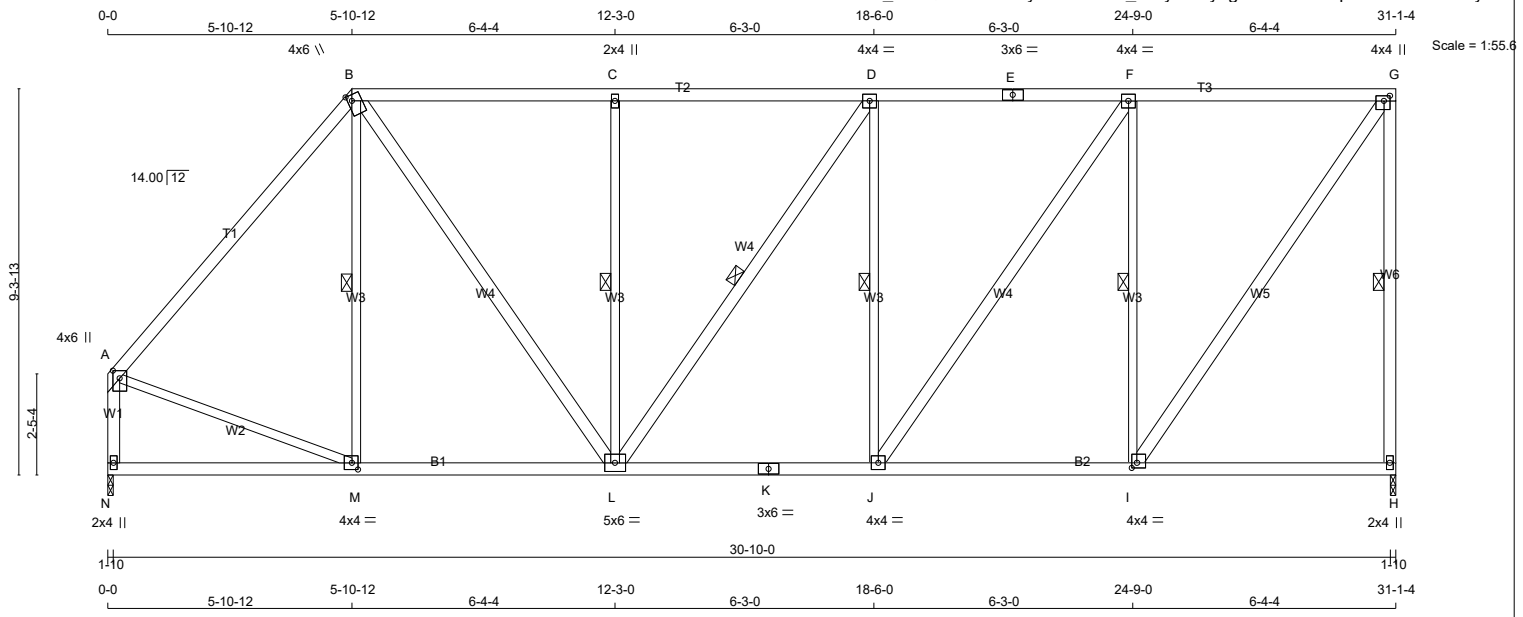

TOTAL WEIGHT = 169 lb

LUMBER

N. L. G. A. RULES

CHORDS	SIZE		LUMBER	DESCR.
A - B	2x4	DRY	No.2	SPF
B - E	2x4	DRY	No.2	SPF
E - G	2x4	DRY	No.2	SPF
H - G	2x4	DRY	No.2	SPF
N - A	2x4	DRY	No.2	SPF
N - K	2x4	DRY	No.2	SPF
K - H	2x4	DRY	No.2	SPF
ALL WEBS	2x3	DRY	No.2	SPF
EXCEPT				
B - L	2x4	DRY	No.2	SPF
L - D	2x4	DRY	No.2	SPF
J - F	2x4	DRY	No.2	SPF
I - G	2x4	DRY	No.2	SPF

DRY: SEASONED LUMBER.

PLATES (table is in inches)

JT	TYPE	PLATES	W	LEN	Y	X
A	TMVW+p	MT20	4.0	6.0	2.25	2.00
B	TTWW+m	MT20	4.0	6.0	1.75	1.25
C	TMW+w	MT20	2.0	4.0		
D	TMWW-t	MT20	4.0	4.0		
E	TS-t	MT20	3.0	6.0		
F	TMWW-t	MT20	4.0	4.0		
G	TMVW+p	MT20	4.0	4.0	1.50	1.75
H	BMV1+p	MT20	2.0	4.0		
I	BMWW-t	MT20	4.0	4.0	1.50	1.50
J	BMWW-t	MT20	4.0	4.0		
K	BS-t	MT20	3.0	6.0		
L	BMWWW-t	MT20	5.0	6.0		
M	BMWW-t	MT20	4.0	4.0	2.00	1.75
N	BMV1+p	MT20	2.0	4.0		

LATERAL BRACE(S) SHOWN SHALL BE 2X4 SPF#2

DIMENSIONS, SUPPORTS AND LOADINGS SPECIFIED BY FABRICATOR TO BE VERIFIED BY BUILDING DESIGNER

BEARINGS

JT	FACTORED GROSS REACTION VERT	HORZ	MAXIMUM FACTORED GROSS REACTION DOWN	HORZ	UPLIFT	INPUT BRG IN-SX	REQRD BRG IN-SX
H	1500	0	1500	0	0	1-10	1-10
N	1500	0	1500	0	0	1-10	1-10

UNFACTORED REACTIONS

JT	1ST LCASE COMBINED	MAX./MIN. COMPONENT REACTIONS SNOW	LIVE	PERM.LIVE	WIND	DEAD	SOIL
H	1070	653 / 0	0 / 0	0 / 0	0 / 0	417 / 0	0 / 0
N	1070	653 / 0	0 / 0	0 / 0	0 / 0	417 / 0	0 / 0

BEARING MATERIAL TO BE SPF NO.2 OR BETTER AT JOINT(S) H, N

BRACING

TOP CHORD TO BE SHEATHED OR MAX. PURLIN SPACING = 5.00 FT.
MAX. UNBRACED BOTTOM CHORD LENGTH = 10.00 FT OR RIGID CEILING DIRECTLY APPLIED.

ALL PITCH BREAKS AND PERIMETER CORNER JOINTS MUST BE LATERALLY RESTRAINED.

1 LATERAL BRACE(S) AT 1/ 2 LENGTH OF G-H, B-M, C-L, D-L, D-J, F-I.

END VERTICAL(S) MUST BE SHEATHED OR HAVE BRACES AS INDICATED IN THE MAX. UNBRACED LENGTH COLUMN OF THE TABLE BELOW

LOADING

TOTAL LOAD CASES: (4)

CHORDS

MEMB. FR-TO	MAX. FACTORED FORCE (LBS)	FACTORED VERT. LOAD (PLF) FROM	TO	LC1 CSI (LC)	MAX UNBRAC LENGTH
A- B	-1246 / 0	-78.0	-78.0	0.64 (1)	5.02
B- C	-1276 / 0	-78.0	-78.0	0.52 (1)	5.01
C- D	-1276 / 0	-78.0	-78.0	0.52 (1)	5.01
D- E	-1275 / 0	-78.0	-78.0	0.52 (1)	5.00
E- F	-1275 / 0	-78.0	-78.0	0.52 (1)	5.00
F- G	-885 / 0	-78.0	-78.0	0.49 (1)	5.79
H- G	-1453 / 0	0.0	0.0	0.59 (1)	5.43
N- A	-1457 / 0	0.0	0.0	0.19 (1)	6.77
N- M	0 / 0	-18.5	-18.5	0.17 (4)	10.00
M- L	0 / 806	-18.5	-18.5	0.25 (4)	10.00
L- K	0 / 1275	-18.5	-18.5	0.28 (1)	10.00
K- J	0 / 1275	-18.5	-18.5	0.28 (1)	10.00
J- I	0 / 885	-18.5	-18.5	0.26 (4)	10.00
I- H	0 / 0	-18.5	-18.5	0.18 (4)	10.00

WEBS

MEMB. FR-TO	MAX. FACTORED FORCE (LBS)	MAX CSI (LC)
M- B	-150 / 33	0.09 (1)
B- L	0 / 813	0.13 (1)
L- C	-553 / 0	0.32 (1)
L- D	-3 / 1	0.00 (4)
J- D	-452 / 0	0.26 (1)
J- F	0 / 686	0.11 (1)
I- F	-1125 / 0	0.64 (1)
I- G	0 / 1537	0.25 (1)
A- M	0 / 855	0.19 (1)

[M]

DESIGN CRITERIA

SPECIFIED LOADS:

TOP CH.	LL	=	21.0	PSF
	DL	=	6.0	PSF
BOT CH.	LL	=	0.0	PSF
	DL	=	7.4	PSF
TOTAL LOAD		=	34.4	PSF

SPACING = 24.0 IN. C/C

LOADING IN FLAT SECTION BASED ON A SLOPE OF 2.00/12 MINIMUM

THIS TRUSS IS DESIGNED FOR RESIDENTIAL OR SMALL BUILDING REQUIREMENTS OF PART 9, NBCC 2015

THIS DESIGN COMPLIES WITH:
- PART 9 OF BCBC 2018 , ABC 2019
- PART 9 OF OBC 2012 (2019 AMENDMENT)
- CSA 086-14
- TPIC 2014

(55 % OF 23.0 P.S.F. G.S.L. PLUS 8.4 P.S.F. RAIN LOAD) EQUALS 21.0 P.S.F. SPECIFIED ROOF LIVE LOAD

ALLOWABLE DEFL.(LL)= L/360 (1.04")
CALCULATED VERT. DEFL.(LL) = L/ 999 (0.06")
ALLOWABLE DEFL.(TL)= L/360 (1.04")
CALCULATED VERT. DEFL.(TL) = L/ 999 (0.12")

CSI: TC=0.64/1.00 (A-B:1) , BC=0.28/1.00 (J-L:1) , WB=0.64/1.00 (F-I:1) , SSI=0.23/1.00 (F-G:1)

DOL LUMBER=1.00 NAIL=1.00 LS BEND=1.10 COMP=1.10 SHEAR=1.10 TENS= 1.10

COMPANION LIVE LOAD FACTOR = 1.00

TRUSS PLATE MANUFACTURER IS NOT RESPONSIBLE FOR QUALITY CONTROL IN THE TRUSS MANUFACTURING PLANT .

NAIL VALUES

PLATE	GRIP(DRY) (PSI) MAX	MIN	SHEAR (PLI) MAX	MIN	SECTION (PLI) MAX	MIN
MT20	650	371	1747	788	1987	1873

PLATE PLACEMENT TOL. = 0.250 inches

PLATE ROTATION TOL. = 5.0 Deg.

JSI GRIP= 0.90 (G) (INPUT = 0.90)
JSI METAL= 0.47 (A) (INPUT = 1.00)

JOB NAME	TRUSS NAME	QUANTITY	PLY	JOB DESC.	DRWG NO.
336328	H45		1	TRUSS DESC. JT 45147	E21104056

Alpa Roof Truss, Maple

Version 8.420 S Jan 21 2021 MiTek Industries, Inc. Wed Oct 13 11:33:38 2021 Page 1

ID:hd511hZTz_bdeQoS817GKByhVxV-NofEvC_1ioVmjee7z4Uh7pWUz4ZJhaNG0kCTDvyTs0h

Scale = 1:64.7

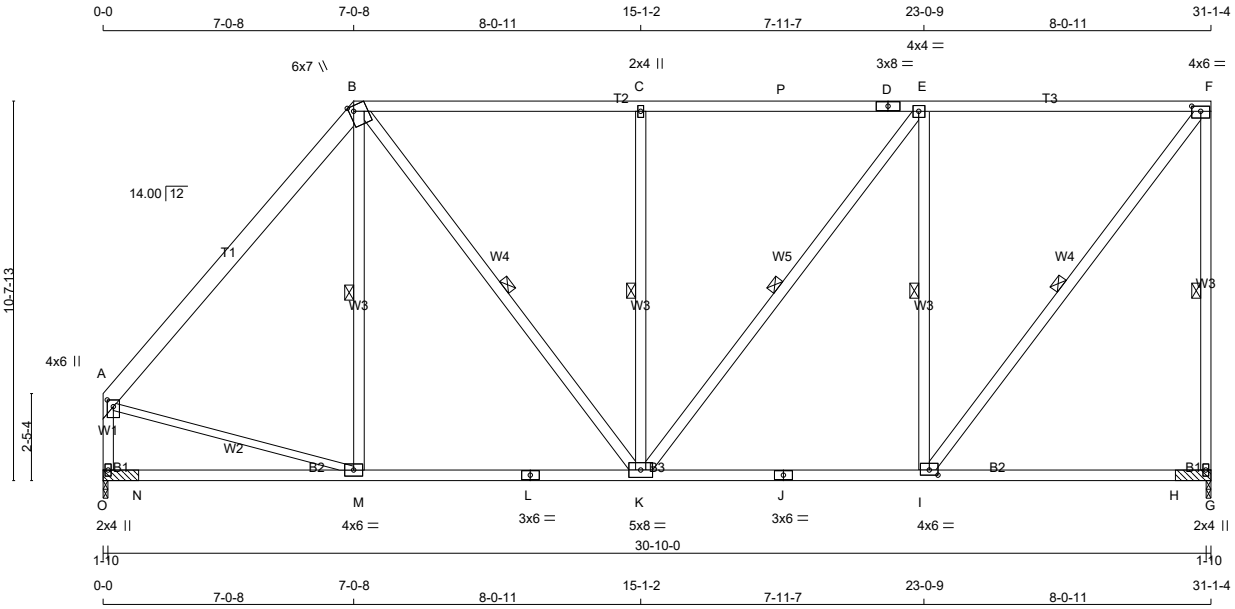

TOTAL WEIGHT = 6 X 182 = 1094 lb

[M]

LUMBER

N. L. G. A. RULES

CHORDS	SIZE		LUMBER	DESCR.
A - B	2x6	DRY	No.2	SPF
B - D	2x4	DRY	No.2	SPF
D - F	2x4	DRY	No.2	SPF
G - F	2x4	DRY	No.2	SPF
O - A	2x4	DRY	No.2	SPF
O - L	2x4	DRY	No.2	SPF
L - J	2x4	DRY	No.2	SPF
J - G	2x4	DRY	No.2	SPF
ALL WEBS	2x4	DRY	No.2	SPF
EXCEPT				
A - M	2x3	DRY	No.2	SPF

DRY: SEASONED LUMBER.

PLATES (table is in inches)

JT	TYPE	PLATES	W	LEN	Y	X
A	TMVW+p	MT20	4.0	6.0	2.25	2.00
B	TTWW+m	MT20	6.0	7.0	Edge	1.50
C	TMW+w	MT20	2.0	4.0		
D	TS-t	MT20	3.0	8.0		
E	TMWW-t	MT20	4.0	4.0		
F	TMVW-t	MT20	4.0	6.0	1.75	3.00
G	BMV1+p	MT20	2.0	4.0		
I	BMWW-t	MT20	4.0	6.0	1.75	3.00
J	BS-t	MT20	3.0	6.0		
K	BMWWW-t	MT20	5.0	8.0		
L	BS-t	MT20	3.0	6.0		
M	BMWW-t	MT20	4.0	6.0		
O	BMV1+p	MT20	2.0	4.0		

Edge - INDICATES REFERENCE CORNER OF PLATE TOUCHES EDGE OF CHORD.

LATERAL BRACE(S) SHOWN SHALL BE 2X4 SPF#2

DIMENSIONS, SUPPORTS AND LOADINGS SPECIFIED BY FABRICATOR TO BE VERIFIED BY BUILDING DESIGNER

BEARINGS

JT	FACTORED GROSS REACTION VERT	HORZ	MAXIMUM FACTORED GROSS REACTION DOWN	HORZ	UPLIFT	INPUT BRG IN-SX	REQRD BRG IN-SX
G	1611	0	1611	0	0	1-10	1-10 & BLOCK
O	1570	0	1570	0	0	1-10	1-10 & BLOCK

UNFACTORED REACTIONS

JT	1ST LCASE COMBINED	MAX./MIN. COMPONENT REACTIONS SNOW	LIVE	PERM.LIVE	WIND	DEAD	SOIL
G	1158	653 / 0	0 / 0	0 / 0	0 / 0	505 / 0	0 / 0
O	1126	653 / 0	0 / 0	0 / 0	0 / 0	473 / 0	0 / 0

BEARING MATERIAL TO BE SPF NO.2 OR BETTER AT JOINT(S) G, O

2x4 DRY SPF No.2 BEARING BLOCK 12" LONG AT JT. G ATTACHED TO FRONT SIDE WITH 2 ROWS OF (0.122"X3") SPIRAL NAILS SPACED 3" C.C. 8 NAILS TOTAL.

2x4 DRY SPF No.2 BEARING BLOCK 12" LONG AT JT. O ATTACHED TO FRONT SIDE WITH 2 ROWS OF (0.122"X3") SPIRAL NAILS SPACED 3" C.C. 8 NAILS TOTAL.

BRACING

FOR SECTION B-F, MAX. PURLIN SPACING = 2.00 FT.
FOR OTHER SECTIONS, TOP CHORD TO BE SHEATHED OR MAX. PURLIN SPACING = 6.18 FT.
MAX. UNBRACED BOTTOM CHORD LENGTH = 10.00 FT OR RIGID CEILING DIRECTLY APPLIED.

ALL PITCH BREAKS AND PERIMETER CORNER JOINTS MUST BE LATERALLY RESTRAINED.

1 LATERAL BRACE(S) AT 1/ 2 LENGTH OF F-G, B-M, B-K, C-K, E-K, E-I, F-I.

END VERTICAL(S) MUST BE SHEATHED OR HAVE BRACES AS INDICATED IN THE MAX. UNBRACED LENGTH COLUMN OF THE TABLE BELOW

LOADING

TOTAL LOAD CASES: (4)

CHORDS

MEMB. FR-TO	MAX. FACTORED FORCE (LBS)	FACTORED VERT. LOAD (PLF) FROM	TO	LC1	MAX CSI (LC)	MAX. UNBRAC LENGTH
A- B	-1327 / 0	-78.0	-78.0	0.37 (1)	6.18	
B- C	-1263 / 0	-85.5	-85.5	0.92 (1)	2.00	
C- P	-1263 / 0	-85.5	-85.5	0.92 (1)	2.00	
P- D	-1263 / 0	-85.5	-85.5	0.92 (1)	2.00	
D- E	-1263 / 0	-85.5	-85.5	0.92 (1)	2.00	
E- F	-991 / 0	-85.5	-85.5	0.87 (1)	2.00	
G- F	-1552 / 0	0.0	0.0	0.89 (1)	5.29	
O- A	-1519 / 0	0.0	0.0	0.18 (1)	6.67	
O- N	0 / 0	-18.5	-18.5	0.26 (4)	10.00	
N- M	0 / 0	-18.5	-18.5	0.26 (4)	10.00	
M- L	0 / 856	-18.5	-18.5	0.35 (4)	10.00	
L- K	0 / 856	-18.5	-18.5	0.35 (4)	10.00	
K- J	0 / 991	-18.5	-18.5	0.40 (4)	10.00	
J- I	0 / 991	-18.5	-18.5	0.40 (4)	10.00	
I- H	0 / 0	-18.5	-18.5	0.29 (4)	10.00	
H- G	0 / 0	-18.5	-18.5	0.29 (4)	10.00	

WEBS

MEMB. FR-TO	MAX. FACTORED FORCE (LBS)	MAX CSI (LC)
M- B	-73 / 76	0.04 (1)
B- K	0 / 659	0.11 (1)
K- C	-735 / 0	0.42 (1)
K- E	0 / 447	0.07 (1)
I- E	-1106 / 0	0.63 (1)
I- F	0 / 1615	0.26 (1)
A- M	0 / 888	0.20 (1)

DESIGN CRITERIA

SPECIFIED LOADS:

TOP CH.	LL	=	21.0	PSF
	DL	=	6.0	PSF
BOT CH.	LL	=	0.0	PSF
	DL	=	7.4	PSF
TOTAL LOAD		=	34.4	PSF

SPACING = 24.0 IN. C/C

LOADING IN FLAT SECTION BASED ON PIGGYBACK TRUSS WITH SLOPES OF 6.00/12 AND -6.00/12 AND RESPECTIVE HEEL HEIGHTS OF 0-0 AND 0-0 AND AN ADDITIONAL DEAD LOAD OF 3.0 P.S.F.

THIS TRUSS IS DESIGNED FOR RESIDENTIAL OR SMALL BUILDING REQUIREMENTS OF PART 9, NBCC 2015

THIS DESIGN COMPLIES WITH:
- PART 9 OF BCBC 2018 , ABC 2019
- PART 9 OF OBC 2012 (2019 AMENDMENT)
- CSA 086-14
- TPIC 2014

(55 % OF 23.0 P.S.F. G.S.L. PLUS 8.4 P.S.F. RAIN LOAD) EQUALS 21.0 P.S.F. SPECIFIED ROOF LIVE LOAD

ALLOWABLE DEFL.(LL)= L/360 (1.04")
CALCULATED VERT. DEFL.(LL) = L/ 999 (0.05")
ALLOWABLE DEFL.(TL)= L/360 (1.04")
CALCULATED VERT. DEFL.(TL) = L/ 999 (0.13")

CSI: TC=0.92/1.00 (B-C:1) , BC=0.40/1.00 (I-K:4) , WB=0.63/1.00 (E-I:1) , SSI=0.32/1.00 (E-F:1)

DOL LUMBER=1.00 NAIL=1.00 LS BEND=1.10 COMP=1.10 SHEAR=1.10 TENS= 1.10

COMPANION LIVE LOAD FACTOR = 1.00

TRUSS PLATE MANUFACTURER IS NOT RESPONSIBLE FOR QUALITY CONTROL IN THE TRUSS MANUFACTURING PLANT .

NAIL VALUES

PLATE	GRIP(DRY) (PSI) MAX	MIN	SHEAR (PLI) MAX	MIN	SECTION (PLI) MAX	MIN
MT20	650	371	1747	788	1987	1873

PLATE PLACEMENT TOL. = 0.250 inches

PLATE ROTATION TOL. = 5.0 Deg.

JSI GRIP= 0.86 (A) (INPUT = 0.90)
JSI METAL= 0.51 (A) (INPUT = 1.00)

JOB NAME	TRUSS NAME	QUANTITY	PLY	JOB DESC.		DRWG NO.
336328	H46P		1	TRUSS DESC.	JT 45147	E21104057

Alpa Roof Truss, Maple

Version 8.420 S Jan 21 2021 MiTek Industries, Inc. Wed Oct 13 11:34:15 2021 Page 1

ID:hd511hZTz bdeQoS817GKByhVxV-nvODgsRF 99WfKzEdMeN7cYvK?EUsQriX?gx1GyTs06

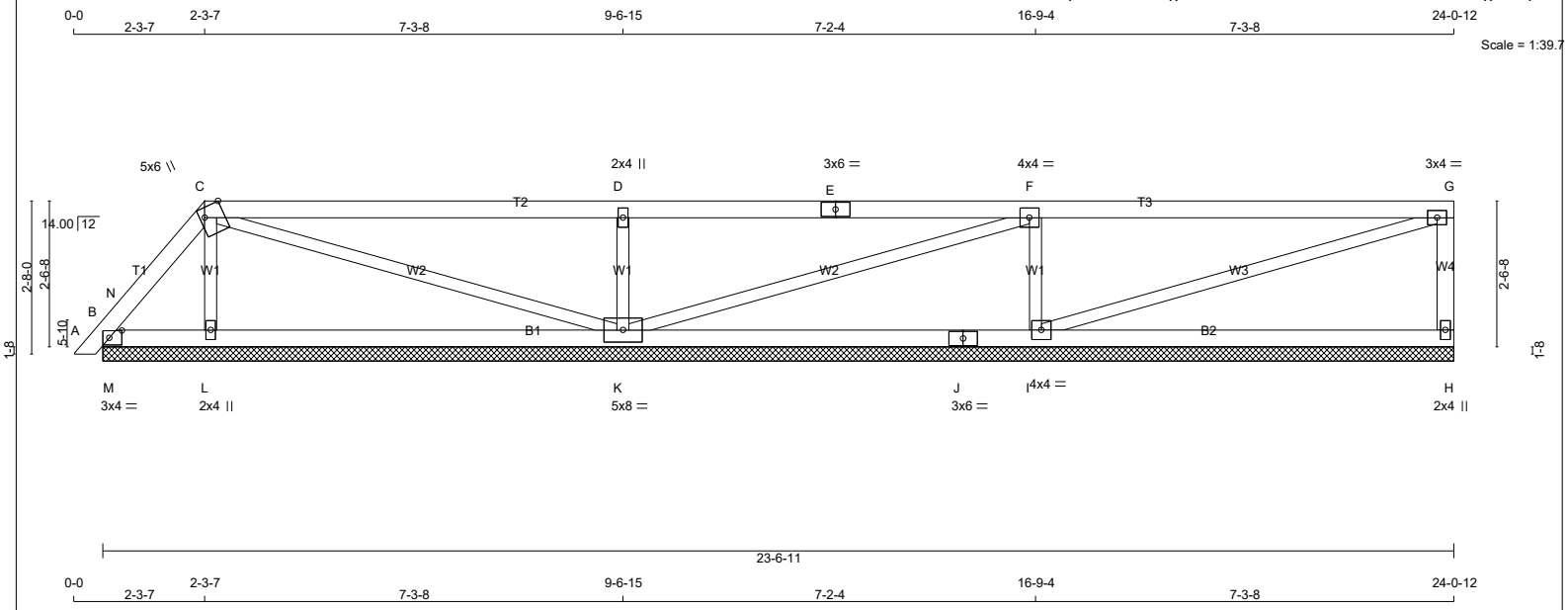

TOTAL WEIGHT = 2 X 80 = 161 lb

[M]

LUMBER

N. L. G. A. RULES

CHORDS	SIZE		LUMBER	DESCR.
A - C	2x4	DRY	No.2	SPF
C - E	2x4	DRY	No.2	SPF
E - G	2x4	DRY	No.2	SPF
H - G	2x4	DRY	No.2	SPF
B - J	2x4	DRY	No.2	SPF
J - H	2x4	DRY	No.2	SPF
ALL WEBS	2x3	DRY	No.2	SPF

DRY: SEASONED LUMBER.

PLATES (table is in inches)

JT	TYPE	PLATES	W	LEN	Y	X
B	TMB1-l	MT20	3.0	4.0	1.50	2.50
C	TTWW+m	MT20	5.0	6.0	Edge	4.00
D	TMW+w	MT20	2.0	4.0		
E	TS-t	MT20	3.0	6.0		
F	TMWW-t	MT20	4.0	4.0		
G	TMVW-t	MT20	3.0	4.0		
H	BMV1+p	MT20	2.0	4.0		
I	BMWW1-t	MT20	4.0	4.0		
J	BS-t	MT20	3.0	6.0		
K	BMWWW1-t	MT20	5.0	8.0		
L	BMW1+w	MT20	2.0	4.0		

Edge - INDICATES REFERENCE CORNER OF PLATE TOUCHES EDGE OF CHORD.

LATERAL BRACE(S) SHOWN SHALL BE 2X4 SPF#2

DIMENSIONS, SUPPORTS AND LOADINGS SPECIFIED BY FABRICATOR TO BE VERIFIED BY BUILDING DESIGNER

BEARINGS

JT	FACTORED GROSS REACTION VERT	HORZ	MAXIMUM FACTORED GROSS REACTION DOWN	HORZ	UPLIFT	INPUT BRG IN-SX	REQRD BRG IN-SX
H	284	0	284	0	0	23-6-11 (8-6-11)	
B	131	0	131	0	0	23-6-11 (8-6-11)	
L	354	0	354	0	0	23-6-11 (8-6-11)	
K	769	0	769	0	0	23-6-11 (8-6-11)	
I	764	0	764	0	0	23-6-11 (8-6-11)	

VALUE IN PARENTHESIS INDICATES EFFECTIVE BEARING LENGTH

UNFACTORED REACTIONS

JT	1ST LCASE COMBINED	MAX./MIN. COMPONENT REACTIONS SNOW	LIVE	PERM.LIVE	WIND	DEAD	SOIL
H	203	124 / 0	0 / 0	0 / 0	0 / 0	78 / 0	0 / 0
B	88	83 / 0	0 / 0	0 / 0	0 / 0	5 / 0	0 / 0
L	259	124 / 0	0 / 0	0 / 0	0 / 0	135 / 0	0 / 0
K	546	344 / 0	0 / 0	0 / 0	0 / 0	203 / 0	0 / 0
I	545	330 / 0	0 / 0	0 / 0	0 / 0	215 / 0	0 / 0

BEARING MATERIAL TO BE SPF NO.2 OR BETTER AT JOINT(S) H, B, L, K, I

BRACING

TOP CHORD TO BE SHEATHED OR MAX. PURLIN SPACING = 6.25 FT.
MAX. UNBRACED BOTTOM CHORD LENGTH = 10.00 FT OR RIGID CEILING DIRECTLY APPLIED.

ALL PITCH BREAKS AND PERIMETER CORNER JOINTS MUST BE LATERALLY RESTRAINED.

LOADING

TOTAL LOAD CASES: (4)

CHORDS

MEMB. FR-TO	MAX. FACTORED FORCE (LBS)	FACTORED VERT. LOAD LC1 (PLF) FROM	TO	MAX CSI (LC)	MAX. UNBRAC LENGTH
A- B	0 / 10	-78.0	-78.0	0.01 (1)	10.00
B- N	0 / 58	-78.0	-78.0	0.04 (4)	10.00
N- C	-73 / 0	-78.0	-78.0	0.03 (1)	6.25
C- D	0 / 9	-78.0	-78.0	0.56 (1)	10.00
D- E	0 / 9	-78.0	-78.0	0.56 (1)	10.00
E- F	0 / 9	-78.0	-78.0	0.56 (1)	10.00
F- G	-9 / 0	-78.0	-78.0	0.56 (1)	10.00
H- G	-231 / 0	0.0	0.0	0.03 (1)	7.81
B- M	0 / 40	-18.5	-18.5	0.04 (1)	10.00
M- L	0 / 40	-18.5	-18.5	0.16 (4)	10.00
L- K	0 / 30	-18.5	-18.5	0.18 (4)	10.00
K- J	0 / 9	-18.5	-18.5	0.24 (4)	10.00
J- I	0 / 9	-18.5	-18.5	0.24 (4)	10.00
I- H	0 / 0	-18.5	-18.5	0.24 (4)	10.00

WEBS

MEMB. FR-TO	MAX. FACTORED FORCE (LBS)	MAX CSI (LC)
L- C	-218 / 0	0.03 (1)
C- K	-41 / 0	0.05 (1)
K- D	-621 / 0	0.10 (1)
K- F	-19 / 0	0.02 (1)
I- F	-615 / 0	0.10 (1)
I- G	0 / 9	0.00 (1)
M- N	-184 / 0	0.00 (1)

DESIGN CRITERIA

SPECIFIED LOADS:

TOP CH.	LL	=	21.0	PSF
	DL	=	6.0	PSF
BOT CH.	LL	=	0.0	PSF
	DL	=	7.4	PSF
TOTAL LOAD		=	34.4	PSF

SPACING = 24.0 IN. C/C

LOADING IN FLAT SECTION BASED ON A SLOPE OF 2.00/12 MINIMUM

THIS TRUSS IS DESIGNED FOR RESIDENTIAL OR SMALL BUILDING REQUIREMENTS OF PART 9, NBCC 2015

THIS DESIGN COMPLIES WITH:
- PART 9 OF BCBC 2018 , ABC 2019
- PART 9 OF OBC 2012 (2019 AMENDMENT)
- CSA 086-14
- TPIC 2014

(55 % OF 23.0 P.S.F. G.S.L. PLUS 8.4 P.S.F. RAIN LOAD) EQUALS 21.0 P.S.F. SPECIFIED ROOF LIVE LOAD

CSI: TC=0.56/1.00 (C-D:1) , BC=0.24/1.00 (I-K:4) , WB=0.10/1.00 (D-K:1) , SSI=0.27/1.00 (F-G:1)

DOL LUMBER=1.00 NAIL=1.00 LS BEND=1.10 COMP=1.10 SHEAR=1.10 TENS= 1.10

COMPANION LIVE LOAD FACTOR = 1.00

TRUSS PLATE MANUFACTURER IS NOT RESPONSIBLE FOR QUALITY CONTROL IN THE TRUSS MANUFACTURING PLANT .

NAIL VALUES

PLATE	GRIP(DRY) (PSI) MAX	MIN	SHEAR (PLI) MAX	MIN	SECTION (PLI) MAX	MIN
MT20	650	371	1747	788	1987	1873

PLATE PLACEMENT TOL. = 0.250 inches

PLATE ROTATION TOL. = 5.0 Deg.

JSI GRIP= 0.83 (G) (INPUT = 0.90)
JSI METAL= 0.25 (E) (INPUT = 1.00)

JOB NAME	TRUSS NAME	QUANTITY	PLY	JOB DESC.		DRWG NO.
336328	H47P		1	TRUSS DESC.	JT 45147	E21104058

Alpa Roof Truss, Maple

Version 8.420 S Jan 21 2021 MiTek Industries, Inc. Wed Oct 13 11:34:17 2021 Page 1

ID:hd511hZTz bdeQoS817GKByhVxV-kIWz5XSVWnQEvd7dlnhrC1eGqpwKKJI? J9158yTs04

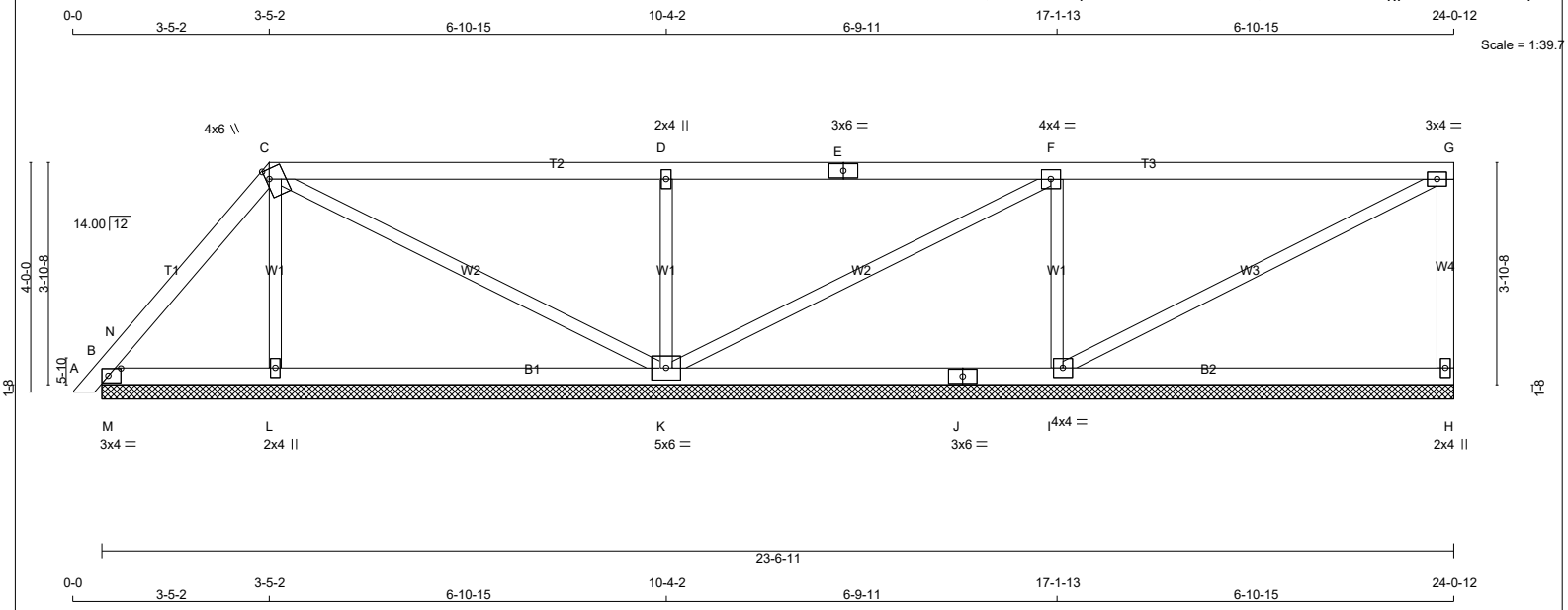

TOTAL WEIGHT = 2 X 86 = 172 lb [M]

LUMBER

N. L. G. A. RULES

CHORDS	SIZE		LUMBER	DESCR.
A - C	2x4	DRY	No.2	SPF
C - E	2x4	DRY	No.2	SPF
E - G	2x4	DRY	No.2	SPF
H - G	2x4	DRY	No.2	SPF
B - J	2x4	DRY	No.2	SPF
J - H	2x4	DRY	No.2	SPF
ALL WEBS	2x3	DRY	No.2	SPF

DRY: SEASONED LUMBER.

PLATES (table is in inches)

JT	TYPE	PLATES	W	LEN	Y	X
B	TMB1-l	MT20	3.0	4.0	1.50	2.50
C	TTWW+m	MT20	4.0	6.0	2.00	0.75
D	TMW+w	MT20	2.0	4.0		
E	TS-t	MT20	3.0	6.0		
F	TMWW-t	MT20	4.0	4.0		
G	TMVW-t	MT20	3.0	4.0		
H	BMV1+p	MT20	2.0	4.0		
I	BMWW1-t	MT20	4.0	4.0		
J	BS-t	MT20	3.0	6.0		
K	BMWWW1-t	MT20	5.0	6.0		
L	BMW1+w	MT20	2.0	4.0		

LATERAL BRACE(S) SHOWN SHALL BE 2X4 SPF#2

DIMENSIONS, SUPPORTS AND LOADINGS SPECIFIED BY FABRICATOR TO BE VERIFIED BY BUILDING DESIGNER

BEARINGS

JT	FACTORED GROSS REACTION VERT	HORZ	MAXIMUM FACTORED GROSS REACTION DOWN	HORZ	UPLIFT	INPUT BRG IN-SX	REQRD BRG IN-SX
H	276	0	276	0	0	23-6-11 (8-6-11)	118
B	222	0	222	0	0	23-6-11 (8-6-11)	118
L	331	0	331	0	0	23-6-11 (8-6-11)	118
K	773	0	773	0	0	23-6-11 (8-6-11)	118
I	700	0	700	0	0	23-6-11 (8-6-11)	118

VALUE IN PARENTHESIS INDICATES EFFECTIVE BEARING LENGTH

UNFACTORED REACTIONS

JT	1ST LCASE COMBINED	MAX./MIN. COMPONENT REACTIONS SNOW	LIVE	PERM.LIVE	WIND	DEAD	SOIL
H	197	122 / 0	0 / 0	0 / 0	0 / 0	75 / 0	0 / 0
B	155	116 / 0	0 / 0	0 / 0	0 / 0	39 / 0	0 / 0
L	241	119 / 0	0 / 0	0 / 0	0 / 0	122 / 0	0 / 0
K	548	349 / 0	0 / 0	0 / 0	0 / 0	199 / 0	0 / 0
I	500	300 / 0	0 / 0	0 / 0	0 / 0	200 / 0	0 / 0

BEARING MATERIAL TO BE SPF NO.2 OR BETTER AT JOINT(S) H, B, L, K, I

BRACING

TOP CHORD TO BE SHEATHED OR MAX. PURLIN SPACING = 6.25 FT.
MAX. UNBRACED BOTTOM CHORD LENGTH = 10.00 FT OR RIGID CEILING DIRECTLY APPLIED.

ALL PITCH BREAKS AND PERIMETER CORNER JOINTS MUST BE LATERALLY RESTRAINED.

LOADING

TOTAL LOAD CASES: (4)

CHORDS

MEMB. FR-TO	MAX. FACTORED FORCE (LBS)	FACTORED VERT. LOAD LC1 (PLF) FROM	TO	MAX CSI (LC)	MAX. UNBRAC LENGTH
A- B	0 / 10	-78.0	-78.0	0.01 (1)	10.00
B- N	0 / 78	-78.0	-78.0	0.07 (1)	10.00
N- C	-102 / 0	-78.0	-78.0	0.08 (1)	6.25
C- D	0 / 25	-78.0	-78.0	0.50 (1)	10.00
D- E	0 / 24	-78.0	-78.0	0.50 (1)	10.00
E- F	0 / 24	-78.0	-78.0	0.50 (1)	10.00
F- G	-18 / 0	-78.0	-78.0	0.50 (1)	6.25
H- G	-226 / 0	0.0	0.0	0.05 (1)	7.81
B- M	0 / 59	-18.5	-18.5	0.08 (1)	10.00
M- L	0 / 59	-18.5	-18.5	0.14 (4)	10.00
L- K	0 / 53	-18.5	-18.5	0.17 (4)	10.00
K- J	0 / 18	-18.5	-18.5	0.22 (4)	10.00
J- I	0 / 18	-18.5	-18.5	0.22 (4)	10.00
I- H	0 / 0	-18.5	-18.5	0.21 (4)	10.00

WEBS

MEMB. FR-TO	MAX. FACTORED FORCE (LBS)	MAX CSI (LC)
L- C	-200 / 0	0.05 (1)
C- K	-87 / 0	0.10 (1)
K- D	-588 / 0	0.14 (1)
K- F	-48 / 0	0.06 (1)
I- F	-566 / 0	0.13 (1)
I- G	0 / 20	0.00 (1)
M- N	-321 / 0	0.00 (1)

DESIGN CRITERIA

SPECIFIED LOADS:

TOP	CH.	LL	=	21.0	PSF
		DL	=	6.0	PSF
BOT	CH.	LL	=	0.0	PSF
		DL	=	7.4	PSF
TOTAL	LOAD		=	34.4	PSF

SPACING = 24.0 IN. C/C

LOADING IN FLAT SECTION BASED ON A SLOPE OF 2.00/12 MINIMUM

THIS TRUSS IS DESIGNED FOR RESIDENTIAL OR SMALL BUILDING REQUIREMENTS OF PART 9, NBCC 2015

THIS DESIGN COMPLIES WITH:
- PART 9 OF BCBC 2018 , ABC 2019
- PART 9 OF OBC 2012 (2019 AMENDMENT)
- CSA 086-14
- TPIC 2014

(55 % OF 23.0 P.S.F. G.S.L. PLUS 8.4 P.S.F. RAIN LOAD) EQUALS 21.0 P.S.F. SPECIFIED ROOF LIVE LOAD

CSI: TC=0.50/1.00 (D-F:1) , BC=0.22/1.00 (I-K:4) , WB=0.14/1.00 (D-K:1) , SSI=0.25/1.00 (F-G:1)

DOL LUMBER=1.00 NAIL=1.00 LS BEND=1.10 COMP=1.10 SHEAR=1.10 TENS= 1.10

COMPANION LIVE LOAD FACTOR = 1.00

TRUSS PLATE MANUFACTURER IS NOT RESPONSIBLE FOR QUALITY CONTROL IN THE TRUSS MANUFACTURING PLANT .

NAIL VALUES

PLATE	GRIP(DRY) (PSI) MAX	MIN	SHEAR (PLI) MAX	MIN	SECTION (PLI) MAX	MIN
MT20	650	371	1747	788	1987	1873

PLATE PLACEMENT TOL. = 0.250 inches

PLATE ROTATION TOL. = 5.0 Deg.

JSI GRIP= 0.90 (C) (INPUT = 0.90)
JSI METAL= 0.22 (E) (INPUT = 1.00)

JOB NAME	TRUSS NAME	QUANTITY	PLY	JOB DESC.		DRWG NO.
336328	H61		1	TRUSS DESC.	JT 45147	E21104059

Alpa Roof Truss, Maple

Version 8.420 S Jan 21 2021 MiTek Industries, Inc. Wed Oct 13 11:34:18 2021 Page 1

ID:hd511hZTz_bdeQoS817GKByhVxV-CU4MJtT7H4Y5XnipJUC4kFAU5CFX3n18DyvbeayTs03

Scale = 1:61.6

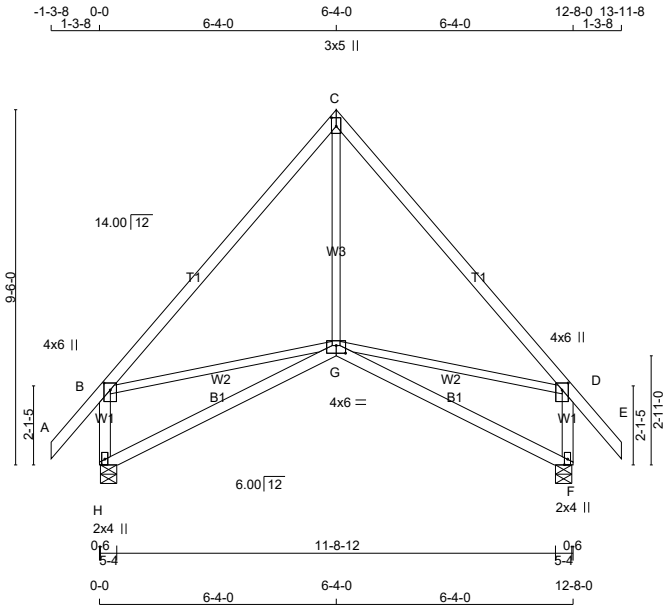

TOTAL WEIGHT = 2 X 63 = 126 lb

LUMBER

N. L. G. A. RULES

CHORDS	SIZE		LUMBER	DESCR.
A - C	2x4	DRY	2100F 1.8E	SPF
C - E	2x4	DRY	2100F 1.8E	SPF
H - B	2x4	DRY	No.2	SPF
F - D	2x4	DRY	No.2	SPF
H - G	2x4	DRY	No.2	SPF
G - F	2x4	DRY	No.2	SPF
ALL WEBS EXCEPT	2x3	DRY	No.2	SPF

DRY: SEASONED LUMBER.

PLATES (table is in inches)

JT	TYPE	PLATES	W	LEN	Y	X
B	TMVW+p	MT20	4.0	6.0	2.25	2.00
C	TTW+p	MT20	3.0	5.0	2.75	1.50
D	TMVW+p	MT20	4.0	6.0	2.25	2.00
F	BMV1+p	MT20	2.0	4.0	Edge	
G	BBWWW-p	MT20	4.0	6.0	2.50	3.00
H	BMV1+p	MT20	2.0	4.0	Edge	

Edge - INDICATES REFERENCE CORNER OF PLATE TOUCHES EDGE OF CHORD.

LATERAL BRACE(S) SHOWN SHALL BE 2X4 SPF#2

DIMENSIONS, SUPPORTS AND LOADINGS SPECIFIED BY FABRICATOR TO BE VERIFIED BY BUILDING DESIGNER

BEARINGS

JT	FACTORED GROSS REACTION VERT	HORZ	MAXIMUM FACTORED GROSS REACTION DOWN	HORZ	UPLIFT	INPUT BRG IN-SX	REQRD BRG IN-SX
H	720	0	720	0	0	5-4	1-8
F	720	0	720	0	0	5-4	1-8

UNFACTORED REACTIONS

JT	1ST LCASE COMBINED	MAX./MIN. COMPONENT REACTIONS SNOW	LIVE	PERM.LIVE	WIND	DEAD	SOIL
H	511	325 / 0	0 / 0	0 / 0	0 / 0	187 / 0	0 / 0
F	511	325 / 0	0 / 0	0 / 0	0 / 0	187 / 0	0 / 0

BEARING MATERIAL TO BE SPF NO.2 OR BETTER AT JOINT(S) H, F

BRACING

TOP CHORD TO BE SHEATHED OR MAX. PURLIN SPACING = 6.25 FT.
MAX. UNBRACED BOTTOM CHORD LENGTH = 10.00 FT OR RIGID CEILING DIRECTLY APPLIED.

ALL PITCH BREAKS AND PERIMETER CORNER JOINTS MUST BE LATERALLY RESTRAINED.

LOADING

TOTAL LOAD CASES: (4)

CHORDS

MEMB. FR-TO	MAX. FACTORED FORCE (LBS)	FACTORED VERT. LOAD (PLF) FROM	TO	LC1 CSI (LC)	MAX. UNBRAC LENGTH
A- B	0 / 42	-78.0	-78.0	0.07 (1)	10.00
B- C	-480 / 0	-78.0	-78.0	0.27 (1)	6.25
C- D	-480 / 0	-78.0	-78.0	0.27 (1)	6.25
D- E	0 / 42	-78.0	-78.0	0.07 (1)	10.00
H- B	-662 / 0	0.0	0.0	0.08 (1)	7.81
F- D	-662 / 0	0.0	0.0	0.08 (1)	7.81
H- G	0 / 0	-18.5	-18.5	0.22 (4)	10.00
G- F	0 / 0	-18.5	-18.5	0.22 (4)	10.00

WEBS

MEMB. FR-TO	MAX. FACTORED FORCE (LBS)	MAX CSI (LC)
G- C	0 / 235	0.06 (4)
B- G	0 / 318	0.07 (1)
G- D	0 / 318	0.07 (1)

[M][F]

DESIGN CRITERIA

SPECIFIED LOADS:

TOP CH.	LL	=	21.0	PSF
	DL	=	6.0	PSF
BOT CH.	LL	=	0.0	PSF
	DL	=	7.4	PSF
TOTAL LOAD		=	34.4	PSF

SPACING = 24.0 IN. C/C

THIS TRUSS IS DESIGNED FOR RESIDENTIAL OR SMALL BUILDING REQUIREMENTS OF PART 9, NBCC 2015

THIS DESIGN COMPLIES WITH:
- PART 9 OF BCBC 2018 , ABC 2019
- PART 9 OF OBC 2012 (2019 AMENDMENT)
- CSA 086-14
- TPIC 2014

(55 % OF 23.0 P.S.F. G.S.L. PLUS 8.4 P.S.F. RAIN LOAD) EQUALS 21.0 P.S.F. SPECIFIED ROOF LIVE LOAD

ALLOWABLE DEFL.(LL)= L/360 (0.42")
CALCULATED VERT. DEFL.(LL) = L/ 999 (0.01")
ALLOWABLE DEFL.(TL)= L/360 (0.42")
CALCULATED VERT. DEFL.(TL) = L/ 999 (0.09")

CSI: TC=0.27/1.00 (C-D:1) , BC=0.22/1.00 (F-G:4) , WB=0.07/1.00 (B-G:1) , SSI=0.13/1.00 (B-C:1)

DOL LUMBER=1.00 NAIL=1.00 LS BEND=1.10 COMP=1.10 SHEAR=1.10 TENS= 1.10

COMPANION LIVE LOAD FACTOR = 1.00

TRUSS PLATE MANUFACTURER IS NOT RESPONSIBLE FOR QUALITY CONTROL IN THE TRUSS MANUFACTURING PLANT .

NAIL VALUES

PLATE	GRIP(DRY) (PSI) MAX	MIN	SHEAR (PLI) MAX	MIN	SECTION (PLI) MAX	MIN
MT20	650	371	1747	788	1987	1873

PLATE PLACEMENT TOL. = 0.250 inches

PLATE ROTATION TOL. = 5.0 Deg.

JSI GRIP= 0.53 (G) (INPUT = 0.90)
JSI METAL= 0.27 (H) (INPUT = 1.00)

JOB NAME	TRUSS NAME	QUANTITY	PLY	JOB DESC.		DRWG NO.
336328	H61AS		1	TRUSS DESC.	JT 45147	E21104060

Alpa Roof Truss, Maple

Version 8.420 S Jan 21 2021 MiTek Industries, Inc. Wed Oct 13 11:34:20 2021 Page 1

ID:hd511hZTz_bdeQoS817GKByhVxV-8tC6jZUNpiopm5sCQvEYqgGpD0xIXieRgGOiiTyTs01

Scale = 1:61.0

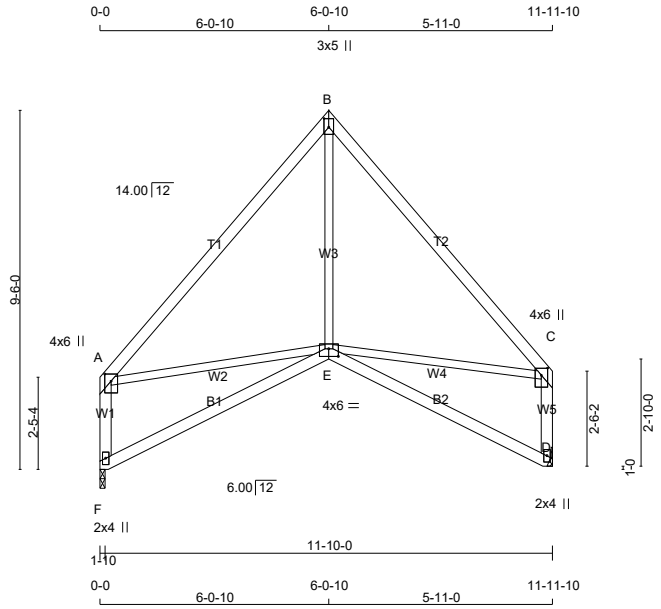

TOTAL WEIGHT = 56 lb

[M][F]

LUMBER

N. L. G. A. RULES

CHORDS	SIZE		LUMBER	DESCR.
A - B	2x4	DRY	1650F 1.5E	SPF
B - C	2x4	DRY	No.2	SPF
F - A	2x4	DRY	No.2	SPF
D - C	2x4	DRY	No.2	SPF
F - E	2x4	DRY	No.2	SPF
E - D	2x4	DRY	No.2	SPF
ALL WEBS EXCEPT	2x3	DRY	No.2	SPF

DRY: SEASONED LUMBER.

PLATES (table is in inches)

JT	TYPE	PLATES	W	LEN	Y	X
A	TMVW+p	MT20	4.0	6.0	2.25	2.00
B	TTW+p	MT20	3.0	5.0	2.75	1.50
C	TMVW+p	MT20	4.0	6.0	2.25	2.00
D	BMV1+p	MT20	2.0	4.0		
E	BBWWW-p	MT20	4.0	6.0	2.50	3.00
F	BMV1+p	MT20	2.0	4.0		

LATERAL BRACE(S) SHOWN SHALL BE 2X4 SPF#2

DIMENSIONS, SUPPORTS AND LOADINGS SPECIFIED BY FABRICATOR TO BE VERIFIED BY BUILDING DESIGNER

BEARINGS

JT	FACTORED GROSS REACTION VERT	HORZ	MAXIMUM FACTORED GROSS REACTION DOWN	HORZ	UPLIFT	INPUT BRG IN-SX	REQRD BRG IN-SX
F	577	0	577	0	0	1-10	1-8
D	577	0	577	0	0	MECHANICAL	

A SUITABLE HANGER/MECHANICAL CONNECTION IS REQUIRED AT JOINT D. MINIMUM BEARING LENGTH AT JOINT D = 1-12.

UNFACTORED REACTIONS

JT	1ST LCASE COMBINED	MAX./MIN. COMPONENT REACTIONS SNOW	LIVE	PERM.LIVE	WIND	DEAD	SOIL
F	412	251 / 0	0 / 0	0 / 0	0 / 0	160 / 0	0 / 0
D	412	251 / 0	0 / 0	0 / 0	0 / 0	160 / 0	0 / 0

BEARING MATERIAL TO BE SPF NO.2 OR BETTER AT JOINT(S) F

BRACING

TOP CHORD TO BE SHEATHED OR MAX. PURLIN SPACING = 6.25 FT.
MAX. UNBRACED BOTTOM CHORD LENGTH = 10.00 FT OR RIGID CEILING DIRECTLY APPLIED.

ALL PITCH BREAKS AND PERIMETER CORNER JOINTS MUST BE LATERALLY RESTRAINED.

LOADING

TOTAL LOAD CASES: (4)

CHORDS

MEMB. FR-TO	MAX. FACTORED FORCE (LBS)	FACTORED VERT. LOAD LC1 (PLF) FROM	TO	MAX CSI (LC)	MAX. UNBRAC LENGTH
A- B	-428 / 0	-78.0	-78.0	0.31 (1)	6.25
B- C	-428 / 0	-78.0	-78.0	0.36 (1)	6.25
F- A	-521 / 0	0.0	0.0	0.07 (1)	7.81
D- C	-523 / 0	0.0	0.0	0.07 (1)	7.81
F- E	0 / 0	-18.5	-18.5	0.20 (4)	10.00
E- D	0 / 0	-18.5	-18.5	0.19 (4)	10.00

WEBS

MEMB. FR-TO	MAX. FACTORED FORCE (LBS)	MAX CSI (LC)
E- B	0 / 184	0.05 (4)
A- E	0 / 282	0.06 (1)
E- C	0 / 281	0.06 (1)

DESIGN CRITERIA

SPECIFIED LOADS:

TOP	CH.	LL	=	21.0	PSF
		DL	=	6.0	PSF
BOT	CH.	LL	=	0.0	PSF
		DL	=	7.4	PSF
TOTAL	LOAD		=	34.4	PSF

SPACING = 24.0 IN. C/C

THIS TRUSS IS DESIGNED FOR RESIDENTIAL OR SMALL BUILDING REQUIREMENTS OF PART 9, NBCC 2015

THIS DESIGN COMPLIES WITH:
- PART 9 OF BCBC 2018 , ABC 2019
- PART 9 OF OBC 2012 (2019 AMENDMENT)
- CSA 086-14
- TPIC 2014

(55 % OF 23.0 P.S.F. G.S.L. PLUS 8.4 P.S.F. RAIN LOAD) EQUALS 21.0 P.S.F. SPECIFIED ROOF LIVE LOAD

ALLOWABLE DEFL.(LL)= L/360 (0.40")
CALCULATED VERT. DEFL.(LL) = L/ 999 (0.01")
ALLOWABLE DEFL.(TL)= L/360 (0.40")
CALCULATED VERT. DEFL.(TL) = L/ 999 (0.08")

CSI: TC=0.36/1.00 (B-C:1) , BC=0.20/1.00 (E-F:4) , WB=0.06/1.00 (A-E:1) , SSI=0.12/1.00 (A-B:1)

DOL LUMBER=1.00 NAIL=1.00 LS BEND=1.10 COMP=1.10 SHEAR=1.10 TENS= 1.10

COMPANION LIVE LOAD FACTOR = 1.00

TRUSS PLATE MANUFACTURER IS NOT RESPONSIBLE FOR QUALITY CONTROL IN THE TRUSS MANUFACTURING PLANT .

NAIL VALUES

PLATE	GRIP(DRY) (PSI) MAX	MIN	SHEAR (PLI) MAX	MIN	SECTION (PLI) MAX	MIN
MT20	650	371	1747	788	1987	1873

PLATE PLACEMENT TOL. = 0.250 inches

PLATE ROTATION TOL. = 5.0 Deg.

JSI GRIP= 0.45 (E) (INPUT = 0.90)
JSI METAL= 0.22 (D) (INPUT = 1.00)

JOB NAME	TRUSS NAME	QUANTITY	PLY	JOB DESC.		DRWG NO.
336328	H61S		1	TRUSS DESC.	JT 45147	E21104061

Alpa Roof Truss, Maple

Version 8.420 S Jan 21 2021 MiTek Industries, Inc. Wed Oct 13 11:34:21 2021 Page 1

ID:hd511hZTz_bdeQoS817GKByhVxV-c3mUxvV?a?wgOFRO_clnMto_yQHEG8rbvw7FFvyTs00

Scale = 1:61.6

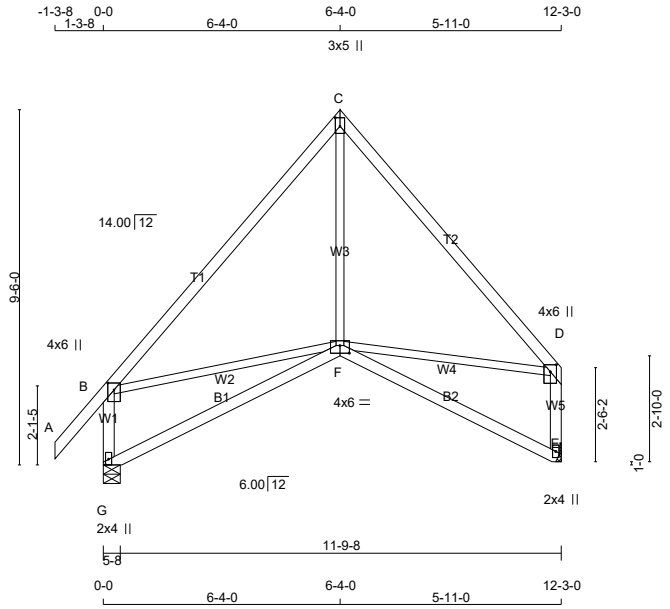

TOTAL WEIGHT = 59 lb

[M][F]

LUMBER

N. L. G. A. RULES

CHORDS	SIZE		LUMBER	DESCR.
A - C	2x4	DRY	2100F 1.8E	SPF
C - D	2x4	DRY	No.2	SPF
G - B	2x4	DRY	No.2	SPF
E - D	2x4	DRY	No.2	SPF
G - F	2x4	DRY	No.2	SPF
F - E	2x4	DRY	No.2	SPF
ALL WEBS EXCEPT	2x3	DRY	No.2	SPF

DRY: SEASONED LUMBER.

PLATES (table is in inches)

JT	TYPE	PLATES	W	LEN	Y	X
B	TMVW+p	MT20	4.0	6.0	2.25	2.00
C	TTW+p	MT20	3.0	5.0	2.75	1.50
D	TMVW+p	MT20	4.0	6.0	2.25	2.00
E	BMV1+p	MT20	2.0	4.0		
F	BBWWW-p	MT20	4.0	6.0	2.50	3.00
G	BMV1+p	MT20	2.0	4.0	Edge	

Edge - INDICATES REFERENCE CORNER OF PLATE TOUCHES EDGE OF CHORD.

LATERAL BRACE(S) SHOWN SHALL BE 2X4 SPF#2

DIMENSIONS, SUPPORTS AND LOADINGS SPECIFIED BY FABRICATOR TO BE VERIFIED BY BUILDING DESIGNER

BEARINGS

JT	FACTORED GROSS REACTION VERT	HORZ	MAXIMUM FACTORED GROSS REACTION DOWN	HORZ	UPLIFT	INPUT BRG IN-SX	REQRD BRG IN-SX
G	700	0	700	0	0	5-8	1-8
E	591	0	591	0	0	MECHANICAL	

A SUITABLE HANGER/MECHANICAL CONNECTION IS REQUIRED AT JOINT E. MINIMUM BEARING LENGTH AT JOINT E = 1-12.

UNFACTORED REACTIONS

JT	1ST LCASE COMBINED	MAX./MIN. COMPONENT REACTIONS SNOW	LIVE	PERM.LIVE	WIND	DEAD	SOIL
G	497	316 / 0	0 / 0	0 / 0	0 / 0	181 / 0	0 / 0
E	421	257 / 0	0 / 0	0 / 0	0 / 0	164 / 0	0 / 0

BEARING MATERIAL TO BE SPF NO.2 OR BETTER AT JOINT(S) G

BRACING

TOP CHORD TO BE SHEATHED OR MAX. PURLIN SPACING = 6.25 FT.
MAX. UNBRACED BOTTOM CHORD LENGTH = 10.00 FT OR RIGID CEILING DIRECTLY APPLIED.

ALL PITCH BREAKS AND PERIMETER CORNER JOINTS MUST BE LATERALLY RESTRAINED.

LOADING

TOTAL LOAD CASES: (4)

CHORDS

MEMB. FR-TO	MAX. FACTORED FORCE (LBS)	FACTORED VERT. LOAD LC1 (PLF) FROM	TO	MAX CSI (LC)	MAX. UNBRAC LENGTH
A- B	0 / 42	-78.0	-78.0	0.07 (1)	10.00
B- C	-448 / 0	-78.0	-78.0	0.27 (1)	6.25
C- D	-448 / 0	-78.0	-78.0	0.36 (1)	6.25
G- B	-642 / 0	0.0	0.0	0.08 (1)	7.81
E- D	-536 / 0	0.0	0.0	0.07 (1)	7.81
G- F	0 / 0	-18.5	-18.5	0.22 (4)	10.00
F- E	0 / 0	-18.5	-18.5	0.19 (4)	10.00

WEBS

MEMB. FR-TO	MAX. FACTORED FORCE (LBS)	MAX CSI (LC)
F- C	0 / 203	0.06 (4)
B- F	0 / 297	0.07 (1)
F- D	0 / 294	0.07 (1)

DESIGN CRITERIA

SPECIFIED LOADS:

TOP	CH.	LL	=	21.0	PSF
		DL	=	6.0	PSF
BOT	CH.	LL	=	0.0	PSF
		DL	=	7.4	PSF
TOTAL	LOAD		=	34.4	PSF

SPACING = 24.0 IN. C/C

THIS TRUSS IS DESIGNED FOR RESIDENTIAL OR SMALL BUILDING REQUIREMENTS OF PART 9, NBCC 2015

THIS DESIGN COMPLIES WITH:
- PART 9 OF BCBC 2018 , ABC 2019
- PART 9 OF OBC 2012 (2019 AMENDMENT)
- CSA 086-14
- TPIC 2014

(55 % OF 23.0 P.S.F. G.S.L. PLUS 8.4 P.S.F. RAIN LOAD) EQUALS 21.0 P.S.F. SPECIFIED ROOF LIVE LOAD

ALLOWABLE DEFL.(LL)= L/360 (0.41")
CALCULATED VERT. DEFL.(LL) = L/ 999 (0.01")
ALLOWABLE DEFL.(TL)= L/360 (0.41")
CALCULATED VERT. DEFL.(TL) = L/ 999 (0.09")

CSI: TC=0.36/1.00 (C-D:1) , BC=0.22/1.00 (F-G:4) , WB=0.07/1.00 (B-F:1) , SSI=0.13/1.00 (B-C:1)

DOL LUMBER=1.00 NAIL=1.00 LS BEND=1.10 COMP=1.10 SHEAR=1.10 TENS= 1.10

COMPANION LIVE LOAD FACTOR = 1.00

TRUSS PLATE MANUFACTURER IS NOT RESPONSIBLE FOR QUALITY CONTROL IN THE TRUSS MANUFACTURING PLANT .

NAIL VALUES

PLATE	GRIP(DRY) (PSI) MAX	MIN	SHEAR (PLI) MAX	MIN	SECTION (PLI) MAX	MIN
MT20	650	371	1747	788	1987	1873

PLATE PLACEMENT TOL. = 0.250 inches

PLATE ROTATION TOL. = 5.0 Deg.

JSI GRIP= 0.50 (F) (INPUT = 0.90)
JSI METAL= 0.27 (G) (INPUT = 1.00)

JOB NAME	TRUSS NAME	QUANTITY	PLY	JOB DESC.		DRWG NO.
336328	H62S		1	TRUSS DESC.	JT 45147	E21104063

Alpa Roof Truss, Maple

Version 8.420 S Jan 21 2021 MiTek Industries, Inc. Wed Oct 13 11:34:24 2021 Page 1

ID:hd511hZTz bdeQoS817GKByhVxV-1eRdZxXuswIEFi9zflJU WQUGdJMTWu1buMvqEyTs?z

Scale = 1:59.8

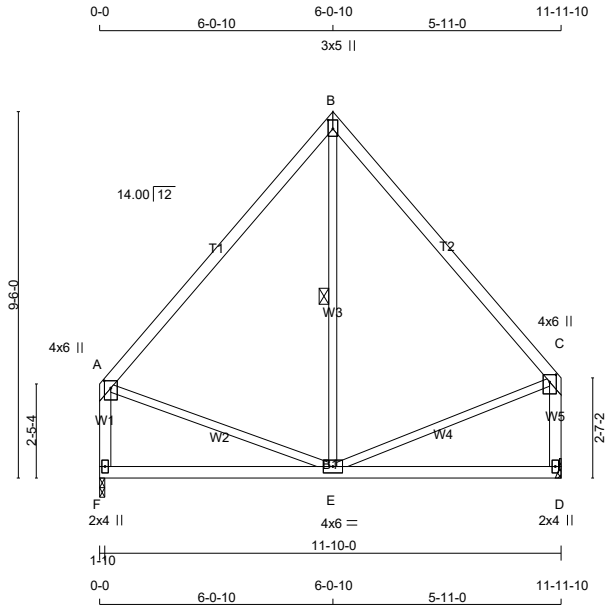

TOTAL WEIGHT = 2 X 57 = 114 lb

[M][F]

LUMBER

N. L. G. A. RULES

CHORDS	SIZE		LUMBER	DESCR.
A - B	2x4	DRY	1650F 1.5E	SPF
B - C	2x4	DRY	No.2	SPF
F - A	2x4	DRY	No.2	SPF
D - C	2x4	DRY	No.2	SPF
F - D	2x4	DRY	No.2	SPF
ALL WEBS EXCEPT	2x3	DRY	No.2	SPF

DRY: SEASONED LUMBER.

PLATES (table is in inches)

JT	TYPE	PLATES	W	LEN	Y	X
A	TMVW+p	MT20	4.0	6.0	2.25	2.00
B	TTW+p	MT20	3.0	5.0	2.75	1.50
C	TMVW+p	MT20	4.0	6.0	2.25	2.00
D	BMV1+p	MT20	2.0	4.0		
E	BMWWW-t	MT20	4.0	6.0		
F	BMV1+p	MT20	2.0	4.0		

LATERAL BRACE(S) SHOWN SHALL BE 2X4 SPF#2

DIMENSIONS, SUPPORTS AND LOADINGS SPECIFIED BY FABRICATOR TO BE VERIFIED BY BUILDING DESIGNER

BEARINGS

JT	FACTORED GROSS REACTION VERT	HORZ	MAXIMUM FACTORED GROSS REACTION DOWN	HORZ	UPLIFT	INPUT BRG	REQRD BRG
F	577	0	577	0	0	1-10	1-8
D	577	0	577	0	0	MECHANICAL	

A SUITABLE HANGER/MECHANICAL CONNECTION IS REQUIRED AT JOINT D. MINIMUM BEARING LENGTH AT JOINT D = 1-8.

UNFACTORED REACTIONS

JT	1ST LCASE COMBINED	MAX./MIN. COMPONENT REACTIONS SNOW	LIVE	PERM.LIVE	WIND	DEAD	SOIL
F	412	251 / 0	0 / 0	0 / 0	0 / 0	160 / 0	0 / 0
D	412	251 / 0	0 / 0	0 / 0	0 / 0	160 / 0	0 / 0

BEARING MATERIAL TO BE SPF NO.2 OR BETTER AT JOINT(S) F

BRACING

TOP CHORD TO BE SHEATHED OR MAX. PURLIN SPACING = 6.25 FT.
MAX. UNBRACED BOTTOM CHORD LENGTH = 10.00 FT OR RIGID CEILING DIRECTLY APPLIED.

ALL PITCH BREAKS AND PERIMETER CORNER JOINTS MUST BE LATERALLY RESTRAINED.

1 LATERAL BRACE(S) AT 1/ 2 LENGTH OF B-E.

END VERTICAL(S) MUST BE SHEATHED OR HAVE BRACES AS INDICATED IN THE MAX. UNBRACED LENGTH COLUMN OF THE TABLE BELOW

LOADING

TOTAL LOAD CASES: (4)

CHORDS

MEMB. FR-TO	MAX. FACTORED FORCE (LBS)	FACTORED VERT. LOAD LC1 (PLF) FROM	TO	MAX CSI (LC)	MAX. UNBRAC LENGTH
A- B	-304 / 0	-78.0	-78.0	0.31 (1)	6.25
B- C	-304 / 0	-78.0	-78.0	0.35 (1)	6.25
F- A	-535 / 0	0.0	0.0	0.07 (1)	7.81
D- C	-536 / 0	0.0	0.0	0.07 (1)	7.81
F- E	0 / 0	-18.5	-18.5	0.19 (4)	10.00
E- D	0 / 0	-18.5	-18.5	0.19 (4)	10.00

WEBS

MEMB. FR-TO	MAX. FACTORED FORCE (LBS)	MAX CSI (LC)
E- B	-5 / 94	0.03 (4)
A- E	0 / 209	0.05 (1)
E- C	0 / 211	0.05 (1)

DESIGN CRITERIA

SPECIFIED LOADS:

TOP	CH.	LL	=	21.0	PSF
		DL	=	6.0	PSF
BOT	CH.	LL	=	0.0	PSF
		DL	=	7.4	PSF
TOTAL	LOAD		=	34.4	PSF

SPACING = 24.0 IN. C/C

THIS TRUSS IS DESIGNED FOR RESIDENTIAL OR SMALL BUILDING REQUIREMENTS OF PART 9, NBCC 2015

THIS DESIGN COMPLIES WITH:
- PART 9 OF BCBC 2018 , ABC 2019
- PART 9 OF OBC 2012 (2019 AMENDMENT)
- CSA 086-14
- TPIC 2014

(55 % OF 23.0 P.S.F. G.S.L. PLUS 8.4 P.S.F. RAIN LOAD) EQUALS 21.0 P.S.F. SPECIFIED ROOF LIVE LOAD

ALLOWABLE DEFL.(LL)= L/360 (0.40")
CALCULATED VERT. DEFL.(LL) = L/ 999 (0.00")
ALLOWABLE DEFL.(TL)= L/360 (0.40")
CALCULATED VERT. DEFL.(TL) = L/ 999 (0.03")

CSI: TC=0.35/1.00 (B-C:1) , BC=0.19/1.00 (E-F:4) , WB=0.05/1.00 (C-E:1) , SSI=0.12/1.00 (A-B:1)

DOL LUMBER=1.00 NAIL=1.00 LS BEND=1.10 COMP=1.10 SHEAR=1.10 TENS= 1.10

COMPANION LIVE LOAD FACTOR = 1.00

TRUSS PLATE MANUFACTURER IS NOT RESPONSIBLE FOR QUALITY CONTROL IN THE TRUSS MANUFACTURING PLANT .

NAIL VALUES

PLATE	GRIP(DRY) (PSI) MAX	MIN	SHEAR (PLI) MAX	MIN	SECTION (PLI) MAX	MIN
MT20	650	371	1747	788	1987	1873

PLATE PLACEMENT TOL. = 0.250 inches

PLATE ROTATION TOL. = 5.0 Deg.

JSI GRIP= 0.31 (E) (INPUT = 0.90)
JSI METAL= 0.16 (A) (INPUT = 1.00)

JOB NAME	TRUSS NAME	QUANTITY	PLY	JOB DESC.		DRWG NO.
336328	H63		1	TRUSS DESC.	JT 45147	E21104064

Alpa Roof Truss, Maple

Version 8.420 S Jan 21 2021 MiTek Industries, Inc. Wed Oct 13 11:34:25 2021 Page 1

ID:hd511hZTz_bdeQoS817GKByhVxV-Vq??nGYWdEQ5ssk9DSqjXjziv1g9CzGAqY5SNhyTs?y

Scale = 1:47.0

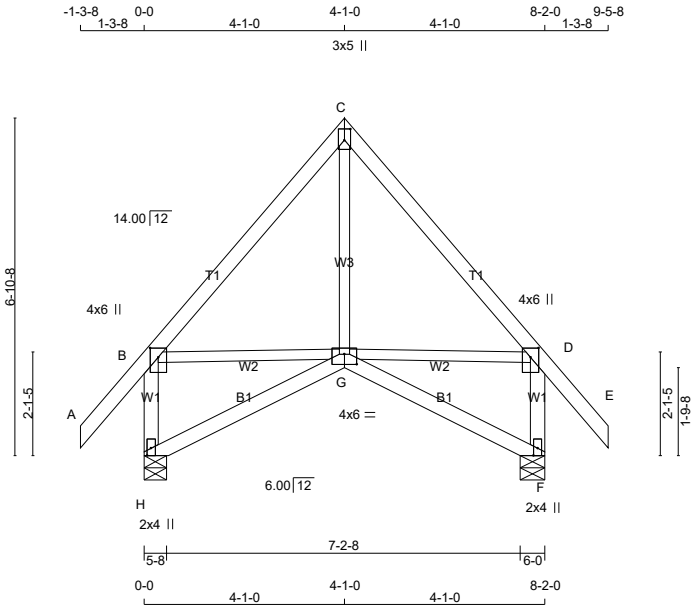

TOTAL WEIGHT = 2 X 44 = 88 lb

[M][F]

LUMBER

N. L. G. A. RULES

CHORDS	SIZE		LUMBER	DESCR.
A - C	2x4	DRY	No.2	SPF
C - E	2x4	DRY	No.2	SPF
H - B	2x4	DRY	No.2	SPF
F - D	2x4	DRY	No.2	SPF
H - G	2x4	DRY	No.2	SPF
G - F	2x4	DRY	No.2	SPF
ALL WEBS EXCEPT	2x3	DRY	No.2	SPF

DRY: SEASONED LUMBER.

PLATES (table is in inches)

JT	TYPE	PLATES	W	LEN	Y	X
B	TMVW+p	MT20	4.0	6.0	2.25	2.00
C	TTW+p	MT20	3.0	5.0	2.75	1.50
D	TMVW+p	MT20	4.0	6.0	2.25	2.00
F	BMV1+p	MT20	2.0	4.0	Edge	
G	BBWWW-p	MT20	4.0	6.0	2.50	3.00
H	BMV1+p	MT20	2.0	4.0	Edge	

Edge - INDICATES REFERENCE CORNER OF PLATE TOUCHES EDGE OF CHORD.

LATERAL BRACE(S) SHOWN SHALL BE 2X4 SPF#2

DIMENSIONS, SUPPORTS AND LOADINGS SPECIFIED BY FABRICATOR TO BE VERIFIED BY BUILDING DESIGNER

BEARINGS

JT	FACTORED GROSS REACTION VERT	HORZ	MAXIMUM FACTORED GROSS REACTION DOWN	HORZ	UPLIFT	INPUT BRG IN-SX	REQRD BRG IN-SX
H	503	0	503	0	0	5-8	1-8
F	503	0	503	0	0	6-0	1-8

UNFACTORED REACTIONS

JT	1ST LCASE COMBINED	MAX./MIN. COMPONENT REACTIONS SNOW	LIVE	PERM.LIVE	WIND	DEAD	SOIL
H	357	230 / 0	0 / 0	0 / 0	0 / 0	126 / 0	0 / 0
F	357	230 / 0	0 / 0	0 / 0	0 / 0	126 / 0	0 / 0

BEARING MATERIAL TO BE SPF NO.2 OR BETTER AT JOINT(S) H, F

BRACING

TOP CHORD TO BE SHEATHED OR MAX. PURLIN SPACING = 6.25 FT.
MAX. UNBRACED BOTTOM CHORD LENGTH = 10.00 FT OR RIGID CEILING DIRECTLY APPLIED.

ALL PITCH BREAKS AND PERIMETER CORNER JOINTS MUST BE LATERALLY RESTRAINED.

LOADING

TOTAL LOAD CASES: (4)

CHORDS

MEMB. FR-TO	MAX. FACTORED FORCE (LBS)	FACTORED VERT. LOAD (PLF) FROM	TO	LC1 CSI (LC)	MAX. UNBRAC LENGTH
A- B	0 / 42	-78.0	-78.0	0.11 (1)	10.00
B- C	-263 / 0	-78.0	-78.0	0.17 (1)	6.25
C- D	-263 / 0	-78.0	-78.0	0.17 (1)	6.25
D- E	0 / 42	-78.0	-78.0	0.11 (1)	10.00
H- B	-465 / 0	0.0	0.0	0.06 (1)	7.81
F- D	-465 / 0	0.0	0.0	0.06 (1)	7.81
H- G	0 / 0	-18.5	-18.5	0.09 (4)	10.00
G- F	0 / 0	-18.5	-18.5	0.09 (4)	10.00

WEBS

MEMB. FR-TO	MAX. FACTORED FORCE (LBS)	MAX CSI (LC)
G- C	0 / 87	0.03 (4)
B- G	0 / 171	0.04 (1)
G- D	0 / 171	0.04 (1)

DESIGN CRITERIA

SPECIFIED LOADS:

TOP CH.	LL	=	21.0	PSF
	DL	=	6.0	PSF
BOT CH.	LL	=	0.0	PSF
	DL	=	7.4	PSF
TOTAL LOAD		=	34.4	PSF

SPACING = 24.0 IN. C/C

THIS TRUSS IS DESIGNED FOR RESIDENTIAL OR SMALL BUILDING REQUIREMENTS OF PART 9, NBCC 2015

THIS DESIGN COMPLIES WITH:
- PART 9 OF BCBC 2018 , ABC 2019
- PART 9 OF OBC 2012 (2019 AMENDMENT)
- CSA 086-14
- TPIC 2014

(55 % OF 23.0 P.S.F. G.S.L. PLUS 8.4 P.S.F. RAIN LOAD) EQUALS 21.0 P.S.F. SPECIFIED ROOF LIVE LOAD

ALLOWABLE DEFL.(LL)= L/360 (0.27")
CALCULATED VERT. DEFL.(LL) = L/ 999 (0.00")
ALLOWABLE DEFL.(TL)= L/360 (0.27")
CALCULATED VERT. DEFL.(TL) = L/ 999 (0.02")

CSI: TC=0.17/1.00 (B-C:1) , BC=0.09/1.00 (G-H:4) , WB=0.04/1.00 (D-G:1) , SSI=0.08/1.00 (B-C:1)

DOL LUMBER=1.00 NAIL=1.00 LS BEND=1.10 COMP=1.10 SHEAR=1.10 TENS= 1.10

COMPANION LIVE LOAD FACTOR = 1.00

TRUSS PLATE MANUFACTURER IS NOT RESPONSIBLE FOR QUALITY CONTROL IN THE TRUSS MANUFACTURING PLANT .

NAIL VALUES

PLATE	GRIP(DRY) (PSI) MAX	MIN	SHEAR (PLI) MAX	MIN	SECTION (PLI) MAX	MIN
MT20	650	371	1747	788	1987	1873

PLATE PLACEMENT TOL. = 0.250 inches

PLATE ROTATION TOL. = 5.0 Deg.

JSI GRIP= 0.31 (F) (INPUT = 0.90)
JSI METAL= 0.19 (H) (INPUT = 1.00)

JOB NAME	TRUSS NAME	QUANTITY	PLY	JOB DESC.		DRWG NO.
336328	H63S		1	TRUSS DESC.	JT 45147	E21104065

Alpa Roof Truss, Maple

Version 8.420 S Jan 21 2021 MiTek Industries, Inc. Wed Oct 13 11:34:27 2021 Page 1

ID:hd511hZTz_bdeQoS817GKByhVxV-RD7lByam9rgp6AuYKtsBc822wqMvgttTHsaZRZyTs?w

Scale = 1:45.9

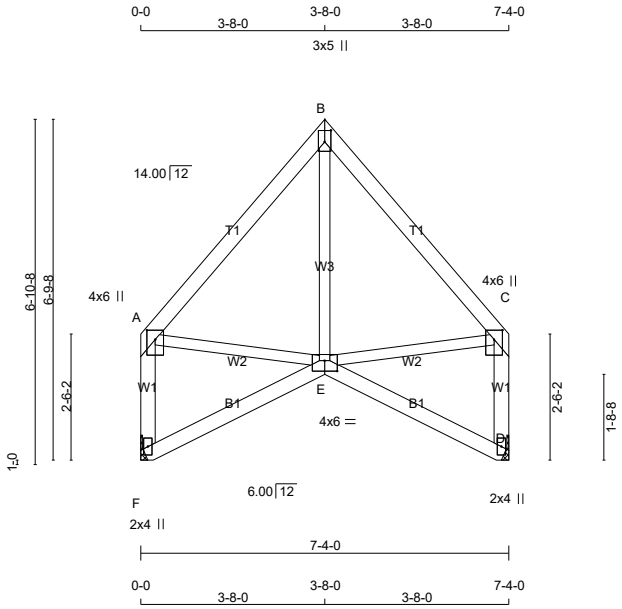

TOTAL WEIGHT = 2 X 37 = 74 lb

[M][F]

LUMBER

N. L. G. A. RULES

CHORDS	SIZE		LUMBER	DESCR.
A - B	2x4	DRY	No.2	SPF
B - C	2x4	DRY	No.2	SPF
F - A	2x4	DRY	No.2	SPF
D - C	2x4	DRY	No.2	SPF
F - E	2x4	DRY	No.2	SPF
E - D	2x4	DRY	No.2	SPF
ALL WEBS EXCEPT	2x3	DRY	No.2	SPF

DRY: SEASONED LUMBER.

PLATES (table is in inches)

JT	TYPE	PLATES	W	LEN	Y	X
A	TMVW+p	MT20	4.0	6.0	2.25	2.00
B	TTW+p	MT20	3.0	5.0	2.75	1.50
C	TMVW+p	MT20	4.0	6.0	2.25	2.00
D	BMV1+p	MT20	2.0	4.0		
E	BBWWW-p	MT20	4.0	6.0	2.50	3.00
F	BMV1+p	MT20	2.0	4.0		

LATERAL BRACE(S) SHOWN SHALL BE 2X4 SPF#2

DIMENSIONS, SUPPORTS AND LOADINGS SPECIFIED BY FABRICATOR TO BE VERIFIED BY BUILDING DESIGNER

BEARINGS

JT	FACTORED GROSS REACTION VERT	HORZ	MAXIMUM FACTORED GROSS REACTION DOWN	HORZ	UPLIFT	INPUT BRG IN-SX	REQRD BRG IN-SX
F	354	0	354	0	0	MECHANICAL	
D	354	0	354	0	0	MECHANICAL	

A SUITABLE HANGER/MECHANICAL CONNECTION IS REQUIRED AT JOINT F, D. MINIMUM BEARING LENGTH AT JOINT F = 1-12, JOINT D = 1-12.

UNFACTORED REACTIONS

JT	1ST LCASE COMBINED	MAX./MIN. COMPONENT REACTIONS SNOW	LIVE	PERM.LIVE	WIND	DEAD	SOIL
F	252	154 / 0	0 / 0	0 / 0	0 / 0	98 / 0	0 / 0
D	252	154 / 0	0 / 0	0 / 0	0 / 0	98 / 0	0 / 0

BRACING

TOP CHORD TO BE SHEATHED OR MAX. PURLIN SPACING = 6.25 FT.
MAX. UNBRACED BOTTOM CHORD LENGTH = 10.00 FT OR RIGID CEILING DIRECTLY APPLIED.

ALL PITCH BREAKS AND PERIMETER CORNER JOINTS MUST BE LATERALLY RESTRAINED.

LOADING

TOTAL LOAD CASES: (4)

CHORDS

MEMB. FR-TO	MAX. FACTORED FORCE (LBS)	FACTORED VERT. LOAD (PLF) FROM	TO	LC1 CSI (LC)	MAX UNBRAC LENGTH
A- B	-212 / 0	-78.0	-78.0	0.13 (1)	6.25
B- C	-212 / 0	-78.0	-78.0	0.13 (1)	6.25
F- A	-320 / 0	0.0	0.0	0.04 (1)	7.81
D- C	-320 / 0	0.0	0.0	0.04 (1)	7.81
F- E	0 / 0	-18.5	-18.5	0.07 (4)	10.00
E- D	0 / 0	-18.5	-18.5	0.07 (4)	10.00

WEBS

MEMB. FR-TO	MAX. FACTORED FORCE (LBS)	MAX CSI (LC)
E- B	0 / 64	0.02 (4)
A- E	0 / 139	0.03 (1)
E- C	0 / 139	0.03 (1)

DESIGN CRITERIA

SPECIFIED LOADS:

TOP	CH.	LL	=	21.0	PSF
		DL	=	6.0	PSF
BOT	CH.	LL	=	0.0	PSF
		DL	=	7.4	PSF
TOTAL	LOAD		=	34.4	PSF

SPACING = 24.0 IN. C/C

THIS TRUSS IS DESIGNED FOR RESIDENTIAL OR SMALL BUILDING REQUIREMENTS OF PART 9, NBCC 2015

THIS DESIGN COMPLIES WITH:
- PART 9 OF BCBC 2018 , ABC 2019
- PART 9 OF OBC 2012 (2019 AMENDMENT)
- CSA 086-14
- TPIC 2014

(55 % OF 23.0 P.S.F. G.S.L. PLUS 8.4 P.S.F. RAIN LOAD) EQUALS 21.0 P.S.F. SPECIFIED ROOF LIVE LOAD

ALLOWABLE DEFL.(LL)= L/360 (0.24")
CALCULATED VERT. DEFL.(LL) = L/ 999 (0.00")
ALLOWABLE DEFL.(TL)= L/360 (0.24")
CALCULATED VERT. DEFL.(TL) = L/ 999 (0.01")

CSI: TC=0.13/1.00 (A-B:1) , BC=0.07/1.00 (E-F:4) , WB=0.03/1.00 (C-E:1) , SSI=0.07/1.00 (A-B:1)

DOL LUMBER=1.00 NAIL=1.00 LS BEND=1.10 COMP=1.10 SHEAR=1.10 TENS= 1.10

COMPANION LIVE LOAD FACTOR = 1.00

TRUSS PLATE MANUFACTURER IS NOT RESPONSIBLE FOR QUALITY CONTROL IN THE TRUSS MANUFACTURING PLANT .

NAIL VALUES

PLATE	GRIP(DRY) (PSI) MAX	MIN	SHEAR (PLI) MAX	MIN	SECTION (PLI) MAX	MIN
MT20	650	371	1747	788	1987	1873

PLATE PLACEMENT TOL. = 0.250 inches

PLATE ROTATION TOL. = 5.0 Deg.

JSI GRIP= 0.18 (E) (INPUT = 0.90)
JSI METAL= 0.13 (F) (INPUT = 1.00)

JOB NAME	TRUSS NAME	QUANTITY	PLY	JOB DESC.	DRWG NO.
336328	H64		1	TRUSS DESC. JT 45147	E21104066

Alpa Roof Truss, Maple

Version 8.420 S Jan 21 2021 MiTek Industries, Inc. Wed Oct 13 11:34:28 2021 Page 1

ID:hd511hZTz_bdeQoS817GKByhVxV-vPh8PIbOw9ogjKTkubNQ8MbDgEiBPK6dWWK7z?yTs?v

Scale = 1:45.5

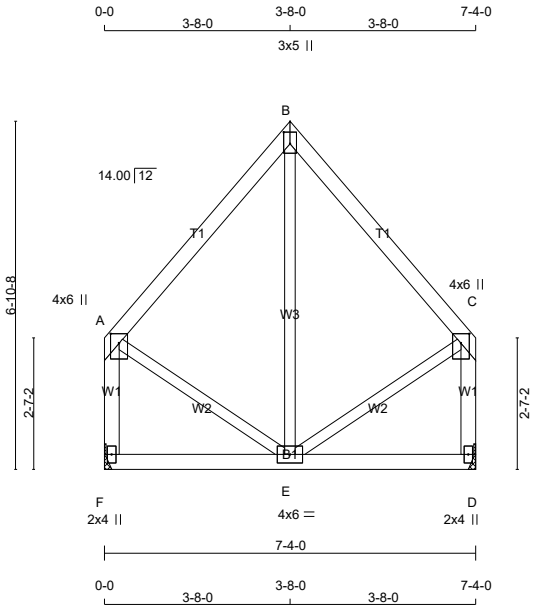

TOTAL WEIGHT = 4 X 38 = 154 lb

LUMBER

N. L. G. A. RULES

CHORDS	SIZE		LUMBER	DESCR.
A - B	2x4	DRY	No.2	SPF
B - C	2x4	DRY	No.2	SPF
F - A	2x4	DRY	No.2	SPF
D - C	2x4	DRY	No.2	SPF
F - D	2x4	DRY	No.2	SPF
ALL WEBS EXCEPT	2x3	DRY	No.2	SPF

DRY: SEASONED LUMBER.

PLATES (table is in inches)

JT	TYPE	PLATES	W	LEN	Y	X
A	TMVW+p	MT20	4.0	6.0	2.25	2.00
B	TTW+p	MT20	3.0	5.0	2.75	1.50
C	TMVW+p	MT20	4.0	6.0	2.25	2.00
D	BMV1+p	MT20	2.0	4.0		
E	BMWWW-t	MT20	4.0	6.0		
F	BMV1+p	MT20	2.0	4.0		

LATERAL BRACE(S) SHOWN SHALL BE 2X4 SPF#2

LICENSED PROFESSIONAL ENGINEER
Y. WIDYA
100225448
10/13/2021
PROVINCE OF ONTARIO

DIMENSIONS, SUPPORTS AND LOADINGS SPECIFIED BY FABRICATOR TO BE VERIFIED BY BUILDING DESIGNER

BEARINGS

JT	FACTORED GROSS REACTION VERT	HORZ	MAXIMUM FACTORED GROSS REACTION DOWN	HORZ	UPLIFT	INPUT BRG IN-SX	REQRD BRG IN-SX
F	354	0	354	0	0	MECHANICAL	
D	354	0	354	0	0	MECHANICAL	

A SUITABLE HANGER/MECHANICAL CONNECTION IS REQUIRED AT JOINT F, D. MINIMUM BEARING LENGTH AT JOINT F = 1-8, JOINT D = 1-8.

UNFACTORED REACTIONS

JT	1ST LCASE COMBINED	MAX./MIN. COMPONENT REACTIONS SNOW	LIVE	PERM.LIVE	WIND	DEAD	SOIL
F	252	154 / 0	0 / 0	0 / 0	0 / 0	98 / 0	0 / 0
D	252	154 / 0	0 / 0	0 / 0	0 / 0	98 / 0	0 / 0

BRACING

TOP CHORD TO BE SHEATHED OR MAX. PURLIN SPACING = 6.25 FT.
MAX. UNBRACED BOTTOM CHORD LENGTH = 10.00 FT OR RIGID CEILING DIRECTLY APPLIED.

ALL PITCH BREAKS AND PERIMETER CORNER JOINTS MUST BE LATERALLY RESTRAINED.

LOADING

TOTAL LOAD CASES: (4)

CHORDS

MEMB. FR-TO	MAX. FACTORED FORCE (LBS)	FACTORED VERT. LOAD (PLF) FROM	TO	LC1 CSI (LC)	MAX UNBRAC LENGTH
A- B	-160 / 0	-78.0	-78.0	0.13 (1)	6.25
B- C	-160 / 0	-78.0	-78.0	0.13 (1)	6.25
F- A	-328 / 0	0.0	0.0	0.05 (1)	7.81
D- C	-328 / 0	0.0	0.0	0.05 (1)	7.81
F- E	0 / 0	-18.5	-18.5	0.07 (4)	10.00
E- D	0 / 0	-18.5	-18.5	0.07 (4)	10.00

WEBS

MEMB. FR-TO	MAX. FACTORED FORCE (LBS)	MAX CSI (LC)
E- B	-43 / 41	0.03 (1)
A- E	0 / 122	0.03 (1)
E- C	0 / 122	0.03 (1)

[M][F]

DESIGN CRITERIA

SPECIFIED LOADS:

TOP	CH.	LL	=	21.0	PSF
		DL	=	6.0	PSF
BOT	CH.	LL	=	0.0	PSF
		DL	=	7.4	PSF
TOTAL	LOAD		=	34.4	PSF

SPACING = 24.0 IN. C/C

THIS TRUSS IS DESIGNED FOR RESIDENTIAL OR SMALL BUILDING REQUIREMENTS OF PART 9, NBCC 2015

THIS DESIGN COMPLIES WITH:
- PART 9 OF BCBC 2018 , ABC 2019
- PART 9 OF OBC 2012 (2019 AMENDMENT)
- CSA 086-14
- TPIC 2014

(55 % OF 23.0 P.S.F. G.S.L. PLUS 8.4 P.S.F. RAIN LOAD) EQUALS 21.0 P.S.F. SPECIFIED ROOF LIVE LOAD

ALLOWABLE DEFL.(LL)= L/360 (0.24")
CALCULATED VERT. DEFL.(LL) = L/ 999 (0.00")
ALLOWABLE DEFL.(TL)= L/360 (0.24")
CALCULATED VERT. DEFL.(TL) = L/ 999 (0.00")

CSI: TC=0.13/1.00 (B-C:1) , BC=0.07/1.00 (D-E:4) , WB=0.03/1.00 (B-E:1) , SSI=0.07/1.00 (B-C:1)

DOL LUMBER=1.00 NAIL=1.00 LS BEND=1.10 COMP=1.10 SHEAR=1.10 TENS= 1.10

COMPANION LIVE LOAD FACTOR = 1.00

TRUSS PLATE MANUFACTURER IS NOT RESPONSIBLE FOR QUALITY CONTROL IN THE TRUSS MANUFACTURING PLANT .

NAIL VALUES

PLATE	GRIP(DRY) (PSI) MAX	MIN	SHEAR (PLI) MAX	MIN	SECTION (PLI) MAX	MIN
MT20	650	371	1747	788	1987	1873

PLATE PLACEMENT TOL. = 0.250 inches

PLATE ROTATION TOL. = 5.0 Deg.

JSI GRIP= 0.19 (A) (INPUT = 0.90)
JSI METAL= 0.09 (C) (INPUT = 1.00)

JOB NAME	TRUSS NAME	QUANTITY	PLY	JOB DESC.	DRWG NO.
336321	H132		1	TRUSS DESC. JT 45147	E21104018

Alpa Roof Truss, Maple

Version 8.420 S Jan 21 2021 MiTek Industries, Inc. Wed Oct 13 14:28:39 2021 Page 1

ID:hd511hZTz_bdeQoS817GKByhVxV-P0g2rs3xiDWo2QwKd_NDDGx2W5WBbo9wj_SellyTpSc

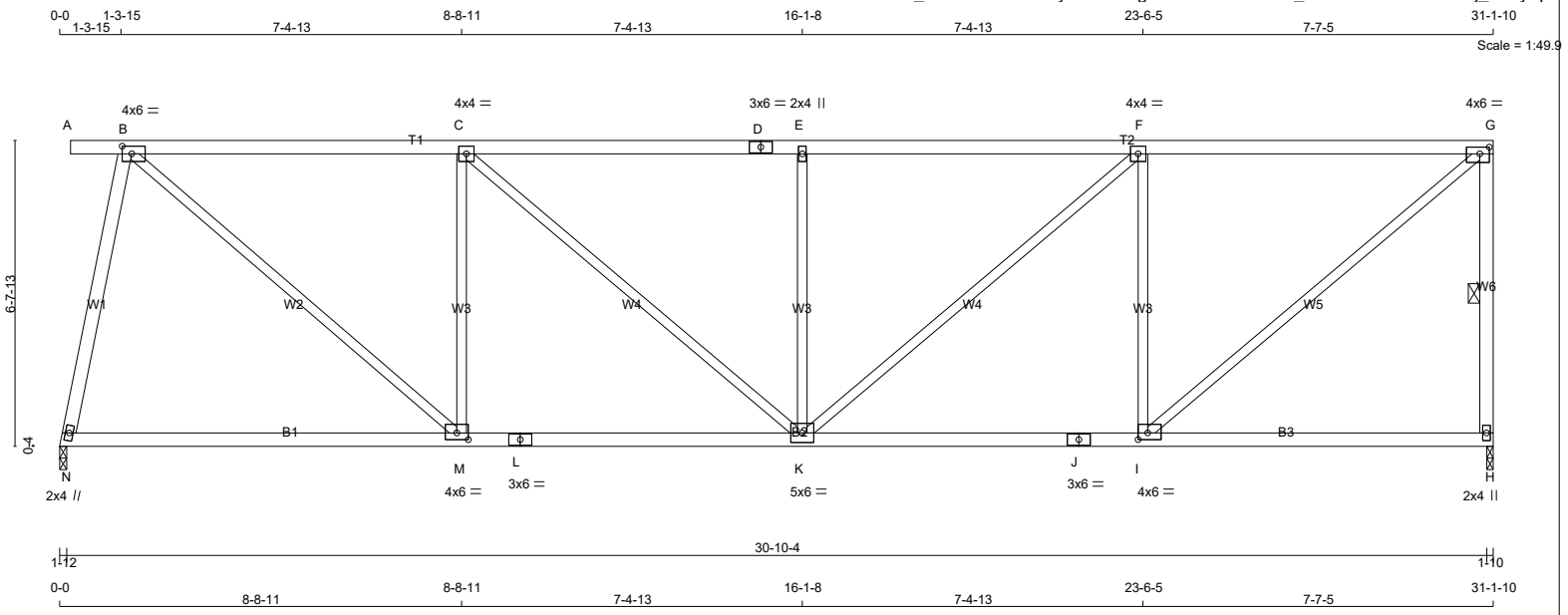

TOTAL WEIGHT = 130 lb

[M]

LUMBER

N. L. G. A. RULES

CHORDS	SIZE		LUMBER	DESCR.
A - D	2x4	DRY	No.2	SPF
D - G	2x4	DRY	No.2	SPF
H - G	2x4	DRY	No.2	SPF
N - L	2x4	DRY	No.2	SPF
L - J	2x4	DRY	No.2	SPF
J - H	2x4	DRY	No.2	SPF
ALL WEBS	2x4	DRY	No.2	SPF
EXCEPT				
B - M	2x3	DRY	No.2	SPF
M - C	2x3	DRY	No.2	SPF
C - K	2x3	DRY	No.2	SPF
K - E	2x3	DRY	No.2	SPF
K - F	2x3	DRY	No.2	SPF
I - F	2x3	DRY	No.2	SPF
I - G	2x3	DRY	No.2	SPF

DRY: SEASONED LUMBER.

PLATES (table is in inches)

JT	TYPE	PLATES	W	LEN	Y	X
B	TMWW-t	MT20	4.0	6.0	2.00	2.50
C	TMWW-t	MT20	4.0	4.0		
D	TS-t	MT20	3.0	6.0		
E	TMW+w	MT20	2.0	4.0		
F	TMWW-t	MT20	4.0	4.0		
G	TMVW-t	MT20	4.0	6.0	1.75	2.50
H	BMV1+p	MT20	2.0	4.0		
I	BMWW-t	MT20	4.0	6.0	1.75	2.50
J	BS-t	MT20	3.0	6.0		
K	BMWWW-t	MT20	5.0	6.0		
L	BS-t	MT20	3.0	6.0		
M	BMWW-t	MT20	4.0	6.0	1.75	3.00
N	BMW1+w	MT20	2.0	4.0		

LATERAL BRACE(S) SHOWN SHALL BE 2X4 SPF#2

DIMENSIONS, SUPPORTS AND LOADINGS SPECIFIED BY FABRICATOR TO BE VERIFIED BY BUILDING DESIGNER

BEARINGS

JT	FACTORED GROSS REACTION VERT	HORZ	MAXIMUM FACTORED GROSS REACTION DOWN	HORZ	UPLIFT	INPUT BRG IN-SX	REQRD BRG IN-SX
N	1488	0	1488	0	0	1-12	1-10
H	1494	0	1494	0	0	1-10	1-10

UNFACTORED REACTIONS

JT	1ST LCASE COMBINED	MAX./MIN. COMPONENT REACTIONS SNOW	LIVE	PERM.LIVE	WIND	DEAD	SOIL
N	1061	647 / 0	0 / 0	0 / 0	0 / 0	414 / 0	0 / 0
H	1065	650 / 0	0 / 0	0 / 0	0 / 0	415 / 0	0 / 0

BEARING MATERIAL TO BE SPF NO.2 OR BETTER AT JOINT(S) N, H

BRACING

TOP CHORD TO BE SHEATHED OR MAX. PURLIN SPACING = 3.80 FT.
MAX. UNBRACED BOTTOM CHORD LENGTH = 10.00 FT OR RIGID CEILING DIRECTLY APPLIED.

ALL PITCH BREAKS AND PERIMETER CORNER JOINTS MUST BE LATERALLY RESTRAINED.

1 LATERAL BRACE(S) AT 1/ 2 LENGTH OF G-H.

END VERTICAL(S) MUST BE SHEATHED OR HAVE BRACES AS INDICATED IN THE MAX. UNBRACED LENGTH COLUMN OF THE TABLE BELOW

LOADING

TOTAL LOAD CASES: (4)

CHORDS

MEMB. FR-TO	MAX. FORCE (LBS)	FACTORED VERT. LOAD LC1 (PLF) FROM	TO	MAX CSI (LC)	MAX. UNBRAC LENGTH
A- B	0 / 0	-78.0	-78.0	0.08 (1)	10.00
B- C	-1544 / 0	-78.0	-78.0	0.77 (1)	4.26
C- D	-1872 / 0	-78.0	-78.0	0.84 (1)	3.89
D- E	-1872 / 0	-78.0	-78.0	0.84 (1)	3.89
E- F	-1872 / 0	-78.0	-78.0	0.88 (1)	3.80
F- G	-1438 / 0	-78.0	-78.0	0.81 (1)	4.30
H- G	-1438 / 0	0.0	0.0	0.29 (1)	5.45
N- M	0 / 278	-18.5	-18.5	0.33 (4)	10.00
M- L	0 / 1544	-18.5	-18.5	0.46 (4)	10.00
L- K	0 / 1544	-18.5	-18.5	0.46 (4)	10.00
K- J	0 / 1438	-18.5	-18.5	0.40 (4)	10.00
J- I	0 / 1438	-18.5	-18.5	0.40 (4)	10.00
I- H	0 / 0	-18.5	-18.5	0.26 (4)	10.00

WEBS

MEMB. FR-TO	FORCE (LBS)	MAX CSI (LC)
N- B	-1451 / 0	0.81 (1)
B- M	0 / 1681	0.38 (1)
M- C	-934 / 0	0.68 (1)
C- K	0 / 432	0.10 (1)
K- E	-534 / 0	0.39 (1)
K- F	0 / 572	0.13 (1)
I- F	-1042 / 0	0.76 (1)
I- G	0 / 1874	0.42 (1)

DESIGN CRITERIA

SPECIFIED LOADS:

TOP CH.	LL	=	21.0	PSF
	DL	=	6.0	PSF
BOT CH.	LL	=	0.0	PSF
	DL	=	7.4	PSF
TOTAL LOAD		=	34.4	PSF

SPACING = 24.0 IN. C/C

LOADING IN FLAT SECTION BASED ON A SLOPE OF 2.00/12 MINIMUM

THIS TRUSS IS DESIGNED FOR RESIDENTIAL OR SMALL BUILDING REQUIREMENTS OF PART 9, NBCC 2015

THIS DESIGN COMPLIES WITH:
- PART 9 OF BCBC 2018 , ABC 2019
- PART 9 OF OBC 2012 (2019 AMENDMENT)
- CSA 086-14
- TPIC 2014

(55 % OF 23.0 P.S.F. G.S.L. PLUS 8.4 P.S.F. RAIN LOAD) EQUALS 21.0 P.S.F. SPECIFIED ROOF LIVE LOAD

ALLOWABLE DEFL.(LL)= L/360 (1.03")
CALCULATED VERT. DEFL.(LL) = L/ 999 (0.09")
ALLOWABLE DEFL.(TL)= L/360 (1.03")
CALCULATED VERT. DEFL.(TL) = L/ 999 (0.20")

CSI: TC=0.88/1.00 (E-F:1) , BC=0.46/1.00 (K-M:4) , WB=0.81/1.00 (B-N:1) , SSI=0.28/1.00 (F-G:1)

DOL LUMBER=1.00 NAIL=1.00 LS BEND=1.10 COMP=1.10 SHEAR=1.10 TENS= 1.10

COMPANION LIVE LOAD FACTOR = 1.00

TRUSS PLATE MANUFACTURER IS NOT RESPONSIBLE FOR QUALITY CONTROL IN THE TRUSS MANUFACTURING PLANT .

NAIL VALUES

PLATE	GRIP(DRY) (PSI) MAX	MIN	SHEAR (PLI) MAX	MIN	SECTION (PLI) MAX	MIN
MT20	650	371	1747	788	1987	1873

PLATE PLACEMENT TOL. = 0.250 inches

PLATE ROTATION TOL. = 5.0 Deg.

JSI GRIP= 0.90 (B) (INPUT = 0.90)
JSI METAL= 0.55 (L) (INPUT = 1.00)

JOB NAME	TRUSS NAME	QUANTITY	PLY	JOB DESC.		DRWG NO.
336321	H133		1	TRUSS DESC.	JT 45147	E21104019

Alpa Roof Truss, Maple

Version 8.420 S Jan 21 2021 MiTek Industries, Inc. Wed Oct 13 14:28:42 2021 Page 1

ID:hd511hZTz_bdeQoS817GKByhVxV-pbMATt5q_8uNvtfvl6xwruZawJZ3oBaMPyglu4yTpSZ

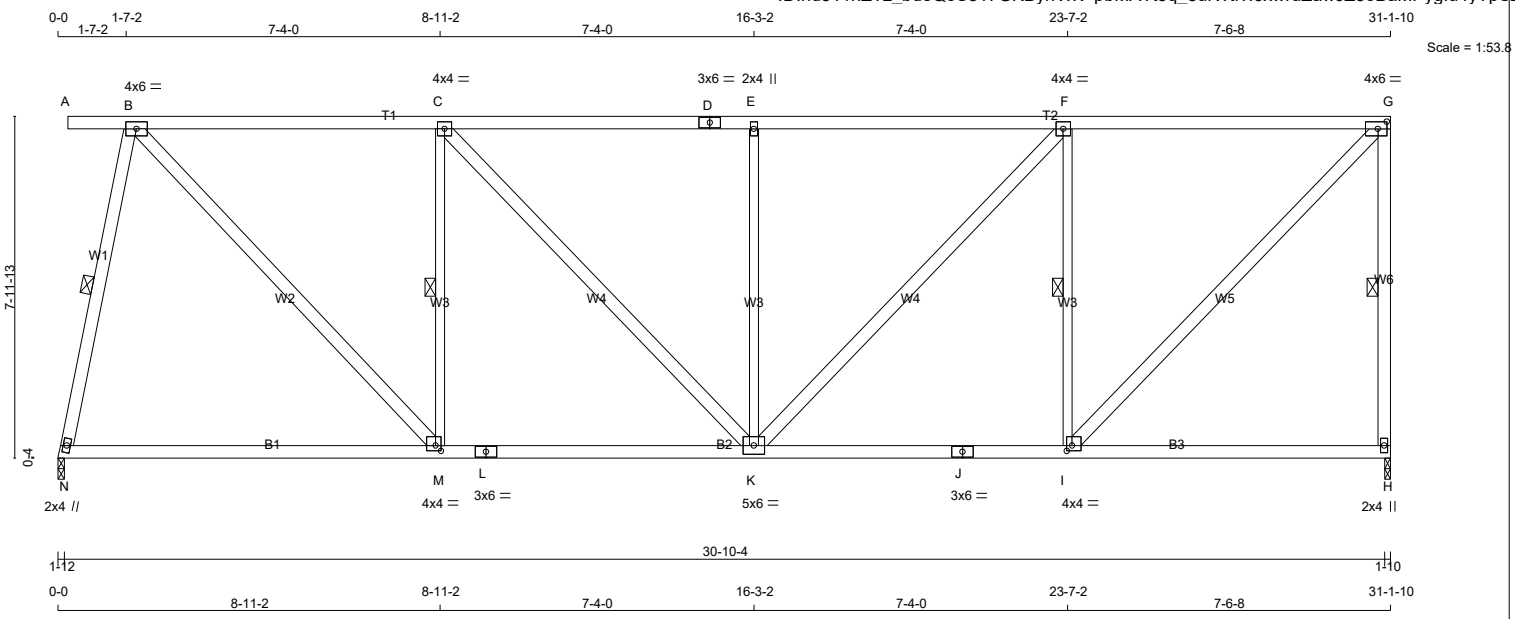

TOTAL WEIGHT = 153 lb

[M]

LUMBER

N. L. G. A. RULES

CHORDS	SIZE		LUMBER	DESCR.
A - D	2x4	DRY	No.2	SPF
D - G	2x4	DRY	No.2	SPF
H - G	2x4	DRY	No.2	SPF
N - L	2x4	DRY	No.2	SPF
L - J	2x4	DRY	No.2	SPF
J - H	2x4	DRY	No.2	SPF
ALL WEBS	2x4	DRY	No.2	SPF
EXCEPT				
M - C	2x3	DRY	No.2	SPF
K - E	2x3	DRY	No.2	SPF
I - F	2x3	DRY	No.2	SPF

DRY: SEASONED LUMBER.

PLATES (table is in inches)

JT	TYPE	PLATES	W	LEN	Y	X
B	TMWW-t	MT20	4.0	6.0		
C	TMWW-t	MT20	4.0	4.0		
D	TS-t	MT20	3.0	6.0		
E	TMW+w	MT20	2.0	4.0		
F	TMWW-t	MT20	4.0	4.0		
G	TMVW-t	MT20	4.0	6.0	2.00	2.50
H	BMV1+p	MT20	2.0	4.0		
I	BMWW-t	MT20	4.0	4.0	1.50	1.50
J	BS-t	MT20	3.0	6.0		
K	BMWWW-t	MT20	5.0	6.0		
L	BS-t	MT20	3.0	6.0		
M	BMWW-t	MT20	4.0	4.0	1.50	1.50
N	BMW1+w	MT20	2.0	4.0		

LATERAL BRACE(S) SHOWN SHALL BE 2X4 SPF#2

DIMENSIONS, SUPPORTS AND LOADINGS SPECIFIED BY FABRICATOR TO BE VERIFIED BY BUILDING DESIGNER

BEARINGS

JT	FACTORED GROSS REACTION VERT	HORZ	MAXIMUM FACTORED GROSS REACTION DOWN	HORZ	UPLIFT	INPUT BRG IN-SX	REQRD BRG IN-SX
N	1487	0	1487	0	0	1-12	1-10
H	1495	0	1495	0	0	1-10	1-10

UNFACTORED REACTIONS

JT	1ST LCASE COMBINED	MAX./MIN. COMPONENT REACTIONS SNOW	LIVE	PERM.LIVE	WIND	DEAD	SOIL
N	1060	647 / 0	0 / 0	0 / 0	0 / 0	414 / 0	0 / 0
H	1066	651 / 0	0 / 0	0 / 0	0 / 0	415 / 0	0 / 0

BEARING MATERIAL TO BE SPF NO.2 OR BETTER AT JOINT(S) N, H

BRACING

TOP CHORD TO BE SHEATHED OR MAX. PURLIN SPACING = 4.19 FT.
MAX. UNBRACED BOTTOM CHORD LENGTH = 10.00 FT OR RIGID CEILING DIRECTLY APPLIED.

ALL PITCH BREAKS AND PERIMETER CORNER JOINTS MUST BE LATERALLY RESTRAINED.

1 LATERAL BRACE(S) AT 1/ 2 LENGTH OF B-N, G-H, C-M, F-I.

END VERTICAL(S) MUST BE SHEATHED OR HAVE BRACES AS INDICATED IN THE MAX. UNBRACED LENGTH COLUMN OF THE TABLE BELOW

LOADING

TOTAL LOAD CASES: (4)

CHORDS

MEMB. FR-TO	MAX. FACTORED FORCE (LBS)	FACTORED VERT. LOAD (PLF) FROM	TO	LC1 CSI (LC)	MAX. UNBRAC LENGTH
A- B	0 / 0	-78.0	-78.0	0.12 (1)	10.00
B- C	-1297 / 0	-78.0	-78.0	0.72 (1)	4.63
C- D	-1548 / 0	-78.0	-78.0	0.77 (1)	4.28
D- E	-1548 / 0	-78.0	-78.0	0.77 (1)	4.28
E- F	-1548 / 0	-78.0	-78.0	0.81 (1)	4.19
F- G	-1183 / 0	-78.0	-78.0	0.76 (1)	4.71
H- G	-1439 / 0	0.0	0.0	0.41 (1)	5.44
N- M	0 / 279	-18.5	-18.5	0.35 (4)	10.00
M- L	0 / 1297	-18.5	-18.5	0.45 (4)	10.00
L- K	0 / 1297	-18.5	-18.5	0.45 (4)	10.00
K- J	0 / 1183	-18.5	-18.5	0.37 (4)	10.00
J- I	0 / 1183	-18.5	-18.5	0.37 (4)	10.00
I- H	0 / 0	-18.5	-18.5	0.26 (4)	10.00

WEBS

MEMB. FR-TO	MAX. FACTORED FORCE (LBS)	MAX CSI (LC)
N- B	-1449 / 0	0.44 (1)
B- M	0 / 1488	0.24 (1)
M- C	-910 / 0	0.37 (1)
C- K	0 / 364	0.06 (1)
K- E	-529 / 0	0.64 (1)
K- F	0 / 529	0.09 (1)
I- F	-1047 / 0	0.42 (1)
I- G	0 / 1689	0.27 (1)

DESIGN CRITERIA

SPECIFIED LOADS:

TOP CH.	LL	=	21.0	PSF
	DL	=	6.0	PSF
BOT CH.	LL	=	0.0	PSF
	DL	=	7.4	PSF
TOTAL LOAD		=	34.4	PSF

SPACING = 24.0 IN. C/C

LOADING IN FLAT SECTION BASED ON A SLOPE OF 2.00/12 MINIMUM

THIS TRUSS IS DESIGNED FOR RESIDENTIAL OR SMALL BUILDING REQUIREMENTS OF PART 9, NBCC 2015

THIS DESIGN COMPLIES WITH:
- PART 9 OF BCBC 2018 , ABC 2019
- PART 9 OF OBC 2012 (2019 AMENDMENT)
- CSA 086-14
- TPIC 2014

(55 % OF 23.0 P.S.F. G.S.L. PLUS 8.4 P.S.F. RAIN LOAD) EQUALS 21.0 P.S.F. SPECIFIED ROOF LIVE LOAD

ALLOWABLE DEFL.(LL)= L/360 (1.03")
CALCULATED VERT. DEFL.(LL) = L/ 999 (0.07")
ALLOWABLE DEFL.(TL)= L/360 (1.03")
CALCULATED VERT. DEFL.(TL) = L/ 999 (0.19")

CSI: TC=0.81/1.00 (E-F:1) , BC=0.45/1.00 (K-M:4) , WB=0.64/1.00 (E-K:1) , SSI=0.28/1.00 (F-G:1)

DOL LUMBER=1.00 NAIL=1.00 LS BEND=1.10 COMP=1.10 SHEAR=1.10 TENS= 1.10

COMPANION LIVE LOAD FACTOR = 1.00

TRUSS PLATE MANUFACTURER IS NOT RESPONSIBLE FOR QUALITY CONTROL IN THE TRUSS MANUFACTURING PLANT .

NAIL VALUES

PLATE	GRIP(DRY) (PSI) MAX	MIN	SHEAR (PLI) MAX	MIN	SECTION (PLI) MAX	MIN
MT20	650	371	1747	788	1987	1873

PLATE PLACEMENT TOL. = 0.250 inches

PLATE ROTATION TOL. = 5.0 Deg.

JSI GRIP= 0.89 (I) (INPUT = 0.90)
JSI METAL= 0.52 (L) (INPUT = 1.00)

JOB NAME	TRUSS NAME	QUANTITY	PLY	JOB DESC.		DRWG NO.
336321	H134		1	TRUSS DESC.	JT 45147	E21104020

Alpa Roof Truss, Maple

Version 8.420 S Jan 21 2021 MiTek Industries, Inc. Wed Oct 13 14:28:46 2021 Page 1

ID:hd511hZTz bdeQoS817GKByhVxV-iMbhJF9K2NPpNVyhXy?s?kkHywvyk0qxKaeV1ryTpSV

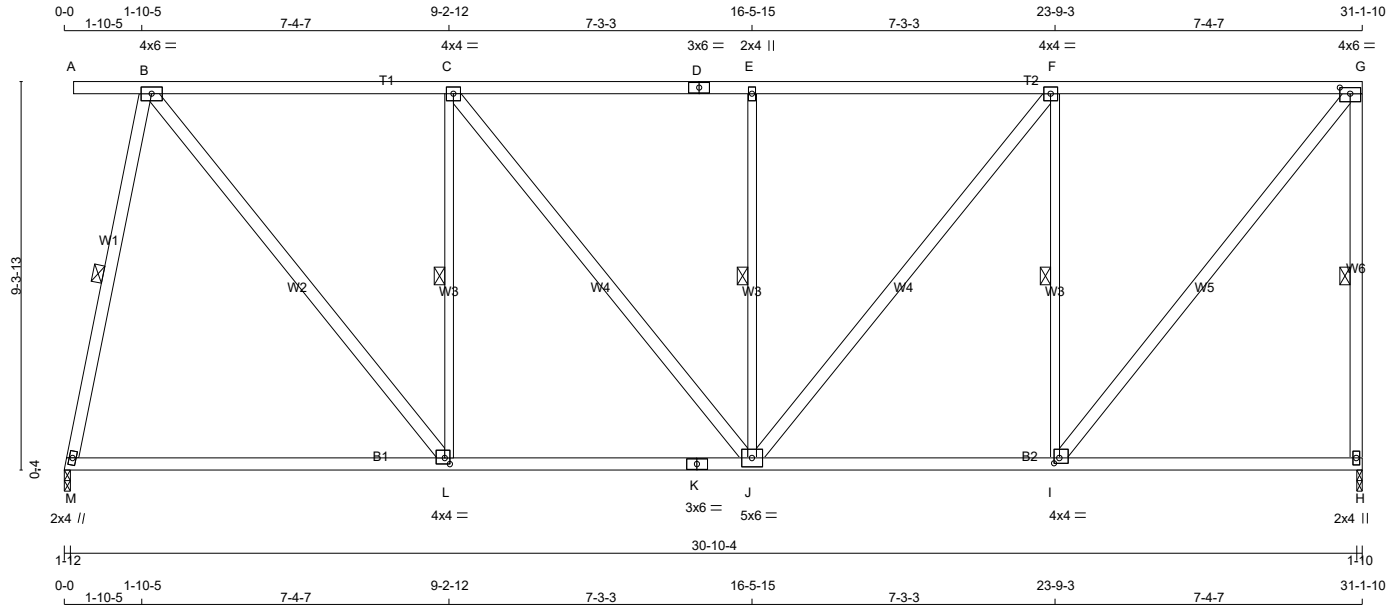

TOTAL WEIGHT = 163 lb

[M]

LUMBER

N. L. G. A. RULES

CHORDS	SIZE		LUMBER	DESCR.
A - D	2x4	DRY	No.2	SPF
D - G	2x4	DRY	No.2	SPF
H - G	2x4	DRY	No.2	SPF
M - K	2x4	DRY	No.2	SPF
K - H	2x4	DRY	No.2	SPF
ALL WEBS	2x4	DRY	No.2	SPF
EXCEPT				
L - C	2x3	DRY	No.2	SPF
J - E	2x3	DRY	No.2	SPF
I - F	2x3	DRY	No.2	SPF

DRY: SEASONED LUMBER.

PLATES (table is in inches)

JT	TYPE	PLATES	W	LEN	Y	X
B	TMWW-t	MT20	4.0	6.0		
C	TMWW-t	MT20	4.0	4.0		
D	TS-t	MT20	3.0	6.0		
E	TMW+w	MT20	2.0	4.0		
F	TMWW-t	MT20	4.0	4.0		
G	TMVW-t	MT20	4.0	6.0	1.75	3.00
H	BMV1+p	MT20	2.0	4.0		
I	BMWW-t	MT20	4.0	4.0	1.50	1.50
J	BMWWW-t	MT20	5.0	6.0		
K	BS-t	MT20	3.0	6.0		
L	BMWW-t	MT20	4.0	4.0	1.75	1.50
M	BMW1+w	MT20	2.0	4.0		

LATERAL BRACE(S) SHOWN SHALL BE 2X4 SPF#2

DIMENSIONS, SUPPORTS AND LOADINGS SPECIFIED BY FABRICATOR TO BE VERIFIED BY BUILDING DESIGNER

BEARINGS

JT	FACTORED GROSS REACTION VERT	HORZ	MAXIMUM FACTORED GROSS REACTION DOWN	HORZ	UPLIFT	INPUT BRG IN-SX	REQRD BRG IN-SX
M	1486	0	1486	0	0	1-12	1-10
H	1496	0	1496	0	0	1-10	1-10

UNFACTORED REACTIONS

JT	1ST LCASE COMBINED	MAX./MIN. COMPONENT REACTIONS SNOW	LIVE	PERM.LIVE	WIND	DEAD	SOIL
M	1060	646 / 0	0 / 0	0 / 0	0 / 0	414 / 0	0 / 0
H	1066	651 / 0	0 / 0	0 / 0	0 / 0	415 / 0	0 / 0

BEARING MATERIAL TO BE SPF NO.2 OR BETTER AT JOINT(S) M, H

BRACING

TOP CHORD TO BE SHEATHED OR MAX. PURLIN SPACING = 4.55 FT.
MAX. UNBRACED BOTTOM CHORD LENGTH = 10.00 FT OR RIGID CEILING DIRECTLY APPLIED.

ALL PITCH BREAKS AND PERIMETER CORNER JOINTS MUST BE LATERALLY RESTRAINED.

1 LATERAL BRACE(S) AT 1/ 2 LENGTH OF B-M, G-H, C-L, E-J, F-I.

END VERTICAL(S) MUST BE SHEATHED OR HAVE BRACES AS INDICATED IN THE MAX. UNBRACED LENGTH COLUMN OF THE TABLE BELOW

LOADING

TOTAL LOAD CASES: (4)

CHORDS

MEMB. FR-TO	MAX. FORCE (LBS)	FACTORED VERT. LOAD (PLF) FROM	TO	LC1 CSI (LC)	MAX UNBRAC LENGTH
A- B	0 / 0	-78.0	-78.0	0.16 (1)	10.00
B- C	-1130 / 0	-78.0	-78.0	0.70 (1)	4.90
C- D	-1318 / 0	-78.0	-78.0	0.73 (1)	4.59
D- E	-1318 / 0	-78.0	-78.0	0.73 (1)	4.59
E- F	-1318 / 0	-78.0	-78.0	0.74 (1)	4.55
F- G	-992 / 0	-78.0	-78.0	0.70 (1)	5.13
H- G	-1442 / 0	0.0	0.0	0.59 (1)	5.44
M- L	0 / 279	-18.5	-18.5	0.36 (4)	10.00
L- K	0 / 1130	-18.5	-18.5	0.45 (4)	10.00
K- J	0 / 1130	-18.5	-18.5	0.45 (4)	10.00
J- I	0 / 992	-18.5	-18.5	0.35 (4)	10.00
I- H	0 / 0	-18.5	-18.5	0.25 (4)	10.00

WEBS

MEMB. FR-TO	MAX. FORCE (LBS)	MAX CSI (LC)
M- B	-1446 / 0	0.63 (1)
B- L	0 / 1359	0.22 (1)
L- C	-880 / 0	0.50 (1)
C- J	0 / 300	0.05 (1)
J- E	-524 / 0	0.30 (1)
J- F	0 / 520	0.08 (1)
I- F	-1057 / 0	0.60 (1)
I- G	0 / 1569	0.25 (1)

DESIGN CRITERIA

SPECIFIED LOADS:

TOP CH.	LL	=	21.0	PSF
	DL	=	6.0	PSF
BOT CH.	LL	=	0.0	PSF
	DL	=	7.4	PSF
TOTAL LOAD		=	34.4	PSF

SPACING = 24.0 IN. C/C

LOADING IN FLAT SECTION BASED ON A SLOPE OF 2.00/12 MINIMUM

THIS TRUSS IS DESIGNED FOR RESIDENTIAL OR SMALL BUILDING REQUIREMENTS OF PART 9, NBCC 2015

THIS DESIGN COMPLIES WITH:
- PART 9 OF BCBC 2018 , ABC 2019
- PART 9 OF OBC 2012 (2019 AMENDMENT)
- CSA 086-14
- TPIC 2014

(55 % OF 23.0 P.S.F. G.S.L. PLUS 8.4 P.S.F. RAIN LOAD) EQUALS 21.0 P.S.F. SPECIFIED ROOF LIVE LOAD

ALLOWABLE DEFL.(LL)= L/360 (1.03")
CALCULATED VERT. DEFL.(LL) = L/ 999 (0.06")
ALLOWABLE DEFL.(TL)= L/360 (1.03")
CALCULATED VERT. DEFL.(TL) = L/ 999 (0.21")

CSI: TC=0.74/1.00 (E-F:1) , BC=0.45/1.00 (J-L:4) , WB=0.63/1.00 (B-M:1) , SSI=0.27/1.00 (F-G:1)

DOL LUMBER=1.00 NAIL=1.00 LS BEND=1.10 COMP=1.10 SHEAR=1.10 TENS= 1.10

COMPANION LIVE LOAD FACTOR = 1.00

TRUSS PLATE MANUFACTURER IS NOT RESPONSIBLE FOR QUALITY CONTROL IN THE TRUSS MANUFACTURING PLANT .

NAIL VALUES

PLATE	GRIP(DRY) (PSI) MAX	MIN	SHEAR (PLI) MAX	MIN	SECTION (PLI) MAX	MIN
MT20	650	371	1747	788	1987	1873

PLATE PLACEMENT TOL. = 0.250 inches

PLATE ROTATION TOL. = 5.0 Deg.

JSI GRIP= 0.84 (I) (INPUT = 0.90)
JSI METAL= 0.35 (I) (INPUT = 1.00)

JOB NAME	TRUSS NAME	QUANTITY	PLY	JOB DESC.		DRWG NO.
336321	H132T		1	TRUSS DESC.	JT 45147	E21104024

Alpa Roof Truss, Maple

Version 8.420 S Jan 21 2021 MiTek Industries, Inc. Wed Oct 13 14:28:41 2021 Page 1

ID:hd511hZTz bdeQoS817GKByhVxV-LOooGY5CDrmWHj4jkPPhIh0QEvD?3iZCAIxkMeyTpSa

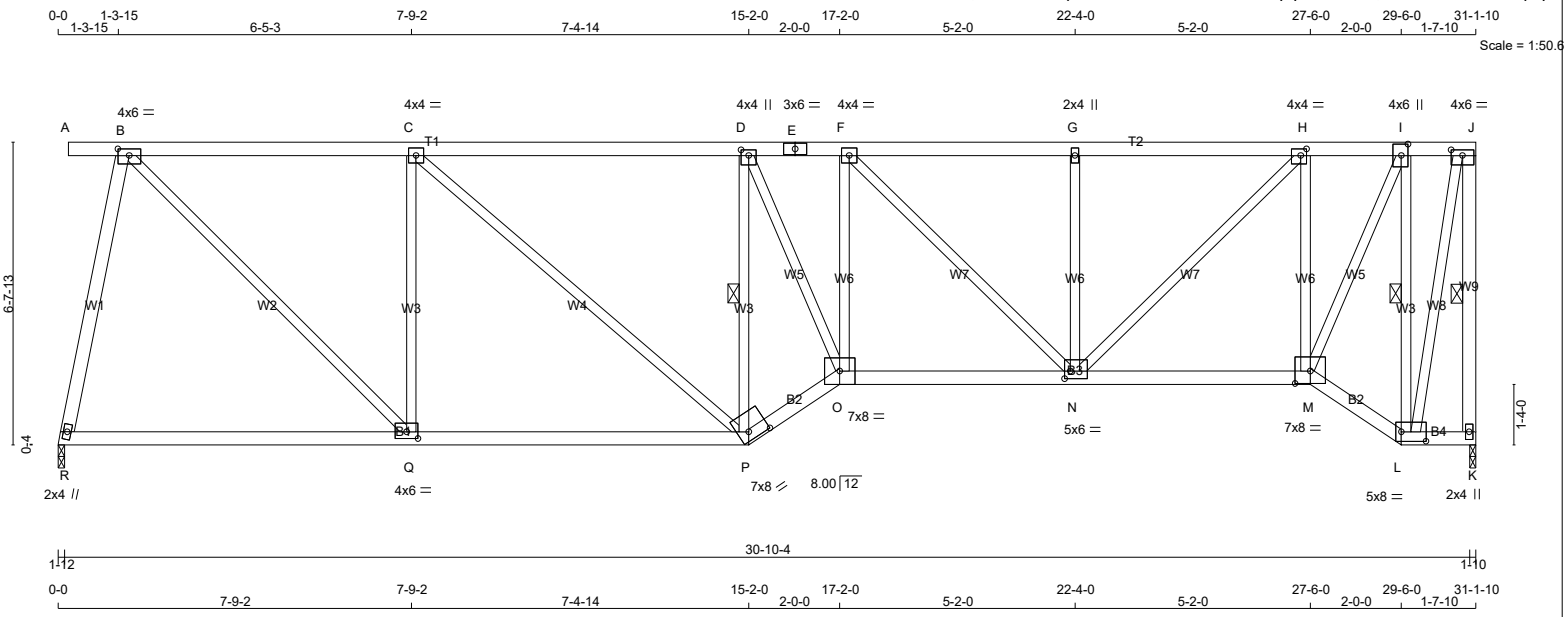

TOTAL WEIGHT = 152 lb

LUMBER

N. L. G. A. RULES

CHORDS	SIZE		LUMBER	DESCR.
A - E	2x4	DRY	No.2	SPF
E - J	2x4	DRY	No.2	SPF
K - J	2x4	DRY	No.2	SPF
R - P	2x4	DRY	No.2	SPF
P - O	2x4	DRY	No.2	SPF
O - M	2x4	DRY	No.2	SPF
M - L	2x4	DRY	No.2	SPF
L - K	2x4	DRY	No.2	SPF
ALL WEBS	2x3	DRY	No.2	SPF
EXCEPT				
R - B	2x4	DRY	No.2	SPF

DRY: SEASONED LUMBER.

PLATES (table is in inches)

JT	TYPE	PLATES	W	LEN	Y	X
B	TMWW-t	MT20	4.0	6.0	1.75	3.00
C	TMWW-t	MT20	4.0	4.0		
D	TMWW+t	MT20	4.0	4.0	1.50	2.00
E	TS-t	MT20	3.0	6.0		
F	TMWW-t	MT20	4.0	4.0		
G	TMW+w	MT20	2.0	4.0		
H	TMWW-t	MT20	4.0	4.0	1.75	1.50
I	TMWW+t	MT20	4.0	6.0	3.00	1.75
J	TMVW-t	MT20	4.0	6.0	1.50	3.00
K	BMV1+p	MT20	2.0	4.0		
L	BBWW-l	MT20	5.0	8.0	2.50	6.50
M	BBWW-l	MT20	7.0	8.0	3.25	4.00
N	BMWWW-t	MT20	5.0	6.0	2.00	1.50
O	BBWW-l	MT20	7.0	8.0		
P	BBWW-h	MT20	7.0	8.0	2.25	5.25
Q	BMWW-t	MT20	4.0	6.0	1.75	3.00
R	BMW1+w	MT20	2.0	4.0		

LATERAL BRACE(S) SHOWN SHALL BE 2X4 SPF#2

DIMENSIONS, SUPPORTS AND LOADINGS SPECIFIED BY FABRICATOR TO BE VERIFIED BY BUILDING DESIGNER

BEARINGS

JT	FACTORED GROSS REACTION VERT	HORZ	MAXIMUM FACTORED GROSS REACTION DOWN	HORZ	UPLIFT	INPUT BRG IN-SX	REQRD BRG IN-SX
R	1488	0	1488	0	0	1-12	1-10
K	1494	0	1494	0	0	1-10	1-10

UNFACTORED REACTIONS

JT	1ST LCASE COMBINED	MAX./MIN. COMPONENT REACTIONS SNOW	LIVE	PERM.LIVE	WIND	DEAD	SOIL
R	1061	647 / 0	0 / 0	0 / 0	0 / 0	414 / 0	0 / 0
K	1065	650 / 0	0 / 0	0 / 0	0 / 0	415 / 0	0 / 0

BEARING MATERIAL TO BE SPF NO.2 OR BETTER AT JOINT(S) R, K

BRACING

TOP CHORD TO BE SHEATHED OR MAX. PURLIN SPACING = 4.06 FT.
MAX. UNBRACED BOTTOM CHORD LENGTH = 10.00 FT OR RIGID CEILING DIRECTLY APPLIED.

ALL PITCH BREAKS AND PERIMETER CORNER JOINTS MUST BE LATERALLY RESTRAINED.

1 LATERAL BRACE(S) AT 1/ 2 LENGTH OF J-K, D-P, I-L.

END VERTICAL(S) MUST BE SHEATHED OR HAVE BRACES AS INDICATED IN THE MAX. UNBRACED LENGTH COLUMN OF THE TABLE BELOW

LOADING

TOTAL LOAD CASES: (4)

CHORDS

MEMB. FR-TO	MAX. FACTORED FORCE (LBS)	FACTORED VERT. LOAD (PLF) FROM	TO	LC1 CSI (LC)	MAX UNBRAC LENGTH
A- B	0 / 0	-78.0	-78.0	0.08 (1)	10.00
B- C	-1426 / 0	-78.0	-78.0	0.63 (1)	4.61
C- D	-1864 / 0	-78.0	-78.0	0.74 (1)	4.09
D- E	-2298 / 0	-78.0	-78.0	0.40 (1)	4.06
E- F	-2298 / 0	-78.0	-78.0	0.40 (1)	4.06
F- G	-1920 / 0	-78.0	-78.0	0.35 (1)	4.51
G- H	-1920 / 0	-78.0	-78.0	0.35 (1)	4.51
H- I	-975 / 0	-78.0	-78.0	0.16 (1)	6.11
I- J	-356 / 0	-78.0	-78.0	0.08 (1)	6.25
K- J	-1479 / 0	0.0	0.0	0.30 (1)	5.39
R- Q	0 / 280	-18.5	-18.5	0.32 (4)	10.00
Q- P	0 / 1426	-18.5	-18.5	0.43 (4)	10.00
P- O	0 / 2210	-18.5	-18.5	0.37 (1)	10.00
O- N	0 / 2294	-18.5	-18.5	0.43 (1)	10.00
N- M	0 / 1001	-18.5	-18.5	0.23 (4)	10.00
M- L	0 / 397	-18.5	-18.5	0.08 (1)	10.00
L- K	0 / 0	-18.5	-18.5	0.01 (4)	10.00

WEBS

MEMB. FR-TO	MAX. FACTORED FORCE (LBS)	MAX CSI (LC)
R- B	-1461 / 0	0.82 (1)
B- Q	0 / 1627	0.37 (1)
Q- C	-986 / 0	0.72 (1)
C- P	0 / 576	0.13 (1)
P- D	-1528 / 0	0.43 (1)
D- O	0 / 1186	0.27 (1)
O- F	0 / 196	0.04 (1)
F- N	-527 / 0	0.51 (1)
N- G	-437 / 0	0.18 (1)
N- H	0 / 1295	0.29 (1)
M- H	-1254 / 0	0.53 (1)
M- I	0 / 1664	0.37 (1)
L- I	-1569 / 0	0.45 (1)
L- J	0 / 1427	0.32 (1)

[M]

DESIGN CRITERIA

SPECIFIED LOADS:

TOP	CH.	LL	=	21.0	PSF
		DL	=	6.0	PSF
BOT	CH.	LL	=	0.0	PSF
		DL	=	7.4	PSF
TOTAL	LOAD		=	34.4	PSF

SPACING = 24.0 IN. C/C

LOADING IN FLAT SECTION BASED ON A SLOPE OF 2.00/12 MINIMUM

THIS TRUSS IS DESIGNED FOR RESIDENTIAL OR SMALL BUILDING REQUIREMENTS OF PART 9, NBCC 2015

THIS DESIGN COMPLIES WITH:
- PART 9 OF BCBC 2018 , ABC 2019
- PART 9 OF OBC 2012 (2019 AMENDMENT)
- CSA 086-14
- TPIC 2014

(55 % OF 23.0 P.S.F. G.S.L. PLUS 8.4 P.S.F. RAIN LOAD) EQUALS 21.0 P.S.F. SPECIFIED ROOF LIVE LOAD

ALLOWABLE DEFL.(LL)= L/360 (1.03")
CALCULATED VERT. DEFL.(LL) = L/ 999 (0.13")
ALLOWABLE DEFL.(TL)= L/360 (1.03")
CALCULATED VERT. DEFL.(TL) = L/ 999 (0.26")

CSI: TC=0.74/1.00 (C-D:1) , BC=0.43/1.00 (P-Q:4) , WB=0.82/1.00 (B-R:1) , SSI=0.24/1.00 (B-C:1)

DOL LUMBER=1.00 NAIL=1.00 LS BEND=1.10 COMP=1.10 SHEAR=1.10 TENS= 1.10

COMPANION LIVE LOAD FACTOR = 1.00

TRUSS PLATE MANUFACTURER IS NOT RESPONSIBLE FOR QUALITY CONTROL IN THE TRUSS MANUFACTURING PLANT .

NAIL VALUES

PLATE	GRIP(DRY) (PSI) MAX	MIN	SHEAR (PLI) MAX	MIN	SECTION (PLI) MAX	MIN
MT20	650	371	1747	788	1987	1873

PLATE PLACEMENT TOL. = 0.250 inches

PLATE ROTATION TOL. = 5.0 Deg.

JSI GRIP= 0.90 (Q) (INPUT = 0.90)
JSI METAL= 0.34 (P) (INPUT = 1.00)

JOB NAME	TRUSS NAME	QUANTITY	PLY	JOB DESC.	DRWG NO.
336321	H133T		1	TRUSS DESC. JT 45147	E21104025

Alpa Roof Truss, Maple

Version 8.420 S Jan 21 2021 MiTek Industries, Inc. Wed Oct 13 14:28:44 2021 Page 1

ID:hd511hZTz bdeQoS817GKByhVxV-mzTxuZ74Wm858BpIQXzOwJeyn6E3G1kftG9OzyyTpSX

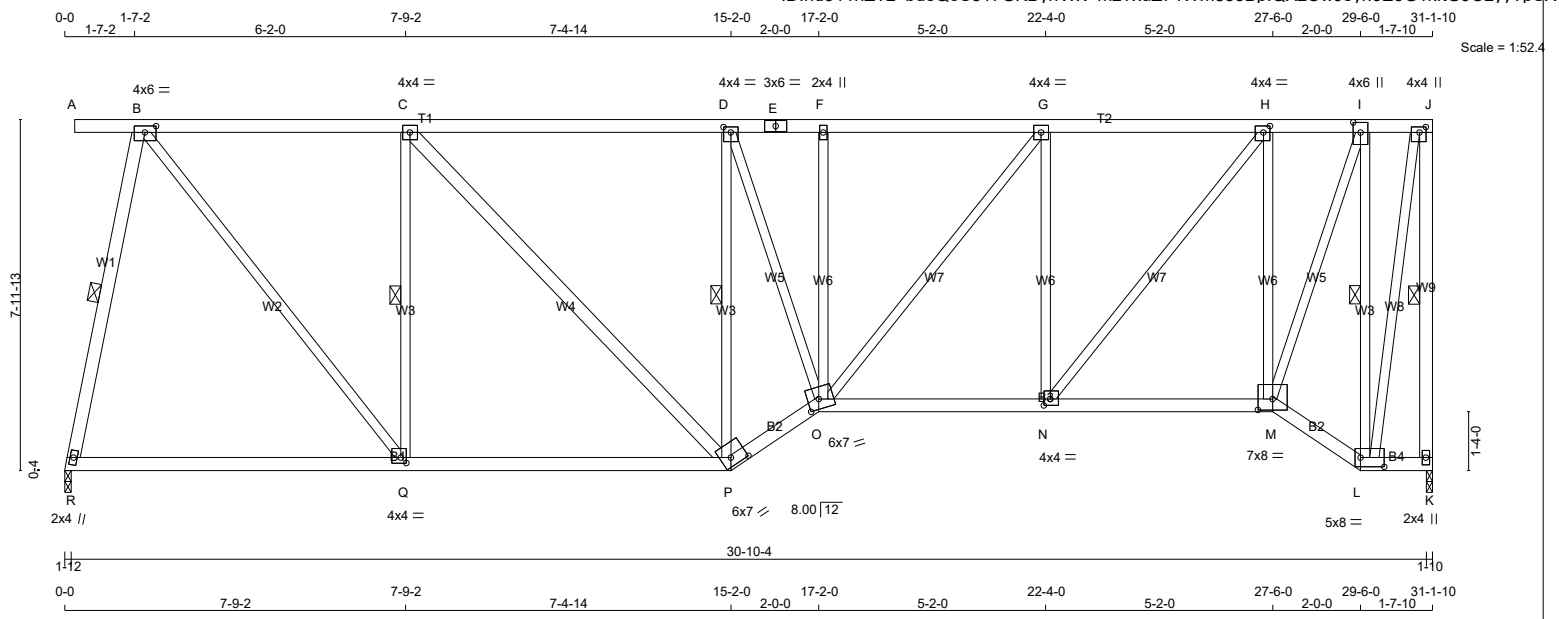

TOTAL WEIGHT = 171 lb

LUMBER

N. L. G. A. RULES

CHORDS	SIZE		LUMBER	DESCR.
A - E	2x4	DRY	No.2	SPF
E - J	2x4	DRY	No.2	SPF
K - J	2x4	DRY	No.2	SPF
R - P	2x4	DRY	No.2	SPF
P - O	2x4	DRY	No.2	SPF
O - M	2x4	DRY	No.2	SPF
M - L	2x4	DRY	No.2	SPF
L - K	2x4	DRY	No.2	SPF
ALL WEBS	2x3	DRY	No.2	SPF
EXCEPT				
R - B	2x4	DRY	No.2	SPF
C - P	2x4	DRY	No.2	SPF

DRY: SEASONED LUMBER.

PLATES (table is in inches)

JT	TYPE	PLATES	W	LEN	Y	X
B	TMWW-t	MT20	4.0	6.0	1.75	3.00
C	TMWW-t	MT20	4.0	4.0		
D	TMWW-t	MT20	4.0	4.0	1.50	2.00
E	TS-t	MT20	3.0	6.0		
F	TMW+w	MT20	2.0	4.0		
G	TMWW-t	MT20	4.0	4.0		
H	TMWW-t	MT20	4.0	4.0	1.75	1.75
I	TMWW+t	MT20	4.0	6.0	2.75	2.00
J	TMVW+p	MT20	4.0	4.0	1.50	1.75
K	BMV1+p	MT20	2.0	4.0		
L	BBWW-l	MT20	5.0	8.0	2.50	6.50
M	BBWW-l	MT20	7.0	8.0	3.00	4.00
N	BMWW-t	MT20	4.0	4.0	1.75	1.75
O	BBWWW-m	MT20	6.0	7.0	2.75	3.00
P	BBWW-h	MT20	6.0	7.0	2.25	4.25
Q	BMWW-t	MT20	4.0	4.0	1.50	1.50
R	BMW1+w	MT20	2.0	4.0		

LATERAL BRACE(S) SHOWN SHALL BE 2X4 SPF#2

DIMENSIONS, SUPPORTS AND LOADINGS SPECIFIED BY FABRICATOR TO BE VERIFIED BY BUILDING DESIGNER

BEARINGS

JT	FACTORED GROSS REACTION VERT	HORZ	MAXIMUM FACTORED GROSS REACTION DOWN	HORZ	UPLIFT	INPUT BRG IN-SX	REQRD BRG IN-SX
R	1487	0	1487	0	0	1-12	1-10
K	1495	0	1495	0	0	1-10	1-10

UNFACTORED REACTIONS

JT	1ST LCASE COMBINED	MAX./MIN. COMPONENT REACTIONS SNOW	LIVE	PERM.LIVE	WIND	DEAD	SOIL
R	1060	647 / 0	0 / 0	0 / 0	0 / 0	414 / 0	0 / 0
K	1066	651 / 0	0 / 0	0 / 0	0 / 0	415 / 0	0 / 0

BEARING MATERIAL TO BE SPF NO.2 OR BETTER AT JOINT(S) R, K

BRACING

TOP CHORD TO BE SHEATHED OR MAX. PURLIN SPACING = 4.48 FT.
MAX. UNBRACED BOTTOM CHORD LENGTH = 10.00 FT OR RIGID CEILING DIRECTLY APPLIED.

ALL PITCH BREAKS AND PERIMETER CORNER JOINTS MUST BE LATERALLY RESTRAINED.

1 LATERAL BRACE(S) AT 1/ 2 LENGTH OF B-R, J-K, C-Q, D-P, I-L.

END VERTICAL(S) MUST BE SHEATHED OR HAVE BRACES AS INDICATED IN THE MAX. UNBRACED LENGTH COLUMN OF THE TABLE BELOW

LOADING

TOTAL LOAD CASES: (4)

CHORDS

MEMB. FR-TO	MAX. FACTORED FORCE (LBS)	FACTORED VERT. LOAD (PLF) FROM	TO	LC1 CSI (LC)	MAX. UNBRAC LENGTH
A- B	0 / 0	-78.0	-78.0	0.12 (1)	10.00
B- C	-1180 / 0	-78.0	-78.0	0.57 (1)	5.05
C- D	-1544 / 0	-78.0	-78.0	0.66 (1)	4.50
D- E	-1816 / 0	-78.0	-78.0	0.40 (1)	4.48
E- F	-1816 / 0	-78.0	-78.0	0.40 (1)	4.48
F- G	-1819 / 0	-78.0	-78.0	0.35 (1)	4.61
G- H	-1520 / 0	-78.0	-78.0	0.33 (1)	4.96
H- I	-770 / 0	-78.0	-78.0	0.15 (1)	6.25
I- J	-294 / 0	-78.0	-78.0	0.09 (1)	6.25
K- J	-1480 / 0	0.0	0.0	0.42 (1)	5.39
R- Q	0 / 281	-18.5	-18.5	0.32 (4)	10.00
Q- P	0 / 1180	-18.5	-18.5	0.41 (4)	10.00
P- O	0 / 1834	-18.5	-18.5	0.31 (1)	10.00
O- N	0 / 1520	-18.5	-18.5	0.31 (1)	10.00
N- M	0 / 791	-18.5	-18.5	0.21 (4)	10.00
M- L	0 / 328	-18.5	-18.5	0.07 (1)	10.00
L- K	0 / 0	-18.5	-18.5	0.01 (4)	10.00

WEBS

MEMB. FR-TO	MAX. FACTORED FORCE (LBS)	MAX CSI (LC)
R- B	-1461 / 0	0.44 (1)
B- Q	0 / 1454	0.33 (1)
Q- C	-974 / 0	0.39 (1)
C- P	0 / 525	0.08 (1)
P- D	-1322 / 0	0.53 (1)
D- O	0 / 922	0.21 (1)
O- F	-164 / 0	0.12 (1)
O- G	0 / 473	0.11 (1)
N- G	-808 / 0	0.59 (1)
N- H	0 / 1172	0.26 (1)
M- H	-1257 / 0	0.92 (1)
M- I	0 / 1578	0.36 (1)
L- I	-1529 / 0	0.61 (1)
L- J	0 / 1411	0.32 (1)

[M]

DESIGN CRITERIA

SPECIFIED LOADS:

TOP	CH.	LL	=	21.0	PSF
		DL	=	6.0	PSF
BOT	CH.	LL	=	0.0	PSF
		DL	=	7.4	PSF
TOTAL	LOAD		=	34.4	PSF

SPACING = 24.0 IN. C/C

LOADING IN FLAT SECTION BASED ON A SLOPE OF 2.00/12 MINIMUM

THIS TRUSS IS DESIGNED FOR RESIDENTIAL OR SMALL BUILDING REQUIREMENTS OF PART 9, NBCC 2015

THIS DESIGN COMPLIES WITH:
- PART 9 OF BCBC 2018 , ABC 2019
- PART 9 OF OBC 2012 (2019 AMENDMENT)
- CSA 086-14
- TPIC 2014

(55 % OF 23.0 P.S.F. G.S.L. PLUS 8.4 P.S.F. RAIN LOAD) EQUALS 21.0 P.S.F. SPECIFIED ROOF LIVE LOAD

ALLOWABLE DEFL.(LL)= L/360 (1.03")
CALCULATED VERT. DEFL.(LL) = L/ 999 (0.12")
ALLOWABLE DEFL.(TL)= L/360 (1.03")
CALCULATED VERT. DEFL.(TL) = L/ 999 (0.23")

CSI: TC=0.66/1.00 (C-D:1) , BC=0.41/1.00 (P-Q:4) , WB=0.92/1.00 (H-M:1) , SSI=0.23/1.00 (C-D:1)

DOL LUMBER=1.00 NAIL=1.00 LS BEND=1.10 COMP=1.10 SHEAR=1.10 TENS= 1.10

COMPANION LIVE LOAD FACTOR = 1.00

TRUSS PLATE MANUFACTURER IS NOT RESPONSIBLE FOR QUALITY CONTROL IN THE TRUSS MANUFACTURING PLANT .

NAIL VALUES

PLATE	GRIP(DRY) (PSI) MAX	MIN	SHEAR (PLI) MAX	MIN	SECTION (PLI) MAX	MIN
MT20	650	371	1747	788	1987	1873

PLATE PLACEMENT TOL. = 0.250 inches

PLATE ROTATION TOL. = 5.0 Deg.

JSI GRIP= 0.89 (J) (INPUT = 0.90)
JSI METAL= 0.36 (P) (INPUT = 1.00)

JOB NAME	TRUSS NAME	QUANTITY	PLY	JOB DESC.	DRWG NO.
336321	H134T		1	TRUSS DESC. JT 45147	E21104026

Alpa Roof Truss, Maple

Version 8.420 S Jan 21 2021 MiTek Industries, Inc. Wed Oct 13 14:28:48 2021 Page 1

ID:hd511hZTz bdeQoS817GKByhVxV-eljRkxAba fWdo63fN1K49pfckcECqlEnu7c6kyTpST

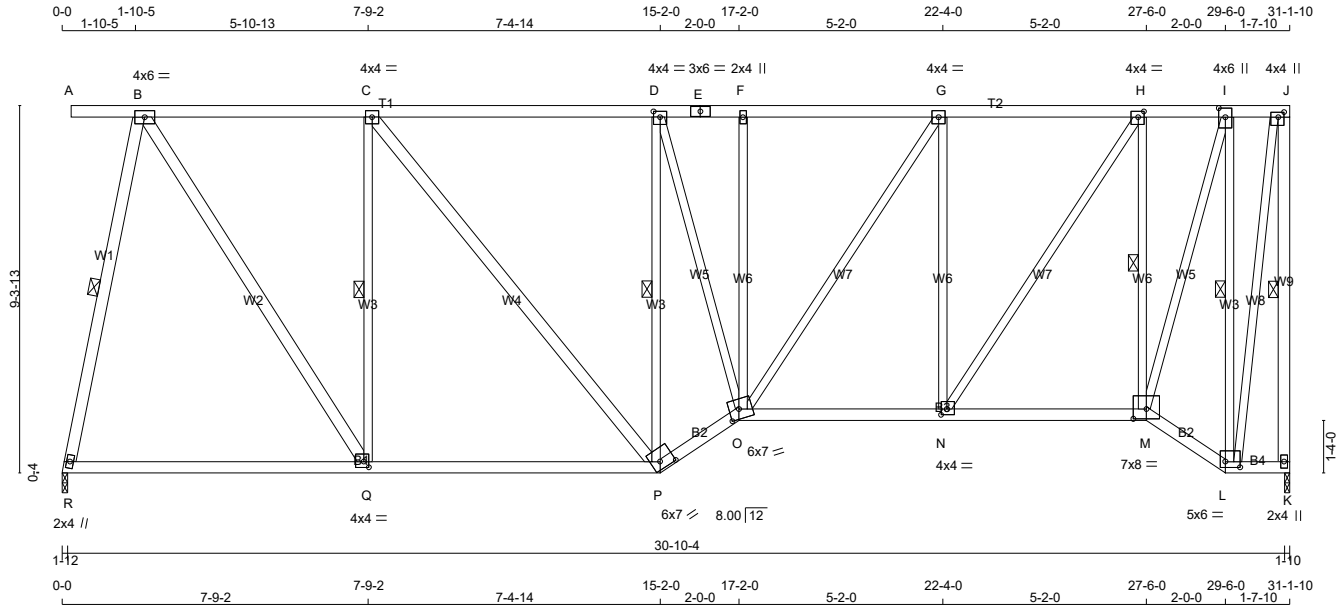

TOTAL WEIGHT = 190 lb

[M]

LUMBER

N. L. G. A. RULES

CHORDS	SIZE		LUMBER	DESCR.
A - E	2x4	DRY	No.2	SPF
E - J	2x4	DRY	No.2	SPF
K - J	2x4	DRY	No.2	SPF
R - P	2x4	DRY	No.2	SPF
P - O	2x4	DRY	No.2	SPF
O - M	2x4	DRY	No.2	SPF
M - L	2x4	DRY	No.2	SPF
L - K	2x4	DRY	No.2	SPF
ALL WEBS	2x4	DRY	No.2	SPF
EXCEPT				
Q - C	2x3	DRY	No.2	SPF
P - D	2x3	DRY	No.2	SPF
D - O	2x3	DRY	No.2	SPF
O - F	2x3	DRY	No.2	SPF
O - G	2x3	DRY	No.2	SPF
N - G	2x3	DRY	No.2	SPF
N - H	2x3	DRY	No.2	SPF
M - H	2x3	DRY	No.2	SPF
M - I	2x3	DRY	No.2	SPF
L - I	2x3	DRY	No.2	SPF
L - J	2x3	DRY	No.2	SPF

DRY: SEASONED LUMBER.

PLATES (table is in inches)

JT	TYPE	PLATES	W	LEN	Y	X
B	TMWW-t	MT20	4.0	6.0		
C	TMWW-t	MT20	4.0	4.0		
D	TMWW-t	MT20	4.0	4.0	1.75	2.00
E	TS-t	MT20	3.0	6.0		
F	TMW+w	MT20	2.0	4.0		
G	TMWW-t	MT20	4.0	4.0		
H	TMWW-t	MT20	4.0	4.0	1.75	1.75
I	TMWW+t	MT20	4.0	6.0	2.75	2.00
J	TMVW+p	MT20	4.0	4.0	1.50	1.75
K	BMV1+p	MT20	2.0	4.0		
L	BBWW-l	MT20	5.0	6.0	1.75	4.50
M	BBWW-l	MT20	7.0	8.0	3.00	4.00
N	BMWW-t	MT20	4.0	4.0	1.75	1.75
O	BBWWW-m	MT20	6.0	7.0	3.00	3.00
P	BBWW-h	MT20	6.0	7.0	2.25	4.25
Q	BMWW-t	MT20	4.0	4.0	1.75	1.50
R	BMW1+w	MT20	2.0	4.0		

LATERAL BRACE(S) SHOWN SHALL BE 2X4 SPF#2

DIMENSIONS, SUPPORTS AND LOADINGS SPECIFIED BY FABRICATOR TO BE VERIFIED BY BUILDING DESIGNER

BEARINGS

JT	FACTORED GROSS REACTION VERT	HORZ	MAXIMUM FACTORED GROSS REACTION DOWN	HORZ	UPLIFT	INPUT BRG IN-SX	REQRD BRG IN-SX
R	1486	0	1486	0	0	1-12	1-10
K	1496	0	1496	0	0	1-10	1-10

UNFACTORED REACTIONS

JT	1ST LCASE COMBINED	MAX./MIN. COMPONENT REACTIONS SNOW	LIVE	PERM.LIVE	WIND	DEAD	SOIL
R	1060	646 / 0	0 / 0	0 / 0	0 / 0	414 / 0	0 / 0
K	1066	651 / 0	0 / 0	0 / 0	0 / 0	415 / 0	0 / 0

BEARING MATERIAL TO BE SPF NO.2 OR BETTER AT JOINT(S) R, K

BRACING

TOP CHORD TO BE SHEATHED OR MAX. PURLIN SPACING = 4.84 FT.
MAX. UNBRACED BOTTOM CHORD LENGTH = 10.00 FT OR RIGID CEILING DIRECTLY APPLIED.

ALL PITCH BREAKS AND PERIMETER CORNER JOINTS MUST BE LATERALLY RESTRAINED.

1 LATERAL BRACE(S) AT 1/ 2 LENGTH OF B-R, J-K, C-Q, D-P, H-M, I-L.

END VERTICAL(S) MUST BE SHEATHED OR HAVE BRACES AS INDICATED IN THE MAX. UNBRACED LENGTH COLUMN OF THE TABLE BELOW

LOADING

TOTAL LOAD CASES: (4)

CHORDS

MEMB. FR-TO	MAX. FACTORED FORCE (LBS)	FACTORED VERT. LOAD (PLF) FROM	TO	LC1 CSI (LC)	MAX. UNBRAC LENGTH
A- B	0 / 0	-78.0	-78.0	0.16 (1)	10.00
B- C	-1007 / 0	-78.0	-78.0	0.53 (1)	5.42
C- D	-1318 / 0	-78.0	-78.0	0.60 (1)	4.86
D- E	-1503 / 0	-78.0	-78.0	0.39 (1)	4.84
E- F	-1503 / 0	-78.0	-78.0	0.39 (1)	4.84
F- G	-1505 / 0	-78.0	-78.0	0.33 (1)	4.98
G- H	-1259 / 0	-78.0	-78.0	0.32 (1)	5.35
H- I	-636 / 0	-78.0	-78.0	0.14 (1)	6.25
I- J	-250 / 0	-78.0	-78.0	0.09 (1)	6.25
K- J	-1481 / 0	0.0	0.0	0.60 (1)	5.38
R- Q	0 / 282	-18.5	-18.5	0.32 (4)	10.00
Q- P	0 / 1007	-18.5	-18.5	0.40 (4)	10.00
P- O	0 / 1568	-18.5	-18.5	0.26 (1)	10.00
O- N	0 / 1259	-18.5	-18.5	0.27 (1)	10.00
N- M	0 / 653	-18.5	-18.5	0.20 (4)	10.00
M- L	0 / 280	-18.5	-18.5	0.06 (1)	10.00
L- K	0 / 0	-18.5	-18.5	0.01 (4)	10.00

WEBS

MEMB. FR-TO	MAX. FACTORED FORCE (LBS)	MAX CSI (LC)
R- B	-1460 / 0	0.63 (1)
B- Q	0 / 1345	0.22 (1)
Q- C	-962 / 0	0.55 (1)
C- P	0 / 490	0.08 (1)
P- D	-1176 / 0	0.67 (1)
D- O	0 / 750	0.17 (1)
O- F	-161 / 0	0.19 (1)
O- G	0 / 442	0.10 (1)
N- G	-809 / 0	0.98 (1)
N- H	0 / 1101	0.25 (1)
M- H	-1259 / 0	0.51 (1)
M- I	0 / 1527	0.34 (1)
L- I	-1500 / 0	0.86 (1)
L- J	0 / 1400	0.32 (1)

DESIGN CRITERIA

SPECIFIED LOADS:

TOP	CH.	LL	=	21.0	PSF
		DL	=	6.0	PSF
BOT	CH.	LL	=	0.0	PSF
		DL	=	7.4	PSF
TOTAL	LOAD		=	34.4	PSF

SPACING = 24.0 IN. C/C

LOADING IN FLAT SECTION BASED ON A SLOPE OF 2.00/12 MINIMUM

THIS TRUSS IS DESIGNED FOR RESIDENTIAL OR SMALL BUILDING REQUIREMENTS OF PART 9, NBCC 2015

THIS DESIGN COMPLIES WITH:
- PART 9 OF BCBC 2018 , ABC 2019
- PART 9 OF OBC 2012 (2019 AMENDMENT)
- CSA 086-14
- TPIC 2014

(55 % OF 23.0 P.S.F. G.S.L. PLUS 8.4 P.S.F. RAIN LOAD) EQUALS 21.0 P.S.F. SPECIFIED ROOF LIVE LOAD

ALLOWABLE DEFL.(LL)= L/360 (1.03")
CALCULATED VERT. DEFL.(LL) = L/ 999 (0.11")
ALLOWABLE DEFL.(TL)= L/360 (1.03")
CALCULATED VERT. DEFL.(TL) = L/ 999 (0.21")

CSI: TC=0.60/1.00 (C-D:1) , BC=0.40/1.00 (P-Q:4) , WB=0.98/1.00 (G-N:1) , SSI=0.23/1.00 (C-D:1)

DOL LUMBER=1.00 NAIL=1.00 LS BEND=1.10 COMP=1.10 SHEAR=1.10 TENS= 1.10

COMPANION LIVE LOAD FACTOR = 1.00

TRUSS PLATE MANUFACTURER IS NOT RESPONSIBLE FOR QUALITY CONTROL IN THE TRUSS MANUFACTURING PLANT .

NAIL VALUES

PLATE	GRIP(DRY) (PSI) MAX	MIN	SHEAR (PLI) MAX	MIN	SECTION (PLI) MAX	MIN
MT20	650	371	1747	788	1987	1873

PLATE PLACEMENT TOL. = 0.250 inches

PLATE ROTATION TOL. = 5.0 Deg.

JSI GRIP= 0.90 (D) (INPUT = 0.90)
JSI METAL= 0.34 (L) (INPUT = 1.00)

JOB NAME	TRUSS NAME	QUANTITY	PLY	JOB DESC.		DRWG NO.
336321	H135T		1	TRUSS DESC.	JT 45147	E21104027

Alpa Roof Truss, Maple

Version 8.420 S Jan 21 2021 MiTek Industries, Inc. Wed Oct 13 14:28:49 2021 Page 1

ID:hd511hZTz bdeQoS817GKByhVxV-6xHqxHBDLInNEyhFC4ZZdNMmZ7yKxIaO0Yt9eAyTpSS

Scale = 1:65.2

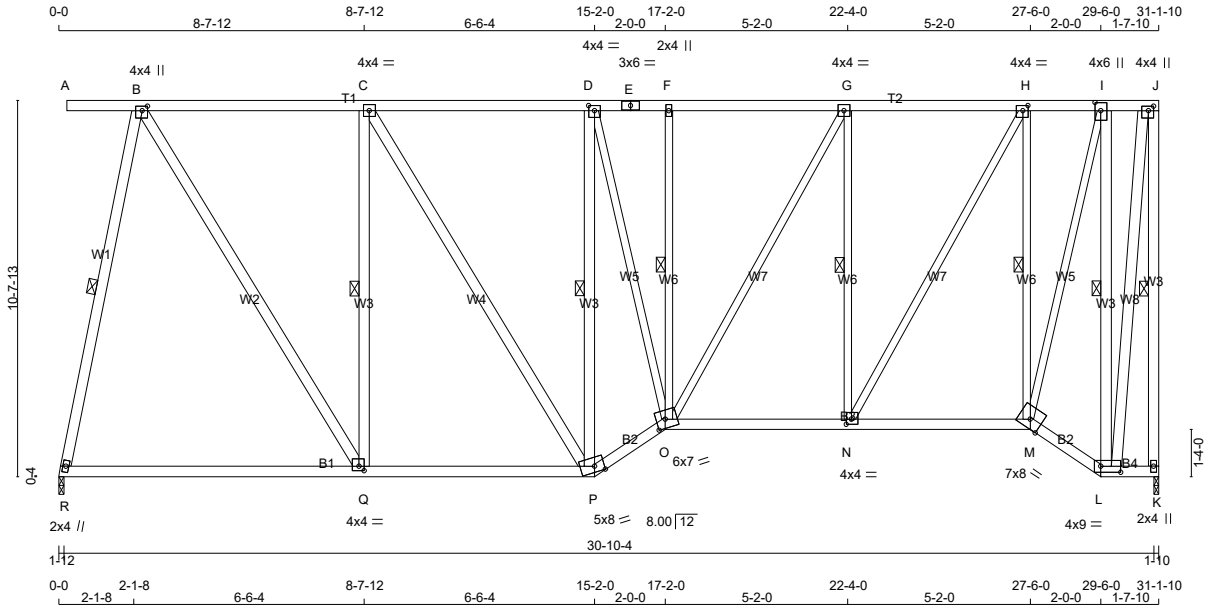

TOTAL WEIGHT = 220 lb

[M]

LUMBER

N. L. G. A. RULES

CHORDS	SIZE		LUMBER	DESCR.
A - E	2x4	DRY	No.2	SPF
E - J	2x4	DRY	No.2	SPF
K - J	2x4	DRY	No.2	SPF
R - P	2x4	DRY	No.2	SPF
P - O	2x4	DRY	No.2	SPF
O - M	2x4	DRY	No.2	SPF
M - L	2x4	DRY	No.2	SPF
L - K	2x4	DRY	No.2	SPF
ALL WEBS	2x4	DRY	No.2	SPF
EXCEPT				
D - O	2x3	DRY	No.2	SPF
O - F	2x3	DRY	No.2	SPF
O - G	2x3	DRY	No.2	SPF
N - G	2x3	DRY	No.2	SPF
N - H	2x3	DRY	No.2	SPF
M - H	2x3	DRY	No.2	SPF
M - I	2x3	DRY	No.2	SPF

DRY: SEASONED LUMBER.

PLATES (table is in inches)

JT	TYPE	PLATES	W	LEN	Y	X
B	TMWW+t	MT20	4.0	4.0	1.50	1.75
C	TMWW-t	MT20	4.0	4.0		
D	TMWW-t	MT20	4.0	4.0	1.75	2.00
E	TS-t	MT20	3.0	6.0		
F	TMW+w	MT20	2.0	4.0		
G	TMWW-t	MT20	4.0	4.0		
H	TMWW-t	MT20	4.0	4.0	1.75	1.75
I	TMWW+t	MT20	4.0	6.0	2.75	2.00
J	TMVW+p	MT20	4.0	4.0	1.50	1.75
K	BMV1+p	MT20	2.0	4.0		
L	BBWW-l	MT20	4.0	9.0	2.00	6.75
M	BBWW-h	MT20	7.0	8.0	Edge	
N	BMWW-t	MT20	4.0	4.0	1.75	1.75
O	BBWWW-m	MT20	6.0	7.0	3.00	3.00
P	BBWW-m	MT20	5.0	8.0	2.00	3.25
Q	BMWW-t	MT20	4.0	4.0	1.50	1.75
R	BMW1+w	MT20	2.0	4.0		

Edge - INDICATES REFERENCE CORNER OF PLATE TOUCHES EDGE OF CHORD.

LATERAL BRACE(S) SHOWN SHALL BE 2X4 SPF#2

DIMENSIONS, SUPPORTS AND LOADINGS SPECIFIED BY FABRICATOR TO BE VERIFIED BY BUILDING DESIGNER

BEARINGS

JT	FACTORED GROSS REACTION VERT	HORZ	MAXIMUM FACTORED GROSS REACTION DOWN	HORZ	UPLIFT	INPUT BRG IN-SX	REQRD BRG IN-SX
R	1485	0	1485	0	0	1-12	1-10
K	1497	0	1497	0	0	1-10	1-10

UNFACTORED REACTIONS

JT	1ST LCASE COMBINED	MAX./MIN. COMPONENT REACTIONS SNOW	LIVE	PERM.LIVE	WIND	DEAD	SOIL
R	1059	645 / 0	0 / 0	0 / 0	0 / 0	413 / 0	0 / 0
K	1067	652 / 0	0 / 0	0 / 0	0 / 0	415 / 0	0 / 0

BEARING MATERIAL TO BE SPF NO.2 OR BETTER AT JOINT(S) R, K

BRACING

TOP CHORD TO BE SHEATHED OR MAX. PURLIN SPACING = 5.16 FT.
MAX. UNBRACED BOTTOM CHORD LENGTH = 10.00 FT OR RIGID CEILING DIRECTLY APPLIED.

ALL PITCH BREAKS AND PERIMETER CORNER JOINTS MUST BE LATERALLY RESTRAINED.

1 LATERAL BRACE(S) AT 1/ 2 LENGTH OF B-R, J-K, C-Q, D-P, F-O, G-N, H-M, I-L.

END VERTICAL(S) MUST BE SHEATHED OR HAVE BRACES AS INDICATED IN THE MAX. UNBRACED LENGTH COLUMN OF THE TABLE BELOW

LOADING

TOTAL LOAD CASES: (4)

CHORDS

MEMB. FR-TO	MAX. FACTORED FORCE (LBS)	FACTORED VERT. LOAD LC1 (PLF) FROM	TO	MAX CSI (LC)	MAX. UNBRAC LENGTH
A- B	0 / 0	-78.0	-78.0	0.22 (1)	10.00
B- C	-942 / 0	-78.0	-78.0	0.53 (1)	5.57
C- D	-1141 / 0	-78.0	-78.0	0.55 (1)	5.16
D- E	-1284 / 0	-78.0	-78.0	0.25 (1)	5.38
E- F	-1284 / 0	-78.0	-78.0	0.25 (1)	5.38
F- G	-1286 / 0	-78.0	-78.0	0.32 (1)	5.31
G- H	-1074 / 0	-78.0	-78.0	0.30 (1)	5.69
H- I	-542 / 0	-78.0	-78.0	0.13 (1)	6.25
I- J	-222 / 0	-78.0	-78.0	0.05 (1)	6.25
K- J	-1482 / 0	0.0	0.0	0.85 (1)	5.38
R- Q	0 / 280	-18.5	-18.5	0.34 (4)	10.00
Q- P	0 / 942	-18.5	-18.5	0.41 (4)	10.00
P- O	0 / 1355	-18.5	-18.5	0.23 (1)	10.00
O- N	0 / 1074	-18.5	-18.5	0.24 (1)	10.00
N- M	0 / 556	-18.5	-18.5	0.19 (4)	10.00
M- L	0 / 241	-18.5	-18.5	0.05 (1)	10.00
L- K	0 / 0	-18.5	-18.5	0.01 (4)	10.00

WEBS

MEMB. FR-TO	MAX. FACTORED FORCE (LBS)	MAX CSI (LC)
R- B	-1450 / 0	0.88 (1)
B- Q	0 / 1258	0.20 (1)
Q- C	-898 / 0	0.51 (1)
C- P	0 / 374	0.06 (1)
P- D	-1008 / 0	0.58 (1)
D- O	0 / 675	0.15 (1)
O- F	-216 / 0	0.12 (1)
O- G	0 / 427	0.10 (1)
N- G	-811 / 0	0.46 (1)
N- H	0 / 1058	0.24 (1)
M- H	-1242 / 0	0.71 (1)
M- I	0 / 1473	0.33 (1)
L- I	-1504 / 0	0.86 (1)
L- J	0 / 1421	0.23 (1)

DESIGN CRITERIA

SPECIFIED LOADS:

TOP	CH.	LL	=	21.0	PSF
		DL	=	6.0	PSF
BOT	CH.	LL	=	0.0	PSF
		DL	=	7.4	PSF
TOTAL	LOAD		=	34.4	PSF

SPACING = 24.0 IN. C/C

LOADING IN FLAT SECTION BASED ON A SLOPE OF 2.00/12 MINIMUM

THIS TRUSS IS DESIGNED FOR RESIDENTIAL OR SMALL BUILDING REQUIREMENTS OF PART 9, NBCC 2015

THIS DESIGN COMPLIES WITH:
- PART 9 OF BCBC 2018 , ABC 2019
- PART 9 OF OBC 2012 (2019 AMENDMENT)
- CSA 086-14
- TPIC 2014

(55 % OF 23.0 P.S.F. G.S.L. PLUS 8.4 P.S.F. RAIN LOAD) EQUALS 21.0 P.S.F. SPECIFIED ROOF LIVE LOAD

ALLOWABLE DEFL.(LL)= L/360 (1.03")
CALCULATED VERT. DEFL.(LL) = L/ 999 (0.10")
ALLOWABLE DEFL.(TL)= L/360 (1.03")
CALCULATED VERT. DEFL.(TL) = L/ 999 (0.19")

CSI: TC=0.85/1.00 (J-K:1) , BC=0.41/1.00 (P-Q:4) , WB=0.88/1.00 (B-R:1) , SSI=0.24/1.00 (B-C:1)

DOL LUMBER=1.00 NAIL=1.00 LS BEND=1.10 COMP=1.10 SHEAR=1.10 TENS= 1.10

COMPANION LIVE LOAD FACTOR = 1.00

TRUSS PLATE MANUFACTURER IS NOT RESPONSIBLE FOR QUALITY CONTROL IN THE TRUSS MANUFACTURING PLANT .

NAIL VALUES

PLATE	GRIP(DRY) (PSI) MAX	MIN	SHEAR (PLI) MAX	MIN	SECTION (PLI) MAX	MIN
MT20	650	371	1747	788	1987	1873

PLATE PLACEMENT TOL. = 0.250 inches

PLATE ROTATION TOL. = 5.0 Deg.

JSI GRIP= 0.90 (L) (INPUT = 0.90)
JSI METAL= 0.41 (B) (INPUT = 1.00)

JOB NAME	TRUSS NAME	QUANTITY	PLY	JOB DESC.		DRWG NO.
336321	J04		1	TRUSS DESC.	JT 45147	E21104028

Alpa Roof Truss, Maple

Version 8.420 S Jan 21 2021 MiTek Industries, Inc. Wed Oct 13 10:32:03 2021 Page 1

ID:hd511hZTz bdeQoS817GKByhVxV-3xuNPlGItVz2xog ?ZhCsc 8icW3SaVOMNeS1ayTswQ

Scale = 1:31.4

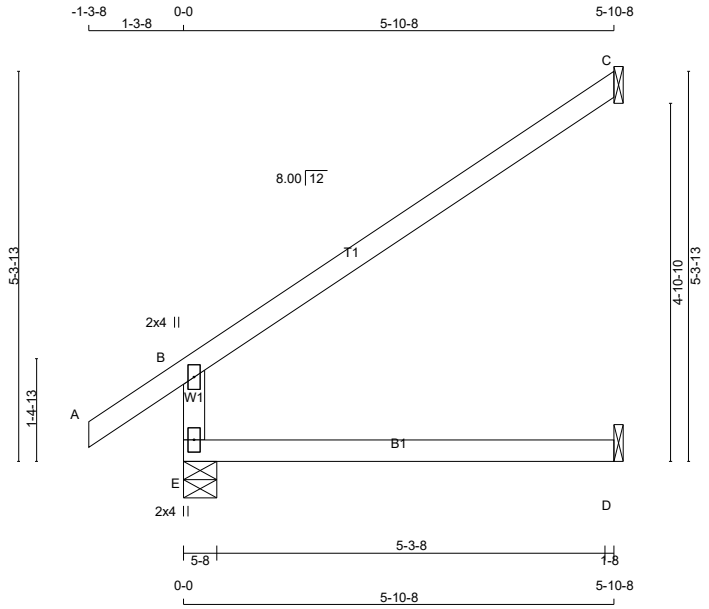

TOTAL WEIGHT = 83 X 18 = 1480 lb

LUMBER

N. L. G. A. RULES

CHORDS	SIZE		LUMBER	DESCR.
E - B	2x4	DRY	No.2	SPF
A - C	2x4	DRY	No.2	SPF
E - D	2x4	DRY	No.2	SPF

DRY: SEASONED LUMBER.

PLATES (table is in inches)

JT	TYPE	PLATES	W	LEN	Y	X
B	TMV+p	MT20	2.0	4.0		
E	BMV1+p	MT20	2.0	4.0		

LATERAL BRACE(S) SHOWN SHALL BE 2X4 SPF#2

DIMENSIONS, SUPPORTS AND LOADINGS SPECIFIED BY FABRICATOR TO BE VERIFIED BY BUILDING DESIGNER

BEARINGS

JT	FACTORED GROSS REACTION VERT	HORZ	MAXIMUM FACTORED GROSS REACTION DOWN	HORZ	UPLIFT	INPUT BRG IN-SX	REQRD BRG IN-SX
E	456	0	456	0	0	5-8	1-8
C	172	0	172	0	0	1-8	1-8
D	46	0	51	0	0	1-8	1-8

SEE MITEK STANDARD DETAIL B97791H FOR CONNECTION TO JOINT(S) C , D

UNFACTORED REACTIONS

JT	1ST LCASE COMBINED	MAX./MIN. COMPONENT REACTIONS SNOW	LIVE	PERM.LIVE	WIND	DEAD	SOIL
E	323	212 / 0	0 / 0	0 / 0	0 / 0	111 / 0	0 / 0
C	119	93 / 0	0 / 0	0 / 0	0 / 0	26 / 0	0 / 0
D	36	0 / 0	0 / 0	0 / 0	0 / 0	36 / 0	0 / 0

BEARING MATERIAL TO BE SPF NO.2 OR BETTER AT JOINT(S) E

BRACING

TOP CHORD TO BE SHEATHED OR MAX. PURLIN SPACING = 6.25 FT.
MAX. UNBRACED BOTTOM CHORD LENGTH = 10.00 FT OR RIGID CEILING DIRECTLY APPLIED.

ALL PITCH BREAKS AND PERIMETER CORNER JOINTS MUST BE LATERALLY RESTRAINED.

LOADING

TOTAL LOAD CASES: (4)

CHORDS MEMB. FR-TO	MAX. FACTORED FORCE (LBS)	FACTORED VERT. LOAD (PLF) FROM	TO	LC1 MAX CSI (LC)	MAX. UNBRAC LENGTH
E- B	-393 / 0	0.0	0.0	0.12 (4)	7.81
A- B	0 / 30	-78.0	-78.0	0.10 (1)	10.00
B- C	-32 / 0	-78.0	-78.0	0.46 (1)	6.25
E- D	0 / 0	-18.5	-18.5	0.13 (4)	10.00

WEBS MEMB. FR-TO	MAX. FACTORED FORCE (LBS)	MAX CSI (LC)

DESIGN CRITERIA

SPECIFIED LOADS:

TOP CH.	LL	=	21.0	PSF
	DL	=	6.0	PSF
BOT CH.	LL	=	0.0	PSF
	DL	=	7.4	PSF
TOTAL LOAD		=	34.4	PSF

SPACING = 24.0 IN. C/C

THIS TRUSS IS DESIGNED FOR RESIDENTIAL OR SMALL BUILDING REQUIREMENTS OF PART 9, NBCC 2015

THIS DESIGN COMPLIES WITH:
- PART 9 OF BCBC 2018 , ABC 2019
- PART 9 OF OBC 2012 (2019 AMENDMENT)
- CSA 086-14
- TPIC 2014

DESIGN ASSUMPTIONS
-OVERHANG NOT TO BE ALTERED OR CUT OFF.

(55 % OF 23.0 P.S.F. G.S.L. PLUS 8.4 P.S.F. RAIN LOAD) EQUALS 21.0 P.S.F. SPECIFIED ROOF LIVE LOAD

ALLOWABLE DEFL.(LL)= L/360 (0.20")
CALCULATED VERT. DEFL.(LL) = L/ 999 (0.00")
ALLOWABLE DEFL.(TL)= L/360 (0.20")
CALCULATED VERT. DEFL.(TL) = L/ 999 (0.03")

CSI: TC=0.46/1.00 (B-C:1) , BC=0.13/1.00 (D-E:4) , WB=0.00/1.00 (n/a:0) , SSI=0.19/1.00 (B-C:1)

DOL LUMBER=1.00 NAIL=1.00 LS BEND=1.10 COMP=1.10 SHEAR=1.10 TENS= 1.10

COMPANION LIVE LOAD FACTOR = 1.00

AUTOSOLVE RIGHT HEEL ONLY

TRUSS PLATE MANUFACTURER IS NOT RESPONSIBLE FOR QUALITY CONTROL IN THE TRUSS MANUFACTURING PLANT .

NAIL VALUES

PLATE	GRIP(DRY) (PSI) MAX	MIN	SHEAR (PLI) MAX	MIN	SECTION (PLI) MAX	MIN
MT20	650	371	1747	788	1987	1873

PLATE PLACEMENT TOL. = 0.250 inches

PLATE ROTATION TOL. = 5.0 Deg.

JSI GRIP= 0.24 (B) (INPUT = 0.90)
JSI METAL= 0.20 (B) (INPUT = 1.00)

JOB NAME	TRUSS NAME	QUANTITY	PLY	JOB DESC.		DRWG NO.
336321	J04T		1	TRUSS DESC.	JT 45147	E21104029

Alpa Roof Truss, Maple

Version 8.420 S Jan 21 2021 MiTek Industries, Inc. Wed Oct 13 10:32:06 2021 Page 1

ID:hd511hZTz_bdeQoS817GKByhVxV-TWaV2nIAAQLdoFPYhiFvUFclUpaDfxVq2Ks6euyTswN

Scale: 3/8"=1'

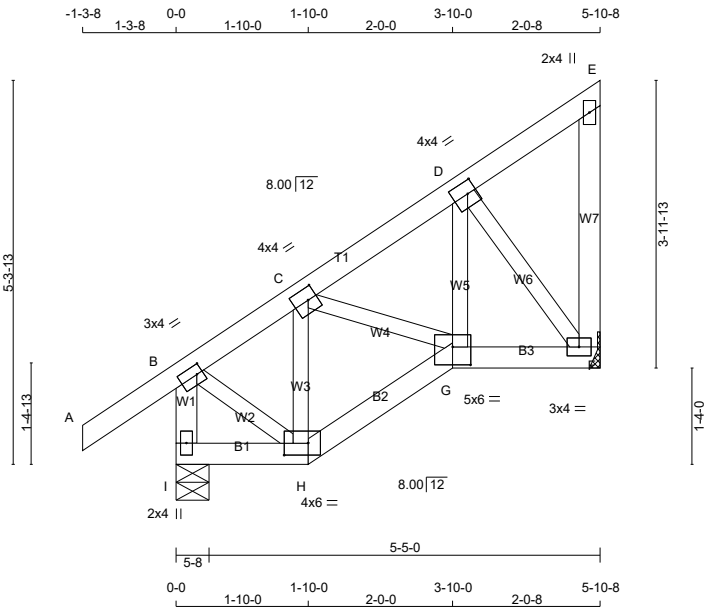

TOTAL WEIGHT = 33 X 31 = 1017 lb

LUMBER

N. L. G. A. RULES

CHORDS	SIZE		LUMBER	DESCR.
I - B	2x4	DRY	No.2	SPF
A - E	2x4	DRY	No.2	SPF
F - E	2x4	DRY	No.2	SPF
I - H	2x4	DRY	No.2	SPF
H - G	2x4	DRY	No.2	SPF
G - F	2x4	DRY	No.2	SPF
ALL WEBS	2x3	DRY	No.2	SPF

DRY: SEASONED LUMBER.

PLATES (table is in inches)

JT	TYPE	PLATES	W	LEN	Y	X
B	TMVW-t	MT20	3.0	4.0	1.50	1.00
C	TMWW-t	MT20	4.0	4.0	2.00	1.50
D	TMWW-t	MT20	4.0	4.0	2.00	1.50
E	TMV+p	MT20	2.0	4.0		
F	BMVW1-t	MT20	3.0	4.0		
G	BBWW-l	MT20	5.0	6.0	3.00	3.00
H	BBWW-l	MT20	4.0	6.0	2.00	4.00
I	BMV1+p	MT20	2.0	4.0		

LATERAL BRACE(S) SHOWN SHALL BE 2X4 SPF#2

DIMENSIONS, SUPPORTS AND LOADINGS SPECIFIED BY FABRICATOR TO BE VERIFIED BY BUILDING DESIGNER

BEARINGS

JT	FACTORED GROSS REACTION VERT	HORZ	MAXIMUM FACTORED GROSS REACTION DOWN	HORZ	UPLIFT	INPUT BRG IN-SX	REQRD BRG IN-SX
I	403	0	403	0	0	5-8	1-8
F	271	0	271	0	0	MECHANICAL	

A SUITABLE HANGER/MECHANICAL CONNECTION IS REQUIRED AT JOINT F. MINIMUM BEARING LENGTH AT JOINT F = 1-8.

UNFACTORED REACTIONS

JT	1ST LCASE COMBINED	MAX./MIN. COMPONENT REACTIONS SNOW	LIVE	PERM.LIVE	WIND	DEAD	SOIL
I	285	188 / 0	0 / 0	0 / 0	0 / 0	97 / 0	0 / 0
F	193	117 / 0	0 / 0	0 / 0	0 / 0	77 / 0	0 / 0

BEARING MATERIAL TO BE SPF NO.2 OR BETTER AT JOINT(S) I

BRACING

TOP CHORD TO BE SHEATHED OR MAX. PURLIN SPACING = 6.25 FT.
MAX. UNBRACED BOTTOM CHORD LENGTH = 10.00 FT OR RIGID CEILING DIRECTLY APPLIED.

ALL PITCH BREAKS AND PERIMETER CORNER JOINTS MUST BE LATERALLY RESTRAINED.

LOADING

TOTAL LOAD CASES: (4)

CHORDS

MEMB. FR-TO	MAX. FACTORED FORCE (LBS)	FACTORED VERT. LOAD LC1 (PLF) FROM	TO	MAX CSI (LC)	MAX. UNBRAC LENGTH
I- B	-386 / 0	0.0	0.0	0.04 (1)	7.81
A- B	0 / 30	-78.0	-78.0	0.10 (1)	10.00
B- C	-188 / 0	-78.0	-78.0	0.10 (1)	6.25
C- D	-192 / 0	-78.0	-78.0	0.05 (1)	6.25
D- E	-10 / 0	-78.0	-78.0	0.05 (1)	6.25
F- E	-57 / 0	0.0	0.0	0.01 (1)	7.81
I- H	0 / 0	-18.5	-18.5	0.02 (4)	10.00
H- G	0 / 160	-18.5	-18.5	0.04 (1)	10.00
G- F	0 / 160	-18.5	-18.5	0.04 (1)	10.00

WEBS

MEMB. FR-TO	MAX. FACTORED FORCE (LBS)	MAX CSI (LC)
B- H	0 / 161	0.04 (1)
H- C	-134 / 0	0.02 (1)
C- G	0 / 35	0.01 (1)
G- D	0 / 114	0.03 (4)
D- F	-254 / 0	0.05 (1)

DESIGN CRITERIA [M]

SPECIFIED LOADS:

TOP	CH.	LL	=	21.0	PSF
		DL	=	6.0	PSF
BOT	CH.	LL	=	0.0	PSF
		DL	=	7.4	PSF
TOTAL	LOAD		=	34.4	PSF

SPACING = 24.0 IN. C/C

THIS TRUSS IS DESIGNED FOR RESIDENTIAL OR SMALL BUILDING REQUIREMENTS OF PART 9, NBCC 2015

THIS DESIGN COMPLIES WITH:
- PART 9 OF BCBC 2018 , ABC 2019
- PART 9 OF OBC 2012 (2019 AMENDMENT)
- CSA 086-14
- TPIC 2014

DESIGN ASSUMPTIONS
-OVERHANG NOT TO BE ALTERED OR CUT OFF.

(55 % OF 23.0 P.S.F. G.S.L. PLUS 8.4 P.S.F. RAIN LOAD) EQUALS 21.0 P.S.F. SPECIFIED ROOF LIVE LOAD

ALLOWABLE DEFL.(LL)= L/360 (0.20")
CALCULATED VERT. DEFL.(LL) = L/ 999 (0.00")
ALLOWABLE DEFL.(TL)= L/360 (0.20")
CALCULATED VERT. DEFL.(TL) = L/ 999 (0.00")

CSI: TC=0.10/1.00 (A-B:1) , BC=0.04/1.00 (F-G:1) , WB=0.05/1.00 (D-F:1) , SSI=0.07/1.00 (A-B:1)

DOL LUMBER=1.00 NAIL=1.00 LS BEND=1.10 COMP=1.10 SHEAR=1.10 TENS= 1.10

COMPANION LIVE LOAD FACTOR = 1.00

TRUSS PLATE MANUFACTURER IS NOT RESPONSIBLE FOR QUALITY CONTROL IN THE TRUSS MANUFACTURING PLANT .

NAIL VALUES

PLATE	GRIP(DRY) (PSI) MAX	MIN	SHEAR (PLI) MAX	MIN	SECTION (PLI) MAX	MIN
MT20	650	371	1747	788	1987	1873

PLATE PLACEMENT TOL. = 0.250 inches

PLATE ROTATION TOL. = 5.0 Deg.

JSI GRIP= 0.50 (B) (INPUT = 0.90)
JSI METAL= 0.10 (B) (INPUT = 1.00)

JOB NAME	TRUSS NAME	QUANTITY	PLY	JOB DESC.		DRWG NO.
336321	J05		1	TRUSS DESC.	JT 45147	E21104030

Alpa Roof Truss, Maple

Version 8.420 S Jan 21 2021 MiTek Industries, Inc. Wed Oct 13 10:32:07 2021 Page 1

ID:hd511hZTz_bdeQoS817GKByhVxV-xi8tF7JoxkTUPPzlEPm81S9r3DuZOOU_H_cfBLyTswM

Scale = 1:33.5

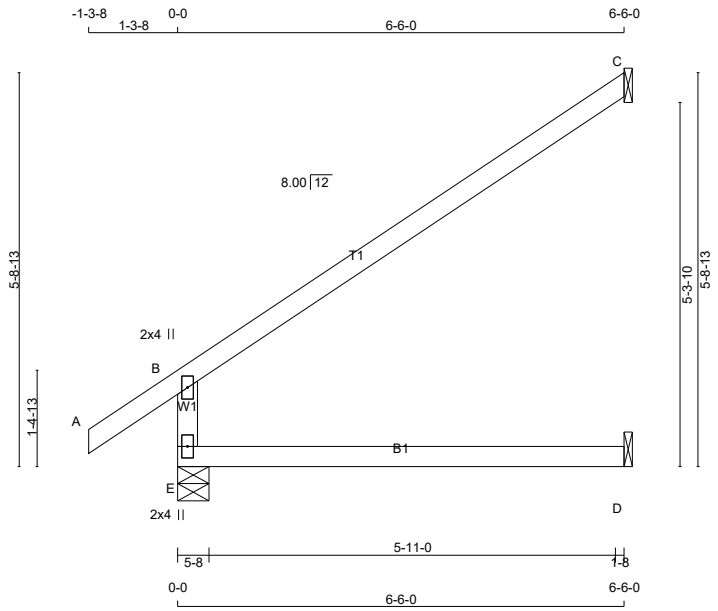

TOTAL WEIGHT = 17 X 19 = 330 lb

[M][F]

LUMBER

N. L. G. A. RULES

CHORDS	SIZE		LUMBER	DESCR.
E - B	2x4	DRY	No.2	SPF
A - C	2x4	DRY	No.2	SPF
E - D	2x4	DRY	No.2	SPF

DRY: SEASONED LUMBER.

PLATES (table is in inches)

JT	TYPE	PLATES	W	LEN	Y	X
B	TMV+p	MT20	2.0	4.0		
E	BMV1+p	MT20	2.0	4.0		

LATERAL BRACE(S) SHOWN SHALL BE 2X4 SPF#2

DIMENSIONS, SUPPORTS AND LOADINGS SPECIFIED BY FABRICATOR TO BE VERIFIED BY BUILDING DESIGNER

BEARINGS

JT	FACTORED GROSS REACTION VERT	HORZ	MAXIMUM FACTORED GROSS REACTION DOWN	HORZ	UPLIFT	INPUT BRG IN-SX	REQRD BRG IN-SX
E	494	0	494	0	0	5-8	1-8
C	190	0	190	0	0	1-8	1-8
D	50	0	56	0	0	1-8	1-8

SEE MITEK STANDARD DETAIL B97791H FOR CONNECTION TO JOINT(S) C , D

UNFACTORED REACTIONS

JT	1ST LCASE COMBINED	MAX./MIN. COMPONENT REACTIONS SNOW	LIVE	PERM.LIVE	WIND	DEAD	SOIL
E	349	228 / 0	0 / 0	0 / 0	0 / 0	121 / 0	0 / 0
C	132	102 / 0	0 / 0	0 / 0	0 / 0	29 / 0	0 / 0
D	40	0 / 0	0 / 0	0 / 0	0 / 0	40 / 0	0 / 0

BEARING MATERIAL TO BE SPF NO.2 OR BETTER AT JOINT(S) E

BRACING

TOP CHORD TO BE SHEATHED OR MAX. PURLIN SPACING = 6.25 FT.
MAX. UNBRACED BOTTOM CHORD LENGTH = 10.00 FT OR RIGID CEILING DIRECTLY APPLIED.

ALL PITCH BREAKS AND PERIMETER CORNER JOINTS MUST BE LATERALLY RESTRAINED.

LOADING

TOTAL LOAD CASES: (4)

CHORDS MEMB. FR-TO	MAX. FACTORED FORCE (LBS)	FACTORED VERT. LOAD (PLF) FROM	TO	LC1 MAX CSI (LC)	MAX. UNBRAC LENGTH
E- B	-424 / 0	0.0	0.0	0.13 (4)	7.81
A- B	0 / 30	-78.0	-78.0	0.10 (1)	10.00
B- C	-35 / 0	-78.0	-78.0	0.44 (1)	6.25
E- D	0 / 0	-18.5	-18.5	0.16 (4)	10.00

WEBS MEMB. FR-TO	MAX. FACTORED FORCE (LBS)	MAX CSI (LC)

DESIGN CRITERIA

SPECIFIED LOADS:

TOP CH.	LL	=	21.0	PSF
	DL	=	6.0	PSF
BOT CH.	LL	=	0.0	PSF
	DL	=	7.4	PSF
TOTAL LOAD		=	34.4	PSF

SPACING = 24.0 IN. C/C

THIS TRUSS IS DESIGNED FOR RESIDENTIAL OR SMALL BUILDING REQUIREMENTS OF PART 9, NBCC 2015

THIS DESIGN COMPLIES WITH:
- PART 9 OF BCBC 2018 , ABC 2019
- PART 9 OF OBC 2012 (2019 AMENDMENT)
- CSA 086-14
- TPIC 2014

DESIGN ASSUMPTIONS
-OVERHANG NOT TO BE ALTERED OR CUT OFF.

(55 % OF 23.0 P.S.F. G.S.L. PLUS 8.4 P.S.F. RAIN LOAD) EQUALS 21.0 P.S.F. SPECIFIED ROOF LIVE LOAD

ALLOWABLE DEFL.(LL)= L/360 (0.22")
CALCULATED VERT. DEFL.(LL) = L/ 999 (0.00")
ALLOWABLE DEFL.(TL)= L/360 (0.22")
CALCULATED VERT. DEFL.(TL) = L/ 999 (0.05")

CSI: TC=0.44/1.00 (B-C:1) , BC=0.16/1.00 (D-E:4) , WB=0.00/1.00 (n/a:0) , SSI=0.21/1.00 (B-C:1)

DOL LUMBER=1.00 NAIL=1.00 LS BEND=1.10 COMP=1.10 SHEAR=1.10 TENS= 1.10

COMPANION LIVE LOAD FACTOR = 1.00

AUTOSOLVE RIGHT HEEL ONLY

TRUSS PLATE MANUFACTURER IS NOT RESPONSIBLE FOR QUALITY CONTROL IN THE TRUSS MANUFACTURING PLANT .

NAIL VALUES

PLATE	GRIP(DRY) (PSI) MAX	MIN	SHEAR (PLI) MAX	MIN	SECTION (PLI) MAX	MIN
MT20	650	371	1747	788	1987	1873

PLATE PLACEMENT TOL. = 0.250 inches

PLATE ROTATION TOL. = 5.0 Deg.

JSI GRIP= 0.26 (B) (INPUT = 0.90)
JSI METAL= 0.22 (B) (INPUT = 1.00)

JOB NAME	TRUSS NAME	QUANTITY	PLY	JOB DESC.		DRWG NO.
336321	J05T		1	TRUSS DESC.	JT 45147	E21104031

Alpa Roof Truss, Maple

Version 8.420 S Jan 21 2021 MiTek Industries, Inc. Wed Oct 13 10:32:09 2021 Page 1

ID:hd511hZTz_bdeQoS817GKByhVxV-u5FegoL2TLkBfj77Mqoc6tEGj1bcsl0GkI5mFDyTswK

Scale = 1:34.2

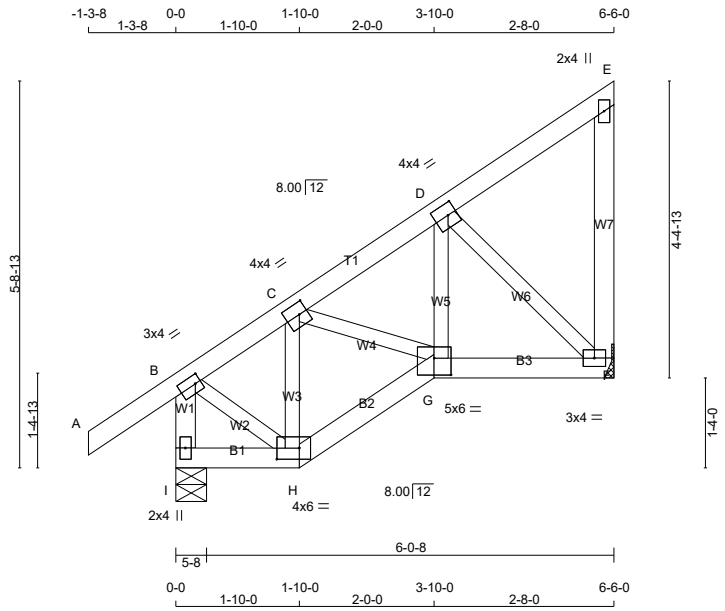

TOTAL WEIGHT = 7 X 33 = 232 lb

[M][F]

LUMBER

N. L. G. A. RULES

CHORDS	SIZE		LUMBER	DESCR.
I - B	2x4	DRY	No.2	SPF
A - E	2x4	DRY	No.2	SPF
F - E	2x4	DRY	No.2	SPF
I - H	2x4	DRY	No.2	SPF
H - G	2x4	DRY	No.2	SPF
G - F	2x4	DRY	No.2	SPF
ALL WEBS	2x3	DRY	No.2	SPF

DRY: SEASONED LUMBER.

PLATES (table is in inches)

JT	TYPE	PLATES	W	LEN	Y	X
B	TMVW-t	MT20	3.0	4.0	1.50	1.00
C	TMWW-t	MT20	4.0	4.0	2.00	1.50
D	TMWW-t	MT20	4.0	4.0	2.00	1.50
E	TMV+p	MT20	2.0	4.0		
F	BMVW1-t	MT20	3.0	4.0		
G	BBWW-l	MT20	5.0	6.0	3.00	3.00
H	BBWW-l	MT20	4.0	6.0	2.00	4.00
I	BMV1+p	MT20	2.0	4.0		

LATERAL BRACE(S) SHOWN SHALL BE 2X4 SPF#2

DIMENSIONS, SUPPORTS AND LOADINGS SPECIFIED BY FABRICATOR TO BE VERIFIED BY BUILDING DESIGNER

BEARINGS

JT	FACTORED GROSS REACTION VERT	HORZ	MAXIMUM FACTORED GROSS REACTION DOWN	HORZ	UPLIFT	INPUT BRG IN-SX	REQRD BRG IN-SX
I	432	0	432	0	0	5-8	1-8
F	302	0	302	0	0	MECHANICAL	

A SUITABLE HANGER/MECHANICAL CONNECTION IS REQUIRED AT JOINT F. MINIMUM BEARING LENGTH AT JOINT F = 1-8.

UNFACTORED REACTIONS

JT	1ST LCASE COMBINED	MAX./MIN. COMPONENT REACTIONS SNOW	LIVE	PERM.LIVE	WIND	DEAD	SOIL
I	305	200 / 0	0 / 0	0 / 0	0 / 0	105 / 0	0 / 0
F	216	130 / 0	0 / 0	0 / 0	0 / 0	85 / 0	0 / 0

BEARING MATERIAL TO BE SPF NO.2 OR BETTER AT JOINT(S) I

BRACING

TOP CHORD TO BE SHEATHED OR MAX. PURLIN SPACING = 6.25 FT.
MAX. UNBRACED BOTTOM CHORD LENGTH = 10.00 FT OR RIGID CEILING DIRECTLY APPLIED.

ALL PITCH BREAKS AND PERIMETER CORNER JOINTS MUST BE LATERALLY RESTRAINED.

LOADING

TOTAL LOAD CASES: (4)

CHORDS

MEMB. FR-TO	MAX. FACTORED FORCE (LBS)	FACTORED VERT. LOAD LC1 (PLF) FROM	TO	MAX CSI (LC)	MAX. UNBRAC LENGTH
I- B	-415 / 0	0.0	0.0	0.04 (1)	7.81
A- B	0 / 30	-78.0	-78.0	0.10 (1)	10.00
B- C	-215 / 0	-78.0	-78.0	0.08 (1)	6.25
C- D	-253 / 0	-78.0	-78.0	0.05 (1)	6.25
D- E	-11 / 0	-78.0	-78.0	0.05 (1)	6.25
F- E	-80 / 0	0.0	0.0	0.02 (1)	7.81
I- H	0 / 0	-18.5	-18.5	0.02 (4)	10.00
H- G	0 / 184	-18.5	-18.5	0.04 (1)	10.00
G- F	0 / 215	-18.5	-18.5	0.06 (4)	10.00

WEBS

MEMB. FR-TO	MAX. FACTORED FORCE (LBS)	MAX CSI (LC)
B- H	0 / 185	0.04 (1)
H- C	-160 / 0	0.03 (1)
C- G	0 / 73	0.02 (1)
G- D	0 / 118	0.03 (4)
D- F	-293 / 0	0.06 (1)

DESIGN CRITERIA

SPECIFIED LOADS:

TOP CH.	LL	=	21.0	PSF
	DL	=	6.0	PSF
BOT CH.	LL	=	0.0	PSF
	DL	=	7.4	PSF
TOTAL LOAD		=	34.4	PSF

SPACING = 24.0 IN. C/C

THIS TRUSS IS DESIGNED FOR RESIDENTIAL OR SMALL BUILDING REQUIREMENTS OF PART 9, NBCC 2015

THIS DESIGN COMPLIES WITH:
- PART 9 OF BCBC 2018 , ABC 2019
- PART 9 OF OBC 2012 (2019 AMENDMENT)
- CSA 086-14
- TPIC 2014

DESIGN ASSUMPTIONS
-OVERHANG NOT TO BE ALTERED OR CUT OFF.

(55 % OF 23.0 P.S.F. G.S.L. PLUS 8.4 P.S.F. RAIN LOAD) EQUALS 21.0 P.S.F. SPECIFIED ROOF LIVE LOAD

ALLOWABLE DEFL.(LL)= L/360 (0.22")
CALCULATED VERT. DEFL.(LL) = L/ 999 (0.00")
ALLOWABLE DEFL.(TL)= L/360 (0.22")
CALCULATED VERT. DEFL.(TL) = L/ 999 (0.01")

CSI: TC=0.10/1.00 (A-B:1) , BC=0.06/1.00 (F-G:4) , WB=0.06/1.00 (D-F:1) , SSI=0.08/1.00 (D-E:1)

DOL LUMBER=1.00 NAIL=1.00 LS BEND=1.10 COMP=1.10 SHEAR=1.10 TENS= 1.10

COMPANION LIVE LOAD FACTOR = 1.00

TRUSS PLATE MANUFACTURER IS NOT RESPONSIBLE FOR QUALITY CONTROL IN THE TRUSS MANUFACTURING PLANT .

NAIL VALUES

PLATE	GRIP(DRY) (PSI) MAX	MIN	SHEAR (PLI) MAX	MIN	SECTION (PLI) MAX	MIN
MT20	650	371	1747	788	1987	1873

PLATE PLACEMENT TOL. = 0.250 inches

PLATE ROTATION TOL. = 5.0 Deg.

JSI GRIP= 0.57 (B) (INPUT = 0.90)
JSI METAL= 0.11 (B) (INPUT = 1.00)

JOB NAME	TRUSS NAME	QUANTITY	PLY	JOB DESC.		DRWG NO.
336321	P01		1	TRUSS DESC.	JT 45147	E21104032

Alpa Roof Truss, Maple

Version 8.420 S Jan 21 2021 MiTek Industries, Inc. Wed Oct 13 10:32:10 2021 Page 1

ID:hd511hZTz bdeQoS817GKByhVxV-MHp0t8LhDfs2GtiKwYJre5nNlQw7blEQzyrKnqyTswJ

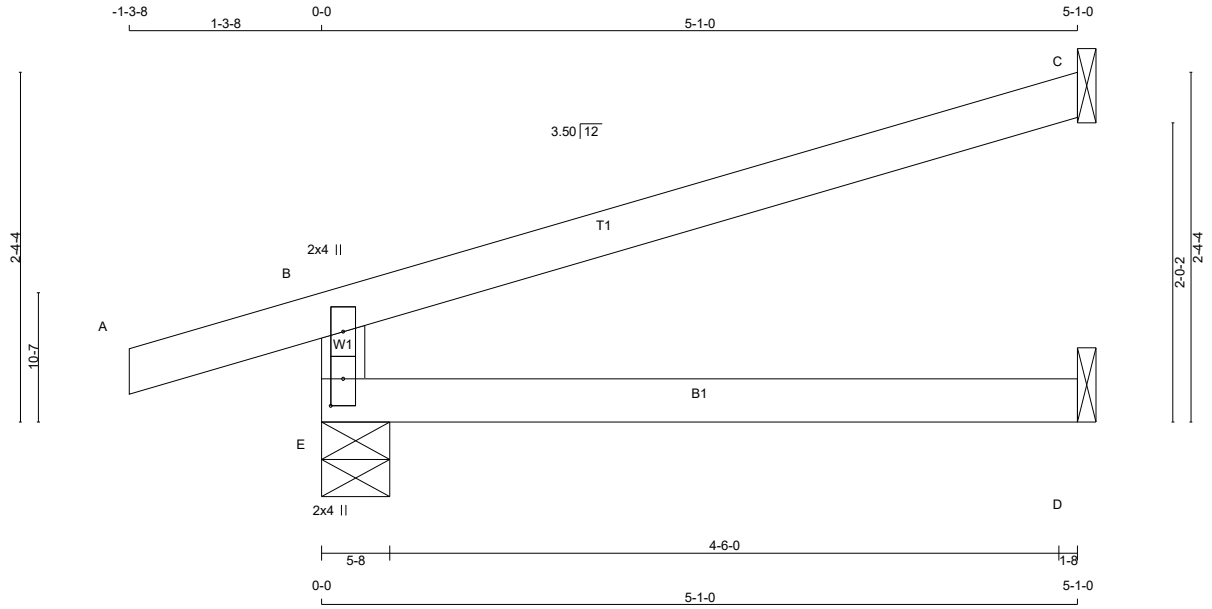

TOTAL WEIGHT = 4 X 14 = 56 lb

[M]

LUMBER

N. L. G. A. RULES

CHORDS	SIZE		LUMBER	DESCR.
E - B	2x4	DRY	No.2	SPF
A - C	2x4	DRY	No.2	SPF
E - D	2x4	DRY	No.2	SPF

DRY: SEASONED LUMBER.

PLATES (table is in inches)

JT	TYPE	PLATES	W	LEN	Y	X
B	TMV+p	MT20	2.0	4.0		
E	BMV1+p	MT20	2.0	4.0	2.25	1.00

LATERAL BRACE(S) SHOWN SHALL BE 2X4 SPF#2

DIMENSIONS, SUPPORTS AND LOADINGS SPECIFIED BY FABRICATOR TO BE VERIFIED BY BUILDING DESIGNER

BEARINGS

JT	FACTORED GROSS REACTION VERT	HORZ	MAXIMUM FACTORED GROSS REACTION DOWN	HORZ	UPLIFT	INPUT BRG IN-SX	REQRD BRG IN-SX
E	407	0	407	0	0	5-8	1-8
C	149	0	149	0	0	1-8	1-8
D	38	0	43	0	0	1-8	1-8

SEE MITEK STANDARD DETAIL B97791H FOR CONNECTION TO JOINT(S) C , D

UNFACTORED REACTIONS

JT	1ST LCASE COMBINED	MAX./MIN. COMPONENT REACTIONS SNOW	LIVE	PERM.LIVE	WIND	DEAD	SOIL
E	288	189 / 0	0 / 0	0 / 0	0 / 0	99 / 0	0 / 0
C	103	80 / 0	0 / 0	0 / 0	0 / 0	23 / 0	0 / 0
D	31	0 / 0	0 / 0	0 / 0	0 / 0	31 / 0	0 / 0

BEARING MATERIAL TO BE SPF NO.2 OR BETTER AT JOINT(S) E

BRACING

TOP CHORD TO BE SHEATHED OR MAX. PURLIN SPACING = 6.25 FT.
MAX. UNBRACED BOTTOM CHORD LENGTH = 10.00 FT OR RIGID CEILING DIRECTLY APPLIED.

ALL PITCH BREAKS AND PERIMETER CORNER JOINTS MUST BE LATERALLY RESTRAINED.

LOADING

TOTAL LOAD CASES: (4)

CHORDS MEMB. FR-TO	MAX. FACTORED FORCE (LBS)	FACTORED VERT. LOAD (PLF) FROM	TO	LC1 MAX CSI (LC)	MAX. UNBRAC LENGTH
E- B	-352 / 0	0.0	0.0	0.10 (4)	7.81
A- B	0 / 15	-78.0	-78.0	0.10 (1)	10.00
B- C	-14 / 0	-78.0	-78.0	0.34 (1)	6.25
E- D	0 / 0	-18.5	-18.5	0.10 (4)	10.00

WEBS MEMB. FR-TO	MAX. FACTORED FORCE (LBS)	MAX CSI (LC)

DESIGN CRITERIA

SPECIFIED LOADS:

TOP CH.	LL	=	21.0	PSF
	DL	=	6.0	PSF
BOT CH.	LL	=	0.0	PSF
	DL	=	7.4	PSF
TOTAL LOAD		=	34.4	PSF

SPACING = 24.0 IN. C/C

THIS TRUSS IS DESIGNED FOR RESIDENTIAL OR SMALL BUILDING REQUIREMENTS OF PART 9, NBCC 2015

THIS DESIGN COMPLIES WITH:
- PART 9 OF BCBC 2018 , ABC 2019
- PART 9 OF OBC 2012 (2019 AMENDMENT)
- CSA 086-14
- TPIC 2014

DESIGN ASSUMPTIONS
-OVERHANG NOT TO BE ALTERED OR CUT OFF.

(55 % OF 23.0 P.S.F. G.S.L. PLUS 8.4 P.S.F. RAIN LOAD) EQUALS 21.0 P.S.F. SPECIFIED ROOF LIVE LOAD

ALLOWABLE DEFL.(LL)= L/360 (0.19")
CALCULATED VERT. DEFL.(LL) = L/ 999 (0.00")
ALLOWABLE DEFL.(TL)= L/360 (0.19")
CALCULATED VERT. DEFL.(TL) = L/ 999 (0.02")

CSI: TC=0.34/1.00 (B-C:1) , BC=0.10/1.00 (D-E:4) , WB=0.00/1.00 (n/a:0) , SSI=0.19/1.00 (B-C:1)

DOL LUMBER=1.00 NAIL=1.00 LS BEND=1.10 COMP=1.10 SHEAR=1.10 TENS= 1.10

COMPANION LIVE LOAD FACTOR = 1.00

AUTOSOLVE RIGHT HEEL ONLY

TRUSS PLATE MANUFACTURER IS NOT RESPONSIBLE FOR QUALITY CONTROL IN THE TRUSS MANUFACTURING PLANT .

NAIL VALUES

PLATE	GRIP(DRY) (PSI) MAX	MIN	SHEAR (PLI) MAX	MIN	SECTION (PLI) MAX	MIN
MT20	650	371	1747	788	1987	1873

PLATE PLACEMENT TOL. = 0.250 inches

PLATE ROTATION TOL. = 5.0 Deg.

JSI GRIP= 0.18 (B) (INPUT = 0.90)
JSI METAL= 0.09 (B) (INPUT = 1.00)

JOB NAME	TRUSS NAME	QUANTITY	PLY	JOB DESC.	DRWG NO.
336321	P02		1	TRUSS DESC. JT 45147	E21104033

Alpa Roof Truss, Maple

Version 8.420 S Jan 21 2021 MiTek Industries, Inc. Wed Oct 13 10:32:12 2021 Page 1

ID:hd511hZTz_bdeQoS817GKByhVxV-IgxmIqNxlG6mWAsi1yMJkWsl9EdE3fjjQGKQsYyTswH

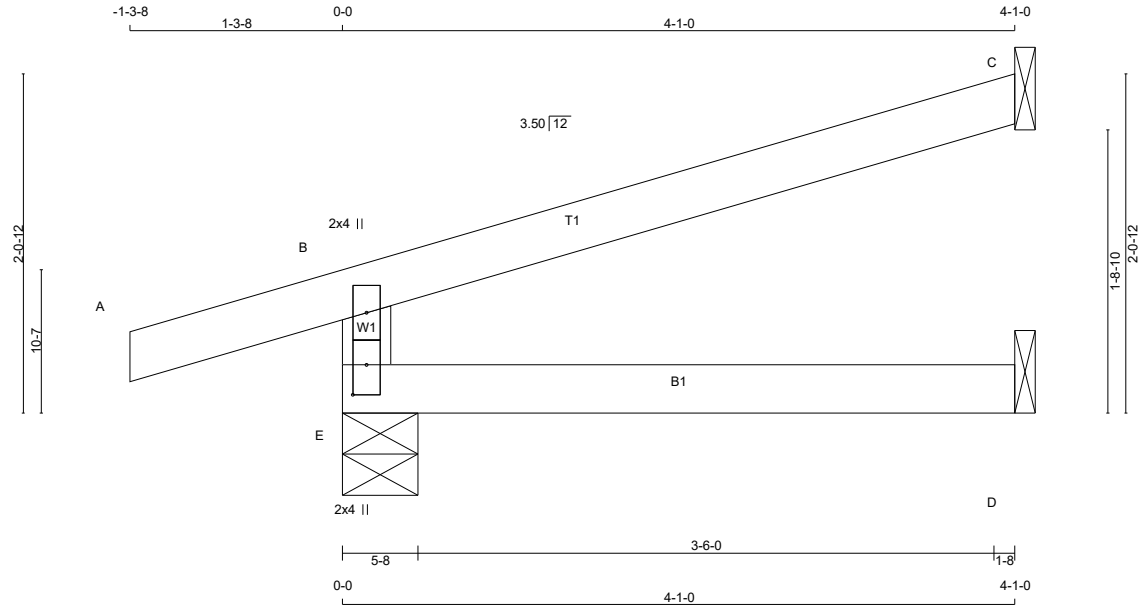

TOTAL WEIGHT = 10 X 12 = 115 lb

[M]

LUMBER

N. L. G. A. RULES

CHORDS	SIZE		LUMBER	DESCR.
E - B	2x4	DRY	No.2	SPF
A - C	2x4	DRY	No.2	SPF
E - D	2x4	DRY	No.2	SPF

DRY: SEASONED LUMBER.

PLATES (table is in inches)

JT	TYPE	PLATES	W	LEN	Y	X
B	TMV+p	MT20	2.0	4.0		
E	BMV1+p	MT20	2.0	4.0	2.25	1.00

LATERAL BRACE(S) SHOWN SHALL BE 2X4 SPF#2

DIMENSIONS, SUPPORTS AND LOADINGS SPECIFIED BY FABRICATOR TO BE VERIFIED BY BUILDING DESIGNER

BEARINGS

JT	FACTORED GROSS REACTION VERT	HORZ	MAXIMUM FACTORED GROSS REACTION DOWN	HORZ	UPLIFT	INPUT BRG IN-SX	REQRD BRG IN-SX
E	347	0	347	0	0	5-8	1-8
C	119	0	119	0	0	1-8	1-8
D	31	0	35	0	0	1-8	1-8

SEE MITEK STANDARD DETAIL B97791H FOR CONNECTION TO JOINT(S) C , D

UNFACTORED REACTIONS

JT	1ST LCASE COMBINED	MAX./MIN. COMPONENT REACTIONS SNOW	LIVE	PERM.LIVE	WIND	DEAD	SOIL
E	245	163 / 0	0 / 0	0 / 0	0 / 0	82 / 0	0 / 0
C	83	64 / 0	0 / 0	0 / 0	0 / 0	18 / 0	0 / 0
D	25	0 / 0	0 / 0	0 / 0	0 / 0	25 / 0	0 / 0

BEARING MATERIAL TO BE SPF NO.2 OR BETTER AT JOINT(S) E

BRACING

TOP CHORD TO BE SHEATHED OR MAX. PURLIN SPACING = 6.25 FT.
MAX. UNBRACED BOTTOM CHORD LENGTH = 10.00 FT OR RIGID CEILING DIRECTLY APPLIED.

ALL PITCH BREAKS AND PERIMETER CORNER JOINTS MUST BE LATERALLY RESTRAINED.

LOADING

TOTAL LOAD CASES: (4)

CHORDS

MEMB. FR-TO	MAX. FACTORED FORCE (LBS)	FACTORED VERT. LOAD (PLF) FROM	TO	LC1 MAX CSI (LC)	MAX. UNBRAC LENGTH
E- B	-303 / 0	0.0	0.0	0.06 (4)	7.81
A- B	0 / 15	-78.0	-78.0	0.10 (1)	10.00
B- C	-11 / 0	-78.0	-78.0	0.22 (1)	6.25
E- D	0 / 0	-18.5	-18.5	0.06 (4)	10.00

WEBS

MEMB. FR-TO	MAX. FACTORED FORCE (LBS)	MAX CSI (LC)

DESIGN CRITERIA

SPECIFIED LOADS:

TOP CH.	LL	=	21.0	PSF
	DL	=	6.0	PSF
BOT CH.	LL	=	0.0	PSF
	DL	=	7.4	PSF
TOTAL LOAD		=	34.4	PSF

SPACING = 24.0 IN. C/C

THIS TRUSS IS DESIGNED FOR RESIDENTIAL OR SMALL BUILDING REQUIREMENTS OF PART 9, NBCC 2015

THIS DESIGN COMPLIES WITH:
- PART 9 OF BCBC 2018 , ABC 2019
- PART 9 OF OBC 2012 (2019 AMENDMENT)
- CSA 086-14
- TPIC 2014

DESIGN ASSUMPTIONS
-OVERHANG NOT TO BE ALTERED OR CUT OFF.

(55 % OF 23.0 P.S.F. G.S.L. PLUS 8.4 P.S.F. RAIN LOAD) EQUALS 21.0 P.S.F. SPECIFIED ROOF LIVE LOAD

ALLOWABLE DEFL.(TL)= L/360 (0.19")
CALCULATED VERT. DEFL.(TL) = L/ 999 (0.01")

CSI: TC=0.22/1.00 (B-C:1) , BC=0.06/1.00 (D-E:4) , WB=0.00/1.00 (n/a:0) , SSI=0.15/1.00 (B-C:1)

DOL LUMBER=1.00 NAIL=1.00 LS BEND=1.10 COMP=1.10 SHEAR=1.10 TENS= 1.10

COMPANION LIVE LOAD FACTOR = 1.00

TRUSS PLATE MANUFACTURER IS NOT RESPONSIBLE FOR QUALITY CONTROL IN THE TRUSS MANUFACTURING PLANT .

NAIL VALUES

PLATE	GRIP(DRY) (PSI) MAX	MIN	SHEAR (PLI) MAX	MIN	SECTION (PLI) MAX	MIN
MT20	650	371	1747	788	1987	1873

PLATE PLACEMENT TOL. = 0.250 inches

PLATE ROTATION TOL. = 5.0 Deg.

JSI GRIP= 0.16 (B) (INPUT = 0.90)
JSI METAL= 0.08 (B) (INPUT = 1.00)

JOB NAME	TRUSS NAME	QUANTITY	PLY	JOB DESC.	DRWG NO.
336324	H41A		1	TRUSS DESC. JT 45147	E21104072

Alpha Roof Truss, Maple

Version 8.420 S Jan 21 2021 MiTek Industries, Inc. Wed Oct 13 14:51:33 2021 Page 1

ID:hd511hZTz bdeQoS817GKByhVxV-ALhTDqhp7OdrtazP6Y1Qv0rsCzNFWCQ9qlHLW6yTp78

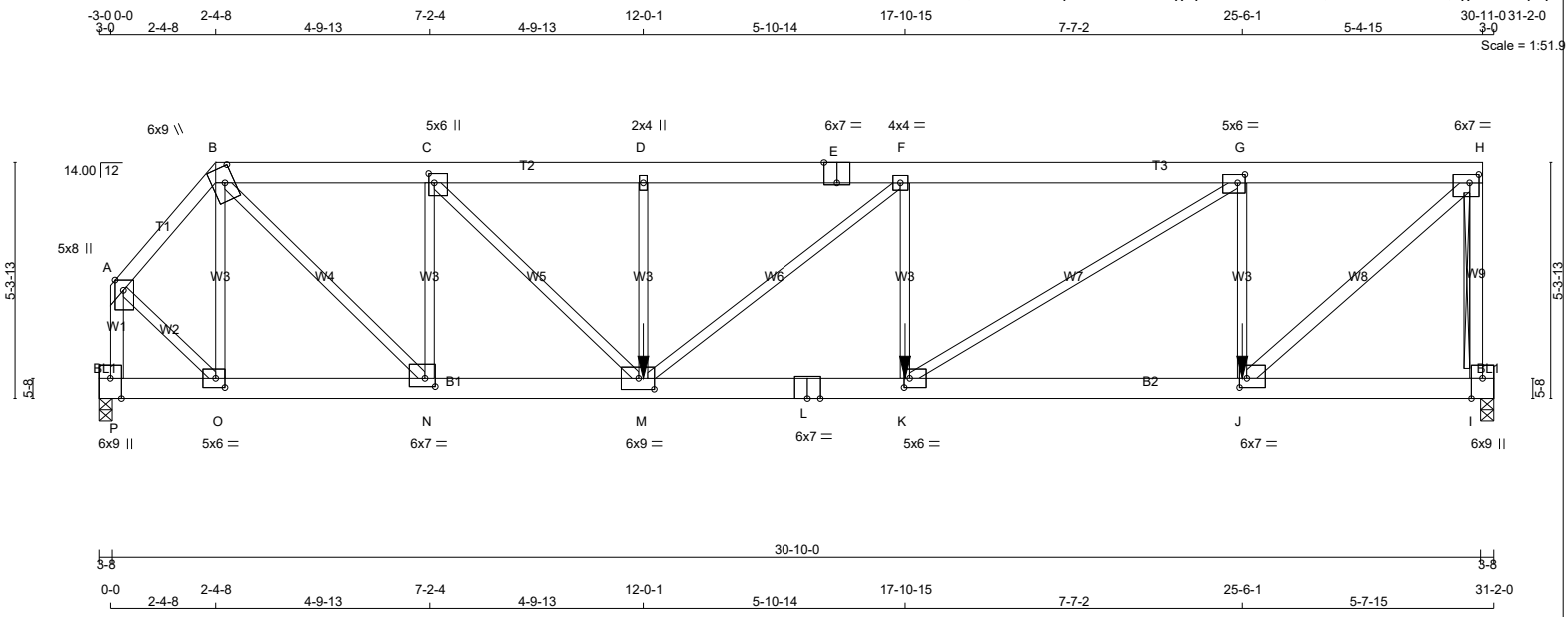

TOTAL WEIGHT = 171 lb

[M]

LUMBER

N. L. G. A. RULES

CHORDS	SIZE		LUMBER	DESCR.
A - B	2x4	DRY	No.2	SPF
B - E	2x6	DRY	No.2	SPF
E - H	2x6	DRY	No.2	SPF
I - H	2x4	DRY	No.2	SPF
P - A	2x4	DRY	No.2	SPF
P - L	2x6	DRY	No.2	SPF
L - I	2x6	DRY	No.2	SPF
BEARING BLOCKS				
BL1	2 - 2x4	DRY	No.2	SPF
ALL WEBS EXCEPT	2x3	DRY	No.2	SPF
J - H	2x4	DRY	No.2	SPF

DRY: SEASONED LUMBER.

PLATES (table is in inches)

JT	TYPE	PLATES	W	LEN	Y	X
A	TMVW+p	MT20	5.0	8.0	2.75	Edge
B	TTWW+m	MT20	6.0	9.0	4.25	2.50
C	TMWW+t	MT20	5.0	6.0	2.50	1.50
D	TMW+w	MT20	2.0	4.0		
E	TS-t	MT20	6.0	7.0	Edge	3.50
F	TMWW-t	MT20	4.0	4.0		
G	TMWW-t	MT20	5.0	6.0	2.25	2.00
H	TMVW-t	MT20	6.0	7.0	2.25	2.50
I	BMVK1+t	MT20	6.0	9.0	Edge	3.00
J	BMWW-t	MT20	6.0	7.0	2.50	2.00
K	BMWW-t	MT20	5.0	6.0	2.50	1.50
L	BS-t	MT20	6.0	7.0		
M	BMWWW-t	MT20	6.0	9.0	3.00	4.25
N	BMWW-t	MT20	6.0	7.0	2.25	2.75
O	BMWW-t	MT20	5.0	6.0	2.50	2.50
P	BMVK1+t	MT20	6.0	9.0	Edge	3.00

Edge - INDICATES REFERENCE CORNER OF PLATE TOUCHES EDGE OF CHORD.

LATERAL BRACE(S) SHOWN SHALL BE 2X4 SPF#2

LICENSED PROFESSIONAL ENGINEER
V. WIDYA
100225448
10/13/2021
PROVINCE OF ONTARIO

DIMENSIONS, SUPPORTS AND LOADINGS SPECIFIED BY FABRICATOR TO BE VERIFIED BY BUILDING DESIGNER

BEARINGS

JT	FACTORED GROSS REACTION VERT	HORZ	MAXIMUM FACTORED GROSS REACTION DOWN	HORZ	UPLIFT	INPUT BRG IN-SX	REQRD BRG IN-SX
I	3543	0	3543	0	0	3-8	3-8
P	2826	0	2826	0	0	3-8	3-8

UNFACTORED REACTIONS

JT	1ST LCASE COMBINED	MAX./MIN. COMPONENT REACTIONS SNOW	LIVE	PERM.LIVE	WIND	DEAD	SOIL
I	2525	1544 / 0	0 / 0	0 / 0	0 / 0	982 / 0	0 / 0
P	2015	1231 / 0	0 / 0	0 / 0	0 / 0	784 / 0	0 / 0

BEARING MATERIAL TO BE SPF NO.2 OR BETTER AT JOINT(S) I, P
BEARING SIZE FACTOR = 1.15 AT JNT(S) I, P (BASED ON SUPPORT DEPTH = 1-8)

BRACING

TOP CHORD TO BE SHEATHED OR MAX. PURLIN SPACING = 3.20 FT.
MAX. UNBRACED BOTTOM CHORD LENGTH = 6.25 FT OR RIGID CEILING DIRECTLY APPLIED.

ALL PITCH BREAKS AND PERIMETER CORNER JOINTS MUST BE LATERALLY RESTRAINED.

2x3 DRY SPF No.2 T-BRACE AT H-I

FASTEN T AND I-BRACES TO NARROW EDGE OF WEB WITH ONE ROW PER PLY OF 3" COMMON WIRE NAILS @ 6" O.C. WITH 3" MINIMUM END DISTANCE. BRACE MUST COVER 90% OF WEB LENGTH.

END VERTICAL(S) MUST BE SHEATHED OR HAVE BRACES AS INDICATED IN THE MAX. UNBRACED LENGTH COLUMN OF THE TABLE BELOW

LOADING

TOTAL LOAD CASES: (4)

CHORDS

MEMB. FR-TO	MAX. FACTORED FORCE (LBS)	FACTORED VERT. LOAD (PLF) FROM	TO	LC1 CSI (LC)	MAX. UNBRAC LENGTH
A- B	-1975 / 0	-78.0	-78.0	0.14 (1)	4.66
B- C	-3606 / 0	-78.0	-78.0	0.23 (1)	4.31
C- D	-5516 / 0	-78.0	-78.0	0.40 (1)	3.42
D- E	-5516 / 0	-156.0	-156.0	0.55 (1)	3.27
E- F	-5516 / 0	-156.0	-156.0	0.55 (1)	3.27
F- G	-5673 / 0	-78.0	-78.0	0.63 (1)	3.20
G- H	-3372 / 0	-153.5	-153.5	0.40 (1)	4.22
I- H	-3463 / 0	0.0	0.0	0.86 (1)	6.03
P- A	-2852 / 0	0.0	0.0	0.40 (1)	5.04
P- O	-198 / 0	-18.5	-18.5	0.07 (1)	6.25
O- N	0 / 1262	-18.5	-18.5	0.23 (1)	10.00
N- M	0 / 3606	-18.5	-18.5	0.52 (1)	10.00
M- L	0 / 5673	-37.3	-37.3	0.87 (1)	10.00
L- K	0 / 5673	-37.3	-37.3	0.87 (1)	10.00
K- J	0 / 3372	-18.5	-18.5	0.51 (1)	10.00
J- I	-104 / 0	-36.4	-36.4	0.12 (4)	6.25

WEBS

MEMB. FR-TO	MAX. FACTORED FORCE (LBS)	MAX CSI (LC)
O- B	-1127 / 0	0.43 (1)
B- N	0 / 3331	0.82 (1)
N- C	-2294 / 0	0.87 (1)
C- M	0 / 2713	0.67 (1)
M- D	-662 / 0	0.25 (1)
M- F	-204 / 0	0.23 (1)
K- F	-633 / 0	0.24 (1)
K- G	0 / 2732	0.68 (1)
J- G	-2269 / 0	0.86 (1)
J- H	0 / 4671	0.83 (1)
A- O	0 / 1943	0.48 (1)

FACTORED CONCENTRATED LOADS (LBS)

JT	LOC.	LC1	MAX-	MAX+	FACE	DIR.	TYPE	HEEL	CONN.
J	25-6-1	-662	-662	---	FRONT	VERT	TOTAL	---	C1
K	17-10-15	-662	-662	---	FRONT	VERT	TOTAL	---	C1
M	12-0-1	-993	-993	---	FRONT	VERT	TOTAL	---	C1

CONNECTION REQUIREMENTS

1) **C1:** A SUITABLE HANGER/MECHANICAL CONNECTION IS REQUIRED.

DESIGN CRITERIA

*** SPECIAL LOADS ANALYSIS ***
GEOMETRY AND/OR BASIC LOADS CHANGED BY USER.
LOADS WERE DERIVED FROM USER INPUT
NO FURTHER MODIFICATIONS WERE MADE

SPECIFIED LOADS:

TOP CH.	LL	=	21.0	PSF
	DL	=	6.0	PSF
BOT CH.	LL	=	0.0	PSF
	DL	=	7.4	PSF
TOTAL LOAD		=	34.4	PSF

SPACING = 24.0 IN. C/C

LOADING IN FLAT SECTION BASED ON A SLOPE OF 2.00/12 MINIMUM

GIRDER TYPE: CPrimeHip
LEFT SETBACK = 2-7-8
RIGHT SETBACK = 0-0
END SETBACK = 5-10-8
END WALL WIDTH = 0-0
CORNER FRAMING TYPE: CONVENTIONAL
END JACK TYPE: CONVENTIONAL
APPLIED TO FRONT SIDE
- ADDT'L LOADS BASED ON 55 % OF GSL.
LOADS APPLIED TO FIRST 5-10-15 OF SPAN MEASURED FROM THE RIGHT.

*** NON STANDARD GIRDER ***
ADDT'L USER-DEFINED LOADS APPLIED TO ALL LOAD CASES.

THIS TRUSS IS DESIGNED FOR RESIDENTIAL OR SMALL BUILDING REQUIREMENTS OF PART 9, NBCC 2015

THIS DESIGN COMPLIES WITH:
- PART 9 OF BCBC 2018 , ABC 2019
- PART 9 OF OBC 2012 (2019 AMENDMENT)
- CSA 086-14
- TPIC 2014

(55 % OF 23.0 P.S.F. G.S.L. PLUS 8.4 P.S.F. RAIN LOAD) EQUALS 21.0 P.S.F. SPECIFIED ROOF LIVE LOAD

ALLOWABLE DEFL.(LL)= L/360 (1.02")
CALCULATED VERT. DEFL.(LL) = L/ 999 (0.21")
ALLOWABLE DEFL.(TL)= L/360 (1.02")
CALCULATED VERT. DEFL.(TL) = L/ 869 (0.42")

CSI: TC=0.86/1.00 (H-I:1) , BC=0.87/1.00 (K-M:1) , WB=0.87/1.00 (C-N:1) , SSI=0.33/1.00 (G-H:1)

DOL LUMBER=1.00 NAIL=1.00 LS BEND=1.00 COMP=1.00 SHEAR=1.00 TENS= 1.00

COMPANION LIVE LOAD FACTOR = 1.00

TRUSS PLATE MANUFACTURER IS NOT RESPONSIBLE FOR QUALITY CONTROL IN THE TRUSS MANUFACTURING PLANT .

NAIL VALUES

PLATE	GRIP(DRY) (PSI) MAX	MIN	SHEAR (PLI) MAX	MIN	SECTION (PLI) MAX	MIN
MT20	650	371	1747	788	1987	1873

CONTINUED ON PAGE 2

JOB NAME	TRUSS NAME	QUANTITY	PLY	JOB DESC.		DRWG NO.
336324	H43TA		1	TRUSS DESC.	JT 45147	E21104073

Alpa Roof Truss, Maple

Version 8.420 S Jan 21 2021 MiTek Industries, Inc. Wed Oct 13 14:51:35 2021 Page 1

ID:hd511hZTz bdeQoS817GKByhVxV-6kpEdMj3e?tZ7t6oEz3u RwDnn8y CqS73mSb?yTp76

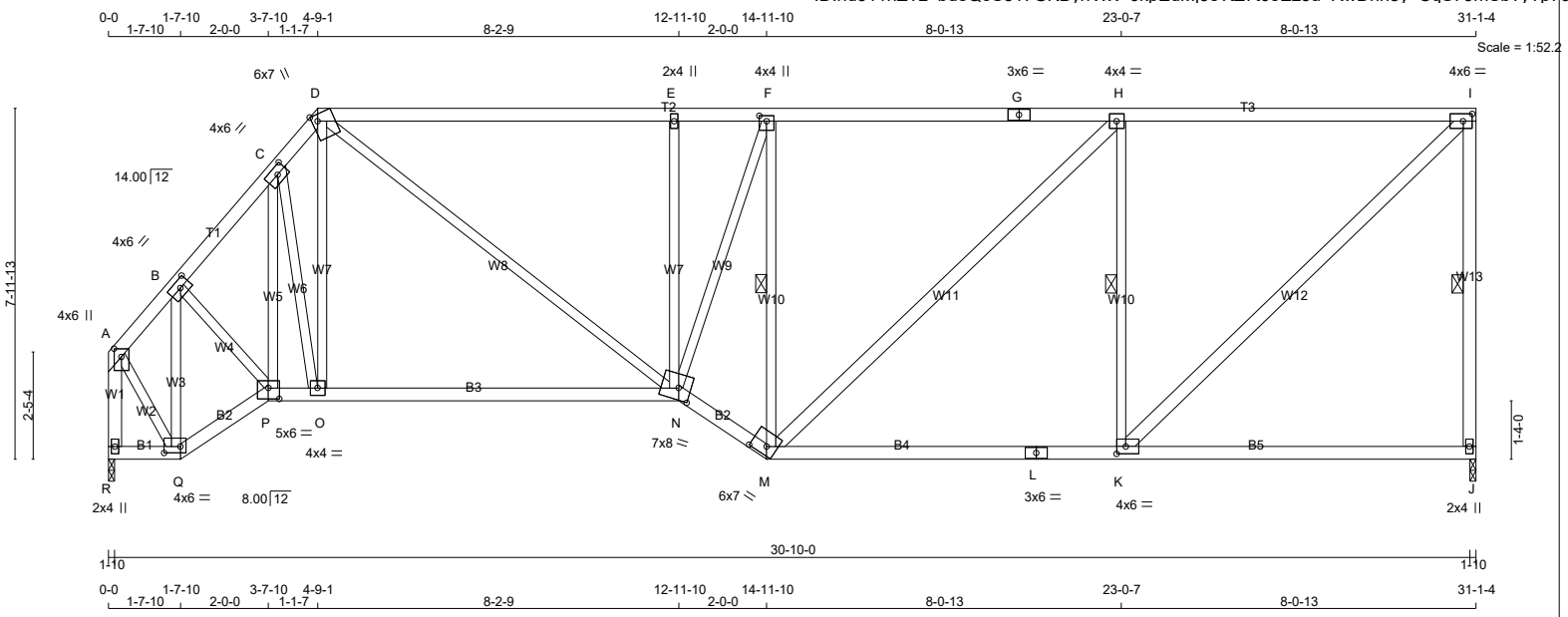

TOTAL WEIGHT = 161 lb

[M]

LUMBER

N. L. G. A. RULES

CHORDS	SIZE		LUMBER	DESCR.
A - D	2x4	DRY	No.2	SPF
D - G	2x4	DRY	1650F 1.5E	SPF
G - I	2x4	DRY	1650F 1.5E	SPF
J - I	2x4	DRY	No.2	SPF
R - A	2x4	DRY	No.2	SPF
R - Q	2x4	DRY	No.2	SPF
Q - P	2x4	DRY	No.2	SPF
P - N	2x4	DRY	No.2	SPF
N - M	2x4	DRY	No.2	SPF
M - L	2x4	DRY	No.2	SPF
L - J	2x4	DRY	No.2	SPF
ALL WEBS EXCEPT	2x3	DRY	No.2	SPF
M - H	2x4	DRY	No.2	SPF
K - I	2x4	DRY	No.2	SPF

DRY: SEASONED LUMBER.

PLATES (table is in inches)

JT	TYPE	PLATES	W	LEN	Y	X
A	TMVW+p	MT20	4.0	6.0	2.25	2.00
B	TMWW-t	MT20	4.0	6.0	2.00	2.75
C	TMWW-t	MT20	4.0	6.0	2.00	2.75
D	TTWW+m	MT20	6.0	7.0	Edge	1.50
E	TMW+w	MT20	2.0	4.0		
F	TMWW+t	MT20	4.0	4.0	1.50	2.00
G	TS-t	MT20	3.0	6.0		
H	TMWW-t	MT20	4.0	4.0		
I	TMVW-t	MT20	4.0	6.0	2.00	2.50
J	BMV1+p	MT20	2.0	4.0		
K	BMWW-t	MT20	4.0	6.0	2.00	2.50
L	BS-t	MT20	3.0	6.0		
M	BBWW-h	MT20	6.0	7.0	2.25	4.25
N	BBWWW-m	MT20	7.0	8.0	3.25	3.25
O	BMWW-t	MT20	4.0	4.0		
P	BBWW-l	MT20	5.0	6.0	3.00	3.00
Q	BBWW-l	MT20	4.0	6.0	1.75	4.50
R	BMV1+p	MT20	2.0	4.0		

Edge - INDICATES REFERENCE CORNER OF PLATE TOUCHES EDGE OF CHORD.

LATERAL BRACE(S) SHOWN SHALL BE 2X4 SPF#2

DIMENSIONS, SUPPORTS AND LOADINGS SPECIFIED BY FABRICATOR TO BE VERIFIED BY BUILDING DESIGNER

BEARINGS

JT	FACTORED GROSS REACTION VERT	HORZ	MAXIMUM FACTORED GROSS REACTION DOWN	HORZ	UPLIFT	INPUT BRG IN-SX	REQRD BRG IN-SX
J	1500	0	1500	0	0	1-10	1-10
R	1500	0	1500	0	0	1-10	1-10

UNFACTORED REACTIONS

JT	1ST LCASE COMBINED	MAX./MIN. COMPONENT REACTIONS SNOW	LIVE	PERM.LIVE	WIND	DEAD	SOIL
J	1070	653 / 0	0 / 0	0 / 0	0 / 0	417 / 0	0 / 0
R	1070	653 / 0	0 / 0	0 / 0	0 / 0	417 / 0	0 / 0

BEARING MATERIAL TO BE SPF NO.2 OR BETTER AT JOINT(S) J, R

BRACING

TOP CHORD TO BE SHEATHED OR MAX. PURLIN SPACING = 4.66 FT.
MAX. UNBRACED BOTTOM CHORD LENGTH = 10.00 FT OR RIGID CEILING DIRECTLY APPLIED.

ALL PITCH BREAKS AND PERIMETER CORNER JOINTS MUST BE LATERALLY RESTRAINED.

1 LATERAL BRACE(S) AT 1/ 2 LENGTH OF I-J, F-M, H-K.

END VERTICAL(S) MUST BE SHEATHED OR HAVE BRACES AS INDICATED IN THE MAX. UNBRACED LENGTH COLUMN OF THE TABLE BELOW

LOADING

TOTAL LOAD CASES: (4)

CHORDS

MEMB. FR-TO	MAX. FACTORED FORCE (LBS)	FACTORED VERT. LOAD (PLF) FROM	TO	LC1 CSI (LC)	MAX. UNBRAC LENGTH
A- B	-903 / 0	-78.0	-78.0	0.04 (1)	6.25
B- C	-1492 / 0	-78.0	-78.0	0.08 (1)	5.31
C- D	-1544 / 0	-78.0	-78.0	0.04 (1)	5.28
D- E	-1866 / 0	-78.0	-78.0	0.70 (1)	4.66
E- F	-1857 / 0	-78.0	-78.0	0.55 (1)	4.67
F- G	-1550 / 0	-78.0	-78.0	0.79 (1)	4.70
G- H	-1550 / 0	-78.0	-78.0	0.79 (1)	4.70
H- I	-1257 / 0	-78.0	-78.0	0.75 (1)	5.11
J- I	-1443 / 0	0.0	0.0	0.41 (1)	5.44
R- A	-1485 / 0	0.0	0.0	0.19 (1)	6.73
R- Q	0 / 0	-18.5	-18.5	0.01 (4)	10.00
Q- P	0 / 678	-18.5	-18.5	0.12 (1)	10.00
P- O	0 / 977	-18.5	-18.5	0.40 (4)	10.00
O- N	0 / 978	-18.5	-18.5	0.40 (4)	10.00
N- M	0 / 1843	-18.5	-18.5	0.31 (1)	10.00
M- L	0 / 1257	-18.5	-18.5	0.47 (4)	10.00
L- K	0 / 1257	-18.5	-18.5	0.47 (4)	10.00
K- J	0 / 0	-18.5	-18.5	0.35 (4)	10.00

WEBS

MEMB. FR-TO	MAX. FACTORED FORCE (LBS)	MAX CSI (LC)
Q- B	-1089 / 0	0.29 (1)
B- P	0 / 629	0.14 (1)
P- C	-173 / 0	0.08 (1)
C- O	-17 / 64	0.02 (4)
O- D	0 / 214	0.06 (4)
D- N	0 / 1120	0.25 (1)
N- E	-557 / 0	0.41 (1)
N- F	0 / 1029	0.23 (1)
M- F	-1224 / 0	0.49 (1)
M- H	0 / 405	0.07 (1)
K- H	-1016 / 0	0.41 (1)
K- I	0 / 1737	0.28 (1)
A- Q	0 / 953	0.21 (1)

DESIGN CRITERIA

SPECIFIED LOADS:

TOP CH.	LL	=	21.0	PSF
	DL	=	6.0	PSF
BOT CH.	LL	=	0.0	PSF
	DL	=	7.4	PSF
TOTAL LOAD		=	34.4	PSF

SPACING = 24.0 IN. C/C

LOADING IN FLAT SECTION BASED ON A SLOPE OF 2.00/12 MINIMUM

THIS TRUSS IS DESIGNED FOR RESIDENTIAL OR SMALL BUILDING REQUIREMENTS OF PART 9, NBCC 2015

THIS DESIGN COMPLIES WITH:
- PART 9 OF BCBC 2018 , ABC 2019
- PART 9 OF OBC 2012 (2019 AMENDMENT)
- CSA 086-14
- TPIC 2014

(55 % OF 23.0 P.S.F. G.S.L. PLUS 8.4 P.S.F. RAIN LOAD) EQUALS 21.0 P.S.F. SPECIFIED ROOF LIVE LOAD

ALLOWABLE DEFL.(LL)= L/360 (1.04")
CALCULATED VERT. DEFL.(LL) = L/ 999 (0.09")
ALLOWABLE DEFL.(TL)= L/360 (1.04")
CALCULATED VERT. DEFL.(TL) = L/ 999 (0.23")

CSI: TC=0.79/1.00 (F-H:1) , BC=0.47/1.00 (K-M:4) , WB=0.49/1.00 (F-M:1) , SSI=0.30/1.00 (H-I:1)

DOL LUMBER=1.00 NAIL=1.00 LS BEND=1.10 COMP=1.10 SHEAR=1.10 TENS= 1.10

COMPANION LIVE LOAD FACTOR = 1.00

TRUSS PLATE MANUFACTURER IS NOT RESPONSIBLE FOR QUALITY CONTROL IN THE TRUSS MANUFACTURING PLANT .

NAIL VALUES

PLATE	GRIP(DRY) (PSI) MAX	MIN	SHEAR (PLI) MAX	MIN	SECTION (PLI) MAX	MIN
MT20	650	371	1747	788	1987	1873

PLATE PLACEMENT TOL. = 0.250 inches

PLATE ROTATION TOL. = 5.0 Deg.

JSI GRIP= 0.87 (I) (INPUT = 0.90)
JSI METAL= 0.36 (L) (INPUT = 1.00)

JOB NAME	TRUSS NAME	QUANTITY	PLY	JOB DESC.	DRWG NO.
336324	H44TA		1	TRUSS DESC. JT 45147	E21104074

Alpa Roof Truss, Maple

Version 8.420 S Jan 21 2021 MiTek Industries, Inc. Wed Oct 13 14:51:37 2021 Page 1

ID:hd511hZTz_bdeQoS817GKByhVxV-37x_22kJAc7HMBGALO5M3s0WXaqhS4PlbNFZgtyTp74

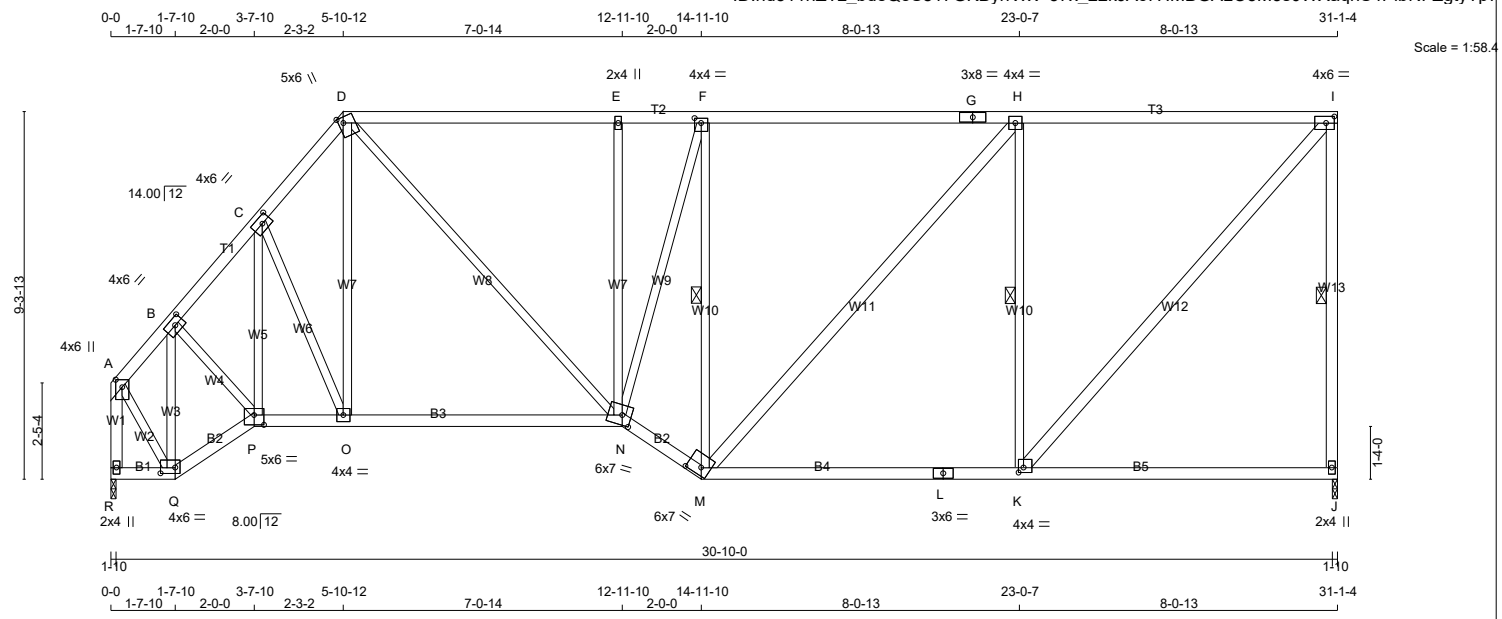

TOTAL WEIGHT = 171 lb

[M]

LUMBER

N. L. G. A. RULES

CHORDS	SIZE		LUMBER	DESCR.
A - D	2x4	DRY	No.2	SPF
D - G	2x4	DRY	No.2	SPF
G - I	2x4	DRY	No.2	SPF
J - I	2x4	DRY	No.2	SPF
R - A	2x4	DRY	No.2	SPF
R - Q	2x4	DRY	No.2	SPF
Q - P	2x4	DRY	No.2	SPF
P - N	2x4	DRY	No.2	SPF
N - M	2x4	DRY	No.2	SPF
M - L	2x4	DRY	No.2	SPF
L - J	2x4	DRY	No.2	SPF
ALL WEBS EXCEPT	2x3	DRY	No.2	SPF
M - H	2x4	DRY	No.2	SPF
K - I	2x4	DRY	No.2	SPF

DRY: SEASONED LUMBER.

PLATES (table is in inches)

JT	TYPE	PLATES	W	LEN	Y	X
A	TMVW+p	MT20	4.0	6.0	2.25	2.00
B	TMWW-t	MT20	4.0	6.0	2.00	2.75
C	TMWW-t	MT20	4.0	6.0	2.00	2.75
D	TTWW+m	MT20	5.0	6.0	1.75	1.50
E	TMW+w	MT20	2.0	4.0		
F	TMWW-t	MT20	4.0	4.0	1.50	2.00
G	TS-t	MT20	3.0	8.0		
H	TMWW-t	MT20	4.0	4.0		
I	TMVW-t	MT20	4.0	6.0	2.00	2.50
J	BMV1+p	MT20	2.0	4.0		
K	BMWW-t	MT20	4.0	4.0	1.50	1.50
L	BS-t	MT20	3.0	6.0		
M	BBWW-h	MT20	6.0	7.0	2.25	4.25
N	BBWWW-m	MT20	6.0	7.0	3.00	2.75
O	BMWW-t	MT20	4.0	4.0		
P	BBWW-l	MT20	5.0	6.0	3.00	3.00
Q	BBWW-l	MT20	4.0	6.0	1.75	4.50
R	BMV1+p	MT20	2.0	4.0		

LATERAL BRACE(S) SHOWN SHALL BE 2X4 SPF#2

DIMENSIONS, SUPPORTS AND LOADINGS SPECIFIED BY FABRICATOR TO BE VERIFIED BY BUILDING DESIGNER

BEARINGS

JT	FACTORED GROSS REACTION VERT	HORZ	MAXIMUM FACTORED GROSS REACTION DOWN	HORZ	UPLIFT	INPUT BRG IN-SX	REQRD BRG IN-SX
J	1500	0	1500	0	0	1-10	1-10
R	1500	0	1500	0	0	1-10	1-10

UNFACTORED REACTIONS

JT	1ST LCASE COMBINED	MAX./MIN. COMPONENT REACTIONS SNOW	LIVE	PERM.LIVE	WIND	DEAD	SOIL
J	1070	653 / 0	0 / 0	0 / 0	0 / 0	417 / 0	0 / 0
R	1070	653 / 0	0 / 0	0 / 0	0 / 0	417 / 0	0 / 0

BEARING MATERIAL TO BE SPF NO.2 OR BETTER AT JOINT(S) J, R

BRACING

TOP CHORD TO BE SHEATHED OR MAX. PURLIN SPACING = 3.98 FT.
MAX. UNBRACED BOTTOM CHORD LENGTH = 10.00 FT OR RIGID CEILING DIRECTLY APPLIED.

ALL PITCH BREAKS AND PERIMETER CORNER JOINTS MUST BE LATERALLY RESTRAINED.

1 LATERAL BRACE(S) AT 1/ 2 LENGTH OF I-J, F-M, H-K.

END VERTICAL(S) MUST BE SHEATHED OR HAVE BRACES AS INDICATED IN THE MAX. UNBRACED LENGTH COLUMN OF THE TABLE BELOW

LOADING

TOTAL LOAD CASES: (4)

CHORDS

MEMB. FR-TO	MAX. FACTORED FORCE (LBS)	FACTORED VERT. LOAD (PLF) FROM	TO	LC1 CSI (LC)	MAX. UNBRAC LENGTH
A- B	-903 / 0	-78.0	-78.0	0.03 (1)	6.25
B- C	-1491 / 0	-78.0	-78.0	0.07 (1)	5.32
C- D	-1478 / 0	-78.0	-78.0	0.07 (1)	5.34
D- E	-1523 / 0	-78.0	-78.0	0.58 (1)	4.64
E- F	-1517 / 0	-78.0	-78.0	0.46 (1)	4.69
F- G	-1323 / 0	-78.0	-78.0	0.96 (1)	3.98
G- H	-1323 / 0	-78.0	-78.0	0.96 (1)	3.98
H- I	-1071 / 0	-78.0	-78.0	0.92 (1)	4.39
J- I	-1443 / 0	0.0	0.0	0.59 (1)	5.44
R- A	-1485 / 0	0.0	0.0	0.19 (1)	6.73
R- Q	0 / 0	-18.5	-18.5	0.01 (4)	10.00
Q- P	0 / 675	-18.5	-18.5	0.12 (1)	10.00
P- O	0 / 977	-18.5	-18.5	0.30 (4)	10.00
O- N	0 / 949	-18.5	-18.5	0.30 (4)	10.00
N- M	0 / 1575	-18.5	-18.5	0.27 (1)	10.00
M- L	0 / 1071	-18.5	-18.5	0.45 (4)	10.00
L- K	0 / 1071	-18.5	-18.5	0.45 (4)	10.00
K- J	0 / 0	-18.5	-18.5	0.35 (4)	10.00

WEBS

MEMB. FR-TO	MAX. FACTORED FORCE (LBS)	MAX CSI (LC)
Q- B	-1083 / 0	0.29 (1)
B- P	0 / 643	0.14 (1)
P- C	-108 / 0	0.05 (1)
C- O	-76 / 0	0.04 (1)
O- D	0 / 197	0.05 (4)
D- N	0 / 845	0.19 (1)
N- E	-429 / 0	0.52 (1)
N- F	0 / 783	0.18 (1)
M- F	-1077 / 0	0.61 (1)
M- H	0 / 377	0.06 (1)
K- H	-1016 / 0	0.58 (1)
K- I	0 / 1607	0.26 (1)
A- Q	0 / 949	0.21 (1)

DESIGN CRITERIA

SPECIFIED LOADS:

TOP CH.	LL	=	21.0	PSF
	DL	=	6.0	PSF
BOT CH.	LL	=	0.0	PSF
	DL	=	7.4	PSF
TOTAL LOAD		=	34.4	PSF

SPACING = 24.0 IN. C/C

LOADING IN FLAT SECTION BASED ON A SLOPE OF 2.00/12 MINIMUM

THIS TRUSS IS DESIGNED FOR RESIDENTIAL OR SMALL BUILDING REQUIREMENTS OF PART 9, NBCC 2015

THIS DESIGN COMPLIES WITH:
- PART 9 OF BCBC 2018 , ABC 2019
- PART 9 OF OBC 2012 (2019 AMENDMENT)
- CSA 086-14
- TPIC 2014

(55 % OF 23.0 P.S.F. G.S.L. PLUS 8.4 P.S.F. RAIN LOAD) EQUALS 21.0 P.S.F. SPECIFIED ROOF LIVE LOAD

ALLOWABLE DEFL.(LL)= L/360 (1.04")
CALCULATED VERT. DEFL.(LL) = L/ 999 (0.08")
ALLOWABLE DEFL.(TL)= L/360 (1.04")
CALCULATED VERT. DEFL.(TL) = L/ 999 (0.19")

CSI: TC=0.96/1.00 (F-H:1) , BC=0.45/1.00 (K-M:4) , WB=0.61/1.00 (F-M:1) , SSI=0.30/1.00 (H-I:1)

DOL LUMBER=1.00 NAIL=1.00 LS BEND=1.10 COMP=1.10 SHEAR=1.10 TENS= 1.10

COMPANION LIVE LOAD FACTOR = 1.00

TRUSS PLATE MANUFACTURER IS NOT RESPONSIBLE FOR QUALITY CONTROL IN THE TRUSS MANUFACTURING PLANT .

NAIL VALUES

PLATE	GRIP(DRY) (PSI) MAX	MIN	SHEAR (PLI) MAX	MIN	SECTION (PLI) MAX	MIN
MT20	650	371	1747	788	1987	1873

PLATE PLACEMENT TOL. = 0.250 inches

PLATE ROTATION TOL. = 5.0 Deg.

JSI GRIP= 0.89 (N) (INPUT = 0.90)
JSI METAL= 0.37 (K) (INPUT = 1.00)

JOB NAME	TRUSS NAME	QUANTITY	PLY	JOB DESC.	DRWG NO.
336324	H45TA		1	TRUSS DESC. JT 45147	E21104075

Alpa Roof Truss, Maple

Version 8.420 S Jan 21 2021 MiTek Industries, Inc. Wed Oct 13 14:51:39 2021 Page 1

ID:hd511hZTz_bdeQoS817GKByhVxV-?V3kTkmZiEN?bVQZTp8q9H5skOXMwzS12hkfkmyTp72

Scale = 1:65.1

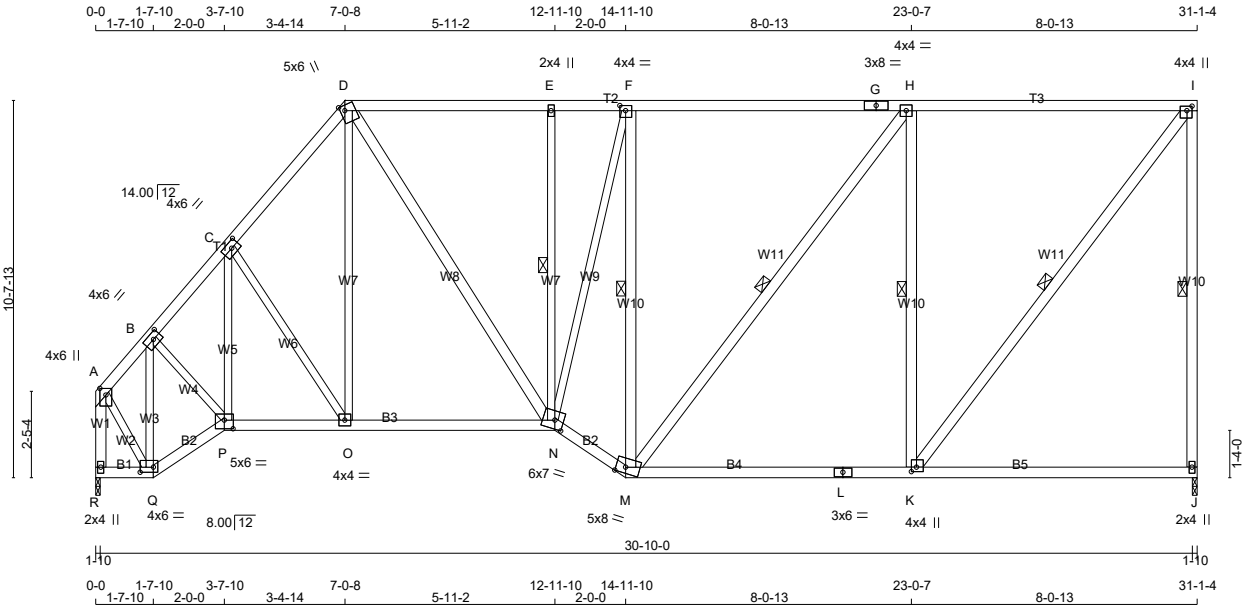

TOTAL WEIGHT = 192 lb

[M]

LUMBER

N. L. G. A. RULES

CHORDS	SIZE		LUMBER	DESCR.
A - D	2x4	DRY	No.2	SPF
D - G	2x4	DRY	No.2	SPF
G - I	2x4	DRY	No.2	SPF
J - I	2x4	DRY	No.2	SPF
R - A	2x4	DRY	No.2	SPF
R - Q	2x4	DRY	No.2	SPF
Q - P	2x4	DRY	No.2	SPF
P - N	2x4	DRY	No.2	SPF
N - M	2x4	DRY	No.2	SPF
M - L	2x4	DRY	No.2	SPF
L - J	2x4	DRY	No.2	SPF
ALL WEBS EXCEPT	2x3	DRY	No.2	SPF
D - N	2x4	DRY	No.2	SPF
M - F	2x4	DRY	No.2	SPF
M - H	2x4	DRY	No.2	SPF
K - H	2x4	DRY	No.2	SPF
K - I	2x4	DRY	No.2	SPF

DRY: SEASONED LUMBER.

PLATES (table is in inches)

JT	TYPE	PLATES	W	LEN	Y	X
A	TMVW+p	MT20	4.0	6.0	2.25	2.00
B	TMWW-t	MT20	4.0	6.0	2.00	2.75
C	TMWW-t	MT20	4.0	6.0	2.00	2.75
D	TTWW+m	MT20	5.0	6.0	1.75	1.50
E	TMW+w	MT20	2.0	4.0		
F	TMWW-t	MT20	4.0	4.0	1.75	2.00
G	TS-t	MT20	3.0	8.0		
H	TMWW-t	MT20	4.0	4.0		
I	TMVW+p	MT20	4.0	4.0	1.50	1.75
J	BMV1+p	MT20	2.0	4.0		
K	BMWW+t	MT20	4.0	4.0	1.50	1.75
L	BS-t	MT20	3.0	6.0		
M	BBWW-m	MT20	5.0	8.0	2.00	3.25
N	BBWWW-m	MT20	6.0	7.0	3.00	3.00
O	BMWW-t	MT20	4.0	4.0		
P	BBWW-l	MT20	5.0	6.0	3.00	3.00
Q	BBWW-l	MT20	4.0	6.0	1.75	4.50
R	BMV1+p	MT20	2.0	4.0		

LATERAL BRACE(S) SHOWN SHALL BE 2X4 SPF#2

DIMENSIONS, SUPPORTS AND LOADINGS SPECIFIED BY FABRICATOR TO BE VERIFIED BY BUILDING DESIGNER

BEARINGS

JT	FACTORED GROSS REACTION VERT	HORZ	MAXIMUM FACTORED GROSS REACTION DOWN	HORZ	UPLIFT	INPUT BRG IN-SX	REQRD BRG IN-SX
J	1500	0	1500	0	0	1-10	1-10
R	1500	0	1500	0	0	1-10	1-10

UNFACTORED REACTIONS

JT	1ST LCASE COMBINED	MAX./MIN. COMPONENT REACTIONS SNOW	LIVE	PERM.LIVE	WIND	DEAD	SOIL
J	1070	653 / 0	0 / 0	0 / 0	0 / 0	417 / 0	0 / 0
R	1070	653 / 0	0 / 0	0 / 0	0 / 0	417 / 0	0 / 0

BEARING MATERIAL TO BE SPF NO.2 OR BETTER AT JOINT(S) J, R

BRACING

TOP CHORD TO BE SHEATHED OR MAX. PURLIN SPACING = 4.27 FT.
MAX. UNBRACED BOTTOM CHORD LENGTH = 10.00 FT OR RIGID CEILING DIRECTLY APPLIED.

ALL PITCH BREAKS AND PERIMETER CORNER JOINTS MUST BE LATERALLY RESTRAINED.

1 LATERAL BRACE(S) AT 1/ 2 LENGTH OF I-J, E-N, F-M, H-M, H-K, I-K.

END VERTICAL(S) MUST BE SHEATHED OR HAVE BRACES AS INDICATED IN THE MAX. UNBRACED LENGTH COLUMN OF THE TABLE BELOW

LOADING

TOTAL LOAD CASES: (4)

CHORDS

MEMB. FR-TO	MAX. FACTORED FORCE (LBS)	FACTORED VERT. LOAD (PLF) FROM	TO	LC1 CSI (LC)	MAX. UNBRAC LENGTH
A- B	-904 / 0	-78.0	-78.0	0.04 (1)	6.25
B- C	-1485 / 0	-78.0	-78.0	0.13 (1)	5.26
C- D	-1429 / 0	-78.0	-78.0	0.14 (1)	5.33
D- E	-1283 / 0	-78.0	-78.0	0.39 (1)	5.22
E- F	-1280 / 0	-78.0	-78.0	0.37 (1)	5.20
F- G	-1154 / 0	-78.0	-78.0	0.92 (1)	4.27
G- H	-1154 / 0	-78.0	-78.0	0.92 (1)	4.27
H- I	-933 / 0	-78.0	-78.0	0.88 (1)	4.70
J- I	-1443 / 0	0.0	0.0	0.82 (1)	5.44
R- A	-1485 / 0	0.0	0.0	0.19 (1)	6.73
R- Q	0 / 0	-18.5	-18.5	0.01 (4)	10.00
Q- P	0 / 671	-18.5	-18.5	0.12 (1)	10.00
P- O	0 / 985	-18.5	-18.5	0.24 (1)	10.00
O- N	0 / 916	-18.5	-18.5	0.23 (4)	10.00
N- M	0 / 1371	-18.5	-18.5	0.23 (1)	10.00
M- L	0 / 933	-18.5	-18.5	0.44 (4)	10.00
L- K	0 / 933	-18.5	-18.5	0.44 (4)	10.00
K- J	0 / 0	-18.5	-18.5	0.35 (4)	10.00

WEBS

MEMB. FR-TO	MAX. FACTORED FORCE (LBS)	MAX CSI (LC)
Q- B	-1077 / 0	0.28 (1)
B- P	0 / 660	0.15 (1)
P- C	-95 / 0	0.04 (1)
C- O	-128 / 0	0.09 (1)
O- D	0 / 212	0.05 (4)
D- N	0 / 666	0.11 (1)
N- E	-315 / 0	0.18 (1)
N- F	0 / 601	0.14 (1)
M- F	-968 / 0	0.55 (1)
M- H	0 / 360	0.06 (1)
K- H	-1015 / 0	0.58 (1)
K- I	0 / 1518	0.24 (1)
A- Q	0 / 943	0.21 (1)

DESIGN CRITERIA

SPECIFIED LOADS:

TOP CH.	LL	=	21.0	PSF
	DL	=	6.0	PSF
BOT CH.	LL	=	0.0	PSF
	DL	=	7.4	PSF
TOTAL LOAD		=	34.4	PSF

SPACING = 24.0 IN. C/C

LOADING IN FLAT SECTION BASED ON A SLOPE OF 2.00/12 MINIMUM

THIS TRUSS IS DESIGNED FOR RESIDENTIAL OR SMALL BUILDING REQUIREMENTS OF PART 9, NBCC 2015

THIS DESIGN COMPLIES WITH:
- PART 9 OF BCBC 2018 , ABC 2019
- PART 9 OF OBC 2012 (2019 AMENDMENT)
- CSA 086-14
- TPIC 2014

(55 % OF 23.0 P.S.F. G.S.L. PLUS 8.4 P.S.F. RAIN LOAD) EQUALS 21.0 P.S.F. SPECIFIED ROOF LIVE LOAD

ALLOWABLE DEFL.(LL)= L/360 (1.04")
CALCULATED VERT. DEFL.(LL) = L/ 999 (0.06")
ALLOWABLE DEFL.(TL)= L/360 (1.04")
CALCULATED VERT. DEFL.(TL) = L/ 999 (0.17")

CSI: TC=0.92/1.00 (F-H:1) , BC=0.44/1.00 (K-M:4) , WB=0.58/1.00 (H-K:1) , SSI=0.30/1.00 (H-I:1)

DOL LUMBER=1.00 NAIL=1.00 LS BEND=1.10 COMP=1.10 SHEAR=1.10 TENS= 1.10

COMPANION LIVE LOAD FACTOR = 1.00

TRUSS PLATE MANUFACTURER IS NOT RESPONSIBLE FOR QUALITY CONTROL IN THE TRUSS MANUFACTURING PLANT .

NAIL VALUES

PLATE	GRIP(DRY) (PSI) MAX	MIN	SHEAR (PLI) MAX	MIN	SECTION (PLI) MAX	MIN
MT20	650	371	1747	788	1987	1873

PLATE PLACEMENT TOL. = 0.250 inches

PLATE ROTATION TOL. = 5.0 Deg.

JSI GRIP= 0.90 (I) (INPUT = 0.90)
JSI METAL= 0.41 (I) (INPUT = 1.00)

JOB NAME	TRUSS NAME	QUANTITY	PLY	JOB DESC.		DRWG NO.
336324	H61A		1	TRUSS DESC.	JT 45147	E21104076

Alpa Roof Truss, Maple

Version 8.420 S Jan 21 2021 MiTek Industries, Inc. Wed Oct 13 14:51:40 2021 Page 1

ID:hd511hZTz bdeQoS817GKByhVxV-Thd7h3nCTXWrDe?l1Wf3hUeBIov0fYOBHLUDGCyTp71

Scale = 1:61.6

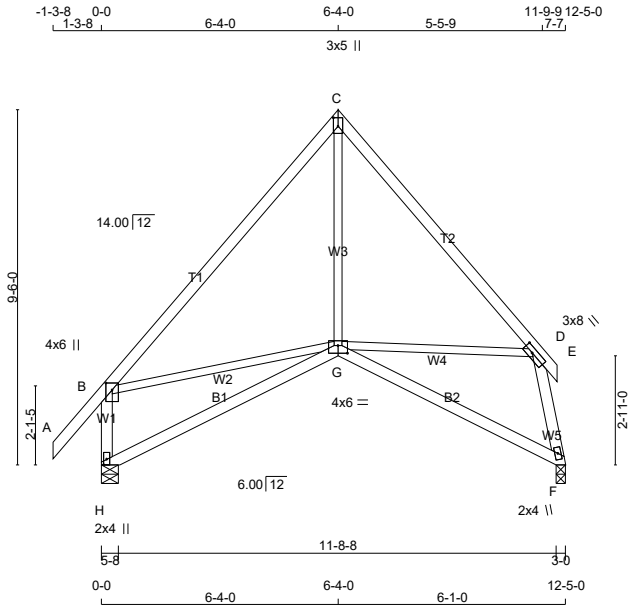

TOTAL WEIGHT = 60 lb

[M][F]

LUMBER

N. L. G. A. RULES

CHORDS	SIZE		LUMBER	DESCR.
A - C	2x4	DRY	2100F 1.8E	SPF
C - E	2x4	DRY	No.2	SPF
H - B	2x4	DRY	No.2	SPF
H - G	2x4	DRY	No.2	SPF
G - F	2x4	DRY	No.2	SPF
ALL WEBS	2x4	DRY	No.2	SPF
EXCEPT				
G - C	2x3	DRY	No.2	SPF
G - D	2x3	DRY	No.2	SPF
B - G	2x3	DRY	No.2	SPF

DRY: SEASONED LUMBER.

PLATES (table is in inches)

JT	TYPE	PLATES	W	LEN	Y	X
B	TMVW+p	MT20	4.0	6.0	2.25	2.00
C	TTW+p	MT20	3.0	5.0	2.75	1.50
D	TMWW-t	MT20	3.0	8.0	1.50	3.00
F	BMW1+w	MT20	2.0	4.0		
G	BBWWW-p	MT20	4.0	6.0	2.50	3.00
H	BMV1+p	MT20	2.0	4.0	Edge	

Edge - INDICATES REFERENCE CORNER OF PLATE TOUCHES EDGE OF CHORD.

LATERAL BRACE(S) SHOWN SHALL BE 2X4 SPF#2

DIMENSIONS, SUPPORTS AND LOADINGS SPECIFIED BY FABRICATOR TO BE VERIFIED BY BUILDING DESIGNER

BEARINGS

JT	FACTORED GROSS REACTION VERT	HORZ	MAXIMUM FACTORED GROSS REACTION DOWN	HORZ	UPLIFT	INPUT BRG IN-SX	REQRD BRG IN-SX
F	596	0	596	0	0	3-0	1-8
H	696	0	696	0	0	5-8	1-8

UNFACTORED REACTIONS

JT	1ST LCASE COMBINED	MAX./MIN. COMPONENT REACTIONS SNOW	LIVE	PERM.LIVE	WIND	DEAD	SOIL
F	425	261 / 0	0 / 0	0 / 0	0 / 0	164 / 0	0 / 0
H	494	314 / 0	0 / 0	0 / 0	0 / 0	180 / 0	0 / 0

BEARING MATERIAL TO BE SPF NO.2 OR BETTER AT JOINT(S) F, H

BRACING

TOP CHORD TO BE SHEATHED OR MAX. PURLIN SPACING = 6.25 FT.
MAX. UNBRACED BOTTOM CHORD LENGTH = 10.00 FT OR RIGID CEILING DIRECTLY APPLIED.

ALL PITCH BREAKS AND PERIMETER CORNER JOINTS MUST BE LATERALLY RESTRAINED.

LOADING

TOTAL LOAD CASES: (4)

CHORDS

MEMB. FR-TO	MAX. FACTORED FORCE (LBS)	FACTORED VERT. LOAD (PLF) FROM	TO	LC1 CSI (LC)	MAX UNBRAC LENGTH
A- B	0 / 42	-78.0	-78.0	0.07 (1)	10.00
B- C	-442 / 0	-78.0	-78.0	0.27 (1)	6.25
C- D	-442 / 0	-78.0	-78.0	0.29 (1)	6.25
D- E	0 / 19	-78.0	-78.0	0.02 (1)	10.00
H- B	-638 / 0	0.0	0.0	0.08 (1)	7.81
H- G	0 / 0	-18.5	-18.5	0.22 (4)	10.00
G- F	0 / 112	-18.5	-18.5	0.19 (4)	10.00

WEBS

MEMB. FR-TO	MAX. FACTORED FORCE (LBS)	MAX CSI (LC)
D- F	-601 / 0	0.09 (1)
G- C	0 / 217	0.06 (4)
G- D	0 / 188	0.04 (1)
B- G	0 / 293	0.07 (1)

DESIGN CRITERIA

SPECIFIED LOADS:

TOP CH.	LL	=	21.0	PSF
	DL	=	6.0	PSF
BOT CH.	LL	=	0.0	PSF
	DL	=	7.4	PSF
TOTAL LOAD		=	34.4	PSF

SPACING = 24.0 IN. C/C

THIS TRUSS IS DESIGNED FOR RESIDENTIAL OR SMALL BUILDING REQUIREMENTS OF PART 9, NBCC 2015

THIS DESIGN COMPLIES WITH:
- PART 9 OF BCBC 2018 , ABC 2019
- PART 9 OF OBC 2012 (2019 AMENDMENT)
- CSA 086-14
- TPIC 2014

(55 % OF 23.0 P.S.F. G.S.L. PLUS 8.4 P.S.F. RAIN LOAD) EQUALS 21.0 P.S.F. SPECIFIED ROOF LIVE LOAD

ALLOWABLE DEFL.(LL)= L/360 (0.40")
CALCULATED VERT. DEFL.(LL) = L/ 999 (0.01")
ALLOWABLE DEFL.(TL)= L/360 (0.40")
CALCULATED VERT. DEFL.(TL) = L/ 999 (0.09")

CSI: TC=0.29/1.00 (C-D:1) , BC=0.22/1.00 (G-H:4) , WB=0.09/1.00 (D-F:1) , SSI=0.13/1.00 (B-C:1)

DOL LUMBER=1.00 NAIL=1.00 LS BEND=1.10 COMP=1.10 SHEAR=1.10 TENS= 1.10

COMPANION LIVE LOAD FACTOR = 1.00

AUTOSOLVE LEFT HEEL ONLY

TRUSS PLATE MANUFACTURER IS NOT RESPONSIBLE FOR QUALITY CONTROL IN THE TRUSS MANUFACTURING PLANT .

NAIL VALUES

PLATE	GRIP(DRY) (PSI) MAX	MIN	SHEAR (PLI) MAX	MIN	SECTION (PLI) MAX	MIN
MT20	650	371	1747	788	1987	1873

PLATE PLACEMENT TOL. = 0.250 inches

PLATE ROTATION TOL. = 5.0 Deg.

JSI GRIP= 0.49 (G) (INPUT = 0.90)
JSI METAL= 0.28 (F) (INPUT = 1.00)

JOB NAME	TRUSS NAME	QUANTITY	PLY	JOB DESC.		DRWG NO.
336324	H61B		1	TRUSS DESC.	JT 45147	E21104077

Alpa Roof Truss, Maple

Version 8.420 S Jan 21 2021 MiTek Industries, Inc. Wed Oct 13 14:51:41 2021 Page 1

ID:hd511hZTz_bdeQoS817GKByhVxV-xuAVuPoqEreiroaxaEAIEiAL_BGfO?gKW?DmpeyTp70

Scale = 1:60.7

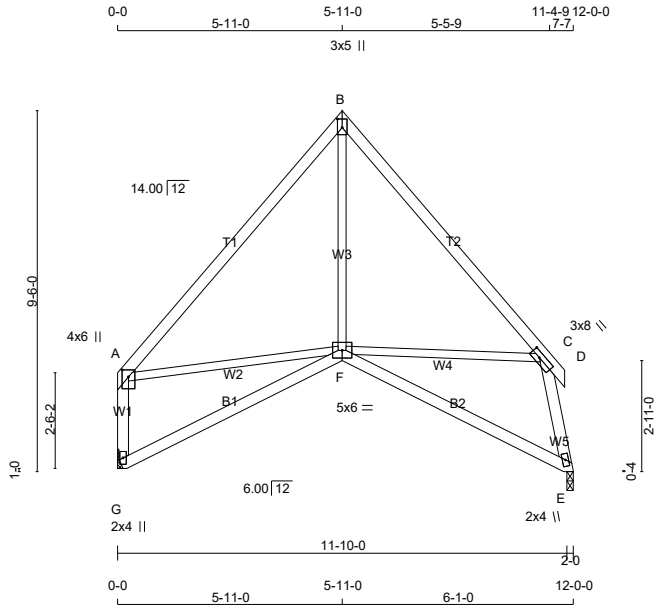

TOTAL WEIGHT = 56 lb

[M][F]

LUMBER

N. L. G. A. RULES

CHORDS	SIZE		LUMBER	DESCR.
A - B	2x4	DRY	No.2	SPF
B - D	2x4	DRY	No.2	SPF
G - A	2x4	DRY	No.2	SPF
G - F	2x4	DRY	No.2	SPF
F - E	2x4	DRY	No.2	SPF
ALL WEBS	2x4	DRY	No.2	SPF
EXCEPT				
F - B	2x3	DRY	No.2	SPF
F - C	2x3	DRY	No.2	SPF
A - F	2x3	DRY	No.2	SPF

DRY: SEASONED LUMBER.

PLATES (table is in inches)

JT	TYPE	PLATES	W	LEN	Y	X
A	TMVW+p	MT20	4.0	6.0	2.25	2.00
B	TTW+p	MT20	3.0	5.0	2.75	1.50
C	TMWW-t	MT20	3.0	8.0	1.50	3.00
E	BMW1+w	MT20	2.0	4.0		
F	BBWWW-p	MT20	5.0	6.0		
G	BMV1+p	MT20	2.0	4.0		

LATERAL BRACE(S) SHOWN SHALL BE 2X4 SPF#2

DIMENSIONS, SUPPORTS AND LOADINGS SPECIFIED BY FABRICATOR TO BE VERIFIED BY BUILDING DESIGNER

BEARINGS

JT	FACTORED GROSS REACTION VERT	HORZ	MAXIMUM FACTORED GROSS REACTION DOWN	HORZ	UPLIFT	INPUT BRG IN-SX	REQRD BRG IN-SX
E	576	0	576	0	0	2-0	1-8
G	567	0	567	0	0	MECHANICAL	

A SUITABLE HANGER/MECHANICAL CONNECTION IS REQUIRED AT JOINT G. MINIMUM BEARING LENGTH AT JOINT G = 1-12.

UNFACTORED REACTIONS

JT	1ST LCASE COMBINED	MAX./MIN. COMPONENT REACTIONS SNOW	LIVE	PERM.LIVE	WIND	DEAD	SOIL
E	411	252 / 0	0 / 0	0 / 0	0 / 0	159 / 0	0 / 0
G	404	247 / 0	0 / 0	0 / 0	0 / 0	157 / 0	0 / 0

BEARING MATERIAL TO BE SPF NO.2 OR BETTER AT JOINT(S) E

BRACING

TOP CHORD TO BE SHEATHED OR MAX. PURLIN SPACING = 6.25 FT.
MAX. UNBRACED BOTTOM CHORD LENGTH = 10.00 FT OR RIGID CEILING DIRECTLY APPLIED.

ALL PITCH BREAKS AND PERIMETER CORNER JOINTS MUST BE LATERALLY RESTRAINED.

LOADING

TOTAL LOAD CASES: (4)

CHORDS

MEMB. FR-TO	MAX. FACTORED FORCE (LBS)	FACTORED VERT. LOAD LC1 (PLF) FROM	TO	MAX CSI (LC)	MAX. UNBRAC LENGTH
A- B	-413 / 0	-78.0	-78.0	0.36 (1)	6.25
B- C	-413 / 0	-78.0	-78.0	0.29 (1)	6.25
C- D	0 / 19	-78.0	-78.0	0.02 (1)	10.00
G- A	-512 / 0	0.0	0.0	0.07 (1)	7.81
G- F	0 / 0	-18.5	-18.5	0.19 (4)	10.00
F- E	0 / 107	-18.5	-18.5	0.19 (4)	10.00

WEBS

MEMB. FR-TO	MAX. FACTORED FORCE (LBS)	MAX CSI (LC)
C- E	-579 / 0	0.08 (1)
F- B	0 / 189	0.05 (4)
F- C	0 / 173	0.04 (1)
A- F	0 / 271	0.06 (1)

DESIGN CRITERIA

SPECIFIED LOADS:

TOP CH.	LL	=	21.0	PSF
	DL	=	6.0	PSF
BOT CH.	LL	=	0.0	PSF
	DL	=	7.4	PSF
TOTAL LOAD		=	34.4	PSF

SPACING = 24.0 IN. C/C

THIS TRUSS IS DESIGNED FOR RESIDENTIAL OR SMALL BUILDING REQUIREMENTS OF PART 9, NBCC 2015

THIS DESIGN COMPLIES WITH:
- PART 9 OF BCBC 2018 , ABC 2019
- PART 9 OF OBC 2012 (2019 AMENDMENT)
- CSA 086-14
- TPIC 2014

(55 % OF 23.0 P.S.F. G.S.L. PLUS 8.4 P.S.F. RAIN LOAD) EQUALS 21.0 P.S.F. SPECIFIED ROOF LIVE LOAD

ALLOWABLE DEFL.(LL)= L/360 (0.39")
CALCULATED VERT. DEFL.(LL) = L/ 999 (0.01")
ALLOWABLE DEFL.(TL)= L/360 (0.39")
CALCULATED VERT. DEFL.(TL) = L/ 999 (0.07")

CSI: TC=0.36/1.00 (A-B:1) , BC=0.19/1.00 (E-F:4) , WB=0.08/1.00 (C-E:1) , SSI=0.12/1.00 (A-B:1)

DOL LUMBER=1.00 NAIL=1.00 LS BEND=1.10 COMP=1.10 SHEAR=1.10 TENS= 1.10

COMPANION LIVE LOAD FACTOR = 1.00

AUTOSOLVE LEFT HEEL ONLY

TRUSS PLATE MANUFACTURER IS NOT RESPONSIBLE FOR QUALITY CONTROL IN THE TRUSS MANUFACTURING PLANT .

NAIL VALUES

PLATE	GRIP(DRY) (PSI) MAX	MIN	SHEAR (PLI) MAX	MIN	SECTION (PLI) MAX	MIN
MT20	650	371	1747	788	1987	1873

PLATE PLACEMENT TOL. = 0.250 inches

PLATE ROTATION TOL. = 5.0 Deg.

JSI GRIP= 0.43 (F) (INPUT = 0.90)
JSI METAL= 0.27 (E) (INPUT = 1.00)

JOB NAME	TRUSS NAME	QUANTITY	PLY	JOB DESC.		DRWG NO.
336324	H81		1	TRUSS DESC.	JT 45147	E21104078

Alpa Roof Truss, Maple

Version 8.420 S Jan 21 2021 MiTek Industries, Inc. Wed Oct 13 14:51:43 2021 Page 1

ID:hd511hZTz bdeQoS817GKByhVxV-tGIFJ5p4mSuQ46kKieCmJ7Gkd?yvsuRdzJittXyTp7_

Scale = 1:64.7

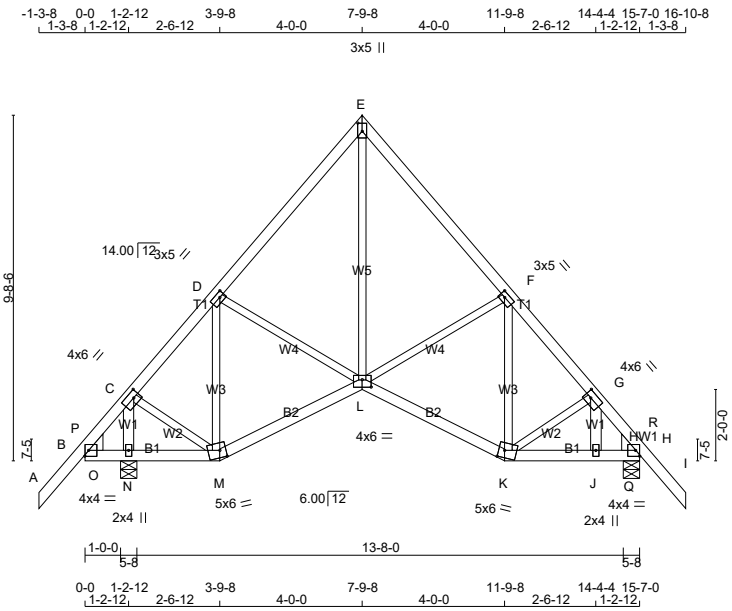

TOTAL WEIGHT = 3 X 81 = 243 lb

[M][F]

LUMBER

N. L. G. A. RULES

CHORDS	SIZE		LUMBER	DESCR.
A - E	2x4	DRY	No.2	SPF
E - I	2x4	DRY	No.2	SPF
B - M	2x4	DRY	No.2	SPF
M - L	2x4	DRY	No.2	SPF
L - K	2x4	DRY	No.2	SPF
K - H	2x4	DRY	No.2	SPF
ALL WEBS	2x3	DRY	No.2	SPF
EXCEPT				
J - G	2x4	DRY	No.2	SPF
N - C	2x4	DRY	No.2	SPF

DRY: SEASONED LUMBER.

PLATES (table is in inches)

JT	TYPE	PLATES	W	LEN	Y	X
B	TMBH-I	MT20	4.0	4.0		Edge
C	TMWW-t	MT20	4.0	6.0	2.00	2.00
D	TMWW-t	MT20	3.0	5.0	1.50	1.75
E	TTW+p	MT20	3.0	5.0	2.75	1.50
F	TMWW-t	MT20	3.0	5.0	1.50	1.75
G	TMWW-t	MT20	4.0	6.0	2.00	2.00
H	TMBH1-I	MT20	4.0	4.0		Edge
J	BMW+w	MT20	2.0	4.0		
K	BBWW-m	MT20	5.0	6.0	2.50	2.00
L	BBWWW-p	MT20	4.0	6.0	2.50	3.00
M	BBWW-m	MT20	5.0	6.0	2.50	2.00
N	BMW1+w	MT20	2.0	4.0		

Edge - INDICATES REFERENCE CORNER OF PLATE TOUCHES EDGE OF CHORD.

LATERAL BRACE(S) SHOWN SHALL BE 2X4 SPF#2

LICENSED PROFESSIONAL ENGINEER
V. WIDYA
100225448
10/13/2021
PROVINCE OF ONTARIO

DIMENSIONS, SUPPORTS AND LOADINGS SPECIFIED BY FABRICATOR TO BE VERIFIED BY BUILDING DESIGNER

BEARINGS

JT	FACTORED GROSS REACTION VERT	HORZ	MAXIMUM FACTORED GROSS REACTION DOWN	HORZ	UPLIFT	INPUT BRG IN-SX	REQRD BRG IN-SX	HEEL WEDGE
H	787	0	787	0	0	5-8	1-8	2x6 R
N	935	0	935	0	0	5-8	1-8	2x6 L

UNFACTORED REACTIONS

JT	1ST LCASE COMBINED	MAX./MIN. COMPONENT REACTIONS SNOW	LIVE	PERM.LIVE	WIND	DEAD	SOIL
H	559	353 / 0	0 / 0	0 / 0	0 / 0	206 / 0	0 / 0
N	664	419 / 0	0 / 0	0 / 0	0 / 0	245 / 0	0 / 0

BEARING MATERIAL TO BE SPF NO.2 OR BETTER AT JOINT(S) H, N

BRACING

TOP CHORD TO BE SHEATHED OR MAX. PURLIN SPACING = 6.25 FT.
MAX. UNBRACED BOTTOM CHORD LENGTH = 6.25 FT OR RIGID CEILING DIRECTLY APPLIED.

ALL PITCH BREAKS AND PERIMETER CORNER JOINTS MUST BE LATERALLY RESTRAINED.

LOADING

TOTAL LOAD CASES: (4)

CHORDS

MEMB. FR-TO	MAX. FACTORED FORCE (LBS)	FACTORED VERT. LOAD (PLF) FROM	TO	LC1 CSI (LC)	MAX. UNBRAC LENGTH
A- B	0 / 39	-78.0	-78.0	0.11 (1)	10.00
B- P	0 / 145	-78.0	-78.0	0.13 (1)	10.00
P- C	0 / 215	-78.0	-78.0	0.06 (1)	10.00
C- D	-409 / 0	-78.0	-78.0	0.12 (1)	6.25
D- E	-500 / 0	-78.0	-78.0	0.15 (1)	6.25
E- F	-501 / 0	-78.0	-78.0	0.15 (1)	6.25
F- G	-596 / 0	-78.0	-78.0	0.13 (1)	6.25
G- R	-652 / 0	-78.0	-78.0	0.06 (1)	6.25
R- H	-960 / 0	-78.0	-78.0	0.09 (1)	6.25
H- I	0 / 39	-78.0	-78.0	0.11 (1)	10.00
B- O	-147 / 0	-18.5	-18.5	0.01 (1)	6.25
O- N	-147 / 0	-18.5	-18.5	0.03 (1)	6.25
N- M	-147 / 0	-18.5	-18.5	0.03 (1)	6.25
M- L	0 / 313	-18.5	-18.5	0.12 (4)	10.00
L- K	0 / 462	-18.5	-18.5	0.13 (4)	10.00
K- J	0 / 387	-18.5	-18.5	0.10 (1)	10.00
J- Q	0 / 387	-18.5	-18.5	0.14 (1)	10.00
Q- H	0 / 387	-18.5	-18.5	0.14 (1)	10.00

WEBS

MEMB. FR-TO	MAX. FACTORED FORCE (LBS)	MAX CSI (LC)
L- E	0 / 465	0.10 (1)
L- F	-119 / 0	0.05 (1)
K- F	-158 / 0	0.06 (1)
K- G	-4 / 36	0.01 (1)
J- G	-54 / 19	0.01 (1)
D- L	0 / 37	0.01 (1)
M- D	-375 / 0	0.13 (1)
C- M	0 / 519	0.12 (1)
N- C	-865 / 0	0.09 (1)
O- P	-6 / 20	0.00 (1)
Q- R	0 / 305	0.00 (1)

DESIGN CRITERIA

SPECIFIED LOADS:

TOP CH.	LL	=	21.0	PSF
	DL	=	6.0	PSF
BOT CH.	LL	=	0.0	PSF
	DL	=	7.4	PSF
TOTAL LOAD		=	34.4	PSF

SPACING = 24.0 IN. C/C

THIS TRUSS IS DESIGNED FOR RESIDENTIAL OR SMALL BUILDING REQUIREMENTS OF PART 9, NBCC 2015

THIS DESIGN COMPLIES WITH:
- PART 9 OF BCBC 2018 , ABC 2019
- PART 9 OF OBC 2012 (2019 AMENDMENT)
- CSA 086-14
- TPIC 2014

DESIGN ASSUMPTIONS
-OVERHANG NOT TO BE ALTERED OR CUT OFF.

(55 % OF 23.0 P.S.F. G.S.L. PLUS 8.4 P.S.F. RAIN LOAD) EQUALS 21.0 P.S.F. SPECIFIED ROOF LIVE LOAD

ALLOWABLE DEFL.(LL)= L/360 (0.48")
CALCULATED VERT. DEFL.(LL) = L/ 999 (0.01")
ALLOWABLE DEFL.(TL)= L/360 (0.48")
CALCULATED VERT. DEFL.(TL) = L/ 999 (0.03")

CANTILEVER DEFLECTION:
ALLOWABLE DEFL.(LL)= L/120 (0.19")
CALCULATED VERT. DEFL.(LL) = L/ 999 (0.00")
ALLOWABLE DEFL.(TL)= L/120 (0.19")
CALCULATED VERT. DEFL.(TL) = L/ 999 (0.00")

CSI: TC=0.15/1.00 (D-E:1) , BC=0.14/1.00 (J-Q:1) , WB=0.13/1.00 (D-M:1) , SSI=0.17/1.00 (H-Q:1)

DOL LUMBER=1.00 NAIL=1.00 LS BEND=1.10 COMP=1.10 SHEAR=1.10 TENS= 1.10

COMPANION LIVE LOAD FACTOR = 1.00

TRUSS PLATE MANUFACTURER IS NOT RESPONSIBLE FOR QUALITY CONTROL IN THE TRUSS MANUFACTURING PLANT .

NAIL VALUES

PLATE	GRIP(DRY) (PSI) MAX	MIN	SHEAR (PLI) MAX	MIN	SECTION (PLI) MAX	MIN
MT20	650	371	1747	788	1987	1873

PLATE PLACEMENT TOL. = 0.250 inches

PLATE ROTATION TOL. = 5.0 Deg.

JSI GRIP= 0.73 (M) (INPUT = 0.90)
JSI METAL= 0.31 (B) (INPUT = 1.00)

JOB NAME	TRUSS NAME	QUANTITY	PLY	JOB DESC.		DRWG NO.
336324	H82		1	TRUSS DESC.	JT 45147	E21104079

Alpa Roof Truss, Maple

Version 8.420 S Jan 21 2021 MiTek Industries, Inc. Wed Oct 13 14:51:45 2021 Page 1

ID:hd511hZTz_bdeQoS817GKByhVxV-qfQ0knrKI488JQtjp3EEOYL_TpbrKlxwQdB_xQyTp6y

Scale = 1:64.7

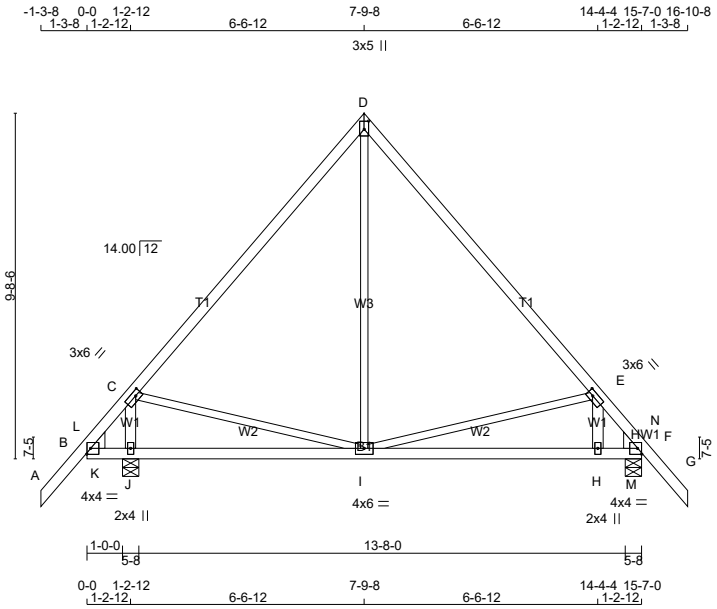

TOTAL WEIGHT = 73 lb

[M][F]

LUMBER

N. L. G. A. RULES

CHORDS	SIZE		LUMBER	DESCR.
A - D	2x4	DRY	No.2	SPF
D - G	2x4	DRY	No.2	SPF
B - F	2x4	DRY	No.2	SPF
ALL WEBS	2x3	DRY	No.2	SPF
EXCEPT				
H - E	2x4	DRY	No.2	SPF
J - C	2x4	DRY	No.2	SPF

DRY: SEASONED LUMBER.

PLATES (table is in inches)

JT	TYPE	PLATES	W	LEN	Y	X
B	TMBH-I	MT20	4.0	4.0		Edge
C	TMWW-t	MT20	3.0	6.0	1.50	2.00
D	TTW+p	MT20	3.0	5.0	2.75	1.50
E	TMWW-t	MT20	3.0	6.0	1.50	2.00
F	TMBH1-I	MT20	4.0	4.0		Edge
H	BMW+w	MT20	2.0	4.0		
I	BMWWW-t	MT20	4.0	6.0		
J	BMW1+w	MT20	2.0	4.0		

Edge - INDICATES REFERENCE CORNER OF PLATE TOUCHES EDGE OF CHORD.

LATERAL BRACE(S) SHOWN SHALL BE 2X4 SPF#2

DIMENSIONS, SUPPORTS AND LOADINGS SPECIFIED BY FABRICATOR TO BE VERIFIED BY BUILDING DESIGNER

BEARINGS

JT	FACTORED GROSS REACTION VERT	HORZ	MAXIMUM FACTORED GROSS REACTION DOWN	HORZ	UPLIFT	INPUT BRG IN-SX	REQRD BRG IN-SX	HEEL WEDGE
F	787	0	787	0	0	5-8	1-8	2x6 R
J	935	0	935	0	0	5-8	1-8	2x6 L

UNFACTORED REACTIONS

JT	1ST LCASE COMBINED	MAX./MIN. COMPONENT REACTIONS SNOW	LIVE	PERM.LIVE	WIND	DEAD	SOIL
F	559	353 / 0	0 / 0	0 / 0	0 / 0	206 / 0	0 / 0
J	664	419 / 0	0 / 0	0 / 0	0 / 0	245 / 0	0 / 0

BEARING MATERIAL TO BE SPF NO.2 OR BETTER AT JOINT(S) F, J

BRACING

TOP CHORD TO BE SHEATHED OR MAX. PURLIN SPACING = 5.24 FT.
MAX. UNBRACED BOTTOM CHORD LENGTH = 10.00 FT OR RIGID CEILING DIRECTLY APPLIED.

ALL PITCH BREAKS AND PERIMETER CORNER JOINTS MUST BE LATERALLY RESTRAINED.

LOADING

TOTAL LOAD CASES: (4)

CHORDS

MEMB. FR-TO	MAX. FACTORED FORCE (LBS)	FACTORED VERT. LOAD (PLF) FROM	TO	LC1 MAX CSI (LC)	MAX. UNBRAC LENGTH
A- B	0 / 39	-78.0	-78.0	0.11 (1)	10.00
B- L	-391 / 0	-78.0	-78.0	0.08 (1)	6.25
L- C	-4 / 177	-78.0	-78.0	0.52 (1)	10.00
C- D	-431 / 0	-78.0	-78.0	0.43 (1)	6.25
D- E	-429 / 0	-78.0	-78.0	0.43 (1)	6.25
E- N	-709 / 0	-78.0	-78.0	0.36 (1)	6.25
N- F	-1521 / 0	-78.0	-78.0	0.10 (1)	5.24
F- G	0 / 39	-78.0	-78.0	0.11 (1)	10.00
B- K	0 / 67	-18.5	-18.5	0.20 (1)	10.00
K- J	0 / 67	-18.5	-18.5	0.20 (1)	10.00
J- I	0 / 67	-18.5	-18.5	0.18 (4)	10.00
I- H	0 / 617	-18.5	-18.5	0.23 (4)	10.00
H- M	0 / 617	-18.5	-18.5	0.37 (1)	10.00
M- F	0 / 617	-18.5	-18.5	0.37 (1)	10.00

WEBS

MEMB. FR-TO	MAX. FACTORED FORCE (LBS)	MAX CSI (LC)
I- D	0 / 186	0.06 (4)
I- E	-375 / 0	0.32 (1)
H- E	-142 / 66	0.02 (4)
C- I	0 / 192	0.04 (1)
J- C	-981 / 0	0.10 (1)
K- L	0 / 645	0.00 (1)
M- N	0 / 939	0.00 (1)

DESIGN CRITERIA

SPECIFIED LOADS:

TOP CH.	LL	=	21.0	PSF
	DL	=	6.0	PSF
BOT CH.	LL	=	0.0	PSF
	DL	=	7.4	PSF
TOTAL LOAD		=	34.4	PSF

SPACING = 24.0 IN. C/C

THIS TRUSS IS DESIGNED FOR RESIDENTIAL OR SMALL BUILDING REQUIREMENTS OF PART 9, NBCC 2015

THIS DESIGN COMPLIES WITH:
- PART 9 OF BCBC 2018 , ABC 2019
- PART 9 OF OBC 2012 (2019 AMENDMENT)
- CSA 086-14
- TPIC 2014

DESIGN ASSUMPTIONS
-OVERHANG NOT TO BE ALTERED OR CUT OFF.

(55 % OF 23.0 P.S.F. G.S.L. PLUS 8.4 P.S.F. RAIN LOAD) EQUALS 21.0 P.S.F. SPECIFIED ROOF LIVE LOAD

ALLOWABLE DEFL.(LL)= L/360 (0.48")
CALCULATED VERT. DEFL.(LL) = L/ 999 (0.02")
ALLOWABLE DEFL.(TL)= L/360 (0.48")
CALCULATED VERT. DEFL.(TL) = L/ 999 (0.06")

CANTILEVER DEFLECTION:
ALLOWABLE DEFL.(LL)= L/120 (0.19")
CALCULATED VERT. DEFL.(LL) = L/ 999 (0.00")
ALLOWABLE DEFL.(TL)= L/120 (0.19")
CALCULATED VERT. DEFL.(TL) = L/ 999 (0.00")

CSI: TC=0.52/1.00 (C-L:1) , BC=0.37/1.00 (F-M:1) , WB=0.32/1.00 (E-I:1) , SSI=0.57/1.00 (F-M:1)

DOL LUMBER=1.00 NAIL=1.00 LS BEND=1.10 COMP=1.10 SHEAR=1.10 TENS= 1.10

COMPANION LIVE LOAD FACTOR = 1.00

TRUSS PLATE MANUFACTURER IS NOT RESPONSIBLE FOR QUALITY CONTROL IN THE TRUSS MANUFACTURING PLANT .

NAIL VALUES

PLATE	GRIP(DRY) (PSI) MAX	MIN	SHEAR (PLI) MAX	MIN	SECTION (PLI) MAX	MIN
MT20	650	371	1747	788	1987	1873

PLATE PLACEMENT TOL. = 0.250 inches

PLATE ROTATION TOL. = 5.0 Deg.

JSI GRIP= 0.68 (E) (INPUT = 0.90)
JSI METAL= 0.33 (F) (INPUT = 1.00)

JOB NAME	TRUSS NAME	QUANTITY	PLY	JOB DESC.		DRWG NO.
336324	H82S		1	TRUSS DESC.	JT 45147	E21104080

Alpa Roof Truss, Maple

Version 8.420 S Jan 21 2021 MiTek Industries, Inc. Wed Oct 13 14:51:47 2021 Page 1

ID:hd511hZTz_bdeQoS817GKByhVxV-m2Ym9TsbqhOsZj15xUHiTzQLbclhogLDuxg4?lyTp6w

Scale = 1:65.3

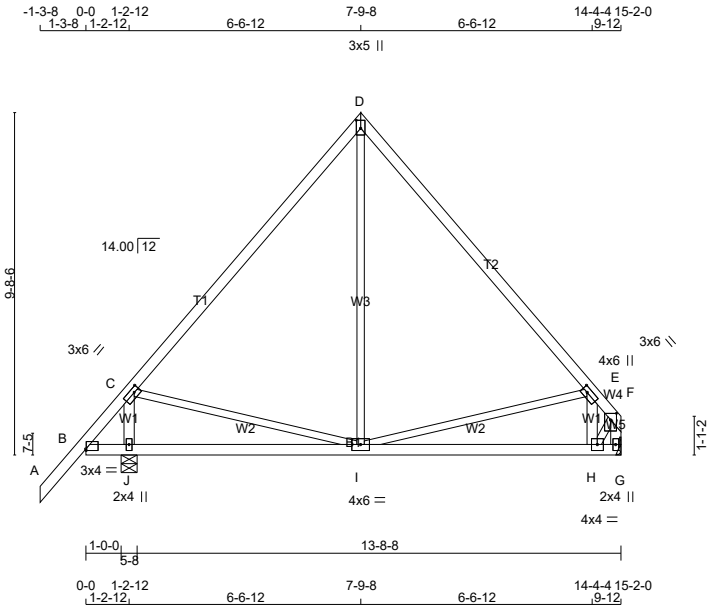

TOTAL WEIGHT = 2 X 70 = 139 lb

[M][F]

LUMBER

N. L. G. A. RULES

CHORDS	SIZE		LUMBER	DESCR.
A - D	2x4	DRY	No.2	SPF
D - F	2x4	DRY	No.2	SPF
G - F	2x4	DRY	No.2	SPF
B - G	2x4	DRY	No.2	SPF
ALL WEBS	2x3	DRY	No.2	SPF
EXCEPT				
J - C	2x4	DRY	No.2	SPF
H - E	2x4	DRY	No.2	SPF

DRY: SEASONED LUMBER.

PLATES (table is in inches)

JT	TYPE	PLATES	W	LEN	Y	X
B	TMB-I	MT20	3.0	4.0	0.50	0.25
C	TMWW-t	MT20	3.0	6.0	1.50	2.00
D	TTW+p	MT20	3.0	5.0	2.75	1.50
E	TMWW-t	MT20	3.0	6.0	1.50	2.00
F	TMVW+p	MT20	4.0	6.0	2.25	2.00
G	BMV1+p	MT20	2.0	4.0		
H	BMWW-t	MT20	4.0	4.0		
I	BMWWW-t	MT20	4.0	6.0		
J	BMW1+w	MT20	2.0	4.0		

LATERAL BRACE(S) SHOWN SHALL BE 2X4 SPF#2

DIMENSIONS, SUPPORTS AND LOADINGS SPECIFIED BY FABRICATOR TO BE VERIFIED BY BUILDING DESIGNER

BEARINGS

JT	FACTORED GROSS REACTION VERT	HORZ	MAXIMUM FACTORED GROSS REACTION DOWN	HORZ	UPLIFT	INPUT BRG IN-SX	REQRD BRG IN-SX
G	652	0	652	0	0	MECHANICAL	
J	921	0	921	0	0	5-8	1-8

A SUITABLE HANGER/MECHANICAL CONNECTION IS REQUIRED AT JOINT G. MINIMUM BEARING LENGTH AT JOINT G = 1-8.

UNFACTORED REACTIONS

JT	1ST LCASE COMBINED	MAX./MIN. COMPONENT REACTIONS SNOW	LIVE	PERM.LIVE	WIND	DEAD	SOIL
G	465	282 / 0	0 / 0	0 / 0	0 / 0	183 / 0	0 / 0
J	654	413 / 0	0 / 0	0 / 0	0 / 0	240 / 0	0 / 0

BEARING MATERIAL TO BE SPF NO.2 OR BETTER AT JOINT(S) J

BRACING

TOP CHORD TO BE SHEATHED OR MAX. PURLIN SPACING = 6.25 FT.
MAX. UNBRACED BOTTOM CHORD LENGTH = 10.00 FT OR RIGID CEILING DIRECTLY APPLIED.

ALL PITCH BREAKS AND PERIMETER CORNER JOINTS MUST BE LATERALLY RESTRAINED.

LOADING

TOTAL LOAD CASES: (4)

CHORDS MEMB. FR-TO	MAX. FACTORED FORCE (LBS)	FACTORED VERT. LOAD LC1 (PLF) FROM	TO	MAX CSI (LC)	MAX. UNBRAC LENGTH	WEBS MEMB. FR-TO	MAX. FACTORED FORCE (LBS)	MAX CSI (LC)
A- B	0 / 39	-78.0	-78.0	0.11 (1)	10.00	J- C	-801 / 0	0.08 (1)
B- C	-25 / 54	-78.0	-78.0	0.48 (1)	6.25	C- I	0 / 175	0.04 (1)
C- D	-411 / 0	-78.0	-78.0	0.43 (1)	6.25	I- D	0 / 160	0.05 (4)
D- E	-413 / 0	-78.0	-78.0	0.43 (1)	6.25	I- E	-307 / 0	0.26 (1)
E- F	-489 / 0	-78.0	-78.0	0.38 (1)	6.25	H- E	-367 / 0	0.04 (1)
G- F	-696 / 0	0.0	0.0	0.07 (1)	7.81	H- F	0 / 723	0.16 (1)
B- J	0 / 72	-18.5	-18.5	0.14 (4)	10.00			
J- I	0 / 72	-18.5	-18.5	0.18 (4)	10.00			
I- H	0 / 539	-18.5	-18.5	0.22 (4)	10.00			
H- G	0 / 0	-18.5	-18.5	0.12 (4)	10.00			

DESIGN CRITERIA

SPECIFIED LOADS:

TOP	CH.	LL	=	21.0	PSF
		DL	=	6.0	PSF
BOT	CH.	LL	=	0.0	PSF
		DL	=	7.4	PSF
TOTAL	LOAD		=	34.4	PSF

SPACING = 24.0 IN. C/C

THIS TRUSS IS DESIGNED FOR RESIDENTIAL OR SMALL BUILDING REQUIREMENTS OF PART 9, NBCC 2015

THIS DESIGN COMPLIES WITH:
- PART 9 OF BCBC 2018 , ABC 2019
- PART 9 OF OBC 2012 (2019 AMENDMENT)
- CSA 086-14
- TPIC 2014

DESIGN ASSUMPTIONS
-OVERHANG NOT TO BE ALTERED OR CUT OFF.

(55 % OF 23.0 P.S.F. G.S.L. PLUS 8.4 P.S.F. RAIN LOAD) EQUALS 21.0 P.S.F. SPECIFIED ROOF LIVE LOAD

ALLOWABLE DEFL.(LL)= L/360 (0.46")
CALCULATED VERT. DEFL.(LL) = L/ 999 (0.01")
ALLOWABLE DEFL.(TL)= L/360 (0.46")
CALCULATED VERT. DEFL.(TL) = L/ 999 (0.04")

CANTILEVER DEFLECTION:
ALLOWABLE DEFL.(LL)= L/120 (0.19")
CALCULATED VERT. DEFL.(LL) = L/ 999 (0.00")
ALLOWABLE DEFL.(TL)= L/120 (0.19")
CALCULATED VERT. DEFL.(TL) = L/ 999 (0.00")

CSI: TC=0.48/1.00 (B-C:1) , BC=0.22/1.00 (H-I:4) , WB=0.26/1.00 (E-I:1) , SSI=0.24/1.00 (E-F:1)

DOL LUMBER=1.00 NAIL=1.00 LS BEND=1.10 COMP=1.10 SHEAR=1.10 TENS= 1.10

COMPANION LIVE LOAD FACTOR = 1.00

TRUSS PLATE MANUFACTURER IS NOT RESPONSIBLE FOR QUALITY CONTROL IN THE TRUSS MANUFACTURING PLANT .

NAIL VALUES

PLATE	GRIP(DRY) (PSI) MAX	MIN	SHEAR (PLI) MAX	MIN	SECTION (PLI) MAX	MIN
MT20	650	371	1747	788	1987	1873

PLATE PLACEMENT TOL. = 0.250 inches

PLATE ROTATION TOL. = 5.0 Deg.

JSI GRIP= 0.78 (H) (INPUT = 0.90)
JSI METAL= 0.20 (H) (INPUT = 1.00)

JOB NAME	TRUSS NAME	QUANTITY	PLY	JOB DESC.	DRWG NO.
336324	H83		1	TRUSS DESC. JT 45147	E21104081

Alpha Roof Truss, Maple

Version 8.420 S Jan 21 2021 MiTek Industries, Inc. Wed Oct 13 14:51:48 2021 Page 1

ID:hd511hZTz_bdeQoS817GKByhVxV-EE58MotDa?WjBtclVCox0AzR50bbX_XM7bQeXkyTp6v

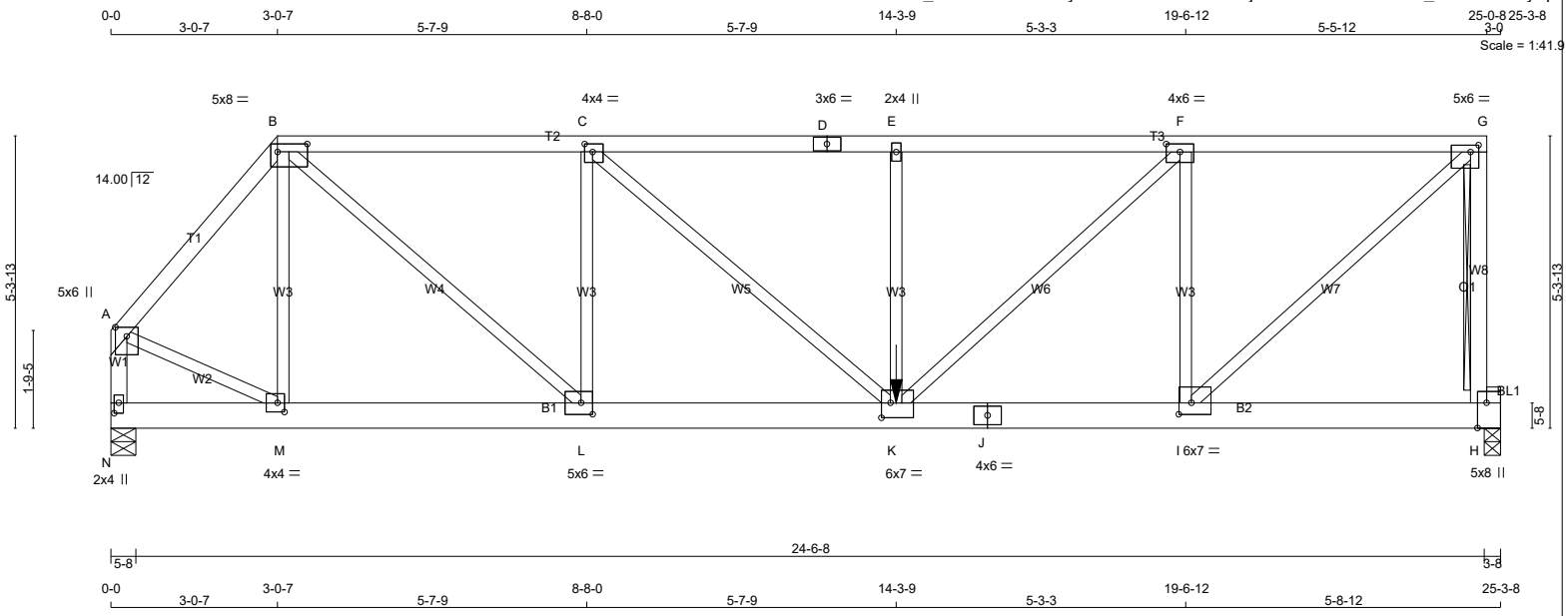

TOTAL WEIGHT = 123 lb

[M]

LUMBER

N. L. G. A. RULES

CHORDS	SIZE		LUMBER	DESCR.
A - B	2x4	DRY	No.2	SPF
B - D	2x4	DRY	1650F 1.5E	SPF
D - G	2x4	DRY	1650F 1.5E	SPF
H - G	2x4	DRY	No.2	SPF
N - A	2x4	DRY	No.2	SPF
N - J	2x6	DRY	No.2	SPF
J - H	2x6	DRY	No.2	SPF
BEARING BLOCKS				
BL1	2x4	DRY	No.2	SPF
ALL WEBS EXCEPT	2x3	DRY	No.2	SPF

DRY: SEASONED LUMBER.

PLATES (table is in inches)

JT	TYPE	PLATES	W	LEN	Y	X
A	TMVW+p	MT20	5.0	6.0	2.00	2.50
B	TTWW-l	MT20	5.0	8.0	1.75	6.50
C	TMWW-t	MT20	4.0	4.0	1.75	1.75
D	TS-t	MT20	3.0	6.0		
E	TMW+w	MT20	2.0	4.0		
F	TMWW-t	MT20	4.0	6.0	1.75	3.00
G	TMVW-t	MT20	5.0	6.0	1.50	1.75
H	BMVK1+t	MT20	5.0	8.0	Edge	2.00
I	BMWW-t	MT20	6.0	7.0	2.50	2.75
J	BS-t	MT20	4.0	6.0		
K	BMWWW-t	MT20	6.0	7.0	3.25	2.00
L	BMWW-t	MT20	5.0	6.0	2.50	2.50
M	BMWW-t	MT20	4.0	4.0	2.00	1.50
N	BMV1+p	MT20	2.0	4.0	2.25	1.00

Edge - INDICATES REFERENCE CORNER OF PLATE TOUCHES EDGE OF CHORD.

LATERAL BRACE(S) SHOWN SHALL BE 2X4 SPF#2

DIMENSIONS, SUPPORTS AND LOADINGS SPECIFIED BY FABRICATOR TO BE VERIFIED BY BUILDING DESIGNER

BEARINGS

JT	FACTORED GROSS REACTION VERT	HORZ	MAXIMUM FACTORED GROSS REACTION DOWN	HORZ	UPLIFT	INPUT BRG IN-SX	REQRD BRG IN-SX
H	2702	0	2702	0	0	3-8	3-8
N	1930	0	1930	0	0	5-8	2-12

UNFACTORED REACTIONS

JT	1ST LCASE COMBINED	MAX./MIN. COMPONENT REACTIONS SNOW	LIVE	PERM.LIVE	WIND	DEAD	SOIL
H	1926	1178 / 0	0 / 0	0 / 0	0 / 0	748 / 0	0 / 0
N	1376	840 / 0	0 / 0	0 / 0	0 / 0	536 / 0	0 / 0

BEARING MATERIAL TO BE SPF NO.2 OR BETTER AT JOINT(S) H, N
BEARING SIZE FACTOR = 1.15 AT JNT(S) H (BASED ON SUPPORT DEPTH = 1-8)

BRACING

TOP CHORD TO BE SHEATHED OR MAX. PURLIN SPACING = 3.21 FT.
MAX. UNBRACED BOTTOM CHORD LENGTH = 6.25 FT OR RIGID CEILING DIRECTLY APPLIED.

ALL PITCH BREAKS AND PERIMETER CORNER JOINTS MUST BE LATERALLY RESTRAINED.

2x3 DRY SPF No.2 T-BRACE AT G-H

FASTEN T AND I-BRACES TO NARROW EDGE OF WEB WITH ONE ROW PER PLY OF 3" COMMON WIRE NAILS @ 6" O.C. WITH 3" MINIMUM END DISTANCE. BRACE MUST COVER 90% OF WEB LENGTH.

END VERTICAL(S) MUST BE SHEATHED OR HAVE BRACES AS INDICATED IN THE MAX. UNBRACED LENGTH COLUMN OF THE TABLE BELOW

LOADING

TOTAL LOAD CASES: (4)

CHORDS

MEMB. FR-TO	MAX. FACTORED FORCE (LBS)	FACTORED VERT. LOAD (PLF) FROM	TO	LC1 CSI (LC)	MAX. UNBRAC LENGTH
A- B	-1740 / 0	-78.0	-78.0	0.19 (1)	4.85
B- C	-2705 / 0	-78.0	-78.0	0.41 (1)	4.33
C- D	-3614 / 0	-78.0	-78.0	0.48 (1)	3.80
D- E	-3614 / 0	-78.0	-78.0	0.48 (1)	3.80
E- F	-3614 / 0	-153.5	-153.5	0.81 (1)	3.21
F- G	-2456 / 0	-153.5	-153.5	0.73 (1)	3.92
H- G	-2620 / 0	0.0	0.0	0.69 (1)	6.92
N- A	-1920 / 0	0.0	0.0	0.22 (1)	6.02
N- M	0 / 0	-18.5	-18.5	0.06 (4)	10.00
M- L	0 / 1118	-18.5	-18.5	0.19 (1)	10.00
L- K	0 / 2706	-18.5	-18.5	0.43 (1)	10.00
K- J	0 / 2456	-36.4	-36.4	0.42 (1)	10.00
J- I	0 / 2456	-36.4	-36.4	0.42 (1)	10.00
I- H	-77 / 0	-36.4	-36.4	0.12 (4)	6.25

WEBS

MEMB. FR-TO	MAX. FACTORED FORCE (LBS)	MAX CSI (LC)
M- B	-369 / 0	0.15 (1)
B- L	0 / 2106	0.52 (1)
L- C	-1267 / 0	0.51 (1)
C- K	0 / 1208	0.30 (1)
K- E	-564 / 0	0.23 (1)
K- F	0 / 1588	0.39 (1)
I- F	-2051 / 0	0.83 (1)
I- G	0 / 3412	0.84 (1)
A- M	0 / 1221	0.30 (1)

FACTORED CONCENTRATED LOADS (LBS)

JT	LOC.	LC1	MAX-	MAX+	FACE	DIR.	TYPE	HEEL	CONN.
K	14-3-9	-1217	-1217	---	FRONT	VERT	TOTAL	---	C1

CONNECTION REQUIREMENTS

1) **C1:** A SUITABLE HANGER/MECHANICAL CONNECTION IS REQUIRED.

DESIGN CRITERIA

*** SPECIAL LOADS ANALYSIS ***
GEOMETRY AND/OR BASIC LOADS CHANGED BY USER.
LOADS WERE DERIVED FROM USER INPUT
NO FURTHER MODIFICATIONS WERE MADE

SPECIFIED LOADS:

TOP	CH.	LL =	21.0	PSF
		DL =	6.0	PSF
BOT	CH.	LL =	0.0	PSF
		DL =	7.4	PSF
TOTAL	LOAD	=	34.4	PSF

SPACING = 24.0 IN. C/C

LOADING IN FLAT SECTION BASED ON A SLOPE OF 2.00/12 MINIMUM

GIRDER TYPE: CPrimeHip
LEFT SETBACK = 3-0-7
RIGHT SETBACK = 0-0
END SETBACK = 5-10-8
END WALL WIDTH = 0-0
CORNER FRAMING TYPE: CONVENTIONAL
END JACK TYPE: CONVENTIONAL
APPLIED TO FRONT SIDE
- ADDT'L LOADS BASED ON 55 % OF GSL.
LOADS APPLIED TO FIRST 10-11-15 OF SPAN MEASURED FROM THE RIGHT.

*** NON STANDARD GIRDER ***
ADDT'L USER-DEFINED LOADS APPLIED TO ALL LOAD CASES.

THIS TRUSS IS DESIGNED FOR RESIDENTIAL OR SMALL BUILDING REQUIREMENTS OF PART 9, NBCC 2015

THIS DESIGN COMPLIES WITH:
- PART 9 OF BCBC 2018 , ABC 2019
- PART 9 OF OBC 2012 (2019 AMENDMENT)
- CSA 086-14
- TPIC 2014

(55 % OF 23.0 P.S.F. G.S.L. PLUS 8.4 P.S.F. RAIN LOAD) EQUALS 21.0 P.S.F. SPECIFIED ROOF LIVE LOAD

ALLOWABLE DEFL.(LL)= L/360 (0.83")
CALCULATED VERT. DEFL.(LL) = L/ 999 (0.12")
ALLOWABLE DEFL.(TL)= L/360 (0.83")
CALCULATED VERT. DEFL.(TL) = L/ 999 (0.24")

CSI: TC=0.81/1.00 (E-F:1) , BC=0.43/1.00 (K-L:1) , WB=0.84/1.00 (G-I:1) , SSI=0.44/1.00 (F-G:1)

DOL LUMBER=1.00 NAIL=1.00 LS BEND=1.00 COMP=1.00 SHEAR=1.00 TENS= 1.00

COMPANION LIVE LOAD FACTOR = 1.00

TRUSS PLATE MANUFACTURER IS NOT RESPONSIBLE FOR QUALITY CONTROL IN THE TRUSS MANUFACTURING PLANT .

NAIL VALUES

PLATE	GRIP(DRY) (PSI) MAX	MIN	SHEAR (PLI) MAX	MIN	SECTION (PLI) MAX	MIN
MT20	650	371	1747	788	1987	1873

CONTINUED ON PAGE 2

JOB NAME	TRUSS NAME	QUANTITY	PLY	JOB DESC.	DRWG NO.
336324	H84		1	TRUSS DESC. JT 45147	E21104082

Alpa Roof Truss, Maple

Version 8.420 S Jan 21 2021 MiTek Industries, Inc. Wed Oct 13 14:51:50 2021 Page 1

ID:hd511hZTz bdeQoS817GKByhVxV-AdDunUvT6cmRQBmqcdqP5b2qmqJp?y9fauvlcdyTp6t

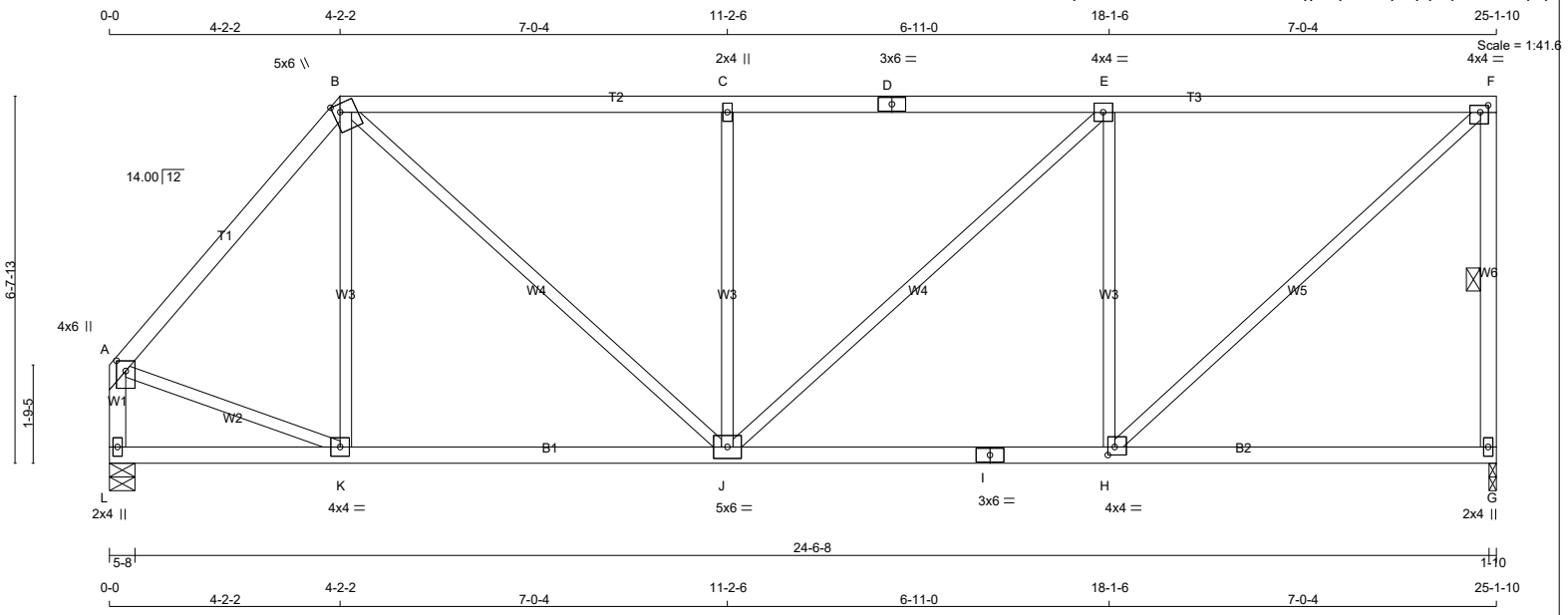

TOTAL WEIGHT = 109 lb [M]

LUMBER

N. L. G. A. RULES

CHORDS	SIZE		LUMBER	DESCR.
A - B	2x4	DRY	No.2	SPF
B - D	2x4	DRY	No.2	SPF
D - F	2x4	DRY	No.2	SPF
G - F	2x4	DRY	No.2	SPF
L - A	2x4	DRY	No.2	SPF
L - I	2x4	DRY	No.2	SPF
I - G	2x4	DRY	No.2	SPF
ALL WEBS EXCEPT	2x3	DRY	No.2	SPF

DRY: SEASONED LUMBER.

PLATES (table is in inches)

JT	TYPE	PLATES	W	LEN	Y	X
A	TMVW+p	MT20	4.0	6.0	2.25	2.00
B	TTWW+m	MT20	5.0	6.0	1.75	1.50
C	TMW+w	MT20	2.0	4.0		
D	TS-t	MT20	3.0	6.0		
E	TMWW-t	MT20	4.0	4.0		
F	TMVW-t	MT20	4.0	4.0	1.50	1.75
G	BMV1+p	MT20	2.0	4.0		
H	BMWW-t	MT20	4.0	4.0	1.75	1.50
I	BS-t	MT20	3.0	6.0		
J	BMWWW-t	MT20	5.0	6.0		
K	BMWW-t	MT20	4.0	4.0		
L	BMV1+p	MT20	2.0	4.0		

LATERAL BRACE(S) SHOWN SHALL BE 2X4 SPF#2

DIMENSIONS, SUPPORTS AND LOADINGS SPECIFIED BY FABRICATOR TO BE VERIFIED BY BUILDING DESIGNER

BEARINGS

JT	FACTORED GROSS REACTION VERT	HORZ	MAXIMUM FACTORED GROSS REACTION DOWN	HORZ	UPLIFT	INPUT BRG IN-SX	REQRD BRG IN-SX
G	1212	0	1212	0	0	1-10	1-8
L	1212	0	1212	0	0	5-8	1-8

UNFACTORED REACTIONS

JT	1ST LCASE COMBINED	MAX./MIN. COMPONENT REACTIONS SNOW	LIVE	PERM.LIVE	WIND	DEAD	SOIL
G	864	528 / 0	0 / 0	0 / 0	0 / 0	337 / 0	0 / 0
L	864	528 / 0	0 / 0	0 / 0	0 / 0	337 / 0	0 / 0

BEARING MATERIAL TO BE SPF NO.2 OR BETTER AT JOINT(S) G, L

BRACING

TOP CHORD TO BE SHEATHED OR MAX. PURLIN SPACING = 4.91 FT.
MAX. UNBRACED BOTTOM CHORD LENGTH = 10.00 FT OR RIGID CEILING DIRECTLY APPLIED.

ALL PITCH BREAKS AND PERIMETER CORNER JOINTS MUST BE LATERALLY RESTRAINED.

1 LATERAL BRACE(S) AT 1/ 2 LENGTH OF F-G.

END VERTICAL(S) MUST BE SHEATHED OR HAVE BRACES AS INDICATED IN THE MAX. UNBRACED LENGTH COLUMN OF THE TABLE BELOW

LOADING

TOTAL LOAD CASES: (4)

CHORDS

MEMB. FR-TO	MAX. FACTORED FORCE (LBS)	FACTORED VERT. LOAD (PLF) FROM	TO	LC1 CSI (LC)	MAX UNBRAC LENGTH
A- B	-1052 / 0	-78.0	-78.0	0.27 (1)	5.80
B- C	-1251 / 0	-78.0	-78.0	0.61 (1)	4.92
C- D	-1252 / 0	-78.0	-78.0	0.61 (1)	4.91
D- E	-1252 / 0	-78.0	-78.0	0.61 (1)	4.91
E- F	-1037 / 0	-78.0	-78.0	0.59 (1)	5.30
G- F	-1160 / 0	0.0	0.0	0.24 (1)	5.91
L- A	-1188 / 0	0.0	0.0	0.13 (1)	7.32
L- K	0 / 0	-18.5	-18.5	0.15 (4)	10.00
K- J	0 / 679	-18.5	-18.5	0.23 (4)	10.00
J- I	0 / 1037	-18.5	-18.5	0.32 (4)	10.00
I- H	0 / 1037	-18.5	-18.5	0.32 (4)	10.00
H- G	0 / 0	-18.5	-18.5	0.22 (4)	10.00

WEBS

MEMB. FR-TO	MAX. FACTORED FORCE (LBS)	MAX CSI (LC)
K- B	-105 / 42	0.08 (1)
B- J	0 / 770	0.17 (1)
J- C	-589 / 0	0.43 (1)
J- E	0 / 291	0.07 (1)
H- E	-794 / 0	0.58 (1)
H- F	0 / 1399	0.31 (1)
A- K	0 / 717	0.16 (1)

DESIGN CRITERIA

SPECIFIED LOADS:

TOP CH.	LL	=	21.0	PSF
	DL	=	6.0	PSF
BOT CH.	LL	=	0.0	PSF
	DL	=	7.4	PSF
TOTAL LOAD		=	34.4	PSF

SPACING = 24.0 IN. C/C

LOADING IN FLAT SECTION BASED ON A SLOPE OF 2.00/12 MINIMUM

THIS TRUSS IS DESIGNED FOR RESIDENTIAL OR SMALL BUILDING REQUIREMENTS OF PART 9, NBCC 2015

THIS DESIGN COMPLIES WITH:
- PART 9 OF BCBC 2018 , ABC 2019
- PART 9 OF OBC 2012 (2019 AMENDMENT)
- CSA 086-14
- TPIC 2014

(55 % OF 23.0 P.S.F. G.S.L. PLUS 8.4 P.S.F. RAIN LOAD) EQUALS 21.0 P.S.F. SPECIFIED ROOF LIVE LOAD

ALLOWABLE DEFL.(LL)= L/360 (0.84")
CALCULATED VERT. DEFL.(LL) = L/ 999 (0.05")
ALLOWABLE DEFL.(TL)= L/360 (0.84")
CALCULATED VERT. DEFL.(TL) = L/ 999 (0.10")

CSI: TC=0.61/1.00 (C-E:1) , BC=0.32/1.00 (H-J:4) , WB=0.58/1.00 (E-H:1) , SSI=0.26/1.00 (E-F:1)

DOL LUMBER=1.00 NAIL=1.00 LS BEND=1.10 COMP=1.10 SHEAR=1.10 TENS= 1.10

COMPANION LIVE LOAD FACTOR = 1.00

TRUSS PLATE MANUFACTURER IS NOT RESPONSIBLE FOR QUALITY CONTROL IN THE TRUSS MANUFACTURING PLANT .

NAIL VALUES

PLATE	GRIP(DRY) (PSI) MAX	MIN	SHEAR (PLI) MAX	MIN	SECTION (PLI) MAX	MIN
MT20	650	371	1747	788	1987	1873

PLATE PLACEMENT TOL. = 0.250 inches

PLATE ROTATION TOL. = 5.0 Deg.

JSI GRIP= 0.90 (F) (INPUT = 0.90)
JSI METAL= 0.39 (A) (INPUT = 1.00)

JOB NAME	TRUSS NAME	QUANTITY	PLY	JOB DESC.	DRWG NO.
336324	H85		1	TRUSS DESC. JT 45147	E21104083

Alpa Roof Truss, Maple

Version 8.420 S Jan 21 2021 MiTek Industries, Inc. Wed Oct 13 14:51:52 2021 Page 1

ID:hd511hZTz bdeQoS817GKByhVxV-7?LfCAwjeD08fUw3k1ttA087Idy7TrOy2COrqWyTp6r

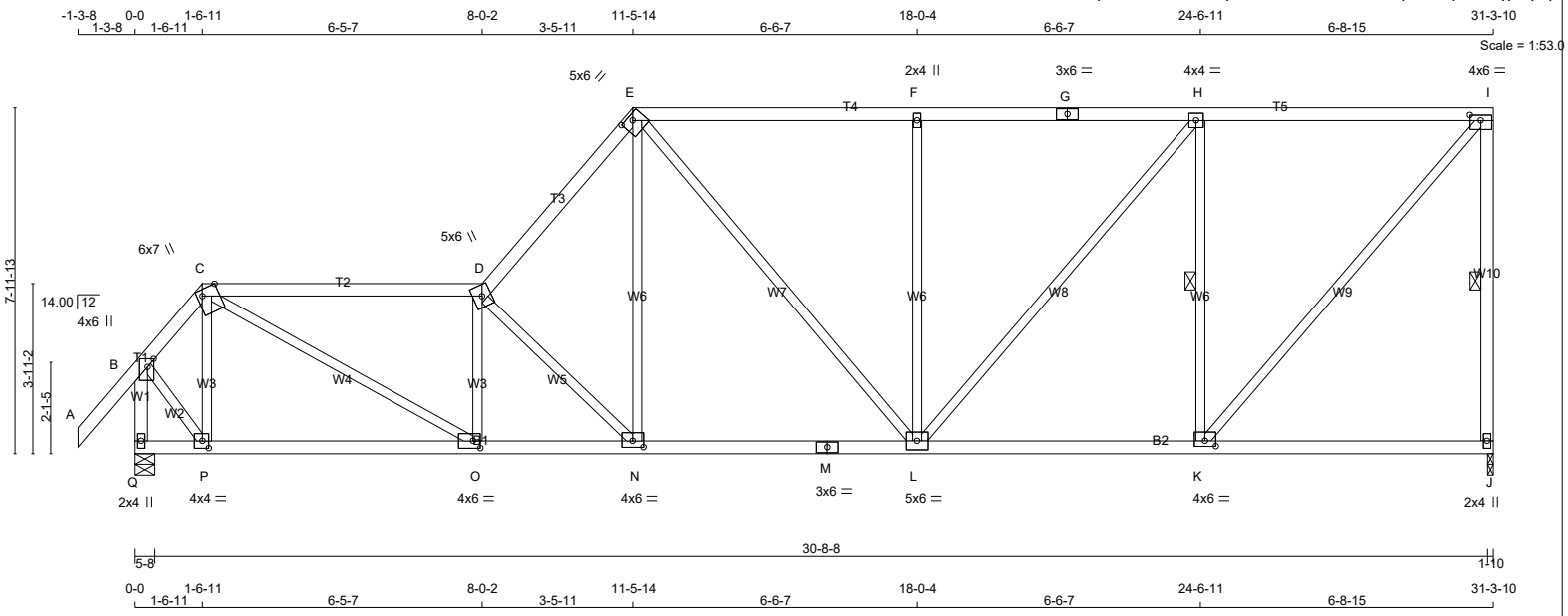

TOTAL WEIGHT = 146 lb

[M]

LUMBER

N. L. G. A. RULES

CHORDS	SIZE		LUMBER	DESCR.
A - C	2x4	DRY	No.2	SPF
C - D	2x4	DRY	No.2	SPF
D - E	2x4	DRY	No.2	SPF
E - G	2x4	DRY	No.2	SPF
G - I	2x4	DRY	No.2	SPF
J - I	2x4	DRY	No.2	SPF
Q - B	2x4	DRY	No.2	SPF
Q - M	2x4	DRY	No.2	SPF
M - J	2x4	DRY	No.2	SPF
ALL WEBS EXCEPT	2x3	DRY	No.2	SPF

DRY: SEASONED LUMBER.

PLATES (table is in inches)

JT	TYPE	PLATES	W	LEN	Y	X
B	TMVW+p	MT20	4.0	6.0	2.25	1.75
C	TTWW+m	MT20	6.0	7.0	Edge	4.50
D	TTWW+m	MT20	5.0	6.0		
E	TTWW-h	MT20	5.0	6.0	1.50	3.00
F	TMW+w	MT20	2.0	4.0		
G	TS-t	MT20	3.0	6.0		
H	TMWW-t	MT20	4.0	4.0		
I	TMVW-t	MT20	4.0	6.0	1.50	3.00
J	BMV1+p	MT20	2.0	4.0		
K	BMWW-t	MT20	4.0	6.0	1.50	3.00
L	BMWWW-t	MT20	5.0	6.0		
M	BS-t	MT20	3.0	6.0		
N	BMWW-t	MT20	4.0	6.0	1.75	3.00
O	BMWW-t	MT20	4.0	6.0	2.00	2.00
P	BMWW-t	MT20	4.0	4.0	2.00	1.75
Q	BMV1+p	MT20	2.0	4.0		

Edge - INDICATES REFERENCE CORNER OF PLATE TOUCHES EDGE OF CHORD.

LATERAL BRACE(S) SHOWN SHALL BE 2X4 SPF#2

DIMENSIONS, SUPPORTS AND LOADINGS SPECIFIED BY FABRICATOR TO BE VERIFIED BY BUILDING DESIGNER

BEARINGS

JT	FACTORED GROSS REACTION VERT	HORZ	MAXIMUM FACTORED GROSS REACTION DOWN	HORZ	UPLIFT	INPUT BRG IN-SX	REQRD BRG IN-SX
J	1507	0	1507	0	0	1-10	1-10
Q	1622	0	1622	0	0	5-8	1-12

UNFACTORED REACTIONS

JT	1ST LCASE COMBINED	MAX./MIN. COMPONENT REACTIONS SNOW	LIVE	PERM.LIVE	WIND	DEAD	SOIL
J	1075	656 / 0	0 / 0	0 / 0	0 / 0	419 / 0	0 / 0
Q	1154	717 / 0	0 / 0	0 / 0	0 / 0	437 / 0	0 / 0

BEARING MATERIAL TO BE SPF NO.2 OR BETTER AT JOINT(S) J, Q

BRACING

TOP CHORD TO BE SHEATHED OR MAX. PURLIN SPACING = 3.50 FT.
MAX. UNBRACED BOTTOM CHORD LENGTH = 10.00 FT OR RIGID CEILING DIRECTLY APPLIED.

ALL PITCH BREAKS AND PERIMETER CORNER JOINTS MUST BE LATERALLY RESTRAINED.

1 LATERAL BRACE(S) AT 1/ 2 LENGTH OF I-J, H-K.

END VERTICAL(S) MUST BE SHEATHED OR HAVE BRACES AS INDICATED IN THE MAX. UNBRACED LENGTH COLUMN OF THE TABLE BELOW

LOADING

TOTAL LOAD CASES: (4)

CHORDS

MEMB. FR-TO	MAX. FACTORED FORCE (LBS)	FACTORED VERT. LOAD LC1 (PLF) FROM	TO	MAX CSI (LC)	MAX. UNBRAC LENGTH
A- B	0 / 42	-78.0	-78.0	0.11 (1)	10.00
B- C	-1036 / 0	-78.0	-78.0	0.12 (1)	6.03
C- D	-2457 / 0	-78.0	-78.0	0.80 (1)	3.50
D- E	-2179 / 0	-78.0	-78.0	0.25 (1)	4.41
E- F	-1545 / 0	-78.0	-78.0	0.55 (1)	4.64
F- G	-1546 / 0	-78.0	-78.0	0.58 (1)	4.58
G- H	-1546 / 0	-78.0	-78.0	0.58 (1)	4.58
H- I	-1091 / 0	-78.0	-78.0	0.54 (1)	5.29
J- I	-1457 / 0	0.0	0.0	0.42 (1)	5.42
Q- B	-1655 / 0	0.0	0.0	0.20 (1)	6.44
Q- P	0 / 0	-18.5	-18.5	0.15 (4)	10.00
P- O	0 / 626	-18.5	-18.5	0.21 (4)	10.00
O- N	0 / 2485	-18.5	-18.5	0.45 (1)	10.00
N- M	0 / 1434	-18.5	-18.5	0.31 (1)	10.00
M- L	0 / 1434	-18.5	-18.5	0.31 (1)	10.00
L- K	0 / 1091	-18.5	-18.5	0.30 (4)	10.00
K- J	0 / 0	-18.5	-18.5	0.20 (4)	10.00

WEBS

MEMB. FR-TO	MAX. FACTORED FORCE (LBS)	MAX CSI (LC)
P- C	-536 / 0	0.13 (1)
C- O	0 / 2104	0.47 (1)
O- D	-970 / 0	0.23 (1)
D- N	-1512 / 0	0.63 (1)
N- E	0 / 1174	0.26 (1)
E- L	0 / 171	0.04 (1)
L- F	-546 / 0	0.66 (1)
L- H	0 / 702	0.16 (1)
K- H	-1107 / 0	0.44 (1)
K- I	0 / 1655	0.37 (1)
B- P	0 / 929	0.21 (1)

DESIGN CRITERIA

SPECIFIED LOADS:

TOP	CH.	LL	=	21.0	PSF
		DL	=	6.0	PSF
BOT	CH.	LL	=	0.0	PSF
		DL	=	7.4	PSF
TOTAL	LOAD		=	34.4	PSF

SPACING = 24.0 IN. C/C

LOADING IN ALL FLAT SECTIONS BASED ON A SLOPE OF 2.00/12 MINIMUM

THIS TRUSS IS DESIGNED FOR RESIDENTIAL OR SMALL BUILDING REQUIREMENTS OF PART 9, NBCC 2015

THIS DESIGN COMPLIES WITH:
- PART 9 OF BCBC 2018 , ABC 2019
- PART 9 OF OBC 2012 (2019 AMENDMENT)
- CSA 086-14
- TPIC 2014

DESIGN ASSUMPTIONS
-OVERHANG NOT TO BE ALTERED OR CUT OFF.

(55 % OF 23.0 P.S.F. G.S.L. PLUS 8.4 P.S.F. RAIN LOAD) EQUALS 21.0 P.S.F. SPECIFIED ROOF LIVE LOAD

ALLOWABLE DEFL.(LL)= L/360 (1.04")
CALCULATED VERT. DEFL.(LL) = L/ 999 (0.12")
ALLOWABLE DEFL.(TL)= L/360 (1.04")
CALCULATED VERT. DEFL.(TL) = L/ 999 (0.25")

CSI: TC=0.80/1.00 (C-D:1) , BC=0.45/1.00 (N-O:1) , WB=0.66/1.00 (F-L:1) , SSI=0.24/1.00 (H-I:1)

DOL LUMBER=1.00 NAIL=1.00 LS BEND=1.10 COMP=1.10 SHEAR=1.10 TENS= 1.10

COMPANION LIVE LOAD FACTOR = 1.00

TRUSS PLATE MANUFACTURER IS NOT RESPONSIBLE FOR QUALITY CONTROL IN THE TRUSS MANUFACTURING PLANT .

NAIL VALUES

PLATE	GRIP(DRY) (PSI) MAX	MIN	SHEAR (PLI) MAX	MIN	SECTION (PLI) MAX	MIN
MT20	650	371	1747	788	1987	1873

PLATE PLACEMENT TOL. = 0.250 inches

PLATE ROTATION TOL. = 5.0 Deg.

JSI GRIP= 0.88 (C) (INPUT = 0.90)
JSI METAL= 0.48 (M) (INPUT = 1.00)

JOB NAME	TRUSS NAME	QUANTITY	PLY	JOB DESC.	DRWG NO.
336324	H86		1	TRUSS DESC. JT 45147	E21104084

Alpa Roof Truss, Maple

Version 8.420 S Jan 21 2021 MiTek Industries, Inc. Wed Oct 13 14:51:53 2021 Page 1

ID:hd511hZTz bdeQoS817GKByhVxV-bCv1PWxLPX8?HeUFHIO6jEqJM1J5CGH5Gs7PDyyTp6q

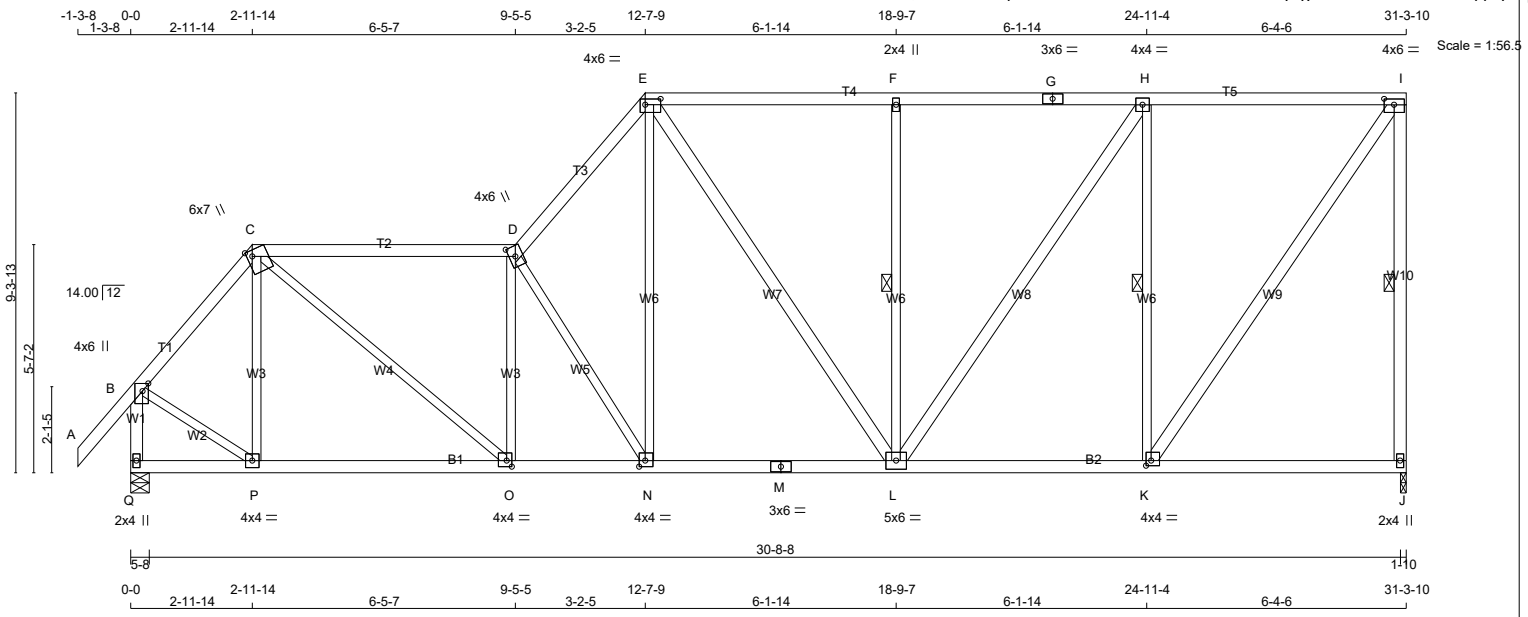

TOTAL WEIGHT = 169 lb

[M]

LUMBER

N. L. G. A. RULES

CHORDS	SIZE		LUMBER	DESCR.
A - C	2x4	DRY	No.2	SPF
C - D	2x4	DRY	No.2	SPF
D - E	2x4	DRY	No.2	SPF
E - G	2x4	DRY	No.2	SPF
G - I	2x4	DRY	No.2	SPF
J - I	2x4	DRY	No.2	SPF
Q - B	2x4	DRY	No.2	SPF
Q - M	2x4	DRY	No.2	SPF
M - J	2x4	DRY	No.2	SPF
ALL WEBS	2x3	DRY	No.2	SPF
EXCEPT				
E - L	2x4	DRY	No.2	SPF
L - H	2x4	DRY	No.2	SPF
K - I	2x4	DRY	No.2	SPF

DRY: SEASONED LUMBER.

PLATES (table is in inches)

JT	TYPE	PLATES	W	LEN	Y	X
B	TMVW+p	MT20	4.0	6.0	2.25	1.75
C	TTWW+m	MT20	6.0	7.0	Edge	1.50
D	TTWW+m	MT20	4.0	6.0	3.00	1.75
E	TTWW-l	MT20	4.0	6.0	1.75	4.50
F	TMW+w	MT20	2.0	4.0		
G	TS-t	MT20	3.0	6.0		
H	TMWW-t	MT20	4.0	4.0		
I	TMVW-t	MT20	4.0	6.0	1.75	3.00
J	BMV1+p	MT20	2.0	4.0		
K	BMWW-t	MT20	4.0	4.0	1.50	1.50
L	BMWWW-t	MT20	5.0	6.0		
M	BS-t	MT20	3.0	6.0		
N	BMWW-t	MT20	4.0	4.0	1.75	1.75
O	BMWW-t	MT20	4.0	4.0	1.75	1.50
P	BMWW-t	MT20	4.0	4.0		
Q	BMV1+p	MT20	2.0	4.0		

Edge - INDICATES REFERENCE CORNER OF PLATE TOUCHES EDGE OF CHORD.

LATERAL BRACE(S) SHOWN SHALL BE 2X4 SPF#2

DIMENSIONS, SUPPORTS AND LOADINGS SPECIFIED BY FABRICATOR TO BE VERIFIED BY BUILDING DESIGNER

BEARINGS

JT	FACTORED GROSS REACTION VERT	HORZ	MAXIMUM FACTORED GROSS REACTION DOWN	HORZ	UPLIFT	INPUT BRG IN-SX	REQRD BRG IN-SX
J	1510	0	1510	0	0	1-10	1-10
Q	1619	0	1619	0	0	5-8	1-12

UNFACTORED REACTIONS

JT	1ST LCASE COMBINED	MAX./MIN. COMPONENT REACTIONS SNOW	LIVE	PERM.LIVE	WIND	DEAD	SOIL
J	1076	657 / 0	0 / 0	0 / 0	0 / 0	419 / 0	0 / 0
Q	1152	716 / 0	0 / 0	0 / 0	0 / 0	436 / 0	0 / 0

BEARING MATERIAL TO BE SPF NO.2 OR BETTER AT JOINT(S) J, Q

BRACING

TOP CHORD TO BE SHEATHED OR MAX. PURLIN SPACING = 4.00 FT.
MAX. UNBRACED BOTTOM CHORD LENGTH = 10.00 FT OR RIGID CEILING DIRECTLY APPLIED.

ALL PITCH BREAKS AND PERIMETER CORNER JOINTS MUST BE LATERALLY RESTRAINED.

1 LATERAL BRACE(S) AT 1/ 2 LENGTH OF I-J, F-L, H-K.

END VERTICAL(S) MUST BE SHEATHED OR HAVE BRACES AS INDICATED IN THE MAX. UNBRACED LENGTH COLUMN OF THE TABLE BELOW

LOADING

TOTAL LOAD CASES: (4)

CHORDS

MEMB. FR-TO	MAX. FACTORED FORCE (LBS)	FACTORED VERT. LOAD (PLF) FROM	TO	LC1 CSI (LC)	MAX UNBRAC LENGTH
A- B	0 / 42	-78.0	-78.0	0.11 (1)	10.00
B- C	-1229 / 0	-78.0	-78.0	0.14 (1)	5.63
C- D	-1878 / 0	-78.0	-78.0	0.71 (1)	4.00
D- E	-1931 / 0	-78.0	-78.0	0.20 (1)	4.68
E- F	-1294 / 0	-78.0	-78.0	0.46 (1)	5.10
F- G	-1294 / 0	-78.0	-78.0	0.49 (1)	5.04
G- H	-1294 / 0	-78.0	-78.0	0.49 (1)	5.04
H- I	-890 / 0	-78.0	-78.0	0.46 (1)	5.83
J- I	-1462 / 0	0.0	0.0	0.60 (1)	5.41
Q- B	-1611 / 0	0.0	0.0	0.19 (1)	6.52
Q- P	0 / 0	-18.5	-18.5	0.13 (4)	10.00
P- O	0 / 788	-18.5	-18.5	0.21 (1)	10.00
O- N	0 / 1894	-18.5	-18.5	0.34 (1)	10.00
N- M	0 / 1270	-18.5	-18.5	0.28 (1)	10.00
M- L	0 / 1270	-18.5	-18.5	0.28 (1)	10.00
L- K	0 / 890	-18.5	-18.5	0.26 (4)	10.00
K- J	0 / 0	-18.5	-18.5	0.18 (4)	10.00

WEBS

MEMB. FR-TO	MAX. FACTORED FORCE (LBS)	MAX CSI (LC)
P- C	-334 / 0	0.16 (1)
C- O	0 / 1416	0.32 (1)
O- D	-823 / 0	0.39 (1)
D- N	-1202 / 0	0.81 (1)
N- E	0 / 1104	0.25 (1)
E- L	0 / 43	0.01 (1)
L- F	-514 / 0	0.29 (1)
L- H	0 / 717	0.12 (1)
K- H	-1132 / 0	0.65 (1)
K- I	0 / 1544	0.25 (1)
B- P	0 / 912	0.21 (1)

DESIGN CRITERIA

SPECIFIED LOADS:

TOP CH.	LL	=	21.0	PSF
	DL	=	6.0	PSF
BOT CH.	LL	=	0.0	PSF
	DL	=	7.4	PSF
TOTAL LOAD		=	34.4	PSF

SPACING = 24.0 IN. C/C

LOADING IN ALL FLAT SECTIONS BASED ON A SLOPE OF 2.00/12 MINIMUM

THIS TRUSS IS DESIGNED FOR RESIDENTIAL OR SMALL BUILDING REQUIREMENTS OF PART 9, NBCC 2015

THIS DESIGN COMPLIES WITH:
- PART 9 OF BCBC 2018 , ABC 2019
- PART 9 OF OBC 2012 (2019 AMENDMENT)
- CSA 086-14
- TPIC 2014

(55 % OF 23.0 P.S.F. G.S.L. PLUS 8.4 P.S.F. RAIN LOAD) EQUALS 21.0 P.S.F. SPECIFIED ROOF LIVE LOAD

ALLOWABLE DEFL.(LL)= L/360 (1.04")
CALCULATED VERT. DEFL.(LL) = L/ 999 (0.09")
ALLOWABLE DEFL.(TL)= L/360 (1.04")
CALCULATED VERT. DEFL.(TL) = L/ 999 (0.19")

CSI: TC=0.71/1.00 (C-D:1) , BC=0.34/1.00 (N-O:1) , WB=0.81/1.00 (D-N:1) , SSI=0.23/1.00 (H-I:1)

DOL LUMBER=1.00 NAIL=1.00 LS BEND=1.10 COMP=1.10 SHEAR=1.10 TENS= 1.10

COMPANION LIVE LOAD FACTOR = 1.00

TRUSS PLATE MANUFACTURER IS NOT RESPONSIBLE FOR QUALITY CONTROL IN THE TRUSS MANUFACTURING PLANT .

NAIL VALUES

PLATE	GRIP(DRY) (PSI) MAX	MIN	SHEAR (PLI) MAX	MIN	SECTION (PLI) MAX	MIN
MT20	650	371	1747	788	1987	1873

PLATE PLACEMENT TOL. = 0.250 inches

PLATE ROTATION TOL. = 5.0 Deg.

JSI GRIP= 0.90 (N) (INPUT = 0.90)
JSI METAL= 0.59 (E) (INPUT = 1.00)

JOB NAME	TRUSS NAME	QUANTITY	PLY	JOB DESC.		DRWG NO.
336324	H87		1	TRUSS DESC.	JT 45147	E21104085

Alpa Roof Truss, Maple

Version 8.420 S Jan 21 2021 MiTek Industries, Inc. Wed Oct 13 14:51:55 2021 Page 1

ID:hd511hZTz_bdeQoS817GKByhVxV-Xa1nqCycx8PjWyeePAQaoflcxr0RgC9OkAcWHqyTp6o

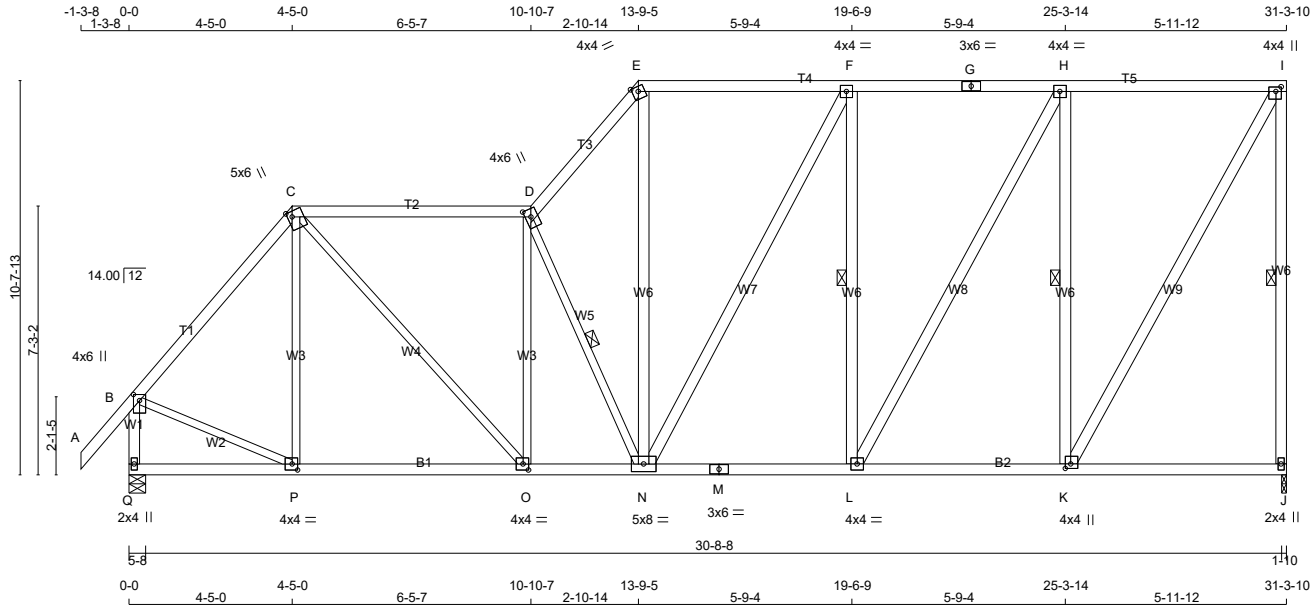

TOTAL WEIGHT = 194 lb

LUMBER

N. L. G. A. RULES

CHORDS	SIZE		LUMBER	DESCR.
A - C	2x4	DRY	No.2	SPF
C - D	2x4	DRY	No.2	SPF
D - E	2x4	DRY	No.2	SPF
E - G	2x4	DRY	No.2	SPF
G - I	2x4	DRY	No.2	SPF
J - I	2x4	DRY	No.2	SPF
Q - B	2x4	DRY	No.2	SPF
Q - M	2x4	DRY	No.2	SPF
M - J	2x4	DRY	No.2	SPF
ALL WEBS	2x4	DRY	No.2	SPF
EXCEPT				
P - C	2x3	DRY	No.2	SPF
C - O	2x3	DRY	No.2	SPF
O - D	2x3	DRY	No.2	SPF
D - N	2x3	DRY	No.2	SPF
B - P	2x3	DRY	No.2	SPF

DRY: SEASONED LUMBER.

PLATES (table is in inches)

JT	TYPE	PLATES	W	LEN	Y	X
B	TMVW+p	MT20	4.0	6.0	2.00	2.00
C	TTWW+m	MT20	5.0	6.0	1.75	1.50
D	TTWW+m	MT20	4.0	6.0	2.50	1.75
E	TTW-m	MT20	4.0	4.0	Edge	
F	TMWW-t	MT20	4.0	4.0		
G	TS-t	MT20	3.0	6.0		
H	TMWW-t	MT20	4.0	4.0		
I	TMVW+p	MT20	4.0	4.0	1.50	1.75
J	BMV1+p	MT20	2.0	4.0		
K	BMWW+t	MT20	4.0	4.0	1.50	1.75
L	BMWW-t	MT20	4.0	4.0		
M	BS-t	MT20	3.0	6.0		
N	BMWWW-t	MT20	5.0	8.0		
O	BMWW-t	MT20	4.0	4.0	2.00	1.75
P	BMWW-t	MT20	4.0	4.0	2.00	1.75
Q	BMV1+p	MT20	2.0	4.0		

Edge - INDICATES REFERENCE CORNER OF PLATE TOUCHES EDGE OF CHORD.

LATERAL BRACE(S) SHOWN SHALL BE 2X4 SPF#2

DIMENSIONS, SUPPORTS AND LOADINGS SPECIFIED BY FABRICATOR TO BE VERIFIED BY BUILDING DESIGNER

BEARINGS

JT	FACTORED GROSS REACTION VERT	HORZ	MAXIMUM FACTORED GROSS REACTION DOWN	HORZ	UPLIFT	INPUT BRG IN-SX	REQRD BRG IN-SX
J	1510	0	1510	0	0	1-10	1-10
Q	1619	0	1619	0	0	5-8	1-12

UNFACTORED REACTIONS

JT	1ST LCASE COMBINED	MAX./MIN. COMPONENT REACTIONS SNOW	LIVE	PERM.LIVE	WIND	DEAD	SOIL
J	1076	657 / 0	0 / 0	0 / 0	0 / 0	419 / 0	0 / 0
Q	1152	716 / 0	0 / 0	0 / 0	0 / 0	436 / 0	0 / 0

BEARING MATERIAL TO BE SPF NO.2 OR BETTER AT JOINT(S) J, Q

BRACING

TOP CHORD TO BE SHEATHED OR MAX. PURLIN SPACING = 4.39 FT.
MAX. UNBRACED BOTTOM CHORD LENGTH = 10.00 FT OR RIGID CEILING DIRECTLY APPLIED.

ALL PITCH BREAKS AND PERIMETER CORNER JOINTS MUST BE LATERALLY RESTRAINED.

1 LATERAL BRACE(S) AT 1/ 2 LENGTH OF I-J, D-N, F-L, H-K.

END VERTICAL(S) MUST BE SHEATHED OR HAVE BRACES AS INDICATED IN THE MAX. UNBRACED LENGTH COLUMN OF THE TABLE BELOW

LOADING

TOTAL LOAD CASES: (4)

CHORDS

MEMB. FR-TO	MAX. FACTORED FORCE (LBS)	FACTORED VERT. LOAD (PLF) FROM	TO	LC1 CSI (LC)	MAX UNBRAC LENGTH
A- B	0 / 42	-78.0	-78.0	0.11 (1)	10.00
B- C	-1296 / 0	-78.0	-78.0	0.33 (1)	5.31
C- D	-1538 / 0	-78.0	-78.0	0.67 (1)	4.39
D- E	-1716 / 0	-78.0	-78.0	0.16 (1)	4.94
E- F	-1131 / 0	-78.0	-78.0	0.38 (1)	5.47
F- G	-1098 / 0	-78.0	-78.0	0.41 (1)	5.47
G- H	-1098 / 0	-78.0	-78.0	0.41 (1)	5.47
H- I	-737 / 0	-78.0	-78.0	0.40 (1)	6.25
J- I	-1465 / 0	0.0	0.0	0.84 (1)	5.41
Q- B	-1591 / 0	0.0	0.0	0.19 (1)	6.55
Q- P	0 / 0	-18.5	-18.5	0.14 (4)	10.00
P- O	0 / 836	-18.5	-18.5	0.22 (4)	10.00
O- N	0 / 1549	-18.5	-18.5	0.29 (1)	10.00
N- M	0 / 1098	-18.5	-18.5	0.24 (1)	10.00
M- L	0 / 1098	-18.5	-18.5	0.24 (1)	10.00
L- K	0 / 737	-18.5	-18.5	0.23 (4)	10.00
K- J	0 / 0	-18.5	-18.5	0.15 (4)	10.00

WEBS

MEMB. FR-TO	MAX. FACTORED FORCE (LBS)	MAX CSI (LC)
P- C	-203 / 3	0.19 (1)
C- O	0 / 1039	0.23 (1)
O- D	-686 / 0	0.64 (1)
D- N	-1072 / 0	0.41 (1)
N- E	0 / 1000	0.16 (1)
N- F	0 / 69	0.01 (1)
L- F	-542 / 0	0.31 (1)
L- H	0 / 741	0.12 (1)
K- H	-1155 / 0	0.66 (1)
K- I	0 / 1475	0.24 (1)
B- P	0 / 900	0.20 (1)

[M]

DESIGN CRITERIA

SPECIFIED LOADS:

TOP CH.	LL	=	21.0	PSF
	DL	=	6.0	PSF
BOT CH.	LL	=	0.0	PSF
	DL	=	7.4	PSF
TOTAL LOAD		=	34.4	PSF

SPACING = 24.0 IN. C/C

LOADING IN ALL FLAT SECTIONS BASED ON A SLOPE OF 2.00/12 MINIMUM

THIS TRUSS IS DESIGNED FOR RESIDENTIAL OR SMALL BUILDING REQUIREMENTS OF PART 9, NBCC 2015

THIS DESIGN COMPLIES WITH:
- PART 9 OF BCBC 2018 , ABC 2019
- PART 9 OF OBC 2012 (2019 AMENDMENT)
- CSA 086-14
- TPIC 2014

(55 % OF 23.0 P.S.F. G.S.L. PLUS 8.4 P.S.F. RAIN LOAD) EQUALS 21.0 P.S.F. SPECIFIED ROOF LIVE LOAD

ALLOWABLE DEFL.(LL)= L/360 (1.04")
CALCULATED VERT. DEFL.(LL) = L/ 999 (0.07")
ALLOWABLE DEFL.(TL)= L/360 (1.04")
CALCULATED VERT. DEFL.(TL) = L/ 999 (0.15")

CSI: TC=0.84/1.00 (I-J:1) , BC=0.29/1.00 (N-O:1) , WB=0.66/1.00 (H-K:1) , SSI=0.22/1.00 (H-I:1)

DOL LUMBER=1.00 NAIL=1.00 LS BEND=1.10 COMP=1.10 SHEAR=1.10 TENS= 1.10

COMPANION LIVE LOAD FACTOR = 1.00

TRUSS PLATE MANUFACTURER IS NOT RESPONSIBLE FOR QUALITY CONTROL IN THE TRUSS MANUFACTURING PLANT .

NAIL VALUES

PLATE	GRIP(DRY) (PSI) MAX	MIN	SHEAR (PLI) MAX	MIN	SECTION (PLI) MAX	MIN
MT20	650	371	1747	788	1987	1873

PLATE PLACEMENT TOL. = 0.250 inches

PLATE ROTATION TOL. = 5.0 Deg.

JSI GRIP= 0.89 (O) (INPUT = 0.90)
JSI METAL= 0.52 (D) (INPUT = 1.00)

JOB NAME	TRUSS NAME	QUANTITY	PLY	JOB DESC.		DRWG NO.
336324	H88		1	TRUSS DESC.	JT 45147	E21104086

Alpa Roof Truss, Maple

Version 8.420 S Jan 21 2021 MiTek Industries, Inc. Wed Oct 13 14:51:57 2021 Page 1

ID:hd511hZTz bdeQoS817GKByhVxV-Tz8YFt sTmfRmGo0WbS2t4r?OeiJ81XhBU5cMjyTp6m

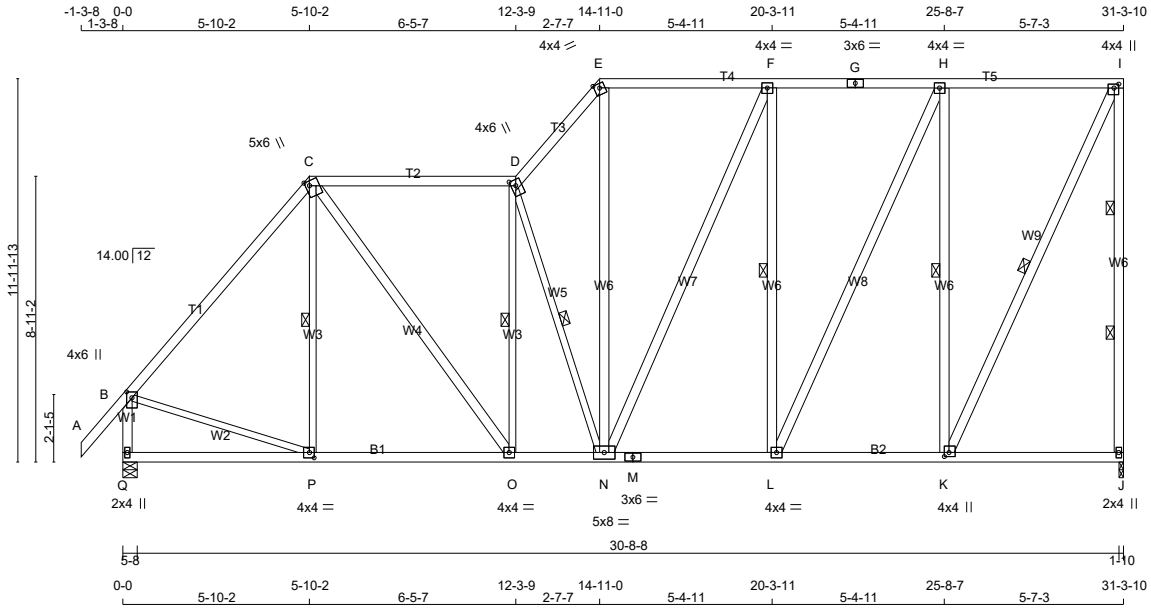

TOTAL WEIGHT = 213 lb

LUMBER

N. L. G. A. RULES

CHORDS	SIZE		LUMBER	DESCR.
A - C	2x4	DRY	No.2	SPF
C - D	2x4	DRY	No.2	SPF
D - E	2x4	DRY	No.2	SPF
E - G	2x4	DRY	No.2	SPF
G - I	2x4	DRY	No.2	SPF
J - I	2x4	DRY	No.2	SPF
Q - B	2x4	DRY	No.2	SPF
Q - M	2x4	DRY	No.2	SPF
M - J	2x4	DRY	No.2	SPF
ALL WEBS	2x4	DRY	No.2	SPF
EXCEPT				
P - C	2x3	DRY	No.2	SPF
O - D	2x3	DRY	No.2	SPF
D - N	2x3	DRY	No.2	SPF
B - P	2x3	DRY	No.2	SPF

DRY: SEASONED LUMBER.

PLATES (table is in inches)

JT	TYPE	PLATES	W	LEN	Y	X
B	TMVW+p	MT20	4.0	6.0	2.25	2.00
C	TTWW+m	MT20	5.0	6.0	1.75	1.50
D	TTWW+m	MT20	4.0	6.0	2.25	1.75
E	TTW-m	MT20	4.0	4.0	Edge	
F	TMWW-t	MT20	4.0	4.0		
G	TS-t	MT20	3.0	6.0		
H	TMWW-t	MT20	4.0	4.0		
I	TMVW+p	MT20	4.0	4.0	1.50	1.75
J	BMV1+p	MT20	2.0	4.0		
K	BMWW+t	MT20	4.0	4.0	1.50	1.75
L	BMWW-t	MT20	4.0	4.0		
M	BS-t	MT20	3.0	6.0		
N	BMWWW-t	MT20	5.0	8.0		
O	BMWW-t	MT20	4.0	4.0		
P	BMWW-t	MT20	4.0	4.0	2.00	1.75
Q	BMV1+p	MT20	2.0	4.0		

Edge - INDICATES REFERENCE CORNER OF PLATE TOUCHES EDGE OF CHORD.

LATERAL BRACE(S) SHOWN SHALL BE 2X4 SPF#2

DIMENSIONS, SUPPORTS AND LOADINGS SPECIFIED BY FABRICATOR TO BE VERIFIED BY BUILDING DESIGNER

BEARINGS

JT	FACTORED GROSS REACTION VERT	HORZ	MAXIMUM FACTORED GROSS REACTION DOWN	HORZ	UPLIFT	INPUT BRG IN-SX	REQRD BRG IN-SX
J	1510	0	1510	0	0	1-10	1-10
Q	1619	0	1619	0	0	5-8	1-12

UNFACTORED REACTIONS

JT	1ST LCASE COMBINED	MAX./MIN. COMPONENT REACTIONS SNOW	LIVE	PERM.LIVE	WIND	DEAD	SOIL
J	1076	657 / 0	0 / 0	0 / 0	0 / 0	419 / 0	0 / 0
Q	1152	716 / 0	0 / 0	0 / 0	0 / 0	436 / 0	0 / 0

BEARING MATERIAL TO BE SPF NO.2 OR BETTER AT JOINT(S) J, Q

BRACING

TOP CHORD TO BE SHEATHED OR MAX. PURLIN SPACING = 4.71 FT.
MAX. UNBRACED BOTTOM CHORD LENGTH = 10.00 FT OR RIGID CEILING DIRECTLY APPLIED.

ALL PITCH BREAKS AND PERIMETER CORNER JOINTS MUST BE LATERALLY RESTRAINED.

2 LATERAL BRACE(S) AT 1/ 3 LENGTH OF I-J.
1 LATERAL BRACE(S) AT 1/ 2 LENGTH OF C-P, D-O, D-N, F-L, H-K, I-K.

END VERTICAL(S) MUST BE SHEATHED OR HAVE BRACES AS INDICATED IN THE MAX. UNBRACED LENGTH COLUMN OF THE TABLE BELOW

LOADING

TOTAL LOAD CASES: (4)

CHORDS

MEMB. FR-TO	MAX. FACTORED FORCE (LBS)	FACTORED VERT. LOAD (PLF) FROM	TO	LC1	MAX CSI (LC)	MAX. UNBRAC LENGTH
A- B	0 / 42	-78.0	-78.0	0.11 (1)	10.00	
B- C	-1304 / 0	-78.0	-78.0	0.64 (1)	4.94	
C- D	-1307 / 0	-78.0	-78.0	0.65 (1)	4.71	
D- E	-1538 / 0	-78.0	-78.0	0.12 (1)	5.19	
E- F	-1012 / 0	-78.0	-78.0	0.32 (1)	5.79	
F- G	-943 / 0	-78.0	-78.0	0.35 (1)	5.90	
G- H	-943 / 0	-78.0	-78.0	0.35 (1)	5.90	
H- I	-619 / 0	-78.0	-78.0	0.34 (1)	6.25	
J- I	-1468 / 0	0.0	0.0	0.48 (1)	5.41	
Q- B	-1577 / 0	0.0	0.0	0.19 (1)	6.57	
Q- P	0 / 0	-18.5	-18.5	0.18 (4)	10.00	
P- O	0 / 844	-18.5	-18.5	0.26 (4)	10.00	
O- N	0 / 1314	-18.5	-18.5	0.24 (1)	10.00	
N- M	0 / 943	-18.5	-18.5	0.20 (1)	10.00	
M- L	0 / 943	-18.5	-18.5	0.20 (1)	10.00	
L- K	0 / 619	-18.5	-18.5	0.19 (4)	10.00	
K- J	0 / 0	-18.5	-18.5	0.14 (4)	10.00	

WEBS

MEMB. FR-TO	MAX. FACTORED FORCE (LBS)	MAX CSI (LC)
P- C	-113 / 50	0.06 (1)
C- O	0 / 779	0.13 (1)
O- D	-550 / 0	0.28 (1)
D- N	-1021 / 0	0.57 (1)
N- E	0 / 888	0.14 (1)
N- F	0 / 170	0.03 (1)
L- F	-604 / 0	0.47 (1)
L- H	0 / 773	0.12 (1)
K- H	-1177 / 0	0.92 (1)
K- I	0 / 1432	0.23 (1)
B- P	0 / 881	0.20 (1)

[M]

DESIGN CRITERIA

SPECIFIED LOADS:

TOP CH.	LL	=	21.0	PSF
	DL	=	6.0	PSF
BOT CH.	LL	=	0.0	PSF
	DL	=	7.4	PSF
TOTAL LOAD		=	34.4	PSF

SPACING = 24.0 IN. C/C

LOADING IN ALL FLAT SECTIONS BASED ON A SLOPE OF 2.00/12 MINIMUM

THIS TRUSS IS DESIGNED FOR RESIDENTIAL OR SMALL BUILDING REQUIREMENTS OF PART 9, NBCC 2015

THIS DESIGN COMPLIES WITH:
- PART 9 OF BCBC 2018 , ABC 2019
- PART 9 OF OBC 2012 (2019 AMENDMENT)
- CSA 086-14
- TPIC 2014

(55 % OF 23.0 P.S.F. G.S.L. PLUS 8.4 P.S.F. RAIN LOAD) EQUALS 21.0 P.S.F. SPECIFIED ROOF LIVE LOAD

ALLOWABLE DEFL.(LL)= L/360 (1.04")
CALCULATED VERT. DEFL.(LL) = L/ 999 (0.07")
ALLOWABLE DEFL.(TL)= L/360 (1.04")
CALCULATED VERT. DEFL.(TL) = L/ 999 (0.14")

CSI: TC=0.65/1.00 (C-D:1) , BC=0.26/1.00 (O-P:4) , WB=0.92/1.00 (H-K:1) , SSI=0.20/1.00 (H-I:1)

DOL LUMBER=1.00 NAIL=1.00 LS BEND=1.10 COMP=1.10 SHEAR=1.10 TENS= 1.10

COMPANION LIVE LOAD FACTOR = 1.00

TRUSS PLATE MANUFACTURER IS NOT RESPONSIBLE FOR QUALITY CONTROL IN THE TRUSS MANUFACTURING PLANT .

NAIL VALUES

PLATE	GRIP(DRY) (PSI) MAX	MIN	SHEAR (PLI) MAX	MIN	SECTION (PLI) MAX	MIN
MT20	650	371	1747	788	1987	1873

PLATE PLACEMENT TOL. = 0.250 inches

PLATE ROTATION TOL. = 5.0 Deg.

JSI GRIP= 0.89 (B) (INPUT = 0.90)
JSI METAL= 0.52 (B) (INPUT = 1.00)

JOB NAME	TRUSS NAME	QUANTITY	PLY	JOB DESC.		DRWG NO.
336324	H89		1	TRUSS DESC.	JT 45147	E21104087

Alpa Roof Truss, Maple

Version 8.420 S Jan 21 2021 MiTek Industries, Inc. Wed Oct 13 14:51:59 2021 Page 1

ID:hd511hZTz bdeQoS817GKByhVxV-PLGIqZ06?Nv9?ZyPe0VWyVwJ0SMtc0O foajQcyTp6k

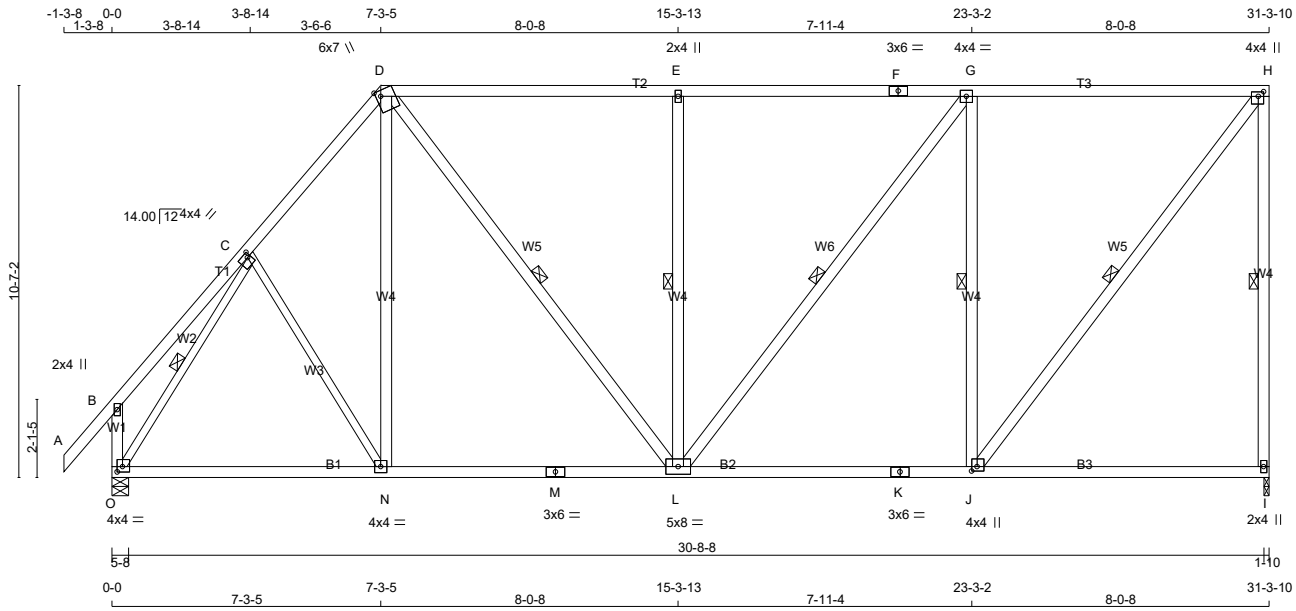

TOTAL WEIGHT = 2 X 180 = 360 lb

[M]

LUMBER

N. L. G. A. RULES

CHORDS	SIZE		LUMBER	DESCR.
A - D	2x4	DRY	No.2	SPF
D - F	2x4	DRY	No.2	SPF
F - H	2x4	DRY	No.2	SPF
I - H	2x4	DRY	No.2	SPF
O - B	2x4	DRY	No.2	SPF
O - M	2x4	DRY	No.2	SPF
M - K	2x4	DRY	No.2	SPF
K - I	2x4	DRY	No.2	SPF
ALL WEBS	2x4	DRY	No.2	SPF
EXCEPT				
C - N	2x3	DRY	No.2	SPF
O - C	2x3	DRY	No.2	SPF

DRY: SEASONED LUMBER.

PLATES (table is in inches)

JT	TYPE	PLATES	W	LEN	Y	X
B	TMV+p	MT20	2.0	4.0		
C	TMWW-t	MT20	4.0	4.0	1.50	1.00
D	TTWW+m	MT20	6.0	7.0	Edge	1.50
E	TMW+w	MT20	2.0	4.0		
F	TS-t	MT20	3.0	6.0		
G	TMWW-t	MT20	4.0	4.0		
H	TMVW+p	MT20	4.0	4.0	1.50	1.75
I	BMV1+p	MT20	2.0	4.0		
J	BMWW+t	MT20	4.0	4.0	1.50	1.75
K	BS-t	MT20	3.0	6.0		
L	BMWWW-t	MT20	5.0	8.0		
M	BS-t	MT20	3.0	6.0		
N	BMWW-t	MT20	4.0	4.0		
O	BMVW1-t	MT20	4.0	4.0	1.75	1.75

Edge - INDICATES REFERENCE CORNER OF PLATE TOUCHES EDGE OF CHORD.

LATERAL BRACE(S) SHOWN SHALL BE 2X4 SPF#2

DIMENSIONS, SUPPORTS AND LOADINGS SPECIFIED BY FABRICATOR TO BE VERIFIED BY BUILDING DESIGNER

BEARINGS

JT	FACTORED GROSS REACTION VERT	HORZ	MAXIMUM FACTORED GROSS REACTION DOWN	HORZ	UPLIFT	INPUT BRG IN-SX	REQRD BRG IN-SX
I	1510	0	1510	0	0	1-10	1-10
O	1619	0	1619	0	0	5-8	1-12

UNFACTORED REACTIONS

JT	1ST LCASE COMBINED	MAX./MIN. COMPONENT REACTIONS SNOW	LIVE	PERM.LIVE	WIND	DEAD	SOIL
I	1076	657 / 0	0 / 0	0 / 0	0 / 0	419 / 0	0 / 0
O	1152	716 / 0	0 / 0	0 / 0	0 / 0	436 / 0	0 / 0

BEARING MATERIAL TO BE SPF NO.2 OR BETTER AT JOINT(S) I, O

BRACING

TOP CHORD TO BE SHEATHED OR MAX. PURLIN SPACING = 4.53 FT.
MAX. UNBRACED BOTTOM CHORD LENGTH = 10.00 FT OR RIGID CEILING DIRECTLY APPLIED.

ALL PITCH BREAKS AND PERIMETER CORNER JOINTS MUST BE LATERALLY RESTRAINED.

1 LATERAL BRACE(S) AT 1/ 2 LENGTH OF H-I, D-L, E-L, G-L, G-J, H-J, C-O.

END VERTICAL(S) MUST BE SHEATHED OR HAVE BRACES AS INDICATED IN THE MAX. UNBRACED LENGTH COLUMN OF THE TABLE BELOW

LOADING

TOTAL LOAD CASES: (4)

CHORDS

MEMB. FR-TO	MAX. FACTORED FORCE (LBS)	FACTORED VERT. LOAD (PLF) FROM	TO	LC1 CSI (LC)	MAX UNBRAC LENGTH
A- B	0 / 42	-78.0	-78.0	0.11 (1)	10.00
B- C	0 / 24	-78.0	-78.0	0.16 (1)	10.00
C- D	-1308 / 0	-78.0	-78.0	0.20 (1)	5.45
D- E	-1201 / 0	-78.0	-78.0	0.83 (1)	4.54
E- F	-1202 / 0	-78.0	-78.0	0.83 (1)	4.53
F- G	-1202 / 0	-78.0	-78.0	0.83 (1)	4.53
G- H	-936 / 0	-78.0	-78.0	0.79 (1)	5.03
I- H	-1451 / 0	0.0	0.0	0.82 (1)	5.43
O- B	-217 / 0	0.0	0.0	0.03 (1)	7.81
O- N	0 / 816	-18.5	-18.5	0.34 (4)	10.00
N- M	0 / 833	-18.5	-18.5	0.35 (4)	10.00
M- L	0 / 833	-18.5	-18.5	0.35 (4)	10.00
L- K	0 / 936	-18.5	-18.5	0.38 (4)	10.00
K- J	0 / 936	-18.5	-18.5	0.38 (4)	10.00
J- I	0 / 0	-18.5	-18.5	0.29 (4)	10.00

WEBS

MEMB. FR-TO	MAX. FACTORED FORCE (LBS)	MAX CSI (LC)
C- N	0 / 48	0.02 (4)
N- D	0 / 139	0.03 (4)
D- L	0 / 597	0.10 (1)
L- E	-678 / 0	0.38 (1)
L- G	0 / 436	0.07 (1)
J- G	-1030 / 0	0.58 (1)
J- H	0 / 1521	0.24 (1)
O- C	-1576 / 0	0.51 (1)

DESIGN CRITERIA

SPECIFIED LOADS:

TOP CH.	LL	=	21.0	PSF
	DL	=	6.0	PSF
BOT CH.	LL	=	0.0	PSF
	DL	=	7.4	PSF
TOTAL LOAD		=	34.4	PSF

SPACING = 24.0 IN. C/C

LOADING IN FLAT SECTION BASED ON A SLOPE OF 2.00/12 MINIMUM

THIS TRUSS IS DESIGNED FOR RESIDENTIAL OR SMALL BUILDING REQUIREMENTS OF PART 9, NBCC 2015

THIS DESIGN COMPLIES WITH:
- PART 9 OF BCBC 2018 , ABC 2019
- PART 9 OF OBC 2012 (2019 AMENDMENT)
- CSA 086-14
- TPIC 2014

(55 % OF 23.0 P.S.F. G.S.L. PLUS 8.4 P.S.F. RAIN LOAD) EQUALS 21.0 P.S.F. SPECIFIED ROOF LIVE LOAD

ALLOWABLE DEFL.(LL)= L/360 (1.04")
CALCULATED VERT. DEFL.(LL) = L/ 999 (0.05")
ALLOWABLE DEFL.(TL)= L/360 (1.04")
CALCULATED VERT. DEFL.(TL) = L/ 999 (0.13")

CSI: TC=0.83/1.00 (D-E:1) , BC=0.38/1.00 (J-L:4) , WB=0.58/1.00 (G-J:1) , SSI=0.29/1.00 (G-H:1)

DOL LUMBER=1.00 NAIL=1.00 LS BEND=1.10 COMP=1.10 SHEAR=1.10 TENS= 1.10

COMPANION LIVE LOAD FACTOR = 1.00

TRUSS PLATE MANUFACTURER IS NOT RESPONSIBLE FOR QUALITY CONTROL IN THE TRUSS MANUFACTURING PLANT .

NAIL VALUES

PLATE	GRIP(DRY) (PSI) MAX	MIN	SHEAR (PLI) MAX	MIN	SECTION (PLI) MAX	MIN
MT20	650	371	1747	788	1987	1873

PLATE PLACEMENT TOL. = 0.250 inches

PLATE ROTATION TOL. = 5.0 Deg.

JSI GRIP= 0.90 (H) (INPUT = 0.90)
JSI METAL= 0.53 (C) (INPUT = 1.00)

JOB NAME	TRUSS NAME	QUANTITY	PLY	JOB DESC.		DRWG NO.
336324	H90		1	TRUSS DESC.	JT 45147	E21104088

Alpa Roof Truss, Maple

Version 8.420 S Jan 21 2021 MiTek Industries, Inc. Wed Oct 13 14:52:01 2021 Page 1

ID:hd511hZTz_bdeQoS817GKByhVxV-MkO35F1NX_9tEt6nlQX_2w?hwFxP4qJH663qVUyTp6i

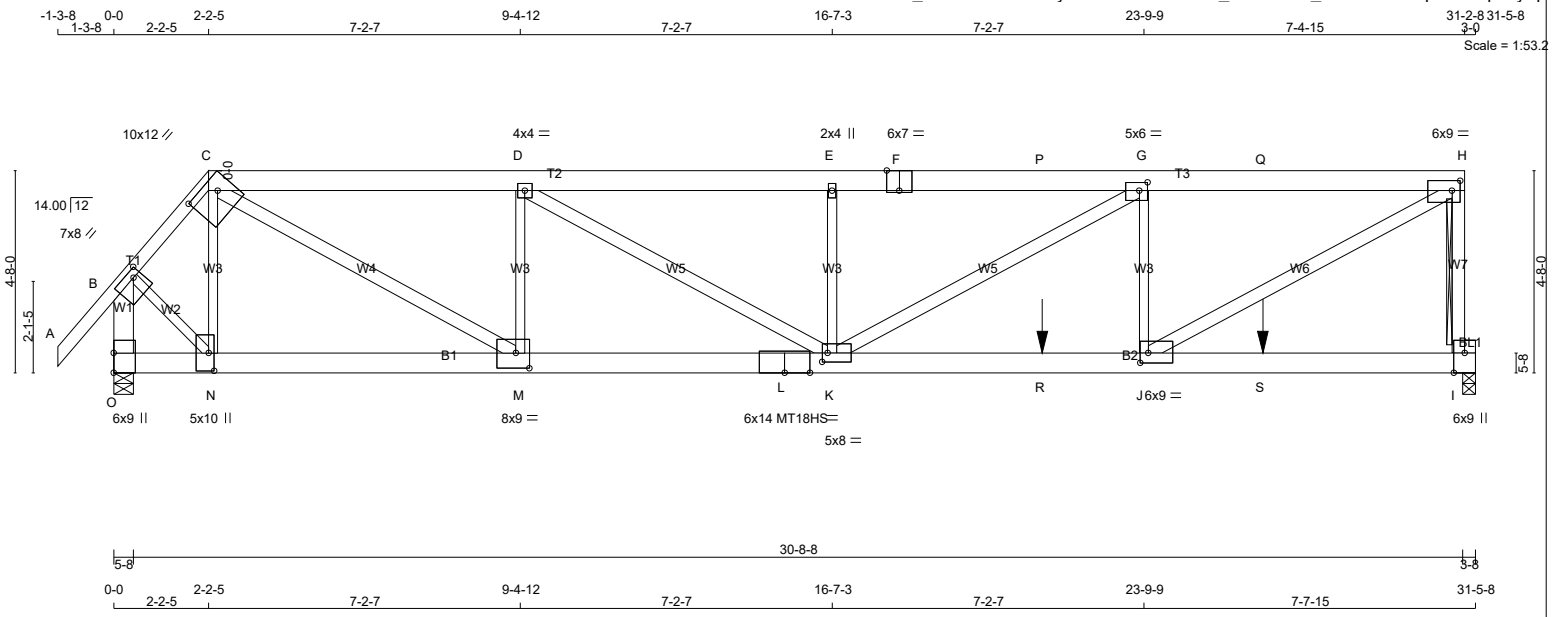

TOTAL WEIGHT = 173 lb

[M]

LUMBER

N. L. G. A. RULES

CHORDS	SIZE		LUMBER	DESCR.
A - C	2x4	DRY	No.2	SPF
C - F	2x6	DRY	1650F 1.5E	SPF
F - H	2x6	DRY	1650F 1.5E	SPF
I - H	2x4	DRY	No.2	SPF
O - B	2x6	DRY	No.2	SPF
O - L	2x6	DRY	2100F 1.8E	SPF
L - I	2x6	DRY	2100F 1.8E	SPF
BEARING BLOCKS				
BL1	2x4	DRY	No.2	SPF
ALL WEBS EXCEPT	2x3	DRY	No.2	SPF
C - M	2x4	DRY	No.2	SPF
D - K	2x4	DRY	1650F 1.5E	SPF
K - G	2x4	DRY	1650F 1.5E	SPF
J - H	2x4	DRY	1650F 1.5E	SPF

DRY: SEASONED LUMBER.

PLATES (table is in inches)

JT	TYPE	PLATES	W	LEN	Y	X
B	TMVW-t	MT20	7.0	8.0	2.00	2.25
C	TTWW-h	MT20	10.0	12.0	3.75	8.00
D	TMWW-t	MT20	4.0	4.0		
E	TMW+w	MT20	2.0	4.0		
F	TS-t	MT20	6.0	7.0	Edge	3.50
G	TMWW-t	MT20	5.0	6.0	2.25	2.25
H	TMVW-t	MT20	6.0	9.0	2.75	2.25
I	BMVK1+t	MT20	6.0	9.0	Edge	3.00
J	BMWW-t	MT20	6.0	9.0	2.75	2.25
K	BMWWW-t	MT20	5.0	8.0	2.50	1.50
L	BS-t	MT18HS	6.0	14.0		
M	BMWW-t	MT20	8.0	9.0	4.25	3.75
N	BMWW+t	MT20	5.0	10.0	5.00	1.50
O	BMV1+t	MT20	6.0	9.0	5.50	

Edge - INDICATES REFERENCE CORNER OF PLATE TOUCHES EDGE OF CHORD.

LATERAL BRACE(S) SHOWN SHALL BE 2X4 SPF#2

LICENSED PROFESSIONAL ENGINEER
V. WIDYA
100225448
10/13/2021
PROVINCE OF ONTARIO

DIMENSIONS, SUPPORTS AND LOADINGS SPECIFIED BY FABRICATOR TO BE VERIFIED BY BUILDING DESIGNER

BEARINGS

JT	FACTORED GROSS REACTION VERT	HORZ	MAXIMUM FACTORED GROSS REACTION DOWN	HORZ	UPLIFT	INPUT BRG IN-SX	REQRD BRG IN-SX
I	3675	0	3675	0	0	3-8	3-8
O	4844	0	4844	0	0	5-8	5-8

UNFACTORED REACTIONS

JT	1ST LCASE COMBINED	MAX./MIN. COMPONENT REACTIONS SNOW	LIVE	PERM.LIVE	WIND	DEAD	SOIL
I	2620	1600 / 0	0 / 0	0 / 0	0 / 0	1020 / 0	0 / 0
O	3452	2119 / 0	0 / 0	0 / 0	0 / 0	1333 / 0	0 / 0

BEARING MATERIAL TO BE SPF NO.2 OR BETTER AT JOINT(S) I, O
BEARING SIZE FACTOR = 1.15 AT JNT(S) I, O (BASED ON SUPPORT DEPTH = 1-8)

BRACING

TOP CHORD TO BE SHEATHED OR MAX. PURLIN SPACING = 3.23 FT.
MAX. UNBRACED BOTTOM CHORD LENGTH = 6.25 FT OR RIGID CEILING DIRECTLY APPLIED.

ALL PITCH BREAKS AND PERIMETER CORNER JOINTS MUST BE LATERALLY RESTRAINED.

2x3 DRY SPF No.2 T-BRACE AT H-I

FASTEN T AND I-BRACES TO NARROW EDGE OF WEB WITH ONE ROW PER PLY OF 3" COMMON WIRE NAILS @ 6" O.C. WITH 3" MINIMUM END DISTANCE. BRACE MUST COVER 90% OF WEB LENGTH.

END VERTICAL(S) MUST BE SHEATHED OR HAVE BRACES AS INDICATED IN THE MAX. UNBRACED LENGTH COLUMN OF THE TABLE BELOW

LOADING

TOTAL LOAD CASES: (4)

CHORDS

MEMB. FR-TO	MAX. FACTORED FORCE (LBS)	FACTORED VERT. LOAD (PLF) FROM	TO	LC1 CSI (LC)	MAX UNBRAC LENGTH
A- B	0 / 42	-78.0	-78.0	0.12 (1)	10.00
B- C	-3851 / 0	-78.0	-78.0	0.27 (1)	3.36
C- D	-7387 / 0	-78.0	-78.0	0.41 (1)	3.49
D- E	-7922 / 0	-78.0	-78.0	0.39 (1)	3.41
E- F	-7922 / 0	-137.2	-137.2	0.57 (1)	3.23
F- P	-7922 / 0	-137.2	-137.2	0.57 (1)	3.23
P- G	-7922 / 0	-78.0	-78.0	0.57 (1)	3.23
G- Q	-5342 / 0	-78.0	-78.0	0.43 (1)	3.95
Q- H	-5342 / 0	-130.8	-130.8	0.43 (1)	3.95
I- H	-3483 / 0	0.0	0.0	0.68 (1)	6.00
O- B	-4925 / 0	0.0	0.0	0.40 (1)	4.81
O- N	0 / 0	-256.7	-256.7	0.35 (1)	10.00
N- M	0 / 2502	-256.7	-256.7	0.57 (1)	10.00
M- L	0 / 7387	-256.7	-256.7	0.83 (1)	10.00
L- K	0 / 7387	-256.7	-256.7	0.83 (1)	10.00
K- R	0 / 5342	-33.5	-33.5	0.50 (1)	10.00
R- J	0 / 5342	-18.5	-18.5	0.50 (1)	10.00
J- S	-121 / 0	-18.5	-18.5	0.22 (1)	6.25
S- I	-121 / 0	-31.0	-31.0	0.22 (1)	6.25

WEBS

MEMB. FR-TO	MAX. FACTORED FORCE (LBS)	MAX CSI (LC)
N- C	-260 / 0	0.08 (1)
C- M	0 / 5660	1.00 (1)
M- D	-914 / 0	0.27 (1)
D- K	0 / 619	0.08 (1)
K- E	-713 / 0	0.21 (1)
K- G	0 / 2988	0.38 (1)
J- G	-2372 / 0	0.70 (1)
J- H	0 / 6282	0.80 (1)
B- N	0 / 3092	0.77 (1)

FACTORED CONCENTRATED LOADS (LBS)

JT	LOC.	LC1	MAX-	MAX+	FACE	DIR.	TYPE	HEEL	CONN.
R	21-5-7	-393	-393	---	FRONT	VERT	TOTAL	---	C1
S	26-6-9	-393	-393	---	FRONT	VERT	TOTAL	---	C1

CONNECTION REQUIREMENTS

1) **C1:** A SUITABLE HANGER/MECHANICAL CONNECTION IS REQUIRED.

DESIGN CRITERIA

*** SPECIAL LOADS ANALYSIS ***
GEOMETRY AND/OR BASIC LOADS CHANGED BY USER.
LOADS WERE DERIVED FROM USER INPUT
NO FURTHER MODIFICATIONS WERE MADE

SPECIFIED LOADS:

TOP CH.	LL	=	21.0	PSF
	DL	=	6.0	PSF
BOT CH.	LL	=	0.0	PSF
	DL	=	7.4	PSF
TOTAL LOAD		=	34.4	PSF

SPACING = 24.0 IN. C/C

LOADING IN FLAT SECTION BASED ON A SLOPE OF 2.00/12 MINIMUM

GIRDER TYPE: CStdGirder
START DISTANCE = 0-0
START SPAN CARRIED = 11-10-8
END DISTANCE = 16-6-0
END SPAN CARRIED = 11-10-8
END WALL WIDTH = 0-0
APPLIED TO FRONT SIDE OF BOTTOM CHORD.
- ADDT'L LOADS BASED ON 55 % OF GSL.

GIRDER TYPE: CPrimeHip
LEFT SETBACK = 2-2-5
RIGHT SETBACK = 0-0
END SETBACK = 4-8-8
END WALL WIDTH = 0-0
CORNER FRAMING TYPE: CONVENTIONAL
END JACK TYPE: CONVENTIONAL
APPLIED TO FRONT SIDE
- ADDT'L LOADS BASED ON 55 % OF GSL.
LOADS APPLIED TO FIRST 4-10-15 OF SPAN MEASURED FROM THE RIGHT.

*** NON STANDARD GIRDER ***
ADDT'L USER-DEFINED LOADS APPLIED TO ALL LOAD CASES.

THIS TRUSS IS DESIGNED FOR RESIDENTIAL OR SMALL BUILDING REQUIREMENTS OF PART 9, NBCC 2015

THIS DESIGN COMPLIES WITH:
- PART 9 OF BCBC 2018 , ABC 2019
- PART 9 OF OBC 2012 (2019 AMENDMENT)
- CSA 086-14
- TPIC 2014

(55 % OF 23.0 P.S.F. G.S.L. PLUS 8.4 P.S.F. RAIN LOAD) EQUALS 21.0 P.S.F. SPECIFIED ROOF LIVE LOAD

ALLOWABLE DEFL.(LL)= L/360 (1.04")
CALCULATED VERT. DEFL.(LL) = L/ 999 (0.33")
ALLOWABLE DEFL.(TL)= L/360 (1.04")
CALCULATED VERT. DEFL.(TL) = L/ 581 (0.64")

CSI: TC=0.68/1.00 (H-I:1) , BC=0.83/1.00 (K-M:1) , WB=1.00/1.00 (C-M:1) , SSI=0.66/1.00 (K-M:1)

DOL LUMBER=1.00 NAIL=1.00 LS BEND=1.00 COMP=1.00 SHEAR=1.00 TENS= 1.00

COMPANION LIVE LOAD FACTOR = 1.00

CONTINUED ON PAGE 2

JOB NAME	TRUSS NAME	QUANTITY	PLY	JOB DESC.	DRWG NO.
336324	H91		1	TRUSS DESC. JT 45147	E21104089

Alpa Roof Truss, Maple

Version 8.420 S Jan 21 2021 MiTek Industries, Inc. Wed Oct 13 14:52:02 2021 Page 1

ID:hd511hZTz bdeQoS817GKByhVxV-qwyRIb2?HIHks1q J82Da7Yr9fOipKWQLmpN1xyTp6h

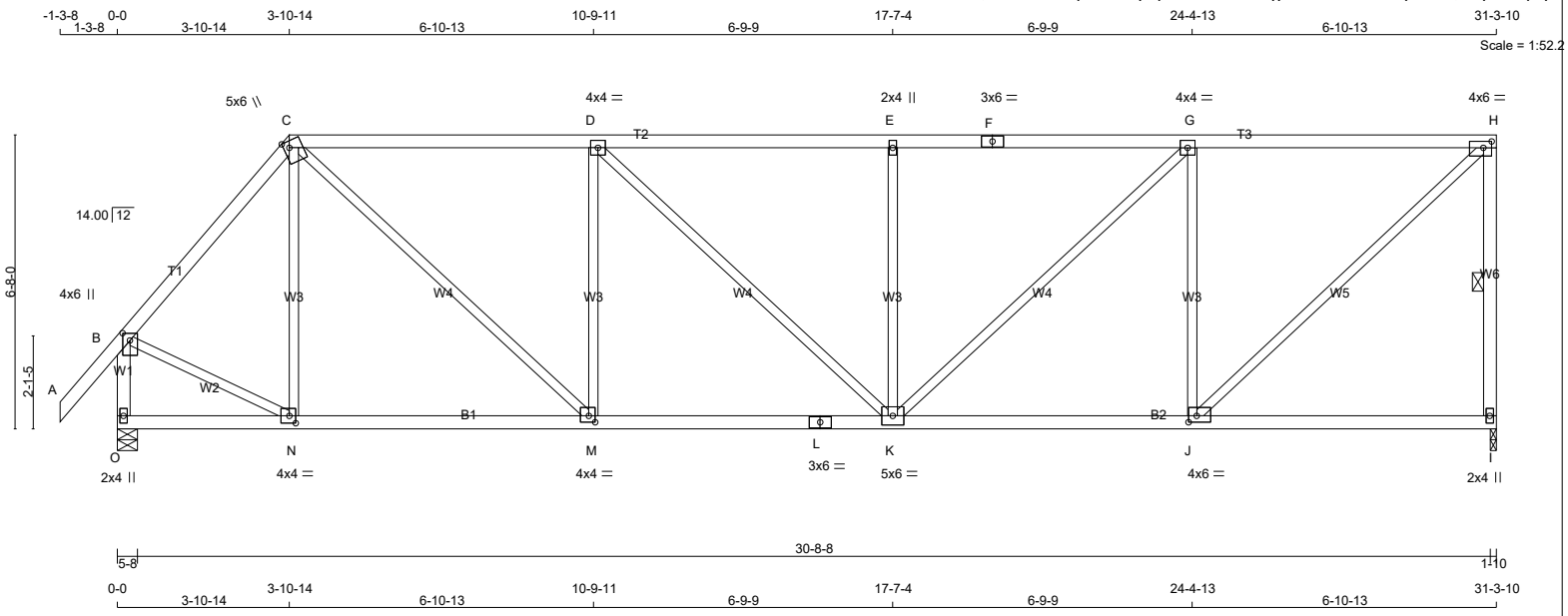

TOTAL WEIGHT = 138 lb

[M]

LUMBER

N. L. G. A. RULES

CHORDS	SIZE		LUMBER	DESCR.
A - C	2x4	DRY	No.2	SPF
C - F	2x4	DRY	No.2	SPF
F - H	2x4	DRY	No.2	SPF
I - H	2x4	DRY	No.2	SPF
O - B	2x4	DRY	No.2	SPF
O - L	2x4	DRY	No.2	SPF
L - I	2x4	DRY	No.2	SPF
ALL WEBS EXCEPT	2x3	DRY	No.2	SPF

DRY: SEASONED LUMBER.

PLATES (table is in inches)

JT	TYPE	PLATES	W	LEN	Y	X
B	TMVW+p	MT20	4.0	6.0	2.00	2.00
C	TTWW+m	MT20	5.0	6.0	1.75	1.50
D	TMWW-t	MT20	4.0	4.0		
E	TMW+w	MT20	2.0	4.0		
F	TS-t	MT20	3.0	6.0		
G	TMWW-t	MT20	4.0	4.0		
H	TMVW-t	MT20	4.0	6.0	1.75	2.25
I	BMV1+p	MT20	2.0	4.0		
J	BMWW-t	MT20	4.0	6.0	1.75	2.25
K	BMWWW-t	MT20	5.0	6.0		
L	BS-t	MT20	3.0	6.0		
M	BMWW-t	MT20	4.0	4.0	1.75	1.75
N	BMWW-t	MT20	4.0	4.0	2.00	1.75
O	BMV1+p	MT20	2.0	4.0		

LATERAL BRACE(S) SHOWN SHALL BE 2X4 SPF#2

LICENSED PROFESSIONAL ENGINEER
V. WIDYA
100225448
10/13/2021
PROVINCE OF ONTARIO

DIMENSIONS, SUPPORTS AND LOADINGS SPECIFIED BY FABRICATOR TO BE VERIFIED BY BUILDING DESIGNER

BEARINGS

JT	FACTORED GROSS REACTION VERT	HORZ	MAXIMUM FACTORED GROSS REACTION DOWN	HORZ	UPLIFT	INPUT BRG IN-SX	REQRD BRG IN-SX
I	1510	0	1510	0	0	1-10	1-10
O	1619	0	1619	0	0	5-8	1-12

UNFACTORED REACTIONS

JT	1ST LCASE COMBINED	MAX./MIN. COMPONENT REACTIONS SNOW	LIVE	PERM.LIVE	WIND	DEAD	SOIL
I	1076	657 / 0	0 / 0	0 / 0	0 / 0	419 / 0	0 / 0
O	1152	716 / 0	0 / 0	0 / 0	0 / 0	436 / 0	0 / 0

BEARING MATERIAL TO BE SPF NO.2 OR BETTER AT JOINT(S) I, O

BRACING

TOP CHORD TO BE SHEATHED OR MAX. PURLIN SPACING = 4.08 FT.
MAX. UNBRACED BOTTOM CHORD LENGTH = 10.00 FT OR RIGID CEILING DIRECTLY APPLIED.

ALL PITCH BREAKS AND PERIMETER CORNER JOINTS MUST BE LATERALLY RESTRAINED.

1 LATERAL BRACE(S) AT 1/ 2 LENGTH OF H-I.

END VERTICAL(S) MUST BE SHEATHED OR HAVE BRACES AS INDICATED IN THE MAX. UNBRACED LENGTH COLUMN OF THE TABLE BELOW

LOADING

TOTAL LOAD CASES: (4)

CHORDS

MEMB. FR-TO	MAX. FACTORED FORCE (LBS)	FACTORED VERT. LOAD (PLF) FROM	TO	LC1 CSI (LC)	MAX UNBRAC LENGTH
A- B	0 / 42	-78.0	-78.0	0.11 (1)	10.00
B- C	-1280 / 0	-78.0	-78.0	0.25 (1)	5.43
C- D	-1746 / 0	-78.0	-78.0	0.70 (1)	4.21
D- E	-1871 / 0	-78.0	-78.0	0.71 (1)	4.08
E- F	-1871 / 0	-78.0	-78.0	0.71 (1)	4.08
F- G	-1871 / 0	-78.0	-78.0	0.71 (1)	4.08
G- H	-1348 / 0	-78.0	-78.0	0.64 (1)	4.72
I- H	-1458 / 0	0.0	0.0	0.30 (1)	5.42
O- B	-1597 / 0	0.0	0.0	0.19 (1)	6.54
O- N	0 / 0	-18.5	-18.5	0.13 (4)	10.00
N- M	0 / 825	-18.5	-18.5	0.25 (4)	10.00
M- L	0 / 1747	-18.5	-18.5	0.37 (1)	10.00
L- K	0 / 1747	-18.5	-18.5	0.37 (1)	10.00
K- J	0 / 1348	-18.5	-18.5	0.34 (4)	10.00
J- I	0 / 0	-18.5	-18.5	0.21 (4)	10.00

WEBS

MEMB. FR-TO	MAX. FACTORED FORCE (LBS)	MAX CSI (LC)
N- C	-246 / 0	0.18 (1)
C- M	0 / 1251	0.28 (1)
M- D	-717 / 0	0.53 (1)
D- K	0 / 170	0.04 (1)
K- E	-489 / 0	0.36 (1)
K- G	0 / 718	0.16 (1)
J- G	-1102 / 0	0.81 (1)
J- H	0 / 1835	0.41 (1)
B- N	0 / 904	0.20 (1)

DESIGN CRITERIA

SPECIFIED LOADS:

TOP CH.	LL	=	21.0	PSF
	DL	=	6.0	PSF
BOT CH.	LL	=	0.0	PSF
	DL	=	7.4	PSF
TOTAL LOAD		=	34.4	PSF

SPACING = 24.0 IN. C/C

LOADING IN FLAT SECTION BASED ON A SLOPE OF 2.00/12 MINIMUM

THIS TRUSS IS DESIGNED FOR RESIDENTIAL OR SMALL BUILDING REQUIREMENTS OF PART 9, NBCC 2015

THIS DESIGN COMPLIES WITH:
- PART 9 OF BCBC 2018 , ABC 2019
- PART 9 OF OBC 2012 (2019 AMENDMENT)
- CSA 086-14
- TPIC 2014

(55 % OF 23.0 P.S.F. G.S.L. PLUS 8.4 P.S.F. RAIN LOAD) EQUALS 21.0 P.S.F. SPECIFIED ROOF LIVE LOAD

ALLOWABLE DEFL.(LL)= L/360 (1.04")
CALCULATED VERT. DEFL.(LL) = L/ 999 (0.09")
ALLOWABLE DEFL.(TL)= L/360 (1.04")
CALCULATED VERT. DEFL.(TL) = L/ 999 (0.19")

CSI: TC=0.71/1.00 (E-G:1) , BC=0.37/1.00 (K-M:1) , WB=0.81/1.00 (G-J:1) , SSI=0.25/1.00 (G-H:1)

DOL LUMBER=1.00 NAIL=1.00 LS BEND=1.10 COMP=1.10 SHEAR=1.10 TENS= 1.10

COMPANION LIVE LOAD FACTOR = 1.00

TRUSS PLATE MANUFACTURER IS NOT RESPONSIBLE FOR QUALITY CONTROL IN THE TRUSS MANUFACTURING PLANT .

NAIL VALUES

PLATE	GRIP(DRY) (PSI) MAX	MIN	SHEAR (PLI) MAX	MIN	SECTION (PLI) MAX	MIN
MT20	650	371	1747	788	1987	1873

PLATE PLACEMENT TOL. = 0.250 inches

PLATE ROTATION TOL. = 5.0 Deg.

JSI GRIP= 0.90 (H) (INPUT = 0.90)
JSI METAL= 0.54 (L) (INPUT = 1.00)

JOB NAME	TRUSS NAME	QUANTITY	PLY	JOB DESC.		DRWG NO.
336324	H92		1	TRUSS DESC.	JT 45147	E21104090

Alpa Roof Truss, Maple

Version 8.420 S Jan 21 2021 MiTek Industries, Inc. Wed Oct 13 14:52:04 2021 Page 1

ID:hd511hZTz bdeQoS817GKByhVxV-mJ3BjH3FpvXS5KqMRZ4hfYdDhT5KHIDjo4IU6pyTp6f

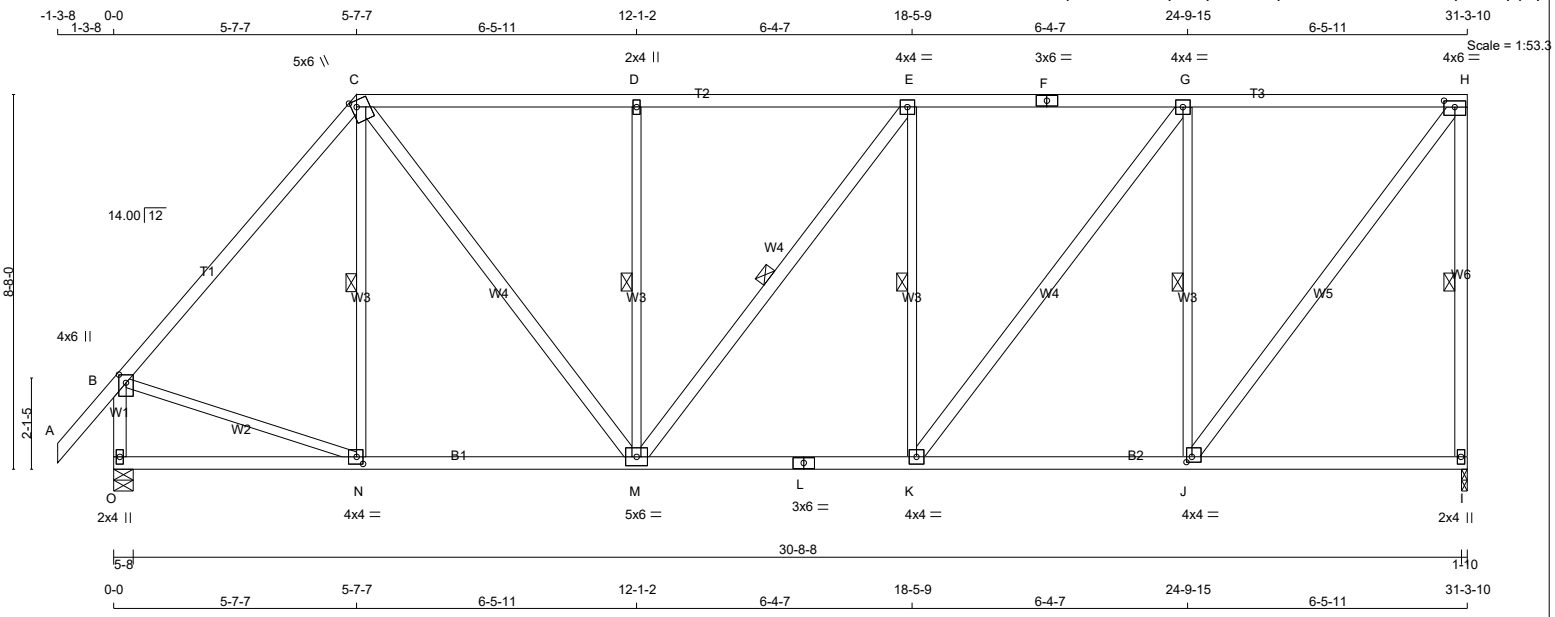

TOTAL WEIGHT = 166 lb

LUMBER

N. L. G. A. RULES

CHORDS	SIZE		LUMBER	DESCR.
A - C	2x4	DRY	No.2	SPF
C - F	2x4	DRY	No.2	SPF
F - H	2x4	DRY	No.2	SPF
I - H	2x4	DRY	No.2	SPF
O - B	2x4	DRY	No.2	SPF
O - L	2x4	DRY	No.2	SPF
L - I	2x4	DRY	No.2	SPF
ALL WEBS	2x3	DRY	No.2	SPF
EXCEPT				
C - M	2x4	DRY	No.2	SPF
M - E	2x4	DRY	No.2	SPF
K - G	2x4	DRY	No.2	SPF
J - H	2x4	DRY	No.2	SPF

DRY: SEASONED LUMBER.

PLATES (table is in inches)

JT	TYPE	PLATES	W	LEN	Y	X
B	TMVW+p	MT20	4.0	6.0	2.25	2.00
C	TTWW+m	MT20	5.0	6.0	1.75	1.50
D	TMW+w	MT20	2.0	4.0		
E	TMWW-t	MT20	4.0	4.0		
F	TS-t	MT20	3.0	6.0		
G	TMWW-t	MT20	4.0	4.0		
H	TMVW-t	MT20	4.0	6.0	1.75	3.00
I	BMV1+p	MT20	2.0	4.0		
J	BMWW-t	MT20	4.0	4.0	1.50	1.50
K	BMWW-t	MT20	4.0	4.0		
L	BS-t	MT20	3.0	6.0		
M	BMWWW-t	MT20	5.0	6.0		
N	BMWW-t	MT20	4.0	4.0	2.00	1.75
O	BMV1+p	MT20	2.0	4.0		

LATERAL BRACE(S) SHOWN SHALL BE 2X4 SPF#2

DIMENSIONS, SUPPORTS AND LOADINGS SPECIFIED BY FABRICATOR TO BE VERIFIED BY BUILDING DESIGNER

BEARINGS

JT	FACTORED GROSS REACTION VERT	HORZ	MAXIMUM FACTORED GROSS REACTION DOWN	HORZ	UPLIFT	INPUT BRG IN-SX	REQRD BRG IN-SX
I	1510	0	1510	0	0	1-10	1-10
O	1619	0	1619	0	0	5-8	1-12

UNFACTORED REACTIONS

JT	1ST LCASE COMBINED	MAX./MIN. COMPONENT REACTIONS SNOW	LIVE	PERM.LIVE	WIND	DEAD	SOIL
I	1076	657 / 0	0 / 0	0 / 0	0 / 0	419 / 0	0 / 0
O	1152	716 / 0	0 / 0	0 / 0	0 / 0	436 / 0	0 / 0

BEARING MATERIAL TO BE SPF NO.2 OR BETTER AT JOINT(S) I, O

BRACING

TOP CHORD TO BE SHEATHED OR MAX. PURLIN SPACING = 4.79 FT.
MAX. UNBRACED BOTTOM CHORD LENGTH = 10.00 FT OR RIGID CEILING DIRECTLY APPLIED.

ALL PITCH BREAKS AND PERIMETER CORNER JOINTS MUST BE LATERALLY RESTRAINED.

1 LATERAL BRACE(S) AT 1/ 2 LENGTH OF H-I, C-N, D-M, E-M, E-K, G-J.

END VERTICAL(S) MUST BE SHEATHED OR HAVE BRACES AS INDICATED IN THE MAX. UNBRACED LENGTH COLUMN OF THE TABLE BELOW

LOADING

TOTAL LOAD CASES: (4)

CHORDS

MEMB. FR-TO	MAX. FORCE (LBS)	FACTORED VERT. LOAD (PLF) FROM	TO	LC1 CSI (LC)	MAX UNBRAC LENGTH
A- B	0 / 42	-78.0	-78.0	0.11 (1)	10.00
B- C	-1304 / 0	-78.0	-78.0	0.58 (1)	5.02
C- D	-1384 / 0	-78.0	-78.0	0.56 (1)	4.81
D- E	-1385 / 0	-78.0	-78.0	0.55 (1)	4.81
E- F	-1398 / 0	-78.0	-78.0	0.56 (1)	4.79
F- G	-1398 / 0	-78.0	-78.0	0.56 (1)	4.79
G- H	-975 / 0	-78.0	-78.0	0.52 (1)	5.54
I- H	-1462 / 0	0.0	0.0	0.50 (1)	5.41
O- B	-1578 / 0	0.0	0.0	0.19 (1)	6.57
O- N	0 / 0	-18.5	-18.5	0.16 (4)	10.00
N- M	0 / 844	-18.5	-18.5	0.24 (4)	10.00
M- L	0 / 1398	-18.5	-18.5	0.30 (1)	10.00
L- K	0 / 1398	-18.5	-18.5	0.30 (1)	10.00
K- J	0 / 975	-18.5	-18.5	0.28 (4)	10.00
J- I	0 / 0	-18.5	-18.5	0.19 (4)	10.00

WEBS

MEMB. FR-TO	MAX. FORCE (LBS)	MAX CSI (LC)
N- C	-131 / 38	0.06 (1)
C- M	0 / 881	0.14 (1)
M- D	-563 / 0	0.27 (1)
M- E	-22 / 0	0.01 (1)
K- E	-442 / 0	0.21 (1)
K- G	0 / 698	0.11 (1)
J- G	-1127 / 0	0.54 (1)
J- H	0 / 1595	0.26 (1)
B- N	0 / 884	0.20 (1)

DESIGN CRITERIA

SPECIFIED LOADS:

TOP CH.	LL	=	21.0	PSF
	DL	=	6.0	PSF
BOT CH.	LL	=	0.0	PSF
	DL	=	7.4	PSF
TOTAL LOAD		=	34.4	PSF

SPACING = 24.0 IN. C/C

LOADING IN FLAT SECTION BASED ON A SLOPE OF 2.00/12 MINIMUM

THIS TRUSS IS DESIGNED FOR RESIDENTIAL OR SMALL BUILDING REQUIREMENTS OF PART 9, NBCC 2015

THIS DESIGN COMPLIES WITH:
- PART 9 OF BCBC 2018 , ABC 2019
- PART 9 OF OBC 2012 (2019 AMENDMENT)
- CSA 086-14
- TPIC 2014

(55 % OF 23.0 P.S.F. G.S.L. PLUS 8.4 P.S.F. RAIN LOAD) EQUALS 21.0 P.S.F. SPECIFIED ROOF LIVE LOAD

ALLOWABLE DEFL.(LL)= L/360 (1.04")
CALCULATED VERT. DEFL.(LL) = L/ 999 (0.06")
ALLOWABLE DEFL.(TL)= L/360 (1.04")
CALCULATED VERT. DEFL.(TL) = L/ 999 (0.13")

CSI: TC=0.58/1.00 (B-C:1) , BC=0.30/1.00 (K-M:1) , WB=0.54/1.00 (G-J:1) , SSI=0.24/1.00 (G-H:1)

DOL LUMBER=1.00 NAIL=1.00 LS BEND=1.10 COMP=1.10 SHEAR=1.10 TENS= 1.10

COMPANION LIVE LOAD FACTOR = 1.00

TRUSS PLATE MANUFACTURER IS NOT RESPONSIBLE FOR QUALITY CONTROL IN THE TRUSS MANUFACTURING PLANT .

NAIL VALUES

PLATE	GRIP(DRY) (PSI) MAX	MIN	SHEAR (PLI) MAX	MIN	SECTION (PLI) MAX	MIN
MT20	650	371	1747	788	1987	1873

PLATE PLACEMENT TOL. = 0.250 inches

PLATE ROTATION TOL. = 5.0 Deg.

JSI GRIP= 0.89 (B) (INPUT = 0.90)
JSI METAL= 0.52 (B) (INPUT = 1.00)

JOB NAME	TRUSS NAME	QUANTITY	PLY	JOB DESC.		DRWG NO.
336324	H93		1	TRUSS DESC.	JT 45147	E21104091

Alpa Roof Truss, Maple

Version 8.420 S Jan 21 2021 MiTek Industries, Inc. Wed Oct 13 14:52:06 2021 Page 1

ID:hd511hZTz_bdeQoS817GKByhVxV-iiBy8y5VLXn9Le_IY_79IzjhzGqtlKQ0GOnbAiyTp6d

Scale: 1/2"=1'

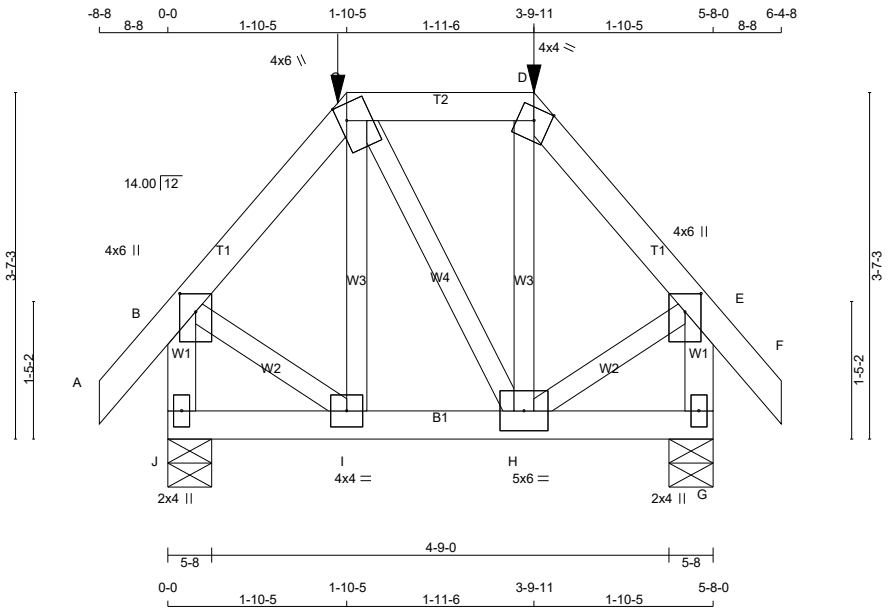

TOTAL WEIGHT = 32 lb

[M]

LUMBER

N. L. G. A. RULES

CHORDS	SIZE		LUMBER	DESCR.
A - C	2x4	DRY	No.2	SPF
C - D	2x4	DRY	No.2	SPF
D - F	2x4	DRY	No.2	SPF
J - B	2x4	DRY	No.2	SPF
G - E	2x4	DRY	No.2	SPF
J - G	2x4	DRY	No.2	SPF
ALL WEBS EXCEPT	2x3	DRY	No.2	SPF

DRY: SEASONED LUMBER.

PLATES (table is in inches)

JT	TYPE	PLATES	W	LEN	Y	X
B	TMVW+p	MT20	4.0	6.0	2.25	2.00
C	TTWW+m	MT20	4.0	6.0	2.00	1.00
D	TTW-m	MT20	4.0	4.0	Edge	
E	TMVW+p	MT20	4.0	6.0	2.25	2.00
G	BMV1+p	MT20	2.0	4.0		
H	BMWWW-t	MT20	5.0	6.0		
I	BMWW-t	MT20	4.0	4.0		
J	BMV1+p	MT20	2.0	4.0		

Edge - INDICATES REFERENCE CORNER OF PLATE TOUCHES EDGE OF CHORD.

LATERAL BRACE(S) SHOWN SHALL BE 2X4 SPF#2

DIMENSIONS, SUPPORTS AND LOADINGS SPECIFIED BY FABRICATOR TO BE VERIFIED BY BUILDING DESIGNER

BEARINGS

JT	FACTORED GROSS REACTION VERT	HORZ	MAXIMUM FACTORED GROSS REACTION DOWN	HORZ	UPLIFT	INPUT BRG IN-SX	REQRD BRG IN-SX
J	455	0	455	0	0	5-8	1-8
G	455	0	455	0	0	5-8	1-8

UNFACTORED REACTIONS

JT	1ST LCASE COMBINED	MAX./MIN. COMPONENT REACTIONS SNOW	LIVE	PERM.LIVE	WIND	DEAD	SOIL
J	323	203 / 0	0 / 0	0 / 0	0 / 0	120 / 0	0 / 0
G	323	203 / 0	0 / 0	0 / 0	0 / 0	120 / 0	0 / 0

BEARING MATERIAL TO BE SPF NO.2 OR BETTER AT JOINT(S) J, G

BRACING

TOP CHORD TO BE SHEATHED OR MAX. PURLIN SPACING = 6.25 FT.
MAX. UNBRACED BOTTOM CHORD LENGTH = 10.00 FT OR RIGID CEILING DIRECTLY APPLIED.

ALL PITCH BREAKS AND PERIMETER CORNER JOINTS MUST BE LATERALLY RESTRAINED.

LOADING

TOTAL LOAD CASES: (4)

CHORDS

MEMB. FR-TO	MAX. FACTORED FORCE (LBS)	FACTORED VERT. LOAD (PLF) FROM	TO	LC1	MAX CSI (LC)	MAX. UNBRAC LENGTH
A- B	0 / 24	-78.0	-78.0	0.04 (1)	10.00	
B- C	-265 / 0	-78.0	-78.0	0.05 (1)	6.25	
C- D	-169 / 0	-114.5	-114.5	0.08 (1)	6.25	
D- E	-265 / 0	-78.0	-78.0	0.05 (1)	6.25	
E- F	0 / 24	-78.0	-78.0	0.04 (1)	10.00	
J- B	-431 / 0	0.0	0.0	0.05 (1)	7.81	
G- E	-431 / 0	0.0	0.0	0.05 (1)	7.81	
J- I	0 / 0	-27.2	-27.2	0.02 (4)	10.00	
I- H	0 / 170	-27.2	-27.2	0.04 (4)	10.00	
H- G	0 / 0	-27.2	-27.2	0.02 (4)	10.00	

WEBS

MEMB. FR-TO	MAX. FACTORED FORCE (LBS)	MAX CSI (LC)
I- C	-38 / 25	0.01 (4)
C- H	0 / 0	0.00 (1)
H- D	-39 / 26	0.01 (4)
B- I	0 / 194	0.05 (1)
H- E	0 / 194	0.05 (1)

FACTORED CONCENTRATED LOADS (LBS)

JT	LOC.	LC1	MAX-	MAX+	FACE	DIR.	TYPE	HEEL	CONN.
C	1-10-5	-57	-57	---	FRONT	VERT	TOTAL	---	C1
D	3-9-11	-57	-57	---	FRONT	VERT	TOTAL	---	C1

DESIGN CRITERIA

SPECIFIED LOADS:

TOP CH.	LL	=	21.0	PSF
	DL	=	6.0	PSF
BOT CH.	LL	=	0.0	PSF
	DL	=	7.4	PSF
TOTAL LOAD		=	34.4	PSF

SPACING = 24.0 IN. C/C

LOADING IN FLAT SECTION BASED ON A SLOPE OF 2.00/12 MINIMUM

GIRDER TYPE: CPrimeHip
SIDE SETBACK = 1-10-5
END SETBACK = 3-10-8
END WALL WIDTH = 0-0
CORNER FRAMING TYPE: CONVENTIONAL
END JACK TYPE: CONVENTIONAL
APPLIED TO FRONT SIDE
- ADDT'L LOADS BASED ON 55 % OF GSL.

THIS TRUSS IS DESIGNED FOR RESIDENTIAL OR SMALL BUILDING REQUIREMENTS OF PART 9, NBCC 2015

THIS DESIGN COMPLIES WITH:
- PART 9 OF BCBC 2018 , ABC 2019
- PART 9 OF OBC 2012 (2019 AMENDMENT)
- CSA 086-14
- TPIC 2014

(55 % OF 23.0 P.S.F. G.S.L. PLUS 8.4 P.S.F. RAIN LOAD) EQUALS 21.0 P.S.F. SPECIFIED ROOF LIVE LOAD

ALLOWABLE DEFL.(LL)= L/360 (0.19")
CALCULATED VERT. DEFL.(LL) = L/ 999 (0.00")
ALLOWABLE DEFL.(TL)= L/360 (0.19")
CALCULATED VERT. DEFL.(TL) = L/ 999 (0.00")

CSI: TC=0.08/1.00 (C-D:1) , BC=0.04/1.00 (H-I:4) , WB=0.05/1.00 (B-I:1) , SSI=0.10/1.00 (C-D:1)

DOL LUMBER=1.00 NAIL=1.00 LS BEND=1.00 COMP=1.00 SHEAR=1.00 TENS= 1.00

COMPANION LIVE LOAD FACTOR = 1.00

TRUSS PLATE MANUFACTURER IS NOT RESPONSIBLE FOR QUALITY CONTROL IN THE TRUSS MANUFACTURING PLANT .

NAIL VALUES

PLATE	GRIP(DRY) (PSI) MAX	MIN	SHEAR (PLI) MAX	MIN	SECTION (PLI) MAX	MIN
MT20	650	371	1747	788	1987	1873

PLATE PLACEMENT TOL. = 0.250 inches

PLATE ROTATION TOL. = 5.0 Deg.

JSI GRIP= 0.24 (B) (INPUT = 0.90)
JSI METAL= 0.12 (B) (INPUT = 1.00)

JOB NAME	TRUSS NAME	QUANTITY	PLY	JOB DESC.		DRWG NO.
336324	H94		1	TRUSS DESC.	JT 45147	E21104092

Alpa Roof Truss, Maple

Version 8.420 S Jan 21 2021 MiTek Industries, Inc. Wed Oct 13 14:52:07 2021 Page 1

ID:hd511hZTz bdeQoS817GKByhVxV-AulKLl676qv0yoZx6heOHBFskqA6Un49U2W8i8yTp6c

Scale = 1:32.6

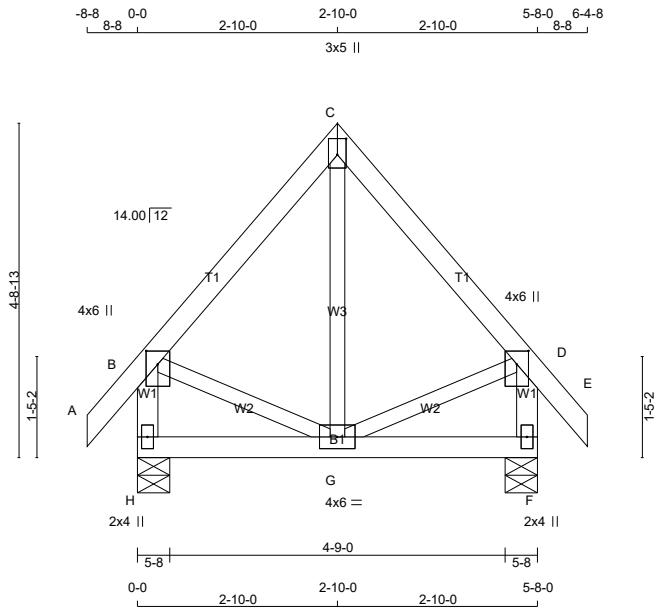

TOTAL WEIGHT = 30 lb

[M][F]

LUMBER

N. L. G. A. RULES

CHORDS	SIZE		LUMBER	DESCR.
A - C	2x4	DRY	No.2	SPF
C - E	2x4	DRY	No.2	SPF
H - B	2x4	DRY	No.2	SPF
F - D	2x4	DRY	No.2	SPF
H - F	2x4	DRY	No.2	SPF
ALL WEBS EXCEPT	2x3	DRY	No.2	SPF

DRY: SEASONED LUMBER.

PLATES (table is in inches)

JT	TYPE	PLATES	W	LEN	Y	X
B	TMVW+p	MT20	4.0	6.0	2.25	2.00
C	TTW+p	MT20	3.0	5.0	2.75	1.50
D	TMVW+p	MT20	4.0	6.0	2.25	2.00
F	BMV1+p	MT20	2.0	4.0		
G	BMWWW-t	MT20	4.0	6.0		
H	BMV1+p	MT20	2.0	4.0		

LATERAL BRACE(S) SHOWN SHALL BE 2X4 SPF#2

DIMENSIONS, SUPPORTS AND LOADINGS SPECIFIED BY FABRICATOR TO BE VERIFIED BY BUILDING DESIGNER

BEARINGS

JT	FACTORED GROSS REACTION VERT	HORZ	MAXIMUM FACTORED GROSS REACTION DOWN	HORZ	UPLIFT	INPUT BRG IN-SX	REQRD BRG IN-SX
H	337	0	337	0	0	5-8	1-8
F	337	0	337	0	0	5-8	1-8

UNFACTORED REACTIONS

JT	1ST LCASE COMBINED	MAX./MIN. COMPONENT REACTIONS SNOW	LIVE	PERM.LIVE	WIND	DEAD	SOIL
H	239	153 / 0	0 / 0	0 / 0	0 / 0	86 / 0	0 / 0
F	239	153 / 0	0 / 0	0 / 0	0 / 0	86 / 0	0 / 0

BEARING MATERIAL TO BE SPF NO.2 OR BETTER AT JOINT(S) H, F

BRACING

TOP CHORD TO BE SHEATHED OR MAX. PURLIN SPACING = 6.25 FT.
MAX. UNBRACED BOTTOM CHORD LENGTH = 10.00 FT OR RIGID CEILING DIRECTLY APPLIED.

ALL PITCH BREAKS AND PERIMETER CORNER JOINTS MUST BE LATERALLY RESTRAINED.

LOADING

TOTAL LOAD CASES: (4)

CHORDS

MEMB. FR-TO	MAX. FACTORED FORCE (LBS)	FACTORED VERT. LOAD LC1 (PLF) FROM	TO	MAX CSI (LC)	MAX. UNBRAC LENGTH
A- B	0 / 24	-78.0	-78.0	0.04 (1)	10.00
B- C	-142 / 0	-78.0	-78.0	0.08 (1)	6.25
C- D	-142 / 0	-78.0	-78.0	0.08 (1)	6.25
D- E	0 / 24	-78.0	-78.0	0.04 (1)	10.00
H- B	-316 / 0	0.0	0.0	0.03 (1)	7.81
F- D	-316 / 0	0.0	0.0	0.03 (1)	7.81
H- G	0 / 0	-18.5	-18.5	0.04 (4)	10.00
G- F	0 / 0	-18.5	-18.5	0.04 (4)	10.00

WEBS

MEMB. FR-TO	MAX. FACTORED FORCE (LBS)	MAX CSI (LC)
G- C	-6 / 43	0.01 (4)
B- G	0 / 98	0.02 (1)
G- D	0 / 98	0.02 (1)

DESIGN CRITERIA

SPECIFIED LOADS:

TOP CH.	LL	=	21.0	PSF
	DL	=	6.0	PSF
BOT CH.	LL	=	0.0	PSF
	DL	=	7.4	PSF
TOTAL LOAD		=	34.4	PSF

SPACING = 24.0 IN. C/C

THIS TRUSS IS DESIGNED FOR RESIDENTIAL OR SMALL BUILDING REQUIREMENTS OF PART 9, NBCC 2015

THIS DESIGN COMPLIES WITH:
- PART 9 OF BCBC 2018 , ABC 2019
- PART 9 OF OBC 2012 (2019 AMENDMENT)
- CSA 086-14
- TPIC 2014

(55 % OF 23.0 P.S.F. G.S.L. PLUS 8.4 P.S.F. RAIN LOAD) EQUALS 21.0 P.S.F. SPECIFIED ROOF LIVE LOAD

ALLOWABLE DEFL.(LL)= L/360 (0.19")
CALCULATED VERT. DEFL.(LL) = L/ 999 (0.00")
ALLOWABLE DEFL.(TL)= L/360 (0.19")
CALCULATED VERT. DEFL.(TL) = L/ 999 (0.00")

CSI: TC=0.08/1.00 (C-D:1) , BC=0.04/1.00 (F-G:4) , WB=0.02/1.00 (B-G:1) , SSI=0.06/1.00 (C-D:1)

DOL LUMBER=1.00 NAIL=1.00 LS BEND=1.10 COMP=1.10 SHEAR=1.10 TENS= 1.10

COMPANION LIVE LOAD FACTOR = 1.00

TRUSS PLATE MANUFACTURER IS NOT RESPONSIBLE FOR QUALITY CONTROL IN THE TRUSS MANUFACTURING PLANT .

NAIL VALUES

PLATE	GRIP(DRY) (PSI) MAX	MIN	SHEAR (PLI) MAX	MIN	SECTION (PLI) MAX	MIN
MT20	650	371	1747	788	1987	1873

PLATE PLACEMENT TOL. = 0.250 inches

PLATE ROTATION TOL. = 5.0 Deg.

JSI GRIP= 0.18 (D) (INPUT = 0.90)
JSI METAL= 0.09 (B) (INPUT = 1.00)

JOB NAME	TRUSS NAME	QUANTITY	PLY	JOB DESC.		DRWG NO.
336324	H94S		1	TRUSS DESC.	JT 45147	E21104093

Alpa Roof Truss, Maple

Version 8.420 S Jan 21 2021 MiTek Industries, Inc. Wed Oct 13 14:52:08 2021 Page 1

ID:hd511hZTz_bdeQoS817GKByhVxV-f4JiZe6mt81tay88gO9dqOo2q4WWDEPJjiGiFayTp6b

Scale = 1:28.5

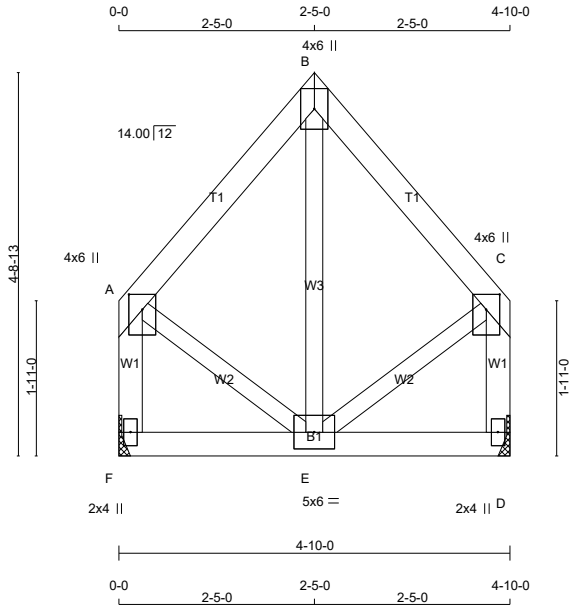

TOTAL WEIGHT = 2 X 26 = 51 lb

LUMBER

N. L. G. A. RULES

CHORDS	SIZE		LUMBER	DESCR.
A - B	2x4	DRY	No.2	SPF
B - C	2x4	DRY	No.2	SPF
F - A	2x4	DRY	No.2	SPF
D - C	2x4	DRY	No.2	SPF
F - D	2x4	DRY	No.2	SPF
ALL WEBS EXCEPT	2x3	DRY	No.2	SPF

DRY: SEASONED LUMBER.

PLATES (table is in inches)

JT	TYPE	PLATES	W	LEN	Y	X
A	TMVW+p	MT20	4.0	6.0	2.25	2.00
B	TTW+p	MT20	4.0	6.0		
C	TMVW+p	MT20	4.0	6.0	2.25	2.00
D	BMV1+p	MT20	2.0	4.0		
E	BMWWW-t	MT20	5.0	6.0		
F	BMV1+p	MT20	2.0	4.0		

LATERAL BRACE(S) SHOWN SHALL BE 2X4 SPF#2

DIMENSIONS, SUPPORTS AND LOADINGS SPECIFIED BY FABRICATOR TO BE VERIFIED BY BUILDING DESIGNER

BEARINGS

JT	FACTORED GROSS REACTION VERT	HORZ	MAXIMUM FACTORED GROSS REACTION DOWN	HORZ	UPLIFT	INPUT BRG IN-SX	REQRD BRG IN-SX
F	233	0	233	0	0	MECHANICAL	
D	233	0	233	0	0	MECHANICAL	

A SUITABLE HANGER/MECHANICAL CONNECTION IS REQUIRED AT JOINT F, D. MINIMUM BEARING LENGTH AT JOINT F = 1-8, JOINT D = 1-8.

UNFACTORED REACTIONS

JT	1ST LCASE COMBINED	MAX./MIN. COMPONENT REACTIONS SNOW	LIVE	PERM.LIVE	WIND	DEAD	SOIL
F	166	101 / 0	0 / 0	0 / 0	0 / 0	65 / 0	0 / 0
D	166	101 / 0	0 / 0	0 / 0	0 / 0	65 / 0	0 / 0

BRACING

TOP CHORD TO BE SHEATHED OR MAX. PURLIN SPACING = 6.25 FT.
MAX. UNBRACED BOTTOM CHORD LENGTH = 10.00 FT OR RIGID CEILING DIRECTLY APPLIED.

ALL PITCH BREAKS AND PERIMETER CORNER JOINTS MUST BE LATERALLY RESTRAINED.

LOADING

TOTAL LOAD CASES: (4)

CHORDS

MEMB. FR-TO	MAX. FACTORED FORCE (LBS)	FACTORED VERT. LOAD (PLF) FROM	TO	LC1 MAX CSI (LC)	MAX. UNBRAC LENGTH
A- B	-103 / 0	-78.0	-78.0	0.06 (1)	6.25
B- C	-103 / 0	-78.0	-78.0	0.06 (1)	6.25
F- A	-215 / 0	0.0	0.0	0.02 (1)	7.81
D- C	-215 / 0	0.0	0.0	0.02 (1)	7.81
F- E	0 / 0	-18.5	-18.5	0.03 (4)	10.00
E- D	0 / 0	-18.5	-18.5	0.03 (4)	10.00

WEBS

MEMB. FR-TO	MAX. FACTORED FORCE (LBS)	MAX CSI (LC)
E- B	-32 / 25	0.01 (1)
A- E	0 / 80	0.02 (1)
E- C	0 / 80	0.02 (1)

DESIGN CRITERIA

SPECIFIED LOADS:

TOP	CH.	LL	=	21.0	PSF
		DL	=	6.0	PSF
BOT	CH.	LL	=	0.0	PSF
		DL	=	7.4	PSF
TOTAL	LOAD		=	34.4	PSF

SPACING = 24.0 IN. C/C

THIS TRUSS IS DESIGNED FOR RESIDENTIAL OR SMALL BUILDING REQUIREMENTS OF PART 9, NBCC 2015

THIS DESIGN COMPLIES WITH:
- PART 9 OF BCBC 2018 , ABC 2019
- PART 9 OF OBC 2012 (2019 AMENDMENT)
- CSA 086-14
- TPIC 2014

(55 % OF 23.0 P.S.F. G.S.L. PLUS 8.4 P.S.F. RAIN LOAD) EQUALS 21.0 P.S.F. SPECIFIED ROOF LIVE LOAD

ALLOWABLE DEFL.(LL)= L/360 (0.19")
CALCULATED VERT. DEFL.(LL) = L/ 999 (0.00")
ALLOWABLE DEFL.(TL)= L/360 (0.19")
CALCULATED VERT. DEFL.(TL) = L/ 999 (0.00")

CSI: TC=0.06/1.00 (A-B:1) , BC=0.03/1.00 (E-F:4) , WB=0.02/1.00 (C-E:1) , SSI=0.05/1.00 (A-B:1)

DOL LUMBER=1.00 NAIL=1.00 LS BEND=1.10 COMP=1.10 SHEAR=1.10 TENS= 1.10

COMPANION LIVE LOAD FACTOR = 1.00

TRUSS PLATE MANUFACTURER IS NOT RESPONSIBLE FOR QUALITY CONTROL IN THE TRUSS MANUFACTURING PLANT .

NAIL VALUES

PLATE	GRIP(DRY) (PSI) MAX	MIN	SHEAR (PLI) MAX	MIN	SECTION (PLI) MAX	MIN
MT20	650	371	1747	788	1987	1873

PLATE PLACEMENT TOL. = 0.250 inches

PLATE ROTATION TOL. = 5.0 Deg.

JSI GRIP= 0.12 (C) (INPUT = 0.90)
JSI METAL= 0.06 (A) (INPUT = 1.00)

JOB NAME	TRUSS NAME	QUANTITY	PLY	JOB DESC.	DRWG NO.
336324	H95		1	TRUSS DESC. JT 45147	E21104094

Alpa Roof Truss, Maple

Version 8.420 S Jan 21 2021 MiTek Industries, Inc. Wed Oct 13 14:52:10 2021 Page 1

ID:hd511hZTz_bdeQoS817GKByhVxV-bTRS_K80PlHbpFIWnpB5vptKZu92h4bcA0loJTyTp6Z

Scale = 1:69.2

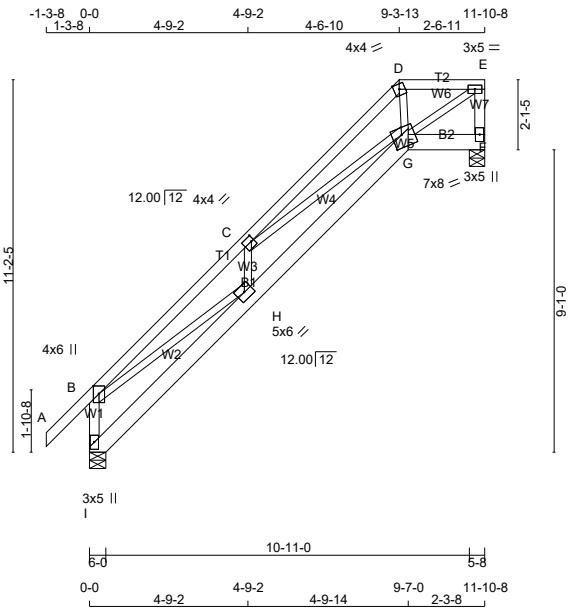

TOTAL WEIGHT = 66 lb

[M][F]

LUMBER

N. L. G. A. RULES

CHORDS	SIZE		LUMBER	DESCR.
I - B	2x4	DRY	No.2	SPF
A - D	2x4	DRY	No.2	SPF
D - E	2x4	DRY	No.2	SPF
F - E	2x4	DRY	No.2	SPF
I - G	2x6	DRY	No.2	SPF
G - F	2x6	DRY	No.2	SPF
ALL WEBS	2x3	DRY	No.2	SPF

DRY: SEASONED LUMBER.

PLATES (table is in inches)

JT	TYPE	PLATES	W	LEN	Y	X
B	TMVW+p	MT20	4.0	6.0	2.75	2.00
C	TMWW-t	MT20	4.0	4.0	2.00	1.00
D	TTW-m	MT20	4.0	4.0	Edge	
E	TMVW-t	MT20	3.0	5.0		
F	BMV1+p	MT20	3.0	5.0		
G	BBWWW-m	MT20	7.0	8.0	4.50	3.50
H	BMWW-t	MT20	5.0	6.0		
I	BMV1+p	MT20	3.0	5.0		

Edge - INDICATES REFERENCE CORNER OF PLATE TOUCHES EDGE OF CHORD.

LATERAL BRACE(S) SHOWN SHALL BE 2X4 SPF#2

DIMENSIONS, SUPPORTS AND LOADINGS SPECIFIED BY FABRICATOR TO BE VERIFIED BY BUILDING DESIGNER

BEARINGS

JT	FACTORED GROSS REACTION VERT	HORZ	MAXIMUM FACTORED GROSS REACTION DOWN	HORZ	UPLIFT	INPUT BRG IN-SX	REQRD BRG IN-SX
I	682	0	682	0	0	6-0	1-8
F	573	0	573	0	0	5-8	1-8

UNFACTORED REACTIONS

JT	1ST LCASE COMBINED	MAX./MIN. COMPONENT REACTIONS SNOW	LIVE	PERM.LIVE	WIND	DEAD	SOIL
I	484	308 / 0	0 / 0	0 / 0	0 / 0	176 / 0	0 / 0
F	408	249 / 0	0 / 0	0 / 0	0 / 0	159 / 0	0 / 0

BEARING MATERIAL TO BE SPF NO.2 OR BETTER AT JOINT(S) I, F

BRACING

TOP CHORD TO BE SHEATHED OR MAX. PURLIN SPACING = 5.31 FT.
MAX. UNBRACED BOTTOM CHORD LENGTH = 10.00 FT OR RIGID CEILING DIRECTLY APPLIED.

ALL PITCH BREAKS AND PERIMETER CORNER JOINTS MUST BE LATERALLY RESTRAINED.

LOADING

TOTAL LOAD CASES: (4)

CHORDS

MEMB. FR-TO	MAX. FACTORED FORCE (LBS)	FACTORED VERT. LOAD (PLF) FROM	TO	LC1 CSI (LC)	MAX. UNBRAC LENGTH
I- B	-623 / 0	0.0	0.0	0.07 (1)	7.81
A- B	0 / 38	-78.0	-78.0	0.11 (1)	10.00
B- C	-1379 / 0	-78.0	-78.0	0.23 (1)	5.31
C- D	-839 / 0	-78.0	-78.0	0.21 (1)	6.25
D- E	-624 / 0	-78.0	-78.0	0.07 (1)	6.25
F- E	-552 / 0	0.0	0.0	0.06 (1)	7.81
I- H	-9 / 2	-18.5	-18.5	0.07 (1)	10.00
H- G	0 / 1342	-18.5	-18.5	0.22 (1)	10.00
G- F	0 / 0	-18.5	-18.5	0.01 (4)	10.00

WEBS

MEMB. FR-TO	MAX. FACTORED FORCE (LBS)	MAX CSI (LC)
B- H	0 / 1174	0.26 (1)
H- C	-257 / 0	0.04 (1)
C- G	-440 / 0	0.29 (1)
D- G	0 / 329	0.07 (1)
G- E	0 / 775	0.17 (1)

DESIGN CRITERIA

SPECIFIED LOADS:

TOP	CH.	LL	=	21.0	PSF
		DL	=	6.0	PSF
BOT	CH.	LL	=	0.0	PSF
		DL	=	7.4	PSF
TOTAL	LOAD		=	34.4	PSF

SPACING = 24.0 IN. C/C

LOADING IN FLAT SECTION BASED ON A SLOPE OF 2.00/12 MINIMUM

THIS TRUSS IS DESIGNED FOR RESIDENTIAL OR SMALL BUILDING REQUIREMENTS OF PART 9, NBCC 2015

THIS DESIGN COMPLIES WITH:
- PART 9 OF BCBC 2018 , ABC 2019
- PART 9 OF OBC 2012 (2019 AMENDMENT)
- CSA 086-14
- TPIC 2014

(55 % OF 23.0 P.S.F. G.S.L. PLUS 8.4 P.S.F. RAIN LOAD) EQUALS 21.0 P.S.F. SPECIFIED ROOF LIVE LOAD

ALLOWABLE DEFL.(LL)= L/360 (0.40")
CALCULATED VERT. DEFL.(LL) = L/ 999 (0.05")
ALLOWABLE DEFL.(TL)= L/360 (0.40")
CALCULATED VERT. DEFL.(TL) = L/ 999 (0.09")

CSI: TC=0.23/1.00 (B-C:1) , BC=0.22/1.00 (G-H:1) , WB=0.29/1.00 (C-G:1) , SSI=0.12/1.00 (C-D:1)

DOL LUMBER=1.00 NAIL=1.00 LS BEND=1.10 COMP=1.10 SHEAR=1.10 TENS= 1.10

COMPANION LIVE LOAD FACTOR = 1.00

TRUSS PLATE MANUFACTURER IS NOT RESPONSIBLE FOR QUALITY CONTROL IN THE TRUSS MANUFACTURING PLANT .

NAIL VALUES

PLATE	GRIP(DRY) (PSI) MAX	MIN	SHEAR (PLI) MAX	MIN	SECTION (PLI) MAX	MIN
MT20	650	371	1747	788	1987	1873

PLATE PLACEMENT TOL. = 0.250 inches

PLATE ROTATION TOL. = 5.0 Deg.

JSI GRIP= 0.81 (E) (INPUT = 0.90)
JSI METAL= 0.59 (B) (INPUT = 1.00)

JOB NAME	TRUSS NAME	QUANTITY	PLY	JOB DESC.	DRWG NO.
336324	H96		1	TRUSS DESC. JT 45147	E21104095

Alpa Roof Truss, Maple

Version 8.420 S Jan 21 2021 MiTek Industries, Inc. Wed Oct 13 14:52:12 2021 Page 1

ID:hd511hZTz_bdeQoS817GKByhVxV-XrYDO0AGxNYJ3ZRvvEEZ_EzgvhqX9_9ueKEvOLyTp6X

Scale = 1:83.8

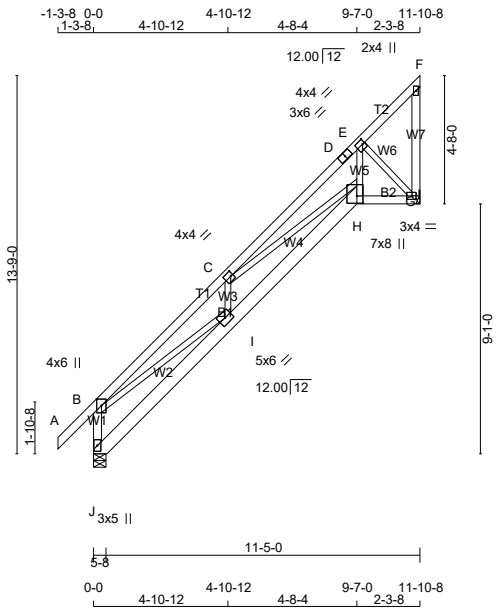

TOTAL WEIGHT = 8 X 69 = 556 lb

[M][F]

LUMBER

N. L. G. A. RULES

CHORDS	SIZE		LUMBER	DESCR.
J - B	2x4	DRY	No.2	SPF
A - D	2x4	DRY	No.2	SPF
D - F	2x4	DRY	No.2	SPF
G - F	2x4	DRY	No.2	SPF
J - H	2x6	DRY	No.2	SPF
H - G	2x4	DRY	No.2	SPF
ALL WEBS	2x3	DRY	No.2	SPF

DRY: SEASONED LUMBER.

PLATES (table is in inches)

JT	TYPE	PLATES	W	LEN	Y	X
B	TMVW+p	MT20	4.0	6.0	2.75	2.00
C	TMWW-t	MT20	4.0	4.0	2.00	1.00
D	TS-t	MT20	3.0	6.0		
E	TMWW-t	MT20	4.0	4.0	2.00	1.00
F	TMV+p	MT20	2.0	4.0		
G	BMVW1-t	MT20	3.0	4.0	1.50	1.75
H	BBWW+p	MT20	7.0	8.0	3.25	2.75
I	BMWW-t	MT20	5.0	6.0		
J	BMV1+p	MT20	3.0	5.0		

LATERAL BRACE(S) SHOWN SHALL BE 2X4 SPF#2

DIMENSIONS, SUPPORTS AND LOADINGS SPECIFIED BY FABRICATOR TO BE VERIFIED BY BUILDING DESIGNER

BEARINGS

JT	FACTORED GROSS REACTION VERT	HORZ	MAXIMUM FACTORED GROSS REACTION DOWN	HORZ	UPLIFT	INPUT BRG	REQRD BRG
J	682	0	682	0	0	5-8	1-8
G	573	0	573	0	0	MECHANICAL	

A SUITABLE HANGER/MECHANICAL CONNECTION IS REQUIRED AT JOINT G. MINIMUM BEARING LENGTH AT JOINT G = 1-8.

UNFACTORED REACTIONS

JT	1ST LCASE COMBINED	MAX./MIN. COMPONENT REACTIONS SNOW	LIVE	PERM.LIVE	WIND	DEAD	SOIL
J	484	308 / 0	0 / 0	0 / 0	0 / 0	176 / 0	0 / 0
G	408	249 / 0	0 / 0	0 / 0	0 / 0	159 / 0	0 / 0

BEARING MATERIAL TO BE SPF NO.2 OR BETTER AT JOINT(S) J

BRACING

TOP CHORD TO BE SHEATHED OR MAX. PURLIN SPACING = 5.29 FT.
MAX. UNBRACED BOTTOM CHORD LENGTH = 10.00 FT OR RIGID CEILING DIRECTLY APPLIED.

ALL PITCH BREAKS AND PERIMETER CORNER JOINTS MUST BE LATERALLY RESTRAINED.

LOADING

TOTAL LOAD CASES: (4)

CHORDS

MEMB. FR-TO	MAX. FACTORED FORCE (LBS)	FACTORED VERT. LOAD (PLF) FROM	TO	LC1 MAX CSI (LC)	MAX. UNBRAC LENGTH
J- B	-622 / 0	0.0	0.0	0.07 (1)	7.81
A- B	0 / 38	-78.0	-78.0	0.11 (1)	10.00
B- C	-1383 / 0	-78.0	-78.0	0.24 (1)	5.29
C- D	-850 / 0	-78.0	-78.0	0.19 (1)	6.25
D- E	-850 / 0	-78.0	-78.0	0.19 (1)	6.25
E- F	-35 / 0	-78.0	-78.0	0.11 (1)	6.25
G- F	-36 / 0	0.0	0.0	0.01 (1)	7.81
J- I	-9 / 2	-18.5	-18.5	0.07 (1)	10.00
I- H	0 / 1342	-18.5	-18.5	0.22 (1)	10.00
H- G	0 / 553	-18.5	-18.5	0.11 (1)	10.00

WEBS

MEMB. FR-TO	MAX. FACTORED FORCE (LBS)	MAX CSI (LC)
B- I	0 / 1181	0.27 (1)
I- C	-242 / 0	0.04 (1)
C- H	-416 / 0	0.29 (1)
H- E	0 / 819	0.18 (1)
E- G	-770 / 0	0.14 (1)

DESIGN CRITERIA

SPECIFIED LOADS:

TOP	CH.	LL	=	21.0	PSF
		DL	=	6.0	PSF
BOT	CH.	LL	=	0.0	PSF
		DL	=	7.4	PSF
TOTAL	LOAD		=	34.4	PSF

SPACING = 24.0 IN. C/C

THIS TRUSS IS DESIGNED FOR RESIDENTIAL OR SMALL BUILDING REQUIREMENTS OF PART 9, NBCC 2015

THIS DESIGN COMPLIES WITH:
- PART 9 OF BCBC 2018 , ABC 2019
- PART 9 OF OBC 2012 (2019 AMENDMENT)
- CSA 086-14
- TPIC 2014

(55 % OF 23.0 P.S.F. G.S.L. PLUS 8.4 P.S.F. RAIN LOAD) EQUALS 21.0 P.S.F. SPECIFIED ROOF LIVE LOAD

ALLOWABLE DEFL.(LL)= L/360 (0.40")
CALCULATED VERT. DEFL.(LL) = L/ 999 (0.05")
ALLOWABLE DEFL.(TL)= L/360 (0.40")
CALCULATED VERT. DEFL.(TL) = L/ 999 (0.09")

CSI: TC=0.24/1.00 (B-C:1) , BC=0.22/1.00 (H-I:1) , WB=0.29/1.00 (C-H:1) , SSI=0.12/1.00 (B-C:1)

DOL LUMBER=1.00 NAIL=1.00 LS BEND=1.10 COMP=1.10 SHEAR=1.10 TENS= 1.10

COMPANION LIVE LOAD FACTOR = 1.00

TRUSS PLATE MANUFACTURER IS NOT RESPONSIBLE FOR QUALITY CONTROL IN THE TRUSS MANUFACTURING PLANT .

NAIL VALUES

PLATE	GRIP(DRY) (PSI) MAX	MIN	SHEAR (PLI) MAX	MIN	SECTION (PLI) MAX	MIN
MT20	650	371	1747	788	1987	1873

PLATE PLACEMENT TOL. = 0.250 inches

PLATE ROTATION TOL. = 5.0 Deg.

JSI GRIP= 0.83 (E) (INPUT = 0.90)
JSI METAL= 0.59 (B) (INPUT = 1.00)

JOB NAME	TRUSS NAME	QUANTITY	PLY	JOB DESC.		DRWG NO.
336324	H97		1	TRUSS DESC.	JT 45147	E21104096

Alpa Roof Truss, Maple

Version 8.420 S Jan 21 2021 MiTek Industries, Inc. Wed Oct 13 14:52:13 2021 Page 1

ID:hd511hZTz bdeQoS817GKByhVxV-?26bcMAuigqAgj05SyloXSVso59iuT?2tzzTwoyTp6W

Scale = 1:60.0

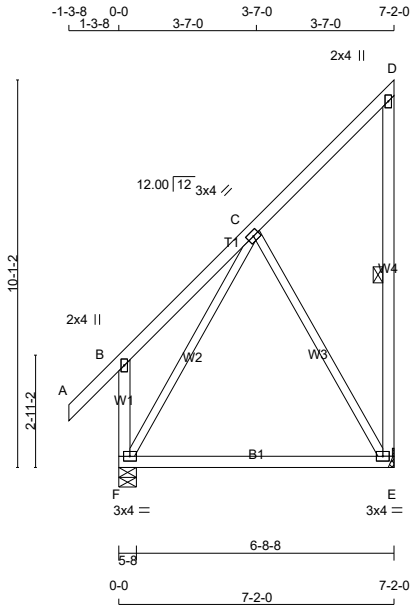

TOTAL WEIGHT = 6 X 47 = 279 lb

[M][F]

LUMBER

N. L. G. A. RULES

CHORDS	SIZE		LUMBER	DESCR.
A - D	2x4	DRY	No.2	SPF
E - D	2x4	DRY	No.2	SPF
F - B	2x4	DRY	No.2	SPF
F - E	2x4	DRY	No.2	SPF
ALL WEBS EXCEPT	2x3	DRY	No.2	SPF

DRY: SEASONED LUMBER.

PLATES (table is in inches)

JT	TYPE	PLATES	W	LEN Y	X
B	TMV+p	MT20	2.0	4.0	
C	TMWW-t	MT20	3.0	4.0	
D	TMV+p	MT20	2.0	4.0	
E	BMVW1-t	MT20	3.0	4.0	
F	BMVW1-t	MT20	3.0	4.0	

LATERAL BRACE(S) SHOWN SHALL BE 2X4 SPF#2

DIMENSIONS, SUPPORTS AND LOADINGS SPECIFIED BY FABRICATOR TO BE VERIFIED BY BUILDING DESIGNER

BEARINGS

JT	FACTORED GROSS REACTION VERT	HORZ	MAXIMUM FACTORED GROSS REACTION DOWN	HORZ	UPLIFT	INPUT BRG IN-SX	REQRD BRG IN-SX
E	346	0	346	0	0	MECHANICAL	
F	454	0	454	0	0	5-8	1-8

A SUITABLE HANGER/MECHANICAL CONNECTION IS REQUIRED AT JOINT E. MINIMUM BEARING LENGTH AT JOINT E = 1-8.

UNFACTORED REACTIONS

JT	1ST LCASE COMBINED	MAX./MIN. COMPONENT REACTIONS SNOW	LIVE	PERM.LIVE	WIND	DEAD	SOIL
E	246	150 / 0	0 / 0	0 / 0	0 / 0	96 / 0	0 / 0
F	322	209 / 0	0 / 0	0 / 0	0 / 0	113 / 0	0 / 0

BEARING MATERIAL TO BE SPF NO.2 OR BETTER AT JOINT(S) F

BRACING

TOP CHORD TO BE SHEATHED OR MAX. PURLIN SPACING = 6.25 FT.
MAX. UNBRACED BOTTOM CHORD LENGTH = 10.00 FT OR RIGID CEILING DIRECTLY APPLIED.

ALL PITCH BREAKS AND PERIMETER CORNER JOINTS MUST BE LATERALLY RESTRAINED.

1 LATERAL BRACE(S) AT 1/ 2 LENGTH OF D-E.

END VERTICAL(S) MUST BE SHEATHED OR HAVE BRACES AS INDICATED IN THE MAX. UNBRACED LENGTH COLUMN OF THE TABLE BELOW

LOADING

TOTAL LOAD CASES: (4)

CHORDS

MEMB. FR-TO	MAX. FACTORED FORCE (LBS)	FACTORED VERT. LOAD (PLF) FROM	TO	LC1 CSI (LC)	MAX UNBRAC LENGTH
A- B	0 / 38	-78.0	-78.0	0.11 (1)	10.00
B- C	0 / 25	-78.0	-78.0	0.17 (1)	10.00
C- D	-24 / 0	-78.0	-78.0	0.13 (1)	6.25
E- D	-109 / 0	0.0	0.0	0.05 (1)	6.25
F- B	-210 / 0	0.0	0.0	0.03 (1)	7.81
F- E	0 / 102	-18.5	-18.5	0.28 (4)	10.00

WEBS

MEMB. FR-TO	MAX. FACTORED FORCE (LBS)	MAX CSI (LC)
C- E	-199 / 0	0.19 (1)
F- C	-205 / 0	0.18 (1)

DESIGN CRITERIA

SPECIFIED LOADS:

TOP CH.	LL	=	21.0	PSF
	DL	=	6.0	PSF
BOT CH.	LL	=	0.0	PSF
	DL	=	7.4	PSF
TOTAL LOAD		=	34.4	PSF

SPACING = 24.0 IN. C/C

THIS TRUSS IS DESIGNED FOR RESIDENTIAL OR SMALL BUILDING REQUIREMENTS OF PART 9, NBCC 2015

THIS DESIGN COMPLIES WITH:
- PART 9 OF BCBC 2018 , ABC 2019
- PART 9 OF OBC 2012 (2019 AMENDMENT)
- CSA 086-14
- TPIC 2014

(55 % OF 23.0 P.S.F. G.S.L. PLUS 8.4 P.S.F. RAIN LOAD) EQUALS 21.0 P.S.F. SPECIFIED ROOF LIVE LOAD

ALLOWABLE DEFL.(TL)= L/360 (0.24")
CALCULATED VERT. DEFL.(TL) = L/ 723 (0.12")

CSI: TC=0.17/1.00 (B-C:1) , BC=0.28/1.00 (E-F:4) , WB=0.19/1.00 (C-E:1) , SSI=0.10/1.00 (C-D:1)

DOL LUMBER=1.00 NAIL=1.00 LS BEND=1.10 COMP=1.10 SHEAR=1.10 TENS= 1.10

COMPANION LIVE LOAD FACTOR = 1.00

TRUSS PLATE MANUFACTURER IS NOT RESPONSIBLE FOR QUALITY CONTROL IN THE TRUSS MANUFACTURING PLANT .

NAIL VALUES

PLATE	GRIP(DRY) (PSI) MAX	MIN	SHEAR (PLI) MAX	MIN	SECTION (PLI) MAX	MIN
MT20	650	371	1747	788	1987	1873

PLATE PLACEMENT TOL. = 0.250 inches

PLATE ROTATION TOL. = 5.0 Deg.

JSI GRIP= 0.32 (C) (INPUT = 0.90)
JSI METAL= 0.11 (B) (INPUT = 1.00)

JOB NAME	TRUSS NAME	QUANTITY	PLY	JOB DESC.		DRWG NO.
336324	H98		1	TRUSS DESC.	JT 45147	E21104097

Alpa Roof Truss, Maple

Version 8.420 S Jan 21 2021 MiTek Industries, Inc. Wed Oct 13 14:52:15 2021 Page 1

ID:hd511hZTz bdeQoS817GKByhVxV-xQEL11C9Elwuw1AUaNnGcta8GvsfMKwLKHSZ gyTp6U

Scale = 1:67.8

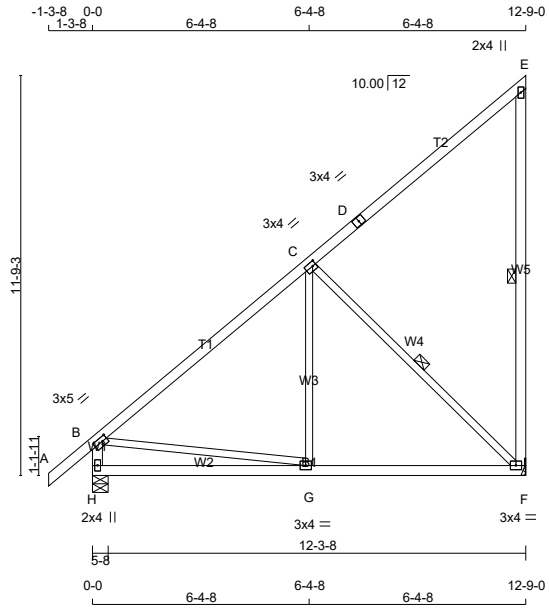

TOTAL WEIGHT = 3 X 66 = 197 lb

[M][F]

LUMBER

N. L. G. A. RULES

CHORDS	SIZE		LUMBER	DESCR.
A - D	2x4	DRY	No.2	SPF
D - E	2x4	DRY	No.2	SPF
F - E	2x4	DRY	No.2	SPF
H - B	2x4	DRY	No.2	SPF
H - F	2x4	DRY	No.2	SPF
ALL WEBS EXCEPT	2x3	DRY	No.2	SPF

DRY: SEASONED LUMBER.

PLATES (table is in inches)

JT	TYPE	PLATES	W	LEN	Y	X
B	TMVW-t	MT20	3.0	5.0	1.50	1.75
C	TMWW-t	MT20	3.0	4.0	1.50	1.25
D	TS-t	MT20	3.0	4.0		
E	TMV+p	MT20	2.0	4.0		
F	BMVW1-t	MT20	3.0	4.0		
G	BMWW-t	MT20	3.0	4.0		
H	BMV1+p	MT20	2.0	4.0		

LATERAL BRACE(S) SHOWN SHALL BE 2X4 SPF#2

DIMENSIONS, SUPPORTS AND LOADINGS SPECIFIED BY FABRICATOR TO BE VERIFIED BY BUILDING DESIGNER

BEARINGS

JT	FACTORED GROSS REACTION VERT	HORZ	MAXIMUM FACTORED GROSS REACTION DOWN	HORZ	UPLIFT	INPUT BRG IN-SX	REQRD BRG IN-SX
F	615	0	615	0	0	MECHANICAL	
H	723	0	723	0	0	5-8	1-8

A SUITABLE HANGER/MECHANICAL CONNECTION IS REQUIRED AT JOINT F. MINIMUM BEARING LENGTH AT JOINT F = 1-8.

UNFACTORED REACTIONS

JT	1ST LCASE COMBINED	MAX./MIN. COMPONENT REACTIONS SNOW	LIVE	PERM.LIVE	WIND	DEAD	SOIL
F	438	268 / 0	0 / 0	0 / 0	0 / 0	171 / 0	0 / 0
H	513	326 / 0	0 / 0	0 / 0	0 / 0	187 / 0	0 / 0

BEARING MATERIAL TO BE SPF NO.2 OR BETTER AT JOINT(S) H

BRACING

TOP CHORD TO BE SHEATHED OR MAX. PURLIN SPACING = 6.25 FT.
MAX. UNBRACED BOTTOM CHORD LENGTH = 10.00 FT OR RIGID CEILING DIRECTLY APPLIED.

ALL PITCH BREAKS AND PERIMETER CORNER JOINTS MUST BE LATERALLY RESTRAINED.

1 LATERAL BRACE(S) AT 1/ 2 LENGTH OF E-F, C-F.

END VERTICAL(S) MUST BE SHEATHED OR HAVE BRACES AS INDICATED IN THE MAX. UNBRACED LENGTH COLUMN OF THE TABLE BELOW

LOADING

TOTAL LOAD CASES: (4)

CHORDS

MEMB. FR-TO	MAX. FACTORED FORCE (LBS)	FACTORED VERT. LOAD (PLF) FROM	TO	LC1 MAX CSI (LC)	MAX. UNBRAC LENGTH
A- B	0 / 35	-78.0	-78.0	0.11 (1)	10.00
B- C	-480 / 0	-78.0	-78.0	0.43 (1)	6.25
C- D	-39 / 0	-78.0	-78.0	0.42 (1)	6.25
D- E	-39 / 0	-78.0	-78.0	0.42 (1)	6.25
F- E	-187 / 0	0.0	0.0	0.14 (1)	6.25
H- B	-678 / 0	0.0	0.0	0.07 (1)	7.81
H- G	0 / 0	-18.5	-18.5	0.21 (4)	10.00
G- F	0 / 399	-18.5	-18.5	0.25 (4)	10.00

WEBS

MEMB. FR-TO	MAX. FACTORED FORCE (LBS)	MAX CSI (LC)
G- C	0 / 145	0.05 (4)
C- F	-553 / 0	0.29 (1)
B- G	0 / 402	0.09 (1)

DESIGN CRITERIA

SPECIFIED LOADS:

TOP CH.	LL	=	21.0	PSF
	DL	=	6.0	PSF
BOT CH.	LL	=	0.0	PSF
	DL	=	7.4	PSF
TOTAL LOAD		=	34.4	PSF

SPACING = 24.0 IN. C/C

THIS TRUSS IS DESIGNED FOR RESIDENTIAL OR SMALL BUILDING REQUIREMENTS OF PART 9, NBCC 2015

THIS DESIGN COMPLIES WITH:
- PART 9 OF BCBC 2018 , ABC 2019
- PART 9 OF OBC 2012 (2019 AMENDMENT)
- CSA 086-14
- TPIC 2014

(55 % OF 23.0 P.S.F. G.S.L. PLUS 8.4 P.S.F. RAIN LOAD) EQUALS 21.0 P.S.F. SPECIFIED ROOF LIVE LOAD

ALLOWABLE DEFL.(LL)= L/360 (0.42")
CALCULATED VERT. DEFL.(LL) = L/ 999 (0.01")
ALLOWABLE DEFL.(TL)= L/360 (0.42")
CALCULATED VERT. DEFL.(TL) = L/ 999 (0.04")

CSI: TC=0.43/1.00 (B-C:1) , BC=0.25/1.00 (F-G:4) , WB=0.29/1.00 (C-F:1) , SSI=0.19/1.00 (B-C:1)

DOL LUMBER=1.00 NAIL=1.00 LS BEND=1.10 COMP=1.10 SHEAR=1.10 TENS= 1.10

COMPANION LIVE LOAD FACTOR = 1.00

TRUSS PLATE MANUFACTURER IS NOT RESPONSIBLE FOR QUALITY CONTROL IN THE TRUSS MANUFACTURING PLANT .

NAIL VALUES

PLATE	GRIP(DRY) (PSI) MAX	MIN	SHEAR (PLI) MAX	MIN	SECTION (PLI) MAX	MIN
MT20	650	371	1747	788	1987	1873

PLATE PLACEMENT TOL. = 0.250 inches

PLATE ROTATION TOL. = 5.0 Deg.

JSI GRIP= 0.68 (C) (INPUT = 0.90)
JSI METAL= 0.20 (B) (INPUT = 1.00)

JOB NAME	TRUSS NAME	QUANTITY	PLY	JOB DESC.		DRWG NO.
336324	H98G		1	TRUSS DESC.	JT 45147	E21104098

Alpa Roof Truss, Maple

Version 8.420 S Jan 21 2021 MiTek Industries, Inc. Wed Oct 13 14:52:16 2021 Page 1

ID:hd511hZTz bdeQoS817GKByhVxV-QdokENDn b2lXAlg84lV847O1IFI5p1UZxC7X7yTp6T

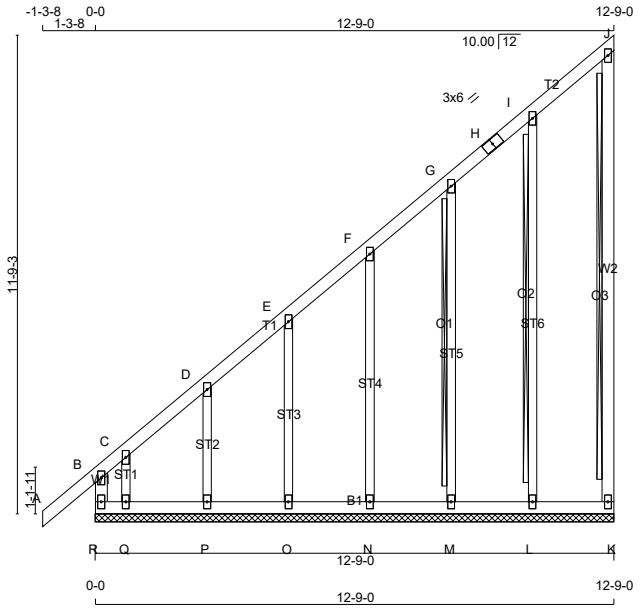

TOTAL WEIGHT = 75 lb

[M]

LUMBER

N. L. G. A. RULES

CHORDS	SIZE		LUMBER	DESCR.
R - B	2x4	DRY	No.2	SPF
A - H	2x4	DRY	No.2	SPF
H - J	2x4	DRY	No.2	SPF
K - J	2x4	DRY	No.2	SPF
R - K	2x4	DRY	No.2	SPF
ALL WEBS	2x3	DRY	No.2	SPF
ALL GABLE WEBS	2x3	DRY	No.2	SPF

DRY: SEASONED LUMBER.

GABLE STUDS SPACED AT 2-0-0 OC.

PLATES (table is in inches)

JT	TYPE	PLATES	W	LEN	Y	X
B	TMV+p	MT20	2.0	4.0		
C, D, E, F, G, I						
C	TMW+w	MT20	2.0	4.0		
H	TS-t	MT20	3.0	6.0		
J	TMV+p	MT20	2.0	4.0		
K	BMV1+p	MT20	2.0	4.0		
L, M, N, O, P, Q						
L	BMW1+w	MT20	2.0	4.0		
R	BMV1+p	MT20	2.0	4.0		

LATERAL BRACE(S) SHOWN SHALL BE 2X4 SPF#2

DIMENSIONS, SUPPORTS AND LOADINGS SPECIFIED BY FABRICATOR TO BE VERIFIED BY BUILDING DESIGNER

BEARINGS

THIS TRUSS DESIGNED FOR CONTINUOUS BEARINGS.

THIS TRUSS REQUIRES RIGID SHEATHING ON EXPOSED FACE.

BEARING MATERIAL TO BE SPF NO.2 OR BETTER AT JOINT(S)

BRACING

TOP CHORD TO BE SHEATHED OR MAX. PURLIN SPACING = 6.25 FT.
MAX. UNBRACED BOTTOM CHORD LENGTH = 10.00 FT OR RIGID CEILING DIRECTLY APPLIED.

ALL PITCH BREAKS AND PERIMETER CORNER JOINTS MUST BE LATERALLY RESTRAINED.

2x4 DRY SPF No.2 T-BRACE AT J-K, I-L
2x3 DRY SPF No.2 T-BRACE AT G-M

FASTEN T AND I-BRACES TO NARROW EDGE OF WEB WITH ONE ROW PER PLY OF 3" COMMON WIRE NAILS @ 6" O.C. WITH 3" MINIMUM END DISTANCE. BRACE MUST COVER 90% OF WEB LENGTH.

END VERTICAL(S) MUST BE SHEATHED OR HAVE BRACES AS INDICATED IN THE MAX. UNBRACED LENGTH COLUMN OF THE TABLE BELOW

LOADING

TOTAL LOAD CASES: (4)

CHORDS

MEMB. FR-TO	MAX. FACTORED FORCE (LBS)	FACTORED VERT. LOAD (PLF) FROM	TO	LC1	MAX CSI (LC)	MAX. UNBRAC LENGTH
R- B	-223 / 0	0.0	0.0	0.03 (1)	7.81	
A- B	0 / 35	-78.0	-78.0	0.11 (1)	10.00	
B- C	-70 / 0	-78.0	-78.0	0.09 (1)	6.25	
C- D	-15 / 0	-78.0	-78.0	0.04 (1)	6.25	
D- E	-14 / 0	-78.0	-78.0	0.04 (1)	6.25	
E- F	-9 / 0	-78.0	-78.0	0.04 (1)	10.00	
F- G	-6 / 0	-78.0	-78.0	0.04 (1)	10.00	
G- H	-3 / 0	-78.0	-78.0	0.04 (1)	10.00	
H- I	-3 / 0	-78.0	-78.0	0.04 (1)	10.00	
I- J	-8 / 0	-78.0	-78.0	0.04 (1)	10.00	
K- J	-71 / 0	0.0	0.0	0.02 (1)	7.81	
R- Q	0 / 16	-18.5	-18.5	0.03 (1)	10.00	
Q- P	0 / 15	-18.5	-18.5	0.02 (4)	10.00	
P- O	0 / 10	-18.5	-18.5	0.02 (4)	10.00	
O- N	0 / 7	-18.5	-18.5	0.02 (4)	10.00	
N- M	0 / 4	-18.5	-18.5	0.02 (4)	10.00	
M- L	0 / 3	-18.5	-18.5	0.02 (4)	10.00	
L- K	0 / 1	-18.5	-18.5	0.02 (4)	10.00	

WEBS

MEMB. FR-TO	MAX. FACTORED FORCE (LBS)	MAX CSI (LC)
L- I	-169 / 0	0.13 (1)
M- G	-153 / 0	0.17 (1)
N- F	-155 / 0	0.12 (1)
O- E	-152 / 0	0.06 (1)
P- D	-161 / 0	0.03 (1)
Q- C	-19 / 0	0.00 (1)

DESIGN CRITERIA

SPECIFIED LOADS:

TOP	CH.	LL	=	21.0	PSF
		DL	=	6.0	PSF
BOT	CH.	LL	=	0.0	PSF
		DL	=	7.4	PSF
TOTAL	LOAD		=	34.4	PSF

SPACING = 24.0 IN. C/C

THIS TRUSS IS DESIGNED FOR RESIDENTIAL OR SMALL BUILDING REQUIREMENTS OF PART 9, NBCC 2015

THIS DESIGN COMPLIES WITH:
- PART 9 OF BCBC 2018 , ABC 2019
- PART 9 OF OBC 2012 (2019 AMENDMENT)
- CSA 086-14
- TPIC 2014

DESIGN ASSUMPTIONS
-OVERHANG NOT TO BE ALTERED OR CUT OFF.

(55 % OF 23.0 P.S.F. G.S.L. PLUS 8.4 P.S.F. RAIN LOAD) EQUALS 21.0 P.S.F. SPECIFIED ROOF LIVE LOAD

CSI: TC=0.11/1.00 (A-B:1) , BC=0.03/1.00 (Q-R:1) , WB=0.17/1.00 (G-M:1) , SSI=0.06/1.00 (A-B:1)

DOL LUMBER=1.00 NAIL=1.00 LS BEND=1.10 COMP=1.10 SHEAR=1.10 TENS= 1.10

COMPANION LIVE LOAD FACTOR = 1.00

TRUSS PLATE MANUFACTURER IS NOT RESPONSIBLE FOR QUALITY CONTROL IN THE TRUSS MANUFACTURING PLANT .

NAIL VALUES

PLATE	GRIP(DRY) (PSI) MAX	MIN	SHEAR (PLI) MAX	MIN	SECTION (PLI) MAX	MIN
MT20	650	371	1747	788	1987	1873

PLATE PLACEMENT TOL. = 0.250 inches

PLATE ROTATION TOL. = 5.0 Deg.

JSI GRIP= 0.17 (B) (INPUT = 0.90)
JSI METAL= 0.13 (B) (INPUT = 1.00)

JOB NAME	TRUSS NAME	QUANTITY	PLY	JOB DESC.		DRWG NO.
336324	H101		1	TRUSS DESC.	JT 45147	E21104099

Alpa Roof Truss, Maple

Version 8.420 S Jan 21 2021 MiTek Industries, Inc. Wed Oct 13 14:52:18 2021 Page 1

ID:hd511hZTz bdeQoS817GKByhVxV-M?wUf3E1WDISnUv3FVKzEVCeQ6vHZkmn0FhDb?yTp6R

Scale = 1:35.9

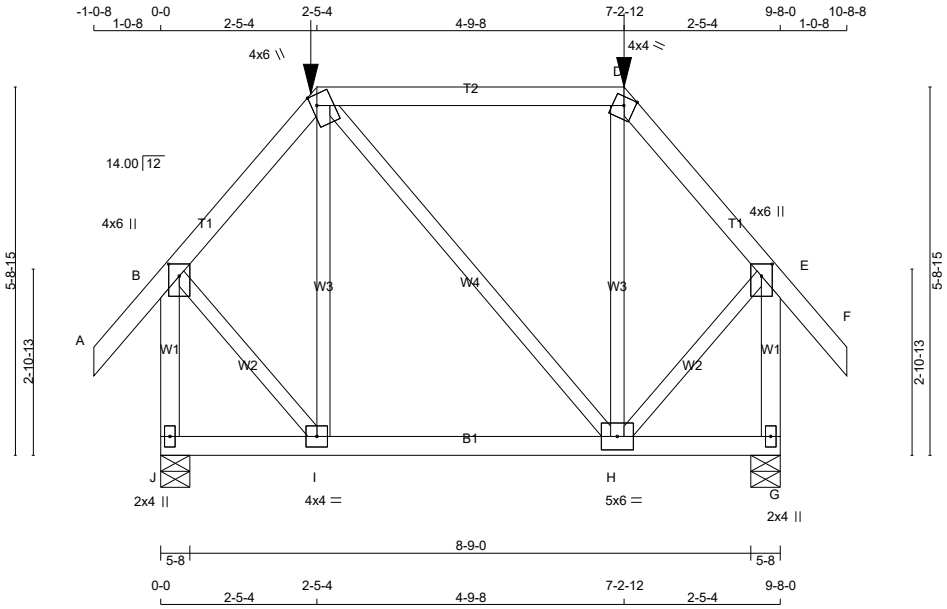

TOTAL WEIGHT = 54 lb

[M]

LUMBER

N. L. G. A. RULES

CHORDS	SIZE		LUMBER	DESCR.
A - C	2x4	DRY	No.2	SPF
C - D	2x4	DRY	No.2	SPF
D - F	2x4	DRY	No.2	SPF
J - B	2x4	DRY	No.2	SPF
G - E	2x4	DRY	No.2	SPF
J - G	2x4	DRY	No.2	SPF
ALL WEBS EXCEPT	2x3	DRY	No.2	SPF

DRY: SEASONED LUMBER.

PLATES (table is in inches)

JT	TYPE	PLATES	W	LEN	Y	X
B	TMVW+p	MT20	4.0	6.0	2.25	2.00
C	TTWW+m	MT20	4.0	6.0	2.00	1.00
D	TTW-m	MT20	4.0	4.0	Edge	
E	TMVW+p	MT20	4.0	6.0	2.25	2.00
G	BMV1+p	MT20	2.0	4.0		
H	BMWWW-t	MT20	5.0	6.0		
I	BMWW-t	MT20	4.0	4.0		
J	BMV1+p	MT20	2.0	4.0		

Edge - INDICATES REFERENCE CORNER OF PLATE TOUCHES EDGE OF CHORD.

LATERAL BRACE(S) SHOWN SHALL BE 2X4 SPF#2

DIMENSIONS, SUPPORTS AND LOADINGS SPECIFIED BY FABRICATOR TO BE VERIFIED BY BUILDING DESIGNER

BEARINGS

JT	FACTORED GROSS REACTION VERT	HORZ	MAXIMUM FACTORED GROSS REACTION DOWN	HORZ	UPLIFT	INPUT BRG IN-SX	REQRD BRG IN-SX
J	761	0	761	0	0	5-8	1-8
G	761	0	761	0	0	5-8	1-8

UNFACTORED REACTIONS

JT	1ST LCASE COMBINED	MAX./MIN. COMPONENT REACTIONS SNOW	LIVE	PERM.LIVE	WIND	DEAD	SOIL
J	541	339 / 0	0 / 0	0 / 0	0 / 0	202 / 0	0 / 0
G	541	339 / 0	0 / 0	0 / 0	0 / 0	202 / 0	0 / 0

BEARING MATERIAL TO BE SPF NO.2 OR BETTER AT JOINT(S) J, G

BRACING

TOP CHORD TO BE SHEATHED OR MAX. PURLIN SPACING = 6.25 FT.
MAX. UNBRACED BOTTOM CHORD LENGTH = 10.00 FT OR RIGID CEILING DIRECTLY APPLIED.

ALL PITCH BREAKS AND PERIMETER CORNER JOINTS MUST BE LATERALLY RESTRAINED.

LOADING

TOTAL LOAD CASES: (4)

CHORDS

MEMB. FR-TO	MAX. FACTORED FORCE (LBS)	FACTORED VERT. LOAD (PLF) FROM	TO	LC1 CSI (LC)	MAX UNBRAC LENGTH
A- B	0 / 34	-78.0	-78.0	0.08 (1)	10.00
B- C	-396 / 0	-78.0	-78.0	0.09 (1)	6.25
C- D	-252 / 0	-114.5	-114.5	0.50 (1)	6.25
D- E	-395 / 0	-78.0	-78.0	0.09 (1)	6.25
E- F	0 / 34	-78.0	-78.0	0.08 (1)	10.00
J- B	-741 / 0	0.0	0.0	0.12 (1)	7.81
G- E	-740 / 0	0.0	0.0	0.12 (1)	7.81
J- I	0 / 0	-27.2	-27.2	0.10 (4)	10.00
I- H	0 / 253	-27.2	-27.2	0.13 (4)	10.00
H- G	0 / 0	-27.2	-27.2	0.10 (4)	10.00

WEBS

MEMB. FR-TO	MAX. FACTORED FORCE (LBS)	MAX CSI (LC)
I- C	-142 / 24	0.07 (1)
C- H	0 / 0	0.00 (1)
H- D	-143 / 24	0.07 (1)
B- I	0 / 360	0.09 (1)
H- E	0 / 360	0.09 (1)

FACTORED CONCENTRATED LOADS (LBS)

JT	LOC.	LC1	MAX-	MAX+	FACE	DIR.	TYPE	HEEL	CONN.
C	2-5-4	-75	-75	---	FRONT	VERT	TOTAL	---	C1
D	7-2-12	-75	-75	---	FRONT	VERT	TOTAL	---	C1

CONNECTION REQUIREMENTS

1) **C1:** A SUITABLE HANGER/MECHANICAL CONNECTION IS REQUIRED.

DESIGN CRITERIA

SPECIFIED LOADS:

TOP CH.	LL	=	21.0	PSF
	DL	=	6.0	PSF
BOT CH.	LL	=	0.0	PSF
	DL	=	7.4	PSF
TOTAL LOAD		=	34.4	PSF

SPACING = 24.0 IN. C/C

LOADING IN FLAT SECTION BASED ON A SLOPE OF 2.00/12 MINIMUM

GIRDER TYPE: CPrimeHip
SIDE SETBACK = 2-5-4
END SETBACK = 3-10-8
END WALL WIDTH = 0-0
CORNER FRAMING TYPE: CONVENTIONAL
END JACK TYPE: CONVENTIONAL
APPLIED TO FRONT SIDE
- ADDT'L LOADS BASED ON 55 % OF GSL.

THIS TRUSS IS DESIGNED FOR RESIDENTIAL OR SMALL BUILDING REQUIREMENTS OF PART 9, NBCC 2015

THIS DESIGN COMPLIES WITH:
- PART 9 OF BCBC 2018 , ABC 2019
- PART 9 OF OBC 2012 (2019 AMENDMENT)
- CSA 086-14
- TPIC 2014

(55 % OF 23.0 P.S.F. G.S.L. PLUS 8.4 P.S.F. RAIN LOAD) EQUALS 21.0 P.S.F. SPECIFIED ROOF LIVE LOAD

ALLOWABLE DEFL.(LL)= L/360 (0.32")
CALCULATED VERT. DEFL.(LL) = L/ 999 (0.00")
ALLOWABLE DEFL.(TL)= L/360 (0.32")
CALCULATED VERT. DEFL.(TL) = L/ 999 (0.02")

CSI: TC=0.50/1.00 (C-D:1) , BC=0.13/1.00 (H-I:4) , WB=0.09/1.00 (B-I:1) , SSI=0.24/1.00 (C-D:1)

DOL LUMBER=1.00 NAIL=1.00 LS BEND=1.00 COMP=1.00 SHEAR=1.00 TENS= 1.00

COMPANION LIVE LOAD FACTOR = 1.00

TRUSS PLATE MANUFACTURER IS NOT RESPONSIBLE FOR QUALITY CONTROL IN THE TRUSS MANUFACTURING PLANT .

NAIL VALUES

PLATE	GRIP(DRY) (PSI) MAX	MIN	SHEAR (PLI) MAX	MIN	SECTION (PLI) MAX	MIN
MT20	650	371	1747	788	1987	1873

PLATE PLACEMENT TOL. = 0.250 inches

PLATE ROTATION TOL. = 5.0 Deg.

JSI GRIP= 0.42 (B) (INPUT = 0.90)
JSI METAL= 0.18 (B) (INPUT = 1.00)

JOB NAME	TRUSS NAME	QUANTITY	PLY	JOB DESC.	DRWG NO.
336324	H102		2	TRUSS DESC. JT 45147	E21104100

Alpa Roof Truss, Maple

Version 8.420 S Jan 21 2021 MiTek Industries, Inc. Wed Oct 13 14:52:19 2021 Page 1

ID:hd511hZTz bdeQoS817GKByhVxV-qCTssPFfHWQJPeUFpCsCmjlt2WAAI9YwFvQn8RyTp6Q

Scale = 1:39.8

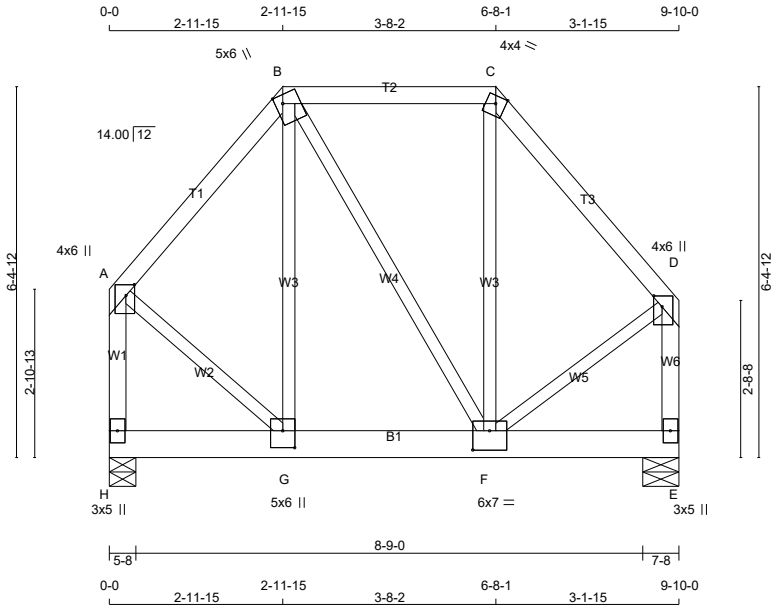

TOTAL WEIGHT = 2 X 59 = 118 lb

[M]

LUMBER

N. L. G. A. RULES

CHORDS	SIZE		LUMBER	DESCR.
A - B	2x4	DRY	No.2	SPF
B - C	2x4	DRY	No.2	SPF
C - D	2x4	DRY	No.2	SPF
H - A	2x4	DRY	No.2	SPF
E - D	2x4	DRY	No.2	SPF
H - E	2x6	DRY	No.2	SPF
ALL WEBS EXCEPT	2x3	DRY	No.2	SPF

DRY: SEASONED LUMBER.

DESIGN CONSISTS OF 2 TRUSSES BUILT SEPARATELY THEN FASTENED TOGETHER AS FOLLOWS:

CHORDS	#ROWS	SURFACE SPACING (IN)	LOAD(PLF)
TOP CHORDS : (0.122"X3") SPIRAL NAILS			
A- B	1	12	TOP
B- C	1	12	TOP
C- D	1	12	TOP
H- A	1	12	TOP
E- D	1	12	TOP
BOTTOM CHORDS : (0.122"X3") SPIRAL NAILS			
H- E	2	6	SIDE(376.8)
WEBS : (0.122"X3") SPIRAL NAILS			
2x3	1	6	

NAILS TO BE DRIVEN FROM ONE SIDE ONLY.

TOP - COMPONENTS ARE LOADED FROM THE TOP AND MUST BE PLACED ON TOP EDGE OF ALL PLIES FOR THE LOAD TO BE TRANSFERRED TO EACH PLY.

SIDE - PLF SHOWN IS THE EQUIVALENT UDL APPLIED TO ONE SIDE THAT THE CORRESPONDING NAILING PATTERN SHALL BE CAPABLE OF TRANSFERING. REMAINING PLF MUST BE APPLIED ON THE OPPOSITE SIDE OR ON THE TOP.

PLATES (table is in inches)

JT	TYPE	PLATES	W	LEN	Y	X
A	TMVW+p	MT20	4.0	6.0	2.25	1.75
B	TTWW+m	MT20	5.0	6.0	1.75	1.50
C	TTW-m	MT20	4.0	4.0	Edge	

LATERAL BRACE(S) SHOWN SHALL BE 2X4 SPF#2

DIMENSIONS, SUPPORTS AND LOADINGS SPECIFIED BY FABRICATOR TO BE VERIFIED BY BUILDING DESIGNER

BEARINGS

JT	FACTORED GROSS REACTION VERT	HORZ	MAXIMUM FACTORED GROSS REACTION DOWN	HORZ	UPLIFT	INPUT BRG IN-SX	REQRD BRG IN-SX
H	4180	0	4180	0	0	5-8	3-5
E	4180	0	4180	0	0	7-8	3-5

UNFACTORED REACTIONS

JT	1ST LCASE COMBINED	MAX./MIN. COMPONENT REACTIONS SNOW	LIVE	PERM.LIVE	WIND	DEAD	SOIL
H	2980	1819 / 0	0 / 0	0 / 0	0 / 0	1161 / 0	0 / 0
E	2980	1819 / 0	0 / 0	0 / 0	0 / 0	1161 / 0	0 / 0

BEARING MATERIAL TO BE SPF NO.2 OR BETTER AT JOINT(S) H, E

BRACING

TOP CHORD TO BE SHEATHED OR MAX. PURLIN SPACING = 5.61 FT.
MAX. UNBRACED BOTTOM CHORD LENGTH = 10.00 FT OR RIGID CEILING DIRECTLY APPLIED.

ALL PITCH BREAKS AND PERIMETER CORNER JOINTS MUST BE LATERALLY RESTRAINED.

LOADING

TOTAL LOAD CASES: (4)

CHORDS

MEMB. FR-TO	MAX. FACTORED FORCE (LBS)	FACTORED VERT. LOAD (PLF) FROM	TO	LC1 CSI (LC)	MAX. UNBRAC LENGTH
A- B	-2418 / 0	-78.0	-78.0	0.09 (1)	5.71
B- C	-1660 / 0	-78.0	-78.0	0.11 (1)	6.25
C- D	-2522 / 0	-78.0	-78.0	0.10 (1)	5.61
H- A	-3196 / 0	0.0	0.0	0.25 (1)	6.49
E- D	-3172 / 0	0.0	0.0	0.23 (1)	6.52
H- G	0 / 0	-772.2	-772.2	0.24 (1)	10.00
G- F	0 / 1589	-772.2	-772.2	0.41 (1)	10.00
F- E	0 / 0	-772.2	-772.2	0.30 (1)	10.00

WEBS

MEMB. FR-TO	MAX. FACTORED FORCE (LBS)	MAX CSI (LC)
G- B	0 / 1465	0.18 (1)
B- F	0 / 139	0.02 (1)
F- C	0 / 1657	0.21 (1)
A- G	0 / 1992	0.25 (1)
F- D	0 / 1982	0.25 (1)

DESIGN CRITERIA

SPECIFIED LOADS:

TOP CH.	LL	=	21.0	PSF
	DL	=	6.0	PSF
BOT CH.	LL	=	0.0	PSF
	DL	=	7.4	PSF
TOTAL LOAD		=	34.4	PSF

SPACING = 24.0 IN. C/C

LOADING IN FLAT SECTION BASED ON A SLOPE OF 2.00/12 MINIMUM

GIRDER TYPE: CStdGirder
START DISTANCE = 0-0
START SPAN CARRIED = 33-3-0
END DISTANCE = 9-10-0
END SPAN CARRIED = 33-3-0
END WALL WIDTH = 0-0
APPLIED TO FRONT SIDE OF BOTTOM CHORD.
- ADDT'L LOADS BASED ON 55 % OF GSL.

THIS TRUSS IS DESIGNED FOR RESIDENTIAL OR SMALL BUILDING REQUIREMENTS OF PART 9, NBCC 2015

THIS DESIGN COMPLIES WITH:
- PART 9 OF BCBC 2018 , ABC 2019
- PART 9 OF OBC 2012 (2019 AMENDMENT)
- CSA 086-14
- TPIC 2014

(55 % OF 23.0 P.S.F. G.S.L. PLUS 8.4 P.S.F. RAIN LOAD) EQUALS 21.0 P.S.F. SPECIFIED ROOF LIVE LOAD

ALLOWABLE DEFL.(LL)= L/360 (0.33")
CALCULATED VERT. DEFL.(LL) = L/ 999 (0.02")
ALLOWABLE DEFL.(TL)= L/360 (0.33")
CALCULATED VERT. DEFL.(TL) = L/ 999 (0.03")

CSI: TC=0.25/1.00 (A-H:1) , BC=0.41/1.00 (F-G:1) , WB=0.25/1.00 (A-G:1) , SSI=0.50/1.00 (E-F:1)

DOL LUMBER=1.00 NAIL=1.00 LS BEND=1.00 COMP=1.00 SHEAR=1.00 TENS= 1.00

COMPANION LIVE LOAD FACTOR = 1.00

TRUSS PLATE MANUFACTURER IS NOT RESPONSIBLE FOR QUALITY CONTROL IN THE TRUSS MANUFACTURING PLANT .

NAIL VALUES

PLATE	GRIP(DRY) (PSI) MAX	MIN	SHEAR (PLI) MAX	MIN	SECTION (PLI) MAX	MIN
MT20	650	371	1747	788	1987	1873

PLATE PLACEMENT TOL. = 0.250 inches

PLATE ROTATION TOL. = 5.0 Deg.

JSI GRIP= 0.84 (A) (INPUT = 0.90)
JSI METAL= 0.44 (D) (INPUT = 1.00)

CONTINUED ON PAGE 2

PLATES (table is in inches)

JT	TYPE	PLATES	W	LEN	Y	X
D	TMVW+p	MT20	4.0	6.0	2.25	1.75
E	BMV1+p	MT20	3.0	5.0		
F	BMWWW-t	MT20	6.0	7.0	4.00	3.50
G	BMWW+t	MT20	5.0	6.0	3.50	2.50
H	BMV1+p	MT20	3.0	5.0		

Edge - INDICATES REFERENCE CORNER OF PLATE TOUCHES EDGE OF CHORD.

LATERAL BRACE(S) SHOWN SHALL BE 2X4 SPF#2

JOB NAME	TRUSS NAME	QUANTITY	PLY	JOB DESC.		DRWG NO.
336324	H103		1	TRUSS DESC.	JT 45147	E21104101

Alpa Roof Truss, Maple

Version 8.420 S Jan 21 2021 MiTek Industries, Inc. Wed Oct 13 14:52:21 2021 Page 1

ID:hd511hZTz_bdeQoS817GKByhVxV-mabdH5Hwp8g1eyddwdugr8qCeJvUm2PDiDvuCKyTp6O

Scale = 1:56.0

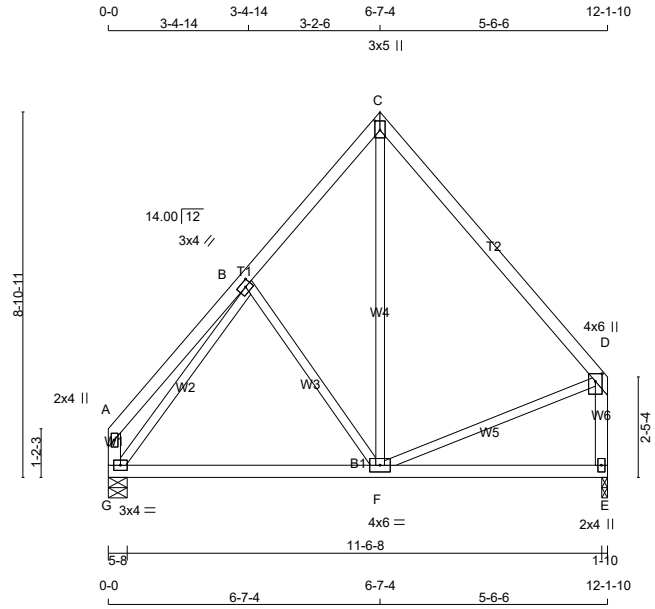

TOTAL WEIGHT = 4 X 59 = 236 lb

[M][F]

LUMBER

N. L. G. A. RULES

CHORDS	SIZE		LUMBER	DESCR.
A - C	2x4	DRY	No.2	SPF
C - D	2x4	DRY	No.2	SPF
G - A	2x4	DRY	No.2	SPF
E - D	2x4	DRY	No.2	SPF
G - E	2x4	DRY	No.2	SPF
ALL WEBS EXCEPT	2x3	DRY	No.2	SPF

DRY: SEASONED LUMBER.

PLATES (table is in inches)

JT	TYPE	PLATES	W	LEN	Y	X
A	TMV+p	MT20	2.0	4.0		
B	TMWW-t	MT20	3.0	4.0	1.50	1.75
C	TTW+p	MT20	3.0	5.0	2.75	1.50
D	TMVW+p	MT20	4.0	6.0	2.25	2.00
E	BMV1+p	MT20	2.0	4.0		
F	BMWWW-t	MT20	4.0	6.0		
G	BMVW1-t	MT20	3.0	4.0		

LATERAL BRACE(S) SHOWN SHALL BE 2X4 SPF#2

DIMENSIONS, SUPPORTS AND LOADINGS SPECIFIED BY FABRICATOR TO BE VERIFIED BY BUILDING DESIGNER

BEARINGS

JT	FACTORED GROSS REACTION VERT	HORZ	MAXIMUM FACTORED GROSS REACTION DOWN	HORZ	UPLIFT	INPUT BRG IN-SX	REQRD BRG IN-SX
E	585	0	585	0	0	1-10	1-8
G	585	0	585	0	0	5-8	1-8

UNFACTORED REACTIONS

JT	1ST LCASE COMBINED	MAX./MIN. COMPONENT REACTIONS SNOW	LIVE	PERM.LIVE	WIND	DEAD	SOIL
E	417	255 / 0	0 / 0	0 / 0	0 / 0	163 / 0	0 / 0
G	417	255 / 0	0 / 0	0 / 0	0 / 0	163 / 0	0 / 0

BEARING MATERIAL TO BE SPF NO.2 OR BETTER AT JOINT(S) E, G

BRACING

TOP CHORD TO BE SHEATHED OR MAX. PURLIN SPACING = 6.25 FT.
MAX. UNBRACED BOTTOM CHORD LENGTH = 10.00 FT OR RIGID CEILING DIRECTLY APPLIED.

ALL PITCH BREAKS AND PERIMETER CORNER JOINTS MUST BE LATERALLY RESTRAINED.

LOADING

TOTAL LOAD CASES: (4)

CHORDS

MEMB. FR-TO	MAX. FACTORED FORCE (LBS)	FACTORED VERT. LOAD (PLF) FROM	TO	LC1	MAX CSI (LC)	MAX. UNBRAC LENGTH
A- B	0 / 23	-78.0	-78.0	0.14 (1)	10.00	
B- C	-355 / 0	-78.0	-78.0	0.11 (1)	6.25	
C- D	-333 / 0	-78.0	-78.0	0.31 (1)	6.25	
G- A	-96 / 0	0.0	0.0	0.01 (1)	7.81	
E- D	-549 / 0	0.0	0.0	0.07 (1)	7.81	
G- F	0 / 311	-18.5	-18.5	0.23 (4)	10.00	
F- E	0 / 0	-18.5	-18.5	0.20 (4)	10.00	

WEBS

MEMB. FR-TO	MAX. FACTORED FORCE (LBS)	MAX CSI (LC)
B- F	-160 / 0	0.09 (1)
F- C	0 / 188	0.05 (4)
G- B	-539 / 0	0.29 (1)
F- D	0 / 231	0.05 (1)

DESIGN CRITERIA

SPECIFIED LOADS:

TOP	CH.	LL	=	21.0	PSF
		DL	=	6.0	PSF
BOT	CH.	LL	=	0.0	PSF
		DL	=	7.4	PSF
TOTAL	LOAD		=	34.4	PSF

SPACING = 24.0 IN. C/C

THIS TRUSS IS DESIGNED FOR RESIDENTIAL OR SMALL BUILDING REQUIREMENTS OF PART 9, NBCC 2015

THIS DESIGN COMPLIES WITH:
- PART 9 OF BCBC 2018 , ABC 2019
- PART 9 OF OBC 2012 (2019 AMENDMENT)
- CSA 086-14
- TPIC 2014

(55 % OF 23.0 P.S.F. G.S.L. PLUS 8.4 P.S.F. RAIN LOAD) EQUALS 21.0 P.S.F. SPECIFIED ROOF LIVE LOAD

ALLOWABLE DEFL.(LL)= L/360 (0.40")
CALCULATED VERT. DEFL.(LL) = L/ 999 (0.01")
ALLOWABLE DEFL.(TL)= L/360 (0.40")
CALCULATED VERT. DEFL.(TL) = L/ 999 (0.05")

CSI: TC=0.31/1.00 (C-D:1) , BC=0.23/1.00 (F-G:4) , WB=0.29/1.00 (B-G:1) , SSI=0.11/1.00 (C-D:1)

DOL LUMBER=1.00 NAIL=1.00 LS BEND=1.10 COMP=1.10 SHEAR=1.10 TENS= 1.10

COMPANION LIVE LOAD FACTOR = 1.00

TRUSS PLATE MANUFACTURER IS NOT RESPONSIBLE FOR QUALITY CONTROL IN THE TRUSS MANUFACTURING PLANT .

NAIL VALUES

PLATE	GRIP(DRY) (PSI) MAX	MIN	SHEAR (PLI) MAX	MIN	SECTION (PLI) MAX	MIN
MT20	650	371	1747	788	1987	1873

PLATE PLACEMENT TOL. = 0.250 inches

PLATE ROTATION TOL. = 5.0 Deg.

JSI GRIP= 0.79 (B) (INPUT = 0.90)
JSI METAL= 0.20 (B) (INPUT = 1.00)

JOB NAME	TRUSS NAME	QUANTITY	PLY	JOB DESC.		DRWG NO.
336324	H103G		1	TRUSS DESC.	JT 45147	E21104102

Alpa Roof Truss, Maple

Version 8.420 S Jan 21 2021 MiTek Industries, Inc. Wed Oct 13 14:52:23 2021 Page 1

ID:hd511hZTz_bdeQoS817GKByhVxV-izjNimIALlwltFn022w8xZwbD7eAEz?WAXO_HDyTp6M

Scale = 1:52.0

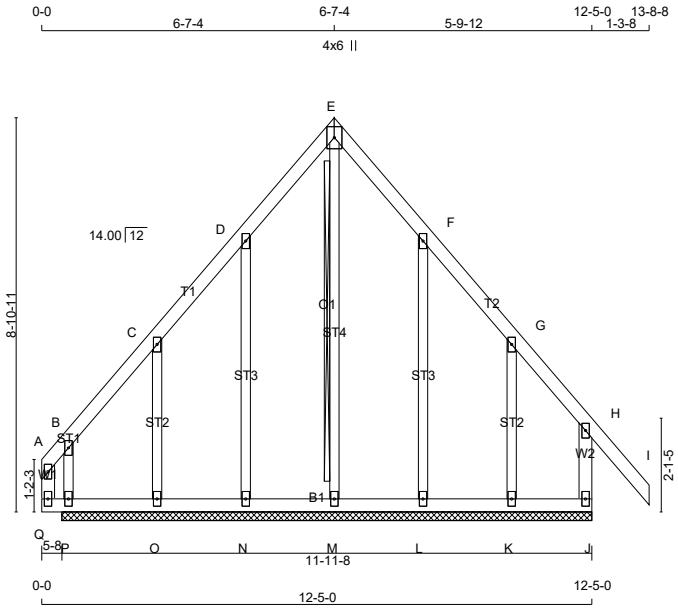

TOTAL WEIGHT = 65 lb

LUMBER

N. L. G. A. RULES

CHORDS	SIZE		LUMBER	DESCR.
Q - A	2x4	DRY	No.2	SPF
A - E	2x4	DRY	No.2	SPF
E - I	2x4	DRY	No.2	SPF
J - H	2x4	DRY	No.2	SPF
Q - J	2x4	DRY	No.2	SPF
ALL WEBS	2x3	DRY	No.2	SPF
ALL GABLE WEBS	2x3	DRY	No.2	SPF

DRY: SEASONED LUMBER.

GABLE STUDS SPACED AT 2-0-0 OC.

PLATES (table is in inches)

JT	TYPE	PLATES	W	LEN	Y	X
A	TMV+p	MT20	2.0	4.0		
B, C, D, F, G						
B	TMW+w	MT20	2.0	4.0		
E	TTW+p	MT20	4.0	6.0		
H	TMV+p	MT20	2.0	4.0		
J	BMV1+p	MT20	2.0	4.0		
K, L, M, N, O, P						
K	BMW1+w	MT20	2.0	4.0		
Q	BMV+p	MT20	2.0	4.0		

LATERAL BRACE(S) SHOWN SHALL BE 2X4 SPF#2

DIMENSIONS, SUPPORTS AND LOADINGS SPECIFIED BY FABRICATOR TO BE VERIFIED BY BUILDING DESIGNER

BEARINGS

THIS TRUSS DESIGNED FOR CONTINUOUS BEARINGS.

THIS TRUSS REQUIRES RIGID SHEATHING ON EXPOSED FACE.

BEARING MATERIAL TO BE SPF NO.2 OR BETTER AT JOINT(S)

BRACING

TOP CHORD TO BE SHEATHED OR MAX. PURLIN SPACING = 6.25 FT.
MAX. UNBRACED BOTTOM CHORD LENGTH = 10.00 FT OR RIGID CEILING DIRECTLY APPLIED.

ALL PITCH BREAKS AND PERIMETER CORNER JOINTS MUST BE LATERALLY RESTRAINED.

2x3 DRY SPF No.2 T-BRACE AT E-M

FASTEN T AND I-BRACES TO NARROW EDGE OF WEB WITH ONE ROW PER PLY OF 3" COMMON WIRE NAILS @ 6" O.C. WITH 3" MINIMUM END DISTANCE. BRACE MUST COVER 90% OF WEB LENGTH.

END VERTICAL(S) MUST BE SHEATHED OR HAVE BRACES AS INDICATED IN THE MAX. UNBRACED LENGTH COLUMN OF THE TABLE BELOW

LOADING

TOTAL LOAD CASES: (4)

CHORDS

MEMB. FR-TO	MAX. FACTORED FORCE (LBS)	FACTORED VERT. LOAD LC1 (PLF) FROM	TO	MAX CSI (LC)	MAX. UNBRAC LENGTH
Q- A	-2 / 1	0.0	0.0	0.01 (1)	10.00
A- B	0 / 10	-78.0	-78.0	0.03 (1)	10.00
B- C	0 / 3	-78.0	-78.0	0.04 (1)	10.00
C- D	0 / 8	-78.0	-78.0	0.04 (1)	10.00
D- E	0 / 11	-78.0	-78.0	0.04 (1)	10.00
E- F	0 / 10	-78.0	-78.0	0.04 (1)	10.00
F- G	0 / 14	-78.0	-78.0	0.04 (1)	10.00
G- H	-19 / 0	-78.0	-78.0	0.08 (1)	6.25
H- I	0 / 42	-78.0	-78.0	0.11 (1)	10.00
J- H	-202 / 0	0.0	0.0	0.02 (1)	7.81
Q- P	0 / 9	-18.5	-18.5	0.01 (4)	10.00
P- O	0 / 0	-18.5	-18.5	0.02 (4)	10.00
O- N	-5 / 0	-18.5	-18.5	0.02 (4)	10.00
N- M	-7 / 0	-18.5	-18.5	0.01 (4)	10.00
M- L	-7 / 0	-18.5	-18.5	0.01 (4)	10.00
L- K	-4 / 0	-18.5	-18.5	0.01 (4)	10.00
K- J	-1 / 0	-18.5	-18.5	0.02 (1)	10.00

WEBS

MEMB. FR-TO	MAX. FACTORED FORCE (LBS)	MAX CSI (LC)
M- E	-179 / 0	0.22 (1)
N- D	-159 / 0	0.11 (1)
O- C	-153 / 0	0.04 (1)
P- B	-115 / 0	0.02 (1)
L- F	-168 / 0	0.12 (1)
K- G	-104 / 0	0.03 (1)

DESIGN CRITERIA

SPECIFIED LOADS:

TOP	CH.	LL	=	21.0	PSF
		DL	=	6.0	PSF
BOT	CH.	LL	=	0.0	PSF
		DL	=	7.4	PSF
TOTAL	LOAD		=	34.4	PSF

SPACING = 24.0 IN. C/C

THIS TRUSS IS DESIGNED FOR RESIDENTIAL OR SMALL BUILDING REQUIREMENTS OF PART 9, NBCC 2015

THIS DESIGN COMPLIES WITH:
- PART 9 OF BCBC 2018 , ABC 2019
- PART 9 OF OBC 2012 (2019 AMENDMENT)
- CSA 086-14
- TPIC 2014

DESIGN ASSUMPTIONS
-OVERHANG NOT TO BE ALTERED OR CUT OFF.

(55 % OF 23.0 P.S.F. G.S.L. PLUS 8.4 P.S.F. RAIN LOAD) EQUALS 21.0 P.S.F. SPECIFIED ROOF LIVE LOAD

CSI: TC=0.11/1.00 (H-I:1) , BC=0.02/1.00 (J-K:1) , WB=0.22/1.00 (E-M:1) , SSI=0.06/1.00 (H-I:1)

DOL LUMBER=1.00 NAIL=1.00 LS BEND=1.10 COMP=1.10 SHEAR=1.10 TENS= 1.10

COMPANION LIVE LOAD FACTOR = 1.00

TRUSS PLATE MANUFACTURER IS NOT RESPONSIBLE FOR QUALITY CONTROL IN THE TRUSS MANUFACTURING PLANT .

NAIL VALUES

PLATE	GRIP(DRY) (PSI) MAX	MIN	SHEAR (PLI) MAX	MIN	SECTION (PLI) MAX	MIN
MT20	650	371	1747	788	1987	1873

PLATE PLACEMENT TOL. = 0.250 inches

PLATE ROTATION TOL. = 5.0 Deg.

JSI GRIP= 0.16 (H) (INPUT = 0.90)
JSI METAL= 0.10 (H) (INPUT = 1.00)

JOB NAME	TRUSS NAME	QUANTITY	PLY	JOB DESC.		DRWG NO.
336324	H104		2	TRUSS DESC.	JT 45147	E21104103

Alpa Roof Truss, Maple

Version 8.420 S Jan 21 2021 MiTek Industries, Inc. Wed Oct 13 14:52:24 2021 Page 1

ID:hd511hZTz_bdeQoS817GKByhVxV-B9Hlw6Jo632cVPMCcmRNTmSi4XnfzLMfOB8YpfyTp6L

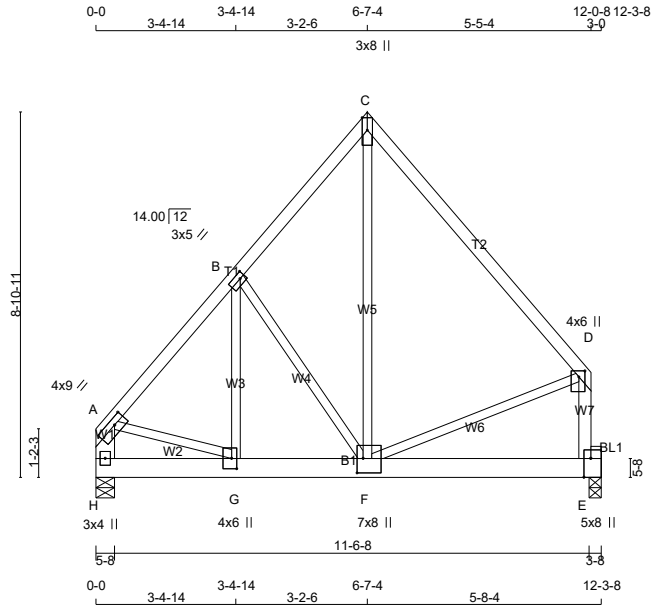

TOTAL WEIGHT = 2 X 69 = 138 lb

[M]

LUMBER

N. L. G. A. RULES

CHORDS	SIZE		LUMBER	DESCR.
A - C	2x4	DRY	No.2	SPF
C - D	2x4	DRY	No.2	SPF
H - A	2x6	DRY	No.2	SPF
E - D	2x4	DRY	No.2	SPF
H - E	2x6	DRY	No.2	SPF

BEARING BLOCKS

BL1	2x4	DRY	No.2	SPF
ALL WEBS EXCEPT	2x3	DRY	No.2	SPF

DRY: SEASONED LUMBER.

DESIGN CONSISTS OF 2 TRUSSES BUILT SEPARATELY THEN FASTENED TOGETHER AS FOLLOWS:

CHORDS	#ROWS	SURFACE SPACING (IN)	LOAD(PLF)
TOP CHORDS : (0.122"X3") SPIRAL NAILS			
A- C	1	12	TOP
C- D	1	12	TOP
E- D	1	12	TOP
H- A	2	12	TOP
BOTTOM CHORDS : (0.122"X3") SPIRAL NAILS			
H- E	2	6	SIDE(376.8)
WEBS : (0.122"X3") SPIRAL NAILS			
2x3	1	6	

NAILS TO BE DRIVEN FROM ONE SIDE ONLY.

TOP - COMPONENTS ARE LOADED FROM THE TOP AND MUST BE PLACED ON TOP EDGE OF ALL PLIES FOR THE LOAD TO BE TRANSFERRED TO EACH PLY.

SIDE - PLF SHOWN IS THE EQUIVALENT UDL APPLIED TO ONE SIDE THAT THE CORRESPONDING NAILING PATTERN SHALL BE CAPABLE OF TRANSFERING. REMAINING PLF MUST BE APPLIED ON THE OPPOSITE SIDE OR ON THE TOP.

PLATES (table is in inches)

JT	TYPE	PLATES	W	LEN	Y	X
A	TMVW-t	MT20	4.0	9.0	1.75	3.50
B	TMWW-t	MT20	3.0	5.0	1.50	1.50

LATERAL BRACE(S) SHOWN SHALL BE 2X4 SPF#2

DIMENSIONS, SUPPORTS AND LOADINGS SPECIFIED BY FABRICATOR TO BE VERIFIED BY BUILDING DESIGNER

BEARINGS

JT	FACTORED GROSS REACTION VERT	HORZ	MAXIMUM FACTORED GROSS REACTION DOWN	HORZ	UPLIFT	INPUT BRG IN-SX	REQRD BRG IN-SX
H	5056	0	5056	0	0	5-8	2-12
E	5068	0	5068	0	0	3-8	3-8

UNFACTORED REACTIONS

JT	1ST LCASE COMBINED	MAX./MIN. COMPONENT REACTIONS SNOW	LIVE	PERM.LIVE	WIND	DEAD	SOIL
H	3605	2200 / 0	0 / 0	0 / 0	0 / 0	1405 / 0	0 / 0
E	3613	2207 / 0	0 / 0	0 / 0	0 / 0	1407 / 0	0 / 0

BEARING MATERIAL TO BE SPF NO.2 OR BETTER AT JOINT(S) H, E
BEARING SIZE FACTOR = 1.15 AT JNT(S) E (BASED ON SUPPORT DEPTH = 1-8)

BRACING

TOP CHORD TO BE SHEATHED OR MAX. PURLIN SPACING = 4.58 FT.
MAX. UNBRACED BOTTOM CHORD LENGTH = 6.25 FT OR RIGID CEILING DIRECTLY APPLIED.

ALL PITCH BREAKS AND PERIMETER CORNER JOINTS MUST BE LATERALLY RESTRAINED.

LOADING

TOTAL LOAD CASES: (4)

CHORDS

MEMB. FR-TO	MAX. FACTORED FORCE (LBS)	FACTORED VERT. LOAD (PLF) FROM	TO	LC1	MAX CSI (LC)	MAX. UNBRAC LENGTH
A- B	-4135 / 0	-78.0	-78.0	0.15 (1)		4.58
B- C	-3044 / 0	-78.0	-78.0	0.10 (1)		5.22
C- D	-3033 / 0	-78.0	-78.0	0.36 (1)		5.02
H- A	-3844 / 0	0.0	0.0	0.14 (1)		7.22
E- D	-3373 / 0	0.0	0.0	0.23 (1)		6.35
H- G	0 / 0	-772.2	-772.2	0.35 (1)		10.00
G- F	0 / 2698	-772.2	-772.2	0.84 (1)		10.00
F- E	-234 / 0	-772.2	-772.2	0.69 (1)		6.25

WEBS

MEMB. FR-TO	MAX. FACTORED FORCE (LBS)	MAX CSI (LC)
G- B	0 / 1625	0.20 (1)
F- B	-1288 / 0	0.36 (1)
F- C	0 / 4283	0.53 (1)
A- G	0 / 2759	0.34 (1)
F- D	0 / 2366	0.29 (1)

DESIGN CRITERIA

SPECIFIED LOADS:

TOP	CH.	LL	=	21.0	PSF
		DL	=	6.0	PSF
BOT	CH.	LL	=	0.0	PSF
		DL	=	7.4	PSF
TOTAL	LOAD		=	34.4	PSF

SPACING = 24.0 IN. C/C

GIRDER TYPE: CStdGirder
START DISTANCE = 0-0
START SPAN CARRIED = 33-3-0
END DISTANCE = 12-3-8
END SPAN CARRIED = 33-3-0
END WALL WIDTH = 0-0
APPLIED TO FRONT SIDE OF BOTTOM CHORD.
- ADDT'L LOADS BASED ON 55 % OF GSL.

THIS TRUSS IS DESIGNED FOR RESIDENTIAL OR SMALL BUILDING REQUIREMENTS OF PART 9, NBCC 2015

THIS DESIGN COMPLIES WITH:
- PART 9 OF BCBC 2018 , ABC 2019
- PART 9 OF OBC 2012 (2019 AMENDMENT)
- CSA 086-14
- TPIC 2014

(55 % OF 23.0 P.S.F. G.S.L. PLUS 8.4 P.S.F. RAIN LOAD) EQUALS 21.0 P.S.F. SPECIFIED ROOF LIVE LOAD

ALLOWABLE DEFL.(LL)= L/360 (0.40")
CALCULATED VERT. DEFL.(LL) = L/ 999 (0.08")
ALLOWABLE DEFL.(TL)= L/360 (0.40")
CALCULATED VERT. DEFL.(TL) = L/ 923 (0.15")

CSI: TC=0.36/1.00 (C-D:1) , BC=0.84/1.00 (F-G:1) , WB=0.53/1.00 (C-F:1) , SSI=0.79/1.00 (E-F:1)

DOL LUMBER=1.00 NAIL=1.00 LS BEND=1.00 COMP=1.00 SHEAR=1.00 TENS= 1.00

COMPANION LIVE LOAD FACTOR = 1.00

AUTOSOLVE RIGHT HEEL ONLY

TRUSS PLATE MANUFACTURER IS NOT RESPONSIBLE FOR QUALITY CONTROL IN THE TRUSS MANUFACTURING PLANT .

NAIL VALUES

PLATE	GRIP(DRY) (PSI) MAX	MIN	SHEAR (PLI) MAX	MIN	SECTION (PLI) MAX	MIN
MT20	650	371	1747	788	1987	1873

PLATE PLACEMENT TOL. = 0.250 inches

PLATE ROTATION TOL. = 5.0 Deg.

JSI GRIP= 0.88 (A) (INPUT = 0.90)
JSI METAL= 0.61 (G) (INPUT = 1.00)

CONTINUED ON PAGE 2

PLATES (table is in inches)

JT	TYPE	PLATES	W	LEN	Y	X
C	TTW+p	MT20	3.0	8.0	3.75	Edge
D	TMVW+p	MT20	4.0	6.0	1.75	1.75
E	BMVK1+t	MT20	5.0	8.0	Edge	2.00
F	BMWWW+t	MT20	7.0	8.0	4.25	1.75
G	BMWW+t	MT20	4.0	6.0	3.00	1.50
H	BMV1+p	MT20	3.0	4.0		

Edge - INDICATES REFERENCE CORNER OF PLATE TOUCHES EDGE OF CHORD.

LATERAL BRACE(S) SHOWN SHALL BE 2X4 SPF#2

JOB NAME	TRUSS NAME	QUANTITY	PLY	JOB DESC.	DRWG NO.
336324	H105		1	TRUSS DESC. JT 45147	E21104104

Alpa Roof Truss, Maple

Version 8.420 S Jan 21 2021 MiTek Industries, Inc. Wed Oct 13 14:52:26 2021 Page 1

ID:hd511hZTz_bdeQoS817GKByhVxV-7YOVKoK2egIKkjWbjAUrYBY3uKc7RGVysVdftXyTp6J

Scale = 1:62.9

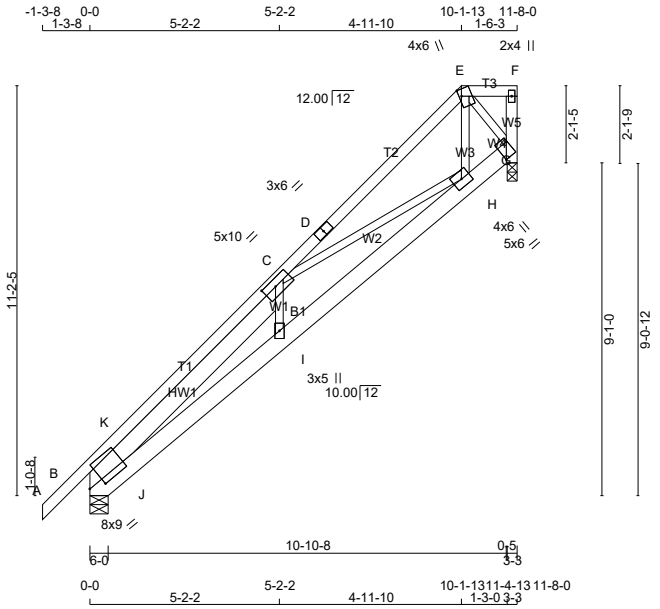

TOTAL WEIGHT = 72 lb

[M][F]

LUMBER

N. L. G. A. RULES

CHORDS	SIZE		LUMBER	DESCR.
A - D	2x4	DRY	No.2	SPF
D - E	2x4	DRY	No.2	SPF
E - F	2x4	DRY	No.2	SPF
G - F	2x4	DRY	No.2	SPF
B - G	2x6	DRY	No.2	SPF
REINFORCING MEMBERS				
HW1	2x6	DRY	No.2	SPF
ALL WEBS	2x3	DRY	No.2	SPF

DRY: SEASONED LUMBER.

PLATES (table is in inches)

JT	TYPE	PLATES	W	LEN	Y	X
B	TMBMW1-I	MT20	8.0	9.0	2.00	5.00
C	TMWWW-t	MT20	5.0	10.0	2.25	4.25
D	TS-t	MT20	3.0	6.0		
E	TTWW+m	MT20	4.0	6.0	2.25	0.75
F	TMV+p	MT20	2.0	4.0		
G	BVMW1+I	MT20	4.0	6.0	4.50	Edge
H	BMWW-t	MT20	5.0	6.0		
I	BMW+w	MT20	3.0	5.0		

Edge - INDICATES REFERENCE CORNER OF PLATE TOUCHES EDGE OF CHORD.

LATERAL BRACE(S) SHOWN SHALL BE 2X4 SPF#2

DIMENSIONS, SUPPORTS AND LOADINGS SPECIFIED BY FABRICATOR TO BE VERIFIED BY BUILDING DESIGNER

BEARINGS

JT	FACTORED GROSS REACTION VERT	HORZ	MAXIMUM FACTORED GROSS REACTION DOWN	HORZ	UPLIFT	INPUT BRG IN-SX	REQRD BRG IN-SX
B	671	0	671	0	0	6-0	1-8
G	563	0	563	0	0	3-3	3-3

UNFACTORED REACTIONS

JT	1ST LCASE COMBINED	MAX./MIN. COMPONENT REACTIONS SNOW	LIVE	PERM.LIVE	WIND	DEAD	SOIL
B	477	303 / 0	0 / 0	0 / 0	0 / 0	173 / 0	0 / 0
G	401	245 / 0	0 / 0	0 / 0	0 / 0	156 / 0	0 / 0

BEARING MATERIAL TO BE SPF NO.2 OR BETTER AT JOINT(S) B, G
BEARING SIZE FACTOR = 1.15 AT JNT(S) G (BASED ON SUPPORT DEPTH = 1-8)

BRACING

TOP CHORD TO BE SHEATHED OR MAX. PURLIN SPACING = 6.09 FT.
MAX. UNBRACED BOTTOM CHORD LENGTH = 10.00 FT OR RIGID CEILING DIRECTLY APPLIED.

ALL PITCH BREAKS AND PERIMETER CORNER JOINTS MUST BE LATERALLY RESTRAINED.

LOADING

TOTAL LOAD CASES: (4)

CHORDS

MEMB. FR-TO	MAX. FACTORED FORCE (LBS)	FACTORED VERT. LOAD LC1 (PLF) FROM	TO	MAX CSI (LC)	MAX. UNBRAC LENGTH
A- B	0 / 16	-78.0	-78.0	0.11 (1)	10.00
B- K	-1035 / 0	-78.0	-78.0	0.09 (1)	6.09
K- C	-666 / 0	-78.0	-78.0	0.19 (1)	6.25
C- D	-403 / 0	-78.0	-78.0	0.21 (1)	6.25
D- E	-403 / 0	-78.0	-78.0	0.21 (1)	6.25
E- F	0 / 0	-78.0	-78.0	0.03 (1)	10.00
G- F	-59 / 0	0.0	0.0	0.01 (1)	7.81
B- J	0 / 625	-18.5	-18.5	0.08 (1)	10.00
J- I	0 / 1231	-18.5	-18.5	0.20 (1)	10.00
I- H	0 / 1251	-18.5	-18.5	0.19 (1)	10.00
H- G	0 / 367	-18.5	-18.5	0.08 (1)	10.00

WEBS

MEMB. FR-TO	MAX. FACTORED FORCE (LBS)	MAX CSI (LC)
I- C	0 / 92	0.03 (4)
C- H	-757 / 0	0.49 (1)
H- E	0 / 341	0.08 (1)
E- G	-415 / 0	0.06 (1)
J- K	0 / 249	0.00 (1)
J- C	-749 / 0	0.37 (1)

DESIGN CRITERIA

SPECIFIED LOADS:

TOP CH.	LL	=	21.0	PSF
	DL	=	6.0	PSF
BOT CH.	LL	=	0.0	PSF
	DL	=	7.4	PSF
TOTAL LOAD		=	34.4	PSF

SPACING = 24.0 IN. C/C

LOADING IN FLAT SECTION BASED ON A SLOPE OF 2.00/12 MINIMUM

THIS TRUSS IS DESIGNED FOR RESIDENTIAL OR SMALL BUILDING REQUIREMENTS OF PART 9, NBCC 2015

THIS DESIGN COMPLIES WITH:
- PART 9 OF BCBC 2018 , ABC 2019
- PART 9 OF OBC 2012 (2019 AMENDMENT)
- CSA 086-14
- TPIC 2014

(55 % OF 23.0 P.S.F. G.S.L. PLUS 8.4 P.S.F. RAIN LOAD) EQUALS 21.0 P.S.F. SPECIFIED ROOF LIVE LOAD

ALLOWABLE DEFL.(LL)= L/360 (0.39")
CALCULATED VERT. DEFL.(LL) = L/ 999 (0.03")
ALLOWABLE DEFL.(TL)= L/360 (0.39")
CALCULATED VERT. DEFL.(TL) = L/ 999 (0.06")

CSI: TC=0.21/1.00 (C-E:1) , BC=0.20/1.00 (I-J:1) , WB=0.49/1.00 (C-H:1) , SSI=0.12/1.00 (C-E:1)

DOL LUMBER=1.00 NAIL=1.00 LS BEND=1.10 COMP=1.10 SHEAR=1.10 TENS= 1.10

COMPANION LIVE LOAD FACTOR = 1.00

TRUSS PLATE MANUFACTURER IS NOT RESPONSIBLE FOR QUALITY CONTROL IN THE TRUSS MANUFACTURING PLANT .

NAIL VALUES

PLATE	GRIP(DRY) (PSI) MAX	MIN	SHEAR (PLI) MAX	MIN	SECTION (PLI) MAX	MIN
MT20	650	371	1747	788	1987	1873

PLATE PLACEMENT TOL. = 0.250 inches

PLATE ROTATION TOL. = 5.0 Deg.

JSI GRIP= 0.83 (G) (INPUT = 0.90)
JSI METAL= 0.21 (H) (INPUT = 1.00)

JOB NAME	TRUSS NAME	QUANTITY	PLY	JOB DESC.	DRWG NO.
336324	H106		1	TRUSS DESC. JT 45147	E21104105

Alpa Roof Truss, Maple

Version 8.420 S Jan 21 2021 MiTek Industries, Inc. Wed Oct 13 14:52:28 2021 Page 1

ID:hd511hZTz_bdeQoS817GKByhVxV-3wWGlUMJAHZ2_1g_rbWJecdGe88Uv43FJp6lyQyTp6H

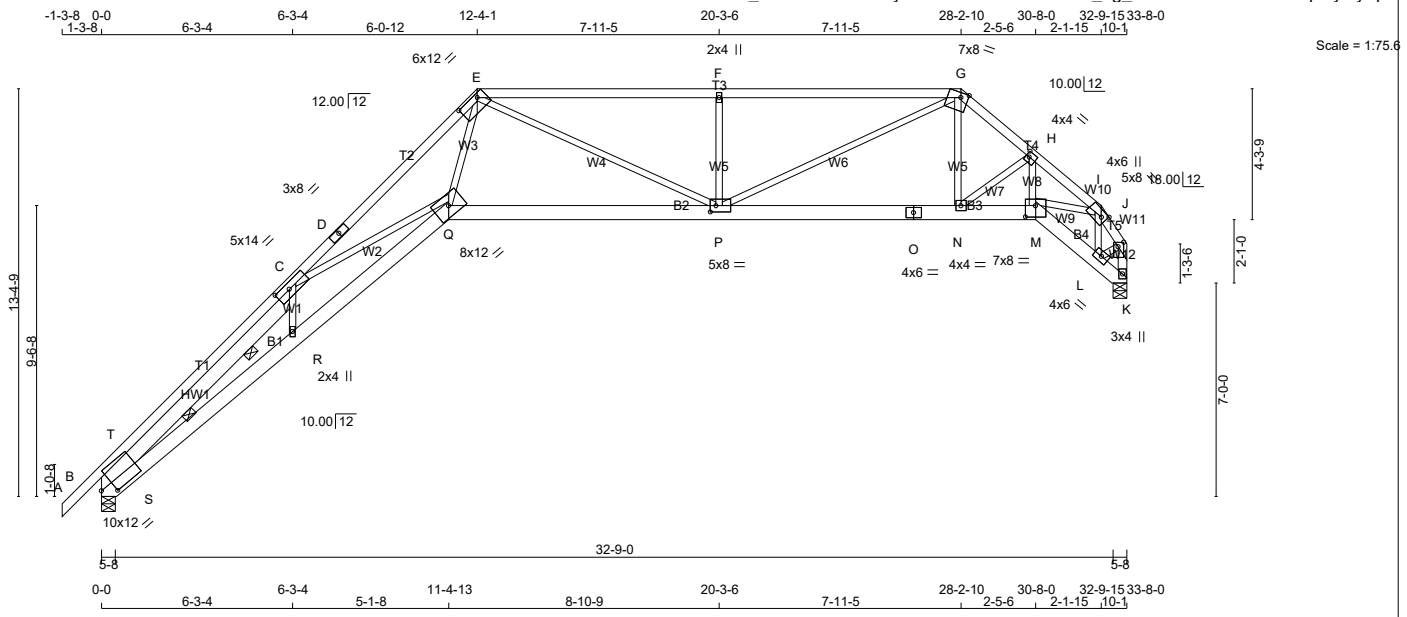

LUMBER

N. L. G. A. RULES

CHORDS	SIZE		LUMBER	DESCR.
A - D	2x4	DRY	2100F 1.8E	SPF
D - E	2x4	DRY	2100F 1.8E	SPF
E - G	2x4	DRY	2100F 1.8E	SPF
G - I	2x4	DRY	1650F 1.5E	SPF
I - J	2x4	DRY	1650F 1.5E	SPF
K - J	2x4	DRY	No.2	SPF
B - Q	2x6	DRY	No.2	SPF
Q - O	2x6	DRY	No.2	SPF
O - M	2x6	DRY	No.2	SPF
M - K	2x6	DRY	No.2	SPF
REINFORCING MEMBERS				
HW1	2x6	DRY	No.2	SPF
ALL WEBS EXCEPT	2x3	DRY	No.2	SPF

DRY: SEASONED LUMBER.

PLATES (table is in inches)

JT	TYPE	PLATES	W	LEN	Y	X
B	TMBMW1-I	MT20	10.0	12.0	4.00	5.00
C	TMWWW-t	MT20	5.0	14.0	2.25	5.75
D	TS-t	MT20	3.0	8.0		
E	TTWW-h	MT20	6.0	12.0	1.50	8.75
F	TMW+w	MT20	2.0	4.0		
G	TTWW-m	MT20	7.0	8.0	Edge	2.75
H	TMWW-t	MT20	4.0	4.0	2.00	1.25
I	TTWW-m	MT20	5.0	8.0	Edge	2.00
J	TMVW+p	MT20	4.0	6.0	1.75	2.25
K	BMV1+p	MT20	3.0	4.0		
L	BMWW-t	MT20	4.0	6.0		
M	BBWW-l	MT20	7.0	8.0	4.50	4.00
N	BMWW-t	MT20	4.0	4.0		
O	BS-t	MT20	4.0	6.0		
P	BMWWW-t	MT20	5.0	8.0	2.50	2.25
Q	BBWW-h	MT20	8.0	12.0		
R	BMW+w	MT20	2.0	4.0		

Edge - INDICATES REFERENCE CORNER OF PLATE TOUCHES EDGE OF CHORD.

LATERAL BRACE(S) SHOWN SHALL BE 2X4 SPF#2

DIMENSIONS, SUPPORTS AND LOADINGS SPECIFIED BY FABRICATOR TO BE VERIFIED BY BUILDING DESIGNER

BEARINGS

JT	FACTORED GROSS REACTION VERT	HORZ	MAXIMUM FACTORED GROSS REACTION DOWN	HORZ	UPLIFT	INPUT BRG IN-SX	REQRD BRG IN-SX
B	1780	0	1780	0	0	5-8	1-11
K	1696	0	1696	0	0	5-8	1-10

ALLOW FOR 0.9" OF HORIZONTAL MOVEMENT DUE TO TOTAL LOAD

UNFACTORED REACTIONS

JT	1ST LCASE COMBINED	MAX./MIN. COMPONENT REACTIONS SNOW	LIVE	PERM.LIVE	WIND	DEAD	SOIL
B	1271	765 / 0	0 / 0	0 / 0	0 / 0	506 / 0	0 / 0
K	1215	707 / 0	0 / 0	0 / 0	0 / 0	509 / 0	0 / 0

BEARING MATERIAL TO BE SPF NO.2 OR BETTER AT JOINT(S) B, K

BRACING

FOR SECTION E-G, MAX. PURLIN SPACING = 2.00 FT.
FOR OTHER SECTIONS, TOP CHORD TO BE SHEATHED OR MAX. PURLIN SPACING = 3.27 FT.
MAX. UNBRACED BOTTOM CHORD LENGTH = 10.00 FT OR RIGID CEILING DIRECTLY APPLIED.

ALL PITCH BREAKS AND PERIMETER CORNER JOINTS MUST BE LATERALLY RESTRAINED.

2 LATERAL BRACE(S) AT 1/ 3 LENGTH OF C-S.

END VERTICAL(S) MUST BE SHEATHED OR HAVE BRACES AS INDICATED IN THE MAX. UNBRACED LENGTH COLUMN OF THE TABLE BELOW

LOADING

TOTAL LOAD CASES: (4)

CHORDS

MEMB. FR-TO	MAX. FACTORED FORCE (LBS)	FACTORED VERT. LOAD LC1 (PLF) FROM	TO	MAX CSI (LC)	MAX. UNBRAC LENGTH
A- B	0 / 16	-78.0	-78.0	0.07 (1)	10.00
B- T	-3603 / 0	-78.0	-78.0	0.17 (1)	4.42
T- C	-2326 / 0	-78.0	-78.0	0.19 (1)	5.26
C- D	-6169 / 0	-78.0	-78.0	0.77 (1)	3.27
D- E	-6169 / 0	-78.0	-78.0	0.77 (1)	3.27
E- F	-3700 / 0	-85.5	-85.5	0.61 (1)	2.00
F- G	-3700 / 0	-85.5	-85.5	0.61 (1)	2.00
G- H	-2637 / 0	-78.0	-78.0	0.09 (1)	4.76
H- I	-3379 / 0	-78.0	-78.0	0.10 (1)	4.30
I- J	-1581 / 0	-78.0	-78.0	0.02 (1)	5.85
K- J	-1677 / 0	0.0	0.0	0.17 (1)	6.41
B- S	0 / 2275	-18.5	-18.5	0.39 (1)	10.00
S- R	0 / 5513	-18.5	-18.5	0.83 (1)	10.00
R- Q	0 / 5582	-18.5	-18.5	0.84 (1)	10.00
Q- P	0 / 3423	-18.5	-18.5	0.51 (1)	10.00
P- O	0 / 2031	-18.5	-18.5	0.31 (1)	10.00
O- N	0 / 2031	-18.5	-18.5	0.31 (1)	10.00
N- M	0 / 2535	-18.5	-18.5	0.37 (1)	10.00
M- L	0 / 1034	-18.5	-18.5	0.13 (1)	10.00
L- K	-6 / 0	-18.5	-18.5	0.00 (1)	10.00

WEBS

MEMB. FR-TO	MAX. FACTORED FORCE (LBS)	MAX CSI (LC)
R- C	-11 / 74	0.03 (4)
C- Q	0 / 72	0.02 (4)
Q- E	0 / 3858	0.87 (1)
E- P	0 / 309	0.07 (1)
P- F	-815 / 0	0.21 (1)
P- G	0 / 1860	0.42 (1)
N- G	0 / 519	0.12 (1)
N- H	-660 / 0	0.13 (1)
M- H	0 / 719	0.16 (1)
M- I	0 / 1776	0.40 (1)
L- I	-959 / 0	0.14 (1)
L- J	0 / 916	0.21 (1)
S- T	0 / 1313	0.00 (1)
S- C	-4109 / 0	0.49 (1)

DESIGN CRITERIA

SPECIFIED LOADS:

TOP CH.	LL	=	21.0	PSF
	DL	=	6.0	PSF
BOT CH.	LL	=	0.0	PSF
	DL	=	7.4	PSF
TOTAL LOAD		=	34.4	PSF

SPACING = 24.0 IN. C/C

LOADING IN FLAT SECTION BASED ON PIGGYBACK TRUSS WITH SLOPES OF 6.00/12 AND -6.00/12 AND RESPECTIVE HEEL HEIGHTS OF 0-0 AND 0-0 AND AN ADDITIONAL DEAD LOAD OF 3.0 P.S.F.

THIS TRUSS IS DESIGNED FOR RESIDENTIAL OR SMALL BUILDING REQUIREMENTS OF PART 9, NBCC 2015

THIS DESIGN COMPLIES WITH:
- PART 9 OF BCBC 2018 , ABC 2019
- PART 9 OF OBC 2012 (2019 AMENDMENT)
- CSA 086-14
- TPIC 2014

(55 % OF 23.0 P.S.F. G.S.L. PLUS 8.4 P.S.F. RAIN LOAD) EQUALS 21.0 P.S.F. SPECIFIED ROOF LIVE LOAD

ALLOWABLE DEFL.(LL)= L/360 (1.12")
CALCULATED VERT. DEFL.(LL) = L/ 999 (0.38")
ALLOWABLE DEFL.(TL)= L/360 (1.12")
CALCULATED VERT. DEFL.(TL) = L/ 519 (0.78")

CSI: TC=0.77/1.00 (C-E:1) , BC=0.84/1.00 (Q-R:1) , WB=0.87/1.00 (E-Q:1) , SSI=0.33/1.00 (F-G:1)

DOL LUMBER=1.00 NAIL=1.00 LS BEND=1.10 COMP=1.10 SHEAR=1.10 TENS= 1.10

COMPANION LIVE LOAD FACTOR = 1.00

TRUSS PLATE MANUFACTURER IS NOT RESPONSIBLE FOR QUALITY CONTROL IN THE TRUSS MANUFACTURING PLANT .

NAIL VALUES

PLATE	GRIP(DRY) (PSI) MAX	MIN	SHEAR (PLI) MAX	MIN	SECTION (PLI) MAX	MIN
MT20	650	371	1747	788	1987	1873

PLATE PLACEMENT TOL. = 0.250 inches

PLATE ROTATION TOL. = 5.0 Deg.

JSI GRIP= 0.90 (I) (INPUT = 0.90)
JSI METAL= 0.74 (E) (INPUT = 1.00)

JOB NAME	TRUSS NAME	QUANTITY	PLY	JOB DESC.	DRWG NO.
336324	H106S		1	TRUSS DESC. JT 45147	E21104106

Alpa Roof Truss, Maple

Version 8.420 S Jan 21 2021 MiTek Industries, Inc. Wed Oct 13 14:52:29 2021 Page 1

ID:hd511hZTz bdeQoS817GKByhVxV-X74ezqNxxbhubAFAOJ1YAqAOFYVzeXWOYTsJUsyTp6G

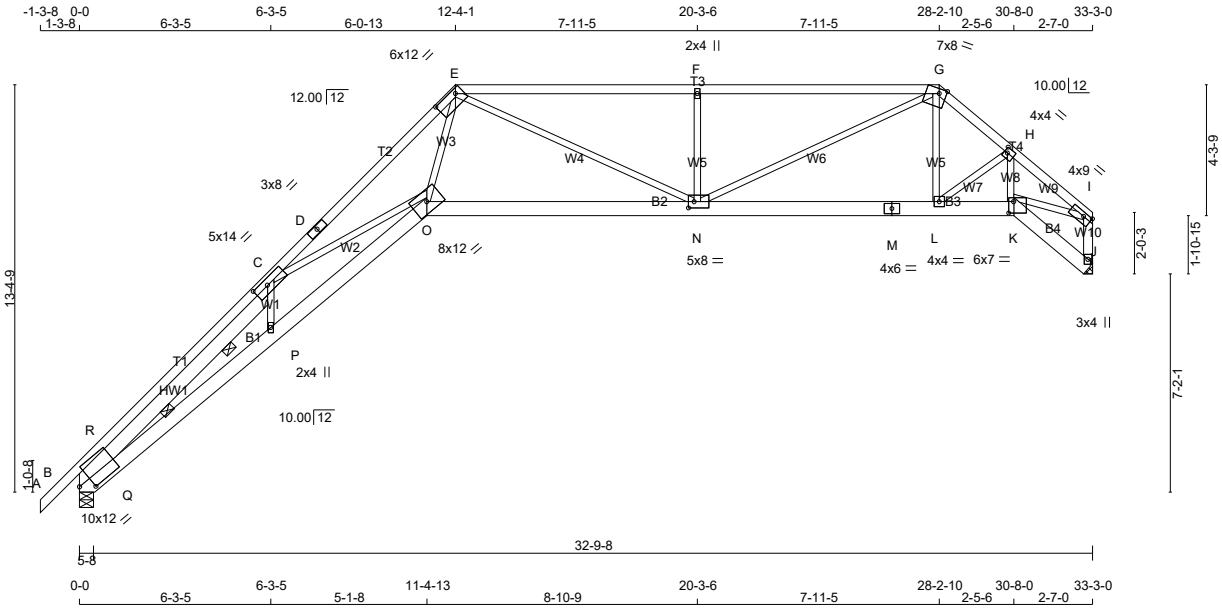

TOTAL WEIGHT = 5 X 168 = 840 lb

LUMBER

N. L. G. A. RULES

CHORDS	SIZE		LUMBER	DESCR.
A - D	2x4	DRY	1650F 1.5E	SPF
D - E	2x4	DRY	1650F 1.5E	SPF
E - G	2x4	DRY	1650F 1.5E	SPF
G - I	2x4	DRY	No.2	SPF
J - I	2x4	DRY	No.2	SPF
B - O	2x6	DRY	No.2	SPF
O - M	2x6	DRY	No.2	SPF
M - K	2x6	DRY	No.2	SPF
K - J	2x6	DRY	No.2	SPF

REINFORCING MEMBERS

HW1	2x6	DRY	No.2	SPF

ALL WEBS	2x3	DRY	No.2	SPF

DRY: SEASONED LUMBER.

PLATES (table is in inches)

JT	TYPE	PLATES	W	LEN	Y	X
B	TMBMW1-l	MT20	10.0	12.0	4.00	5.00
C	TMWWW-t	MT20	5.0	14.0	2.25	5.75
D	TS-t	MT20	3.0	8.0		
E	TTWW-h	MT20	6.0	12.0	1.75	9.25
F	TMW+w	MT20	2.0	4.0		
G	TTWW-m	MT20	7.0	8.0	Edge	2.75
H	TMWW-t	MT20	4.0	4.0	2.00	1.25
I	TMVW-t	MT20	4.0	9.0	1.50	3.25
J	BMV1+p	MT20	3.0	4.0		
K	BBWW-l	MT20	6.0	7.0	4.50	2.00
L	BMWW-t	MT20	4.0	4.0		
M	BS-t	MT20	4.0	6.0		
N	BMWWW-t	MT20	5.0	8.0	2.50	2.25
O	BBWW-h	MT20	8.0	12.0		
P	BMW+w	MT20	2.0	4.0		

Edge - INDICATES REFERENCE CORNER OF PLATE TOUCHES EDGE OF CHORD.

LATERAL BRACE(S) SHOWN SHALL BE 2X4 SPF#2

DIMENSIONS, SUPPORTS AND LOADINGS SPECIFIED BY FABRICATOR TO BE VERIFIED BY BUILDING DESIGNER

BEARINGS

JT	FACTORED GROSS REACTION VERT	HORZ	MAXIMUM FACTORED GROSS REACTION DOWN	HORZ	UPLIFT	INPUT BRG IN-SX	REQRD BRG IN-SX
J	1676	0	1676	0	0	MECHANICAL	
B	1759	0	1759	0	0	5-8	1-11

A SUITABLE HANGER/MECHANICAL CONNECTION IS REQUIRED AT JOINT J. MINIMUM BEARING LENGTH AT JOINT J = 3-8.

ALLOW FOR 1.0" OF HORIZONTAL MOVEMENT DUE TO TOTAL LOAD

UNFACTORED REACTIONS

JT	1ST LCASE COMBINED	MAX./MIN. COMPONENT REACTIONS SNOW	LIVE	PERM.LIVE	WIND	DEAD	SOIL
J	1202	698 / 0	0 / 0	0 / 0	0 / 0	504 / 0	0 / 0
B	1256	756 / 0	0 / 0	0 / 0	0 / 0	499 / 0	0 / 0

BEARING MATERIAL TO BE SPF NO.2 OR BETTER AT JOINT(S) B

BRACING

FOR SECTION E-G, MAX. PURLIN SPACING = 2.00 FT.
FOR OTHER SECTIONS, TOP CHORD TO BE SHEATHED OR MAX. PURLIN SPACING = 2.96 FT.
MAX. UNBRACED BOTTOM CHORD LENGTH = 10.00 FT OR RIGID CEILING DIRECTLY APPLIED.

ALL PITCH BREAKS AND PERIMETER CORNER JOINTS MUST BE LATERALLY RESTRAINED.

2 LATERAL BRACE(S) AT 1/ 3 LENGTH OF C-Q.

END VERTICAL(S) MUST BE SHEATHED OR HAVE BRACES AS INDICATED IN THE MAX. UNBRACED LENGTH COLUMN OF THE TABLE BELOW

LOADING

TOTAL LOAD CASES: (4)

CHORDS

MEMB. FR-TO	MAX. FACTORED FORCE (LBS)	FACTORED VERT. LOAD LC1 (PLF) FROM	TO	MAX CSI (LC)	MAX. UNBRAC LENGTH
A- B	0 / 16	-78.0	-78.0	0.09 (1)	10.00
B- R	-3452 / 0	-78.0	-78.0	0.19 (1)	4.17
R- C	-2217 / 0	-78.0	-78.0	0.26 (1)	4.95
C- D	-6056 / 0	-78.0	-78.0	0.97 (1)	2.96
D- E	-6056 / 0	-78.0	-78.0	0.97 (1)	2.96
E- F	-3590 / 0	-85.5	-85.5	0.77 (1)	2.00
F- G	-3590 / 0	-85.5	-85.5	0.77 (1)	2.00
G- H	-2449 / 0	-78.0	-78.0	0.12 (1)	4.32
H- I	-2890 / 0	-78.0	-78.0	0.17 (1)	3.98
J- I	-1653 / 0	0.0	0.0	0.19 (1)	6.45
B- Q	0 / 2147	-18.5	-18.5	0.35 (1)	10.00
Q- P	0 / 5453	-18.5	-18.5	0.82 (1)	10.00
P- O	0 / 5515	-18.5	-18.5	0.83 (1)	10.00
O- N	0 / 3355	-18.5	-18.5	0.50 (1)	10.00
N- M	0 / 1880	-18.5	-18.5	0.30 (1)	10.00
M- L	0 / 1880	-18.5	-18.5	0.30 (1)	10.00
L- K	0 / 2204	-18.5	-18.5	0.33 (1)	10.00
K- J	0 / 0	-18.5	-18.5	0.02 (4)	10.00

WEBS

MEMB. FR-TO	MAX. FACTORED FORCE (LBS)	MAX CSI (LC)
P- C	0 / 79	0.03 (4)
C- O	0 / 58	0.02 (4)
O- E	0 / 3801	0.86 (1)
E- N	0 / 261	0.06 (1)
N- F	-817 / 0	0.21 (1)
N- G	0 / 1905	0.43 (1)
L- G	0 / 382	0.09 (1)
L- H	-426 / 0	0.08 (1)
K- H	0 / 334	0.08 (1)
K- I	0 / 2243	0.50 (1)
Q- R	0 / 1262	0.00 (1)
Q- C	-4144 / 0	0.49 (1)

[M][F]

DESIGN CRITERIA

SPECIFIED LOADS:

TOP CH.	LL	=	21.0	PSF
	DL	=	6.0	PSF
BOT CH.	LL	=	0.0	PSF
	DL	=	7.4	PSF
TOTAL LOAD		=	34.4	PSF

SPACING = 24.0 IN. C/C

LOADING IN FLAT SECTION BASED ON PIGGYBACK TRUSS WITH SLOPES OF 6.00/12 AND -6.00/12 AND RESPECTIVE HEEL HEIGHTS OF 0-0 AND 0-0 AND AN ADDITIONAL DEAD LOAD OF 3.0 P.S.F.

THIS TRUSS IS DESIGNED FOR RESIDENTIAL OR SMALL BUILDING REQUIREMENTS OF PART 9, NBCC 2015

THIS DESIGN COMPLIES WITH:
- PART 9 OF BCBC 2018 , ABC 2019
- PART 9 OF OBC 2012 (2019 AMENDMENT)
- CSA 086-14
- TPIC 2014

(55 % OF 23.0 P.S.F. G.S.L. PLUS 8.4 P.S.F. RAIN LOAD) EQUALS 21.0 P.S.F. SPECIFIED ROOF LIVE LOAD

ALLOWABLE DEFL.(LL)= L/360 (1.11")
CALCULATED VERT. DEFL.(LL) = L/ 999 (0.40")
ALLOWABLE DEFL.(TL)= L/360 (1.11")
CALCULATED VERT. DEFL.(TL) = L/ 487 (0.82")

CSI: TC=0.97/1.00 (C-E:1) , BC=0.83/1.00 (O-P:1) , WB=0.86/1.00 (E-O:1) , SSI=0.33/1.00 (F-G:1)

DOL LUMBER=1.00 NAIL=1.00 LS BEND=1.10 COMP=1.10 SHEAR=1.10 TENS= 1.10

COMPANION LIVE LOAD FACTOR = 1.00

TRUSS PLATE MANUFACTURER IS NOT RESPONSIBLE FOR QUALITY CONTROL IN THE TRUSS MANUFACTURING PLANT .

NAIL VALUES

PLATE	GRIP(DRY) (PSI) MAX	MIN	SHEAR (PLI) MAX	MIN	SECTION (PLI) MAX	MIN
MT20	650	371	1747	788	1987	1873

PLATE PLACEMENT TOL. = 0.250 inches

PLATE ROTATION TOL. = 5.0 Deg.

JSI GRIP= 0.90 (E) (INPUT = 0.90)
JSI METAL= 0.71 (E) (INPUT = 1.00)

JOB NAME	TRUSS NAME	QUANTITY	PLY	JOB DESC.		DRWG NO.
336324	H107		1	TRUSS DESC.	JT 45147	E21104107

Alpa Roof Truss, Maple

Version 8.420 S Jan 21 2021 MiTek Industries, Inc. Wed Oct 13 14:52:32 2021 Page 1

ID:hd511hZTz bdeQoS817GKByhVxV-yimnbrPpDW3TSezl4RaGoSoxvlW6rt7rER4z5ByTp6D

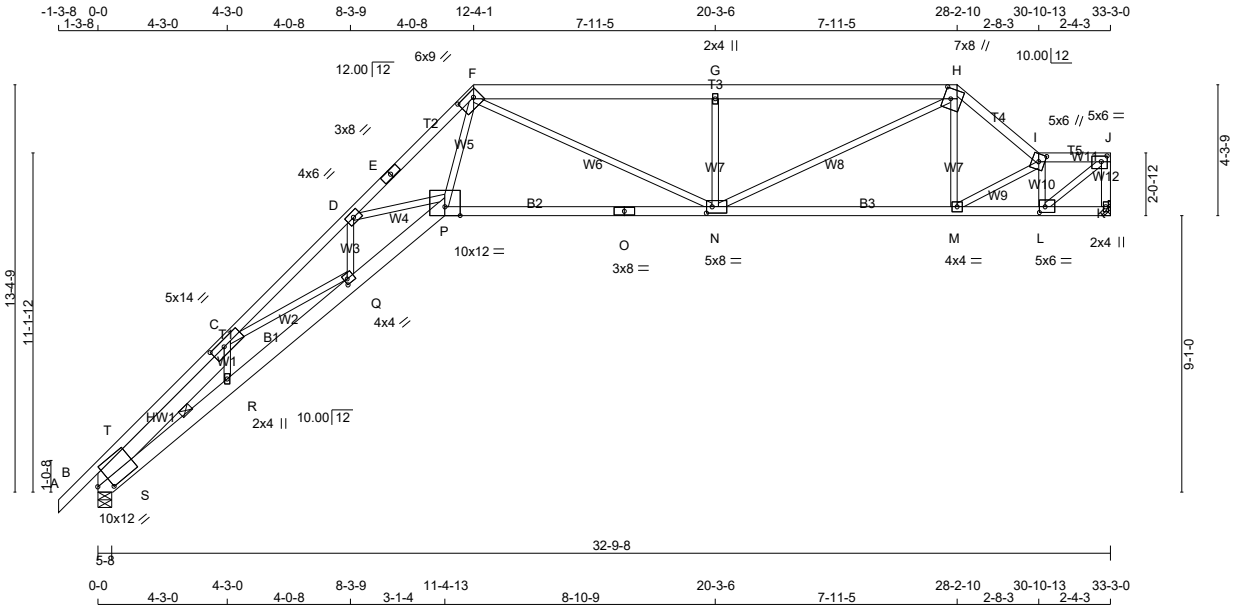

TOTAL WEIGHT = 4 X 159 = 638 lb

[M]

LUMBER

N. L. G. A. RULES

CHORDS	SIZE		LUMBER	DESCR.
A - E	2x4	DRY	No.2	SPF
E - F	2x4	DRY	No.2	SPF
F - H	2x6	DRY	No.2	SPF
H - I	2x4	DRY	No.2	SPF
I - J	2x4	DRY	No.2	SPF
K - J	2x4	DRY	No.2	SPF
B - P	2x6	DRY	No.2	SPF
P - O	2x4	DRY	No.2	SPF
O - K	2x4	DRY	No.2	SPF

REINFORCING MEMBERS

HW1	2x6	DRY	No.2	SPF

ALL WEBS	2x3	DRY	No.2	SPF

DRY: SEASONED LUMBER.

PLATES (table is in inches)

JT	TYPE	PLATES	W	LEN	Y	X
B	TMBMW1-l	MT20	10.0	12.0	4.00	5.00
C	TMWWW-t	MT20	5.0	14.0	2.25	5.50
D	TMWW-t	MT20	4.0	6.0		
E	TS-t	MT20	3.0	8.0		
F	TTWW-h	MT20	6.0	9.0	2.50	6.25
G	TMW+w	MT20	2.0	4.0		
H	TTWW+m	MT20	7.0	8.0	4.00	2.75
I	TTWW+m	MT20	5.0	6.0	3.00	2.25
J	TMVW-t	MT20	5.0	6.0	2.25	2.25
K	BMV1+p	MT20	2.0	4.0		
L	BMWW-t	MT20	5.0	6.0	2.25	2.25
M	BMWW-t	MT20	4.0	4.0		
N	BMWWW-t	MT20	5.0	8.0	2.50	2.25
O	BS-t	MT20	3.0	8.0		
P	BBWW-l	MT20	10.0	12.0	Edge	
Q	BMWW-t	MT20	4.0	4.0	2.00	1.25
R	BMW+w	MT20	2.0	4.0		

Edge - INDICATES REFERENCE CORNER OF PLATE TOUCHES EDGE OF CHORD.

LATERAL BRACE(S) SHOWN SHALL BE 2X4 SPF#2

DIMENSIONS, SUPPORTS AND LOADINGS SPECIFIED BY FABRICATOR TO BE VERIFIED BY BUILDING DESIGNER

BEARINGS

JT	FACTORED GROSS REACTION VERT	HORZ	MAXIMUM FACTORED GROSS REACTION DOWN	HORZ	UPLIFT	INPUT BRG IN-SX	REQRD BRG IN-SX
K	1676	0	1676	0	0	MECHANICAL	
B	1759	0	1759	0	0	5-8	1-11

A SUITABLE HANGER/MECHANICAL CONNECTION IS REQUIRED AT JOINT K. MINIMUM BEARING LENGTH AT JOINT K = 1-15.

ALLOW FOR 0.9" OF HORIZONTAL MOVEMENT DUE TO TOTAL LOAD

UNFACTORED REACTIONS

JT	1ST LCASE COMBINED	MAX./MIN. COMPONENT REACTIONS SNOW	LIVE	PERM.LIVE	WIND	DEAD	SOIL
K	1202	698 / 0	0 / 0	0 / 0	0 / 0	504 / 0	0 / 0
B	1256	756 / 0	0 / 0	0 / 0	0 / 0	499 / 0	0 / 0

BEARING MATERIAL TO BE SPF NO.2 OR BETTER AT JOINT(S) B

BRACING

FOR SECTION F-H, MAX. PURLIN SPACING = 2.00 FT.
FOR OTHER SECTIONS, TOP CHORD TO BE SHEATHED OR MAX. PURLIN SPACING = 2.36 FT.
MAX. UNBRACED BOTTOM CHORD LENGTH = 10.00 FT OR RIGID CEILING DIRECTLY APPLIED.

ALL PITCH BREAKS AND PERIMETER CORNER JOINTS MUST BE LATERALLY RESTRAINED.

1 LATERAL BRACE(S) AT 1/ 2 LENGTH OF C-S.

END VERTICAL(S) MUST BE SHEATHED OR HAVE BRACES AS INDICATED IN THE MAX. UNBRACED LENGTH COLUMN OF THE TABLE BELOW

LOADING

TOTAL LOAD CASES: (4)

CHORDS

MEMB. FR-TO	MAX. FACTORED FORCE (LBS)	FACTORED VERT. LOAD LC1 (PLF) FROM	TO	MAX CSI (LC)	MAX. UNBRAC LENGTH
A- B	0 / 16	-78.0	-78.0	0.11 (1)	10.00
B- T	-3089 / 0	-78.0	-78.0	0.20 (1)	3.82
T- C	-1957 / 0	-78.0	-78.0	0.16 (1)	4.70
C- D	-6220 / 0	-78.0	-78.0	0.86 (1)	2.36
D- E	-6027 / 0	-78.0	-78.0	0.88 (1)	2.40
E- F	-6027 / 0	-78.0	-78.0	0.88 (1)	2.40
F- G	-3585 / 0	-85.5	-85.5	0.52 (1)	2.00
G- H	-3585 / 0	-85.5	-85.5	0.52 (1)	2.00
H- I	-2384 / 0	-78.0	-78.0	0.16 (1)	4.32
I- J	-1969 / 0	-78.0	-78.0	0.11 (1)	4.72
K- J	-1627 / 0	0.0	0.0	0.18 (1)	6.48
B- S	0 / 1800	-18.5	-18.5	0.22 (1)	10.00
S- R	0 / 4709	-18.5	-18.5	0.69 (1)	10.00
R- Q	0 / 4747	-18.5	-18.5	0.71 (1)	10.00
Q- P	0 / 5681	-18.5	-18.5	0.80 (1)	10.00
P- O	0 / 3353	-18.5	-18.5	0.66 (1)	10.00
O- N	0 / 3353	-18.5	-18.5	0.66 (1)	10.00
N- M	0 / 1853	-18.5	-18.5	0.49 (4)	10.00
M- L	0 / 2063	-18.5	-18.5	0.45 (1)	10.00
L- K	0 / 0	-18.5	-18.5	0.09 (1)	10.00

WEBS

MEMB. FR-TO	MAX. FACTORED FORCE (LBS)	MAX CSI (LC)
R- C	0 / 56	0.02 (4)
C- Q	0 / 820	0.18 (1)
Q- D	-187 / 0	0.03 (1)
D- P	-129 / 0	0.03 (1)
P- F	0 / 3838	0.86 (1)
F- N	0 / 259	0.06 (1)
N- G	-839 / 0	0.22 (1)
N- H	0 / 1934	0.44 (1)
M- H	0 / 287	0.06 (1)
M- I	-257 / 0	0.05 (1)
L- I	-1590 / 0	0.24 (1)
L- J	0 / 2508	0.56 (1)
S- T	0 / 1204	0.00 (1)
S- C	-3749 / 0	0.45 (1)

DESIGN CRITERIA

SPECIFIED LOADS:

TOP CH.	LL	=	21.0	PSF
	DL	=	6.0	PSF
BOT CH.	LL	=	0.0	PSF
	DL	=	7.4	PSF
TOTAL LOAD		=	34.4	PSF

SPACING = 24.0 IN. C/C

LOADING IN HIGHEST FLAT SECTION BASED ON PIGGYBACK TRUSS WITH SLOPES OF 6.00/12 AND -6.00/12 AND RESPECTIVE HEEL HEIGHTS OF 0-0 AND 0-0 AND AN ADDITIONAL DEAD LOAD OF 3.0 P.S.F.

LOADING IN OTHER FLAT SECTIONS BASED ON A SLOPE OF 6.00/12

THIS TRUSS IS DESIGNED FOR RESIDENTIAL OR SMALL BUILDING REQUIREMENTS OF PART 9, NBCC 2015

THIS DESIGN COMPLIES WITH:
- PART 9 OF BCBC 2018 , ABC 2019
- PART 9 OF OBC 2012 (2019 AMENDMENT)
- CSA 086-14
- TPIC 2014

(55 % OF 23.0 P.S.F. G.S.L. PLUS 8.4 P.S.F. RAIN LOAD) EQUALS 21.0 P.S.F. SPECIFIED ROOF LIVE LOAD

ALLOWABLE DEFL.(LL)= L/360 (1.11")
CALCULATED VERT. DEFL.(LL) = L/ 971 (0.41")
ALLOWABLE DEFL.(TL)= L/360 (1.11")
CALCULATED VERT. DEFL.(TL) = L/ 459 (0.87")

CSI: TC=0.88/1.00 (D-F:1) , BC=0.80/1.00 (P-Q:1) , WB=0.86/1.00 (F-P:1) , SSI=0.25/1.00 (F-G:1)

DOL LUMBER=1.00 NAIL=1.00 LS BEND=1.10 COMP=1.10 SHEAR=1.10 TENS= 1.10

COMPANION LIVE LOAD FACTOR = 1.00

TRUSS PLATE MANUFACTURER IS NOT RESPONSIBLE FOR QUALITY CONTROL IN THE TRUSS MANUFACTURING PLANT .

NAIL VALUES

PLATE	GRIP(DRY) (PSI) MAX	MIN	SHEAR (PLI) MAX	MIN	SECTION (PLI) MAX	MIN
MT20	650	371	1747	788	1987	1873

PLATE PLACEMENT TOL. = 0.250 inches

PLATE ROTATION TOL. = 5.0 Deg.

JSI GRIP= 0.89 (F) (INPUT = 0.90)
JSI METAL= 0.99 (O) (INPUT = 1.00)

JOB NAME	TRUSS NAME	QUANTITY	PLY	JOB DESC.		DRWG NO.
336324	H108		1	TRUSS DESC.	JT 45147	E21104108

Alpa Roof Truss, Maple

Version 8.420 S Jan 21 2021 MiTek Industries, Inc. Wed Oct 13 14:52:33 2021 Page 1

ID:hd511hZTz bdeQoS817GKByhVxV-QuK9oBQR qBK4oYxd96VLqK8V9sNaKA T5qWdeyTp6C

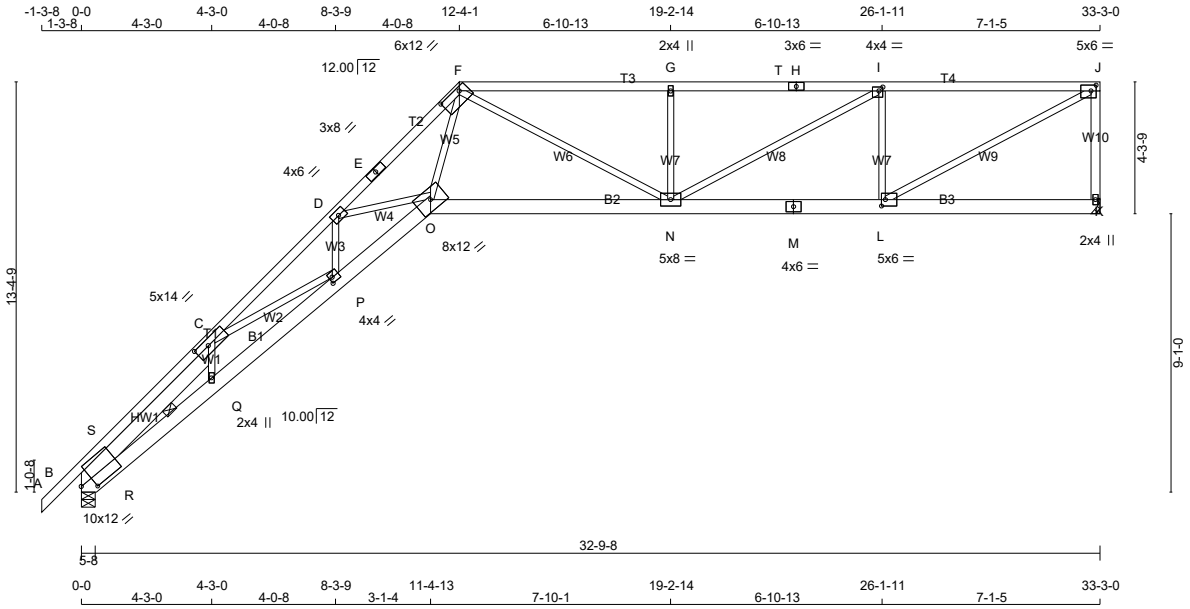

TOTAL WEIGHT = 2 X 163 = 327 lb

LUMBER

N. L. G. A. RULES

CHORDS	SIZE		LUMBER	DESCR.
A - E	2x4	DRY	1650F 1.5E	SPF
E - F	2x4	DRY	1650F 1.5E	SPF
F - H	2x4	DRY	1650F 1.5E	SPF
H - J	2x4	DRY	1650F 1.5E	SPF
K - J	2x4	DRY	No.2	SPF
B - O	2x6	DRY	No.2	SPF
O - M	2x6	DRY	No.2	SPF
M - K	2x6	DRY	No.2	SPF

REINFORCING MEMBERS

HW1	2x6	DRY	No.2	SPF

ALL WEBS	2x3	DRY	No.2	SPF

DRY: SEASONED LUMBER.

PLATES (table is in inches)

JT	TYPE	PLATES	W	LEN	Y	X
B	TMBMW1-I	MT20	10.0	12.0	4.00	5.00
C	TMWWW-t	MT20	5.0	14.0	2.25	5.50
D	TMWW-t	MT20	4.0	6.0		
E	TS-t	MT20	3.0	8.0		
F	TTWW-h	MT20	6.0	12.0	1.50	8.75
G	TMW+w	MT20	2.0	4.0		
H	TS-t	MT20	3.0	6.0		
I	TMWW-t	MT20	4.0	4.0	1.50	1.50
J	TMVW-t	MT20	5.0	6.0	2.25	2.00
K	BMV1+p	MT20	2.0	4.0		
L	BMWW-t	MT20	5.0	6.0	2.50	1.50
M	BS-t	MT20	4.0	6.0		
N	BMWWW-t	MT20	5.0	8.0		
O	BBWW-h	MT20	8.0	12.0		
P	BMWW-t	MT20	4.0	4.0	2.00	1.25
Q	BMW+w	MT20	2.0	4.0		

LATERAL BRACE(S) SHOWN SHALL BE 2X4 SPF#2

DIMENSIONS, SUPPORTS AND LOADINGS SPECIFIED BY FABRICATOR TO BE VERIFIED BY BUILDING DESIGNER

BEARINGS

JT	FACTORED GROSS REACTION VERT	HORZ	MAXIMUM FACTORED GROSS REACTION DOWN	HORZ	UPLIFT	INPUT BRG IN-SX	REQRD BRG IN-SX
K	1711	0	1711	0	0	MECHANICAL	
B	1762	0	1762	0	0	5-8	1-11

A SUITABLE HANGER/MECHANICAL CONNECTION IS REQUIRED AT JOINT K. MINIMUM BEARING LENGTH AT JOINT K = 2-1.

ALLOW FOR 0.8" OF HORIZONTAL MOVEMENT DUE TO TOTAL LOAD

UNFACTORED REACTIONS

JT	1ST LCASE COMBINED	MAX./MIN. COMPONENT REACTIONS SNOW	LIVE	PERM.LIVE	WIND	DEAD	SOIL
K	1229	698 / 0	0 / 0	0 / 0	0 / 0	532 / 0	0 / 0
B	1258	756 / 0	0 / 0	0 / 0	0 / 0	502 / 0	0 / 0

BEARING MATERIAL TO BE SPF NO.2 OR BETTER AT JOINT(S) B

BRACING

FOR SECTION F-J, MAX. PURLIN SPACING = 2.00 FT.
FOR OTHER SECTIONS, TOP CHORD TO BE SHEATHED OR MAX. PURLIN SPACING = 3.09 FT.
MAX. UNBRACED BOTTOM CHORD LENGTH = 10.00 FT OR RIGID CEILING DIRECTLY APPLIED.

ALL PITCH BREAKS AND PERIMETER CORNER JOINTS MUST BE LATERALLY RESTRAINED.

1 LATERAL BRACE(S) AT 1/ 2 LENGTH OF C-R.

END VERTICAL(S) MUST BE SHEATHED OR HAVE BRACES AS INDICATED IN THE MAX. UNBRACED LENGTH COLUMN OF THE TABLE BELOW

LOADING

TOTAL LOAD CASES: (4)

CHORDS

MEMB. FR-TO	MAX. FACTORED FORCE (LBS)	FACTORED VERT. LOAD LC1 (PLF) FROM	TO	MAX CSI (LC)	MAX. UNBRAC LENGTH
A- B	0 / 16	-78.0	-78.0	0.09 (1)	10.00
B- S	-3142 / 0	-78.0	-78.0	0.14 (1)	4.38
S- C	-1999 / 0	-78.0	-78.0	0.12 (1)	5.26
C- D	-6252 / 0	-78.0	-78.0	0.44 (1)	3.11
D- E	-6100 / 0	-78.0	-78.0	0.52 (1)	3.09
E- F	-6100 / 0	-78.0	-78.0	0.52 (1)	3.09
F- G	-3616 / 0	-85.5	-85.5	0.71 (1)	2.00
G- T	-3616 / 0	-85.5	-85.5	0.76 (1)	2.00
T- H	-3616 / 0	-85.5	-85.5	0.76 (1)	2.00
H- I	-3616 / 0	-85.5	-85.5	0.76 (1)	2.00
I- J	-2545 / 0	-85.5	-85.5	0.65 (1)	2.00
K- J	-1650 / 0	0.0	0.0	0.44 (1)	6.45
B- R	0 / 1848	-18.5	-18.5	0.24 (1)	10.00
R- Q	0 / 4700	-18.5	-18.5	0.69 (1)	10.00
Q- P	0 / 4746	-18.5	-18.5	0.71 (1)	10.00
P- O	0 / 5747	-18.5	-18.5	0.80 (1)	10.00
O- N	0 / 3366	-18.5	-18.5	0.48 (1)	10.00
N- M	0 / 2545	-18.5	-18.5	0.35 (1)	10.00
M- L	0 / 2545	-18.5	-18.5	0.35 (1)	10.00
L- K	0 / 0	-18.5	-18.5	0.10 (4)	10.00

WEBS

MEMB. FR-TO	MAX. FACTORED FORCE (LBS)	MAX CSI (LC)
Q- C	-1 / 51	0.02 (4)
C- P	0 / 853	0.19 (1)
P- D	-248 / 0	0.04 (1)
D- O	-124 / 0	0.03 (1)
O- F	0 / 3896	0.88 (1)
F- N	0 / 287	0.06 (1)
N- G	-624 / 0	0.16 (1)
N- I	0 / 1233	0.28 (1)
L- I	-1270 / 0	0.33 (1)
L- J	0 / 2906	0.65 (1)
R- S	0 / 1218	0.00 (1)
R- C	-3701 / 0	0.44 (1)

DESIGN CRITERIA

SPECIFIED LOADS:

TOP	CH.	LL	=	21.0	PSF
		DL	=	6.0	PSF
BOT	CH.	LL	=	0.0	PSF
		DL	=	7.4	PSF
TOTAL	LOAD		=	34.4	PSF

SPACING = 24.0 IN. C/C

LOADING IN FLAT SECTION BASED ON PIGGYBACK TRUSS WITH SLOPES OF 6.00/12 AND -6.00/12 AND RESPECTIVE HEEL HEIGHTS OF 0-0 AND 0-0 AND AN ADDITIONAL DEAD LOAD OF 3.0 P.S.F.

THIS TRUSS IS DESIGNED FOR RESIDENTIAL OR SMALL BUILDING REQUIREMENTS OF PART 9, NBCC 2015

THIS DESIGN COMPLIES WITH:
- PART 9 OF BCBC 2018 , ABC 2019
- PART 9 OF OBC 2012 (2019 AMENDMENT)
- CSA 086-14
- TPIC 2014

(55 % OF 23.0 P.S.F. G.S.L. PLUS 8.4 P.S.F. RAIN LOAD) EQUALS 21.0 P.S.F. SPECIFIED ROOF LIVE LOAD

ALLOWABLE DEFL.(LL)= L/360 (1.11")
CALCULATED VERT. DEFL.(LL) = L/ 989 (0.40")
ALLOWABLE DEFL.(TL)= L/360 (1.11")
CALCULATED VERT. DEFL.(TL) = L/ 481 (0.83")

CSI: TC=0.76/1.00 (G-I:1) , BC=0.80/1.00 (O-P:1) , WB=0.88/1.00 (F-O:1) , SSI=0.28/1.00 (I-J:1)

DOL LUMBER=1.00 NAIL=1.00 LS BEND=1.10 COMP=1.10 SHEAR=1.10 TENS= 1.10

COMPANION LIVE LOAD FACTOR = 1.00

TRUSS PLATE MANUFACTURER IS NOT RESPONSIBLE FOR QUALITY CONTROL IN THE TRUSS MANUFACTURING PLANT .

NAIL VALUES

PLATE	GRIP(DRY) (PSI) MAX	MIN	SHEAR (PLI) MAX	MIN	SECTION (PLI) MAX	MIN
MT20	650	371	1747	788	1987	1873

PLATE PLACEMENT TOL. = 0.250 inches

PLATE ROTATION TOL. = 5.0 Deg.

JSI GRIP= 0.90 (J) (INPUT = 0.90)
JSI METAL= 0.74 (F) (INPUT = 1.00)

JOB NAME	TRUSS NAME	QUANTITY	PLY	JOB DESC.		DRWG NO.
336324	H109G		1	TRUSS DESC.	JT 45147	E21104109

Alpa Roof Truss, Maple

Version 8.420 S Jan 21 2021 MiTek Industries, Inc. Wed Oct 13 14:52:35 2021 Page 1

ID:hd511hZTz_bdeQoS817GKByhVxV-MHRvDtRiWRR2J5iKlZ8zQ5Qf8zk12OdHwPJdiWyTp6A

Scale = 1:61.7

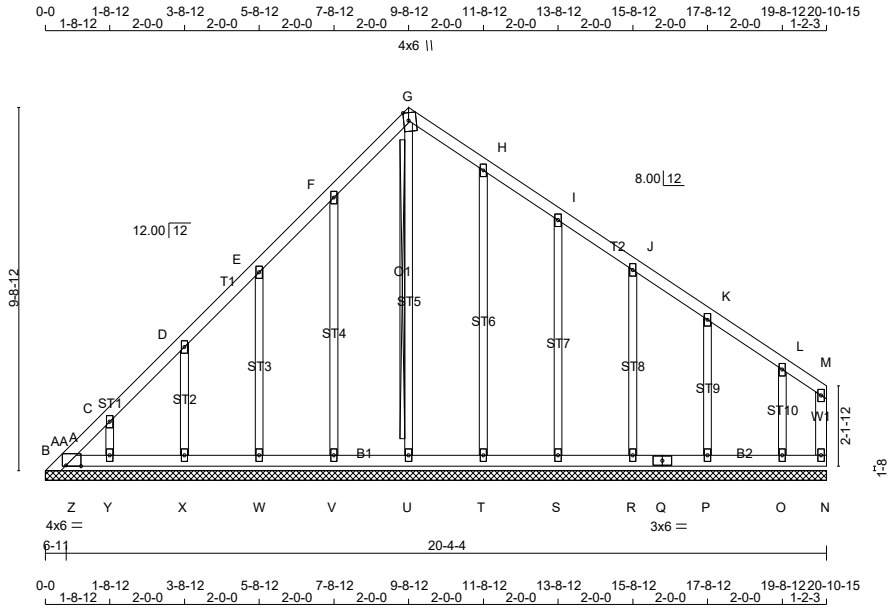

TOTAL WEIGHT = 97 lb

[M]

LUMBER

N. L. G. A. RULES

CHORDS	SIZE		LUMBER	DESCR.
A - G	2x4	DRY	No.2	SPF
G - M	2x4	DRY	No.2	SPF
N - M	2x4	DRY	No.2	SPF
B - Q	2x4	DRY	No.2	SPF
Q - N	2x4	DRY	No.2	SPF
ALL WEBS	2x3	DRY	No.2	SPF
ALL GABLE WEBS	2x3	DRY	No.2	SPF

DRY: SEASONED LUMBER.

GABLE STUDS SPACED AT 2-0-0 OC.

PLATES (table is in inches)

JT	TYPE	PLATES	W	LEN	Y	X
B	TMB1-l	MT20	4.0	6.0	Edge	4.75
C, D, E, F, H, I, J, K, L						
C	TMW+w	MT20	2.0	4.0		
G	TTW+m	MT20	4.0	6.0	Edge	1.50
M	TMV+p	MT20	2.0	4.0		
N	BMV1+p	MT20	2.0	4.0		
O, P, R, S, T, U, V, W, X, Y						
O	BMW1+w	MT20	2.0	4.0		
Q	BS-t	MT20	3.0	6.0		

Edge - INDICATES REFERENCE CORNER OF PLATE TOUCHES EDGE OF CHORD.

LATERAL BRACE(S) SHOWN SHALL BE 2X4 SPF#2

DIMENSIONS, SUPPORTS AND LOADINGS SPECIFIED BY FABRICATOR TO BE VERIFIED BY BUILDING DESIGNER

BEARINGS

THIS TRUSS DESIGNED FOR CONTINUOUS BEARINGS.

THIS TRUSS REQUIRES RIGID SHEATHING ON EXPOSED FACE.

BEVELED PLATE OR SHIM REQUIRED TO PROVIDE FULL BEARING SURFACE WITH TRUSS CHORD AT JT(S): N , U , V , W , X , Y , T , S , R , P , O

BEARING MATERIAL TO BE SPF NO.2 OR BETTER AT JOINT(S)

BRACING

TOP CHORD TO BE SHEATHED OR MAX. PURLIN SPACING = 6.25 FT.

MAX. UNBRACED BOTTOM CHORD LENGTH = 6.25 FT OR RIGID CEILING DIRECTLY APPLIED.

ALL PITCH BREAKS AND PERIMETER CORNER JOINTS MUST BE LATERALLY RESTRAINED.

2x4 DRY SPF No.2 T-BRACE AT G-U

FASTEN T AND I-BRACES TO NARROW EDGE OF WEB WITH ONE ROW PER PLY OF 3" COMMON WIRE NAILS @ 6" O.C. WITH 3" MINIMUM END DISTANCE. BRACE MUST COVER 90% OF WEB LENGTH.

END VERTICAL(S) MUST BE SHEATHED OR HAVE BRACES AS INDICATED IN THE MAX. UNBRACED LENGTH COLUMN OF THE TABLE BELOW

LOADING

TOTAL LOAD CASES: (4)

CHORDS

MEMB. FR-TO	MAX. FORCE (LBS)	FACTORED VERT. LOAD (PLF) FROM	TO	LC1	MAX CSI (LC)	MAX. UNBRAC LENGTH
A- B	0 / 3	-96.5	-96.5	0.00 (1)	10.00	
B-AA	-23 / 0	-78.0	-78.0	0.00 (1)	6.25	
AA- C	0 / 5	-78.0	-78.0	0.03 (1)	10.00	
C- D	0 / 7	-78.0	-78.0	0.04 (1)	10.00	
D- E	0 / 10	-78.0	-78.0	0.04 (1)	10.00	
E- F	0 / 19	-78.0	-78.0	0.05 (1)	10.00	
F- G	0 / 8	-78.0	-78.0	0.05 (1)	10.00	
G- H	0 / 7	-78.0	-78.0	0.05 (1)	10.00	
H- I	0 / 16	-78.0	-78.0	0.05 (1)	10.00	
I- J	0 / 12	-78.0	-78.0	0.04 (1)	10.00	
J- K	0 / 8	-78.0	-78.0	0.04 (1)	10.00	
K- L	0 / 7	-78.0	-78.0	0.04 (1)	10.00	
L- M	0 / 9	-78.0	-78.0	0.03 (1)	10.00	
N- M	-26 / 0	0.0	0.0	0.00 (1)	7.81	
B- Z	0 / 8	-18.5	-18.5	0.00 (1)	10.00	
Z- Y	0 / 8	-18.5	-18.5	0.01 (4)	10.00	
Y- X	-3 / 0	-18.5	-18.5	0.02 (4)	10.00	
X- W	-8 / 0	-18.5	-18.5	0.02 (4)	10.00	
W- V	-11 / 0	-18.5	-18.5	0.01 (4)	6.25	
V- U	-13 / 0	-18.5	-18.5	0.01 (4)	6.25	
U- T	-13 / 0	-18.5	-18.5	0.01 (4)	6.25	
T- S	-12 / 0	-18.5	-18.5	0.01 (4)	6.25	
S- R	-10 / 0	-18.5	-18.5	0.01 (4)	10.00	
R- Q	-7 / 0	-18.5	-18.5	0.02 (4)	10.00	
Q- P	-7 / 0	-18.5	-18.5	0.02 (4)	10.00	
P- O	-4 / 0	-18.5	-18.5	0.02 (4)	10.00	
O- N	0 / 0	-18.5	-18.5	0.01 (4)	10.00	

WEBS

MEMB. FR-TO	MAX. FORCE (LBS)	MAX CSI (LC)
U- G	-153 / 0	0.10 (1)
V- F	-179 / 0	0.19 (1)
W- E	-146 / 0	0.07 (1)
X- D	-156 / 0	0.03 (1)
Y- C	-121 / 0	0.02 (1)
T- H	-178 / 0	0.24 (1)
S- I	-150 / 0	0.12 (1)
R- J	-154 / 0	0.07 (1)
P- K	-159 / 0	0.04 (1)
O- L	-131 / 0	0.02 (1)
Z-AA	-4 / 2	0.00 (1)

DESIGN CRITERIA

SPECIFIED LOADS:

TOP	CH.	LL	=	21.0	PSF
		DL	=	6.0	PSF
BOT	CH.	LL	=	0.0	PSF
		DL	=	7.4	PSF
TOTAL	LOAD		=	34.4	PSF

SPACING = 24.0 IN. C/C

THIS TRUSS IS DESIGNED FOR RESIDENTIAL OR SMALL BUILDING REQUIREMENTS OF PART 9, NBCC 2015

THIS DESIGN COMPLIES WITH:
- PART 9 OF BCBC 2018 , ABC 2019
- PART 9 OF OBC 2012 (2019 AMENDMENT)
- CSA 086-14
- TPIC 2014

(55 % OF 23.0 P.S.F. G.S.L. PLUS 8.4 P.S.F. RAIN LOAD) EQUALS 21.0 P.S.F. SPECIFIED ROOF LIVE LOAD

CSI: TC=0.05/1.00 (E-F:1) , BC=0.02/1.00 (W-X:4) , WB=0.24/1.00 (H-T:1) , SSI=0.06/1.00 (G-H:1)

DOL LUMBER=1.00 NAIL=1.00 LS BEND=1.10 COMP=1.10 SHEAR=1.10 TENS= 1.10

COMPANION LIVE LOAD FACTOR = 1.00

TRUSS PLATE MANUFACTURER IS NOT RESPONSIBLE FOR QUALITY CONTROL IN THE TRUSS MANUFACTURING PLANT .

NAIL VALUES

PLATE	GRIP(DRY) (PSI) MAX	MIN	SHEAR (PLI) MAX	MIN	SECTION (PLI) MAX	MIN
MT20	650	371	1747	788	1987	1873

PLATE PLACEMENT TOL. = 0.250 inches

PLATE ROTATION TOL. = 5.0 Deg.

JSI GRIP= 0.38 (C) (INPUT = 0.90)
JSI METAL= 0.09 (F) (INPUT = 1.00)

JOB NAME	TRUSS NAME	QUANTITY	PLY	JOB DESC.		DRWG NO.
336324	H110G		1	TRUSS DESC.	JT 45147	E21104110

Alpa Roof Truss, Maple

Version 8.420 S Jan 21 2021 MiTek Industries, Inc. Wed Oct 13 14:52:37 2021 Page 1

ID:hd511hZTz bdeQoS817GKByhVxV-lfZqeZTy22hmZPsis ARVWV GmQuWL2aOiokmPyTp68

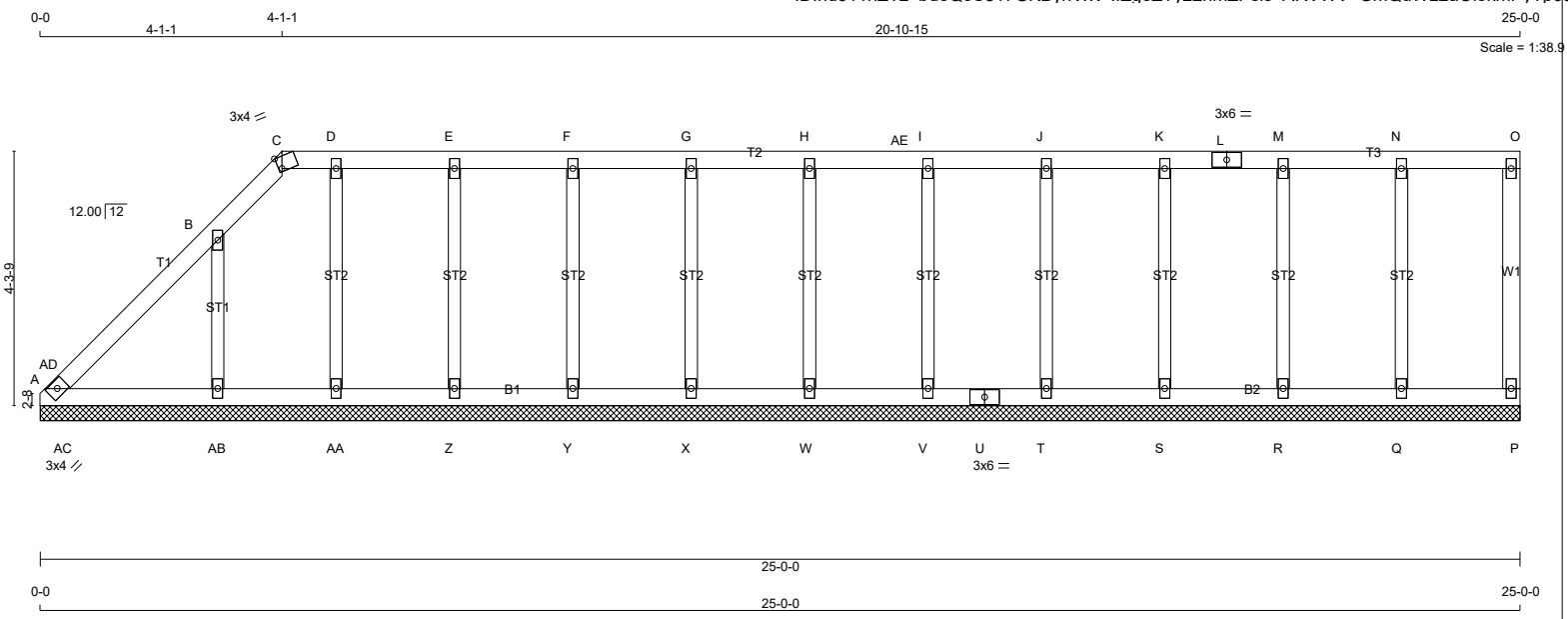

TOTAL WEIGHT = 95 lb [M]

LUMBER

N. L. G. A. RULES

CHORDS	SIZE		LUMBER	DESCR.
A - C	2x4	DRY	No.2	SPF
C - L	2x4	DRY	No.2	SPF
L - O	2x4	DRY	No.2	SPF
P - O	2x4	DRY	No.2	SPF
A - U	2x4	DRY	No.2	SPF
U - P	2x4	DRY	No.2	SPF
ALL WEBS	2x3	DRY	No.2	SPF
ALL GABLE WEBS	2x3	DRY	No.2	SPF

DRY: SEASONED LUMBER.

GABLE STUDS SPACED AT 2-0-0 OC.

PLATES (table is in inches)

JT	TYPE	PLATES	W	LEN	Y	X
A	TBM1-h	MT20	3.0	4.0		
B, D, E, F, G, H, I, J, K, M, N						
B	TMW+w	MT20	2.0	4.0		
C	TT-m	MT20	3.0	4.0	Edge 0.75	
L	TS-t	MT20	3.0	6.0		
O	TMV+p	MT20	2.0	4.0		
P	BMV1+p	MT20	2.0	4.0		
Q, R, S, T, V, W, X, Y, Z, AA, AB						
Q	BMW1+w	MT20	2.0	4.0		
U	BS-t	MT20	3.0	6.0		

Edge - INDICATES REFERENCE CORNER OF PLATE TOUCHES EDGE OF CHORD.

LATERAL BRACE(S) SHOWN SHALL BE 2X4 SPF#2

DIMENSIONS, SUPPORTS AND LOADINGS SPECIFIED BY FABRICATOR TO BE VERIFIED BY BUILDING DESIGNER

BEARINGS

THIS TRUSS DESIGNED FOR CONTINUOUS BEARINGS.

THIS TRUSS REQUIRES RIGID SHEATHING ON EXPOSED FACE.

BEARING MATERIAL TO BE SPF NO.2 OR BETTER AT JOINT(S)

BRACING

FOR SECTION C-O, MAX. PURLIN SPACING = 2.00 FT.
FOR OTHER SECTIONS, TOP CHORD TO BE SHEATHED OR MAX. PURLIN SPACING = 6.25 FT.
MAX. UNBRACED BOTTOM CHORD LENGTH = 6.25 FT OR RIGID CEILING DIRECTLY APPLIED.

ALL PITCH BREAKS AND PERIMETER CORNER JOINTS MUST BE LATERALLY RESTRAINED.

LOADING

TOTAL LOAD CASES: (4)

CHORDS

MEMB. FR-TO	MAX. FACTORED FORCE (LBS)	FACTORED VERT. LOAD LC1 (PLF) FROM	TO	MAX CSI (LC)	MAX. UNBRAC LENGTH
A-AD	-14 / 0	-78.0	-78.0	0.01 (4)	6.25
AD- B	0 / 4	-78.0	-78.0	0.07 (1)	10.00
B- C	-32 / 0	-78.0	-78.0	0.07 (1)	6.25
C- D	0 / 1	-85.5	-85.5	0.05 (1)	2.00
D- E	0 / 0	-85.5	-85.5	0.05 (1)	10.00
E- F	0 / 0	-85.5	-85.5	0.04 (1)	10.00
F- G	0 / 0	-85.5	-85.5	0.04 (1)	10.00
G- H	0 / 0	-85.5	-85.5	0.04 (1)	10.00
H-AE	0 / 0	-85.5	-85.5	0.04 (1)	10.00
AE- I	0 / 0	-85.5	-85.5	0.04 (1)	10.00
I- J	0 / 0	-85.5	-85.5	0.04 (1)	10.00
J- K	0 / 0	-85.5	-85.5	0.04 (1)	10.00
K- L	0 / 0	-85.5	-85.5	0.04 (1)	10.00
L- M	0 / 0	-85.5	-85.5	0.04 (1)	10.00
M- N	0 / 0	-85.5	-85.5	0.05 (1)	10.00
N- O	0 / 0	-85.5	-85.5	0.05 (1)	10.00
P- O	-69 / 0	0.0	0.0	0.02 (1)	7.81
A-AC	-26 / 0	-18.5	-18.5	0.05 (1)	6.25
AC-AB	0 / 8	-18.5	-18.5	0.05 (1)	10.00
AB-AA	0 / 0	-18.5	-18.5	0.04 (1)	10.00
AA- Z	0 / 0	-18.5	-18.5	0.02 (4)	10.00
Z- Y	0 / 0	-18.5	-18.5	0.02 (4)	10.00
Y- X	0 / 0	-18.5	-18.5	0.01 (4)	10.00
X- W	0 / 0	-18.5	-18.5	0.01 (4)	10.00
W- V	0 / 0	-18.5	-18.5	0.01 (4)	10.00
V- U	0 / 0	-18.5	-18.5	0.01 (4)	10.00
U- T	0 / 0	-18.5	-18.5	0.01 (4)	10.00
T- S	0 / 0	-18.5	-18.5	0.01 (4)	10.00
S- R	0 / 0	-18.5	-18.5	0.01 (4)	10.00
R- Q	0 / 0	-18.5	-18.5	0.02 (4)	10.00
Q- P	0 / 0	-18.5	-18.5	0.02 (4)	10.00

WEBS

MEMB. FR-TO	MAX. FACTORED FORCE (LBS)	MAX CSI (LC)
Q- N	-191 / 0	0.05 (1)
R- M	-168 / 0	0.05 (1)
S- K	-172 / 0	0.05 (1)
T- J	-171 / 0	0.05 (1)
V- I	-171 / 0	0.05 (1)
W- H	-171 / 0	0.05 (1)
X- G	-171 / 0	0.05 (1)
Y- F	-172 / 0	0.05 (1)
Z- E	-165 / 0	0.05 (1)
AA- D	-170 / 0	0.05 (1)
AB- B	-203 / 0	0.04 (1)
AC-AD	-94 / 0	0.00 (1)

DESIGN CRITERIA

SPECIFIED LOADS:

TOP	CH.	LL	=	21.0	PSF
		DL	=	6.0	PSF
BOT	CH.	LL	=	0.0	PSF
		DL	=	7.4	PSF
TOTAL	LOAD		=	34.4	PSF

SPACING = 24.0 IN. C/C

LOADING IN FLAT SECTION BASED ON PIGGYBACK TRUSS WITH SLOPES OF 6.00/12 AND -6.00/12 AND RESPECTIVE HEEL HEIGHTS OF 0-0 AND 0-0 AND AN ADDITIONAL DEAD LOAD OF 3.0 P.S.F.

THIS TRUSS IS DESIGNED FOR RESIDENTIAL OR SMALL BUILDING REQUIREMENTS OF PART 9, NBCC 2015

THIS DESIGN COMPLIES WITH:
- PART 9 OF BCBC 2018 , ABC 2019
- PART 9 OF OBC 2012 (2019 AMENDMENT)
- CSA 086-14
- TPIC 2014

(55 % OF 23.0 P.S.F. G.S.L. PLUS 8.4 P.S.F. RAIN LOAD) EQUALS 21.0 P.S.F. SPECIFIED ROOF LIVE LOAD

CSI: TC=0.07/1.00 (B-AD:1) , BC=0.05/1.00 (AB-AC:1) , WB=0.05/1.00 (N-Q:1) , SSI=0.08/1.00 (N-O:1)

DOL LUMBER=1.00 NAIL=1.00 LS BEND=1.10 COMP=1.10 SHEAR=1.10 TENS= 1.10

COMPANION LIVE LOAD FACTOR = 1.00

TRUSS PLATE MANUFACTURER IS NOT RESPONSIBLE FOR QUALITY CONTROL IN THE TRUSS MANUFACTURING PLANT .

NAIL VALUES

PLATE	GRIP(DRY) (PSI) MAX	MIN	SHEAR (PLI) MAX	MIN	SECTION (PLI) MAX	MIN
MT20	650	371	1747	788	1987	1873

PLATE PLACEMENT TOL. = 0.250 inches

PLATE ROTATION TOL. = 5.0 Deg.

JSI GRIP= 0.90 (C) (INPUT = 0.90)
JSI METAL= 0.11 (B) (INPUT = 1.00)

JOB NAME	TRUSS NAME	QUANTITY	PLY	JOB DESC.		DRWG NO.
336324	H112P		1	TRUSS DESC.	JT 45147	E21104111

Alpa Roof Truss, Maple

Version 8.420 S Jan 21 2021 MiTek Industries, Inc. Wed Oct 13 14:52:39 2021 Page 1

ID:hd511hZTz bdeQoS817GKByhVxV-F2hQ3FUCaqxUoj?5 PDvawaGxa4R E6tr0HrrHyTp66

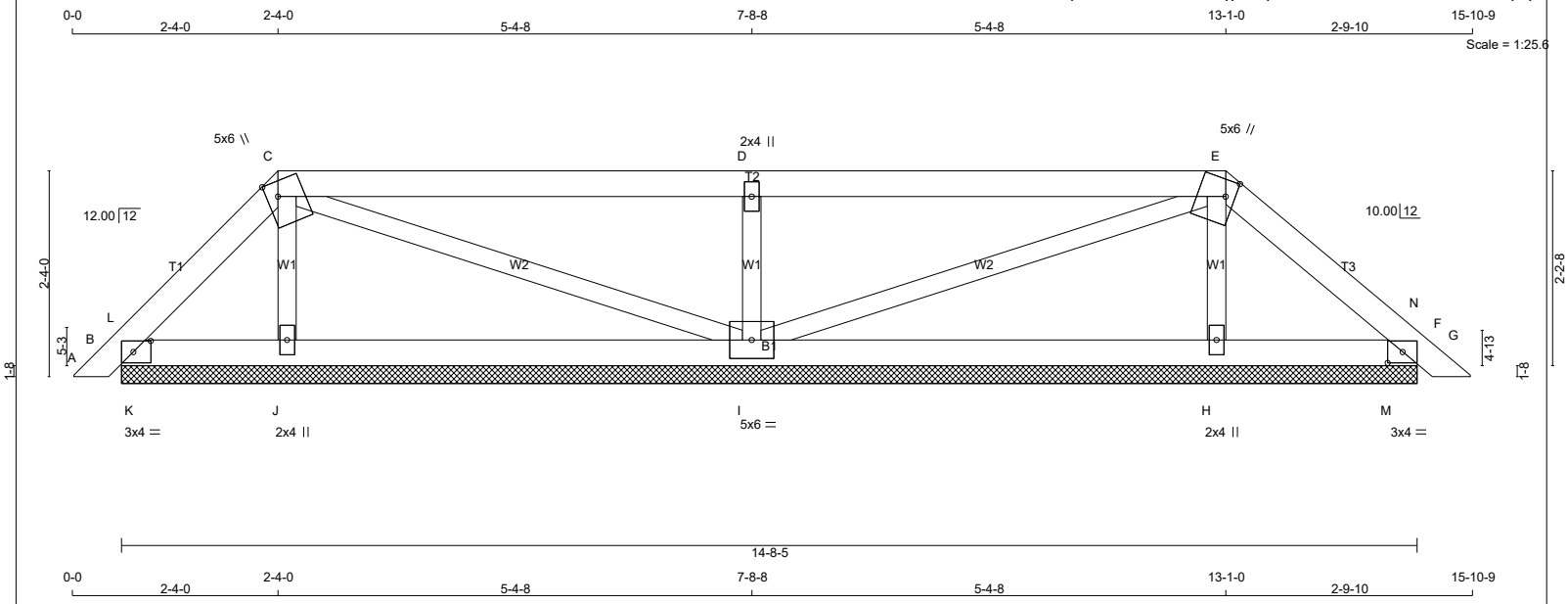

TOTAL WEIGHT = 50 lb

LUMBER

N. L. G. A. RULES

CHORDS	SIZE		LUMBER	DESCR.
A - C	2x4	DRY	No.2	SPF
C - E	2x4	DRY	No.2	SPF
E - G	2x4	DRY	No.2	SPF
B - F	2x4	DRY	No.2	SPF
ALL WEBS	2x3	DRY	No.2	SPF

DRY: SEASONED LUMBER.

PLATES (table is in inches)

JT	TYPE	PLATES	W	LEN	Y	X
B	TMB1-l	MT20	3.0	4.0	1.50	2.50
C	TTWW+m	MT20	5.0	6.0	2.00	1.50
D	TMW+w	MT20	2.0	4.0		
E	TTWW+m	MT20	5.0	6.0	2.25	1.25
F	TMB1-l	MT20	3.0	4.0	1.50	2.00
H	BMW1+w	MT20	2.0	4.0		
I	BMWWW1-t	MT20	5.0	6.0		
J	BMW1+w	MT20	2.0	4.0		

LATERAL BRACE(S) SHOWN SHALL BE 2X4 SPF#2

DIMENSIONS, SUPPORTS AND LOADINGS SPECIFIED BY FABRICATOR TO BE VERIFIED BY BUILDING DESIGNER

BEARINGS

JT	FACTORED GROSS REACTION VERT	HORZ	MAXIMUM FACTORED GROSS REACTION DOWN	HORZ	UPLIFT	INPUT BRG IN-SX	REQRD BRG IN-SX
B	146	0	146	0	0	14-8-5	1-8
F	169	0	169	0	0	14-8-5	1-8
J	258	0	258	0	0	14-8-5	1-8
I	640	0	640	0	0	14-8-5	1-8
H	280	0	280	0	0	14-8-5	1-8

UNFACTORED REACTIONS

JT	1ST LCASE COMBINED	MAX./MIN. COMPONENT REACTIONS SNOW	LIVE	PERM.LIVE	WIND	DEAD	SOIL
B	101	79 / 0	0 / 0	0 / 0	0 / 0	22 / 0	0 / 0
F	117	87 / 0	0 / 0	0 / 0	0 / 0	30 / 0	0 / 0
J	188	95 / 0	0 / 0	0 / 0	0 / 0	93 / 0	0 / 0
I	454	289 / 0	0 / 0	0 / 0	0 / 0	165 / 0	0 / 0
H	202	107 / 0	0 / 0	0 / 0	0 / 0	96 / 0	0 / 0

BEARING MATERIAL TO BE SPF NO.2 OR BETTER AT JOINT(S) B, F, J, I, H

BRACING

TOP CHORD TO BE SHEATHED OR MAX. PURLIN SPACING = 6.25 FT.
MAX. UNBRACED BOTTOM CHORD LENGTH = 10.00 FT OR RIGID CEILING DIRECTLY APPLIED.

ALL PITCH BREAKS AND PERIMETER CORNER JOINTS MUST BE LATERALLY RESTRAINED.

LOADING

TOTAL LOAD CASES: (4)

CHORDS MEMB. FR-TO	MAX. FACTORED FORCE (LBS)	FACTORED VERT. LOAD (PLF) FROM	TO	LC1 MAX CSI (LC)	MAX. UNBRAC LENGTH	WEBS MEMB. FR-TO	MAX. FACTORED FORCE (LBS)	MAX CSI (LC)
A- B	0 / 11	-78.0	-78.0	0.01 (1)	10.00	J- C	-162 / 0	0.02 (1)
B- L	-19 / 11	-78.0	-78.0	0.02 (1)	6.25	C- I	-23 / 0	0.01 (1)
L- C	-64 / 0	-78.0	-78.0	0.02 (1)	6.25	I- D	-523 / 0	0.08 (1)
C- D	-10 / 0	-78.0	-78.0	0.38 (1)	10.00	I- E	-25 / 0	0.01 (1)
D- E	-10 / 0	-78.0	-78.0	0.38 (1)	10.00	H- E	-180 / 0	0.03 (1)
E- N	-62 / 0	-78.0	-78.0	0.04 (1)	6.25	K- L	-124 / 0	0.00 (1)
N- F	-22 / 2	-78.0	-78.0	0.02 (1)	6.25	M- N	-139 / 0	0.00 (1)
F- G	0 / 12	-78.0	-78.0	0.02 (1)	10.00			
B- K	0 / 41	-18.5	-18.5	0.04 (1)	10.00			
K- J	0 / 41	-18.5	-18.5	0.08 (4)	10.00			
J- I	0 / 32	-18.5	-18.5	0.11 (4)	10.00			
I- H	0 / 34	-18.5	-18.5	0.11 (4)	10.00			
H- M	0 / 43	-18.5	-18.5	0.08 (4)	10.00			
M- F	0 / 43	-18.5	-18.5	0.05 (1)	10.00			

DESIGN CRITERIA

SPECIFIED LOADS:

TOP	CH.	LL	=	21.0	PSF
		DL	=	6.0	PSF
BOT	CH.	LL	=	0.0	PSF
		DL	=	7.4	PSF
TOTAL	LOAD		=	34.4	PSF

SPACING = 24.0 IN. C/C

LOADING IN FLAT SECTION BASED ON A SLOPE OF 2.00/12 MINIMUM

THIS TRUSS IS DESIGNED FOR RESIDENTIAL OR SMALL BUILDING REQUIREMENTS OF PART 9, NBCC 2015

THIS DESIGN COMPLIES WITH:
- PART 9 OF BCBC 2018 , ABC 2019
- PART 9 OF OBC 2012 (2019 AMENDMENT)
- CSA 086-14
- TPIC 2014

(55 % OF 23.0 P.S.F. G.S.L. PLUS 8.4 P.S.F. RAIN LOAD) EQUALS 21.0 P.S.F. SPECIFIED ROOF LIVE LOAD

CSI: TC=0.38/1.00 (D-E:1) , BC=0.11/1.00 (H-I:4) , WB=0.08/1.00 (D-I:1) , SSI=0.20/1.00 (D-E:1)

DOL LUMBER=1.00 NAIL=1.00 LS BEND=1.10 COMP=1.10 SHEAR=1.10 TENS= 1.10

COMPANION LIVE LOAD FACTOR = 1.00

TRUSS PLATE MANUFACTURER IS NOT RESPONSIBLE FOR QUALITY CONTROL IN THE TRUSS MANUFACTURING PLANT .

NAIL VALUES

PLATE	GRIP(DRY) (PSI) MAX	MIN	SHEAR (PLI) MAX	MIN	SECTION (PLI) MAX	MIN
MT20	650	371	1747	788	1987	1873

PLATE PLACEMENT TOL. = 0.250 inches

PLATE ROTATION TOL. = 5.0 Deg.

JSI GRIP= 0.26 (D) (INPUT = 0.90)
JSI METAL= 0.11 (D) (INPUT = 1.00)

JOB NAME	TRUSS NAME	QUANTITY	PLY	JOB DESC.		DRWG NO.
336324	H113P		1	TRUSS DESC.	JT 45147	E21104112

Alpa Roof Truss, Maple

Version 8.420 S Jan 21 2021 MiTek Industries, Inc. Wed Oct 13 14:52:41 2021 Page 1

ID:hd511hZTz bdeQoS817GKByhVxV-BRoAUwWS6HBC109T5qFNfLfbqNkUS8ZAJKmxvAyTp64

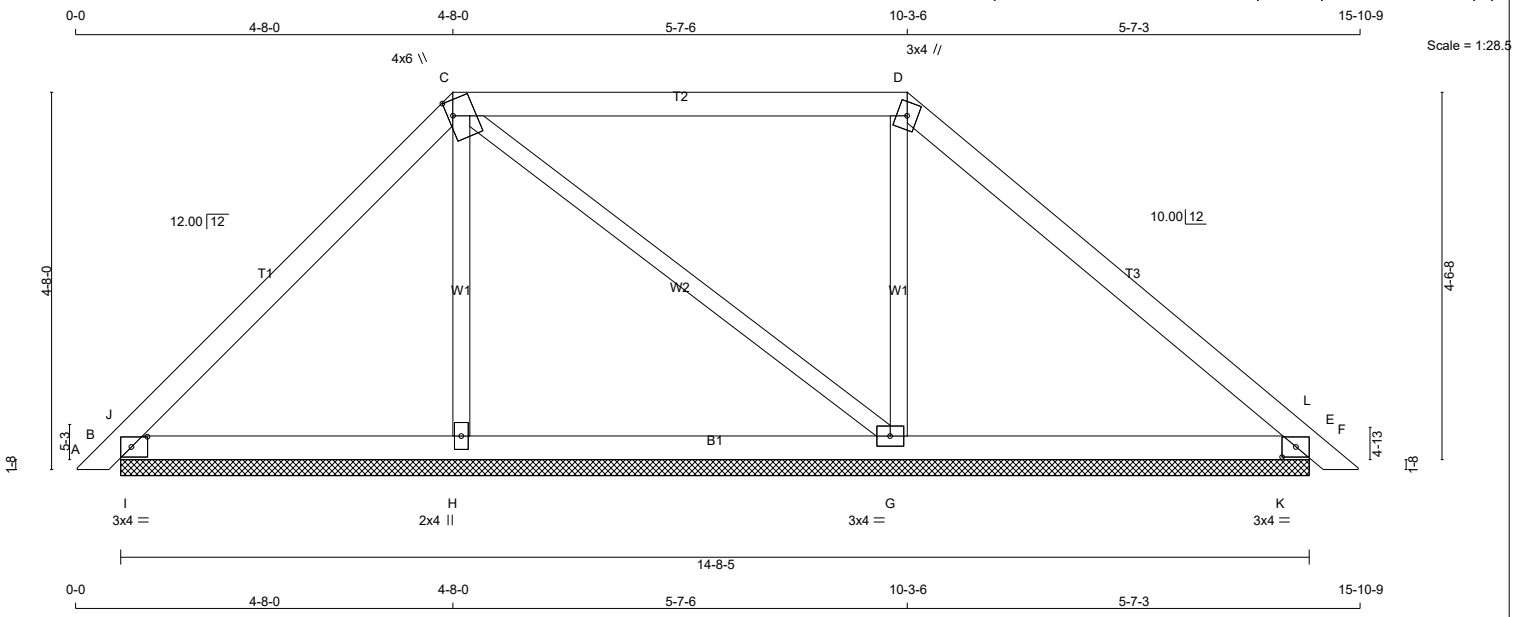

TOTAL WEIGHT = 51 lb

LUMBER

N. L. G. A. RULES

CHORDS	SIZE		LUMBER	DESCR.
A - C	2x4	DRY	No.2	SPF
C - D	2x4	DRY	No.2	SPF
D - F	2x4	DRY	No.2	SPF
B - E	2x4	DRY	No.2	SPF
ALL WEBS	2x3	DRY	No.2	SPF

DRY: SEASONED LUMBER.

PLATES (table is in inches)

JT	TYPE	PLATES	W	LEN	Y	X
B	TMB1-I	MT20	3.0	4.0	1.50	2.50
C	TTWW+m	MT20	4.0	6.0	2.25	0.75
D	TTW+m	MT20	3.0	4.0		
E	TMB1-I	MT20	3.0	4.0	1.50	2.00
G	BMWW1-t	MT20	3.0	4.0		
H	BMW1+w	MT20	2.0	4.0		

LATERAL BRACE(S) SHOWN SHALL BE 2X4 SPF#2

DIMENSIONS, SUPPORTS AND LOADINGS SPECIFIED BY FABRICATOR TO BE VERIFIED BY BUILDING DESIGNER

BEARINGS

JT	FACTORED GROSS REACTION VERT	HORZ	MAXIMUM FACTORED GROSS REACTION DOWN	HORZ	UPLIFT	INPUT BRG IN-SX	REQRD BRG IN-SX
B	378	0	378	0	0	14-8-5	1-8
E	381	0	381	0	0	14-8-5	1-8
H	304	0	304	0	0	14-8-5	1-8
G	429	0	429	0	0	14-8-5	1-8

UNFACTORED REACTIONS

JT	1ST LCASE COMBINED	MAX./MIN. COMPONENT REACTIONS SNOW	LIVE	PERM.LIVE	WIND	DEAD	SOIL
B	266	183 / 0	0 / 0	0 / 0	0 / 0	83 / 0	0 / 0
E	269	181 / 0	0 / 0	0 / 0	0 / 0	88 / 0	0 / 0
H	220	115 / 0	0 / 0	0 / 0	0 / 0	105 / 0	0 / 0
G	307	178 / 0	0 / 0	0 / 0	0 / 0	129 / 0	0 / 0

BEARING MATERIAL TO BE SPF NO.2 OR BETTER AT JOINT(S) B, E, H, G

BRACING

TOP CHORD TO BE SHEATHED OR MAX. PURLIN SPACING = 6.25 FT.
MAX. UNBRACED BOTTOM CHORD LENGTH = 10.00 FT OR RIGID CEILING DIRECTLY APPLIED.

ALL PITCH BREAKS AND PERIMETER CORNER JOINTS MUST BE LATERALLY RESTRAINED.

LOADING

TOTAL LOAD CASES: (4)

CHORDS

MEMB. FR-TO	MAX. FACTORED FORCE (LBS)	FACTORED VERT. LOAD (PLF) FROM	TO	LC1 CSI (LC)	MAX UNBRAC LENGTH
A- B	0 / 11	-78.0	-78.0	0.01 (1)	10.00
B- J	-43 / 1	-78.0	-78.0	0.09 (1)	6.25
J- C	-228 / 0	-78.0	-78.0	0.16 (1)	6.25
C- D	-129 / 0	-78.0	-78.0	0.42 (1)	6.25
D- L	-190 / 0	-78.0	-78.0	0.24 (1)	6.25
L- E	-41 / 72	-78.0	-78.0	0.13 (1)	6.25
E- F	0 / 12	-78.0	-78.0	0.02 (1)	10.00
B- I	0 / 152	-18.5	-18.5	0.15 (1)	10.00
I- H	0 / 152	-18.5	-18.5	0.15 (1)	10.00
H- G	0 / 148	-18.5	-18.5	0.14 (4)	10.00
G- K	0 / 136	-18.5	-18.5	0.20 (1)	10.00
K- E	0 / 136	-18.5	-18.5	0.20 (1)	10.00

WEBS

MEMB. FR-TO	MAX. FACTORED FORCE (LBS)	MAX CSI (LC)
H- C	-187 / 0	0.06 (1)
C- G	-23 / 0	0.02 (1)
G- D	-270 / 0	0.08 (1)
I- J	-441 / 0	0.00 (1)
K- L	-547 / 0	0.00 (1)

DESIGN CRITERIA

SPECIFIED LOADS:

TOP	CH.	LL	=	21.0	PSF
		DL	=	6.0	PSF
BOT	CH.	LL	=	0.0	PSF
		DL	=	7.4	PSF
TOTAL	LOAD		=	34.4	PSF

SPACING = 24.0 IN. C/C

LOADING IN FLAT SECTION BASED ON A SLOPE OF 2.00/12 MINIMUM

THIS TRUSS IS DESIGNED FOR RESIDENTIAL OR SMALL BUILDING REQUIREMENTS OF PART 9, NBCC 2015

THIS DESIGN COMPLIES WITH:
- PART 9 OF BCBC 2018 , ABC 2019
- PART 9 OF OBC 2012 (2019 AMENDMENT)
- CSA 086-14
- TPIC 2014

(55 % OF 23.0 P.S.F. G.S.L. PLUS 8.4 P.S.F. RAIN LOAD) EQUALS 21.0 P.S.F. SPECIFIED ROOF LIVE LOAD

CSI: TC=0.42/1.00 (C-D:1) , BC=0.20/1.00 (E-K:1) , WB=0.08/1.00 (D-G:1) , SSI=0.43/1.00 (E-K:1)

DOL LUMBER=1.00 NAIL=1.00 LS BEND=1.10 COMP=1.10 SHEAR=1.10 TENS= 1.10

COMPANION LIVE LOAD FACTOR = 1.00

TRUSS PLATE MANUFACTURER IS NOT RESPONSIBLE FOR QUALITY CONTROL IN THE TRUSS MANUFACTURING PLANT .

NAIL VALUES

PLATE	GRIP(DRY) (PSI) MAX	MIN	SHEAR (PLI) MAX	MIN	SECTION (PLI) MAX	MIN
MT20	650	371	1747	788	1987	1873

PLATE PLACEMENT TOL. = 0.250 inches

PLATE ROTATION TOL. = 5.0 Deg.

JSI GRIP= 0.45 (D) (INPUT = 0.90)
JSI METAL= 0.09 (B) (INPUT = 1.00)

JOB NAME	TRUSS NAME	QUANTITY	PLY	JOB DESC.		DRWG NO.
336324	H114P		1	TRUSS DESC.	JT 45147	E21104113

Alpa Roof Truss, Maple

Version 8.420 S Jan 21 2021 MiTek Industries, Inc. Wed Oct 13 14:52:42 2021 Page 1

ID:hd511hZTz bdeQoS817GKByhVxV-fdMZhGX5tbJ2fAkqfXmcCZCltn2WBbCJX VVScyTp63

Scale = 1:43.3

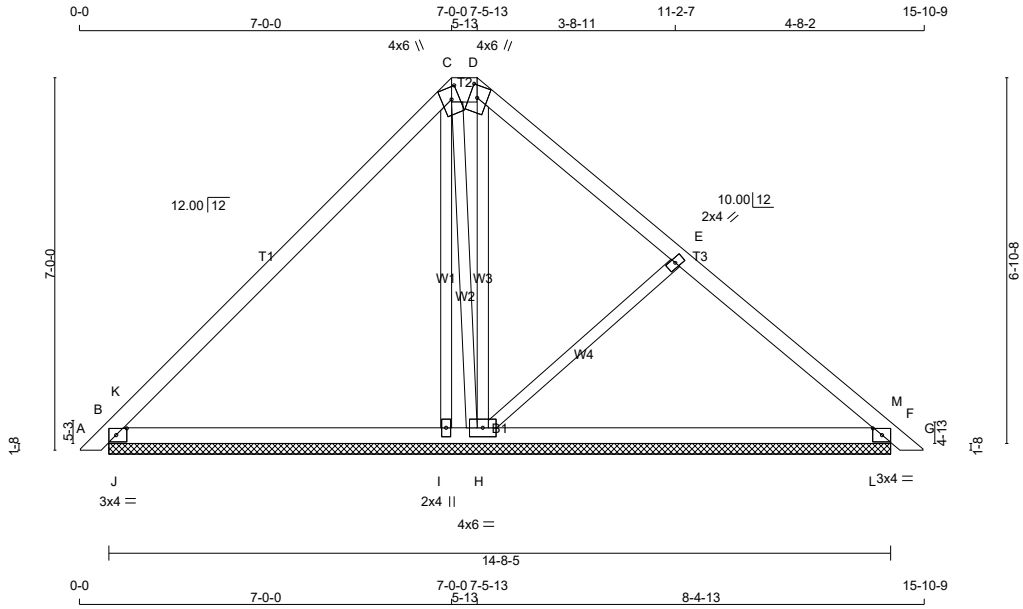

TOTAL WEIGHT = 60 lb

[M]

LUMBER

N. L. G. A. RULES

CHORDS	SIZE		LUMBER	DESCR.
A - C	2x4	DRY	No.2	SPF
C - D	2x6	DRY	No.2	SPF
D - G	2x4	DRY	No.2	SPF
B - F	2x4	DRY	No.2	SPF
ALL WEBS	2x3	DRY	No.2	SPF

DRY: SEASONED LUMBER.

PLATES (table is in inches)

JT	TYPE	PLATES	W	LEN	Y	X
B	TMB1-l	MT20	3.0	4.0	1.50	2.50
C	TTWW+m	MT20	4.0	6.0	2.75	1.75
D	TTW+m	MT20	4.0	6.0	2.75	1.75
E	TMW+w	MT20	2.0	4.0		
F	TMB1-l	MT20	3.0	4.0	1.50	2.00
H	BMWWW1-t	MT20	4.0	6.0		
I	BMW1+w	MT20	2.0	4.0		

LATERAL BRACE(S) SHOWN SHALL BE 2X4 SPF#2

DIMENSIONS, SUPPORTS AND LOADINGS SPECIFIED BY FABRICATOR TO BE VERIFIED BY BUILDING DESIGNER

BEARINGS

JT	FACTORED GROSS REACTION VERT	HORZ	MAXIMUM GROSS REACTION DOWN	HORZ	FACTORED UPLIFT	INPUT BRG IN-SX	REQRD BRG IN-SX
B	408	0	408	0	0	14-8-5	1-8
F	469	0	469	0	0	14-8-5	1-8
I	302	0	302	0	0	14-8-5	1-8
H	314	0	314	0	0	14-8-5	1-8

UNFACTORED REACTIONS

JT	1ST LCASE COMBINED	MAX./MIN. COMPONENT REACTIONS SNOW	LIVE	PERM.LIVE	WIND	DEAD	SOIL
B	290	183 / 0	0 / 0	0 / 0	0 / 0	107 / 0	0 / 0
F	333	212 / 0	0 / 0	0 / 0	0 / 0	121 / 0	0 / 0
I	211	150 / 0	0 / 0	0 / 0	0 / 0	62 / 0	0 / 0
H	229	113 / 0	0 / 0	0 / 0	0 / 0	116 / 0	0 / 0

BEARING MATERIAL TO BE SPF NO.2 OR BETTER AT JOINT(S) B, F, I, H

BRACING

TOP CHORD TO BE SHEATHED OR MAX. PURLIN SPACING = 6.25 FT.
MAX. UNBRACED BOTTOM CHORD LENGTH = 10.00 FT OR RIGID CEILING DIRECTLY APPLIED.

ALL PITCH BREAKS AND PERIMETER CORNER JOINTS MUST BE LATERALLY RESTRAINED.

LOADING

TOTAL LOAD CASES: (4)

CHORDS

MEMB. FR-TO	MAX. FACTORED FORCE (LBS)	FACTORED VERT. LOAD (PLF) FROM	TO	LC1 MAX CSI (LC)	MAX. UNBRAC LENGTH
A- B	0 / 11	-78.0	-78.0	0.01 (1)	10.00
B- K	0 / 624	-78.0	-78.0	0.37 (1)	10.00
K- C	-154 / 0	-78.0	-78.0	0.40 (1)	6.25
C- D	-85 / 0	-78.0	-78.0	0.00 (1)	6.25
D- E	-134 / 0	-78.0	-78.0	0.20 (1)	6.25
E- M	-363 / 0	-78.0	-78.0	0.20 (1)	6.25
M- F	-543 / 0	-78.0	-78.0	0.12 (4)	6.25
F- G	0 / 12	-78.0	-78.0	0.02 (1)	10.00
B- J	0 / 93	-18.5	-18.5	0.35 (1)	10.00
J- I	0 / 93	-18.5	-18.5	0.35 (1)	10.00
I- H	0 / 94	-18.5	-18.5	0.27 (1)	10.00
H- L	0 / 302	-18.5	-18.5	0.25 (4)	10.00
L- F	0 / 302	-18.5	-18.5	0.11 (4)	10.00

WEBS

MEMB. FR-TO	MAX. FACTORED FORCE (LBS)	MAX CSI (LC)
I- C	-47 / 0	0.04 (1)
H- D	-58 / 7	0.04 (1)
C- H	-93 / 0	0.07 (1)
H- E	-294 / 0	0.12 (1)
J- K	-1209 / 0	0.00 (1)
L- M	0 / 248	0.00 (1)

DESIGN CRITERIA

SPECIFIED LOADS:

TOP CH.	LL	=	21.0	PSF
	DL	=	6.0	PSF
BOT CH.	LL	=	0.0	PSF
	DL	=	7.4	PSF
TOTAL LOAD		=	34.4	PSF

SPACING = 24.0 IN. C/C

LOADING IN FLAT SECTION BASED ON A SLOPE OF 2.00/12 MINIMUM

THIS TRUSS IS DESIGNED FOR RESIDENTIAL OR SMALL BUILDING REQUIREMENTS OF PART 9, NBCC 2015

THIS DESIGN COMPLIES WITH:
- PART 9 OF BCBC 2018 , ABC 2019
- PART 9 OF OBC 2012 (2019 AMENDMENT)
- CSA 086-14
- TPIC 2014

(55 % OF 23.0 P.S.F. G.S.L. PLUS 8.4 P.S.F. RAIN LOAD) EQUALS 21.0 P.S.F. SPECIFIED ROOF LIVE LOAD

CSI: TC=0.40/1.00 (C-K:1) , BC=0.35/1.00 (B-J:1) , WB=0.12/1.00 (E-H:1) , SSI=0.94/1.00 (B-J:1)

DOL LUMBER=1.00 NAIL=1.00 LS BEND=1.10 COMP=1.10 SHEAR=1.10 TENS= 1.10

COMPANION LIVE LOAD FACTOR = 1.00

TRUSS PLATE MANUFACTURER IS NOT RESPONSIBLE FOR QUALITY CONTROL IN THE TRUSS MANUFACTURING PLANT .

NAIL VALUES

PLATE	GRIP(DRY) (PSI) MAX	MIN	SHEAR (PLI) MAX	MIN	SECTION (PLI) MAX	MIN
MT20	650	371	1747	788	1987	1873

PLATE PLACEMENT TOL. = 0.250 inches

PLATE ROTATION TOL. = 5.0 Deg.

JSI GRIP= 0.42 (B) (INPUT = 0.90)
JSI METAL= 0.12 (F) (INPUT = 1.00)

JOB NAME	TRUSS NAME	QUANTITY	PLY	JOB DESC.		DRWG NO.
336324	H115P		1	TRUSS DESC.	JT 45147	E21104114

Alpa Roof Truss, Maple

Version 8.420 S Jan 21 2021 MiTek Industries, Inc. Wed Oct 13 14:52:44 2021 Page 1

ID:hd511hZTz bdeQoS817GKByhVxV-b?UJ6yYLOCamuUu2nyo4H H5gbjpfVTc?I bWVyTp61

Scale = 1:45.3

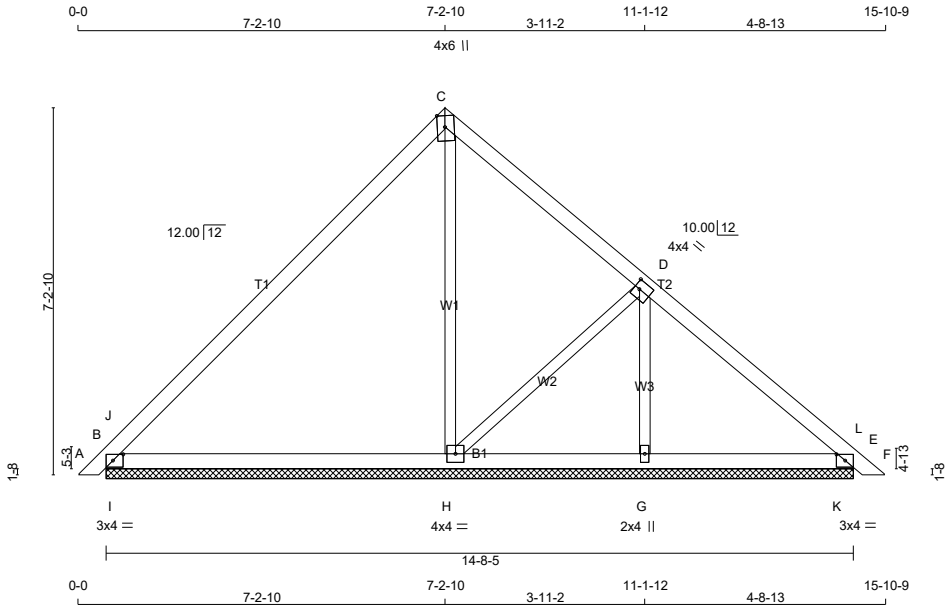

TOTAL WEIGHT = 9 X 53 = 477 lb

[M]

LUMBER

N. L. G. A. RULES

CHORDS	SIZE		LUMBER	DESCR.
A - C	2x4	DRY	No.2	SPF
C - F	2x4	DRY	No.2	SPF
B - E	2x4	DRY	No.2	SPF
ALL WEBS	2x3	DRY	No.2	SPF

DRY: SEASONED LUMBER.

PLATES (table is in inches)

JT	TYPE	PLATES	W	LEN	Y	X
B	TMB1-I	MT20	3.0	4.0	1.50	2.50
C	TTW+m	MT20	4.0	6.0	Edge	1.75
D	TMWW-t	MT20	4.0	4.0	2.00	1.25
E	TMB1-I	MT20	3.0	4.0	1.50	2.00
G	BMW1+w	MT20	2.0	4.0		
H	BMWW1-t	MT20	4.0	4.0		

Edge - INDICATES REFERENCE CORNER OF PLATE TOUCHES EDGE OF CHORD.

LATERAL BRACE(S) SHOWN SHALL BE 2X4 SPF#2

DIMENSIONS, SUPPORTS AND LOADINGS SPECIFIED BY FABRICATOR TO BE VERIFIED BY BUILDING DESIGNER

BEARINGS

JT	FACTORED GROSS REACTION VERT	HORZ	MAXIMUM FACTORED GROSS REACTION DOWN	HORZ	UPLIFT	INPUT BRG IN-SX	REQRD BRG IN-SX
B	492	0	492	0	0	14-8-5	1-8
E	361	0	361	0	0	14-8-5	1-8
H	280	0	280	0	0	14-8-5	1-8
G	360	0	360	0	0	14-8-5	1-8

UNFACTORED REACTIONS

JT	1ST LCASE COMBINED	MAX./MIN. COMPONENT REACTIONS SNOW	LIVE	PERM.LIVE	WIND	DEAD	SOIL
B	348	228 / 0	0 / 0	0 / 0	0 / 0	120 / 0	0 / 0
E	255	170 / 0	0 / 0	0 / 0	0 / 0	85 / 0	0 / 0
H	204	102 / 0	0 / 0	0 / 0	0 / 0	102 / 0	0 / 0
G	256	158 / 0	0 / 0	0 / 0	0 / 0	99 / 0	0 / 0

BEARING MATERIAL TO BE SPF NO.2 OR BETTER AT JOINT(S) B, E, H, G

BRACING

TOP CHORD TO BE SHEATHED OR MAX. PURLIN SPACING = 6.25 FT.
MAX. UNBRACED BOTTOM CHORD LENGTH = 10.00 FT OR RIGID CEILING DIRECTLY APPLIED.

ALL PITCH BREAKS AND PERIMETER CORNER JOINTS MUST BE LATERALLY RESTRAINED.

LOADING

TOTAL LOAD CASES: (4)

CHORDS

MEMB. FR-TO	MAX. FACTORED FORCE (LBS)	FACTORED VERT. LOAD LC1 (PLF) FROM	TO	MAX CSI (LC)	MAX. UNBRAC LENGTH
A- B	0 / 11	-78.0	-78.0	0.01 (1)	10.00
B- J	-20 / 522	-78.0	-78.0	0.35 (1)	6.25
J- C	-241 / 0	-78.0	-78.0	0.45 (1)	6.25
C- D	-224 / 0	-78.0	-78.0	0.20 (1)	6.25
D- L	-223 / 0	-78.0	-78.0	0.20 (1)	6.25
L- E	-230 / 0	-78.0	-78.0	0.02 (1)	6.25
E- F	0 / 12	-78.0	-78.0	0.02 (1)	10.00
B- I	0 / 155	-18.5	-18.5	0.36 (1)	10.00
I- H	0 / 155	-18.5	-18.5	0.36 (1)	10.00
H- G	0 / 188	-18.5	-18.5	0.24 (1)	10.00
G- K	0 / 188	-18.5	-18.5	0.11 (1)	10.00
K- E	0 / 188	-18.5	-18.5	0.09 (1)	10.00

WEBS

MEMB. FR-TO	MAX. FACTORED FORCE (LBS)	MAX CSI (LC)
H- C	-54 / 11	0.05 (1)
H- D	-45 / 0	0.02 (1)
G- D	-315 / 0	0.07 (1)
I- J	-1198 / 0	0.00 (1)
K- L	-144 / 30	0.00 (1)

DESIGN CRITERIA

SPECIFIED LOADS:

TOP	CH.	LL	=	21.0	PSF
		DL	=	6.0	PSF
BOT	CH.	LL	=	0.0	PSF
		DL	=	7.4	PSF
TOTAL	LOAD		=	34.4	PSF

SPACING = 24.0 IN. C/C

THIS TRUSS IS DESIGNED FOR RESIDENTIAL OR SMALL BUILDING REQUIREMENTS OF PART 9, NBCC 2015

THIS DESIGN COMPLIES WITH:
- PART 9 OF BCBC 2018 , ABC 2019
- PART 9 OF OBC 2012 (2019 AMENDMENT)
- CSA 086-14
- TPIC 2014

(55 % OF 23.0 P.S.F. G.S.L. PLUS 8.4 P.S.F. RAIN LOAD) EQUALS 21.0 P.S.F. SPECIFIED ROOF LIVE LOAD

CSI: TC=0.45/1.00 (C-J:1) , BC=0.36/1.00 (B-I:1) , WB=0.07/1.00 (D-G:1) , SSI=0.94/1.00 (B-I:1)

DOL LUMBER=1.00 NAIL=1.00 LS BEND=1.10 COMP=1.10 SHEAR=1.10 TENS= 1.10

COMPANION LIVE LOAD FACTOR = 1.00

TRUSS PLATE MANUFACTURER IS NOT RESPONSIBLE FOR QUALITY CONTROL IN THE TRUSS MANUFACTURING PLANT .

NAIL VALUES

PLATE	GRIP(DRY) (PSI) MAX	MIN	SHEAR (PLI) MAX	MIN	SECTION (PLI) MAX	MIN
MT20	650	371	1747	788	1987	1873

PLATE PLACEMENT TOL. = 0.250 inches

PLATE ROTATION TOL. = 5.0 Deg.

JSI GRIP= 0.49 (B) (INPUT = 0.90)
JSI METAL= 0.11 (B) (INPUT = 1.00)

JOB NAME	TRUSS NAME	QUANTITY	PLY	JOB DESC.		DRWG NO.
336324	H116P		1	TRUSS DESC.	JT 45147	E21104115

Alpa Roof Truss, Maple

Version 8.420 S Jan 21 2021 MiTek Industries, Inc. Wed Oct 13 14:52:45 2021 Page 1

ID:hd511hZTz_bdeQoS817GKByhVxV-3C2hKlZz9WidWeTFKgJJqBqDy_3KOvklEyk92xyTp60

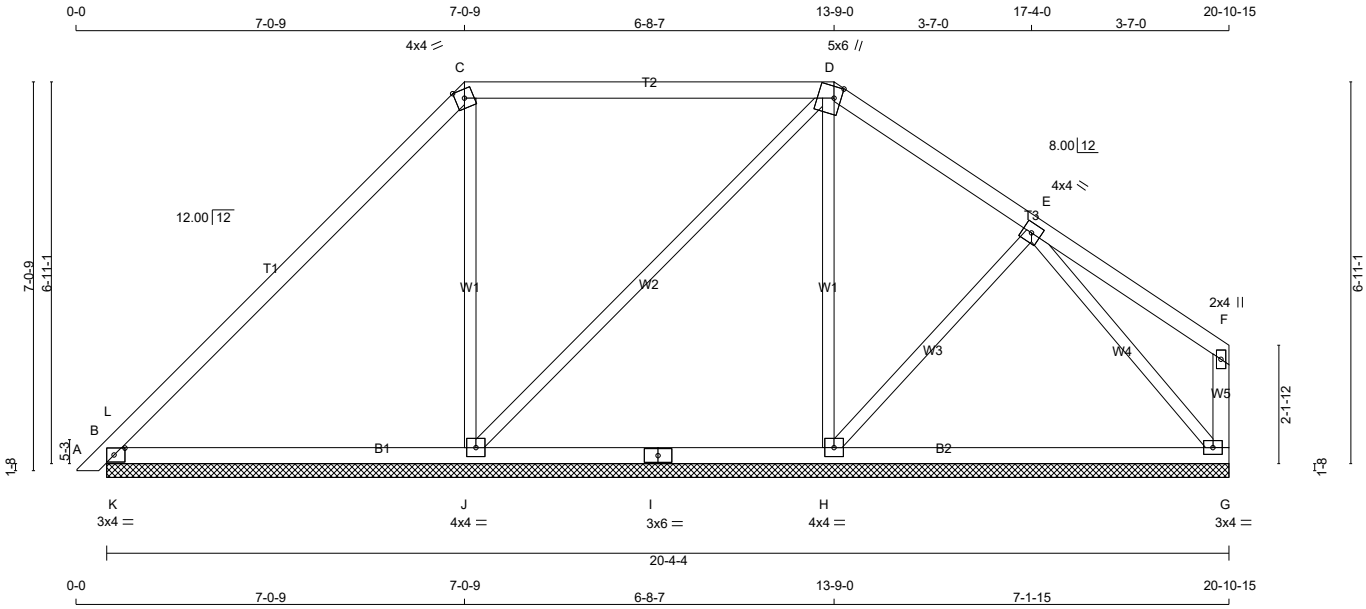

TOTAL WEIGHT = 80 lb

[M]

LUMBER

N. L. G. A. RULES

CHORDS	SIZE		LUMBER	DESCR.
A - C	2x4	DRY	No.2	SPF
C - D	2x4	DRY	No.2	SPF
D - F	2x4	DRY	No.2	SPF
G - F	2x4	DRY	No.2	SPF
B - I	2x4	DRY	No.2	SPF
I - G	2x4	DRY	No.2	SPF
ALL WEBS	2x3	DRY	No.2	SPF

DRY: SEASONED LUMBER.

PLATES (table is in inches)

JT	TYPE	PLATES	W	LEN	Y	X
B	TMB1-l	MT20	3.0	4.0	1.50	2.50
C	TTW-m	MT20	4.0	4.0	Edge	
D	TTWW+m	MT20	5.0	6.0	2.50	1.50
E	TMWW-t	MT20	4.0	4.0		
F	TMV+p	MT20	2.0	4.0		
G	BMVW1-t	MT20	3.0	4.0		
H	BMWW1-t	MT20	4.0	4.0		
I	BS-t	MT20	3.0	6.0		
J	BMWW1-t	MT20	4.0	4.0		

Edge - INDICATES REFERENCE CORNER OF PLATE TOUCHES EDGE OF CHORD.

LATERAL BRACE(S) SHOWN SHALL BE 2X4 SPF#2

DIMENSIONS, SUPPORTS AND LOADINGS SPECIFIED BY FABRICATOR TO BE VERIFIED BY BUILDING DESIGNER

BEARINGS

JT	FACTORED GROSS REACTION VERT	HORZ	MAXIMUM FACTORED GROSS REACTION DOWN	HORZ	UPLIFT	INPUT BRG IN-SX	REQRD BRG IN-SX
G	452	0	452	0	0	20-4-4 (10-4-4)	8
B	494	0	494	0	0	20-4-4 (10-4-4)	8
J	461	0	461	0	0	20-4-4 (10-4-4)	8
H	592	0	592	0	0	20-4-4 (10-4-4)	8

VALUE IN PARENTHESIS INDICATES EFFECTIVE BEARING LENGTH

UNFACTORED REACTIONS

JT	1ST LCASE COMBINED	MAX./MIN. COMPONENT REACTIONS SNOW	LIVE	PERM.LIVE	WIND	DEAD	SOIL
G	320	210 / 0	0 / 0	0 / 0	0 / 0	110 / 0	0 / 0
B	349	229 / 0	0 / 0	0 / 0	0 / 0	120 / 0	0 / 0
J	330	193 / 0	0 / 0	0 / 0	0 / 0	137 / 0	0 / 0
H	425	241 / 0	0 / 0	0 / 0	0 / 0	184 / 0	0 / 0

BEARING MATERIAL TO BE SPF NO.2 OR BETTER AT JOINT(S) G, B, J, H

BRACING

TOP CHORD TO BE SHEATHED OR MAX. PURLIN SPACING = 6.25 FT.
MAX. UNBRACED BOTTOM CHORD LENGTH = 10.00 FT OR RIGID CEILING DIRECTLY APPLIED.

ALL PITCH BREAKS AND PERIMETER CORNER JOINTS MUST BE LATERALLY RESTRAINED.

LOADING

TOTAL LOAD CASES: (4)

CHORDS MEMB. FR-TO	MAX. FACTORED FORCE (LBS)	FACTORED VERT. LOAD (PLF) FROM	TO	LC1 MAX CSI (LC)	MAX. UNBRAC LENGTH
A- B	0 / 11	-78.0	-78.0	0.01 (1)	10.00
B- L	-27 / 459	-78.0	-78.0	0.32 (1)	6.25
L- C	-251 / 0	-78.0	-78.0	0.42 (1)	6.25
C- D	-158 / 0	-78.0	-78.0	0.60 (1)	6.25
D- E	-168 / 0	-78.0	-78.0	0.17 (1)	6.25
E- F	0 / 19	-78.0	-78.0	0.17 (1)	10.00
G- F	-106 / 0	0.0	0.0	0.01 (1)	7.81
B- K	0 / 162	-18.5	-18.5	0.34 (1)	10.00
K- J	0 / 162	-18.5	-18.5	0.34 (1)	10.00
J- I	0 / 119	-18.5	-18.5	0.22 (4)	10.00
I- H	0 / 119	-18.5	-18.5	0.22 (4)	10.00
H- G	0 / 246	-18.5	-18.5	0.23 (4)	10.00

WEBS MEMB. FR-TO	MAX. FACTORED FORCE (LBS)	MAX CSI (LC)
J- C	-314 / 0	0.26 (1)
J- D	0 / 55	0.01 (1)
H- D	-323 / 0	0.26 (1)
H- E	-186 / 0	0.10 (1)
E- G	-380 / 0	0.19 (1)
K- L	-1126 / 0	0.00 (1)

DESIGN CRITERIA

SPECIFIED LOADS:

TOP CH.	LL	=	21.0	PSF
	DL	=	6.0	PSF
BOT CH.	LL	=	0.0	PSF
	DL	=	7.4	PSF
TOTAL LOAD		=	34.4	PSF

SPACING = 24.0 IN. C/C

LOADING IN FLAT SECTION BASED ON A SLOPE OF 2.00/12 MINIMUM

THIS TRUSS IS DESIGNED FOR RESIDENTIAL OR SMALL BUILDING REQUIREMENTS OF PART 9, NBCC 2015

THIS DESIGN COMPLIES WITH:
- PART 9 OF BCBC 2018 , ABC 2019
- PART 9 OF OBC 2012 (2019 AMENDMENT)
- CSA 086-14
- TPIC 2014

(55 % OF 23.0 P.S.F. G.S.L. PLUS 8.4 P.S.F. RAIN LOAD) EQUALS 21.0 P.S.F. SPECIFIED ROOF LIVE LOAD

CSI: TC=0.60/1.00 (C-D:1) , BC=0.34/1.00 (J-K:1) , WB=0.26/1.00 (D-H:1) , SSI=0.88/1.00 (B-K:1)

DOL LUMBER=1.00 NAIL=1.00 LS BEND=1.10 COMP=1.10 SHEAR=1.10 TENS= 1.10

COMPANION LIVE LOAD FACTOR = 1.00

TRUSS PLATE MANUFACTURER IS NOT RESPONSIBLE FOR QUALITY CONTROL IN THE TRUSS MANUFACTURING PLANT .

NAIL VALUES

PLATE	GRIP(DRY) (PSI) MAX	MIN	SHEAR (PLI) MAX	MIN	SECTION (PLI) MAX	MIN
MT20	650	371	1747	788	1987	1873

PLATE PLACEMENT TOL. = 0.250 inches

PLATE ROTATION TOL. = 5.0 Deg.

JSI GRIP= 0.74 (G) (INPUT = 0.90)
JSI METAL= 0.12 (E) (INPUT = 1.00)

JOB NAME	TRUSS NAME	QUANTITY	PLY	JOB DESC.		DRWG NO.
336324	H117P		1	TRUSS DESC.	JT 45147	E21104116

Alpa Roof Truss, Maple

Version 8.420 S Jan 21 2021 MiTek Industries, Inc. Wed Oct 13 14:52:47 2021 Page 1

ID:hd511hZTz bdeQoS817GKByhVxV-0aASl bDh7yLmxddS5Mnvcvd ooqsrW2hGDG7qyTp6_

Scale = 1:57.8

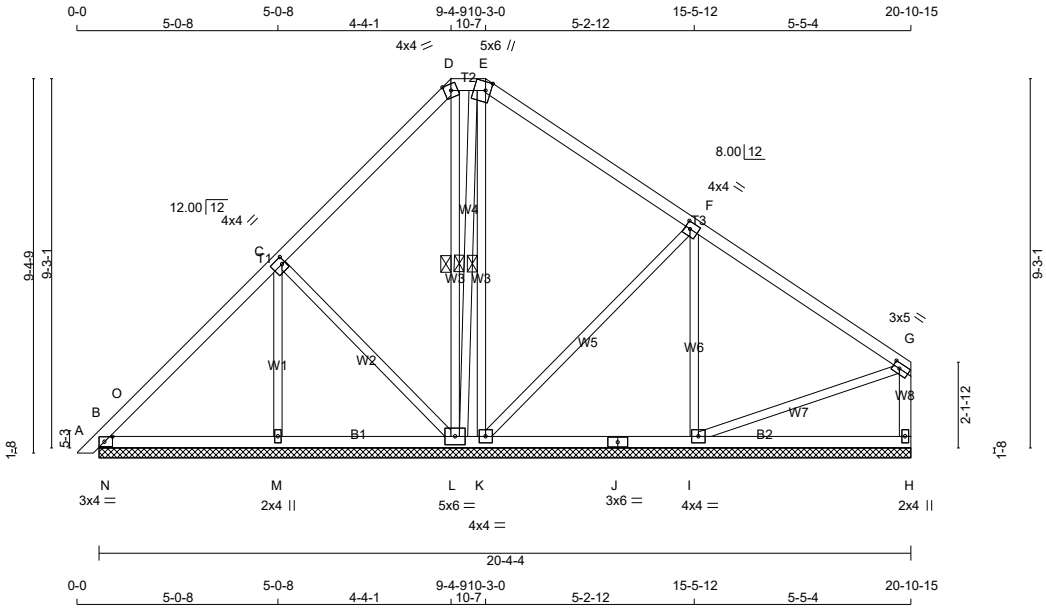

TOTAL WEIGHT = 100 lb

[M]

LUMBER

N. L. G. A. RULES

CHORDS	SIZE		LUMBER	DESCR.
A - D	2x4	DRY	No.2	SPF
D - E	2x4	DRY	No.2	SPF
E - G	2x4	DRY	No.2	SPF
H - G	2x4	DRY	No.2	SPF
B - J	2x4	DRY	No.2	SPF
J - H	2x4	DRY	No.2	SPF
ALL WEBS	2x3	DRY	No.2	SPF

DRY: SEASONED LUMBER.

PLATES (table is in inches)

JT	TYPE	PLATES	W	LEN	Y	X
B	TMB1-l	MT20	3.0	4.0	1.50	2.50
C	TMWW-t	MT20	4.0	4.0	2.00	1.00
D	TTW-m	MT20	4.0	4.0	Edge	
E	TTWW+m	MT20	5.0	6.0	2.50	1.50
F	TMWW-t	MT20	4.0	4.0	2.00	1.50
G	TMVW-t	MT20	3.0	5.0	1.50	2.00
H	BMV1+p	MT20	2.0	4.0		
I	BMWW1-t	MT20	4.0	4.0		
J	BS-t	MT20	3.0	6.0		
K	BMWW1-t	MT20	4.0	4.0		
L	BMWWW1-t	MT20	5.0	6.0		
M	BMW1+w	MT20	2.0	4.0		

Edge - INDICATES REFERENCE CORNER OF PLATE TOUCHES EDGE OF CHORD.

LATERAL BRACE(S) SHOWN SHALL BE 2X4 SPF#2

DIMENSIONS, SUPPORTS AND LOADINGS SPECIFIED BY FABRICATOR TO BE VERIFIED BY BUILDING DESIGNER

BEARINGS

JT	FACTORED GROSS REACTION VERT	HORZ	MAXIMUM FACTORED GROSS REACTION DOWN	HORZ	UPLIFT	INPUT BRG IN-SX	REQRD BRG IN-SX
H	291	0	291	0	0	20-4-4 (7-4-4)	1-8
B	292	0	292	0	0	20-4-4 (7-4-4)	1-8
M	309	0	309	0	0	20-4-4 (7-4-4)	1-8
L	388	0	388	0	0	20-4-4 (7-4-4)	1-8
K	280	0	280	0	0	20-4-4 (7-4-4)	1-8
I	437	0	437	0	0	20-4-4 (7-4-4)	1-8

VALUE IN PARENTHESIS INDICATES EFFECTIVE BEARING LENGTH

UNFACTORED REACTIONS

JT	1ST LCASE COMBINED	MAX./MIN. COMPONENT REACTIONS SNOW	LIVE	PERM.LIVE	WIND	DEAD	SOIL
H	206	135 / 0	0 / 0	0 / 0	0 / 0	71 / 0	0 / 0
B	207	137 / 0	0 / 0	0 / 0	0 / 0	70 / 0	0 / 0
M	223	119 / 0	0 / 0	0 / 0	0 / 0	104 / 0	0 / 0
L	272	193 / 0	0 / 0	0 / 0	0 / 0	79 / 0	0 / 0
K	201	117 / 0	0 / 0	0 / 0	0 / 0	84 / 0	0 / 0
I	315	173 / 0	0 / 0	0 / 0	0 / 0	143 / 0	0 / 0

BEARING MATERIAL TO BE SPF NO.2 OR BETTER AT JOINT(S) H, B, M, L, K, I

BRACING

TOP CHORD TO BE SHEATHED OR MAX. PURLIN SPACING = 6.25 FT.
MAX. UNBRACED BOTTOM CHORD LENGTH = 6.25 FT OR RIGID CEILING DIRECTLY APPLIED.

ALL PITCH BREAKS AND PERIMETER CORNER JOINTS MUST BE LATERALLY RESTRAINED.

1 LATERAL BRACE(S) AT 1/ 2 LENGTH OF D-L, E-L, E-K.

END VERTICAL(S) MUST BE SHEATHED OR HAVE BRACES AS INDICATED IN THE MAX. UNBRACED LENGTH COLUMN OF THE TABLE BELOW

LOADING

TOTAL LOAD CASES: (4)

CHORDS

MEMB. FR-TO	MAX. FACTORED FORCE (LBS)	FACTORED VERT. LOAD LC1 (PLF) FROM	TO	MAX CSI (LC)	MAX. UNBRAC LENGTH
A- B	0 / 11	-78.0	-78.0	0.01 (1)	10.00
B- O	-57 / 0	-78.0	-78.0	0.05 (1)	6.25
O- C	-106 / 0	-78.0	-78.0	0.24 (1)	6.25
C- D	-6 / 0	-78.0	-78.0	0.24 (1)	10.00
D- E	0 / 18	-78.0	-78.0	0.01 (1)	10.00
E- F	-19 / 0	-78.0	-78.0	0.38 (1)	6.25
F- G	-80 / 0	-78.0	-78.0	0.38 (1)	6.25
H- G	-251 / 0	0.0	0.0	0.03 (1)	7.81
B- N	0 / 91	-18.5	-18.5	0.10 (1)	10.00
N- M	0 / 91	-18.5	-18.5	0.10 (4)	10.00
M- L	0 / 91	-18.5	-18.5	0.10 (4)	10.00
L- K	-10 / 0	-18.5	-18.5	0.07 (4)	6.25
K- J	0 / 90	-18.5	-18.5	0.14 (4)	10.00
J- I	0 / 90	-18.5	-18.5	0.14 (4)	10.00
I- H	0 / 0	-18.5	-18.5	0.14 (4)	10.00

WEBS

MEMB. FR-TO	MAX. FACTORED FORCE (LBS)	MAX CSI (LC)
M- C	-191 / 0	0.07 (1)
C- L	-154 / 0	0.11 (1)
L- D	-179 / 0	0.10 (1)
L- E	-91 / 0	0.05 (1)
K- E	-101 / 0	0.06 (1)
K- F	-142 / 0	0.17 (1)
I- F	-352 / 0	0.18 (1)
I- G	0 / 95	0.02 (1)
N- O	-279 / 0	0.00 (1)

DESIGN CRITERIA

SPECIFIED LOADS:

TOP CH.	LL	=	21.0	PSF
	DL	=	6.0	PSF
BOT CH.	LL	=	0.0	PSF
	DL	=	7.4	PSF
TOTAL LOAD		=	34.4	PSF

SPACING = 24.0 IN. C/C

LOADING IN FLAT SECTION BASED ON A SLOPE OF 2.00/12 MINIMUM

THIS TRUSS IS DESIGNED FOR RESIDENTIAL OR SMALL BUILDING REQUIREMENTS OF PART 9, NBCC 2015

THIS DESIGN COMPLIES WITH:
- PART 9 OF BCBC 2018 , ABC 2019
- PART 9 OF OBC 2012 (2019 AMENDMENT)
- CSA 086-14
- TPIC 2014

(55 % OF 23.0 P.S.F. G.S.L. PLUS 8.4 P.S.F. RAIN LOAD) EQUALS 21.0 P.S.F. SPECIFIED ROOF LIVE LOAD

CSI: TC=0.38/1.00 (F-G:1) , BC=0.14/1.00 (I-K:4) , WB=0.18/1.00 (F-I:1) , SSI=0.23/1.00 (B-N:1)

DOL LUMBER=1.00 NAIL=1.00 LS BEND=1.10 COMP=1.10 SHEAR=1.10 TENS= 1.10

COMPANION LIVE LOAD FACTOR = 1.00

TRUSS PLATE MANUFACTURER IS NOT RESPONSIBLE FOR QUALITY CONTROL IN THE TRUSS MANUFACTURING PLANT .

NAIL VALUES

PLATE	GRIP(DRY) (PSI) MAX	MIN	SHEAR (PLI) MAX	MIN	SECTION (PLI) MAX	MIN
MT20	650	371	1747	788	1987	1873

PLATE PLACEMENT TOL. = 0.250 inches

PLATE ROTATION TOL. = 5.0 Deg.

JSI GRIP= 0.72 (G) (INPUT = 0.90)
JSI METAL= 0.09 (D) (INPUT = 1.00)

JOB NAME	TRUSS NAME	QUANTITY	PLY	JOB DESC.		DRWG NO.
336324	H118		1	TRUSS DESC.	JT 45147	E21104117

Alpa Roof Truss, Maple

Version 8.420 S Jan 21 2021 MiTek Industries, Inc. Wed Oct 13 14:52:49 2021 Page 1

ID:hd511hZTz bdeQoS817GKByhVxV-yzHC9fcUDkC3?Fm0ZWOF 1?0ScV0KnJL8aiMAiyTp5y

Scale = 1:47.2

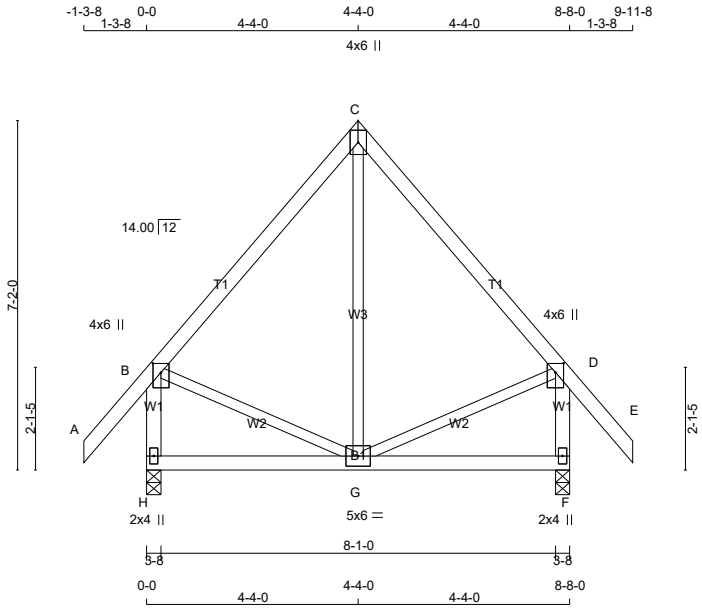

TOTAL WEIGHT = 46 lb

[M][F]

LUMBER

N. L. G. A. RULES

CHORDS	SIZE		LUMBER	DESCR.
A - C	2x4	DRY	No.2	SPF
C - E	2x4	DRY	No.2	SPF
H - B	2x4	DRY	No.2	SPF
F - D	2x4	DRY	No.2	SPF
H - F	2x4	DRY	No.2	SPF
ALL WEBS EXCEPT	2x3	DRY	No.2	SPF

DRY: SEASONED LUMBER.

PLATES (table is in inches)

JT	TYPE	PLATES	W	LEN	Y	X
B	TMVW+p	MT20	4.0	6.0	2.25	2.00
C	TTW+p	MT20	4.0	6.0		
D	TMVW+p	MT20	4.0	6.0	2.25	2.00
F	BMV1+p	MT20	2.0	4.0		
G	BMWWW-t	MT20	5.0	6.0		
H	BMV1+p	MT20	2.0	4.0		

LATERAL BRACE(S) SHOWN SHALL BE 2X4 SPF#2

DIMENSIONS, SUPPORTS AND LOADINGS SPECIFIED BY FABRICATOR TO BE VERIFIED BY BUILDING DESIGNER

BEARINGS

JT	FACTORED GROSS REACTION VERT	HORZ	MAXIMUM FACTORED GROSS REACTION DOWN	HORZ	UPLIFT	INPUT BRG IN-SX	REQRD BRG IN-SX
H	527	0	527	0	0	3-8	1-8
F	527	0	527	0	0	3-8	1-8

UNFACTORED REACTIONS

JT	1ST LCASE COMBINED	MAX./MIN. COMPONENT REACTIONS SNOW	LIVE	PERM.LIVE	WIND	DEAD	SOIL
H	374	241 / 0	0 / 0	0 / 0	0 / 0	133 / 0	0 / 0
F	374	241 / 0	0 / 0	0 / 0	0 / 0	133 / 0	0 / 0

BEARING MATERIAL TO BE SPF NO.2 OR BETTER AT JOINT(S) H, F

BRACING

TOP CHORD TO BE SHEATHED OR MAX. PURLIN SPACING = 6.25 FT.
MAX. UNBRACED BOTTOM CHORD LENGTH = 10.00 FT OR RIGID CEILING DIRECTLY APPLIED.

ALL PITCH BREAKS AND PERIMETER CORNER JOINTS MUST BE LATERALLY RESTRAINED.

LOADING

TOTAL LOAD CASES: (4)

CHORDS

MEMB. FR-TO	MAX. FACTORED FORCE (LBS)	FACTORED VERT. LOAD (PLF) FROM	TO	LC1 CSI (LC)	MAX UNBRAC LENGTH
A- B	0 / 42	-78.0	-78.0	0.11 (1)	10.00
B- C	-214 / 0	-78.0	-78.0	0.19 (1)	6.25
C- D	-214 / 0	-78.0	-78.0	0.19 (1)	6.25
D- E	0 / 42	-78.0	-78.0	0.11 (1)	10.00
H- B	-497 / 0	0.0	0.0	0.06 (1)	7.81
F- D	-497 / 0	0.0	0.0	0.06 (1)	7.81
H- G	0 / 0	-18.5	-18.5	0.10 (4)	10.00
G- F	0 / 0	-18.5	-18.5	0.10 (4)	10.00

WEBS

MEMB. FR-TO	MAX. FACTORED FORCE (LBS)	MAX CSI (LC)
G- C	-13 / 64	0.02 (4)
B- G	0 / 150	0.03 (1)
G- D	0 / 150	0.03 (1)

DESIGN CRITERIA

SPECIFIED LOADS:

TOP CH.	LL	=	21.0	PSF
	DL	=	6.0	PSF
BOT CH.	LL	=	0.0	PSF
	DL	=	7.4	PSF
TOTAL LOAD		=	34.4	PSF

SPACING = 24.0 IN. C/C

THIS TRUSS IS DESIGNED FOR RESIDENTIAL OR SMALL BUILDING REQUIREMENTS OF PART 9, NBCC 2015

THIS DESIGN COMPLIES WITH:
- PART 9 OF BCBC 2018 , ABC 2019
- PART 9 OF OBC 2012 (2019 AMENDMENT)
- CSA 086-14
- TPIC 2014

(55 % OF 23.0 P.S.F. G.S.L. PLUS 8.4 P.S.F. RAIN LOAD) EQUALS 21.0 P.S.F. SPECIFIED ROOF LIVE LOAD

ALLOWABLE DEFL.(LL)= L/360 (0.29")
CALCULATED VERT. DEFL.(LL) = L/ 999 (0.00")
ALLOWABLE DEFL.(TL)= L/360 (0.29")
CALCULATED VERT. DEFL.(TL) = L/ 999 (0.01")

CSI: TC=0.19/1.00 (B-C:1) , BC=0.10/1.00 (G-H:4) , WB=0.03/1.00 (D-G:1) , SSI=0.09/1.00 (B-C:1)

DOL LUMBER=1.00 NAIL=1.00 LS BEND=1.10 COMP=1.10 SHEAR=1.10 TENS= 1.10

COMPANION LIVE LOAD FACTOR = 1.00

TRUSS PLATE MANUFACTURER IS NOT RESPONSIBLE FOR QUALITY CONTROL IN THE TRUSS MANUFACTURING PLANT .

NAIL VALUES

PLATE	GRIP(DRY) (PSI) MAX	MIN	SHEAR (PLI) MAX	MIN	SECTION (PLI) MAX	MIN
MT20	650	371	1747	788	1987	1873

PLATE PLACEMENT TOL. = 0.250 inches

PLATE ROTATION TOL. = 5.0 Deg.

JSI GRIP= 0.28 (B) (INPUT = 0.90)
JSI METAL= 0.14 (D) (INPUT = 1.00)

JOB NAME	TRUSS NAME	QUANTITY	PLY	JOB DESC.	DRWG NO.
336324	H118G		1	TRUSS DESC. JT 45147	E21104118

Alpa Roof Truss, Maple

Version 8.420 S Jan 21 2021 MiTek Industries, Inc. Wed Oct 13 14:52:50 2021 Page 1

ID:hd511hZTz bdeQoS817GKByhVxV-Q9raN?d6 2KwdPLC7DvUXFXCP?rT3DDUNERwj8yTp5x

Scale: 1/4"=1'

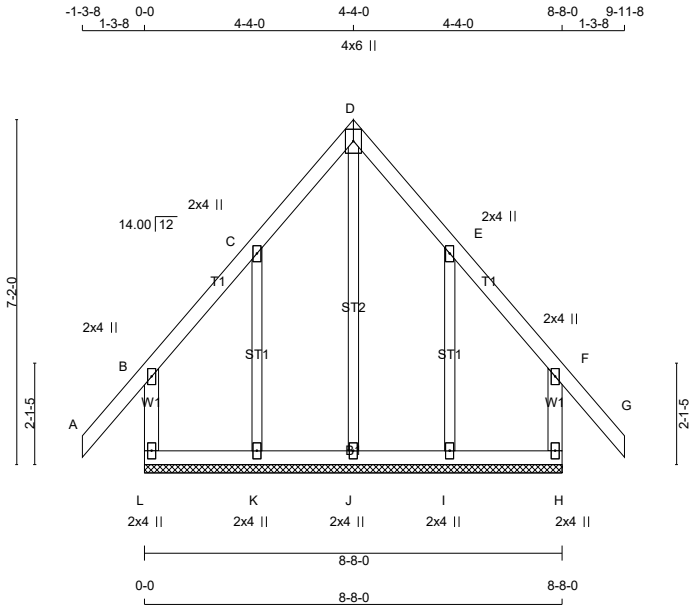

TOTAL WEIGHT = 46 lb

[M]

LUMBER

N. L. G. A. RULES

CHORDS	SIZE		LUMBER	DESCR.
L - B	2x4	DRY	No.2	SPF
A - D	2x4	DRY	No.2	SPF
D - G	2x4	DRY	No.2	SPF
H - F	2x4	DRY	No.2	SPF
L - H	2x4	DRY	No.2	SPF
ALL WEBS	2x3	DRY	No.2	SPF
ALL GABLE WEBS	2x3	DRY	No.2	SPF

DRY: SEASONED LUMBER.

GABLE STUDS SPACED AT 2-0-0 OC.

PLATES (table is in inches)

JT	TYPE	PLATES	W	LEN	Y	X
B	TMV+p	MT20	2.0	4.0		
C	TMW+w	MT20	2.0	4.0		
D	TTW+p	MT20	4.0	6.0		
E	TMW+w	MT20	2.0	4.0		
F	TMV+p	MT20	2.0	4.0		
H	BMV1+p	MT20	2.0	4.0		
I, J, K						
I	BMW1+w	MT20	2.0	4.0		
L	BMV1+p	MT20	2.0	4.0		

LATERAL BRACE(S) SHOWN SHALL BE 2X4 SPF#2

DIMENSIONS, SUPPORTS AND LOADINGS SPECIFIED BY FABRICATOR TO BE VERIFIED BY BUILDING DESIGNER

BEARINGS

THIS TRUSS DESIGNED FOR CONTINUOUS BEARINGS.

THIS TRUSS REQUIRES RIGID SHEATHING ON EXPOSED FACE.

BEARING MATERIAL TO BE SPF NO.2 OR BETTER AT JOINT(S)

BRACING

TOP CHORD TO BE SHEATHED OR MAX. PURLIN SPACING = 6.25 FT.
MAX. UNBRACED BOTTOM CHORD LENGTH = 10.00 FT OR RIGID CEILING DIRECTLY APPLIED.

ALL PITCH BREAKS AND PERIMETER CORNER JOINTS MUST BE LATERALLY RESTRAINED.

LOADING

TOTAL LOAD CASES: (4)

CHORDS

MEMB. FR-TO	MAX. FORCE (LBS)	FACTORED VERT. LOAD (PLF) FROM	TO	LC1 CSI (LC)	MAX UNBRAC LENGTH
L- B	-213 / 0	0.0	0.0	0.02 (1)	7.81
A- B	0 / 42	-78.0	-78.0	0.11 (1)	10.00
B- C	-21 / 0	-78.0	-78.0	0.05 (1)	6.25
C- D	-14 / 0	-78.0	-78.0	0.04 (1)	6.25
D- E	-14 / 0	-78.0	-78.0	0.04 (1)	6.25
E- F	-21 / 0	-78.0	-78.0	0.05 (1)	6.25
F- G	0 / 42	-78.0	-78.0	0.11 (1)	10.00
H- F	-213 / 0	0.0	0.0	0.02 (1)	7.81
L- K	0 / 13	-18.5	-18.5	0.02 (4)	10.00
K- J	0 / 9	-18.5	-18.5	0.02 (4)	10.00
J- I	0 / 9	-18.5	-18.5	0.02 (4)	10.00
I- H	0 / 13	-18.5	-18.5	0.02 (4)	10.00

WEBS

MEMB. FR-TO	MAX. FORCE (LBS)	MAX CSI (LC)
J- D	-142 / 0	0.12 (1)
K- C	-163 / 0	0.06 (1)
I- E	-163 / 0	0.06 (1)

DESIGN CRITERIA

SPECIFIED LOADS:

TOP	CH.	LL	=	21.0	PSF
		DL	=	6.0	PSF
BOT	CH.	LL	=	0.0	PSF
		DL	=	7.4	PSF
TOTAL	LOAD		=	34.4	PSF

SPACING = 24.0 IN. C/C

THIS TRUSS IS DESIGNED FOR RESIDENTIAL OR SMALL BUILDING REQUIREMENTS OF PART 9, NBCC 2015

THIS DESIGN COMPLIES WITH:
- PART 9 OF BCBC 2018 , ABC 2019
- PART 9 OF OBC 2012 (2019 AMENDMENT)
- CSA 086-14
- TPIC 2014

DESIGN ASSUMPTIONS
-OVERHANG NOT TO BE ALTERED OR CUT OFF.

(55 % OF 23.0 P.S.F. G.S.L. PLUS 8.4 P.S.F. RAIN LOAD) EQUALS 21.0 P.S.F. SPECIFIED ROOF LIVE LOAD

CSI: TC=0.11/1.00 (F-G:1) , BC=0.02/1.00 (K-L:4) , WB=0.12/1.00 (D-J:1) , SSI=0.06/1.00 (A-B:1)

DOL LUMBER=1.00 NAIL=1.00 LS BEND=1.10 COMP=1.10 SHEAR=1.10 TENS= 1.10

COMPANION LIVE LOAD FACTOR = 1.00

TRUSS PLATE MANUFACTURER IS NOT RESPONSIBLE FOR QUALITY CONTROL IN THE TRUSS MANUFACTURING PLANT .

NAIL VALUES

PLATE	GRIP(DRY) (PSI) MAX	MIN	SHEAR (PLI) MAX	MIN	SECTION (PLI) MAX	MIN
MT20	650	371	1747	788	1987	1873

PLATE PLACEMENT TOL. = 0.250 inches

PLATE ROTATION TOL. = 5.0 Deg.

JSI GRIP= 0.18 (B) (INPUT = 0.90)
JSI METAL= 0.11 (B) (INPUT = 1.00)

JOB NAME	TRUSS NAME	QUANTITY	PLY	JOB DESC.		DRWG NO.
336324	H119		1	TRUSS DESC.	JT 45147	E21104119

Alpa Roof Truss, Maple

Version 8.420 S Jan 21 2021 MiTek Industries, Inc. Wed Oct 13 14:52:52 2021 Page 1

ID:hd511hZTz bdeQoS817GKByhVxV-MYzLohfMWfaesjVbFexycqdWTpS3X45nrYw1n1yTp5v

Scale = 1:65.4

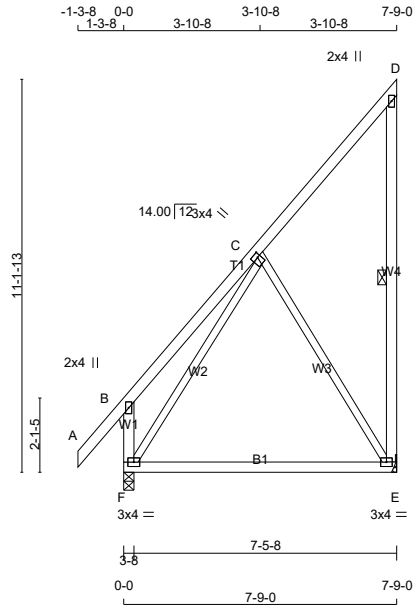

TOTAL WEIGHT = 3 X 50 = 150 lb

[M][F]

LUMBER

N. L. G. A. RULES

CHORDS	SIZE		LUMBER	DESCR.
A - D	2x4	DRY	No.2	SPF
E - D	2x4	DRY	No.2	SPF
F - B	2x4	DRY	No.2	SPF
F - E	2x4	DRY	No.2	SPF
ALL WEBS EXCEPT	2x3	DRY	No.2	SPF

DRY: SEASONED LUMBER.

PLATES (table is in inches)

JT	TYPE	PLATES	W	LEN	Y	X
B	TMV+p	MT20	2.0	4.0		
C	TMWW+t	MT20	3.0	4.0	1.50	1.00
D	TMV+p	MT20	2.0	4.0		
E	BMVW1-t	MT20	3.0	4.0		
F	BMVW1-t	MT20	3.0	4.0		

LATERAL BRACE(S) SHOWN SHALL BE 2X4 SPF#2

DIMENSIONS, SUPPORTS AND LOADINGS SPECIFIED BY FABRICATOR TO BE VERIFIED BY BUILDING DESIGNER

BEARINGS

JT	FACTORED GROSS REACTION VERT	HORZ	MAXIMUM FACTORED GROSS REACTION DOWN	HORZ	UPLIFT	INPUT BRG IN-SX	REQRD BRG IN-SX
E	374	0	374	0	0	MECHANICAL	
F	483	0	483	0	0	3-8	1-8

A SUITABLE HANGER/MECHANICAL CONNECTION IS REQUIRED AT JOINT E. MINIMUM BEARING LENGTH AT JOINT E = 1-8.

UNFACTORED REACTIONS

JT	1ST LCASE COMBINED	MAX./MIN. COMPONENT REACTIONS SNOW	LIVE	PERM.LIVE	WIND	DEAD	SOIL
E	267	163 / 0	0 / 0	0 / 0	0 / 0	104 / 0	0 / 0
F	342	222 / 0	0 / 0	0 / 0	0 / 0	121 / 0	0 / 0

BEARING MATERIAL TO BE SPF NO.2 OR BETTER AT JOINT(S) F

BRACING

TOP CHORD TO BE SHEATHED OR MAX. PURLIN SPACING = 6.25 FT.
MAX. UNBRACED BOTTOM CHORD LENGTH = 10.00 FT OR RIGID CEILING DIRECTLY APPLIED.

ALL PITCH BREAKS AND PERIMETER CORNER JOINTS MUST BE LATERALLY RESTRAINED.

1 LATERAL BRACE(S) AT 1/ 2 LENGTH OF D-E.

END VERTICAL(S) MUST BE SHEATHED OR HAVE BRACES AS INDICATED IN THE MAX. UNBRACED LENGTH COLUMN OF THE TABLE BELOW

LOADING

TOTAL LOAD CASES: (4)

CHORDS

MEMB. FR-TO	MAX. FACTORED FORCE (LBS)	FACTORED VERT. LOAD (PLF) FROM	TO	LC1 MAX CSI (LC)	MAX. UNBRAC LENGTH
A- B	0 / 42	-78.0	-78.0	0.11 (1)	10.00
B- C	0 / 30	-78.0	-78.0	0.20 (1)	10.00
C- D	-27 / 0	-78.0	-78.0	0.15 (1)	6.25
E- D	-121 / 0	0.0	0.0	0.08 (1)	6.25
F- B	-215 / 0	0.0	0.0	0.03 (1)	7.81
F- E	0 / 120	-18.5	-18.5	0.33 (4)	10.00

WEBS

MEMB. FR-TO	MAX. FACTORED FORCE (LBS)	MAX CSI (LC)
C- E	-217 / 0	0.22 (1)
F- C	-230 / 0	0.22 (1)

DESIGN CRITERIA

SPECIFIED LOADS:

TOP CH.	LL	=	21.0	PSF
	DL	=	6.0	PSF
BOT CH.	LL	=	0.0	PSF
	DL	=	7.4	PSF
TOTAL LOAD		=	34.4	PSF

SPACING = 24.0 IN. C/C

THIS TRUSS IS DESIGNED FOR RESIDENTIAL OR SMALL BUILDING REQUIREMENTS OF PART 9, NBCC 2015

THIS DESIGN COMPLIES WITH:
- PART 9 OF BCBC 2018 , ABC 2019
- PART 9 OF OBC 2012 (2019 AMENDMENT)
- CSA 086-14
- TPIC 2014

(55 % OF 23.0 P.S.F. G.S.L. PLUS 8.4 P.S.F. RAIN LOAD) EQUALS 21.0 P.S.F. SPECIFIED ROOF LIVE LOAD

ALLOWABLE DEFL.(TL)= L/360 (0.26")
CALCULATED VERT. DEFL.(TL) = L/ 572 (0.16")

CSI: TC=0.20/1.00 (B-C:1) , BC=0.33/1.00 (E-F:4) , WB=0.22/1.00 (C-F:1) , SSI=0.10/1.00 (C-D:1)

DOL LUMBER=1.00 NAIL=1.00 LS BEND=1.10 COMP=1.10 SHEAR=1.10 TENS= 1.10

COMPANION LIVE LOAD FACTOR = 1.00

TRUSS PLATE MANUFACTURER IS NOT RESPONSIBLE FOR QUALITY CONTROL IN THE TRUSS MANUFACTURING PLANT .

NAIL VALUES

PLATE	GRIP(DRY) (PSI) MAX	MIN	SHEAR (PLI) MAX	MIN	SECTION (PLI) MAX	MIN
MT20	650	371	1747	788	1987	1873

PLATE PLACEMENT TOL. = 0.250 inches

PLATE ROTATION TOL. = 5.0 Deg.

JSI GRIP= 0.31 (C) (INPUT = 0.90)
JSI METAL= 0.17 (C) (INPUT = 1.00)

JOB NAME	TRUSS NAME	QUANTITY	PLY	JOB DESC.		DRWG NO.
336324	H120		1	TRUSS DESC.	JT 45147	E21104120

Alpa Roof Truss, Maple

Version 8.420 S Jan 21 2021 MiTek Industries, Inc. Wed Oct 13 14:52:53 2021 Page 1

ID:hd511hZTz_bdeQoS817GKByhVxV-qkXj?1f_HziVUs4noLTB8t9gBDsnGapx3CgaJTyTp5u

Scale: 1/4"=1'

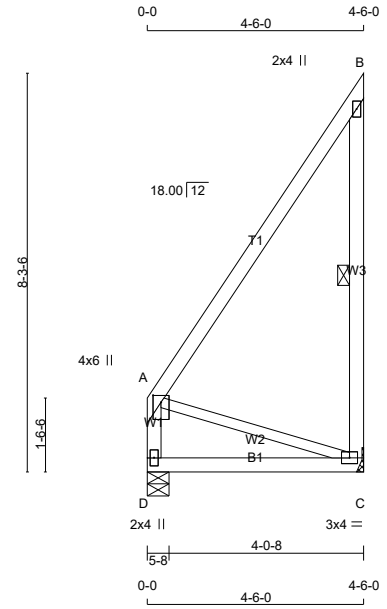

TOTAL WEIGHT = 5 X 28 = 140 lb

[M][F]

LUMBER

N. L. G. A. RULES

CHORDS	SIZE		LUMBER	DESCR.
A - B	2x4	DRY	No.2	SPF
C - B	2x4	DRY	No.2	SPF
D - A	2x4	DRY	No.2	SPF
D - C	2x4	DRY	No.2	SPF
ALL WEBS	2x3	DRY	No.2	SPF

DRY: SEASONED LUMBER.

PLATES (table is in inches)

JT	TYPE	PLATES	W	LEN	Y	X
A	TMVW+p	MT20	4.0	6.0	1.75	2.00
B	TMV+p	MT20	2.0	4.0		
C	BMVW1-t	MT20	3.0	4.0		
D	BMV1+p	MT20	2.0	4.0		

LATERAL BRACE(S) SHOWN SHALL BE 2X4 SPF#2

DIMENSIONS, SUPPORTS AND LOADINGS SPECIFIED BY FABRICATOR TO BE VERIFIED BY BUILDING DESIGNER

BEARINGS

JT	FACTORED GROSS REACTION VERT	HORZ	MAXIMUM FACTORED GROSS REACTION DOWN	HORZ	UPLIFT	INPUT BRG IN-SX	REQRD BRG IN-SX
C	217	0	217	0	0	MECHANICAL	
D	217	0	217	0	0	5-8	1-8

A SUITABLE HANGER/MECHANICAL CONNECTION IS REQUIRED AT JOINT C. MINIMUM BEARING LENGTH AT JOINT C = 1-8.

UNFACTORED REACTIONS

JT	1ST LCASE COMBINED	MAX./MIN. COMPONENT REACTIONS SNOW	LIVE	PERM.LIVE	WIND	DEAD	SOIL
C	155	94 / 0	0 / 0	0 / 0	0 / 0	60 / 0	0 / 0
D	155	94 / 0	0 / 0	0 / 0	0 / 0	60 / 0	0 / 0

BEARING MATERIAL TO BE SPF NO.2 OR BETTER AT JOINT(S) D

BRACING

TOP CHORD TO BE SHEATHED OR MAX. PURLIN SPACING = 10.00 FT.
MAX. UNBRACED BOTTOM CHORD LENGTH = 10.00 FT OR RIGID CEILING DIRECTLY APPLIED.

ALL PITCH BREAKS AND PERIMETER CORNER JOINTS MUST BE LATERALLY RESTRAINED.

1 LATERAL BRACE(S) AT 1/ 2 LENGTH OF B-C.

END VERTICAL(S) MUST BE SHEATHED OR HAVE BRACES AS INDICATED IN THE MAX. UNBRACED LENGTH COLUMN OF THE TABLE BELOW

LOADING

TOTAL LOAD CASES: (4)

CHORDS MEMB. FR-TO	MAX. FACTORED FORCE (LBS)	FACTORED VERT. LOAD (PLF) FROM	TO	LC1 MAX CSI (LC)	MAX. UNBRAC LENGTH	WEBS MEMB. FR-TO	MAX. FACTORED FORCE (LBS)	MAX CSI (LC)
A- B	0 / 0	-78.0	-78.0	0.27 (1)	10.00	A- C	0 / 0	0.00 (1)
C- B	-175 / 0	0.0	0.0	0.05 (1)	6.25			
D- A	-175 / 0	0.0	0.0	0.02 (1)	7.81			
D- C	0 / 0	-18.5	-18.5	0.11 (4)	10.00			

DESIGN CRITERIA

SPECIFIED LOADS:

TOP CH.	LL	=	21.0	PSF
	DL	=	6.0	PSF
BOT CH.	LL	=	0.0	PSF
	DL	=	7.4	PSF
TOTAL LOAD		=	34.4	PSF

SPACING = 24.0 IN. C/C

THIS TRUSS IS DESIGNED FOR RESIDENTIAL OR SMALL BUILDING REQUIREMENTS OF PART 9, NBCC 2015

THIS DESIGN COMPLIES WITH:
- PART 9 OF BCBC 2018 , ABC 2019
- PART 9 OF OBC 2012 (2019 AMENDMENT)
- CSA 086-14
- TPIC 2014

(55 % OF 23.0 P.S.F. G.S.L. PLUS 8.4 P.S.F. RAIN LOAD) EQUALS 21.0 P.S.F. SPECIFIED ROOF LIVE LOAD

ALLOWABLE DEFL.(TL)= L/360 (0.19")
CALCULATED VERT. DEFL.(TL) = L/ 999 (0.02")

CSI: TC=0.27/1.00 (A-B:1) , BC=0.11/1.00 (C-D:4) , WB=0.00/1.00 (A-C:1) , SSI=0.08/1.00 (A-B:1)

DOL LUMBER=1.00 NAIL=1.00 LS BEND=1.10 COMP=1.10 SHEAR=1.10 TENS= 1.10

COMPANION LIVE LOAD FACTOR = 1.00

TRUSS PLATE MANUFACTURER IS NOT RESPONSIBLE FOR QUALITY CONTROL IN THE TRUSS MANUFACTURING PLANT .

NAIL VALUES

PLATE	GRIP(DRY) (PSI) MAX	MIN	SHEAR (PLI) MAX	MIN	SECTION (PLI) MAX	MIN
MT20	650	371	1747	788	1987	1873

PLATE PLACEMENT TOL. = 0.250 inches

PLATE ROTATION TOL. = 5.0 Deg.

JSI GRIP= 0.17 (C) (INPUT = 0.90)
JSI METAL= 0.08 (B) (INPUT = 1.00)

JOB NAME	TRUSS NAME	QUANTITY	PLY	JOB DESC.	DRWG NO.
336324	H130A		2	TRUSS DESC. JT 45147	E21104121

Alpa Roof Truss, Maple

Version 8.420 S Jan 21 2021 MiTek Industries, Inc. Wed Oct 13 14:52:55 2021 Page 1

ID:hd511hZTz bdeQoS817GKByhVxV-n7fTQjhEpayCjAEAwmVfEIFts0TNkKpDXW9hOMyTp5s

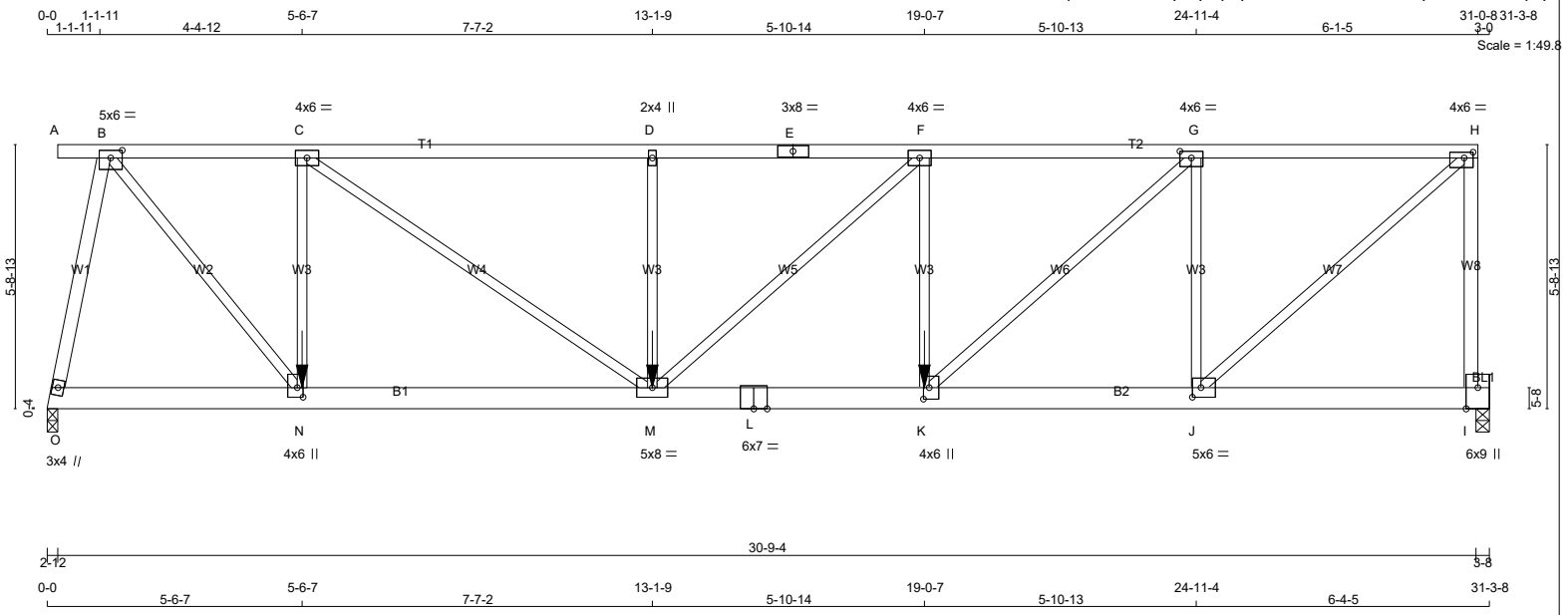

TOTAL WEIGHT = 2 X 150 = 301 lb

[M]

LUMBER

N. L. G. A. RULES

CHORDS	SIZE		LUMBER	DESCR.
A - E	2x4	DRY	No.2	SPF
E - H	2x4	DRY	No.2	SPF
I - H	2x4	DRY	No.2	SPF
O - L	2x6	DRY	No.2	SPF
L - I	2x6	DRY	No.2	SPF

BEARING BLOCKS

BL1	2x4	DRY	No.2	SPF

ALL WEBS EXCEPT	2x3	DRY	No.2	SPF
O - B	2x4	DRY	No.2	SPF

DRY: SEASONED LUMBER.

DESIGN CONSISTS OF 2 TRUSSES BUILT SEPARATELY THEN FASTENED TOGETHER AS FOLLOWS:

CHORDS	#ROWS	SURFACE SPACING (IN)	LOAD(PLF)
TOP CHORDS : (0.122"X3") SPIRAL NAILS			
A- E	1	12	SIDE(44.7)
E- H	1	12	SIDE(44.7)
H- I	1	12	TOP
BOTTOM CHORDS : (0.122"X3") SPIRAL NAILS			
O- L	2	12	SIDE(172.7)
L- I	2	12	SIDE(172.5)
WEBS : (0.122"X3") SPIRAL NAILS			
C- N	1	6	SIDE(18.3)
D- M	1	6	SIDE(18.5)
F- K	1	6	SIDE(114.0)
2x3	1	6	
2x4	1	6	

NAILS TO BE DRIVEN FROM ONE SIDE ONLY.

GIRDER NAILING ASSUMES NAILED HANGERS ARE FASTENED WITH MIN. 3-0 INCH NAILS.

TOP - COMPONENTS ARE LOADED FROM THE TOP AND MUST BE PLACED ON TOP EDGE OF ALL PLIES FOR THE LOAD TO BE TRANSFERRED TO EACH PLY.

LATERAL BRACE(S) SHOWN SHALL BE 2X4 SPF#2

DIMENSIONS, SUPPORTS AND LOADINGS SPECIFIED BY FABRICATOR TO BE VERIFIED BY BUILDING DESIGNER

BEARINGS

JT	FACTORED GROSS REACTION VERT	HORZ	MAXIMUM FACTORED GROSS REACTION DOWN	HORZ	UPLIFT	INPUT BRG IN-SX	REQRD BRG IN-SX
O	3686	0	3686	0	0	2-12	2-7
I	2986	0	2986	0	0	3-8	2-8

UNFACTORED REACTIONS

JT	1ST LCASE COMBINED	MAX./MIN. COMPONENT REACTIONS SNOW	LIVE	PERM.LIVE	WIND	DEAD	SOIL
O	2630	1594 / 0	0 / 0	0 / 0	0 / 0	1036 / 0	0 / 0
I	2129	1300 / 0	0 / 0	0 / 0	0 / 0	829 / 0	0 / 0

BEARING MATERIAL TO BE SPF NO.2 OR BETTER AT JOINT(S) O, I

BRACING

TOP CHORD TO BE SHEATHED OR MAX. PURLIN SPACING = 3.66 FT.
MAX. UNBRACED BOTTOM CHORD LENGTH = 6.25 FT OR RIGID CEILING DIRECTLY APPLIED.

ALL PITCH BREAKS AND PERIMETER CORNER JOINTS MUST BE LATERALLY RESTRAINED.

LOADING

TOTAL LOAD CASES: (4)

CHORDS

MEMB. FR-TO	MAX. FACTORED FORCE (LBS)	FACTORED VERT. LOAD (PLF) FROM	TO	LC1 CSI (LC)	MAX. UNBRAC LENGTH
A- B	0 / 0	-78.0	-78.0	0.03 (1)	10.00
B- C	-3275 / 0	-165.7	-165.7	0.31 (1)	4.80
C- D	-5523 / 0	-78.0	-78.0	0.72 (1)	3.66
D- E	-5523 / 0	-167.5	-167.5	0.57 (1)	3.66
E- F	-5523 / 0	-167.5	-167.5	0.57 (1)	3.66
F- G	-5375 / 0	-78.0	-78.0	0.47 (1)	3.83
G- H	-3041 / 0	-78.0	-78.0	0.27 (1)	5.05
I- H	-2937 / 0	0.0	0.0	0.83 (1)	6.71
O- N	0 / 689	-39.3	-39.3	0.09 (4)	10.00
N- M	0 / 3275	-18.5	-18.5	0.25 (1)	10.00
M- L	0 / 5375	-39.8	-39.8	0.42 (1)	10.00
L- K	0 / 5375	-39.8	-39.8	0.42 (1)	10.00
K- J	0 / 3041	-18.5	-18.5	0.22 (1)	10.00
J- I	-80 / 0	-18.5	-18.5	0.04 (4)	6.25

WEBS

MEMB. FR-TO	MAX. FACTORED FORCE (LBS)	MAX CSI (LC)
O- B	-3664 / 0	0.67 (1)
B- N	0 / 4147	0.51 (1)
N- C	-2303 / 0	0.55 (1)
C- M	0 / 2752	0.34 (1)
M- D	-820 / 0	0.20 (1)
M- F	0 / 200	0.02 (1)
K- F	-856 / 0	0.21 (1)
K- G	0 / 3154	0.39 (1)
J- G	-2617 / 0	0.63 (1)
J- H	0 / 4152	0.51 (1)

FACTORED CONCENTRATED LOADS (LBS)

JT	LOC.	LC1	MAX-	MAX+	FACE	DIR.	TYPE	HEEL	CONN.
K	19-0-7	-1098	-1098	---	FRONT	VERT	TOTAL	---	C1
M	13-1-9	-732	-732	---	FRONT	VERT	TOTAL	---	C1
N	5-6-7	-732	-732	---	FRONT	VERT	TOTAL	---	C1

CONNECTION REQUIREMENTS

1) **C1:** A SUITABLE HANGER/MECHANICAL CONNECTION IS REQUIRED.

DESIGN CRITERIA

*** SPECIAL LOADS ANALYSIS ***
GEOMETRY AND/OR BASIC LOADS CHANGED BY USER.
LOADS WERE DERIVED FROM USER INPUT
NO FURTHER MODIFICATIONS WERE MADE

SPECIFIED LOADS:

TOP	CH.	LL =	21.0	PSF
		DL =	6.0	PSF
BOT	CH.	LL =	0.0	PSF
		DL =	7.4	PSF
TOTAL	LOAD	=	34.4	PSF

SPACING = 24.0 IN. C/C

LOADING IN FLAT SECTION BASED ON A SLOPE OF 2.00/12 MINIMUM

GIRDER TYPE: CPrimeHip
SIDE SETBACK = 0-0
END SETBACK = 6-6-0
END WALL WIDTH = 0-0
CORNER FRAMING TYPE: CONVENTIONAL
END JACK TYPE: CONVENTIONAL
APPLIED TO FRONT SIDE
- ADDT'L LOADS BASED ON 55 % OF GSL.
LOADS APPLIED TO FIRST 5-6-7 OF SPAN MEASURED FROM THE LEFT.

*** NON STANDARD GIRDER ***
ADDT'L USER-DEFINED LOADS APPLIED TO ALL LOAD CASES.

THIS TRUSS IS DESIGNED FOR RESIDENTIAL OR SMALL BUILDING REQUIREMENTS OF PART 9, NBCC 2015

THIS DESIGN COMPLIES WITH:
- PART 9 OF BCBC 2018 , ABC 2019
- PART 9 OF OBC 2012 (2019 AMENDMENT)
- CSA 086-14
- TPIC 2014

(55 % OF 23.0 P.S.F. G.S.L. PLUS 8.4 P.S.F. RAIN LOAD) EQUALS 21.0 P.S.F. SPECIFIED ROOF LIVE LOAD

ALLOWABLE DEFL.(LL)= L/360 (1.02")
CALCULATED VERT. DEFL.(LL) = L/ 999 (0.13")
ALLOWABLE DEFL.(TL)= L/360 (1.02")
CALCULATED VERT. DEFL.(TL) = L/ 999 (0.26")

CSI: TC=0.83/1.00 (H-I:1) , BC=0.42/1.00 (K-M:1) , WB=0.67/1.00 (B-O:1) , SSI=0.22/1.00 (D-F:1)

DOL LUMBER=1.00 NAIL=1.00 LS BEND=1.00 COMP=1.00 SHEAR=1.00 TENS= 1.00

COMPANION LIVE LOAD FACTOR = 1.00

TRUSS PLATE MANUFACTURER IS NOT RESPONSIBLE FOR QUALITY CONTROL IN THE TRUSS MANUFACTURING PLANT .

NAIL VALUES

PLATE	GRIP(DRY) (PSI) MAX	MIN	SHEAR (PLI) MAX	MIN	SECTION (PLI) MAX	MIN
MT20	650	371	1747	788	1987	1873

CONTINUED ON PAGE 2

PLATES (table is in inches)

JT	TYPE	PLATES	W	LEN	Y	X
B	TMWW-t	MT20	5.0	6.0	2.00	3.00
C	TMWW-t	MT20	4.0	6.0		
D	TMW+w	MT20	2.0	4.0		
E	TS-t	MT20	3.0	8.0		
F	TMWW-t	MT20	4.0	6.0		
G	TMWW-t	MT20	4.0	6.0	1.75	3.00
H	TMVW-t	MT20	4.0	6.0	1.50	2.25
I	BMVK1+p	MT20	6.0	9.0	Edge	3.00
J	BMWW-t	MT20	5.0	6.0	2.50	2.25
K	BMWW+t	MT20	4.0	6.0	3.00	1.50
L	BS-t	MT20	6.0	7.0		
M	BMWWW-t	MT20	5.0	8.0		
N	BMWW+t	MT20	4.0	6.0	2.50	1.50
O	BMW1+w	MT20	3.0	4.0		

Edge - INDICATES REFERENCE CORNER OF PLATE TOUCHES EDGE OF CHORD.

PLATE PLACEMENT TOL. = 0.250 inches

PLATE ROTATION TOL. = 5.0 Deg.

JSI GRIP= 0.84 (N) (INPUT = 0.90)
JSI METAL= 0.58 (N) (INPUT = 1.00)

LATERAL BRACE(S) SHOWN SHALL BE 2X4 SPF#2

JOB NAME	TRUSS NAME	QUANTITY	PLY	JOB DESC.	DRWG NO.
336324	H130T		2	TRUSS DESC. JT 45147	E21104122

Alpa Roof Truss, Maple

ID:hd511hZTz bdeQoS817GKByhVxV-jWmErOiVKCCwyUOY1BX7JjKBLq58CBFW qeoSFyTp5q

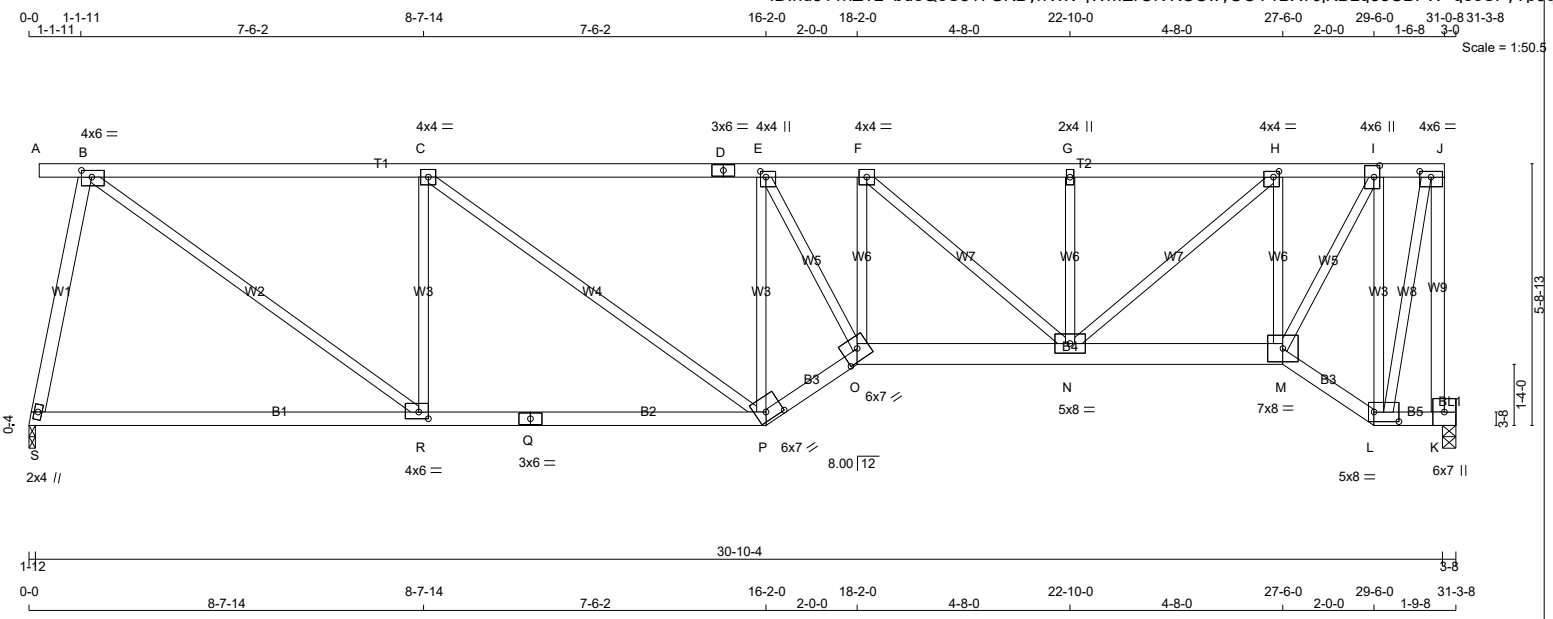

TOTAL WEIGHT = 2 X 147 = 294 lb

[M]

LUMBER

N. L. G. A. RULES

CHORDS	SIZE		LUMBER	DESCR.
A - D	2x4	DRY	1650F 1.5E	SPF
D - J	2x4	DRY	1650F 1.5E	SPF
K - J	2x4	DRY	No.2	SPF
S - Q	2x4	DRY	No.2	SPF
Q - P	2x4	DRY	No.2	SPF
P - O	2x4	DRY	No.2	SPF
O - M	2x6	DRY	No.2	SPF
M - L	2x4	DRY	No.2	SPF
L - K	2x4	DRY	No.2	SPF
BEARING BLOCKS				
BL1	2x4	DRY	No.2	SPF
ALL WEBS EXCEPT	2x3	DRY	No.2	SPF
S - B	2x4	DRY	No.2	SPF

DRY: SEASONED LUMBER.

DESIGN CONSISTS OF 2 TRUSSES BUILT SEPARATELY THEN FASTENED TOGETHER AS FOLLOWS:

CHORDS	#ROWS	SURFACE SPACING (IN)	LOAD(PLF)
TOP CHORDS : (0.122"X3") SPIRAL NAILS			
A- D	1	12	SIDE(43.9)
D- J	1	12	SIDE(43.9)
J- K	1	12	TOP
BOTTOM CHORDS : (0.122"X3") SPIRAL NAILS			
S- Q	1	12	SIDE(11.7)
Q- P	1	12	SIDE(11.7)
P- O	1	12	SIDE(44.7)
M- L	1	12	SIDE(44.7)
L- K	1	12	SIDE(11.7)
O- M	2	12	SIDE(54.3)
WEBS : (0.122"X3") SPIRAL NAILS			
2x3	1	6	
2x4	1	6	

NAILS TO BE DRIVEN FROM ONE SIDE ONLY.

TOP - COMPONENTS ARE LOADED FROM THE TOP AND MUST BE PLACED ON TOP EDGE OF ALL PLIES FOR THE LOAD TO BE TRANSFERRED TO EACH PLY.

LATERAL BRACE(S) SHOWN SHALL BE 2X4 SPF#2

DIMENSIONS, SUPPORTS AND LOADINGS SPECIFIED BY FABRICATOR TO BE VERIFIED BY BUILDING DESIGNER

BEARINGS

JT	FACTORED GROSS REACTION VERT	HORZ	MAXIMUM FACTORED GROSS REACTION DOWN	HORZ	UPLIFT	INPUT BRG IN-SX	REQRD BRG IN-SX
S	3046	0	3046	0	0	1-12	1-10
K	3156	0	3156	0	0	3-8	2-8

UNFACTORED REACTIONS

JT	1ST LCASE COMBINED	MAX./MIN. COMPONENT REACTIONS SNOW	LIVE	PERM.LIVE	WIND	DEAD	SOIL
S	2174	1315 / 0	0 / 0	0 / 0	0 / 0	859 / 0	0 / 0
K	2250	1375 / 0	0 / 0	0 / 0	0 / 0	876 / 0	0 / 0

BEARING MATERIAL TO BE SPF NO.2 OR BETTER AT JOINT(S) S, K

BRACING

TOP CHORD TO BE SHEATHED OR MAX. PURLIN SPACING = 4.02 FT.
MAX. UNBRACED BOTTOM CHORD LENGTH = 6.25 FT OR RIGID CEILING DIRECTLY APPLIED.

ALL PITCH BREAKS AND PERIMETER CORNER JOINTS MUST BE LATERALLY RESTRAINED.

LOADING

TOTAL LOAD CASES: (4)

CHORDS

MEMB. FR-TO	MAX. FACTORED FORCE (LBS)	FACTORED VERT. LOAD (PLF) FROM	TO	LC1	MAX CSI (LC)	MAX. UNBRAC LENGTH
A- B	0 / 0	-78.0	-78.0	0.03 (1)	10.00	
B- C	-3766 / 0	-165.7	-165.7	0.78 (1)	4.37	
C- D	-4524 / 0	-165.7	-165.7	0.83 (1)	4.02	
D- E	-4524 / 0	-165.7	-165.7	0.83 (1)	4.02	
E- F	-5760 / 0	-78.0	-78.0	0.36 (1)	4.22	
F- G	-4720 / 0	-78.0	-78.0	0.15 (1)	4.88	
G- H	-4720 / 0	-78.0	-78.0	0.15 (1)	4.89	
H- I	-2353 / 0	-78.0	-78.0	0.09 (1)	6.25	
I- J	-745 / 0	-165.7	-165.7	0.08 (1)	6.25	
K- J	-3129 / 0	0.0	0.0	0.96 (1)	6.55	
S- R	0 / 567	-39.3	-39.3	0.42 (4)	10.00	
R- Q	0 / 3766	-39.3	-39.3	0.59 (4)	10.00	
Q- P	0 / 3766	-39.3	-39.3	0.59 (4)	10.00	
P- O	0 / 5411	-127.0	-127.0	0.53 (1)	10.00	
O- N	0 / 5737	-127.0	-127.0	0.47 (1)	10.00	
N- M	0 / 2414	-127.0	-127.0	0.25 (1)	10.00	
M- L	0 / 829	-127.0	-127.0	0.12 (1)	10.00	
L- K	-84 / 0	-39.3	-39.3	0.01 (4)	6.25	

WEBS

MEMB. FR-TO	MAX. FACTORED FORCE (LBS)	MAX CSI (LC)
S- B	-2969 / 0	0.58 (1)
B- R	0 / 3972	0.49 (1)
R- C	-1976 / 0	0.51 (1)
C- P	0 / 935	0.12 (1)
P- E	-3370 / 0	0.87 (1)
E- O	0 / 2825	0.35 (1)
O- F	0 / 906	0.11 (1)
F- N	-1357 / 0	0.43 (1)
N- G	-412 / 0	0.06 (1)
N- H	0 / 3075	0.38 (1)
M- H	-2380 / 0	0.34 (1)
M- I	0 / 3623	0.45 (1)
L- I	-3237 / 0	0.83 (1)
L- J	0 / 3035	0.38 (1)

DESIGN CRITERIA

SPECIFIED LOADS:

TOP	CH.	LL =	21.0	PSF
		DL =	6.0	PSF
BOT	CH.	LL =	0.0	PSF
		DL =	7.4	PSF
TOTAL	LOAD	=	34.4	PSF

SPACING = 24.0 IN. C/C

LOADING IN FLAT SECTION BASED ON A SLOPE OF 2.00/12 MINIMUM

GIRDER TYPE: CPrimeHip
SIDE SETBACK = 0-0
END SETBACK = 6-6-0
END WALL WIDTH = 0-0
CORNER FRAMING TYPE: CONVENTIONAL
END JACK TYPE: CONVENTIONAL
APPLIED TO FRONT SIDE
- ADDT'L LOADS BASED ON 55 % OF GSL.
LOADS APPLIED TO FIRST 16-2-0 OF SPAN MEASURED FROM THE LEFT.

GIRDER TYPE: CStdGirder
START DISTANCE = 16-2-0
START SPAN CARRIED = 6-6-0
END DISTANCE = 29-6-0
END SPAN CARRIED = 6-6-0
END WALL WIDTH = 0-0
APPLIED TO FRONT SIDE OF BOTTOM CHORD.
- ADDT'L LOADS BASED ON 55 % OF GSL.

GIRDER TYPE: CPrimeHip
SIDE SETBACK = 0-0
END SETBACK = 6-6-0
END WALL WIDTH = 0-0
CORNER FRAMING TYPE: CONVENTIONAL
END JACK TYPE: CONVENTIONAL
APPLIED TO FRONT SIDE
- ADDT'L LOADS BASED ON 55 % OF GSL.
LOADS APPLIED TO FIRST 1-9-8 OF SPAN MEASURED FROM THE RIGHT.

THIS TRUSS IS DESIGNED FOR RESIDENTIAL OR SMALL BUILDING REQUIREMENTS OF PART 9, NBCC 2015

THIS DESIGN COMPLIES WITH:
- PART 9 OF BCBC 2018 , ABC 2019
- PART 9 OF OBC 2012 (2019 AMENDMENT)
- CSA 086-14
- TPIC 2014

(55 % OF 23.0 P.S.F. G.S.L. PLUS 8.4 P.S.F. RAIN LOAD) EQUALS 21.0 P.S.F. SPECIFIED ROOF LIVE LOAD

ALLOWABLE DEFL.(LL)= L/360 (1.02")
CALCULATED VERT. DEFL.(LL) = L/ 999 (0.15")
ALLOWABLE DEFL.(TL)= L/360 (1.02")
CALCULATED VERT. DEFL.(TL) = L/ 999 (0.30")

CSI: TC=0.96/1.00 (J-K:1) , BC=0.59/1.00 (P-R:4) , WB=0.87/1.00 (E-P:1) , SSI=0.32/1.00 (B-C:1)

DOL LUMBER=1.00 NAIL=1.00 LS BEND=1.00 COMP=1.00 SHEAR=1.00 TENS= 1.00

COMPANION LIVE LOAD FACTOR = 1.00

CONTINUED ON PAGE 2

PLATES (table is in inches)

JT	TYPE	PLATES	W	LEN	Y	X
B	TMWW-t	MT20	4.0	6.0	1.75	2.75
C	TMWW-t	MT20	4.0	4.0		
D	TS-t	MT20	3.0	6.0		
E	TMWW+t	MT20	4.0	4.0	1.50	1.50
F	TMWW-t	MT20	4.0	4.0		
G	TMW+w	MT20	2.0	4.0		
H	TMWW-t	MT20	4.0	4.0	1.50	1.50
I	TMWW+t	MT20	4.0	6.0	3.00	1.50
J	TMVW-t	MT20	4.0	6.0	1.50	3.00
K	BMVK1+p	MT20	6.0	7.0		
L	BBWW-l	MT20	5.0	8.0	2.50	6.50
M	BBWW-l	MT20	7.0	8.0		
N	BMWWW-t	MT20	5.0	8.0		
O	BBWW-h	MT20	6.0	7.0	3.00	4.00
P	BBWW-h	MT20	6.0	7.0	2.25	4.25
Q	BS-t	MT20	3.0	6.0		
R	BMWW-t	MT20	4.0	6.0	1.75	2.50
S	BMW1+w	MT20	2.0	4.0		

TRUSS PLATE MANUFACTURER IS NOT RESPONSIBLE FOR QUALITY CONTROL IN THE TRUSS MANUFACTURING PLANT .

NAIL VALUES

PLATE	GRIP(DRY) (PSI)		SHEAR (PLI)		SECTION (PLI)	
	MAX	MIN	MAX	MIN	MAX	MIN
MT20	650	371	1747	788	1987	1873

PLATE PLACEMENT TOL. = 0.250 inches

PLATE ROTATION TOL. = 5.0 Deg.

JSI GRIP= 0.90 (P) (INPUT = 0.90)
JSI METAL= 0.56 (Q) (INPUT = 1.00)

LATERAL BRACE(S) SHOWN SHALL BE 2X4 SPF#2

JOB NAME	TRUSS NAME	QUANTITY	PLY	JOB DESC.	DRWG NO.
336324	H131B		2	TRUSS DESC. JT 45147	E21104123

Alpa Roof Truss, Maple

Version 8.420 S Jan 21 2021 MiTek Industries, Inc. Wed Oct 13 14:52:59 2021 Page 1

ID:hd511hZTz bdeQoS817GKByhVxV-fuu G4klspTeCnXx9cZbO8PZNeqGqALpS77uX7yTp5o

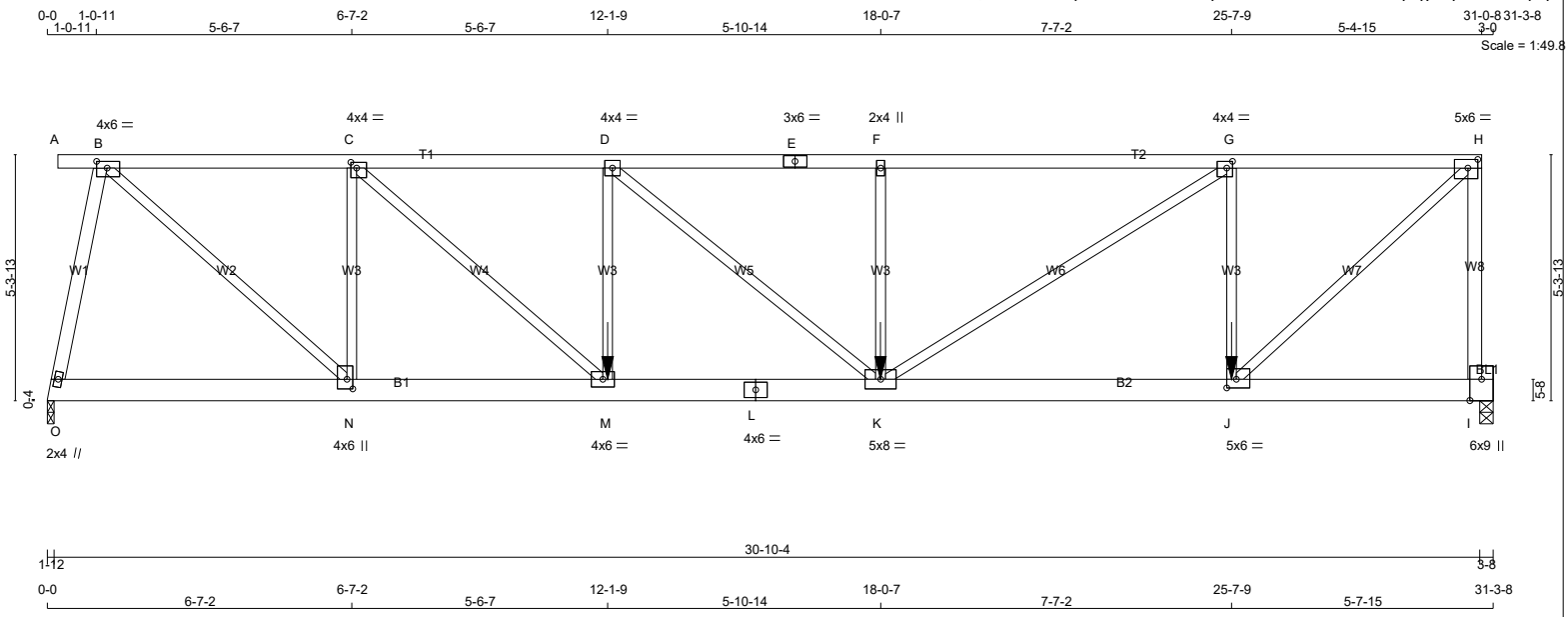

TOTAL WEIGHT = 2 X 147 = 294 lb

[M]

LUMBER

N. L. G. A. RULES

CHORDS	SIZE		LUMBER	DESCR.
A - E	2x4	DRY	No.2	SPF
E - H	2x4	DRY	No.2	SPF
I - H	2x4	DRY	No.2	SPF
O - L	2x6	DRY	No.2	SPF
L - I	2x6	DRY	No.2	SPF

BEARING BLOCKS

BL1	2x4	DRY	No.2	SPF

ALL WEBS	2x3	DRY	No.2	SPF
EXCEPT				
O - B	2x4	DRY	No.2	SPF

DRY: SEASONED LUMBER.

DESIGN CONSISTS OF 2 TRUSSES BUILT SEPARATELY THEN FASTENED TOGETHER AS FOLLOWS:

CHORDS	#ROWS	SURFACE SPACING (IN)	LOAD(PLF)
TOP CHORDS : (0.122"X3") SPIRAL NAILS			
A- E	1	12	SIDE(39.0)
E- H	1	12	SIDE(39.0)
H- I	1	12	TOP
BOTTOM CHORDS : (0.122"X3") SPIRAL NAILS			
O- L	2	12	SIDE(173.8)
L- I	2	12	SIDE(174.2)
WEBS : (0.122"X3") SPIRAL NAILS			
D- M	1	6	SIDE(85.3)
2x3	1	6	
2x4	1	6	

NAILS TO BE DRIVEN FROM ONE SIDE ONLY.

GIRDER NAILING ASSUMES NAILED HANGERS ARE FASTENED WITH MIN. 3-0 INCH NAILS.

TOP - COMPONENTS ARE LOADED FROM THE TOP AND MUST BE PLACED ON TOP EDGE OF ALL PLIES FOR THE LOAD TO BE TRANSFERRED TO EACH PLY.

SIDE - PLF SHOWN IS THE EQUIVALENT UDL APPLIED TO ONE SIDE THAT THE CORRESPONDING NAILING PATTERN SHALL BE CAPABLE OF TRANSFERING. REMAINING PLF MUST BE APPLIED ON THE OPPOSITE SIDE OR ON THE TOP.

LATERAL BRACE(S) SHOWN SHALL BE 2X4 SPF#2

DIMENSIONS, SUPPORTS AND LOADINGS SPECIFIED BY FABRICATOR TO BE VERIFIED BY BUILDING DESIGNER

BEARINGS

JT	FACTORED GROSS REACTION VERT	HORZ	MAXIMUM FACTORED GROSS REACTION DOWN	HORZ	UPLIFT	INPUT BRG IN-SX	REQRD BRG IN-SX
O	2814	0	2814	0	0	1-12	1-8
I	3547	0	3547	0	0	3-8	2-8

UNFACTORED REACTIONS

JT	1ST LCASE COMBINED	MAX./MIN. COMPONENT REACTIONS SNOW	LIVE	PERM.LIVE	WIND	DEAD	SOIL
O	2007	1224 / 0	0 / 0	0 / 0	0 / 0	782 / 0	0 / 0
I	2528	1546 / 0	0 / 0	0 / 0	0 / 0	983 / 0	0 / 0

BEARING MATERIAL TO BE SPF NO.2 OR BETTER AT JOINT(S) O, I

BRACING

TOP CHORD TO BE SHEATHED OR MAX. PURLIN SPACING = 3.64 FT.
MAX. UNBRACED BOTTOM CHORD LENGTH = 6.25 FT OR RIGID CEILING DIRECTLY APPLIED.

ALL PITCH BREAKS AND PERIMETER CORNER JOINTS MUST BE LATERALLY RESTRAINED.

LOADING

TOTAL LOAD CASES: (4)

CHORDS

MEMB. FR-TO	MAX. FACTORED FORCE (LBS)	FACTORED VERT. LOAD (PLF) FROM	TO	LC1	MAX CSI (LC)	MAX. UNBRAC LENGTH
A- B	0 / 0	-78.0	-78.0	0.03 (1)	10.00	
B- C	-3281 / 0	-78.0	-78.0	0.22 (1)	4.95	
C- D	-5455 / 0	-78.0	-78.0	0.44 (1)	3.81	
D- E	-5592 / 0	-156.0	-156.0	0.53 (1)	3.69	
E- F	-5592 / 0	-156.0	-156.0	0.53 (1)	3.69	
F- G	-5592 / 0	-78.0	-78.0	0.73 (1)	3.64	
G- H	-3319 / 0	-153.5	-153.5	0.41 (1)	4.67	
I- H	-3463 / 0	0.0	0.0	0.80 (1)	6.29	
O- N	0 / 527	-18.5	-18.5	0.06 (4)	10.00	
N- M	0 / 3281	-18.5	-18.5	0.24 (1)	10.00	
M- L	0 / 5455	-37.3	-37.3	0.42 (1)	10.00	
L- K	0 / 5455	-37.3	-37.3	0.42 (1)	10.00	
K- J	0 / 3319	-18.5	-18.5	0.26 (1)	10.00	
J- I	-102 / 0	-36.4	-36.4	0.06 (4)	6.25	

WEBS

MEMB. FR-TO	MAX. FACTORED FORCE (LBS)	MAX CSI (LC)
O- B	-2813 / 0	0.43 (1)
B- N	0 / 3729	0.46 (1)
N- C	-2382 / 0	0.48 (1)
C- M	0 / 2915	0.36 (1)
M- D	-802 / 0	0.16 (1)
D- K	0 / 179	0.02 (1)
K- F	-762 / 0	0.15 (1)
K- G	0 / 2712	0.34 (1)
J- G	-2276 / 0	0.46 (1)
J- H	0 / 4634	0.57 (1)

FACTORED CONCENTRATED LOADS (LBS)

JT	LOC.	LC1	MAX-	MAX+	FACE	DIR.	TYPE	HEEL	CONN.
J	25-7-9	-662	-662	---	FRONT	VERT	TOTAL	---	C1
K	18-0-7	-662	-662	---	FRONT	VERT	TOTAL	---	C1
M	12-1-9	-993	-993	---	FRONT	VERT	TOTAL	---	C1

CONNECTION REQUIREMENTS

1) **C1:** A SUITABLE HANGER/MECHANICAL CONNECTION IS REQUIRED.

DESIGN CRITERIA

*** SPECIAL LOADS ANALYSIS ***
GEOMETRY AND/OR BASIC LOADS CHANGED BY USER.
LOADS WERE DERIVED FROM USER INPUT
NO FURTHER MODIFICATIONS WERE MADE

SPECIFIED LOADS:

TOP	CH.	LL =	21.0	PSF
		DL =	6.0	PSF
BOT	CH.	LL =	0.0	PSF
		DL =	7.4	PSF
TOTAL	LOAD	=	34.4	PSF

SPACING = 24.0 IN. C/C

LOADING IN FLAT SECTION BASED ON A SLOPE OF 2.00/12 MINIMUM

GIRDER TYPE: CPrimeHip
SIDE SETBACK = 0-0
END SETBACK = 5-10-8
END WALL WIDTH = 0-0
CORNER FRAMING TYPE: CONVENTIONAL
END JACK TYPE: CONVENTIONAL
APPLIED TO FRONT SIDE
- ADDT'L LOADS BASED ON 55 % OF GSL.
LOADS APPLIED TO FIRST 5-7-15 OF SPAN MEASURED FROM THE RIGHT.

*** NON STANDARD GIRDER ***
ADDT'L USER-DEFINED LOADS APPLIED TO ALL LOAD CASES.

THIS TRUSS IS DESIGNED FOR RESIDENTIAL OR SMALL BUILDING REQUIREMENTS OF PART 9, NBCC 2015

THIS DESIGN COMPLIES WITH:
- PART 9 OF BCBC 2018 , ABC 2019
- PART 9 OF OBC 2012 (2019 AMENDMENT)
- CSA 086-14
- TPIC 2014

(55 % OF 23.0 P.S.F. G.S.L. PLUS 8.4 P.S.F. RAIN LOAD) EQUALS 21.0 P.S.F. SPECIFIED ROOF LIVE LOAD

ALLOWABLE DEFL.(LL)= L/360 (1.02")
CALCULATED VERT. DEFL.(LL) = L/ 999 (0.13")
ALLOWABLE DEFL.(TL)= L/360 (1.02")
CALCULATED VERT. DEFL.(TL) = L/ 999 (0.26")

CSI: TC=0.80/1.00 (H-I:1) , BC=0.42/1.00 (K-M:1) , WB=0.57/1.00 (H-J:1) , SSI=0.21/1.00 (G-H:1)

DOL LUMBER=1.00 NAIL=1.00 LS BEND=1.00 COMP=1.00 SHEAR=1.00 TENS= 1.00

COMPANION LIVE LOAD FACTOR = 1.00

TRUSS PLATE MANUFACTURER IS NOT RESPONSIBLE FOR QUALITY CONTROL IN THE TRUSS MANUFACTURING PLANT .

NAIL VALUES

PLATE	GRIP(DRY) (PSI) MAX	MIN	SHEAR (PLI) MAX	MIN	SECTION (PLI) MAX	MIN
MT20	650	371	1747	788	1987	1873

CONTINUED ON PAGE 2

PLATES (table is in inches)

JT	TYPE	PLATES	W	LEN	Y	X
B	TMWW-t	MT20	4.0	6.0	1.75	2.75
C	TMWW-t	MT20	4.0	4.0	1.50	1.50
D	TMWW-t	MT20	4.0	4.0		
E	TS-t	MT20	3.0	6.0		
F	TMW+w	MT20	2.0	4.0		
G	TMWW-t	MT20	4.0	4.0	1.75	1.50
H	TMVW-t	MT20	5.0	6.0	2.25	2.50
I	BMVK1+p	MT20	6.0	9.0	Edge	3.00
J	BMWW-t	MT20	5.0	6.0	2.25	2.50
K	BMWWW-t	MT20	5.0	8.0		
L	BS-t	MT20	4.0	6.0		
M	BMWW-t	MT20	4.0	6.0		
N	BMWW+t	MT20	4.0	6.0	2.50	1.50
O	BMW1+w	MT20	2.0	4.0		

Edge - INDICATES REFERENCE CORNER OF PLATE TOUCHES EDGE OF CHORD.

PLATE PLACEMENT TOL. = 0.250 inches

PLATE ROTATION TOL. = 5.0 Deg.

JSI GRIP= 0.90 (N) (INPUT = 0.90)
JSI METAL= 0.71 (L) (INPUT = 1.00)

LATERAL BRACE(S) SHOWN SHALL BE 2X4 SPF#2

JOB NAME	TRUSS NAME	QUANTITY	PLY	JOB DESC.		DRWG NO.
336324	H135		1	TRUSS DESC.	JT 45147	E21104124

Alpa Roof Truss, Maple

Version 8.420 S Jan 21 2021 MiTek Industries, Inc. Wed Oct 13 14:51:29 2021 Page 1

ID:hd511hZTz bdeQoS817GKByhVxV-IaSyNJeI397PPyfetiyUlAhAfM5dbNBZl7J7NLyTp7C

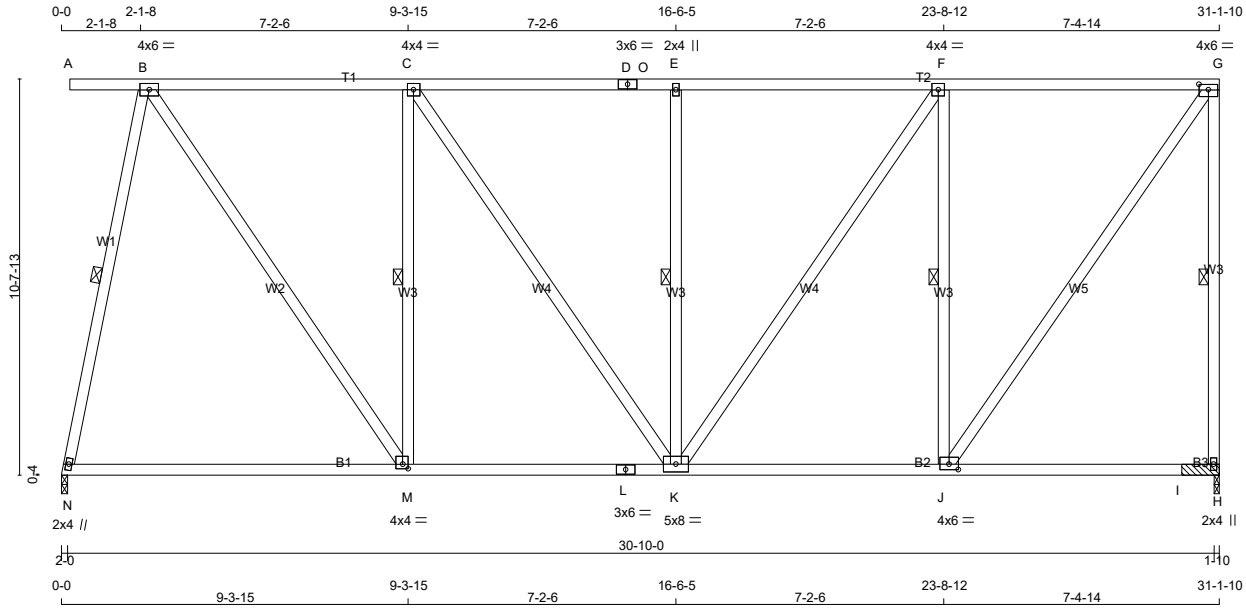

Scale = 1:62.0

TOTAL WEIGHT = 10 X 185 = 1853 lb

LUMBER

N. L. G. A. RULES

CHORDS	SIZE		LUMBER	DESCR.
A - D	2x4	DRY	No.2	SPF
D - G	2x4	DRY	No.2	SPF
H - G	2x4	DRY	No.2	SPF
N - L	2x4	DRY	No.2	SPF
L - H	2x4	DRY	No.2	SPF
ALL WEBS	2x4	DRY	No.2	SPF

DRY: SEASONED LUMBER.

PLATES (table is in inches)

JT	TYPE	PLATES	W	LEN	Y	X
B	TMWW-t	MT20	4.0	6.0		
C	TMWW-t	MT20	4.0	4.0		
D	TS-t	MT20	3.0	6.0		
E	TMW+w	MT20	2.0	4.0		
F	TMWW-t	MT20	4.0	4.0		
G	TMVW-t	MT20	4.0	6.0	1.75	3.00
H	BMV1+p	MT20	2.0	4.0		
J	BMWW-t	MT20	4.0	6.0	1.75	3.00
K	BMWWW-t	MT20	5.0	8.0		
L	BS-t	MT20	3.0	6.0		
M	BMWW-t	MT20	4.0	4.0	1.50	1.75
N	BMW1+w	MT20	2.0	4.0		

LATERAL BRACE(S) SHOWN SHALL BE 2X4 SPF#2

DIMENSIONS, SUPPORTS AND LOADINGS SPECIFIED BY FABRICATOR TO BE VERIFIED BY BUILDING DESIGNER

BEARINGS

JT	FACTORED GROSS REACTION VERT	HORZ	MAXIMUM FACTORED GROSS REACTION DOWN	HORZ	UPLIFT	INPUT BRG IN-SX	REQRD BRG IN-SX
N	1600	0	1600	0	0	2-0	1-12
H	1614	0	1614	0	0	1-10	1-10 & BLOCK

UNFACTORED REACTIONS

JT	1ST LCASE COMBINED	MAX./MIN. COMPONENT REACTIONS SNOW	LIVE	PERM.LIVE	WIND	DEAD	SOIL
N	1151	645 / 0	0 / 0	0 / 0	0 / 0	506 / 0	0 / 0
H	1160	652 / 0	0 / 0	0 / 0	0 / 0	508 / 0	0 / 0

BEARING MATERIAL TO BE SPF NO.2 OR BETTER AT JOINT(S) N, H

2x4 DRY SPF No.2 BEARING BLOCK 12" LONG AT JT. H ATTACHED TO FRONT SIDE WITH 2 ROWS OF (0.122"X3") SPIRAL NAILS SPACED 3" C.C. 8 NAILS TOTAL.

BRACING

FOR SECTION A-G, MAX. PURLIN SPACING = 2.00 FT.
FOR OTHER SECTIONS, TOP CHORD TO BE SHEATHED OR MAX. PURLIN SPACING = 10.00 FT.
MAX. UNBRACED BOTTOM CHORD LENGTH = 10.00 FT OR RIGID CEILING DIRECTLY APPLIED.

ALL PITCH BREAKS AND PERIMETER CORNER JOINTS MUST BE LATERALLY RESTRAINED.

1 LATERAL BRACE(S) AT 1/ 2 LENGTH OF B-N, G-H, C-M, E-K, F-J.

END VERTICAL(S) MUST BE SHEATHED OR HAVE BRACES AS INDICATED IN THE MAX. UNBRACED LENGTH COLUMN OF THE TABLE BELOW

LOADING

TOTAL LOAD CASES: (4)

CHORDS

MEMB. FR-TO	MAX. FACTORED FORCE (LBS)	FACTORED VERT. LOAD (PLF) FROM	TO	LC1	MAX CSI (LC)	MAX. UNBRAC LENGTH
A- B	0 / 0	-85.5	-85.5	0.24 (1)		10.00
B- C	-1069 / 0	-85.5	-85.5	0.73 (1)		2.00
C- D	-1239 / 0	-85.5	-85.5	0.75 (1)		2.00
D- O	-1239 / 0	-85.5	-85.5	0.75 (1)		2.00
O- E	-1239 / 0	-85.5	-85.5	0.75 (1)		2.00
E- F	-1239 / 0	-85.5	-85.5	0.80 (1)		2.00
F- G	-936 / 0	-85.5	-85.5	0.76 (1)		2.00
H- G	-1559 / 0	0.0	0.0	0.89 (1)		5.28
N- M	0 / 302	-18.5	-18.5	0.37 (4)		10.00
M- L	0 / 1069	-18.5	-18.5	0.46 (4)		10.00
L- K	0 / 1069	-18.5	-18.5	0.46 (4)		10.00
K- J	0 / 936	-18.5	-18.5	0.36 (4)		10.00
J- I	0 / 0	-18.5	-18.5	0.25 (4)		10.00
I- H	0 / 0	-18.5	-18.5	0.25 (4)		10.00

WEBS

MEMB. FR-TO	MAX. FACTORED FORCE (LBS)	MAX CSI (LC)
N- B	-1561 / 0	0.95 (1)
B- M	0 / 1359	0.22 (1)
M- C	-941 / 0	0.54 (1)
C- K	0 / 298	0.05 (1)
K- E	-570 / 0	0.33 (1)
K- F	0 / 531	0.09 (1)
J- F	-1151 / 0	0.66 (1)
J- G	0 / 1609	0.26 (1)

DESIGN CRITERIA

SPECIFIED LOADS:

TOP	CH.	LL	=	21.0	PSF
		DL	=	6.0	PSF
BOT	CH.	LL	=	0.0	PSF
		DL	=	7.4	PSF
TOTAL	LOAD		=	34.4	PSF

SPACING = 24.0 IN. C/C

LOADING IN FLAT SECTION BASED ON PIGGYBACK TRUSS WITH SLOPES OF 6.00/12 AND -6.00/12 AND RESPECTIVE HEEL HEIGHTS OF 0-0 AND 0-0 AND AN ADDITIONAL DEAD LOAD OF 3.0 P.S.F.

THIS TRUSS IS DESIGNED FOR RESIDENTIAL OR SMALL BUILDING REQUIREMENTS OF PART 9, NBCC 2015

THIS DESIGN COMPLIES WITH:
- PART 9 OF BCBC 2018 , ABC 2019
- PART 9 OF OBC 2012 (2019 AMENDMENT)
- CSA 086-14
- TPIC 2014

(55 % OF 23.0 P.S.F. G.S.L. PLUS 8.4 P.S.F. RAIN LOAD) EQUALS 21.0 P.S.F. SPECIFIED ROOF LIVE LOAD

ALLOWABLE DEFL.(LL)= L/360 (1.03")
CALCULATED VERT. DEFL.(LL) = L/ 999 (0.06")
ALLOWABLE DEFL.(TL)= L/360 (1.03")
CALCULATED VERT. DEFL.(TL) = L/ 999 (0.21")

CSI: TC=0.89/1.00 (G-H:1) , BC=0.46/1.00 (K-M:4) , WB=0.95/1.00 (B-N:1) , SSI=0.30/1.00 (F-G:1)

DOL LUMBER=1.00 NAIL=1.00 LS BEND=1.10 COMP=1.10 SHEAR=1.10 TENS= 1.10

COMPANION LIVE LOAD FACTOR = 1.00

TRUSS PLATE MANUFACTURER IS NOT RESPONSIBLE FOR QUALITY CONTROL IN THE TRUSS MANUFACTURING PLANT .

NAIL VALUES

PLATE	GRIP(DRY) (PSI) MAX	MIN	SHEAR (PLI) MAX	MIN	SECTION (PLI) MAX	MIN
MT20	650	371	1747	788	1987	1873

PLATE PLACEMENT TOL. = 0.250 inches

PLATE ROTATION TOL. = 5.0 Deg.

JSI GRIP= 0.86 (G) (INPUT = 0.90)
JSI METAL= 0.33 (J) (INPUT = 1.00)

JOB NAME	TRUSS NAME	QUANTITY	PLY	JOB DESC.	DRWG NO.
336324	H136P		1	TRUSS DESC. JT 45147	E21104125

Alpa Roof Truss, Maple

Version 8.420 S Jan 21 2021 MiTek Industries, Inc. Wed Oct 13 14:53:00 2021 Page 1

ID:hd511hZTz_bdeQoS817GKByhVxV-74SMTQlNd7bVpx67jJ5qxMynL1DCPk_zgnsS3ZyTp5n

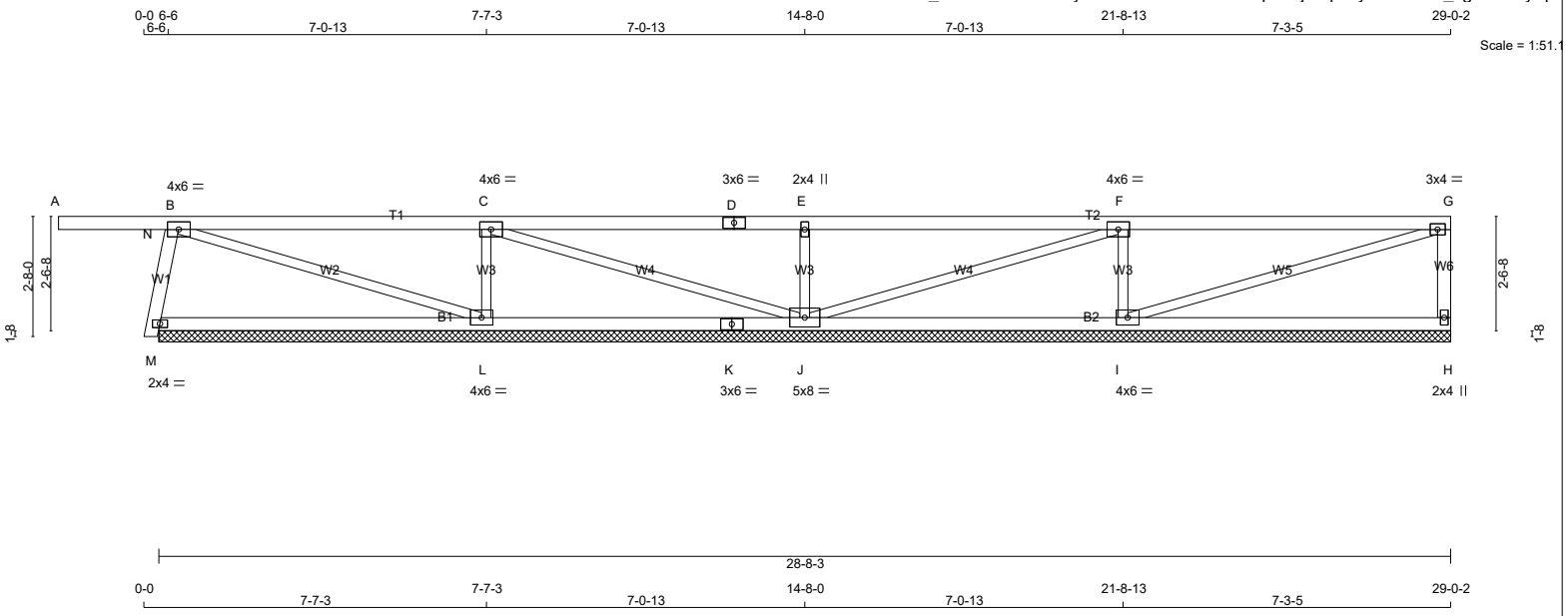

TOTAL WEIGHT = 3 X 101 = 303 lb [M]

LUMBER

N. L. G. A. RULES

CHORDS	SIZE		LUMBER	DESCR.
A - D	2x4	DRY	No.2	SPF
D - G	2x4	DRY	No.2	SPF
H - G	2x4	DRY	No.2	SPF
M - K	2x4	DRY	No.2	SPF
K - H	2x4	DRY	No.2	SPF
ALL WEBS	2x3	DRY	No.2	SPF
EXCEPT				
N - B	2x4	DRY	No.2	SPF

DRY: SEASONED LUMBER.

PLATES (table is in inches)

JT	TYPE	PLATES	W	LEN	Y	X
B, C, F						
B	TMWW-t	MT20	4.0	6.0		
D	TS-t	MT20	3.0	6.0		
E	TMW+w	MT20	2.0	4.0		
G	TMVW-t	MT20	3.0	4.0		
H	BMV1+p	MT20	2.0	4.0		
I	BMWW1-t	MT20	4.0	6.0		
J	BMWWW1-t	MT20	5.0	8.0		
K	BS-t	MT20	3.0	6.0		
L	BMWW1-t	MT20	4.0	6.0		
M	BWM1-l	MT20	2.0	4.0		

LATERAL BRACE(S) SHOWN SHALL BE 2X4 SPF#2

DIMENSIONS, SUPPORTS AND LOADINGS SPECIFIED BY FABRICATOR TO BE VERIFIED BY BUILDING DESIGNER

BEARINGS

JT	FACTORED GROSS REACTION VERT	HORZ	MAXIMUM FACTORED GROSS REACTION DOWN	HORZ	UPLIFT	INPUT BRG IN-SX	REQRD BRG IN-SX
H	279	0	279	0	0	28-8-3 (15-11-13)	88
M	447	0	447	0	0	28-8-3 (15-11-13)	88
L	781	0	781	0	0	28-8-3 (15-11-13)	88
J	654	0	654	0	0	28-8-3 (15-11-13)	88
I	782	0	782	0	0	28-8-3 (15-11-13)	88

VALUE IN PARENTHESIS INDICATES EFFECTIVE BEARING LENGTH

UNFACTORED REACTIONS

JT	1ST LCASE COMBINED	MAX./MIN. COMPONENT REACTIONS SNOW	LIVE	PERM.LIVE	WIND	DEAD	SOIL
H	199	122 / 0	0 / 0	0 / 0	0 / 0	77 / 0	0 / 0
M	315	212 / 0	0 / 0	0 / 0	0 / 0	104 / 0	0 / 0
L	557	337 / 0	0 / 0	0 / 0	0 / 0	220 / 0	0 / 0
J	466	288 / 0	0 / 0	0 / 0	0 / 0	178 / 0	0 / 0
I	558	339 / 0	0 / 0	0 / 0	0 / 0	219 / 0	0 / 0

BEARING MATERIAL TO BE SPF NO.2 OR BETTER AT JOINT(S) H, M, L, J, I

BRACING

TOP CHORD TO BE SHEATHED OR MAX. PURLIN SPACING = 6.25 FT.
MAX. UNBRACED BOTTOM CHORD LENGTH = 10.00 FT OR RIGID CEILING DIRECTLY APPLIED.

MAX. UNBRACED INTERIOR CHORD LENGTH = 7.81 FT

ALL PITCH BREAKS AND PERIMETER CORNER JOINTS MUST BE LATERALLY RESTRAINED.

LOADING

TOTAL LOAD CASES: (4)

CHORDS

MEMB. FR-TO	MAX. FACTORED FORCE (LBS)	FACTORED VERT. LOAD (PLF) FROM	TO	LC1 MAX CSI (LC)	MAX. UNBRAC LENGTH
A- B	0 / 0	-78.0	-78.0	0.35 (1)	10.00
B- C	-23 / 0	-78.0	-78.0	0.56 (1)	6.25
C- D	0 / 25	-78.0	-78.0	0.56 (1)	10.00
D- E	0 / 25	-78.0	-78.0	0.56 (1)	10.00
E- F	0 / 25	-78.0	-78.0	0.59 (1)	10.00
F- G	-5 / 0	-78.0	-78.0	0.59 (1)	10.00
H- G	-226 / 0	0.0	0.0	0.03 (1)	7.81
M- L	0 / 79	-18.5	-18.5	0.25 (4)	10.00
L- K	0 / 23	-18.5	-18.5	0.25 (4)	10.00
K- J	0 / 23	-18.5	-18.5	0.25 (4)	10.00
J- I	0 / 5	-18.5	-18.5	0.24 (4)	10.00
I- H	0 / 0	-18.5	-18.5	0.24 (4)	10.00

WEBS

MEMB. FR-TO	MAX. FACTORED FORCE (LBS)	MAX CSI (LC)
N- M	0 / 0	0.00 (1)
M- B	-401 / 0	0.05 (1)
B- L	-58 / 0	0.06 (1)
L- C	-609 / 0	0.10 (1)
C- J	-50 / 0	0.06 (1)
J- E	-510 / 0	0.08 (1)
J- F	-31 / 0	0.03 (1)
I- F	-631 / 0	0.10 (1)
I- G	0 / 5	0.00 (1)

DESIGN CRITERIA

SPECIFIED LOADS:

TOP CH.	LL	=	21.0	PSF
	DL	=	6.0	PSF
BOT CH.	LL	=	0.0	PSF
	DL	=	7.4	PSF
TOTAL LOAD		=	34.4	PSF

SPACING = 24.0 IN. C/C

LOADING IN FLAT SECTION BASED ON A SLOPE OF 2.00/12 MINIMUM

THIS TRUSS IS DESIGNED FOR RESIDENTIAL OR SMALL BUILDING REQUIREMENTS OF PART 9, NBCC 2015

THIS DESIGN COMPLIES WITH:
- PART 9 OF BCBC 2018 , ABC 2019
- PART 9 OF OBC 2012 (2019 AMENDMENT)
- CSA 086-14
- TPIC 2014

(55 % OF 23.0 P.S.F. G.S.L. PLUS 8.4 P.S.F. RAIN LOAD) EQUALS 21.0 P.S.F. SPECIFIED ROOF LIVE LOAD

CSI: TC=0.59/1.00 (E-F:1) , BC=0.25/1.00 (L-M:4) , WB=0.10/1.00 (F-I:1) , SSI=0.27/1.00 (F-G:1)

DOL LUMBER=1.00 NAIL=1.00 LS BEND=1.10 COMP=1.10 SHEAR=1.10 TENS= 1.10

COMPANION LIVE LOAD FACTOR = 1.00

TRUSS PLATE MANUFACTURER IS NOT RESPONSIBLE FOR QUALITY CONTROL IN THE TRUSS MANUFACTURING PLANT .

NAIL VALUES

PLATE	GRIP(DRY) (PSI) MAX	MIN	SHEAR (PLI) MAX	MIN	SECTION (PLI) MAX	MIN
MT20	650	371	1747	788	1987	1873

PLATE PLACEMENT TOL. = 0.250 inches

PLATE ROTATION TOL. = 5.0 Deg.

JSI GRIP= 0.83 (G) (INPUT = 0.90)
JSI METAL= 0.30 (M) (INPUT = 1.00)

JOB NAME	TRUSS NAME	QUANTITY	PLY	JOB DESC.	DRWG NO.
336324	H137P		1	TRUSS DESC. JT 45147	E21104126

Alpa Roof Truss, Maple

Version 8.420 S Jan 21 2021 MiTek Industries, Inc. Wed Oct 13 14:53:01 2021 Page 1

ID:hd511hZTz bdeQoS817GKByhVxV-bH0khmm?OQjMR5hJG1c3TZUyARYI8Ac6vRc?c0yTp5m

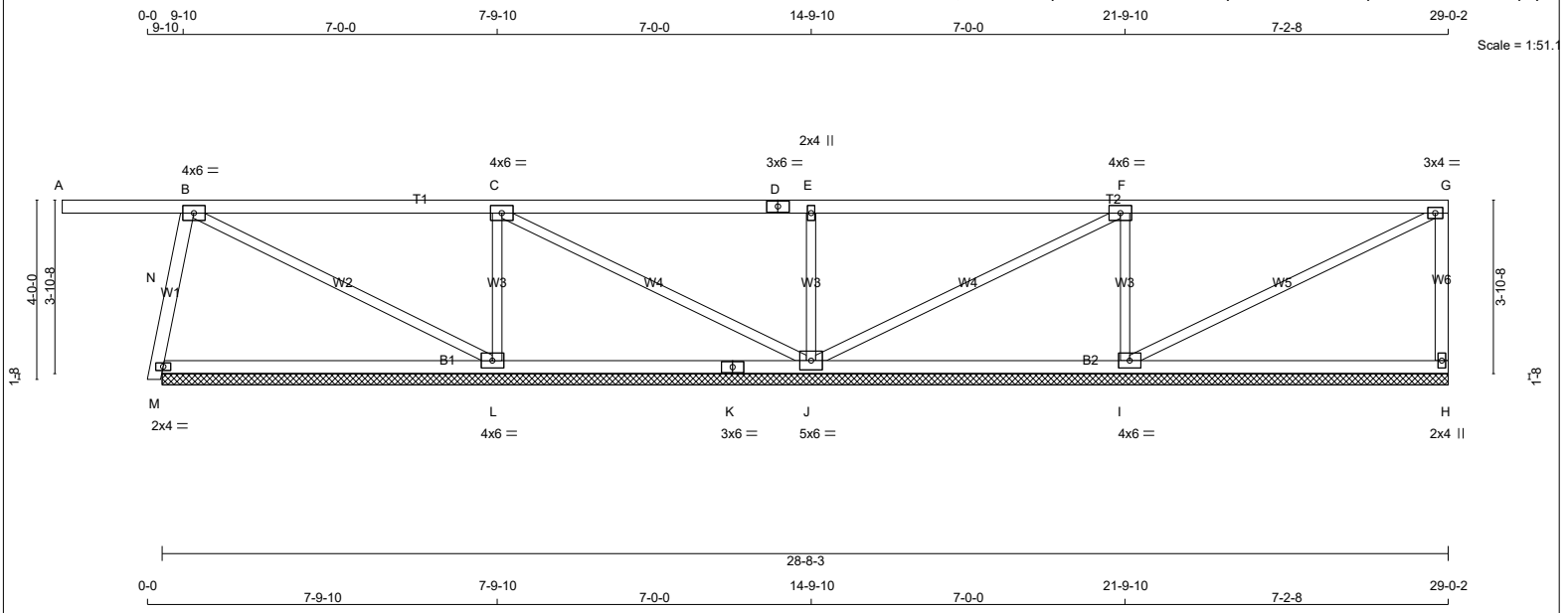

TOTAL WEIGHT = 2 X 109 = 217 lb

[M]

LUMBER

N. L. G. A. RULES

CHORDS	SIZE		LUMBER	DESCR.
A - D	2x4	DRY	No.2	SPF
D - G	2x4	DRY	No.2	SPF
H - G	2x4	DRY	No.2	SPF
M - K	2x4	DRY	No.2	SPF
K - H	2x4	DRY	No.2	SPF
ALL WEBS	2x3	DRY	No.2	SPF
EXCEPT				
N - B	2x4	DRY	No.2	SPF

DRY: SEASONED LUMBER.

PLATES (table is in inches)

JT	TYPE	PLATES	W	LEN	Y	X
B, C, F						
B	TMWW-t	MT20	4.0	6.0		
D	TS-t	MT20	3.0	6.0		
E	TMW+w	MT20	2.0	4.0		
G	TMVW-t	MT20	3.0	4.0		
H	BMV1+p	MT20	2.0	4.0		
I	BMWW1-t	MT20	4.0	6.0		
J	BMWWW1-t	MT20	5.0	6.0		
K	BS-t	MT20	3.0	6.0		
L	BMWW1-t	MT20	4.0	6.0		
M	BWM1-l	MT20	2.0	4.0		

LATERAL BRACE(S) SHOWN SHALL BE 2X4 SPF#2

DIMENSIONS, SUPPORTS AND LOADINGS SPECIFIED BY FABRICATOR TO BE VERIFIED BY BUILDING DESIGNER

BEARINGS

JT	FACTORED GROSS REACTION VERT	HORZ	MAXIMUM FACTORED GROSS REACTION DOWN	HORZ	UPLIFT	INPUT BRG IN-SX	REQRD BRG IN-SX
H	278	0	278	0	0	28-8-3 (15-11-8)	88
M	455	0	455	0	0	28-8-3 (15-11-8)	88
L	762	0	762	0	0	28-8-3 (15-11-8)	88
J	700	0	700	0	0	28-8-3 (15-11-8)	88
I	748	0	748	0	0	28-8-3 (15-11-8)	88

VALUE IN PARENTHESIS INDICATES EFFECTIVE BEARING LENGTH

UNFACTORED REACTIONS

JT	1ST LCASE COMBINED	MAX./MIN. COMPONENT REACTIONS SNOW	LIVE	PERM.LIVE	WIND	DEAD	SOIL
H	198	121 / 0	0 / 0	0 / 0	0 / 0	77 / 0	0 / 0
M	321	215 / 0	0 / 0	0 / 0	0 / 0	106 / 0	0 / 0
L	545	326 / 0	0 / 0	0 / 0	0 / 0	218 / 0	0 / 0
J	497	314 / 0	0 / 0	0 / 0	0 / 0	183 / 0	0 / 0
I	534	321 / 0	0 / 0	0 / 0	0 / 0	213 / 0	0 / 0

BEARING MATERIAL TO BE SPF NO.2 OR BETTER AT JOINT(S) H, M, L, J, I

BRACING

TOP CHORD TO BE SHEATHED OR MAX. PURLIN SPACING = 6.25 FT.
MAX. UNBRACED BOTTOM CHORD LENGTH = 10.00 FT OR RIGID CEILING DIRECTLY APPLIED.

MAX. UNBRACED INTERIOR CHORD LENGTH = 7.81 FT

ALL PITCH BREAKS AND PERIMETER CORNER JOINTS MUST BE LATERALLY RESTRAINED.

LOADING

TOTAL LOAD CASES: (4)

CHORDS

MEMB. FR-TO	MAX. FACTORED FORCE (LBS)	FACTORED VERT. LOAD LC1 (PLF) FROM	TO	MAX CSI (LC)	MAX. UNBRAC LENGTH
A- B	0 / 0	-78.0	-78.0	0.42 (1)	10.00
B- C	-20 / 0	-78.0	-78.0	0.55 (1)	6.25
C- D	0 / 63	-78.0	-78.0	0.56 (1)	10.00
D- E	0 / 63	-78.0	-78.0	0.56 (1)	10.00
E- F	0 / 63	-78.0	-78.0	0.59 (1)	10.00
F- G	-6 / 0	-78.0	-78.0	0.58 (1)	10.00
H- G	-225 / 0	0.0	0.0	0.05 (1)	7.81
M- L	0 / 80	-18.5	-18.5	0.26 (4)	10.00
L- K	0 / 20	-18.5	-18.5	0.26 (4)	10.00
K- J	0 / 20	-18.5	-18.5	0.26 (4)	10.00
J- I	0 / 6	-18.5	-18.5	0.24 (4)	10.00
I- H	0 / 0	-18.5	-18.5	0.24 (4)	10.00

WEBS

MEMB. FR-TO	MAX. FACTORED FORCE (LBS)	MAX CSI (LC)
N- M	0 / 0	0.00 (1)
M- B	-407 / 0	0.08 (1)
B- L	-67 / 0	0.08 (1)
L- C	-575 / 0	0.13 (1)
C- J	-94 / 0	0.12 (1)
J- E	-505 / 0	0.12 (1)
J- F	-78 / 0	0.10 (1)
I- F	-599 / 0	0.14 (1)
I- G	0 / 7	0.00 (1)

DESIGN CRITERIA

SPECIFIED LOADS:

TOP CH.	LL	=	21.0	PSF
	DL	=	6.0	PSF
BOT CH.	LL	=	0.0	PSF
	DL	=	7.4	PSF
TOTAL LOAD		=	34.4	PSF

SPACING = 24.0 IN. C/C

LOADING IN FLAT SECTION BASED ON A SLOPE OF 2.00/12 MINIMUM

THIS TRUSS IS DESIGNED FOR RESIDENTIAL OR SMALL BUILDING REQUIREMENTS OF PART 9, NBCC 2015

THIS DESIGN COMPLIES WITH:
- PART 9 OF BCBC 2018 , ABC 2019
- PART 9 OF OBC 2012 (2019 AMENDMENT)
- CSA 086-14
- TPIC 2014

(55 % OF 23.0 P.S.F. G.S.L. PLUS 8.4 P.S.F. RAIN LOAD) EQUALS 21.0 P.S.F. SPECIFIED ROOF LIVE LOAD

CSI: TC=0.59/1.00 (E-F:1) , BC=0.26/1.00 (L-M:4) , WB=0.14/1.00 (F-I:1) , SSI=0.27/1.00 (F-G:1)

DOL LUMBER=1.00 NAIL=1.00 LS BEND=1.10 COMP=1.10 SHEAR=1.10 TENS= 1.10

COMPANION LIVE LOAD FACTOR = 1.00

TRUSS PLATE MANUFACTURER IS NOT RESPONSIBLE FOR QUALITY CONTROL IN THE TRUSS MANUFACTURING PLANT .

NAIL VALUES

PLATE	GRIP(DRY) (PSI) MAX	MIN	SHEAR (PLI) MAX	MIN	SECTION (PLI) MAX	MIN
MT20	650	371	1747	788	1987	1873

PLATE PLACEMENT TOL. = 0.250 inches

PLATE ROTATION TOL. = 5.0 Deg.

JSI GRIP= 0.78 (G) (INPUT = 0.90)
JSI METAL= 0.30 (M) (INPUT = 1.00)

JOB NAME	TRUSS NAME	QUANTITY	PLY	JOB DESC.	DRWG NO.
336324	H141E		2	TRUSS DESC. JT 45147	E21104127

Alpa Roof Truss, Maple

Version 8.420 S Jan 21 2021 MiTek Industries, Inc. Wed Oct 13 14:53:03 2021 Page 1

ID:hd511hZTz bdeQoS817GKByhVxV-Yf8V5SnGw2z4qPriOSeXY aEJF9ScxsPMl56quyTp5k

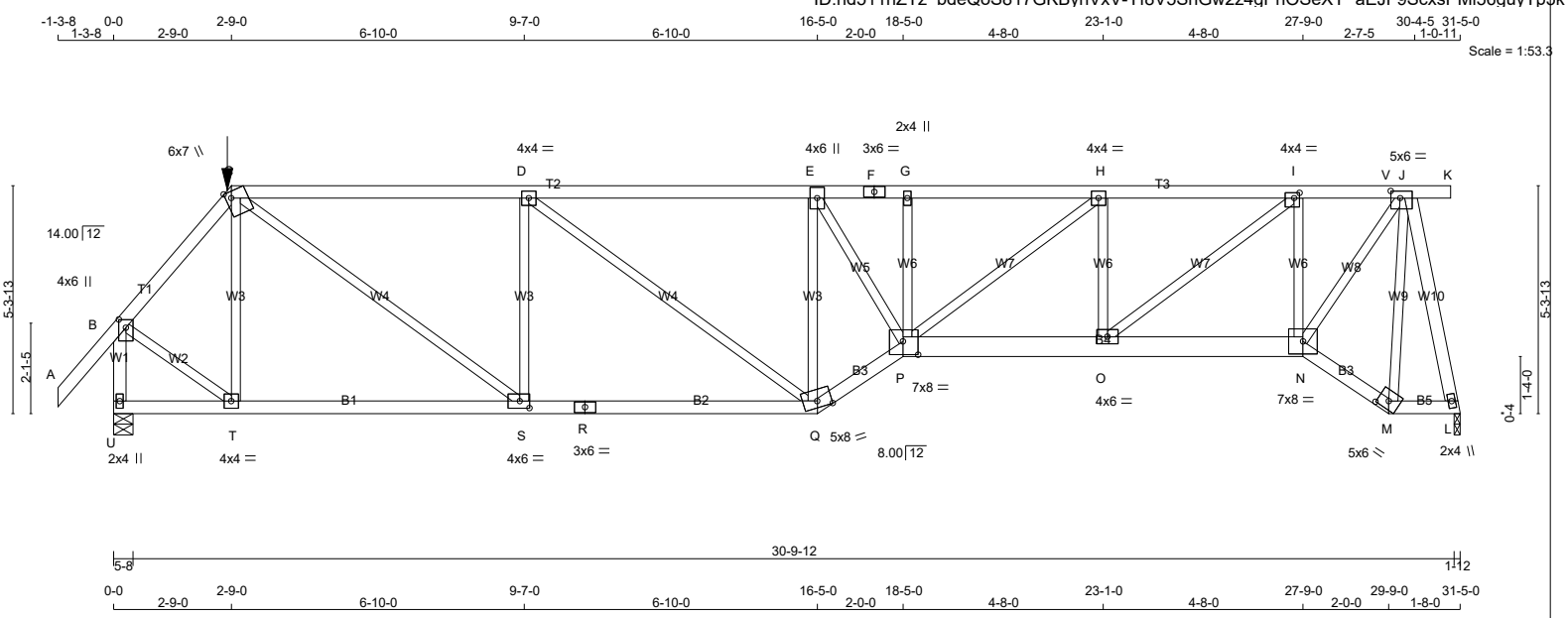

TOTAL WEIGHT = 2 X 145 = 290 lb

LUMBER

N. L. G. A. RULES

CHORDS	SIZE		LUMBER	DESCR.
A - C	2x4	DRY	No.2	SPF
C - F	2x4	DRY	No.2	SPF
F - K	2x4	DRY	No.2	SPF
U - B	2x4	DRY	No.2	SPF
U - R	2x4	DRY	No.2	SPF
R - Q	2x4	DRY	No.2	SPF
Q - P	2x4	DRY	No.2	SPF
P - N	2x6	DRY	No.2	SPF
N - M	2x4	DRY	No.2	SPF
M - L	2x4	DRY	No.2	SPF
ALL WEBS EXCEPT	2x3	DRY	No.2	SPF
J - L	2x4	DRY	No.2	SPF

DRY: SEASONED LUMBER.

DESIGN CONSISTS OF 2 TRUSSES BUILT SEPARATELY THEN FASTENED TOGETHER AS FOLLOWS:

CHORDS	#ROWS	SURFACE SPACING (IN)	LOAD(PLF)
TOP CHORDS : (0.122"X3") SPIRAL NAILS			
A- C	1	12	SIDE(61.0)
C- F	1	12	SIDE(37.8)
F- K	1	12	SIDE(37.8)
U- B	1	12	TOP
BOTTOM CHORDS : (0.122"X3") SPIRAL NAILS			
U- R	1	12	SIDE(10.0)
R- Q	1	12	SIDE(10.0)
Q- P	1	12	SIDE(38.5)
N- M	1	12	SIDE(38.5)
M- L	1	12	SIDE(10.0)
P- N	2	12	SIDE(46.7)
WEBS : (0.122"X3") SPIRAL NAILS			
T- C	1	6	SIDE(3.1)
2x3	1	6	
2x4	1	6	

NAILS TO BE DRIVEN FROM ONE SIDE ONLY.

GIRDER NAILING ASSUMES NAILED HANGERS ARE FASTENED WITH MIN. 3-0 INCH NAILS.

LATERAL BRACE(S) SHOWN SHALL BE 2X4 SPF#2

DIMENSIONS, SUPPORTS AND LOADINGS SPECIFIED BY FABRICATOR TO BE VERIFIED BY BUILDING DESIGNER

BEARINGS

JT	FACTORED GROSS REACTION VERT	HORZ	MAXIMUM FACTORED GROSS REACTION DOWN	HORZ	UPLIFT	INPUT BRG IN-SX	REQRD BRG IN-SX
L	2882	0	2882	0	0	1-12	1-9
U	3014	0	3014	0	0	5-8	1-10

UNFACTORED REACTIONS

JT	1ST LCASE COMBINED	MAX./MIN. COMPONENT REACTIONS SNOW	LIVE	PERM.LIVE	WIND	DEAD	SOIL
L	2057	1246 / 0	0 / 0	0 / 0	0 / 0	811 / 0	0 / 0
U	2148	1317 / 0	0 / 0	0 / 0	0 / 0	831 / 0	0 / 0

BEARING MATERIAL TO BE SPF NO.2 OR BETTER AT JOINT(S) L, U

BRACING

TOP CHORD TO BE SHEATHED OR MAX. PURLIN SPACING = 3.47 FT.
MAX. UNBRACED BOTTOM CHORD LENGTH = 10.00 FT OR RIGID CEILING DIRECTLY APPLIED.

ALL PITCH BREAKS AND PERIMETER CORNER JOINTS MUST BE LATERALLY RESTRAINED.

LOADING

TOTAL LOAD CASES: (4)

CHORDS

MEMB. FR-TO	MAX. FACTORED FORCE (LBS)	FACTORED VERT. LOAD (PLF) FROM	TO	LC1	MAX CSI (LC)	MAX. UNBRAC LENGTH
A- B	0 / 42	-78.0	-78.0	0.06 (1)	10.00	
B- C	-2405 / 0	-78.0	-78.0	0.08 (1)	5.74	
C- D	-4111 / 0	-153.5	-153.5	0.82 (1)	3.72	
D- E	-4684 / 0	-153.5	-153.5	0.87 (1)	3.47	
E- F	-6149 / 0	-78.0	-78.0	0.41 (1)	3.54	
F- G	-6149 / 0	-78.0	-78.0	0.41 (1)	3.54	
G- H	-6150 / 0	-78.0	-78.0	0.30 (1)	3.75	
H- I	-5026 / 0	-78.0	-78.0	0.24 (1)	4.14	
I- V	-2528 / 0	-78.0	-78.0	0.08 (1)	5.62	
V- J	-2528 / 0	-153.5	-153.5	0.08 (1)	5.62	
J- K	0 / 0	-78.0	-78.0	0.03 (1)	10.00	
U- B	-3000 / 0	0.0	0.0	0.19 (1)	6.66	
U- T	0 / 0	-36.4	-36.4	0.12 (4)	10.00	
T- S	0 / 1538	-36.4	-36.4	0.31 (4)	10.00	
S- R	0 / 4112	-36.4	-36.4	0.48 (1)	10.00	
R- Q	0 / 4112	-36.4	-36.4	0.48 (1)	10.00	
Q- P	0 / 5600	-112.0	-112.0	0.54 (1)	10.00	
P- O	0 / 5027	-112.0	-112.0	0.41 (1)	10.00	
O- N	0 / 2592	-112.0	-112.0	0.25 (1)	10.00	
N- M	0 / 709	-112.0	-112.0	0.10 (1)	10.00	
M- L	0 / 605	-36.4	-36.4	0.06 (1)	10.00	

WEBS

MEMB. FR-TO	MAX. FACTORED FORCE (LBS)	MAX CSI (LC)
J- L	-2925 / 0	0.48 (1)
T- C	-742 / 0	0.16 (1)
C- S	0 / 3186	0.39 (1)
S- D	-1612 / 0	0.35 (1)
D- Q	0 / 710	0.09 (1)
Q- E	-3370 / 0	0.73 (1)
E- P	0 / 3064	0.38 (1)
P- G	-46 / 0	0.01 (1)
P- H	0 / 1425	0.18 (1)
O- H	-1290 / 0	0.16 (1)
O- I	0 / 3104	0.38 (1)
N- I	-2220 / 0	0.27 (1)
N- J	0 / 3528	0.44 (1)
M- J	-258 / 0	0.06 (1)
B- T	0 / 1821	0.23 (1)

FACTORED CONCENTRATED LOADS (LBS)

JT	LOC.	LC1	MAX-	MAX+	FACE	DIR.	TYPE	HEEL	CONN.
C	2-9-0	-156	-156	---	FRONT	VERT	TOTAL	---	C1

CONNECTION REQUIREMENTS

1) **C1:** A SUITABLE HANGER/MECHANICAL CONNECTION IS REQUIRED.

[M]

DESIGN CRITERIA

SPECIFIED LOADS:

TOP	CH.	LL	=	21.0	PSF
		DL	=	6.0	PSF
BOT	CH.	LL	=	0.0	PSF
		DL	=	7.4	PSF
TOTAL	LOAD		=	34.4	PSF

SPACING = 24.0 IN. C/C

LOADING IN FLAT SECTION BASED ON A SLOPE OF 2.00/12 MINIMUM

GIRDER TYPE: CPrimeHip
LEFT SETBACK = 2-9-0
RIGHT SETBACK = 0-0
END SETBACK = 5-10-8
END WALL WIDTH = 0-0
CORNER FRAMING TYPE: CONVENTIONAL
END JACK TYPE: CONVENTIONAL
APPLIED TO FRONT SIDE
- ADDT'L LOADS BASED ON 55 % OF GSL.
LOADS APPLIED TO FIRST 1-8-0 OF SPAN MEASURED FROM THE RIGHT.

GIRDER TYPE: CStdGirder
START DISTANCE = 16-5-0
START SPAN CARRIED = 5-10-8
END DISTANCE = 29-9-0
END SPAN CARRIED = 5-10-8
END WALL WIDTH = 0-0
APPLIED TO FRONT SIDE OF BOTTOM CHORD.
- ADDT'L LOADS BASED ON 55 % OF GSL.

GIRDER TYPE: CPrimeHip
LEFT SETBACK = 2-9-0
RIGHT SETBACK = 0-0
END SETBACK = 5-10-8
END WALL WIDTH = 0-0
CORNER FRAMING TYPE: CONVENTIONAL
END JACK TYPE: CONVENTIONAL
APPLIED TO FRONT SIDE
- ADDT'L LOADS BASED ON 55 % OF GSL.
LOADS APPLIED TO FIRST 16-5-0 OF SPAN MEASURED FROM THE LEFT.

THIS TRUSS IS DESIGNED FOR RESIDENTIAL OR SMALL BUILDING REQUIREMENTS OF PART 9, NBCC 2015

THIS DESIGN COMPLIES WITH:
- PART 9 OF BCBC 2018 , ABC 2019
- PART 9 OF OBC 2012 (2019 AMENDMENT)
- CSA 086-14
- TPIC 2014

(55 % OF 23.0 P.S.F. G.S.L. PLUS 8.4 P.S.F. RAIN LOAD) EQUALS 21.0 P.S.F. SPECIFIED ROOF LIVE LOAD

ALLOWABLE DEFL.(LL)= L/360 (1.04")
CALCULATED VERT. DEFL.(LL) = L/ 999 (0.16")
ALLOWABLE DEFL.(TL)= L/360 (1.04")
CALCULATED VERT. DEFL.(TL) = L/ 999 (0.31")

CSI: TC=0.87/1.00 (D-E:1) , BC=0.54/1.00 (P-Q:1) , WB=0.73/1.00 (E-Q:1) , SSI=0.27/1.00 (C-D:1)

DOL LUMBER=1.00 NAIL=1.00 LS BEND=1.00 COMP=1.00 SHEAR=1.00 TENS= 1.00

COMPANION LIVE LOAD FACTOR = 1.00

CONTINUED ON PAGE 2

PLATES (table is in inches)

JT	TYPE	PLATES	W	LEN	Y	X
B	TMVW+p	MT20	4.0	6.0	2.25	2.00
C	TTWW+m	MT20	6.0	7.0	Edge	1.50
D	TMWW-t	MT20	4.0	4.0		
E	TMWW+t	MT20	4.0	6.0		
F	TS-t	MT20	3.0	6.0		
G	TMW+w	MT20	2.0	4.0		
H	TMWW-t	MT20	4.0	4.0		
I	TMWW-t	MT20	4.0	4.0	1.50	1.50
J	TMWWW-t	MT20	5.0	6.0	2.00	2.50
L	BMW1+w	MT20	2.0	4.0		
M	BBW-h	MT20	5.0	6.0	2.25	3.00
N	BBWW-l	MT20	7.0	8.0		
O	BMWW-t	MT20	4.0	6.0		
P	BBWWW-p	MT20	7.0	8.0	3.75	4.25
Q	BBWW-m	MT20	5.0	8.0	Edge	
R	BS-t	MT20	3.0	6.0		
S	BMWW-t	MT20	4.0	6.0	2.00	2.75
T	BMWW-t	MT20	4.0	4.0		
U	BMV1+p	MT20	2.0	4.0		

Edge - INDICATES REFERENCE CORNER OF PLATE TOUCHES EDGE OF CHORD.

LATERAL BRACE(S) SHOWN SHALL BE 2X4 SPF#2

TRUSS PLATE MANUFACTURER IS NOT RESPONSIBLE FOR QUALITY CONTROL IN THE TRUSS MANUFACTURING PLANT .

NAIL VALUES

PLATE	GRIP(DRY) (PSI) MAX	MIN	SHEAR (PLI) MAX	MIN	SECTION (PLI) MAX	MIN
MT20	650	371	1747	788	1987	1873

PLATE PLACEMENT TOL. = 0.250 inches

PLATE ROTATION TOL. = 5.0 Deg.

JSI GRIP= 0.90 (O) (INPUT = 0.90)
JSI METAL= 0.59 (R) (INPUT = 1.00)

JOB NAME	TRUSS NAME	QUANTITY	PLY	JOB DESC.	DRWG NO.
336324	H142E		1	TRUSS DESC. JT 45147	E21104128

Alpa Roof Truss, Maple

Version 8.420 S Jan 21 2021 MiTek Industries, Inc. Wed Oct 13 14:53:05 2021 Page 1

ID:hd511hZTz_bdeQoS817GKByhVxV-U2FFW8pWSfDowi?5Vtg?ePfe72uV4nCiq3aDlnyTp5i

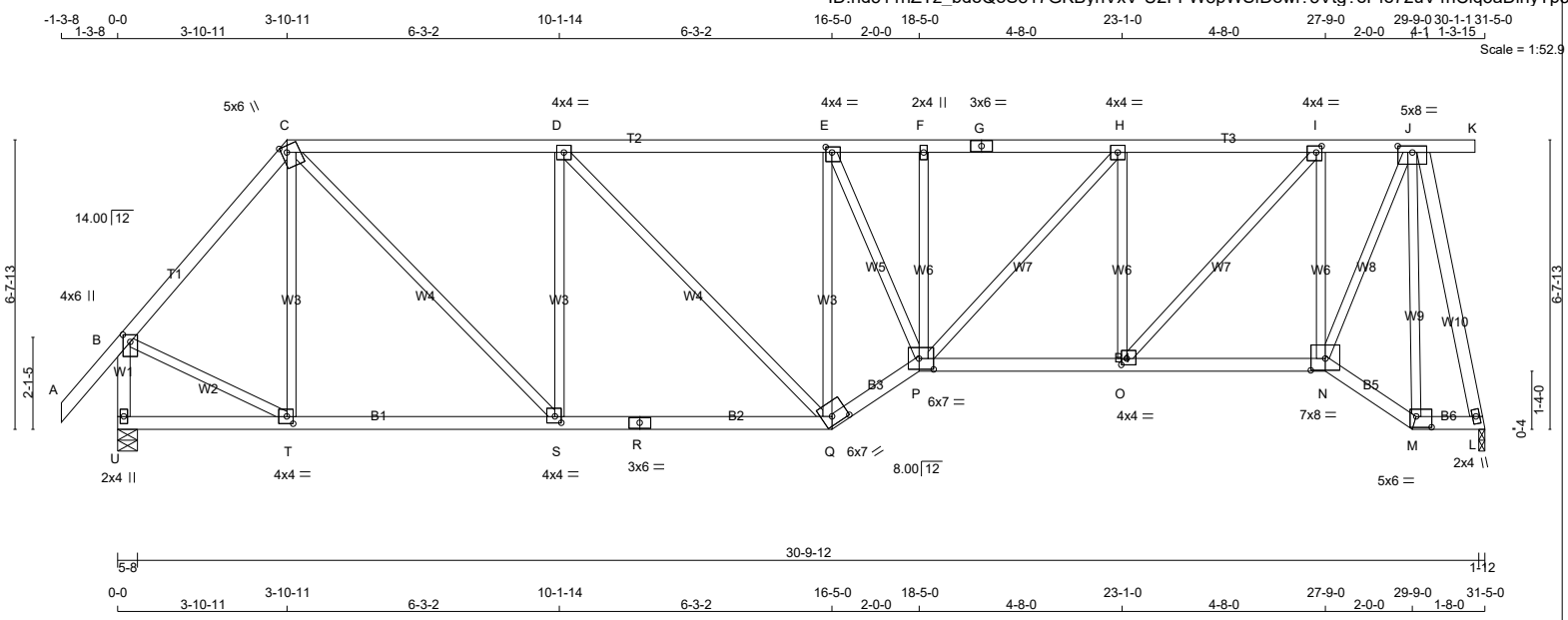

LUMBER

N. L. G. A. RULES

CHORDS	SIZE		LUMBER	DESCR.
A - C	2x4	DRY	No.2	SPF
C - G	2x4	DRY	No.2	SPF
G - K	2x4	DRY	No.2	SPF
U - B	2x4	DRY	No.2	SPF
U - R	2x4	DRY	No.2	SPF
R - Q	2x4	DRY	No.2	SPF
Q - P	2x4	DRY	No.2	SPF
P - N	2x4	DRY	No.2	SPF
N - M	2x4	DRY	No.2	SPF
M - L	2x4	DRY	No.2	SPF
ALL WEBS EXCEPT	2x3	DRY	No.2	SPF
J - L	2x4	DRY	No.2	SPF

DRY: SEASONED LUMBER.

PLATES (table is in inches)

JT	TYPE	PLATES	W	LEN	Y	X
B	TMVW+p	MT20	4.0	6.0	2.00	2.00
C	TTWW+m	MT20	5.0	6.0	1.75	1.50
D	TMWW-t	MT20	4.0	4.0		
E	TMWW-t	MT20	4.0	4.0	1.50	1.75
F	TMW+w	MT20	2.0	4.0		
G	TS-t	MT20	3.0	6.0		
H	TMWW-t	MT20	4.0	4.0		
I	TMWW-t	MT20	4.0	4.0	1.75	1.50
J	TMWWW-t	MT20	5.0	8.0	1.75	4.00
L	BMW1+w	MT20	2.0	4.0		
M	BBW-l	MT20	5.0	6.0	3.00	4.25
N	BBWW-l	MT20	7.0	8.0	3.25	4.00
O	BMWW-t	MT20	4.0	4.0	1.75	1.50
P	BBWWW-p	MT20	6.0	7.0	3.00	4.00
Q	BBWW-h	MT20	6.0	7.0	2.25	4.25
R	BS-t	MT20	3.0	6.0		
S	BMWW-t	MT20	4.0	4.0	1.75	1.75
T	BMWW-t	MT20	4.0	4.0	2.00	1.75
U	BMV1+p	MT20	2.0	4.0		

LATERAL BRACE(S) SHOWN SHALL BE 2X4 SPF#2

DIMENSIONS, SUPPORTS AND LOADINGS SPECIFIED BY FABRICATOR TO BE VERIFIED BY BUILDING DESIGNER

BEARINGS

JT	FACTORED GROSS REACTION VERT	HORZ	MAXIMUM FACTORED GROSS REACTION DOWN	HORZ	UPLIFT	INPUT BRG IN-SX	REQRD BRG IN-SX
L	1501	0	1501	0	0	1-12	1-10
U	1618	0	1618	0	0	5-8	1-12

UNFACTORED REACTIONS

JT	1ST LCASE COMBINED	MAX./MIN. COMPONENT REACTIONS SNOW	LIVE	PERM.LIVE	WIND	DEAD	SOIL
L	1070	653 / 0	0 / 0	0 / 0	0 / 0	418 / 0	0 / 0
U	1151	715 / 0	0 / 0	0 / 0	0 / 0	435 / 0	0 / 0

BEARING MATERIAL TO BE SPF NO.2 OR BETTER AT JOINT(S) L, U

BRACING

TOP CHORD TO BE SHEATHED OR MAX. PURLIN SPACING = 4.23 FT.
MAX. UNBRACED BOTTOM CHORD LENGTH = 10.00 FT OR RIGID CEILING DIRECTLY APPLIED.

ALL PITCH BREAKS AND PERIMETER CORNER JOINTS MUST BE LATERALLY RESTRAINED.

LOADING

TOTAL LOAD CASES: (4)

CHORDS

MEMB. FR-TO	MAX. FACTORED FORCE (LBS)	FACTORED VERT. LOAD (PLF) FROM	TO	LC1 CSI (LC)	MAX. UNBRAC LENGTH
A- B	0 / 42	-78.0	-78.0	0.11 (1)	10.00
B- C	-1275 / 0	-78.0	-78.0	0.25 (1)	5.44
C- D	-1688 / 0	-78.0	-78.0	0.57 (1)	4.44
D- E	-1881 / 0	-78.0	-78.0	0.59 (1)	4.23
E- F	-2286 / 0	-78.0	-78.0	0.27 (1)	4.26
F- G	-2290 / 0	-78.0	-78.0	0.32 (1)	4.24
G- H	-2290 / 0	-78.0	-78.0	0.32 (1)	4.24
H- I	-1852 / 0	-78.0	-78.0	0.28 (1)	4.65
I- J	-952 / 0	-78.0	-78.0	0.12 (1)	6.23
J- K	0 / 0	-78.0	-78.0	0.11 (1)	10.00
U- B	-1593 / 0	0.0	0.0	0.19 (1)	6.55
U- T	0 / 0	-18.5	-18.5	0.11 (4)	10.00
T- S	0 / 822	-18.5	-18.5	0.25 (4)	10.00
S- R	0 / 1688	-18.5	-18.5	0.36 (1)	10.00
R- Q	0 / 1688	-18.5	-18.5	0.36 (1)	10.00
Q- P	0 / 2233	-18.5	-18.5	0.37 (1)	10.00
P- O	0 / 1852	-18.5	-18.5	0.35 (1)	10.00
O- N	0 / 978	-18.5	-18.5	0.21 (1)	10.00
N- M	0 / 413	-18.5	-18.5	0.08 (1)	10.00
M- L	0 / 344	-18.5	-18.5	0.06 (1)	10.00

WEBS

MEMB. FR-TO	MAX. FACTORED FORCE (LBS)	MAX CSI (LC)
J- L	-1527 / 0	0.86 (1)
T- C	-257 / 0	0.19 (1)
C- S	0 / 1231	0.28 (1)
S- D	-751 / 0	0.55 (1)
D- Q	0 / 274	0.06 (1)
Q- E	-1364 / 0	1.00 (1)
E- P	0 / 1105	0.25 (1)
P- F	-191 / 0	0.08 (1)
P- H	0 / 643	0.14 (1)
O- H	-869 / 0	0.37 (1)
O- I	0 / 1300	0.29 (1)
N- I	-1241 / 0	0.52 (1)
B- T	0 / 901	0.20 (1)
N- J	0 / 1642	0.37 (1)
J- M	-196 / 0	0.14 (1)

DESIGN CRITERIA

SPECIFIED LOADS:

TOP CH.	LL	=	21.0	PSF
	DL	=	6.0	PSF
BOT CH.	LL	=	0.0	PSF
	DL	=	7.4	PSF
TOTAL LOAD		=	34.4	PSF

SPACING = 24.0 IN. C/C

LOADING IN FLAT SECTION BASED ON A SLOPE OF 2.00/12 MINIMUM

THIS TRUSS IS DESIGNED FOR RESIDENTIAL OR SMALL BUILDING REQUIREMENTS OF PART 9, NBCC 2015

THIS DESIGN COMPLIES WITH:
- PART 9 OF BCBC 2018 , ABC 2019
- PART 9 OF OBC 2012 (2019 AMENDMENT)
- CSA 086-14
- TPIC 2014

(55 % OF 23.0 P.S.F. G.S.L. PLUS 8.4 P.S.F. RAIN LOAD) EQUALS 21.0 P.S.F. SPECIFIED ROOF LIVE LOAD

ALLOWABLE DEFL.(LL)= L/360 (1.04")
CALCULATED VERT. DEFL.(LL) = L/ 999 (0.12")
ALLOWABLE DEFL.(TL)= L/360 (1.04")
CALCULATED VERT. DEFL.(TL) = L/ 999 (0.23")

CSI: TC=0.59/1.00 (D-E:1) , BC=0.37/1.00 (P-Q:1) , WB=1.00/1.00 (E-Q:1) , SSI=0.23/1.00 (C-D:1)

DOL LUMBER=1.00 NAIL=1.00 LS BEND=1.10 COMP=1.10 SHEAR=1.10 TENS= 1.10

COMPANION LIVE LOAD FACTOR = 1.00

TRUSS PLATE MANUFACTURER IS NOT RESPONSIBLE FOR QUALITY CONTROL IN THE TRUSS MANUFACTURING PLANT .

NAIL VALUES

PLATE	GRIP(DRY) (PSI) MAX	MIN	SHEAR (PLI) MAX	MIN	SECTION (PLI) MAX	MIN
MT20	650	371	1747	788	1987	1873

PLATE PLACEMENT TOL. = 0.250 inches

PLATE ROTATION TOL. = 5.0 Deg.

JSI GRIP= 0.89 (P) (INPUT = 0.90)
JSI METAL= 0.53 (R) (INPUT = 1.00)

JOB NAME	TRUSS NAME	QUANTITY	PLY	JOB DESC.	DRWG NO.
336324	H143T		1	TRUSS DESC. JT 45147	E21104129

Alpa Roof Truss, Maple

Version 8.420 S Jan 21 2021 MiTek Industries, Inc. Wed Oct 13 14:53:07 2021 Page 1

ID:hd511hZTz_bdeQoS817GKByhVxV-QRN?xpqm_GTV908TdIjTjqk0rsb2YjA_HN3JpfyTp5g

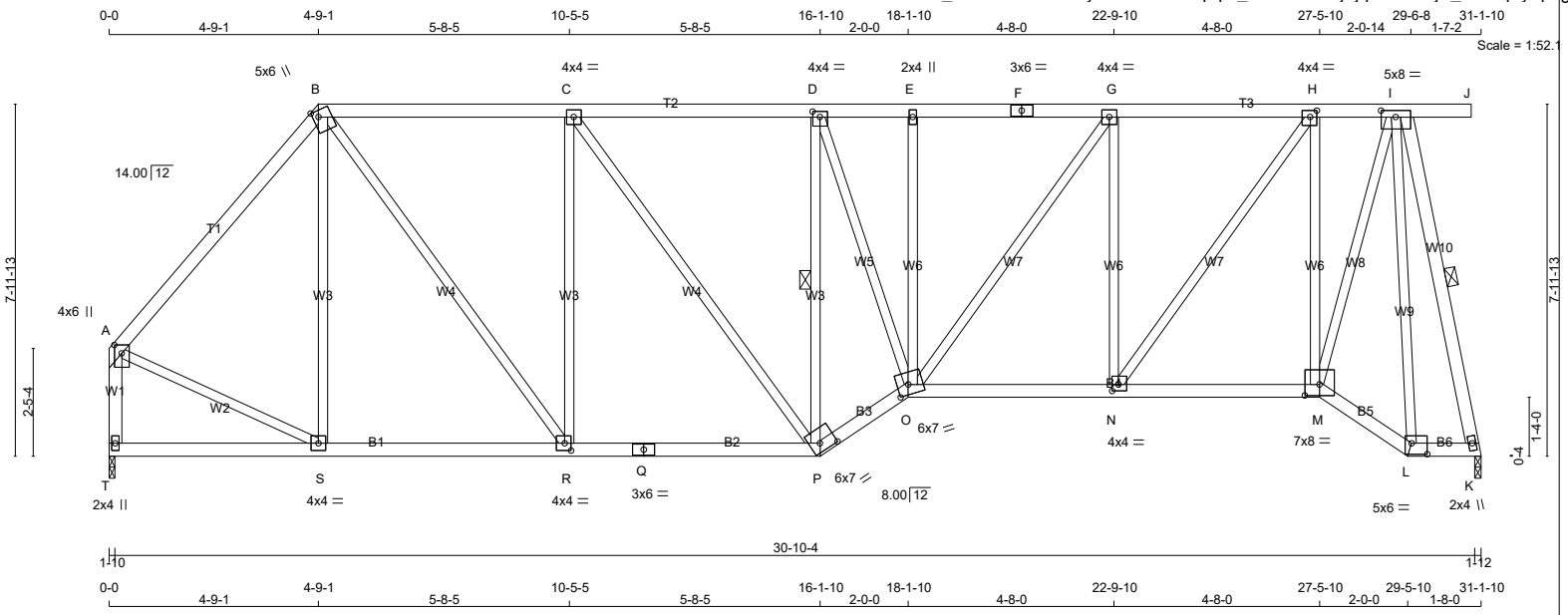

TOTAL WEIGHT = 167 lb

LUMBER

N. L. G. A. RULES

CHORDS	SIZE		LUMBER	DESCR.
A - B	2x4	DRY	No.2	SPF
B - F	2x4	DRY	No.2	SPF
F - J	2x4	DRY	No.2	SPF
T - A	2x4	DRY	No.2	SPF
T - Q	2x4	DRY	No.2	SPF
Q - P	2x4	DRY	No.2	SPF
P - O	2x4	DRY	No.2	SPF
O - M	2x4	DRY	No.2	SPF
M - L	2x4	DRY	No.2	SPF
L - K	2x4	DRY	No.2	SPF
ALL WEBS EXCEPT	2x3	DRY	No.2	SPF
I - K	2x4	DRY	No.2	SPF

DRY: SEASONED LUMBER.

PLATES (table is in inches)

JT	TYPE	PLATES	W	LEN	Y	X
A	TMVW+p	MT20	4.0	6.0	2.25	2.00
B	TTWW+m	MT20	5.0	6.0	1.75	1.50
C	TMWW-t	MT20	4.0	4.0		
D	TMWW-t	MT20	4.0	4.0	1.50	2.00
E	TMW+w	MT20	2.0	4.0		
F	TS-t	MT20	3.0	6.0		
G	TMWW-t	MT20	4.0	4.0		
H	TMWW-t	MT20	4.0	4.0	1.75	1.75
I	TMWWW-t	MT20	5.0	8.0	1.75	4.00
K	BMW1+w	MT20	2.0	4.0		
L	BBW-l	MT20	5.0	6.0	3.00	4.25
M	BBWW-l	MT20	7.0	8.0	3.00	4.00
N	BMWW-t	MT20	4.0	4.0	1.75	1.75
O	BBWWW-m	MT20	6.0	7.0	2.75	3.00
P	BBWW-h	MT20	6.0	7.0	2.25	4.25
Q	BS-t	MT20	3.0	6.0		
R	BMWW-t	MT20	4.0	4.0	2.00	1.75
S	BMWW-t	MT20	4.0	4.0		
T	BMV1+p	MT20	2.0	4.0		

LATERAL BRACE(S) SHOWN SHALL BE 2X4 SPF#2

DIMENSIONS, SUPPORTS AND LOADINGS SPECIFIED BY FABRICATOR TO BE VERIFIED BY BUILDING DESIGNER

BEARINGS

JT	FACTORED GROSS REACTION VERT	HORZ	MAXIMUM FACTORED GROSS REACTION DOWN	HORZ	UPLIFT	INPUT BRG IN-SX	REQRD BRG IN-SX
K	1490	0	1490	0	0	1-12	1-10
T	1492	0	1492	0	0	1-10	1-10

UNFACTORED REACTIONS

JT	1ST LCASE COMBINED	MAX./MIN. COMPONENT REACTIONS SNOW	LIVE	PERM.LIVE	WIND	DEAD	SOIL
K	1062	648 / 0	0 / 0	0 / 0	0 / 0	414 / 0	0 / 0
T	1064	649 / 0	0 / 0	0 / 0	0 / 0	414 / 0	0 / 0

BEARING MATERIAL TO BE SPF NO.2 OR BETTER AT JOINT(S) K, T

BRACING

TOP CHORD TO BE SHEATHED OR MAX. PURLIN SPACING = 4.72 FT.
MAX. UNBRACED BOTTOM CHORD LENGTH = 10.00 FT OR RIGID CEILING DIRECTLY APPLIED.

ALL PITCH BREAKS AND PERIMETER CORNER JOINTS MUST BE LATERALLY RESTRAINED.

1 LATERAL BRACE(S) AT 1/ 2 LENGTH OF I-K, D-P.

END VERTICAL(S) MUST BE SHEATHED OR HAVE BRACES AS INDICATED IN THE MAX. UNBRACED LENGTH COLUMN OF THE TABLE BELOW

LOADING

TOTAL LOAD CASES: (4)

CHORDS

MEMB. FR-TO	MAX. FACTORED FORCE (LBS)	FACTORED VERT. LOAD LC1 (PLF) FROM	TO	MAX CSI (LC)	MAX. UNBRAC LENGTH
A- B	-1226 / 0	-78.0	-78.0	0.38 (1)	5.36
B- C	-1384 / 0	-78.0	-78.0	0.44 (1)	4.98
C- D	-1518 / 0	-78.0	-78.0	0.45 (1)	4.80
D- E	-1771 / 0	-78.0	-78.0	0.21 (1)	4.81
E- F	-1775 / 0	-78.0	-78.0	0.29 (1)	4.72
F- G	-1775 / 0	-78.0	-78.0	0.29 (1)	4.72
G- H	-1439 / 0	-78.0	-78.0	0.27 (1)	5.15
H- I	-731 / 0	-78.0	-78.0	0.16 (1)	6.25
I- J	0 / 0	-78.0	-78.0	0.16 (1)	10.00
T- A	-1457 / 0	0.0	0.0	0.19 (1)	6.77
T- S	0 / 0	-18.5	-18.5	0.11 (4)	10.00
S- R	0 / 791	-18.5	-18.5	0.21 (4)	10.00
R- Q	0 / 1384	-18.5	-18.5	0.29 (1)	10.00
Q- P	0 / 1384	-18.5	-18.5	0.29 (1)	10.00
P- O	0 / 1807	-18.5	-18.5	0.30 (1)	10.00
O- N	0 / 1439	-18.5	-18.5	0.29 (1)	10.00
N- M	0 / 749	-18.5	-18.5	0.18 (4)	10.00
M- L	0 / 410	-18.5	-18.5	0.08 (1)	10.00
L- K	0 / 334	-18.5	-18.5	0.06 (1)	10.00

WEBS

MEMB. FR-TO	MAX. FACTORED FORCE (LBS)	MAX CSI (LC)
I- K	-1514 / 0	0.46 (1)
S- B	-232 / 0	0.28 (1)
B- R	0 / 993	0.22 (1)
R- C	-687 / 0	0.83 (1)
C- P	0 / 226	0.05 (1)
P- D	-1118 / 0	0.45 (1)
D- O	0 / 852	0.19 (1)
O- E	-206 / 0	0.15 (1)
O- G	0 / 567	0.13 (1)
N- G	-864 / 0	0.63 (1)
N- H	0 / 1182	0.27 (1)
M- H	-1148 / 0	0.84 (1)
A- S	0 / 864	0.19 (1)
I- L	-194 / 0	0.24 (1)
M- I	0 / 1481	0.33 (1)

DESIGN CRITERIA

SPECIFIED LOADS:

TOP CH.	LL	=	21.0	PSF
	DL	=	6.0	PSF
BOT CH.	LL	=	0.0	PSF
	DL	=	7.4	PSF
TOTAL LOAD		=	34.4	PSF

SPACING = 24.0 IN. C/C

LOADING IN FLAT SECTION BASED ON A SLOPE OF 2.00/12 MINIMUM

THIS TRUSS IS DESIGNED FOR RESIDENTIAL OR SMALL BUILDING REQUIREMENTS OF PART 9, NBCC 2015

THIS DESIGN COMPLIES WITH:
- PART 9 OF BCBC 2018 , ABC 2019
- PART 9 OF OBC 2012 (2019 AMENDMENT)
- CSA 086-14
- TPIC 2014

DESIGN ASSUMPTIONS
-OVERHANG NOT TO BE ALTERED OR CUT OFF.

(55 % OF 23.0 P.S.F. G.S.L. PLUS 8.4 P.S.F. RAIN LOAD) EQUALS 21.0 P.S.F. SPECIFIED ROOF LIVE LOAD

ALLOWABLE DEFL.(LL)= L/360 (1.03")
CALCULATED VERT. DEFL.(LL) = L/ 999 (0.09")
ALLOWABLE DEFL.(TL)= L/360 (1.03")
CALCULATED VERT. DEFL.(TL) = L/ 999 (0.18")

CSI: TC=0.45/1.00 (C-D:1) , BC=0.30/1.00 (O-P:1) , WB=0.84/1.00 (H-M:1) , SSI=0.21/1.00 (B-C:1)

DOL LUMBER=1.00 NAIL=1.00 LS BEND=1.10 COMP=1.10 SHEAR=1.10 TENS= 1.10

COMPANION LIVE LOAD FACTOR = 1.00

TRUSS PLATE MANUFACTURER IS NOT RESPONSIBLE FOR QUALITY CONTROL IN THE TRUSS MANUFACTURING PLANT .

NAIL VALUES

PLATE	GRIP(DRY) (PSI) MAX	MIN	SHEAR (PLI) MAX	MIN	SECTION (PLI) MAX	MIN
MT20	650	371	1747	788	1987	1873

PLATE PLACEMENT TOL. = 0.250 inches

PLATE ROTATION TOL. = 5.0 Deg.

JSI GRIP= 0.90 (R) (INPUT = 0.90)
JSI METAL= 0.46 (A) (INPUT = 1.00)

JOB NAME	TRUSS NAME	QUANTITY	PLY	JOB DESC.	DRWG NO.
336324	H144T		1	TRUSS DESC. JT 45147	E21104130

Alpa Roof Truss, Maple

Version 8.420 S Jan 21 2021 MiTek Industries, Inc. Wed Oct 13 14:53:09 2021 Page 1

ID:hd511hZTz_bdeQoS817GKByhVxV-MpVmMVs0WujDOKIskiIxoFqKMgHA0fZHlhYQuYyTp5e

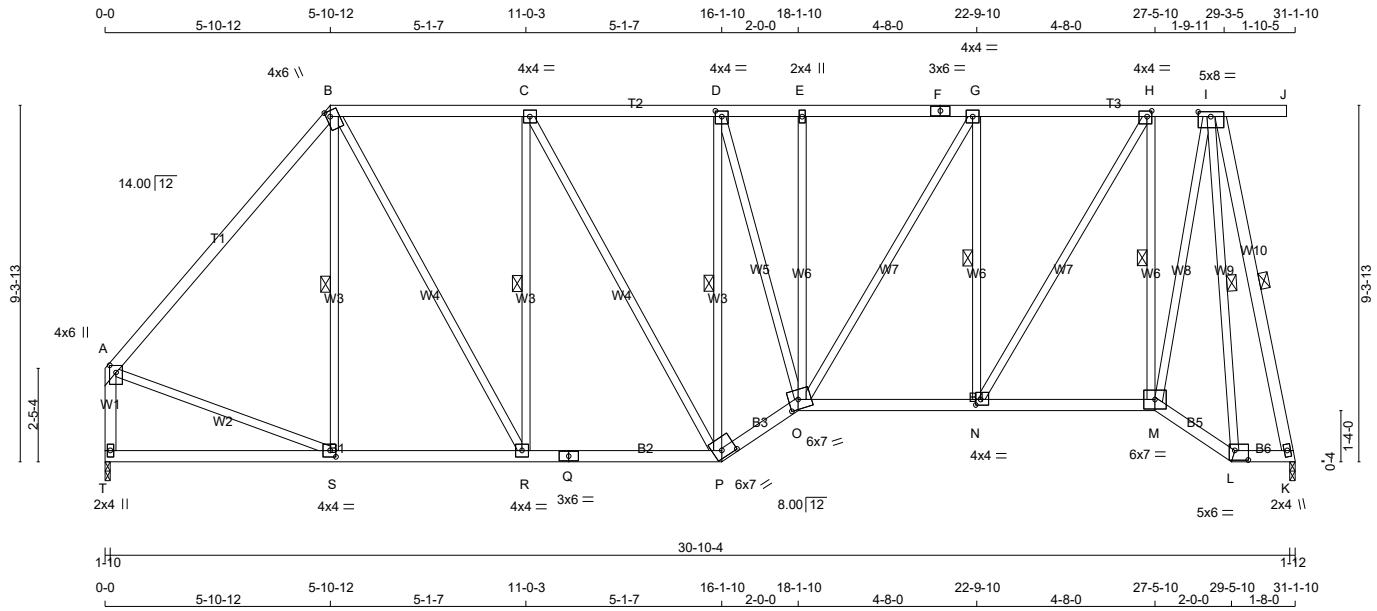

TOTAL WEIGHT = 183 lb

LUMBER

N. L. G. A. RULES

CHORDS	SIZE		LUMBER	DESCR.
A - B	2x4	DRY	No.2	SPF
B - F	2x4	DRY	No.2	SPF
F - J	2x4	DRY	No.2	SPF
T - A	2x4	DRY	No.2	SPF
T - Q	2x4	DRY	No.2	SPF
Q - P	2x4	DRY	No.2	SPF
P - O	2x4	DRY	No.2	SPF
O - M	2x4	DRY	No.2	SPF
M - L	2x4	DRY	No.2	SPF
L - K	2x4	DRY	No.2	SPF
ALL WEBS EXCEPT	2x3	DRY	No.2	SPF
I - K	2x4	DRY	No.2	SPF

DRY: SEASONED LUMBER.

PLATES (table is in inches)

JT	TYPE	PLATES	W	LEN	Y	X
A	TMVW+p	MT20	4.0	6.0	2.25	2.00
B	TTWW+m	MT20	4.0	6.0	1.75	1.25
C	TMWW-t	MT20	4.0	4.0		
D	TMWW-t	MT20	4.0	4.0	1.75	2.00
E	TMW+w	MT20	2.0	4.0		
F	TS-t	MT20	3.0	6.0		
G	TMWW-t	MT20	4.0	4.0		
H	TMWW-t	MT20	4.0	4.0	1.75	1.50
I	TMWWW-t	MT20	5.0	8.0	1.50	4.00
K	BMW1+w	MT20	2.0	4.0		
L	BBW-l	MT20	5.0	6.0	3.00	4.25
M	BBWW-l	MT20	6.0	7.0		
N	BMWW-t	MT20	4.0	4.0	1.75	1.50
O	BBWWW-m	MT20	6.0	7.0	3.00	3.00
P	BBWW-h	MT20	6.0	7.0	2.25	4.25
Q	BS-t	MT20	3.0	6.0		
R	BMWW-t	MT20	4.0	4.0		
S	BMWW-t	MT20	4.0	4.0	2.00	1.75
T	BMV1+p	MT20	2.0	4.0		

LATERAL BRACE(S) SHOWN SHALL BE 2X4 SPF#2

DIMENSIONS, SUPPORTS AND LOADINGS SPECIFIED BY FABRICATOR TO BE VERIFIED BY BUILDING DESIGNER

BEARINGS

JT	FACTORED GROSS REACTION VERT	HORZ	MAXIMUM FACTORED GROSS REACTION DOWN	HORZ	UPLIFT	INPUT BRG IN-SX	REQRD BRG IN-SX
K	1490	0	1490	0	0	1-12	1-10
T	1492	0	1492	0	0	1-10	1-10

UNFACTORED REACTIONS

JT	1ST LCASE COMBINED	MAX./MIN. COMPONENT REACTIONS SNOW	LIVE	PERM.LIVE	WIND	DEAD	SOIL
K	1062	648 / 0	0 / 0	0 / 0	0 / 0	414 / 0	0 / 0
T	1064	649 / 0	0 / 0	0 / 0	0 / 0	414 / 0	0 / 0

BEARING MATERIAL TO BE SPF NO.2 OR BETTER AT JOINT(S) K, T

BRACING

TOP CHORD TO BE SHEATHED OR MAX. PURLIN SPACING = 5.04 FT.
MAX. UNBRACED BOTTOM CHORD LENGTH = 10.00 FT OR RIGID CEILING DIRECTLY APPLIED.

ALL PITCH BREAKS AND PERIMETER CORNER JOINTS MUST BE LATERALLY RESTRAINED.

1 LATERAL BRACE(S) AT 1/ 2 LENGTH OF I-K, B-S, C-R, D-P, G-N, H-M, I-L.

END VERTICAL(S) MUST BE SHEATHED OR HAVE BRACES AS INDICATED IN THE MAX. UNBRACED LENGTH COLUMN OF THE TABLE BELOW

LOADING

TOTAL LOAD CASES: (4)

CHORDS

MEMB. FR-TO	MAX. FACTORED FORCE (LBS)	FACTORED VERT. LOAD (PLF) FROM	TO	LC1 CSI (LC)	MAX UNBRAC LENGTH
A- B	-1236 / 0	-78.0	-78.0	0.64 (1)	5.04
B- C	-1201 / 0	-78.0	-78.0	0.34 (1)	5.40
C- D	-1291 / 0	-78.0	-78.0	0.35 (1)	5.25
D- E	-1464 / 0	-78.0	-78.0	0.16 (1)	5.24
E- F	-1467 / 0	-78.0	-78.0	0.28 (1)	5.10
F- G	-1467 / 0	-78.0	-78.0	0.28 (1)	5.10
G- H	-1190 / 0	-78.0	-78.0	0.26 (1)	5.54
H- I	-602 / 0	-78.0	-78.0	0.21 (1)	6.25
I- J	0 / 0	-78.0	-78.0	0.21 (1)	10.00
T- A	-1447 / 0	0.0	0.0	0.19 (1)	6.79
T- S	0 / 0	-18.5	-18.5	0.14 (4)	10.00
S- R	0 / 800	-18.5	-18.5	0.22 (4)	10.00
R- Q	0 / 1201	-18.5	-18.5	0.25 (1)	10.00
Q- P	0 / 1201	-18.5	-18.5	0.25 (1)	10.00
P- O	0 / 1538	-18.5	-18.5	0.26 (1)	10.00
O- N	0 / 1190	-18.5	-18.5	0.25 (1)	10.00
N- M	0 / 617	-18.5	-18.5	0.17 (4)	10.00
M- L	0 / 409	-18.5	-18.5	0.08 (1)	10.00
L- K	0 / 329	-18.5	-18.5	0.06 (1)	10.00

WEBS

MEMB. FR-TO	MAX. FACTORED FORCE (LBS)	MAX CSI (LC)
I- K	-1513 / 0	0.65 (1)
S- B	-159 / 21	0.09 (1)
B- R	0 / 811	0.18 (1)
R- C	-612 / 0	0.35 (1)
C- P	0 / 182	0.04 (1)
P- D	-949 / 0	0.54 (1)
D- O	0 / 697	0.16 (1)
O- E	-218 / 0	0.26 (1)
O- G	0 / 533	0.12 (1)
N- G	-868 / 0	0.35 (1)
N- H	0 / 1124	0.25 (1)
M- H	-1096 / 0	0.44 (1)
A- S	0 / 848	0.19 (1)
I- L	-194 / 0	0.11 (1)
M- I	0 / 1400	0.32 (1)

DESIGN CRITERIA

SPECIFIED LOADS:

TOP CH.	LL	=	21.0	PSF
	DL	=	6.0	PSF
BOT CH.	LL	=	0.0	PSF
	DL	=	7.4	PSF
TOTAL LOAD		=	34.4	PSF

SPACING = 24.0 IN. C/C

LOADING IN FLAT SECTION BASED ON A SLOPE OF 2.00/12 MINIMUM

THIS TRUSS IS DESIGNED FOR RESIDENTIAL OR SMALL BUILDING REQUIREMENTS OF PART 9, NBCC 2015

THIS DESIGN COMPLIES WITH:
- PART 9 OF BCBC 2018 , ABC 2019
- PART 9 OF OBC 2012 (2019 AMENDMENT)
- CSA 086-14
- TPIC 2014

DESIGN ASSUMPTIONS
-OVERHANG NOT TO BE ALTERED OR CUT OFF.

(55 % OF 23.0 P.S.F. G.S.L. PLUS 8.4 P.S.F. RAIN LOAD) EQUALS 21.0 P.S.F. SPECIFIED ROOF LIVE LOAD

ALLOWABLE DEFL.(LL)= L/360 (1.03")
CALCULATED VERT. DEFL.(LL) = L/ 999 (0.08")
ALLOWABLE DEFL.(TL)= L/360 (1.03")
CALCULATED VERT. DEFL.(TL) = L/ 999 (0.16")

CSI: TC=0.64/1.00 (A-B:1) , BC=0.26/1.00 (O-P:1) , WB=0.65/1.00 (I-K:1) , SSI=0.19/1.00 (B-C:1)

DOL LUMBER=1.00 NAIL=1.00 LS BEND=1.10 COMP=1.10 SHEAR=1.10 TENS= 1.10

COMPANION LIVE LOAD FACTOR = 1.00

TRUSS PLATE MANUFACTURER IS NOT RESPONSIBLE FOR QUALITY CONTROL IN THE TRUSS MANUFACTURING PLANT .

NAIL VALUES

PLATE	GRIP(DRY) (PSI) MAX	MIN	SHEAR (PLI) MAX	MIN	SECTION (PLI) MAX	MIN
MT20	650	371	1747	788	1987	1873

PLATE PLACEMENT TOL. = 0.250 inches

PLATE ROTATION TOL. = 5.0 Deg.

JSI GRIP= 0.87 (H) (INPUT = 0.90)
JSI METAL= 0.47 (A) (INPUT = 1.00)

JOB NAME	TRUSS NAME	QUANTITY	PLY	JOB DESC.	DRWG NO.
336324	H145T		1	TRUSS DESC. JT 45147	E21104131

Alpa Roof Truss, Maple

Version 8.420 S Jan 21 2021 MiTek Industries, Inc. Wed Oct 13 14:53:11 2021 Page 1

ID:hd511hZTz_bdeQoS817GKByhVxV-JCcWnBtH1VzxedSEs7nPtgvk8TvYUVvaC?1XyRyTp5c

Scale = 1:65.3

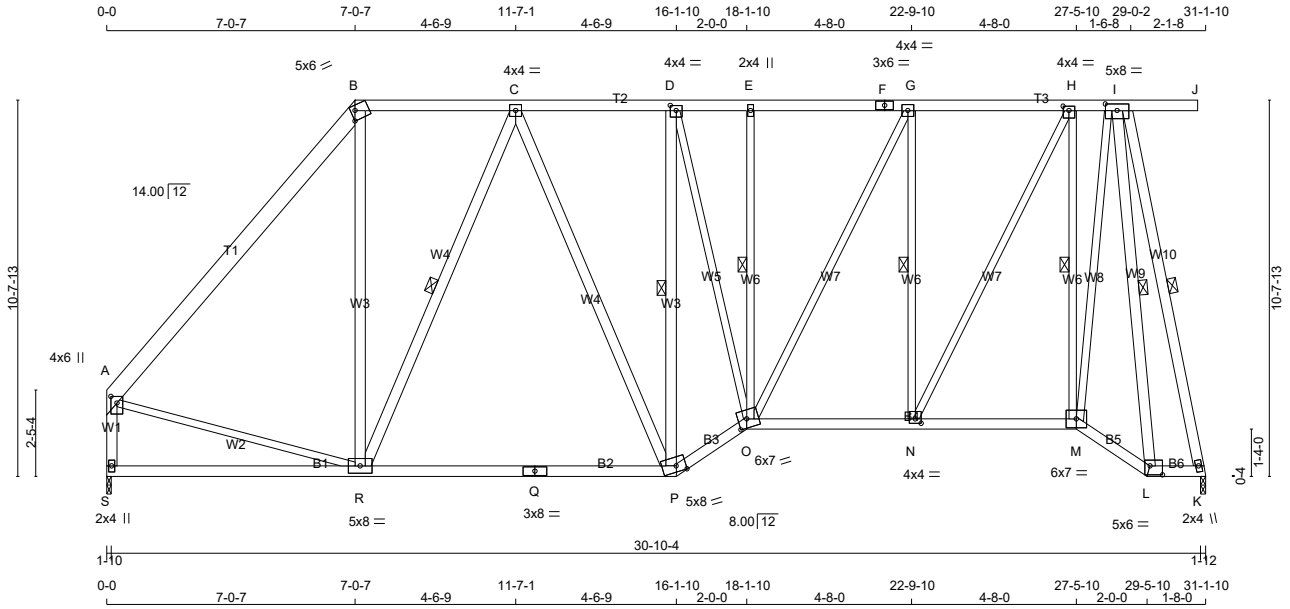

TOTAL WEIGHT = 215 lb

[M]

LUMBER

N. L. G. A. RULES

CHORDS	SIZE		LUMBER	DESCR.
A - B	2x6	DRY	No.2	SPF
B - F	2x4	DRY	No.2	SPF
F - J	2x4	DRY	No.2	SPF
S - A	2x4	DRY	No.2	SPF
S - Q	2x4	DRY	No.2	SPF
Q - P	2x4	DRY	No.2	SPF
P - O	2x4	DRY	No.2	SPF
O - M	2x4	DRY	No.2	SPF
M - L	2x4	DRY	No.2	SPF
L - K	2x4	DRY	No.2	SPF
ALL WEBS EXCEPT	2x4	DRY	No.2	SPF
D - O	2x3	DRY	No.2	SPF
O - E	2x3	DRY	No.2	SPF
O - G	2x3	DRY	No.2	SPF
N - G	2x3	DRY	No.2	SPF
N - H	2x3	DRY	No.2	SPF
M - H	2x3	DRY	No.2	SPF
A - R	2x3	DRY	No.2	SPF
M - I	2x3	DRY	No.2	SPF

DRY: SEASONED LUMBER.

PLATES (table is in inches)

JT	TYPE	PLATES	W	LEN	Y	X
A	TMVW+p	MT20	4.0	6.0	2.25	2.00
B	TTW-m	MT20	5.0	6.0	3.25	Edge
C	TMWW-t	MT20	4.0	4.0		
D	TMWW-t	MT20	4.0	4.0	1.75	2.00
E	TMW+w	MT20	2.0	4.0		
F	TS-t	MT20	3.0	6.0		
G	TMWW-t	MT20	4.0	4.0		
H	TMWW-t	MT20	4.0	4.0	1.50	2.00
I	TMWWW-t	MT20	5.0	8.0	2.25	4.00
K	BMW1+w	MT20	2.0	4.0		
L	BBW-l	MT20	5.0	6.0	3.00	4.25
M	BBWW-l	MT20	6.0	7.0		
N	BMWW-t	MT20	4.0	4.0	1.50	2.00
O	BBWWW-m	MT20	6.0	7.0	3.00	3.00
P	BBWW-m	MT20	5.0	8.0	2.00	3.25
Q	BS-t	MT20	3.0	8.0		
R	BMWWW-t	MT20	5.0	8.0		
S	BMV1+p	MT20	2.0	4.0		

LATERAL BRACE(S) SHOWN SHALL BE 2X4 SPF#2

DIMENSIONS, SUPPORTS AND LOADINGS SPECIFIED BY FABRICATOR TO BE VERIFIED BY BUILDING DESIGNER

BEARINGS

JT	FACTORED GROSS REACTION VERT	HORZ	MAXIMUM FACTORED GROSS REACTION DOWN	HORZ	UPLIFT	INPUT BRG IN-SX	REQRD BRG IN-SX
K	1490	0	1490	0	0	1-12	1-10
S	1492	0	1492	0	0	1-10	1-10

UNFACTORED REACTIONS

JT	1ST LCASE COMBINED	MAX./MIN. COMPONENT REACTIONS SNOW	LIVE	PERM.LIVE	WIND	DEAD	SOIL
K	1062	648 / 0	0 / 0	0 / 0	0 / 0	414 / 0	0 / 0
S	1064	649 / 0	0 / 0	0 / 0	0 / 0	414 / 0	0 / 0

BEARING MATERIAL TO BE SPF NO.2 OR BETTER AT JOINT(S) K, S

BRACING

TOP CHORD TO BE SHEATHED OR MAX. PURLIN SPACING = 5.42 FT.
MAX. UNBRACED BOTTOM CHORD LENGTH = 10.00 FT OR RIGID CEILING DIRECTLY APPLIED.

ALL PITCH BREAKS AND PERIMETER CORNER JOINTS MUST BE LATERALLY RESTRAINED.

1 LATERAL BRACE(S) AT 1/ 2 LENGTH OF I-K, D-P, E-O, G-N, H-M, I-L, C-R.

END VERTICAL(S) MUST BE SHEATHED OR HAVE BRACES AS INDICATED IN THE MAX. UNBRACED LENGTH COLUMN OF THE TABLE BELOW

LOADING

TOTAL LOAD CASES: (4)

CHORDS

MEMB. FR-TO	MAX. FACTORED FORCE (LBS)	FACTORED VERT. LOAD LC1 (PLF) FROM	TO	MAX CSI (LC)	MAX. UNBRAC LENGTH
A- B	-1250 / 0	-78.0	-78.0	0.36 (1)	6.25
B- C	-814 / 0	-78.0	-78.0	0.25 (1)	6.25
C- D	-1123 / 0	-78.0	-78.0	0.26 (1)	5.65
D- E	-1248 / 0	-78.0	-78.0	0.12 (1)	5.62
E- F	-1250 / 0	-78.0	-78.0	0.27 (1)	5.42
F- G	-1250 / 0	-78.0	-78.0	0.27 (1)	5.42
G- H	-1015 / 0	-78.0	-78.0	0.26 (1)	5.87
H- I	-511 / 0	-78.0	-78.0	0.27 (1)	6.25
I- J	0 / 0	-78.0	-78.0	0.27 (1)	10.00
S- A	-1446 / 0	0.0	0.0	0.17 (1)	6.80
S- R	0 / 0	-18.5	-18.5	0.36 (4)	10.00
R- Q	0 / 1051	-18.5	-18.5	0.46 (4)	10.00
Q- P	0 / 1051	-18.5	-18.5	0.46 (4)	10.00
P- O	0 / 1336	-18.5	-18.5	0.23 (1)	10.00
O- N	0 / 1015	-18.5	-18.5	0.22 (1)	10.00
N- M	0 / 523	-18.5	-18.5	0.16 (4)	10.00
M- L	0 / 405	-18.5	-18.5	0.08 (1)	10.00
L- K	0 / 323	-18.5	-18.5	0.06 (1)	10.00

WEBS

MEMB. FR-TO	MAX. FACTORED FORCE (LBS)	MAX CSI (LC)
I- K	-1512 / 0	0.92 (1)
R- B	0 / 522	0.08 (1)
P- D	-819 / 0	0.47 (1)
D- O	0 / 588	0.13 (1)
O- E	-230 / 0	0.13 (1)
O- G	0 / 512	0.12 (1)
N- G	-873 / 0	0.50 (1)
N- H	0 / 1090	0.25 (1)
M- H	-1023 / 0	0.58 (1)
I- L	-192 / 0	0.11 (1)
A- R	0 / 836	0.19 (1)
R- C	-603 / 0	0.42 (1)
C- P	0 / 179	0.03 (1)
M- I	0 / 1312	0.30 (1)

DESIGN CRITERIA

SPECIFIED LOADS:

TOP CH.	LL	=	21.0	PSF
	DL	=	6.0	PSF
BOT CH.	LL	=	0.0	PSF
	DL	=	7.4	PSF
TOTAL LOAD		=	34.4	PSF

SPACING = 24.0 IN. C/C

LOADING IN FLAT SECTION BASED ON A SLOPE OF 2.00/12 MINIMUM

THIS TRUSS IS DESIGNED FOR RESIDENTIAL OR SMALL BUILDING REQUIREMENTS OF PART 9, NBCC 2015

THIS DESIGN COMPLIES WITH:
- PART 9 OF BCBC 2018 , ABC 2019
- PART 9 OF OBC 2012 (2019 AMENDMENT)
- CSA 086-14
- TPIC 2014

DESIGN ASSUMPTIONS
-OVERHANG NOT TO BE ALTERED OR CUT OFF.

(55 % OF 23.0 P.S.F. G.S.L. PLUS 8.4 P.S.F. RAIN LOAD) EQUALS 21.0 P.S.F. SPECIFIED ROOF LIVE LOAD

ALLOWABLE DEFL.(LL)= L/360 (1.03")
CALCULATED VERT. DEFL.(LL) = L/ 999 (0.07")
ALLOWABLE DEFL.(TL)= L/360 (1.03")
CALCULATED VERT. DEFL.(TL) = L/ 999 (0.24")

CSI: TC=0.36/1.00 (A-B:1) , BC=0.46/1.00 (P-R:4) , WB=0.92/1.00 (I-K:1) , SSI=0.17/1.00 (B-C:1)

DOL LUMBER=1.00 NAIL=1.00 LS BEND=1.10 COMP=1.10 SHEAR=1.10 TENS= 1.10

COMPANION LIVE LOAD FACTOR = 1.00

TRUSS PLATE MANUFACTURER IS NOT RESPONSIBLE FOR QUALITY CONTROL IN THE TRUSS MANUFACTURING PLANT .

NAIL VALUES

PLATE	GRIP(DRY) (PSI) MAX	MIN	SHEAR (PLI) MAX	MIN	SECTION (PLI) MAX	MIN
MT20	650	371	1747	788	1987	1873

PLATE PLACEMENT TOL. = 0.250 inches

PLATE ROTATION TOL. = 5.0 Deg.

JSI GRIP= 0.88 (R) (INPUT = 0.90)
JSI METAL= 0.68 (Q) (INPUT = 1.00)

CONTINUED ON PAGE 2

JOB NAME	TRUSS NAME	QUANTITY	PLY	JOB DESC.		DRWG NO.
336324	H145		1	TRUSS DESC.	JT 45147	E21104132

Alpa Roof Truss, Maple

Version 8.420 S Jan 21 2021 MiTek Industries, Inc. Wed Oct 13 14:51:31 2021 Page 1

ID:hd511hZTz bdeQoS817GKByhVxV-Ezajo gYbmN7eGp0?7 yqbmYJ9o62MzsCRoESEyTp7A

Scale = 1:62.2

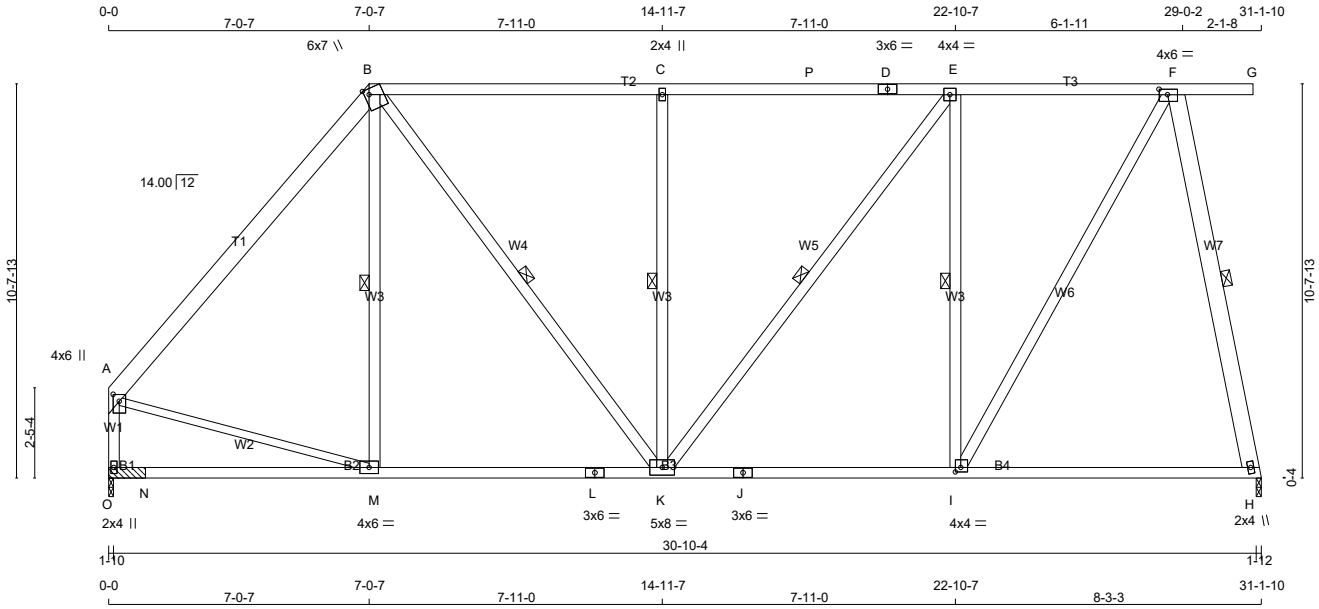

TOTAL WEIGHT = 4 X 187 = 747 lb

[M]

LUMBER

N. L. G. A. RULES

CHORDS	SIZE		LUMBER	DESCR.
A - B	2x6	DRY	No.2	SPF
B - D	2x4	DRY	1650F 1.5E	SPF
D - G	2x4	DRY	1650F 1.5E	SPF
O - A	2x4	DRY	No.2	SPF
O - L	2x4	DRY	No.2	SPF
L - J	2x4	DRY	No.2	SPF
J - H	2x4	DRY	No.2	SPF
ALL WEBS	2x4	DRY	No.2	SPF
EXCEPT				
F - H	2x6	DRY	No.2	SPF
A - M	2x3	DRY	No.2	SPF

DRY: SEASONED LUMBER.

PLATES (table is in inches)

JT	TYPE	PLATES	W	LEN	Y	X
A	TMVW+p	MT20	4.0	6.0	2.25	2.00
B	TTWW+m	MT20	6.0	7.0	Edge	1.50
C	TMW+w	MT20	2.0	4.0		
D	TS-t	MT20	3.0	6.0		
E	TMWW-t	MT20	4.0	4.0		
F	TMWW-t	MT20	4.0	6.0	1.75	2.75
H	BMW1+w	MT20	2.0	4.0		
I	BMWW-t	MT20	4.0	4.0	1.50	1.75
J	BS-t	MT20	3.0	6.0		
K	BMWWW-t	MT20	5.0	8.0		
L	BS-t	MT20	3.0	6.0		
M	BMWW-t	MT20	4.0	6.0		
O	BMV1+p	MT20	2.0	4.0		

Edge - INDICATES REFERENCE CORNER OF PLATE TOUCHES EDGE OF CHORD.

LATERAL BRACE(S) SHOWN SHALL BE 2X4 SPF#2

DIMENSIONS, SUPPORTS AND LOADINGS SPECIFIED BY FABRICATOR TO BE VERIFIED BY BUILDING DESIGNER

BEARINGS

JT	FACTORED GROSS REACTION VERT	HORZ	MAXIMUM FACTORED GROSS REACTION DOWN	HORZ	UPLIFT	INPUT BRG IN-SX	REQRD BRG IN-SX
H	1596	0	1596	0	0	1-12	1-12
O	1563	0	1563	0	0	1-10	1-10 & BLOCK

UNFACTORED REACTIONS

JT	1ST LCASE COMBINED	MAX./MIN. COMPONENT REACTIONS SNOW	LIVE	PERM.LIVE	WIND	DEAD	SOIL
H	1148	647 / 0	0 / 0	0 / 0	0 / 0	501 / 0	0 / 0
O	1120	650 / 0	0 / 0	0 / 0	0 / 0	470 / 0	0 / 0

BEARING MATERIAL TO BE SPF NO.2 OR BETTER AT JOINT(S) H, O

2x4 DRY SPF No.2 BEARING BLOCK 12" LONG AT JT. O ATTACHED TO FRONT SIDE WITH 2 ROWS OF (0.122"X3") SPIRAL NAILS SPACED 3" C.C. 8 NAILS TOTAL.

BRACING

FOR SECTION B-G, MAX. PURLIN SPACING = 2.00 FT.
FOR OTHER SECTIONS, TOP CHORD TO BE SHEATHED OR MAX. PURLIN SPACING = 6.19 FT.
MAX. UNBRACED BOTTOM CHORD LENGTH = 10.00 FT OR RIGID CEILING DIRECTLY APPLIED.

ALL PITCH BREAKS AND PERIMETER CORNER JOINTS MUST BE LATERALLY RESTRAINED.

1 LATERAL BRACE(S) AT 1/ 2 LENGTH OF F-H, B-M, B-K, C-K, E-K, E-I.

END VERTICAL(S) MUST BE SHEATHED OR HAVE BRACES AS INDICATED IN THE MAX. UNBRACED LENGTH COLUMN OF THE TABLE BELOW

LOADING

TOTAL LOAD CASES: (4)

CHORDS

MEMB. FR-TO	MAX. FACTORED FORCE (LBS)	FACTORED VERT. LOAD (PLF) FROM	TO	LC1 MAX CSI (LC)	MAX. UNBRAC LENGTH
A- B	-1319 / 0	-78.0	-78.0	0.37 (1)	6.19
B- C	-1254 / 0	-85.5	-85.5	0.75 (1)	2.00
C- P	-1254 / 0	-85.5	-85.5	0.75 (1)	2.00
P- D	-1254 / 0	-85.5	-85.5	0.75 (1)	2.00
D- E	-1254 / 0	-85.5	-85.5	0.75 (1)	2.00
E- F	-973 / 0	-85.5	-85.5	0.46 (1)	2.00
F- G	0 / 0	-85.5	-85.5	0.22 (1)	10.00
O- A	-1511 / 0	0.0	0.0	0.18 (1)	6.68
O- N	0 / 0	-18.5	-18.5	0.25 (4)	10.00
N- M	0 / 0	-18.5	-18.5	0.25 (4)	10.00
M- L	0 / 851	-18.5	-18.5	0.34 (4)	10.00
L- K	0 / 851	-18.5	-18.5	0.34 (4)	10.00
K- J	0 / 973	-18.5	-18.5	0.40 (4)	10.00
J- I	0 / 973	-18.5	-18.5	0.40 (4)	10.00
I- H	0 / 303	-18.5	-18.5	0.32 (4)	10.00

WEBS

MEMB. FR-TO	MAX. FACTORED FORCE (LBS)	MAX CSI (LC)
F- H	-1568 / 0	0.61 (1)
M- B	-73 / 75	0.04 (1)
B- K	0 / 660	0.11 (1)
K- C	-756 / 0	0.43 (1)
K- E	0 / 464	0.07 (1)
I- E	-1000 / 0	0.57 (1)
I- F	0 / 1346	0.22 (1)
A- M	0 / 883	0.20 (1)

DESIGN CRITERIA

SPECIFIED LOADS:

TOP CH.	LL	=	21.0	PSF
	DL	=	6.0	PSF
BOT CH.	LL	=	0.0	PSF
	DL	=	7.4	PSF
TOTAL LOAD		=	34.4	PSF

SPACING = 24.0 IN. C/C

LOADING IN FLAT SECTION BASED ON PIGGYBACK TRUSS WITH SLOPES OF 6.00/12 AND -6.00/12 AND RESPECTIVE HEEL HEIGHTS OF 0-0 AND 0-0 AND AN ADDITIONAL DEAD LOAD OF 3.0 P.S.F.

THIS TRUSS IS DESIGNED FOR RESIDENTIAL OR SMALL BUILDING REQUIREMENTS OF PART 9, NBCC 2015

THIS DESIGN COMPLIES WITH:
- PART 9 OF BCBC 2018 , ABC 2019
- PART 9 OF OBC 2012 (2019 AMENDMENT)
- CSA 086-14
- TPIC 2014

(55 % OF 23.0 P.S.F. G.S.L. PLUS 8.4 P.S.F. RAIN LOAD) EQUALS 21.0 P.S.F. SPECIFIED ROOF LIVE LOAD

ALLOWABLE DEFL.(LL)= L/360 (1.03")
CALCULATED VERT. DEFL.(LL) = L/ 999 (0.04")
ALLOWABLE DEFL.(TL)= L/360 (1.03")
CALCULATED VERT. DEFL.(TL) = L/ 999 (0.12")

CSI: TC=0.75/1.00 (C-E:1) , BC=0.40/1.00 (I-K:4) , WB=0.61/1.00 (F-H:1) , SSI=0.32/1.00 (B-C:1)

DOL LUMBER=1.00 NAIL=1.00 LS BEND=1.10 COMP=1.10 SHEAR=1.10 TENS= 1.10

COMPANION LIVE LOAD FACTOR = 1.00

TRUSS PLATE MANUFACTURER IS NOT RESPONSIBLE FOR QUALITY CONTROL IN THE TRUSS MANUFACTURING PLANT .

NAIL VALUES

PLATE	GRIP(DRY) (PSI) MAX	MIN	SHEAR (PLI) MAX	MIN	SECTION (PLI) MAX	MIN
MT20	650	371	1747	788	1987	1873

PLATE PLACEMENT TOL. = 0.250 inches

PLATE ROTATION TOL. = 5.0 Deg.

JSI GRIP= 0.86 (A) (INPUT = 0.90)
JSI METAL= 0.51 (A) (INPUT = 1.00)

JOB NAME	TRUSS NAME	QUANTITY	PLY	JOB DESC.		DRWG NO.
336324	H146P		1	TRUSS DESC.	JT 45147	E21104133

Alpa Roof Truss, Maple

Version 8.420 S Jan 21 2021 MiTek Industries, Inc. Wed Oct 13 14:53:13 2021 Page 1

ID:hd511hZTz_bdeQoS817GKByhVxV-FbkHCtvXZ6DftxcdzYqty5_3XHf_ycPtgJWe1JyTp5a

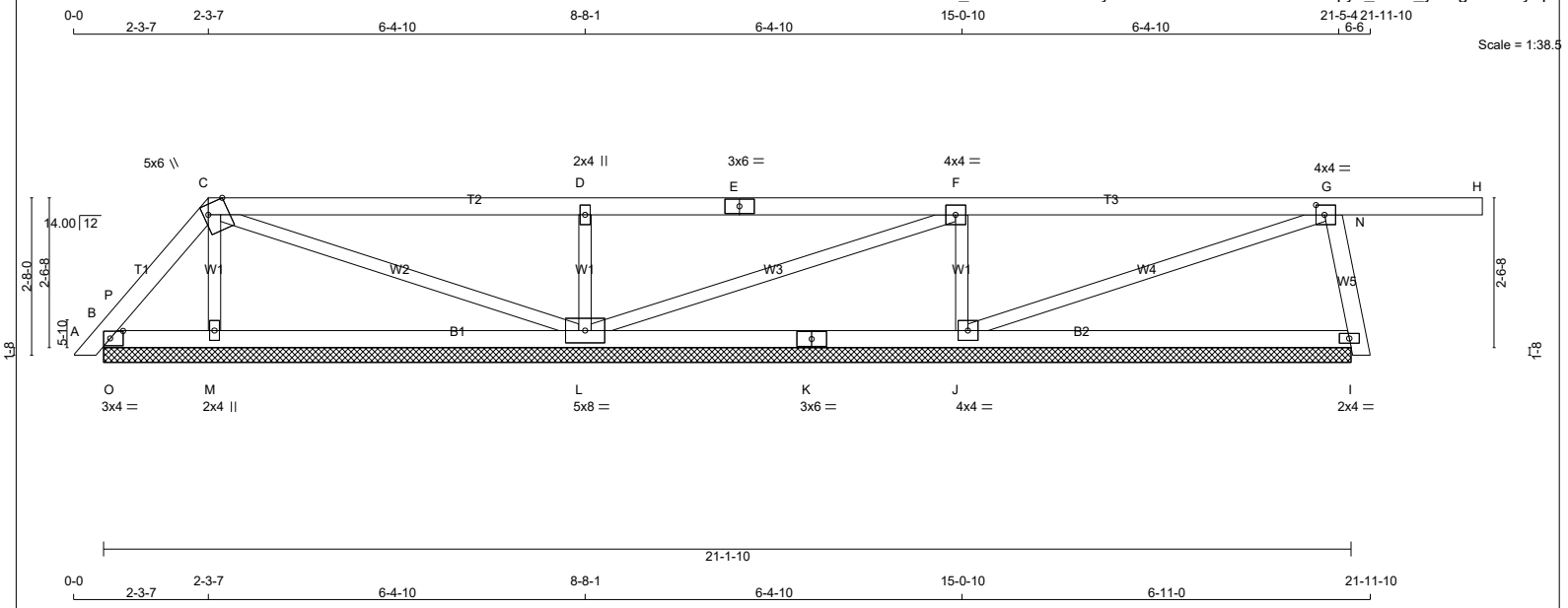

TOTAL WEIGHT = 76 lb [M]

LUMBER

N. L. G. A. RULES

CHORDS	SIZE		LUMBER	DESCR.
A - C	2x4	DRY	No.2	SPF
C - E	2x4	DRY	No.2	SPF
E - H	2x4	DRY	No.2	SPF
B - K	2x4	DRY	No.2	SPF
K - I	2x4	DRY	No.2	SPF
ALL WEBS	2x3	DRY	No.2	SPF
EXCEPT				
G - N	2x4	DRY	No.2	SPF

DRY: SEASONED LUMBER.

PLATES (table is in inches)

JT	TYPE	PLATES	W	LEN	Y	X
B	TMB1-l	MT20	3.0	4.0	1.50	2.50
C	TTWW+m	MT20	5.0	6.0	Edge	4.00
D	TMW+w	MT20	2.0	4.0		
E	TS-t	MT20	3.0	6.0		
F	TMWW-t	MT20	4.0	4.0		
G	TMWW-t	MT20	4.0	4.0	2.00	1.75
I	BWM1-l	MT20	2.0	4.0		
J	BMWW1-t	MT20	4.0	4.0		
K	BS-t	MT20	3.0	6.0		
L	BMWWW1-t	MT20	5.0	8.0		
M	BMW1+w	MT20	2.0	4.0		

Edge - INDICATES REFERENCE CORNER OF PLATE TOUCHES EDGE OF CHORD.

LATERAL BRACE(S) SHOWN SHALL BE 2X4 SPF#2

DIMENSIONS, SUPPORTS AND LOADINGS SPECIFIED BY FABRICATOR TO BE VERIFIED BY BUILDING DESIGNER

BEARINGS

JT	FACTORED GROSS REACTION VERT	HORZ	MAXIMUM FACTORED GROSS REACTION DOWN	HORZ	UPLIFT	INPUT BRG IN-SX	REQRD BRG IN-SX
B	141	0	141	0	0	21-1-10 (9-1-10)	108
M	306	0	306	0	0	21-1-10 (9-1-10)	108
L	687	0	687	0	0	21-1-10 (9-1-10)	108
J	684	0	684	0	0	21-1-10 (9-1-10)	108
I	427	0	427	0	0	21-1-10 (9-1-10)	108

VALUE IN PARENTHESIS INDICATES EFFECTIVE BEARING LENGTH

UNFACTORED REACTIONS

JT	1ST LCASE COMBINED	MAX./MIN. COMPONENT REACTIONS SNOW	LIVE	PERM.LIVE	WIND	DEAD	SOIL
B	96	83 / 0	0 / 0	0 / 0	0 / 0	13 / 0	0 / 0
M	223	108 / 0	0 / 0	0 / 0	0 / 0	115 / 0	0 / 0
L	488	309 / 0	0 / 0	0 / 0	0 / 0	179 / 0	0 / 0
J	489	294 / 0	0 / 0	0 / 0	0 / 0	194 / 0	0 / 0
I	301	203 / 0	0 / 0	0 / 0	0 / 0	98 / 0	0 / 0

BEARING MATERIAL TO BE SPF NO.2 OR BETTER AT JOINT(S) B, M, L, J, I

BRACING

TOP CHORD TO BE SHEATHED OR MAX. PURLIN SPACING = 6.25 FT.
MAX. UNBRACED BOTTOM CHORD LENGTH = 10.00 FT OR RIGID CEILING DIRECTLY APPLIED.

MAX. UNBRACED INTERIOR CHORD LENGTH = 7.81 FT

ALL PITCH BREAKS AND PERIMETER CORNER JOINTS MUST BE LATERALLY RESTRAINED.

LOADING

TOTAL LOAD CASES: (4)

CHORDS

MEMB. FR-TO	MAX. FACTORED FORCE (LBS)	FACTORED VERT. LOAD LC1 (PLF) FROM	TO	MAX CSI (LC)	MAX. UNBRAC LENGTH
A- B	0 / 10	-78.0	-78.0	0.01 (1)	10.00
B- P	0 / 37	-78.0	-78.0	0.03 (4)	10.00
P- C	-73 / 0	-78.0	-78.0	0.02 (1)	6.25
C- D	0 / 4	-78.0	-78.0	0.44 (1)	10.00
D- E	0 / 4	-78.0	-78.0	0.44 (1)	10.00
E- F	0 / 4	-78.0	-78.0	0.44 (1)	10.00
F- G	-29 / 0	-78.0	-78.0	0.42 (1)	6.25
G- H	0 / 0	-78.0	-78.0	0.35 (1)	10.00
B- O	0 / 41	-18.5	-18.5	0.04 (1)	10.00
O- M	0 / 41	-18.5	-18.5	0.12 (4)	10.00
M- L	0 / 32	-18.5	-18.5	0.14 (4)	10.00
L- K	0 / 29	-18.5	-18.5	0.20 (4)	10.00
K- J	0 / 29	-18.5	-18.5	0.20 (4)	10.00
J- I	0 / 75	-18.5	-18.5	0.20 (4)	10.00

WEBS

MEMB. FR-TO	MAX. FACTORED FORCE (LBS)	MAX CSI (LC)
G- I	-385 / 0	0.05 (1)
I- N	0 / 0	0.00 (1)
M- C	-189 / 0	0.03 (1)
C- L	-38 / 0	0.03 (1)
L- D	-549 / 0	0.09 (1)
L- F	-34 / 0	0.03 (1)
J- F	-529 / 0	0.08 (1)
J- G	-50 / 0	0.04 (1)
O- P	-161 / 0	0.00 (1)

DESIGN CRITERIA

SPECIFIED LOADS:

TOP CH.	LL	=	21.0	PSF
	DL	=	6.0	PSF
BOT CH.	LL	=	0.0	PSF
	DL	=	7.4	PSF
TOTAL LOAD		=	34.4	PSF

SPACING = 24.0 IN. C/C

LOADING IN FLAT SECTION BASED ON A SLOPE OF 2.00/12 MINIMUM

THIS TRUSS IS DESIGNED FOR RESIDENTIAL OR SMALL BUILDING REQUIREMENTS OF PART 9, NBCC 2015

THIS DESIGN COMPLIES WITH:
- PART 9 OF BCBC 2018 , ABC 2019
- PART 9 OF OBC 2012 (2019 AMENDMENT)
- CSA 086-14
- TPIC 2014

(55 % OF 23.0 P.S.F. G.S.L. PLUS 8.4 P.S.F. RAIN LOAD) EQUALS 21.0 P.S.F. SPECIFIED ROOF LIVE LOAD

CSI: TC=0.44/1.00 (C-D:1) , BC=0.20/1.00 (I-J:4) , WB=0.09/1.00 (D-L:1) , SSI=0.23/1.00 (C-D:1)

DOL LUMBER=1.00 NAIL=1.00 LS BEND=1.10 COMP=1.10 SHEAR=1.10 TENS= 1.10

COMPANION LIVE LOAD FACTOR = 1.00

TRUSS PLATE MANUFACTURER IS NOT RESPONSIBLE FOR QUALITY CONTROL IN THE TRUSS MANUFACTURING PLANT .

NAIL VALUES

PLATE	GRIP(DRY) (PSI) MAX	MIN	SHEAR (PLI) MAX	MIN	SECTION (PLI) MAX	MIN
MT20	650	371	1747	788	1987	1873

PLATE PLACEMENT TOL. = 0.250 inches

PLATE ROTATION TOL. = 5.0 Deg.

JSI GRIP= 0.80 (G) (INPUT = 0.90)
JSI METAL= 0.29 (I) (INPUT = 1.00)

JOB NAME	TRUSS NAME	QUANTITY	PLY	JOB DESC.		DRWG NO.
336324	H147P		1	TRUSS DESC.	JT 45147	E21104134

Alpa Roof Truss, Maple

Version 8.420 S Jan 21 2021 MiTek Industries, Inc. Wed Oct 13 14:53:14 2021 Page 1

ID:hd511hZTz bdeQoS817GKByhVxV-jnIfPCw9KQMWV5BpXGL6VJXDVh0dh350uzFBZlyTp5Z

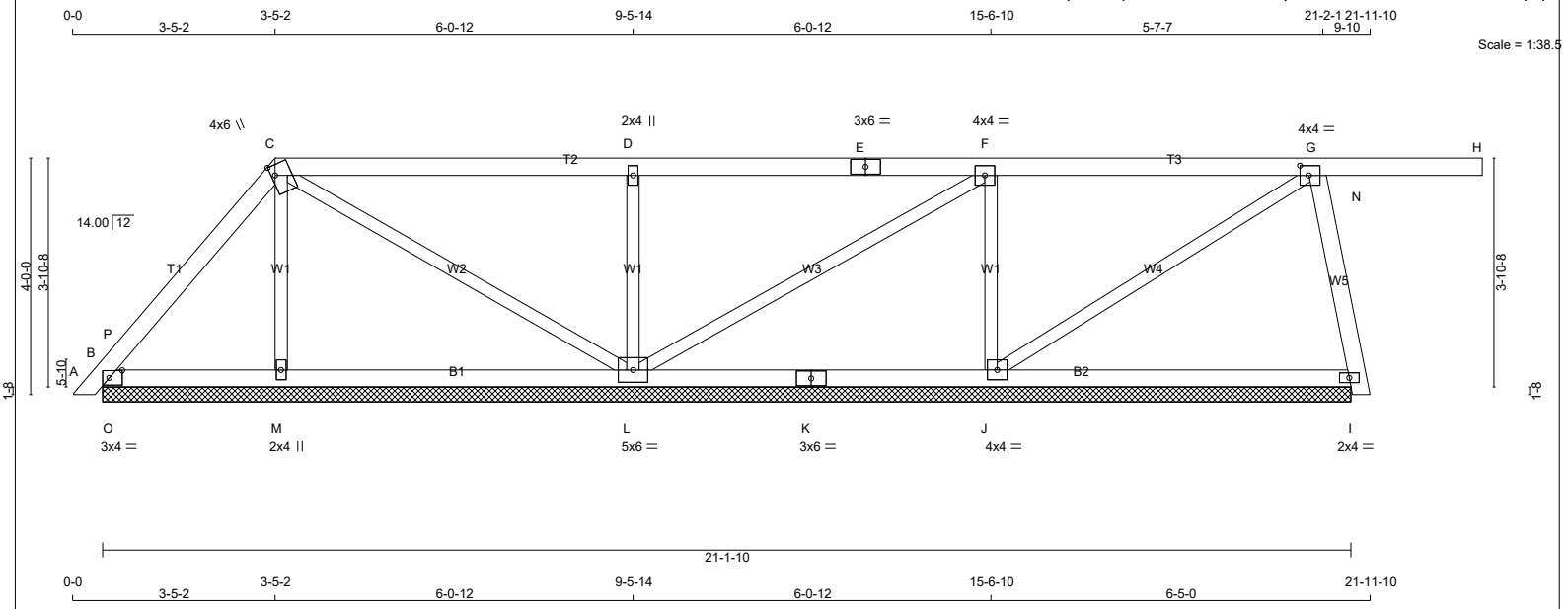

TOTAL WEIGHT = 2 X 82 = 164 lb

[M]

LUMBER

N. L. G. A. RULES

CHORDS	SIZE		LUMBER	DESCR.
A - C	2x4	DRY	No.2	SPF
C - E	2x4	DRY	No.2	SPF
E - H	2x4	DRY	No.2	SPF
B - K	2x4	DRY	No.2	SPF
K - I	2x4	DRY	No.2	SPF
ALL WEBS	2x3	DRY	No.2	SPF
EXCEPT				
G - N	2x4	DRY	No.2	SPF

DRY: SEASONED LUMBER.

PLATES (table is in inches)

JT	TYPE	PLATES	W	LEN	Y	X
B	TMB1-l	MT20	3.0	4.0	1.50	2.50
C	TTWW+m	MT20	4.0	6.0	2.00	0.75
D	TMW+w	MT20	2.0	4.0		
E	TS-t	MT20	3.0	6.0		
F	TMWW-t	MT20	4.0	4.0		
G	TMWW-t	MT20	4.0	4.0	2.00	1.75
I	BWM1-l	MT20	2.0	4.0		
J	BMWW1-t	MT20	4.0	4.0		
K	BS-t	MT20	3.0	6.0		
L	BMWWW1-t	MT20	5.0	6.0		
M	BMW1+w	MT20	2.0	4.0		

LATERAL BRACE(S) SHOWN SHALL BE 2X4 SPF#2

DIMENSIONS, SUPPORTS AND LOADINGS SPECIFIED BY FABRICATOR TO BE VERIFIED BY BUILDING DESIGNER

BEARINGS

JT	FACTORED GROSS REACTION VERT	HORZ	MAXIMUM FACTORED GROSS REACTION DOWN	HORZ	UPLIFT	INPUT BRG IN-SX	REQRD BRG IN-SX
B	226	0	226	0	0	21-1-10 (9-1-10)	1-08
M	288	0	288	0	0	21-1-10 (9-1-10)	1-08
L	707	0	707	0	0	21-1-10 (9-1-10)	1-08
J	616	0	616	0	0	21-1-10 (9-1-10)	1-08
I	407	0	407	0	0	21-1-10 (9-1-10)	1-08

VALUE IN PARENTHESIS INDICATES EFFECTIVE BEARING LENGTH

UNFACTORED REACTIONS

JT	1ST LCASE COMBINED	MAX./MIN. COMPONENT REACTIONS SNOW	LIVE	PERM.LIVE	WIND	DEAD	SOIL
B	158	115 / 0	0 / 0	0 / 0	0 / 0	43 / 0	0 / 0
M	210	104 / 0	0 / 0	0 / 0	0 / 0	106 / 0	0 / 0
L	501	322 / 0	0 / 0	0 / 0	0 / 0	180 / 0	0 / 0
J	441	263 / 0	0 / 0	0 / 0	0 / 0	178 / 0	0 / 0
I	287	194 / 0	0 / 0	0 / 0	0 / 0	92 / 0	0 / 0

BEARING MATERIAL TO BE SPF NO.2 OR BETTER AT JOINT(S) B, M, L, J, I

BRACING

TOP CHORD TO BE SHEATHED OR MAX. PURLIN SPACING = 6.25 FT.
MAX. UNBRACED BOTTOM CHORD LENGTH = 10.00 FT OR RIGID CEILING DIRECTLY APPLIED.

MAX. UNBRACED INTERIOR CHORD LENGTH = 7.81 FT

ALL PITCH BREAKS AND PERIMETER CORNER JOINTS MUST BE LATERALLY RESTRAINED.

LOADING

TOTAL LOAD CASES: (4)

CHORDS

MEMB. FR-TO	MAX. FACTORED FORCE (LBS)	FACTORED VERT. LOAD (PLF) FROM	TO	LC1	MAX CSI (LC)	MAX. UNBRAC LENGTH
A- B	0 / 10	-78.0	-78.0	0.01 (1)	10.00	
B- P	0 / 64	-78.0	-78.0	0.06 (1)	10.00	
P- C	-101 / 0	-78.0	-78.0	0.08 (1)	6.25	
C- D	0 / 19	-78.0	-78.0	0.40 (1)	10.00	
D- E	0 / 19	-78.0	-78.0	0.40 (1)	10.00	
E- F	0 / 19	-78.0	-78.0	0.40 (1)	10.00	
F- G	-30 / 0	-78.0	-78.0	0.34 (1)	6.25	
G- H	0 / 0	-78.0	-78.0	0.42 (1)	10.00	
B- O	0 / 59	-18.5	-18.5	0.08 (1)	10.00	
O- M	0 / 59	-18.5	-18.5	0.11 (4)	10.00	
M- L	0 / 54	-18.5	-18.5	0.13 (4)	10.00	
L- K	0 / 30	-18.5	-18.5	0.17 (4)	10.00	
K- J	0 / 30	-18.5	-18.5	0.17 (4)	10.00	
J- I	0 / 72	-18.5	-18.5	0.18 (4)	10.00	

WEBS

MEMB. FR-TO	MAX. FACTORED FORCE (LBS)	MAX CSI (LC)
G- I	-368 / 0	0.07 (1)
I- N	0 / 0	0.00 (1)
M- C	-170 / 0	0.04 (1)
C- L	-84 / 0	0.08 (1)
L- D	-529 / 0	0.12 (1)
L- F	-57 / 0	0.05 (1)
J- F	-460 / 0	0.11 (1)
J- G	-50 / 0	0.04 (1)
O- P	-305 / 0	0.00 (1)

DESIGN CRITERIA

SPECIFIED LOADS:

TOP CH.	LL	=	21.0	PSF
	DL	=	6.0	PSF
BOT CH.	LL	=	0.0	PSF
	DL	=	7.4	PSF
TOTAL LOAD		=	34.4	PSF

SPACING = 24.0 IN. C/C

LOADING IN FLAT SECTION BASED ON A SLOPE OF 2.00/12 MINIMUM

THIS TRUSS IS DESIGNED FOR RESIDENTIAL OR SMALL BUILDING REQUIREMENTS OF PART 9, NBCC 2015

THIS DESIGN COMPLIES WITH:
- PART 9 OF BCBC 2018 , ABC 2019
- PART 9 OF OBC 2012 (2019 AMENDMENT)
- CSA 086-14
- TPIC 2014

(55 % OF 23.0 P.S.F. G.S.L. PLUS 8.4 P.S.F. RAIN LOAD) EQUALS 21.0 P.S.F. SPECIFIED ROOF LIVE LOAD

CSI: TC=0.42/1.00 (G-H:1) , BC=0.18/1.00 (I-J:4) , WB=0.12/1.00 (D-L:1) , SSI=0.23/1.00 (B-O:1)

DOL LUMBER=1.00 NAIL=1.00 LS BEND=1.10 COMP=1.10 SHEAR=1.10 TENS= 1.10

COMPANION LIVE LOAD FACTOR = 1.00

TRUSS PLATE MANUFACTURER IS NOT RESPONSIBLE FOR QUALITY CONTROL IN THE TRUSS MANUFACTURING PLANT .

NAIL VALUES

PLATE	GRIP(DRY) (PSI) MAX	MIN	SHEAR (PLI) MAX	MIN	SECTION (PLI) MAX	MIN
MT20	650	371	1747	788	1987	1873

PLATE PLACEMENT TOL. = 0.250 inches

PLATE ROTATION TOL. = 5.0 Deg.

JSI GRIP= 0.89 (C) (INPUT = 0.90)
JSI METAL= 0.27 (I) (INPUT = 1.00)

JOB NAME	TRUSS NAME	QUANTITY	PLY	JOB DESC.	DRWG NO.
336324	H251T		1	TRUSS DESC. JT 45147	E21104135

Alpha Roof Truss, Maple

Version 8.420 S Jan 21 2021 MiTek Industries, Inc. Wed Oct 13 14:53:17 2021 Page 1

ID:hd511hZTz_bdeQoS817GKByhVxV-7M_n2Ey2dLk5MYvOCOup7x9dIusKuD3TaxUrA4yTp5W

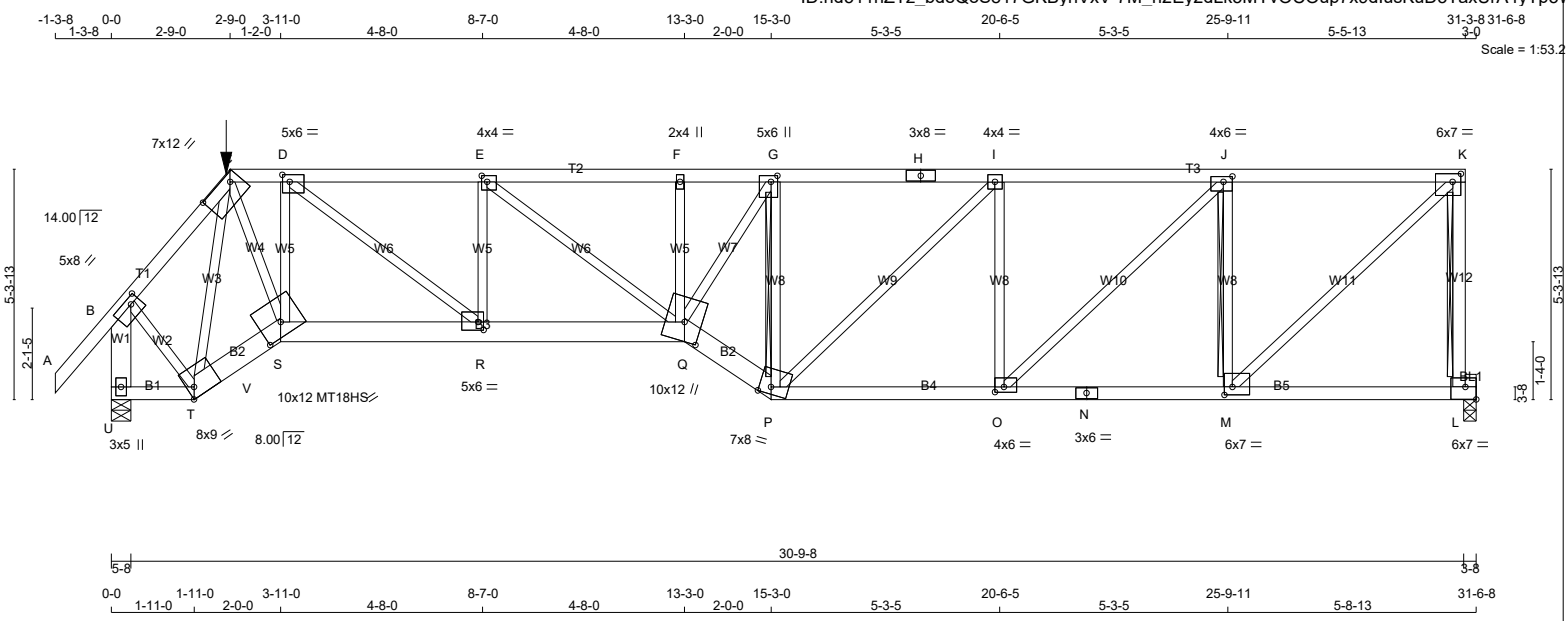

LUMBER

N. L. G. A. RULES

CHORDS	SIZE		LUMBER	DESCR.
A - C	2x4	DRY	No.2	SPF
C - H	2x4	DRY	1650F 1.5E	SPF
H - K	2x4	DRY	1650F 1.5E	SPF
L - K	2x4	DRY	No.2	SPF
U - B	2x6	DRY	No.2	SPF
U - T	2x4	DRY	No.2	SPF
T - S	2x6	DRY	No.2	SPF
S - Q	2x6	DRY	No.2	SPF
Q - P	2x6	DRY	No.2	SPF
P - N	2x4	DRY	No.2	SPF
N - L	2x4	DRY	No.2	SPF
BEARING BLOCKS				
BL1	2x4	DRY	No.2	SPF
ALL WEBS EXCEPT	2x3	DRY	No.2	SPF

DRY: SEASONED LUMBER.

PLATES (table is in inches)

JT	TYPE	PLATES	W	LEN	Y	X
B	TMVW-t	MT20	5.0	8.0	1.75	2.50
C	TTWW-h	MT20	7.0	12.0	2.00	9.25
D	TMWW-t	MT20	5.0	6.0	2.00	2.00
E	TMWW-t	MT20	4.0	4.0	1.75	1.50
F	TMW+w	MT20	2.0	4.0		
G	TMWW+t	MT20	5.0	6.0	1.75	1.75
H	TS-t	MT20	3.0	8.0		
I	TMWW-t	MT20	4.0	4.0		
J	TMWW-t	MT20	4.0	6.0	1.50	2.50
K	TMVW-t	MT20	6.0	7.0	2.25	2.25
L	BMVK1-t	MT20	6.0	7.0	3.50	Edge
M	BMWW-t	MT20	6.0	7.0	2.25	2.25
N	BS-t	MT20	3.0	6.0		
O	BMWW-t	MT20	4.0	6.0	1.50	2.50
P	BBWW-m	MT20	7.0	8.0	2.00	3.25
Q	BBWWW+m	MT20	10.0	12.0	5.25	4.75
R	BMWW-t	MT20	5.0	6.0	2.25	1.50
S	BBWW-h	MT18HS	10.0	12.0	3.75	6.00
T	BBWW-h	MT20	8.0	9.0	3.00	Edge
U	BMV1+p	MT20	3.0	5.0		

LATERAL BRACE(S) SHOWN SHALL BE 2X4 SPF#2

DIMENSIONS, SUPPORTS AND LOADINGS SPECIFIED BY FABRICATOR TO BE VERIFIED BY BUILDING DESIGNER

BEARINGS

JT	FACTORED GROSS REACTION VERT	HORZ	MAXIMUM FACTORED GROSS REACTION DOWN	HORZ	UPLIFT	INPUT BRG IN-SX	REQRD BRG IN-SX
L	2987	0	2987	0	0	3-8	3-8
U	3079	0	3079	0	0	5-8	4-8

UNFACTORED REACTIONS

JT	1ST LCASE COMBINED	MAX./MIN. COMPONENT REACTIONS SNOW	LIVE	PERM.LIVE	WIND	DEAD	SOIL
L	2129	1302 / 0	0 / 0	0 / 0	0 / 0	827 / 0	0 / 0
U	2194	1345 / 0	0 / 0	0 / 0	0 / 0	849 / 0	0 / 0

BEARING MATERIAL TO BE SPF NO.2 OR BETTER AT JOINT(S) L, U
BEARING SIZE FACTOR = 1.15 AT JNT(S) L (BASED ON SUPPORT DEPTH = 1-8)

BRACING

TOP CHORD TO BE SHEATHED OR MAX. PURLIN SPACING = 2.78 FT.
MAX. UNBRACED BOTTOM CHORD LENGTH = 6.25 FT OR RIGID CEILING DIRECTLY APPLIED.

ALL PITCH BREAKS AND PERIMETER CORNER JOINTS MUST BE LATERALLY RESTRAINED.

2x3 DRY SPF No.2 T-BRACE AT K-L, J-M
2x4 DRY SPF No.2 T-BRACE AT G-P

FASTEN T AND I-BRACES TO NARROW EDGE OF WEB WITH ONE ROW PER PLY OF 3" COMMON WIRE NAILS @ 6" O.C. WITH 3" MINIMUM END DISTANCE. BRACE MUST COVER 90% OF WEB LENGTH.

END VERTICAL(S) MUST BE SHEATHED OR HAVE BRACES AS INDICATED IN THE MAX. UNBRACED LENGTH COLUMN OF THE TABLE BELOW

LOADING

TOTAL LOAD CASES: (4)

CHORDS

MEMB. FR-TO	MAX. FACTORED FORCE (LBS)	FACTORED VERT. LOAD (PLF) FROM	TO	LC1	MAX CSI (LC)	MAX. UNBRAC LENGTH
A- B	0 / 42	-78.0	-78.0	0.12 (1)	10.00	
B- C	-2129 / 0	-78.0	-78.0	0.19 (1)	4.47	
C- D	-2909 / 0	-78.0	-78.0	0.09 (1)	4.54	
D- E	-5242 / 0	-78.0	-78.0	0.45 (1)	3.26	
E- F	-6313 / 0	-78.0	-78.0	0.55 (1)	2.91	
F- G	-6310 / 0	-78.0	-78.0	0.55 (1)	2.78	
G- H	-4716 / 0	-153.5	-153.5	0.70 (1)	3.12	
H- I	-4716 / 0	-153.5	-153.5	0.70 (1)	3.12	
I- J	-4213 / 0	-153.5	-153.5	0.83 (1)	3.02	
J- K	-2718 / 0	-153.5	-153.5	0.71 (1)	3.83	
L- K	-2907 / 0	0.0	0.0	0.82 (1)	6.58	
U- B	-3044 / 0	0.0	0.0	0.26 (1)	6.00	
U- T	0 / 0	-36.4	-36.4	0.04 (4)	10.00	
T- V	0 / 2130	-129.9	-129.9	0.32 (1)	10.00	
V- S	0 / 2130	-112.0	-112.0	0.32 (1)	10.00	
S- R	0 / 2965	-112.0	-112.0	0.55 (1)	10.00	
R- Q	0 / 5242	-112.0	-112.0	0.85 (1)	10.00	
Q- P	0 / 5636	-112.0	-112.0	0.77 (1)	10.00	
P- O	0 / 4214	-36.4	-36.4	0.88 (1)	10.00	
O- N	0 / 2718	-36.4	-36.4	0.61 (1)	10.00	
N- M	0 / 2718	-36.4	-36.4	0.61 (1)	10.00	
M- L	-84 / 0	-36.4	-36.4	0.25 (4)	6.25	

WEBS

MEMB. FR-TO	MAX. FACTORED FORCE (LBS)	MAX CSI (LC)
T- C	-2284 / 0	0.86 (1)
C- S	0 / 3684	0.91 (1)
S- D	-1938 / 0	0.47 (1)
D- R	0 / 2904	0.72 (1)
R- E	-1248 / 0	0.30 (1)
E- Q	0 / 1350	0.33 (1)
Q- F	-106 / 0	0.03 (1)
Q- G	0 / 3291	0.81 (1)
P- G	-3421 / 0	0.80 (1)
P- I	0 / 690	0.17 (1)
O- I	-1272 / 0	0.55 (1)
O- J	0 / 2066	0.51 (1)
M- J	-2355 / 0	0.86 (1)
M- K	0 / 3800	0.94 (1)
B- T	0 / 1828	0.45 (1)

FACTORED CONCENTRATED LOADS (LBS)

JT	LOC.	LC1	MAX-	MAX+	FACE	DIR.	TYPE	HEEL	CONN.
C	2-9-0	-156	-156	---	FRONT	VERT	TOTAL	---	C1

CONNECTION REQUIREMENTS

1) **C1:** A SUITABLE HANGER/MECHANICAL CONNECTION IS REQUIRED.

DESIGN CRITERIA

SPECIFIED LOADS:

TOP CH.	LL	=	21.0	PSF
	DL	=	6.0	PSF
BOT CH.	LL	=	0.0	PSF
	DL	=	7.4	PSF
TOTAL LOAD		=	34.4	PSF

SPACING = 24.0 IN. C/C

LOADING IN FLAT SECTION BASED ON A SLOPE OF 2.00/12 MINIMUM

GIRDER TYPE: CPrimeHip
LEFT SETBACK = 2-9-0
RIGHT SETBACK = 0-0
END SETBACK = 5-10-8
END WALL WIDTH = 0-0
CORNER FRAMING TYPE: CONVENTIONAL
END JACK TYPE: CONVENTIONAL
APPLIED TO FRONT SIDE
- ADDT'L LOADS BASED ON 55 % OF GSL.
LOADS APPLIED TO FIRST 2-9-0 OF SPAN MEASURED FROM THE LEFT.

GIRDER TYPE: CStdGirder
START DISTANCE = 1-11-0
START SPAN CARRIED = 5-10-8
END DISTANCE = 15-3-0
END SPAN CARRIED = 5-10-8
END WALL WIDTH = 0-0
APPLIED TO FRONT SIDE OF BOTTOM CHORD.
- ADDT'L LOADS BASED ON 55 % OF GSL.

GIRDER TYPE: CPrimeHip
LEFT SETBACK = 2-9-0
RIGHT SETBACK = 0-0
END SETBACK = 5-10-8
END WALL WIDTH = 0-0
CORNER FRAMING TYPE: CONVENTIONAL
END JACK TYPE: CONVENTIONAL
APPLIED TO FRONT SIDE
- ADDT'L LOADS BASED ON 55 % OF GSL.
LOADS APPLIED TO FIRST 16-3-8 OF SPAN MEASURED FROM THE RIGHT.

THIS TRUSS IS DESIGNED FOR RESIDENTIAL OR SMALL BUILDING REQUIREMENTS OF PART 9, NBCC 2015

THIS DESIGN COMPLIES WITH:
- PART 9 OF BCBC 2018 , ABC 2019
- PART 9 OF OBC 2012 (2019 AMENDMENT)
- CSA 086-14
- TPIC 2014

(55 % OF 23.0 P.S.F. G.S.L. PLUS 8.4 P.S.F. RAIN LOAD) EQUALS 21.0 P.S.F. SPECIFIED ROOF LIVE LOAD

ALLOWABLE DEFL.(LL)= L/360 (1.04")
CALCULATED VERT. DEFL.(LL) = L/ 999 (0.32")
ALLOWABLE DEFL.(TL)= L/360 (1.04")
CALCULATED VERT. DEFL.(TL) = L/ 603 (0.62")

CSI: TC=0.83/1.00 (I-J:1) , BC=0.88/1.00 (O-P:1) , WB=0.94/1.00 (K-M:1) , SSI=0.43/1.00 (J-K:1)

DOL LUMBER=1.00 NAIL=1.00 LS BEND=1.00 COMP=1.00 SHEAR=1.00 TENS= 1.00

COMPANION LIVE LOAD FACTOR = 1.00

CONTINUED ON PAGE 2

JOB NAME	TRUSS NAME	QUANTITY	PLY	JOB DESC.		DRWG NO.
336324	H252T		1	TRUSS DESC.	JT 45147	E21104136

Alpa Roof Truss, Maple

Version 8.420 S Jan 21 2021 MiTek Industries, Inc. Wed Oct 13 14:53:18 2021 Page 1

ID:hd511hZTz_bdeQoS817GKByhVxV-bYYAFazgOesy_iUbm5P2f9hpJIlhdjHcpbDPiXyTp5V

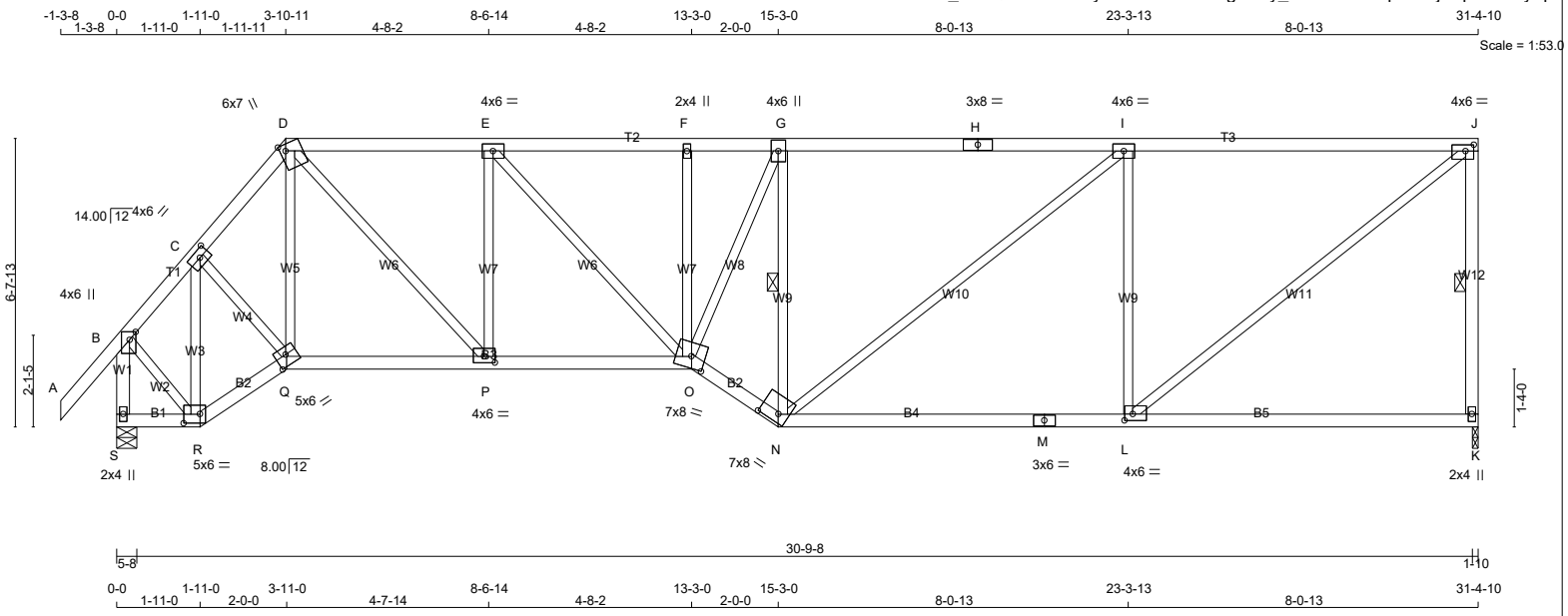

TOTAL WEIGHT = 146 lb

[M]

LUMBER

N. L. G. A. RULES

CHORDS	SIZE		LUMBER	DESCR.
A - D	2x4	DRY	No.2	SPF
D - H	2x4	DRY	1650F 1.5E	SPF
H - J	2x4	DRY	1650F 1.5E	SPF
K - J	2x4	DRY	No.2	SPF
S - B	2x4	DRY	No.2	SPF
S - R	2x4	DRY	No.2	SPF
R - Q	2x4	DRY	No.2	SPF
Q - O	2x4	DRY	No.2	SPF
O - N	2x4	DRY	No.2	SPF
N - M	2x4	DRY	No.2	SPF
M - K	2x4	DRY	No.2	SPF
ALL WEBS EXCEPT	2x3	DRY	No.2	SPF

DRY: SEASONED LUMBER.

PLATES (table is in inches)

JT	TYPE	PLATES	W	LEN	Y	X
B	TMVW+p	MT20	4.0	6.0	2.25	1.75
C	TMWW-t	MT20	4.0	6.0	2.00	2.75
D	TTWW+m	MT20	6.0	7.0	Edge	1.50
E	TMWW-t	MT20	4.0	6.0		
F	TMW+w	MT20	2.0	4.0		
G	TMWW+t	MT20	4.0	6.0		
H	TS-t	MT20	3.0	8.0		
I	TMWW-t	MT20	4.0	6.0		
J	TMVW-t	MT20	4.0	6.0	1.75	2.25
K	BMV1+p	MT20	2.0	4.0		
L	BMWW-t	MT20	4.0	6.0	1.75	2.25
M	BS-t	MT20	3.0	6.0		
N	BBWW-h	MT20	7.0	8.0	2.25	5.25
O	BBWWW-m	MT20	7.0	8.0	3.25	3.75
P	BMWW-t	MT20	4.0	6.0	1.75	3.00
Q	BBWW-h	MT20	5.0	6.0	3.00	3.00
R	BBWW-l	MT20	5.0	6.0	2.50	4.50
S	BMV1+p	MT20	2.0	4.0		

Edge - INDICATES REFERENCE CORNER OF PLATE TOUCHES EDGE OF CHORD.

LATERAL BRACE(S) SHOWN SHALL BE 2X4 SPF#2

DIMENSIONS, SUPPORTS AND LOADINGS SPECIFIED BY FABRICATOR TO BE VERIFIED BY BUILDING DESIGNER

BEARINGS

JT	FACTORED GROSS REACTION VERT	HORZ	MAXIMUM FACTORED GROSS REACTION DOWN	HORZ	UPLIFT	INPUT BRG IN-SX	REQRD BRG IN-SX
K	1511	0	1511	0	0	1-10	1-10
S	1626	0	1626	0	0	5-8	1-13

UNFACTORED REACTIONS

JT	1ST LCASE COMBINED	MAX./MIN. COMPONENT REACTIONS SNOW	LIVE	PERM.LIVE	WIND	DEAD	SOIL
K	1078	657 / 0	0 / 0	0 / 0	0 / 0	420 / 0	0 / 0
S	1157	719 / 0	0 / 0	0 / 0	0 / 0	438 / 0	0 / 0

BEARING MATERIAL TO BE SPF NO.2 OR BETTER AT JOINT(S) K, S

BRACING

TOP CHORD TO BE SHEATHED OR MAX. PURLIN SPACING = 4.36 FT.
MAX. UNBRACED BOTTOM CHORD LENGTH = 10.00 FT OR RIGID CEILING DIRECTLY APPLIED.

ALL PITCH BREAKS AND PERIMETER CORNER JOINTS MUST BE LATERALLY RESTRAINED.

1 LATERAL BRACE(S) AT 1/ 2 LENGTH OF J-K, G-N.

END VERTICAL(S) MUST BE SHEATHED OR HAVE BRACES AS INDICATED IN THE MAX. UNBRACED LENGTH COLUMN OF THE TABLE BELOW

LOADING

TOTAL LOAD CASES: (4)

CHORDS

MEMB. FR-TO	MAX. FACTORED FORCE (LBS)	FACTORED VERT. LOAD (PLF) FROM	TO	LC1 CSI (LC)	MAX UNBRAC LENGTH
A- B	0 / 42	-78.0	-78.0	0.11 (1)	10.00
B- C	-1062 / 0	-78.0	-78.0	0.12 (1)	5.98
C- D	-1590 / 0	-78.0	-78.0	0.09 (1)	5.17
D- E	-1911 / 0	-78.0	-78.0	0.25 (1)	5.18
E- F	-2310 / 0	-78.0	-78.0	0.27 (1)	4.80
F- G	-2308 / 0	-78.0	-78.0	0.34 (1)	4.67
G- H	-1911 / 0	-78.0	-78.0	0.82 (1)	4.36
H- I	-1911 / 0	-78.0	-78.0	0.82 (1)	4.36
I- J	-1532 / 0	-78.0	-78.0	0.77 (1)	4.77
K- J	-1454 / 0	0.0	0.0	0.30 (1)	5.43
S- B	-1608 / 0	0.0	0.0	0.19 (1)	6.52
S- R	0 / 0	-18.5	-18.5	0.02 (4)	10.00
R- Q	0 / 774	-18.5	-18.5	0.14 (1)	10.00
Q- P	0 / 1025	-18.5	-18.5	0.22 (1)	10.00
P- O	0 / 1911	-18.5	-18.5	0.36 (1)	10.00
O- N	0 / 2268	-18.5	-18.5	0.38 (1)	10.00
N- M	0 / 1532	-18.5	-18.5	0.49 (4)	10.00
M- L	0 / 1532	-18.5	-18.5	0.49 (4)	10.00
L- K	0 / 0	-18.5	-18.5	0.34 (4)	10.00

WEBS

MEMB. FR-TO	MAX. FACTORED FORCE (LBS)	MAX CSI (LC)
R- C	-998 / 0	0.26 (1)
C- Q	0 / 592	0.13 (1)
Q- D	0 / 52	0.02 (4)
D- P	0 / 1296	0.29 (1)
P- E	-850 / 0	0.36 (1)
E- O	0 / 584	0.13 (1)
O- F	-111 / 0	0.05 (1)
O- G	0 / 1086	0.24 (1)
N- G	-1478 / 0	0.42 (1)
N- I	0 / 483	0.11 (1)
L- I	-1027 / 0	0.75 (1)
L- J	0 / 1950	0.44 (1)
B- R	0 / 903	0.20 (1)

DESIGN CRITERIA

SPECIFIED LOADS:

TOP CH.	LL	=	21.0	PSF
	DL	=	6.0	PSF
BOT CH.	LL	=	0.0	PSF
	DL	=	7.4	PSF
TOTAL LOAD		=	34.4	PSF

SPACING = 24.0 IN. C/C

LOADING IN FLAT SECTION BASED ON A SLOPE OF 2.00/12 MINIMUM

THIS TRUSS IS DESIGNED FOR RESIDENTIAL OR SMALL BUILDING REQUIREMENTS OF PART 9, NBCC 2015

THIS DESIGN COMPLIES WITH:
- PART 9 OF BCBC 2018 , ABC 2019
- PART 9 OF OBC 2012 (2019 AMENDMENT)
- CSA 086-14
- TPIC 2014

DESIGN ASSUMPTIONS
-OVERHANG NOT TO BE ALTERED OR CUT OFF.

(55 % OF 23.0 P.S.F. G.S.L. PLUS 8.4 P.S.F. RAIN LOAD) EQUALS 21.0 P.S.F. SPECIFIED ROOF LIVE LOAD

ALLOWABLE DEFL.(LL)= L/360 (1.05")
CALCULATED VERT. DEFL.(LL) = L/ 999 (0.12")
ALLOWABLE DEFL.(TL)= L/360 (1.05")
CALCULATED VERT. DEFL.(TL) = L/ 999 (0.27")

CSI: TC=0.82/1.00 (G-I:1) , BC=0.49/1.00 (L-N:4) , WB=0.75/1.00 (I-L:1) , SSI=0.30/1.00 (I-J:1)

DOL LUMBER=1.00 NAIL=1.00 LS BEND=1.10 COMP=1.10 SHEAR=1.10 TENS= 1.10

COMPANION LIVE LOAD FACTOR = 1.00

TRUSS PLATE MANUFACTURER IS NOT RESPONSIBLE FOR QUALITY CONTROL IN THE TRUSS MANUFACTURING PLANT .

NAIL VALUES

PLATE	GRIP(DRY) (PSI) MAX	MIN	SHEAR (PLI) MAX	MIN	SECTION (PLI) MAX	MIN
MT20	650	371	1747	788	1987	1873

PLATE PLACEMENT TOL. = 0.250 inches

PLATE ROTATION TOL. = 5.0 Deg.

JSI GRIP= 0.85 (J) (INPUT = 0.90)
JSI METAL= 0.43 (M) (INPUT = 1.00)

JOB NAME	TRUSS NAME	QUANTITY	PLY	JOB DESC.		DRWG NO.
336324	J08		1	TRUSS DESC.	JT 45147	E21104137

Alpa Roof Truss, Maple

Version 8.420 S Jan 21 2021 MiTek Industries, Inc. Wed Oct 13 14:53:20 2021 Page 1

ID:hd511hZTz_bdeQoS817GKByhVxV-YxfwgG_wwG6fD0ezuWSWkanJB55v5oVvHviVnPyTp5T

Scale = 1:22.4

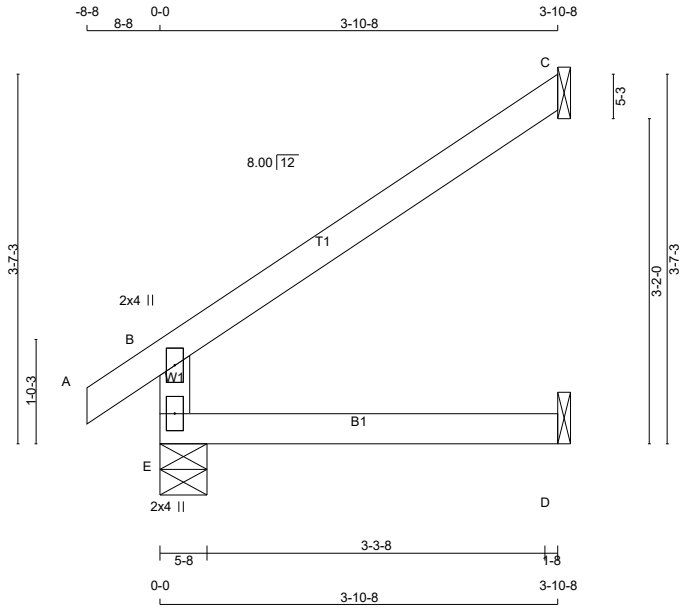

TOTAL WEIGHT = 2 X 12 = 23 lb

[M][F]

LUMBER

N. L. G. A. RULES

CHORDS	SIZE		LUMBER	DESCR.
E - B	2x4	DRY	No.2	SPF
A - C	2x4	DRY	No.2	SPF
E - D	2x4	DRY	No.2	SPF

DRY: SEASONED LUMBER.

PLATES (table is in inches)

JT	TYPE	PLATES	W	LEN	Y	X
B	TMV+p	MT20	2.0	4.0		
E	BMV1+p	MT20	2.0	4.0		

LATERAL BRACE(S) SHOWN SHALL BE 2X4 SPF#2

DIMENSIONS, SUPPORTS AND LOADINGS SPECIFIED BY FABRICATOR TO BE VERIFIED BY BUILDING DESIGNER

BEARINGS

JT	FACTORED GROSS REACTION VERT	HORZ	MAXIMUM FACTORED GROSS REACTION DOWN	HORZ	UPLIFT	INPUT BRG IN-SX	REQRD BRG IN-SX
E	292	0	292	0	0	5-8	1-8
C	113	0	113	0	0	1-8	1-8
D	30	0	34	0	0	1-8	1-8

SEE MITEK STANDARD DETAIL B97791H FOR CONNECTION TO JOINT(S) C , D

UNFACTORED REACTIONS

JT	1ST LCASE COMBINED	MAX./MIN. COMPONENT REACTIONS SNOW	LIVE	PERM.LIVE	WIND	DEAD	SOIL
E	207	135 / 0	0 / 0	0 / 0	0 / 0	72 / 0	0 / 0
C	78	61 / 0	0 / 0	0 / 0	0 / 0	17 / 0	0 / 0
D	24	0 / 0	0 / 0	0 / 0	0 / 0	24 / 0	0 / 0

BEARING MATERIAL TO BE SPF NO.2 OR BETTER AT JOINT(S) E

BRACING

TOP CHORD TO BE SHEATHED OR MAX. PURLIN SPACING = 6.25 FT.
MAX. UNBRACED BOTTOM CHORD LENGTH = 10.00 FT OR RIGID CEILING DIRECTLY APPLIED.

ALL PITCH BREAKS AND PERIMETER CORNER JOINTS MUST BE LATERALLY RESTRAINED.

LOADING

TOTAL LOAD CASES: (4)

CHORDS MEMB. FR-TO	MAX. FACTORED FORCE (LBS)	FACTORED VERT. LOAD (PLF) FROM	TO	LC1 MAX CSI (LC)	MAX. UNBRAC LENGTH	WEBS MEMB. FR-TO	MAX. FACTORED FORCE (LBS)	MAX CSI (LC)
E- B	-250 / 0	0.0	0.0	0.04 (4)	7.81			
A- B	0 / 17	-78.0	-78.0	0.04 (1)	10.00			
B- C	-21 / 0	-78.0	-78.0	0.15 (1)	6.25			
E- D	0 / 0	-18.5	-18.5	0.06 (4)	10.00			

DESIGN CRITERIA

SPECIFIED LOADS:

TOP	CH.	LL	=	21.0	PSF
		DL	=	6.0	PSF
BOT	CH.	LL	=	0.0	PSF
		DL	=	7.4	PSF
TOTAL	LOAD		=	34.4	PSF

SPACING = 24.0 IN. C/C

THIS TRUSS IS DESIGNED FOR RESIDENTIAL OR SMALL BUILDING REQUIREMENTS OF PART 9, NBCC 2015

THIS DESIGN COMPLIES WITH:
- PART 9 OF BCBC 2018 , ABC 2019
- PART 9 OF OBC 2012 (2019 AMENDMENT)
- CSA 086-14
- TPIC 2014

DESIGN ASSUMPTIONS
-OVERHANG NOT TO BE ALTERED OR CUT OFF.

(55 % OF 23.0 P.S.F. G.S.L. PLUS 8.4 P.S.F. RAIN LOAD) EQUALS 21.0 P.S.F. SPECIFIED ROOF LIVE LOAD

ALLOWABLE DEFL.(LL)= L/360 (0.19")
CALCULATED VERT. DEFL.(LL) = L/ 999 (0.00")
ALLOWABLE DEFL.(TL)= L/360 (0.19")
CALCULATED VERT. DEFL.(TL) = L/ 999 (0.01")

CSI: TC=0.15/1.00 (B-C:1) , BC=0.06/1.00 (D-E:4) , WB=0.00/1.00 (n/a:0) , SSI=0.12/1.00 (B-C:1)

DOL LUMBER=1.00 NAIL=1.00 LS BEND=1.10 COMP=1.10 SHEAR=1.10 TENS= 1.10

COMPANION LIVE LOAD FACTOR = 1.00

AUTOSOLVE RIGHT HEEL ONLY

TRUSS PLATE MANUFACTURER IS NOT RESPONSIBLE FOR QUALITY CONTROL IN THE TRUSS MANUFACTURING PLANT .

NAIL VALUES

PLATE	GRIP(DRY) (PSI) MAX	MIN	SHEAR (PLI) MAX	MIN	SECTION (PLI) MAX	MIN
MT20	650	371	1747	788	1987	1873

PLATE PLACEMENT TOL. = 0.250 inches

PLATE ROTATION TOL. = 5.0 Deg.

JSI GRIP= 0.15 (B) (INPUT = 0.90)
JSI METAL= 0.13 (B) (INPUT = 1.00)

JOB NAME	TRUSS NAME	QUANTITY	PLY	JOB DESC.		DRWG NO.
336324	J10		1	TRUSS DESC.	JT 45147	E21104138

Alpa Roof Truss, Maple

Version 8.420 S Jan 21 2021 MiTek Industries, Inc. Wed Oct 13 14:53:21 2021 Page 1

ID:hd511hZTz bdeQoS817GKByhVxV-07DItc?YhZEWrADAREzlHnJTCVQ?qFl2VZS3JryTp5S

Scale = 1:34.2

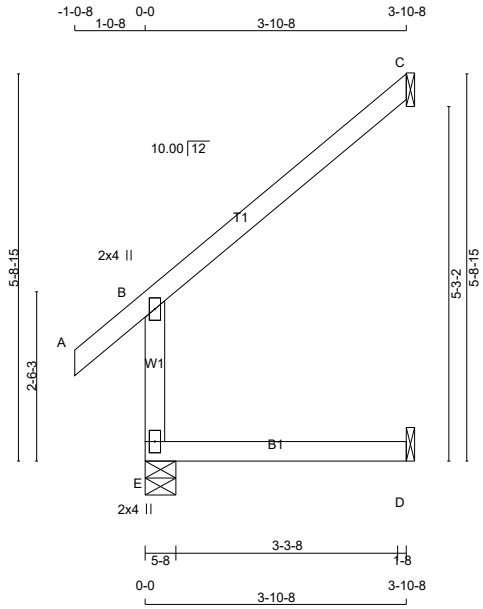

TOTAL WEIGHT = 4 X 14 = 57 lb

[M]

LUMBER

N. L. G. A. RULES

CHORDS	SIZE		LUMBER	DESCR.
E - B	2x4	DRY	No.2	SPF
A - C	2x4	DRY	No.2	SPF
E - D	2x4	DRY	No.2	SPF

DRY: SEASONED LUMBER.

PLATES (table is in inches)

JT	TYPE	PLATES	W	LEN	Y	X
B	TMV+p	MT20	2.0	4.0		
E	BMV1+p	MT20	2.0	4.0		

LATERAL BRACE(S) SHOWN SHALL BE 2X4 SPF#2

DIMENSIONS, SUPPORTS AND LOADINGS SPECIFIED BY FABRICATOR TO BE VERIFIED BY BUILDING DESIGNER

BEARINGS

JT	FACTORED GROSS REACTION VERT	HORZ	MAXIMUM FACTORED GROSS REACTION DOWN	HORZ	UPLIFT	INPUT BRG IN-SX	REQRD BRG IN-SX
E	316	0	316	0	0	5-8	1-8
C	113	0	113	0	0	1-8	1-8
D	33	0	36	0	0	1-8	1-8

SEE MITEK STANDARD DETAIL B97791H FOR CONNECTION TO JOINT(S) C , D

UNFACTORED REACTIONS

JT	1ST LCASE COMBINED	MAX./MIN. COMPONENT REACTIONS SNOW	LIVE	PERM.LIVE	WIND	DEAD	SOIL
E	223	149 / 0	0 / 0	0 / 0	0 / 0	74 / 0	0 / 0
C	79	61 / 0	0 / 0	0 / 0	0 / 0	17 / 0	0 / 0
D	26	0 / 0	0 / 0	0 / 0	0 / 0	26 / 0	0 / 0

BEARING MATERIAL TO BE SPF NO.2 OR BETTER AT JOINT(S) E

BRACING

TOP CHORD TO BE SHEATHED OR MAX. PURLIN SPACING = 6.25 FT.
MAX. UNBRACED BOTTOM CHORD LENGTH = 10.00 FT OR RIGID CEILING DIRECTLY APPLIED.

ALL PITCH BREAKS AND PERIMETER CORNER JOINTS MUST BE LATERALLY RESTRAINED.

LOADING

TOTAL LOAD CASES: (4)

CHORDS MEMB. FR-TO	MAX. FACTORED FORCE (LBS)	FACTORED VERT. LOAD (PLF) FROM	TO	LC1 MAX CSI (LC)	MAX. UNBRAC LENGTH
E- B	-277 / 0	0.0	0.0	0.03 (4)	7.81
A- B	0 / 28	-78.0	-78.0	0.07 (1)	10.00
B- C	-24 / 0	-78.0	-78.0	0.20 (1)	6.25
E- D	0 / 0	-18.5	-18.5	0.07 (4)	10.00

WEBS MEMB. FR-TO	MAX. FACTORED FORCE (LBS)	MAX CSI (LC)

DESIGN CRITERIA

SPECIFIED LOADS:

TOP	CH.	LL	=	21.0	PSF
		DL	=	6.0	PSF
BOT	CH.	LL	=	0.0	PSF
		DL	=	7.4	PSF
TOTAL	LOAD		=	34.4	PSF

SPACING = 24.0 IN. C/C

THIS TRUSS IS DESIGNED FOR RESIDENTIAL OR SMALL BUILDING REQUIREMENTS OF PART 9, NBCC 2015

THIS DESIGN COMPLIES WITH:
- PART 9 OF BCBC 2018 , ABC 2019
- PART 9 OF OBC 2012 (2019 AMENDMENT)
- CSA 086-14
- TPIC 2014

DESIGN ASSUMPTIONS
-OVERHANG NOT TO BE ALTERED OR CUT OFF.

(55 % OF 23.0 P.S.F. G.S.L. PLUS 8.4 P.S.F. RAIN LOAD) EQUALS 21.0 P.S.F. SPECIFIED ROOF LIVE LOAD

ALLOWABLE DEFL.(LL)= L/360 (0.19")
CALCULATED VERT. DEFL.(LL) = L/ 999 (0.00")
ALLOWABLE DEFL.(TL)= L/360 (0.19")
CALCULATED VERT. DEFL.(TL) = L/ 999 (0.01")

CSI: TC=0.20/1.00 (B-C:1) , BC=0.07/1.00 (D-E:4) , WB=0.00/1.00 (n/a:0) , SSI=0.11/1.00 (B-C:1)

DOL LUMBER=1.00 NAIL=1.00 LS BEND=1.10 COMP=1.10 SHEAR=1.10 TENS= 1.10

COMPANION LIVE LOAD FACTOR = 1.00

TRUSS PLATE MANUFACTURER IS NOT RESPONSIBLE FOR QUALITY CONTROL IN THE TRUSS MANUFACTURING PLANT .

NAIL VALUES

PLATE	GRIP(DRY) (PSI) MAX	MIN	SHEAR (PLI) MAX	MIN	SECTION (PLI) MAX	MIN
MT20	650	371	1747	788	1987	1873

PLATE PLACEMENT TOL. = 0.250 inches

PLATE ROTATION TOL. = 5.0 Deg.

JSI GRIP= 0.19 (B) (INPUT = 0.90)
JSI METAL= 0.15 (B) (INPUT = 1.00)

JOB NAME	TRUSS NAME	QUANTITY	PLY	JOB DESC.		DRWG NO.
336336	P04		1	TRUSS DESC.	JT 45147	E21104153

Alpa Roof Truss, Maple

Version 8.420 S Jan 21 2021 MiTek Industries, Inc. Wed Oct 13 15:36:33 2021 Page 1

ID:hd511hZTz bdeQoS817GKByhVxV-7nrBtvNQGzoloVNKHbTaKOgPqM368XQaXpKDHcyToSy

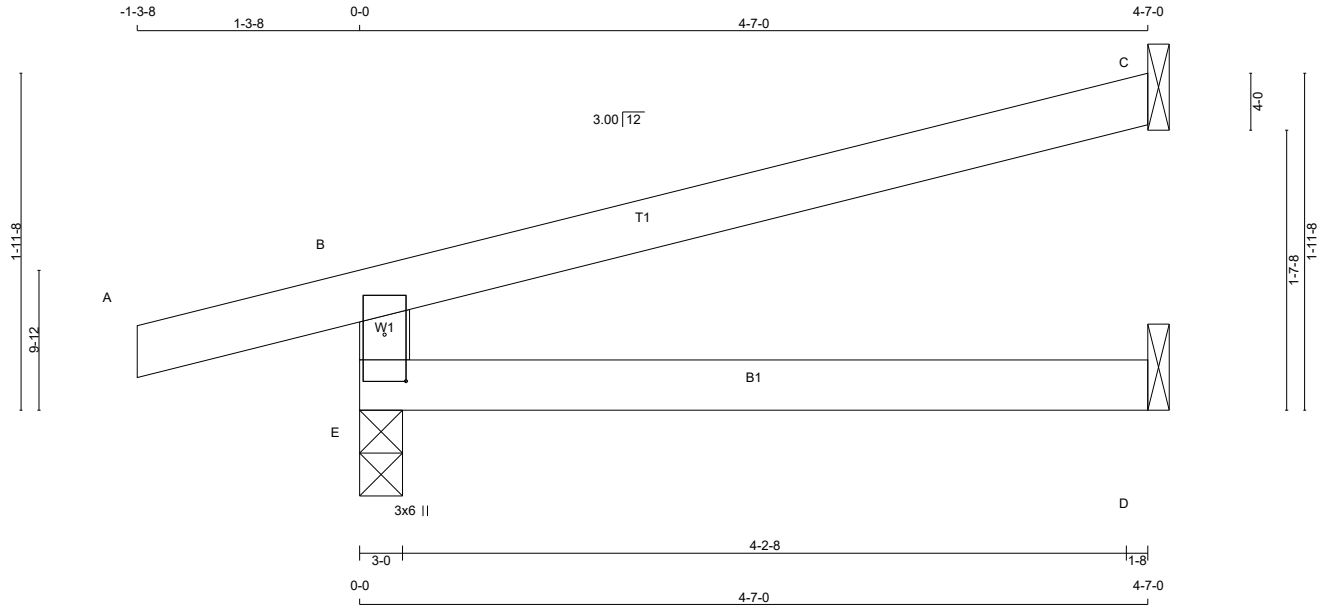

TOTAL WEIGHT = 9 X 13 = 113 lb

LUMBER

N. L. G. A. RULES

CHORDS	SIZE		LUMBER	DESCR.
E - B	2x4	DRY	No.2	SPF
A - C	2x4	DRY	No.2	SPF
E - D	2x4	DRY	No.2	SPF

DRY: SEASONED LUMBER.

PLATES (table is in inches)

JT	TYPE	PLATES	W	LEN	Y	X
B						
E						
E	TMBMV1+p	MT20	3.0	6.0	3.25	1.50

LATERAL BRACE(S) SHOWN SHALL BE 2X4 SPF#2

DIMENSIONS, SUPPORTS AND LOADINGS SPECIFIED BY FABRICATOR TO BE VERIFIED BY BUILDING DESIGNER

BEARINGS

JT	FACTORED GROSS REACTION VERT	HORZ	MAXIMUM FACTORED GROSS REACTION DOWN	HORZ	UPLIFT	INPUT BRG IN-SX	REQRD BRG IN-SX
E	377	0	377	0	0	3-0	1-8
C	134	0	134	0	0	1-8	1-8
D	34	0	39	0	0	1-8	1-8

SEE MITEK STANDARD DETAIL B97791H FOR CONNECTION TO JOINT(S) C , D

UNFACTORED REACTIONS

JT	1ST LCASE COMBINED	MAX./MIN. COMPONENT REACTIONS SNOW	LIVE	PERM.LIVE	WIND	DEAD	SOIL
E	266	176 / 0	0 / 0	0 / 0	0 / 0	91 / 0	0 / 0
C	93	72 / 0	0 / 0	0 / 0	0 / 0	21 / 0	0 / 0
D	28	0 / 0	0 / 0	0 / 0	0 / 0	28 / 0	0 / 0

BEARING MATERIAL TO BE SPF NO.2 OR BETTER AT JOINT(S) E

BRACING

TOP CHORD TO BE SHEATHED OR MAX. PURLIN SPACING = 6.25 FT.
MAX. UNBRACED BOTTOM CHORD LENGTH = 10.00 FT OR RIGID CEILING DIRECTLY APPLIED.

ALL PITCH BREAKS AND PERIMETER CORNER JOINTS MUST BE LATERALLY RESTRAINED.

LOADING

TOTAL LOAD CASES: (4)

CHORDS MEMB. FR-TO	MAX. FACTORED FORCE (LBS)	FACTORED VERT. LOAD (PLF) FROM	TO	LC1 MAX CSI (LC)	MAX. UNBRAC LENGTH	WEBS MEMB. FR-TO	MAX. FACTORED FORCE (LBS)	MAX CSI (LC)
E- B	-327 / 0	0.0	0.0	0.09 (4)	7.81			
A- B	0 / 13	-78.0	-78.0	0.10 (1)	10.00			
B- C	-11 / 0	-78.0	-78.0	0.28 (1)	6.25			
E- D	0 / 0	-18.5	-18.5	0.09 (4)	10.00			

[M]

DESIGN CRITERIA

SPECIFIED LOADS:

TOP	CH.	LL	=	21.0	PSF
		DL	=	6.0	PSF
BOT	CH.	LL	=	0.0	PSF
		DL	=	7.4	PSF
TOTAL	LOAD		=	34.4	PSF

SPACING = 24.0 IN. C/C

THIS TRUSS IS DESIGNED FOR RESIDENTIAL OR SMALL BUILDING REQUIREMENTS OF PART 9, NBCC 2015

THIS DESIGN COMPLIES WITH:
- PART 9 OF BCBC 2018 , ABC 2019
- PART 9 OF OBC 2012 (2019 AMENDMENT)
- CSA 086-14
- TPIC 2014

DESIGN ASSUMPTIONS
-OVERHANG NOT TO BE ALTERED OR CUT OFF.

(55 % OF 23.0 P.S.F. G.S.L. PLUS 8.4 P.S.F. RAIN LOAD) EQUALS 21.0 P.S.F. SPECIFIED ROOF LIVE LOAD

ALLOWABLE DEFL.(LL)= L/360 (0.19")
CALCULATED VERT. DEFL.(LL) = L/ 999 (0.00")
ALLOWABLE DEFL.(TL)= L/360 (0.19")
CALCULATED VERT. DEFL.(TL) = L/ 999 (0.01")

CSI: TC=0.28/1.00 (B-C:1) , BC=0.09/1.00 (D-E:4) , WB=0.00/1.00 (n/a:0) , SSI=0.17/1.00 (B-C:1)

DOL LUMBER=1.00 NAIL=1.00 LS BEND=1.10 COMP=1.10 SHEAR=1.10 TENS= 1.10

COMPANION LIVE LOAD FACTOR = 1.00

TRUSS PLATE MANUFACTURER IS NOT RESPONSIBLE FOR QUALITY CONTROL IN THE TRUSS MANUFACTURING PLANT .

NAIL VALUES

PLATE	GRIP(DRY) (PSI) MAX	MIN	SHEAR (PLI) MAX	MIN	SECTION (PLI) MAX	MIN
MT20	650	371	1747	788	1987	1873

PLATE PLACEMENT TOL. = 0.250 inches

PLATE ROTATION TOL. = 5.0 Deg.

JSI GRIP= 0.20 (E) (INPUT = 0.90)
JSI METAL= 0.05 (E) (INPUT = 1.00)

TECHNICAL BULLETIN

LUS – Double Shear Joist Hangers

SIMPSON Strong-Tie®

All LUS hangers have double shear nailing. This patented innovation distributes the load through two points on each joist nail for greater strength. It also allows the use of fewer nails, faster installation and the use of common nails for all connections.

Material: 18 gauge

Finish: G90 galvanized

Design:

- Factored resistances are in accordance with CSA O86-14.
- Uplift resistances have been increased 15%. No further increase is permitted.
- Wood shear is not considered in the factored resistances given. The specifier must ensure that the joist and header capacities are capable of withstanding these loads.

Installation:

- Use all specified fasteners.
- Nails: 16d = 0.162" dia. x 3½" long common wire, 10d = 0.148" x 3" long common wire.
- Double shear nails must be driven at an angle through the joist or truss into the header to achieve the table loads.
- Not designed for welded or nailer applications.

Options:

- These hangers cannot be modified

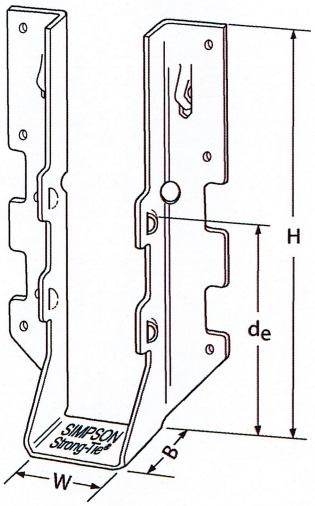

LUS28

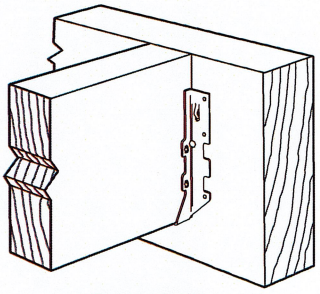

Typical LUS Installation

Model No.	Ga.	Dimensions (in.)				Fasteners		Factored Resistance (lb.)			
								D.Fir-L		S-P-F	
		W	H	B	d_e[1]	Face	Joist	Uplift (K_D=1.15)	Normal (K_D=1.00)	Uplift (K_D=1.15)	Normal (K_D=1.00)
LUS24	18	1 9/16	3 1/8	1 3/4	1 15/16	(4) 10d	(2) 10d	710	1630	645	1155
LUS24-2	18	3 1/8	3 1/8	2	1 13/16	(4) 16d	(2) 16d	835	2020	590	1435
LUS26	18	1 9/16	4 3/4	1 3/4	3 5/8	(4) 10d	(4) 10d	1420	2170	1290	1630
LUS26-2	18	3 1/8	4 7/8	2	4	(4) 16d	(4) 16d	1720	2595	1545	1920
LUS26-3	18	4 5/8	4 3/16	2	3 1/4	(4) 16d	(4) 16d	1720	2595	1545	2340
LUS28	18	1 9/16	6 5/8	1 3/4	3 3/4	(6) 10d	(6) 10d	1420	2520	1290	1790
LUS28-2	18	3 1/8	7	2	4	(6) 16d	(4) 16d	1720	3325	1545	2575
LUS28-3	18	4 5/8	6 1/4	2	3 1/4	(6) 16d	(4) 16d	1720	3325	1545	2375
LUS210	18	1 9/16	7 13/16	1 3/4	3 7/8	(8) 10d	(4) 10d	1420	2785	1290	2210
LUS210-2	18	3 1/8	9	2	6	(8) 16d	(6) 16d	2580	4500	2320	3195
LUS210-3	18	4 5/8	8 3/16	2	5 1/4	(8) 16d	(6) 16d	2580	3345	2320	2375

1. d_e is the distance from the seat of the hanger to the highest joist nail.

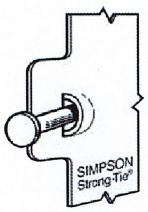

Dome Double Shear Nailing prevents tabs breaking off (available on some models).

U.S. Patent 5,603,580

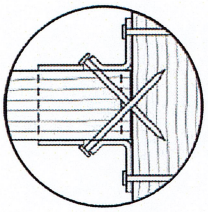

Double Shear Nailing Top View.

LICENSED PROFESSIONAL ENGINEER
04/01/2020
B. D. BUNTING
PROVINCE OF ONTARIO

LIMIT STATES DESIGN

This technical bulletin is effective until June 30, 2022, and reflects information available as of April 1, 2020. This information is updated periodically and should not be relied upon after June 30, 2022. Contact Simpson Strong-Tie for current information and limited warranty or see strongtie.com.

© 2020 Simpson Strong-Tie Company Inc.

(800) 999-5099
strongtie.com

TECHNICAL BULLETIN

HUS/LJS – Double Shear Joist Hangers

SIMPSON Strong-Tie®

All hangers have double shear nailing. This patented innovation distributes the load through two points on each joist nail for greater strength. It also allows the use of fewer nails, faster installation and the use of common nails for all connections. Do not bend or remove tabs.

Material: See table

Finish: G90 galvanized

Design:

- Factored resistances are in accordance with CSA O86 -14.
- Uplift resistances have been increased 15%. No further increase is permitted.
- Wood shear is not considered in the factored resistances given. The specifier must ensure that the joist and header capacities are capable of withstanding these loads.

Installation:

- Use all specified fasteners
- Nails: 16d = 0.162" dia. x 3½" long common wire
- Double shear nails must be driven at an angle through the joist or truss into the header to achieve the table loads
- Not designed for welded or nailer applications

Options:

- See current catalogue for options

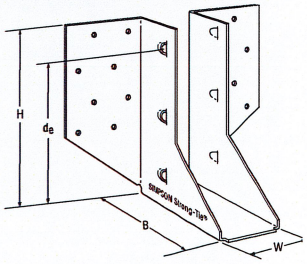

LJS26DS

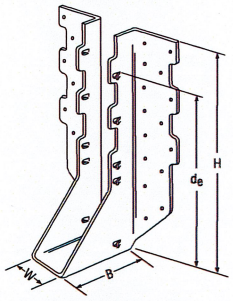

HUS210
(HUS26, HUS28, similar)

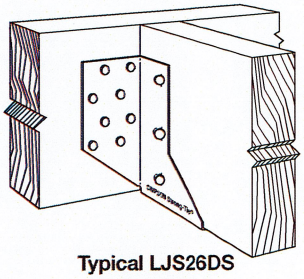

Typical LJS26DS Installation

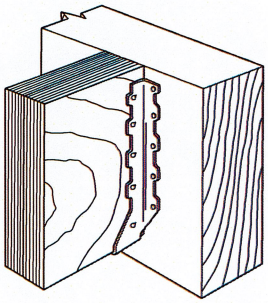

Typical HUS Installation

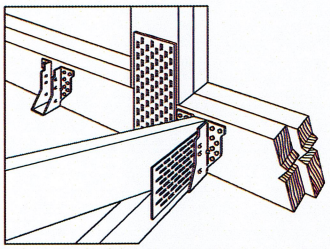

Typical HUS Installation
(Truss Designer to provide fastener quantity for connecting multiple members together)

Model No.	Ga.	Dimensions (in.)				Fasteners		Factored Resistance (lb.)			
								D.Fir-L		S-P-F	
		W	H	B	d_e[1]	Face	Joist	Uplift (K_D=1.15) lb.	Normal (K_D=1.00) lb.	Uplift (K_D=1.15) lb.	Normal (K_D=1.00) lb.
LJS26DS	18	1 9/16	5	3½	4⅝	(16) 16d	(6) 16d	2055	4265	1460	4115
HUS26	16	1⅝	5⅜	3	3 15/16	(14) 16d	(6) 16d	2705	4940	2065	3875
HUS28	16	1⅝	7 3/32	3	6 3/32	(22) 16d	(8) 16d	3605	5365	2675	4345
HUS210	16	1⅝	9 3/32	3	7 31/32	(30) 16d	(10) 16d	4505	5795	4010	4740
HUS1.81/10	16	1 13/16	9	3	8	(30) 16d	(10) 16d	4505	6450	4010	5200

1. d_e is the distance from the seat of the hanger to the highest joist nail.

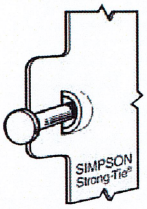

Dome Double Shear Nailing prevents tabs breaking off (available on some models).

U.S. Patent 5,603,580

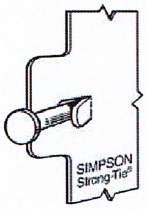

Double Shear Nailing Side View. Do not bend tab back.

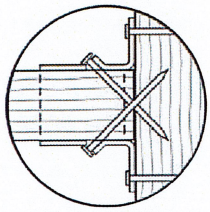

Double Shear Nailing Top View.

LICENSED PROFESSIONAL ENGINEER
04/01/2020
B. D. BUNTING
PROVINCE OF ONTARIO

LIMIT STATES DESIGN

This technical bulletin is effective until June 30, 2022, and reflects information available as of April 1, 2020. This information is updated periodically and should not be relied upon after June 30, 2022. Contact Simpson Strong-Tie for current information and limited warranty or see strongtie.com.

© 2020 Simpson Strong-Tie Company Inc.

(800) 999-5099
strongtie.com

TECHNICAL BULLETIN

HHUS – Double Shear Joist Hangers

SIMPSON Strong-Tie®

All HHUS hangers have double shear nailing. This patented innovation distributes the load through two points on each joist nail for greater strength. It also allows the use of fewer nails, faster installation and the use of common nails for all connections. Do not bend or remove tabs.

Material: 14 gauge

Finish: G90 galvanized

Design:

- Factored resistances are in accordance with CSA O86-14.
- Uplift resistances have been increased 15%. No further increase is permitted.
- Wood shear is not considered in the factored resistances given. The specifier must ensure that the joist and header capacities are capable of withstanding these loads.

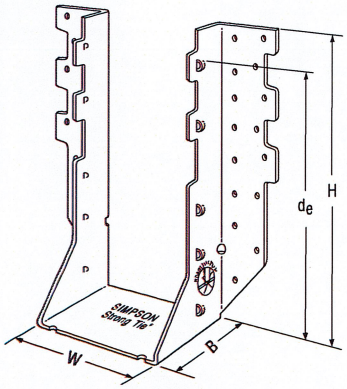

HHUS410

Installation:

- Use all specified fasteners
- Nails: 16d = 0.162" dia. x 3½" long common wire
- Double shear nails must be driven at an angle through the joist or truss into the header to achieve the table loads
- Not designed for welded or nailer applications

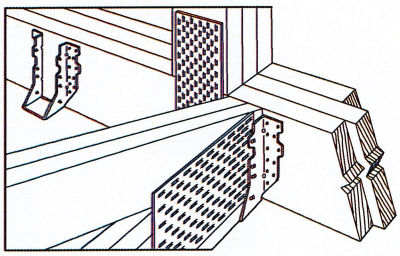

Typical HHUS Installation (Truss Designer to provide fastener quantity for connecting multiple members together)

Options:

- See current catalogue for options

Model No.	Ga.	Dimensions (in.)				Fasteners		Factored Resistance (lb.)			
								D.Fir-L		S-P-F	
		W	H	B	d_e[1]	Face	Joist	Uplift (K_D=1.15)	Normal (K_D=1.00)	Uplift (K_D=1.15)	Normal (K_D=1.00)
HHUS26-2	14	3 5/16	5 13/16	3	3 15/16	(14) 16d	(6) 16d	2850	7335	2065	5205
HHUS28-2	14	3 5/16	7 7/32	3	6 5/32	(22) 16d	(8) 16d	3765	8940	2675	6345
HHUS210-2	14	3 5/16	9 3/32	3	8	(30) 16d	(10) 16d	4670	9660	4235	7000
HHUS210-3	14	4 11/16	9	3	7 15/16	(30) 16d	(10) 16d	4670	9670	4235	6865
HHUS210-4	14	6 1/8	8 29/32	3	7 27/32	(30) 16d	(10) 16d	4670	10155	4235	7210
HHUS46	14	3 5/8	5 13/32	3	3 15/16	(14) 16d	(6) 16d	2540	7335	2065	5205
HHUS48	14	3 5/8	7 1/8	3	6 1/8	(22) 16d	(8) 16d	3765	8940	2675	6345
HHUS410	14	3 5/8	9	3	8	(30) 16d	(10) 16d	4670	9855	4235	7000
HHUS5.50/10	14	5 1/2	9	3	8	(30) 16d	(10) 16d	4670	10155	4235	7210
HHUS7.25/10	14	7 1/4	9	3 5/16	7 29/32	(30) 16d	(10) 16d	4670	10155	3370	7210

1. d_e is the distance from the seat of the hanger to the highest joist nail.

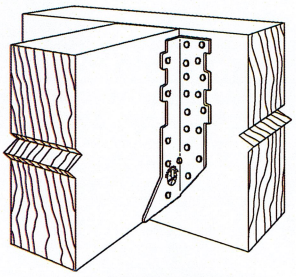

Typical HHUS Installation

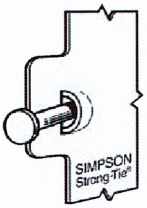

Dome Double Shear Nailing prevents tabs breaking off (available on some models).

U.S. Patent 5,603,580

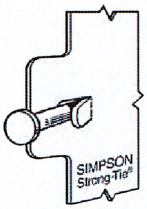

Double Shear Nailing Side View. Do not bend tab back.

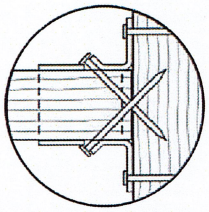

Double Shear Nailing Top View.

LIMIT STATES DESIGN

This technical bulletin is effective until June 30, 2022, and reflects information available as of April 1, 2020. This information is updated periodically and should not be relied upon after June 30, 2022. Contact Simpson Strong-Tie for current information and limited warranty or see strongtie.com.

© 2020 Simpson Strong-Tie Company Inc.

T-SPECHHUS20 3/20 exp. 6/22

(800) 999-5099
strongtie.com

TC – Truss Connectors

SIMPSON Strong-Tie®

The TC truss connector is an ideal connector for scissor trusses and can allow horizontal movement up to 1¼". The TC also attaches plated trusses to top plates or sill plates to resist uplift forces. Typically used on one or both ends of truss as determined by the building designer.

Material: 16 gauge

Finish: G90 galvanized

Design: Factored resistances are in accordance with CSA 086-14

Installation:

- Use all specified fasteners.
- Nails: 10d = 0.148" dia. x 3" long common wire, 10d x 1½ = 0.148" dia. x 1½" long.
- Drive 10d nails into the truss at the inside end of the slotted holes (inside end is towards the centre of the truss) and clinch on the back side. Do not seat these nails into the truss–allow room under the nail head for movement of the truss with respect to the wall.

Optional TC Installation:

- Bend one flange up 90°. Drive specified nails into the top and face of the top plates or install Titen® screws into the top and face of masonry wall. See optional load tables and installation details.

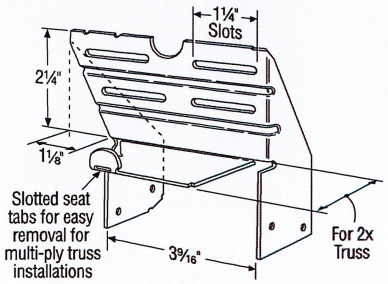

TC24
U.S. Patent 4,932,173

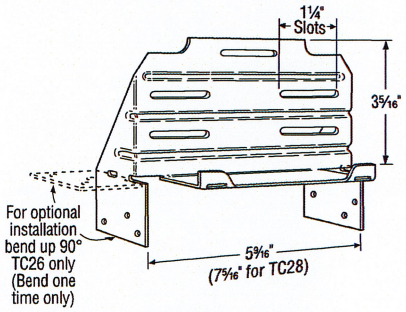

TC26
(TC28 Similiar)

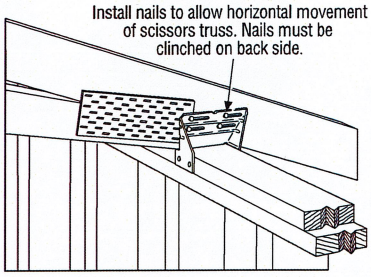

Typical TC24 Installation

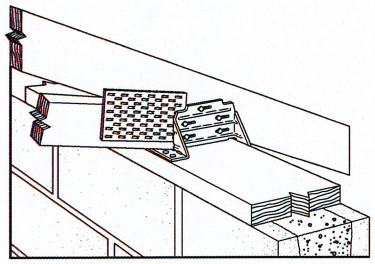

Optional TC26 Installation for Grouted Concrete Block using a Wood Nailer
(8", 10", 12" Wall Installation Similar)

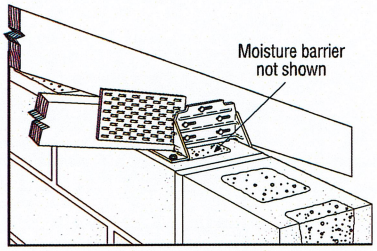

Optional TC26 Installation for Grouted Concrete Block using Titen Screws

Model No.	Fasteners		Factored Resistance	
	Truss	Wall Plates	D.Fir-L	S-P-F
			Uplift (K_D=1.15)	Uplift (K_D=1.15)
			lb.	lb.
TC24	(4) 10d	(4) 10d	605	430
TC26	(5) 10d	(6) 10d	1015	720
TC28	(5) 10d	(6) 10d	1015	720

Optional TC Installation Table

Model No.	Fasteners		Factored Resistance	
	Truss	Wall Plates	D.Fir-L	S-P-F
			Uplift (K_D=1.15)	Uplift (K_D=1.15)
			lb.	lb.
TC26	(5) 10d	(6) 10d x 1½"	810	660
	(5) 10d	(6) 10d	930	660

1. Factored resistances have been increased 15% for earthquake or wind loading; no further increase allowed; reduce where other loads govern.
2. Grout strength is 15 MPa minimum.
3. Optional TC26 installation with 10d nails requires minimum 3" top plate thickness.
4. TC26 fastened to grouted concrete block with (6) – ⁹⁄₁₆" x 2¼" Titen screws has a factored uplift resistance of 275 lb.

LIMIT STATES DESIGN

This technical bulletin is effective until June 30, 2022, and reflects information available as of April 1, 2020. This information is updated periodically and should not be relied upon after June 30, 2022. Contact Simpson Strong-Tie for current information and limited warranty or see strongtie.com.

© 2020 Simpson Strong-Tie Company Inc.

(800) 999-5099
strongtie.com

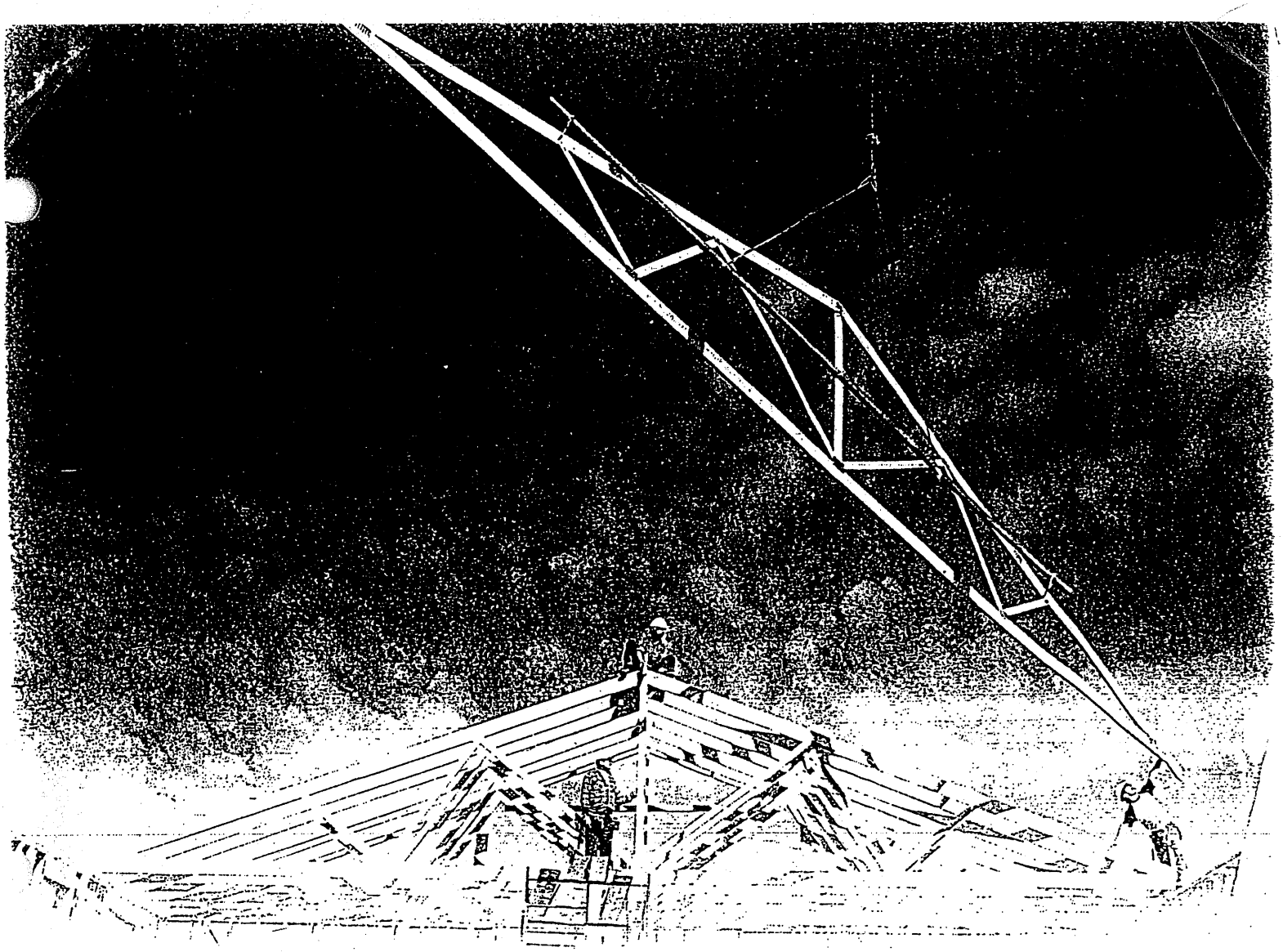

Wood Truss Installation

A Guide to proper handling, erecting and bracing metal plate connected wood trusses

Table of Content

Warning.....4

1 Unloading & Lifting.....5

2 Job Site Handling.....5

3 Hoisting.....6

4 Beginning the Erection Process.....7

5 Erection Tolerance.....8

6 Bracing.....8

7 Bracing Requirements for 3 Planes of Roof.....9

8 Stacking Materials.....10

Caution Notes.....11

Warning

General

Familiarity with the **Construction Design Documents**, the **Truss Design Drawings**, and **Truss Placement Plans** (if required by the **Construction Design Documents**) is required to properly erect, brace, and connect the trusses to the building system.

All of the care and quality involved in the design and manufacture of wood trusses can be jeopardized if the trusses are not properly handled, erected, and braced.

The consequences of improper handling, erecting, and bracing may be a collapse of the structure, which at best is a substantial loss of time and materials, and at worst is a loss of life. The majority of truss accidents occur during truss installation and not as a result of improper design or manufacture.

Prior to truss erection, the builder/erector shall meet with the erection crew for a safety and planning meeting, making sure each crew member understands his or her roles and responsibilities during the erection process.

Temporary Erection Bracing

Trusses are not marked in any way to identify the frequency, or location of temporary erection bracing.

All temporary bracing shall comply with the latest edition of *Commentary and Recommendations for Handling, Installing & Bracing Metal Plate Connected Wood Trusses* (HIB), published by the Truss Plate Institute, and/or as specified in the **Construction Design Documents** prepared by the building designer.

Permanent Truss Bracing

Permanent bracing for the roof or floor trusses is the responsibility of the building designer and should be shown on the **Construction Design Documents**. Permanent bracing locations for individual compression members of a wood truss are shown on the **Truss Design Drawings**, and shall be installed by the building or erection contractor. This bracing is needed for the proper performance of individual trusses within the roof or floor system. The design and connection of the bracing to the truss and then to the overall building system is the responsibility of the building designer, and is in addition to the permanent bracing plan, which is also specified by the building designer.

Special Design Requirements

Special design requirements, such as wind bracing, portal bracing, seismic bracing, diaphragms, shear walls, or other load transfer elements and their connections to wood trusses must be considered separately by the building designer, who shall determine size, location, and method of connections for all bracing as needed to resist these forces.

1 Unloading & Lifting

Never handle trusses flat

Beginning with the unloading process, and throughout all phases of construction, care must be taken to avoid **lateral bending** of trusses, which can cause damage to the lumber and metal connector plates at the joints.

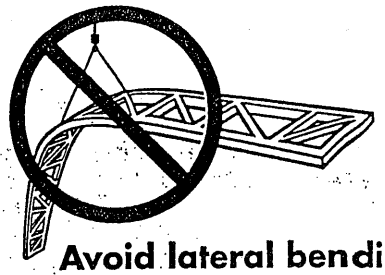

Avoid lateral bending

- **Use special care in windy weather.**
- **If using a crane within 10 feet of an electric line, contact the local power company.**
- **If using a crane within 5 miles of an airport, contact the airport 30 days prior to erection to learn about any safety regulations that must be followed.**

2 Job Site Handling

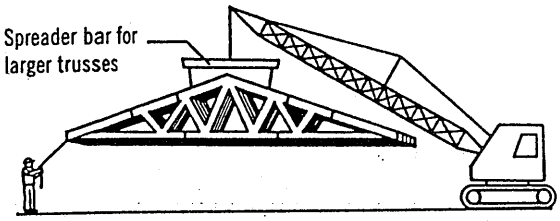

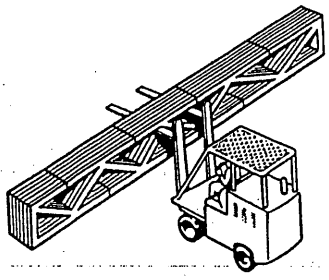

All trusses should be picked up at the top chords in a vertical position only

Proper banding and smooth ground allow for unloading of trusses without damage. This should be done as close to the building site as possible to minimize handling. **Do not** break banding until installation begins. Hand erection of trusses is allowed, provided excessive lateral bending is prevented.

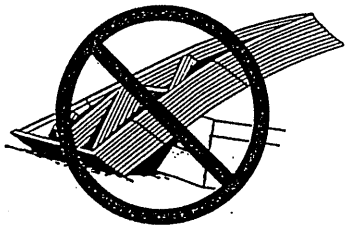

Do not store unbraced bundles upright

If trusses are stored vertically they shall be braced in a manner that will prevent tipping or topping. Generally cuting of the banding is done just prior to installation.

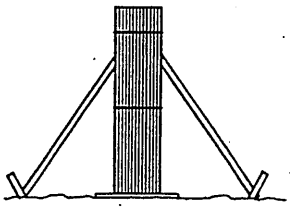

Do not store on uneven ground

If trusses are stored horizontally, blocking should be used on eight to ten foot centers, or as required, to minimize lateral bending and moisture gain.

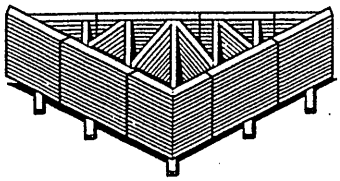

Care should be exercised when removing banding to avoid damaging trusses.

During long term storage, trusses shall be protected from the environment in a manner that provides for adequate ventilation of the trusses. If tarpaulins or other material is used, the ends shall be left open for ventilation. Plastic is not recommended, since it can trap moisture.

3 Hoisting

All trusses that are erected one at a time shall be held safely in position by the erection equipment until such time as all necessary bracing has been installed and the ends of the trusses are securely fastened to the building.

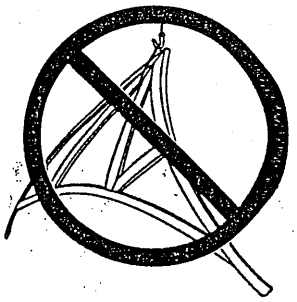

Avoid lateral bending

L ≤ 30'

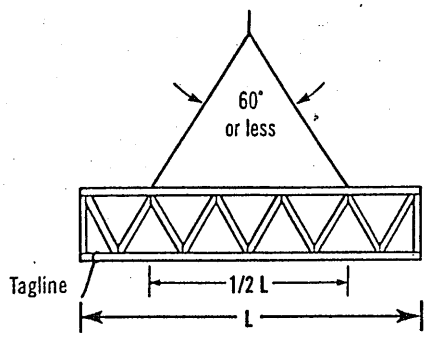

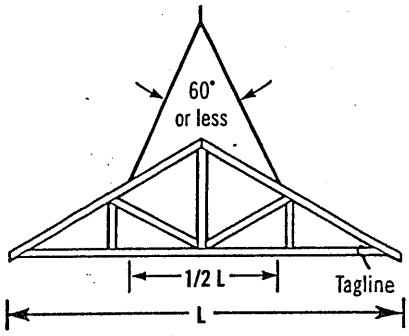

Truss sling is acceptable where these criteria are met.

30' < L ≤ 60'

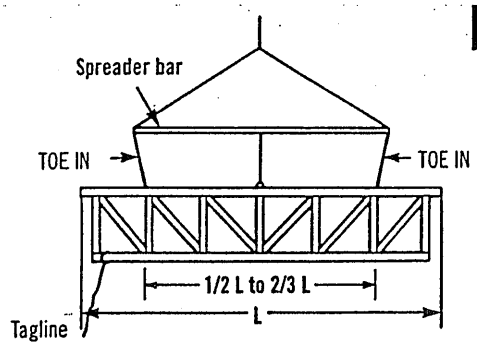

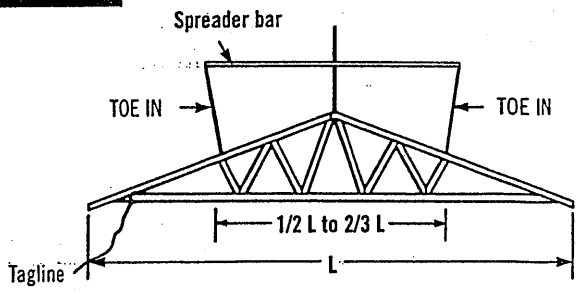

Use spreader bar in all other cases. It should be noted that the lines from the ends of the spreader bar "**TOE IN**"; if these lines should "**TOE OUT**" the truss may fold in half.

L > 60'

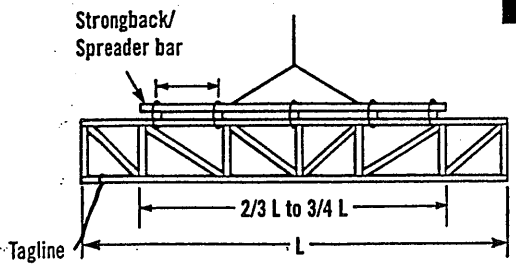

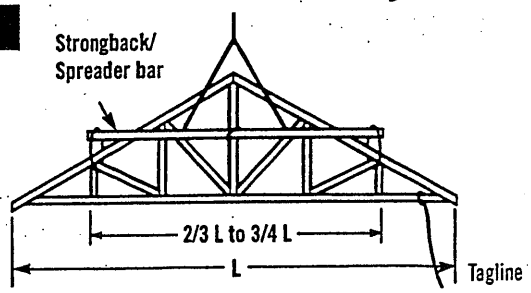

For lifting trusses with spans in excess of 60 feet, it is recommended that a strongback/spreader bar be used as illustrated. The strongback/spreader bar should be attached to the top chord and web members at intervals of approximately 10 feet. Further, the strongback/spreader bar should be at or above the mid-height of the truss to prevent overturning. The strongback/spreader bar can be of any material with sufficient strength to safely carry the weight of the truss and sufficient rigidity to adequately resist bending of the truss.

4 Beginning the Erection Process

It is important for the builder or erection contractor to provide substantial bracing for the first truss erected. The two or more trusses making up the rest of the first set are tied to and rely upon the first truss for stability. Likewise, after this first set of trusses is adequately cross-braced, the remaining trusses installed rely upon this first set for stability. Thus, the performance of the truss bracing system depends to a great extent on how well the first group of trusses is braced.

Ground Brace – Exterior

One satisfactory method ties the first unit of trusses off to a series of braces that are attached to a stake driven into the ground and securely anchored. The ground brace itself should be supported as shown below or it is apt to buckle. Additional ground braces in the opposite direction, inside the building, are also recommended.

Ground Brace – Interior

Another satisfactory method where height of building or ground conditions prohibit bracing from the exterior is to tie the first truss rigidly in place from the interior at the floor level, provided the floor is substantially completed and capable of supporting the ground bracing forces. Securely fasten the first truss to the middle of the building. Brace the bracing similar to exterior ground bracing shown at left. Set trusses from the middle toward the end of the building. Properly cross-brace the first set of trusses before removing floor braces and setting remaining trusses.

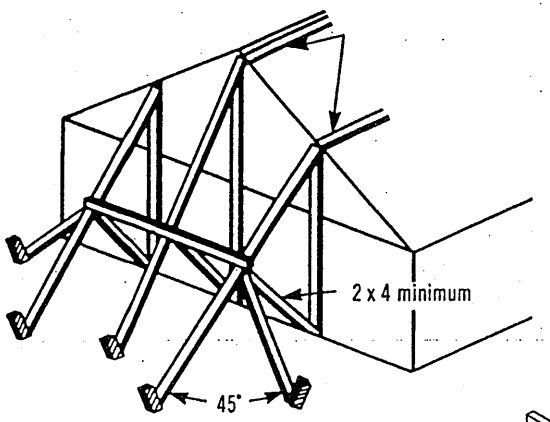

Note: Locate ground braces for first truss directly in line with all rows of top chord continuous lateral bracing (either temporary or permanent).

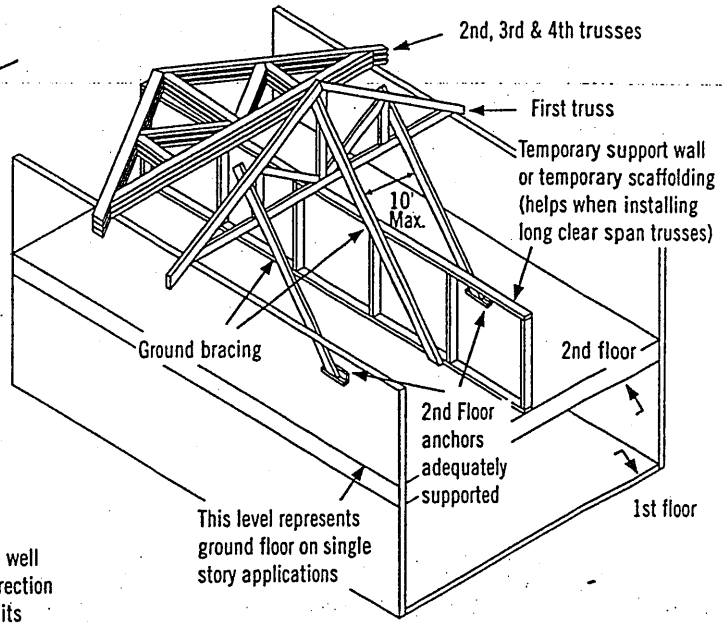

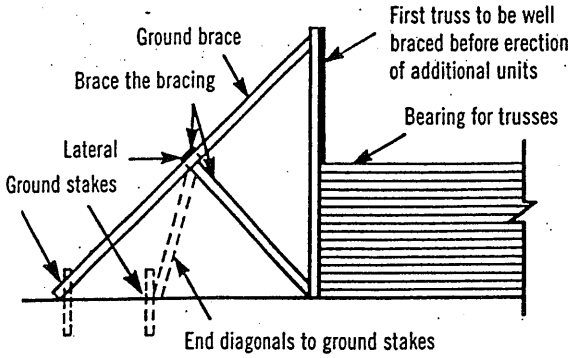

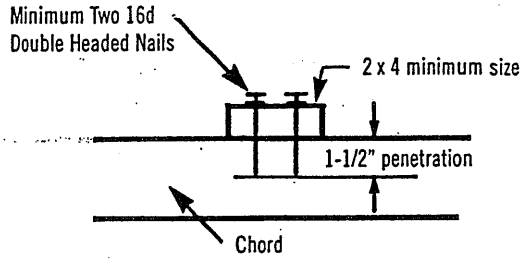

Inadequate size of bracing material or inadequate fastening is a major cause of erection dominoing.

5 Erection Tolerance

Complying with erection tolerances is critical to achieving an acceptable roof or floor line, and to accomplishing effective bracing. Setting trusses within tolerance the first time will prevent the need for the hazardous practice of respacing or adjusting trusses when roof sheathing or roof purlins are installed. Trusses leaning or bowing can cause nails to miss the top chords when sheathing is applied, and create cumulative stresses on the bracing, which is a frequent cause of dominoing.

When sheathing, make sure nails are driven into the top chord of the trusses.

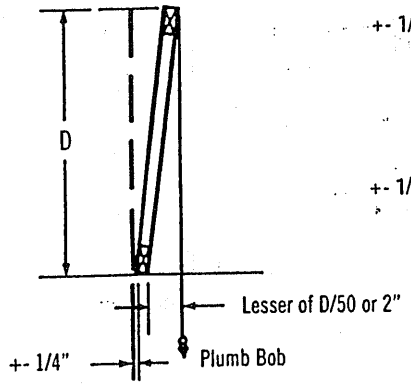

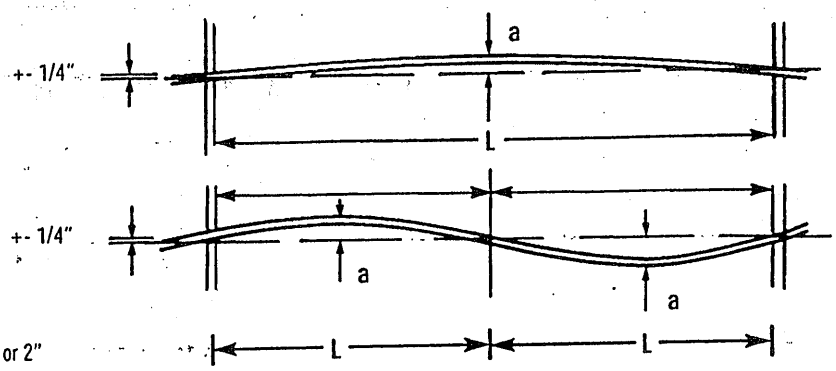

L = 16' to 32', a = 1"
L = 32' & over, a = 2"

6 Bracing

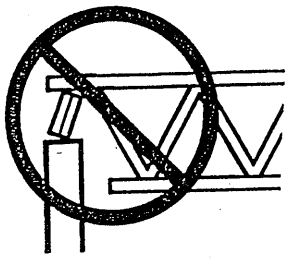

Do not install trusses on temporarily connected supports

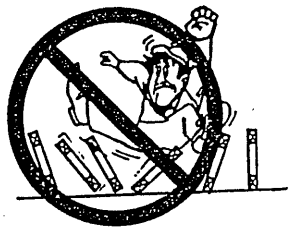

Do not walk on unbraced trusses

Do not walk on trusses or gable ends lying flat

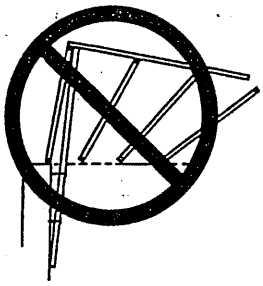

Nails in withdrawal (parallel to force)

All anchors, hangers, tie-downs, seats, bearing ledgers, etc., that are part of the supporting structure shall be accurately and properly placed and permanently attached before truss installation begins. No trusses shall ever be installed on anchors or ties that have temporary connections to the supporting structure.

Nailing scabs to the end of the building to brace the first truss is not recommended.
All nailing of bracing should be done so that nails are driven perpendicular to the direction of force, as shown at right.

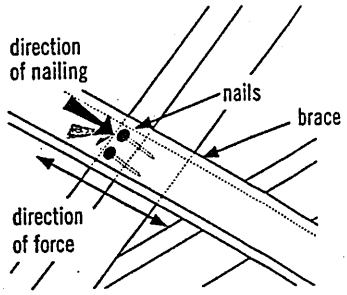

Well nailed (perpendicular to force)

7 Bracing Requirements for 3 Planes of Roof

Temporary erection bracing must be applied to three planes of the roof system to ensure stability: Plane 1) **Top Chord** (sheathing), Plane 2) **Bottom Chord** (ceiling plane), and Plane 3) **Web Member** plane or vertical plane perpendicular to trusses.

1) Top Chord Plane

Most important to the builder or erection contractor is bracing in the plane of the top chord. Truss top chords are susceptible to lateral buckling before they are braced or sheathed.

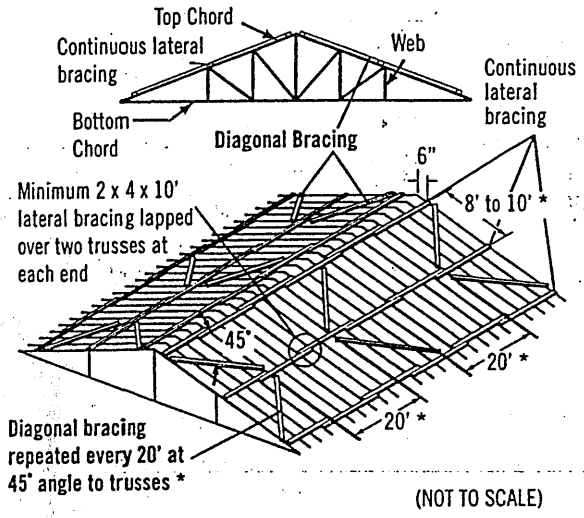

(NOT TO SCALE)

Exact spacing between trusses should be maintained as bracing is installed to avoid the hazardous practice of removing bracing to adjust spacing. This act of "adjusting spacing" can cause trusses to topple if connections are removed at the wrong time.

2) Bottom Chord Plane

In order to hold proper spacing on the bottom chord, temporary bracing is recommended on the top of the bottom chord.

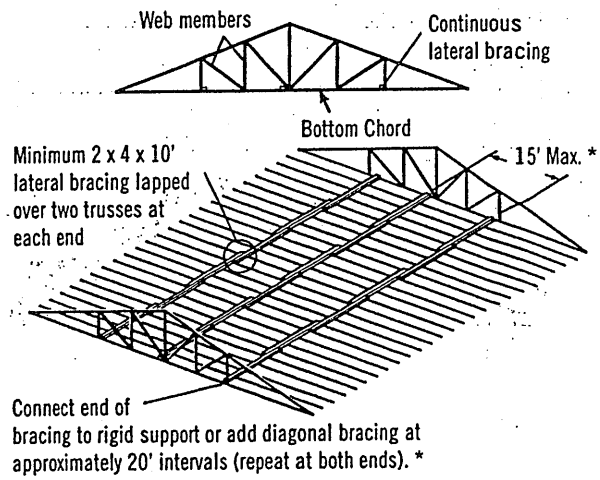

* Long spans, heavy loads or other spacing configurations may require closer spacing between lateral bracing and closer intervals between diagonals. Consult the building designer or HIB and DSB (*Recommended Design Specification for Temporary Bracing of Metal-Plate Connected Wood Trusses*) for details.

Diagonal or cross-bracing is very important!

3) Web Member Plane

"X" bracing, as shown, is critical in preventing trusses from leaning or dominoing. Repeat as shown to create a succession of rigid units.

X-bracing should be installed on vertical web members wherever possible, at or near lateral bracing. Plywood or OSB may be substituted for X-bracing.

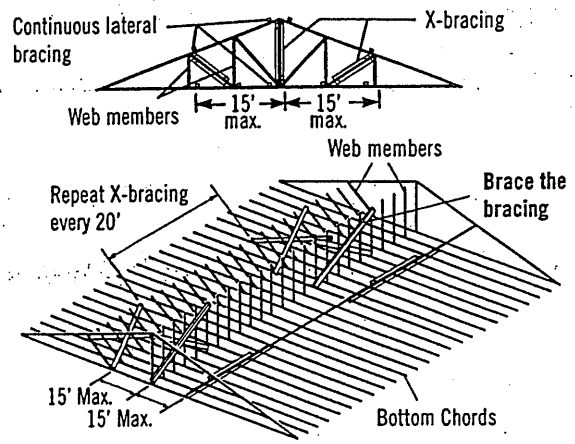

Note: Top chords and some web members are not shown, in order to make drawings more readable.

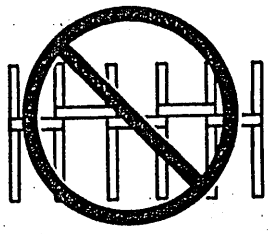

Do not use short blocks to brace individual trusses without a specific bracing plan detailing their use

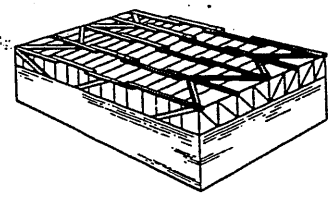

Bracing requirements using the same principles apply to parallel chord trusses

8 Stacking Materials

Do not proceed with building completion until all bracing is securely and properly in place

Never stack materials on unbraced or inadequately braced trusses

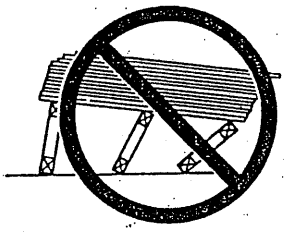

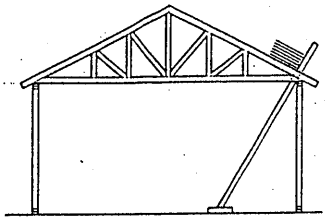

Proper distribution of construction materials is a must during construction.

Never stack materials near a peak

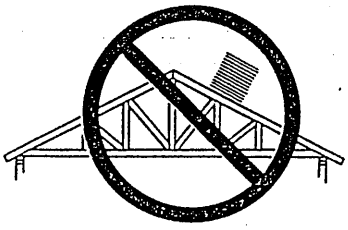

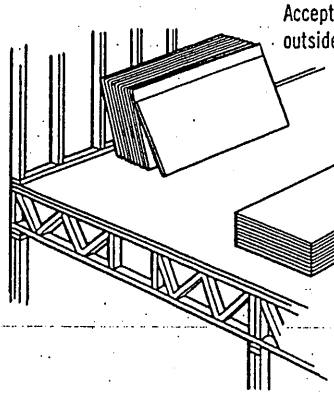

Never stack materials on the cantilever of a truss

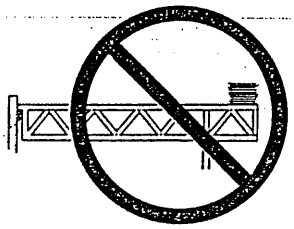

Always stack materials over two or more trusses.

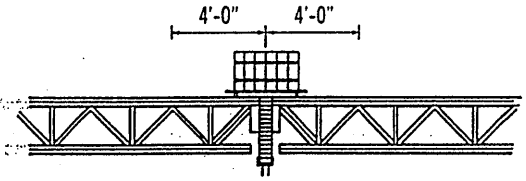

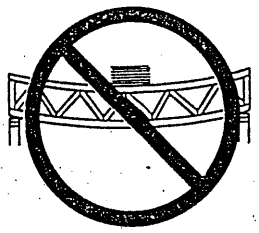

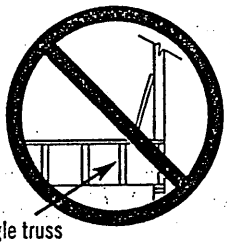

Roofing and mechanical contractors are cautioned to stack materials only along outside supporting members or directly over inside supporting members. Trusses are not designed for dynamic loads (i.e., moving vehicles). Extreme care should be taken when loading and stacking construction materials (rolled roofing, mechanical equipment, etc.) on the roof or floor system.

Never overload small groups or single trusses. Position load over as many trusses as possible.

Never cut any structural member of a truss.

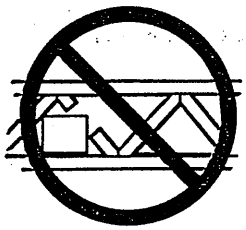

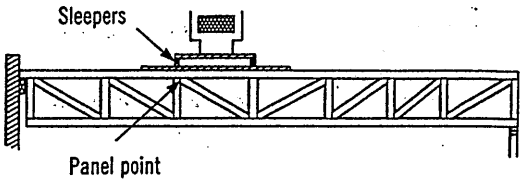

Sleepers for mechanical equipment should be located at panel points (joints) or over main supporting members, and only on trusses that have been designed for such loads.

Caution Notes

Errors in building lines and/or dimensions, or errors by others shall be corrected by the contractor or responsible construction trade subcontractor or supplier **before** erection of trusses begins.

Cutting of nonstructural overhangs is considered a part of normal erection and shall be done by the builder or erection contractor.

Any field modification that involves the cutting, drilling, or relocation of any structural truss member or connector plate shall not be done without the approval of the truss manufacturer or a licensed design professional.

The methods and procedures outlined are intended to ensure that the overall construction techniques employed will put floor and roof trusses **safely** in place in a completed structure. These recommendations for bracing wood trusses originate from the collective experience of leading technical personnel in the wood truss industry, but must, due to the nature of responsibilities involved, be presented only as a **guide** for use by a qualified building designer, builder, or erection contractor. Thus, the Wood Truss Council of America expressly disclaims any responsibility for damages arising from the use, application, or reliance on the recommendations and information contained herein.

[Selected text and figures referenced or reproduced from HIB and DSB by permission of the Truss Plate Institute, Madison, WI.]

THE CANADIAN WOOD TRUSS ASSOCIATION

L'ASSOCIATION CANADIENNE DES FABRICANTS DE FERMES DE BOIS

1400 Blair Place, Suite 210, Ottawa, ON K1J 9B8
Tel.: 613-747-5544 Fax: 613-747-6264

Wood Truss Council of America

One WTCA Center
6300 Enterprise Lane, Madison, WI 53719-1140
Tel.: 608-274-4849 Fax: 608-274-3329
wtca@woodtruss.com www.woodtruss.com