ALPA-BARRIE

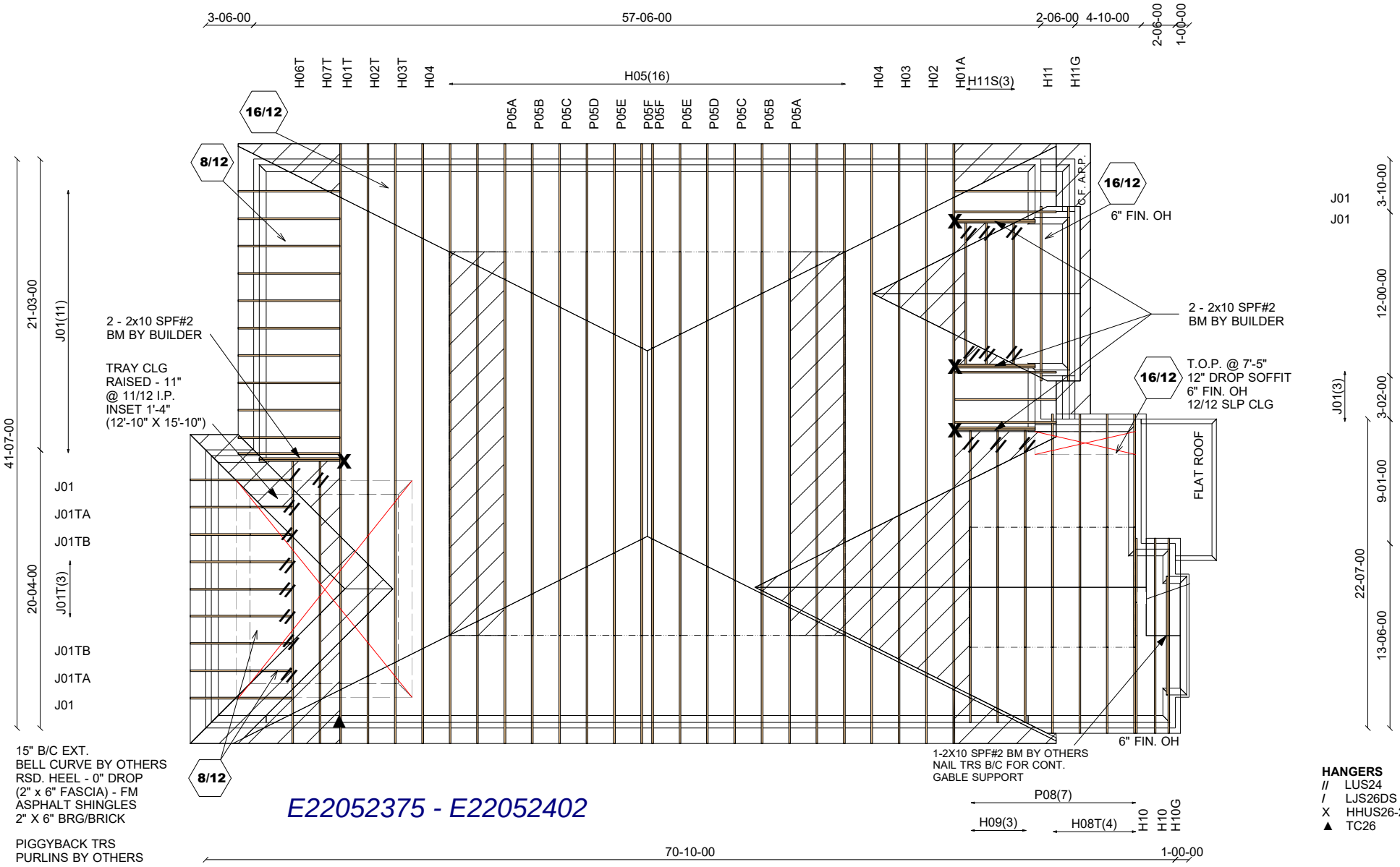

15" B/C EXT.
BELL CURVE BY OTHERS
RSD. HEEL - 0" DROP
(2" x 6" FASCIA) - FM
ASPHALT SHINGLES
2" X 6" BRG/BRICK

PIGGYBACK TRS
PURLINS BY OTHERS

E22052375 - E22052402

HANGERS

//	LUS24
/	LJS26DS
X	HHUS26-2
▲	TC26

Mitek V. 8.2.0

(ARCH. COM.)
PL# 116955, 117689

ALL CONVENTIONAL FRAMING TO CONFORM WITH PART 9 O.B.C. LATEST EDITION. ROOF RAFTERS THAT CROSS OVER TRUSSES TO BE 2X4 SPF #2 @ 24" O.C WITH A VERT. POST TO THE TRUSS UNDERNEATH AT EACH CROSS POINT. VERT. POSTS LONGER THAN 6' TO HAVE LATERAL BRACING SO THAT THE DISTANCE BETWEEN END POINTS & BETWEEN ROWS OF BRACING DOES NOT EXCEED 6'

CONVENTIONAL FRAMING BY OTHERS

Job Track: 45147	Builder / Location: GOLD PARK HOMES / VAUGHAN	Model / Elevation: **"THE WILLOWCREEK"**	STD OR OPT 2ND FL 5 BED (W/ OR W/OUT ELEVATOR)
Layout ID: 343277		5012 / A	
Plan Log: 116408	Project: PINE VALLEY PH 2	THESE DRAWINGS CONSTITUTE THE PROPERTY OF ALPA ROOF TRUSSES INC., SHALL NOT BE REPRODUCED, PUBLISHED, OR REDISTRIBUTED IN ANY MANNER OR UTILIZED FOR ANY PURPOSE OTHER THAN THE MANUFACTURE OF TRUSSES BY ALPA ROOF TRUSSES INC AND WILL BE RETRACTED BY ALPA ROOF TRUSSES INC IF UTLILZED FOR ANY OTHER PURPOSE.	
	Date: 2022-05-31 Designer: AMANDA		

EWP DESIGN INC.

(905) 832-2250 FAX (905) 832-0286

RESPONSIBILITIES AND SPECIFICATIONS

RESPONSIBILITIES

1. EWP DESIGN INC. is responsible for the design of trusses as individual components.
2. It is the responsibility of others to ascertain that the design loads utilized on each drawing meet or exceed the actual dead load imposed by the structure, the live load imposed by the intended use and the snow load imposed by local building code or authorities with jurisdictions.
3. All dimensions are to be verified by the owner, contractor, architect or other authorities with jurisdictions before truss fabrication.
4. EWP DESIGN INC. bears no responsibility for the erection of trusses. Persons erecting trusses are cautioned to seek professional advice regarding the temporary and permanent bracing for the system. Bracing shown on EWP DESIGN INC. drawing is specified for the truss as a component only and forms an integral part of the truss design.
5. It is the truss manufacturer's responsibility to ensure that trusses are manufactured in conformance with specifications of EWP DESIGN INC. as outlined below.

SPECIFICATIONS

1. Trusses designed by EWP DESIGN INC. conform to the relevant section of the Ontario Building Code of Canada (Part 9 or Part 4) or to the Canadian code for farm buildings, whichever applies to the building type, as indicated on the EWP DESIGN INC. drawings, and conform to the design procedures established by the Truss Plate Institute of Canada. Unit stresses used for truss designs are as per the edition of CSA-O86 shown on EWP DESIGN INC. drawings.
2. Lumber is to be the size, species and grade as specified on EWP DESIGN INC. drawings.
3. Moisture content of lumber shall not exceed 19% in service unless specified otherwise.
4. Metal connector plates shall be applied to both faces of truss at each joint and shall be positioned as specified.
5. Top chords of trusses are assumed to be continuously braced laterally by roof sheathing or by purlins at intervals not exceeding 12.5 times the thickness of top chord member.
6. Bottom chords shall be laterally braced at intervals not exceeding 3M (10') o.c., where rigid ceiling is not applied directly to the underside of chords.

THESE DRAWINGS CONSTITUTE THE PROPERTY OF EWP DESIGN INC., SHALL NOT BE REPRODUCED, PUBLISHED, OR REDISTRIBUTED IN ANY MANNER OR UTILIZED FOR ANY PURPOSE OTHER THAN THE MANUFACTURE OF TRUSSES BY THE ALPA LUMBER GROUP, AND WILL BE RETRACTED BY EWP DESIGN INC. IF UTILIZED FOR ANY OTHER PURPOSE.

JOB NAME	TRUSS NAME	QUANTITY	PLY	JOB DESC.	DRWG NO.
343277	H01A		1	TRUSS DESC. JT 45147	E22052375

Alpha Roof Truss, Maple

Version 8.530 S Feb 23 2022 MiTek Industries, Inc. Wed Jun 8 15:41:36 2022 Page 1

ID:9a plwcon izmXpuR1McGqzT9hG-2q26N8tsN4qYtFPPlby9KZiJQQ1zlKuNQ1sclRz8JUD

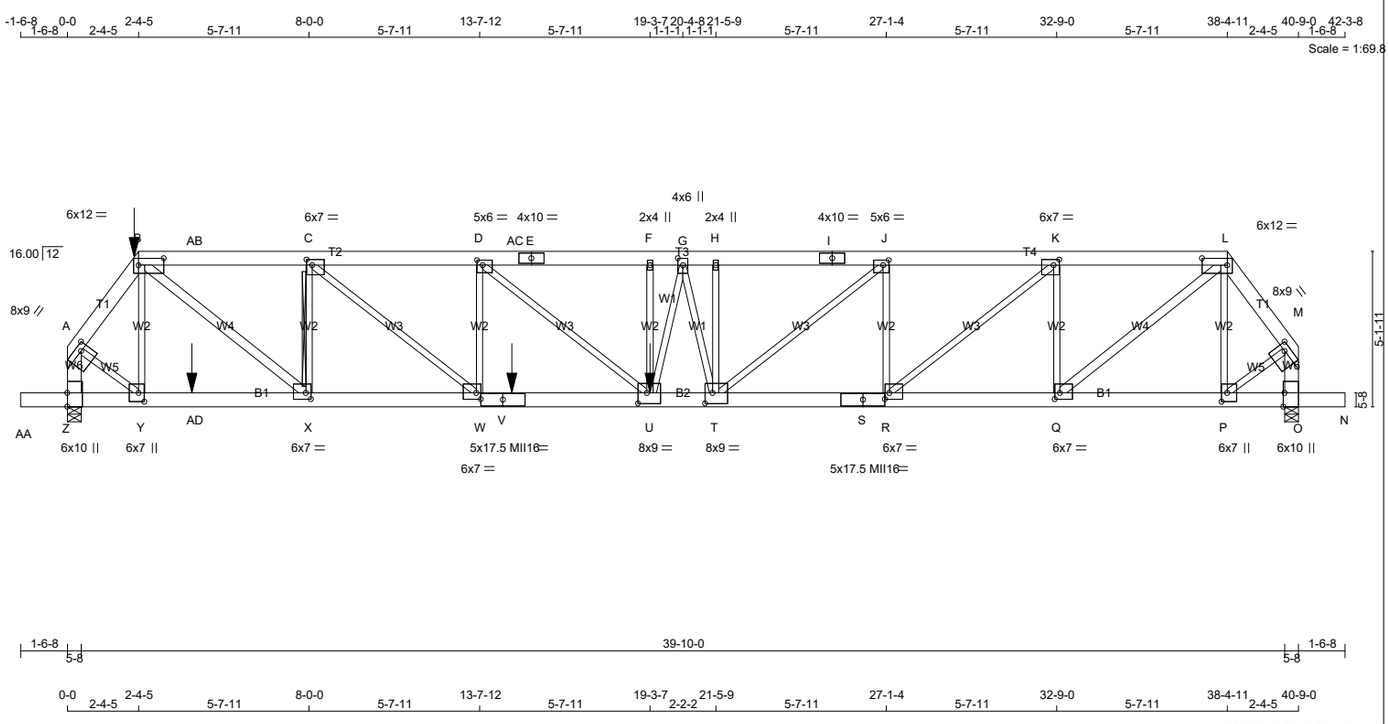

TOTAL WEIGHT = 241 lb

LUMBER

N. L. G. A. RULES

CHORDS	SIZE		LUMBER	DESCR.
A - B	2x6	DRY	No.2	SPF
B - E	2x6	DRY	1650F 1.5E	SPF
E - I	2x6	DRY	1650F 1.5E	SPF
I - L	2x6	DRY	1650F 1.5E	SPF
L - M	2x6	DRY	No.2	SPF
Z - A	2x6	DRY	No.2	SPF
O - M	2x6	DRY	No.2	SPF
AA- V	2x6	DRY	2100F 1.8E	SPF
V - S	2x6	DRY	2100F 1.8E	SPF
S - N	2x6	DRY	2100F 1.8E	SPF
ALL WEBS EXCEPT	2x3	DRY	No.2	SPF
B - X	2x4	DRY	No.2	SPF
Q - L	2x4	DRY	No.2	SPF

DRY: SEASONED LUMBER.

PLATES (table is in inches)

JT	TYPE	PLATES	W	LEN	Y	X
A	TMVW-t	MT20	8.0	9.0	2.25	3.00
B	TTWW-l	MT20	6.0	12.0	2.75	10.00
C	TMWW-t	MT20	6.0	7.0	2.25	2.25
D	TMWW-t	MT20	5.0	6.0	2.00	2.25
E	TS-t	MT20	4.0	10.0		
F	TMW+w	MT20	2.0	4.0		
G	TMWW+t	MT20	4.0	6.0	2.75	2.00
H	TMW+w	MT20	2.0	4.0		
I	TS-t	MT20	4.0	10.0		
J	TMWW-t	MT20	5.0	6.0	2.00	2.25
K	TMWW-t	MT20	6.0	7.0	2.25	2.25
L	TTWW-l	MT20	6.0	12.0	2.75	10.00
M	TMVW-t	MT20	8.0	9.0	2.25	3.00
O	BMV1+t	MT20	6.0	10.0	Edge	0.50
P	BMWW+t	MT20	6.0	7.0	3.50	2.25
Q	BMWW-t	MT20	6.0	7.0	2.50	2.00
R	BMWW-t	MT20	6.0	7.0	2.50	1.75
S	BS-t	MII16	5.0	17.5		
T	BMWWW-t	MT20	8.0	9.0	4.25	3.00
U	BMWWW-t	MT20	8.0	9.0	4.25	3.50
V	BS-t	MII16	5.0	17.5		
W	BMWW-t	MT20	6.0	7.0	2.50	1.75
X	BMWW-t	MT20	6.0	7.0	2.50	2.00
Y	BMWW+t	MT20	6.0	7.0	3.50	2.25
Z	BMV1+t	MT20	6.0	10.0	Edge	

Edge - INDICATES REFERENCE CORNER OF PLATE TOUCHES EDGE OF CHORD.

LATERAL BRACE(S) SHOWN SHALL BE 2X4 SPF#2

LICENSED PROFESSIONAL ENGINEER
Y. WIDYA
100225448
06/08/2022
PROVINCE OF ONTARIO

DIMENSIONS, SUPPORTS AND LOADINGS SPECIFIED BY FABRICATOR TO BE VERIFIED BY BUILDING DESIGNER

BEARINGS

JT	FACTORED GROSS REACTION VERT	HORZ	MAXIMUM FACTORED GROSS REACTION DOWN	HORZ	UPLIFT	INPUT BRG IN-SX	REQRD BRG IN-SX
Z	4974	0	4974	0	0	5-8	5-8
O	3534	0	3534	0	0	5-8	3-10

UNFACTORED REACTIONS

JT	1ST LCASE COMBINED	SNOW	MAX./MIN. COMPONENT REACTIONS LIVE	PERM.LIVE	WIND	DEAD	SOIL
Z	3506	2366 / 0	0 / 0	0 / 0	0 / 0	1140 / 0	0 / 0
O	2498	1648 / 0	0 / 0	0 / 0	0 / 0	850 / 0	0 / 0

BEARING MATERIAL TO BE SPF NO.2 OR BETTER AT JOINT(S) Z, O
BEARING SIZE FACTOR = 1.15 AT JNT(S) Z, O (BASED ON SUPPORT DEPTH = 1-8)

BRACING

TOP CHORD TO BE SHEATHED OR MAX. PURLIN SPACING = 2.72 FT.
MAX. UNBRACED BOTTOM CHORD LENGTH = 10.00 FT OR RIGID CEILING DIRECTLY APPLIED.

ALL PITCH BREAKS AND PERIMETER CORNER JOINTS MUST BE LATERALLY RESTRAINED.

2x3 DRY SPF No.2 T-BRACE AT C-X

FASTEN T AND I-BRACES TO NARROW EDGE OF WEB WITH ONE ROW PER PLY OF 3" COMMON WIRE NAILS @ 6" O.C. WITH 3" MINIMUM END DISTANCE. BRACE MUST COVER 90% OF WEB LENGTH.

END VERTICAL(S) MUST BE SHEATHED OR HAVE BRACES AS INDICATED IN THE MAX. UNBRACED LENGTH COLUMN OF THE TABLE BELOW

LOADING

TOTAL LOAD CASES: (4)

C H O R D S

MEMB. FR-TO	MAX. FORCE (LBS)	FACTORED VERT. LOAD (PLF) FROM	TO	LC1	MAX CSI (LC)	MAX. UNBRAC LENGTH
A- B	-4348 / 0	-78.0	-78.0	0.14 (1)	4.05	
B-AB	-6536 / 0	-153.5	-153.5	0.29 (1)	3.77	
AB- C	-6536 / 0	-78.0	-78.0	0.29 (1)	3.77	
C- D	-9597 / 0	-78.0	-78.0	0.42 (1)	3.10	
D-AC	-10777 / 0	-78.0	-78.0	0.64 (1)	2.72	
AC- E	-10777 / 0	-156.0	-156.0	0.64 (1)	2.72	
E- F	-10777 / 0	-156.0	-156.0	0.64 (1)	2.72	
F- G	-10777 / 0	-78.0	-78.0	0.36 (1)	2.96	
G- H	-10116 / 0	-78.0	-78.0	0.34 (1)	3.07	
H- I	-10116 / 0	-78.0	-78.0	0.45 (1)	3.00	
I- J	-10116 / 0	-78.0	-78.0	0.45 (1)	3.00	
J- K	-7962 / 0	-78.0	-78.0	0.34 (1)	3.44	
K- L	-5181 / 0	-78.0	-78.0	0.21 (1)	4.23	
L- M	-2913 / 0	-78.0	-78.0	0.08 (1)	4.85	
Z- A	-5043 / 0	0.0	0.0	0.38 (1)	4.75	
O- M	-3409 / 0	0.0	0.0	0.26 (1)	5.71	
AA- Z	0 / 0	-96.5	-96.5	0.05 (1)	10.00	
Z- Y	0 / 0	-36.4	-36.4	0.26 (1)	10.00	
Y-AD	0 / 2561	-36.4	-36.4	0.39 (1)	10.00	
AD- X	0 / 2561	-18.5	-18.5	0.39 (1)	10.00	
X- W	0 / 6535	-18.5	-18.5	0.41 (1)	10.00	
W- V	0 / 9597	-18.5	-18.5	0.72 (1)	10.00	
V- U	0 / 9597	-37.3	-37.3	0.72 (1)	10.00	
U- T	0 / 10451	-18.5	-18.5	0.58 (1)	10.00	
T- S	0 / 7962	-18.5	-18.5	0.47 (1)	10.00	
S- R	0 / 7962	-18.5	-18.5	0.47 (1)	10.00	
R- Q	0 / 5181	-18.5	-18.5	0.31 (1)	10.00	
Q- P	0 / 1702	-18.5	-18.5	0.13 (1)	10.00	
P- O	0 / 0	-18.5	-18.5	0.05 (1)	10.00	
O- N	0 / 0	-96.5	-96.5	0.05 (1)	10.00	

W E B S

MEMB. FR-TO	MAX. FORCE (LBS)	MAX CSI (LC)
Y- B	-345 / 0	0.12 (1)
B- X	0 / 5130	0.91 (1)
X- C	-2951 / 0	0.90 (1)
C- W	0 / 3979	0.98 (1)
W- D	-1589 / 0	0.56 (1)
D- U	0 / 1533	0.38 (1)
U- F	-461 / 0	0.16 (1)
U- G	0 / 1440	0.36 (1)
G- T	-1479 / 0	0.55 (1)
T- H	-292 / 0	0.10 (1)
T- J	0 / 2798	0.69 (1)
R- J	-2209 / 0	0.78 (1)
R- K	0 / 3615	0.89 (1)
Q- K	-2742 / 0	0.97 (1)
Q- L	0 / 4490	0.79 (1)
P- L	-830 / 0	0.29 (1)
A- Y	0 / 2946	0.73 (1)
P- M	0 / 1974	0.49 (1)

FACTORED CONCENTRATED LOADS (LBS)

JT	LOC.	LC1	MAX-	MAX+	FACE	DIR.	TYPE	HEEL	CONN.
B	2-4-5	-134	-134	---	FRONT	VERT	TOTAL	---	C1
U	19-3-7	-1697	-1697	---	FRONT	VERT	TOTAL	---	C1
V	14-8-9	-897	-897	---	FRONT	VERT	TOTAL	---	C1
AD	4-1-7	-897	-897	---	FRONT	VERT	TOTAL	---	C1

CONNECTION REQUIREMENTS

1) **C1:** A SUITABLE HANGER/MECHANICAL CONNECTION IS REQUIRED.

DESIGN CRITERIA

*** SPECIAL LOADS ANALYSIS ***
GEOMETRY AND/OR BASIC LOADS CHANGED BY USER.
LOADS WERE DERIVED FROM USER INPUT
NO FURTHER MODIFICATIONS WERE MADE

SPECIFIED LOADS:

TOP CH.	LL	=	21.0	PSF
	DL	=	6.0	PSF
BOT CH.	LL	=	0.0	PSF
	DL	=	7.4	PSF
TOTAL LOAD		=	34.4	PSF

SPACING = 24.0 IN. C/C

LOADING IN FLAT SECTION BASED ON A SLOPE OF 2.00/12 MINIMUM

GIRDER TYPE: CPrimeHip
SIDE SETBACK = 2-4-5
END SETBACK = 5-10-8
END WALL WIDTH = 0-0
CORNER FRAMING TYPE: CONVENTIONAL
END JACK TYPE: CONVENTIONAL
APPLIED TO FRONT SIDE
- ADDT'L LOADS BASED ON 55 % OF GSL.
LOADS APPLIED TO FIRST 4-1-7 OF SPAN MEASURED FROM THE LEFT.

*** NON STANDARD GIRDER ***
ADDT'L USER-DEFINED LOADS APPLIED TO ALL LOAD CASES.

THIS TRUSS IS DESIGNED FOR RESIDENTIAL OR SMALL BUILDING REQUIREMENTS OF PART 9, NBCC 2015

THIS DESIGN COMPLIES WITH:
- PART 9 OF BCBC 2018 , ABC 2019
- PART 9 OF OBC 2012 (2019 AMENDMENT)
- CSA 086-14
- TPIC 2014

(55 % OF 23.0 P.S.F. G.S.L. PLUS 8.4 P.S.F. RAIN LOAD) EQUALS 21.0 P.S.F. SPECIFIED ROOF LIVE LOAD

ALLOWABLE DEFL.(LL)= L/360 (1.36")
CALCULATED VERT. DEFL.(LL) = L/ 976 (0.50")
ALLOWABLE DEFL.(TL)= L/360 (1.36")
CALCULATED VERT. DEFL.(TL) = L/ 542 (0.90")

CANTILEVER DEFLECTION:
ALLOWABLE DEFL.(LL)= L/120 (0.19")
CALCULATED VERT. DEFL.(LL) = L/ 999 (0.00")
ALLOWABLE DEFL.(TL)= L/120 (0.19")
CALCULATED VERT. DEFL.(TL) = L/ 999 (0.00")

CSI: TC=0.64/1.00 (D-F:1) , BC=0.72/1.00 (U-W:1) , WB=0.98/1.00 (C-W:1) , SSI=0.60/1.00 (U-W:1)

DOL LUMBER=1.00 NAIL=1.00 LS BEND=1.00 COMP=1.00 SHEAR=1.00 TENS= 1.00

COMPANION LIVE LOAD FACTOR = 1.00

AUTOSOLVE HEELS OFF

TRUSS PLATE MANUFACTURER IS NOT RESPONSIBLE FOR QUALITY CONTROL IN THE TRUSS MANUFACTURING PLANT .

NAIL VALUES

PLATE	GRIP(DRY) (PSI) MAX	MIN	SHEAR (PLI) MAX	MIN	SECTION (PLI) MAX	MIN
MT20	650	371	1747	788	1987	1873
MII16	438	302	2547	1256	4283	1816

PLATE PLACEMENT TOL. = 0.250 inches

PLATE ROTATION TOL. = 5.0 Deg.

JSI GRIP= 0.90 (Q) (INPUT = 0.90)
JSI METAL= 1.00 (V) (INPUT = 1.00)

JOB NAME	TRUSS NAME	QUANTITY	PLY	JOB DESC.		DRWG NO.
343277	H01T		2	TRUSS DESC.	JT 45147	E22052376

Alpha Roof Truss, Maple

Version 8.530 S Feb 23 2022 MiTek Industries, Inc. Wed Jun 8 15:41:39 2022 Page 1

ID:9a plwcon izmXpuR1McGqzT9hG-TFkE0Awlg?C7ki8zQjVsxBKtDd25yldp6 4GMmz8JUA

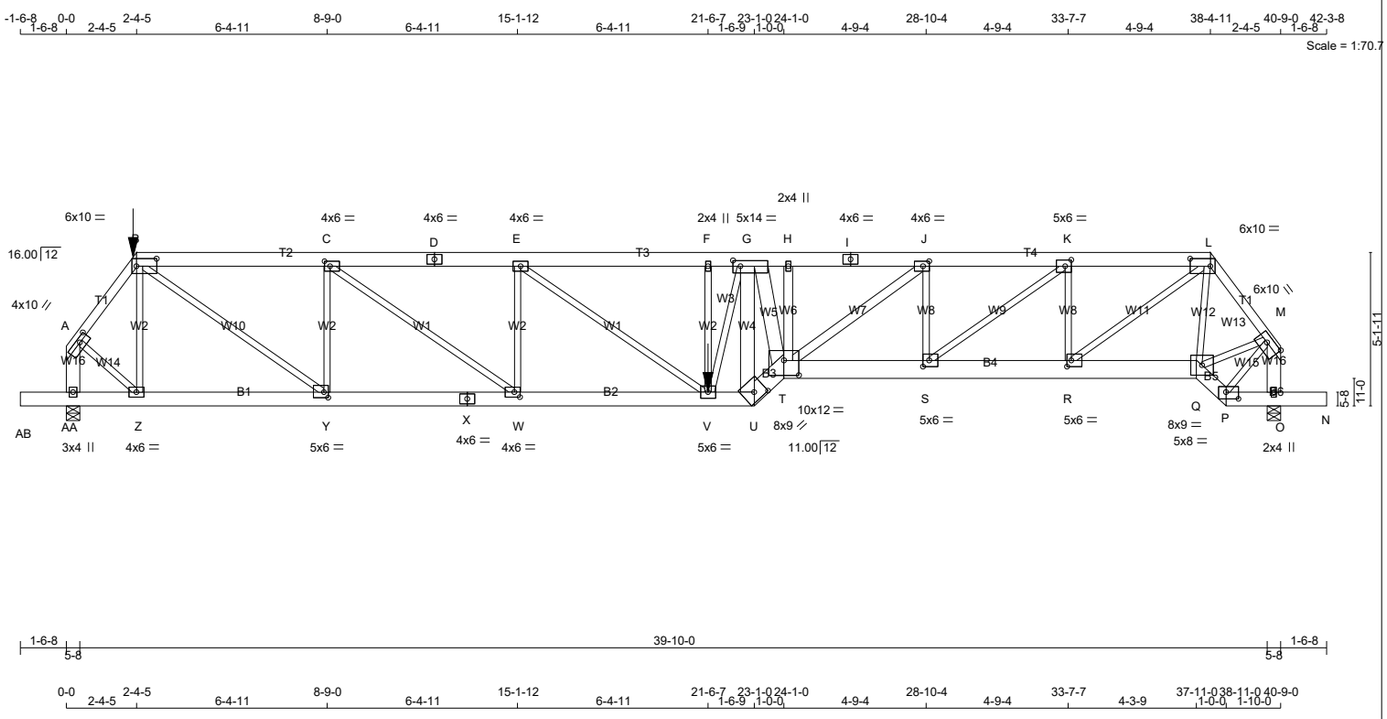

TOTAL WEIGHT = 2 X 252 = 505 lb

[M]

LUMBER

N. L. G. A. RULES

CHORDS	SIZE		LUMBER	DESCR.
A - B	2x4	DRY	No.2	SPF
B - D	2x6	DRY	No.2	SPF
D - I	2x6	DRY	No.2	SPF
I - L	2x6	DRY	No.2	SPF
L - M	2x4	DRY	No.2	SPF
AA- A	2x6	DRY	No.2	SPF
O - M	2x6	DRY	No.2	SPF
AB- X	2x6	DRY	No.2	SPF
X - U	2x6	DRY	No.2	SPF
U - T	2x8	DRY	No.2	SPF
T - Q	2x8	DRY	No.2	SPF
Q - P	2x6	DRY	No.2	SPF
P - N	2x6	DRY	No.2	SPF
ALL WEBS EXCEPT	2x3	DRY	No.2	SPF
U - G	2x6	DRY	No.2	SPF
G - T	2x6	DRY	No.2	SPF
T - H	2x4	DRY	No.2	SPF
T - J	2x4	DRY	No.2	SPF

DRY: SEASONED LUMBER.

DESIGN CONSISTS OF 2 TRUSSES BUILT SEPARATELY THEN FASTENED TOGETHER AS FOLLOWS:

CHORDS #ROWS		SURFACE SPACING (IN)	LOAD(PLF)
TOP CHORDS : (0.122"X3") SPIRAL NAILS			
A- B	1	12	SIDE(61.0)
L- M	1	12	TOP
B- D	2	12	SIDE(37.8)
D- I	2	12	SIDE(37.8)
I- L	2	12	TOP
AA- A	2	12	TOP
O- M	2	12	TOP
BOTTOM CHORDS : (0.122"X3") SPIRAL NAILS			
AB- X	2	12	SIDE(10.0)
X- U	2	12	SIDE(174.2)
Q- P	2	12	TOP
P- N	2	12	TOP
U- T	2	12	TOP
T- Q	2	12	TOP
WEBS : (0.122"X3") SPIRAL NAILS			
2x3	1	6	
F- V	1	6	SIDE(394.0)
2x4	1	6	
2x6	2	6	

NAILS TO BE DRIVEN FROM ONE SIDE ONLY.

GIRDER NAILING ASSUMES NAILED HANGERS ARE FASTENED WITH MIN. 3-0 INCH NAILS.

TOP - COMPONENTS ARE LOADED FROM THE TOP AND MUST BE PLACED ON TOP EDGE OF ALL PLIES FOR THE LOAD TO BE TRANSFERRED TO EACH PLY.

SIDE - PLF SHOWN IS THE EQUIVALENT UDL APPLIED TO ONE SIDE THAT THE CORRESPONDING NAILING PATTERN SHALL BE CAPABLE OF TRANSFERING. REMAINING PLF MUST BE APPLIED ON THE OPPOSITE SIDE OR ON THE TOP.

PLATES (table is in inches)

JT	TYPE	PLATES	W	LEN	Y	X
A	TMVW-t	MT20	4.0	10.0	1.50	4.00
B	TTWW-l	MT20	6.0	10.0	3.00	8.25
C	TMWW-t	MT20	4.0	6.0	2.00	2.25

LATERAL BRACE(S) SHOWN SHALL BE 2X4 SPF#2

DIMENSIONS, SUPPORTS AND LOADINGS SPECIFIED BY FABRICATOR TO BE VERIFIED BY BUILDING DESIGNER

BEARINGS

JT	FACTORED GROSS REACTION VERT	HORZ	MAXIMUM FACTORED GROSS REACTION DOWN	HORZ	UPLIFT	INPUT BRG IN-SX	REQRD BRG IN-SX
AA	4573	0	4573	0	0	5-8	2-7
O	3803	0	3803	0	0	5-8	2-0

UNFACTORED REACTIONS

JT	1ST LCASE COMBINED	SNOW	MAX./MIN. COMPONENT REACTIONS LIVE	PERM.LIVE	WIND	DEAD	SOIL
AA	3242	2079 / 0	0 / 0	0 / 0	0 / 0	1163 / 0	0 / 0
O	2690	1760 / 0	0 / 0	0 / 0	0 / 0	930 / 0	0 / 0

BEARING MATERIAL TO BE SPF NO.2 OR BETTER AT JOINT(S) AA, O

BRACING

TOP CHORD TO BE SHEATHED OR MAX. PURLIN SPACING = 3.13 FT.
MAX. UNBRACED BOTTOM CHORD LENGTH = 6.25 FT OR RIGID CEILING DIRECTLY APPLIED.

ALL PITCH BREAKS AND PERIMETER CORNER JOINTS MUST BE LATERALLY RESTRAINED.

LOADING

TOTAL LOAD CASES: (4)

CHORDS

MEMB. FR-TO	MAX. FACTORED FORCE (LBS)	FACTORED VERT. LOAD (PLF) FROM	TO	LC1	MAX CSI (LC)	MAX. UNBRAC LENGTH
A- B	-3739 / 0	-78.0	-78.0	0.09 (1)	4.82	
B- C	-6936 / 0	-153.5	-153.5	0.31 (1)	4.30	
C- D	-9936 / 0	-153.5	-153.5	0.42 (1)	3.60	
D- E	-9936 / 0	-153.5	-153.5	0.42 (1)	3.60	
E- F	-11142 / 0	-153.5	-153.5	0.45 (1)	3.41	
F- G	-11142 / 0	-78.0	-78.0	0.32 (1)	3.49	
G- H	-12932 / 0	-78.0	-78.0	0.44 (1)	3.14	
H- I	-12918 / 0	-78.0	-78.0	0.48 (1)	3.13	
I- J	-12918 / 0	-78.0	-78.0	0.48 (1)	3.13	
J- K	-9835 / 0	-78.0	-78.0	0.23 (1)	3.80	
K- L	-6362 / 0	-78.0	-78.0	0.14 (1)	4.64	
L- M	-3831 / 0	-78.0	-78.0	0.09 (1)	4.77	
AA- A	-4470 / 0	0.0	0.0	0.18 (1)	6.81	
O- M	-3574 / 0	0.0	0.0	0.14 (1)	7.42	
AB-AA	0 / 0	-96.5	-96.5	0.04 (1)	10.00	
AA- Z	0 / 0	-36.4	-36.4	0.08 (1)	10.00	
Z- Y	0 / 2216	-36.4	-36.4	0.23 (1)	10.00	
Y- X	0 / 6936	-36.4	-36.4	0.50 (1)	10.00	
X- W	0 / 6936	-36.4	-36.4	0.50 (1)	10.00	
W- V	0 / 9936	-36.4	-36.4	0.77 (1)	10.00	
V- U	0 / 10901	-18.5	-18.5	0.82 (1)	10.00	
U- T	0 / 14392	-18.5	-18.5	0.77 (1)	10.00	
T- S	0 / 9836	-18.5	-18.5	0.60 (1)	10.00	
S- R	0 / 6362	-18.5	-18.5	0.42 (1)	10.00	
R- Q	0 / 2246	-18.5	-18.5	0.14 (1)	10.00	
Q- P	-28 / 4	-18.5	-18.5	0.00 (4)	6.25	
P- O	-1 / 0	-18.5	-18.5	0.04 (1)	10.00	
O- N	0 / 0	-96.5	-96.5	0.04 (1)	10.00	

WEBS

MEMB. FR-TO	MAX. FACTORED FORCE (LBS)	MAX CSI (LC)
Z- B	-1098 / 0	0.19 (1)
B- Y	0 / 5848	0.72 (1)
Y- C	-3274 / 0	0.58 (1)
C- W	0 / 3719	0.46 (1)
W- E	-1886 / 0	0.33 (1)
E- V	0 / 1495	0.19 (1)
V- F	-431 / 0	0.08 (1)
V- G	0 / 1002	0.12 (1)
U- G	-9088 / 0	0.73 (1)
G- T	0 / 7856	0.51 (1)
T- H	0 / 364	0.03 (1)
T- J	0 / 3878	0.34 (1)
S- J	-2824 / 0	0.34 (1)
S- K	0 / 4392	0.54 (1)
R- K	-3072 / 0	0.36 (1)
R- L	0 / 5202	0.64 (1)
Q- L	-384 / 0	0.05 (1)
A- Z	0 / 2634	0.33 (1)
P- M	-27 / 4	0.00 (1)
Q- M	0 / 2356	0.29 (1)

FACTORED CONCENTRATED LOADS (LBS)

JT	LOC.	LC1	MAX-	MAX+	FACE	DIR.	TYPE	HEEL	CONN.
B	2-4-5	-134	-134	---	FRONT	VERT	TOTAL	---	C1
V	21-6-7	-2178	-2178	---	FRONT	VERT	TOTAL	---	C1

CONNECTION REQUIREMENTS

1) **C1:** A SUITABLE HANGER/MECHANICAL CONNECTION IS REQUIRED.

DESIGN CRITERIA

*** SPECIAL LOADS ANALYSIS ***
GEOMETRY AND/OR BASIC LOADS CHANGED BY USER.
LOADS WERE DERIVED FROM USER INPUT
NO FURTHER MODIFICATIONS WERE MADE

SPECIFIED LOADS:

TOP CH.	LL	=	21.0	PSF
	DL	=	6.0	PSF
BOT CH.	LL	=	0.0	PSF
	DL	=	7.4	PSF
TOTAL LOAD		=	34.4	PSF

SPACING = 24.0 IN. C/C

LOADING IN FLAT SECTION BASED ON A SLOPE OF 2.00/12 MINIMUM

GIRDER TYPE: CPrimeHip
SIDE SETBACK = 2-4-5
END SETBACK = 5-10-8
END WALL WIDTH = 0-0
CORNER FRAMING TYPE: CONVENTIONAL
END JACK TYPE: CONVENTIONAL
APPLIED TO FRONT SIDE
- ADDT'L LOADS BASED ON 55 % OF GSL.
LOADS APPLIED TO FIRST 21-6-7 OF SPAN MEASURED FROM THE LEFT.

*** NON STANDARD GIRDER ***
ADDT'L USER-DEFINED LOADS APPLIED TO ALL LOAD CASES.

THIS TRUSS IS DESIGNED FOR RESIDENTIAL OR SMALL BUILDING REQUIREMENTS OF PART 9, NBCC 2015

THIS DESIGN COMPLIES WITH:
- PART 9 OF BCBC 2018 , ABC 2019
- PART 9 OF OBC 2012 (2019 AMENDMENT)
- CSA 086-14
- TPIC 2014

DESIGN ASSUMPTIONS
-OVERHANG NOT TO BE ALTERED OR CUT OFF.

(55 % OF 23.0 P.S.F. G.S.L. PLUS 8.4 P.S.F. RAIN LOAD) EQUALS 21.0 P.S.F. SPECIFIED ROOF LIVE LOAD

ALLOWABLE DEFL.(LL)= L/360 (1.36")
CALCULATED VERT. DEFL.(LL) = L/ 999 (0.36")
ALLOWABLE DEFL.(TL)= L/360 (1.36")
CALCULATED VERT. DEFL.(TL) = L/ 743 (0.66")

CANTILEVER DEFLECTION:
ALLOWABLE DEFL.(LL)= L/120 (0.19")
CALCULATED VERT. DEFL.(LL) = L/ 574 (0.03")
ALLOWABLE DEFL.(TL)= L/120 (0.19")
CALCULATED VERT. DEFL.(TL) = L/ 313 (0.06")

CSI: TC=0.48/1.00 (H-J:1) , BC=0.82/1.00 (U-V:1) , WB=0.73/1.00 (G-U:1) , SSI=0.19/1.00 (B-C:1)

DOL LUMBER=1.00 NAIL=1.00 LS BEND=1.00 COMP=1.00 SHEAR=1.00 TENS= 1.00

COMPANION LIVE LOAD FACTOR = 1.00

AUTOSOLVE HEELS OFF

TRUSS PLATE MANUFACTURER IS NOT RESPONSIBLE FOR QUALITY CONTROL IN THE TRUSS MANUFACTURING PLANT .

NAIL VALUES

PLATE	GRIP(DRY) (PSI) MAX	MIN	SHEAR (PLI) MAX	MIN	SECTION (PLI) MAX	MIN
MT20	650	371	1747	788	1987	1873

PLATE PLACEMENT TOL. = 0.250 inches

PLATE ROTATION TOL. = 5.0 Deg.

JSI GRIP= 0.89 (Y) (INPUT = 0.90)
JSI METAL= 0.95 (U) (INPUT = 1.00)

CONTINUED ON PAGE 2

PLATES (table is in inches)

JT	TYPE	PLATES	W	LEN	Y	X
D	TS-t	MT20	4.0	6.0		
E	TMWW-t	MT20	4.0	6.0		
F	TMW+w	MT20	2.0	4.0		
G	TMWWW-t	MT20	5.0	14.0	2.25	3.00
H	TMW+w	MT20	2.0	4.0		
I	TS-t	MT20	4.0	6.0		
J	TMWW-t	MT20	4.0	6.0	2.00	2.50
K	TMWW-t	MT20	5.0	6.0	2.50	2.50
L	TTWW-l	MT20	6.0	10.0	3.00	8.25
M	TMVWW-t	MT20	6.0	10.0	Edge	5.75
O	BMV1+p	MT20	2.0	4.0		
P	BBW-l	MT20	5.0	8.0	2.75	5.00
Q	BBWW-l	MT20	8.0	9.0		
R	BMWW-t	MT20	5.0	6.0	2.50	1.75
S	BMWW-t	MT20	5.0	6.0	2.50	2.50
T	BBWWW-p	MT20	10.0	12.0	6.00	6.00
U	BBW-h	MT20	8.0	9.0	3.25	4.50
V	BMWWW-t	MT20	5.0	6.0		
W	BMWW-t	MT20	4.0	6.0	2.00	2.25
X	BS-t	MT20	4.0	6.0		
Y	BMWW-t	MT20	5.0	6.0	2.25	1.75
Z	BMWW-t	MT20	4.0	6.0		
AA	BMV1+p	MT20	3.0	4.0		

Edge - INDICATES REFERENCE CORNER OF PLATE TOUCHES EDGE OF CHORD.

LATERAL BRACE(S) SHOWN SHALL BE 2X4 SPF#2

JOB NAME	TRUSS NAME	QUANTITY	PLY	JOB DESC.		DRWG NO.
343277	H02		1	TRUSS DESC.	JT 45147	E22052377

Alpha Roof Truss, Maple

Version 8.530 S Feb 23 2022 MiTek Industries, Inc. Wed Jun 8 15:41:40 2022 Page 1

ID:9a plwcon izmXpuR1McGqzT9hG-xSIcDWwNRIK MsjA R15UPs1L1RjhC?yLeqquCz8JU9

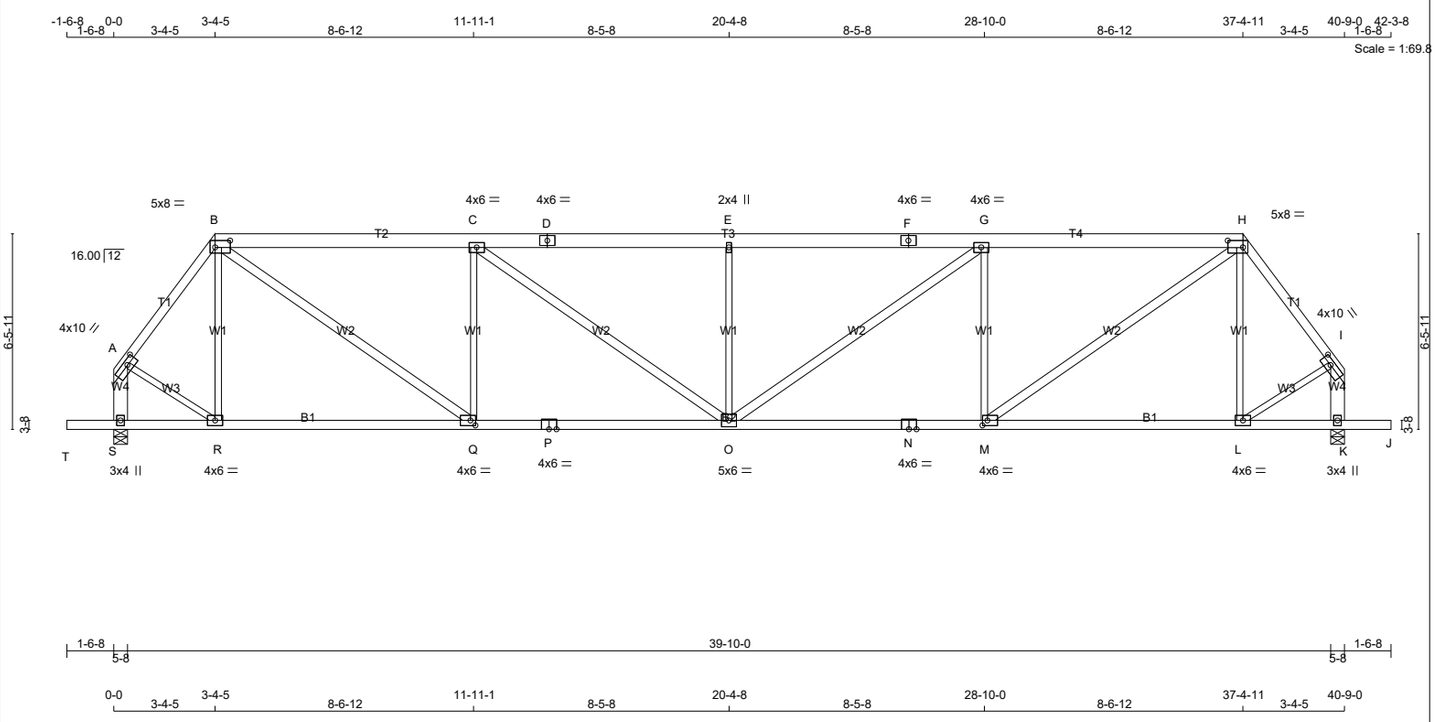

TOTAL WEIGHT = 206 lb

[M]

LUMBER

N. L. G. A. RULES

CHORDS	SIZE		LUMBER	DESCR.
A - B	2x4	DRY	No.2	SPF
B - D	2x6	DRY	No.2	SPF
D - F	2x6	DRY	No.2	SPF
F - H	2x6	DRY	No.2	SPF
H - I	2x4	DRY	No.2	SPF
S - A	2x6	DRY	No.2	SPF
K - I	2x6	DRY	No.2	SPF
T - P	2x4	DRY	No.2	SPF
P - N	2x4	DRY	No.2	SPF
N - J	2x4	DRY	No.2	SPF
ALL WEBS	2x3	DRY	No.2	SPF
EXCEPT				
B - Q	2x4	DRY	No.2	SPF
C - O	2x4	DRY	No.2	SPF
O - G	2x4	DRY	No.2	SPF
M - H	2x4	DRY	No.2	SPF

DRY: SEASONED LUMBER.

PLATES (table is in inches)

JT	TYPE	PLATES	W	LEN	Y	X
A	TMVW-t	MT20	4.0	10.0	1.75	4.00
B	TTWW-l	MT20	5.0	8.0	2.75	6.00
C	TMWW-t	MT20	4.0	6.0		
D	TS-t	MT20	4.0	6.0		
E	TMW+w	MT20	2.0	4.0		
F	TS-t	MT20	4.0	6.0		
G	TMWW-t	MT20	4.0	6.0		
H	TTWW-l	MT20	5.0	8.0	2.75	6.00
I	TMVW-t	MT20	4.0	10.0	1.75	4.00
K	BMV1+p	MT20	3.0	4.0		
L	BMWW-t	MT20	4.0	6.0		
M	BMWW-t	MT20	4.0	6.0	2.00	2.00
N	BS-t	MT20	4.0	6.0		
O	BMWWW-t	MT20	5.0	6.0		
P	BS-t	MT20	4.0	6.0		
Q	BMWW-t	MT20	4.0	6.0	2.00	2.00
R	BMWW-t	MT20	4.0	6.0		
S	BMV1+p	MT20	3.0	4.0		

LATERAL BRACE(S) SHOWN SHALL BE 2X4 SPF#2

DIMENSIONS, SUPPORTS AND LOADINGS SPECIFIED BY FABRICATOR TO BE VERIFIED BY BUILDING DESIGNER

BEARINGS

JT	FACTORED GROSS REACTION VERT	HORZ	MAXIMUM FACTORED GROSS REACTION DOWN	HORZ	UPLIFT	INPUT BRG IN-SX	REQRD BRG IN-SX
S	2114	0	2114	0	0	5-8	2-4
K	2114	0	2114	0	0	5-8	2-4

UNFACTORED REACTIONS

JT	1ST LCASE COMBINED	MAX./MIN. COMPONENT REACTIONS SNOW	LIVE	PERM.LIVE	WIND	DEAD	SOIL
S	1507	920 / 0	0 / 0	0 / 0	0 / 0	587 / 0	0 / 0
K	1507	920 / 0	0 / 0	0 / 0	0 / 0	587 / 0	0 / 0

BEARING MATERIAL TO BE SPF NO.2 OR BETTER AT JOINT(S) S, K

BRACING

TOP CHORD TO BE SHEATHED OR MAX. PURLIN SPACING = 4.16 FT.
MAX. UNBRACED BOTTOM CHORD LENGTH = 10.00 FT OR RIGID CEILING DIRECTLY APPLIED.

ALL PITCH BREAKS AND PERIMETER CORNER JOINTS MUST BE LATERALLY RESTRAINED.

LOADING

TOTAL LOAD CASES: (4)

CHORDS

MEMB. FR-TO	MAX. FACTORED FORCE (LBS)	FACTORED VERT. LOAD (PLF) FROM	TO	LC1	MAX CSI (LC)	MAX. UNBRAC LENGTH
A- B	-1695 / 0	-78.0	-78.0	0.21 (1)	4.92	
B- C	-2828 / 0	-78.0	-78.0	0.49 (1)	4.49	
C- D	-3359 / 0	-78.0	-78.0	0.52 (1)	4.16	
D- E	-3359 / 0	-78.0	-78.0	0.52 (1)	4.16	
E- F	-3359 / 0	-78.0	-78.0	0.52 (1)	4.16	
F- G	-3359 / 0	-78.0	-78.0	0.52 (1)	4.16	
G- H	-2828 / 0	-78.0	-78.0	0.49 (1)	4.49	
H- I	-1695 / 0	-78.0	-78.0	0.21 (1)	4.92	
S- A	-1959 / 0	0.0	0.0	0.15 (1)	7.19	
K- I	-1959 / 0	0.0	0.0	0.15 (1)	7.19	
T- S	0 / 0	-96.5	-96.5	0.16 (1)	10.00	
S- R	0 / 0	-18.5	-18.5	0.20 (4)	10.00	
R- Q	0 / 1010	-18.5	-18.5	0.37 (4)	10.00	
Q- P	0 / 2828	-18.5	-18.5	0.60 (1)	10.00	
P- O	0 / 2828	-18.5	-18.5	0.60 (1)	10.00	
O- N	0 / 2828	-18.5	-18.5	0.60 (1)	10.00	
N- M	0 / 2828	-18.5	-18.5	0.60 (1)	10.00	
M- L	0 / 1010	-18.5	-18.5	0.37 (4)	10.00	
L- K	0 / 0	-18.5	-18.5	0.20 (4)	10.00	
K- J	0 / 0	-96.5	-96.5	0.16 (1)	10.00	

WEBS

MEMB. FR-TO	MAX. FACTORED FORCE (LBS)	MAX CSI (LC)
R- B	-338 / 0	0.22 (1)
Q- C	-1134 / 0	0.72 (1)
C- O	0 / 655	0.11 (1)
O- E	-612 / 0	0.39 (1)
O- G	0 / 655	0.11 (1)
M- G	-1134 / 0	0.72 (1)
M- H	0 / 2231	0.36 (1)
L- H	-338 / 0	0.22 (1)
A- R	0 / 1120	0.25 (1)
L- I	0 / 1120	0.25 (1)

DESIGN CRITERIA

SPECIFIED LOADS:

TOP CH.	LL	=	21.0	PSF
	DL	=	6.0	PSF
BOT CH.	LL	=	0.0	PSF
	DL	=	7.4	PSF
TOTAL LOAD		=	34.4	PSF

SPACING = 24.0 IN. C/C

LOADING IN FLAT SECTION BASED ON A SLOPE OF 2.00/12 MINIMUM

THIS TRUSS IS DESIGNED FOR RESIDENTIAL OR SMALL BUILDING REQUIREMENTS OF PART 9, NBCC 2015

THIS DESIGN COMPLIES WITH:
- PART 9 OF BCBC 2018 , ABC 2019
- PART 9 OF OBC 2012 (2019 AMENDMENT)
- CSA 086-14
- TPIC 2014

(55 % OF 23.0 P.S.F. G.S.L. PLUS 8.4 P.S.F. RAIN LOAD) EQUALS 21.0 P.S.F. SPECIFIED ROOF LIVE LOAD

ALLOWABLE DEFL.(LL)= L/360 (1.36")
CALCULATED VERT. DEFL.(LL) = L/ 999 (0.16")
ALLOWABLE DEFL.(TL)= L/360 (1.36")
CALCULATED VERT. DEFL.(TL) = L/ 999 (0.34")

CANTILEVER DEFLECTION:
ALLOWABLE DEFL.(LL)= L/120 (0.19")
CALCULATED VERT. DEFL.(LL) = L/ 999 (0.01")
ALLOWABLE DEFL.(TL)= L/120 (0.19")
CALCULATED VERT. DEFL.(TL) = L/ 999 (0.01")

CSI: TC=0.52/1.00 (E-G:1) , BC=0.60/1.00 (O-Q:1) , WB=0.72/1.00 (C-Q:1) , SSI=0.24/1.00 (G-H:1)

DOL LUMBER=1.00 NAIL=1.00 LS BEND=1.10 COMP=1.10 SHEAR=1.10 TENS= 1.10

COMPANION LIVE LOAD FACTOR = 1.00

AUTOSOLVE HEELS OFF

TRUSS PLATE MANUFACTURER IS NOT RESPONSIBLE FOR QUALITY CONTROL IN THE TRUSS MANUFACTURING PLANT .

NAIL VALUES

PLATE	GRIP(DRY) (PSI) MAX	MIN	SHEAR (PLI) MAX	MIN	SECTION (PLI) MAX	MIN
MT20	650	371	1747	788	1987	1873

PLATE PLACEMENT TOL. = 0.250 inches

PLATE ROTATION TOL. = 5.0 Deg.

JSI GRIP= 0.89 (A) (INPUT = 0.90)
JSI METAL= 0.65 (P) (INPUT = 1.00)

JOB NAME	TRUSS NAME	QUANTITY	PLY	JOB DESC.	DRWG NO.
343277	H02T		1	TRUSS DESC. JT 45147	E22052378

Alpha Roof Truss, Maple

Version 8.530 S Feb 23 2022 MiTek Industries, Inc. Wed Jun 8 15:41:42 2022 Page 1

ID:9a plwcon izmXpuR1McGqzT9hG-tqQNeBydzwahbAtY5r3ZZqyKor6E95UFpyJxz5z8JU7

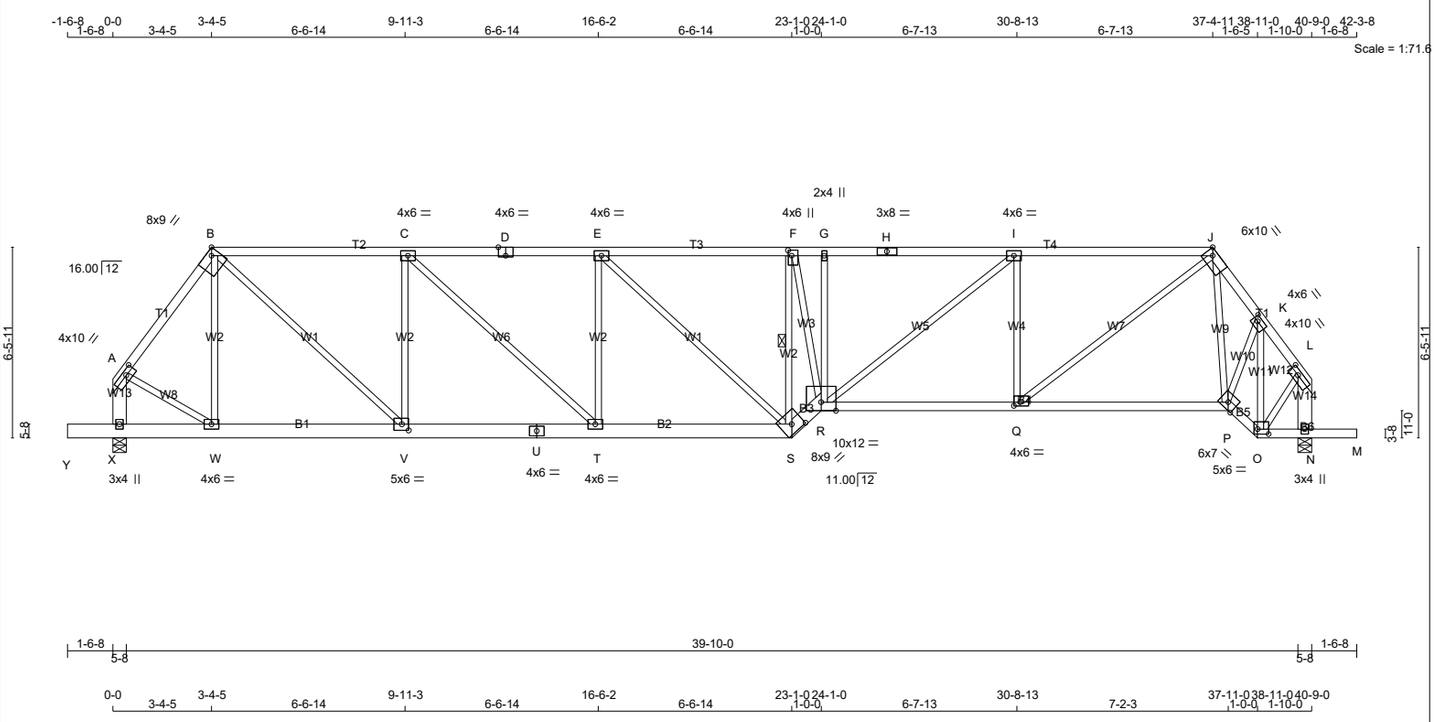

TOTAL WEIGHT = 206 lb

[M]

LUMBER

N. L. G. A. RULES

CHORDS	SIZE		LUMBER	DESCR.
A - B	2x4	DRY	No.2	SPF
B - D	2x4	DRY	1650F 1.5E	SPF
D - H	2x4	DRY	1650F 1.5E	SPF
H - J	2x4	DRY	1650F 1.5E	SPF
J - L	2x4	DRY	No.2	SPF
X - A	2x6	DRY	No.2	SPF
N - L	2x6	DRY	No.2	SPF
Y - U	2x6	DRY	No.2	SPF
U - S	2x6	DRY	No.2	SPF
S - R	2x6	DRY	No.2	SPF
R - P	2x4	DRY	No.2	SPF
P - O	2x4	DRY	No.2	SPF
O - M	2x4	DRY	No.2	SPF
ALL WEBS EXCEPT	2x3	DRY	No.2	SPF

DRY: SEASONED LUMBER.

PLATES (table is in inches)

JT	TYPE	PLATES	W	LEN	Y	X
A	TMVW-t	MT20	4.0	10.0	1.75	4.00
B	TTWW-h	MT20	8.0	9.0	Edge	2.75
C, E, I						
C	TMWW-t	MT20	4.0	6.0		
D	TS-t	MT20	4.0	6.0	Edge	3.00
F	TMWW+t	MT20	4.0	6.0	2.25	1.50
G	TMW+w	MT20	2.0	4.0		
H	TS-t	MT20	3.0	8.0		
J	TTWW-h	MT20	6.0	10.0	Edge	2.75
K	TMWW-t	MT20	4.0	6.0	1.75	2.00
L	TMVW-t	MT20	4.0	10.0	1.75	4.00
N	BMV1+p	MT20	3.0	4.0		
O	BBWW-l	MT20	5.0	6.0	2.00	4.50
P	BBWW-h	MT20	6.0	7.0	Edge	
Q	BMWW-t	MT20	4.0	6.0	1.50	2.50
R	BBWWW-p	MT20	10.0	12.0	Edge	
S	BBWW-h	MT20	8.0	9.0	3.25	4.50
T	BMWW-t	MT20	4.0	6.0		
U	BS-t	MT20	4.0	6.0		
V	BMWW-t	MT20	5.0	6.0	2.50	2.75
W	BMWW-t	MT20	4.0	6.0		
X	BMV1+p	MT20	3.0	4.0		

Edge - INDICATES REFERENCE CORNER OF PLATE TOUCHES EDGE OF CHORD.

LATERAL BRACE(S) SHOWN SHALL BE 2X4 SPF#2

LICENSED PROFESSIONAL ENGINEER
V. WIDYA
100225448
06/08/2022
PROVINCE OF ONTARIO

DIMENSIONS, SUPPORTS AND LOADINGS SPECIFIED BY FABRICATOR TO BE VERIFIED BY BUILDING DESIGNER

BEARINGS

JT	FACTORED GROSS REACTION VERT	HORZ	MAXIMUM FACTORED GROSS REACTION DOWN	HORZ	UPLIFT	INPUT BRG IN-SX	REQRD BRG IN-SX
X	2111	0	2111	0	0	5-8	2-4
N	2117	0	2117	0	0	5-8	2-4

UNFACTORED REACTIONS

JT	1ST LCASE COMBINED	MAX./MIN. COMPONENT REACTIONS SNOW	LIVE	PERM.LIVE	WIND	DEAD	SOIL
X	1505	919 / 0	0 / 0	0 / 0	0 / 0	587 / 0	0 / 0
N	1509	921 / 0	0 / 0	0 / 0	0 / 0	588 / 0	0 / 0

BEARING MATERIAL TO BE SPF NO.2 OR BETTER AT JOINT(S) X, N

BRACING

TOP CHORD TO BE SHEATHED OR MAX. PURLIN SPACING = 3.57 FT.
MAX. UNBRACED BOTTOM CHORD LENGTH = 10.00 FT OR RIGID CEILING DIRECTLY APPLIED.

ALL PITCH BREAKS AND PERIMETER CORNER JOINTS MUST BE LATERALLY RESTRAINED.

1 LATERAL BRACE(S) AT 1/ 2 LENGTH OF F-S.

END VERTICAL(S) MUST BE SHEATHED OR HAVE BRACES AS INDICATED IN THE MAX. UNBRACED LENGTH COLUMN OF THE TABLE BELOW

LOADING

TOTAL LOAD CASES: (4)

CHORDS

MEMB. FR-TO	MAX. FACTORED FORCE (LBS)	FACTORED VERT. LOAD (PLF) FROM	TO	LC1	MAX CSI (LC)	MAX. UNBRAC LENGTH
A- B	-1711 / 0	-78.0	-78.0	0.21 (1)	4.90	
B- C	-2478 / 0	-78.0	-78.0	0.53 (1)	4.39	
C- D	-3207 / 0	-78.0	-78.0	0.60 (1)	3.92	
D- E	-3207 / 0	-78.0	-78.0	0.60 (1)	3.92	
E- F	-3277 / 0	-78.0	-78.0	0.50 (1)	4.02	
F- G	-3744 / 0	-78.0	-78.0	0.38 (1)	3.78	
G- H	-3746 / 0	-78.0	-78.0	0.71 (1)	3.57	
H- I	-3746 / 0	-78.0	-78.0	0.71 (1)	3.57	
I- J	-2893 / 0	-78.0	-78.0	0.62 (1)	4.03	
J- K	-1913 / 0	-78.0	-78.0	0.07 (1)	4.83	
K- L	-1383 / 0	-78.0	-78.0	0.06 (1)	5.49	
X- A	-1953 / 0	0.0	0.0	0.15 (1)	7.20	
N- L	-1889 / 0	0.0	0.0	0.15 (1)	7.29	
Y- X	0 / 0	-96.5	-96.5	0.08 (1)	10.00	
X- W	0 / 0	-18.5	-18.5	0.07 (4)	10.00	
W- V	0 / 1014	-18.5	-18.5	0.17 (1)	10.00	
V- U	0 / 2478	-18.5	-18.5	0.34 (1)	10.00	
U- T	0 / 2478	-18.5	-18.5	0.34 (1)	10.00	
T- S	0 / 3207	-18.5	-18.5	0.43 (1)	10.00	
S- R	0 / 4405	-18.5	-18.5	0.52 (1)	10.00	
R- Q	0 / 2894	-18.5	-18.5	0.60 (1)	10.00	
Q- P	0 / 1142	-18.5	-18.5	0.36 (4)	10.00	
P- O	0 / 1074	-18.5	-18.5	0.18 (1)	10.00	
O- N	0 / 0	-18.5	-18.5	0.16 (1)	10.00	
N- M	0 / 0	-96.5	-96.5	0.16 (1)	10.00	

WEBS

MEMB. FR-TO	FORCE (LBS)	MAX CSI (LC)
W- B	-327 / 0	0.21 (1)
B- V	0 / 1990	0.45 (1)
V- C	-1234 / 0	0.79 (1)
C- T	0 / 994	0.22 (1)
T- E	-569 / 0	0.36 (1)
E- S	0 / 95	0.02 (1)
S- F	-2881 / 0	0.75 (1)
F- R	0 / 2455	0.55 (1)
R- G	-88 / 0	0.04 (1)
R- I	0 / 1080	0.24 (1)
Q- I	-1257 / 0	0.59 (1)
Q- J	0 / 2226	0.50 (1)
J- P	-118 / 0	0.05 (1)
P- K	0 / 970	0.22 (1)
O- K	-1479 / 0	0.40 (1)
A- W	0 / 1113	0.25 (1)
O- L	0 / 1097	0.25 (1)

DESIGN CRITERIA

SPECIFIED LOADS:

TOP CH.	LL	=	21.0	PSF
	DL	=	6.0	PSF
BOT CH.	LL	=	0.0	PSF
	DL	=	7.4	PSF
TOTAL LOAD		=	34.4	PSF

SPACING = 24.0 IN. C/C

LOADING IN FLAT SECTION BASED ON A SLOPE OF 2.00/12 MINIMUM

THIS TRUSS IS DESIGNED FOR RESIDENTIAL OR SMALL BUILDING REQUIREMENTS OF PART 9, NBCC 2015

THIS DESIGN COMPLIES WITH:
- PART 9 OF BCBC 2018 , ABC 2019
- PART 9 OF OBC 2012 (2019 AMENDMENT)
- CSA 086-14
- TPIC 2014

DESIGN ASSUMPTIONS
-OVERHANG NOT TO BE ALTERED OR CUT OFF.

(55 % OF 23.0 P.S.F. G.S.L. PLUS 8.4 P.S.F. RAIN LOAD) EQUALS 21.0 P.S.F. SPECIFIED ROOF LIVE LOAD

ALLOWABLE DEFL.(LL)= L/360 (1.36")
CALCULATED VERT. DEFL.(LL) = L/ 999 (0.26")
ALLOWABLE DEFL.(TL)= L/360 (1.36")
CALCULATED VERT. DEFL.(TL) = L/ 963 (0.51")

CANTILEVER DEFLECTION:
ALLOWABLE DEFL.(LL)= L/120 (0.19")
CALCULATED VERT. DEFL.(LL) = L/ 999 (0.01")
ALLOWABLE DEFL.(TL)= L/120 (0.19")
CALCULATED VERT. DEFL.(TL) = L/ 915 (0.02")

CSI: TC=0.71/1.00 (G-I:1) , BC=0.60/1.00 (Q-R:1) , WB=0.79/1.00 (C-V:1) , SSI=0.25/1.00 (I-J:1)

DOL LUMBER=1.00 NAIL=1.00 LS BEND=1.10 COMP=1.10 SHEAR=1.10 TENS= 1.10

COMPANION LIVE LOAD FACTOR = 1.00

AUTOSOLVE HEELS OFF

TRUSS PLATE MANUFACTURER IS NOT RESPONSIBLE FOR QUALITY CONTROL IN THE TRUSS MANUFACTURING PLANT .

NAIL VALUES

PLATE	GRIP(DRY) (PSI) MAX	MIN	SHEAR (PLI) MAX	MIN	SECTION (PLI) MAX	MIN
MT20	650	371	1747	788	1987	1873

PLATE PLACEMENT TOL. = 0.250 inches

PLATE ROTATION TOL. = 5.0 Deg.

JSI GRIP= 0.90 (J) (INPUT = 0.90)
JSI METAL= 0.60 (U) (INPUT = 1.00)

JOB NAME	TRUSS NAME	QUANTITY	PLY	JOB DESC.		DRWG NO.
343277	H03		1	TRUSS DESC.	JT 45147	E22052379

Alpha Roof Truss, Maple

Version 8.530 S Feb 23 2022 MiTek Industries, Inc. Wed Jun 8 15:41:44 2022 Page 1

ID:9a plwcon izmXpuR1McGqzT9hG-pDX73t uVXqPrU0xDG51eF1d1eq5d14YGGo11zz8JU5

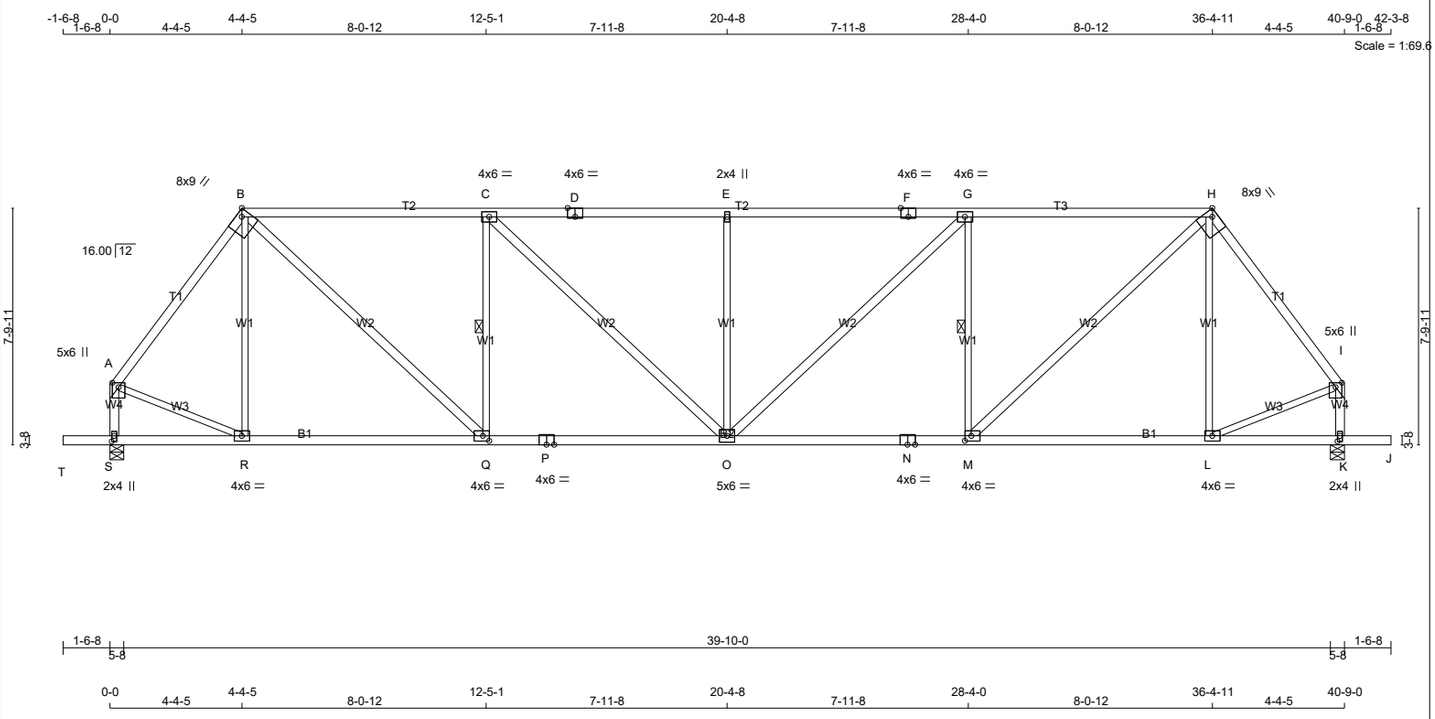

TOTAL WEIGHT = 192 lb

[M]

LUMBER

N. L. G. A. RULES

CHORDS	SIZE		LUMBER	DESCR.
A - B	2x4	DRY	No.2	SPF
B - D	2x4	DRY	1650F 1.5E	SPF
D - F	2x4	DRY	1650F 1.5E	SPF
F - H	2x4	DRY	1650F 1.5E	SPF
H - I	2x4	DRY	No.2	SPF
S - A	2x4	DRY	No.2	SPF
K - I	2x4	DRY	No.2	SPF
T - P	2x4	DRY	No.2	SPF
P - N	2x4	DRY	No.2	SPF
N - J	2x4	DRY	No.2	SPF
ALL WEBS EXCEPT	2x3	DRY	No.2	SPF
B - Q	2x4	DRY	No.2	SPF
C - O	2x4	DRY	No.2	SPF
O - G	2x4	DRY	No.2	SPF
M - H	2x4	DRY	No.2	SPF

DRY: SEASONED LUMBER.

PLATES (table is in inches)

JT	TYPE	PLATES	W	LEN	Y	X
A	TMVW+p	MT20	5.0	6.0	1.75	2.50
B	TTWW-h	MT20	8.0	9.0	Edge	2.75
C	TMWW-t	MT20	4.0	6.0		
D	TS-t	MT20	4.0	6.0	Edge	3.00
E	TMW+w	MT20	2.0	4.0		
F	TS-t	MT20	4.0	6.0	Edge	3.00
G	TMWW-t	MT20	4.0	6.0		
H	TTWW-h	MT20	8.0	9.0	Edge	2.75
I	TMVW+p	MT20	5.0	6.0	1.75	2.50
K	BMV1+p	MT20	2.0	4.0	2.25	1.00
L	BMWW-t	MT20	4.0	6.0		
M	BMWW-t	MT20	4.0	6.0	2.00	2.50
N	BS-t	MT20	4.0	6.0		
O	BMWWW-t	MT20	5.0	6.0		
P	BS-t	MT20	4.0	6.0		
Q	BMWW-t	MT20	4.0	6.0	2.00	2.50
R	BMWW-t	MT20	4.0	6.0		
S	BMV1+p	MT20	2.0	4.0	2.25	1.00

Edge - INDICATES REFERENCE CORNER OF PLATE TOUCHES EDGE OF CHORD.

LATERAL BRACE(S) SHOWN SHALL BE 2X4 SPF#2

DIMENSIONS, SUPPORTS AND LOADINGS SPECIFIED BY FABRICATOR TO BE VERIFIED BY BUILDING DESIGNER

BEARINGS

JT	FACTORED GROSS REACTION VERT	HORZ	MAXIMUM FACTORED GROSS REACTION DOWN	HORZ	UPLIFT	INPUT BRG IN-SX	REQRD BRG IN-SX
S	2114	0	2114	0	0	5-8	3-3
K	2114	0	2114	0	0	5-8	3-3

UNFACTORED REACTIONS

JT	1ST LCASE COMBINED	MAX./MIN. COMPONENT REACTIONS SNOW	LIVE	PERM.LIVE	WIND	DEAD	SOIL
S	1507	920 / 0	0 / 0	0 / 0	0 / 0	587 / 0	0 / 0
K	1507	920 / 0	0 / 0	0 / 0	0 / 0	587 / 0	0 / 0

BEARING MATERIAL TO BE SPF NO.2 OR BETTER AT JOINT(S) S, K

BRACING

TOP CHORD TO BE SHEATHED OR MAX. PURLIN SPACING = 3.77 FT.
MAX. UNBRACED BOTTOM CHORD LENGTH = 10.00 FT OR RIGID CEILING DIRECTLY APPLIED.

ALL PITCH BREAKS AND PERIMETER CORNER JOINTS MUST BE LATERALLY RESTRAINED.

1 LATERAL BRACE(S) AT 1/ 2 LENGTH OF C-Q, G-M.

END VERTICAL(S) MUST BE SHEATHED OR HAVE BRACES AS INDICATED IN THE MAX. UNBRACED LENGTH COLUMN OF THE TABLE BELOW

LOADING

TOTAL LOAD CASES: (4)

CHORDS

MEMB. FR-TO	MAX. FACTORED FORCE (LBS)	FACTORED VERT. LOAD (PLF) FROM	TO	LC1 CSI (LC)	MAX UNBRAC LENGTH
A- B	-1742 / 0	-78.0	-78.0	0.38 (1)	4.72
B- C	-2341 / 0	-78.0	-78.0	0.87 (1)	4.04
C- D	-2721 / 0	-78.0	-78.0	0.92 (1)	3.77
D- E	-2721 / 0	-78.0	-78.0	0.92 (1)	3.77
E- F	-2721 / 0	-78.0	-78.0	0.92 (1)	3.77
F- G	-2721 / 0	-78.0	-78.0	0.92 (1)	3.77
G- H	-2341 / 0	-78.0	-78.0	0.87 (1)	4.04
H- I	-1742 / 0	-78.0	-78.0	0.38 (1)	4.72
S- A	-1941 / 0	0.0	0.0	0.22 (1)	6.04
K- I	-1941 / 0	0.0	0.0	0.22 (1)	6.04
T- S	0 / 0	-96.5	-96.5	0.16 (1)	10.00
S- R	0 / 0	-18.5	-18.5	0.18 (4)	10.00
R- Q	0 / 1036	-18.5	-18.5	0.34 (4)	10.00
Q- P	0 / 2342	-18.5	-18.5	0.51 (1)	10.00
P- O	0 / 2342	-18.5	-18.5	0.51 (1)	10.00
O- N	0 / 2342	-18.5	-18.5	0.51 (1)	10.00
N- M	0 / 2342	-18.5	-18.5	0.51 (1)	10.00
M- L	0 / 1036	-18.5	-18.5	0.34 (4)	10.00
L- K	0 / 0	-18.5	-18.5	0.18 (4)	10.00
K- J	0 / 0	-96.5	-96.5	0.16 (1)	10.00

WEBS

MEMB. FR-TO	MAX. FACTORED FORCE (LBS)	MAX CSI (LC)
R- B	-245 / 0	0.28 (1)
B- Q	0 / 1780	0.29 (1)
Q- C	-1058 / 0	0.41 (1)
C- O	0 / 521	0.08 (1)
O- E	-572 / 0	0.65 (1)
O- G	0 / 521	0.08 (1)
M- G	-1058 / 0	0.41 (1)
M- H	0 / 1780	0.29 (1)
L- H	-245 / 0	0.28 (1)
A- R	0 / 1105	0.25 (1)
L- I	0 / 1105	0.25 (1)

DESIGN CRITERIA

SPECIFIED LOADS:

TOP CH.	LL	=	21.0	PSF
	DL	=	6.0	PSF
BOT CH.	LL	=	0.0	PSF
	DL	=	7.4	PSF
TOTAL LOAD		=	34.4	PSF

SPACING = 24.0 IN. C/C

LOADING IN FLAT SECTION BASED ON A SLOPE OF 2.00/12 MINIMUM

THIS TRUSS IS DESIGNED FOR RESIDENTIAL OR SMALL BUILDING REQUIREMENTS OF PART 9, NBCC 2015

THIS DESIGN COMPLIES WITH:
- PART 9 OF BCBC 2018 , ABC 2019
- PART 9 OF OBC 2012 (2019 AMENDMENT)
- CSA 086-14
- TPIC 2014

(55 % OF 23.0 P.S.F. G.S.L. PLUS 8.4 P.S.F. RAIN LOAD) EQUALS 21.0 P.S.F. SPECIFIED ROOF LIVE LOAD

ALLOWABLE DEFL.(LL)= L/360 (1.36")
CALCULATED VERT. DEFL.(LL) = L/ 999 (0.14")
ALLOWABLE DEFL.(TL)= L/360 (1.36")
CALCULATED VERT. DEFL.(TL) = L/ 999 (0.29")

CANTILEVER DEFLECTION:
ALLOWABLE DEFL.(LL)= L/120 (0.19")
CALCULATED VERT. DEFL.(LL) = L/ 999 (0.01")
ALLOWABLE DEFL.(TL)= L/120 (0.19")
CALCULATED VERT. DEFL.(TL) = L/ 999 (0.01")

CSI: TC=0.92/1.00 (C-E:1) , BC=0.51/1.00 (O-Q:1) , WB=0.65/1.00 (E-O:1) , SSI=0.30/1.00 (G-H:1)

DOL LUMBER=1.00 NAIL=1.00 LS BEND=1.10 COMP=1.10 SHEAR=1.10 TENS= 1.10

COMPANION LIVE LOAD FACTOR = 1.00

TRUSS PLATE MANUFACTURER IS NOT RESPONSIBLE FOR QUALITY CONTROL IN THE TRUSS MANUFACTURING PLANT .

NAIL VALUES

PLATE	GRIP(DRY) (PSI) MAX	MIN	SHEAR (PLI) MAX	MIN	SECTION (PLI) MAX	MIN
MT20	650	371	1747	788	1987	1873

PLATE PLACEMENT TOL. = 0.250 inches

PLATE ROTATION TOL. = 5.0 Deg.

JSI GRIP= 0.87 (M) (INPUT = 0.90)
JSI METAL= 0.54 (I) (INPUT = 1.00)

JOB NAME	TRUSS NAME	QUANTITY	PLY	JOB DESC.	DRWG NO.
343277	H03T		1	TRUSS DESC. JT 45147	E22052380

Alpha Roof Truss, Maple

Version 8.530 S Feb 23 2022 MiTek Industries, Inc. Wed Jun 8 15:41:46 2022 Page 1

ID:9a plwcon izmXpuR1McGqzT9hG-mbftUZ?818474nAKKh8Vjq6?ISWA5tmrjaH86sz8JU3

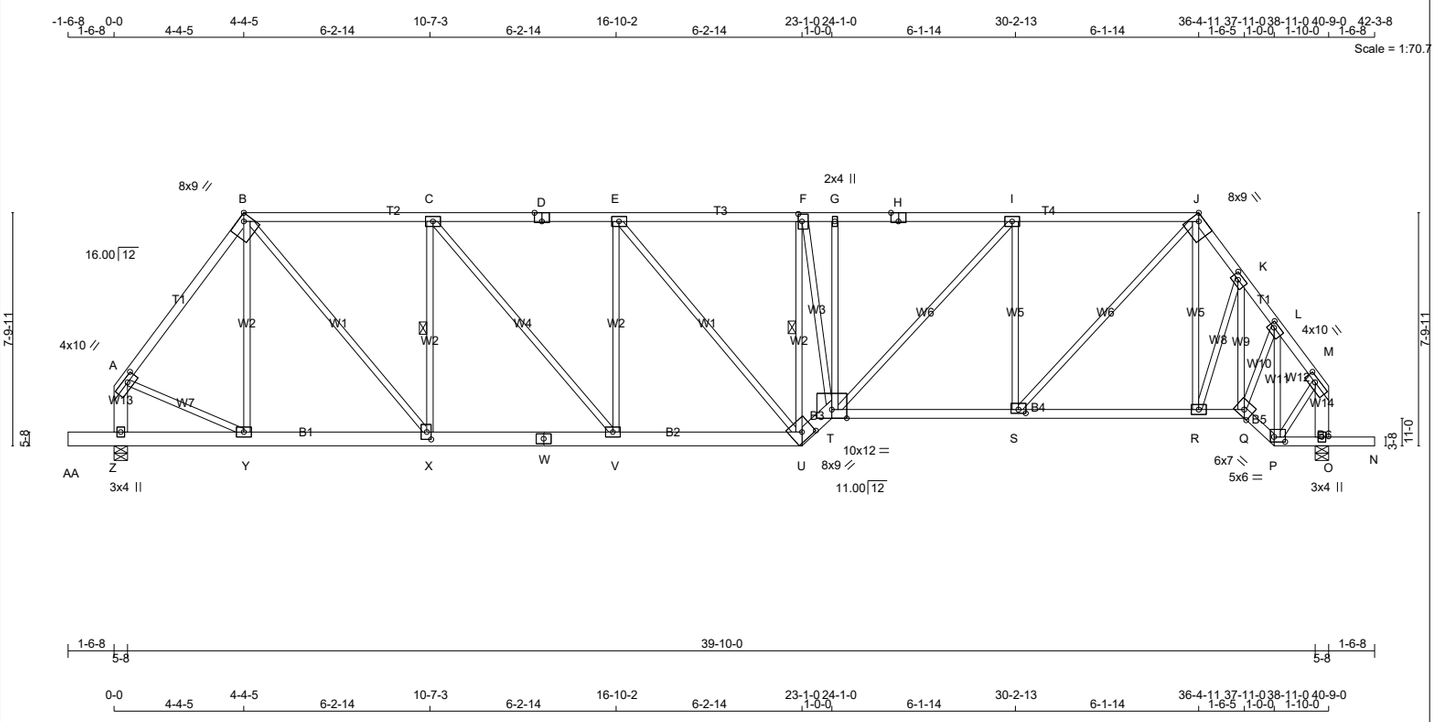

TOTAL WEIGHT = 227 lb [M]

LUMBER

N. L. G. A. RULES

CHORDS	SIZE		LUMBER	DESCR.
A - B	2x4	DRY	No.2	SPF
B - D	2x4	DRY	No.2	SPF
D - H	2x4	DRY	No.2	SPF
H - J	2x4	DRY	No.2	SPF
J - M	2x4	DRY	No.2	SPF
Z - A	2x6	DRY	No.2	SPF
O - M	2x6	DRY	No.2	SPF
AA- W	2x6	DRY	No.2	SPF
W - U	2x6	DRY	No.2	SPF
U - T	2x6	DRY	No.2	SPF
T - Q	2x4	DRY	No.2	SPF
Q - P	2x4	DRY	No.2	SPF
P - N	2x4	DRY	No.2	SPF
ALL WEBS EXCEPT	2x3	DRY	No.2	SPF

DRY: SEASONED LUMBER.

PLATES (table is in inches)

JT	TYPE	PLATES	W	LEN	Y	X
A	TMVW-t	MT20	4.0	10.0	1.75	4.00
B	TTWW-h	MT20	8.0	9.0	Edge	2.75
C, E, I						
C	TMWW-t	MT20	4.0	6.0		
D	TS-t	MT20	4.0	6.0	Edge	3.00
F	TMWW+t	MT20	4.0	6.0	3.00	1.50
G	TMW+w	MT20	2.0	4.0		
H	TS-t	MT20	4.0	6.0	Edge	3.00
J	TTWW-h	MT20	8.0	9.0	Edge	2.75
K	TMWW-t	MT20	4.0	6.0	2.00	2.50
L	TMWW-t	MT20	4.0	6.0	1.75	2.00
M	TMVW-t	MT20	4.0	10.0	1.75	4.00
O	BMV1+p	MT20	3.0	4.0		
P	BBWW-l	MT20	5.0	6.0	2.00	4.50
Q	BBWW-h	MT20	6.0	7.0	Edge	
R, V, Y						
R	BMWW-t	MT20	4.0	6.0		
S	BMWW-t	MT20	4.0	6.0	1.50	3.00
T	BBWWW-p	MT20	10.0	12.0	Edge	
U	BBWW-h	MT20	8.0	9.0	3.25	4.50
W	BS-t	MT20	4.0	6.0		
X	BMWW+t	MT20	4.0	6.0	3.00	1.75
Z	BMV1+p	MT20	3.0	4.0		

Edge - INDICATES REFERENCE CORNER OF PLATE TOUCHES EDGE OF CHORD.

LATERAL BRACE(S) SHOWN SHALL BE 2X4 SPF#2

DIMENSIONS, SUPPORTS AND LOADINGS SPECIFIED BY FABRICATOR TO BE VERIFIED BY BUILDING DESIGNER

BEARINGS

JT	FACTORED GROSS REACTION VERT	HORZ	MAXIMUM FACTORED GROSS REACTION DOWN	HORZ	UPLIFT	INPUT BRG IN-SX	REQRD BRG IN-SX
Z	2111	0	2111	0	0	5-8	2-4
O	2117	0	2117	0	0	5-8	2-4

UNFACTORED REACTIONS

JT	1ST LCASE COMBINED	MAX./MIN. COMPONENT REACTIONS SNOW	LIVE	PERM.LIVE	WIND	DEAD	SOIL
Z	1505	919 / 0	0 / 0	0 / 0	0 / 0	587 / 0	0 / 0
O	1509	921 / 0	0 / 0	0 / 0	0 / 0	588 / 0	0 / 0

BEARING MATERIAL TO BE SPF NO.2 OR BETTER AT JOINT(S) Z, O

BRACING

TOP CHORD TO BE SHEATHED OR MAX. PURLIN SPACING = 3.36 FT.
MAX. UNBRACED BOTTOM CHORD LENGTH = 10.00 FT OR RIGID CEILING DIRECTLY APPLIED.

ALL PITCH BREAKS AND PERIMETER CORNER JOINTS MUST BE LATERALLY RESTRAINED.

1 LATERAL BRACE(S) AT 1/ 2 LENGTH OF C-X, F-U.

END VERTICAL(S) MUST BE SHEATHED OR HAVE BRACES AS INDICATED IN THE MAX. UNBRACED LENGTH COLUMN OF THE TABLE BELOW

LOADING

TOTAL LOAD CASES: (4)

CHORDS

MEMB. FR-TO	MAX. FACTORED FORCE (LBS)	FACTORED VERT. LOAD (PLF) FROM	TO	LC1 CSI (LC)	MAX UNBRAC LENGTH
A- B	-1756 / 0	-78.0	-78.0	0.38 (1)	4.71
B- C	-2117 / 0	-78.0	-78.0	0.59 (1)	4.06
C- D	-2644 / 0	-78.0	-78.0	0.67 (1)	3.64
D- E	-2644 / 0	-78.0	-78.0	0.67 (1)	3.64
E- F	-2683 / 0	-78.0	-78.0	0.58 (1)	3.76
F- G	-2974 / 0	-78.0	-78.0	0.45 (1)	3.56
G- H	-2976 / 0	-78.0	-78.0	0.75 (1)	3.36
H- I	-2976 / 0	-78.0	-78.0	0.75 (1)	3.36
I- J	-2370 / 0	-78.0	-78.0	0.66 (1)	3.79
J- K	-1960 / 0	-78.0	-78.0	0.07 (1)	4.77
K- L	-1911 / 0	-78.0	-78.0	0.06 (1)	4.84
L- M	-1383 / 0	-78.0	-78.0	0.06 (1)	5.49
Z- A	-1936 / 0	0.0	0.0	0.14 (1)	7.23
O- M	-1889 / 0	0.0	0.0	0.15 (1)	7.29
AA- Z	0 / 0	-96.5	-96.5	0.08 (1)	10.00
Z- Y	0 / 0	-18.5	-18.5	0.06 (4)	10.00
Y- X	0 / 1044	-18.5	-18.5	0.17 (1)	10.00
X- W	0 / 2117	-18.5	-18.5	0.29 (1)	10.00
W- V	0 / 2117	-18.5	-18.5	0.29 (1)	10.00
V- U	0 / 2644	-18.5	-18.5	0.36 (1)	10.00
U- T	0 / 3601	-18.5	-18.5	0.43 (1)	10.00
T- S	0 / 2371	-18.5	-18.5	0.47 (1)	10.00
S- R	0 / 1161	-18.5	-18.5	0.28 (4)	10.00
R- Q	0 / 1144	-18.5	-18.5	0.25 (1)	10.00
Q- P	0 / 1074	-18.5	-18.5	0.18 (1)	10.00
P- O	0 / 0	-18.5	-18.5	0.16 (1)	10.00
O- N	0 / 0	-96.5	-96.5	0.16 (1)	10.00

WEBS

MEMB. FR-TO	MAX. FACTORED FORCE (LBS)	MAX CSI (LC)
Y- B	-241 / 0	0.26 (1)
B- X	0 / 1661	0.37 (1)
X- C	-1158 / 0	0.43 (1)
C- V	0 / 820	0.18 (1)
V- E	-525 / 0	0.56 (1)
E- U	0 / 60	0.01 (1)
U- F	-2339 / 0	0.86 (1)
F- T	0 / 1904	0.43 (1)
T- G	-67 / 4	0.05 (1)
T- I	0 / 881	0.20 (1)
S- I	-1193 / 0	0.96 (1)
S- J	0 / 1767	0.40 (1)
R- J	0 / 62	0.02 (4)
R- K	0 / 49	0.01 (4)
Q- K	-196 / 0	0.07 (1)
Q- L	0 / 999	0.22 (1)
P- L	-1480 / 0	0.40 (1)
A- Y	0 / 1107	0.25 (1)
P- M	0 / 1098	0.25 (1)

DESIGN CRITERIA

SPECIFIED LOADS:

TOP CH.	LL	=	21.0	PSF
	DL	=	6.0	PSF
BOT CH.	LL	=	0.0	PSF
	DL	=	7.4	PSF
TOTAL LOAD		=	34.4	PSF

SPACING = 24.0 IN. C/C

LOADING IN FLAT SECTION BASED ON A SLOPE OF 2.00/12 MINIMUM

THIS TRUSS IS DESIGNED FOR RESIDENTIAL OR SMALL BUILDING REQUIREMENTS OF PART 9, NBCC 2015

THIS DESIGN COMPLIES WITH:
- PART 9 OF BCBC 2018 , ABC 2019
- PART 9 OF OBC 2012 (2019 AMENDMENT)
- CSA 086-14
- TPIC 2014

DESIGN ASSUMPTIONS
-OVERHANG NOT TO BE ALTERED OR CUT OFF.

(55 % OF 23.0 P.S.F. G.S.L. PLUS 8.4 P.S.F. RAIN LOAD) EQUALS 21.0 P.S.F. SPECIFIED ROOF LIVE LOAD

ALLOWABLE DEFL.(LL)= L/360 (1.36")
CALCULATED VERT. DEFL.(LL) = L/ 999 (0.20")
ALLOWABLE DEFL.(TL)= L/360 (1.36")
CALCULATED VERT. DEFL.(TL) = L/ 999 (0.39")

CANTILEVER DEFLECTION:
ALLOWABLE DEFL.(LL)= L/120 (0.19")
CALCULATED VERT. DEFL.(LL) = L/ 999 (0.00")
ALLOWABLE DEFL.(TL)= L/120 (0.19")
CALCULATED VERT. DEFL.(TL) = L/ 999 (0.01")

CSI: TC=0.75/1.00 (G-I:1) , BC=0.47/1.00 (S-T:1) , WB=0.96/1.00 (I-S:1) , SSI=0.23/1.00 (I-J:1)

DOL LUMBER=1.00 NAIL=1.00 LS BEND=1.10 COMP=1.10 SHEAR=1.10 TENS= 1.10

COMPANION LIVE LOAD FACTOR = 1.00

AUTOSOLVE HEELS OFF

TRUSS PLATE MANUFACTURER IS NOT RESPONSIBLE FOR QUALITY CONTROL IN THE TRUSS MANUFACTURING PLANT .

NAIL VALUES

PLATE	GRIP(DRY) (PSI) MAX	MIN	SHEAR (PLI) MAX	MIN	SECTION (PLI) MAX	MIN
MT20	650	371	1747	788	1987	1873

PLATE PLACEMENT TOL. = 0.250 inches

PLATE ROTATION TOL. = 5.0 Deg.

JSI GRIP= 0.89 (F) (INPUT = 0.90)
JSI METAL= 0.52 (W) (INPUT = 1.00)

JOB NAME	TRUSS NAME	QUANTITY	PLY	JOB DESC.	DRWG NO.
343277	H04	.	1	TRUSS DESC. JT 45147	E22052381

Alpha Roof Truss, Maple

Version 8.530 S Feb 23 2022 MiTek Industries, Inc. Wed Jun 8 15:41:48 2022 Page 1

ID:9a plwcon izmXpuR1McGqzT9hG-i nevF1OZmKrK5KiS6Azp5CHzGC5Zto8BumFAlz8JU1

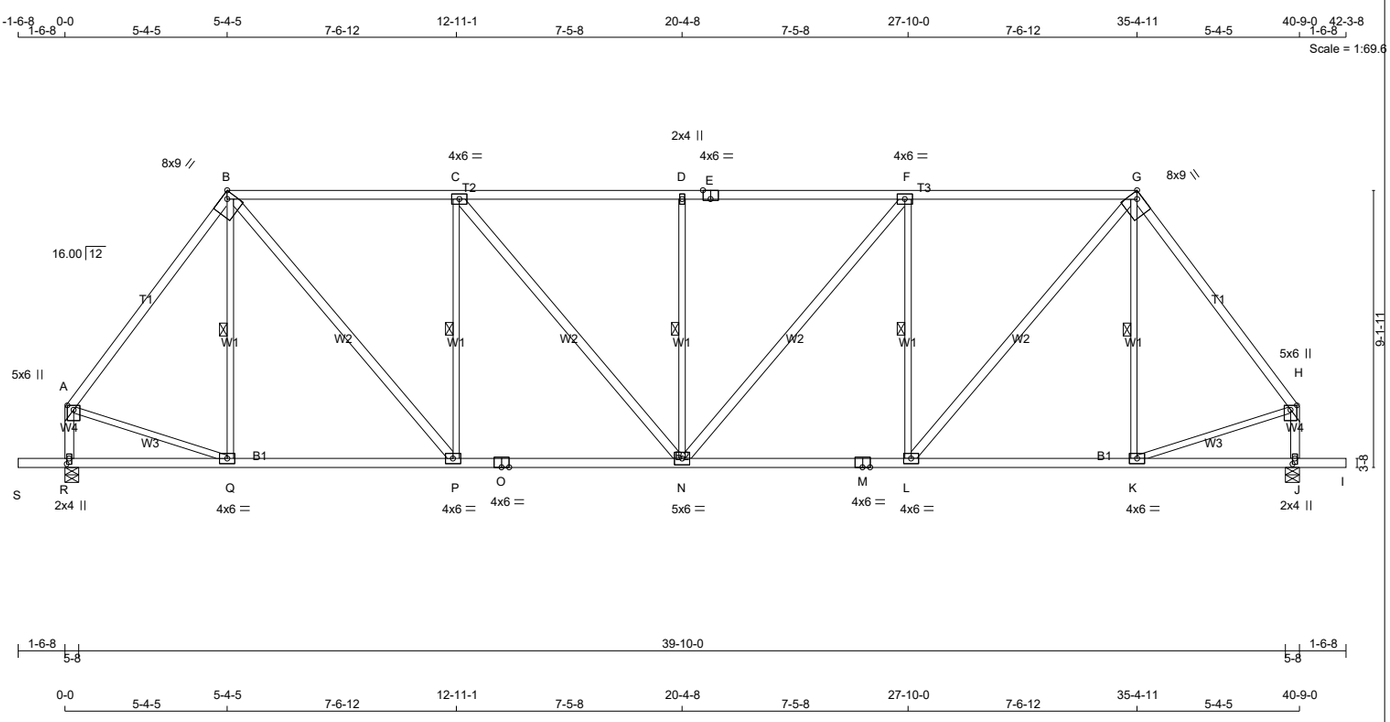

TOTAL WEIGHT = 2 X 204 = 408 lb

[M]

LUMBER

N. L. G. A. RULES

CHORDS	SIZE		LUMBER	DESCR.
A - B	2x4	DRY	No.2	SPF
B - E	2x4	DRY	No.2	SPF
E - G	2x4	DRY	No.2	SPF
G - H	2x4	DRY	No.2	SPF
R - A	2x4	DRY	No.2	SPF
J - H	2x4	DRY	No.2	SPF
S - O	2x4	DRY	No.2	SPF
O - M	2x4	DRY	No.2	SPF
M - I	2x4	DRY	No.2	SPF
ALL WEBS	2x3	DRY	No.2	SPF
EXCEPT				
B - P	2x4	DRY	No.2	SPF
C - N	2x4	DRY	No.2	SPF
N - F	2x4	DRY	No.2	SPF
L - G	2x4	DRY	No.2	SPF

DRY: SEASONED LUMBER.

PLATES (table is in inches)

JT	TYPE	PLATES	W	LEN	Y	X
A	TMVW+p	MT20	5.0	6.0	1.75	2.50
B	TTWW-h	MT20	8.0	9.0	Edge	2.75
C	TMWW-t	MT20	4.0	6.0		
D	TMW+w	MT20	2.0	4.0		
E	TS-t	MT20	4.0	6.0	Edge	3.00
F	TMWW-t	MT20	4.0	6.0		
G	TTWW-h	MT20	8.0	9.0	Edge	2.75
H	TMVW+p	MT20	5.0	6.0	1.75	2.50
J	BMV1+p	MT20	2.0	4.0	2.25	1.00
K, L, P, Q						
K	BMWW-t	MT20	4.0	6.0		
M	BS-t	MT20	4.0	6.0		
N	BMWWW-t	MT20	5.0	6.0		
O	BS-t	MT20	4.0	6.0		
R	BMV1+p	MT20	2.0	4.0	2.25	1.00

Edge - INDICATES REFERENCE CORNER OF PLATE TOUCHES EDGE OF CHORD.

LATERAL BRACE(S) SHOWN SHALL BE 2X4 SPF#2

DIMENSIONS, SUPPORTS AND LOADINGS SPECIFIED BY FABRICATOR TO BE VERIFIED BY BUILDING DESIGNER

BEARINGS

JT	FACTORED GROSS REACTION VERT	HORZ	MAXIMUM FACTORED GROSS REACTION DOWN	HORZ	UPLIFT	INPUT BRG IN-SX	REQRD BRG IN-SX
R	2114	0	2114	0	0	5-8	3-3
J	2114	0	2114	0	0	5-8	3-3

UNFACTORED REACTIONS

JT	1ST LCASE COMBINED	MAX./MIN. COMPONENT REACTIONS SNOW	LIVE	PERM.LIVE	WIND	DEAD	SOIL
R	1507	920 / 0	0 / 0	0 / 0	0 / 0	587 / 0	0 / 0
J	1507	920 / 0	0 / 0	0 / 0	0 / 0	587 / 0	0 / 0

BEARING MATERIAL TO BE SPF NO.2 OR BETTER AT JOINT(S) R, J

BRACING

TOP CHORD TO BE SHEATHED OR MAX. PURLIN SPACING = 3.41 FT.
MAX. UNBRACED BOTTOM CHORD LENGTH = 10.00 FT OR RIGID CEILING DIRECTLY APPLIED.

ALL PITCH BREAKS AND PERIMETER CORNER JOINTS MUST BE LATERALLY RESTRAINED.

1 LATERAL BRACE(S) AT 1/ 2 LENGTH OF B-Q, C-P, D-N, F-L, G-K.

END VERTICAL(S) MUST BE SHEATHED OR HAVE BRACES AS INDICATED IN THE MAX. UNBRACED LENGTH COLUMN OF THE TABLE BELOW

LOADING

TOTAL LOAD CASES: (4)

CHORDS

MEMB. FR-TO	MAX. FACTORED FORCE (LBS)	FACTORED VERT. LOAD (PLF) FROM	TO	LC1	MAX CSI (LC)	MAX. UNBRAC LENGTH
A- B	-1759 / 0	-78.0	-78.0	0.65 (1)		4.49
B- C	-2022 / 0	-78.0	-78.0	0.93 (1)		3.65
C- D	-2305 / 0	-78.0	-78.0	0.99 (1)		3.41
D- E	-2305 / 0	-78.0	-78.0	0.99 (1)		3.41
E- F	-2305 / 0	-78.0	-78.0	0.99 (1)		3.41
F- G	-2022 / 0	-78.0	-78.0	0.93 (1)		3.65
G- H	-1759 / 0	-78.0	-78.0	0.65 (1)		4.49
R- A	-1929 / 0	0.0	0.0	0.22 (1)		6.06
J- H	-1929 / 0	0.0	0.0	0.22 (1)		6.06
S- R	0 / 0	-96.5	-96.5	0.16 (1)		10.00
R- Q	0 / 0	-18.5	-18.5	0.18 (4)		10.00
Q- P	0 / 1049	-18.5	-18.5	0.31 (4)		10.00
P- O	0 / 2022	-18.5	-18.5	0.44 (1)		10.00
O- N	0 / 2022	-18.5	-18.5	0.44 (1)		10.00
N- M	0 / 2022	-18.5	-18.5	0.44 (1)		10.00
M- L	0 / 2022	-18.5	-18.5	0.44 (1)		10.00
L- K	0 / 1049	-18.5	-18.5	0.31 (4)		10.00
K- J	0 / 0	-18.5	-18.5	0.18 (4)		10.00
J- I	0 / 0	-96.5	-96.5	0.16 (1)		10.00

WEBS

MEMB. FR-TO	MAX. FACTORED FORCE (LBS)	MAX CSI (LC)
Q- B	-177 / 26	0.10 (1)
B- P	0 / 1494	0.24 (1)
P- C	-992 / 0	0.54 (1)
C- N	0 / 439	0.07 (1)
N- D	-536 / 0	0.29 (1)
N- F	0 / 439	0.07 (1)
L- F	-992 / 0	0.54 (1)
L- G	0 / 1494	0.24 (1)
K- G	-177 / 26	0.10 (1)
A- Q	0 / 1096	0.25 (1)
K- H	0 / 1096	0.25 (1)

DESIGN CRITERIA

SPECIFIED LOADS:

TOP CH.	LL	=	21.0	PSF
	DL	=	6.0	PSF
BOT CH.	LL	=	0.0	PSF
	DL	=	7.4	PSF
TOTAL LOAD		=	34.4	PSF

SPACING = 24.0 IN. C/C

LOADING IN FLAT SECTION BASED ON A SLOPE OF 2.00/12 MINIMUM

THIS TRUSS IS DESIGNED FOR RESIDENTIAL OR SMALL BUILDING REQUIREMENTS OF PART 9, NBCC 2015

THIS DESIGN COMPLIES WITH:
- PART 9 OF BCBC 2018 , ABC 2019
- PART 9 OF OBC 2012 (2019 AMENDMENT)
- CSA 086-14
- TPIC 2014

(55 % OF 23.0 P.S.F. G.S.L. PLUS 8.4 P.S.F. RAIN LOAD) EQUALS 21.0 P.S.F. SPECIFIED ROOF LIVE LOAD

ALLOWABLE DEFL.(LL)= L/360 (1.36")
CALCULATED VERT. DEFL.(LL) = L/ 999 (0.11")
ALLOWABLE DEFL.(TL)= L/360 (1.36")
CALCULATED VERT. DEFL.(TL) = L/ 999 (0.24")

CANTILEVER DEFLECTION:
ALLOWABLE DEFL.(LL)= L/120 (0.19")
CALCULATED VERT. DEFL.(LL) = L/ 999 (0.01")
ALLOWABLE DEFL.(TL)= L/120 (0.19")
CALCULATED VERT. DEFL.(TL) = L/ 999 (0.01")

CSI: TC=0.99/1.00 (C-D:1) , BC=0.44/1.00 (N-P:1) , WB=0.54/1.00 (C-P:1) , SSI=0.28/1.00 (B-C:1)

DOL LUMBER=1.00 NAIL=1.00 LS BEND=1.10 COMP=1.10 SHEAR=1.10 TENS= 1.10

COMPANION LIVE LOAD FACTOR = 1.00

TRUSS PLATE MANUFACTURER IS NOT RESPONSIBLE FOR QUALITY CONTROL IN THE TRUSS MANUFACTURING PLANT .

NAIL VALUES

PLATE	GRIP(DRY) (PSI) MAX	MIN	SHEAR (PLI) MAX	MIN	SECTION (PLI) MAX	MIN
MT20	650	371	1747	788	1987	1873

PLATE PLACEMENT TOL. = 0.250 inches

PLATE ROTATION TOL. = 5.0 Deg.

JSI GRIP= 0.90 (P) (INPUT = 0.90)
JSI METAL= 0.56 (A) (INPUT = 1.00)

JOB NAME	TRUSS NAME	QUANTITY	PLY	JOB DESC.		DRWG NO.
343277	H05		1	TRUSS DESC.	JT 45147	E22052382

Alpha Roof Truss, Maple

Version 8.530 S Feb 23 2022 MiTek Industries, Inc. Wed Jun 8 15:41:49 2022 Page 1

ID:9a plwcon izmXpuR1McGqzT9hG-AAL06b10J3SixFvv0phCLIkS9fYaIFRHQYVojBz8JU0

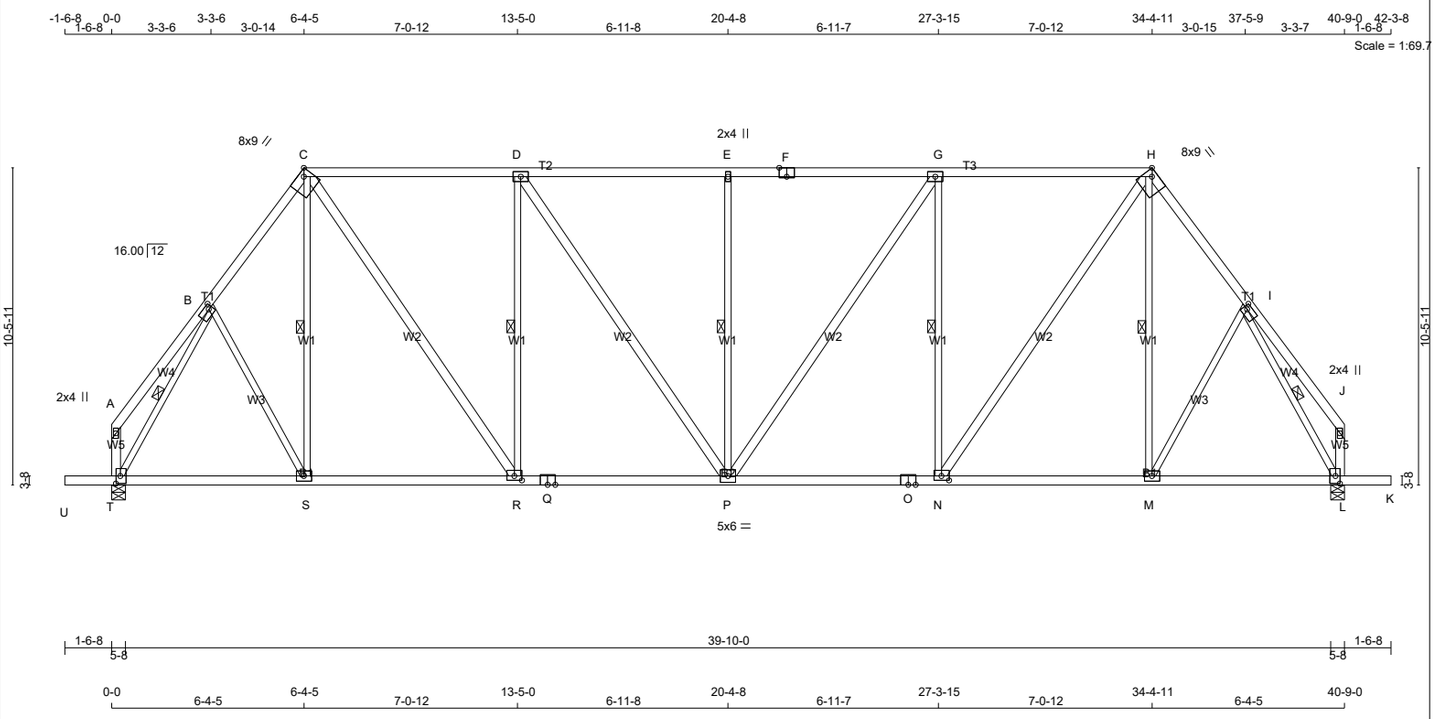

TOTAL WEIGHT = 16 X 226 = 3619 lb

[M]

LUMBER

N. L. G. A. RULES

CHORDS	SIZE		LUMBER	DESCR.
A - C	2x4	DRY	No.2	SPF
C - F	2x4	DRY	No.2	SPF
F - H	2x4	DRY	No.2	SPF
H - J	2x4	DRY	No.2	SPF
T - A	2x4	DRY	No.2	SPF
L - J	2x4	DRY	No.2	SPF
U - Q	2x4	DRY	No.2	SPF
Q - O	2x4	DRY	No.2	SPF
O - K	2x4	DRY	No.2	SPF
ALL WEBS	2x3	DRY	No.2	SPF
EXCEPT				
C - R	2x4	DRY	No.2	SPF
D - P	2x4	DRY	No.2	SPF
P - G	2x4	DRY	No.2	SPF
N - H	2x4	DRY	No.2	SPF

DRY: SEASONED LUMBER.

PLATES (table is in inches)

JT	TYPE	PLATES	W	LEN	Y	X
A	TMV+p	MT20	2.0	4.0		
B	TMWW-t	MT20	4.0	6.0	1.75	1.50
C	TTWW-h	MT20	8.0	9.0	Edge	2.75
D	TMWW-t	MT20	4.0	6.0		
E	TMW+w	MT20	2.0	4.0		
F	TS-t	MT20	4.0	6.0	Edge	3.00
G	TMWW-t	MT20	4.0	6.0		
H	TTWW-h	MT20	8.0	9.0	Edge	2.75
I	TMWW-t	MT20	4.0	6.0	1.75	1.50
J	TMV+p	MT20	2.0	4.0		
L	BMVW1+p	MT20	4.0	6.0	3.00	1.75
M	BMWW-t	MT20	4.0	6.0		
N	BMWW-t	MT20	4.0	6.0	1.75	3.00
O	BS-t	MT20	4.0	6.0		
P	BMWWW-t	MT20	5.0	6.0		
Q	BS-t	MT20	4.0	6.0		
R	BMWW-t	MT20	4.0	6.0	1.75	3.00
S	BMWW-t	MT20	4.0	6.0		
T	BMVW1+p	MT20	4.0	6.0	3.00	1.75

Edge - INDICATES REFERENCE CORNER OF PLATE TOUCHES EDGE OF CHORD.

LATERAL BRACE(S) SHOWN SHALL BE 2X4 SPF#2

LICENSED PROFESSIONAL ENGINEER
V. WIDYA
100225448
06/08/2022
PROVINCE OF ONTARIO

DIMENSIONS, SUPPORTS AND LOADINGS SPECIFIED BY FABRICATOR TO BE VERIFIED BY BUILDING DESIGNER

BEARINGS

JT	FACTORED GROSS REACTION VERT	HORZ	MAXIMUM FACTORED GROSS REACTION DOWN	HORZ	UPLIFT	INPUT BRG IN-SX	REQRD BRG IN-SX
T	2325	0	2325	0	0	5-8	2-7
L	2325	0	2325	0	0	5-8	2-7

UNFACTORED REACTIONS

JT	1ST LCASE COMBINED	MAX./MIN. COMPONENT REACTIONS SNOW	LIVE	PERM.LIVE	WIND	DEAD	SOIL
T	1676	920 / 0	0 / 0	0 / 0	0 / 0	756 / 0	0 / 0
L	1676	920 / 0	0 / 0	0 / 0	0 / 0	756 / 0	0 / 0

BEARING MATERIAL TO BE SPF NO.2 OR BETTER AT JOINT(S) T, L

BRACING

FOR SECTION C-H, MAX. PURLIN SPACING = 2.00 FT.
FOR OTHER SECTIONS, TOP CHORD TO BE SHEATHED OR MAX. PURLIN SPACING = 4.64 FT.
MAX. UNBRACED BOTTOM CHORD LENGTH = 10.00 FT OR RIGID CEILING DIRECTLY APPLIED.

ALL PITCH BREAKS AND PERIMETER CORNER JOINTS MUST BE LATERALLY RESTRAINED.

1 LATERAL BRACE(S) AT 1/ 2 LENGTH OF C-S, D-R, E-P, G-N, H-M, B-T, I-L.

END VERTICAL(S) MUST BE SHEATHED OR HAVE BRACES AS INDICATED IN THE MAX. UNBRACED LENGTH COLUMN OF THE TABLE BELOW

LOADING

TOTAL LOAD CASES: (4)

CHORDS

MEMB. FR-TO	MAX. FACTORED FORCE (LBS)	VERT. LOAD LC1 FROM (PLF)	TO	MAX CSI (LC)	MAX. UNBRAC LENGTH
A- B	0 / 20	-78.0	-78.0	0.11 (1)	10.00
B- C	-2002 / 0	-78.0	-78.0	0.18 (1)	4.64
C- D	-2032 / 0	-93.0	-93.0	0.92 (1)	2.00
D- E	-2279 / 0	-93.0	-93.0	0.96 (1)	2.00
E- F	-2279 / 0	-93.0	-93.0	0.96 (1)	2.00
F- G	-2279 / 0	-93.0	-93.0	0.96 (1)	2.00
G- H	-2032 / 0	-93.0	-93.0	0.92 (1)	2.00
H- I	-2002 / 0	-78.0	-78.0	0.18 (1)	4.64
I- J	0 / 20	-78.0	-78.0	0.11 (1)	10.00
T- A	-97 / 0	0.0	0.0	0.01 (1)	7.81
L- J	-97 / 0	0.0	0.0	0.01 (1)	7.81
U- T	0 / 0	-96.5	-96.5	0.16 (1)	10.00
T- S	0 / 1099	-18.5	-18.5	0.32 (4)	10.00
S- R	0 / 1181	-18.5	-18.5	0.33 (4)	10.00
R- Q	0 / 2032	-18.5	-18.5	0.43 (1)	10.00
Q- P	0 / 2032	-18.5	-18.5	0.43 (1)	10.00
P- O	0 / 2032	-18.5	-18.5	0.43 (1)	10.00
O- N	0 / 2032	-18.5	-18.5	0.43 (1)	10.00
N- M	0 / 1181	-18.5	-18.5	0.33 (4)	10.00
M- L	0 / 1099	-18.5	-18.5	0.32 (4)	10.00
L- K	0 / 0	-96.5	-96.5	0.16 (1)	10.00

WEBS

MEMB. FR-TO	MAX. FACTORED FORCE (LBS)	MAX CSI (LC)
B- S	0 / 165	0.04 (4)
S- C	-5 / 49	0.02 (4)
C- R	0 / 1489	0.24 (1)
R- D	-1092 / 0	0.84 (1)
D- P	0 / 437	0.07 (1)
P- E	-596 / 0	0.46 (1)
P- G	0 / 437	0.07 (1)
N- G	-1092 / 0	0.84 (1)
N- H	0 / 1489	0.24 (1)
M- H	-5 / 49	0.02 (4)
M- I	0 / 165	0.04 (4)
T- B	-2310 / 0	0.68 (1)
I- L	-2310 / 0	0.68 (1)

DESIGN CRITERIA

SPECIFIED LOADS:

TOP CH.	LL	=	21.0	PSF
	DL	=	6.0	PSF
BOT CH.	LL	=	0.0	PSF
	DL	=	7.4	PSF
TOTAL LOAD		=	34.4	PSF

SPACING = 24.0 IN. C/C

LOADING IN FLAT SECTION BASED ON PIGGYBACK TRUSS WITH SLOPES OF 6.00/12 AND -6.00/12 AND RESPECTIVE HEEL HEIGHTS OF 0-0 AND 0-0 AND AN ADDITIONAL DEAD LOAD OF 6.0 P.S.F.

THIS TRUSS IS DESIGNED FOR RESIDENTIAL OR SMALL BUILDING REQUIREMENTS OF PART 9, NBCC 2015

THIS DESIGN COMPLIES WITH:
- PART 9 OF BCBC 2018 , ABC 2019
- PART 9 OF OBC 2012 (2019 AMENDMENT)
- CSA 086-14
- TPIC 2014

(55 % OF 23.0 P.S.F. G.S.L. PLUS 8.4 P.S.F. RAIN LOAD) EQUALS 21.0 P.S.F. SPECIFIED ROOF LIVE LOAD

ALLOWABLE DEFL.(LL)= L/360 (1.36")
CALCULATED VERT. DEFL.(LL) = L/ 999 (0.10")
ALLOWABLE DEFL.(TL)= L/360 (1.36")
CALCULATED VERT. DEFL.(TL) = L/ 999 (0.23")

CANTILEVER DEFLECTION:
ALLOWABLE DEFL.(LL)= L/120 (0.19")
CALCULATED VERT. DEFL.(LL) = L/ 999 (0.01")
ALLOWABLE DEFL.(TL)= L/120 (0.19")
CALCULATED VERT. DEFL.(TL) = L/ 999 (0.01")

CSI: TC=0.96/1.00 (D-E:1) , BC=0.43/1.00 (P-R:1) , WB=0.84/1.00 (G-N:1) , SSI=0.31/1.00 (C-D:1)

DOL LUMBER=1.00 NAIL=1.00 LS BEND=1.10 COMP=1.10 SHEAR=1.10 TENS= 1.10

COMPANION LIVE LOAD FACTOR = 1.00

TRUSS PLATE MANUFACTURER IS NOT RESPONSIBLE FOR QUALITY CONTROL IN THE TRUSS MANUFACTURING PLANT .

NAIL VALUES

PLATE	GRIP(DRY) (PSI) MAX	MIN	SHEAR (PLI) MAX	MIN	SECTION (PLI) MAX	MIN
MT20	650	371	1747	788	1987	1873

PLATE PLACEMENT TOL. = 0.250 inches

PLATE ROTATION TOL. = 5.0 Deg.

JSI GRIP= 0.89 (B) (INPUT = 0.90)
JSI METAL= 0.53 (I) (INPUT = 1.00)

JOB NAME	TRUSS NAME	QUANTITY	PLY	JOB DESC.		DRWG NO.
343277	H06T		1	TRUSS DESC.	JT 45147	E22052383

Alpha Roof Truss, Maple

Version 8.530 S Feb 23 2022 MiTek Industries, Inc. Wed Jun 8 15:41:52 2022 Page 1

ID:9a plwcon izmXpuR1McGqzT9hG-al09kc4vc rHoidThyEvzxM8 tSLVjlk6WkSJWz8JTz

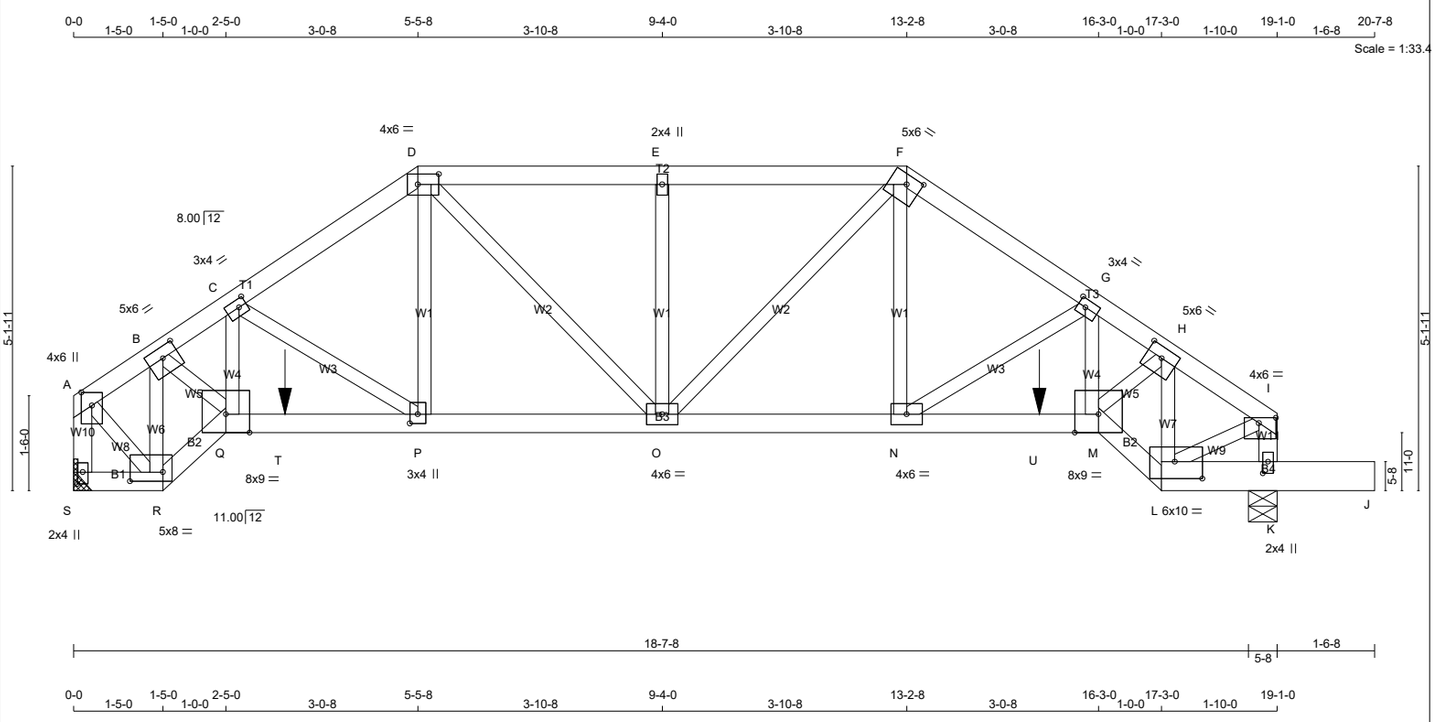

LUMBER

N. L. G. A. RULES

CHORDS	SIZE		LUMBER	DESCR.
A - D	2x4	DRY	No.2	SPF
D - F	2x4	DRY	No.2	SPF
F - I	2x4	DRY	No.2	SPF
S - A	2x4	DRY	No.2	SPF
K - I	2x4	DRY	No.2	SPF
S - R	2x4	DRY	No.2	SPF
R - Q	2x4	DRY	No.2	SPF
Q - M	2x4	DRY	No.2	SPF
M - L	2x4	DRY	No.2	SPF
L - J	2x6	DRY	No.2	SPF
ALL WEBS EXCEPT	2x3	DRY	No.2	SPF

DRY: SEASONED LUMBER.

PLATES (table is in inches)

JT	TYPE	PLATES	W	LEN	Y	X
A	TMVW+p	MT20	4.0	6.0	2.50	2.00
B	TMWW-t	MT20	5.0	6.0	2.00	3.00
C	TMWW-t	MT20	3.0	4.0	1.50	1.50
D	TTWW-l	MT20	4.0	6.0	2.00	4.00
E	TMW+w	MT20	2.0	4.0		
F	TTWW-h	MT20	5.0	6.0	1.75	2.75
G	TMWW-t	MT20	3.0	4.0	1.50	1.50
H	TMWW-t	MT20	5.0	6.0	2.00	3.00
I	TMVW-p	MT20	4.0	6.0	1.00	3.25
K	BMV1+p	MT20	2.0	4.0	2.25	1.00
L	BBWW-l	MT20	6.0	10.0	3.25	5.25
M	BBWW-l	MT20	8.0	9.0	Edge	
N	BMWW-t	MT20	4.0	6.0		
O	BMWWW-t	MT20	4.0	6.0		
P	BMWW+t	MT20	3.0	4.0	1.75	1.50
Q	BBWW-l	MT20	8.0	9.0	Edge	
R	BBWW-l	MT20	5.0	8.0	1.75	6.25
S	BMV1+p	MT20	2.0	4.0	2.25	1.00

Edge - INDICATES REFERENCE CORNER OF PLATE TOUCHES EDGE OF CHORD.

LATERAL BRACE(S) SHOWN SHALL BE 2X4 SPF#2

DIMENSIONS, SUPPORTS AND LOADINGS SPECIFIED BY FABRICATOR TO BE VERIFIED BY BUILDING DESIGNER

BEARINGS

JT	FACTORED GROSS REACTION VERT	HORZ	MAXIMUM FACTORED GROSS REACTION DOWN	HORZ	UPLIFT	INPUT BRG	REQRD BRG
S	1982	0	1982	0	0	MECHANICAL	
K	2105	0	2105	0	0	5-8	3-3

A SUITABLE HANGER/MECHANICAL CONNECTION IS REQUIRED AT JOINT S. MINIMUM BEARING LENGTH AT JOINT S = 2-15.

UNFACTORED REACTIONS

JT	1ST LCASE COMBINED	MAX./MIN. COMPONENT REACTIONS SNOW	LIVE	PERM.LIVE	WIND	DEAD	SOIL
S	1411	874 / 0	0 / 0	0 / 0	0 / 0	537 / 0	0 / 0
K	1499	924 / 0	0 / 0	0 / 0	0 / 0	576 / 0	0 / 0

BEARING MATERIAL TO BE SPF NO.2 OR BETTER AT JOINT(S) K

BRACING

TOP CHORD TO BE SHEATHED OR MAX. PURLIN SPACING = 3.73 FT.
MAX. UNBRACED BOTTOM CHORD LENGTH = 10.00 FT OR RIGID CEILING DIRECTLY APPLIED.

ALL PITCH BREAKS AND PERIMETER CORNER JOINTS MUST BE LATERALLY RESTRAINED.

LOADING

TOTAL LOAD CASES: (4)

CHORDS

MEMB. FR-TO	MAX. FACTORED FORCE (LBS)	FACTORED VERT. LOAD (PLF) FROM	TO	LC1 CSI (LC)	MAX UNBRAC LENGTH
A- B	-1534 / 0	-78.0	-78.0	0.12 (1)	5.17
B- C	-2865 / 0	-78.0	-78.0	0.19 (1)	3.92
C- D	-2527 / 0	-78.0	-78.0	0.20 (1)	4.14
D- E	-2497 / 0	-78.0	-78.0	0.28 (1)	4.06
E- F	-2497 / 0	-78.0	-78.0	0.28 (1)	4.06
F- G	-2610 / 0	-78.0	-78.0	0.21 (1)	4.07
G- H	-3205 / 0	-78.0	-78.0	0.19 (1)	3.73
H- I	-1907 / 0	-78.0	-78.0	0.13 (1)	4.73
S- A	-1956 / 0	0.0	0.0	0.22 (1)	5.97
K- I	-1860 / 0	0.0	0.0	0.21 (1)	6.10
S- R	0 / 0	-37.3	-37.3	0.02 (4)	10.00
R- Q	0 / 1562	-37.2	-37.2	0.28 (1)	10.00
Q- T	0 / 2407	-37.2	-37.2	0.89 (1)	10.00
T- P	0 / 2407	-112.0	-112.0	0.89 (1)	10.00
P- O	0 / 2115	-112.0	-112.0	0.69 (1)	10.00
O- N	0 / 2188	-112.0	-112.0	0.70 (1)	10.00
N- U	0 / 2666	-112.0	-112.0	0.93 (1)	10.00
U- M	0 / 2666	-37.2	-37.2	0.93 (1)	10.00
M- L	0 / 1952	-37.3	-37.3	0.35 (1)	10.00
L- K	0 / 0	-37.3	-37.3	0.08 (1)	10.00
K- J	0 / 0	-96.5	-96.5	0.08 (1)	10.00

WEBS

MEMB. FR-TO	MAX. FACTORED FORCE (LBS)	MAX CSI (LC)
R- B	-2036 / 0	0.34 (1)
R- Q	0 / 1795	0.44 (1)
Q- C	0 / 166	0.04 (1)
C- P	-371 / 0	0.09 (1)
P- D	0 / 785	0.19 (1)
D- O	0 / 543	0.13 (1)
O- E	-346 / 0	0.10 (1)
O- F	0 / 440	0.11 (1)
N- F	0 / 904	0.22 (1)
N- G	-596 / 0	0.15 (1)
M- G	0 / 444	0.11 (1)
M- H	0 / 1733	0.43 (1)
L- H	-2016 / 0	0.33 (1)
A- R	0 / 1620	0.40 (1)
L- I	0 / 1731	0.43 (1)

FACTORED CONCENTRATED LOADS (LBS)

JT	LOC.	LC1	MAX-	MAX+	FACE	DIR.	TYPE	HEEL	CONN.
T	3-4-4	-423	-423	---	FRONT	VERT	TOTAL	---	C1
U	15-3-12	-423	-423	---	FRONT	VERT	TOTAL	---	C1

CONNECTION REQUIREMENTS

1) **C1:** A SUITABLE HANGER/MECHANICAL CONNECTION IS REQUIRED.

[M]

DESIGN CRITERIA

*** SPECIAL LOADS ANALYSIS ***
GEOMETRY AND/OR BASIC LOADS CHANGED BY USER.
LOADS WERE DERIVED FROM USER INPUT
NO FURTHER MODIFICATIONS WERE MADE

SPECIFIED LOADS:

TOP CH.	LL	=	21.0	PSF
	DL	=	6.0	PSF
BOT CH.	LL	=	0.0	PSF
	DL	=	7.4	PSF
TOTAL LOAD		=	34.4	PSF

SPACING = 24.0 IN. C/C

LOADING IN FLAT SECTION BASED ON A SLOPE OF 2.00/12 MINIMUM

GIRDER TYPE: CStdGirder
START DISTANCE = 3-4-4
START SPAN CARRIED = 5-10-8
END DISTANCE = 15-3-12
END SPAN CARRIED = 5-10-8
END WALL WIDTH = 0-0
APPLIED TO FRONT SIDE OF BOTTOM CHORD.
- ADDT'L LOADS BASED ON 55 % OF GSL.

*** NON STANDARD GIRDER ***
ADDT'L USER-DEFINED LOADS APPLIED TO ALL LOAD CASES.

THIS TRUSS IS DESIGNED FOR RESIDENTIAL OR SMALL BUILDING REQUIREMENTS OF PART 9, NBCC 2015

THIS DESIGN COMPLIES WITH:
- PART 9 OF BCBC 2018 , ABC 2019
- PART 9 OF OBC 2012 (2019 AMENDMENT)
- CSA 086-14
- TPIC 2014

DESIGN ASSUMPTIONS
-OVERHANG NOT TO BE ALTERED OR CUT OFF.

(55 % OF 23.0 P.S.F. G.S.L. PLUS 8.4 P.S.F. RAIN LOAD) EQUALS 21.0 P.S.F. SPECIFIED ROOF LIVE LOAD

ALLOWABLE DEFL.(LL)= L/360 (0.64")
CALCULATED VERT. DEFL.(LL) = L/ 999 (0.08")
ALLOWABLE DEFL.(TL)= L/360 (0.64")
CALCULATED VERT. DEFL.(TL) = L/ 999 (0.16")

CANTILEVER DEFLECTION:
ALLOWABLE DEFL.(LL)= L/120 (0.19")
CALCULATED VERT. DEFL.(LL) = L/ 790 (0.02")
ALLOWABLE DEFL.(TL)= L/120 (0.19")
CALCULATED VERT. DEFL.(TL) = L/ 405 (0.05")

CSI: TC=0.28/1.00 (D-E:1) , BC=0.93/1.00 (M-N:1) , WB=0.44/1.00 (B-Q:1) , SSI=0.31/1.00 (P-Q:1)

DOL LUMBER=1.00 NAIL=1.00 LS BEND=1.00 COMP=1.00 SHEAR=1.00 TENS= 1.00

COMPANION LIVE LOAD FACTOR = 1.00

TRUSS PLATE MANUFACTURER IS NOT RESPONSIBLE FOR QUALITY CONTROL IN THE TRUSS MANUFACTURING PLANT .

NAIL VALUES

PLATE	GRIP(DRY) (PSI) MAX	MIN	SHEAR (PLI) MAX	MIN	SECTION (PLI) MAX	MIN
MT20	650	371	1747	788	1987	1873

PLATE PLACEMENT TOL. = 0.250 inches

PLATE ROTATION TOL. = 5.0 Deg.

JSI GRIP= 0.90 (P) (INPUT = 0.90)
JSI METAL= 0.72 (A) (INPUT = 1.00)

JOB NAME	TRUSS NAME	QUANTITY	PLY	JOB DESC.		DRWG NO.
343277	H07T		1	TRUSS DESC.	JT 45147	E22052384

Alpa Roof Truss, Maple

Version 8.530 S Feb 23 2022 MiTek Industries, Inc. Wed Jun 8 15:41:53 2022 Page 1

ID:9a plwcon izmXpuR1McGqzT9hG-2yaXyy5XNIz8QsCqFfm8W8vKbHx8EDwtKAT0ryz8JTy

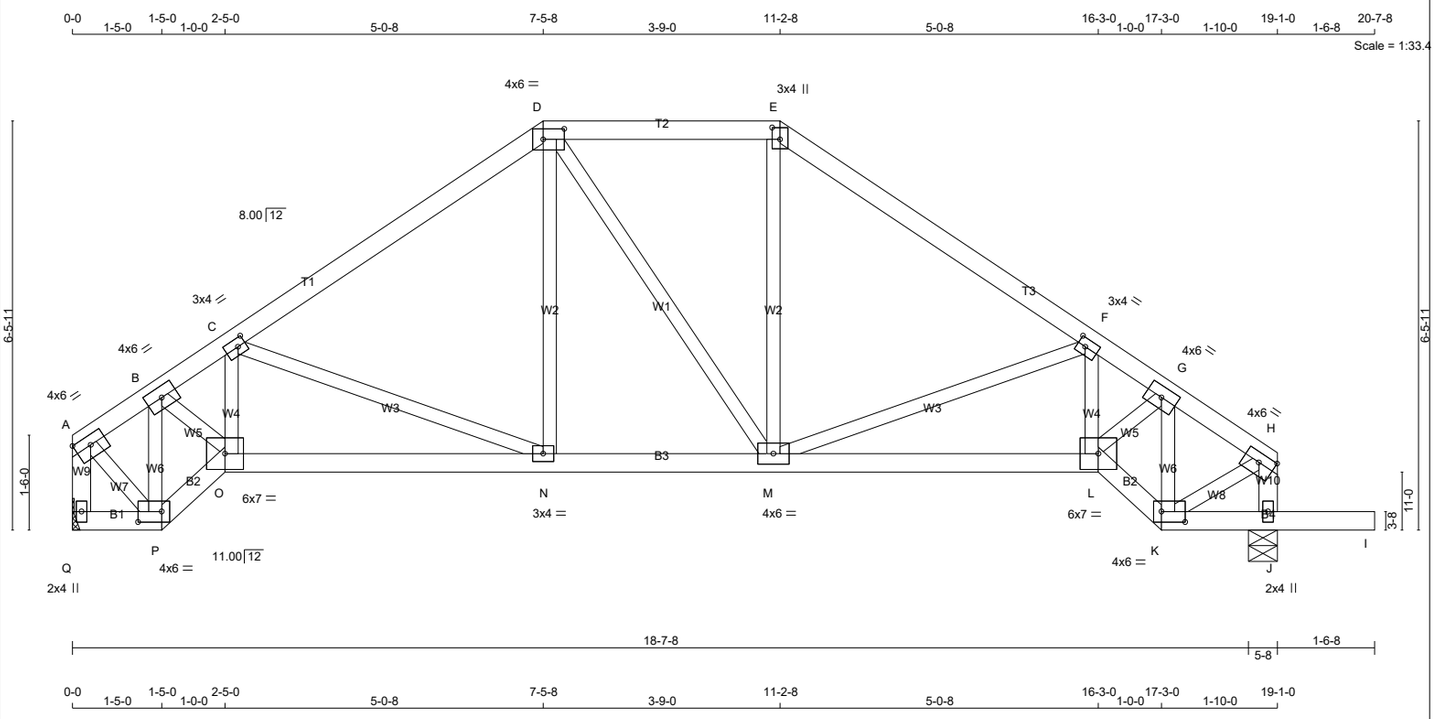

TOTAL WEIGHT = 84 lb

LUMBER

N. L. G. A. RULES

CHORDS	SIZE		LUMBER	DESCR.
A - D	2x4	DRY	No.2	SPF
D - E	2x4	DRY	No.2	SPF
E - H	2x4	DRY	No.2	SPF
Q - A	2x4	DRY	No.2	SPF
J - H	2x4	DRY	No.2	SPF
Q - P	2x4	DRY	No.2	SPF
P - O	2x4	DRY	No.2	SPF
O - L	2x4	DRY	No.2	SPF
L - K	2x4	DRY	No.2	SPF
K - I	2x4	DRY	No.2	SPF
ALL WEBS EXCEPT	2x3	DRY	No.2	SPF

DRY: SEASONED LUMBER.

PLATES (table is in inches)

JT	TYPE	PLATES	W	LEN	Y	X
A	TMVW-t	MT20	4.0	6.0	1.75	Edge
B	TMWW-t	MT20	4.0	6.0		
C	TMWW-t	MT20	3.0	4.0	1.50	1.50
D	TTWW-l	MT20	4.0	6.0	2.00	4.00
E	TTW+p	MT20	3.0	4.0	2.25	1.50
F	TMWW-t	MT20	3.0	4.0	1.50	1.50
G	TMWW-t	MT20	4.0	6.0		
H	TMVW-t	MT20	4.0	6.0	1.75	Edge
J	BMV1+p	MT20	2.0	4.0		
K	BBWW-l	MT20	4.0	6.0	2.00	4.50
L	BBWW-l	MT20	6.0	7.0		
M	BMWWW-t	MT20	4.0	6.0		
N	BMWW-t	MT20	3.0	4.0		
O	BBWW-l	MT20	6.0	7.0		
P	BBWW-l	MT20	4.0	6.0	2.00	4.50
Q	BMV1+p	MT20	2.0	4.0		

Edge - INDICATES REFERENCE CORNER OF PLATE TOUCHES EDGE OF CHORD.

LATERAL BRACE(S) SHOWN SHALL BE 2X4 SPF#2

DIMENSIONS, SUPPORTS AND LOADINGS SPECIFIED BY FABRICATOR TO BE VERIFIED BY BUILDING DESIGNER

BEARINGS

JT	FACTORED GROSS REACTION VERT	HORZ	MAXIMUM FACTORED GROSS REACTION DOWN	HORZ	UPLIFT	INPUT BRG	REQRD BRG
Q	914	0	914	0	0	MECHANICAL	
J	1075	0	1075	0	0	5-8	1-8

A SUITABLE HANGER/MECHANICAL CONNECTION IS REQUIRED AT JOINT Q. MINIMUM BEARING LENGTH AT JOINT Q = 1-8.

UNFACTORED REACTIONS

JT	1ST LCASE COMBINED	MAX./MIN. COMPONENT REACTIONS SNOW	LIVE	PERM.LIVE	WIND	DEAD	SOIL
Q	652	398 / 0	0 / 0	0 / 0	0 / 0	254 / 0	0 / 0
J	767	468 / 0	0 / 0	0 / 0	0 / 0	299 / 0	0 / 0

BEARING MATERIAL TO BE SPF NO.2 OR BETTER AT JOINT(S) J

BRACING

TOP CHORD TO BE SHEATHED OR MAX. PURLIN SPACING = 5.32 FT.
MAX. UNBRACED BOTTOM CHORD LENGTH = 10.00 FT OR RIGID CEILING DIRECTLY APPLIED.

ALL PITCH BREAKS AND PERIMETER CORNER JOINTS MUST BE LATERALLY RESTRAINED.

LOADING

TOTAL LOAD CASES: (4)

CHORDS

MEMB. FR-TO	MAX. FACTORED FORCE (LBS)	FACTORED VERT. LOAD (PLF) FROM	TO	LC1 CSI (LC)	MAX UNBRAC LENGTH
A- B	-679 / 0	-78.0	-78.0	0.07 (1)	6.25
B- C	-1247 / 0	-78.0	-78.0	0.20 (1)	5.54
C- D	-972 / 0	-78.0	-78.0	0.23 (1)	6.05
D- E	-806 / 0	-78.0	-78.0	0.15 (1)	6.25
E- F	-984 / 0	-78.0	-78.0	0.23 (1)	6.02
F- G	-1382 / 0	-78.0	-78.0	0.20 (1)	5.32
G- H	-808 / 0	-78.0	-78.0	0.07 (1)	6.25
Q- A	-901 / 0	0.0	0.0	0.09 (1)	7.81
J- H	-847 / 0	0.0	0.0	0.09 (1)	7.81
Q- P	0 / 0	-18.5	-18.5	0.01 (4)	10.00
P- O	0 / 680	-18.5	-18.5	0.11 (1)	10.00
O- N	0 / 1132	-18.5	-18.5	0.24 (1)	10.00
N- M	0 / 795	-18.5	-18.5	0.18 (1)	10.00
M- L	0 / 1230	-18.5	-18.5	0.26 (1)	10.00
L- K	0 / 834	-18.5	-18.5	0.14 (1)	10.00
K- J	0 / 0	-18.5	-18.5	0.12 (1)	10.00
J- I	0 / 0	-96.5	-96.5	0.16 (1)	10.00

WEBS

MEMB. FR-TO	MAX. FACTORED FORCE (LBS)	MAX CSI (LC)
P- B	-884 / 0	0.14 (1)
O- B	0 / 887	0.20 (1)
O- C	-114 / 12	0.02 (1)
C- N	-365 / 0	0.18 (1)
N- D	0 / 212	0.05 (1)
D- M	0 / 18	0.00 (1)
M- E	0 / 233	0.05 (1)
M- F	-460 / 0	0.23 (1)
L- F	0 / 54	0.02 (4)
L- G	0 / 874	0.20 (1)
K- G	-918 / 0	0.14 (1)
A- P	0 / 705	0.16 (1)
K- H	0 / 734	0.17 (1)

[M][F]

DESIGN CRITERIA

SPECIFIED LOADS:

TOP CH.	LL	=	21.0	PSF
	DL	=	6.0	PSF
BOT CH.	LL	=	0.0	PSF
	DL	=	7.4	PSF
TOTAL LOAD		=	34.4	PSF

SPACING = 24.0 IN. C/C

LOADING IN FLAT SECTION BASED ON A SLOPE OF 2.00/12 MINIMUM

THIS TRUSS IS DESIGNED FOR RESIDENTIAL OR SMALL BUILDING REQUIREMENTS OF PART 9, NBCC 2015

THIS DESIGN COMPLIES WITH:
- PART 9 OF BCBC 2018 , ABC 2019
- PART 9 OF OBC 2012 (2019 AMENDMENT)
- CSA 086-14
- TPIC 2014

DESIGN ASSUMPTIONS
-OVERHANG NOT TO BE ALTERED OR CUT OFF.

(55 % OF 23.0 P.S.F. G.S.L. PLUS 8.4 P.S.F. RAIN LOAD) EQUALS 21.0 P.S.F. SPECIFIED ROOF LIVE LOAD

ALLOWABLE DEFL.(LL)= L/360 (0.64")
CALCULATED VERT. DEFL.(LL) = L/ 999 (0.03")
ALLOWABLE DEFL.(TL)= L/360 (0.64")
CALCULATED VERT. DEFL.(TL) = L/ 999 (0.07")

CANTILEVER DEFLECTION:
ALLOWABLE DEFL.(LL)= L/120 (0.19")
CALCULATED VERT. DEFL.(LL) = L/ 999 (0.01")
ALLOWABLE DEFL.(TL)= L/120 (0.19")
CALCULATED VERT. DEFL.(TL) = L/ 999 (0.01")

CSI: TC=0.23/1.00 (E-F:1) , BC=0.26/1.00 (L-M:1) , WB=0.23/1.00 (F-M:1) , SSI=0.15/1.00 (B-C:1)

DOL LUMBER=1.00 NAIL=1.00 LS BEND=1.10 COMP=1.10 SHEAR=1.10 TENS= 1.10

COMPANION LIVE LOAD FACTOR = 1.00

TRUSS PLATE MANUFACTURER IS NOT RESPONSIBLE FOR QUALITY CONTROL IN THE TRUSS MANUFACTURING PLANT .

NAIL VALUES

PLATE	GRIP(DRY) (PSI) MAX	MIN	SHEAR (PLI) MAX	MIN	SECTION (PLI) MAX	MIN
MT20	650	371	1747	788	1987	1873

PLATE PLACEMENT TOL. = 0.250 inches

PLATE ROTATION TOL. = 5.0 Deg.

JSI GRIP= 0.88 (M) (INPUT = 0.90)
JSI METAL= 0.31 (P) (INPUT = 1.00)

JOB NAME	TRUSS NAME	QUANTITY	PLY	JOB DESC.	DRWG NO.
343277	H08T		1	TRUSS DESC. JT 45147	E22052385

Alpa Roof Truss, Maple

Version 8.530 S Feb 23 2022 MiTek Industries, Inc. Wed Jun 8 15:41:55 2022 Page 1

ID:9a plwcon izmXpuR1McGqzT9hG-?KiHNe6nvvDrfAM2M4ocbZ eK4bWi23AoUy7vrz8JTw

Scale = 1:45.2

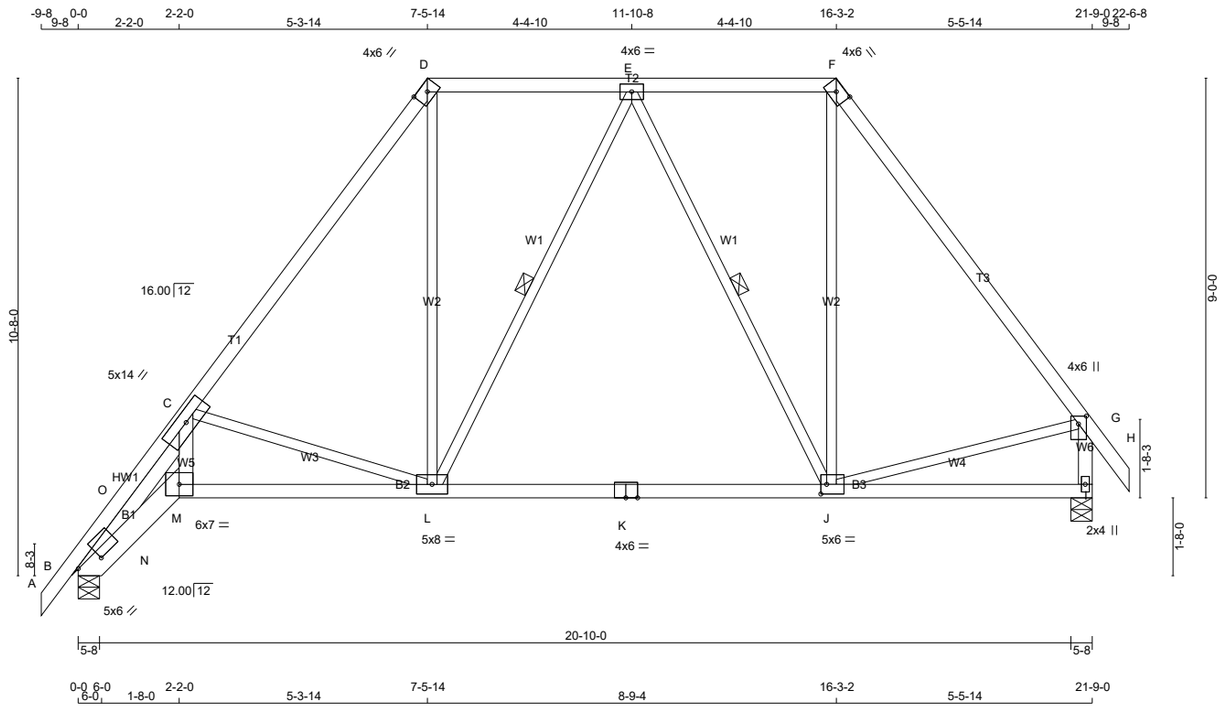

TOTAL WEIGHT = 4 X 112 = 447 lb

[M][F]

LUMBER

N. L. G. A. RULES

CHORDS	SIZE		LUMBER	DESCR.
A - D	2x4	DRY	No.2	SPF
D - F	2x4	DRY	No.2	SPF
F - H	2x4	DRY	No.2	SPF
I - G	2x4	DRY	No.2	SPF
B - M	2x6	DRY	No.2	SPF
M - K	2x4	DRY	No.2	SPF
K - I	2x4	DRY	No.2	SPF
REINFORCING MEMBERS				
HW1	2x4	DRY	No.2	SPF
ALL WEBS EXCEPT	2x3	DRY	No.2	SPF
M - C	2x4	DRY	No.2	SPF

DRY: SEASONED LUMBER.

PLATES (table is in inches)

JT	TYPE	PLATES	W	LEN	Y	X
B	TMBMW1-I	MT20	5.0	6.0	2.25	6.25
C	TMWWW-t	MT20	5.0	14.0		
D	TTW-h	MT20	4.0	6.0	2.00	3.25
E	TMWW-t	MT20	4.0	6.0		
F	TTW-h	MT20	4.0	6.0	2.00	3.00
G	TMVW+p	MT20	4.0	6.0	2.00	2.00
I	BMV1+p	MT20	2.0	4.0		
J	BMWWW-t	MT20	5.0	6.0	2.50	1.50
K	BS-t	MT20	4.0	6.0		
L	BMWWW-t	MT20	5.0	8.0		
M	BBW-I	MT20	6.0	7.0		

LATERAL BRACE(S) SHOWN SHALL BE 2X4 SPF#2

DIMENSIONS, SUPPORTS AND LOADINGS SPECIFIED BY FABRICATOR TO BE VERIFIED BY BUILDING DESIGNER

BEARINGS

JT	FACTORED GROSS REACTION VERT	HORZ	MAXIMUM FACTORED GROSS REACTION DOWN	HORZ	UPLIFT	INPUT BRG IN-SX	REQRD BRG IN-SX
I	1199	0	1199	0	0	5-8	1-8
B	1175	0	1175	0	0	5-8	1-8

UNFACTORED REACTIONS

JT	1ST LCASE COMBINED	MAX./MIN. COMPONENT REACTIONS SNOW	LIVE	PERM.LIVE	WIND	DEAD	SOIL
I	860	498 / 0	0 / 0	0 / 0	0 / 0	362 / 0	0 / 0
B	842	492 / 0	0 / 0	0 / 0	0 / 0	350 / 0	0 / 0

BEARING MATERIAL TO BE SPF NO.2 OR BETTER AT JOINT(S) I, B

BRACING

FOR SECTION D-F, MAX. PURLIN SPACING = 2.00 FT.
FOR OTHER SECTIONS, TOP CHORD TO BE SHEATHED OR MAX. PURLIN SPACING = 4.44 FT.
MAX. UNBRACED BOTTOM CHORD LENGTH = 10.00 FT OR RIGID CEILING DIRECTLY APPLIED.

ALL PITCH BREAKS AND PERIMETER CORNER JOINTS MUST BE LATERALLY RESTRAINED.

1 LATERAL BRACE(S) AT 1/ 2 LENGTH OF E-L, E-J.

END VERTICAL(S) MUST BE SHEATHED OR HAVE BRACES AS INDICATED IN THE MAX. UNBRACED LENGTH COLUMN OF THE TABLE BELOW

LOADING

TOTAL LOAD CASES: (4)

CHORDS

MEMB. FR-TO	MAX. FACTORED FORCE (LBS)	FACTORED VERT. LOAD (PLF) FROM	TO	LC1 CSI (LC)	MAX UNBRAC LENGTH
A- B	0 / 15	-78.0	-78.0	0.03 (1)	10.00
B- O	-2289 / 0	-78.0	-78.0	0.12 (1)	4.44
O- C	-1648 / 0	-78.0	-78.0	0.20 (1)	4.97
C- D	-1141 / 0	-78.0	-78.0	0.31 (1)	5.63
D- E	-672 / 0	-93.0	-93.0	0.23 (1)	2.00
E- F	-563 / 0	-93.0	-93.0	0.22 (1)	2.00
F- G	-936 / 0	-78.0	-78.0	0.34 (1)	6.00
G- H	0 / 28	-78.0	-78.0	0.05 (1)	10.00
I- G	-1165 / 0	0.0	0.0	0.13 (1)	7.39
B- N	0 / 1435	-18.5	-18.5	0.25 (1)	10.00
N- M	0 / 2487	-18.5	-18.5	0.37 (1)	10.00
M- L	0 / 1583	-18.5	-18.5	0.39 (4)	10.00
L- K	0 / 739	-18.5	-18.5	0.31 (4)	10.00
K- J	0 / 739	-18.5	-18.5	0.31 (4)	10.00
J- I	0 / 0	-18.5	-18.5	0.23 (4)	10.00

WEBS

MEMB. FR-TO	MAX. FACTORED FORCE (LBS)	MAX CSI (LC)
M- C	0 / 1821	0.29 (1)
C- L	-968 / 0	0.51 (1)
L- D	0 / 563	0.13 (1)
L- E	-150 / 0	0.10 (1)
E- J	-396 / 0	0.27 (1)
J- F	0 / 375	0.08 (1)
J- G	0 / 574	0.13 (1)
C- N	-1592 / 0	0.25 (1)
N- O	0 / 668	0.00 (1)

DESIGN CRITERIA

SPECIFIED LOADS:

TOP CH.	LL	=	21.0	PSF
	DL	=	6.0	PSF
BOT CH.	LL	=	0.0	PSF
	DL	=	7.4	PSF
TOTAL LOAD		=	34.4	PSF

SPACING = 24.0 IN. C/C

LOADING IN FLAT SECTION BASED ON PIGGYBACK TRUSS WITH SLOPES OF 6.00/12 AND -6.00/12 AND RESPECTIVE HEEL HEIGHTS OF 0-0 AND 0-0 AND AN ADDITIONAL DEAD LOAD OF 6.0 P.S.F.

THIS TRUSS IS DESIGNED FOR RESIDENTIAL OR SMALL BUILDING REQUIREMENTS OF PART 9, NBCC 2015

THIS DESIGN COMPLIES WITH:
- PART 9 OF BCBC 2018 , ABC 2019
- PART 9 OF OBC 2012 (2019 AMENDMENT)
- CSA 086-14
- TPIC 2014

(55 % OF 23.0 P.S.F. G.S.L. PLUS 8.4 P.S.F. RAIN LOAD) EQUALS 21.0 P.S.F. SPECIFIED ROOF LIVE LOAD

ALLOWABLE DEFL.(LL)= L/360 (0.73")
CALCULATED VERT. DEFL.(LL) = L/ 999 (0.04")
ALLOWABLE DEFL.(TL)= L/360 (0.73")
CALCULATED VERT. DEFL.(TL) = L/ 999 (0.15")

CSI: TC=0.34/1.00 (F-G:1) , BC=0.39/1.00 (L-M:4) , WB=0.51/1.00 (C-L:1) , SSI=0.20/1.00 (D-E:1)

DOL LUMBER=1.00 NAIL=1.00 LS BEND=1.10 COMP=1.10 SHEAR=1.10 TENS= 1.10

COMPANION LIVE LOAD FACTOR = 1.00

AUTOSOLVE LEFT HEEL ONLY

TRUSS PLATE MANUFACTURER IS NOT RESPONSIBLE FOR QUALITY CONTROL IN THE TRUSS MANUFACTURING PLANT .

NAIL VALUES

PLATE	GRIP(DRY) (PSI) MAX	MIN	SHEAR (PLI) MAX	MIN	SECTION (PLI) MAX	MIN
MT20	650	371	1747	788	1987	1873

PLATE PLACEMENT TOL. = 0.250 inches

PLATE ROTATION TOL. = 5.0 Deg.

JSI GRIP= 0.79 (J) (INPUT = 0.90)
JSI METAL= 0.56 (B) (INPUT = 1.00)

JOB NAME	TRUSS NAME	QUANTITY	PLY	JOB DESC.	DRWG NO.
343277	H09	.	1	TRUSS DESC. JT 45147	E22052386

Alpa Roof Truss, Maple

Version 8.530 S Feb 23 2022 MiTek Industries, Inc. Wed Jun 8 15:41:56 2022 Page 1

ID:9a plwcon izmXpuR1McGqzT9hG-TXGfa 7PqDLiHKxFwoJr7nXpwUyFRXrJ18iqSHz8JTv

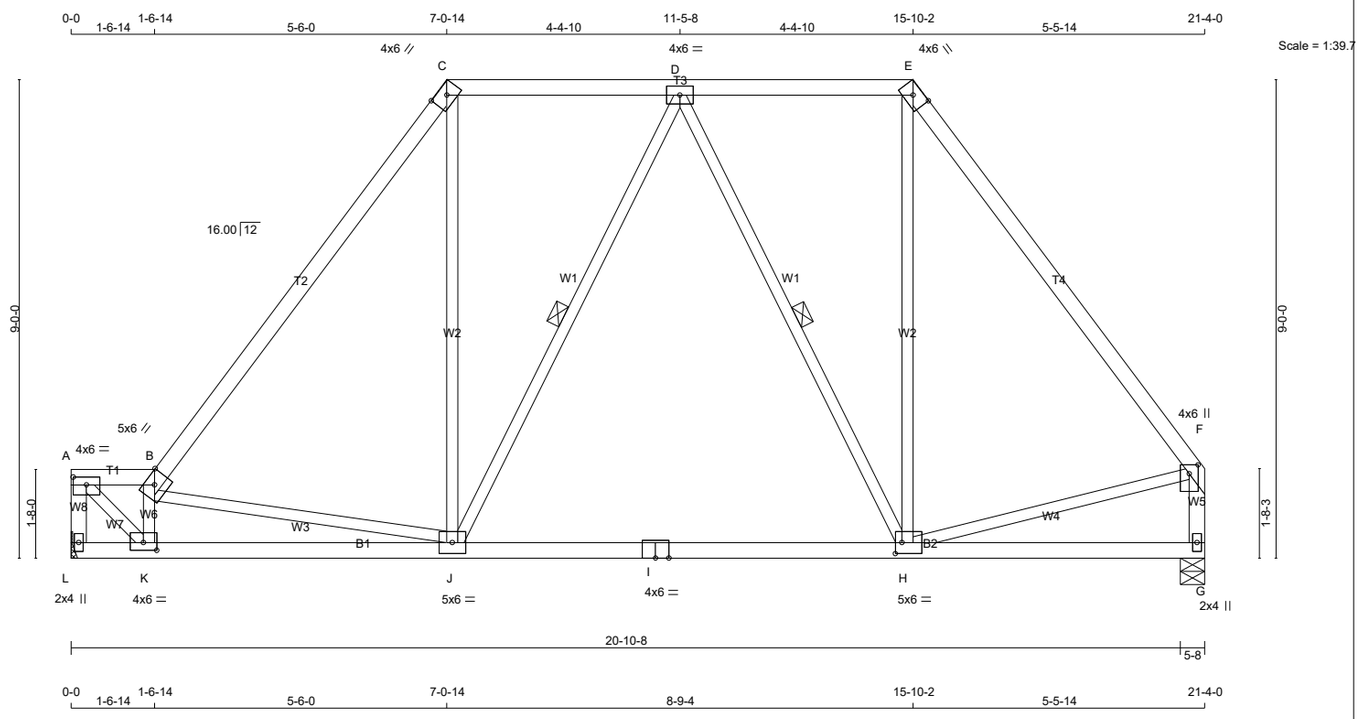

TOTAL WEIGHT = 3 X 101 = 302 lb

[M][F]

LUMBER

N. L. G. A. RULES

CHORDS	SIZE		LUMBER	DESCR.
L - A	2x4	DRY	No.2	SPF
A - B	2x4	DRY	No.2	SPF
B - C	2x4	DRY	No.2	SPF
C - E	2x4	DRY	No.2	SPF
E - F	2x4	DRY	No.2	SPF
G - F	2x4	DRY	No.2	SPF
L - I	2x4	DRY	No.2	SPF
I - G	2x4	DRY	No.2	SPF
ALL WEBS EXCEPT	2x3	DRY	No.2	SPF

DRY: SEASONED LUMBER.

PLATES (table is in inches)

JT	TYPE	PLATES	W	LEN	Y	X
A	TMVW-t	MT20	4.0	6.0	1.75	3.00
B	TTWW-h	MT20	5.0	6.0	Edge	
C	TTW-h	MT20	4.0	6.0	2.00	3.00
D	TMWW-t	MT20	4.0	6.0		
E	TTW-h	MT20	4.0	6.0	2.00	3.00
F	TMVW+p	MT20	4.0	6.0	2.00	2.00
G	BMV1+p	MT20	2.0	4.0		
H	BMWWW-t	MT20	5.0	6.0	2.50	1.50
I	BS-t	MT20	4.0	6.0		
J	BMWWW-t	MT20	5.0	6.0		
K	BMWW-t	MT20	4.0	6.0	1.75	3.00
L	BMV1+p	MT20	2.0	4.0		

Edge - INDICATES REFERENCE CORNER OF PLATE TOUCHES EDGE OF CHORD.

LATERAL BRACE(S) SHOWN SHALL BE 2X4 SPF#2

DIMENSIONS, SUPPORTS AND LOADINGS SPECIFIED BY FABRICATOR TO BE VERIFIED BY BUILDING DESIGNER

BEARINGS

JT	FACTORED GROSS REACTION VERT	HORZ	MAXIMUM FACTORED GROSS REACTION DOWN	HORZ	UPLIFT	INPUT BRG	REQRD BRG
L	1090	0	1090	0	0	MECHANICAL	
G	1100	0	1100	0	0	5-8	1-8

A SUITABLE HANGER/MECHANICAL CONNECTION IS REQUIRED AT JOINT L. MINIMUM BEARING LENGTH AT JOINT L = 1-8.

UNFACTORED REACTIONS

JT	1ST LCASE COMBINED	MAX./MIN. COMPONENT REACTIONS SNOW	LIVE	PERM.LIVE	WIND	DEAD	SOIL
L	782	448 / 0	0 / 0	0 / 0	0 / 0	335 / 0	0 / 0
G	790	448 / 0	0 / 0	0 / 0	0 / 0	342 / 0	0 / 0

BEARING MATERIAL TO BE SPF NO.2 OR BETTER AT JOINT(S) G

BRACING

FOR SECTION C-E, MAX. PURLIN SPACING = 2.00 FT.
FOR OTHER SECTIONS, TOP CHORD TO BE SHEATHED OR MAX. PURLIN SPACING = 5.78 FT.
MAX. UNBRACED BOTTOM CHORD LENGTH = 10.00 FT OR RIGID CEILING DIRECTLY APPLIED.

ALL PITCH BREAKS AND PERIMETER CORNER JOINTS MUST BE LATERALLY RESTRAINED.

1 LATERAL BRACE(S) AT 1/ 2 LENGTH OF D-J, D-H.

END VERTICAL(S) MUST BE SHEATHED OR HAVE BRACES AS INDICATED IN THE MAX. UNBRACED LENGTH COLUMN OF THE TABLE BELOW

LOADING

TOTAL LOAD CASES: (4)

CHORDS

MEMB. FR-TO	MAX. FACTORED FORCE (LBS)	FACTORED VERT. LOAD (PLF) FROM	TO	LC1 MAX CSI (LC)	MAX. UNBRAC LENGTH
L- A	-1061 / 0	0.0	0.0	0.11 (1)	7.64
A- B	-1103 / 0	-78.0	-78.0	0.04 (1)	6.00
B- C	-1032 / 0	-78.0	-78.0	0.35 (1)	5.78
C- D	-627 / 0	-93.0	-93.0	0.23 (1)	2.00
D- E	-544 / 0	-93.0	-93.0	0.23 (1)	2.00
E- F	-905 / 0	-78.0	-78.0	0.34 (1)	6.08
G- F	-1065 / 0	0.0	0.0	0.11 (1)	7.64
L- K	0 / 0	-18.5	-18.5	0.03 (1)	10.00
K- J	0 / 1182	-18.5	-18.5	0.36 (4)	10.00
J- I	0 / 707	-18.5	-18.5	0.31 (4)	10.00
I- H	0 / 707	-18.5	-18.5	0.31 (4)	10.00
H- G	0 / 0	-18.5	-18.5	0.23 (4)	10.00

WEBS

MEMB. FR-TO	MAX. FACTORED FORCE (LBS)	MAX CSI (LC)
A- K	0 / 1512	0.34 (1)
K- B	-1007 / 0	0.14 (1)
B- J	-577 / 0	0.34 (1)
J- C	0 / 449	0.10 (1)
J- D	-181 / 0	0.12 (1)
D- H	-367 / 0	0.25 (1)
H- E	0 / 350	0.08 (4)
H- F	0 / 555	0.12 (1)

DESIGN CRITERIA

SPECIFIED LOADS:

TOP CH.	LL	=	21.0	PSF
	DL	=	6.0	PSF
BOT CH.	LL	=	0.0	PSF
	DL	=	7.4	PSF
TOTAL LOAD		=	34.4	PSF

SPACING = 24.0 IN. C/C

LOADING IN HIGHEST FLAT SECTION BASED ON PIGGYBACK TRUSS WITH SLOPES OF 6.00/12 AND -6.00/12 AND RESPECTIVE HEEL HEIGHTS OF 0-0 AND 0-0 AND AN ADDITIONAL DEAD LOAD OF 6.0 P.S.F.

LOADING IN OTHER FLAT SECTIONS BASED ON A SLOPE OF 6.00/12

THIS TRUSS IS DESIGNED FOR RESIDENTIAL OR SMALL BUILDING REQUIREMENTS OF PART 9, NBCC 2015

THIS DESIGN COMPLIES WITH:
- PART 9 OF BCBC 2018 , ABC 2019
- PART 9 OF OBC 2012 (2019 AMENDMENT)
- CSA 086-14
- TPIC 2014

(55 % OF 23.0 P.S.F. G.S.L. PLUS 8.4 P.S.F. RAIN LOAD) EQUALS 21.0 P.S.F. SPECIFIED ROOF LIVE LOAD

ALLOWABLE DEFL.(LL)= L/360 (0.71")
CALCULATED VERT. DEFL.(LL) = L/ 999 (0.03")
ALLOWABLE DEFL.(TL)= L/360 (0.71")
CALCULATED VERT. DEFL.(TL) = L/ 999 (0.12")

CSI: TC=0.35/1.00 (B-C:1) , BC=0.36/1.00 (J-K:4) , WB=0.34/1.00 (B-J:1) , SSI=0.20/1.00 (C-D:1)

DOL LUMBER=1.00 NAIL=1.00 LS BEND=1.10 COMP=1.10 SHEAR=1.10 TENS= 1.10

COMPANION LIVE LOAD FACTOR = 1.00

TRUSS PLATE MANUFACTURER IS NOT RESPONSIBLE FOR QUALITY CONTROL IN THE TRUSS MANUFACTURING PLANT .

NAIL VALUES

PLATE	GRIP(DRY) (PSI) MAX	MIN	SHEAR (PLI) MAX	MIN	SECTION (PLI) MAX	MIN
MT20	650	371	1747	788	1987	1873

PLATE PLACEMENT TOL. = 0.250 inches

PLATE ROTATION TOL. = 5.0 Deg.

JSI GRIP= 0.84 (K) (INPUT = 0.90)
JSI METAL= 0.34 (F) (INPUT = 1.00)

JOB NAME	TRUSS NAME	QUANTITY	PLY	JOB DESC.		DRWG NO.
343277	H10	.	1	TRUSS DESC.	JT 45147	E22052387

Alpa Roof Truss, Maple

Version 8.530 S Feb 23 2022 MiTek Industries, Inc. Wed Jun 8 15:41:58 2022 Page 1

ID:9a plwcon izmXpuR1McGqzT9hG-PvNQ?g8gCqbQWd5d1CLJDBcDzIgfvRpcUSBnWAz8JTt

Scale: 1/4"=1'

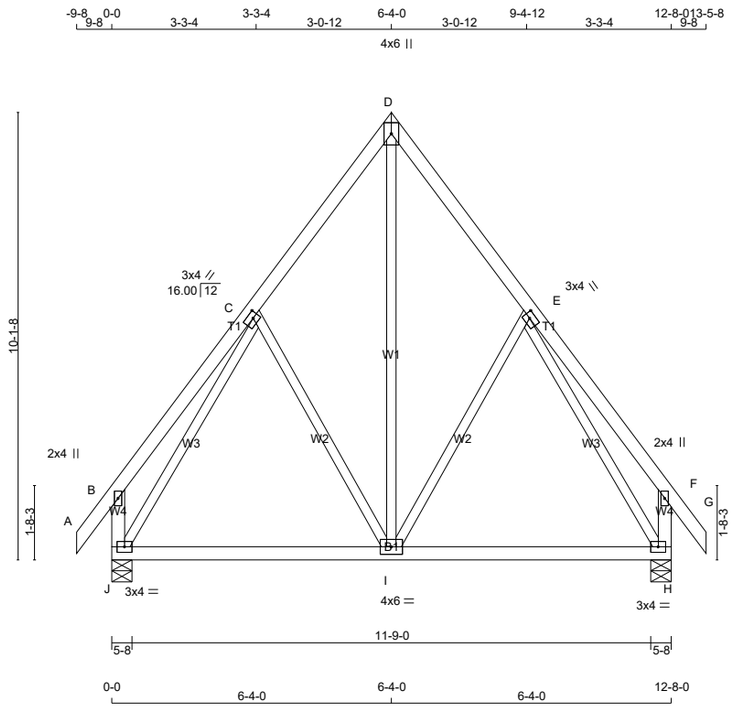

TOTAL WEIGHT = 2 X 73 = 145 lb

[M][F]

LUMBER

N. L. G. A. RULES

CHORDS	SIZE		LUMBER	DESCR.
A - D	2x4	DRY	No.2	SPF
D - G	2x4	DRY	No.2	SPF
J - B	2x4	DRY	No.2	SPF
H - F	2x4	DRY	No.2	SPF
J - H	2x4	DRY	No.2	SPF
ALL WEBS EXCEPT	2x3	DRY	No.2	SPF

DRY: SEASONED LUMBER.

PLATES (table is in inches)

JT	TYPE	PLATES	W	LEN	Y	X
B	TMV+p	MT20	2.0	4.0		
C	TMWW-t	MT20	3.0	4.0	1.50	1.50
D	TTW+p	MT20	4.0	6.0		
E	TMWW-t	MT20	3.0	4.0	1.50	1.50
F	TMV+p	MT20	2.0	4.0		
H	BMVW1-t	MT20	3.0	4.0		
I	BMWWW-t	MT20	4.0	6.0		
J	BMVW1-t	MT20	3.0	4.0		

LATERAL BRACE(S) SHOWN SHALL BE 2X4 SPF#2

LICENSED PROFESSIONAL ENGINEER
V. WIDYA
100225448
06/08/2022
PROVINCE OF ONTARIO

DIMENSIONS, SUPPORTS AND LOADINGS SPECIFIED BY FABRICATOR TO BE VERIFIED BY BUILDING DESIGNER

BEARINGS

JT	FACTORED GROSS REACTION VERT	HORZ	MAXIMUM FACTORED GROSS REACTION DOWN	HORZ	UPLIFT	INPUT BRG IN-SX	REQRD BRG IN-SX
J	682	0	682	0	0	5-8	1-8
H	682	0	682	0	0	5-8	1-8

UNFACTORED REACTIONS

JT	1ST LCASE COMBINED	MAX./MIN. COMPONENT REACTIONS SNOW	LIVE	PERM.LIVE	WIND	DEAD	SOIL
J	485	304 / 0	0 / 0	0 / 0	0 / 0	181 / 0	0 / 0
H	485	304 / 0	0 / 0	0 / 0	0 / 0	181 / 0	0 / 0

BEARING MATERIAL TO BE SPF NO.2 OR BETTER AT JOINT(S) J, H

BRACING

TOP CHORD TO BE SHEATHED OR MAX. PURLIN SPACING = 6.25 FT.
MAX. UNBRACED BOTTOM CHORD LENGTH = 10.00 FT OR RIGID CEILING DIRECTLY APPLIED.

ALL PITCH BREAKS AND PERIMETER CORNER JOINTS MUST BE LATERALLY RESTRAINED.

LOADING

TOTAL LOAD CASES: (4)

C H O R D S

MEMB. FR-TO	MAX. FACTORED FORCE (LBS)	FACTORED VERT. LOAD (PLF) FROM	TO	LC1 CSI (LC)	MAX MAX. UNBRAC LENGTH
A- B	0 / 28	-78.0	-78.0	0.05 (1)	10.00
B- C	0 / 23	-78.0	-78.0	0.12 (1)	10.00
C- D	-368 / 0	-78.0	-78.0	0.10 (1)	6.25
D- E	-368 / 0	-78.0	-78.0	0.10 (1)	6.25
E- F	0 / 23	-78.0	-78.0	0.12 (1)	10.00
F- G	0 / 28	-78.0	-78.0	0.05 (1)	10.00
J- B	-163 / 0	0.0	0.0	0.02 (1)	7.81
H- F	-163 / 0	0.0	0.0	0.02 (1)	7.81
J- I	0 / 271	-18.5	-18.5	0.24 (4)	10.00
I- H	0 / 271	-18.5	-18.5	0.24 (4)	10.00

W E B S

MEMB. FR-TO	MAX. FACTORED FORCE (LBS)	MAX CSI (LC)
I- D	0 / 357	0.08 (1)
I- E	-123 / 0	0.09 (1)
C- I	-123 / 0	0.09 (1)
J- C	-545 / 0	0.38 (1)
E- H	-545 / 0	0.38 (1)

DESIGN CRITERIA

SPECIFIED LOADS:

TOP CH.	LL	=	21.0	PSF
	DL	=	6.0	PSF
BOT CH.	LL	=	0.0	PSF
	DL	=	7.4	PSF
TOTAL LOAD		=	34.4	PSF

SPACING = 24.0 IN. C/C

THIS TRUSS IS DESIGNED FOR RESIDENTIAL OR SMALL BUILDING REQUIREMENTS OF PART 9, NBCC 2015

THIS DESIGN COMPLIES WITH:
- PART 9 OF BCBC 2018 , ABC 2019
- PART 9 OF OBC 2012 (2019 AMENDMENT)
- CSA 086-14
- TPIC 2014

(55 % OF 23.0 P.S.F. G.S.L. PLUS 8.4 P.S.F. RAIN LOAD) EQUALS 21.0 P.S.F. SPECIFIED ROOF LIVE LOAD

ALLOWABLE DEFL.(LL)= L/360 (0.42")
CALCULATED VERT. DEFL.(LL) = L/ 999 (0.01")
ALLOWABLE DEFL.(TL)= L/360 (0.42")
CALCULATED VERT. DEFL.(TL) = L/ 999 (0.04")

CSI: TC=0.12/1.00 (B-C:1) , BC=0.24/1.00 (I-J:4) , WB=0.38/1.00 (E-H:1) , SSI=0.10/1.00 (I-J:4)

DOL LUMBER=1.00 NAIL=1.00 LS BEND=1.10 COMP=1.10 SHEAR=1.10 TENS= 1.10

COMPANION LIVE LOAD FACTOR = 1.00

TRUSS PLATE MANUFACTURER IS NOT RESPONSIBLE FOR QUALITY CONTROL IN THE TRUSS MANUFACTURING PLANT .

NAIL VALUES

PLATE	GRIP(DRY) (PSI) MAX	MIN	SHEAR (PLI) MAX	MIN	SECTION (PLI) MAX	MIN
MT20	650	371	1747	788	1987	1873

PLATE PLACEMENT TOL. = 0.250 inches

PLATE ROTATION TOL. = 5.0 Deg.

JSI GRIP= 0.80 (C) (INPUT = 0.90)
JSI METAL= 0.20 (C) (INPUT = 1.00)

JOB NAME	TRUSS NAME	QUANTITY	PLY	JOB DESC.	DRWG NO.
343277	H10G		1	TRUSS DESC. JT 45147	E22052388

Alpa Roof Truss, Maple

Version 8.530 S Feb 23 2022 MiTek Industries, Inc. Wed Jun 8 15:41:59 2022 Page 1

ID:9a plwcon izmXpuR1McGqzT9hG-t6xoC?9Iz8jH8nqqbwsYIP9Pvh3Cexdlj6wK2cz8JTs

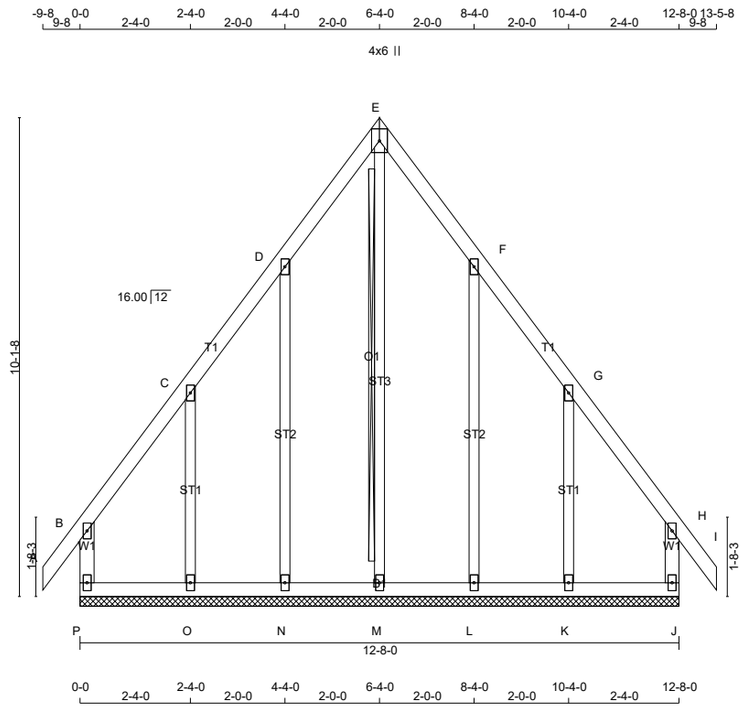

TOTAL WEIGHT = 71 lb

[M]

LUMBER

N. L. G. A. RULES

CHORDS	SIZE		LUMBER	DESCR.
A - E	2x4	DRY	No.2	SPF
E - I	2x4	DRY	No.2	SPF
P - B	2x4	DRY	No.2	SPF
J - H	2x4	DRY	No.2	SPF
P - J	2x4	DRY	No.2	SPF
ALL WEBS	2x3	DRY	No.2	SPF
ALL GABLE WEBS	2x3	DRY	No.2	SPF

DRY: SEASONED LUMBER.

GABLE STUDS SPACED AT 2-0-0 OC.

PLATES (table is in inches)

JT	TYPE	PLATES	W	LEN	Y	X
B	TMV+p	MT20	2.0	4.0		
C, D, F, G						
C	TMW+w	MT20	2.0	4.0		
E	TTW+p	MT20	4.0	6.0		
H	TMV+p	MT20	2.0	4.0		
J	BMV1+p	MT20	2.0	4.0		
K, L, M, N, O						
K	BMW1+w	MT20	2.0	4.0		
P	BMV1+p	MT20	2.0	4.0		

LATERAL BRACE(S) SHOWN SHALL BE 2X4 SPF#2

DIMENSIONS, SUPPORTS AND LOADINGS SPECIFIED BY FABRICATOR TO BE VERIFIED BY BUILDING DESIGNER

BEARINGS

THIS TRUSS DESIGNED FOR CONTINUOUS BEARINGS.

THIS TRUSS REQUIRES RIGID SHEATHING ON EXPOSED FACE.

BEARING MATERIAL TO BE SPF NO.2 OR BETTER AT JOINT(S)

BRACING

TOP CHORD TO BE SHEATHED OR MAX. PURLIN SPACING = 6.25 FT.
MAX. UNBRACED BOTTOM CHORD LENGTH = 10.00 FT OR RIGID CEILING DIRECTLY APPLIED.

ALL PITCH BREAKS AND PERIMETER CORNER JOINTS MUST BE LATERALLY RESTRAINED.

2x4 DRY SPF No.2 T-BRACE AT E-M

FASTEN T AND I-BRACES TO NARROW EDGE OF WEB WITH ONE ROW PER PLY OF 3" COMMON WIRE NAILS @ 6" O.C. WITH 3" MINIMUM END DISTANCE. BRACE MUST COVER 90% OF WEB LENGTH.

END VERTICAL(S) MUST BE SHEATHED OR HAVE BRACES AS INDICATED IN THE MAX. UNBRACED LENGTH COLUMN OF THE TABLE BELOW

LOADING

TOTAL LOAD CASES: (4)

CHORDS

MEMB. FR-TO	MAX. FORCE (LBS)	FACTORED VERT. LOAD LC1 (PLF) FROM	TO	MAX CSI (LC)	MAX. UNBRAC LENGTH
A- B	0 / 28	-78.0	-78.0	0.05 (1)	10.00
B- C	-46 / 0	-78.0	-78.0	0.05 (1)	6.25
C- D	-37 / 0	-78.0	-78.0	0.04 (1)	6.25
D- E	-31 / 0	-78.0	-78.0	0.04 (1)	6.25
E- F	-31 / 0	-78.0	-78.0	0.04 (1)	6.25
F- G	-37 / 0	-78.0	-78.0	0.04 (1)	6.25
G- H	-46 / 0	-78.0	-78.0	0.05 (1)	6.25
H- I	0 / 28	-78.0	-78.0	0.05 (1)	10.00
P- B	-195 / 0	0.0	0.0	0.03 (1)	7.81
J- H	-195 / 0	0.0	0.0	0.03 (1)	7.81
P- O	0 / 26	-18.5	-18.5	0.02 (1)	10.00
O- N	0 / 22	-18.5	-18.5	0.02 (4)	10.00
N- M	0 / 19	-18.5	-18.5	0.02 (4)	10.00
M- L	0 / 19	-18.5	-18.5	0.02 (4)	10.00
L- K	0 / 22	-18.5	-18.5	0.02 (4)	10.00
K- J	0 / 26	-18.5	-18.5	0.02 (1)	10.00

WEBS

MEMB. FR-TO	MAX. FORCE (LBS)	MAX CSI (LC)
M- E	-118 / 0	0.09 (1)
N- D	-154 / 0	0.15 (1)
O- C	-157 / 0	0.05 (1)
L- F	-154 / 0	0.15 (1)
K- G	-157 / 0	0.05 (1)

DESIGN CRITERIA

SPECIFIED LOADS:

TOP CH.	LL	=	21.0	PSF
	DL	=	6.0	PSF
BOT CH.	LL	=	0.0	PSF
	DL	=	7.4	PSF
TOTAL LOAD		=	34.4	PSF

SPACING = 24.0 IN. C/C

THIS TRUSS IS DESIGNED FOR RESIDENTIAL OR SMALL BUILDING REQUIREMENTS OF PART 9, NBCC 2015

THIS DESIGN COMPLIES WITH:
- PART 9 OF BCBC 2018 , ABC 2019
- PART 9 OF OBC 2012 (2019 AMENDMENT)
- CSA 086-14
- TPIC 2014

DESIGN ASSUMPTIONS
-OVERHANG NOT TO BE ALTERED OR CUT OFF.

(55 % OF 23.0 P.S.F. G.S.L. PLUS 8.4 P.S.F. RAIN LOAD) EQUALS 21.0 P.S.F. SPECIFIED ROOF LIVE LOAD

CSI: TC=0.05/1.00 (A-B:1) , BC=0.02/1.00 (O-P:1) , WB=0.15/1.00 (F-L:1) , SSI=0.04/1.00 (B-C:1)

DOL LUMBER=1.00 NAIL=1.00 LS BEND=1.10 COMP=1.10 SHEAR=1.10 TENS= 1.10

COMPANION LIVE LOAD FACTOR = 1.00

TRUSS PLATE MANUFACTURER IS NOT RESPONSIBLE FOR QUALITY CONTROL IN THE TRUSS MANUFACTURING PLANT .

NAIL VALUES

PLATE	GRIP(DRY) (PSI) MAX	MIN	SHEAR (PLI) MAX	MIN	SECTION (PLI) MAX	MIN
MT20	650	371	1747	788	1987	1873

PLATE PLACEMENT TOL. = 0.250 inches

PLATE ROTATION TOL. = 5.0 Deg.

JSI GRIP= 0.18 (H) (INPUT = 0.90)
JSI METAL= 0.10 (H) (INPUT = 1.00)

JOB NAME	TRUSS NAME	QUANTITY	PLY	JOB DESC.		DRWG NO.
343277	H11		1	TRUSS DESC.	JT 45147	E22052389

Alpa Roof Truss, Maple

Version 8.530 S Feb 23 2022 MiTek Industries, Inc. Wed Jun 8 15:42:00 2022 Page 1

ID:9a plwcon izmXpuR1McGqzT9hG-LIVAQLAwkSr8mxF09dOnIchWU5MENQZvxmqub2z8JTr

Scale = 1:43.2

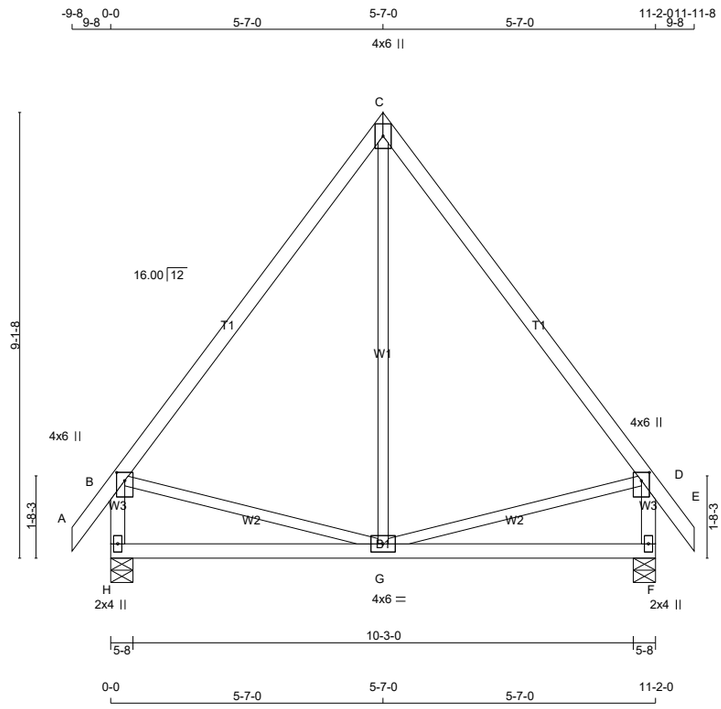

TOTAL WEIGHT = 56 lb

[M][F]

LUMBER

N. L. G. A. RULES

CHORDS	SIZE		LUMBER	DESCR.
A - C	2x4	DRY	No.2	SPF
C - E	2x4	DRY	No.2	SPF
H - B	2x4	DRY	No.2	SPF
F - D	2x4	DRY	No.2	SPF
H - F	2x4	DRY	No.2	SPF
ALL WEBS EXCEPT	2x3	DRY	No.2	SPF

DRY: SEASONED LUMBER.

PLATES (table is in inches)

JT	TYPE	PLATES	W	LEN	Y	X
B	TMVW+p	MT20	4.0	6.0	2.00	2.00
C	TTW+p	MT20	4.0	6.0		
D	TMVW+p	MT20	4.0	6.0	2.00	2.00
F	BMV1+p	MT20	2.0	4.0		
G	BMWWW-t	MT20	4.0	6.0		
H	BMV1+p	MT20	2.0	4.0		

LATERAL BRACE(S) SHOWN SHALL BE 2X4 SPF#2

LICENSED PROFESSIONAL ENGINEER
V. WIDYA
100225448
06/08/2022
PROVINCE OF ONTARIO

DIMENSIONS, SUPPORTS AND LOADINGS SPECIFIED BY FABRICATOR TO BE VERIFIED BY BUILDING DESIGNER

BEARINGS

JT	FACTORED GROSS REACTION VERT	HORZ	MAXIMUM FACTORED GROSS REACTION DOWN	HORZ	UPLIFT	INPUT BRG IN-SX	REQRD BRG IN-SX
H	609	0	609	0	0	5-8	1-8
F	609	0	609	0	0	5-8	1-8

UNFACTORED REACTIONS

JT	1ST LCASE COMBINED	MAX./MIN. COMPONENT REACTIONS SNOW	LIVE	PERM.LIVE	WIND	DEAD	SOIL
H	433	273 / 0	0 / 0	0 / 0	0 / 0	161 / 0	0 / 0
F	433	273 / 0	0 / 0	0 / 0	0 / 0	161 / 0	0 / 0

BEARING MATERIAL TO BE SPF NO.2 OR BETTER AT JOINT(S) H, F

BRACING

TOP CHORD TO BE SHEATHED OR MAX. PURLIN SPACING = 6.25 FT.
MAX. UNBRACED BOTTOM CHORD LENGTH = 10.00 FT OR RIGID CEILING DIRECTLY APPLIED.

ALL PITCH BREAKS AND PERIMETER CORNER JOINTS MUST BE LATERALLY RESTRAINED.

LOADING

TOTAL LOAD CASES: (4)

CHORDS

MEMB. FR-TO	MAX. FACTORED FORCE (LBS)	FACTORED VERT. LOAD (PLF) FROM	TO	LC1 CSI (LC)	MAX UNBRAC LENGTH
A- B	0 / 28	-78.0	-78.0	0.05 (1)	10.00
B- C	-300 / 0	-78.0	-78.0	0.31 (1)	6.25
C- D	-300 / 0	-78.0	-78.0	0.31 (1)	6.25
D- E	0 / 28	-78.0	-78.0	0.05 (1)	10.00
H- B	-570 / 0	0.0	0.0	0.06 (1)	7.81
F- D	-570 / 0	0.0	0.0	0.06 (1)	7.81
H- G	0 / 0	-18.5	-18.5	0.16 (4)	10.00
G- F	0 / 0	-18.5	-18.5	0.16 (4)	10.00

WEBS

MEMB. FR-TO	MAX. FACTORED FORCE (LBS)	MAX CSI (LC)
G- C	0 / 109	0.04 (4)
B- G	0 / 185	0.04 (1)
G- D	0 / 185	0.04 (1)

DESIGN CRITERIA

SPECIFIED LOADS:

TOP CH.	LL	=	21.0	PSF
	DL	=	6.0	PSF
BOT CH.	LL	=	0.0	PSF
	DL	=	7.4	PSF
TOTAL LOAD		=	34.4	PSF

SPACING = 24.0 IN. C/C

THIS TRUSS IS DESIGNED FOR RESIDENTIAL OR SMALL BUILDING REQUIREMENTS OF PART 9, NBCC 2015

THIS DESIGN COMPLIES WITH:
- PART 9 OF BCBC 2018 , ABC 2019
- PART 9 OF OBC 2012 (2019 AMENDMENT)
- CSA 086-14
- TPIC 2014

(55 % OF 23.0 P.S.F. G.S.L. PLUS 8.4 P.S.F. RAIN LOAD) EQUALS 21.0 P.S.F. SPECIFIED ROOF LIVE LOAD

ALLOWABLE DEFL.(LL)= L/360 (0.37")
CALCULATED VERT. DEFL.(LL) = L/ 999 (0.00")
ALLOWABLE DEFL.(TL)= L/360 (0.37")
CALCULATED VERT. DEFL.(TL) = L/ 999 (0.02")

CSI: TC=0.31/1.00 (B-C:1) , BC=0.16/1.00 (F-G:4) , WB=0.04/1.00 (B-G:1) , SSI=0.10/1.00 (B-C:1)

DOL LUMBER=1.00 NAIL=1.00 LS BEND=1.10 COMP=1.10 SHEAR=1.10 TENS= 1.10

COMPANION LIVE LOAD FACTOR = 1.00

TRUSS PLATE MANUFACTURER IS NOT RESPONSIBLE FOR QUALITY CONTROL IN THE TRUSS MANUFACTURING PLANT .

NAIL VALUES

PLATE	GRIP(DRY) (PSI) MAX	MIN	SHEAR (PLI) MAX	MIN	SECTION (PLI) MAX	MIN
MT20	650	371	1747	788	1987	1873

PLATE PLACEMENT TOL. = 0.250 inches

PLATE ROTATION TOL. = 5.0 Deg.

JSI GRIP= 0.32 (D) (INPUT = 0.90)
JSI METAL= 0.17 (B) (INPUT = 1.00)

JOB NAME	TRUSS NAME	QUANTITY	PLY	JOB DESC.		DRWG NO.
343277	H11G		1	TRUSS DESC.	JT 45147	E22052390

Alpa Roof Truss, Maple

Version 8.530 S Feb 23 2022 MiTek Industries, Inc. Wed Jun 8 15:42:02 2022 Page 1

ID:9a plwcon izmXpuR1McGqzT9hG-lqdxr1CAG35s?FOOG2QFN1nv8v4xrIHCP39 fxz8JTp

Scale = 1:40.4

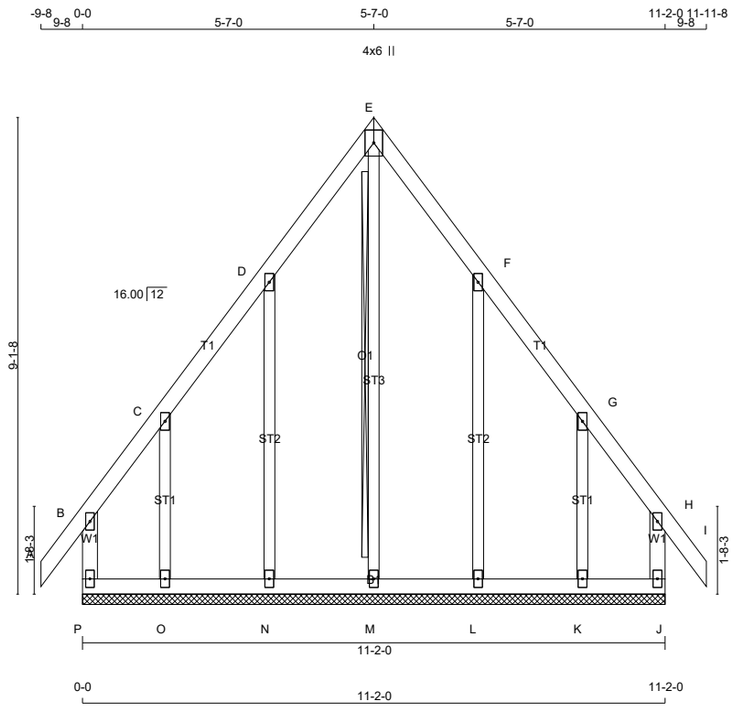

TOTAL WEIGHT = 62 lb

[M]

LUMBER

N. L. G. A. RULES

CHORDS	SIZE		LUMBER	DESCR.
P - B	2x4	DRY	No.2	SPF
A - E	2x4	DRY	No.2	SPF
E - I	2x4	DRY	No.2	SPF
J - H	2x4	DRY	No.2	SPF
P - J	2x4	DRY	No.2	SPF
ALL WEBS	2x3	DRY	No.2	SPF
ALL GABLE WEBS	2x3	DRY	No.2	SPF

DRY: SEASONED LUMBER.

GABLE STUDS SPACED AT 2-0-0 OC.

PLATES (table is in inches)

JT	TYPE	PLATES	W	LEN	Y	X
B	TMV+p	MT20	2.0	4.0		
C, D, F, G						
C	TMW+w	MT20	2.0	4.0		
E	TTW+p	MT20	4.0	6.0		
H	TMV+p	MT20	2.0	4.0		
J	BMV1+p	MT20	2.0	4.0		
K, L, M, N, O						
K	BMW1+w	MT20	2.0	4.0		
P	BMV1+p	MT20	2.0	4.0		

LATERAL BRACE(S) SHOWN SHALL BE 2X4 SPF#2

DIMENSIONS, SUPPORTS AND LOADINGS SPECIFIED BY FABRICATOR TO BE VERIFIED BY BUILDING DESIGNER

BEARINGS

THIS TRUSS DESIGNED FOR CONTINUOUS BEARINGS.

THIS TRUSS REQUIRES RIGID SHEATHING ON EXPOSED FACE.

BEARING MATERIAL TO BE SPF NO.2 OR BETTER AT JOINT(S)

BRACING

TOP CHORD TO BE SHEATHED OR MAX. PURLIN SPACING = 6.25 FT.
MAX. UNBRACED BOTTOM CHORD LENGTH = 10.00 FT OR RIGID CEILING DIRECTLY APPLIED.

ALL PITCH BREAKS AND PERIMETER CORNER JOINTS MUST BE LATERALLY RESTRAINED.

2x3 DRY SPF No.2 T-BRACE AT E-M

FASTEN T AND I-BRACES TO NARROW EDGE OF WEB WITH ONE ROW PER PLY OF 3" COMMON WIRE NAILS @ 6" O.C. WITH 3" MINIMUM END DISTANCE. BRACE MUST COVER 90% OF WEB LENGTH.

END VERTICAL(S) MUST BE SHEATHED OR HAVE BRACES AS INDICATED IN THE MAX. UNBRACED LENGTH COLUMN OF THE TABLE BELOW

LOADING

TOTAL LOAD CASES: (4)

C H O R D S

MEMB. FR-TO	MAX. FORCE (LBS)	FACTORED VERT. LOAD LC1 (PLF) FROM	TO	MAX CSI (LC)	MAX. UNBRAC LENGTH
P- B	-156 / 0	0.0	0.0	0.03 (1)	7.81
A- B	0 / 28	-78.0	-78.0	0.05 (1)	10.00
B- C	-38 / 0	-78.0	-78.0	0.03 (1)	6.25
C- D	-32 / 0	-78.0	-78.0	0.04 (1)	6.25
D- E	-29 / 0	-78.0	-78.0	0.04 (1)	6.25
E- F	-29 / 0	-78.0	-78.0	0.04 (1)	6.25
F- G	-32 / 0	-78.0	-78.0	0.04 (1)	6.25
G- H	-38 / 0	-78.0	-78.0	0.03 (1)	6.25
H- I	0 / 28	-78.0	-78.0	0.05 (1)	10.00
J- H	-156 / 0	0.0	0.0	0.03 (1)	7.81
P- O	0 / 25	-18.5	-18.5	0.02 (1)	10.00
O- N	0 / 21	-18.5	-18.5	0.02 (4)	10.00
N- M	0 / 18	-18.5	-18.5	0.02 (4)	10.00
M- L	0 / 18	-18.5	-18.5	0.02 (4)	10.00
L- K	0 / 21	-18.5	-18.5	0.02 (4)	10.00
K- J	0 / 25	-18.5	-18.5	0.02 (1)	10.00

W E B S

MEMB. FR-TO	MAX. FACTORED FORCE (LBS)	MAX CSI (LC)
M- E	-120 / 0	0.16 (1)
N- D	-159 / 0	0.11 (1)
O- C	-131 / 0	0.03 (1)
L- F	-159 / 0	0.11 (1)
K- G	-131 / 0	0.03 (1)

DESIGN CRITERIA

SPECIFIED LOADS:

TOP CH.	LL	=	21.0	PSF
	DL	=	6.0	PSF
BOT CH.	LL	=	0.0	PSF
	DL	=	7.4	PSF
TOTAL LOAD		=	34.4	PSF

SPACING = 24.0 IN. C/C

THIS TRUSS IS DESIGNED FOR RESIDENTIAL OR SMALL BUILDING REQUIREMENTS OF PART 9, NBCC 2015

THIS DESIGN COMPLIES WITH:
- PART 9 OF BCBC 2018 , ABC 2019
- PART 9 OF OBC 2012 (2019 AMENDMENT)
- CSA 086-14
- TPIC 2014

DESIGN ASSUMPTIONS
-OVERHANG NOT TO BE ALTERED OR CUT OFF.

(55 % OF 23.0 P.S.F. G.S.L. PLUS 8.4 P.S.F. RAIN LOAD) EQUALS 21.0 P.S.F. SPECIFIED ROOF LIVE LOAD

CSI: TC=0.05/1.00 (A-B:1) , BC=0.02/1.00 (J-K:1) , WB=0.16/1.00 (E-M:1) , SSI=0.04/1.00 (D-E:1)

DOL LUMBER=1.00 NAIL=1.00 LS BEND=1.10 COMP=1.10 SHEAR=1.10 TENS= 1.10

COMPANION LIVE LOAD FACTOR = 1.00

TRUSS PLATE MANUFACTURER IS NOT RESPONSIBLE FOR QUALITY CONTROL IN THE TRUSS MANUFACTURING PLANT .

NAIL VALUES

PLATE	GRIP(DRY) (PSI) MAX	MIN	SHEAR (PLI) MAX	MIN	SECTION (PLI) MAX	MIN
MT20	650	371	1747	788	1987	1873

PLATE PLACEMENT TOL. = 0.250 inches

PLATE ROTATION TOL. = 5.0 Deg.

JSI GRIP= 0.15 (B) (INPUT = 0.90)
JSI METAL= 0.08 (B) (INPUT = 1.00)

JOB NAME	TRUSS NAME	QUANTITY	PLY	JOB DESC.		DRWG NO.
343277	H11S	.	1	TRUSS DESC.	JT 45147	E22052391

Alpa Roof Truss, Maple

Version 8.530 S Feb 23 2022 MiTek Industries, Inc. Wed Jun 8 15:42:03 2022 Page 1

ID:9a plwcon izmXpuR1McGqzT9hG-mtBJ2NCo0NDjdPzbqmxUwFJ0SJOJanOLejuYBNz8JTo

Scale = 1:43.2

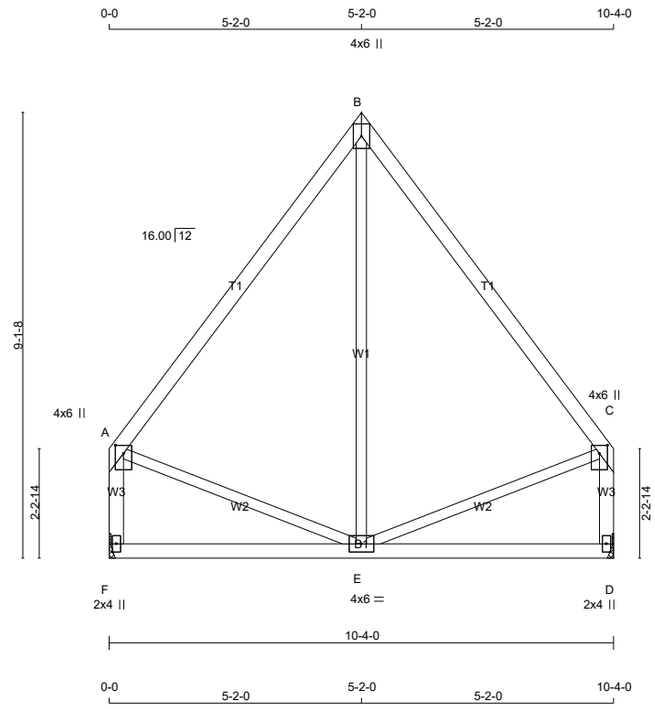

TOTAL WEIGHT = 3 X 52 = 155 lb

[M][F]

LUMBER

N. L. G. A. RULES

CHORDS	SIZE		LUMBER	DESCR.
A - B	2x4	DRY	No.2	SPF
B - C	2x4	DRY	No.2	SPF
F - A	2x4	DRY	No.2	SPF
D - C	2x4	DRY	No.2	SPF
F - D	2x4	DRY	No.2	SPF
ALL WEBS EXCEPT	2x3	DRY	No.2	SPF

DRY: SEASONED LUMBER.

PLATES (table is in inches)

JT	TYPE	PLATES	W	LEN	Y	X
A	TMVW+p	MT20	4.0	6.0	2.00	2.00
B	TTW+p	MT20	4.0	6.0		
C	TMVW+p	MT20	4.0	6.0	2.00	2.00
D	BMV1+p	MT20	2.0	4.0		
E	BMWWW-t	MT20	4.0	6.0		
F	BMV1+p	MT20	2.0	4.0		

LATERAL BRACE(S) SHOWN SHALL BE 2X4 SPF#2

DIMENSIONS, SUPPORTS AND LOADINGS SPECIFIED BY FABRICATOR TO BE VERIFIED BY BUILDING DESIGNER

BEARINGS

JT	FACTORED GROSS REACTION VERT	HORZ	MAXIMUM FACTORED GROSS REACTION DOWN	HORZ	UPLIFT	INPUT BRG IN-SX	REQRD BRG IN-SX
F	498	0	498	0	0	MECHANICAL	
D	498	0	498	0	0	MECHANICAL	

A SUITABLE HANGER/MECHANICAL CONNECTION IS REQUIRED AT JOINT F, D. MINIMUM BEARING LENGTH AT JOINT F = 1-8, JOINT D = 1-8.

UNFACTORED REACTIONS

JT	1ST LCASE COMBINED	MAX./MIN. COMPONENT REACTIONS SNOW	LIVE	PERM.LIVE	WIND	DEAD	SOIL
F	355	217 / 0	0 / 0	0 / 0	0 / 0	138 / 0	0 / 0
D	355	217 / 0	0 / 0	0 / 0	0 / 0	138 / 0	0 / 0

BRACING

TOP CHORD TO BE SHEATHED OR MAX. PURLIN SPACING = 6.25 FT.
MAX. UNBRACED BOTTOM CHORD LENGTH = 10.00 FT OR RIGID CEILING DIRECTLY APPLIED.

ALL PITCH BREAKS AND PERIMETER CORNER JOINTS MUST BE LATERALLY RESTRAINED.

LOADING

TOTAL LOAD CASES: (4)

CHORDS

MEMB. FR-TO	MAX. FACTORED FORCE (LBS)	FACTORED VERT. LOAD LC1 (PLF) FROM	TO	MAX CSI (LC)	MAX. UNBRAC LENGTH
A- B	-257 / 0	-78.0	-78.0	0.27 (1)	6.25
B- C	-257 / 0	-78.0	-78.0	0.27 (1)	6.25
F- A	-462 / 0	0.0	0.0	0.06 (1)	7.81
D- C	-462 / 0	0.0	0.0	0.06 (1)	7.81
F- E	0 / 0	-18.5	-18.5	0.14 (4)	10.00
E- D	0 / 0	-18.5	-18.5	0.14 (4)	10.00

WEBS

MEMB. FR-TO	MAX. FACTORED FORCE (LBS)	MAX CSI (LC)
E- B	0 / 87	0.03 (4)
A- E	0 / 164	0.04 (1)
E- C	0 / 164	0.04 (1)

DESIGN CRITERIA

SPECIFIED LOADS:

TOP CH.	LL	=	21.0	PSF
	DL	=	6.0	PSF
BOT CH.	LL	=	0.0	PSF
	DL	=	7.4	PSF
TOTAL LOAD		=	34.4	PSF

SPACING = 24.0 IN. C/C

THIS TRUSS IS DESIGNED FOR RESIDENTIAL OR SMALL BUILDING REQUIREMENTS OF PART 9, NBCC 2015

THIS DESIGN COMPLIES WITH:
- PART 9 OF BCBC 2018 , ABC 2019
- PART 9 OF OBC 2012 (2019 AMENDMENT)
- CSA 086-14
- TPIC 2014

(55 % OF 23.0 P.S.F. G.S.L. PLUS 8.4 P.S.F. RAIN LOAD) EQUALS 21.0 P.S.F. SPECIFIED ROOF LIVE LOAD

ALLOWABLE DEFL.(LL)= L/360 (0.34")
CALCULATED VERT. DEFL.(LL) = L/ 999 (0.00")
ALLOWABLE DEFL.(TL)= L/360 (0.34")
CALCULATED VERT. DEFL.(TL) = L/ 999 (0.02")

CSI: TC=0.27/1.00 (A-B:1) , BC=0.14/1.00 (E-F:4) , WB=0.04/1.00 (C-E:1) , SSI=0.09/1.00 (A-B:1)

DOL LUMBER=1.00 NAIL=1.00 LS BEND=1.10 COMP=1.10 SHEAR=1.10 TENS= 1.10

COMPANION LIVE LOAD FACTOR = 1.00

TRUSS PLATE MANUFACTURER IS NOT RESPONSIBLE FOR QUALITY CONTROL IN THE TRUSS MANUFACTURING PLANT .

NAIL VALUES

PLATE	GRIP(DRY) (PSI) MAX	MIN	SHEAR (PLI) MAX	MIN	SECTION (PLI) MAX	MIN
MT20	650	371	1747	788	1987	1873

PLATE PLACEMENT TOL. = 0.250 inches

PLATE ROTATION TOL. = 5.0 Deg.

JSI GRIP= 0.26 (A) (INPUT = 0.90)
JSI METAL= 0.13 (A) (INPUT = 1.00)

JOB NAME	TRUSS NAME	QUANTITY	PLY	JOB DESC.		DRWG NO.
343277	J01		1	TRUSS DESC.	JT 45147	E22052392

Alpa Roof Truss, Maple

Version 8.530 S Feb 23 2022 MiTek Industries, Inc. Wed Jun 8 15:42:04 2022 Page 1

ID:9a plwcon izmXpuR1McGqzT9hG-E3lhGjDQngLaEYYnOTSjSSsADikpJECVsNe5kpz8JTn

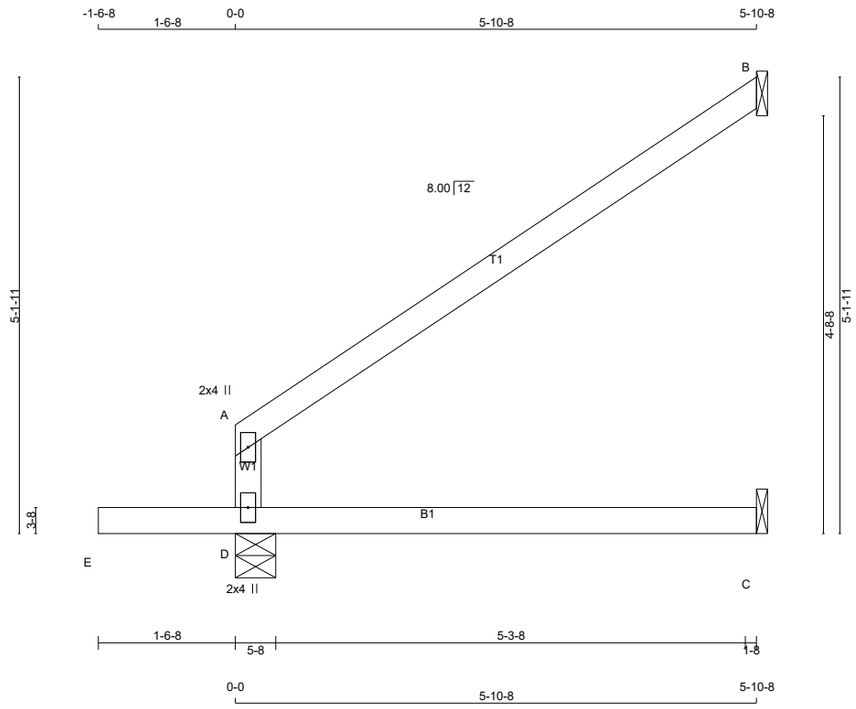

TOTAL WEIGHT = 18 X 18 = 317 lb

[M]

LUMBER

N. L. G. A. RULES

CHORDS	SIZE		LUMBER	DESCR.
D - A	2x4	DRY	No.2	SPF
A - B	2x4	DRY	No.2	SPF
E - C	2x4	DRY	No.2	SPF

DRY: SEASONED LUMBER.

PLATES (table is in inches)

JT	TYPE	PLATES	W	LEN	Y	X
A	TMV+p	MT20	2.0	4.0		
D	BMV1+p	MT20	2.0	4.0		

LATERAL BRACE(S) SHOWN SHALL BE 2X4 SPF#2

DIMENSIONS, SUPPORTS AND LOADINGS SPECIFIED BY FABRICATOR TO BE VERIFIED BY BUILDING DESIGNER

BEARINGS

JT	FACTORED GROSS REACTION VERT	HORZ	MAXIMUM FACTORED GROSS REACTION DOWN	HORZ	UPLIFT	INPUT BRG IN-SX	REQRD BRG IN-SX
D	487	0	487	0	0	5-8	1-8
B	188	0	188	0	0	1-8	1-8
C	41	0	46	0	0	1-8	1-8

SEE MITEK STANDARD DETAIL MSD2015-H FOR CONNECTION TO JOINT(S) B , C

UNFACTORED REACTIONS

JT	1ST LCASE COMBINED	MAX./MIN. COMPONENT REACTIONS SNOW	LIVE	PERM.LIVE	WIND	DEAD	SOIL
D	348	210 / 0	0 / 0	0 / 0	0 / 0	137 / 0	0 / 0
B	130	101 / 0	0 / 0	0 / 0	0 / 0	29 / 0	0 / 0
C	33	0 / 0	0 / 0	0 / 0	0 / 0	33 / 0	0 / 0

BEARING MATERIAL TO BE SPF NO.2 OR BETTER AT JOINT(S) D

BRACING

TOP CHORD TO BE SHEATHED OR MAX. PURLIN SPACING = 6.25 FT.
MAX. UNBRACED BOTTOM CHORD LENGTH = 10.00 FT OR RIGID CEILING DIRECTLY APPLIED.

ALL PITCH BREAKS AND PERIMETER CORNER JOINTS MUST BE LATERALLY RESTRAINED.

LOADING

TOTAL LOAD CASES: (4)

CHORDS MEMB. FR-TO	MAX. FACTORED FORCE (LBS)	FACTORED VERT. LOAD (PLF) FROM	TO	LC1 MAX CSI (LC)	WEBS MAX. UNBRAC LENGTH	MEMB. FR-TO	MAX. FACTORED FORCE (LBS)	MAX CSI (LC)
D- A	-270 / 0	0.0	0.0	0.33 (1)	7.81			
A- B	-23 / 0	-78.0	-78.0	0.33 (1)	6.25			
E- D	0 / 0	-96.5	-96.5	0.16 (1)	10.00			
D- C	0 / 0	-18.5	-18.5	0.19 (4)	10.00			

DESIGN CRITERIA

SPECIFIED LOADS:

TOP CH.	LL	=	21.0	PSF
	DL	=	6.0	PSF
BOT CH.	LL	=	0.0	PSF
	DL	=	7.4	PSF
TOTAL LOAD		=	34.4	PSF

SPACING = 24.0 IN. C/C

THIS TRUSS IS DESIGNED FOR RESIDENTIAL OR SMALL BUILDING REQUIREMENTS OF PART 9, NBCC 2015

THIS DESIGN COMPLIES WITH:
- PART 9 OF BCBC 2018 , ABC 2019
- PART 9 OF OBC 2012 (2019 AMENDMENT)
- CSA 086-14
- TPIC 2014

DESIGN ASSUMPTIONS
-OVERHANG NOT TO BE ALTERED OR CUT OFF.

(55 % OF 23.0 P.S.F. G.S.L. PLUS 8.4 P.S.F. RAIN LOAD) EQUALS 21.0 P.S.F. SPECIFIED ROOF LIVE LOAD

ALLOWABLE DEFL.(TL)= L/360 (0.20")
CALCULATED VERT. DEFL.(TL) = L/ 999 (0.02")

CANTILEVER DEFLECTION:
ALLOWABLE DEFL.(LL)= L/120 (0.19")
CALCULATED VERT. DEFL.(LL) = L/ 999 (0.01")
ALLOWABLE DEFL.(TL)= L/120 (0.19")
CALCULATED VERT. DEFL.(TL) = L/ 999 (0.01")

CSI: TC=0.33/1.00 (A-D:1) , BC=0.19/1.00 (C-D:4) , WB=0.00/1.00 (n/a:0) , SSI=0.18/1.00 (A-B:1)

DOL LUMBER=1.00 NAIL=1.00 LS BEND=1.10 COMP=1.10 SHEAR=1.10 TENS= 1.10

COMPANION LIVE LOAD FACTOR = 1.00

AUTOSOLVE RIGHT HEEL ONLY

TRUSS PLATE MANUFACTURER IS NOT RESPONSIBLE FOR QUALITY CONTROL IN THE TRUSS MANUFACTURING PLANT .

NAIL VALUES

PLATE	GRIP(DRY) (PSI) MAX	MIN	SHEAR (PLI) MAX	MIN	SECTION (PLI) MAX	MIN
MT20	650	371	1747	788	1987	1873

PLATE PLACEMENT TOL. = 0.250 inches

PLATE ROTATION TOL. = 5.0 Deg.

JSI GRIP= 0.17 (A) (INPUT = 0.90)
JSI METAL= 0.14 (A) (INPUT = 1.00)

JOB NAME	TRUSS NAME	QUANTITY	PLY	JOB DESC.		DRWG NO.
343277	J01T	.	1	TRUSS DESC.	JT 45147	E22052393

Alpa Roof Truss, Maple

Version 8.530 S Feb 23 2022 MiTek Industries, Inc. Wed Jun 8 15:42:06 2022 Page 1

ID:9a plwcon izmXpuR1McGqzT9hG-ASsRqPFhJlcHUsiAVuUBXtxafWPnn8rnKh7Coiz8JTI

Scale = 1:23.8

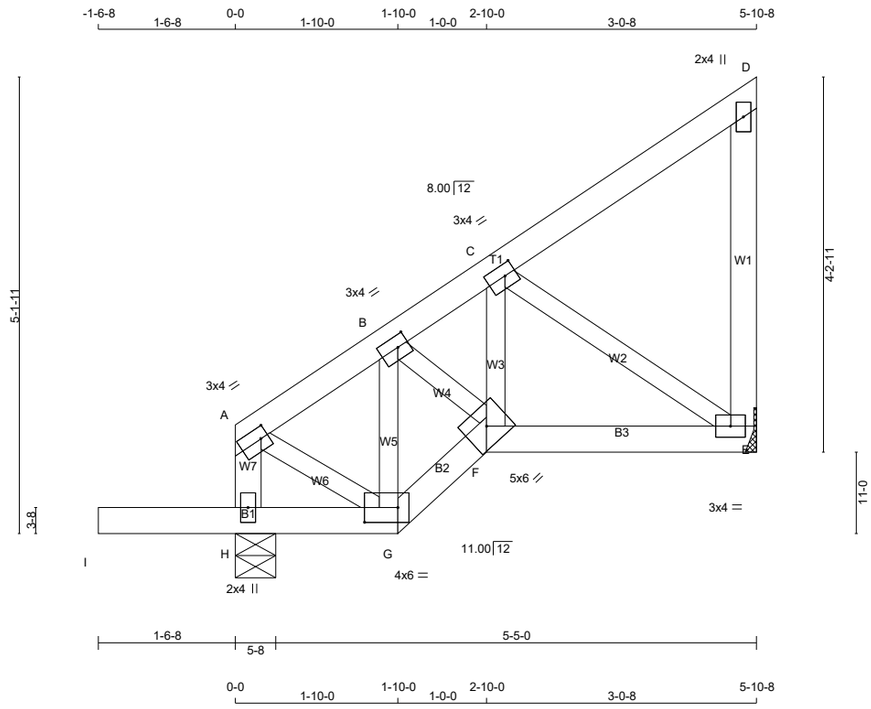

TOTAL WEIGHT = 3 X 30 = 90 lb

[M]

LUMBER

N. L. G. A. RULES

CHORDS	SIZE		LUMBER	DESCR.
H - A	2x4	DRY	No.2	SPF
A - D	2x4	DRY	No.2	SPF
E - D	2x4	DRY	No.2	SPF
I - G	2x4	DRY	No.2	SPF
G - F	2x4	DRY	No.2	SPF
F - E	2x4	DRY	No.2	SPF
ALL WEBS	2x3	DRY	No.2	SPF

DRY: SEASONED LUMBER.

PLATES (table is in inches)

JT	TYPE	PLATES	W	LEN	Y	X
A	TMVW-t	MT20	3.0	4.0	1.50	1.00
B	TMWW-t	MT20	3.0	4.0	1.50	1.50
C	TMWW-t	MT20	3.0	4.0	1.50	1.50
D	TMV+p	MT20	2.0	4.0		
E	BMVW1-t	MT20	3.0	4.0		
F	BBWW-h	MT20	5.0	6.0		
G	BBWW-l	MT20	4.0	6.0	2.00	4.50
H	BMV1+p	MT20	2.0	4.0		

LATERAL BRACE(S) SHOWN SHALL BE 2X4 SPF#2

DIMENSIONS, SUPPORTS AND LOADINGS SPECIFIED BY FABRICATOR TO BE VERIFIED BY BUILDING DESIGNER

BEARINGS

JT	FACTORED GROSS REACTION VERT	HORZ	MAXIMUM FACTORED GROSS REACTION DOWN	HORZ	UPLIFT	INPUT BRG	REQRD BRG
H	452	0	452	0	0	5-8	1-8
E	264	0	264	0	0	MECHANICAL	

A SUITABLE HANGER/MECHANICAL CONNECTION IS REQUIRED AT JOINT E. MINIMUM BEARING LENGTH AT JOINT E = 1-8.

UNFACTORED REACTIONS

JT	1ST LCASE COMBINED	MAX./MIN. COMPONENT REACTIONS SNOW	LIVE	PERM.LIVE	WIND	DEAD	SOIL
H	322	197 / 0	0 / 0	0 / 0	0 / 0	125 / 0	0 / 0
E	188	115 / 0	0 / 0	0 / 0	0 / 0	73 / 0	0 / 0

BEARING MATERIAL TO BE SPF NO.2 OR BETTER AT JOINT(S) H

BRACING

TOP CHORD TO BE SHEATHED OR MAX. PURLIN SPACING = 6.25 FT.
MAX. UNBRACED BOTTOM CHORD LENGTH = 10.00 FT OR RIGID CEILING DIRECTLY APPLIED.

ALL PITCH BREAKS AND PERIMETER CORNER JOINTS MUST BE LATERALLY RESTRAINED.

LOADING

TOTAL LOAD CASES: (4)

C H O R D S

MEMB. FR-TO	MAX. FACTORED FORCE (LBS)	FACTORED VERT. LOAD (PLF) FROM	TO	LC1 MAX CSI (LC)	MAX. UNBRAC LENGTH
H- A	-223 / 0	0.0	0.0	0.02 (1)	7.81
A- B	-165 / 0	-78.0	-78.0	0.04 (1)	6.25
B- C	-239 / 0	-78.0	-78.0	0.08 (1)	6.25
C- D	-11 / 0	-78.0	-78.0	0.08 (1)	6.25
E- D	-95 / 0	0.0	0.0	0.03 (1)	7.81
I- H	0 / 0	-96.5	-96.5	0.16 (1)	10.00
H- G	0 / 0	-18.5	-18.5	0.16 (1)	10.00
G- F	0 / 173	-18.5	-18.5	0.03 (1)	10.00
F- E	0 / 216	-18.5	-18.5	0.07 (4)	10.00

W E B S

MEMB. FR-TO	MAX. FACTORED FORCE (LBS)	MAX CSI (LC)
A- G	0 / 154	0.03 (1)
G- B	-220 / 0	0.03 (1)
B- F	0 / 130	0.03 (1)
F- C	0 / 63	0.02 (4)
C- E	-259 / 0	0.06 (1)

DESIGN CRITERIA

SPECIFIED LOADS:

TOP CH.	LL	=	21.0	PSF
	DL	=	6.0	PSF
BOT CH.	LL	=	0.0	PSF
	DL	=	7.4	PSF
TOTAL LOAD		=	34.4	PSF

SPACING = 24.0 IN. C/C

THIS TRUSS IS DESIGNED FOR RESIDENTIAL OR SMALL BUILDING REQUIREMENTS OF PART 9, NBCC 2015

THIS DESIGN COMPLIES WITH:
- PART 9 OF BCBC 2018 , ABC 2019
- PART 9 OF OBC 2012 (2019 AMENDMENT)
- CSA 086-14
- TPIC 2014

DESIGN ASSUMPTIONS
-OVERHANG NOT TO BE ALTERED OR CUT OFF.

(55 % OF 23.0 P.S.F. G.S.L. PLUS 8.4 P.S.F. RAIN LOAD) EQUALS 21.0 P.S.F. SPECIFIED ROOF LIVE LOAD

ALLOWABLE DEFL.(LL)= L/360 (0.20")
CALCULATED VERT. DEFL.(LL) = L/ 999 (0.00")
ALLOWABLE DEFL.(TL)= L/360 (0.20")
CALCULATED VERT. DEFL.(TL) = L/ 999 (0.01")

CANTILEVER DEFLECTION:
ALLOWABLE DEFL.(LL)= L/120 (0.19")
CALCULATED VERT. DEFL.(LL) = L/ 999 (0.02")
ALLOWABLE DEFL.(TL)= L/120 (0.19")
CALCULATED VERT. DEFL.(TL) = L/ 588 (0.03")

CSI: TC=0.08/1.00 (B-C:1) , BC=0.16/1.00 (G-H:1) , WB=0.06/1.00 (C-E:1) , SSI=0.12/1.00 (H-I:1)

DOL LUMBER=1.00 NAIL=1.00 LS BEND=1.10 COMP=1.10 SHEAR=1.10 TENS= 1.10

COMPANION LIVE LOAD FACTOR = 1.00

TRUSS PLATE MANUFACTURER IS NOT RESPONSIBLE FOR QUALITY CONTROL IN THE TRUSS MANUFACTURING PLANT .

NAIL VALUES

PLATE	GRIP(DRY) (PSI) MAX	MIN	SHEAR (PLI) MAX	MIN	SECTION (PLI) MAX	MIN
MT20	650	371	1747	788	1987	1873

PLATE PLACEMENT TOL. = 0.250 inches

PLATE ROTATION TOL. = 5.0 Deg.

JSI GRIP= 0.48 (A) (INPUT = 0.90)
JSI METAL= 0.07 (E) (INPUT = 1.00)

JOB NAME	TRUSS NAME	QUANTITY	PLY	JOB DESC.	DRWG NO.
343277	J01TA	.	1	TRUSS DESC. JT 45147	E22052394

Alpa Roof Truss, Maple

Version 8.530 S Feb 23 2022 MiTek Industries, Inc. Wed Jun 8 15:42:07 2022 Page 1

ID:9a plwcon izmXpuR1McGqzT9hG-eeQqukFJ4bk850HM3b0Q45Ul6wlIWaoxZLslK8z8JTk

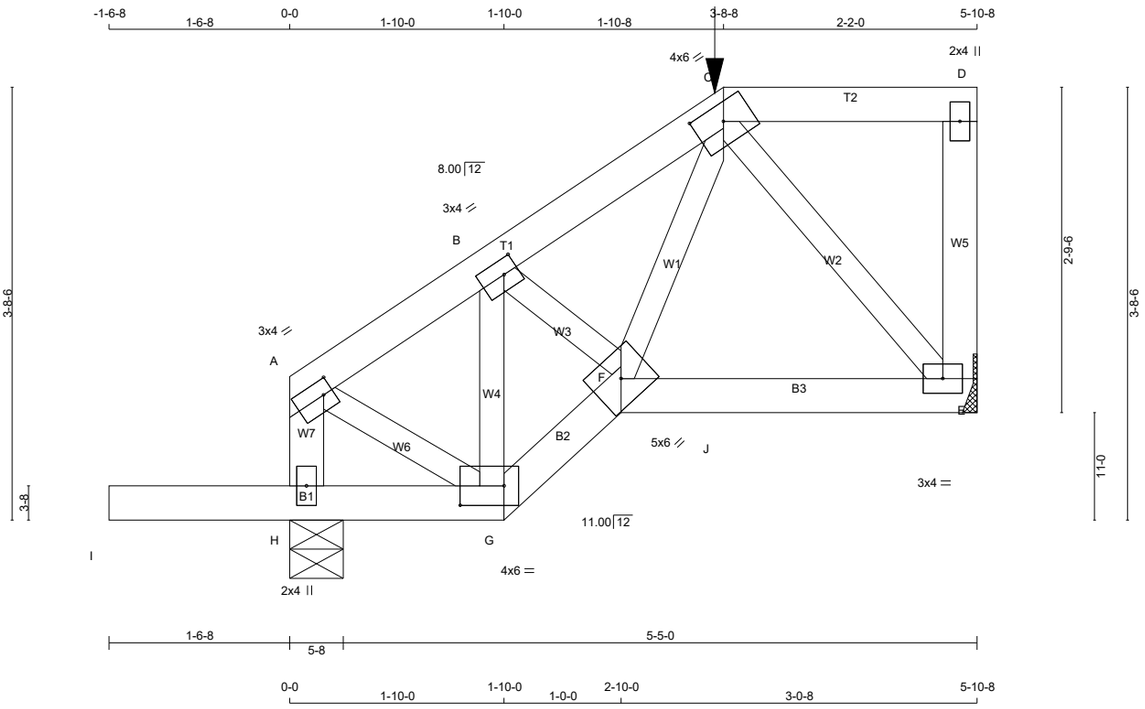

TOTAL WEIGHT = 2 X 28 = 57 lb [M]

LUMBER

N. L. G. A. RULES

CHORDS	SIZE		LUMBER	DESCR.
A - C	2x4	DRY	No.2	SPF
C - D	2x4	DRY	No.2	SPF
E - D	2x4	DRY	No.2	SPF
H - A	2x4	DRY	No.2	SPF
I - G	2x4	DRY	No.2	SPF
G - F	2x4	DRY	No.2	SPF
F - E	2x4	DRY	No.2	SPF
ALL WEBS EXCEPT	2x3	DRY	No.2	SPF

DRY: SEASONED LUMBER.

PLATES (table is in inches)

JT	TYPE	PLATES	W	LEN	Y	X
A	TMVW-t	MT20	3.0	4.0	1.50	1.00
B	TMWW-t	MT20	3.0	4.0	1.50	1.50
C	TTWW-h	MT20	4.0	6.0	1.75	3.00
D	TMV+p	MT20	2.0	4.0		
E	BMVW1-t	MT20	3.0	4.0		
F	BBWW-h	MT20	5.0	6.0		
G	BBWW-l	MT20	4.0	6.0	2.00	4.50
H	BMV1+p	MT20	2.0	4.0		

LATERAL BRACE(S) SHOWN SHALL BE 2X4 SPF#2

LICENSED PROFESSIONAL ENGINEER
V. WIDYA
100225448
06/08/2022
PROVINCE OF ONTARIO

DIMENSIONS, SUPPORTS AND LOADINGS SPECIFIED BY FABRICATOR TO BE VERIFIED BY BUILDING DESIGNER

BEARINGS

JT	FACTORED GROSS REACTION VERT	HORZ	MAXIMUM FACTORED GROSS REACTION DOWN	HORZ	UPLIFT	INPUT BRG	REQRD BRG
E	413	0	413	0	0	MECHANICAL	
H	527	0	527	0	0	5-8	1-8

A SUITABLE HANGER/MECHANICAL CONNECTION IS REQUIRED AT JOINT E. MINIMUM BEARING LENGTH AT JOINT E = 1-8.

UNFACTORED REACTIONS

JT	1ST LCASE COMBINED	MAX./MIN. COMPONENT REACTIONS SNOW	LIVE	PERM.LIVE	WIND	DEAD	SOIL
E	294	183 / 0	0 / 0	0 / 0	0 / 0	111 / 0	0 / 0
H	377	225 / 0	0 / 0	0 / 0	0 / 0	152 / 0	0 / 0

BEARING MATERIAL TO BE SPF NO.2 OR BETTER AT JOINT(S) H

BRACING

TOP CHORD TO BE SHEATHED OR MAX. PURLIN SPACING = 6.25 FT.
MAX. UNBRACED BOTTOM CHORD LENGTH = 10.00 FT OR RIGID CEILING DIRECTLY APPLIED.

ALL PITCH BREAKS AND PERIMETER CORNER JOINTS MUST BE LATERALLY RESTRAINED.

LOADING

TOTAL LOAD CASES: (4)

CHORDS

MEMB. FR-TO	MAX. FACTORED FORCE (LBS)	FACTORED VERT. LOAD (PLF) FROM	TO	LC1	MAX CSI (LC)	MAX. UNBRAC LENGTH
A- B	-243 / 0	-78.0	-78.0	0.04 (1)	6.25	
B- C	-339 / 0	-78.0	-78.0	0.04 (1)	6.25	
C- D	0 / 0	-111.3	-111.3	0.10 (1)	10.00	
E- D	-121 / 0	0.0	0.0	0.02 (1)	7.81	
H- A	-292 / 0	0.0	0.0	0.03 (1)	7.81	
I- H	0 / 0	-96.5	-96.5	0.17 (1)	10.00	
H- G	0 / 0	-26.4	-26.4	0.17 (1)	10.00	
G- F	0 / 261	-26.4	-26.4	0.05 (1)	10.00	
F- J	0 / 223	-26.4	-26.4	0.10 (4)	10.00	
J- E	0 / 223	-26.4	-26.4	0.10 (4)	10.00	

WEBS

MEMB. FR-TO	MAX. FACTORED FORCE (LBS)	MAX CSI (LC)
G- B	-302 / 0	0.05 (1)
B- F	0 / 118	0.03 (1)
F- C	0 / 157	0.04 (1)
C- E	-338 / 0	0.07 (1)
A- G	0 / 231	0.06 (1)

FACTORED CONCENTRATED LOADS (LBS)

JT	LOC.	LC1	MAX-	MAX+	FACE	DIR.	TYPE	HEEL	CONN.
C	3-8-8	-106	-106	---	FRONT	VERT	TOTAL	---	C1

CONNECTION REQUIREMENTS

1) **C1:** A SUITABLE HANGER/MECHANICAL CONNECTION IS REQUIRED.

DESIGN CRITERIA

SPECIFIED LOADS:

TOP CH.	LL	=	21.0	PSF
	DL	=	6.0	PSF
BOT CH.	LL	=	0.0	PSF
	DL	=	7.4	PSF
TOTAL LOAD		=	34.4	PSF

SPACING = 24.0 IN. C/C

LOADING IN FLAT SECTION BASED ON A SLOPE OF 2.00/12 MINIMUM

GIRDER TYPE: CPrimeHip
LEFT SETBACK = 3-8-8
RIGHT SETBACK = 0-0
END SETBACK = 3-8-8
END WALL WIDTH = 0-0
CORNER FRAMING TYPE: CONVENTIONAL
END JACK TYPE: CONVENTIONAL
APPLIED TO FRONT SIDE
- ADDT'L LOADS BASED ON 55 % OF GSL.

THIS TRUSS IS DESIGNED FOR RESIDENTIAL OR SMALL BUILDING REQUIREMENTS OF PART 9, NBCC 2015

THIS DESIGN COMPLIES WITH:
- PART 9 OF BCBC 2018 , ABC 2019
- PART 9 OF OBC 2012 (2019 AMENDMENT)
- CSA 086-14
- TPIC 2014

DESIGN ASSUMPTIONS
-OVERHANG NOT TO BE ALTERED OR CUT OFF.

(55 % OF 23.0 P.S.F. G.S.L. PLUS 8.4 P.S.F. RAIN LOAD) EQUALS 21.0 P.S.F. SPECIFIED ROOF LIVE LOAD

ALLOWABLE DEFL.(LL)= L/360 (0.20")
CALCULATED VERT. DEFL.(LL) = L/ 999 (0.00")
ALLOWABLE DEFL.(TL)= L/360 (0.20")
CALCULATED VERT. DEFL.(TL) = L/ 999 (0.01")

CANTILEVER DEFLECTION:
ALLOWABLE DEFL.(LL)= L/120 (0.19")
CALCULATED VERT. DEFL.(LL) = L/ 999 (0.02")
ALLOWABLE DEFL.(TL)= L/120 (0.19")
CALCULATED VERT. DEFL.(TL) = L/ 617 (0.03")

CSI: TC=0.10/1.00 (C-D:1) , BC=0.17/1.00 (G-H:1) , WB=0.07/1.00 (C-E:1) , SSI=0.13/1.00 (H-I:1)

DOL LUMBER=1.00 NAIL=1.00 LS BEND=1.00 COMP=1.00 SHEAR=1.00 TENS= 1.00

COMPANION LIVE LOAD FACTOR = 1.00

TRUSS PLATE MANUFACTURER IS NOT RESPONSIBLE FOR QUALITY CONTROL IN THE TRUSS MANUFACTURING PLANT .

NAIL VALUES

PLATE	GRIP(DRY) (PSI) MAX	MIN	SHEAR (PLI) MAX	MIN	SECTION (PLI) MAX	MIN
MT20	650	371	1747	788	1987	1873

PLATE PLACEMENT TOL. = 0.250 inches

PLATE ROTATION TOL. = 5.0 Deg.

JSI GRIP= 0.72 (A) (INPUT = 0.90)
JSI METAL= 0.10 (A) (INPUT = 1.00)

JOB NAME	TRUSS NAME	QUANTITY	PLY	JOB DESC.		DRWG NO.
343277	J01TB	.	1	TRUSS DESC.	JT 45147	E22052395

Alpa Roof Truss, Maple

Version 8.530 S Feb 23 2022 MiTek Industries, Inc. Wed Jun 8 15:42:09 2022 Page 1

ID:9a plwcon izmXpuR1McGqzT9hG-a1YaJQHZcD sLKRlB02u9WZ5ujRT VaE0fLsP1z8JTi

Scale = 1:23.5

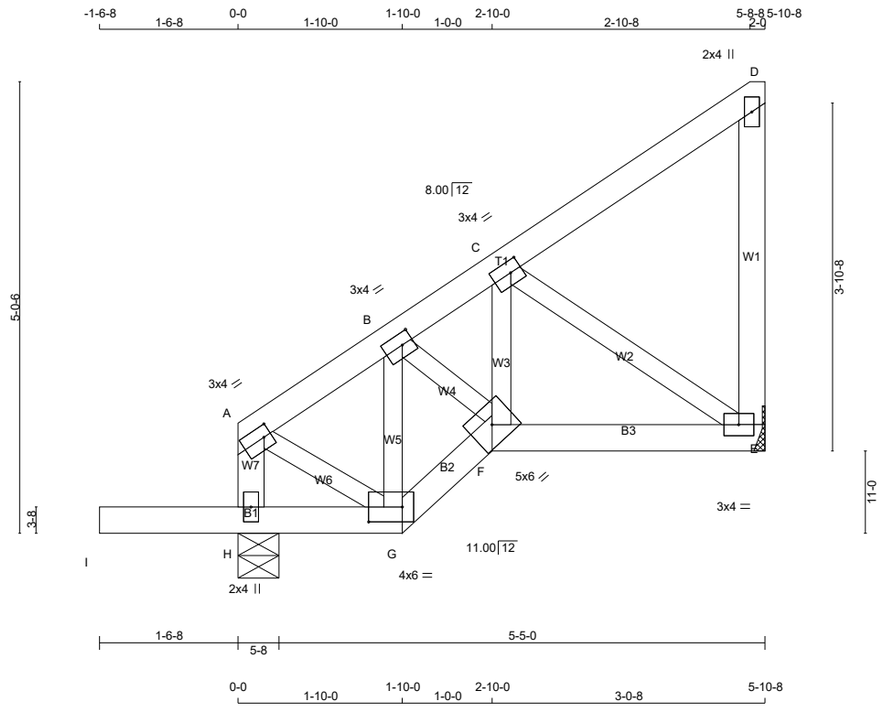

TOTAL WEIGHT = 2 X 30 = 60 lb [M]

LUMBER

N. L. G. A. RULES

CHORDS	SIZE		LUMBER	DESCR.
A - D	2x4	DRY	No.2	SPF
E - D	2x4	DRY	No.2	SPF
H - A	2x4	DRY	No.2	SPF
I - G	2x4	DRY	No.2	SPF
G - F	2x4	DRY	No.2	SPF
F - E	2x4	DRY	No.2	SPF
ALL WEBS EXCEPT	2x3	DRY	No.2	SPF

DRY: SEASONED LUMBER.

PLATES (table is in inches)

JT	TYPE	PLATES	W	LEN	Y	X
A	TMVW-t	MT20	3.0	4.0	1.50	1.00
B	TMWW-t	MT20	3.0	4.0	1.50	1.50
C	TMWW-t	MT20	3.0	4.0	1.50	1.50
D	TMV+p	MT20	2.0	4.0		
E	BMVW1-t	MT20	3.0	4.0		
F	BBWW-h	MT20	5.0	6.0		
G	BBWW-l	MT20	4.0	6.0	2.00	4.50
H	BMV1+p	MT20	2.0	4.0		

LATERAL BRACE(S) SHOWN SHALL BE 2X4 SPF#2

LICENSED PROFESSIONAL ENGINEER
Y. WIDYA
100225448
06/08/2022
PROVINCE OF ONTARIO

DIMENSIONS, SUPPORTS AND LOADINGS SPECIFIED BY FABRICATOR TO BE VERIFIED BY BUILDING DESIGNER

BEARINGS

JT	FACTORED GROSS REACTION VERT	HORZ	MAXIMUM FACTORED GROSS REACTION DOWN	HORZ	UPLIFT	INPUT BRG	REQRD BRG
E	264	0	264	0	0	MECHANICAL	
H	452	0	452	0	0	5-8	1-8

A SUITABLE HANGER/MECHANICAL CONNECTION IS REQUIRED AT JOINT E. MINIMUM BEARING LENGTH AT JOINT E = 1-8.

UNFACTORED REACTIONS

JT	1ST LCASE COMBINED	MAX./MIN. COMPONENT REACTIONS SNOW	LIVE	PERM.LIVE	WIND	DEAD	SOIL
E	188	115 / 0	0 / 0	0 / 0	0 / 0	73 / 0	0 / 0
H	322	197 / 0	0 / 0	0 / 0	0 / 0	125 / 0	0 / 0

BEARING MATERIAL TO BE SPF NO.2 OR BETTER AT JOINT(S) H

BRACING

TOP CHORD TO BE SHEATHED OR MAX. PURLIN SPACING = 6.25 FT.
MAX. UNBRACED BOTTOM CHORD LENGTH = 10.00 FT OR RIGID CEILING DIRECTLY APPLIED.

ALL PITCH BREAKS AND PERIMETER CORNER JOINTS MUST BE LATERALLY RESTRAINED.

LOADING

TOTAL LOAD CASES: (4)

CHORDS

MEMB. FR-TO	MAX. FACTORED FORCE (LBS)	FACTORED VERT. LOAD (PLF) FROM	TO	LC1 MAX CSI (LC)	MAX. UNBRAC LENGTH
A- B	-165 / 0	-78.0	-78.0	0.04 (1)	6.25
B- C	-239 / 0	-78.0	-78.0	0.08 (1)	6.25
C- D	-11 / 0	-78.0	-78.0	0.08 (1)	6.25
E- D	-95 / 0	0.0	0.0	0.03 (1)	7.81
H- A	-223 / 0	0.0	0.0	0.02 (1)	7.81
I- H	0 / 0	-96.5	-96.5	0.16 (1)	10.00
H- G	0 / 0	-18.5	-18.5	0.16 (1)	10.00
G- F	0 / 173	-18.5	-18.5	0.03 (1)	10.00
F- E	0 / 216	-18.5	-18.5	0.07 (4)	10.00

WEBS

MEMB. FR-TO	MAX. FACTORED FORCE (LBS)	MAX CSI (LC)
G- B	-220 / 0	0.03 (1)
B- F	0 / 130	0.03 (1)
F- C	0 / 63	0.02 (4)
C- E	-259 / 0	0.06 (1)
A- G	0 / 154	0.03 (1)

DESIGN CRITERIA

SPECIFIED LOADS:

TOP CH.	LL	=	21.0	PSF
	DL	=	6.0	PSF
BOT CH.	LL	=	0.0	PSF
	DL	=	7.4	PSF
TOTAL LOAD		=	34.4	PSF

SPACING = 24.0 IN. C/C

THIS TRUSS IS DESIGNED FOR RESIDENTIAL OR SMALL BUILDING REQUIREMENTS OF PART 9, NBCC 2015

THIS DESIGN COMPLIES WITH:
- PART 9 OF BCBC 2018 , ABC 2019
- PART 9 OF OBC 2012 (2019 AMENDMENT)
- CSA 086-14
- TPIC 2014

DESIGN ASSUMPTIONS
-OVERHANG NOT TO BE ALTERED OR CUT OFF.

(55 % OF 23.0 P.S.F. G.S.L. PLUS 8.4 P.S.F. RAIN LOAD) EQUALS 21.0 P.S.F. SPECIFIED ROOF LIVE LOAD

ALLOWABLE DEFL.(LL)= L/360 (0.20")
CALCULATED VERT. DEFL.(LL) = L/ 999 (0.00")
ALLOWABLE DEFL.(TL)= L/360 (0.20")
CALCULATED VERT. DEFL.(TL) = L/ 999 (0.01")

CANTILEVER DEFLECTION:
ALLOWABLE DEFL.(LL)= L/120 (0.19")
CALCULATED VERT. DEFL.(LL) = L/ 999 (0.02")
ALLOWABLE DEFL.(TL)= L/120 (0.19")
CALCULATED VERT. DEFL.(TL) = L/ 588 (0.03")

CSI: TC=0.08/1.00 (B-C:1) , BC=0.16/1.00 (G-H:1) , WB=0.06/1.00 (C-E:1) , SSI=0.12/1.00 (H-I:1)

DOL LUMBER=1.00 NAIL=1.00 LS BEND=1.10 COMP=1.10 SHEAR=1.10 TENS= 1.10

COMPANION LIVE LOAD FACTOR = 1.00

TRUSS PLATE MANUFACTURER IS NOT RESPONSIBLE FOR QUALITY CONTROL IN THE TRUSS MANUFACTURING PLANT .

NAIL VALUES

PLATE	GRIP(DRY) (PSI) MAX	MIN	SHEAR (PLI) MAX	MIN	SECTION (PLI) MAX	MIN
MT20	650	371	1747	788	1987	1873

PLATE PLACEMENT TOL. = 0.250 inches

PLATE ROTATION TOL. = 5.0 Deg.

JSI GRIP= 0.48 (A) (INPUT = 0.90)
JSI METAL= 0.07 (E) (INPUT = 1.00)

JOB NAME	TRUSS NAME	QUANTITY	PLY	JOB DESC.		DRWG NO.
343277	P05A	.	1	TRUSS DESC.	JT 45147	E22052396

Alpa Roof Truss, Maple

Version 8.530 S Feb 23 2022 MiTek Industries, Inc. Wed Jun 8 15:42:10 2022 Page 1

ID:9a plwcon izmXpuR1McGqzT9hG-3D6yWmIBNW6jyT?xkkZ7ij67F7mPjx NFJ5PxTz8JTh

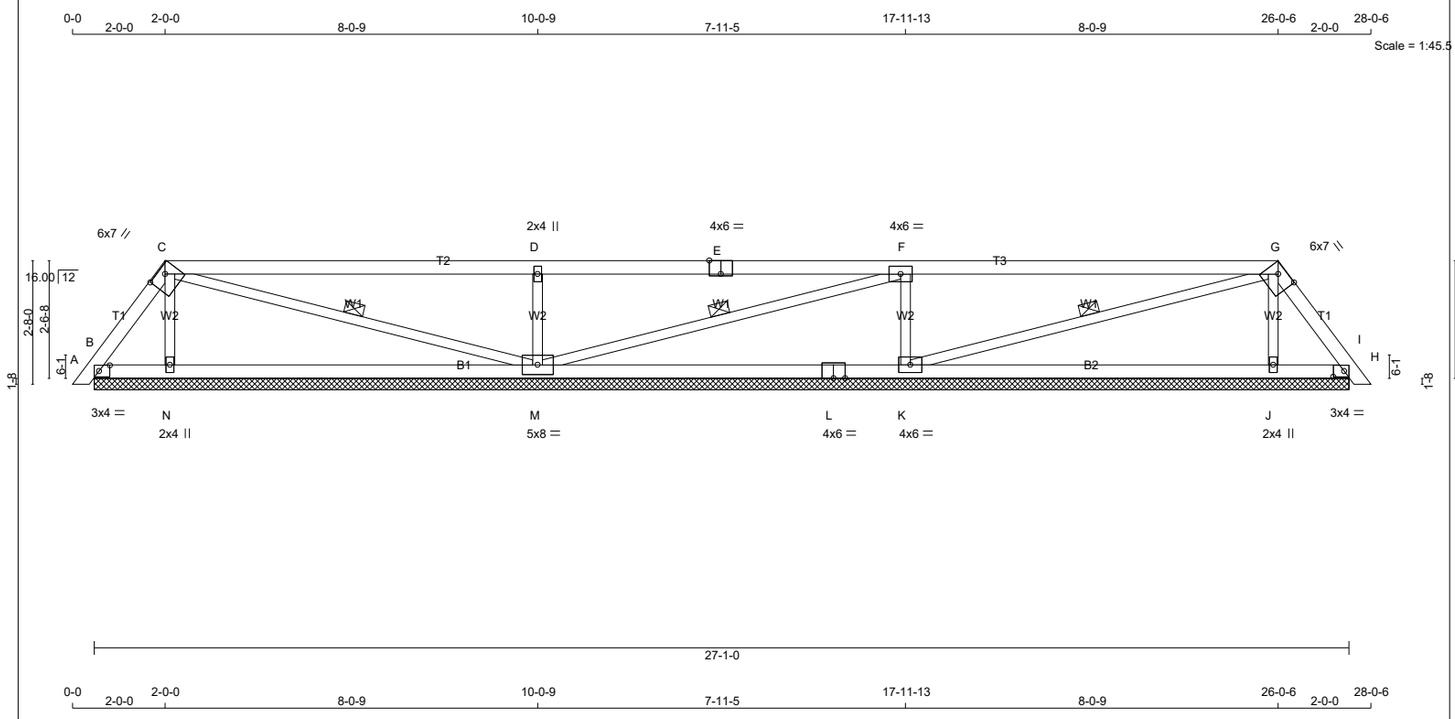

TOTAL WEIGHT = 2 X 92 = 184 lb

[M]

LUMBER

N. L. G. A. RULES

CHORDS	SIZE		LUMBER	DESCR.
A - C	2x4	DRY	No.2	SPF
C - E	2x4	DRY	No.2	SPF
E - G	2x4	DRY	No.2	SPF
G - I	2x4	DRY	No.2	SPF
B - L	2x4	DRY	No.2	SPF
L - H	2x4	DRY	No.2	SPF
ALL WEBS	2x3	DRY	No.2	SPF

DRY: SEASONED LUMBER.

PLATES (table is in inches)

JT	TYPE	PLATES	W	LEN	Y	X
B	TMB1-l	MT20	3.0	4.0	1.50	2.75
C	TTWW-h	MT20	6.0	7.0	1.75	4.00
D	TMW+w	MT20	2.0	4.0		
E	TS-t	MT20	4.0	6.0	Edge	3.00
F	TMWW-t	MT20	4.0	6.0		
G	TTWW-h	MT20	6.0	7.0	2.00	4.25
H	TMB1-l	MT20	3.0	4.0	1.50	2.75
J	BMW1+w	MT20	2.0	4.0		
K	BMWW1-t	MT20	4.0	6.0		
L	BS-t	MT20	4.0	6.0		
M	BMWWW1-t	MT20	5.0	8.0		
N	BMW1+w	MT20	2.0	4.0		

Edge - INDICATES REFERENCE CORNER OF PLATE TOUCHES EDGE OF CHORD.

LATERAL BRACE(S) SHOWN SHALL BE 2X4 SPF#2

DIMENSIONS, SUPPORTS AND LOADINGS SPECIFIED BY FABRICATOR TO BE VERIFIED BY BUILDING DESIGNER

BEARINGS

JT	FACTORED GROSS REACTION VERT	HORZ	MAXIMUM FACTORED GROSS REACTION DOWN	HORZ	UPLIFT	INPUT BRG IN-SX	REQRD BRG IN-SX
B	120	0	120	0	-5	27-1-0 (11-1-8)	8
N	369	0	369	0	0	27-1-0 (11-1-8)	8
M	852	0	852	0	0	27-1-0 (11-1-8)	8
K	833	0	833	0	0	27-1-0 (11-1-8)	8
J	361	0	361	0	0	27-1-0 (11-1-8)	8
H	133	0	133	0	-2	27-1-0 (11-1-8)	8

VALUE IN PARENTHESIS INDICATES EFFECTIVE BEARING LENGTH

PROVIDE ANCHORAGE AT BEARING JOINT B FOR 150 LBS FACTORED UPLIFT
PROVIDE ANCHORAGE AT BEARING JOINT H FOR 150 LBS FACTORED UPLIFT

UNFACTORED REACTIONS

JT	1ST LCASE COMBINED	MAX./MIN. COMPONENT REACTIONS SNOW	LIVE	PERM.LIVE	WIND	DEAD	SOIL
B	80	83 / 0	0 / 0	0 / 0	0 / 0	0 / -4	0 / 0
N	270	126 / 0	0 / 0	0 / 0	0 / 0	144 / 0	0 / 0
M	606	378 / 0	0 / 0	0 / 0	0 / 0	228 / 0	0 / 0
K	593	368 / 0	0 / 0	0 / 0	0 / 0	225 / 0	0 / 0
J	264	122 / 0	0 / 0	0 / 0	0 / 0	143 / 0	0 / 0
H	88	90 / 0	0 / 0	0 / 0	0 / 0	0 / -2	0 / 0

BEARING MATERIAL TO BE SPF NO.2 OR BETTER AT JOINT(S) B, N, M, K, J, H

BRACING

TOP CHORD TO BE SHEATHED OR MAX. PURLIN SPACING = 6.25 FT.
MAX. UNBRACED BOTTOM CHORD LENGTH = 10.00 FT OR RIGID CEILING DIRECTLY APPLIED.

ALL PITCH BREAKS AND PERIMETER CORNER JOINTS MUST BE LATERALLY RESTRAINED.

1 LATERAL BRACE(S) AT 1/ 2 LENGTH OF C-M, F-M, G-K.

LOADING

TOTAL LOAD CASES: (4)

C H O R D S

MEMB. FR-TO	MAX. FACTORED FORCE (LBS)	FACTORED VERT. LOAD LC1 (PLF) FROM	TO	MAX CSI (LC)	MAX. UNBRAC LENGTH
A- B	0 / 10	-78.0	-78.0	0.01 (1)	10.00
B- C	-82 / 0	-78.0	-78.0	0.03 (1)	6.25
C- D	0 / 1	-78.0	-78.0	0.68 (1)	10.00
D- E	0 / 1	-78.0	-78.0	0.68 (1)	10.00
E- F	0 / 1	-78.0	-78.0	0.68 (1)	10.00
F- G	-24 / 0	-78.0	-78.0	0.68 (1)	6.25
G- H	-97 / 0	-78.0	-78.0	0.03 (1)	6.25
H- I	0 / 10	-78.0	-78.0	0.01 (1)	10.00
B- N	0 / 46	-18.5	-18.5	0.19 (4)	10.00
N- M	0 / 35	-18.5	-18.5	0.24 (4)	10.00
M- L	0 / 24	-18.5	-18.5	0.24 (4)	10.00
L- K	0 / 24	-18.5	-18.5	0.24 (4)	10.00
K- J	0 / 45	-18.5	-18.5	0.24 (4)	10.00
J- H	0 / 55	-18.5	-18.5	0.19 (4)	10.00

W E B S

MEMB. FR-TO	MAX. FACTORED FORCE (LBS)	MAX CSI (LC)
N- C	-234 / 0	0.04 (1)
C- M	-38 / 0	0.02 (1)
M- D	-685 / 0	0.11 (1)
M- F	-26 / 0	0.01 (1)
K- F	-678 / 0	0.11 (1)
K- G	-22 / 0	0.01 (1)
J- G	-226 / 0	0.04 (1)

DESIGN CRITERIA

SPECIFIED LOADS:

TOP CH.	LL	=	21.0	PSF
	DL	=	6.0	PSF
BOT CH.	LL	=	0.0	PSF
	DL	=	7.4	PSF
TOTAL LOAD		=	34.4	PSF

SPACING = 24.0 IN. C/C

LOADING IN FLAT SECTION BASED ON A SLOPE OF 2.00/12 MINIMUM

THIS TRUSS IS DESIGNED FOR RESIDENTIAL OR SMALL BUILDING REQUIREMENTS OF PART 9, NBCC 2015

THIS DESIGN COMPLIES WITH:
- PART 9 OF BCBC 2018 , ABC 2019
- PART 9 OF OBC 2012 (2019 AMENDMENT)
- CSA 086-14
- TPIC 2014

(55 % OF 23.0 P.S.F. G.S.L. PLUS 8.4 P.S.F. RAIN LOAD) EQUALS 21.0 P.S.F. SPECIFIED ROOF LIVE LOAD

CSI: TC=0.68/1.00 (F-G:1) , BC=0.24/1.00 (J-K:4) , WB=0.11/1.00 (D-M:1) , SSI=0.29/1.00 (F-G:1)

DOL LUMBER=1.00 NAIL=1.00 LS BEND=1.10 COMP=1.10 SHEAR=1.10 TENS= 1.10

COMPANION LIVE LOAD FACTOR = 1.00

TRUSS PLATE MANUFACTURER IS NOT RESPONSIBLE FOR QUALITY CONTROL IN THE TRUSS MANUFACTURING PLANT .

NAIL VALUES

PLATE	GRIP(DRY) (PSI) MAX	MIN	SHEAR (PLI) MAX	MIN	SECTION (PLI) MAX	MIN
MT20	650	371	1747	788	1987	1873

PLATE PLACEMENT TOL. = 0.250 inches

PLATE ROTATION TOL. = 5.0 Deg.

JSI GRIP= 0.88 (G) (INPUT = 0.90)
JSI METAL= 0.20 (E) (INPUT = 1.00)

JOB NAME	TRUSS NAME	QUANTITY	PLY	JOB DESC.	DRWG NO.
343277	P05B	.	1	TRUSS DESC. JT 45147	E22052397

Alpa Roof Truss, Maple

Version 8.530 S Feb 23 2022 MiTek Industries, Inc. Wed Jun 8 15:42:12 2022 Page 1

ID:9a plwcon izmXpuR1McGqzT9hG-?cEjxSJSv8MRCn9Js9bbn8BVRxRQBpuqidaW0Mz8JTf

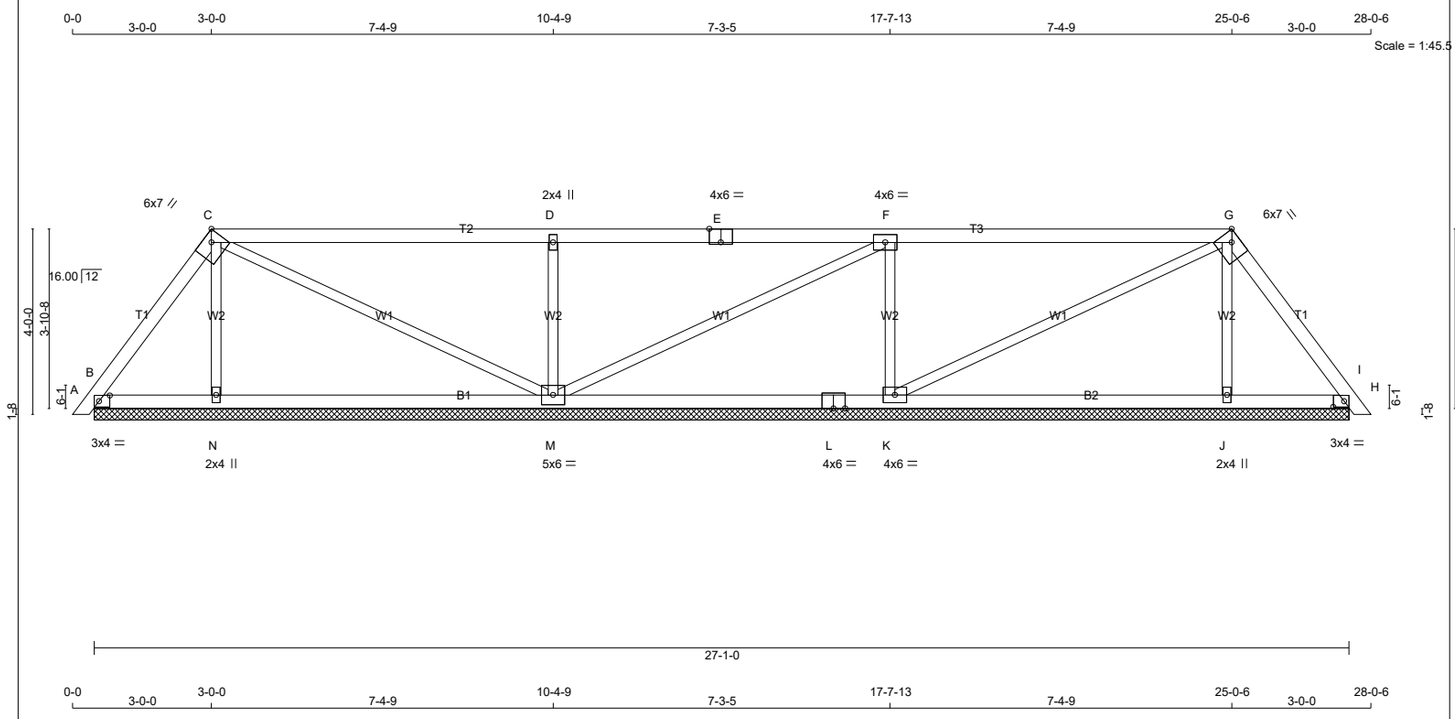

TOTAL WEIGHT = 2 X 97 = 194 lb

[M]

LUMBER

N. L. G. A. RULES

CHORDS	SIZE		LUMBER	DESCR.
A - C	2x4	DRY	No.2	SPF
C - E	2x4	DRY	No.2	SPF
E - G	2x4	DRY	No.2	SPF
G - I	2x4	DRY	No.2	SPF
B - L	2x4	DRY	No.2	SPF
L - H	2x4	DRY	No.2	SPF
ALL WEBS	2x3	DRY	No.2	SPF

DRY: SEASONED LUMBER.

PLATES (table is in inches)

JT	TYPE	PLATES	W	LEN	Y	X
B	TMB1-l	MT20	3.0	4.0	1.50	2.75
C	TTWW-h	MT20	6.0	7.0	Edge	2.75
D	TMW+w	MT20	2.0	4.0		
E	TS-t	MT20	4.0	6.0	Edge	3.00
F	TMWW-t	MT20	4.0	6.0		
G	TTWW-h	MT20	6.0	7.0	Edge	2.75
H	TMB1-l	MT20	3.0	4.0	1.50	2.75
J	BMW1+w	MT20	2.0	4.0		
K	BMWW1-t	MT20	4.0	6.0		
L	BS-t	MT20	4.0	6.0		
M	BMWWW1-t	MT20	5.0	6.0		
N	BMW1+w	MT20	2.0	4.0		

Edge - INDICATES REFERENCE CORNER OF PLATE TOUCHES EDGE OF CHORD.

LATERAL BRACE(S) SHOWN SHALL BE 2X4 SPF#2

DIMENSIONS, SUPPORTS AND LOADINGS SPECIFIED BY FABRICATOR TO BE VERIFIED BY BUILDING DESIGNER

BEARINGS

JT	FACTORED GROSS REACTION VERT	HORZ	MAXIMUM FACTORED GROSS REACTION DOWN	HORZ	UPLIFT	INPUT BRG IN-SX	REQRD BRG IN-SX
B	200	0	200	0	0	27-1-0 (11-1-8)	1-8
N	337	0	337	0	0	27-1-0 (11-1-8)	1-8
M	825	0	825	0	0	27-1-0 (11-1-8)	1-8
K	750	0	750	0	0	27-1-0 (11-1-8)	1-8
J	328	0	328	0	0	27-1-0 (11-1-8)	1-8
H	228	0	228	0	0	27-1-0 (11-1-8)	1-8

VALUE IN PARENTHESIS INDICATES EFFECTIVE BEARING LENGTH

UNFACTORED REACTIONS

JT	1ST LCASE COMBINED	MAX./MIN. COMPONENT REACTIONS SNOW	LIVE	PERM.LIVE	WIND	DEAD	SOIL
B	139	108 / 0	0 / 0	0 / 0	0 / 0	31 / 0	0 / 0
N	246	121 / 0	0 / 0	0 / 0	0 / 0	125 / 0	0 / 0
M	586	370 / 0	0 / 0	0 / 0	0 / 0	216 / 0	0 / 0
K	534	330 / 0	0 / 0	0 / 0	0 / 0	204 / 0	0 / 0
J	239	116 / 0	0 / 0	0 / 0	0 / 0	123 / 0	0 / 0
H	158	123 / 0	0 / 0	0 / 0	0 / 0	35 / 0	0 / 0

BEARING MATERIAL TO BE SPF NO.2 OR BETTER AT JOINT(S) B, N, M, K, J, H

BRACING

TOP CHORD TO BE SHEATHED OR MAX. PURLIN SPACING = 6.25 FT.
MAX. UNBRACED BOTTOM CHORD LENGTH = 10.00 FT OR RIGID CEILING DIRECTLY APPLIED.

ALL PITCH BREAKS AND PERIMETER CORNER JOINTS MUST BE LATERALLY RESTRAINED.

LOADING

TOTAL LOAD CASES: (4)

CHORDS

MEMB. FR-TO	MAX. FORCE (LBS)	FACTORED VERT. LOAD (PLF) FROM	TO	LC1 MAX CSI (LC)	MAX. UNBRAC LENGTH
A- B	0 / 10	-78.0	-78.0	0.01 (1)	10.00
B- C	-90 / 0	-78.0	-78.0	0.08 (1)	6.25
C- D	0 / 19	-78.0	-78.0	0.57 (1)	10.00
D- E	0 / 19	-78.0	-78.0	0.57 (1)	10.00
E- F	0 / 19	-78.0	-78.0	0.57 (1)	10.00
F- G	-38 / 0	-78.0	-78.0	0.57 (1)	6.25
G- H	-124 / 0	-78.0	-78.0	0.09 (1)	6.25
H- I	0 / 10	-78.0	-78.0	0.01 (1)	10.00
B- N	0 / 52	-18.5	-18.5	0.15 (4)	10.00
N- M	0 / 46	-18.5	-18.5	0.20 (4)	10.00
M- L	0 / 39	-18.5	-18.5	0.20 (4)	10.00
L- K	0 / 39	-18.5	-18.5	0.20 (4)	10.00
K- J	0 / 66	-18.5	-18.5	0.20 (4)	10.00
J- H	0 / 72	-18.5	-18.5	0.15 (4)	10.00

WEBS

MEMB. FR-TO	MAX. FORCE (LBS)	MAX CSI (LC)
N- C	-225 / 0	0.05 (1)
C- M	-71 / 0	0.10 (1)
M- D	-628 / 0	0.15 (1)
M- F	-64 / 0	0.09 (1)
K- F	-600 / 0	0.14 (1)
K- G	-30 / 0	0.04 (1)
J- G	-215 / 0	0.05 (1)

DESIGN CRITERIA

SPECIFIED LOADS:

TOP CH.	LL	=	21.0	PSF
	DL	=	6.0	PSF
BOT CH.	LL	=	0.0	PSF
	DL	=	7.4	PSF
TOTAL LOAD		=	34.4	PSF

SPACING = 24.0 IN. C/C

LOADING IN FLAT SECTION BASED ON A SLOPE OF 2.00/12 MINIMUM

THIS TRUSS IS DESIGNED FOR RESIDENTIAL OR SMALL BUILDING REQUIREMENTS OF PART 9, NBCC 2015

THIS DESIGN COMPLIES WITH:
- PART 9 OF BCBC 2018 , ABC 2019
- PART 9 OF OBC 2012 (2019 AMENDMENT)
- CSA 086-14
- TPIC 2014

(55 % OF 23.0 P.S.F. G.S.L. PLUS 8.4 P.S.F. RAIN LOAD) EQUALS 21.0 P.S.F. SPECIFIED ROOF LIVE LOAD

CSI: TC=0.57/1.00 (D-F:1) , BC=0.20/1.00 (J-K:4) , WB=0.15/1.00 (D-M:1) , SSI=0.27/1.00 (F-G:1)

DOL LUMBER=1.00 NAIL=1.00 LS BEND=1.10 COMP=1.10 SHEAR=1.10 TENS= 1.10

COMPANION LIVE LOAD FACTOR = 1.00

TRUSS PLATE MANUFACTURER IS NOT RESPONSIBLE FOR QUALITY CONTROL IN THE TRUSS MANUFACTURING PLANT .

NAIL VALUES

PLATE	GRIP(DRY) (PSI) MAX	MIN	SHEAR (PLI) MAX	MIN	SECTION (PLI) MAX	MIN
MT20	650	371	1747	788	1987	1873

PLATE PLACEMENT TOL. = 0.250 inches

PLATE ROTATION TOL. = 5.0 Deg.

JSI GRIP= 0.88 (C) (INPUT = 0.90)
JSI METAL= 0.17 (E) (INPUT = 1.00)

JOB NAME	TRUSS NAME	QUANTITY	PLY	JOB DESC.		DRWG NO.
343277	P05C	.	1	TRUSS DESC.	JT 45147	E22052398

Alpa Roof Truss, Maple

Version 8.530 S Feb 23 2022 MiTek Industries, Inc. Wed Jun 8 15:42:13 2022 Page 1

ID:9a plwcon izmXpuR1McGqzT9hG-Ton58oK4gRUIpxkWQs7qJMkhfLoCwFrpxHJ4Yoz8JTe

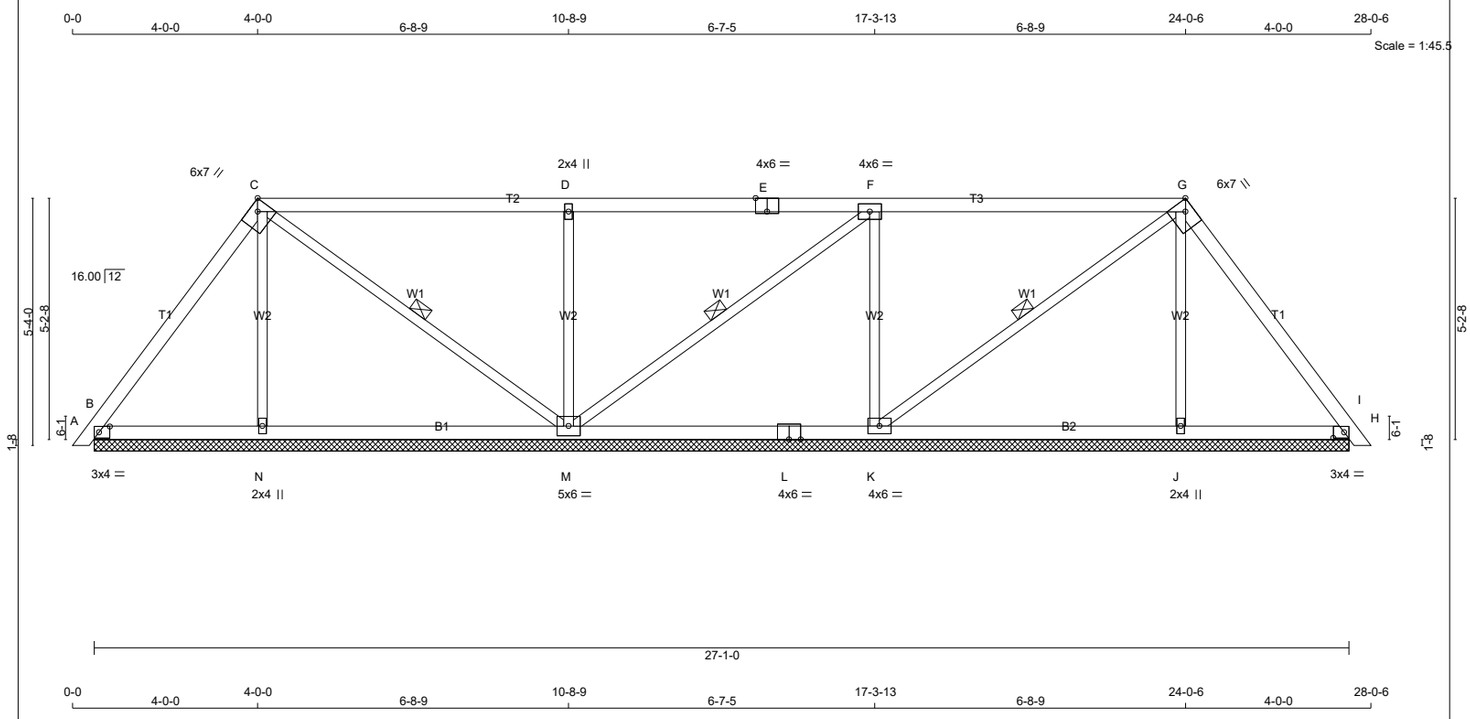

TOTAL WEIGHT = 2 X 103 = 207 lb [M]

LUMBER

N. L. G. A. RULES

CHORDS	SIZE		LUMBER	DESCR.
A - C	2x4	DRY	No.2	SPF
C - E	2x4	DRY	No.2	SPF
E - G	2x4	DRY	No.2	SPF
G - I	2x4	DRY	No.2	SPF
B - L	2x4	DRY	No.2	SPF
L - H	2x4	DRY	No.2	SPF
ALL WEBS	2x3	DRY	No.2	SPF

DRY: SEASONED LUMBER.

PLATES (table is in inches)

JT	TYPE	PLATES	W	LEN	Y	X
B	TMB1-l	MT20	3.0	4.0	1.50	2.75
C	TTWW-h	MT20	6.0	7.0	Edge	2.75
D	TMW+w	MT20	2.0	4.0		
E	TS-t	MT20	4.0	6.0	Edge	3.00
F	TMWW-t	MT20	4.0	6.0		
G	TTWW-h	MT20	6.0	7.0	Edge	2.75
H	TMB1-l	MT20	3.0	4.0	1.50	2.75
J	BMW1+w	MT20	2.0	4.0		
K	BMWW1-t	MT20	4.0	6.0		
L	BS-t	MT20	4.0	6.0		
M	BMWWW1-t	MT20	5.0	6.0		
N	BMW1+w	MT20	2.0	4.0		

Edge - INDICATES REFERENCE CORNER OF PLATE TOUCHES EDGE OF CHORD.

LATERAL BRACE(S) SHOWN SHALL BE 2X4 SPF#2

DIMENSIONS, SUPPORTS AND LOADINGS SPECIFIED BY FABRICATOR TO BE VERIFIED BY BUILDING DESIGNER

BEARINGS

JT	FACTORED GROSS REACTION VERT	HORZ	MAXIMUM FACTORED GROSS REACTION DOWN	HORZ	UPLIFT	INPUT BRG IN-SX	REQRD BRG IN-SX
B	258	0	258	0	0	27-1-0 (12-1-0)	1-8
N	318	0	318	0	0	27-1-0 (12-1-0)	1-8
M	823	0	823	0	0	27-1-0 (12-1-0)	1-8
K	655	0	655	0	0	27-1-0 (12-1-0)	1-8
J	312	0	312	0	0	27-1-0 (12-1-0)	1-8
H	303	0	303	0	0	27-1-0 (12-1-0)	1-8

VALUE IN PARENTHESIS INDICATES EFFECTIVE BEARING LENGTH

UNFACTORED REACTIONS

JT	1ST LCASE COMBINED	MAX./MIN. COMPONENT REACTIONS SNOW	LIVE	PERM.LIVE	WIND	DEAD	SOIL
B	180	129 / 0	0 / 0	0 / 0	0 / 0	52 / 0	0 / 0
N	231	113 / 0	0 / 0	0 / 0	0 / 0	118 / 0	0 / 0
M	583	376 / 0	0 / 0	0 / 0	0 / 0	207 / 0	0 / 0
K	467	286 / 0	0 / 0	0 / 0	0 / 0	181 / 0	0 / 0
J	228	110 / 0	0 / 0	0 / 0	0 / 0	117 / 0	0 / 0
H	212	153 / 0	0 / 0	0 / 0	0 / 0	59 / 0	0 / 0

BEARING MATERIAL TO BE SPF NO.2 OR BETTER AT JOINT(S) B, N, M, K, J, H

BRACING

TOP CHORD TO BE SHEATHED OR MAX. PURLIN SPACING = 6.25 FT.
MAX. UNBRACED BOTTOM CHORD LENGTH = 10.00 FT OR RIGID CEILING DIRECTLY APPLIED.

ALL PITCH BREAKS AND PERIMETER CORNER JOINTS MUST BE LATERALLY RESTRAINED.

1 LATERAL BRACE(S) AT 1/ 2 LENGTH OF C-M, F-M, G-K.

LOADING

TOTAL LOAD CASES: (4)

CHORDS

MEMB. FR-TO	MAX. FACTORED FORCE (LBS)	FACTORED VERT. LOAD LC1 (PLF) FROM	TO	MAX CSI (LC)	MAX. UNBRAC LENGTH
A- B	0 / 10	-78.0	-78.0	0.01 (1)	10.00
B- C	-91 / 0	-78.0	-78.0	0.17 (1)	6.25
C- D	0 / 39	-78.0	-78.0	0.48 (1)	10.00
D- E	0 / 38	-78.0	-78.0	0.48 (1)	10.00
E- F	0 / 38	-78.0	-78.0	0.48 (1)	10.00
F- G	-48 / 0	-78.0	-78.0	0.47 (1)	6.25
G- H	-146 / 0	-78.0	-78.0	0.17 (1)	6.25
H- I	0 / 10	-78.0	-78.0	0.01 (1)	10.00
B- N	0 / 53	-18.5	-18.5	0.13 (4)	10.00
N- M	0 / 49	-18.5	-18.5	0.17 (4)	10.00
M- L	0 / 48	-18.5	-18.5	0.17 (4)	10.00
L- K	0 / 48	-18.5	-18.5	0.17 (4)	10.00
K- J	0 / 81	-18.5	-18.5	0.17 (4)	10.00
J- H	0 / 86	-18.5	-18.5	0.13 (4)	10.00

WEBS

MEMB. FR-TO	MAX. FACTORED FORCE (LBS)	MAX CSI (LC)
N- C	-211 / 0	0.08 (1)
C- M	-108 / 0	0.05 (1)
M- D	-571 / 0	0.23 (1)
M- F	-108 / 0	0.05 (1)
K- F	-506 / 0	0.20 (1)
K- G	-41 / 0	0.02 (1)
J- G	-205 / 0	0.08 (1)

DESIGN CRITERIA

SPECIFIED LOADS:

TOP CH.	LL	=	21.0	PSF
	DL	=	6.0	PSF
BOT CH.	LL	=	0.0	PSF
	DL	=	7.4	PSF
TOTAL LOAD		=	34.4	PSF

SPACING = 24.0 IN. C/C

LOADING IN FLAT SECTION BASED ON A SLOPE OF 2.00/12 MINIMUM

THIS TRUSS IS DESIGNED FOR RESIDENTIAL OR SMALL BUILDING REQUIREMENTS OF PART 9, NBCC 2015

THIS DESIGN COMPLIES WITH:
- PART 9 OF BCBC 2018 , ABC 2019
- PART 9 OF OBC 2012 (2019 AMENDMENT)
- CSA 086-14
- TPIC 2014

(55 % OF 23.0 P.S.F. G.S.L. PLUS 8.4 P.S.F. RAIN LOAD) EQUALS 21.0 P.S.F. SPECIFIED ROOF LIVE LOAD

CSI: TC=0.48/1.00 (D-F:1) , BC=0.17/1.00 (J-K:4) , WB=0.23/1.00 (D-M:1) , SSI=0.24/1.00 (F-G:1)

DOL LUMBER=1.00 NAIL=1.00 LS BEND=1.10 COMP=1.10 SHEAR=1.10 TENS= 1.10

COMPANION LIVE LOAD FACTOR = 1.00

TRUSS PLATE MANUFACTURER IS NOT RESPONSIBLE FOR QUALITY CONTROL IN THE TRUSS MANUFACTURING PLANT .

NAIL VALUES

PLATE	GRIP(DRY) (PSI) MAX	MIN	SHEAR (PLI) MAX	MIN	SECTION (PLI) MAX	MIN
MT20	650	371	1747	788	1987	1873

PLATE PLACEMENT TOL. = 0.250 inches

PLATE ROTATION TOL. = 5.0 Deg.

JSI GRIP= 0.76 (C) (INPUT = 0.90)
JSI METAL= 0.15 (H) (INPUT = 1.00)

JOB NAME	TRUSS NAME	QUANTITY	PLY	JOB DESC.		DRWG NO.
343277	P05D	.	1	TRUSS DESC.	JT 45147	E22052399

Alpa Roof Truss, Maple

Version 8.530 S Feb 23 2022 MiTek Industries, Inc. Wed Jun 8 15:42:15 2022 Page 1

ID:9a plwcon izmXpuR1McGqzT9hG-PBvrZUMKC3k03FuuXH9IPnp2X8UDO7J6OboAdqz8JTc

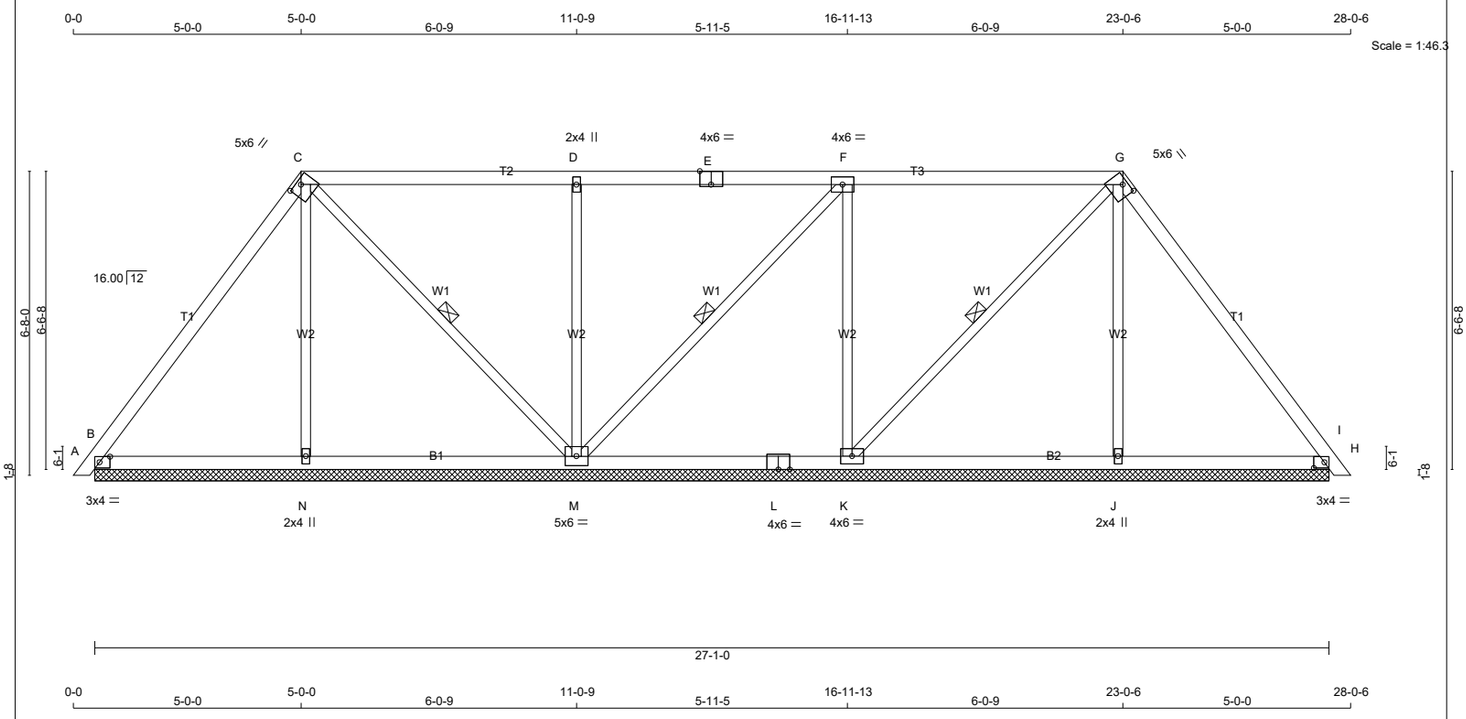

TOTAL WEIGHT = 2 X 110 = 220 lb

[M]

LUMBER

N. L. G. A. RULES

CHORDS	SIZE		LUMBER	DESCR.
A - C	2x4	DRY	No.2	SPF
C - E	2x4	DRY	No.2	SPF
E - G	2x4	DRY	No.2	SPF
G - I	2x4	DRY	No.2	SPF
B - L	2x4	DRY	No.2	SPF
L - H	2x4	DRY	No.2	SPF
ALL WEBS	2x3	DRY	No.2	SPF

DRY: SEASONED LUMBER.

PLATES (table is in inches)

JT	TYPE	PLATES	W	LEN	Y	X
B	TMB1-l	MT20	3.0	4.0	1.50	2.75
C	TTWW-h	MT20	5.0	6.0	1.25	3.00
D	TMW+w	MT20	2.0	4.0		
E	TS-t	MT20	4.0	6.0	Edge	3.00
F	TMWW-t	MT20	4.0	6.0		
G	TTWW-h	MT20	5.0	6.0	1.25	3.00
H	TMB1-l	MT20	3.0	4.0	1.50	2.75
J	BMW1+w	MT20	2.0	4.0		
K	BMWW1-t	MT20	4.0	6.0		
L	BS-t	MT20	4.0	6.0		
M	BMWWW1-t	MT20	5.0	6.0		
N	BMW1+w	MT20	2.0	4.0		

Edge - INDICATES REFERENCE CORNER OF PLATE TOUCHES EDGE OF CHORD.

LATERAL BRACE(S) SHOWN SHALL BE 2X4 SPF#2

DIMENSIONS, SUPPORTS AND LOADINGS SPECIFIED BY FABRICATOR TO BE VERIFIED BY BUILDING DESIGNER

BEARINGS

JT	FACTORED GROSS REACTION VERT	HORZ	MAXIMUM FACTORED GROSS REACTION DOWN	HORZ	UPLIFT	INPUT BRG IN-SX	REQRD BRG IN-SX
B	306	0	306	0	0	27-1-0 (12-1-0)	1-8
N	305	0	305	0	0	27-1-0 (12-1-0)	1-8
M	826	0	826	0	0	27-1-0 (12-1-0)	1-8
K	563	0	563	0	0	27-1-0 (12-1-0)	1-8
J	304	0	304	0	0	27-1-0 (12-1-0)	1-8
H	364	0	364	0	0	27-1-0 (12-1-0)	1-8

VALUE IN PARENTHESIS INDICATES EFFECTIVE BEARING LENGTH

UNFACTORED REACTIONS

JT	1ST LCASE COMBINED	MAX./MIN. COMPONENT REACTIONS SNOW	LIVE	PERM.LIVE	WIND	DEAD	SOIL
B	215	148 / 0	0 / 0	0 / 0	0 / 0	67 / 0	0 / 0
N	223	106 / 0	0 / 0	0 / 0	0 / 0	117 / 0	0 / 0
M	584	386 / 0	0 / 0	0 / 0	0 / 0	198 / 0	0 / 0
K	402	244 / 0	0 / 0	0 / 0	0 / 0	158 / 0	0 / 0
J	222	105 / 0	0 / 0	0 / 0	0 / 0	117 / 0	0 / 0
H	256	179 / 0	0 / 0	0 / 0	0 / 0	76 / 0	0 / 0

BEARING MATERIAL TO BE SPF NO.2 OR BETTER AT JOINT(S) B, N, M, K, J, H

BRACING

TOP CHORD TO BE SHEATHED OR MAX. PURLIN SPACING = 6.25 FT.
MAX. UNBRACED BOTTOM CHORD LENGTH = 10.00 FT OR RIGID CEILING DIRECTLY APPLIED.

ALL PITCH BREAKS AND PERIMETER CORNER JOINTS MUST BE LATERALLY RESTRAINED.

1 LATERAL BRACE(S) AT 1/ 2 LENGTH OF C-M, F-M, G-K.

LOADING

TOTAL LOAD CASES: (4)

CHORDS

MEMB. FR-TO	MAX. FACTORED FORCE (LBS)	FACTORED VERT. LOAD (PLF) FROM	TO	LC1	MAX CSI (LC)	MAX. UNBRAC LENGTH
A- B	0 / 10	-78.0	-78.0	0.01	(1)	10.00
B- C	-86 / 0	-78.0	-78.0	0.27	(1)	6.25
C- D	0 / 49	-78.0	-78.0	0.39	(1)	10.00
D- E	0 / 49	-78.0	-78.0	0.39	(1)	10.00
E- F	0 / 49	-78.0	-78.0	0.39	(1)	10.00
F- G	-49 / 0	-78.0	-78.0	0.38	(1)	6.25
G- H	-159 / 0	-78.0	-78.0	0.28	(1)	6.25
H- I	0 / 10	-78.0	-78.0	0.01	(1)	10.00
B- N	0 / 51	-18.5	-18.5	0.13	(4)	10.00
N- M	0 / 48	-18.5	-18.5	0.13	(4)	10.00
M- L	0 / 49	-18.5	-18.5	0.13	(4)	10.00
L- K	0 / 49	-18.5	-18.5	0.13	(4)	10.00
K- J	0 / 90	-18.5	-18.5	0.13	(4)	10.00
J- H	0 / 94	-18.5	-18.5	0.13	(4)	10.00

WEBS

MEMB. FR-TO	MAX. FACTORED FORCE (LBS)	MAX CSI (LC)
N- C	-197 / 0	0.14 (1)
C- M	-138 / 0	0.07 (1)
M- D	-514 / 0	0.36 (1)
M- F	-142 / 0	0.07 (1)
K- F	-410 / 0	0.29 (1)
K- G	-59 / 0	0.03 (1)
J- G	-195 / 0	0.14 (1)

DESIGN CRITERIA

SPECIFIED LOADS:

TOP CH.	LL	=	21.0	PSF
	DL	=	6.0	PSF
BOT CH.	LL	=	0.0	PSF
	DL	=	7.4	PSF
TOTAL LOAD		=	34.4	PSF

SPACING = 24.0 IN. C/C

LOADING IN FLAT SECTION BASED ON A SLOPE OF 2.00/12 MINIMUM

THIS TRUSS IS DESIGNED FOR RESIDENTIAL OR SMALL BUILDING REQUIREMENTS OF PART 9, NBCC 2015

THIS DESIGN COMPLIES WITH:
- PART 9 OF BCBC 2018 , ABC 2019
- PART 9 OF OBC 2012 (2019 AMENDMENT)
- CSA 086-14
- TPIC 2014

(55 % OF 23.0 P.S.F. G.S.L. PLUS 8.4 P.S.F. RAIN LOAD) EQUALS 21.0 P.S.F. SPECIFIED ROOF LIVE LOAD

CSI: TC=0.39/1.00 (D-F:1) , BC=0.13/1.00 (J-K:4) , WB=0.36/1.00 (D-M:1) , SSI=0.22/1.00 (F-G:1)

DOL LUMBER=1.00 NAIL=1.00 LS BEND=1.10 COMP=1.10 SHEAR=1.10 TENS= 1.10

COMPANION LIVE LOAD FACTOR = 1.00

TRUSS PLATE MANUFACTURER IS NOT RESPONSIBLE FOR QUALITY CONTROL IN THE TRUSS MANUFACTURING PLANT .

NAIL VALUES

PLATE	GRIP(DRY) (PSI) MAX	MIN	SHEAR (PLI) MAX	MIN	SECTION (PLI) MAX	MIN
MT20	650	371	1747	788	1987	1873

PLATE PLACEMENT TOL. = 0.250 inches

PLATE ROTATION TOL. = 5.0 Deg.

JSI GRIP= 0.86 (C) (INPUT = 0.90)
JSI METAL= 0.17 (H) (INPUT = 1.00)

JOB NAME	TRUSS NAME	QUANTITY	PLY	JOB DESC.		DRWG NO.
343277	P05E	.	1	TRUSS DESC.	JT 45147	E22052400

Alpa Roof Truss, Maple

Version 8.530 S Feb 23 2022 MiTek Industries, Inc. Wed Jun 8 15:42:16 2022 Page 1

ID:9a plwcon izmXpuR1McGqzT9hG-tNTDnpMyzMsthOT55 gXx M65Ypj7RyGdFYk97z8JTb

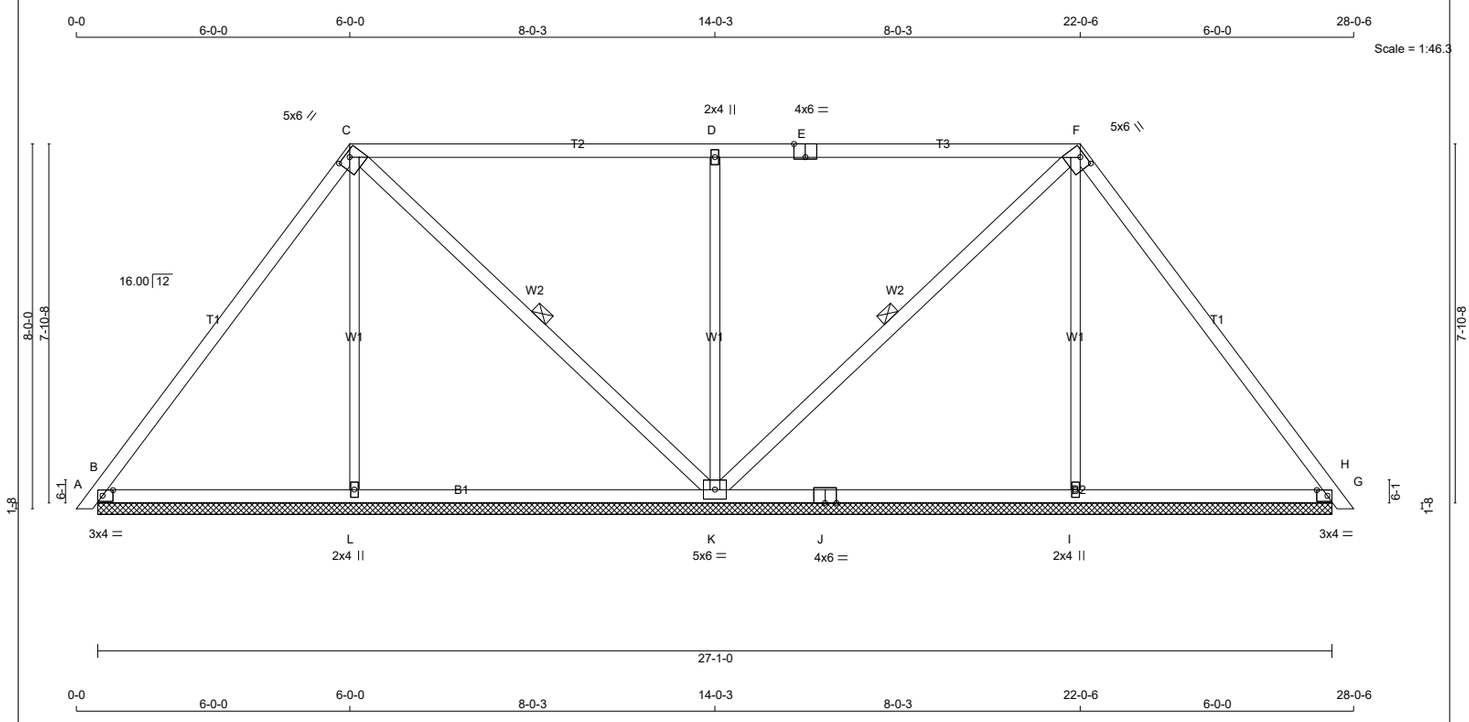

TOTAL WEIGHT = 2 X 114 = 228 lb

[M]

LUMBER

N. L. G. A. RULES

CHORDS	SIZE		LUMBER	DESCR.
A - C	2x4	DRY	No.2	SPF
C - E	2x4	DRY	No.2	SPF
E - F	2x4	DRY	No.2	SPF
F - H	2x4	DRY	No.2	SPF
B - J	2x4	DRY	No.2	SPF
J - G	2x4	DRY	No.2	SPF
ALL WEBS	2x3	DRY	No.2	SPF
EXCEPT				
C - K	2x4	DRY	No.2	SPF
K - F	2x4	DRY	No.2	SPF

DRY: SEASONED LUMBER.

PLATES (table is in inches)

JT	TYPE	PLATES	W	LEN	Y	X
B	TMB1-l	MT20	3.0	4.0	1.50	2.75
C	TTWW-h	MT20	5.0	6.0	1.25	3.00
D	TMW+w	MT20	2.0	4.0		
E	TS-t	MT20	4.0	6.0	Edge	3.00
F	TTWW-h	MT20	5.0	6.0	1.25	3.00
G	TMB1-l	MT20	3.0	4.0	1.50	2.75
I	BMW1+w	MT20	2.0	4.0		
J	BS-t	MT20	4.0	6.0		
K	BMWWW1-t	MT20	5.0	6.0		
L	BMW1+w	MT20	2.0	4.0		

Edge - INDICATES REFERENCE CORNER OF PLATE TOUCHES EDGE OF CHORD.

LATERAL BRACE(S) SHOWN SHALL BE 2X4 SPF#2

LICENSED PROFESSIONAL ENGINEER
V. WIDYA
100225448
06/08/2022
PROVINCE OF ONTARIO

DIMENSIONS, SUPPORTS AND LOADINGS SPECIFIED BY FABRICATOR TO BE VERIFIED BY BUILDING DESIGNER

BEARINGS

JT	FACTORED GROSS REACTION VERT	HORZ	MAXIMUM FACTORED GROSS REACTION DOWN	HORZ	UPLIFT	INPUT BRG IN-SX	REQRD BRG IN-SX
B	411	0	411	0	0	27-1-0 (11-1-8)	8
L	373	0	373	0	0	27-1-0 (11-1-8)	8
K	1101	0	1101	0	0	27-1-0 (11-1-8)	8
I	373	0	373	0	0	27-1-0 (11-1-8)	8
G	411	0	411	0	0	27-1-0 (11-1-8)	8

VALUE IN PARENTHESIS INDICATES EFFECTIVE BEARING LENGTH

UNFACTORED REACTIONS

JT	1ST LCASE COMBINED	MAX./MIN. COMPONENT REACTIONS SNOW	LIVE	PERM.LIVE	WIND	DEAD	SOIL
B	288	201 / 0	0 / 0	0 / 0	0 / 0	87 / 0	0 / 0
L	273	126 / 0	0 / 0	0 / 0	0 / 0	147 / 0	0 / 0
K	778	511 / 0	0 / 0	0 / 0	0 / 0	267 / 0	0 / 0
I	273	126 / 0	0 / 0	0 / 0	0 / 0	147 / 0	0 / 0
G	288	201 / 0	0 / 0	0 / 0	0 / 0	87 / 0	0 / 0

BEARING MATERIAL TO BE SPF NO.2 OR BETTER AT JOINT(S) B, L, K, I, G

BRACING

TOP CHORD TO BE SHEATHED OR MAX. PURLIN SPACING = 6.25 FT.
MAX. UNBRACED BOTTOM CHORD LENGTH = 10.00 FT OR RIGID CEILING DIRECTLY APPLIED.

ALL PITCH BREAKS AND PERIMETER CORNER JOINTS MUST BE LATERALLY RESTRAINED.

1 LATERAL BRACE(S) AT 1/ 2 LENGTH OF C-K, F-K.

LOADING

TOTAL LOAD CASES: (4)

CHORDS

MEMB. FR-TO	MAX. FACTORED FORCE (LBS)	FACTORED VERT. LOAD LC1 (PLF) FROM	TO	MAX CSI (LC)	MAX. UNBRAC LENGTH
A- B	0 / 10	-78.0	-78.0	0.01 (1)	10.00
B- C	-162 / 0	-78.0	-78.0	0.42 (1)	6.25
C- D	-2 / 0	-78.0	-78.0	0.85 (1)	10.00
D- E	-4 / 0	-78.0	-78.0	0.85 (1)	10.00
E- F	-4 / 0	-78.0	-78.0	0.85 (1)	10.00
F- G	-162 / 0	-78.0	-78.0	0.42 (1)	6.25
G- H	0 / 10	-78.0	-78.0	0.01 (1)	10.00
B- L	0 / 96	-18.5	-18.5	0.20 (4)	10.00
L- K	0 / 93	-18.5	-18.5	0.24 (4)	10.00
K- J	0 / 93	-18.5	-18.5	0.24 (4)	10.00
J- I	0 / 93	-18.5	-18.5	0.24 (4)	10.00
I- G	0 / 96	-18.5	-18.5	0.20 (4)	10.00

WEBS

MEMB. FR-TO	MAX. FACTORED FORCE (LBS)	MAX CSI (LC)
L- C	-235 / 0	0.27 (1)
C- K	-124 / 0	0.08 (1)
K- D	-781 / 0	0.91 (1)
K- F	-124 / 0	0.08 (1)
I- F	-235 / 0	0.27 (1)

DESIGN CRITERIA

SPECIFIED LOADS:

TOP CH.	LL	=	21.0	PSF
	DL	=	6.0	PSF
BOT CH.	LL	=	0.0	PSF
	DL	=	7.4	PSF
TOTAL LOAD		=	34.4	PSF

SPACING = 24.0 IN. C/C

LOADING IN FLAT SECTION BASED ON A SLOPE OF 2.00/12 MINIMUM

THIS TRUSS IS DESIGNED FOR RESIDENTIAL OR SMALL BUILDING REQUIREMENTS OF PART 9, NBCC 2015

THIS DESIGN COMPLIES WITH:
- PART 9 OF BCBC 2018 , ABC 2019
- PART 9 OF OBC 2012 (2019 AMENDMENT)
- CSA 086-14
- TPIC 2014

(55 % OF 23.0 P.S.F. G.S.L. PLUS 8.4 P.S.F. RAIN LOAD) EQUALS 21.0 P.S.F. SPECIFIED ROOF LIVE LOAD

CSI: TC=0.85/1.00 (D-F:1) , BC=0.24/1.00 (I-K:4) , WB=0.91/1.00 (D-K:1) , SSI=0.30/1.00 (C-D:1)

DOL LUMBER=1.00 NAIL=1.00 LS BEND=1.10 COMP=1.10 SHEAR=1.10 TENS= 1.10

COMPANION LIVE LOAD FACTOR = 1.00

TRUSS PLATE MANUFACTURER IS NOT RESPONSIBLE FOR QUALITY CONTROL IN THE TRUSS MANUFACTURING PLANT .

NAIL VALUES

PLATE	GRIP(DRY) (PSI) MAX	MIN	SHEAR (PLI) MAX	MIN	SECTION (PLI) MAX	MIN
MT20	650	371	1747	788	1987	1873

PLATE PLACEMENT TOL. = 0.250 inches

PLATE ROTATION TOL. = 5.0 Deg.

JSI GRIP= 0.87 (F) (INPUT = 0.90)
JSI METAL= 0.19 (G) (INPUT = 1.00)

JOB NAME	TRUSS NAME	QUANTITY	PLY	JOB DESC.		DRWG NO.
343277	P05F		1	TRUSS DESC.	JT 45147	E22052401

Alpa Roof Truss, Maple

Version 8.530 S Feb 23 2022 MiTek Industries, Inc. Wed Jun 8 15:42:18 2022 Page 1

ID:9a plwcon izmXpuR1McGqzT9hG-qlb CVOCU 6bwidTCPi?0PRUaMVdbUlY4Z1qD?z8JTZ

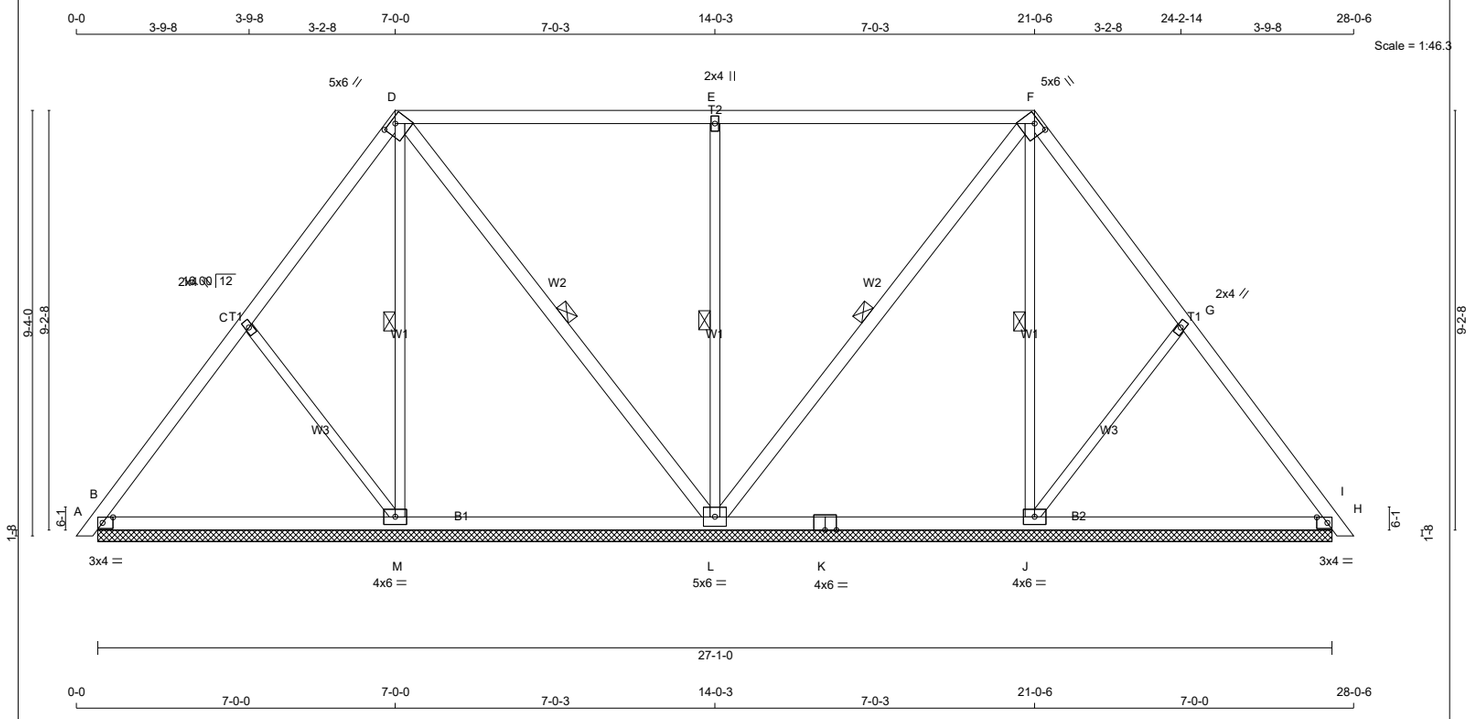

TOTAL WEIGHT = 2 X 128 = 256 lb [M]

LUMBER

N. L. G. A. RULES

CHORDS	SIZE		LUMBER	DESCR.
A - D	2x4	DRY	No.2	SPF
D - F	2x4	DRY	No.2	SPF
F - I	2x4	DRY	No.2	SPF
B - K	2x4	DRY	No.2	SPF
K - H	2x4	DRY	No.2	SPF
ALL WEBS	2x3	DRY	No.2	SPF
EXCEPT				
D - L	2x4	DRY	No.2	SPF
L - F	2x4	DRY	No.2	SPF

DRY: SEASONED LUMBER.

PLATES (table is in inches)

JT	TYPE	PLATES	W	LEN	Y	X
B	TMB1-l	MT20	3.0	4.0	1.50	2.75
C, E, G						
C	TMW+w	MT20	2.0	4.0		
D	TTWW-h	MT20	5.0	6.0	1.25	3.00
F	TTWW-h	MT20	5.0	6.0	1.25	3.00
H	TMB1-l	MT20	3.0	4.0	1.50	2.75
J	BMWW1-t	MT20	4.0	6.0		
K	BS-t	MT20	4.0	6.0		
L	BMWWW1-t	MT20	5.0	6.0		
M	BMWW1-t	MT20	4.0	6.0		

LATERAL BRACE(S) SHOWN SHALL BE 2X4 SPF#2

DIMENSIONS, SUPPORTS AND LOADINGS SPECIFIED BY FABRICATOR TO BE VERIFIED BY BUILDING DESIGNER

BEARINGS

JT	FACTORED GROSS REACTION VERT	HORZ	MAXIMUM FACTORED GROSS REACTION DOWN	HORZ	UPLIFT	INPUT BRG IN-SX	REQRD BRG IN-SX
B	359	0	359	0	0	27-1-0 (11-1-8)	8
M	473	0	473	0	0	27-1-0 (11-1-8)	8
L	1004	0	1004	0	0	27-1-0 (11-1-8)	8
J	473	0	473	0	0	27-1-0 (11-1-8)	8
H	359	0	359	0	0	27-1-0 (11-1-8)	8

VALUE IN PARENTHESIS INDICATES EFFECTIVE BEARING LENGTH

UNFACTORED REACTIONS

JT	1ST LCASE COMBINED	MAX./MIN. COMPONENT REACTIONS SNOW	LIVE	PERM.LIVE	WIND	DEAD	SOIL
B	254	167 / 0	0 / 0	0 / 0	0 / 0	86 / 0	0 / 0
M	343	178 / 0	0 / 0	0 / 0	0 / 0	165 / 0	0 / 0
L	708	476 / 0	0 / 0	0 / 0	0 / 0	233 / 0	0 / 0
J	343	178 / 0	0 / 0	0 / 0	0 / 0	165 / 0	0 / 0
H	254	167 / 0	0 / 0	0 / 0	0 / 0	86 / 0	0 / 0

BEARING MATERIAL TO BE SPF NO.2 OR BETTER AT JOINT(S) B, M, L, J, H

BRACING

TOP CHORD TO BE SHEATHED OR MAX. PURLIN SPACING = 6.25 FT.
MAX. UNBRACED BOTTOM CHORD LENGTH = 10.00 FT OR RIGID CEILING DIRECTLY APPLIED.

ALL PITCH BREAKS AND PERIMETER CORNER JOINTS MUST BE LATERALLY RESTRAINED.

1 LATERAL BRACE(S) AT 1/ 2 LENGTH OF D-M, D-L, E-L, F-L, F-J.

LOADING

TOTAL LOAD CASES: (4)

C H O R D S

MEMB. FR-TO	MAX. FACTORED FORCE (LBS)	VERT. LOAD LC1 (PLF) FROM	TO	MAX CSI (LC)	MAX. UNBRAC LENGTH
A- B	0 / 10	-78.0	-78.0	0.01 (1)	10.00
B- C	-210 / 0	-78.0	-78.0	0.14 (1)	6.25
C- D	-57 / 0	-78.0	-78.0	0.14 (1)	6.25
D- E	0 / 62	-78.0	-78.0	0.66 (1)	10.00
E- F	0 / 62	-78.0	-78.0	0.66 (1)	10.00
F- G	-57 / 0	-78.0	-78.0	0.14 (1)	6.25
G- H	-210 / 0	-78.0	-78.0	0.14 (1)	6.25
H- I	0 / 10	-78.0	-78.0	0.01 (1)	10.00
B- M	0 / 139	-18.5	-18.5	0.22 (4)	10.00
M- L	0 / 17	-18.5	-18.5	0.21 (4)	10.00
L- K	0 / 17	-18.5	-18.5	0.21 (4)	10.00
K- J	0 / 17	-18.5	-18.5	0.21 (4)	10.00
J- H	0 / 139	-18.5	-18.5	0.22 (4)	10.00

W E B S

MEMB. FR-TO	MAX. FACTORED FORCE (LBS)	MAX CSI (LC)
C- M	-194 / 0	0.10 (1)
M- D	-178 / 0	0.10 (1)
D- L	-127 / 0	0.09 (1)
L- E	-684 / 0	0.38 (1)
L- F	-127 / 0	0.09 (1)
J- F	-178 / 0	0.10 (1)
J- G	-194 / 0	0.10 (1)

DESIGN CRITERIA

SPECIFIED LOADS:

TOP CH.	LL	=	21.0	PSF
	DL	=	6.0	PSF
BOT CH.	LL	=	0.0	PSF
	DL	=	7.4	PSF
TOTAL LOAD		=	34.4	PSF

SPACING = 24.0 IN. C/C

LOADING IN FLAT SECTION BASED ON A SLOPE OF 2.00/12 MINIMUM

THIS TRUSS IS DESIGNED FOR RESIDENTIAL OR SMALL BUILDING REQUIREMENTS OF PART 9, NBCC 2015

THIS DESIGN COMPLIES WITH:
- PART 9 OF BCBC 2018 , ABC 2019
- PART 9 OF OBC 2012 (2019 AMENDMENT)
- CSA 086-14
- TPIC 2014

(55 % OF 23.0 P.S.F. G.S.L. PLUS 8.4 P.S.F. RAIN LOAD) EQUALS 21.0 P.S.F. SPECIFIED ROOF LIVE LOAD

CSI: TC=0.66/1.00 (D-E:1) , BC=0.22/1.00 (H-J:4) , WB=0.38/1.00 (E-L:1) , SSI=0.27/1.00 (E-F:1)

DOL LUMBER=1.00 NAIL=1.00 LS BEND=1.10 COMP=1.10 SHEAR=1.10 TENS= 1.10

COMPANION LIVE LOAD FACTOR = 1.00

TRUSS PLATE MANUFACTURER IS NOT RESPONSIBLE FOR QUALITY CONTROL IN THE TRUSS MANUFACTURING PLANT .

NAIL VALUES

PLATE	GRIP(DRY) (PSI) MAX	MIN	SHEAR (PLI) MAX	MIN	SECTION (PLI) MAX	MIN
MT20	650	371	1747	788	1987	1873

PLATE PLACEMENT TOL. = 0.250 inches

PLATE ROTATION TOL. = 5.0 Deg.

JSI GRIP= 0.73 (D) (INPUT = 0.90)
JSI METAL= 0.18 (H) (INPUT = 1.00)

JOB NAME	TRUSS NAME	QUANTITY	PLY	JOB DESC.		DRWG NO.
343277	P08		1	TRUSS DESC.	JT 45147	E22052402

Alpa Roof Truss, Maple

Version 8.530 S Feb 23 2022 MiTek Industries, Inc. Wed Jun 8 15:42:19 2022 Page 1

ID:9a plwcon izmXpuR1McGqzT9hG-Iy9MPrPrFHERYsCqm7DEZd mQlsuK0xiJDmOmSz8JTY

Scale = 1:28.3

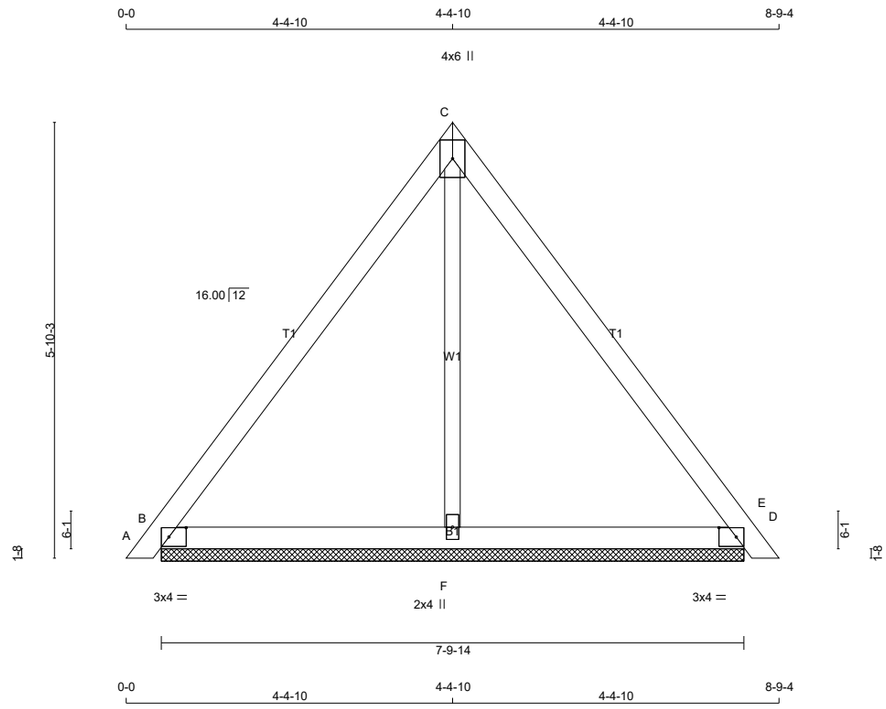

TOTAL WEIGHT = 7 X 30 = 207 lb [M]

LUMBER

N. L. G. A. RULES

CHORDS	SIZE		LUMBER	DESCR.
A - C	2x4	DRY	No.2	SPF
C - E	2x4	DRY	No.2	SPF
B - D	2x4	DRY	No.2	SPF
ALL WEBS	2x3	DRY	No.2	SPF

DRY: SEASONED LUMBER.

PLATES (table is in inches)

JT	TYPE	PLATES	W	LEN	Y	X
B	TMB1-I	MT20	3.0	4.0	1.50	2.75
C	TTW+p	MT20	4.0	6.0		
D	TMB1-I	MT20	3.0	4.0	1.50	2.75
F	BMW1+w	MT20	2.0	4.0		

DIMENSIONS, SUPPORTS AND LOADINGS SPECIFIED BY FABRICATOR TO BE VERIFIED BY BUILDING DESIGNER

BEARINGS

JT	FACTORED GROSS REACTION VERT	HORZ	MAXIMUM FACTORED GROSS REACTION DOWN	HORZ	UPLIFT	INPUT BRG IN-SX	REQRD BRG IN-SX
B	291	0	291	0	0	7-9-14	1-8
D	291	0	291	0	0	7-9-14	1-8
F	228	0	228	0	0	7-9-14	1-8

UNFACTORED REACTIONS

JT	1ST LCASE COMBINED	MAX./MIN. COMPONENT REACTIONS SNOW	LIVE	PERM.LIVE	WIND	DEAD	SOIL
B	205	142 / 0	0 / 0	0 / 0	0 / 0	62 / 0	0 / 0
D	205	142 / 0	0 / 0	0 / 0	0 / 0	62 / 0	0 / 0
F	168	74 / 0	0 / 0	0 / 0	0 / 0	94 / 0	0 / 0

BEARING MATERIAL TO BE SPF NO.2 OR BETTER AT JOINT(S) B, D, F

BRACING

TOP CHORD TO BE SHEATHED OR MAX. PURLIN SPACING = 6.25 FT.
MAX. UNBRACED BOTTOM CHORD LENGTH = 10.00 FT OR RIGID CEILING DIRECTLY APPLIED.

ALL PITCH BREAKS AND PERIMETER CORNER JOINTS MUST BE LATERALLY RESTRAINED.

LOADING

TOTAL LOAD CASES: (4)

CHORDS

MEMB. FR-TO	MAX. FACTORED FORCE (LBS)	FACTORED VERT. LOAD LC1 (PLF) FROM	TO	MAX CSI (LC)	MAX. UNBRAC LENGTH
A- B	0 / 10	-78.0	-78.0	0.01 (1)	10.00
B- C	-104 / 0	-78.0	-78.0	0.20 (1)	6.25
C- D	-104 / 0	-78.0	-78.0	0.20 (1)	6.25
D- E	0 / 10	-78.0	-78.0	0.01 (1)	10.00
B- F	0 / 61	-18.5	-18.5	0.09 (4)	10.00
F- D	0 / 61	-18.5	-18.5	0.09 (4)	10.00

WEBS

MEMB. FR-TO	MAX. FACTORED FORCE (LBS)	MAX CSI (LC)
F- C	-138 / 0	0.06 (1)

DESIGN CRITERIA

SPECIFIED LOADS:

TOP CH.	LL	=	21.0	PSF
	DL	=	6.0	PSF
BOT CH.	LL	=	0.0	PSF
	DL	=	7.4	PSF
TOTAL LOAD		=	34.4	PSF

SPACING = 24.0 IN. C/C

THIS TRUSS IS DESIGNED FOR RESIDENTIAL OR SMALL BUILDING REQUIREMENTS OF PART 9, NBCC 2015

THIS DESIGN COMPLIES WITH:
- PART 9 OF BCBC 2018 , ABC 2019
- PART 9 OF OBC 2012 (2019 AMENDMENT)
- CSA 086-14
- TPIC 2014

(55 % OF 23.0 P.S.F. G.S.L. PLUS 8.4 P.S.F. RAIN LOAD) EQUALS 21.0 P.S.F. SPECIFIED ROOF LIVE LOAD

CSI: TC=0.20/1.00 (C-D:1) , BC=0.09/1.00 (B-F:4) , WB=0.06/1.00 (C-F:1) , SSI=0.07/1.00 (C-D:1)

DOL LUMBER=1.00 NAIL=1.00 LS BEND=1.10 COMP=1.10 SHEAR=1.10 TENS= 1.10

COMPANION LIVE LOAD FACTOR = 1.00

TRUSS PLATE MANUFACTURER IS NOT RESPONSIBLE FOR QUALITY CONTROL IN THE TRUSS MANUFACTURING PLANT .

NAIL VALUES

PLATE	GRIP(DRY) (PSI) MAX	MIN	SHEAR (PLI) MAX	MIN	SECTION (PLI) MAX	MIN
MT20	650	371	1747	788	1987	1873

PLATE PLACEMENT TOL. = 0.250 inches

PLATE ROTATION TOL. = 5.0 Deg.

JSI GRIP= 0.33 (D) (INPUT = 0.90)
JSI METAL= 0.13 (D) (INPUT = 1.00)

LATERAL BRACE(S) SHOWN SHALL BE 2X4 SPF#2

LUS – Double Shear Joist Hangers

SIMPSON Strong-Tie®

All LUS hangers have double shear nailing. This patented innovation distributes the load through two points on each joist nail for greater strength. It also allows the use of fewer nails, faster installation and the use of common nails for all connections.

Material: 18 gauge

Finish: G90 galvanized

Design:

- Factored resistances are in accordance with CSA O86-14.
- Uplift resistances have been increased 15%. No further increase is permitted.
- Wood shear is not considered in the factored resistances given. The specifier must ensure that the joist and header capacities are capable of withstanding these loads.

Installation:

- Use all specified fasteners.
- Nails: 16d = 0.162" dia. x 3½" long common wire, 10d = 0.148" x 3" long common wire.
- Double shear nails must be driven at an angle through the joist or truss into the header to achieve the table loads.
- Not designed for welded or nailer applications.

Options:

- These hangers cannot be modified

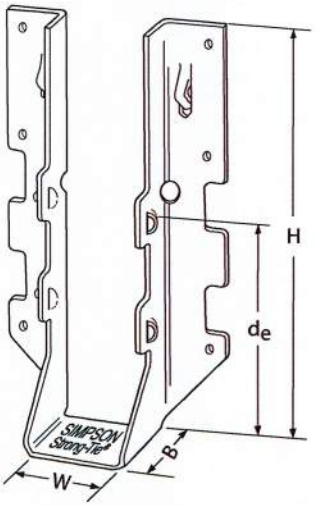

LUS28

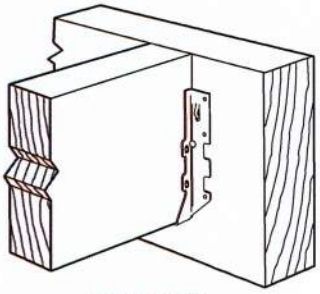

Typical LUS Installation

Model No.	Ga.	Dimensions (in.)				Fasteners		Factored Resistance (lb.)			
								D.Fir-L		S-P-F	
		W	H	B	d_e[1]	Face	Joist	Uplift (K_D=1.15)	Normal (K_D=1.00)	Uplift (K_D=1.15)	Normal (K_D=1.00)
LUS24	18	1 9/16	3 1/8	1 3/4	1 15/16	(4) 10d	(2) 10d	710	1630	645	1155
LUS24-2	18	3 1/8	3 1/8	2	1 13/16	(4) 16d	(2) 16d	835	2020	590	1435
LUS26	18	1 9/16	4 3/4	1 3/4	3 5/8	(4) 10d	(4) 10d	1420	2170	1290	1630
LUS26-2	18	3 1/8	4 7/8	2	4	(4) 16d	(4) 16d	1720	2595	1545	1920
LUS26-3	18	4 5/8	4 3/16	2	3 1/4	(4) 16d	(4) 16d	1720	2595	1545	2340
LUS28	18	1 9/16	6 5/8	1 3/4	3 3/4	(6) 10d	(6) 10d	1420	2520	1290	1790
LUS28-2	18	3 1/8	7	2	4	(6) 16d	(4) 16d	1720	3325	1545	2575
LUS28-3	18	4 5/8	6 1/4	2	3 1/4	(6) 16d	(4) 16d	1720	3325	1545	2375
LUS210	18	1 9/16	7 13/16	1 3/4	3 7/8	(8) 10d	(4) 10d	1420	2785	1290	2210
LUS210-2	18	3 1/8	9	2	6	(8) 16d	(6) 16d	2580	4500	2320	3195
LUS210-3	18	4 5/8	8 3/16	2	5 1/4	(8) 16d	(6) 16d	2580	3345	2320	2375

1. d_e is the distance from the seat of the hanger to the highest joist nail.

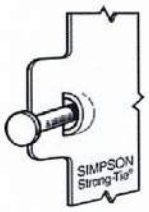

Dome Double Shear Nailing prevents tabs breaking off (available on some models).

U.S. Patent 5,603,580

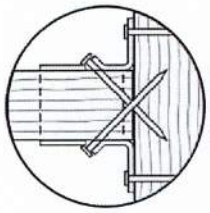

Double Shear Nailing Top View.

LICENSED PROFESSIONAL ENGINEER
04/01/2020
B. D. BUNTING
PROVINCE OF ONTARIO

LIMIT STATES DESIGN

This technical bulletin is effective until June 30, 2022, and reflects information available as of April 1, 2020. This information is updated periodically and should not be relied upon after June 30, 2022. Contact Simpson Strong-Tie for current information and limited warranty or see strongtie.com.

© 2020 Simpson Strong-Tie Company Inc.

(800) 999-5099
strongtie.com

TECHNICAL BULLETIN

HUS/LJS – Double Shear Joist Hangers

SIMPSON Strong-Tie®

All hangers have double shear nailing. This patented innovation distributes the load through two points on each joist nail for greater strength. It also allows the use of fewer nails, faster installation and the use of common nails for all connections. Do not bend or remove tabs.

Material: See table

Finish: G90 galvanized

Design:

- Factored resistances are in accordance with CSA O86 -14.
- Uplift resistances have been increased 15%. No further increase is permitted.
- Wood shear is not considered in the factored resistances given. The specifier must ensure that the joist and header capacities are capable of withstanding these loads.

Installation:

- Use all specified fasteners
- Nails: 16d = 0.162" dia. x 3½" long common wire
- Double shear nails must be driven at an angle through the joist or truss into the header to achieve the table loads
- Not designed for welded or nailer applications

Options:

- See current catalogue for options

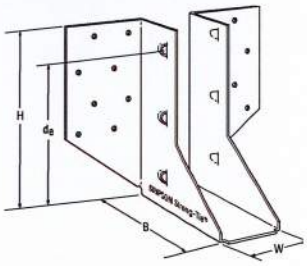

LJS26DS

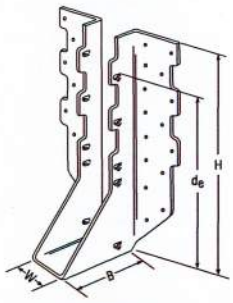

HUS210
(HUS26, HUS28, similar)

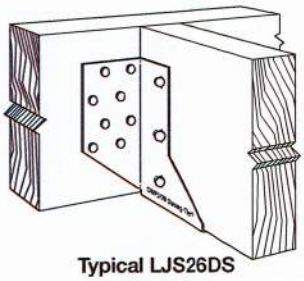

Typical LJS26DS Installation

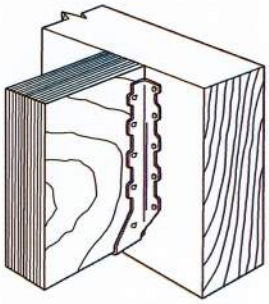

Typical HUS Installation

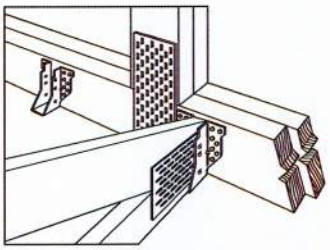

Typical HUS Installation
(Truss Designer to provide fastener quantity for connecting multiple members together)

Model No.	Ga.	Dimensions (in.)				Fasteners		Factored Resistance (lb.)			
								D.Fir-L		S-P-F	
		W	H	B	d_e[1]	Face	Joist	Uplift (K_D=1.15) lb.	Normal (K_D=1.00) lb.	Uplift (K_D=1.15) lb.	Normal (K_D=1.00) lb.
LJS26DS	18	1 9/16	5	3½	4⅝	(16) 16d	(6) 16d	2055	4265	1460	4115
HUS26	16	1⅝	5⅜	3	3 15/16	(14) 16d	(6) 16d	2705	4940	2065	3875
HUS28	16	1⅝	7 3/32	3	6 3/32	(22) 16d	(8) 16d	3605	5365	2675	4345
HUS210	16	1⅝	9 3/32	3	7 31/32	(30) 16d	(10) 16d	4505	5795	4010	4740
HUS1.81/10	16	1 13/16	9	3	8	(30) 16d	(10) 16d	4505	6450	4010	5200

1. d_e is the distance from the seat of the hanger to the highest joist nail.

Dome Double Shear Nailing prevents tabs breaking off (available on some models).

U.S. Patent 5,603,580

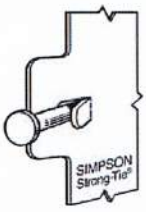

Double Shear Nailing Side View. Do not bend tab back.

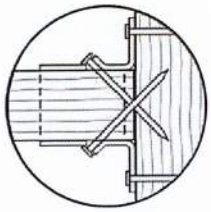

Double Shear Nailing Top View.

LIMIT STATES DESIGN

This technical bulletin is effective until June 30, 2022, and reflects information available as of April 1, 2020. This information is updated periodically and should not be relied upon after June 30, 2022. Contact Simpson Strong-Tie for current information and limited warranty or see strongtie.com.

© 2020 Simpson Strong-Tie Company Inc.

(800) 999-5099
strongtie.com

TECHNICAL BULLETIN

HHUS – Double Shear Joist Hangers

SIMPSON Strong-Tie®

All HHUS hangers have double shear nailing. This patented innovation distributes the load through two points on each joist nail for greater strength. It also allows the use of fewer nails, faster installation and the use of common nails for all connections. Do not bend or remove tabs.

Material: 14 gauge

Finish: G90 galvanized

Design:

- Factored resistances are in accordance with CSA O86-14.
- Uplift resistances have been increased 15%. No further increase is permitted.
- Wood shear is not considered in the factored resistances given. The specifier must ensure that the joist and header capacities are capable of withstanding these loads.

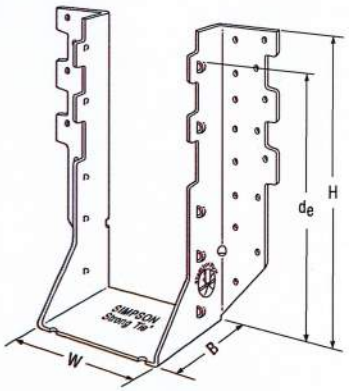

HHUS410

Installation:

- Use all specified fasteners
- Nails: 16d = 0.162" dia. x 3½" long common wire
- Double shear nails must be driven at an angle through the joist or truss into the header to achieve the table loads
- Not designed for welded or nailer applications

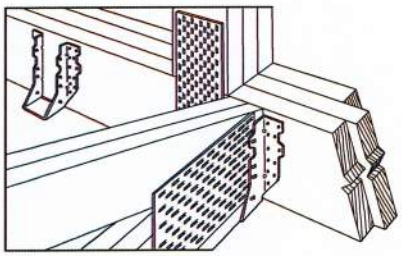

Typical HHUS Installation (Truss Designer to provide fastener quantity for connecting multiple members together)

Options:

- See current catalogue for options

Model No.	Ga.	Dimensions (in.)				Fasteners		Factored Resistance (lb.)			
								D.Fir-L		S-P-F	
		W	H	B	d_e[1]	Face	Joist	Uplift (K_D=1.15)	Normal (K_D=1.00)	Uplift (K_D=1.15)	Normal (K_D=1.00)
HHUS26-2	14	3 5/16	5 13/16	3	3 15/16	(14) 16d	(6) 16d	2850	7335	2065	5205
HHUS28-2	14	3 5/16	7 7/32	3	6 5/32	(22) 16d	(8) 16d	3765	8940	2675	6345
HHUS210-2	14	3 5/16	9 3/32	3	8	(30) 16d	(10) 16d	4670	9660	4235	7000
HHUS210-3	14	4 11/16	9	3	7 15/16	(30) 16d	(10) 16d	4670	9670	4235	6865
HHUS210-4	14	6 1/8	8 29/32	3	7 27/32	(30) 16d	(10) 16d	4670	10155	4235	7210
HHUS46	14	3 5/8	5 13/32	3	3 15/16	(14) 16d	(6) 16d	2540	7335	2065	5205
HHUS48	14	3 5/8	7 1/8	3	6 1/8	(22) 16d	(8) 16d	3765	8940	2675	6345
HHUS410	14	3 5/8	9	3	8	(30) 16d	(10) 16d	4670	9855	4235	7000
HHUS5.50/10	14	5 1/2	9	3	8	(30) 16d	(10) 16d	4670	10155	4235	7210
HHUS7.25/10	14	7 1/4	9	3 5/16	7 29/32	(30) 16d	(10) 16d	4670	10155	3370	7210

1. d_e is the distance from the seat of the hanger to the highest joist nail.

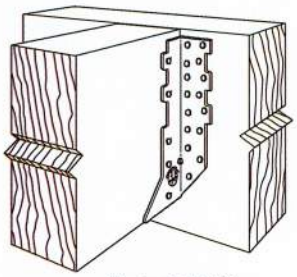

Typical HHUS Installation

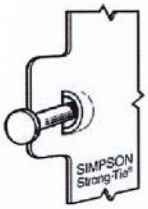

Dome Double Shear Nailing prevents tabs breaking off (available on some models).

U.S. Patent 5,603,580

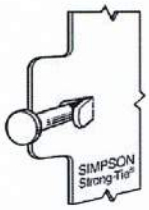

Double Shear Nailing Side View. Do not bend tab back.

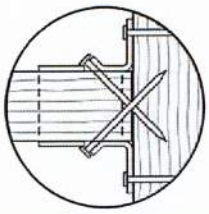

Double Shear Nailing Top View.

LIMIT STATES DESIGN

This technical bulletin is effective until June 30, 2022, and reflects information available as of April 1, 2020. This information is updated periodically and should not be relied upon after June 30, 2022. Contact Simpson Strong-Tie for current information and limited warranty or see strongtie.com.

© 2020 Simpson Strong-Tie Company Inc.

T-SPECHHUS20 3/20 exp. 6/22

(800) 999-5099
strongtie.com

TC – Truss Connectors

SIMPSON Strong-Tie®

The TC truss connector is an ideal connector for scissor trusses and can allow horizontal movement up to 1¼". The TC also attaches plated trusses to top plates or sill plates to resist uplift forces. Typically used on one or both ends of truss as determined by the building designer.

Material: 16 gauge

Finish: G90 galvanized

Design: Factored resistances are in accordance with CSA 086-14

Installation:

- Use all specified fasteners.
- Nails: 10d = 0.148" dia. x 3" long common wire, 10d x 1½ = 0.148" dia. x 1½" long.
- Drive 10d nails into the truss at the inside end of the slotted holes (inside end is towards the centre of the truss) and clinch on the back side. Do not seat these nails into the truss–allow room under the nail head for movement of the truss with respect to the wall.

Optional TC Installation:

- Bend one flange up 90°. Drive specified nails into the top and face of the top plates or install Titen® screws into the top and face of masonry wall. See optional load tables and installation details.

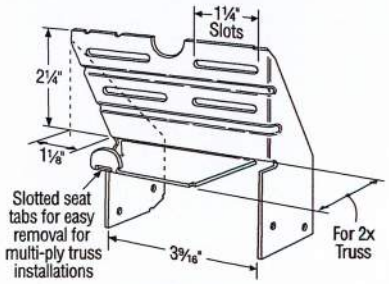

TC24
U.S. Patent 4,932,173

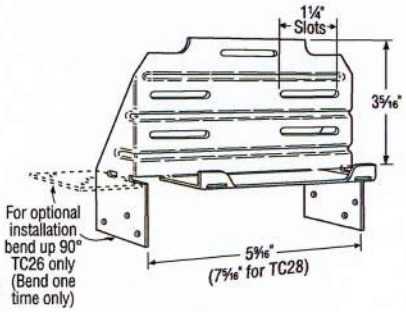

TC26
(TC28 Similiar)

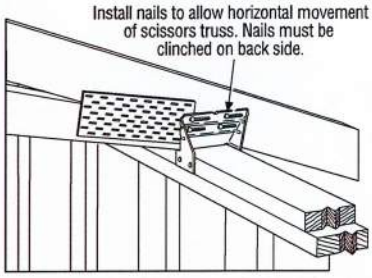

Typical TC24 Installation

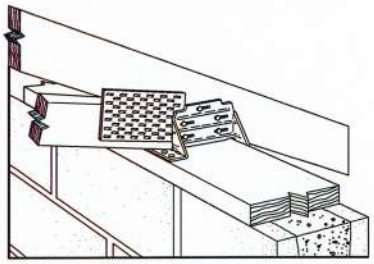

Optional TC26 Installation for Grouted Concrete Block using a Wood Nailer
(8", 10", 12" Wall Installation Similar)

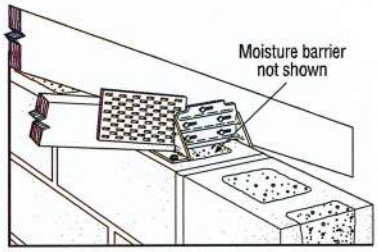

Optional TC26 Installation for Grouted Concrete Block using Titen Screws

Model No.	Fasteners		Factored Resistance	
	Truss	Wall Plates	D.Fir-L	S-P-F
			Uplift (K_D=1.15)	Uplift (K_D=1.15)
			lb.	lb.
TC24	(4) 10d	(4) 10d	605	430
TC26	(5) 10d	(6) 10d	1015	720
TC28	(5) 10d	(6) 10d	1015	720

Optional TC Installation Table

Model No.	Fasteners		Factored Resistance	
	Truss	Wall Plates	D.Fir-L	S-P-F
			Uplift (K_D=1.15)	Uplift (K_D=1.15)
			lb.	lb.
TC26	(5) 10d	(6) 10d x 1½"	810	660
	(5) 10d	(6) 10d	930	660

1. Factored resistances have been increased 15% for earthquake or wind loading; no further increase allowed; reduce where other loads govern.
2. Grout strength is 15 MPa minimum.
3. Optional TC26 installation with 10d nails requires minimum 3" top plate thickness.
4. TC26 fastened to grouted concrete block with (6) – ⁹⁄₁₆" x 2¼" Titen screws has a factored uplift resistance of 275 lb.

LIMIT STATES DESIGN

This technical bulletin is effective until June 30, 2022, and reflects information available as of April 1, 2020. This information is updated periodically and should not be relied upon after June 30, 2022. Contact Simpson Strong-Tie for current information and limited warranty or see strongtie.com.

© 2020 Simpson Strong-Tie Company Inc.

(800) 999-5099
strongtie.com

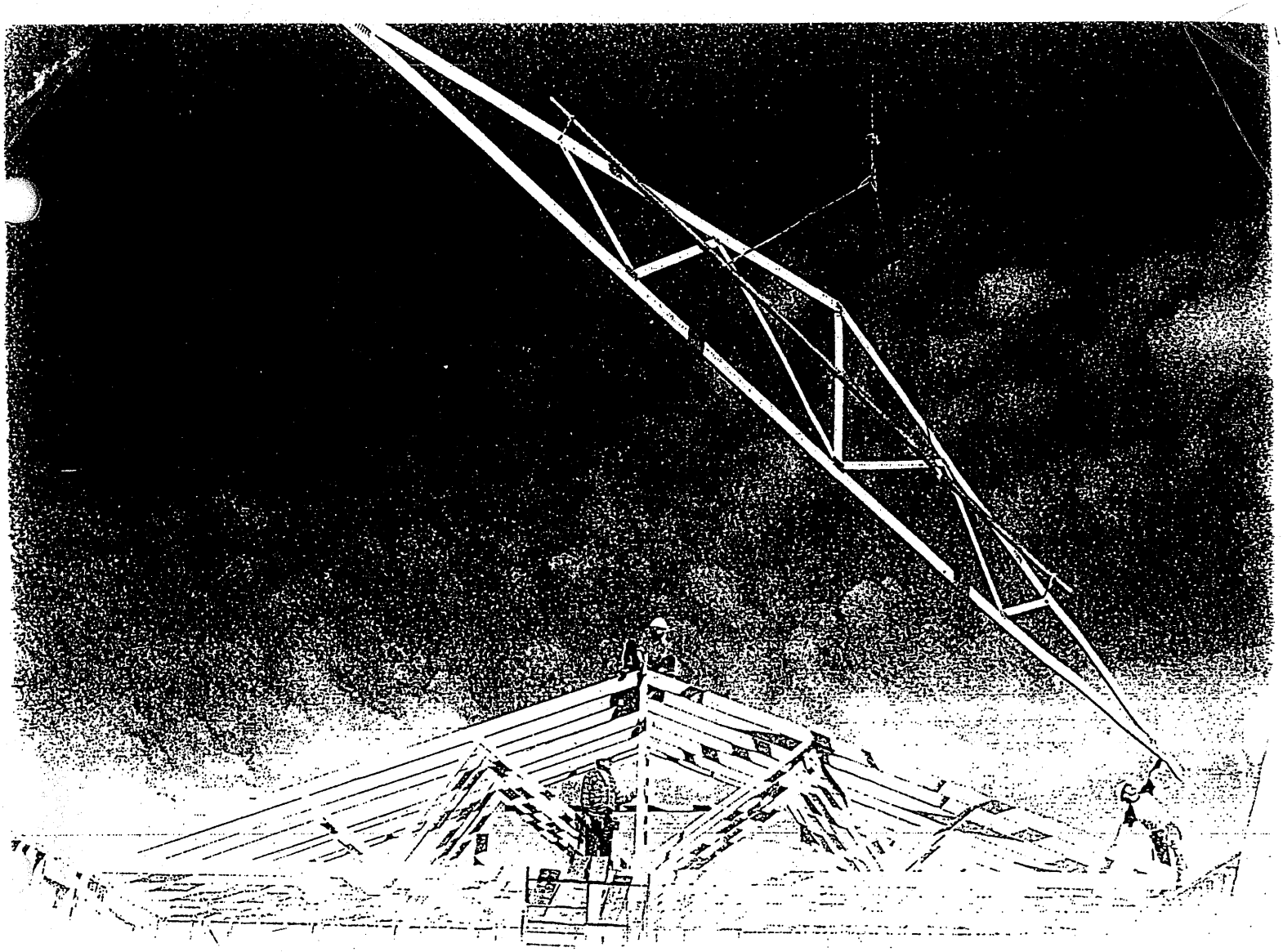

Wood Truss Installation

A Guide to proper handling, erecting and bracing metal plate connected wood trusses

Table of Content

Warning.....4

1 Unloading & Lifting.....5

2 Job Site Handling.....5

3 Hoisting.....6

4 Beginning the Erection Process.....7

5 Erection Tolerance.....8

6 Bracing.....8

7 Bracing Requirements for 3 Planes of Roof.....9

8 Stacking Materials.....10

Caution Notes.....11

Warning

General

Familiarity with the **Construction Design Documents**, the **Truss Design Drawings**, and **Truss Placement Plans** (if required by the **Construction Design Documents**) is required to properly erect, brace, and connect the trusses to the building system.

All of the care and quality involved in the design and manufacture of wood trusses can be jeopardized if the trusses are not properly handled, erected, and braced.

The consequences of improper handling, erecting, and bracing may be a collapse of the structure, which at best is a substantial loss of time and materials, and at worst is a loss of life. The majority of truss accidents occur during truss installation and not as a result of improper design or manufacture.

Prior to truss erection, the builder/erector shall meet with the erection crew for a safety and planning meeting, making sure each crew member understands his or her roles and responsibilities during the erection process.

Temporary Erection Bracing

Trusses are not marked in any way to identify the frequency, or location of temporary erection bracing.

All temporary bracing shall comply with the latest edition of *Commentary and Recommendations for Handling, Installing & Bracing Metal Plate Connected Wood Trusses* (HIB), published by the Truss Plate Institute, and/or as specified in the **Construction Design Documents** prepared by the building designer.

Permanent Truss Bracing

Permanent bracing for the roof or floor trusses is the responsibility of the building designer and should be shown on the **Construction Design Documents**. Permanent bracing locations for individual compression members of a wood truss are shown on the **Truss Design Drawings**, and shall be installed by the building or erection contractor. This bracing is needed for the proper performance of individual trusses within the roof or floor system. The design and connection of the bracing to the truss and then to the overall building system is the responsibility of the building designer, and is in addition to the permanent bracing plan, which is also specified by the building designer.

Special Design Requirements

Special design requirements, such as wind bracing, portal bracing, seismic bracing, diaphragms, shear walls, or other load transfer elements and their connections to wood trusses must be considered separately by the building designer, who shall determine size, location, and method of connections for all bracing as needed to resist these forces.

1 Unloading & Lifting

Never handle trusses flat

Beginning with the unloading process, and throughout all phases of construction, care must be taken to avoid **lateral bending** of trusses, which can cause damage to the lumber and metal connector plates at the joints.

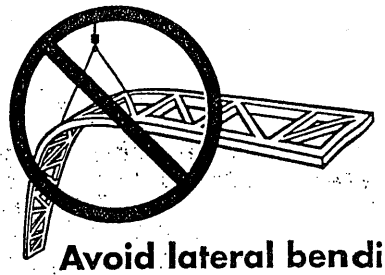

Avoid lateral bending

- **Use special care in windy weather.**
- **If using a crane within 10 feet of an electric line, contact the local power company.**
- **If using a crane within 5 miles of an airport, contact the airport 30 days prior to erection to learn about any safety regulations that must be followed.**

2 Job Site Handling

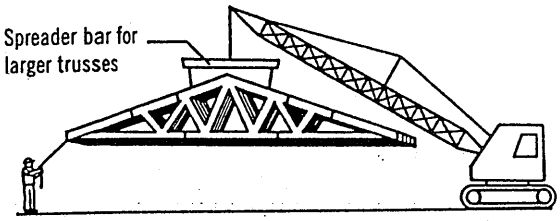

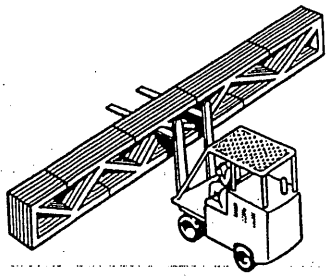

All trusses should be picked up at the top chords in a vertical position only

Proper banding and smooth ground allow for unloading of trusses without damage. This should be done as close to the building site as possible to minimize handling. **Do not** break banding until installation begins. Hand erection of trusses is allowed, provided excessive lateral bending is prevented.

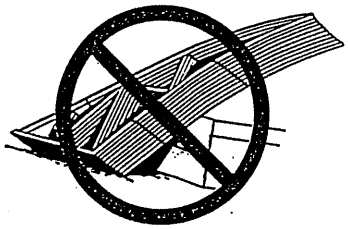

Do not store unbraced bundles upright

If trusses are stored vertically they shall be braced in a manner that will prevent tipping or topping. Generally cuting of the banding is done just prior to installation.

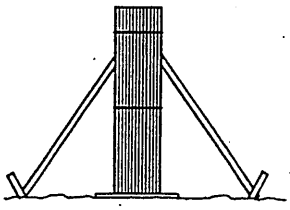

Do not store on uneven ground

If trusses are stored horizontally, blocking should be used on eight to ten foot centers, or as required, to minimize lateral bending and moisture gain.

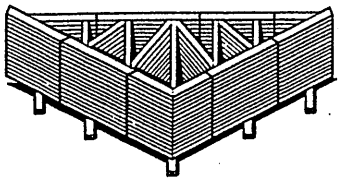

Care should be exercised when removing banding to avoid damaging trusses.

During long term storage, trusses shall be protected from the environment in a manner that provides for adequate ventilation of the trusses. If tarpaulins or other material is used, the ends shall be left open for ventilation. Plastic is not recommended, since it can trap moisture.

3 Hoisting

All trusses that are erected one at a time shall be held safely in position by the erection equipment until such time as all necessary bracing has been installed and the ends of the trusses are securely fastened to the building.

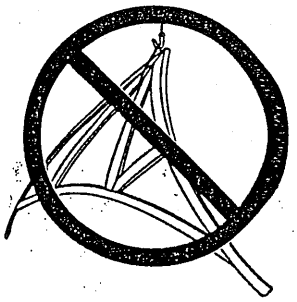

Avoid lateral bending

L ≤ 30'

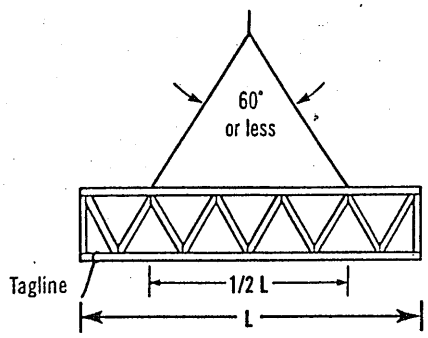

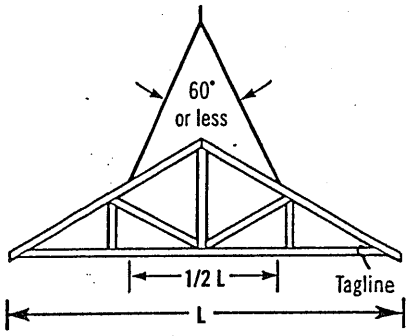

Truss sling is acceptable where these criteria are met.

30' < L ≤ 60'

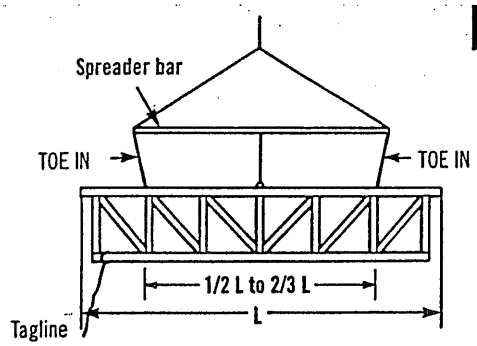

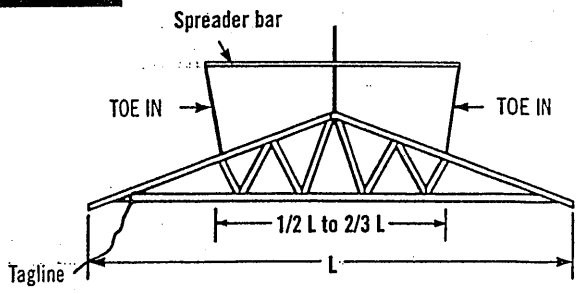

Use spreader bar in all other cases. It should be noted that the lines from the ends of the spreader bar "**TOE IN**"; if these lines should "**TOE OUT**" the truss may fold in half.

L > 60'

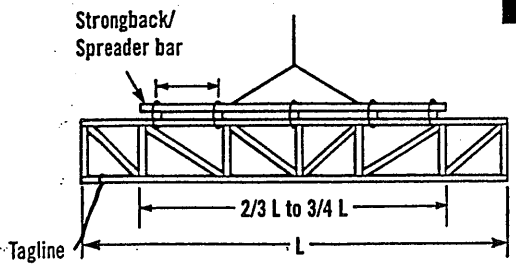

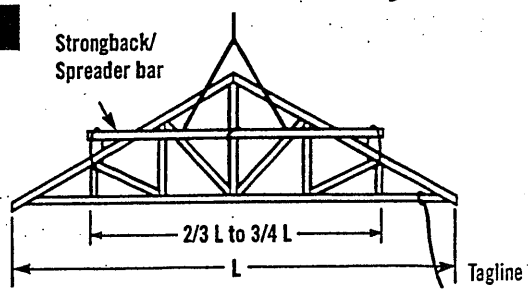

For lifting trusses with spans in excess of 60 feet, it is recommended that a strongback/spreader bar be used as illustrated. The strongback/spreader bar should be attached to the top chord and web members at intervals of approximately 10 feet. Further, the strongback/spreader bar should be at or above the mid-height of the truss to prevent overturning. The strongback/spreader bar can be of any material with sufficient strength to safely carry the weight of the truss and sufficient rigidity to adequately resist bending of the truss.

4 Beginning the Erection Process

It is important for the builder or erection contractor to provide substantial bracing for the first truss erected. The two or more trusses making up the rest of the first set are tied to and rely upon the first truss for stability. Likewise, after this first set of trusses is adequately cross-braced, the remaining trusses installed rely upon this first set for stability. Thus, the performance of the truss bracing system depends to a great extent on how well the first group of trusses is braced.

Ground Brace – Exterior

One satisfactory method ties the first unit of trusses off to a series of braces that are attached to a stake driven into the ground and securely anchored. The ground brace itself should be supported as shown below or it is apt to buckle. Additional ground braces in the opposite direction, inside the building, are also recommended.

Ground Brace – Interior

Another satisfactory method where height of building or ground conditions prohibit bracing from the exterior is to tie the first truss rigidly in place from the interior at the floor level, provided the floor is substantially completed and capable of supporting the ground bracing forces. Securely fasten the first truss to the middle of the building. Brace the bracing similar to exterior ground bracing shown at left. Set trusses from the middle toward the end of the building. Properly cross-brace the first set of trusses before removing floor braces and setting remaining trusses.

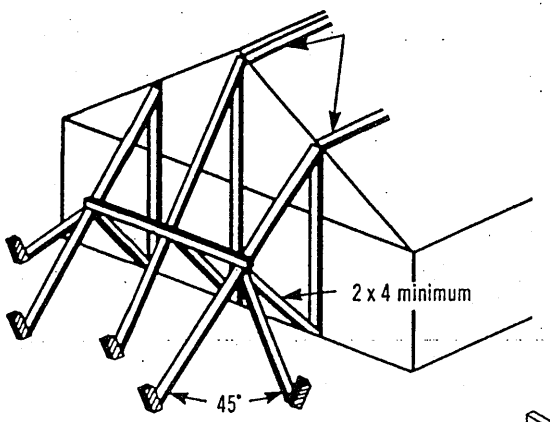

Note: Locate ground braces for first truss directly in line with all rows of top chord continuous lateral bracing (either temporary or permanent).

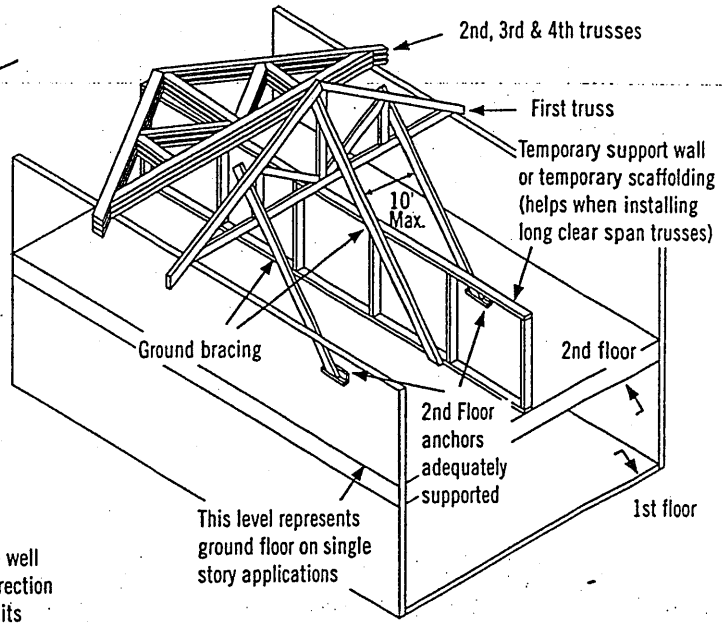

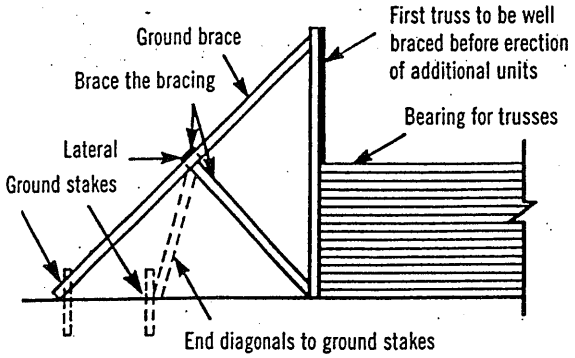

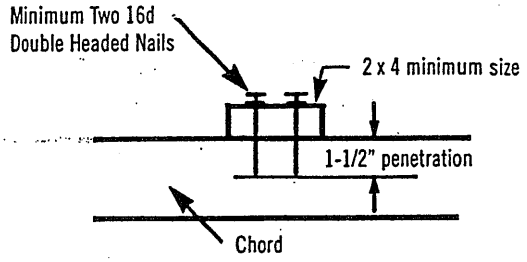

Inadequate size of bracing material or inadequate fastening is a major cause of erection dominoing.

5 Erection Tolerance

Complying with erection tolerances is critical to achieving an acceptable roof or floor line, and to accomplishing effective bracing. Setting trusses within tolerance the first time will prevent the need for the hazardous practice of respacing or adjusting trusses when roof sheathing or roof purlins are installed. Trusses leaning or bowing can cause nails to miss the top chords when sheathing is applied, and create cumulative stresses on the bracing, which is a frequent cause of dominoing.

When sheathing, make sure nails are driven into the top chord of the trusses.

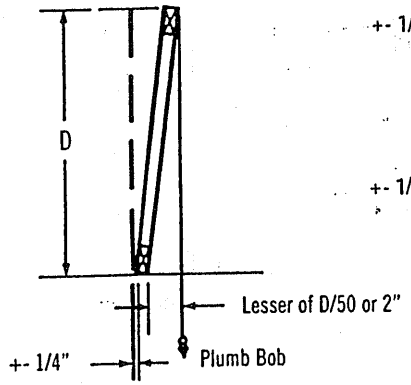

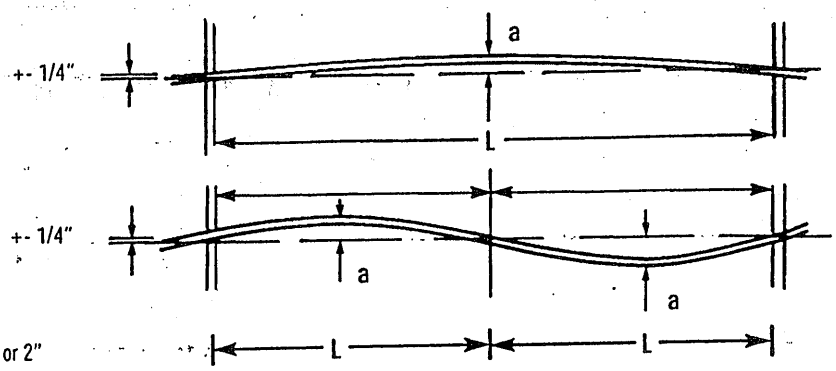

L = 16' to 32', a = 1"
L = 32' & over, a = 2"

6 Bracing

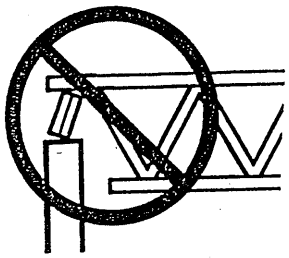

Do not install trusses on temporarily connected supports

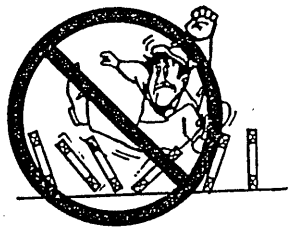

Do not walk on unbraced trusses

Do not walk on trusses or gable ends lying flat

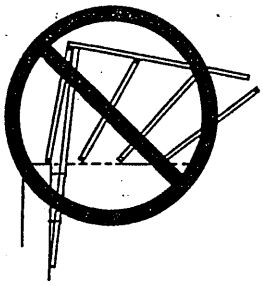

Nails in withdrawal (parallel to force)

All anchors, hangers, tie-downs, seats, bearing ledgers, etc., that are part of the supporting structure shall be accurately and properly placed and permanently attached before truss installation begins. No trusses shall ever be installed on anchors or ties that have temporary connections to the supporting structure.

Nailing scabs to the end of the building to brace the first truss is not recommended.
All nailing of bracing should be done so that nails are driven perpendicular to the direction of force, as shown at right.

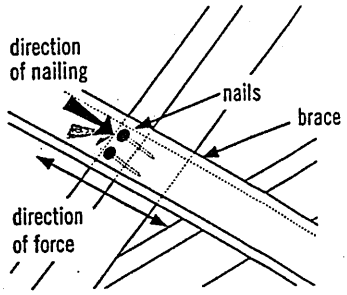

Well nailed (perpendicular to force)

7 Bracing Requirements for 3 Planes of Roof

Temporary erection bracing must be applied to three planes of the roof system to ensure stability: Plane 1) **Top Chord** (sheathing), Plane 2) **Bottom Chord** (ceiling plane), and Plane 3) **Web Member** plane or vertical plane perpendicular to trusses.

1) Top Chord Plane

Most important to the builder or erection contractor is bracing in the plane of the top chord. Truss top chords are susceptible to lateral buckling before they are braced or sheathed.

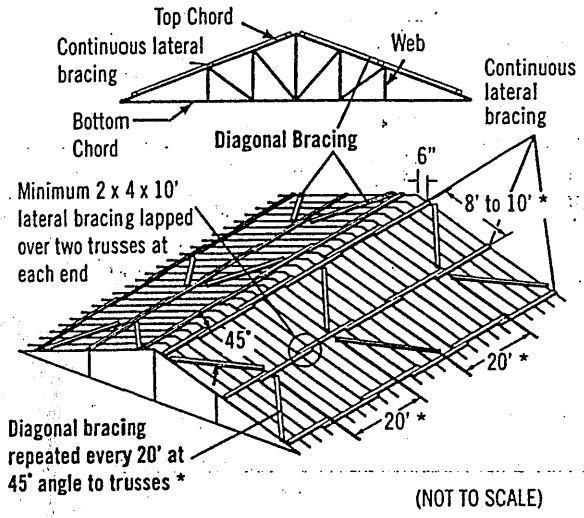

(NOT TO SCALE)

Exact spacing between trusses should be maintained as bracing is installed to avoid the hazardous practice of removing bracing to adjust spacing. This act of "adjusting spacing" can cause trusses to topple if connections are removed at the wrong time.

2) Bottom Chord Plane

In order to hold proper spacing on the bottom chord, temporary bracing is recommended on the top of the bottom chord.

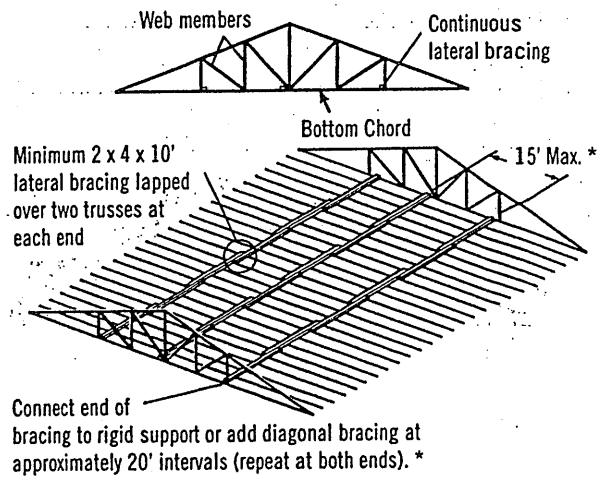

* Long spans, heavy loads or other spacing configurations may require closer spacing between lateral bracing and closer intervals between diagonals. Consult the building designer or HIB and DSB (*Recommended Design Specification for Temporary Bracing of Metal-Plate Connected Wood Trusses*) for details.

Diagonal or cross-bracing is very important!

3) Web Member Plane

"X" bracing, as shown, is critical in preventing trusses from leaning or dominoing. Repeat as shown to create a succession of rigid units.

X-bracing should be installed on vertical web members wherever possible, at or near lateral bracing. Plywood or OSB may be substituted for X-bracing.

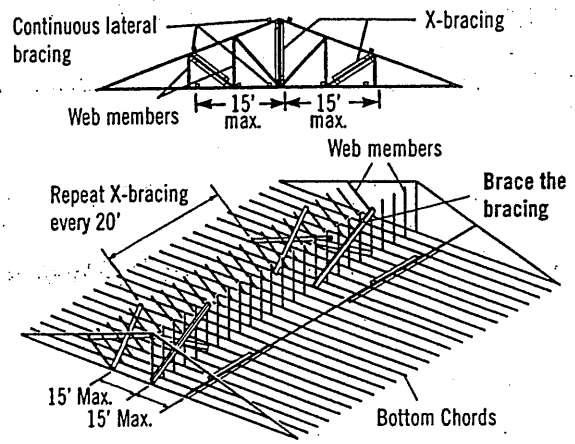

Note: Top chords and some web members are not shown, in order to make drawings more readable.

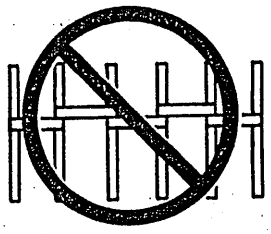

Do not use short blocks to brace individual trusses without a specific bracing plan detailing their use

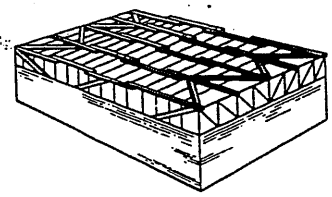

Bracing requirements using the same principles apply to parallel chord trusses

8 Stacking Materials

Do not proceed with building completion until all bracing is securely and properly in place

Never stack materials on unbraced or inadequately braced trusses

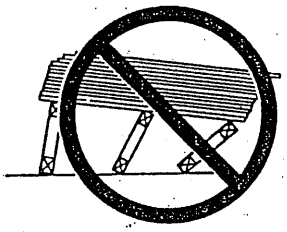

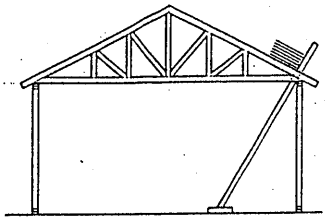

Proper distribution of construction materials is a must during construction.

Never stack materials near a peak

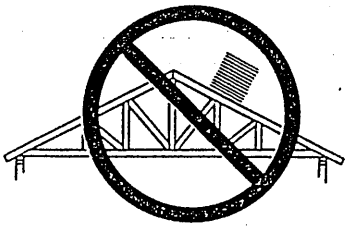

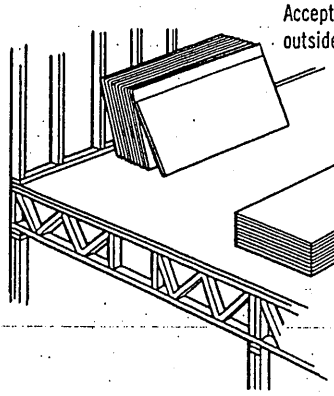

Never stack materials on the cantilever of a truss

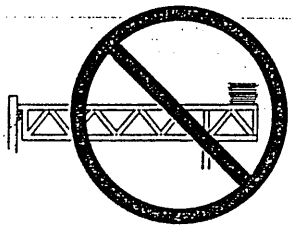

Always stack materials over two or more trusses.

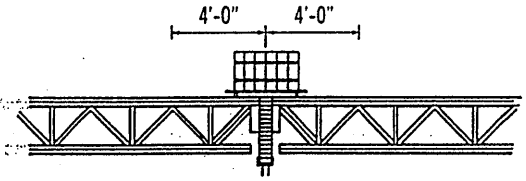

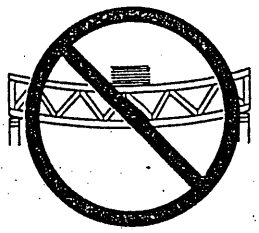

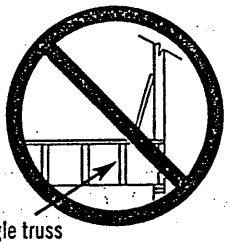

Roofing and mechanical contractors are cautioned to stack materials only along outside supporting members or directly over inside supporting members. Trusses are not designed for dynamic loads (i.e., moving vehicles). Extreme care should be taken when loading and stacking construction materials (rolled roofing, mechanical equipment, etc.) on the roof or floor system.

Never overload small groups or single trusses. Position load over as many trusses as possible.

Never cut any structural member of a truss.

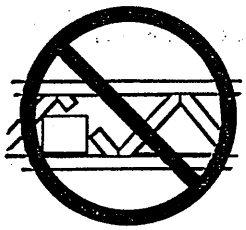

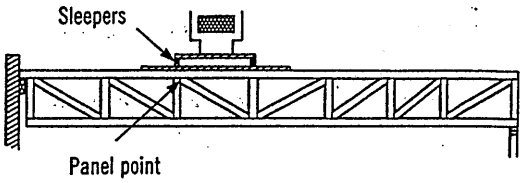

Sleepers for mechanical equipment should be located at panel points (joints) or over main supporting members, and only on trusses that have been designed for such loads.

Caution Notes

Errors in building lines and/or dimensions, or errors by others shall be corrected by the contractor or responsible construction trade subcontractor or supplier **before** erection of trusses begins.

Cutting of nonstructural overhangs is considered a part of normal erection and shall be done by the builder or erection contractor.

Any field modification that involves the cutting, drilling, or relocation of any structural truss member or connector plate shall not be done without the approval of the truss manufacturer or a licensed design professional.

The methods and procedures outlined are intended to ensure that the overall construction techniques employed will put floor and roof trusses **safely** in place in a completed structure. These recommendations for bracing wood trusses originate from the collective experience of leading technical personnel in the wood truss industry, but must, due to the nature of responsibilities involved, be presented only as a **guide** for use by a qualified building designer, builder, or erection contractor. Thus, the Wood Truss Council of America expressly disclaims any responsibility for damages arising from the use, application, or reliance on the recommendations and information contained herein.

[Selected text and figures referenced or reproduced from HIB and DSB by permission of the Truss Plate Institute, Madison, WI.]

THE CANADIAN WOOD TRUSS ASSOCIATION

L'ASSOCIATION CANADIENNE DES FABRICANTS DE FERMES DE BOIS

1400 Blair Place, Suite 210, Ottawa, ON K1J 9B8
Tel.: 613-747-5544 Fax: 613-747-6264

Wood Truss Council of America

One WTCA Center
6300 Enterprise Lane, Madison, WI 53719-1140
Tel.: 608-274-4849 Fax: 608-274-3329
wtca@woodtruss.com www.woodtruss.com