ALPA-BARRIE

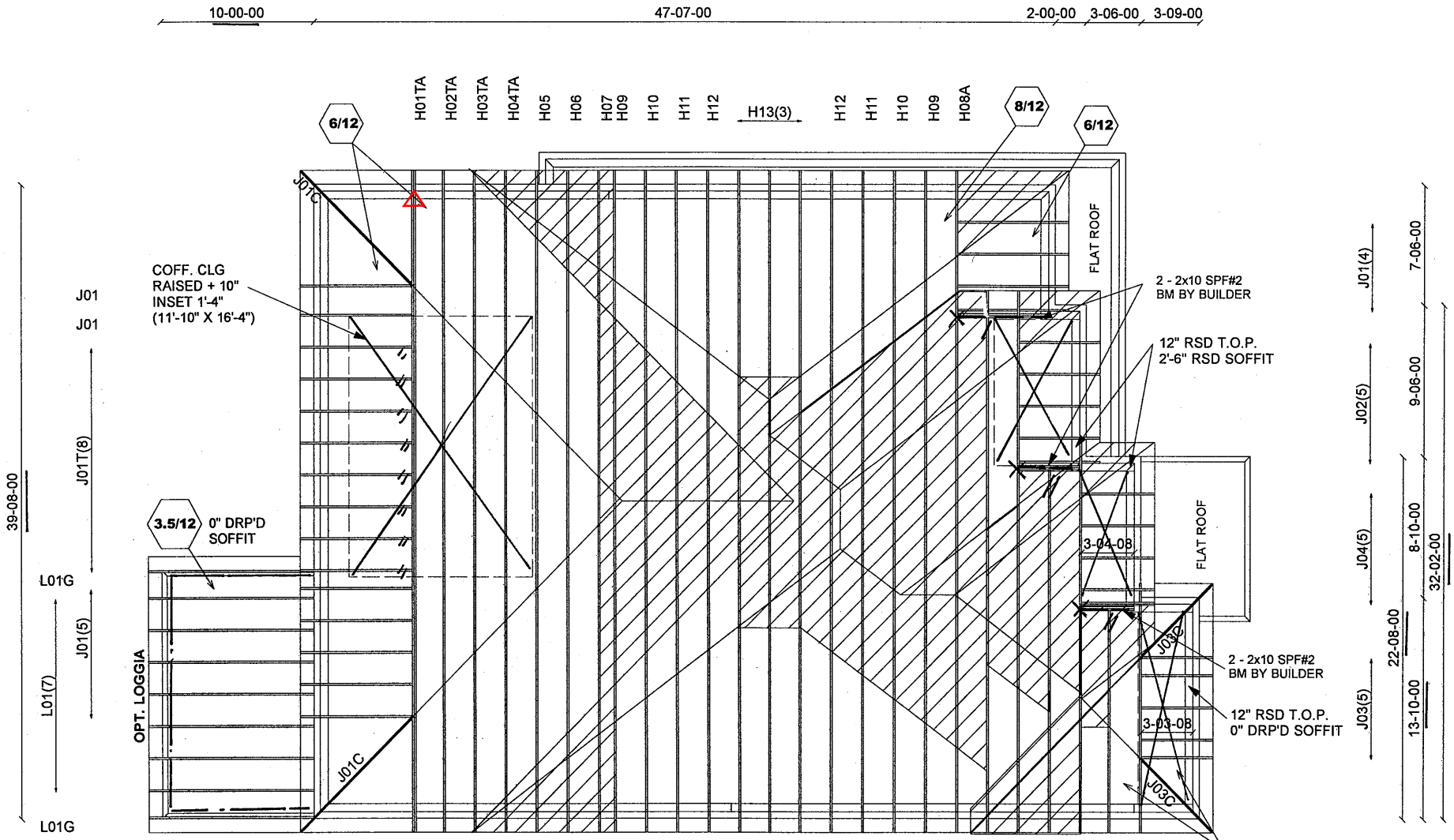

15" FIN. OH. **(NO BELL)**
RSD. HEEL - 0" DROP
(2" x 6" FASCIA) - FM
ASPHALT SHINGLES
2" X 6" BRG/BRICK

TRUSS LAYOUT NOT A.P.P. (CONFIRM).

E20115189 - E20115190
E20115220 - E20115239
E20115245 - E20115249

HANGERS
// LUS24
/ LJS26DS
X HHUS26-2
△ TC26

ASPEN

Mitek V. 8.2.0

ALL CONVENTIONAL FRAMING TO CONFORM WITH PART 9 O.B.C. LATEST EDITION. ROOF RAFTERS THAT CROSS OVER TRUSSES TO BE 2X4 SPF #2 @ 24" O.C WITH A VERT. POST TO THE TRUSS UNDERNEATH AT EACH CROSS POINT. VERT. POSTS LONGER THAN 6' TO HAVE LATERAL BRACING SO THAT THE DISTANCE BETWEEN END POINTS & BETWEEN ROWS OF BRACING DOES NOT EXCEED 6'

CONVENTIONAL FRAMING BY OTHERS

Job Track: 45147	Builder / Location: GOLD PARK HOMES / VAUGHAN	Model / Elevation: 5009	/ C ALT 5 BED OR OPT LOGGIA
Layout ID: 324087	Project: PINE VALLEY	THESE DRAWINGS CONSTITUTE THE PROPERTY OF ALPA ROOF TRUSSES INC., SHALL NOT BE REPRODUCED, PUBLISHED, OR REDISTRIBUTED IN ANY MANNER OR UTILIZED FOR ANY PURPOSE OTHER THAN THE MANUFACTURE OF TRUSSES BY ALPA ROOF TRUSSES INC AND WILL BE RETRACTED BY ALPA ROOF TRUSSES INC IF UTLILZED FOR ANY OTHER PURPOSE.	
Plan Log: 106926	Date: 2020-09-24 Designer: emozes		

EWP DESIGN INC.

(905) 832-2250 FAX (905) 832-0286

RESPONSIBILITIES AND SPECIFICATIONS

RESPONSIBILITIES

1. EWP DESIGN INC. is responsible for the design of trusses as individual components.
2. It is the responsibility of others to ascertain that the design loads utilized on each drawing meet or exceed the actual dead load imposed by the structure, the live load imposed by the intended use and the snow load imposed by local building code or authorities with jurisdictions.
3. All dimensions are to be verified by the owner, contractor, architect or other authorities with jurisdictions before truss fabrication.
4. EWP DESIGN INC. bears no responsibility for the erection of trusses. Persons erecting trusses are cautioned to seek professional advice regarding the temporary and permanent bracing for the system. Bracing shown on EWP DESIGN INC. drawing is specified for the truss as a component only and forms an integral part of the truss design.
5. It is the truss manufacturer's responsibility to ensure that trusses are manufactured in conformance with specifications of EWP DESIGN INC. as outlined below.

SPECIFICATIONS

1. Trusses designed by EWP DESIGN INC. conform to the relevant section of the Ontario Building Code of Canada (Part 9 or Part 4) or to the Canadian code for farm buildings, whichever applies to the building type, as indicated on the EWP DESIGN INC. drawings, and conform to the design procedures established by the Truss Plate Institute of Canada. Unit stresses used for truss designs are as per the edition of CSA-O86 shown on EWP DESIGN INC. drawings.
2. Lumber is to be the size, species and grade as specified on EWP DESIGN INC. drawings.
3. Moisture content of lumber shall not exceed 19% in service unless specified otherwise.
4. Metal connector plates shall be applied to both faces of truss at each joint and shall be positioned as specified.
5. Top chords of trusses are assumed to be continuously braced laterally by roof sheathing or by purlins at intervals not exceeding 12.5 times the thickness of top chord member.
6. Bottom chords shall be laterally braced at intervals not exceeding 3M (10') o.c., where rigid ceiling is not applied directly to the underside of chords.

THESE DRAWINGS CONSTITUTE THE PROPERTY OF EWP DESIGN INC., SHALL NOT BE REPRODUCED, PUBLISHED, OR REDISTRIBUTED IN ANY MANNER OR UTILIZED FOR ANY PURPOSE OTHER THAN THE MANUFACTURE OF TRUSSES BY THE ALPA LUMBER GROUP, AND WILL BE RETRACTED BY EWP DESIGN INC. IF UTILIZED FOR ANY OTHER PURPOSE.

JOB NAME	TRUSS NAME	QUANTITY	PLY	JOB DESC.	DRWG NO.
324082	L01		1	TRUSS DESC. JT 45147	E20115189

Alpha Roof Truss, Maple

Version 8.330 S May 6 2020 MiTek Industries, Inc. Fri Nov 20 13:44:30 2020 Page 1

ID:?e6mKUZ36q6Hh0QiNXna66yd61Q-6kNc81uaWkx1Q1YuqtjnBJ1FzKUuDbqC4ctH0tyHHfl

Scale = 1:21.3

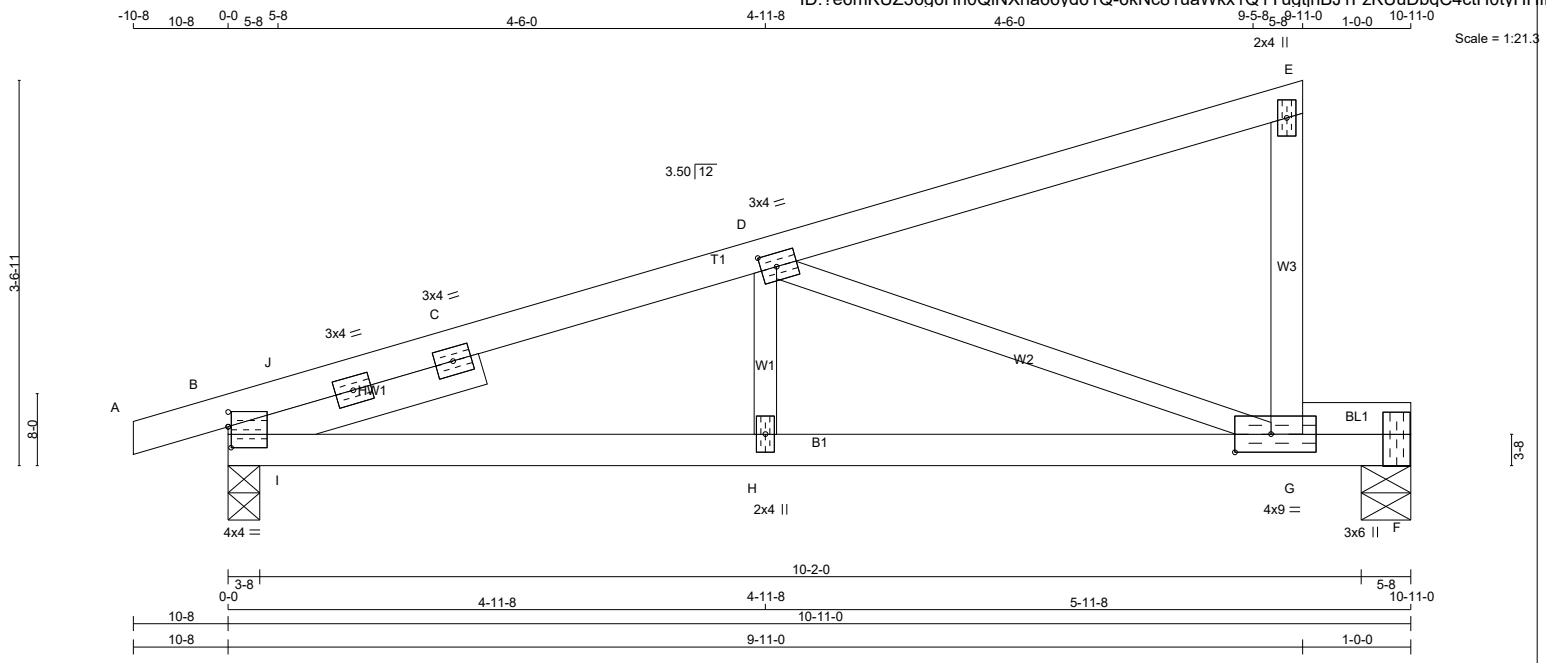

TOTAL WEIGHT = 7 X 38 = 265 lb

[M][F]

LUMBER

N. L. G. A. RULES

CHORDS	SIZE		LUMBER	DESCR.
A - E	2x4	DRY	No.2	SPF
G - E	2x4	DRY	No.2	SPF
B - F	2x4	DRY	No.2	SPF
REINFORCING MEMBERS				
HW1	2x4	DRY	No.2	SPF
BEARING BLOCKS				
BL1	2x4	DRY	No.2	SPF
ALL WEBS	2x3	DRY	No.2	SPF

DRY: SEASONED LUMBER.

PLATES (table is in inches)

JT	TYPE	PLATES	W	LEN	Y	X
B	TMBMR1-I	MT20	4.0	4.0	2.25	0.25
B	RT-t	MT20	3.0	4.0		
B	RT-t	MT20	3.0	4.0		
B	TP+p	MT20	3.0	6.0	1.50	
D	TMWW-t	MT20	3.0	4.0	1.50	1.75
E	TMV+p	MT20	2.0	4.0		
G	BMVWK-t	MT20	4.0	9.0	2.00	4.00
H	BMW+w	MT20	2.0	4.0		

LATERAL BRACE(S) SHOWN SHALL BE 2X4 SPF#2

DIMENSIONS, SUPPORTS AND LOADINGS SPECIFIED BY FABRICATOR TO BE VERIFIED BY BUILDING DESIGNER

BEARINGS

JT	FACTORED GROSS REACTION VERT	HORZ	MAXIMUM FACTORED GROSS REACTION DOWN	HORZ	UPLIFT	INPUT BRG IN-SX	REQRD BRG IN-SX
B	594	0	594	0	0	3-8	1-8
F	452	0	452	0	0	5-8	1-8

UNFACTORED REACTIONS

JT	1ST LCASE COMBINED	MAX./MIN. COMPONENT REACTIONS SNOW	LIVE	PERM.LIVE	WIND	DEAD	SOIL
B	422	266 / 0	0 / 0	0 / 0	0 / 0	157 / 0	0 / 0
F	324	189 / 0	0 / 0	0 / 0	0 / 0	135 / 0	0 / 0

BEARING MATERIAL TO BE SPF NO.2 OR BETTER AT JOINT(S) B, F

BRACING

TOP CHORD TO BE SHEATHED OR MAX. PURLIN SPACING = 6.25 FT.
MAX. UNBRACED BOTTOM CHORD LENGTH = 10.00 FT OR RIGID CEILING DIRECTLY APPLIED.

ALL PITCH BREAKS AND PERIMETER CORNER JOINTS MUST BE LATERALLY RESTRAINED.

LOADING

TOTAL LOAD CASES: (4)

CHORDS

MEMB. FR-TO	MAX. FACTORED FORCE (LBS)	FACTORED VERT. LOAD (PLF) FROM	TO	LC1 MAX CSI (LC)	MAX. UNBRAC LENGTH
A- B	-4 / 0	-78.0	-78.0	0.03 (1)	10.00
B- J	-684 / 0	-78.0	-78.0	0.01 (4)	6.25
J- C	-735 / 0	-78.0	-78.0	0.15 (1)	6.25
C- D	-735 / 0	-78.0	-78.0	0.15 (1)	6.25
D- E	-8 / 0	-78.0	-78.0	0.23 (1)	10.00
G- E	-165 / 0	0.0	0.0	0.03 (1)	7.81
B- I	0 / 507	-18.5	-18.5	0.11 (1)	10.00
I- H	0 / 934	-18.5	-18.5	0.35 (1)	10.00
H- G	0 / 934	-18.5	-18.5	0.75 (1)	10.00
G- F	0 / 0	-18.5	-18.5	0.60 (1)	10.00

WEBS

MEMB. FR-TO	MAX. FACTORED FORCE (LBS)	MAX CSI (LC)
H- D	0 / 243	0.06 (4)
D- G	-994 / 0	0.43 (1)
I- J	0 / 250	0.00 (1)
I- C	-509 / 0	0.06 (1)

DESIGN CRITERIA

SPECIFIED LOADS:

TOP CH.	LL =	21.0	PSF
	DL =	6.0	PSF
BOT CH.	LL =	0.0	PSF
	DL =	7.4	PSF
TOTAL LOAD	=	34.4	PSF

SPACING = 24.0 IN. C/C

THIS TRUSS IS DESIGNED FOR RESIDENTIAL OR SMALL BUILDING REQUIREMENTS OF PART 9, NBCC 2015

THIS DESIGN COMPLIES WITH:
- PART 9 OF BCBC 2018 , ABC 2019
- PART 9 OF OBC 2012 (2019 AMENDMENT)
- CSA 086-14
- TPIC 2014

(55 % OF 23.0 P.S.F. G.S.L. PLUS 8.4 P.S.F. RAIN LOAD) EQUALS 21.0 P.S.F. SPECIFIED ROOF LIVE LOAD

ALLOWABLE DEFL.(LL)= L/360 (0.36")
CALCULATED VERT. DEFL.(LL) = L/ 999 (0.13")
ALLOWABLE DEFL.(TL)= L/360 (0.36")
CALCULATED VERT. DEFL.(TL) = L/ 477 (0.27")

CSI: TC=0.23/1.00 (D-E:1) , BC=0.75/1.00 (G-H:1) , WB=0.43/1.00 (D-G:1) , SSI=0.35/1.00 (F-G:1)

DOL LUMBER=1.00 NAIL=1.00 LS BEND=1.10 COMP=1.10 SHEAR=1.10 TENS= 1.10

COMPANION LIVE LOAD FACTOR = 1.00

TRUSS PLATE MANUFACTURER IS NOT RESPONSIBLE FOR QUALITY CONTROL IN THE TRUSS MANUFACTURING PLANT .

NAIL VALUES

PLATE	GRIP(DRY) (PSI) MAX	MIN	SHEAR (PLI) MAX	MIN	SECTION (PLI) MAX	MIN
MT20	650	371	1747	788	1987	1873

PLATE PLACEMENT TOL. = 0.250 inches

PLATE ROTATION TOL. = 5.0 Deg.

JSI GRIP= 0.86 (D) (INPUT = 0.90)
JSI METAL= 0.32 (B) (INPUT = 1.00)

JOB NAME	TRUSS NAME	QUANTITY	PLY	JOB DESC.	DRWG NO.
324082	L01G		1	TRUSS DESC. JT 45147	E20115190

Alpa Roof Truss, Maple

Version 8.330 S May 6 2020 MiTek Industries, Inc. Fri Nov 20 13:44:33 2020 Page 1

ID:?e6mKUZ36q6Hh0QiNXna66yd61Q-WJ3Im3wSpfJcHUHTM?HUpyfopXqjQ1qema6xdCyHHfi

Scale = 1:20.8

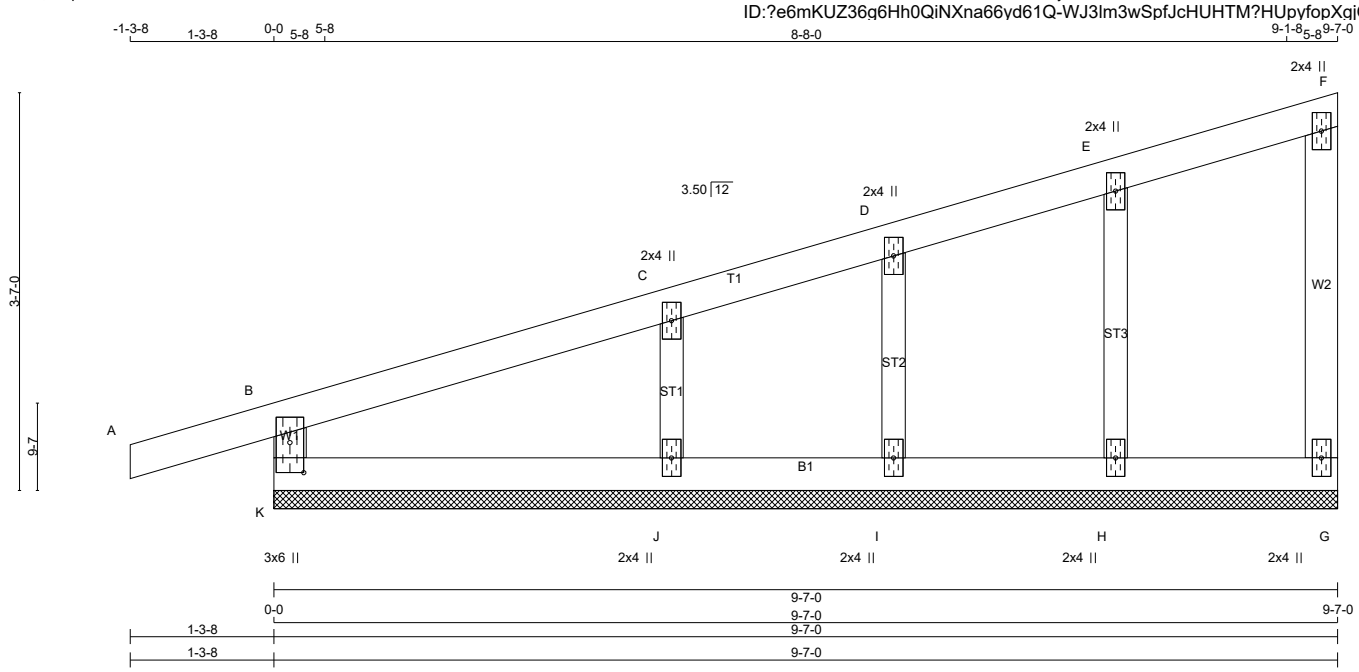

TOTAL WEIGHT = 2 X 32 = 64 lb

[M]

LUMBER

N. L. G. A. RULES

CHORDS	SIZE		LUMBER	DESCR.
K - B	2x4	DRY	No.2	SPF
A - F	2x4	DRY	No.2	SPF
G - F	2x4	DRY	No.2	SPF
K - G	2x4	DRY	No.2	SPF
ALL WEBS	2x3	DRY	No.2	SPF
ALL GABLE WEBS	2x3	DRY	No.2	SPF

DRY: SEASONED LUMBER.

GABLE STUDS SPACED AT 2-0-0 OC.

PLATES (table is in inches)

JT	TYPE	PLATES	W	LEN	Y	X
B						
C, D, E						
C	TMW+w	MT20	2.0	4.0		
F	TMV+p	MT20	2.0	4.0		
G	BMV1+p	MT20	2.0	4.0		
H, I, J						
H	BMW1+w	MT20	2.0	4.0		
K						
K	TMBMV1+p	MT20	3.0	6.0	3.25	1.50

LATERAL BRACE(S) SHOWN SHALL BE 2X4 SPF#2

DIMENSIONS, SUPPORTS AND LOADINGS SPECIFIED BY FABRICATOR TO BE VERIFIED BY BUILDING DESIGNER

BEARINGS

THIS TRUSS DESIGNED FOR CONTINUOUS BEARINGS.

THIS TRUSS REQUIRES RIGID SHEATHING ON EXPOSED FACE.

BEARING MATERIAL TO BE SPF NO.2 OR BETTER AT JOINT(S)

BRACING

TOP CHORD TO BE SHEATHED OR MAX. PURLIN SPACING = 6.25 FT.
MAX. UNBRACED BOTTOM CHORD LENGTH = 10.00 FT OR RIGID CEILING DIRECTLY APPLIED.

ALL PITCH BREAKS AND PERIMETER CORNER JOINTS MUST BE LATERALLY RESTRAINED.

LOADING

TOTAL LOAD CASES: (4)

CHORDS

MEMB. FR-TO	FORCE (LBS)	FACTORED VERT. LOAD (PLF) FROM	TO	LC1	MAX CSI (LC)	MAX. UNBRAC LENGTH
K- B	-257 / 0	0.0	0.0	0.04 (4)	7.81	
A- B	0 / 15	-78.0	-78.0	0.10 (1)	10.00	
B- C	-20 / 0	-78.0	-78.0	0.13 (1)	6.25	
C- D	-17 / 0	-78.0	-78.0	0.08 (1)	6.25	
D- E	-7 / 0	-78.0	-78.0	0.04 (1)	10.00	
E- F	-8 / 0	-78.0	-78.0	0.04 (1)	10.00	
G- F	-69 / 0	0.0	0.0	0.02 (1)	7.81	
K- J	0 / 17	-18.5	-18.5	0.04 (4)	10.00	
J- I	0 / 11	-18.5	-18.5	0.04 (4)	10.00	
I- H	0 / 8	-18.5	-18.5	0.02 (4)	10.00	
H- G	0 / 6	-18.5	-18.5	0.02 (4)	10.00	

WEBS

MEMB. FR-TO	FORCE (LBS)	MAX CSI (LC)
H- E	-172 / 0	0.03 (1)
I- D	-128 / 0	0.02 (1)
J- C	-225 / 0	0.03 (1)

DESIGN CRITERIA

SPECIFIED LOADS:

TOP	CH.	LL	=	21.0	PSF
		DL	=	6.0	PSF
BOT	CH.	LL	=	0.0	PSF
		DL	=	7.4	PSF
TOTAL	LOAD		=	34.4	PSF

SPACING = 24.0 IN. C/C

THIS TRUSS IS DESIGNED FOR RESIDENTIAL OR SMALL BUILDING REQUIREMENTS OF PART 9, NBCC 2015

THIS DESIGN COMPLIES WITH:
- PART 9 OF BCBC 2018 , ABC 2019
- PART 9 OF OBC 2012 (2019 AMENDMENT)
- CSA 086-14
- TPIC 2014

DESIGN ASSUMPTIONS
-OVERHANG NOT TO BE ALTERED OR CUT OFF.

(55 % OF 23.0 P.S.F. G.S.L. PLUS 8.4 P.S.F. RAIN LOAD) EQUALS 21.0 P.S.F. SPECIFIED ROOF LIVE LOAD

CSI: TC=0.13/1.00 (B-C:1) , BC=0.04/1.00 (J-K:4) , WB=0.03/1.00 (C-J:1) , SSI=0.11/1.00 (B-C:1)

DOL LUMBER=1.00 NAIL=1.00 LS BEND=1.10 COMP=1.10 SHEAR=1.10 TENS= 1.10

COMPANION LIVE LOAD FACTOR = 1.00

TRUSS PLATE MANUFACTURER IS NOT RESPONSIBLE FOR QUALITY CONTROL IN THE TRUSS MANUFACTURING PLANT .

NAIL VALUES

PLATE	GRIP(DRY) (PSI) MAX	MIN	SHEAR (PLI) MAX	MIN	SECTION (PLI) MAX	MIN
MT20	650	371	1747	788	1987	1873

PLATE PLACEMENT TOL. = 0.250 inches

PLATE ROTATION TOL. = 5.0 Deg.

JSI GRIP= 0.14 (K) (INPUT = 0.90)
JSI METAL= 0.06 (C) (INPUT = 1.00)

JOB NAME	TRUSS NAME	QUANTITY	PLY	JOB DESC.	DRWG NO.
324088	H06		1	TRUSS DESC. JT 45147	E20115220

Alpa Roof Truss, Maple

Version 8.330 S May 6 2020 MiTek Industries, Inc. Fri Nov 20 15:10:13 2020 Page 1

ID:?e6mKUZ36q6Hh0QiNXna66yd61Q-09etXc7bKwvIwPDKTVUr7tY1EVq8jZeDjFCw1HyHGPO

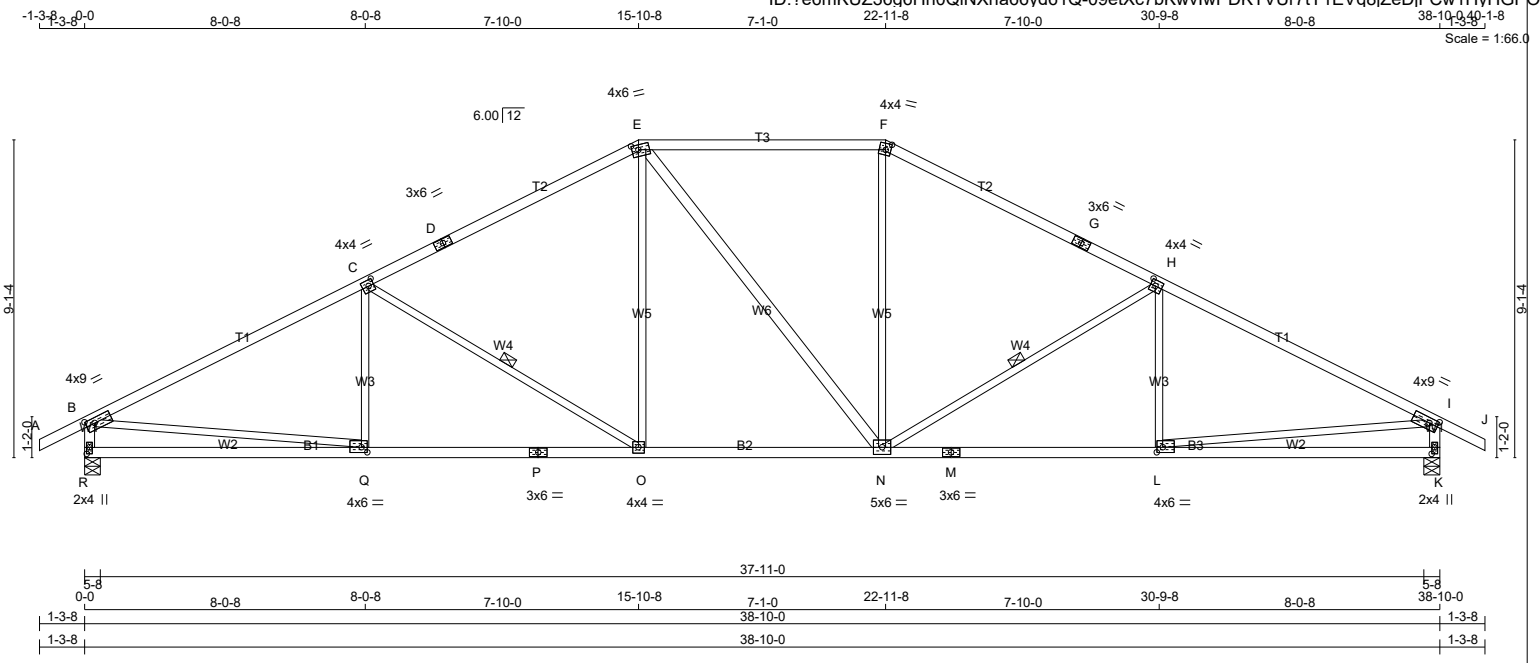

TOTAL WEIGHT = 159 lb

LUMBER

N. L. G. A. RULES

CHORDS	SIZE		LUMBER	DESCR.
A - D	2x4	DRY	1650F 1.5E	SPF
D - E	2x4	DRY	1650F 1.5E	SPF
E - F	2x4	DRY	2100F 1.8E	SPF
F - G	2x4	DRY	1650F 1.5E	SPF
G - J	2x4	DRY	1650F 1.5E	SPF
R - B	2x4	DRY	No.2	SPF
K - I	2x4	DRY	No.2	SPF
R - P	2x4	DRY	No.2	SPF
P - M	2x4	DRY	No.2	SPF
M - K	2x4	DRY	No.2	SPF
ALL WEBS EXCEPT	2x3	DRY	No.2	SPF
E - N	2x4	DRY	No.2	SPF

DRY: SEASONED LUMBER.

PLATES (table is in inches)

JT	TYPE	PLATES	W	LEN	Y	X
B	TMVW-t	MT20	4.0	9.0	1.75	3.00
C	TMWW-t	MT20	4.0	4.0	2.00	1.75
D	TS-t	MT20	3.0	6.0		
E	TTWW-m	MT20	4.0	6.0	1.75	2.25
F	TTW-m	MT20	4.0	4.0	2.25	1.75
G	TS-t	MT20	3.0	6.0		
H	TMWW-t	MT20	4.0	4.0	2.00	1.75
I	TMVW-t	MT20	4.0	9.0	1.75	3.00
K	BMV1+p	MT20	2.0	4.0	2.25	1.00
L	BMWW-t	MT20	4.0	6.0	1.75	2.00
M	BS-t	MT20	3.0	6.0		
N	BMWWW-t	MT20	5.0	6.0		
O	BMWW-t	MT20	4.0	4.0		
P	BS-t	MT20	3.0	6.0		
Q	BMWW-t	MT20	4.0	6.0	1.75	2.00
R	BMV1+p	MT20	2.0	4.0	2.25	1.00

LATERAL BRACE(S) SHOWN SHALL BE 2X4 SPF#2

DIMENSIONS, SUPPORTS AND LOADINGS SPECIFIED BY FABRICATOR TO BE VERIFIED BY BUILDING DESIGNER

BEARINGS

JT	FACTORED GROSS REACTION VERT	HORZ	MAXIMUM FACTORED GROSS REACTION DOWN	HORZ	UPLIFT	INPUT BRG IN-SX	REQRD BRG IN-SX
R	1979	0	1979	0	0	5-8	2-15
K	1979	0	1979	0	0	5-8	2-15

UNFACTORED REACTIONS

JT	1ST LCASE COMBINED	MAX./MIN. COMPONENT REACTIONS SNOW	LIVE	PERM.LIVE	WIND	DEAD	SOIL
R	1409	872 / 0	0 / 0	0 / 0	0 / 0	537 / 0	0 / 0
K	1409	872 / 0	0 / 0	0 / 0	0 / 0	537 / 0	0 / 0

BEARING MATERIAL TO BE SPF NO.2 OR BETTER AT JOINT(S) R, K

BRACING

TOP CHORD TO BE SHEATHED OR MAX. PURLIN SPACING = 3.93 FT.
MAX. UNBRACED BOTTOM CHORD LENGTH = 10.00 FT OR RIGID CEILING DIRECTLY APPLIED.

ALL PITCH BREAKS AND PERIMETER CORNER JOINTS MUST BE LATERALLY RESTRAINED.

1 LATERAL BRACE(S) AT 1/ 2 LENGTH OF C-O, H-N.

END VERTICAL(S) MUST BE SHEATHED OR HAVE BRACES AS INDICATED IN THE MAX. UNBRACED LENGTH COLUMN OF THE TABLE BELOW

LOADING

TOTAL LOAD CASES: (4)

CHORDS

MEMB. FR-TO	MAX. FACTORED FORCE (LBS)	FACTORED VERT. LOAD (PLF) FROM	TO	LC1	MAX CSI (LC)	MAX. UNBRAC LENGTH
A- B	0 / 24	-78.0	-78.0	0.08 (1)	10.00	
B- C	-2864 / 0	-78.0	-78.0	0.73 (1)	3.93	
C- D	-2271 / 0	-78.0	-78.0	0.64 (1)	4.37	
D- E	-2271 / 0	-78.0	-78.0	0.64 (1)	4.37	
E- F	-2007 / 0	-78.0	-78.0	0.36 (1)	5.30	
F- G	-2272 / 0	-78.0	-78.0	0.64 (1)	4.37	
G- H	-2272 / 0	-78.0	-78.0	0.64 (1)	4.37	
H- I	-2864 / 0	-78.0	-78.0	0.73 (1)	3.93	
I- J	0 / 24	-78.0	-78.0	0.08 (1)	10.00	
R- B	-1918 / 0	0.0	0.0	0.19 (1)	6.07	
K- I	-1917 / 0	0.0	0.0	0.19 (1)	6.07	
N- M	0 / 2591	-18.5	-18.5	0.56 (1)	10.00	
M- L	0 / 2591	-18.5	-18.5	0.56 (1)	10.00	
L- K	0 / 0	-18.5	-18.5	0.28 (4)	10.00	

WEBS

MEMB. FR-TO	MAX. FACTORED FORCE (LBS)	MAX CSI (LC)
Q- C	-112 / 81	0.04 (1)
C- O	-693 / 0	0.42 (1)
O- E	0 / 496	0.11 (1)
E- N	0 / 0	0.00 (1)
N- F	0 / 497	0.11 (1)
N- H	-693 / 0	0.42 (1)
L- H	-113 / 81	0.05 (1)
B- Q	0 / 2606	0.59 (1)
L- I	0 / 2606	0.59 (1)

[M][F]

DESIGN CRITERIA

SPECIFIED LOADS:

TOP CH.	LL	=	21.0	PSF
	DL	=	6.0	PSF
BOT CH.	LL	=	0.0	PSF
	DL	=	7.4	PSF
TOTAL LOAD		=	34.4	PSF

SPACING = 24.0 IN. C/C

LOADING IN FLAT SECTION BASED ON A SLOPE OF 2.00/12 MINIMUM

THIS TRUSS IS DESIGNED FOR RESIDENTIAL OR SMALL BUILDING REQUIREMENTS OF PART 9, NBCC 2015

THIS DESIGN COMPLIES WITH:
- PART 9 OF BCBC 2018 , ABC 2019
- PART 9 OF OBC 2012 (2019 AMENDMENT)
- CSA 086-14
- TPIC 2014

(55 % OF 23.0 P.S.F. G.S.L. PLUS 8.4 P.S.F. RAIN LOAD) EQUALS 21.0 P.S.F. SPECIFIED ROOF LIVE LOAD

ALLOWABLE DEFL.(LL)= L/360 (1.29")
CALCULATED VERT. DEFL.(LL) = L/ 999 (0.14")
ALLOWABLE DEFL.(TL)= L/360 (1.29")
CALCULATED VERT. DEFL.(TL) = L/ 999 (0.31")

CSI: TC=0.73/1.00 (B-C:1) , BC=0.56/1.00 (O-Q:1) , WB=0.59/1.00 (B-Q:1) , SSI=0.27/1.00 (H-I:1)

DOL LUMBER=1.00 NAIL=1.00 LS BEND=1.10 COMP=1.10 SHEAR=1.10 TENS= 1.10

COMPANION LIVE LOAD FACTOR = 1.00

TRUSS PLATE MANUFACTURER IS NOT RESPONSIBLE FOR QUALITY CONTROL IN THE TRUSS MANUFACTURING PLANT .

NAIL VALUES

PLATE	GRIP(DRY) (PSI) MAX	MIN	SHEAR (PLI) MAX	MIN	SECTION (PLI) MAX	MIN
MT20	650	371	1747	788	1987	1873

PLATE PLACEMENT TOL. = 0.250 inches

PLATE ROTATION TOL. = 5.0 Deg.

JSI GRIP= 0.87 (Q) (INPUT = 0.90)
JSI METAL= 0.86 (P) (INPUT = 1.00)

JOB NAME	TRUSS NAME	QUANTITY	PLY	JOB DESC.	DRWG NO.
324088	H07		1	TRUSS DESC. JT 45147	E20115221

Alpa Roof Truss, Maple

Version 8.330 S May 6 2020 MiTek Industries, Inc. Fri Nov 20 15:10:14 2020 Page 1

ID:?e6mKUZ36q6Hh0QiNXna66yd61Q-ULCFly8E5E19YYoW0C04q44HSv9VSxKMxvyTajyHGPN

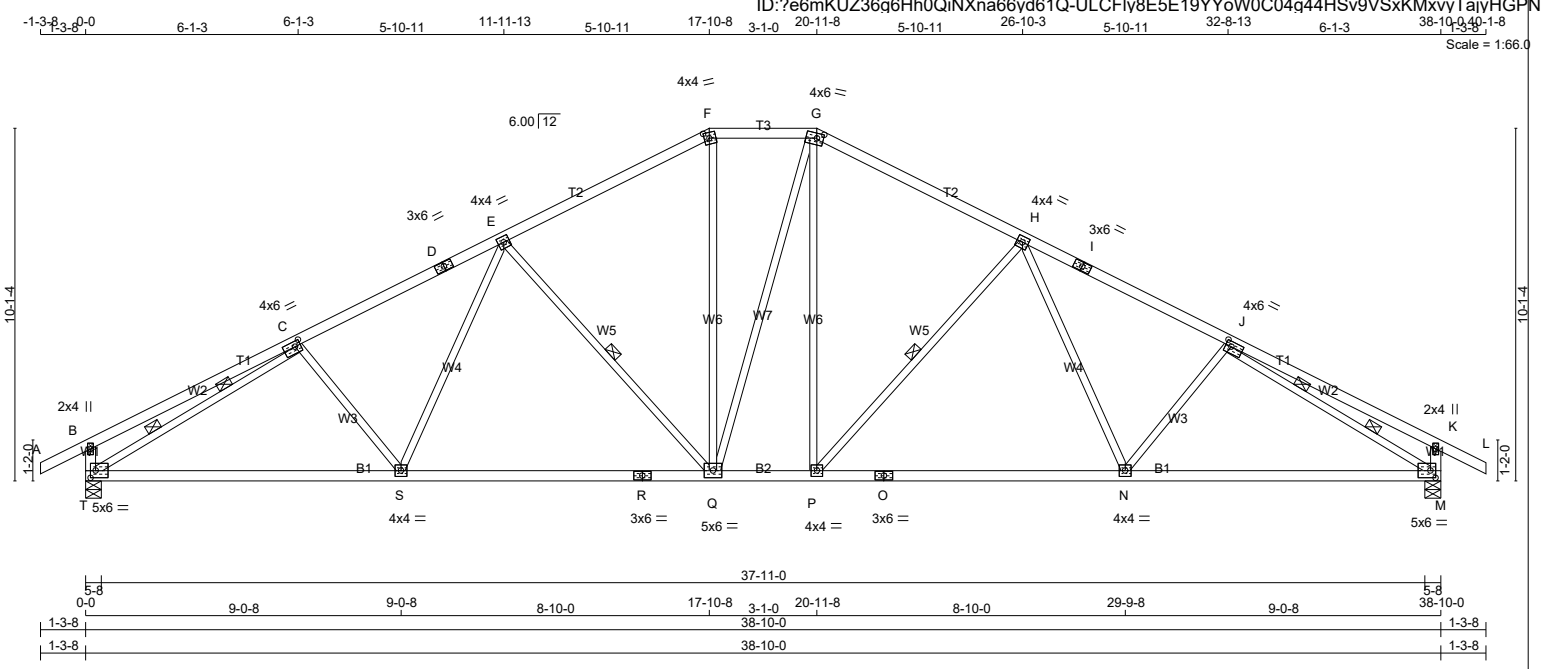

TOTAL WEIGHT = 167 lb

LUMBER

N. L. G. A. RULES

CHORDS	SIZE		LUMBER	DESCR.
A - D	2x4	DRY	No.2	SPF
D - F	2x4	DRY	No.2	SPF
F - G	2x4	DRY	No.2	SPF
G - I	2x4	DRY	No.2	SPF
I - L	2x4	DRY	No.2	SPF
T - B	2x4	DRY	No.2	SPF
M - K	2x4	DRY	No.2	SPF
T - R	2x4	DRY	No.2	SPF
R - O	2x4	DRY	No.2	SPF
O - M	2x4	DRY	No.2	SPF
ALL WEBS EXCEPT	2x3	DRY	No.2	SPF

DRY: SEASONED LUMBER.

PLATES (table is in inches)

JT	TYPE	PLATES	W	LEN	Y	X
B	TMV+p	MT20	2.0	4.0		
C	TMWW-t	MT20	4.0	6.0	1.75	2.00
D	TS-t	MT20	3.0	6.0		
E	TMWW-t	MT20	4.0	4.0		
F	TTW-m	MT20	4.0	4.0	2.00	1.75
G	TTWW-m	MT20	4.0	6.0	1.75	2.25
H	TMWW-t	MT20	4.0	4.0		
I	TS-t	MT20	3.0	6.0		
J	TMWW-t	MT20	4.0	6.0	1.75	2.00
K	TMV+p	MT20	2.0	4.0		
M	BMVW1-t	MT20	5.0	6.0	2.50	1.75
N, P, S						
N	BMWW-t	MT20	4.0	4.0		
O	BS-t	MT20	3.0	6.0		
Q	BMWWW-t	MT20	5.0	6.0		
R	BS-t	MT20	3.0	6.0		
T	BMVW1-t	MT20	5.0	6.0	2.50	1.75

LATERAL BRACE(S) SHOWN SHALL BE 2X4 SPF#2

DIMENSIONS, SUPPORTS AND LOADINGS SPECIFIED BY FABRICATOR TO BE VERIFIED BY BUILDING DESIGNER

BEARINGS

JT	FACTORED GROSS REACTION VERT	HORZ	MAXIMUM FACTORED GROSS REACTION DOWN	HORZ	UPLIFT	INPUT BRG IN-SX	REQRD BRG IN-SX
T	1979	0	1979	0	0	5-8	2-2
M	1979	0	1979	0	0	5-8	2-2

UNFACTORED REACTIONS

JT	1ST LCASE COMBINED	MAX./MIN. COMPONENT REACTIONS SNOW	LIVE	PERM.LIVE	WIND	DEAD	SOIL
T	1409	872 / 0	0 / 0	0 / 0	0 / 0	537 / 0	0 / 0
M	1409	872 / 0	0 / 0	0 / 0	0 / 0	537 / 0	0 / 0

BEARING MATERIAL TO BE SPF NO.2 OR BETTER AT JOINT(S) T, M

BRACING

TOP CHORD TO BE SHEATHED OR MAX. PURLIN SPACING = 3.87 FT.
MAX. UNBRACED BOTTOM CHORD LENGTH = 10.00 FT OR RIGID CEILING DIRECTLY APPLIED.

ALL PITCH BREAKS AND PERIMETER CORNER JOINTS MUST BE LATERALLY RESTRAINED.

1 LATERAL BRACE(S) AT 1/ 2 LENGTH OF E-Q, H-P.
2 LATERAL BRACE(S) AT 1/ 3 LENGTH OF C-T, J-M.

END VERTICAL(S) MUST BE SHEATHED OR HAVE BRACES AS INDICATED IN THE MAX. UNBRACED LENGTH COLUMN OF THE TABLE BELOW

LOADING

TOTAL LOAD CASES: (4)

CHORDS

MEMB. FR-TO	MAX. FACTORED FORCE (LBS)	FACTORED VERT. LOAD (PLF) FROM	TO	LC1 CSI (LC)	MAX UNBRAC LENGTH
A- B	0 / 24	-78.0	-78.0	0.10 (1)	10.00
B- C	0 / 19	-78.0	-78.0	0.35 (1)	10.00
C- D	-2711 / 0	-78.0	-78.0	0.44 (1)	3.87
D- E	-2711 / 0	-78.0	-78.0	0.44 (1)	3.87
E- F	-2085 / 0	-78.0	-78.0	0.40 (1)	4.33
F- G	-1852 / 0	-78.0	-78.0	0.13 (1)	4.83
G- H	-2083 / 0	-78.0	-78.0	0.40 (1)	4.34
H- I	-2712 / 0	-78.0	-78.0	0.44 (1)	3.87
I- J	-2712 / 0	-78.0	-78.0	0.44 (1)	3.87
J- K	0 / 19	-78.0	-78.0	0.35 (1)	10.00
K- L	0 / 24	-78.0	-78.0	0.10 (1)	10.00

WEBS

MEMB. FR-TO	FORCE (LBS)	MAX. FACTORED CSI (LC)
C- S	-135 / 26	0.06 (1)
S- E	0 / 322	0.07 (4)
E- Q	-689 / 0	0.40 (1)
Q- F	0 / 621	0.14 (1)
Q- G	0 / 5	0.00 (1)
P- G	0 / 616	0.14 (1)
P- H	-691 / 0	0.40 (1)
H- N	0 / 324	0.07 (4)
N- J	-135 / 26	0.06 (1)
T- C	-2984 / 0	0.94 (1)
L- M	-2985 / 0	0.94 (1)
S- R	0 / 2299	0.60 (4)
R- Q	0 / 2299	0.60 (4)
Q- P	0 / 1850	0.41 (1)
P- O	0 / 2299	0.60 (4)
O- N	0 / 2299	0.60 (4)
N- M	0 / 2510	0.62 (4)

[M][F]

DESIGN CRITERIA

SPECIFIED LOADS:

TOP CH.	LL	=	21.0	PSF
	DL	=	6.0	PSF
BOT CH.	LL	=	0.0	PSF
	DL	=	7.4	PSF
TOTAL LOAD		=	34.4	PSF

SPACING = 24.0 IN. C/C

LOADING IN FLAT SECTION BASED ON A SLOPE OF 2.00/12 MINIMUM

THIS TRUSS IS DESIGNED FOR RESIDENTIAL OR SMALL BUILDING REQUIREMENTS OF PART 9, NBCC 2015

THIS DESIGN COMPLIES WITH:
- PART 9 OF BCBC 2018 , ABC 2019
- PART 9 OF OBC 2012 (2019 AMENDMENT)
- CSA 086-14
- TPIC 2014

(55 % OF 23.0 P.S.F. G.S.L. PLUS 8.4 P.S.F. RAIN LOAD) EQUALS 21.0 P.S.F. SPECIFIED ROOF LIVE LOAD

ALLOWABLE DEFL.(LL)= L/360 (1.29")
CALCULATED VERT. DEFL.(LL) = L/ 999 (0.15")
ALLOWABLE DEFL.(TL)= L/360 (1.29")
CALCULATED VERT. DEFL.(TL) = L/ 999 (0.37")

CSI: TC=0.44/1.00 (H-J:1) , BC=0.62/1.00 (M-N:4) , WB=0.94/1.00 (J-M:1) , SSI=0.19/1.00 (B-C:1)

DOL LUMBER=1.00 NAIL=1.00 LS BEND=1.10 COMP=1.10 SHEAR=1.10 TENS= 1.10

COMPANION LIVE LOAD FACTOR = 1.00

TRUSS PLATE MANUFACTURER IS NOT RESPONSIBLE FOR QUALITY CONTROL IN THE TRUSS MANUFACTURING PLANT .

NAIL VALUES

PLATE	GRIP(DRY) (PSI) MAX	MIN	SHEAR (PLI) MAX	MIN	SECTION (PLI) MAX	MIN
MT20	650	371	1747	788	1987	1873

PLATE PLACEMENT TOL. = 0.250 inches

PLATE ROTATION TOL. = 5.0 Deg.

JSI GRIP= 0.89 (J) (INPUT = 0.90)
JSI METAL= 0.76 (O) (INPUT = 1.00)

JOB NAME	TRUSS NAME	QUANTITY	PLY	JOB DESC.	DRWG NO.
324088	H08A		1	TRUSS DESC. JT 45147	E20115222

Alpa Roof Truss, Maple

Version 8.330 S May 6 2020 MiTek Industries, Inc. Fri Nov 20 15:10:16 2020 Page 1

ID:?e6mKUZ36g6Hh0QiNXna66yd61Q-QkJ0AdAUdrHtnsyv8d2YIVAVUinqwqQfPDRaecyHGPL

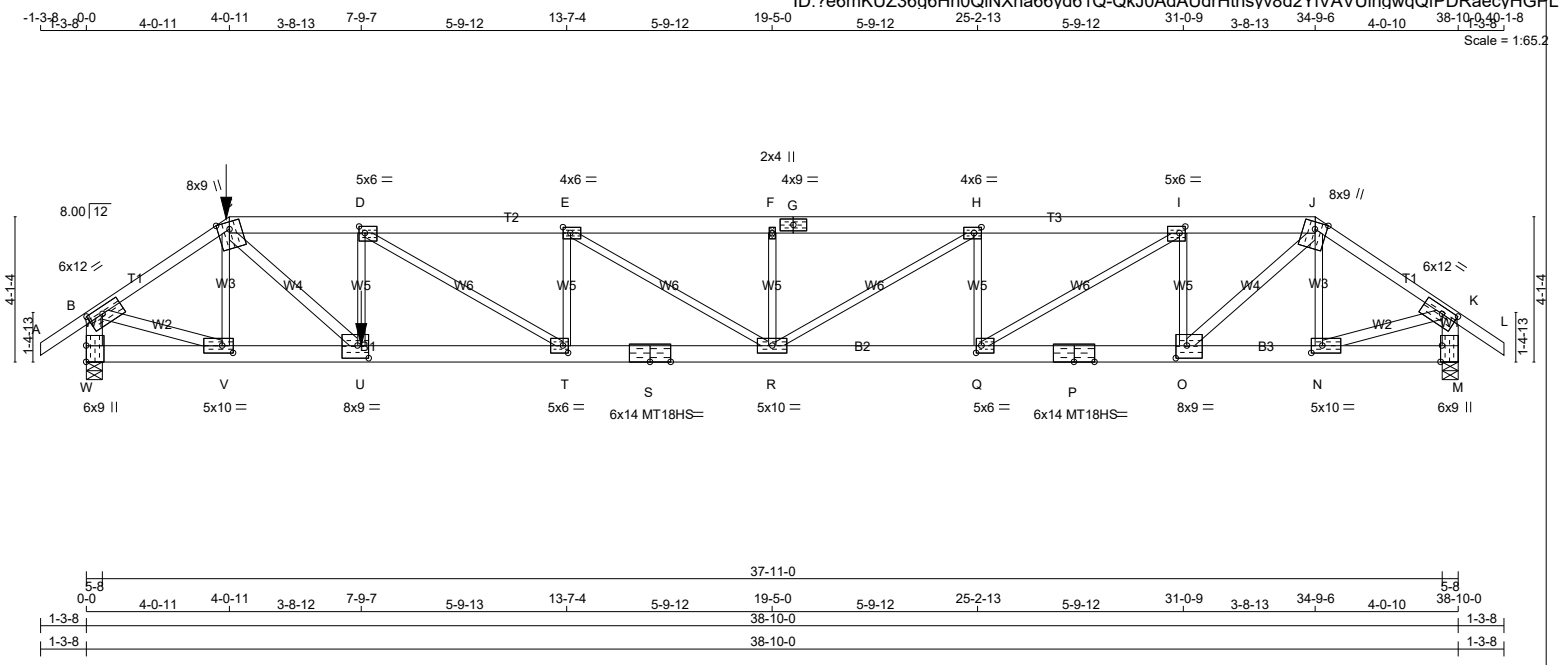

TOTAL WEIGHT = 201 lb

[M]

LUMBER

N. L. G. A. RULES

CHORDS	SIZE		LUMBER	DESCR.
A - C	2x4	DRY	No.2	SPF
C - G	2x6	DRY	No.2	SPF
G - J	2x6	DRY	No.2	SPF
J - L	2x4	DRY	No.2	SPF
W - B	2x6	DRY	No.2	SPF
M - K	2x6	DRY	No.2	SPF
W - S	2x6	DRY	1650F 1.5E	SPF
S - P	2x6	DRY	1650F 1.5E	SPF
P - M	2x6	DRY	1650F 1.5E	SPF
ALL WEBS	2x3	DRY	No.2	SPF
EXCEPT				
C - U	2x4	DRY	No.2	SPF
O - J	2x4	DRY	No.2	SPF
B - V	2x4	DRY	No.2	SPF
N - K	2x4	DRY	No.2	SPF

DRY: SEASONED LUMBER.

PLATES (table is in inches)

JT	TYPE	PLATES	W	LEN	Y	X
B	TMVW-t	MT20	6.0	12.0	2.25	5.00
C	TTWW+m	MT20	8.0	9.0	Edge	
D	TMWW-t	MT20	5.0	6.0	2.25	2.00
E	TMWW-t	MT20	4.0	6.0	2.00	2.50
F	TMW+w	MT20	2.0	4.0		
G	TS-t	MT20	4.0	9.0		
H	TMWW-t	MT20	4.0	6.0	2.00	2.50
I	TMWW-t	MT20	5.0	6.0	2.25	2.00
J	TTWW+m	MT20	8.0	9.0	Edge	
K	TMVW-t	MT20	6.0	12.0	2.25	5.00
M	BMV1+t	MT20	6.0	9.0	Edge	0.50
N	BMWW-t	MT20	5.0	10.0	2.50	3.75
O	BMWW-t	MT20	8.0	9.0	4.25	3.75
P	BS-t	MT18HS	6.0	14.0		
Q	BMWW-t	MT20	5.0	6.0	2.50	1.75
R	BMWWW-t	MT20	5.0	10.0		
S	BS-t	MT18HS	6.0	14.0		
T	BMWW-t	MT20	5.0	6.0	2.50	1.75
U	BMWW-t	MT20	8.0	9.0	4.25	3.75
V	BMWW-t	MT20	5.0	10.0	2.50	3.75
W	BMV1+t	MT20	6.0	9.0	5.50	

LATERAL BRACE(S) SHOWN SHALL BE 2X4 SPF#2

LICENSED PROFESSIONAL ENGINEER
Y. WIDYA
100225448
11/20/2020
PROVINCE OF ONTARIO

DIMENSIONS, SUPPORTS AND LOADINGS SPECIFIED BY FABRICATOR TO BE VERIFIED BY BUILDING DESIGNER

BEARINGS

JT	FACTORED GROSS REACTION VERT	HORZ	MAXIMUM FACTORED GROSS REACTION DOWN	HORZ	UPLIFT	INPUT BRG IN-SX	REQRD BRG IN-SX
W	4962	0	4962	0	0	5-8	5-8
M	2666	0	2666	0	0	5-8	3-3

UNFACTORED REACTIONS

JT	1ST LCASE COMBINED	MAX./MIN. COMPONENT REACTIONS SNOW	LIVE	PERM.LIVE	WIND	DEAD	SOIL
W	3537	2162 / 0	0 / 0	0 / 0	0 / 0	1376 / 0	0 / 0
M	1898	1172 / 0	0 / 0	0 / 0	0 / 0	726 / 0	0 / 0

BEARING MATERIAL TO BE SPF NO.2 OR BETTER AT JOINT(S) W, M

BEARING SIZE FACTOR = 1.15 AT JNT(S) W (BASED ON SUPPORT DEPTH = 1-8)

BRACING

TOP CHORD TO BE SHEATHED OR MAX. PURLIN SPACING = 2.06 FT.

MAX. UNBRACED BOTTOM CHORD LENGTH = 10.00 FT OR RIGID CEILING DIRECTLY APPLIED.

ALL PITCH BREAKS AND PERIMETER CORNER JOINTS MUST BE LATERALLY RESTRAINED.

LOADING

TOTAL LOAD CASES: (4)

CHORDS

MEMB. FR-TO	MAX. FACTORED FORCE (LBS)	FACTORED VERT. LOAD (PLF) FROM	TO	LC1 CSI (LC)	MAX UNBRAC LENGTH
A- B	0 / 30	-78.0	-78.0	0.12 (1)	10.00
B- C	-6084 / 0	-78.0	-78.0	0.92 (1)	2.06
C- D	-9009 / 0	-153.5	-153.5	0.76 (1)	2.35
D- E	-9314 / 0	-78.0	-78.0	0.86 (1)	2.27
E- F	-8650 / 0	-78.0	-78.0	0.74 (1)	2.50
F- G	-8650 / 0	-78.0	-78.0	0.74 (1)	2.50
G- H	-8650 / 0	-78.0	-78.0	0.74 (1)	2.50
H- I	-7122 / 0	-78.0	-78.0	0.54 (1)	2.95
I- J	-4719 / 0	-78.0	-78.0	0.28 (1)	3.80
J- K	-3102 / 0	-78.0	-78.0	0.43 (1)	3.56
K- L	0 / 30	-78.0	-78.0	0.12 (1)	10.00
W- B	-4898 / 0	0.0	0.0	0.35 (1)	4.82
M- K	-2627 / 0	0.0	0.0	0.19 (1)	6.38
W- V	0 / 0	-36.4	-36.4	0.04 (4)	10.00
V- U	0 / 5109	-36.4	-36.4	0.50 (1)	10.00
Q- P	0 / 4719	-18.5	-18.5	0.43 (1)	10.00
P- O	0 / 4719	-18.5	-18.5	0.43 (1)	10.00
O- N	0 / 2606	-18.5	-18.5	0.23 (1)	10.00
N- M	0 / 0	-18.5	-18.5	0.03 (4)	10.00

WEBS

MEMB. FR-TO	MAX. FACTORED FORCE (LBS)	MAX CSI (LC)
V- C	-1085 / 0	0.27 (1)
C- U	0 / 5472	0.97 (1)
U- D	-765 / 0	0.18 (1)
D- T	0 / 360	0.09 (1)
T- E	-59 / 54	0.02 (4)
E- R	-783 / 0	0.68 (1)
R- F	-443 / 0	0.11 (1)
R- H	0 / 1804	0.45 (1)
Q- H	-1412 / 0	0.34 (1)
Q- I	0 / 2836	0.70 (1)
O- I	-1960 / 0	0.47 (1)
O- J	0 / 2965	0.52 (1)
N- J	-598 / 0	0.15 (1)
B- V	0 / 5237	0.93 (1)
N- K	0 / 2670	0.47 (1)

FACTORED CONCENTRATED LOADS (LBS)

JT	LOC.	LC1	MAX-	MAX+	FACE	DIR.	TYPE	HEEL	CONN.
C	4-0-11	-231	-231	---	FRONT	VERT	TOTAL	---	C1
U	7-9-7	-3016	-3016	---	FRONT	VERT	TOTAL	---	C1

CONNECTION REQUIREMENTS

1) **C1:** A SUITABLE HANGER/MECHANICAL CONNECTION IS REQUIRED.

DESIGN CRITERIA

*** SPECIAL LOADS ANALYSIS ***
GEOMETRY AND/OR BASIC LOADS CHANGED BY USER.
LOADS WERE DERIVED FROM USER INPUT
NO FURTHER MODIFICATIONS WERE MADE

SPECIFIED LOADS:

TOP	CH.	LL	=	21.0	PSF
		DL	=	6.0	PSF
BOT	CH.	LL	=	0.0	PSF
		DL	=	7.4	PSF
TOTAL	LOAD		=	34.4	PSF

SPACING = 24.0 IN. C/C

LOADING IN FLAT SECTION BASED ON A SLOPE OF 2.00/12 MINIMUM

GIRDER TYPE: CPrimeHip
LEFT SETBACK = 4-0-11
RIGHT SETBACK = 4-0-10
END SETBACK = 5-10-8
END WALL WIDTH = 0-0
CORNER FRAMING TYPE: CONVENTIONAL
END JACK TYPE: CONVENTIONAL
APPLIED TO FRONT SIDE
- ADDT'L LOADS BASED ON 55 % OF GSL.
LOADS APPLIED TO FIRST 7-9-7 OF SPAN MEASURED FROM THE LEFT.

*** NON STANDARD GIRDER ***
ADDT'L USER-DEFINED LOADS APPLIED TO ALL LOAD CASES.

THIS TRUSS IS DESIGNED FOR RESIDENTIAL OR SMALL BUILDING REQUIREMENTS OF PART 9, NBCC 2015

THIS DESIGN COMPLIES WITH:
- PART 9 OF BCBC 2018 , ABC 2019
- PART 9 OF OBC 2012 (2019 AMENDMENT)
- CSA 086-14
- TPIC 2014

(55 % OF 23.0 P.S.F. G.S.L. PLUS 8.4 P.S.F. RAIN LOAD) EQUALS 21.0 P.S.F. SPECIFIED ROOF LIVE LOAD

ALLOWABLE DEFL.(LL)= L/360 (1.29")
CALCULATED VERT. DEFL.(LL) = L/ 999 (0.45")
ALLOWABLE DEFL.(TL)= L/360 (1.29")
CALCULATED VERT. DEFL.(TL) = L/ 527 (0.88")

CSI: TC=0.92/1.00 (B-C:1) , BC=0.83/1.00 (T-U:1) , WB=0.97/1.00 (C-U:1) , SSI=0.20/1.00 (C-D:1)

DOL LUMBER=1.00 NAIL=1.00 LS BEND=1.00 COMP=1.00 SHEAR=1.00 TENS= 1.00

COMPANION LIVE LOAD FACTOR = 1.00

AUTOSOLVE HEELS OFF

TRUSS PLATE MANUFACTURER IS NOT RESPONSIBLE FOR QUALITY CONTROL IN THE TRUSS MANUFACTURING PLANT .

CONTINUED ON PAGE 2

JOB NAME	TRUSS NAME	QUANTITY	PLY	JOB DESC.	DRWG NO.
324088	H09		1	TRUSS DESC. JT 45147	E20115223

Alpha Roof Truss, Maple

Version 8.330 S May 6 2020 MiTek Industries, Inc. Fri Nov 20 15:10:17 2020 Page 1

ID:?e6mKUZ36q6Hh0QiNXna66yd61Q-vwtONzB6O9PkP0X5iKZnIjijl6A3fP3odtA7A2yHGPK

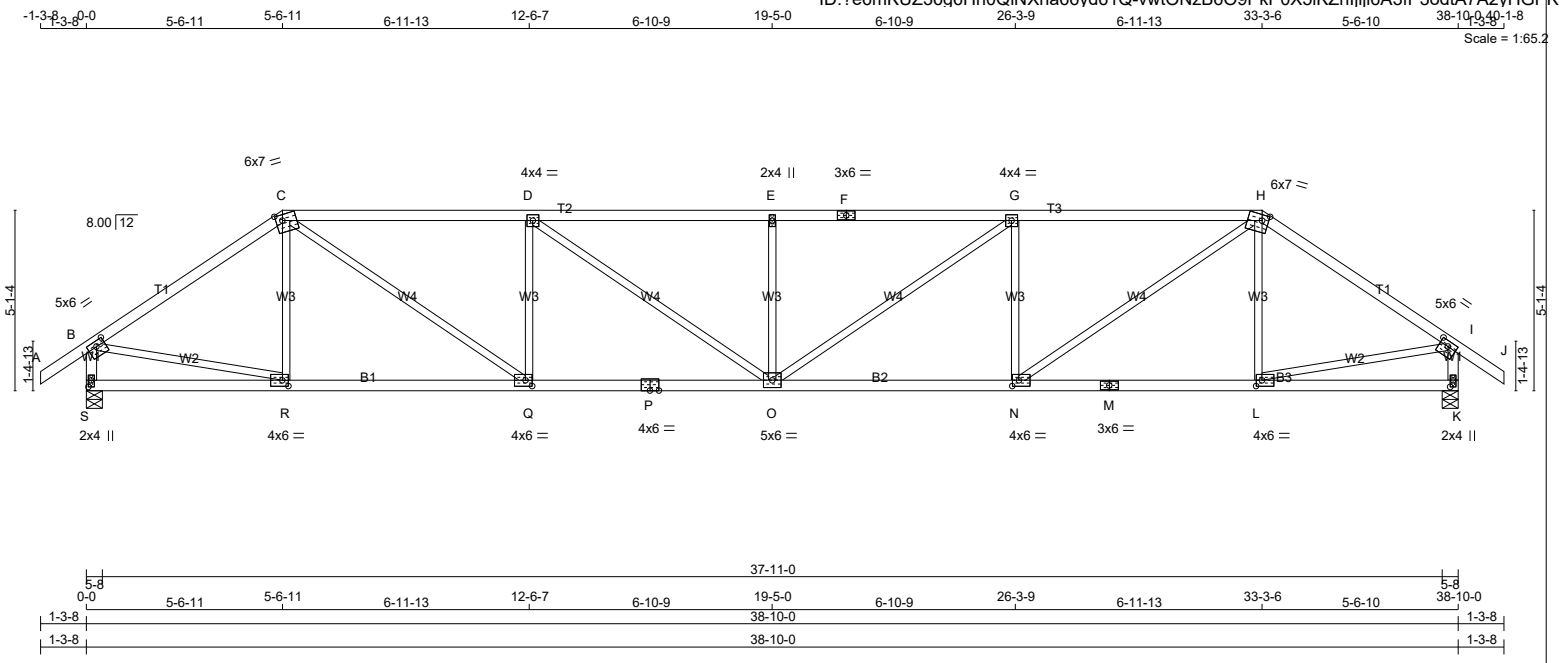

TOTAL WEIGHT = 2 X 151 = 301 lb

[M]

LUMBER

N. L. G. A. RULES

CHORDS	SIZE		LUMBER	DESCR.
A - C	2x4	DRY	No.2	SPF
C - F	2x4	DRY	1650F 1.5E	SPF
F - H	2x4	DRY	1650F 1.5E	SPF
H - J	2x4	DRY	No.2	SPF
S - B	2x4	DRY	No.2	SPF
K - I	2x4	DRY	No.2	SPF
S - P	2x4	DRY	No.2	SPF
P - M	2x4	DRY	No.2	SPF
M - K	2x4	DRY	No.2	SPF
ALL WEBS EXCEPT	2x3	DRY	No.2	SPF

DRY: SEASONED LUMBER.

PLATES (table is in inches)

JT	TYPE	PLATES	W	LEN	Y	X
B	TMVW-t	MT20	5.0	6.0	1.75	3.00
C	TTWW-m	MT20	6.0	7.0	2.00	2.25
D	TMWW-t	MT20	4.0	4.0		
E	TMW+w	MT20	2.0	4.0		
F	TS-t	MT20	3.0	6.0		
G	TMWW-t	MT20	4.0	4.0		
H	TTWW-m	MT20	6.0	7.0	2.00	2.25
I	TMVW-t	MT20	5.0	6.0	1.75	3.00
K	BMV1+p	MT20	2.0	4.0	2.25	1.00
L	BMWW-t	MT20	4.0	6.0	2.00	2.00
M	BS-t	MT20	3.0	6.0		
N	BMWW-t	MT20	4.0	6.0	2.00	2.25
O	BMWWW-t	MT20	5.0	6.0		
P	BS-t	MT20	4.0	6.0		
Q	BMWW-t	MT20	4.0	6.0	2.00	2.25
R	BMWW-t	MT20	4.0	6.0	2.00	2.00
S	BMV1+p	MT20	2.0	4.0	2.25	1.00

LATERAL BRACE(S) SHOWN SHALL BE 2X4 SPF#2

DIMENSIONS, SUPPORTS AND LOADINGS SPECIFIED BY FABRICATOR TO BE VERIFIED BY BUILDING DESIGNER

BEARINGS

JT	FACTORED GROSS REACTION VERT	HORZ	MAXIMUM FACTORED GROSS REACTION DOWN	HORZ	UPLIFT	INPUT BRG IN-SX	REQRD BRG IN-SX
S	1980	0	1980	0	0	5-8	2-15
K	1980	0	1980	0	0	5-8	2-15

UNFACTORED REACTIONS

JT	1ST LCASE COMBINED	MAX./MIN. COMPONENT REACTIONS SNOW	LIVE	PERM.LIVE	WIND	DEAD	SOIL
S	1410	873 / 0	0 / 0	0 / 0	0 / 0	537 / 0	0 / 0
K	1410	873 / 0	0 / 0	0 / 0	0 / 0	537 / 0	0 / 0

BEARING MATERIAL TO BE SPF NO.2 OR BETTER AT JOINT(S) S, K

BRACING

TOP CHORD TO BE SHEATHED OR MAX. PURLIN SPACING = 3.52 FT.
MAX. UNBRACED BOTTOM CHORD LENGTH = 10.00 FT OR RIGID CEILING DIRECTLY APPLIED.

ALL PITCH BREAKS AND PERIMETER CORNER JOINTS MUST BE LATERALLY RESTRAINED.

LOADING

TOTAL LOAD CASES: (4)

CHORDS

MEMB. FR-TO	MAX. FACTORED FORCE (LBS)	FACTORED VERT. LOAD (PLF) FROM	TO	LC1 CSI (LC)	MAX UNBRAC LENGTH
A- B	0 / 30	-78.0	-78.0	0.10 (1)	10.00
B- C	-2262 / 0	-78.0	-78.0	0.61 (1)	3.96
C- D	-3396 / 0	-78.0	-78.0	0.71 (1)	3.74
D- E	-3841 / 0	-78.0	-78.0	0.76 (1)	3.52
E- F	-3841 / 0	-78.0	-78.0	0.76 (1)	3.52
F- G	-3841 / 0	-78.0	-78.0	0.76 (1)	3.52
G- H	-3396 / 0	-78.0	-78.0	0.71 (1)	3.74
H- I	-2262 / 0	-78.0	-78.0	0.61 (1)	3.96
I- J	0 / 30	-78.0	-78.0	0.10 (1)	10.00
S- B	-1940 / 0	0.0	0.0	0.20 (1)	6.04
K- I	-1940 / 0	0.0	0.0	0.20 (1)	6.04
S- R	0 / 0	-18.5	-18.5	0.17 (4)	10.00
R- Q	0 / 1875	-18.5	-18.5	0.40 (1)	10.00
Q- P	0 / 3396	-18.5	-18.5	0.62 (1)	10.00
P- O	0 / 3396	-18.5	-18.5	0.62 (1)	10.00
O- N	0 / 3396	-18.5	-18.5	0.62 (1)	10.00

WEBS

MEMB. FR-TO	MAX. FACTORED FORCE (LBS)	MAX CSI (LC)
R- C	-228 / 3	0.09 (1)
C- Q	0 / 1846	0.42 (1)
Q- D	-920 / 0	0.35 (1)
D- O	0 / 543	0.12 (1)
O- E	-496 / 0	0.19 (1)
O- G	0 / 543	0.12 (1)
N- G	-920 / 0	0.35 (1)
N- H	0 / 1846	0.42 (1)
L- H	-228 / 3	0.09 (1)
B- R	0 / 1913	0.43 (1)
L- I	0 / 1913	0.43 (1)

DESIGN CRITERIA

SPECIFIED LOADS:

TOP CH.	LL	=	21.0	PSF
	DL	=	6.0	PSF
BOT CH.	LL	=	0.0	PSF
	DL	=	7.4	PSF
TOTAL LOAD		=	34.4	PSF

SPACING = 24.0 IN. C/C

LOADING IN FLAT SECTION BASED ON A SLOPE OF 2.00/12 MINIMUM

THIS TRUSS IS DESIGNED FOR RESIDENTIAL OR SMALL BUILDING REQUIREMENTS OF PART 9, NBCC 2015

THIS DESIGN COMPLIES WITH:
- PART 9 OF BCBC 2018 , ABC 2019
- PART 9 OF OBC 2012 (2019 AMENDMENT)
- CSA 086-14
- TPIC 2014

(55 % OF 23.0 P.S.F. G.S.L. PLUS 8.4 P.S.F. RAIN LOAD) EQUALS 21.0 P.S.F. SPECIFIED ROOF LIVE LOAD

ALLOWABLE DEFL.(LL)= L/360 (1.29")
CALCULATED VERT. DEFL.(LL) = L/ 999 (0.24")
ALLOWABLE DEFL.(TL)= L/360 (1.29")
CALCULATED VERT. DEFL.(TL) = L/ 980 (0.48")

CSI: TC=0.76/1.00 (E-G:1) , BC=0.62/1.00 (O-Q:1) , WB=0.43/1.00 (B-R:1) , SSI=0.26/1.00 (C-D:1)

DOL LUMBER=1.00 NAIL=1.00 LS BEND=1.10 COMP=1.10 SHEAR=1.10 TENS= 1.10

COMPANION LIVE LOAD FACTOR = 1.00

TRUSS PLATE MANUFACTURER IS NOT RESPONSIBLE FOR QUALITY CONTROL IN THE TRUSS MANUFACTURING PLANT .

NAIL VALUES

PLATE	GRIP(DRY) (PSI) MAX	MIN	SHEAR (PLI) MAX	MIN	SECTION (PLI) MAX	MIN
MT20	650	371	1747	788	1987	1873

PLATE PLACEMENT TOL. = 0.250 inches

PLATE ROTATION TOL. = 5.0 Deg.

JSI GRIP= 0.89 (R) (INPUT = 0.90)
JSI METAL= 0.80 (P) (INPUT = 1.00)

JOB NAME	TRUSS NAME	QUANTITY	PLY	JOB DESC.	DRWG NO.
324088	H10		1	TRUSS DESC. JT 45147	E20115224

Alpha Roof Truss, Maple

Version 8.330 S May 6 2020 MiTek Industries, Inc. Fri Nov 20 15:10:18 2020 Page 1

ID:?e6mKUZ36q6Hh0QiNXna66yd61Q-N7RmbJBk9SXb1A6IF240qwFupWXpOkKysXwhjUyHGPJ

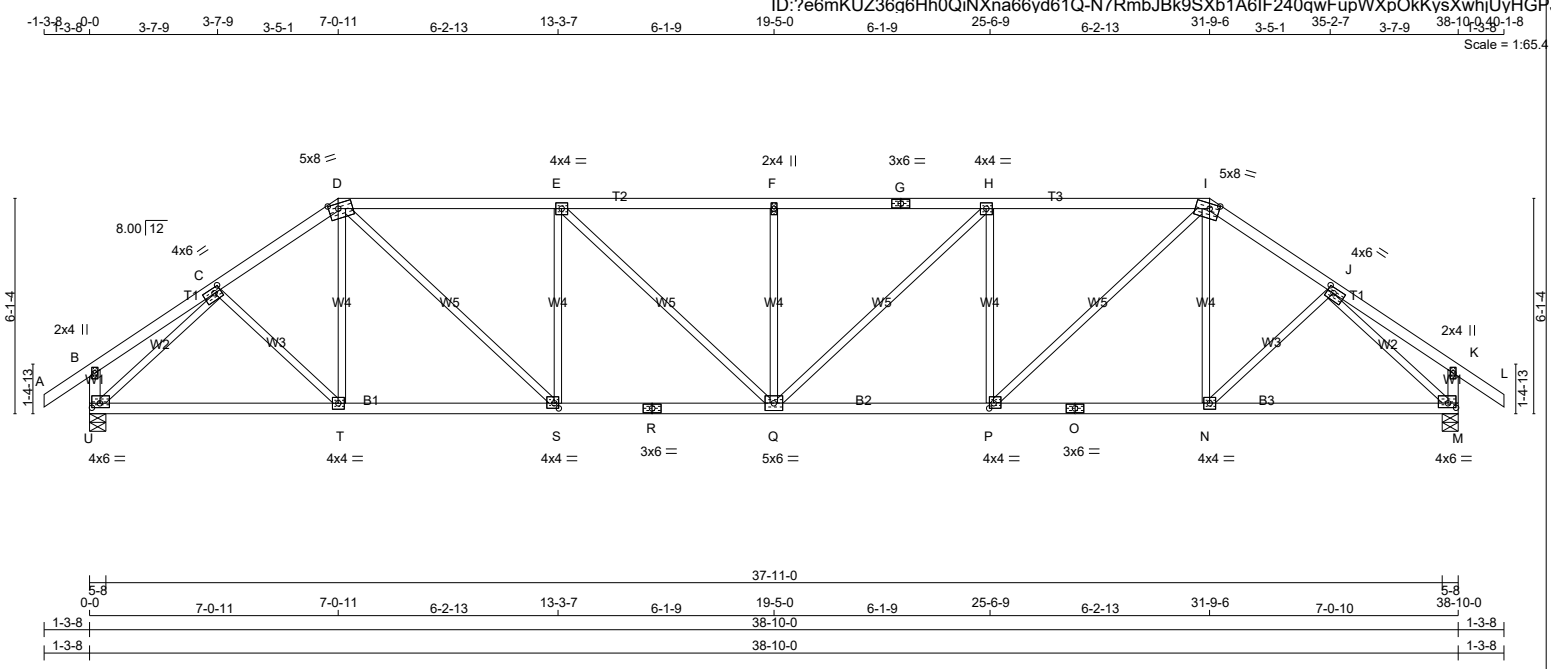

TOTAL WEIGHT = 2 X 162 = 324 lb

[M]

LUMBER

N. L. G. A. RULES

CHORDS	SIZE		LUMBER	DESCR.
A - D	2x4	DRY	No.2	SPF
D - G	2x4	DRY	No.2	SPF
G - I	2x4	DRY	No.2	SPF
I - L	2x4	DRY	No.2	SPF
U - B	2x4	DRY	No.2	SPF
M - K	2x4	DRY	No.2	SPF
U - R	2x4	DRY	No.2	SPF
R - O	2x4	DRY	No.2	SPF
O - M	2x4	DRY	No.2	SPF
ALL WEBS EXCEPT	2x3	DRY	No.2	SPF

DRY: SEASONED LUMBER.

PLATES (table is in inches)

JT	TYPE	PLATES	W	LEN	Y	X
B	TMV+p	MT20	2.0	4.0		
C	TMWW-t	MT20	4.0	6.0	1.75	2.25
D	TTWW-m	MT20	5.0	8.0	1.75	3.25
E	TMWW-t	MT20	4.0	4.0		
F	TMW+w	MT20	2.0	4.0		
G	TS-t	MT20	3.0	6.0		
H	TMWW-t	MT20	4.0	4.0		
I	TTWW-m	MT20	5.0	8.0	1.75	3.25
J	TMWW-t	MT20	4.0	6.0	1.75	2.25
K	TMV+p	MT20	2.0	4.0		
M	BMVW1-t	MT20	4.0	6.0	1.50	2.75
N	BMWW-t	MT20	4.0	4.0		
O	BS-t	MT20	3.0	6.0		
P	BMWW-t	MT20	4.0	4.0	1.75	1.50
Q	BMWWW-t	MT20	5.0	6.0		
R	BS-t	MT20	3.0	6.0		
S	BMWW-t	MT20	4.0	4.0	1.75	1.50
T	BMWW-t	MT20	4.0	4.0		
U	BMVW1-t	MT20	4.0	6.0	1.50	2.75

LATERAL BRACE(S) SHOWN SHALL BE 2X4 SPF#2

DIMENSIONS, SUPPORTS AND LOADINGS SPECIFIED BY FABRICATOR TO BE VERIFIED BY BUILDING DESIGNER

BEARINGS

JT	FACTORED GROSS REACTION VERT	HORZ	MAXIMUM FACTORED GROSS REACTION DOWN	HORZ	UPLIFT	INPUT BRG IN-SX	REQRD BRG IN-SX
U	1980	0	1980	0	0	5-8	2-2
M	1980	0	1980	0	0	5-8	2-2

UNFACTORED REACTIONS

JT	1ST LCASE COMBINED	MAX./MIN. COMPONENT REACTIONS SNOW	LIVE	PERM.LIVE	WIND	DEAD	SOIL
U	1410	873 / 0	0 / 0	0 / 0	0 / 0	537 / 0	0 / 0
M	1410	873 / 0	0 / 0	0 / 0	0 / 0	537 / 0	0 / 0

BEARING MATERIAL TO BE SPF NO.2 OR BETTER AT JOINT(S) U, M

BRACING

TOP CHORD TO BE SHEATHED OR MAX. PURLIN SPACING = 3.30 FT.
MAX. UNBRACED BOTTOM CHORD LENGTH = 10.00 FT OR RIGID CEILING DIRECTLY APPLIED.

ALL PITCH BREAKS AND PERIMETER CORNER JOINTS MUST BE LATERALLY RESTRAINED.

LOADING

TOTAL LOAD CASES: (4)

CHORDS MEMB. FR-TO	MAX. FACTORED FORCE (LBS)	FACTORED VERT. LOAD (PLF) FROM	TO	LC1 CSI (LC)	MAX UNBRAC LENGTH	WEBS MEMB. FR-TO	MAX. FACTORED FORCE (LBS)	MAX CSI (LC)
A- B	0 / 30	-78.0	-78.0	0.10 (1)	10.00	C- T	0 / 174	0.04 (1)
B- C	0 / 15	-78.0	-78.0	0.13 (1)	10.00	T- D	0 / 83	0.03 (4)
C- D	-2279 / 0	-78.0	-78.0	0.20 (1)	4.36	D- S	0 / 1360	0.31 (1)
D- E	-2877 / 0	-78.0	-78.0	0.70 (1)	3.48	S- E	-821 / 0	0.48 (1)
E- F	-3170 / 0	-78.0	-78.0	0.74 (1)	3.30	E- Q	0 / 404	0.09 (1)
F- G	-3170 / 0	-78.0	-78.0	0.74 (1)	3.30	Q- F	-441 / 0	0.26 (1)
G- H	-3170 / 0	-78.0	-78.0	0.74 (1)	3.30	Q- H	0 / 404	0.09 (1)
H- I	-2877 / 0	-78.0	-78.0	0.70 (1)	3.48	P- H	-821 / 0	0.48 (1)
I- J	-2279 / 0	-78.0	-78.0	0.20 (1)	4.36	P- I	0 / 1360	0.31 (1)
J- K	0 / 15	-78.0	-78.0	0.13 (1)	10.00	N- I	0 / 83	0.03 (4)
K- L	0 / 30	-78.0	-78.0	0.10 (1)	10.00	N- J	0 / 174	0.04 (1)
U- B	-218 / 0	0.0	0.0	0.02 (1)	7.81	U- C	-2448 / 0	0.94 (1)
M- K	-218 / 0	0.0	0.0	0.02 (1)	7.81	J- M	-2448 / 0	0.94 (1)
U- T	0 / 1754	-18.5	-18.5	0.40 (1)	10.00			
T- S	0 / 1881	-18.5	-18.5	0.42 (1)	10.00			
S- R	0 / 2877	-18.5	-18.5	0.53 (1)	10.00			
N- M	0 / 1754	-18.5	-18.5	0.40 (1)	10.00			

DESIGN CRITERIA

SPECIFIED LOADS:

TOP CH.	LL	=	21.0	PSF
	DL	=	6.0	PSF
BOT CH.	LL	=	0.0	PSF
	DL	=	7.4	PSF
TOTAL LOAD		=	34.4	PSF

SPACING = 24.0 IN. C/C

LOADING IN FLAT SECTION BASED ON A SLOPE OF 2.00/12 MINIMUM

THIS TRUSS IS DESIGNED FOR RESIDENTIAL OR SMALL BUILDING REQUIREMENTS OF PART 9, NBCC 2015

THIS DESIGN COMPLIES WITH:
- PART 9 OF BCBC 2018 , ABC 2019
- PART 9 OF OBC 2012 (2019 AMENDMENT)
- CSA 086-14
- TPIC 2014

(55 % OF 23.0 P.S.F. G.S.L. PLUS 8.4 P.S.F. RAIN LOAD) EQUALS 21.0 P.S.F. SPECIFIED ROOF LIVE LOAD

ALLOWABLE DEFL.(LL)= L/360 (1.29")
CALCULATED VERT. DEFL.(LL) = L/ 999 (0.18")
ALLOWABLE DEFL.(TL)= L/360 (1.29")
CALCULATED VERT. DEFL.(TL) = L/ 999 (0.36")

CSI: TC=0.74/1.00 (E-F:1) , BC=0.53/1.00 (Q-S:1) , WB=0.94/1.00 (C-U:1) , SSI=0.23/1.00 (D-E:1)

DOL LUMBER=1.00 NAIL=1.00 LS BEND=1.10 COMP=1.10 SHEAR=1.10 TENS= 1.10

COMPANION LIVE LOAD FACTOR = 1.00

TRUSS PLATE MANUFACTURER IS NOT RESPONSIBLE FOR QUALITY CONTROL IN THE TRUSS MANUFACTURING PLANT .

NAIL VALUES

PLATE	GRIP(DRY) (PSI) MAX	MIN	SHEAR (PLI) MAX	MIN	SECTION (PLI) MAX	MIN
MT20	650	371	1747	788	1987	1873

PLATE PLACEMENT TOL. = 0.250 inches

PLATE ROTATION TOL. = 5.0 Deg.

JSI GRIP= 0.90 (U) (INPUT = 0.90)
JSI METAL= 0.92 (R) (INPUT = 1.00)

JOB NAME	TRUSS NAME	QUANTITY	PLY	JOB DESC.	DRWG NO.
324088	H11		1	TRUSS DESC. JT 45147	E20115225

Alpa Roof Truss, Maple

Version 8.330 S May 6 2020 MiTek Industries, Inc. Fri Nov 20 15:10:19 2020 Page 1

ID:?e6mKUZ36g6Hh0QiNXna66yd61Q-rJ?8ofCMwmfSfKqUplbFN8o0owuK7Gu55BfEFxyHGPI

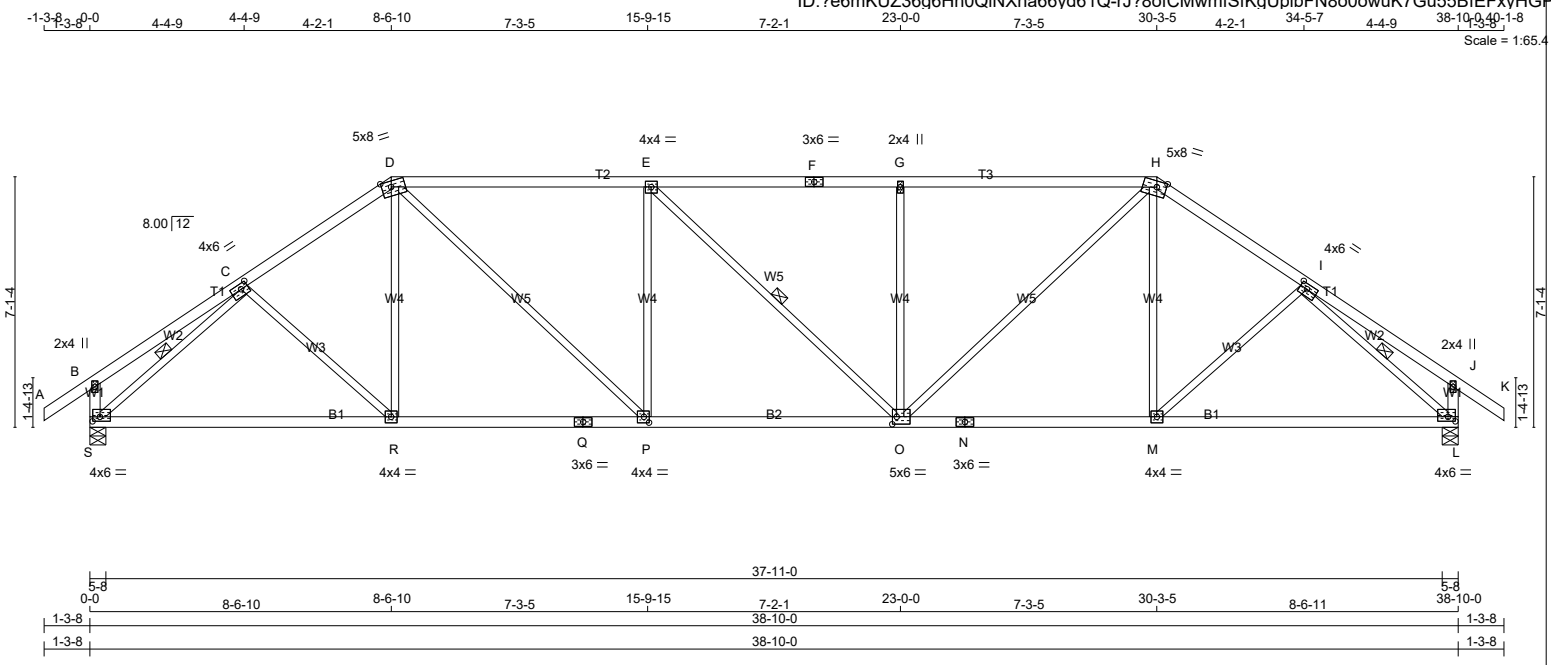

TOTAL WEIGHT = 2 X 161 = 322 lb

LUMBER

N. L. G. A. RULES

CHORDS	SIZE		LUMBER	DESCR.
A - D	2x4	DRY	No.2	SPF
D - F	2x4	DRY	No.2	SPF
F - H	2x4	DRY	No.2	SPF
H - K	2x4	DRY	No.2	SPF
S - B	2x4	DRY	No.2	SPF
L - J	2x4	DRY	No.2	SPF
S - Q	2x4	DRY	No.2	SPF
Q - N	2x4	DRY	No.2	SPF
N - L	2x4	DRY	No.2	SPF
ALL WEBS EXCEPT	2x3	DRY	No.2	SPF

DRY: SEASONED LUMBER.

PLATES (table is in inches)

JT	TYPE	PLATES	W	LEN	Y	X
B	TMV+p	MT20	2.0	4.0		
C	TMWW-t	MT20	4.0	6.0	1.75	2.50
D	TTWW-m	MT20	5.0	8.0	2.00	3.25
E	TMWW-t	MT20	4.0	4.0		
F	TS-t	MT20	3.0	6.0		
G	TMW+w	MT20	2.0	4.0		
H	TTWW-m	MT20	5.0	8.0	2.00	3.25
I	TMWW-t	MT20	4.0	6.0	1.75	2.50
J	TMV+p	MT20	2.0	4.0		
L	BMVW1-t	MT20	4.0	6.0	1.50	2.50
M	BMWW-t	MT20	4.0	4.0		
N	BS-t	MT20	3.0	6.0		
O	BMWWW-t	MT20	5.0	6.0	2.50	1.50
P	BMWW-t	MT20	4.0	4.0	2.00	1.75
Q	BS-t	MT20	3.0	6.0		
R	BMWW-t	MT20	4.0	4.0		
S	BMVW1-t	MT20	4.0	6.0	1.50	2.50

LATERAL BRACE(S) SHOWN SHALL BE 2X4 SPF#2

DIMENSIONS, SUPPORTS AND LOADINGS SPECIFIED BY FABRICATOR TO BE VERIFIED BY BUILDING DESIGNER

BEARINGS

JT	FACTORED GROSS REACTION VERT	HORZ	MAXIMUM FACTORED GROSS REACTION DOWN	HORZ	UPLIFT	INPUT BRG IN-SX	REQRD BRG IN-SX
S	1980	0	1980	0	0	5-8	2-2
L	1980	0	1980	0	0	5-8	2-2

UNFACTORED REACTIONS

JT	1ST LCASE COMBINED	MAX./MIN. COMPONENT REACTIONS SNOW	LIVE	PERM.LIVE	WIND	DEAD	SOIL
S	1410	873 / 0	0 / 0	0 / 0	0 / 0	537 / 0	0 / 0
L	1410	873 / 0	0 / 0	0 / 0	0 / 0	537 / 0	0 / 0

BEARING MATERIAL TO BE SPF NO.2 OR BETTER AT JOINT(S) S, L

BRACING

TOP CHORD TO BE SHEATHED OR MAX. PURLIN SPACING = 3.38 FT.
MAX. UNBRACED BOTTOM CHORD LENGTH = 10.00 FT OR RIGID CEILING DIRECTLY APPLIED.

ALL PITCH BREAKS AND PERIMETER CORNER JOINTS MUST BE LATERALLY RESTRAINED.

1 LATERAL BRACE(S) AT 1/ 2 LENGTH OF E-O, C-S, I-L.

END VERTICAL(S) MUST BE SHEATHED OR HAVE BRACES AS INDICATED IN THE MAX. UNBRACED LENGTH COLUMN OF THE TABLE BELOW

LOADING

TOTAL LOAD CASES: (4)

CHORDS

MEMB. FR-TO	MAX. FACTORED FORCE (LBS)	FACTORED VERT. LOAD (PLF) FROM	TO	LC1 MAX CSI (LC)	MAX. UNBRAC LENGTH
A- B	0 / 30	-78.0	-78.0	0.10 (1)	10.00
B- C	0 / 20	-78.0	-78.0	0.21 (1)	10.00
C- D	-2253 / 0	-78.0	-78.0	0.31 (1)	4.28
D- E	-2646 / 0	-78.0	-78.0	0.92 (1)	3.38
E- F	-2645 / 0	-78.0	-78.0	0.90 (1)	3.38
F- G	-2645 / 0	-78.0	-78.0	0.90 (1)	3.38
G- H	-2645 / 0	-78.0	-78.0	0.91 (1)	3.39
H- I	-2253 / 0	-78.0	-78.0	0.31 (1)	4.28
I- J	0 / 20	-78.0	-78.0	0.21 (1)	10.00
J- K	0 / 30	-78.0	-78.0	0.10 (1)	10.00
S- B	-238 / 0	0.0	0.0	0.02 (1)	7.81
L- J	-238 / 0	0.0	0.0	0.02 (1)	7.81
P- O	0 / 2646	-18.5	-18.5	0.51 (1)	10.00
O- N	0 / 1858	-18.5	-18.5	0.49 (4)	10.00
N- M	0 / 1858	-18.5	-18.5	0.49 (4)	10.00
M- L	0 / 1823	-18.5	-18.5	0.47 (4)	10.00

WEBS

MEMB. FR-TO	MAX. FACTORED FORCE (LBS)	MAX CSI (LC)
C- R	0 / 73	0.03 (4)
R- D	0 / 142	0.05 (4)
D- P	0 / 1079	0.24 (1)
P- E	-612 / 0	0.54 (1)
E- O	-1 / 0	0.00 (1)
O- G	-612 / 0	0.53 (1)
O- H	0 / 1077	0.24 (1)
M- H	0 / 143	0.05 (4)
M- I	0 / 73	0.03 (4)
S- C	-2477 / 0	0.60 (1)
I- L	-2477 / 0	0.60 (1)

DESIGN CRITERIA

SPECIFIED LOADS:

TOP CH.	LL	=	21.0	PSF
	DL	=	6.0	PSF
BOT CH.	LL	=	0.0	PSF
	DL	=	7.4	PSF
TOTAL LOAD		=	34.4	PSF

SPACING = 24.0 IN. C/C

LOADING IN FLAT SECTION BASED ON A SLOPE OF 2.00/12 MINIMUM

THIS TRUSS IS DESIGNED FOR RESIDENTIAL OR SMALL BUILDING REQUIREMENTS OF PART 9, NBCC 2015

THIS DESIGN COMPLIES WITH:
- PART 9 OF BCBC 2018 , ABC 2019
- PART 9 OF OBC 2012 (2019 AMENDMENT)
- CSA 086-14
- TPIC 2014

(55 % OF 23.0 P.S.F. G.S.L. PLUS 8.4 P.S.F. RAIN LOAD) EQUALS 21.0 P.S.F. SPECIFIED ROOF LIVE LOAD

ALLOWABLE DEFL.(LL)= L/360 (1.29")
CALCULATED VERT. DEFL.(LL) = L/ 999 (0.15")
ALLOWABLE DEFL.(TL)= L/360 (1.29")
CALCULATED VERT. DEFL.(TL) = L/ 999 (0.32")

CSI: TC=0.92/1.00 (D-E:1) , BC=0.51/1.00 (O-P:1) , WB=0.60/1.00 (I-L:1) , SSI=0.26/1.00 (D-E:1)

DOL LUMBER=1.00 NAIL=1.00 LS BEND=1.10 COMP=1.10 SHEAR=1.10 TENS= 1.10

COMPANION LIVE LOAD FACTOR = 1.00

TRUSS PLATE MANUFACTURER IS NOT RESPONSIBLE FOR QUALITY CONTROL IN THE TRUSS MANUFACTURING PLANT .

NAIL VALUES

PLATE	GRIP(DRY) (PSI) MAX	MIN	SHEAR (PLI) MAX	MIN	SECTION (PLI) MAX	MIN
MT20	650	371	1747	788	1987	1873

PLATE PLACEMENT TOL. = 0.250 inches

PLATE ROTATION TOL. = 5.0 Deg.

JSI GRIP= 0.90 (I) (INPUT = 0.90)
JSI METAL= 0.58 (I) (INPUT = 1.00)

JOB NAME	TRUSS NAME	QUANTITY	PLY	JOB DESC.	DRWG NO.
324088	H12		1	TRUSS DESC. JT 45147	E20115226

Alpa Roof Truss, Maple

Version 8.330 S May 6 2020 MiTek Industries, Inc. Fri Nov 20 15:10:20 2020 Page 1

ID:?e6mKUZ36q6Hh0QiNXna66yd61Q-JVZX??D h4nJGTFqNT6UvLKlqJFXsi7EKrPnnNyHGPH

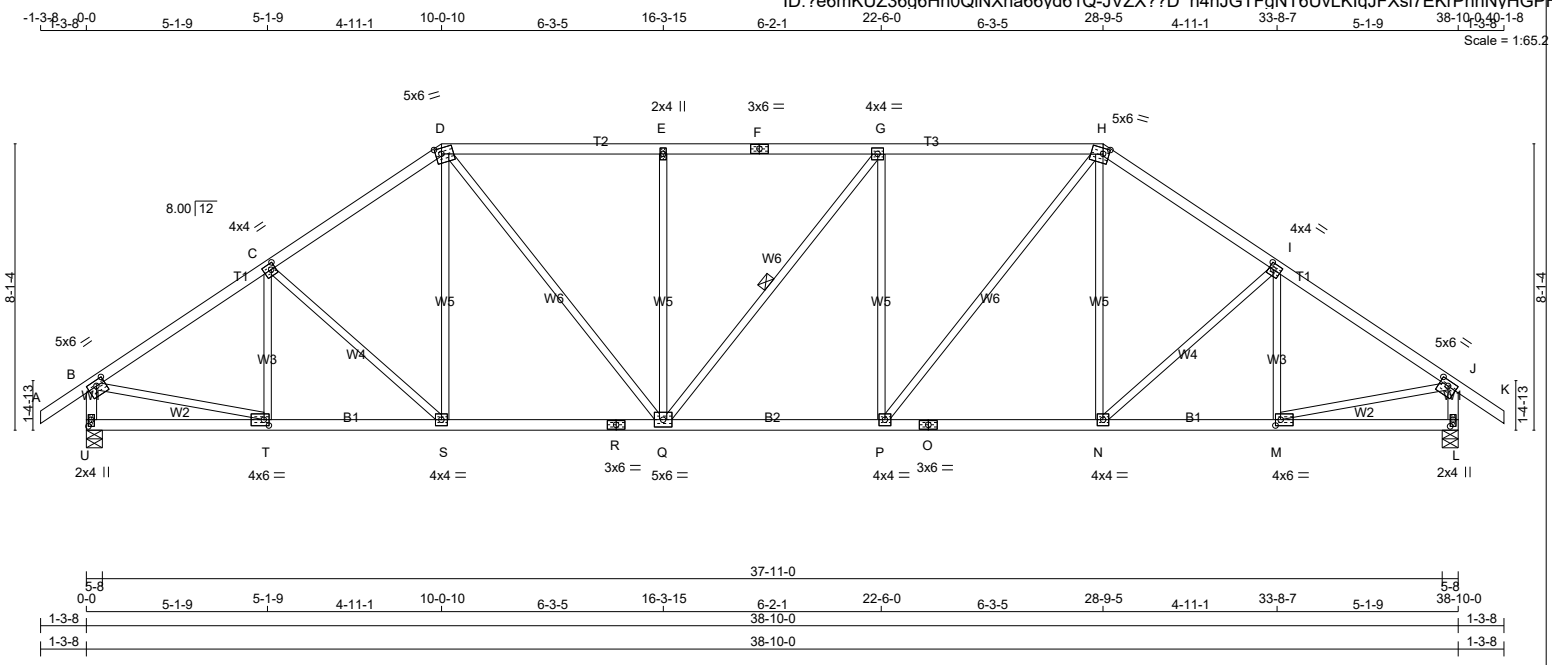

TOTAL WEIGHT = 173 lb

LUMBER

N. L. G. A. RULES

CHORDS	SIZE		LUMBER	DESCR.
A - D	2x4	DRY	No.2	SPF
D - F	2x4	DRY	No.2	SPF
F - H	2x4	DRY	No.2	SPF
H - K	2x4	DRY	No.2	SPF
U - B	2x4	DRY	No.2	SPF
L - J	2x4	DRY	No.2	SPF
U - R	2x4	DRY	No.2	SPF
R - O	2x4	DRY	No.2	SPF
O - L	2x4	DRY	No.2	SPF
ALL WEBS EXCEPT	2x3	DRY	No.2	SPF

DRY: SEASONED LUMBER.

PLATES (table is in inches)

JT	TYPE	PLATES	W	LEN	Y	X
B	TMVW-t	MT20	5.0	6.0	1.75	3.00
C	TMWW-t	MT20	4.0	4.0	2.00	1.50
D	TTWW-m	MT20	5.0	6.0	2.00	2.00
E	TMW+w	MT20	2.0	4.0		
F	TS-t	MT20	3.0	6.0		
G	TMWW-t	MT20	4.0	4.0		
H	TTWW-m	MT20	5.0	6.0	2.00	2.00
I	TMWW-t	MT20	4.0	4.0	2.00	1.50
J	TMVW-t	MT20	5.0	6.0	1.75	3.00
L	BMV1+p	MT20	2.0	4.0	2.25	1.00
M	BMWW-t	MT20	4.0	6.0	2.00	1.75
N, P, S						
N	BMWW-t	MT20	4.0	4.0		
O	BS-t	MT20	3.0	6.0		
Q	BMWWW-t	MT20	5.0	6.0		
R	BS-t	MT20	3.0	6.0		
T	BMWW-t	MT20	4.0	6.0	2.00	1.75
U	BMV1+p	MT20	2.0	4.0	2.25	1.00

LATERAL BRACE(S) SHOWN SHALL BE 2X4 SPF#2

DIMENSIONS, SUPPORTS AND LOADINGS SPECIFIED BY FABRICATOR TO BE VERIFIED BY BUILDING DESIGNER

BEARINGS

JT	FACTORED GROSS REACTION VERT	HORZ	MAXIMUM FACTORED GROSS REACTION DOWN	HORZ	UPLIFT	INPUT BRG IN-SX	REQRD BRG IN-SX
U	1980	0	1980	0	0	5-8	2-15
L	1980	0	1980	0	0	5-8	2-15

UNFACTORED REACTIONS

JT	1ST LCASE COMBINED	MAX./MIN. COMPONENT REACTIONS SNOW	LIVE	PERM.LIVE	WIND	DEAD	SOIL
U	1410	873 / 0	0 / 0	0 / 0	0 / 0	537 / 0	0 / 0
L	1410	873 / 0	0 / 0	0 / 0	0 / 0	537 / 0	0 / 0

BEARING MATERIAL TO BE SPF NO.2 OR BETTER AT JOINT(S) U, L

BRACING

TOP CHORD TO BE SHEATHED OR MAX. PURLIN SPACING = 4.08 FT.
MAX. UNBRACED BOTTOM CHORD LENGTH = 10.00 FT OR RIGID CEILING DIRECTLY APPLIED.

ALL PITCH BREAKS AND PERIMETER CORNER JOINTS MUST BE LATERALLY RESTRAINED.

1 LATERAL BRACE(S) AT 1/ 2 LENGTH OF G-Q.

END VERTICAL(S) MUST BE SHEATHED OR HAVE BRACES AS INDICATED IN THE MAX. UNBRACED LENGTH COLUMN OF THE TABLE BELOW

LOADING

TOTAL LOAD CASES: (4)

CHORDS

MEMB. FR-TO	MAX. FACTORED FORCE (LBS)	FACTORED VERT. LOAD (PLF) FROM	TO	LC1 CSI (LC)	MAX UNBRAC LENGTH
A- B	0 / 30	-78.0	-78.0	0.10 (1)	10.00
B- C	-2271 / 0	-78.0	-78.0	0.34 (1)	4.26
C- D	-2186 / 0	-78.0	-78.0	0.32 (1)	4.33
D- E	-2312 / 0	-78.0	-78.0	0.45 (1)	4.08
E- F	-2313 / 0	-78.0	-78.0	0.41 (1)	4.14
F- G	-2313 / 0	-78.0	-78.0	0.41 (1)	4.14
G- H	-2314 / 0	-78.0	-78.0	0.45 (1)	4.08
H- I	-2185 / 0	-78.0	-78.0	0.32 (1)	4.33
I- J	-2271 / 0	-78.0	-78.0	0.34 (1)	4.26
J- K	0 / 30	-78.0	-78.0	0.10 (1)	10.00
U- B	-1938 / 0	0.0	0.0	0.20 (1)	6.04
L- J	-1938 / 0	0.0	0.0	0.20 (1)	6.04
R- Q	0 / 1797	-18.5	-18.5	0.36 (1)	10.00
Q- P	0 / 2314	-18.5	-18.5	0.45 (1)	10.00
P- O	0 / 1797	-18.5	-18.5	0.36 (1)	10.00
O- N	0 / 1797	-18.5	-18.5	0.36 (1)	10.00
N- M	0 / 1910	-18.5	-18.5	0.38 (1)	10.00
M- L	0 / 0	-18.5	-18.5	0.10 (4)	10.00

WEBS

MEMB. FR-TO	MAX. FACTORED FORCE (LBS)	MAX CSI (LC)
T- C	-307 / 0	0.11 (1)
C- S	-156 / 0	0.13 (1)
S- D	0 / 212	0.05 (4)
D- Q	0 / 822	0.18 (1)
Q- E	-526 / 0	0.67 (1)
Q- G	-2 / 0	0.00 (1)
P- G	-526 / 0	0.67 (1)
P- H	0 / 824	0.19 (1)
N- H	0 / 211	0.05 (4)
N- I	-156 / 0	0.13 (1)
M- I	-307 / 0	0.11 (1)
B- T	0 / 1952	0.44 (1)
		44 (1)

DESIGN CRITERIA

SPECIFIED LOADS:

TOP	CH.	LL =	21.0	PSF
		DL =	6.0	PSF
BOT	CH.	LL =	0.0	PSF
		DL =	7.4	PSF
TOTAL	LOAD	=	34.4	PSF

SPACING = 24.0 IN. C/C

LOADING IN FLAT SECTION BASED ON A SLOPE OF 2.00/12 MINIMUM

THIS TRUSS IS DESIGNED FOR RESIDENTIAL OR SMALL BUILDING REQUIREMENTS OF PART 9, NBCC 2015

THIS DESIGN COMPLIES WITH:
- PART 9 OF BCBC 2018 , ABC 2019
- PART 9 OF OBC 2012 (2019 AMENDMENT)
- CSA 086-14
- TPIC 2014

(55 % OF 23.0 P.S.F. G.S.L. PLUS 8.4 P.S.F. RAIN LOAD) EQUALS 21.0 P.S.F. SPECIFIED ROOF LIVE LOAD

ALLOWABLE DEFL.(LL)= L/360 (1.29")
CALCULATED VERT. DEFL.(LL) = L/ 999 (0.12")
ALLOWABLE DEFL.(TL)= L/360 (1.29")
CALCULATED VERT. DEFL.(TL) = L/ 999 (0.24")

CSI: TC=0.45/1.00 (G-H:1) , BC=0.45/1.00 (P-Q:1) , WB=0.67/1.00 (G-P:1) , SSI=0.23/1.00 (G-H:1)

DOL LUMBER=1.00 NAIL=1.00 LS BEND=1.10 COMP=1.10 SHEAR=1.10 TENS= 1.10

COMPANION LIVE LOAD FACTOR = 1.00

TRUSS PLATE MANUFACTURER IS NOT RESPONSIBLE FOR QUALITY CONTROL IN THE TRUSS MANUFACTURING PLANT .

NAIL VALUES

PLATE	GRIP(DRY) (PSI) MAX	MIN	SHEAR (PLI) MAX	MIN	SECTION (PLI) MAX	MIN
MT20	650	371	1747	788	1987	1873

PLATE PLACEMENT TOL. = 0.250 inches

PLATE ROTATION TOL. = 5.0 Deg.

JSI GRIP= 0.89 (M) (INPUT = 0.90)
JSI METAL= 0.58 (J) (INPUT = 1.00)

JOB NAME	TRUSS NAME	QUANTITY	PLY	JOB DESC.	DRWG NO.
324088	H13		1	TRUSS DESC. JT 45147	E20115227

Alpa Roof Truss, Maple

Version 8.330 S May 6 2020 MiTek Industries, Inc. Fri Nov 20 15:10:21 2020 Page 1

ID:?e6mKUZ36g6Hh0QiNXna66yd61Q-ni7vDLEdSNvAudqsxAejSZtPejaKbDrOYV8LJpyHGPG

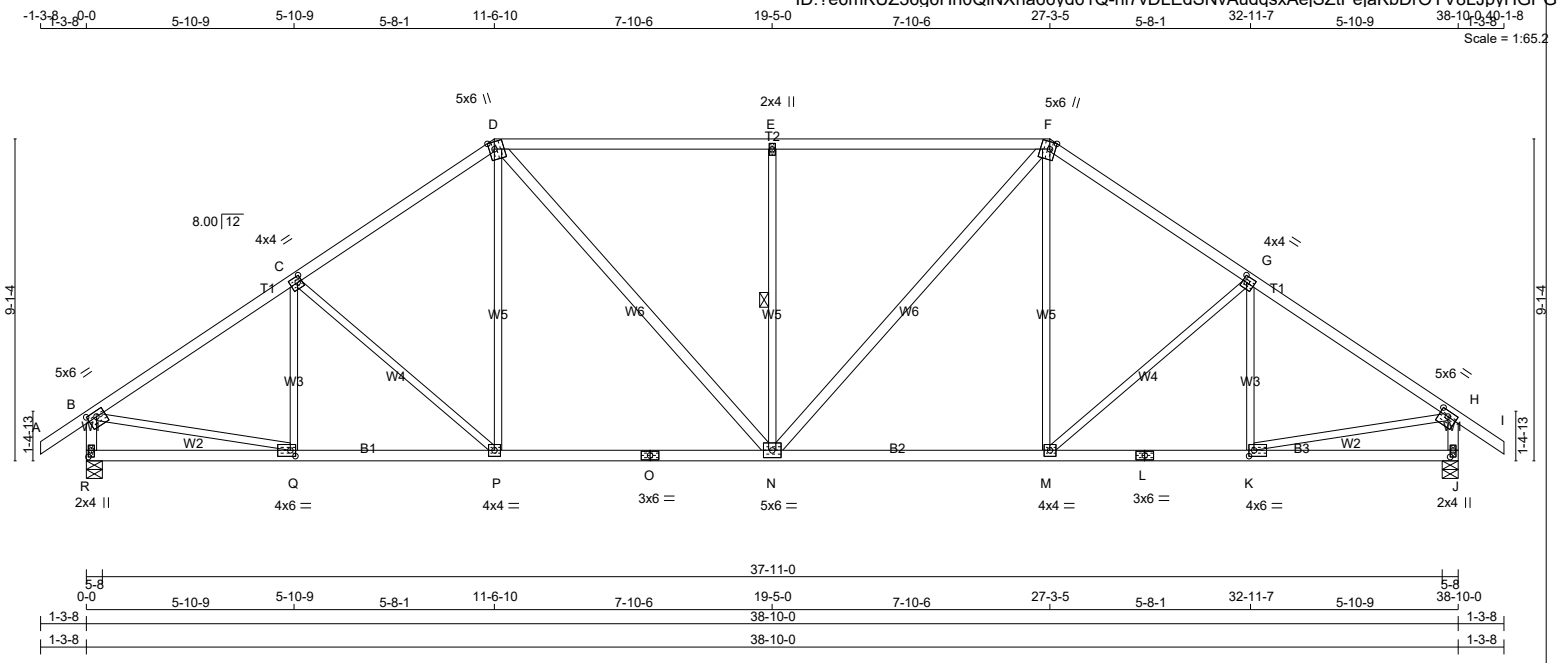

TOTAL WEIGHT = 176 lb

LUMBER

N. L. G. A. RULES

CHORDS	SIZE		LUMBER	DESCR.
A - D	2x4	DRY	No.2	SPF
D - F	2x4	DRY	No.2	SPF
F - I	2x4	DRY	No.2	SPF
R - B	2x4	DRY	No.2	SPF
J - H	2x4	DRY	No.2	SPF
R - O	2x4	DRY	No.2	SPF
O - L	2x4	DRY	No.2	SPF
L - J	2x4	DRY	No.2	SPF
ALL WEBS	2x3	DRY	No.2	SPF
EXCEPT				
D - N	2x4	DRY	No.2	SPF
N - F	2x4	DRY	No.2	SPF

DRY: SEASONED LUMBER.

PLATES (table is in inches)

JT	TYPE	PLATES	W	LEN	Y	X
B	TMVW-t	MT20	5.0	6.0	1.75	3.00
C	TMWW-t	MT20	4.0	4.0	2.00	1.50
D	TTWW+m	MT20	5.0	6.0	Edge	1.75
E	TMW+w	MT20	2.0	4.0		
F	TTWW+m	MT20	5.0	6.0	Edge	1.75
G	TMWW-t	MT20	4.0	4.0	2.00	1.50
H	TMVW-t	MT20	5.0	6.0	1.75	3.00
J	BMV1+p	MT20	2.0	4.0	2.25	1.00
K	BMWW-t	MT20	4.0	6.0	2.00	1.75
L	BS-t	MT20	3.0	6.0		
M	BMWW-t	MT20	4.0	4.0		
N	BMWWW-t	MT20	5.0	6.0		
O	BS-t	MT20	3.0	6.0		
P	BMWW-t	MT20	4.0	4.0		
Q	BMWW-t	MT20	4.0	6.0	2.00	1.75
R	BMV1+p	MT20	2.0	4.0	2.25	1.00

Edge - INDICATES REFERENCE CORNER OF PLATE TOUCHES EDGE OF CHORD.

LATERAL BRACE(S) SHOWN SHALL BE 2X4 SPF#2

DIMENSIONS, SUPPORTS AND LOADINGS SPECIFIED BY FABRICATOR TO BE VERIFIED BY BUILDING DESIGNER

BEARINGS

JT	FACTORED GROSS REACTION VERT	HORZ	MAXIMUM FACTORED GROSS REACTION DOWN	HORZ	UPLIFT	INPUT BRG IN-SX	REQRD BRG IN-SX
R	1980	0	1980	0	0	5-8	2-15
J	1980	0	1980	0	0	5-8	2-15

UNFACTORED REACTIONS

JT	1ST LCASE COMBINED	MAX./MIN. COMPONENT REACTIONS SNOW	LIVE	PERM.LIVE	WIND	DEAD	SOIL
R	1410	873 / 0	0 / 0	0 / 0	0 / 0	537 / 0	0 / 0
J	1410	873 / 0	0 / 0	0 / 0	0 / 0	537 / 0	0 / 0

BEARING MATERIAL TO BE SPF NO.2 OR BETTER AT JOINT(S) R, J

BRACING

TOP CHORD TO BE SHEATHED OR MAX. PURLIN SPACING = 3.70 FT.
MAX. UNBRACED BOTTOM CHORD LENGTH = 10.00 FT OR RIGID CEILING DIRECTLY APPLIED.

ALL PITCH BREAKS AND PERIMETER CORNER JOINTS MUST BE LATERALLY RESTRAINED.

1 LATERAL BRACE(S) AT 1/ 2 LENGTH OF E-N.

END VERTICAL(S) MUST BE SHEATHED OR HAVE BRACES AS INDICATED IN THE MAX. UNBRACED LENGTH COLUMN OF THE TABLE BELOW

LOADING

TOTAL LOAD CASES: (4)

CHORDS

MEMB. FR-TO	MAX. FACTORED FORCE (LBS)	FACTORED VERT. LOAD (PLF) FROM	TO	LC1 MAX CSI (LC)	MAX. UNBRAC LENGTH
A- B	0 / 30	-78.0	-78.0	0.10 (1)	10.00
B- C	-2302 / 0	-78.0	-78.0	0.45 (1)	4.11
C- D	-2116 / 0	-78.0	-78.0	0.42 (1)	4.28
D- E	-2141 / 0	-78.0	-78.0	0.77 (1)	3.70
E- F	-2141 / 0	-78.0	-78.0	0.77 (1)	3.70
F- G	-2116 / 0	-78.0	-78.0	0.42 (1)	4.28
G- H	-2302 / 0	-78.0	-78.0	0.45 (1)	4.11
H- I	0 / 30	-78.0	-78.0	0.10 (1)	10.00
R- B	-1933 / 0	0.0	0.0	0.20 (1)	6.05
J- H	-1933 / 0	0.0	0.0	0.20 (1)	6.05
R- O	0 / 0	-18.5	-18.5	0.13 (4)	10.00
M- L	0 / 1940	-18.5	-18.5	0.41 (1)	10.00
L- K	0 / 1940	-18.5	-18.5	0.41 (1)	10.00
K- J	0 / 0	-18.5	-18.5	0.13 (4)	10.00

WEBS

MEMB. FR-TO	MAX. FACTORED FORCE (LBS)	MAX CSI (LC)
Q- C	-246 / 0	0.10 (1)
C- P	-273 / 0	0.32 (1)
P- D	0 / 306	0.07 (4)
D- N	0 / 607	0.10 (1)
N- E	-755 / 0	0.41 (1)
N- F	0 / 607	0.10 (1)
M- F	0 / 306	0.07 (4)
M- G	-273 / 0	0.32 (1)
K- G	-246 / 0	0.10 (1)
B- Q	0 / 1972	0.44 (1)
K- H	0 / 1972	0.44 (1)

DESIGN CRITERIA

SPECIFIED LOADS:

TOP	CH.	LL =	21.0	PSF
		DL =	6.0	PSF
BOT	CH.	LL =	0.0	PSF
		DL =	7.4	PSF
TOTAL	LOAD	=	34.4	PSF

SPACING = 24.0 IN. C/C

LOADING IN FLAT SECTION BASED ON A SLOPE OF 2.00/12 MINIMUM

THIS TRUSS IS DESIGNED FOR RESIDENTIAL OR SMALL BUILDING REQUIREMENTS OF PART 9, NBCC 2015

THIS DESIGN COMPLIES WITH:
- PART 9 OF BCBC 2018 , ABC 2019
- PART 9 OF OBC 2012 (2019 AMENDMENT)
- CSA 086-14
- TPIC 2014

(55 % OF 23.0 P.S.F. G.S.L. PLUS 8.4 P.S.F. RAIN LOAD) EQUALS 21.0 P.S.F. SPECIFIED ROOF LIVE LOAD

ALLOWABLE DEFL.(LL)= L/360 (1.29")
CALCULATED VERT. DEFL.(LL) = L/ 999 (0.10")
ALLOWABLE DEFL.(TL)= L/360 (1.29")
CALCULATED VERT. DEFL.(TL) = L/ 999 (0.24")

CSI: TC=0.77/1.00 (E-F:1) , BC=0.41/1.00 (M-N:1) , WB=0.44/1.00 (H-K:1) , SSI=0.30/1.00 (D-E:1)

DOL LUMBER=1.00 NAIL=1.00 LS BEND=1.10 COMP=1.10 SHEAR=1.10 TENS= 1.10

COMPANION LIVE LOAD FACTOR = 1.00

TRUSS PLATE MANUFACTURER IS NOT RESPONSIBLE FOR QUALITY CONTROL IN THE TRUSS MANUFACTURING PLANT .

NAIL VALUES

PLATE	GRIP(DRY) (PSI) MAX	MIN	SHEAR (PLI) MAX	MIN	SECTION (PLI) MAX	MIN
MT20	650	371	1747	788	1987	1873

PLATE PLACEMENT TOL. = 0.250 inches

PLATE ROTATION TOL. = 5.0 Deg.

JSI GRIP= 0.85 (K) (INPUT = 0.90)
JSI METAL= 0.63 (O) (INPUT = 1.00)

[M][F]

JOB NAME	TRUSS NAME	QUANTITY	PLY	JOB DESC.	DRWG NO.
324088	H15A		1	TRUSS DESC. JT 45147	E20115228

Alpa Roof Truss, Maple

Version 8.330 S May 6 2020 MiTek Industries, Inc. Fri Nov 20 15:10:22 2020 Page 1

ID:?e6mKUZ36g6Hh0QiNXna66yd61Q-FuhHQhEFDh11WnP3Uu9y?mQds7zBKkGXn9uusFyHGPF

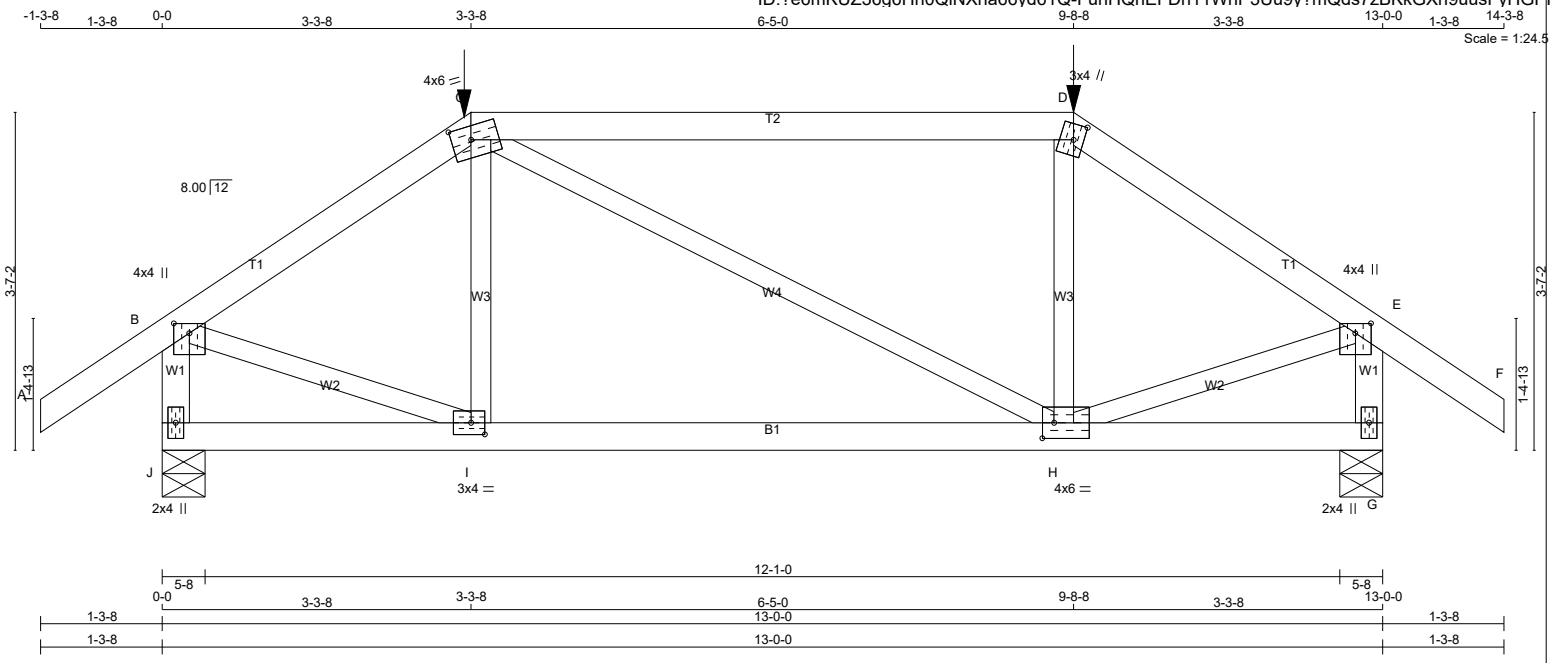

TOTAL WEIGHT = 53 lb

LUMBER

N. L. G. A. RULES

CHORDS	SIZE		LUMBER	DESCR.
A - C	2x4	DRY	No.2	SPF
C - D	2x4	DRY	2100F 1.8E	SPF
D - F	2x4	DRY	No.2	SPF
J - B	2x4	DRY	No.2	SPF
G - E	2x4	DRY	No.2	SPF
J - G	2x4	DRY	No.2	SPF
ALL WEBS EXCEPT	2x3	DRY	No.2	SPF

DRY: SEASONED LUMBER.

PLATES (table is in inches)

JT	TYPE	PLATES	W	LEN	Y	X
B	TMVW+p	MT20	4.0	4.0	1.25	2.00
C	TTWW-m	MT20	4.0	6.0	1.75	2.50
D	TTW+m	MT20	3.0	4.0	2.00	1.25
E	TMVW+p	MT20	4.0	4.0	1.25	2.00
G	BMV1+p	MT20	2.0	4.0		
H	BMWWW-t	MT20	4.0	6.0	2.00	1.50
I	BMWW-t	MT20	3.0	4.0	1.50	1.75
J	BMV1+p	MT20	2.0	4.0		

LATERAL BRACE(S) SHOWN SHALL BE 2X4 SPF#2

DIMENSIONS, SUPPORTS AND LOADINGS SPECIFIED BY FABRICATOR TO BE VERIFIED BY BUILDING DESIGNER

BEARINGS

JT	FACTORED GROSS REACTION VERT	HORZ	MAXIMUM FACTORED GROSS REACTION DOWN	HORZ	UPLIFT	INPUT BRG IN-SX	REQRD BRG IN-SX
J	930	0	930	0	0	5-8	1-8
G	930	0	930	0	0	5-8	1-8

UNFACTORED REACTIONS

JT	1ST LCASE COMBINED	MAX./MIN. COMPONENT REACTIONS SNOW	LIVE	PERM.LIVE	WIND	DEAD	SOIL
J	661	415 / 0	0 / 0	0 / 0	0 / 0	246 / 0	0 / 0
G	661	415 / 0	0 / 0	0 / 0	0 / 0	246 / 0	0 / 0

BEARING MATERIAL TO BE SPF NO.2 OR BETTER AT JOINT(S) J, G

BRACING

TOP CHORD TO BE SHEATHED OR MAX. PURLIN SPACING = 6.25 FT.
MAX. UNBRACED BOTTOM CHORD LENGTH = 10.00 FT OR RIGID CEILING DIRECTLY APPLIED.

ALL PITCH BREAKS AND PERIMETER CORNER JOINTS MUST BE LATERALLY RESTRAINED.

LOADING

TOTAL LOAD CASES: (4)

CHORDS

MEMB. FR-TO	MAX. FACTORED FORCE (LBS)	FACTORED VERT. LOAD (PLF) FROM	TO	LC1 CSI (LC)	MAX UNBRAC LENGTH
A- B	0 / 30	-78.0	-78.0	0.12 (1)	10.00
B- C	-817 / 0	-78.0	-78.0	0.17 (1)	6.25
C- D	-676 / 0	-103.1	-103.1	0.55 (1)	6.25
D- E	-818 / 0	-78.0	-78.0	0.17 (1)	6.25
E- F	0 / 30	-78.0	-78.0	0.12 (1)	10.00
J- B	-907 / 0	0.0	0.0	0.10 (1)	7.81
G- E	-907 / 0	0.0	0.0	0.10 (1)	7.81
J- I	0 / 0	-24.5	-24.5	0.17 (4)	10.00
I- H	0 / 676	-24.5	-24.5	0.24 (4)	10.00
H- G	0 / 0	-24.5	-24.5	0.17 (4)	10.00

WEBS

MEMB. FR-TO	MAX. FACTORED FORCE (LBS)	MAX CSI (LC)
I- C	-81 / 67	0.03 (4)
C- H	0 / 0	0.00 (1)
H- D	-80 / 67	0.03 (4)
B- I	0 / 712	0.18 (1)
H- E	0 / 712	0.18 (1)

FACTORED CONCENTRATED LOADS (LBS)

JT	LOC.	LC1	MAX-	MAX+	FACE	DIR.	TYPE	HEEL	CONN.
C	3-3-8	-77	-77	---	FRONT	VERT	TOTAL	---	C1
D	9-8-8	-77	-77	---	FRONT	VERT	TOTAL	---	C1

DESIGN CRITERIA

SPECIFIED LOADS:

TOP CH.	LL	=	21.0	PSF
	DL	=	6.0	PSF
BOT CH.	LL	=	0.0	PSF
	DL	=	7.4	PSF
TOTAL LOAD		=	34.4	PSF

SPACING = 24.0 IN. C/C

LOADING IN FLAT SECTION BASED ON A SLOPE OF 2.00/12 MINIMUM

GIRDER TYPE: CPrimeHip
SIDE SETBACK = 3-3-8
END SETBACK = 3-3-8
END WALL WIDTH = 0-0
CORNER FRAMING TYPE: CONVENTIONAL
END JACK TYPE: CONVENTIONAL
APPLIED TO FRONT SIDE
- ADDT'L LOADS BASED ON 55 % OF GSL.

THIS TRUSS IS DESIGNED FOR RESIDENTIAL OR SMALL BUILDING REQUIREMENTS OF PART 9, NBCC 2015

THIS DESIGN COMPLIES WITH:
- PART 9 OF BCBC 2018 , ABC 2019
- PART 9 OF OBC 2012 (2019 AMENDMENT)
- CSA 086-14
- TPIC 2014

(55 % OF 23.0 P.S.F. G.S.L. PLUS 8.4 P.S.F. RAIN LOAD) EQUALS 21.0 P.S.F. SPECIFIED ROOF LIVE LOAD

ALLOWABLE DEFL.(LL)= L/360 (0.43")
CALCULATED VERT. DEFL.(LL) = L/ 999 (0.01")
ALLOWABLE DEFL.(TL)= L/360 (0.43")
CALCULATED VERT. DEFL.(TL) = L/ 999 (0.05")

CSI: TC=0.55/1.00 (C-D:1) , BC=0.24/1.00 (H-I:4) , WB=0.18/1.00 (E-H:1) , SSI=0.28/1.00 (C-D:1)

DOL LUMBER=1.00 NAIL=1.00 LS BEND=1.00 COMP=1.00 SHEAR=1.00 TENS= 1.00

COMPANION LIVE LOAD FACTOR = 1.00

TRUSS PLATE MANUFACTURER IS NOT RESPONSIBLE FOR QUALITY CONTROL IN THE TRUSS MANUFACTURING PLANT .

NAIL VALUES

PLATE	GRIP(DRY) (PSI) MAX	MIN	SHEAR (PLI) MAX	MIN	SECTION (PLI) MAX	MIN
MT20	650	371	1747	788	1987	1873

PLATE PLACEMENT TOL. = 0.250 inches

PLATE ROTATION TOL. = 5.0 Deg.

JSI GRIP= 0.86 (H) (INPUT = 0.90)
JSI METAL= 0.23 (I) (INPUT = 1.00)

JOB NAME	TRUSS NAME	QUANTITY	PLY	JOB DESC.	DRWG NO.
324088	H16		1	TRUSS DESC. JT 45147	E20115229

Alpa Roof Truss, Maple

Version 8.330 S May 6 2020 MiTek Industries, Inc. Fri Nov 20 15:10:22 2020 Page 1

ID:?e6mKUZ36g6Hh0QiNXna66yd61Q-FuhHQhEFDh11WnP3Uu9y?mQh 7 qKlkXn9uusFyHGPF

Scale = 1:34.1

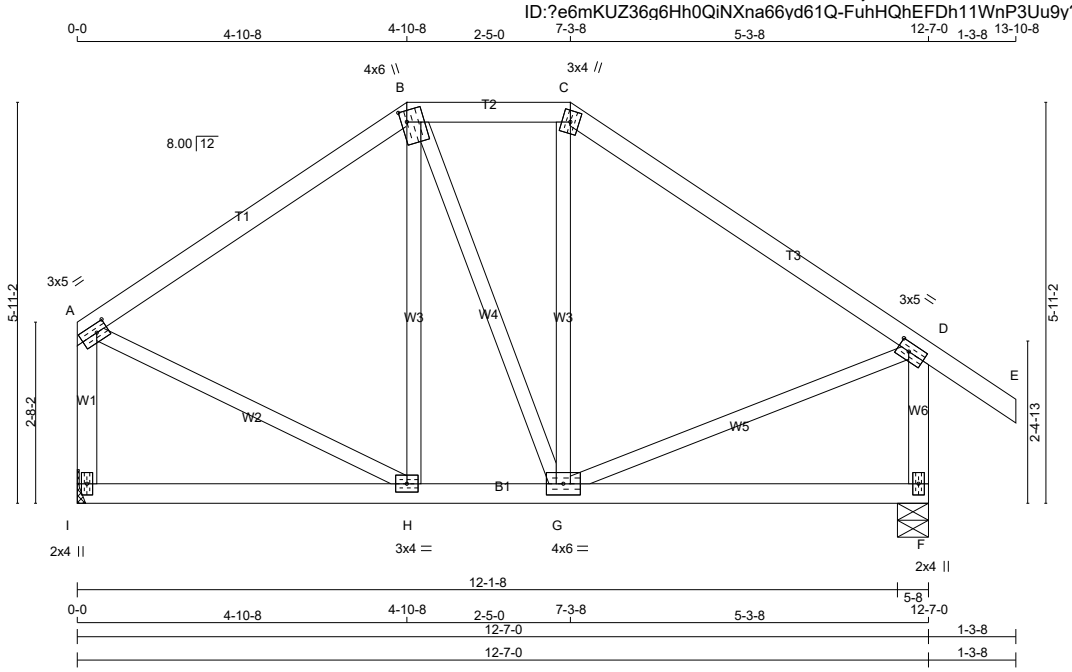

TOTAL WEIGHT = 60 lb

[M][F]

LUMBER

N. L. G. A. RULES

CHORDS	SIZE		LUMBER	DESCR.
A - B	2x4	DRY	No.2	SPF
B - C	2x4	DRY	No.2	SPF
C - E	2x4	DRY	No.2	SPF
I - A	2x4	DRY	No.2	SPF
F - D	2x4	DRY	No.2	SPF
I - F	2x4	DRY	No.2	SPF
ALL WEBS EXCEPT	2x3	DRY	No.2	SPF

DRY: SEASONED LUMBER.

PLATES (table is in inches)

JT	TYPE	PLATES	W	LEN	Y	X
A	TMVW-t	MT20	3.0	5.0	1.50	2.00
B	TTWW+m	MT20	4.0	6.0	2.00	1.00
C	TTW+m	MT20	3.0	4.0		
D	TMVW-t	MT20	3.0	5.0	1.50	2.00
F	BMV1+p	MT20	2.0	4.0		
G	BMWWW-t	MT20	4.0	6.0		
H	BMWW-t	MT20	3.0	4.0		
I	BMV1+p	MT20	2.0	4.0		

LATERAL BRACE(S) SHOWN SHALL BE 2X4 SPF#2

DIMENSIONS, SUPPORTS AND LOADINGS SPECIFIED BY FABRICATOR TO BE VERIFIED BY BUILDING DESIGNER

BEARINGS

JT	FACTORED GROSS REACTION VERT	HORZ	MAXIMUM FACTORED GROSS REACTION DOWN	HORZ	UPLIFT	INPUT BRG IN-SX	REQRD BRG IN-SX
I	607	0	607	0	0	MECHANICAL	
F	714	0	714	0	0	5-8	1-8

A SUITABLE HANGER/MECHANICAL CONNECTION IS REQUIRED AT JOINT I. MINIMUM BEARING LENGTH AT JOINT I = 1-8.

UNFACTORED REACTIONS

JT	1ST LCASE COMBINED	MAX./MIN. COMPONENT REACTIONS SNOW	LIVE	PERM.LIVE	WIND	DEAD	SOIL
I	433	264 / 0	0 / 0	0 / 0	0 / 0	169 / 0	0 / 0
F	507	322 / 0	0 / 0	0 / 0	0 / 0	185 / 0	0 / 0

BEARING MATERIAL TO BE SPF NO.2 OR BETTER AT JOINT(S) F

BRACING

TOP CHORD TO BE SHEATHED OR MAX. PURLIN SPACING = 6.25 FT.
MAX. UNBRACED BOTTOM CHORD LENGTH = 10.00 FT OR RIGID CEILING DIRECTLY APPLIED.

ALL PITCH BREAKS AND PERIMETER CORNER JOINTS MUST BE LATERALLY RESTRAINED.

LOADING

TOTAL LOAD CASES: (4)

CHORDS

MEMB. FR-TO	MAX. FACTORED FORCE (LBS)	FACTORED VERT. LOAD LC1 (PLF) FROM	TO	MAX CSI (LC)	MAX. UNBRAC LENGTH
A- B	-398 / 0	-78.0	-78.0	0.24 (1)	6.25
B- C	-338 / 0	-78.0	-78.0	0.06 (1)	6.25
C- D	-409 / 0	-78.0	-78.0	0.28 (1)	6.25
D- E	0 / 30	-78.0	-78.0	0.10 (1)	10.00
I- A	-568 / 0	0.0	0.0	0.08 (1)	7.81
F- D	-672 / 0	0.0	0.0	0.09 (1)	7.81
I- H	0 / 0	-18.5	-18.5	0.10 (4)	10.00
H- G	0 / 329	-18.5	-18.5	0.14 (4)	10.00
G- F	0 / 0	-18.5	-18.5	0.11 (4)	10.00

WEBS

MEMB. FR-TO	MAX. FACTORED FORCE (LBS)	MAX CSI (LC)
H- B	-86 / 15	0.05 (1)
B- G	0 / 25	0.01 (1)
G- C	-73 / 27	0.04 (1)
A- H	0 / 366	0.08 (1)
G- D	0 / 364	0.08 (1)

DESIGN CRITERIA

SPECIFIED LOADS:

TOP CH.	LL =	21.0	PSF
	DL =	6.0	PSF
BOT CH.	LL =	0.0	PSF
	DL =	7.4	PSF
TOTAL LOAD	=	34.4	PSF

SPACING = 24.0 IN. C/C

LOADING IN FLAT SECTION BASED ON A SLOPE OF 2.00/12 MINIMUM

THIS TRUSS IS DESIGNED FOR RESIDENTIAL OR SMALL BUILDING REQUIREMENTS OF PART 9, NBCC 2015

THIS DESIGN COMPLIES WITH:
- PART 9 OF BCBC 2018 , ABC 2019
- PART 9 OF OBC 2012 (2019 AMENDMENT)
- CSA 086-14
- TPIC 2014

(55 % OF 23.0 P.S.F. G.S.L. PLUS 8.4 P.S.F. RAIN LOAD) EQUALS 21.0 P.S.F. SPECIFIED ROOF LIVE LOAD

ALLOWABLE DEFL.(LL)= L/360 (0.42")
CALCULATED VERT. DEFL.(LL) = L/ 999 (0.01")
ALLOWABLE DEFL.(TL)= L/360 (0.42")
CALCULATED VERT. DEFL.(TL) = L/ 999 (0.03")

CSI: TC=0.28/1.00 (C-D:1) , BC=0.14/1.00 (G-H:4) , WB=0.08/1.00 (A-H:1) , SSI=0.13/1.00 (C-D:1)

DOL LUMBER=1.00 NAIL=1.00 LS BEND=1.10 COMP=1.10 SHEAR=1.10 TENS= 1.10

COMPANION LIVE LOAD FACTOR = 1.00

TRUSS PLATE MANUFACTURER IS NOT RESPONSIBLE FOR QUALITY CONTROL IN THE TRUSS MANUFACTURING PLANT .

NAIL VALUES

PLATE	GRIP(DRY) (PSI) MAX	MIN	SHEAR (PLI) MAX	MIN	SECTION (PLI) MAX	MIN
MT20	650	371	1747	788	1987	1873

PLATE PLACEMENT TOL. = 0.250 inches

PLATE ROTATION TOL. = 5.0 Deg.

JSI GRIP= 0.58 (D) (INPUT = 0.90)
JSI METAL= 0.17 (D) (INPUT = 1.00)

JOB NAME	TRUSS NAME	QUANTITY	PLY	JOB DESC.	DRWG NO.
324088	H17A		1	TRUSS DESC. JT 45147	E20115230

Alpa Roof Truss, Maple

Version 8.330 S May 6 2020 MiTek Industries, Inc. Fri Nov 20 15:10:23 2020 Page 1

ID:?e6mKUZ36q6Hh0QiNXna66yd61Q-j4Efe1Ft ?9t7x F2bqBX yp5XIb36vh0pdROiyHGPE

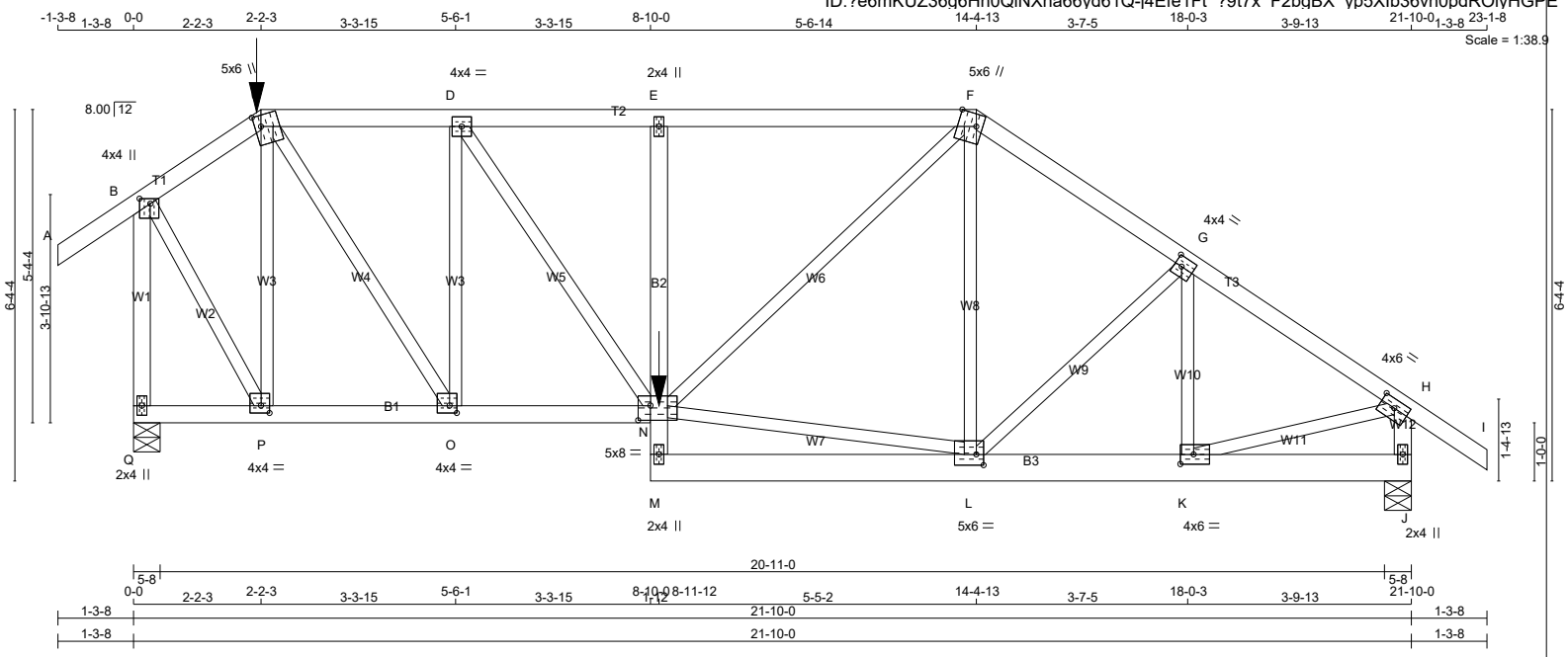

TOTAL WEIGHT = 120 lb

LUMBER

N. L. G. A. RULES

CHORDS	SIZE		LUMBER	DESCR.
A - C	2x4	DRY	No.2	SPF
C - F	2x4	DRY	No.2	SPF
F - I	2x4	DRY	No.2	SPF
Q - B	2x4	DRY	No.2	SPF
J - H	2x4	DRY	No.2	SPF
Q - N	2x4	DRY	No.2	SPF
M - E	2x4	DRY	No.2	SPF
M - J	2x6	DRY	No.2	SPF
ALL WEBS EXCEPT	2x3	DRY	No.2	SPF

DRY: SEASONED LUMBER.

PLATES (table is in inches)

JT	TYPE	PLATES	W	LEN	Y	X
B	TMVW+p	MT20	4.0	4.0	1.00	2.25
C	TTWW+m	MT20	5.0	6.0	2.25	1.25
D	TMWW-t	MT20	4.0	4.0		
E	TMV+p	MT20	2.0	4.0		
F	TTWW+m	MT20	5.0	6.0	Edge	3.75
G	TMWW-t	MT20	4.0	4.0	2.00	1.50
H	TMVW-t	MT20	4.0	6.0	1.75	3.00
J	BMV1+p	MT20	2.0	4.0		
K	BMWW-t	MT20	4.0	6.0	2.00	2.75
L	BMWWW-t	MT20	5.0	6.0	2.25	1.50
M	BMV+p	MT20	2.0	4.0		
N	BVMWWW-l	MT20	5.0	8.0	3.00	2.50
O	BMWW-t	MT20	4.0	4.0	1.50	1.50
P	BMWW-t	MT20	4.0	4.0	1.50	1.75
Q	BMV1+p	MT20	2.0	4.0		

Edge - INDICATES REFERENCE CORNER OF PLATE TOUCHES EDGE OF CHORD.

LATERAL BRACE(S) SHOWN SHALL BE 2X4 SPF#2

DIMENSIONS, SUPPORTS AND LOADINGS SPECIFIED BY FABRICATOR TO BE VERIFIED BY BUILDING DESIGNER

BEARINGS

JT	FACTORED GROSS REACTION VERT	HORZ	MAXIMUM FACTORED GROSS REACTION DOWN	HORZ	UPLIFT	INPUT BRG IN-SX	REQRD BRG IN-SX
Q	1738	0	1738	0	0	5-8	2-9
J	1468	0	1468	0	0	5-8	2-3

UNFACTORED REACTIONS

JT	1ST LCASE COMBINED	MAX./MIN. COMPONENT REACTIONS SNOW	LIVE	PERM.LIVE	WIND	DEAD	SOIL
Q	1237	767 / 0	0 / 0	0 / 0	0 / 0	471 / 0	0 / 0
J	1044	650 / 0	0 / 0	0 / 0	0 / 0	394 / 0	0 / 0

BEARING MATERIAL TO BE SPF NO.2 OR BETTER AT JOINT(S) Q, J

BRACING

TOP CHORD TO BE SHEATHED OR MAX. PURLIN SPACING = 4.42 FT.
MAX. UNBRACED BOTTOM CHORD LENGTH = 7.81 FT OR RIGID CEILING DIRECTLY APPLIED.

ALL PITCH BREAKS AND PERIMETER CORNER JOINTS MUST BE LATERALLY RESTRAINED.

LOADING

TOTAL LOAD CASES: (4)

CHORDS

MEMB. FR-TO	MAX. FACTORED FORCE (LBS)	FACTORED VERT. LOAD (PLF) FROM	TO	LC1 CSI (LC)	MAX UNBRAC LENGTH
A- B	0 / 30	-78.0	-78.0	0.12 (1)	10.00
B- C	-822 / 0	-78.0	-78.0	0.08 (1)	6.25
C- D	-1422 / 0	-104.8	-104.8	0.19 (1)	5.24
D- E	-1920 / 0	-104.8	-104.8	0.36 (1)	4.42
E- F	-1909 / 0	-78.0	-78.0	0.39 (1)	4.43
F- G	-1532 / 0	-78.0	-78.0	0.23 (1)	5.05
G- H	-1535 / 0	-78.0	-78.0	0.23 (1)	5.04
H- I	0 / 30	-78.0	-78.0	0.12 (1)	10.00
Q- B	-1721 / 0	0.0	0.0	0.45 (1)	6.30
J- H	-1423 / 0	0.0	0.0	0.16 (1)	6.81
Q- P	0 / 0	-24.9	-24.9	0.05 (4)	10.00
P- O	0 / 662	-24.9	-24.9	0.15 (1)	10.00
O- N	0 / 1423	-24.9	-24.9	0.30 (1)	10.00
M- N	0 / 46	0.0	0.0	0.09 (1)	10.00
N- E	-457 / 0	0.0	0.0	0.15 (1)	7.81
M- L	0 / 57	-18.5	-18.5	0.07 (4)	10.00

WEBS

MEMB. FR-TO	MAX. FACTORED FORCE (LBS)	MAX CSI (LC)
P- C	-988 / 0	0.44 (1)
C- O	0 / 1383	0.34 (1)
O- D	-1068 / 0	0.47 (1)
D- N	0 / 879	0.22 (1)
N- L	0 / 1217	0.30 (1)
N- F	0 / 892	0.22 (1)
L- F	-52 / 44	0.03 (1)
L- G	-49 / 0	0.02 (1)
K- G	-302 / 0	0.07 (1)
B- P	0 / 1268	0.31 (1)
K- H	0 / 1335	0.33 (1)

JT	LOC.	LC1	MAX-	MAX+	FACE	DIR.	TYPE	HEEL	CONN.
C	2-2-3	-53	-53	---	FRONT	VERT	TOTAL	---	C1
N	8-11-12	-593	-593	---	FRONT	VERT	TOTAL	---	C1

CONNECTION REQUIREMENTS

1) **C1:** A SUITABLE HANGER/MECHANICAL CONNECTION IS REQUIRED.

[M]

DESIGN CRITERIA

*** SPECIAL LOADS ANALYSIS ***
GEOMETRY AND/OR BASIC LOADS CHANGED BY USER.
LOADS WERE DERIVED FROM USER INPUT
NO FURTHER MODIFICATIONS WERE MADE

SPECIFIED LOADS:

TOP	CH.	LL	=	21.0	PSF
		DL	=	6.0	PSF
BOT	CH.	LL	=	0.0	PSF
		DL	=	7.4	PSF
TOTAL	LOAD		=	34.4	PSF

SPACING = 24.0 IN. C/C

LOADING IN FLAT SECTION BASED ON A SLOPE OF 2.00/12 MINIMUM

GIRDER TYPE: CPrimeHip
LEFT SETBACK = 2-2-3
RIGHT SETBACK = 7-5-2
END SETBACK = 3-4-8
END WALL WIDTH = 0-0
CORNER FRAMING TYPE: CONVENTIONAL
END JACK TYPE: CONVENTIONAL
APPLIED TO FRONT SIDE
- ADDT'L LOADS BASED ON 55 % OF GSL.
LOADS APPLIED TO FIRST 9-1-7 OF SPAN MEASURED FROM THE LEFT.

*** NON STANDARD GIRDER ***
ADDT'L USER-DEFINED LOADS APPLIED TO ALL LOAD CASES.

THIS TRUSS IS DESIGNED FOR RESIDENTIAL OR SMALL BUILDING REQUIREMENTS OF PART 9, NBCC 2015

THIS DESIGN COMPLIES WITH:
- PART 9 OF BCBC 2018 , ABC 2019
- PART 9 OF OBC 2012 (2019 AMENDMENT)
- CSA 086-14
- TPIC 2014

(55 % OF 23.0 P.S.F. G.S.L. PLUS 8.4 P.S.F. RAIN LOAD) EQUALS 21.0 P.S.F. SPECIFIED ROOF LIVE LOAD

ALLOWABLE DEFL.(LL)= L/360 (0.73")
CALCULATED VERT. DEFL.(LL) = L/ 999 (0.06")
ALLOWABLE DEFL.(TL)= L/360 (0.73")
CALCULATED VERT. DEFL.(TL) = L/ 999 (0.11")

CSI: TC=0.45/1.00 (B-Q:1) , BC=0.30/1.00 (N-O:1) , WB=0.47/1.00 (D-O:1) , SSI=0.21/1.00 (E-F:1)

DOL LUMBER=1.00 NAIL=1.00 LS BEND=1.00 COMP=1.00 SHEAR=1.00 TENS= 1.00

COMPANION LIVE LOAD FACTOR = 1.00

TRUSS PLATE MANUFACTURER IS NOT RESPONSIBLE FOR QUALITY CONTROL IN THE TRUSS MANUFACTURING PLANT .

CONTINUED ON PAGE 2

JOB NAME	TRUSS NAME	QUANTITY	PLY	JOB DESC.	DRWG NO.
324088	H18		1	TRUSS DESC. JT 45147	E20115231

Alpa Roof Truss, Maple

Version 8.330 S May 6 2020 MiTek Industries, Inc. Fri Nov 20 15:10:24 2020 Page 1

ID:?e6mKUZ36g6Hh0QiNXna66yd61Q-BHo1rMGVlIHkl5ZRcIBQ4BVuLxdWob5qFTN?w8yHGPD

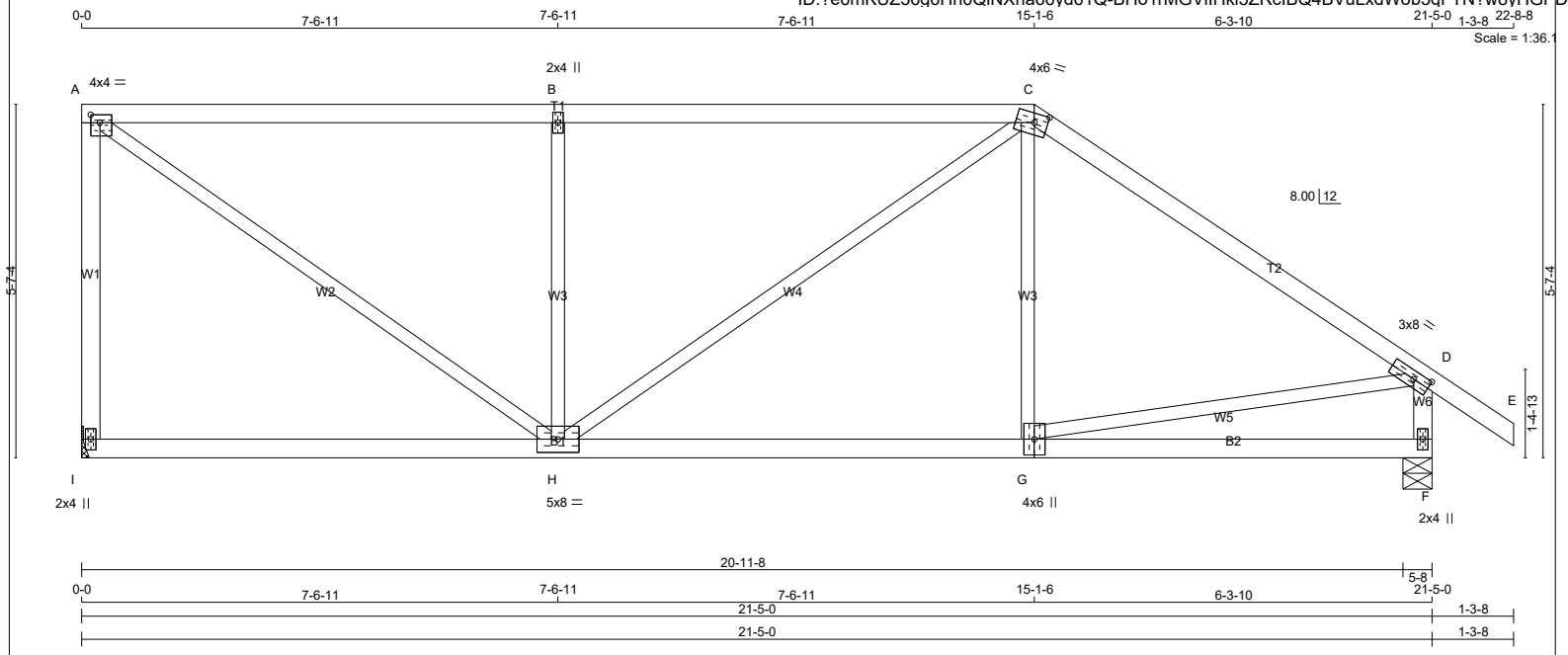

TOTAL WEIGHT = 87 lb

LUMBER

N. L. G. A. RULES

CHORDS	SIZE		LUMBER	DESCR.
I - A	2x4	DRY	No.2	SPF
A - C	2x4	DRY	No.2	SPF
C - E	2x4	DRY	No.2	SPF
F - D	2x4	DRY	No.2	SPF
I - G	2x4	DRY	No.2	SPF
G - F	2x4	DRY	No.2	SPF
ALL WEBS EXCEPT	2x3	DRY	No.2	SPF

DRY: SEASONED LUMBER.

PLATES (table is in inches)

JT	TYPE	PLATES	W	LEN	Y	X
A	TMVW-t	MT20	4.0	4.0	1.50	1.75
B	TMW+w	MT20	2.0	4.0		
C	TTWW-m	MT20	4.0	6.0	1.75	2.50
D	TMVW-t	MT20	3.0	8.0	1.50	3.25
F	BMV1+p	MT20	2.0	4.0		
G	BSWW+l	MT20	4.0	6.0		
H	BMWWW-t	MT20	5.0	8.0		
I	BMV1+p	MT20	2.0	4.0		

LATERAL BRACE(S) SHOWN SHALL BE 2X4 SPF#2

DIMENSIONS, SUPPORTS AND LOADINGS SPECIFIED BY FABRICATOR TO BE VERIFIED BY BUILDING DESIGNER

BEARINGS

JT	FACTORED GROSS REACTION VERT	HORZ	MAXIMUM FACTORED GROSS REACTION DOWN	HORZ	UPLIFT	INPUT BRG IN-SX	REQRD BRG IN-SX
I	1033	0	1033	0	0	MECHANICAL	
F	1140	0	1140	0	0	5-8	1-11

A SUITABLE HANGER/MECHANICAL CONNECTION IS REQUIRED AT JOINT I. MINIMUM BEARING LENGTH AT JOINT I = 1-8.

UNFACTORED REACTIONS

JT	1ST LCASE COMBINED	MAX./MIN. COMPONENT REACTIONS SNOW	LIVE	PERM.LIVE	WIND	DEAD	SOIL
I	737	450 / 0	0 / 0	0 / 0	0 / 0	287 / 0	0 / 0
F	811	507 / 0	0 / 0	0 / 0	0 / 0	303 / 0	0 / 0

BEARING MATERIAL TO BE SPF NO.2 OR BETTER AT JOINT(S) F

BRACING

TOP CHORD TO BE SHEATHED OR MAX. PURLIN SPACING = 4.49 FT.
MAX. UNBRACED BOTTOM CHORD LENGTH = 10.00 FT OR RIGID CEILING DIRECTLY APPLIED.

ALL PITCH BREAKS AND PERIMETER CORNER JOINTS MUST BE LATERALLY RESTRAINED.

LOADING

TOTAL LOAD CASES: (4)

CHORDS

MEMB. FR-TO	MAX. FACTORED FORCE (LBS)	FACTORED VERT. LOAD (PLF) FROM	TO	LC1 MAX CSI (LC)	MAX. UNBRAC LENGTH
I- A	-979 / 0	0.0	0.0	0.56 (1)	7.81
A- B	-1075 / 0	-78.0	-78.0	0.87 (1)	4.49
B- C	-1075 / 0	-78.0	-78.0	0.87 (1)	4.49
C- D	-1046 / 0	-78.0	-78.0	0.62 (1)	5.23
D- E	0 / 30	-78.0	-78.0	0.10 (1)	10.00
F- D	-1081 / 0	0.0	0.0	0.11 (1)	7.59
I- H	0 / 0	-18.5	-18.5	0.30 (4)	10.00
H- G	0 / 869	-18.5	-18.5	0.38 (4)	10.00
G- F	0 / 0	-18.5	-18.5	0.22 (4)	10.00

WEBS

MEMB. FR-TO	MAX. FACTORED FORCE (LBS)	MAX CSI (LC)
A- H	0 / 1315	0.30 (1)
H- B	-731 / 0	0.35 (1)
H- C	0 / 253	0.06 (1)
G- C	-34 / 68	0.02 (4)
G- D	0 / 881	0.20 (1)

DESIGN CRITERIA

SPECIFIED LOADS:

TOP	CH.	LL =	21.0	PSF
		DL =	6.0	PSF
BOT	CH.	LL =	0.0	PSF
		DL =	7.4	PSF
TOTAL	LOAD	=	34.4	PSF

SPACING = 24.0 IN. C/C

LOADING IN FLAT SECTION BASED ON A SLOPE OF 2.00/12 MINIMUM

THIS TRUSS IS DESIGNED FOR RESIDENTIAL OR SMALL BUILDING REQUIREMENTS OF PART 9, NBCC 2015

THIS DESIGN COMPLIES WITH:
- PART 9 OF BCBC 2018 , ABC 2019
- PART 9 OF OBC 2012 (2019 AMENDMENT)
- CSA 086-14
- TPIC 2014

(55 % OF 23.0 P.S.F. G.S.L. PLUS 8.4 P.S.F. RAIN LOAD) EQUALS 21.0 P.S.F. SPECIFIED ROOF LIVE LOAD

ALLOWABLE DEFL.(LL)= L/360 (0.71")
CALCULATED VERT. DEFL.(LL) = L/ 999 (0.04")
ALLOWABLE DEFL.(TL)= L/360 (0.71")
CALCULATED VERT. DEFL.(TL) = L/ 999 (0.13")

CSI: TC=0.87/1.00 (A-B:1) , BC=0.38/1.00 (G-H:4) , WB=0.35/1.00 (B-H:1) , SSI=0.29/1.00 (A-B:1)

DOL LUMBER=1.00 NAIL=1.00 LS BEND=1.10 COMP=1.10 SHEAR=1.10 TENS= 1.10

COMPANION LIVE LOAD FACTOR = 1.00

TRUSS PLATE MANUFACTURER IS NOT RESPONSIBLE FOR QUALITY CONTROL IN THE TRUSS MANUFACTURING PLANT .

NAIL VALUES

PLATE	GRIP(DRY) (PSI) MAX	MIN	SHEAR (PLI) MAX	MIN	SECTION (PLI) MAX	MIN
MT20	650	371	1747	788	1987	1873

PLATE PLACEMENT TOL. = 0.250 inches

PLATE ROTATION TOL. = 5.0 Deg.

JSI GRIP= 0.89 (A) (INPUT = 0.90)
JSI METAL= 0.39 (G) (INPUT = 1.00)

JOB NAME	TRUSS NAME	QUANTITY	PLY	JOB DESC.	DRWG NO.
324088	H19A		1	TRUSS DESC. JT 45147	E20115232

Alpa Roof Truss, Maple

Version 8.330 S May 6 2020 MiTek Industries, Inc. Fri Nov 20 15:10:26 2020 Page 1

ID:?e6mKUZ36g6Hh0QiNXna66yd61Q-8fwoG2HlGwXS OjqjjDu9caJvkGvGMA7ins6?1yHGPB

Scale = 1:54.1

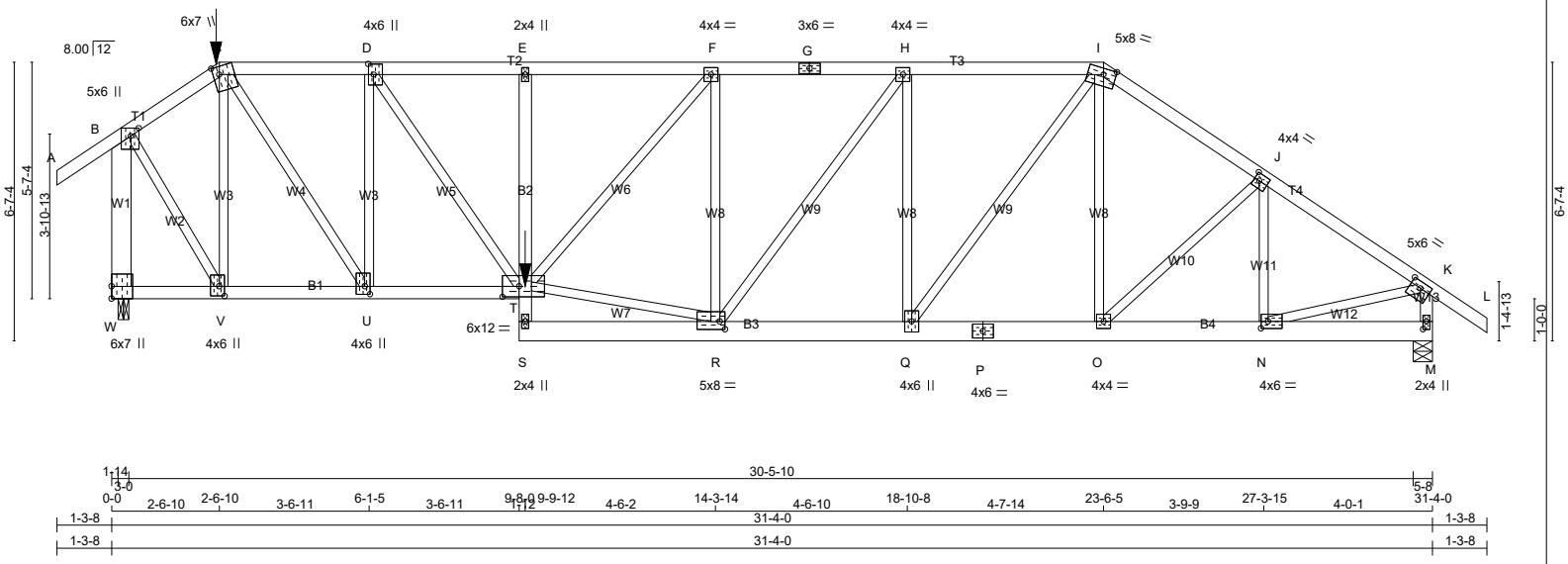

TOTAL WEIGHT = 172 lb

LUMBER

N. L. G. A. RULES

CHORDS	SIZE		LUMBER	DESCR.
A - C	2x4	DRY	No.2	SPF
C - G	2x4	DRY	No.2	SPF
G - I	2x4	DRY	No.2	SPF
I - L	2x4	DRY	No.2	SPF
W - B	2x6	DRY	No.2	SPF
M - K	2x4	DRY	No.2	SPF
W - T	2x4	DRY	No.2	SPF
S - E	2x4	DRY	No.2	SPF
S - P	2x6	DRY	No.2	SPF
P - M	2x6	DRY	No.2	SPF
ALL WEBS EXCEPT	2x3	DRY	No.2	SPF

DRY: SEASONED LUMBER.

PLATES (table is in inches)

JT	TYPE	PLATES	W	LEN	Y	X
B	TMVW+p	MT20	5.0	6.0	2.25	2.25
C	TTWW+m	MT20	6.0	7.0	2.25	1.75
D	TMWW+t	MT20	4.0	6.0	3.00	1.50
E	TMV+p	MT20	2.0	4.0		
F	TMWW-t	MT20	4.0	4.0		
G	TS-t	MT20	3.0	6.0		
H	TMWW-t	MT20	4.0	4.0		
I	TTWW-m	MT20	5.0	8.0	1.75	3.50
J	TMWW-t	MT20	4.0	4.0	2.00	1.50
K	TMVW-t	MT20	5.0	6.0	1.75	3.00
M	BMV1+p	MT20	2.0	4.0	2.25	1.00
N	BMWW-t	MT20	4.0	6.0	2.00	2.00
O	BMWW-t	MT20	4.0	4.0		
P	BS-t	MT20	4.0	6.0		
Q	BMWW+t	MT20	4.0	6.0		
R	BMWWW-t	MT20	5.0	8.0	2.25	1.50
S	BMV+p	MT20	2.0	4.0		
T	BVMWWW-l	MT20	6.0	12.0	3.00	4.75
U	BMWW+t	MT20	4.0	6.0	2.25	1.50
V	BMWW+t	MT20	4.0	6.0	2.75	1.50
W	BMV1+t	MT20	6.0	7.0		

LATERAL BRACE(S) SHOWN SHALL BE 2X4 SPF#2

DIMENSIONS, SUPPORTS AND LOADINGS SPECIFIED BY FABRICATOR TO BE VERIFIED BY BUILDING DESIGNER

BEARINGS

JT	FACTORED GROSS REACTION VERT	HORZ	MAXIMUM FACTORED GROSS REACTION DOWN	HORZ	UPLIFT	INPUT BRG IN-SX	REQRD BRG IN-SX
M	2033	0	2033	0	0	5-8	3-2
W	2727	0	2727	0	0	3-0	3-0

UNFACTORED REACTIONS

JT	1ST LCASE COMBINED	MAX./MIN. COMPONENT REACTIONS SNOW	LIVE	PERM.LIVE	WIND	DEAD	SOIL
M	1447	896 / 0	0 / 0	0 / 0	0 / 0	551 / 0	0 / 0
W	1942	1196 / 0	0 / 0	0 / 0	0 / 0	746 / 0	0 / 0

BEARING MATERIAL TO BE SPF NO.2 OR BETTER AT JOINT(S) M, W
BEARING SIZE FACTOR = 1.15 AT JNT(S) W (BASED ON SUPPORT DEPTH = 1-8)

BRACING

TOP CHORD TO BE SHEATHED OR MAX. PURLIN SPACING = 3.31 FT.
MAX. UNBRACED BOTTOM CHORD LENGTH = 7.81 FT OR RIGID CEILING DIRECTLY APPLIED.

ALL PITCH BREAKS AND PERIMETER CORNER JOINTS MUST BE LATERALLY RESTRAINED.

LOADING

TOTAL LOAD CASES: (4)

CHORDS

MEMB. FR-TO	MAX. FACTORED FORCE (LBS)	FACTORED VERT. LOAD (PLF) FROM	TO	LC1 CSI (LC)	MAX. UNBRAC LENGTH
A- B	0 / 30	-78.0	-78.0	0.12 (1)	10.00
B- C	-1492 / 0	-78.0	-78.0	0.13 (1)	5.22
C- D	-2577 / 0	-114.5	-114.5	0.32 (1)	3.97
D- E	-3615 / 0	-114.5	-114.5	0.43 (1)	3.31
E- F	-3597 / 0	-78.0	-78.0	0.42 (1)	3.36
F- G	-3033 / 0	-78.0	-78.0	0.44 (1)	3.59
G- H	-3033 / 0	-78.0	-78.0	0.44 (1)	3.59
H- I	-2678 / 0	-78.0	-78.0	0.40 (1)	3.83
I- J	-2371 / 0	-78.0	-78.0	0.30 (1)	4.15
J- K	-2282 / 0	-78.0	-78.0	0.30 (1)	4.22
K- L	0 / 30	-78.0	-78.0	0.12 (1)	10.00
W- B	-2707 / 0	0.0	0.0	0.48 (1)	6.30
M- K	-1983 / 0	0.0	0.0	0.22 (1)	5.94
W- V	0 / 0	-27.2	-27.2	0.07 (4)	10.00
V- U	0 / 1208	-27.2	-27.2	0.28 (1)	10.00
R- Q	0 / 2678	-18.5	-18.5	0.38 (1)	10.00
Q- P	0 / 1955	-18.5	-18.5	0.29 (1)	10.00
P- O	0 / 1955	-18.5	-18.5	0.29 (1)	10.00
O- N	0 / 1914	-18.5	-18.5	0.29 (1)	10.00
N- M	0 / 0	-18.5	-18.5	0.05 (1)	10.00

WEBS

MEMB. FR-TO	MAX. FACTORED FORCE (LBS)	MAX CSI (LC)
V- C	-1561 / 0	0.76 (1)
C- U	0 / 2457	0.61 (1)
U- D	-1945 / 0	0.95 (1)
D- T	0 / 1816	0.45 (1)
T- R	0 / 2994	0.74 (1)
T- F	0 / 855	0.21 (1)
R- F	-999 / 0	0.68 (1)
R- H	0 / 607	0.15 (1)
Q- H	-889 / 0	0.61 (1)
Q- I	0 / 1206	0.30 (1)
O- I	0 / 82	0.03 (4)
O- J	0 / 55	0.01 (1)
N- J	-443 / 0	0.11 (1)
N- K	0 / 1972	0.49 (1)
B- V	0 / 2077	0.51 (1)

FACTORED CONCENTRATED LOADS (LBS)

JT	LOC.	LC1	MAX-	MAX+	FACE	DIR.	TYPE	HEEL	CONN.
C	2-6-10	-79	-79	---	FRONT	VERT	TOTAL	---	C1
T	9-9-12	-1094	-1094	---	FRONT	VERT	TOTAL	---	C1

CONNECTION REQUIREMENTS

1) **C1:** A SUITABLE HANGER/MECHANICAL CONNECTION IS REQUIRED.

[M]

DESIGN CRITERIA

*** SPECIAL LOADS ANALYSIS ***
GEOMETRY AND/OR BASIC LOADS CHANGED BY USER.
LOADS WERE DERIVED FROM USER INPUT
NO FURTHER MODIFICATIONS WERE MADE

SPECIFIED LOADS:

TOP	CH.	LL	=	21.0	PSF
		DL	=	6.0	PSF
BOT	CH.	LL	=	0.0	PSF
		DL	=	7.4	PSF
TOTAL	LOAD		=	34.4	PSF

SPACING = 24.0 IN. C/C

LOADING IN FLAT SECTION BASED ON A SLOPE OF 2.00/12 MINIMUM

GIRDER TYPE: CPrimeHip
LEFT SETBACK = 2-6-10
RIGHT SETBACK = 7-9-10
END SETBACK = 3-10-8
END WALL WIDTH = 0-0
CORNER FRAMING TYPE: CONVENTIONAL
END JACK TYPE: CONVENTIONAL
APPLIED TO FRONT SIDE
- ADDT'L LOADS BASED ON 55 % OF GSL.
LOADS APPLIED TO FIRST 9-9-7 OF SPAN MEASURED FROM THE LEFT.

*** NON STANDARD GIRDER ***
ADDT'L USER-DEFINED LOADS APPLIED TO ALL LOAD CASES.

THIS TRUSS IS DESIGNED FOR RESIDENTIAL OR SMALL BUILDING REQUIREMENTS OF PART 9, NBCC 2015

THIS DESIGN COMPLIES WITH:
- PART 9 OF BCBC 2018 , ABC 2019
- PART 9 OF OBC 2012 (2019 AMENDMENT)
- CSA 086-14
- TPIC 2014

(55 % OF 23.0 P.S.F. G.S.L. PLUS 8.4 P.S.F. RAIN LOAD) EQUALS 21.0 P.S.F. SPECIFIED ROOF LIVE LOAD

ALLOWABLE DEFL.(LL)= L/360 (1.04")
CALCULATED VERT. DEFL.(LL) = L/ 999 (0.14")
ALLOWABLE DEFL.(TL)= L/360 (1.04")
CALCULATED VERT. DEFL.(TL) = L/ 999 (0.28")

CSI: TC=0.48/1.00 (B-W:1) , BC=0.51/1.00 (T-U:1) , WB=0.95/1.00 (D-U:1) , SSI=0.21/1.00 (C-D:1)

DOL LUMBER=1.00 NAIL=1.00 LS BEND=1.00 COMP=1.00 SHEAR=1.00 TENS= 1.00

COMPANION LIVE LOAD FACTOR = 1.00

AUTOSOLVE RIGHT HEEL ONLY

TRUSS PLATE MANUFACTURER IS NOT RESPONSIBLE FOR QUALITY CONTROL IN THE TRUSS MANUFACTURING PLANT .

CONTINUED ON PAGE 2

JOB NAME	TRUSS NAME	QUANTITY	PLY	JOB DESC.	DRWG NO.
324088	H20		1	TRUSS DESC. JT 45147	E20115233

Alpha Roof Truss, Maple

Version 8.330 S May 6 2020 MiTek Industries, Inc. Fri Nov 20 15:10:28 2020 Page 1

ID:?e6mKUZ36q6Hh0QiNXna66yd61Q-422YhkJ0oXoAEitDr8GME1fd Y?hkIyQ95LC3vyHGP9

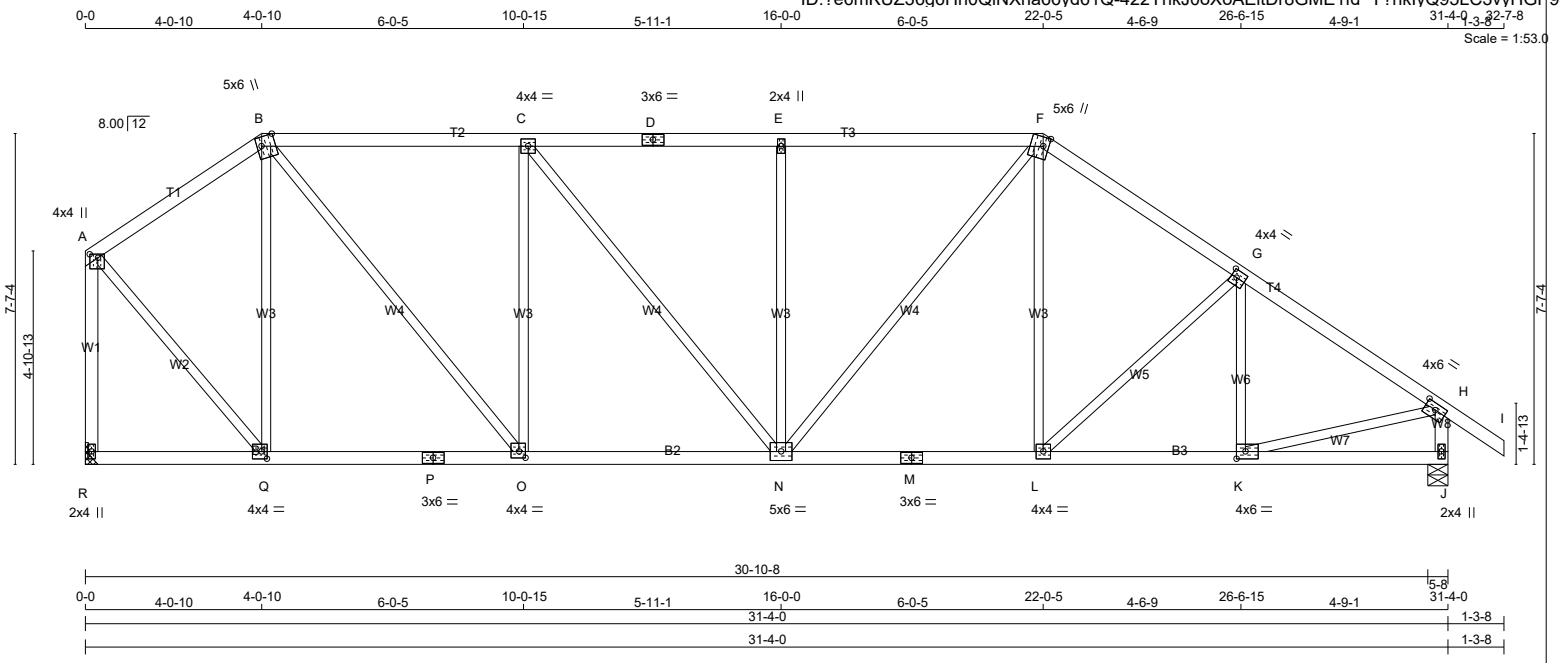

TOTAL WEIGHT = 144 lb

LUMBER

N. L. G. A. RULES

CHORDS	SIZE		LUMBER	DESCR.
A - B	2x4	DRY	No.2	SPF
B - D	2x4	DRY	No.2	SPF
D - F	2x4	DRY	No.2	SPF
F - I	2x4	DRY	No.2	SPF
R - A	2x4	DRY	No.2	SPF
J - H	2x4	DRY	No.2	SPF
R - P	2x4	DRY	No.2	SPF
P - M	2x4	DRY	No.2	SPF
M - J	2x4	DRY	No.2	SPF
ALL WEBS EXCEPT	2x3	DRY	No.2	SPF

DRY: SEASONED LUMBER.

PLATES (table is in inches)

JT	TYPE	PLATES	W	LEN	Y	X
A	TMVW+p	MT20	4.0	4.0	1.00	2.25
B	TTWW+m	MT20	5.0	6.0	Edge	3.75
C	TMWW-t	MT20	4.0	4.0		
D	TS-t	MT20	3.0	6.0		
E	TMW+w	MT20	2.0	4.0		
F	TTWW+m	MT20	5.0	6.0	2.50	1.50
G	TMWW-t	MT20	4.0	4.0	2.00	1.50
H	TMVW-t	MT20	4.0	6.0	1.75	3.00
J	BMV1+p	MT20	2.0	4.0		
K	BMWW-t	MT20	4.0	6.0	2.00	2.50
L	BMWW-t	MT20	4.0	4.0		
M	BS-t	MT20	3.0	6.0		
N	BMWWW-t	MT20	5.0	6.0		
O	BMWW-t	MT20	4.0	4.0	1.75	1.75
P	BS-t	MT20	3.0	6.0		
Q	BMWW-t	MT20	4.0	4.0	2.00	1.50
R	BMV1+p	MT20	2.0	4.0		

Edge - INDICATES REFERENCE CORNER OF PLATE TOUCHES EDGE OF CHORD.

LATERAL BRACE(S) SHOWN SHALL BE 2X4 SPF#2

DIMENSIONS, SUPPORTS AND LOADINGS SPECIFIED BY FABRICATOR TO BE VERIFIED BY BUILDING DESIGNER

BEARINGS

JT	FACTORED GROSS REACTION VERT	HORZ	MAXIMUM FACTORED GROSS REACTION DOWN	HORZ	UPLIFT	INPUT BRG IN-SX	REQRD BRG IN-SX
R	1511	0	1511	0	0	MECHANICAL	
J	1618	0	1618	0	0	5-8	2-6

A SUITABLE HANGER/MECHANICAL CONNECTION IS REQUIRED AT JOINT R. MINIMUM BEARING LENGTH AT JOINT R = 1-10.

UNFACTORED REACTIONS

JT	1ST LCASE COMBINED	MAX./MIN. COMPONENT REACTIONS SNOW	LIVE	PERM.LIVE	WIND	DEAD	SOIL
R	1078	658 / 0	0 / 0	0 / 0	0 / 0	420 / 0	0 / 0
J	1152	715 / 0	0 / 0	0 / 0	0 / 0	436 / 0	0 / 0

BEARING MATERIAL TO BE SPF NO.2 OR BETTER AT JOINT(S) J

BRACING

TOP CHORD TO BE SHEATHED OR MAX. PURLIN SPACING = 4.62 FT.
MAX. UNBRACED BOTTOM CHORD LENGTH = 10.00 FT OR RIGID CEILING DIRECTLY APPLIED.

ALL PITCH BREAKS AND PERIMETER CORNER JOINTS MUST BE LATERALLY RESTRAINED.

LOADING

TOTAL LOAD CASES: (4)

CHORDS

MEMB. FR-TO	MAX. FACTORED FORCE (LBS)	FACTORED VERT. LOAD (PLF) FROM	TO	LC1 MAX CSI (LC)	MAX. UNBRAC LENGTH
A- B	-902 / 0	-78.0	-78.0	0.24 (1)	6.18
B- C	-1457 / 0	-78.0	-78.0	0.45 (1)	4.88
C- D	-1661 / 0	-78.0	-78.0	0.46 (1)	4.62
D- E	-1661 / 0	-78.0	-78.0	0.46 (1)	4.62
E- F	-1661 / 0	-78.0	-78.0	0.46 (1)	4.63
F- G	-1659 / 0	-78.0	-78.0	0.34 (1)	4.79
G- H	-1763 / 0	-78.0	-78.0	0.35 (1)	4.68
H- I	0 / 30	-78.0	-78.0	0.10 (1)	10.00
R- A	-1485 / 0	0.0	0.0	0.63 (1)	6.73
J- H	-1579 / 0	0.0	0.0	0.16 (1)	6.56
R- Q	0 / 0	-18.5	-18.5	0.11 (4)	10.00
Q- P	0 / 739	-18.5	-18.5	0.20 (4)	10.00
P- O	0 / 1486	-18.5	-18.5	0.30 (1)	10.00
K- J	0 / 0	-18.5	-18.5	0.09 (4)	10.00

WEBS

MEMB. FR-TO	MAX. FACTORED FORCE (LBS)	MAX CSI (LC)
Q- B	-719 / 0	0.76 (1)
Q- O	0 / 1128	0.25 (1)
O- C	-760 / 0	0.80 (1)
C- N	0 / 325	0.07 (1)
N- E	-506 / 0	0.53 (1)
N- F	0 / 471	0.11 (1)
L- F	0 / 219	0.05 (4)
L- G	-173 / 0	0.12 (1)
K- G	-250 / 0	0.08 (1)
A- Q	0 / 1114	0.25 (1)
K- H	0 / 1524	0.34 (1)

[M]

DESIGN CRITERIA

SPECIFIED LOADS:

TOP CH.	LL	=	21.0	PSF
	DL	=	6.0	PSF
BOT CH.	LL	=	0.0	PSF
	DL	=	7.4	PSF
TOTAL LOAD		=	34.4	PSF

SPACING = 24.0 IN. C/C

LOADING IN FLAT SECTION BASED ON A SLOPE OF 2.00/12 MINIMUM

THIS TRUSS IS DESIGNED FOR RESIDENTIAL OR SMALL BUILDING REQUIREMENTS OF PART 9, NBCC 2015

THIS DESIGN COMPLIES WITH:
- PART 9 OF BCBC 2018 , ABC 2019
- PART 9 OF OBC 2012 (2019 AMENDMENT)
- CSA 086-14
- TPIC 2014

(55 % OF 23.0 P.S.F. G.S.L. PLUS 8.4 P.S.F. RAIN LOAD) EQUALS 21.0 P.S.F. SPECIFIED ROOF LIVE LOAD

ALLOWABLE DEFL.(LL)= L/360 (1.04")
CALCULATED VERT. DEFL.(LL) = L/ 999 (0.07")
ALLOWABLE DEFL.(TL)= L/360 (1.04")
CALCULATED VERT. DEFL.(TL) = L/ 999 (0.14")

CSI: TC=0.63/1.00 (A-R:1) , BC=0.30/1.00 (K-L:1) , WB=0.80/1.00 (C-O:1) , SSI=0.22/1.00 (B-C:1)

DOL LUMBER=1.00 NAIL=1.00 LS BEND=1.10 COMP=1.10 SHEAR=1.10 TENS= 1.10

COMPANION LIVE LOAD FACTOR = 1.00

TRUSS PLATE MANUFACTURER IS NOT RESPONSIBLE FOR QUALITY CONTROL IN THE TRUSS MANUFACTURING PLANT .

NAIL VALUES

PLATE	GRIP(DRY) (PSI) MAX	MIN	SHEAR (PLI) MAX	MIN	SECTION (PLI) MAX	MIN
MT20	650	371	1747	788	1987	1873

PLATE PLACEMENT TOL. = 0.250 inches

PLATE ROTATION TOL. = 5.0 Deg.

JSI GRIP= 0.89 (Q) (INPUT = 0.90)
JSI METAL= 0.47 (M) (INPUT = 1.00)

JOB NAME	TRUSS NAME	QUANTITY	PLY	JOB DESC.	DRWG NO.
324088	J01		1	TRUSS DESC. JT 45147	E20115234

Alpa Roof Truss, Maple

Version 8.330 S May 6 2020 MiTek Industries, Inc. Fri Nov 20 15:10:34 2020 Page 1

ID:?e6mKUZ36q6Hh0QiNXna66yd61Q-vCPpynOmONYKydKMBPMmUIvhBz4l8C IY0oXHZyHGP3

Scale = 1:23.3

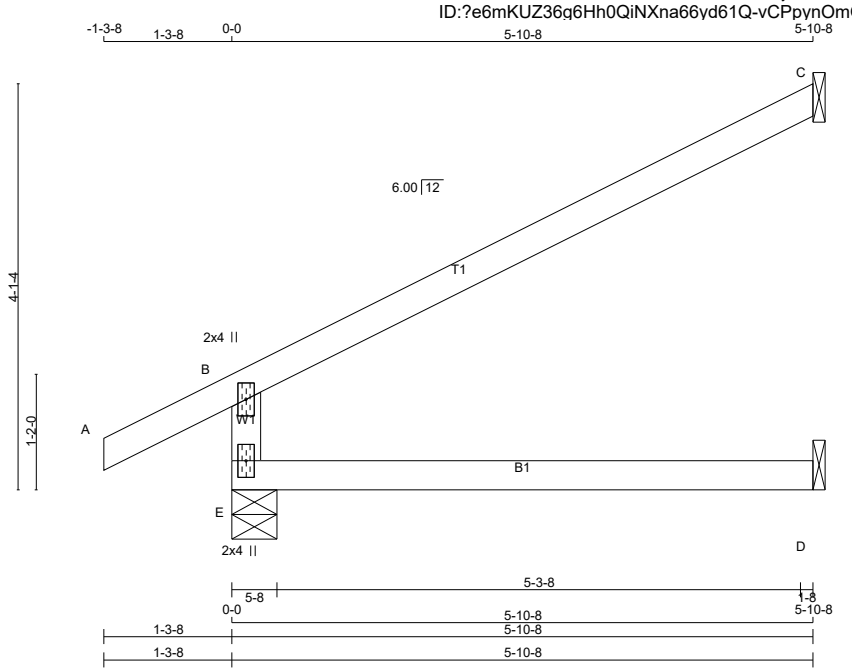

TOTAL WEIGHT = 11 X 17 = 185 lb

LUMBER

N. L. G. A. RULES

CHORDS	SIZE		LUMBER	DESCR.
E - B	2x4	DRY	No.2	SPF
A - C	2x4	DRY	No.2	SPF
E - D	2x4	DRY	No.2	SPF

DRY: SEASONED LUMBER.

PLATES (table is in inches)

JT	TYPE	PLATES	W	LEN	Y	X
B	TMV+p	MT20	2.0	4.0		
E	BMV1+p	MT20	2.0	4.0		

LATERAL BRACE(S) SHOWN SHALL BE 2X4 SPF#2

DIMENSIONS, SUPPORTS AND LOADINGS SPECIFIED BY FABRICATOR TO BE VERIFIED BY BUILDING DESIGNER

BEARINGS

JT	FACTORED GROSS REACTION VERT	HORZ	MAXIMUM FACTORED GROSS REACTION DOWN	HORZ	UPLIFT	INPUT BRG IN-SX	REQRD BRG IN-SX
E	456	0	456	0	0	5-8	1-8
C	172	0	172	0	0	1-8	1-8
D	45	0	50	0	0	1-8	1-8

SEE MITEK STANDARD DETAIL B97791H FOR CONNECTION TO JOINT(S) C , D

UNFACTORED REACTIONS

JT	1ST LCASE COMBINED	MAX./MIN. COMPONENT REACTIONS SNOW	LIVE	PERM.LIVE	WIND	DEAD	SOIL
E	322	211 / 0	0 / 0	0 / 0	0 / 0	111 / 0	0 / 0
C	119	93 / 0	0 / 0	0 / 0	0 / 0	26 / 0	0 / 0
D	36	0 / 0	0 / 0	0 / 0	0 / 0	36 / 0	0 / 0

BEARING MATERIAL TO BE SPF NO.2 OR BETTER AT JOINT(S) E, C

BRACING

TOP CHORD TO BE SHEATHED OR MAX. PURLIN SPACING = 6.25 FT.
MAX. UNBRACED BOTTOM CHORD LENGTH = 10.00 FT OR RIGID CEILING DIRECTLY APPLIED.

ALL PITCH BREAKS AND PERIMETER CORNER JOINTS MUST BE LATERALLY RESTRAINED.

LOADING

TOTAL LOAD CASES: (4)

CHORDS

MEMB. FR-TO	MAX. FACTORED FORCE (LBS)	FACTORED VERT. LOAD LC1 (PLF) FROM	TO	MAX CSI (LC)	MAX. UNBRAC LENGTH
E- B	-392 / 0	0.0	0.0	0.13 (4)	7.81
A- B	0 / 24	-78.0	-78.0	0.10 (1)	10.00
B- C	-26 / 0	-78.0	-78.0	0.46 (1)	6.25
E- D	0 / 0	-18.5	-18.5	0.13 (4)	10.00

WEBS

MEMB. FR-TO	MAX. FACTORED FORCE (LBS)	MAX CSI (LC)

[M]

DESIGN CRITERIA

SPECIFIED LOADS:

TOP CH.	LL	=	21.0	PSF
	DL	=	6.0	PSF
BOT CH.	LL	=	0.0	PSF
	DL	=	7.4	PSF
TOTAL LOAD		=	34.4	PSF

SPACING = 24.0 IN. C/C

THIS TRUSS IS DESIGNED FOR RESIDENTIAL OR SMALL BUILDING REQUIREMENTS OF PART 9, NBCC 2015

THIS DESIGN COMPLIES WITH:
- PART 9 OF BCBC 2018 , ABC 2019
- PART 9 OF OBC 2012 (2019 AMENDMENT)
- CSA 086-14
- TPIC 2014

DESIGN ASSUMPTIONS
-OVERHANG NOT TO BE ALTERED OR CUT OFF.

(55 % OF 23.0 P.S.F. G.S.L. PLUS 8.4 P.S.F. RAIN LOAD) EQUALS 21.0 P.S.F. SPECIFIED ROOF LIVE LOAD

ALLOWABLE DEFL.(LL)= L/360 (0.20")
CALCULATED VERT. DEFL.(LL) = L/ 999 (0.00")
ALLOWABLE DEFL.(TL)= L/360 (0.20")
CALCULATED VERT. DEFL.(TL) = L/ 999 (0.03")

CSI: TC=0.46/1.00 (B-C:1) , BC=0.13/1.00 (D-E:4) , WB=0.00/1.00 (n/a:0) , SSI=0.20/1.00 (B-C:1)

DOL LUMBER=1.00 NAIL=1.00 LS BEND=1.10 COMP=1.10 SHEAR=1.10 TENS= 1.10

COMPANION LIVE LOAD FACTOR = 1.00

AUTOSOLVE RIGHT HEEL ONLY

TRUSS PLATE MANUFACTURER IS NOT RESPONSIBLE FOR QUALITY CONTROL IN THE TRUSS MANUFACTURING PLANT .

NAIL VALUES

PLATE	GRIP(DRY) (PSI) MAX	MIN	SHEAR (PLI) MAX	MIN	SECTION (PLI) MAX	MIN
MT20	650	371	1747	788	1987	1873

PLATE PLACEMENT TOL. = 0.250 inches

PLATE ROTATION TOL. = 5.0 Deg.

JSI GRIP= 0.22 (B) (INPUT = 0.90)
JSI METAL= 0.16 (B) (INPUT = 1.00)

JOB NAME	TRUSS NAME	QUANTITY	PLY	JOB DESC.	DRWG NO.
324088	J01A		1	TRUSS DESC. JT 45147	E20115235

Alpa Roof Truss, Maple

Version 8.330 S May 6 2020 MiTek Industries, Inc. Fri Nov 20 15:10:35 2020 Page 1

ID:?e6mKUZ36g6Hh0QiNXna66yd61Q-NOzC97OP9hgAZnvZl6u?0WSyMMPetdkSmgX4p?yHGP2

Scale = 1:18.7

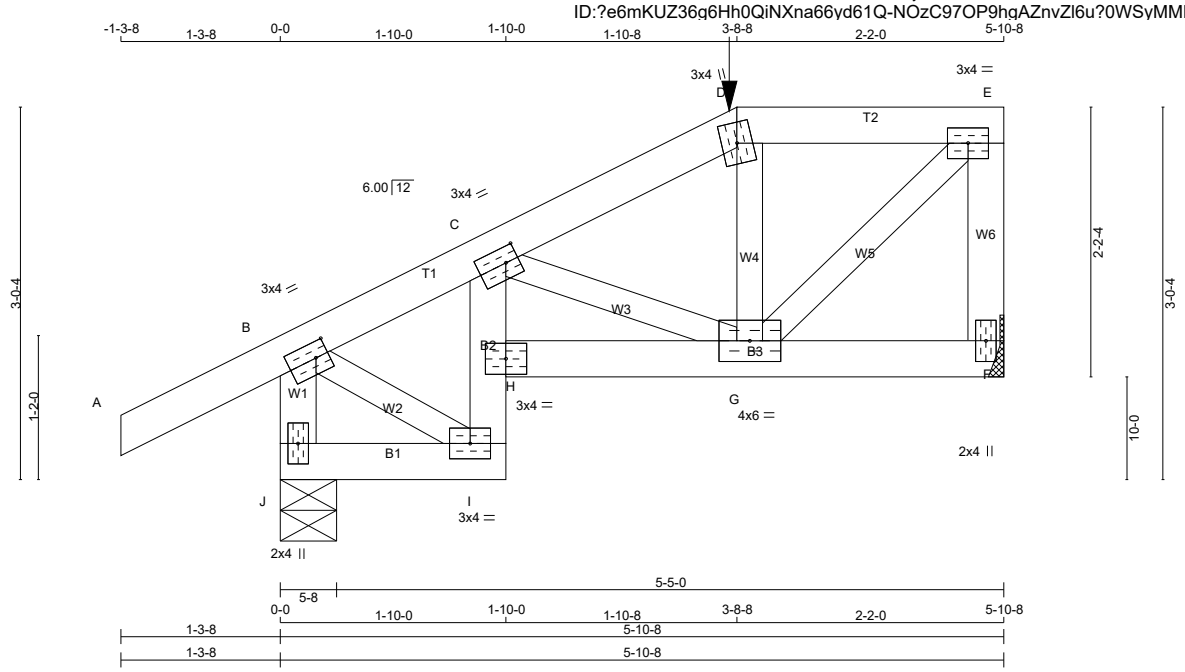

TOTAL WEIGHT = 26 lb

[M]

LUMBER

N. L. G. A. RULES

CHORDS	SIZE		LUMBER	DESCR.
A - D	2x4	DRY	No.2	SPF
D - E	2x4	DRY	No.2	SPF
F - E	2x4	DRY	No.2	SPF
J - B	2x4	DRY	No.2	SPF
J - I	2x4	DRY	No.2	SPF
I - C	2x4	DRY	No.2	SPF
H - F	2x4	DRY	No.2	SPF
ALL WEBS EXCEPT	2x3	DRY	No.2	SPF

DRY: SEASONED LUMBER.

PLATES (table is in inches)

JT	TYPE	PLATES	W	LEN	Y	X
B	TMVW-t	MT20	3.0	4.0	1.50	1.25
C	TMVW-t	MT20	3.0	4.0	1.50	1.25
D	TTW+m	MT20	3.0	4.0		
E	TMVW-t	MT20	3.0	4.0		
F	BMV1+p	MT20	2.0	4.0		
G	BMWWW-t	MT20	4.0	6.0		
H	BVM-l	MT20	3.0	4.0		
I	BMVW-t	MT20	3.0	4.0		
J	BMV1+p	MT20	2.0	4.0		

LATERAL BRACE(S) SHOWN SHALL BE 2X4 SPF#2

DIMENSIONS, SUPPORTS AND LOADINGS SPECIFIED BY FABRICATOR TO BE VERIFIED BY BUILDING DESIGNER

BEARINGS

JT	FACTORED GROSS REACTION VERT	HORZ	MAXIMUM FACTORED GROSS REACTION DOWN	HORZ	UPLIFT	INPUT BRG IN-SX	REQRD BRG IN-SX
F	420	0	420	0	0	MECHANICAL	
J	477	0	477	0	0	5-8	1-8

A SUITABLE HANGER/MECHANICAL CONNECTION IS REQUIRED AT JOINT F. MINIMUM BEARING LENGTH AT JOINT F = 1-8.

UNFACTORED REACTIONS

JT	1ST LCASE COMBINED	MAX./MIN. COMPONENT REACTIONS SNOW	LIVE	PERM.LIVE	WIND	DEAD	SOIL
F	299	185 / 0	0 / 0	0 / 0	0 / 0	115 / 0	0 / 0
J	339	215 / 0	0 / 0	0 / 0	0 / 0	124 / 0	0 / 0

BEARING MATERIAL TO BE SPF NO.2 OR BETTER AT JOINT(S) J

BRACING

TOP CHORD TO BE SHEATHED OR MAX. PURLIN SPACING = 6.25 FT.
MAX. UNBRACED BOTTOM CHORD LENGTH = 7.81 FT OR RIGID CEILING DIRECTLY APPLIED.

ALL PITCH BREAKS AND PERIMETER CORNER JOINTS MUST BE LATERALLY RESTRAINED.

LOADING

TOTAL LOAD CASES: (4)

CHORDS

MEMB. FR-TO	MAX. FACTORED FORCE (LBS)	FACTORED VERT. LOAD LC1 (PLF) FROM	TO	MAX CSI (LC)	MAX. UNBRAC LENGTH
A- B	0 / 24	-78.0	-78.0	0.11 (1)	10.00
B- C	-300 / 0	-78.0	-78.0	0.10 (1)	6.25
C- D	-362 / 0	-78.0	-78.0	0.05 (1)	6.25
D- E	-320 / 0	-111.3	-111.3	0.06 (1)	6.25
F- E	-386 / 0	0.0	0.0	0.06 (1)	7.81
J- B	-489 / 0	0.0	0.0	0.01 (4)	7.81
J- I	-9 / 9	-26.4	-26.4	0.08 (1)	10.00
I- H	-70 / 0	0.0	0.0	0.22 (1)	7.81
H- C	-62 / 12	0.0	0.0	0.16 (1)	7.81
H- G	0 / 434	-26.4	-26.4	0.13 (1)	10.00
G- F	0 / 31	-26.4	-26.4	0.04 (1)	10.00

WEBS

MEMB. FR-TO	MAX. FACTORED FORCE (LBS)	MAX CSI (LC)
C- G	-115 / 0	0.02 (1)
G- D	-153 / 0	0.03 (1)
G- E	0 / 392	0.10 (1)
B- I	0 / 279	0.07 (1)

L CONN.
C1

CONNECTION REQUIREMENTS

1) **C1:** A SUITABLE HANGER/MECHANICAL CONNECTION IS REQUIRED.

DESIGN CRITERIA

SPECIFIED LOADS:

TOP	CH.	LL =	21.0	PSF
		DL =	6.0	PSF
BOT	CH.	LL =	0.0	PSF
		DL =	7.4	PSF
TOTAL	LOAD	=	34.4	PSF

SPACING = 24.0 IN. C/C

LOADING IN FLAT SECTION BASED ON A SLOPE OF 2.00/12 MINIMUM

GIRDER TYPE: CPrimeHip
LEFT SETBACK = 3-8-8
RIGHT SETBACK = 0-0
END SETBACK = 3-8-8
END WALL WIDTH = 0-0
CORNER FRAMING TYPE: CONVENTIONAL
END JACK TYPE: CONVENTIONAL
APPLIED TO FRONT SIDE
- ADDT'L LOADS BASED ON 55 % OF GSL.

THIS TRUSS IS DESIGNED FOR RESIDENTIAL OR SMALL BUILDING REQUIREMENTS OF PART 9, NBCC 2015

THIS DESIGN COMPLIES WITH:
- PART 9 OF BCBC 2018 , ABC 2019
- PART 9 OF OBC 2012 (2019 AMENDMENT)
- CSA 086-14
- TPIC 2014

DESIGN ASSUMPTIONS
-OVERHANG NOT TO BE ALTERED OR CUT OFF.

(55 % OF 23.0 P.S.F. G.S.L. PLUS 8.4 P.S.F. RAIN LOAD) EQUALS 21.0 P.S.F. SPECIFIED ROOF LIVE LOAD

ALLOWABLE DEFL.(LL)= L/360 (0.20")
CALCULATED VERT. DEFL.(LL) = L/ 999 (0.01")
ALLOWABLE DEFL.(TL)= L/360 (0.20")
CALCULATED VERT. DEFL.(TL) = L/ 999 (0.01")

CSI: TC=0.11/1.00 (A-B:1) , BC=0.22/1.00 (H-I:1) , WB=0.10/1.00 (E-G:1) , SSI=0.21/1.00 (H-I:1)

DOL LUMBER=1.00 NAIL=1.00 LS BEND=1.00 COMP=1.00 SHEAR=1.00 TENS= 1.00

COMPANION LIVE LOAD FACTOR = 1.00

TRUSS PLATE MANUFACTURER IS NOT RESPONSIBLE FOR QUALITY CONTROL IN THE TRUSS MANUFACTURING PLANT .

NAIL VALUES

PLATE	GRIP(DRY) (PSI) MAX	MIN	SHEAR (PLI) MAX	MIN	SECTION (PLI) MAX	MIN
MT20	650	371	1747	788	1987	1873

PLATE PLACEMENT TOL. = 0.250 inches

PLATE ROTATION TOL. = 5.0 Deg.

CONTINUED ON PAGE 2

JOB NAME	TRUSS NAME	QUANTITY	PLY	JOB DESC.	DRWG NO.
324088	J01T		1	TRUSS DESC. JT 45147	E20115236

Alpa Roof Truss, Maple

Version 8.330 S May 6 2020 MiTek Industries, Inc. Fri Nov 20 15:10:36 2020 Page 1

ID:?e6mKUZ36q6Hh0QiNXna66yd61Q-raXaMTP1w o1BxUlJqPEZj?6pmmoc4mb?KHeLSyHGP1

Scale = 1:23.5

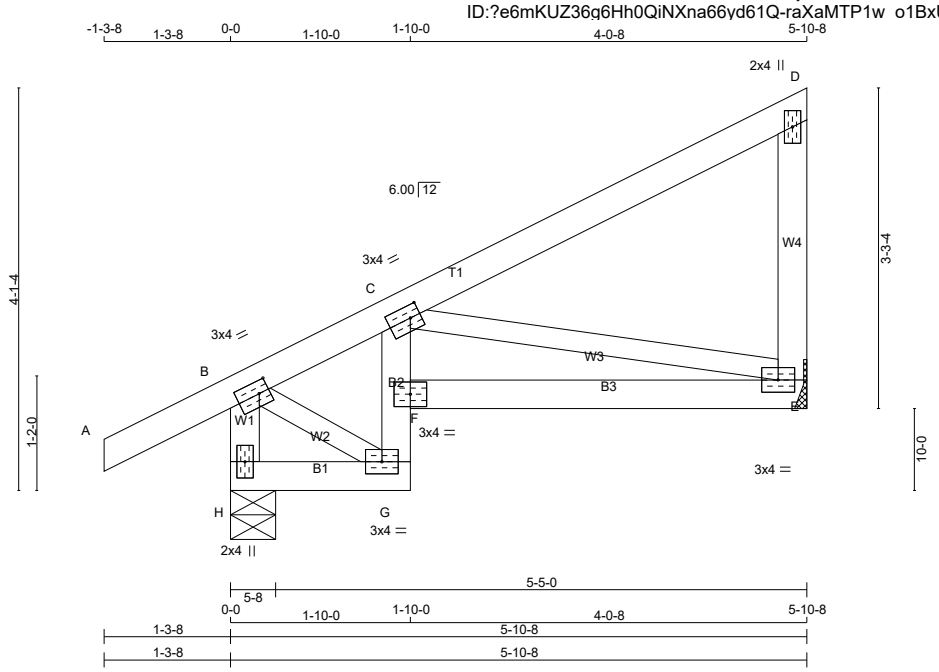

TOTAL WEIGHT = 9 X 26 = 232 lb

[M]

LUMBER

N. L. G. A. RULES

CHORDS	SIZE		LUMBER	DESCR.
H - B	2x4	DRY	No.2	SPF
A - D	2x4	DRY	No.2	SPF
E - D	2x4	DRY	No.2	SPF
H - G	2x4	DRY	No.2	SPF
G - C	2x4	DRY	No.2	SPF
F - E	2x4	DRY	No.2	SPF
ALL WEBS	2x3	DRY	No.2	SPF

DRY: SEASONED LUMBER.

PLATES (table is in inches)

JT	TYPE	PLATES	W	LEN	Y	X
B	TMVW-t	MT20	3.0	4.0	1.50	1.25
C	TMVW-t	MT20	3.0	4.0	1.50	1.25
D	TMV+p	MT20	2.0	4.0		
E	BMVW1-t	MT20	3.0	4.0		
F	BVM-l	MT20	3.0	4.0		
G	BMVW-t	MT20	3.0	4.0		
H	BMV1+p	MT20	2.0	4.0		

LATERAL BRACE(S) SHOWN SHALL BE 2X4 SPF#2

DIMENSIONS, SUPPORTS AND LOADINGS SPECIFIED BY FABRICATOR TO BE VERIFIED BY BUILDING DESIGNER

BEARINGS

JT	FACTORED GROSS REACTION VERT	HORZ	MAXIMUM FACTORED GROSS REACTION DOWN	HORZ	UPLIFT	INPUT BRG IN-SX	REQRD BRG IN-SX
H	401	0	401	0	0	5-8	1-8
E	271	0	271	0	0	MECHANICAL	

A SUITABLE HANGER/MECHANICAL CONNECTION IS REQUIRED AT JOINT E. MINIMUM BEARING LENGTH AT JOINT E = 1-8.

UNFACTORED REACTIONS

JT	1ST LCASE COMBINED	MAX./MIN. COMPONENT REACTIONS SNOW	LIVE	PERM.LIVE	WIND	DEAD	SOIL
H	284	187 / 0	0 / 0	0 / 0	0 / 0	97 / 0	0 / 0
E	194	117 / 0	0 / 0	0 / 0	0 / 0	77 / 0	0 / 0

BEARING MATERIAL TO BE SPF NO.2 OR BETTER AT JOINT(S) H

BRACING

TOP CHORD TO BE SHEATHED OR MAX. PURLIN SPACING = 6.25 FT.
MAX. UNBRACED BOTTOM CHORD LENGTH = 6.25 FT OR RIGID CEILING DIRECTLY APPLIED.

ALL PITCH BREAKS AND PERIMETER CORNER JOINTS MUST BE LATERALLY RESTRAINED.

LOADING

TOTAL LOAD CASES: (4)

CHORDS

MEMB. FR-TO	MAX. FACTORED FORCE (LBS)	FACTORED VERT. LOAD (PLF) FROM	TO	LC1 MAX CSI (LC)	MAX. UNBRAC LENGTH
H- B	-412 / 0	0.0	0.0	0.03 (1)	7.81
A- B	0 / 24	-78.0	-78.0	0.10 (1)	10.00
B- C	-227 / 0	-78.0	-78.0	0.07 (1)	6.25
C- D	-52 / 0	-78.0	-78.0	0.13 (1)	6.25
E- D	-138 / 0	0.0	0.0	0.12 (1)	7.81
H- G	-29 / 3	-18.5	-18.5	0.06 (1)	6.25
G- F	-68 / 0	0.0	0.0	0.16 (1)	7.81
F- C	-45 / 33	0.0	0.0	0.14 (1)	7.81
F- E	0 / 424	-18.5	-18.5	0.13 (1)	10.00

WEBS

MEMB. FR-TO	MAX. FACTORED FORCE (LBS)	MAX CSI (LC)
B- G	0 / 244	0.05 (1)
C- E	-386 / 0	0.11 (1)

DESIGN CRITERIA

SPECIFIED LOADS:

TOP	CH.	LL =	21.0	PSF
		DL =	6.0	PSF
BOT	CH.	LL =	0.0	PSF
		DL =	7.4	PSF
TOTAL	LOAD	=	34.4	PSF

SPACING = 24.0 IN. C/C

THIS TRUSS IS DESIGNED FOR RESIDENTIAL OR SMALL BUILDING REQUIREMENTS OF PART 9, NBCC 2015

THIS DESIGN COMPLIES WITH:
- PART 9 OF BCBC 2018 , ABC 2019
- PART 9 OF OBC 2012 (2019 AMENDMENT)
- CSA 086-14
- TPIC 2014

DESIGN ASSUMPTIONS
-OVERHANG NOT TO BE ALTERED OR CUT OFF.

(55 % OF 23.0 P.S.F. G.S.L. PLUS 8.4 P.S.F. RAIN LOAD) EQUALS 21.0 P.S.F. SPECIFIED ROOF LIVE LOAD

ALLOWABLE DEFL.(LL)= L/360 (0.20")
CALCULATED VERT. DEFL.(LL) = L/ 999 (0.01")
ALLOWABLE DEFL.(TL)= L/360 (0.20")
CALCULATED VERT. DEFL.(TL) = L/ 999 (0.02")

CSI: TC=0.13/1.00 (C-D:1) , BC=0.16/1.00 (F-G:1) , WB=0.11/1.00 (C-E:1) , SSI=0.18/1.00 (C-F:1)

DOL LUMBER=1.00 NAIL=1.00 LS BEND=1.10 COMP=1.10 SHEAR=1.10 TENS= 1.10

COMPANION LIVE LOAD FACTOR = 1.00

TRUSS PLATE MANUFACTURER IS NOT RESPONSIBLE FOR QUALITY CONTROL IN THE TRUSS MANUFACTURING PLANT .

NAIL VALUES

PLATE	GRIP(DRY) (PSI) MAX	MIN	SHEAR (PLI) MAX	MIN	SECTION (PLI) MAX	MIN
MT20	650	371	1747	788	1987	1873

PLATE PLACEMENT TOL. = 0.250 inches

PLATE ROTATION TOL. = 5.0 Deg.

JSI GRIP= 0.64 (E) (INPUT = 0.90)
JSI METAL= 0.14 (E) (INPUT = 1.00)

JOB NAME	TRUSS NAME	QUANTITY	PLY	JOB DESC.	DRWG NO.
324088	J02		1	TRUSS DESC. JT 45147	E20115237

Alpa Roof Truss, Maple

Version 8.330 S May 6 2020 MiTek Industries, Inc. Fri Nov 20 15:16:06 2020 Page 1

ID:?e6mKUZ36g6Hh0QiNXna66yd61Q-B3TKdJP1CNNDneiAe7KdxJfUSoPJxLBAugD5wJyHGJt

Scale = 1:31.3

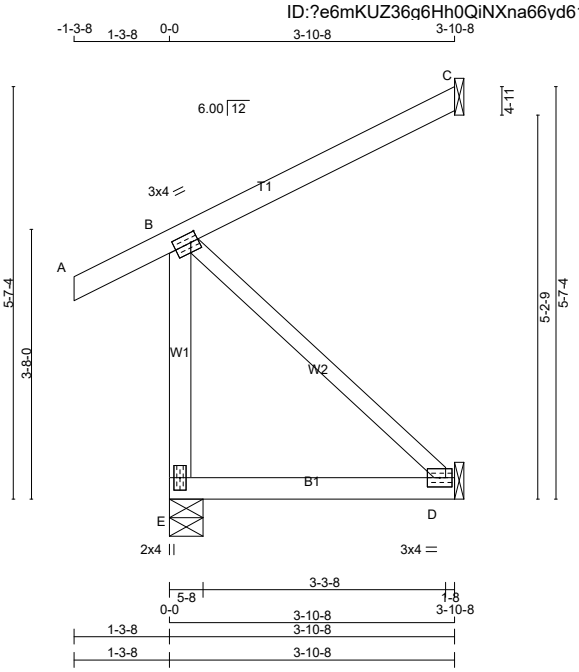

TOTAL WEIGHT = 5 X 19 = 93 lb

[M]

LUMBER

N. L. G. A. RULES

CHORDS	SIZE		LUMBER	DESCR.
E - B	2x4	DRY	No.2	SPF
A - C	2x4	DRY	No.2	SPF
E - D	2x4	DRY	No.2	SPF
ALL WEBS	2x3	DRY	No.2	SPF

DRY: SEASONED LUMBER.

PLATES (table is in inches)

JT	TYPE	PLATES	W	LEN	Y	X
B	TMVW-t	MT20	3.0	4.0	1.50	1.25
D	BMW1-t	MT20	3.0	4.0		
E	BMV1+p	MT20	2.0	4.0		

LATERAL BRACE(S) SHOWN SHALL BE 2X4 SPF#2

DIMENSIONS, SUPPORTS AND LOADINGS SPECIFIED BY FABRICATOR TO BE VERIFIED BY BUILDING DESIGNER

BEARINGS

JT	FACTORED GROSS REACTION VERT	HORZ	MAXIMUM FACTORED GROSS REACTION DOWN	HORZ	UPLIFT	INPUT BRG IN-SX	REQRD BRG IN-SX
E	291	0	291	0	0	5-8	1-8
C	151	0	151	0	0	1-8	1-8
D	34	0	38	0	0	1-8	1-8

SEE MITEK STANDARD DETAIL B97791H FOR CONNECTION TO JOINT(S) C , D

UNFACTORED REACTIONS

JT	1ST LCASE COMBINED	MAX./MIN. COMPONENT REACTIONS SNOW	LIVE	PERM.LIVE	WIND	DEAD	SOIL
E	205	138 / 0	0 / 0	0 / 0	0 / 0	67 / 0	0 / 0
C	105	81 / 0	0 / 0	0 / 0	0 / 0	23 / 0	0 / 0
D	27	0 / 0	0 / 0	0 / 0	0 / 0	27 / 0	0 / 0

BEARING MATERIAL TO BE SPF NO.2 OR BETTER AT JOINT(S) E

BRACING

TOP CHORD TO BE SHEATHED OR MAX. PURLIN SPACING = 10.00 FT.
MAX. UNBRACED BOTTOM CHORD LENGTH = 10.00 FT OR RIGID CEILING DIRECTLY APPLIED.

ALL PITCH BREAKS AND PERIMETER CORNER JOINTS MUST BE LATERALLY RESTRAINED.

LOADING

TOTAL LOAD CASES: (7)

CHORDS

MEMB. FR-TO	MAX. FACTORED FORCE (LBS)	FACTORED VERT. LOAD LC1 (PLF) FROM	TO	MAX CSI (LC)	MAX. UNBRAC LENGTH
E- B	-257 / 0	0.0	0.0	0.06 (1)	7.81
A- B	0 / 24	-78.0	-78.0	0.12 (5)	10.00
B- C	0 / 0	-78.0	-78.0	0.20 (1)	10.00
E- D	0 / 0	-18.5	-18.5	0.07 (4)	10.00

WEBS

MEMB. FR-TO	MAX. FACTORED FORCE (LBS)	MAX CSI (LC)
B- D	0 / 0	0.00 (1)

CANTILEVER ANALYSIS HAS BEEN CONSIDERED IN THIS DESIGN

PATTERN-LOADING CHECK APPLIED TO THIS TRUSS.

DESIGN CRITERIA

SPECIFIED LOADS:

TOP CH.	LL	=	21.0	PSF
	DL	=	6.0	PSF
BOT CH.	LL	=	0.0	PSF
	DL	=	7.4	PSF
TOTAL LOAD		=	34.4	PSF

SPACING = 24.0 IN. C/C

THIS TRUSS IS DESIGNED FOR RESIDENTIAL OR SMALL BUILDING REQUIREMENTS OF PART 9, NBCC 2015

THIS DESIGN COMPLIES WITH:
- PART 9 OF BCBC 2018 , ABC 2019
- PART 9 OF OBC 2012 (2019 AMENDMENT)
- CSA 086-14
- TPIC 2014

(55 % OF 23.0 P.S.F. G.S.L. PLUS 8.4 P.S.F. RAIN LOAD) EQUALS 21.0 P.S.F. SPECIFIED ROOF LIVE LOAD

ALLOWABLE DEFL.(TL)= L/360 (0.19")
CALCULATED VERT. DEFL.(TL) = L/ 999 (0.01")

CSI: TC=0.20/1.00 (B-C:1) , BC=0.07/1.00 (D-E:4) , WB=0.00/1.00 (B-D:1) , SSI=0.11/1.00 (B-C:1)

DOL LUMBER=1.00 NAIL=1.00 LS BEND=1.10 COMP=1.10 SHEAR=1.10 TENS= 1.10

COMPANION LIVE LOAD FACTOR = 1.00

TRUSS PLATE MANUFACTURER IS NOT RESPONSIBLE FOR QUALITY CONTROL IN THE TRUSS MANUFACTURING PLANT .

NAIL VALUES

PLATE	GRIP(DRY) (PSI) MAX	MIN	SHEAR (PLI) MAX	MIN	SECTION (PLI) MAX	MIN
MT20	650	371	1747	788	1987	1873

PLATE PLACEMENT TOL. = 0.250 inches

PLATE ROTATION TOL. = 5.0 Deg.

JSI GRIP= 0.23 (B) (INPUT = 0.90)
JSI METAL= 0.05 (E) (INPUT = 1.00)

JOB NAME	TRUSS NAME	QUANTITY	PLY	JOB DESC.	DRWG NO.
324088	J03		1	TRUSS DESC. JT 45147	E20115238

Alpa Roof Truss, Maple

Version 8.330 S May 6 2020 MiTek Industries, Inc. Fri Nov 20 15:10:38 2020 Page 1

ID:?e6mKUZ36g6Hh0QiNXna66yd61Q-nzeKn9RHSc2lQEd8QFRie84S5aU14? uTemkQKyHGP?

Scale = 1:21.1

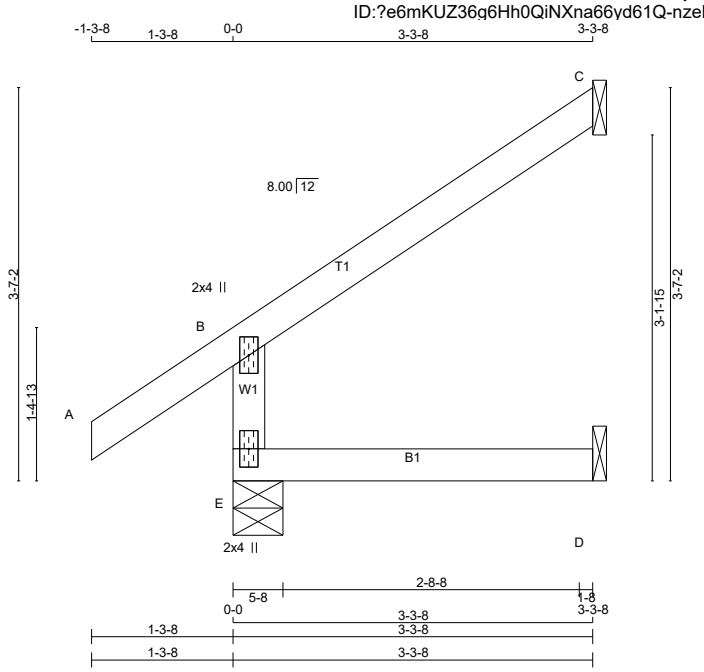

TOTAL WEIGHT = 5 X 11 = 57 lb

[M]

LUMBER

N. L. G. A. RULES

CHORDS	SIZE		LUMBER	DESCR.
E - B	2x4	DRY	No.2	SPF
A - C	2x4	DRY	No.2	SPF
E - D	2x4	DRY	No.2	SPF

DRY: SEASONED LUMBER.

PLATES (table is in inches)

JT	TYPE	PLATES	W	LEN	Y	X
B	TMV+p	MT20	2.0	4.0		
E	BMV1+p	MT20	2.0	4.0		

LATERAL BRACE(S) SHOWN SHALL BE 2X4 SPF#2

DIMENSIONS, SUPPORTS AND LOADINGS SPECIFIED BY FABRICATOR TO BE VERIFIED BY BUILDING DESIGNER

BEARINGS

JT	FACTORED GROSS REACTION VERT	HORZ	MAXIMUM FACTORED GROSS REACTION DOWN	HORZ	UPLIFT	INPUT BRG IN-SX	REQRD BRG IN-SX
E	302	0	302	0	0	5-8	1-8
C	96	0	96	0	0	1-8	1-8
D	27	0	30	0	0	1-8	1-8

SEE MITEK STANDARD DETAIL B97791H FOR CONNECTION TO JOINT(S) C , D

UNFACTORED REACTIONS

JT	1ST LCASE COMBINED	MAX./MIN. COMPONENT REACTIONS SNOW	LIVE	PERM.LIVE	WIND	DEAD	SOIL
E	212	144 / 0	0 / 0	0 / 0	0 / 0	69 / 0	0 / 0
C	67	52 / 0	0 / 0	0 / 0	0 / 0	15 / 0	0 / 0
D	21	0 / 0	0 / 0	0 / 0	0 / 0	21 / 0	0 / 0

BEARING MATERIAL TO BE SPF NO.2 OR BETTER AT JOINT(S) E

BRACING

TOP CHORD TO BE SHEATHED OR MAX. PURLIN SPACING = 6.25 FT.
MAX. UNBRACED BOTTOM CHORD LENGTH = 10.00 FT OR RIGID CEILING DIRECTLY APPLIED.

ALL PITCH BREAKS AND PERIMETER CORNER JOINTS MUST BE LATERALLY RESTRAINED.

LOADING

TOTAL LOAD CASES: (7)

CHORDS MEMB. FR-TO	MAX. FACTORED FORCE (LBS)	FACTORED VERT. LOAD (PLF) FROM	TO	LC1 MAX CSI (LC)	WEBS MAX. UNBRAC LENGTH	MEMB. FR-TO	MAX. FACTORED FORCE (LBS)	MAX CSI (LC)
E- B	-267 / 0	0.0	0.0	0.03 (4)	7.81			
A- B	0 / 30	-78.0	-78.0	0.12 (5)	10.00			
B- C	-18 / 0	-78.0	-78.0	0.14 (6)	6.25			
E- D	0 / 0	-18.5	-18.5	0.04 (4)	10.00			

CANTILEVER ANALYSIS HAS BEEN CONSIDERED IN THIS DESIGN

PATTERN-LOADING CHECK APPLIED TO THIS TRUSS.

DESIGN CRITERIA

SPECIFIED LOADS:

TOP CH.	LL	=	21.0	PSF
	DL	=	6.0	PSF
BOT CH.	LL	=	0.0	PSF
	DL	=	7.4	PSF
TOTAL LOAD		=	34.4	PSF

SPACING = 24.0 IN. C/C

THIS TRUSS IS DESIGNED FOR RESIDENTIAL OR SMALL BUILDING REQUIREMENTS OF PART 9, NBCC 2015

THIS DESIGN COMPLIES WITH:
- PART 9 OF BCBC 2018 , ABC 2019
- PART 9 OF OBC 2012 (2019 AMENDMENT)
- CSA 086-14
- TPIC 2014

DESIGN ASSUMPTIONS
-OVERHANG NOT TO BE ALTERED OR CUT OFF.

(55 % OF 23.0 P.S.F. G.S.L. PLUS 8.4 P.S.F. RAIN LOAD) EQUALS 21.0 P.S.F. SPECIFIED ROOF LIVE LOAD

ALLOWABLE DEFL.(LL)= L/360 (0.19")
CALCULATED VERT. DEFL.(LL) = L/ 999 (0.00")
ALLOWABLE DEFL.(TL)= L/360 (0.19")
CALCULATED VERT. DEFL.(TL) = L/ 999 (0.00")

CSI: TC=0.14/1.00 (B-C:6) , BC=0.04/1.00 (D-E:4) , WB=0.00/1.00 (n/a:0) , SSI=0.10/1.00 (B-C:6)

DOL LUMBER=1.00 NAIL=1.00 LS BEND=1.10 COMP=1.10 SHEAR=1.10 TENS= 1.10

COMPANION LIVE LOAD FACTOR = 1.00

AUTOSOLVE RIGHT HEEL ONLY

TRUSS PLATE MANUFACTURER IS NOT RESPONSIBLE FOR QUALITY CONTROL IN THE TRUSS MANUFACTURING PLANT .

NAIL VALUES

PLATE	GRIP(DRY) (PSI) MAX	MIN	SHEAR (PLI) MAX	MIN	SECTION (PLI) MAX	MIN
MT20	650	371	1747	788	1987	1873

PLATE PLACEMENT TOL. = 0.250 inches

PLATE ROTATION TOL. = 5.0 Deg.

JSI GRIP= 0.16 (B) (INPUT = 0.90)
JSI METAL= 0.14 (B) (INPUT = 1.00)

JOB NAME	TRUSS NAME	QUANTITY	PLY	JOB DESC.	DRWG NO.
324088	J04		1	TRUSS DESC. JT 45147	E20115239

Alpha Roof Truss, Maple

Version 8.330 S May 6 2020 MiTek Industries, Inc. Fri Nov 20 15:10:38 2020 Page 1

ID:?e6mKUZ36q6Hh0QiNXna66yd61Q-nzeKn9RHSc2lQEd8QFRie84SzaUt4? uTemkQKyHGP?

Scale = 1:30.1

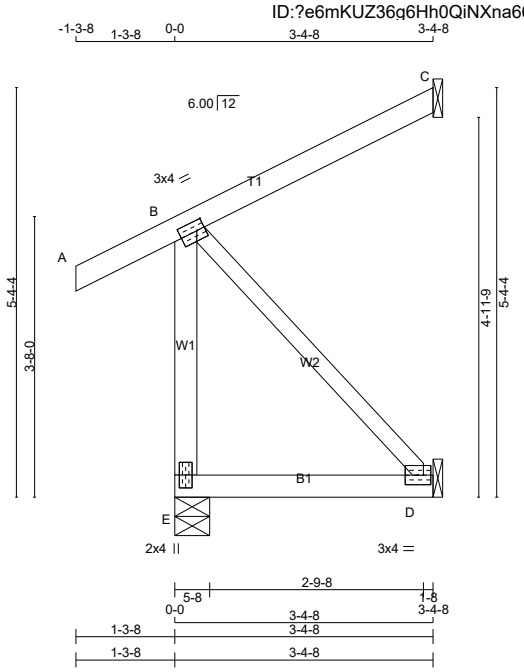

TOTAL WEIGHT = 5 X 17 = 86 lb

LUMBER

N. L. G. A. RULES

CHORDS	SIZE		LUMBER	DESCR.
E - B	2x4	DRY	No.2	SPF
A - C	2x4	DRY	No.2	SPF
E - D	2x4	DRY	No.2	SPF
ALL WEBS	2x3	DRY	No.2	SPF

DRY: SEASONED LUMBER.

PLATES (table is in inches)

JT	TYPE	PLATES	W	LEN	Y	X
B	TMVW-t	MT20	3.0	4.0	1.50	1.25
D	BMW1-t	MT20	3.0	4.0		
E	BMV1+p	MT20	2.0	4.0		

LATERAL BRACE(S) SHOWN SHALL BE 2X4 SPF#2

DIMENSIONS, SUPPORTS AND LOADINGS SPECIFIED BY FABRICATOR TO BE VERIFIED BY BUILDING DESIGNER

BEARINGS

JT	FACTORED GROSS REACTION VERT	HORZ	MAXIMUM FACTORED GROSS REACTION DOWN	HORZ	UPLIFT	INPUT BRG IN-SX	REQRD BRG IN-SX
E	267	0	267	0	0	5-8	1-8
C	132	0	132	0	0	1-8	1-8
D	29	0	33	0	0	1-8	1-8

SEE MITEK STANDARD DETAIL B97791H FOR CONNECTION TO JOINT(S) C , D

UNFACTORED REACTIONS

JT	1ST LCASE COMBINED	MAX./MIN. COMPONENT REACTIONS SNOW	LIVE	PERM.LIVE	WIND	DEAD	SOIL
E	188	128 / 0	0 / 0	0 / 0	0 / 0	60 / 0	0 / 0
C	91	71 / 0	0 / 0	0 / 0	0 / 0	20 / 0	0 / 0
D	24	0 / 0	0 / 0	0 / 0	0 / 0	24 / 0	0 / 0

BEARING MATERIAL TO BE SPF NO.2 OR BETTER AT JOINT(S) E

BRACING

TOP CHORD TO BE SHEATHED OR MAX. PURLIN SPACING = 10.00 FT.
MAX. UNBRACED BOTTOM CHORD LENGTH = 10.00 FT OR RIGID CEILING DIRECTLY APPLIED.

ALL PITCH BREAKS AND PERIMETER CORNER JOINTS MUST BE LATERALLY RESTRAINED.

LOADING

TOTAL LOAD CASES: (7)

CHORDS

MEMB. FR-TO	MAX. FACTORED FORCE (LBS)	FACTORED VERT. LOAD LC1 (PLF) FROM	TO	MAX CSI (LC)	MAX. UNBRAC LENGTH
E- B	-237 / 0	0.0	0.0	0.05 (1)	7.81
A- B	0 / 24	-78.0	-78.0	0.12 (5)	10.00
B- C	0 / 0	-78.0	-78.0	0.15 (1)	10.00
E- D	0 / 0	-18.5	-18.5	0.05 (4)	10.00

WEBS

MEMB. FR-TO	MAX. FACTORED FORCE (LBS)	MAX CSI (LC)
B- D	0 / 0	0.00 (1)

CANTILEVER ANALYSIS HAS BEEN CONSIDERED IN THIS DESIGN

PATTERN-LOADING CHECK APPLIED TO THIS TRUSS.

[M]

DESIGN CRITERIA

SPECIFIED LOADS:

TOP CH.	LL	=	21.0	PSF
	DL	=	6.0	PSF
BOT CH.	LL	=	0.0	PSF
	DL	=	7.4	PSF
TOTAL LOAD		=	34.4	PSF

SPACING = 24.0 IN. C/C

THIS TRUSS IS DESIGNED FOR RESIDENTIAL OR SMALL BUILDING REQUIREMENTS OF PART 9, NBCC 2015

THIS DESIGN COMPLIES WITH:
- PART 9 OF BCBC 2018 , ABC 2019
- PART 9 OF OBC 2012 (2019 AMENDMENT)
- CSA 086-14
- TPIC 2014

(55 % OF 23.0 P.S.F. G.S.L. PLUS 8.4 P.S.F. RAIN LOAD) EQUALS 21.0 P.S.F. SPECIFIED ROOF LIVE LOAD

ALLOWABLE DEFL.(TL)= L/360 (0.19")
CALCULATED VERT. DEFL.(TL) = L/ 999 (0.00")

CSI: TC=0.15/1.00 (B-C:1) , BC=0.05/1.00 (D-E:4) , WB=0.00/1.00 (B-D:1) , SSI=0.09/1.00 (B-C:1)

DOL LUMBER=1.00 NAIL=1.00 LS BEND=1.10 COMP=1.10 SHEAR=1.10 TENS= 1.10

COMPANION LIVE LOAD FACTOR = 1.00

TRUSS PLATE MANUFACTURER IS NOT RESPONSIBLE FOR QUALITY CONTROL IN THE TRUSS MANUFACTURING PLANT .

NAIL VALUES

PLATE	GRIP(DRY) (PSI) MAX	MIN	SHEAR (PLI) MAX	MIN	SECTION (PLI) MAX	MIN
MT20	650	371	1747	788	1987	1873

PLATE PLACEMENT TOL. = 0.250 inches

PLATE ROTATION TOL. = 5.0 Deg.

JSI GRIP= 0.21 (B) (INPUT = 0.90)
JSI METAL= 0.05 (E) (INPUT = 1.00)

JOB NAME	TRUSS NAME	QUANTITY	PLY	JOB DESC.	DRWG NO.
324087	H01TA		2	TRUSS DESC. JT 45147	E20115245

Alpa Roof Truss, Maple

ID:?e6mKUZ36q6Hh0QiNXna66yd61Q-10CZqkM4kL6b28M3xNirqmm8F9TU6UJ4?eK0VAyHGG3

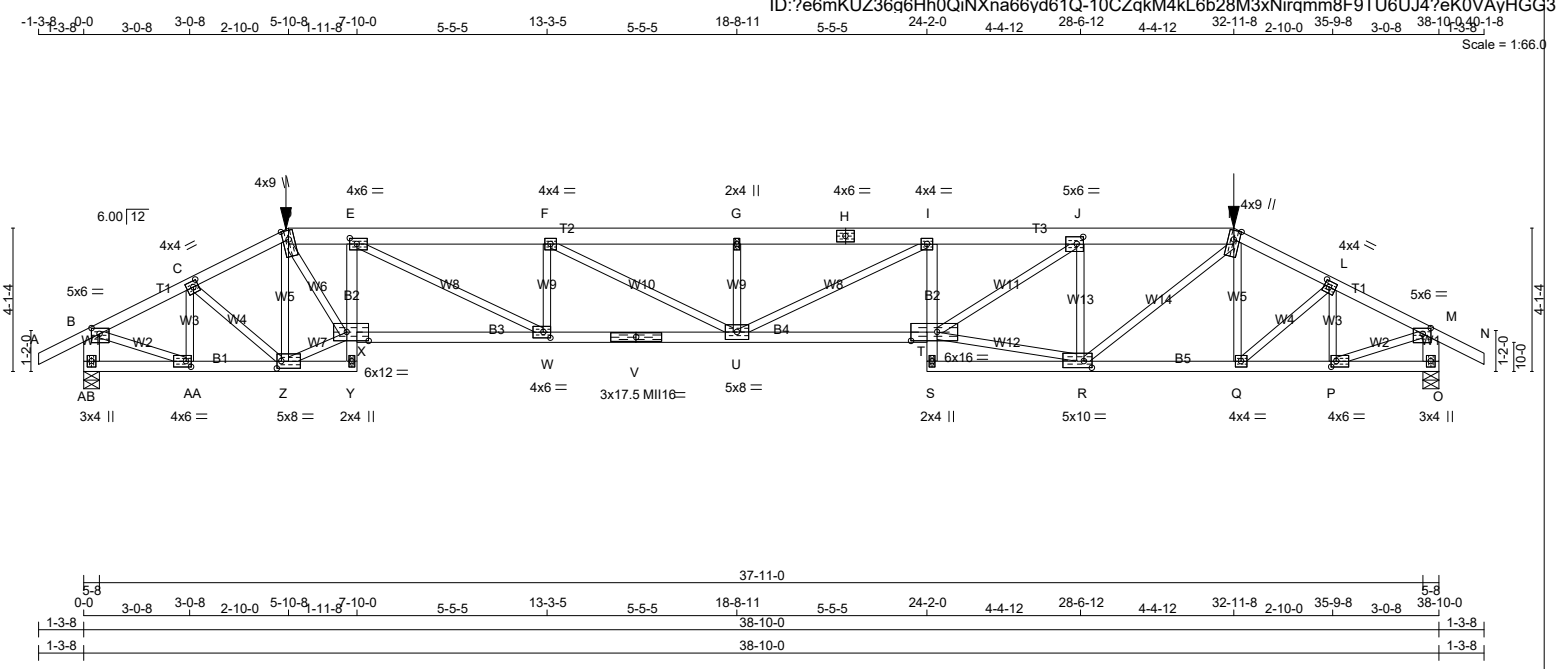

TOTAL WEIGHT = 2 X 177 = 355 lb

[M]

LUMBER

N. L. G. A. RULES

CHORDS	SIZE		LUMBER	DESCR.
A - D	2x4	DRY	No.2	SPF
D - H	2x6	DRY	No.2	SPF
H - K	2x6	DRY	No.2	SPF
K - N	2x4	DRY	No.2	SPF
AB- B	2x6	DRY	No.2	SPF
O - M	2x6	DRY	No.2	SPF
AB- Y	2x4	DRY	No.2	SPF
Y - E	2x4	DRY	No.2	SPF
X - V	2x4	DRY	1650F 1.5E	SPF
V - T	2x4	DRY	1650F 1.5E	SPF
S - I	2x4	DRY	No.2	SPF
S - O	2x4	DRY	No.2	SPF
ALL WEBS EXCEPT	2x3	DRY	No.2	SPF

DRY: SEASONED LUMBER.

DESIGN CONSISTS OF 2 TRUSSES BUILT SEPARATELY THEN FASTENED TOGETHER AS FOLLOWS:

CHORDS	#ROWS	SURFACE SPACING (IN)	LOAD(PLF)
TOP CHORDS : (0.122"X3") SPIRAL NAILS			
A- D	1	12	SIDE(61.0)
K- N	1	12	SIDE(61.0)
D- H	2	12	SIDE(37.8)
H- K	2	12	SIDE(37.8)
AB- B	2	12	TOP
O- M	2	12	TOP
BOTTOM CHORDS : (0.122"X3") SPIRAL NAILS			
AB- Y	1	12	SIDE(10.0)
Y- E	1	12	TOP
X- V	1	12	SIDE(46.7)
V- T	1	12	SIDE(46.7)
I- S	1	12	TOP
S- O	1	12	SIDE(10.0)
WEBS : (0.122"X3") SPIRAL NAILS			
Z- D	1	6	SIDE(49.4)
Q- K	1	6	SIDE(49.4)
2x3	1	6	

NAILS TO BE DRIVEN FROM ONE SIDE ONLY.

LATERAL BRACE(S) SHOWN SHALL BE 2X4 SPF#2

DIMENSIONS, SUPPORTS AND LOADINGS SPECIFIED BY FABRICATOR TO BE VERIFIED BY BUILDING DESIGNER

BEARINGS

JT	FACTORED GROSS REACTION VERT	HORZ	MAXIMUM FACTORED GROSS REACTION DOWN	HORZ	UPLIFT	INPUT BRG IN-SX	REQRD BRG IN-SX
AB	3684	0	3684	0	0	5-8	2-0
O	3684	0	3684	0	0	5-8	2-0

ALLOW FOR 0.3" OF HORIZONTAL MOVEMENT DUE TO TOTAL LOAD

UNFACTORED REACTIONS

JT	1ST LCASE COMBINED	MAX./MIN. COMPONENT REACTIONS SNOW	LIVE	PERM.LIVE	WIND	DEAD	SOIL
AB	2626	1603 / 0	0 / 0	0 / 0	0 / 0	1024 / 0	0 / 0
O	2626	1603 / 0	0 / 0	0 / 0	0 / 0	1024 / 0	0 / 0

BEARING MATERIAL TO BE SPF NO.2 OR BETTER AT JOINT(S) AB, O

BRACING

TOP CHORD TO BE SHEATHED OR MAX. PURLIN SPACING = 3.20 FT.
MAX. UNBRACED BOTTOM CHORD LENGTH = 7.12 FT OR RIGID CEILING DIRECTLY APPLIED.

ALL PITCH BREAKS AND PERIMETER CORNER JOINTS MUST BE LATERALLY RESTRAINED.

LOADING

TOTAL LOAD CASES: (4)

CHORDS

MEMB. FR-TO	MAX. FACTORED FORCE (LBS)	FACTORED VERT. LOAD (PLF) FROM	TO	LC1	MAX CSI (LC)	MAX. UNBRAC LENGTH
A- B	0 / 24	-78.0	-78.0	0.06 (1)	10.00	
B- C	-4858 / 0	-78.0	-78.0	0.14 (1)	4.28	
C- D	-5644 / 0	-78.0	-78.0	0.15 (1)	4.00	
D- E	-7983 / 0	-153.5	-153.5	0.13 (1)	4.23	
E- F	-11438 / 0	-78.0	-78.0	0.37 (1)	3.42	
F- G	-12685 / 0	-78.0	-78.0	0.40 (1)	3.23	
G- H	-12685 / 0	-78.0	-78.0	0.43 (1)	3.20	
H- I	-12685 / 0	-78.0	-78.0	0.43 (1)	3.20	
I- J	-11866 / 0	-153.5	-153.5	0.37 (1)	3.34	
J- K	-7659 / 0	-153.5	-153.5	0.21 (1)	4.22	
K- L	-5636 / 0	-78.0	-78.0	0.16 (1)	4.00	
L- M	-4857 / 0	-78.0	-78.0	0.14 (1)	4.28	
M- N	0 / 24	-78.0	-78.0	0.06 (1)	10.00	
AB- B	-3614 / 0	0.0	0.0	0.13 (1)	7.39	
O- M	-3616 / 0	0.0	0.0	0.13 (1)	7.39	
AB-AA	0 / 0	-36.4	-36.4	0.05 (4)	10.00	
AA- Z	0 / 4350	-36.4	-36.4	0.44 (1)	10.00	
Z- Y	0 / 317	-36.4	-36.4	0.08 (1)	10.00	
Y- X	-3 / 18	0.0	0.0	0.20 (1)	10.00	
X- E	-2237 / 0	0.0	0.0	0.25 (1)	7.12	
X- W	0 / 8073	-112.0	-112.0	0.71 (1)	10.00	
W- V	0 / 11438	-112.0	-112.0	0.91 (1)	10.00	
V- U	0 / 11438	-112.0	-112.0	0.91 (1)	10.00	
U- T	0 / 12028	-112.0	-112.0	0.96 (1)	10.00	
S- T	0 / 72	0.0	0.0	0.35 (1)	10.00	
T- I	-787 / 0	0.0	0.0	0.35 (1)	7.81	
S- R	0 / 511	-36.4	-36.4	0.11 (4)	10.00	
R- Q	0 / 5074	-36.4	-36.4	0.49 (1)	10.00	
Q- P	0 / 4347	-36.4	-36.4	0.42 (1)	10.00	
P- O	0 / 0	-36.4	-36.4	0.05 (4)	10.00	

WEBS

MEMB. FR-TO	MAX. FACTORED FORCE (LBS)	MAX CSI (LC)
AA- C	-1177 / 0	0.11 (1)
C- Z	0 / 951	0.12 (1)
Z- D	-2558 / 0	0.34 (1)
Z- X	0 / 5256	0.65 (1)
D- X	0 / 5404	0.67 (1)
E- W	0 / 3790	0.47 (1)
W- F	-1079 / 0	0.11 (1)
F- U	0 / 1413	0.17 (1)
U- G	-471 / 0	0.05 (1)
U- I	0 / 741	0.09 (1)
T- R	0 / 7381	0.91 (1)
T- J	0 / 4959	0.61 (1)
R- J	-3584 / 0	0.45 (1)
R- K	0 / 3430	0.42 (1)
Q- K	-458 / 0	0.06 (1)
Q- L	0 / 947	0.12 (1)
P- L	-1165 / 0	0.10 (1)
B-AA	0 / 4520	0.56 (1)
P- M	0 / 4516	0.56 (1)

FACTORED CONCENTRATED LOADS (LBS)

JT	LOC.	LC1	MAX-	MAX+	FACE	DIR.	TYPE	HEEL	CONN.
D	5-10-8	-334	-334	---	FRONT	VERT	TOTAL	---	C1
K	32-11-8	-334	-334	---	FRONT	VERT	TOTAL	---	C1

DESIGN CRITERIA

SPECIFIED LOADS:

TOP	CH.	LL =	21.0	PSF
		DL =	6.0	PSF
BOT	CH.	LL =	0.0	PSF
		DL =	7.4	PSF
TOTAL	LOAD	=	34.4	PSF

SPACING = 24.0 IN. C/C

LOADING IN FLAT SECTION BASED ON A SLOPE OF 2.00/12 MINIMUM

GIRDER TYPE: CPrimeHip
SIDE SETBACK = 5-10-8
END SETBACK = 5-10-8
END WALL WIDTH = 0-0
CORNER FRAMING TYPE: CONVENTIONAL
END JACK TYPE: CONVENTIONAL
APPLIED TO FRONT SIDE
- ADDT'L LOADS BASED ON 55 % OF GSL.
LOADS APPLIED TO FIRST 7-10-0 OF SPAN MEASURED FROM THE LEFT.

GIRDER TYPE: CPrimeHip
SIDE SETBACK = 5-10-8
END SETBACK = 5-10-8
END WALL WIDTH = 0-0
CORNER FRAMING TYPE: CONVENTIONAL
END JACK TYPE: CONVENTIONAL
APPLIED TO FRONT SIDE
- ADDT'L LOADS BASED ON 55 % OF GSL.
LOADS APPLIED TO FIRST 14-8-0 OF SPAN MEASURED FROM THE RIGHT.

GIRDER TYPE: CStdGirder
START DISTANCE = 7-10-0
START SPAN CARRIED = 5-10-8
END DISTANCE = 24-2-0
END SPAN CARRIED = 5-10-8
END WALL WIDTH = 0-0
APPLIED TO FRONT SIDE OF BOTTOM CHORD.
- ADDT'L LOADS BASED ON 55 % OF GSL.

THIS TRUSS IS DESIGNED FOR RESIDENTIAL OR SMALL BUILDING REQUIREMENTS OF PART 9, NBCC 2015

THIS DESIGN COMPLIES WITH:
- PART 9 OF BCBC 2018 , ABC 2019
- PART 9 OF OBC 2012 (2019 AMENDMENT)
- CSA 086-14
- TPIC 2014

(55 % OF 23.0 P.S.F. G.S.L. PLUS 8.4 P.S.F. RAIN LOAD) EQUALS 21.0 P.S.F. SPECIFIED ROOF LIVE LOAD

ALLOWABLE DEFL.(LL)= L/360 (1.29")
CALCULATED VERT. DEFL.(LL) = L/ 991 (0.47")
ALLOWABLE DEFL.(TL)= L/360 (1.29")
CALCULATED VERT. DEFL.(TL) = L/ 500 (0.93")

CSI: TC=0.43/1.00 (G-I:1) , BC=0.96/1.00 (T-U:1) , WB=0.91/1.00 (R-T:1) , SSI=0.22/1.00 (S-T:1)

DOL LUMBER=1.00 NAIL=1.00 LS BEND=1.00 COMP=1.00 SHEAR=1.00 TENS= 1.00

COMPANION LIVE LOAD FACTOR = 1.00

CONTINUED ON PAGE 2

GIRDER NAILING ASSUMES NAILED HANGERS ARE FASTENED WITH MIN. 3-0 INCH NAILS.

PLATES (table is in inches)

JT	TYPE	PLATES	W	LEN	Y	X
B	TMVW-p	MT20	5.0	6.0	2.00	2.75
C	TMWW-t	MT20	4.0	4.0	2.00	1.75
D	TTWW+m	MT20	4.0	9.0	Edge	
E	TMVW-t	MT20	4.0	6.0	2.00	2.50
F	TMWW-t	MT20	4.0	4.0		
G	TMW+w	MT20	2.0	4.0		
H	TS-t	MT20	4.0	6.0		
I	TMVW-t	MT20	4.0	4.0		
J	TMWW-t	MT20	5.0	6.0	2.50	2.25
K	TTWW+m	MT20	4.0	9.0	Edge	
L	TMWW-t	MT20	4.0	4.0	2.00	1.75
M	TMVW-p	MT20	5.0	6.0	2.00	2.75
O	BMV1+p	MT20	3.0	4.0		
P	BMWW-t	MT20	4.0	6.0	2.00	1.75
Q	BMWW-t	MT20	4.0	4.0		
R	BMWWW-t	MT20	5.0	10.0	2.25	2.75
S	BMV+p	MT20	2.0	4.0		
T	BVMWW-l	MT20	6.0	16.0	3.00	9.00
U	BMWWW-t	MT20	5.0	8.0		
V	BS-t	MII16	3.0	17.5		
W	BMWW-t	MT20	4.0	6.0	2.00	2.50
X	BVMWW-l	MT20	6.0	12.0	3.00	7.50
Y	BMV+p	MT20	2.0	4.0		
Z	BMWWW-t	MT20	5.0	8.0	2.50	1.50
AA	BMWW-t	MT20	4.0	6.0	2.00	1.75
AB	BMV1+p	MT20	3.0	4.0		

Edge - INDICATES REFERENCE CORNER OF PLATE TOUCHES EDGE OF CHORD.

LATERAL BRACE(S) SHOWN SHALL BE 2X4 SPF#2

AUTOSOLVE HEELS OFF

TRUSS PLATE MANUFACTURER IS NOT RESPONSIBLE FOR QUALITY CONTROL IN THE TRUSS MANUFACTURING PLANT .

NAIL VALUES

PLATE	GRIP(DRY) (PSI)		SHEAR (PLI)		SECTION (PLI)	
	MAX	MIN	MAX	MIN	MAX	MIN
MT20	650	371	1747	788	1987	1873
MII16	438	302	2547	1256	4283	1816

PLATE PLACEMENT TOL. = 0.250 inches

PLATE ROTATION TOL. = 5.0 Deg.

JSI GRIP= 0.90 (X) (INPUT = 0.90)
JSI METAL= 0.97 (T) (INPUT = 1.00)

JOB NAME	TRUSS NAME	QUANTITY	PLY	JOB DESC.	DRWG NO.
324087	H02TA		1	TRUSS DESC. JT 45147	E20115246

Alpa Roof Truss, Maple

Version 8.330 S May 6 2020 MiTek Industries, Inc. Fri Nov 20 15:20:11 2020 Page 1

ID:?e6mKUZ36q6Hh0QiNXna66yd61Q-WCmy24NiVfESqIxGV4D4M JF3Ys1r16EDI3Z1dyHGG2

Scale = 1:66.0

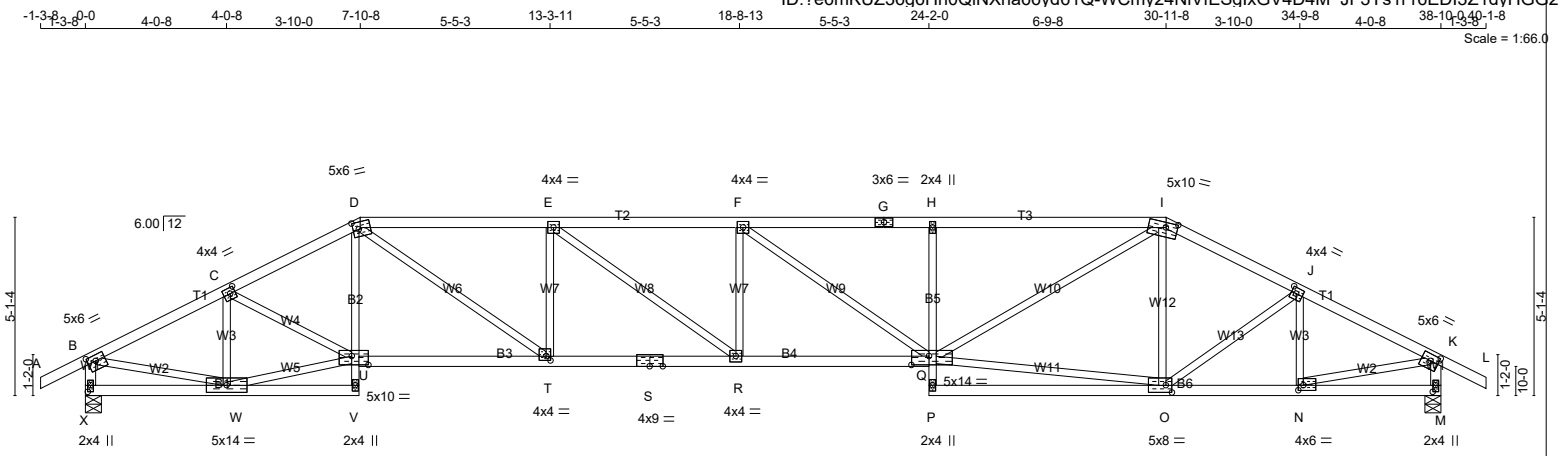

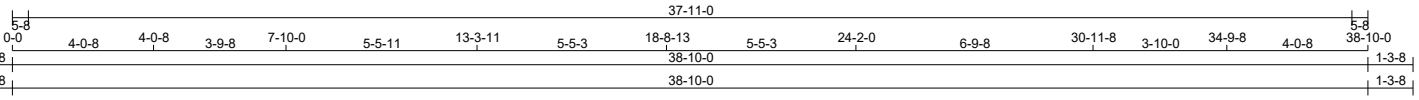

TOTAL WEIGHT = 160 lb

LUMBER

N. L. G. A. RULES

CHORDS	SIZE		LUMBER	DESCR.
A - D	2x4	DRY	No.2	SPF
D - G	2x4	DRY	1650F 1.5E	SPF
G - I	2x4	DRY	1650F 1.5E	SPF
I - L	2x4	DRY	No.2	SPF
X - B	2x4	DRY	No.2	SPF
M - K	2x4	DRY	No.2	SPF
X - V	2x4	DRY	No.2	SPF
V - D	2x3	DRY	No.2	SPF
U - S	2x4	DRY	No.2	SPF
S - Q	2x4	DRY	No.2	SPF
P - H	2x3	DRY	No.2	SPF
P - M	2x4	DRY	No.2	SPF
ALL WEBS EXCEPT	2x3	DRY	No.2	SPF

DRY: SEASONED LUMBER.

PLATES (table is in inches)

JT	TYPE	PLATES	W	LEN	Y	X
B	TMVW-t	MT20	5.0	6.0	2.00	2.75
C	TMWW-t	MT20	4.0	4.0	2.00	1.75
D	TTVW-m	MT20	5.0	6.0	2.50	2.00
E	TMWW-t	MT20	4.0	4.0		
F	TMWW-t	MT20	4.0	4.0		
G	TS-t	MT20	3.0	6.0		
H	TMV+p	MT20	2.0	4.0		
I	TTWW-m	MT20	5.0	10.0	1.75	4.00
J	TMWW-t	MT20	4.0	4.0	2.00	1.75
K	TMVW-t	MT20	5.0	6.0	2.25	2.75
M	BMV1+p	MT20	2.0	4.0	2.25	1.00
N	BMWW-t	MT20	4.0	6.0	1.75	1.75
O	BMWWW-t	MT20	5.0	8.0	2.50	2.00
P	BMV+p	MT20	2.0	4.0		
Q	BVMWWW-l	MT20	5.0	14.0	3.00	6.00
R	BMWW-t	MT20	4.0	4.0		
S	BS-t	MT20	4.0	9.0		
T	BMWW-t	MT20	4.0	4.0	1.50	1.50
U	BVMWW-l	MT20	5.0	10.0	3.00	5.75
V	BMV+p	MT20	2.0	4.0		
W	BMWWW-t	MT20	5.0	14.0		
X	BMV1+p	MT20	2.0	4.0	2.25	1.00

LATERAL BRACE(S) SHOWN SHALL BE 2X4 SPF#2

DIMENSIONS, SUPPORTS AND LOADINGS SPECIFIED BY FABRICATOR TO BE VERIFIED BY BUILDING DESIGNER

BEARINGS

JT	FACTORED GROSS REACTION VERT	HORZ	MAXIMUM FACTORED GROSS REACTION DOWN	HORZ	UPLIFT	INPUT BRG IN-SX	REQRD BRG IN-SX
X	1979	0	1979	0	0	5-8	2-15
M	1979	0	1979	0	0	5-8	2-15

UNFACTORED REACTIONS

JT	1ST LCASE COMBINED	MAX./MIN. COMPONENT REACTIONS SNOW	LIVE	PERM.LIVE	WIND	DEAD	SOIL
X	1409	872 / 0	0 / 0	0 / 0	0 / 0	537 / 0	0 / 0
M	1409	872 / 0	0 / 0	0 / 0	0 / 0	537 / 0	0 / 0

BEARING MATERIAL TO BE SPF NO.2 OR BETTER AT JOINT(S) X, M

BRACING

TOP CHORD TO BE SHEATHED OR MAX. PURLIN SPACING = 3.44 FT.
MAX. UNBRACED BOTTOM CHORD LENGTH = 7.81 FT OR RIGID CEILING DIRECTLY APPLIED.

ALL PITCH BREAKS AND PERIMETER CORNER JOINTS MUST BE LATERALLY RESTRAINED.

LOADING

TOTAL LOAD CASES: (4)

CHORDS

MEMB. FR-TO	MAX. FACTORED FORCE (LBS)	FACTORED VERT. LOAD LC1 (PLF) FROM	TO	MAX CSI (LC)	MAX. UNBRAC LENGTH
A- B	0 / 24	-78.0	-78.0	0.10 (1)	10.00
B- C	-2711 / 0	-78.0	-78.0	0.26 (1)	4.00
C- D	-3347 / 0	-78.0	-78.0	0.31 (1)	3.61
D- E	-4185 / 0	-78.0	-78.0	0.46 (1)	3.64
E- F	-4604 / 0	-78.0	-78.0	0.49 (1)	3.47
F- G	-4362 / 0	-78.0	-78.0	0.58 (1)	3.44
G- H	-4362 / 0	-78.0	-78.0	0.58 (1)	3.44
H- I	-4345 / 0	-78.0	-78.0	0.68 (1)	3.44
I- J	-2771 / 0	-78.0	-78.0	0.28 (1)	3.94
J- K	-2662 / 0	-78.0	-78.0	0.27 (1)	4.02
K- L	0 / 24	-78.0	-78.0	0.10 (1)	10.00
X- B	-1940 / 0	0.0	0.0	0.20 (1)	6.04
M- K	-1938 / 0	0.0	0.0	0.20 (1)	6.04
X- W	0 / 0	-18.5	-18.5	0.07 (4)	10.00
W- V	0 / 36	-18.5	-18.5	0.06 (4)	10.00
V- U	0 / 30	0.0	0.0	0.09 (1)	10.00
U- D	0 / 384	0.0	0.0	0.17 (1)	10.00
U- T	0 / 2960	-18.5	-18.5	0.55 (1)	10.00
T- S	0 / 4185	-18.5	-18.5	0.72 (1)	10.00
S- R	0 / 4185	-18.5	-18.5	0.72 (1)	10.00
R- Q	0 / 4604	-18.5	-18.5	0.82 (1)	10.00
P- Q	0 / 57	0.0	0.0	0.19 (1)	10.00
Q- H	-550 / 0	0.0	0.0	0.25 (1)	7.81
P- O	0 / 79	-18.5	-18.5	0.18 (4)	10.00
O- N	0 / 2393	-18.5	-18.5	0.49 (1)	10.00
N- M	0 / 0	-18.5	-18.5	0.08 (4)	10.00

WEBS

MEMB. FR-TO	MAX. FACTORED FORCE (LBS)	MAX CSI (LC)
W- C	-1018 / 0	0.19 (1)
W- U	0 / 2387	0.54 (1)
C- U	0 / 687	0.15 (1)
D- T	0 / 1506	0.34 (1)
T- E	-797 / 0	0.22 (1)
E- R	0 / 519	0.12 (1)
R- F	-201 / 0	0.05 (1)
F- Q	-298 / 0	0.26 (1)
Q- O	0 / 2403	0.54 (1)
Q- I	0 / 2189	0.49 (1)
O- I	-218 / 0	0.08 (1)
O- J	0 / 89	0.02 (1)
N- J	-463 / 0	0.09 (1)
B- W	0 / 2484	0.56 (1)
N- K	0 / 2446	0.55 (1)

[M]

DESIGN CRITERIA

SPECIFIED LOADS:

TOP CH.	LL	=	21.0	PSF
	DL	=	6.0	PSF
BOT CH.	LL	=	0.0	PSF
	DL	=	7.4	PSF
TOTAL LOAD		=	34.4	PSF

SPACING = 24.0 IN. C/C

LOADING IN FLAT SECTION BASED ON A SLOPE OF 2.00/12 MINIMUM

THIS TRUSS IS DESIGNED FOR RESIDENTIAL OR SMALL BUILDING REQUIREMENTS OF PART 9, NBCC 2015

THIS DESIGN COMPLIES WITH:
- PART 9 OF BCBC 2018 , ABC 2019
- PART 9 OF OBC 2012 (2019 AMENDMENT)
- CSA 086-14
- TPIC 2014

(55 % OF 23.0 P.S.F. G.S.L. PLUS 8.4 P.S.F. RAIN LOAD) EQUALS 21.0 P.S.F. SPECIFIED ROOF LIVE LOAD

ALLOWABLE DEFL.(LL)= L/360 (1.29")
CALCULATED VERT. DEFL.(LL) = L/ 999 (0.33")
ALLOWABLE DEFL.(TL)= L/360 (1.29")
CALCULATED VERT. DEFL.(TL) = L/ 711 (0.66")

CSI: TC=0.68/1.00 (H-I:1) , BC=0.82/1.00 (Q-R:1) , WB=0.56/1.00 (B-W:1) , SSI=0.24/1.00 (H-I:1)

DOL LUMBER=1.00 NAIL=1.00 LS BEND=1.10 COMP=1.10 SHEAR=1.10 TENS= 1.10

COMPANION LIVE LOAD FACTOR = 1.00

TRUSS PLATE MANUFACTURER IS NOT RESPONSIBLE FOR QUALITY CONTROL IN THE TRUSS MANUFACTURING PLANT .

NAIL VALUES

PLATE	GRIP(DRY) (PSI) MAX	MIN	SHEAR (PLI) MAX	MIN	SECTION (PLI) MAX	MIN
MT20	650	371	1747	788	1987	1873

PLATE PLACEMENT TOL. = 0.250 inches

PLATE ROTATION TOL. = 5.0 Deg.

JSI GRIP= 0.90 (K) (INPUT = 0.90)
JSI METAL= 0.94 (S) (INPUT = 1.00)

JOB NAME	TRUSS NAME	QUANTITY	PLY	JOB DESC.	DRWG NO.
324087	H03TA		1	TRUSS DESC. JT 45147	E20115247

Alpa Roof Truss, Maple

ID:?e6mKUZ36q6Hh0QiNXna66yd61Q- OKKFQNKGzNJISWS2okJvBrOoyEQaUANSyp6Z3yHGG1

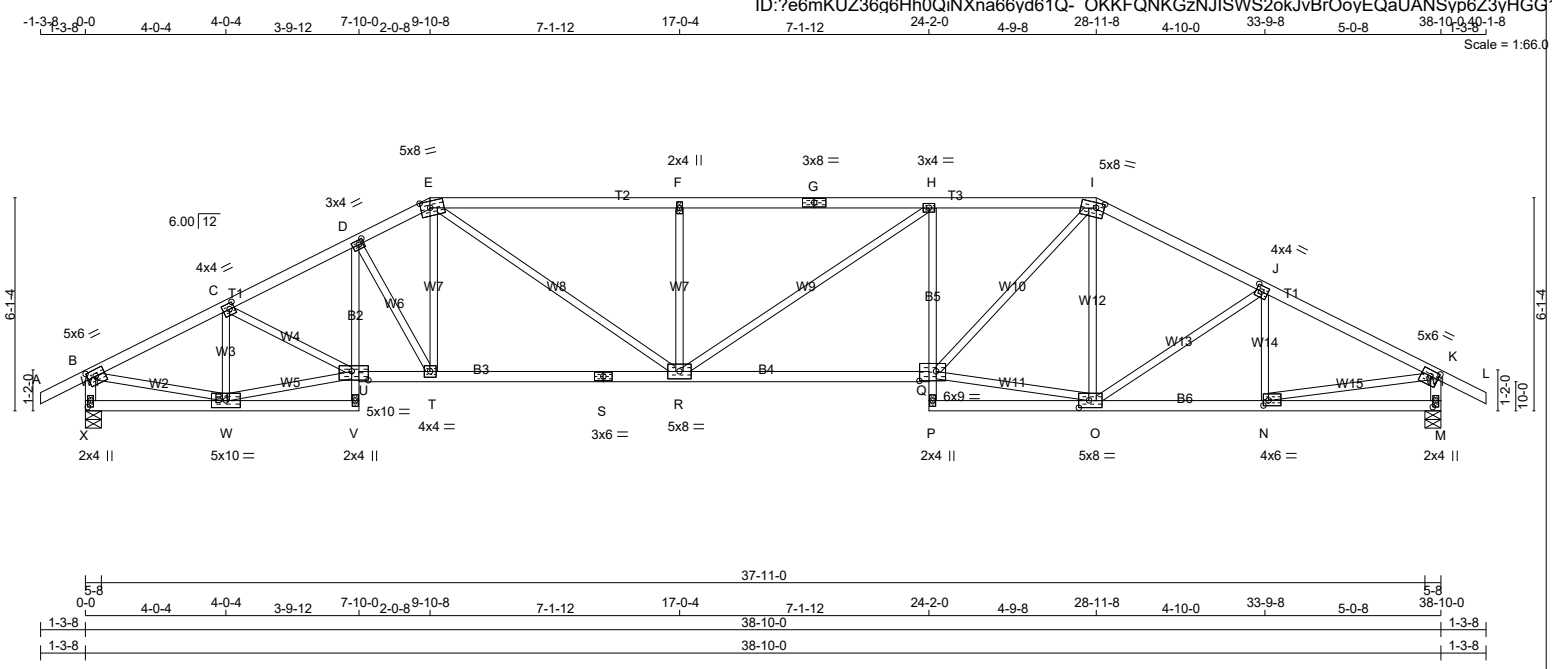

TOTAL WEIGHT = 165 lb

LUMBER

N. L. G. A. RULES

CHORDS	SIZE		LUMBER	DESCR.
A - E	2x4	DRY	No.2	SPF
E - G	2x4	DRY	No.2	SPF
G - I	2x4	DRY	No.2	SPF
I - L	2x4	DRY	No.2	SPF
X - B	2x4	DRY	No.2	SPF
M - K	2x4	DRY	No.2	SPF
X - V	2x4	DRY	No.2	SPF
V - D	2x3	DRY	No.2	SPF
U - S	2x4	DRY	No.2	SPF
S - Q	2x4	DRY	No.2	SPF
P - H	2x3	DRY	No.2	SPF
P - M	2x4	DRY	No.2	SPF
ALL WEBS EXCEPT	2x3	DRY	No.2	SPF

DRY: SEASONED LUMBER.

PLATES (table is in inches)

JT	TYPE	PLATES	W	LEN	Y	X
B	TMVW-t	MT20	5.0	6.0	2.25	2.75
C	TMWW-t	MT20	4.0	4.0	2.00	1.75
D	TMVW-t	MT20	3.0	4.0	1.50	1.75
E	TTWW-m	MT20	5.0	8.0	2.25	3.25
F	TMW+w	MT20	2.0	4.0		
G	TS-t	MT20	3.0	8.0		
H	TMVW-t	MT20	3.0	4.0		
I	TTWW-m	MT20	5.0	8.0	1.75	2.75
J	TMWW-t	MT20	4.0	4.0	2.00	1.75
K	TMVW-t	MT20	5.0	6.0	2.00	2.75
M	BMV1+p	MT20	2.0	4.0	2.25	1.00
N	BMWW-t	MT20	4.0	6.0	1.75	1.75
O	BMWWW-t	MT20	5.0	8.0	2.50	3.50
P	BMV+p	MT20	2.0	4.0		
Q	BVMWW-l	MT20	6.0	9.0	3.25	5.75
R	BMWWW-t	MT20	5.0	8.0		
S	BS-t	MT20	3.0	6.0		
T	BMWW-t	MT20	4.0	4.0		
U	BVMWW-l	MT20	5.0	10.0	3.00	5.75
V	BMV+p	MT20	2.0	4.0		
W	BMWWW-t	MT20	5.0	10.0		
X	BMV1+p	MT20	2.0	4.0	2.25	1.00

LATERAL BRACE(S) SHOWN SHALL BE 2X4 SPF#2

DIMENSIONS, SUPPORTS AND LOADINGS SPECIFIED BY FABRICATOR TO BE VERIFIED BY BUILDING DESIGNER

BEARINGS

JT	FACTORED GROSS REACTION VERT	HORZ	MAXIMUM FACTORED GROSS REACTION DOWN	HORZ	UPLIFT	INPUT BRG IN-SX	REQRD BRG IN-SX
X	1979	0	1979	0	0	5-8	2-15
M	1979	0	1979	0	0	5-8	2-15

UNFACTORED REACTIONS

JT	1ST LCASE COMBINED	MAX./MIN. COMPONENT REACTIONS SNOW	LIVE	PERM.LIVE	WIND	DEAD	SOIL
X	1409	872 / 0	0 / 0	0 / 0	0 / 0	537 / 0	0 / 0
M	1409	872 / 0	0 / 0	0 / 0	0 / 0	537 / 0	0 / 0

BEARING MATERIAL TO BE SPF NO.2 OR BETTER AT JOINT(S) X, M

BRACING

TOP CHORD TO BE SHEATHED OR MAX. PURLIN SPACING = 2.99 FT.
MAX. UNBRACED BOTTOM CHORD LENGTH = 7.81 FT OR RIGID CEILING DIRECTLY APPLIED.

ALL PITCH BREAKS AND PERIMETER CORNER JOINTS MUST BE LATERALLY RESTRAINED.

LOADING

TOTAL LOAD CASES: (4)

CHORDS

MEMB. FR-TO	MAX. FACTORED FORCE (LBS)	FACTORED VERT. LOAD (PLF) FROM	TO	LC1 CSI (LC)	MAX. UNBRAC LENGTH
A- B	0 / 24	-78.0	-78.0	0.10 (1)	10.00
B- C	-2662 / 0	-78.0	-78.0	0.23 (1)	4.07
C- D	-3393 / 0	-78.0	-78.0	0.25 (1)	3.65
D- E	-3118 / 0	-78.0	-78.0	0.14 (1)	3.88
E- F	-3697 / 0	-78.0	-78.0	0.81 (1)	2.99
F- G	-3697 / 0	-78.0	-78.0	0.79 (1)	3.04
G- H	-3697 / 0	-78.0	-78.0	0.79 (1)	3.04
H- I	-3505 / 0	-78.0	-78.0	0.43 (1)	3.42
I- J	-2687 / 0	-78.0	-78.0	0.33 (1)	3.96
J- K	-2775 / 0	-78.0	-78.0	0.35 (1)	3.90
K- L	0 / 24	-78.0	-78.0	0.10 (1)	10.00
X- B	-1942 / 0	0.0	0.0	0.20 (1)	6.04
M- K	-1935 / 0	0.0	0.0	0.20 (1)	6.05
X- W	0 / 0	-18.5	-18.5	0.06 (4)	10.00
W- V	0 / 39	-18.5	-18.5	0.06 (4)	10.00
V- U	0 / 34	0.0	0.0	0.10 (1)	10.00
U- D	0 / 334	0.0	0.0	0.17 (1)	10.00
U- T	0 / 3037	-18.5	-18.5	0.56 (1)	10.00
T- S	0 / 2788	-18.5	-18.5	0.56 (1)	10.00
S- R	0 / 2788	-18.5	-18.5	0.56 (1)	10.00
R- Q	0 / 3512	-18.5	-18.5	0.68 (1)	10.00
P- Q	0 / 38	0.0	0.0	0.10 (1)	10.00
Q- H	-614 / 0	0.0	0.0	0.30 (1)	7.81
P- O	0 / 40	-18.5	-18.5	0.10 (4)	10.00
O- N	0 / 2499	-18.5	-18.5	0.46 (1)	10.00
N- M	0 / 0	-18.5	-18.5	0.10 (4)	10.00

WEBS

MEMB. FR-TO	MAX. FACTORED FORCE (LBS)	MAX CSI (LC)
W- C	-1003 / 0	0.19 (1)
W- U	0 / 2418	0.54 (1)
C- U	0 / 722	0.16 (1)
D- T	-517 / 0	0.17 (1)
T- E	0 / 476	0.11 (1)
E- R	0 / 1108	0.25 (1)
R- F	-640 / 0	0.26 (1)
R- H	0 / 225	0.05 (1)
Q- O	0 / 2386	0.54 (1)
Q- I	0 / 1625	0.37 (1)
O- I	-261 / 0	0.15 (1)
O- J	-140 / 0	0.09 (1)
N- J	-337 / 0	0.07 (1)
B- W	0 / 2445	0.55 (1)
N- K	0 / 2535	0.57 (1)

[M][F]

DESIGN CRITERIA

SPECIFIED LOADS:

TOP CH.	LL	=	21.0	PSF
	DL	=	6.0	PSF
BOT CH.	LL	=	0.0	PSF
	DL	=	7.4	PSF
TOTAL LOAD		=	34.4	PSF

SPACING = 24.0 IN. C/C

LOADING IN FLAT SECTION BASED ON A SLOPE OF 2.00/12 MINIMUM

THIS TRUSS IS DESIGNED FOR RESIDENTIAL OR SMALL BUILDING REQUIREMENTS OF PART 9, NBCC 2015

THIS DESIGN COMPLIES WITH:
- PART 9 OF BCBC 2018 , ABC 2019
- PART 9 OF OBC 2012 (2019 AMENDMENT)
- CSA 086-14
- TPIC 2014

(55 % OF 23.0 P.S.F. G.S.L. PLUS 8.4 P.S.F. RAIN LOAD) EQUALS 21.0 P.S.F. SPECIFIED ROOF LIVE LOAD

ALLOWABLE DEFL.(LL)= L/360 (1.29")
CALCULATED VERT. DEFL.(LL) = L/ 999 (0.25")
ALLOWABLE DEFL.(TL)= L/360 (1.29")
CALCULATED VERT. DEFL.(TL) = L/ 869 (0.54")

CSI: TC=0.81/1.00 (E-F:1) , BC=0.68/1.00 (Q-R:1) , WB=0.57/1.00 (K-N:1) , SSI=0.26/1.00 (E-F:1)

DOL LUMBER=1.00 NAIL=1.00 LS BEND=1.10 COMP=1.10 SHEAR=1.10 TENS= 1.10

COMPANION LIVE LOAD FACTOR = 1.00

TRUSS PLATE MANUFACTURER IS NOT RESPONSIBLE FOR QUALITY CONTROL IN THE TRUSS MANUFACTURING PLANT .

NAIL VALUES

PLATE	GRIP(DRY) (PSI) MAX	MIN	SHEAR (PLI) MAX	MIN	SECTION (PLI) MAX	MIN
MT20	650	371	1747	788	1987	1873

PLATE PLACEMENT TOL. = 0.250 inches

PLATE ROTATION TOL. = 5.0 Deg.

JSI GRIP= 0.90 (B) (INPUT = 0.90)
JSI METAL= 0.84 (S) (INPUT = 1.00)

JOB NAME	TRUSS NAME	QUANTITY	PLY	JOB DESC.	DRWG NO.
324087	H04TA		1	TRUSS DESC. JT 45147	E20115248

Alpha Roof Truss, Maple

Version 8.330 S May 6 2020 MiTek Industries, Inc. Fri Nov 20 15:20:13 2020 Page 1

ID:?e6mKUZ36g6Hh0QiNXna66yd61Q-SbuiTmOy1GVAvc5ecVFYSPOc9MccJwFXhcYq6VyHGG0

Scale = 1:66.0

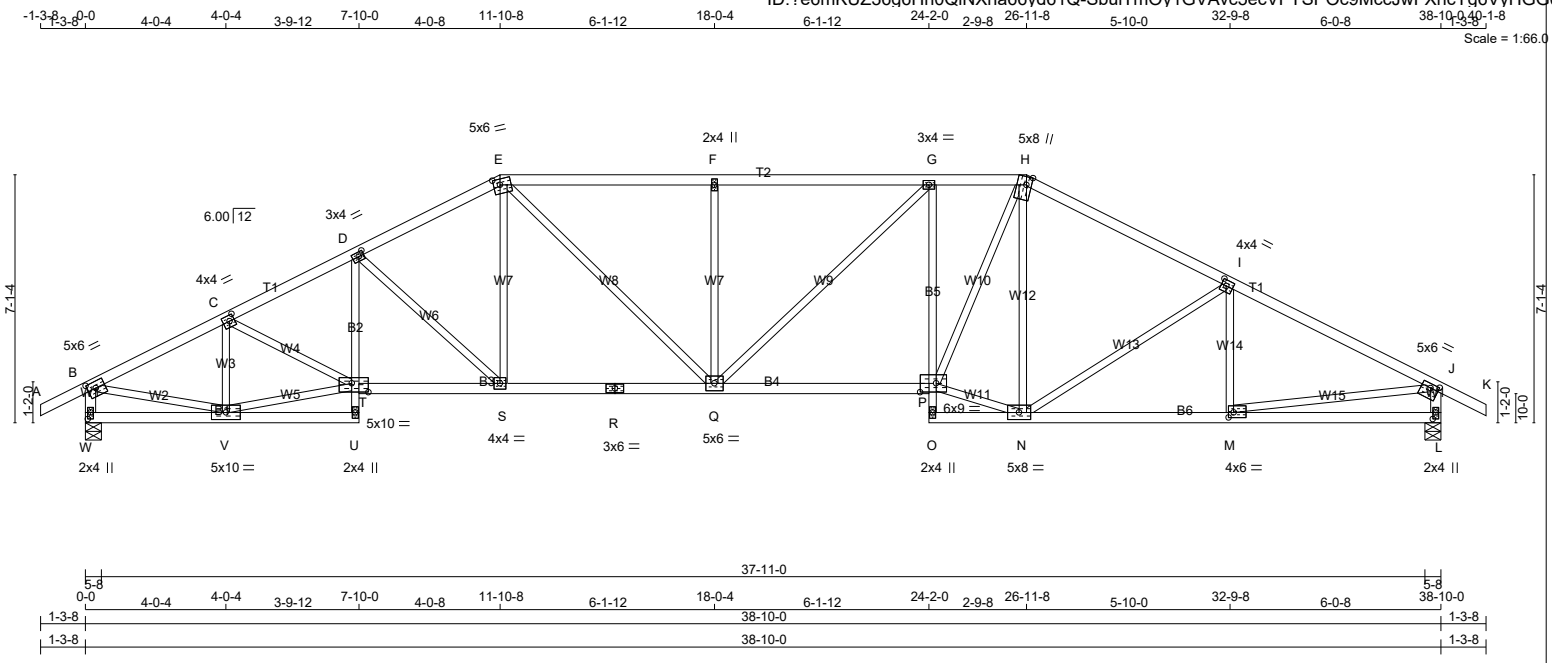

TOTAL WEIGHT = 170 lb

LUMBER

N. L. G. A. RULES

CHORDS	SIZE		LUMBER	DESCR.
A - E	2x4	DRY	No.2	SPF
E - H	2x4	DRY	No.2	SPF
H - K	2x4	DRY	No.2	SPF
W - B	2x4	DRY	No.2	SPF
L - J	2x4	DRY	No.2	SPF
W - U	2x4	DRY	No.2	SPF
U - D	2x3	DRY	No.2	SPF
T - R	2x4	DRY	No.2	SPF
R - P	2x4	DRY	No.2	SPF
O - G	2x3	DRY	No.2	SPF
O - L	2x4	DRY	No.2	SPF
ALL WEBS EXCEPT	2x3	DRY	No.2	SPF

DRY: SEASONED LUMBER.

PLATES (table is in inches)

JT	TYPE	PLATES	W	LEN	Y	X
B	TMVW-t	MT20	5.0	6.0	2.25	2.75
C	TMWW-t	MT20	4.0	4.0	2.00	1.75
D	TMVW-t	MT20	3.0	4.0	1.50	1.75
E	TTWW-m	MT20	5.0	6.0	2.00	2.25
F	TMW+w	MT20	2.0	4.0		
G	TMVW-t	MT20	3.0	4.0		
H	TTWW+m	MT20	5.0	8.0	2.75	1.75
I	TMWW-t	MT20	4.0	4.0	2.00	1.75
J	TMVW-t	MT20	5.0	6.0	1.50	2.75
L	BMV1+p	MT20	2.0	4.0	2.25	1.00
M	BMWW-t	MT20	4.0	6.0	1.75	1.75
N	BMWWW-t	MT20	5.0	8.0		
O	BMV+p	MT20	2.0	4.0		
P	BVMWW-l	MT20	6.0	9.0	3.00	5.50
Q	BMWWW-t	MT20	5.0	6.0		
R	BS-t	MT20	3.0	6.0		
S	BMWW-t	MT20	4.0	4.0		
T	BVMWW-l	MT20	5.0	10.0	3.00	5.75
U	BMV+p	MT20	2.0	4.0		
V	BMWWW-t	MT20	5.0	10.0		
W	BMV1+p	MT20	2.0	4.0	2.25	1.00

LATERAL BRACE(S) SHOWN SHALL BE 2X4 SPF#2

DIMENSIONS, SUPPORTS AND LOADINGS SPECIFIED BY FABRICATOR TO BE VERIFIED BY BUILDING DESIGNER

BEARINGS

JT	FACTORED GROSS REACTION VERT	HORZ	MAXIMUM FACTORED GROSS REACTION DOWN	HORZ	UPLIFT	INPUT BRG IN-SX	REQRD BRG IN-SX
W	1979	0	1979	0	0	5-8	2-15
L	1979	0	1979	0	0	5-8	2-15

UNFACTORED REACTIONS

JT	1ST LCASE COMBINED	MAX./MIN. COMPONENT REACTIONS SNOW	LIVE	PERM.LIVE	WIND	DEAD	SOIL
W	1409	872 / 0	0 / 0	0 / 0	0 / 0	537 / 0	0 / 0
L	1409	872 / 0	0 / 0	0 / 0	0 / 0	537 / 0	0 / 0

BEARING MATERIAL TO BE SPF NO.2 OR BETTER AT JOINT(S) W, L

BRACING

TOP CHORD TO BE SHEATHED OR MAX. PURLIN SPACING = 3.54 FT.
MAX. UNBRACED BOTTOM CHORD LENGTH = 7.81 FT OR RIGID CEILING DIRECTLY APPLIED.

ALL PITCH BREAKS AND PERIMETER CORNER JOINTS MUST BE LATERALLY RESTRAINED.

LOADING

TOTAL LOAD CASES: (4)

CHORDS

MEMB. FR-TO	FORCE (LBS)	FACTORED VERT. LOAD (PLF) FROM	TO	LC1 CSI (LC)	MAX UNBRAC LENGTH
A- B	0 / 24	-78.0	-78.0	0.10 (1)	10.00
B- C	-2657 / 0	-78.0	-78.0	0.24 (1)	4.06
C- D	-3403 / 0	-78.0	-78.0	0.25 (1)	3.64
D- E	-2905 / 0	-78.0	-78.0	0.27 (1)	3.89
E- F	-3089 / 0	-78.0	-78.0	0.52 (1)	3.54
F- G	-3089 / 0	-78.0	-78.0	0.51 (1)	3.55
G- H	-2906 / 0	-78.0	-78.0	0.25 (1)	3.89
H- I	-2568 / 0	-78.0	-78.0	0.47 (1)	3.90
I- J	-2835 / 0	-78.0	-78.0	0.51 (1)	3.70
J- K	0 / 24	-78.0	-78.0	0.10 (1)	10.00
W- B	-1942 / 0	0.0	0.0	0.20 (1)	6.04
L- J	-1930 / 0	0.0	0.0	0.20 (1)	6.06
W- V	0 / 0	-18.5	-18.5	0.06 (4)	10.00
V- U	0 / 39	-18.5	-18.5	0.06 (4)	10.00
U- T	0 / 33	0.0	0.0	0.10 (1)	10.00
T- D	0 / 317	0.0	0.0	0.17 (1)	10.00
T- S	0 / 3055	-18.5	-18.5	0.55 (1)	10.00
S- R	0 / 2594	-18.5	-18.5	0.50 (1)	10.00
R- Q	0 / 2594	-18.5	-18.5	0.50 (1)	10.00
Q- P	0 / 2910	-18.5	-18.5	0.55 (1)	10.00
O- P	0 / 9	0.0	0.0	0.06 (1)	10.00
P- G	-540 / 0	0.0	0.0	0.48 (1)	7.81
O- N	0 / 25	-18.5	-18.5	0.10 (4)	10.00
N- M	0 / 2557	-18.5	-18.5	0.49 (1)	10.00
M- L	0 / 0	-18.5	-18.5	0.15 (4)	10.00

WEBS

MEMB. FR-TO	FORCE (LBS)	MAX CSI (LC)
V- C	-1000 / 0	0.19 (1)
V- T	0 / 2413	0.54 (1)
C- T	0 / 748	0.17 (1)
D- S	-635 / 0	0.36 (1)
S- E	0 / 489	0.11 (1)
E- Q	0 / 690	0.16 (1)
Q- F	-557 / 0	0.35 (1)
Q- G	0 / 248	0.06 (1)
P- N	0 / 2374	0.53 (1)
P- H	0 / 1544	0.35 (1)
N- H	-495 / 0	0.43 (1)
N- I	-338 / 0	0.33 (1)
M- I	-248 / 0	0.07 (1)
B- V	0 / 2439	0.55 (1)
M- J	0 / 2582	0.58 (1)

[M][F]

DESIGN CRITERIA

SPECIFIED LOADS:

TOP	CH.	LL =	21.0	PSF
		DL =	6.0	PSF
BOT	CH.	LL =	0.0	PSF
		DL =	7.4	PSF
TOTAL	LOAD	=	34.4	PSF

SPACING = 24.0 IN. C/C

LOADING IN FLAT SECTION BASED ON A SLOPE OF 2.00/12 MINIMUM

THIS TRUSS IS DESIGNED FOR RESIDENTIAL OR SMALL BUILDING REQUIREMENTS OF PART 9, NBCC 2015

THIS DESIGN COMPLIES WITH:
- PART 9 OF BCBC 2018 , ABC 2019
- PART 9 OF OBC 2012 (2019 AMENDMENT)
- CSA 086-14
- TPIC 2014

(55 % OF 23.0 P.S.F. G.S.L. PLUS 8.4 P.S.F. RAIN LOAD) EQUALS 21.0 P.S.F. SPECIFIED ROOF LIVE LOAD

ALLOWABLE DEFL.(LL)= L/360 (1.29")
CALCULATED VERT. DEFL.(LL) = L/ 999 (0.20")
ALLOWABLE DEFL.(TL)= L/360 (1.29")
CALCULATED VERT. DEFL.(TL) = L/ 999 (0.43")

CSI: TC=0.52/1.00 (E-F:1) , BC=0.55/1.00 (P-Q:1) , WB=0.58/1.00 (J-M:1) , SSI=0.23/1.00 (E-F:1)

DOL LUMBER=1.00 NAIL=1.00 LS BEND=1.10 COMP=1.10 SHEAR=1.10 TENS= 1.10

COMPANION LIVE LOAD FACTOR = 1.00

TRUSS PLATE MANUFACTURER IS NOT RESPONSIBLE FOR QUALITY CONTROL IN THE TRUSS MANUFACTURING PLANT .

NAIL VALUES

PLATE	GRIP(DRY) (PSI) MAX	MIN	SHEAR (PLI) MAX	MIN	SECTION (PLI) MAX	MIN
MT20	650	371	1747	788	1987	1873

PLATE PLACEMENT TOL. = 0.250 inches

PLATE ROTATION TOL. = 5.0 Deg.

JSI GRIP= 0.90 (J) (INPUT = 0.90)
JSI METAL= 0.81 (R) (INPUT = 1.00)

JOB NAME	TRUSS NAME	QUANTITY	PLY	JOB DESC.	DRWG NO.
324087	H05		1	TRUSS DESC. JT 45147	E20115249

Alpa Roof Truss, Maple

Version 8.330 S May 6 2020 MiTek Industries, Inc. Fri Nov 20 15:20:14 2020 Page 1

ID:?e6mKUZ36g6Hh0QiNXna66yd61Q-wnS4g6Pboad1XmgrADmn cxkVmxS2M9gvGIDexyHGG?

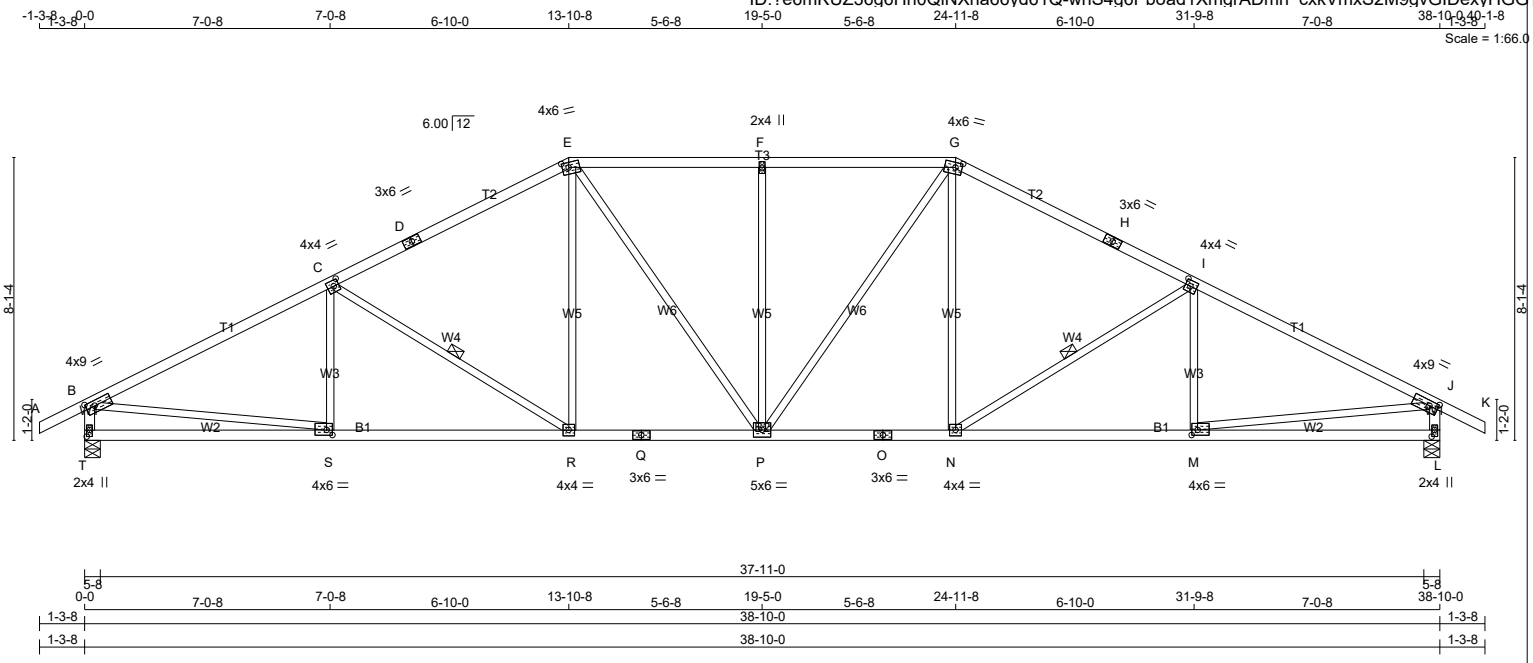

TOTAL WEIGHT = 161 lb

LUMBER

N. L. G. A. RULES

CHORDS	SIZE		LUMBER	DESCR.
A - D	2x4	DRY	No.2	SPF
D - E	2x4	DRY	No.2	SPF
E - G	2x4	DRY	No.2	SPF
G - H	2x4	DRY	No.2	SPF
H - K	2x4	DRY	No.2	SPF
T - B	2x4	DRY	No.2	SPF
L - J	2x4	DRY	No.2	SPF
T - Q	2x4	DRY	No.2	SPF
Q - O	2x4	DRY	No.2	SPF
O - L	2x4	DRY	No.2	SPF
ALL WEBS EXCEPT	2x3	DRY	No.2	SPF

DRY: SEASONED LUMBER.

PLATES (table is in inches)

JT	TYPE	PLATES	W	LEN	Y	X
B	TMVW-t	MT20	4.0	9.0	1.75	3.00
C	TMWW-t	MT20	4.0	4.0	2.00	1.75
D	TS-t	MT20	3.0	6.0		
E	TTWW-m	MT20	4.0	6.0	1.75	2.25
F	TMW+w	MT20	2.0	4.0		
G	TTWW-m	MT20	4.0	6.0	1.75	2.25
H	TS-t	MT20	3.0	6.0		
I	TMWW-t	MT20	4.0	4.0	2.00	1.75
J	TMVW-t	MT20	4.0	9.0	1.75	3.00
L	BMV1+p	MT20	2.0	4.0	2.25	1.00
M	BMWW-t	MT20	4.0	6.0	1.75	2.00
N	BMWW-t	MT20	4.0	4.0		
O	BS-t	MT20	3.0	6.0		
P	BMWWW-t	MT20	5.0	6.0		
Q	BS-t	MT20	3.0	6.0		
R	BMWW-t	MT20	4.0	4.0		
S	BMWW-t	MT20	4.0	6.0	1.75	2.00
T	BMV1+p	MT20	2.0	4.0	2.25	1.00

LATERAL BRACE(S) SHOWN SHALL BE 2X4 SPF#2

DIMENSIONS, SUPPORTS AND LOADINGS SPECIFIED BY FABRICATOR TO BE VERIFIED BY BUILDING DESIGNER

BEARINGS

JT	FACTORED GROSS REACTION VERT	HORZ	MAXIMUM FACTORED GROSS REACTION DOWN	HORZ	UPLIFT	INPUT BRG IN-SX	REQRD BRG IN-SX
T	1979	0	1979	0	0	5-8	2-15
L	1979	0	1979	0	0	5-8	2-15

UNFACTORED REACTIONS

JT	1ST LCASE COMBINED	MAX./MIN. COMPONENT REACTIONS SNOW	LIVE	PERM.LIVE	WIND	DEAD	SOIL
T	1409	872 / 0	0 / 0	0 / 0	0 / 0	537 / 0	0 / 0
L	1409	872 / 0	0 / 0	0 / 0	0 / 0	537 / 0	0 / 0

BEARING MATERIAL TO BE SPF NO.2 OR BETTER AT JOINT(S) T, L

BRACING

TOP CHORD TO BE SHEATHED OR MAX. PURLIN SPACING = 3.45 FT.
MAX. UNBRACED BOTTOM CHORD LENGTH = 10.00 FT OR RIGID CEILING DIRECTLY APPLIED.

ALL PITCH BREAKS AND PERIMETER CORNER JOINTS MUST BE LATERALLY RESTRAINED.

1 LATERAL BRACE(S) AT 1/ 2 LENGTH OF C-R, I-N.

END VERTICAL(S) MUST BE SHEATHED OR HAVE BRACES AS INDICATED IN THE MAX. UNBRACED LENGTH COLUMN OF THE TABLE BELOW

LOADING

TOTAL LOAD CASES: (4)

CHORDS

MEMB. FR-TO	MAX. FACTORED FORCE (LBS)	FACTORED VERT. LOAD (PLF) FROM	TO	LC1	MAX CSI (LC)	MAX. UNBRAC LENGTH
A- B	0 / 24	-78.0	-78.0	0.10 (1)	10.00	
B- C	-2861 / 0	-78.0	-78.0	0.73 (1)	3.45	
C- D	-2427 / 0	-78.0	-78.0	0.64 (1)	3.78	
D- E	-2427 / 0	-78.0	-78.0	0.64 (1)	3.78	
E- F	-2368 / 0	-78.0	-78.0	0.39 (1)	4.11	
F- G	-2368 / 0	-78.0	-78.0	0.39 (1)	4.11	
G- H	-2427 / 0	-78.0	-78.0	0.64 (1)	3.78	
H- I	-2427 / 0	-78.0	-78.0	0.64 (1)	3.78	
I- J	-2861 / 0	-78.0	-78.0	0.73 (1)	3.45	
J- K	0 / 24	-78.0	-78.0	0.10 (1)	10.00	
T- B	-1924 / 0	0.0	0.0	0.19 (1)	6.06	
L- J	-1924 / 0	0.0	0.0	0.19 (1)	6.06	
T- S	0 / 0	-18.5	-18.5	0.21 (4)	10.00	
S- R	0 / 2585	-18.5	-18.5	0.51 (1)	10.00	
R- Q	0 / 2149	-18.5	-18.5	0.43 (1)	10.00	
Q- P	0 / 2149	-18.5	-18.5	0.43 (1)	10.00	
P- O	0 / 2149	-18.5	-18.5	0.43 (1)	10.00	
O- N	0 / 2149	-18.5	-18.5	0.43 (1)	10.00	
N- M	0 / 2585	-18.5	-18.5	0.51 (1)	10.00	
M- L	0 / 0	-18.5	-18.5	0.21 (4)	10.00	

WEBS

MEMB. FR-TO	MAX. FACTORED FORCE (LBS)	MAX CSI (LC)
S- C	-174 / 42	0.06 (1)
C- R	-522 / 0	0.24 (1)
R- E	0 / 397	0.09 (1)
E- P	0 / 379	0.09 (1)
P- F	-527 / 0	0.67 (1)
P- G	0 / 379	0.09 (1)
N- G	0 / 397	0.09 (1)
N- I	-522 / 0	0.24 (1)
M- I	-174 / 42	0.06 (1)
B- S	0 / 2604	0.59 (1)
M- J	0 / 2604	0.59 (1)

DESIGN CRITERIA [M][F]

SPECIFIED LOADS:

TOP CH.	LL	=	21.0	PSF
	DL	=	6.0	PSF
BOT CH.	LL	=	0.0	PSF
	DL	=	7.4	PSF
TOTAL LOAD		=	34.4	PSF

SPACING = 24.0 IN. C/C

LOADING IN FLAT SECTION BASED ON A SLOPE OF 2.00/12 MINIMUM

THIS TRUSS IS DESIGNED FOR RESIDENTIAL OR SMALL BUILDING REQUIREMENTS OF PART 9, NBCC 2015

THIS DESIGN COMPLIES WITH:
- PART 9 OF BCBC 2018 , ABC 2019
- PART 9 OF OBC 2012 (2019 AMENDMENT)
- CSA 086-14
- TPIC 2014

(55 % OF 23.0 P.S.F. G.S.L. PLUS 8.4 P.S.F. RAIN LOAD) EQUALS 21.0 P.S.F. SPECIFIED ROOF LIVE LOAD

ALLOWABLE DEFL.(LL)= L/360 (1.29")
CALCULATED VERT. DEFL.(LL) = L/ 999 (0.15")
ALLOWABLE DEFL.(TL)= L/360 (1.29")
CALCULATED VERT. DEFL.(TL) = L/ 999 (0.30")

CSI: TC=0.73/1.00 (B-C:1) , BC=0.51/1.00 (R-S:1) , WB=0.67/1.00 (F-P:1) , SSI=0.24/1.00 (B-C:1)

DOL LUMBER=1.00 NAIL=1.00 LS BEND=1.10 COMP=1.10 SHEAR=1.10 TENS= 1.10

COMPANION LIVE LOAD FACTOR = 1.00

TRUSS PLATE MANUFACTURER IS NOT RESPONSIBLE FOR QUALITY CONTROL IN THE TRUSS MANUFACTURING PLANT .

NAIL VALUES

PLATE	GRIP(DRY) (PSI) MAX	MIN	SHEAR (PLI) MAX	MIN	SECTION (PLI) MAX	MIN
MT20	650	371	1747	788	1987	1873

PLATE PLACEMENT TOL. = 0.250 inches

PLATE ROTATION TOL. = 5.0 Deg.

JSI GRIP= 0.89 (M) (INPUT = 0.90)
JSI METAL= 0.64 (Q) (INPUT = 1.00)