ALPA-BARRIE

ENGINEERING
A. 18023525 - A. 18023527
A. 18023552 - A. 18023558
A. 18023575 - A. 18023576
A. 18023583 - A. 18023589
A-18023083

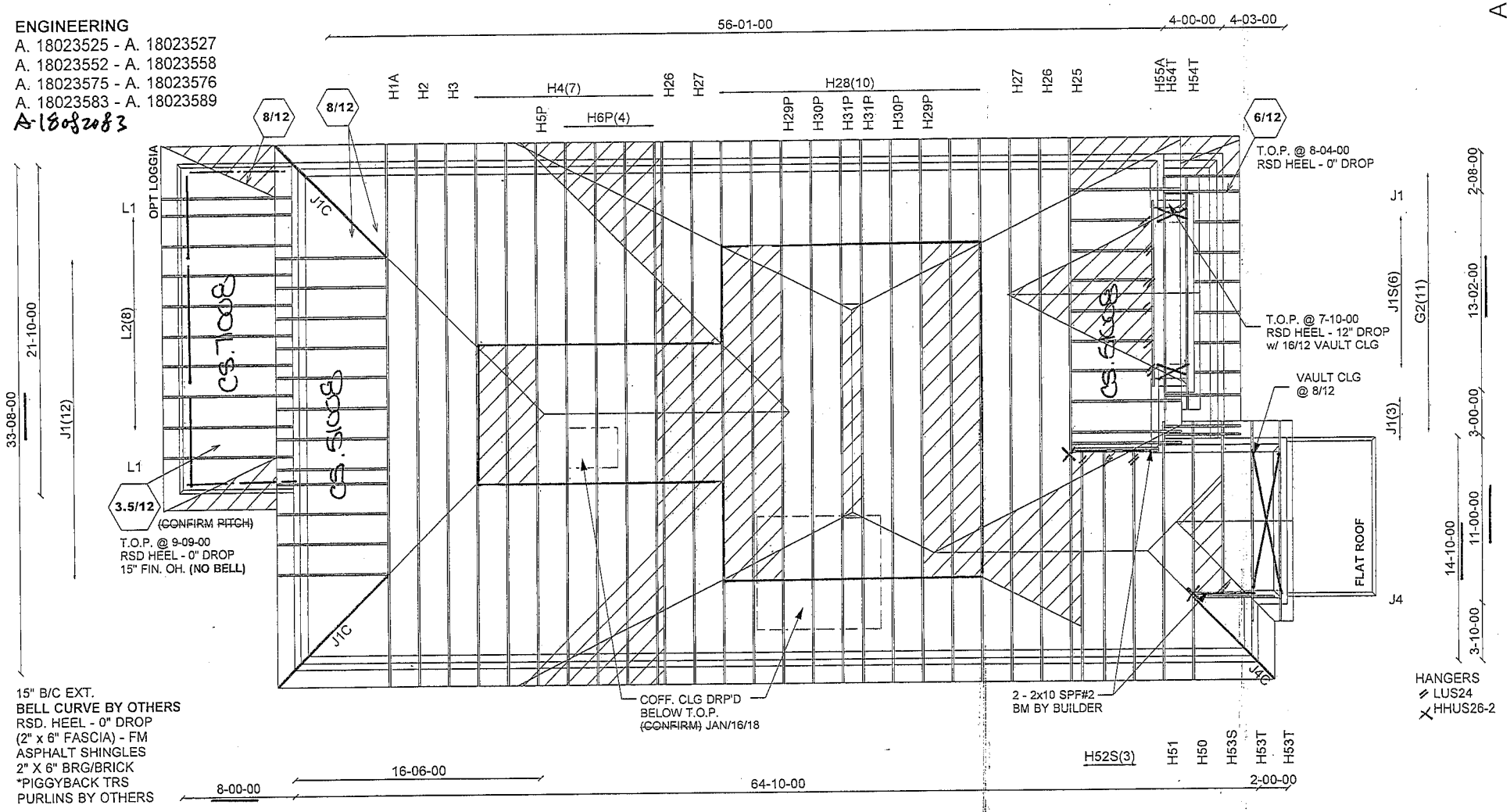

FORESTCREST

Mitek V. 8.2.0

ALL CONVENTIONAL FRAMING TO CONFORM WITH PART 9 O.B.C. LATEST EDITION. ROOF RAFTERS THAT CROSS OVER TRUSSES TO BE 2X4 SPF #2 @ 24" O.C WITH A VERT. POST TO THE TRUSS UNDERNEATH AT EACH CROSS POINT. VERT. POSTS LONGER THAN 6' TO HAVE LATERAL BRACING SO THAT THE DISTANCE BETWEEN END POINTS & BETWEEN ROWS OF BRACING DOES NOT EXCEED 6'

CONVENTIONAL FRAMING BY OTHERS

Job Track: 45147	Builder / Location: GOLD PARK HOMES / VAUGHAN	Model / Elevation: STD OR OPT 2ND FLR (SBEO) OR OPT. LOGGIA 4203 REV1 / B	
Layout ID: 301042	Project: PINE VALLEY	THESE DRAWINGS CONSTITUTE THE PROPERTY OF ALPA ROOF TRUSSES INC., SHALL NOT BE REPRODUCED, PUBLISHED, OR REDISTRIBUTED IN ANY MANNER OR UTILIZED FOR ANY PURPOSE OTHER THAN THE MANUFACTURE OF TRUSSES BY ALPA ROOF TRUSSES INC AND WILL BE RETRACTED BY ALPA ROOF TRUSSES INC IF UTLILZED FOR ANY OTHER PURPOSE.	
Plan Log: 99352	Date: 8/14/2018 Designer: AMANDA		

ALPA-BARRIE

ENGINEERING
A. 18023525 - A. 18023527
A. 18023549 - A. 18023558
A. 18023575 - A. 18023576
A. 18023579 - A. 18023581
A. 18023583 - A. 18023589
A-18082084

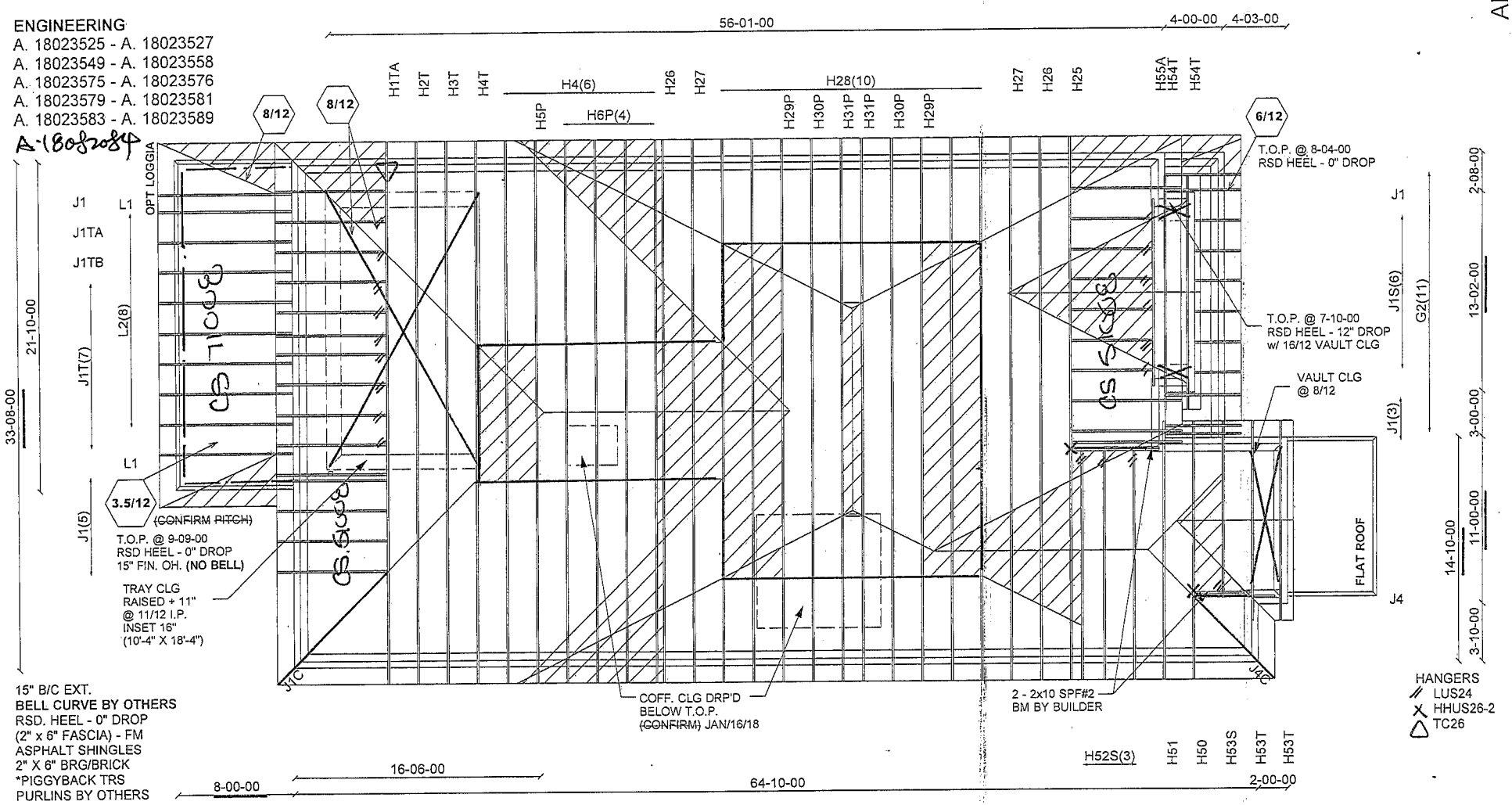

15" B/C EXT.
BELL CURVE BY OTHERS
RSD. HEEL - 0" DROP
(2" x 6" FASCIA) - FM
ASPHALT SHINGLES
2" X 6" BRG/BRICK
*PIGGYBACK TRS
PURLINS BY OTHERS

FORESTCREST

Mitek V. 8.2.0

ALL CONVENTIONAL FRAMING TO CONFORM WITH PART 9 O.B.C. LATEST EDITION. ROOF RAFTERS THAT CROSS OVER TRUSSES TO BE 2X4 SPF #2 @ 24" O.C WITH A VERT. POST TO THE TRUSS UNDERNEATH AT EACH CROSS POINT. VERT. POSTS LONGER THAN 6' TO HAVE LATERAL BRACING SO THAT THE DISTANCE BETWEEN END POINTS & BETWEEN ROWS OF BRACING DOES NOT EXCEED 6'

CONVENTIONAL FRAMING BY OTHERS

Job Track: 45147	Builder / Location: GOLD PARK HOMES / VAUGHAN		Model / Elevation: 4203 REV1 / B OPT TRAY OR OPT 2ND FLR (SBED) OR OPT LOGGIA
Layout ID: 301043	Project: PINE VALLEY		THESE DRAWINGS CONSTITUTE THE PROPERTY OF ALPA ROOF TRUSSES INC., SHALL NOT BE REPRODUCED, PUBLISHED, OR REDISTRIBUTED IN ANY MANNER OR UTILIZED FOR ANY PURPOSE OTHER THAN THE MANUFACTURE OF TRUSSES BY ALPA ROOF TRUSSES INC AND WILL BE RETRACTED BY ALPA ROOF TRUSSES INC IF UTLILZED FOR ANY OTHER PURPOSE.
Plan Log: 99352	Date: 8/14/2018	Designer: AMANDA	

Stracon Engineering Inc.

69 Graydon Crescent
Richmond Hill, Ontario
L4B 3W7
(905) 832-2250 Fax (905) 832-0286

REGISTERED PROFESSIONAL ENGINEER
JAN 15 2014
E. FOK
PROVINCE OF ONTARIO

RESPONSIBILITIES

1. Stracon Engineering Inc. is responsible for the design of trusses as individual components.
2. It is the responsibility of others to ascertain that the design loads utilized on this drawing meet or exceed the actual dead load imposed by the structure and the live load imposed by the local building code or the authorities with jurisdictions.
3. All dimensions are to be verified by owner contractor, architect or other authority before manufacture.
4. Stracon Engineering Inc. bears no responsibility for the erection of the trusses. Persons erecting trusses are cautioned to seek professional advice regarding temporary and permanent bracing system. Bracing shown on Stracon Engineering Inc. drawings is specified for the truss as a component only and forms an integral part of the truss design.
5. It is the truss manufacture's responsibility to ensure that trusses are manufactured in conformance with Stracon Engineering Inc. specifications outlined below.

SPECIFICATIONS

1. Trusses designed by Stracon Engineering Inc. conforms to the relevant section of the Ontario Building Code of Canada (Part 9 or Part 4) or to the Canadian code for farm buildings, whichever applies to the building type indicated on the drawings as well as to the procedures established by the truss plate institute of Canada. Unit stresses used are as per CSA-086-09.
2. Lumber is to be the sizes and grade specified.
3. Moisture content of lumber is not to exceed 19% in service unless otherwise specified.
4. Lumber not to be treated with chemicals unless otherwise specified.
5. Plates shall be applied to both faces of the truss at each joint and shall be positioned as specified.
6. The top chord is assumed to be continuously laterally braced by the roof sheathing or purlins at intervals not exceeding 12.5 times in thickness.
7. Where not rigid ceiling is attached directly to the bottom chord, laterally brace the chords at intervals not exceeding 3M (10') o.c.

January 15, 2014

JOB NAME	TRUSS NAME	QUANTITY	PLY	JOB DESC.	DRWG NO.
301040	H1A	1	1	TRUSS DESC.	

Alpa Roof Truss, Maple

Version 8.210 S Jun 13 2018 MiTek Industries, Inc. Wed Aug 15 16:29:05 2018 Page 1

ID:84gOFYESM8s1JmDO6_uSGRyQWjP-DswLpT7XGysUiy_4wbY_TXdA?2s1j0U4MCtP8QynZJi

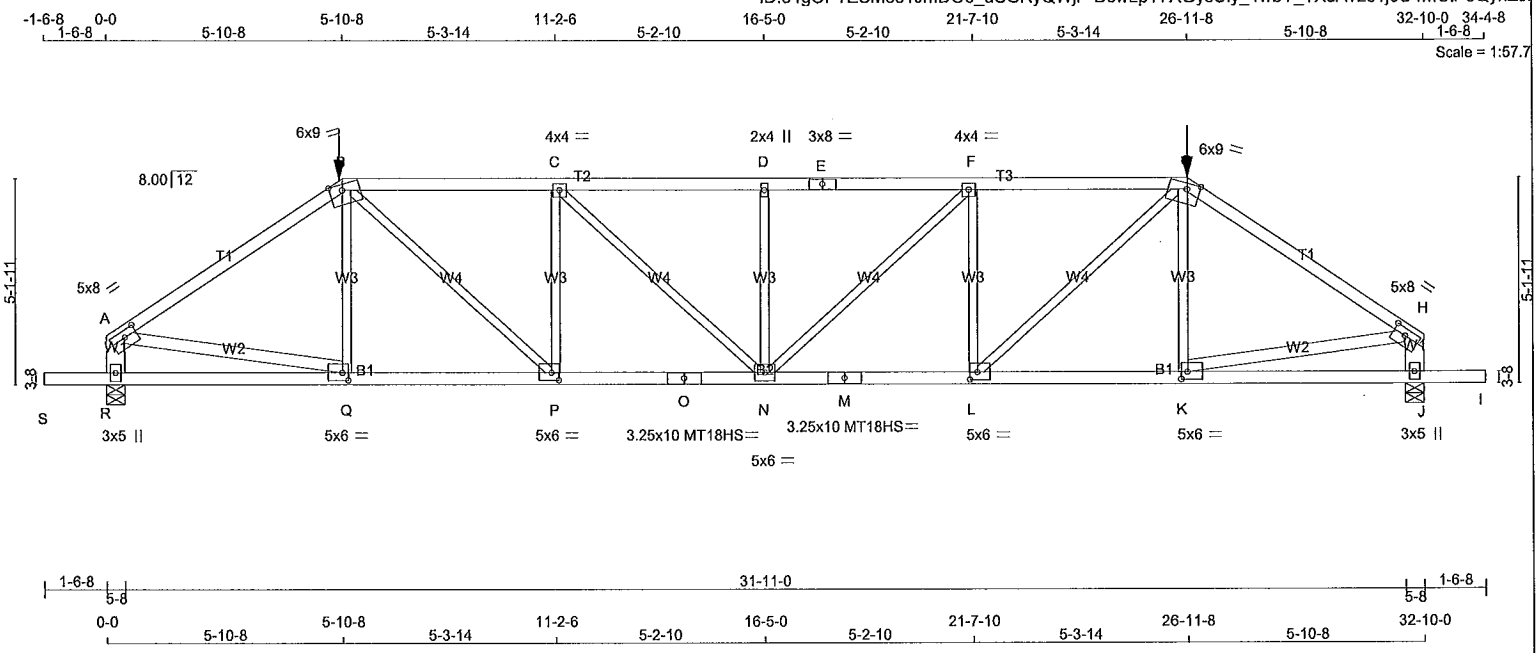

TOTAL WEIGHT = 138 lb

[M]

LUMBER

N. L. G. A. RULES

CHORDS	SIZE		LUMBER	DESCR.
A - B	2x4	DRY	1650F 1.5E	SPF
B - E	2x4	DRY	1650F 1.5E	SPF
E - G	2x4	DRY	1650F 1.5E	SPF
G - H	2x4	DRY	1650F 1.5E	SPF
R - A	2x6	DRY	No.2	SPF
J - H	2x6	DRY	No.2	SPF
S - O	2x4	DRY	No.2	SPF
O - M	2x4	DRY	No.2	SPF
M - I	2x4	DRY	No.2	SPF
ALL WEBS	2x3	DRY	No.2	SPF
EXCEPT				
A - Q	2x4	DRY	No.2	SPF
K - H	2x4	DRY	No.2	SPF

DRY: SEASONED LUMBER.

PLATES (table is in inches)

JT	TYPE	PLATES	W	LEN	Y	X
A	TMVW-t	MT20	5.0	8.0	2.00	3.75
B	TTWW-m	MT20	6.0	9.0	1.75	3.75
C	TMWW-t	MT20	4.0	4.0		
D	TMW+w	MT20	2.0	4.0		
E	TS-t	MT20	3.0	8.0		
F	TMWW-t	MT20	4.0	4.0		
G	TTWW-m	MT20	6.0	9.0	1.75	3.75
H	TMVW-t	MT20	5.0	8.0	2.00	3.75
J	BMV1+p	MT20	3.0	5.0		
K	BMWW-t	MT20	5.0	6.0	2.25	1.75
L	BMWW-t	MT20	5.0	6.0	2.25	2.25
M	BS-t	MT18HS	3.25	10.0		
N	BMWWW-t	MT20	5.0	6.0		
O	BS-t	MT18HS	3.25	10.0		
P	BMWW-t	MT20	5.0	6.0	2.25	2.25
Q	BMWW-t	MT20	5.0	6.0	2.25	1.75
R	BMV1+p	MT20	3.0	5.0		

HANGERS NOTES

Note: Lateral brace(s) shown shall be 2x4 SPF#2.

REGISTERED PROFESSIONAL ENGINEER
08/15/2018
EDWIN C. FOK
PROVINCE OF ONTARIO

DIMENSIONS, SUPPORTS AND LOADINGS SPECIFIED BY FABRICATOR TO BE VERIFIED BY BUILDING DESIGNER

BEARINGS

JT	FACTORED GROSS REACTION VERT	HORZ	MAXIMUM FACTORED GROSS REACTION DOWN	HORZ	UPLIFT	INPUT BRG IN-SX	REQRD BRG IN-SX
R	3157	0	3157	0	0	5-8	4-8
J	3157	0	3157	0	0	5-8	4-8

UNFACTORED REACTIONS

JT	1ST LCASE COMBINED	MAX./MIN. COMPONENT REACTIONS SNOW	LIVE	PERM.LIVE	WIND	DEAD	SOIL
R	2253	1362 / 0	0 / 0	0 / 0	0 / 0	891 / 0	0 / 0
J	2253	1362 / 0	0 / 0	0 / 0	0 / 0	891 / 0	0 / 0

BEARING MATERIAL TO BE SPF NO.2 OR BETTER AT JOINT(S) R, J

BRACING

TOP CHORD TO BE SHEATHED OR MAX. PURLIN SPACING = 2.56 FT.
MAX. UNBRACED BOTTOM CHORD LENGTH = 10.00 FT OR RIGID CEILING DIRECTLY APPLIED.

ALL PITCH BREAKS AND PERIMETER CORNER JOINTS MUST BE LATERALLY RESTRAINED.

LOADING

TOTAL LOAD CASES: (4)

CHORDS

MEMB. FR-TO	MAX. FACTORED FORCE (LBS)	FACTORED VERT. LOAD (PLF) FROM	TO	LC1 MAX CSI (LC)	MAX. UNBRAC LENGTH
A- B	-3947 / 0	-78.0	-78.0	0.78 (1)	3.44
B- C	-4980 / 0	-153.5	-153.5	0.88 (1)	2.76
C- D	-5482 / 0	-153.5	-153.5	0.93 (1)	2.56
D- E	-5482 / 0	-153.5	-153.5	0.93 (1)	2.56
E- F	-5482 / 0	-153.5	-153.5	0.93 (1)	2.56
F- G	-4980 / 0	-153.5	-153.5	0.88 (1)	2.76
G- H	-3947 / 0	-78.0	-78.0	0.78 (1)	3.44
R- A	-2919 / 0	0.0	0.0	0.21 (1)	6.10
J- H	-2919 / 0	0.0	0.0	0.21 (1)	6.10
S- R	0 / 0	-96.5	-96.5	0.17 (1)	10.00
R- Q	0 / 0	-36.4	-36.4	0.32 (4)	10.00
Q- P	0 / 3274	-36.4	-36.4	0.76 (1)	10.00
P- O	0 / 4980	-36.4	-36.4	0.98 (1)	10.00
O- N	0 / 4980	-36.4	-36.4	0.98 (1)	10.00
N- M	0 / 4980	-36.4	-36.4	0.98 (1)	10.00
M- L	0 / 4980	-36.4	-36.4	0.98 (1)	10.00
L- K	0 / 3274	-36.4	-36.4	0.76 (1)	10.00
K- J	0 / 0	-36.4	-36.4	0.32 (4)	10.00
J- I	0 / 0	-96.5	-96.5	0.17 (1)	10.00

WEBS

MEMB. FR-TO	MAX. FACTORED FORCE (LBS)	MAX CSI (LC)
Q- B	-259 / 73	0.10 (1)
B- P	0 / 2304	0.57 (1)
P- C	-1374 / 0	0.56 (1)
C- N	0 / 685	0.17 (1)
N- D	-739 / 0	0.30 (1)
N- F	0 / 685	0.17 (1)
L- F	-1374 / 0	0.56 (1)
L- G	0 / 2304	0.57 (1)
K- G	-259 / 73	0.10 (1)
A- Q	0 / 3317	0.59 (1)
K- H	0 / 3317	0.59 (1)

FACTORED CONCENTRATED LOADS (LBS)

JT	LOC.	LC1	MAX-	MAX+	FACE	DIR.	TYPE
B	5-10-8	-334	-334	---	FRONT	VERT	TOTAL
G	26-11-8	-334	-334	---	FRONT	VERT	TOTAL

DESIGN CRITERIA

SPECIFIED LOADS:

TOP CH.	LL	=	21.0	PSF
	DL	=	6.0	PSF
BOT CH.	LL	=	0.0	PSF
	DL	=	7.4	PSF
TOTAL LOAD		=	34.4	PSF

SPACING = 24.0 IN. C/C

LOADING IN FLAT SECTION BASED ON A SLOPE OF 2.00/12 MINIMUM

GIRDER TYPE: CPrimeHip
SIDE SETBACK = 5-10-8
END SETBACK = 5-10-8
END WALL WIDTH = 0-0
CORNER FRAMING TYPE: CONVENTIONAL
END JACK TYPE: CONVENTIONAL
APPLIED TO FRONT SIDE
- ADDT'L LOADS BASED ON 55 % OF GSL.

THIS TRUSS IS DESIGNED FOR RESIDENTIAL OR SMALL BUILDING REQUIREMENTS OF PART 9, NBCC 2010, NBCC 2015

THIS DESIGN COMPLIES WITH:
- PART 9 OF OBC 2012, OBC 2018
- CSA 086-09, CSA 086-14
- TPIC 2011, TPIC 2014

(55 % OF 23.0 P.S.F. G.S.L. PLUS 8.4 P.S.F. RAIN LOAD) EQUALS 21.0 P.S.F. SPECIFIED ROOF LIVE LOAD

ALLOWABLE DEFL.(LL)= L/360 (1.09")
CALCULATED VERT. DEFL.(LL) = L/ 999 (0.25")
ALLOWABLE DEFL.(TL)= L/360 (1.09")
CALCULATED VERT. DEFL.(TL) = L/ 797 (0.49")

CANTILEVER DEFLECTION:
ALLOWABLE DEFL.(LL)= L/120 (0.19")
CALCULATED VERT. DEFL.(LL) = L/ 999 (0.01")
ALLOWABLE DEFL.(TL)= L/120 (0.19")
CALCULATED VERT. DEFL.(TL) = L/ 999 (0.01")

CSI: TC=0.93/1.00 (C-D:1) , BC=0.98/1.00 (N-P:1) , WB=0.59/1.00 (H-K:1) , SSI=0.42/1.00 (B-C:1)

DOL LUMBER=1.00 NAIL=1.00 LS BEND=1.00 COMP=1.00 SHEAR=1.00 TENS= 1.00

COMPANION LIVE LOAD FACTOR = 1.00

AUTOSOLVE HEELS OFF

TRUSS PLATE MANUFACTURER IS NOT RESPONSIBLE FOR QUALITY CONTROL IN THE TRUSS MANUFACTURING PLANT .

NAIL VALUES

PLATE	GRIP(DRY) (PSI) MAX	MIN	SHEAR (PLI) MAX	MIN	SECTION (PLI) MAX	MIN
MT20	618	354	1667	788	1987	1656
MT18HS	511	354	2455	1382	3004	2010

A-18082083

CONTINUED ON PAGE 2

JOB NAME	TRUSS NAME	QUANTITY	PLY	JOB DESC.	DRWG NO.
301041	H1TA	1	1	TRUSS DESC.	

Alpa Roof Truss, Maple

Version 8.210 S Jun 13 2018 MiTek Industries, Inc. Wed Aug 15 16:36:23 2018 Page 1

ID:84gOFYESM8s1JmDO6_uSGRyQWjP-P6OxkEQG7X2LFGTGaaPiDum2lcMQL0uY4L_bW1ynZCs

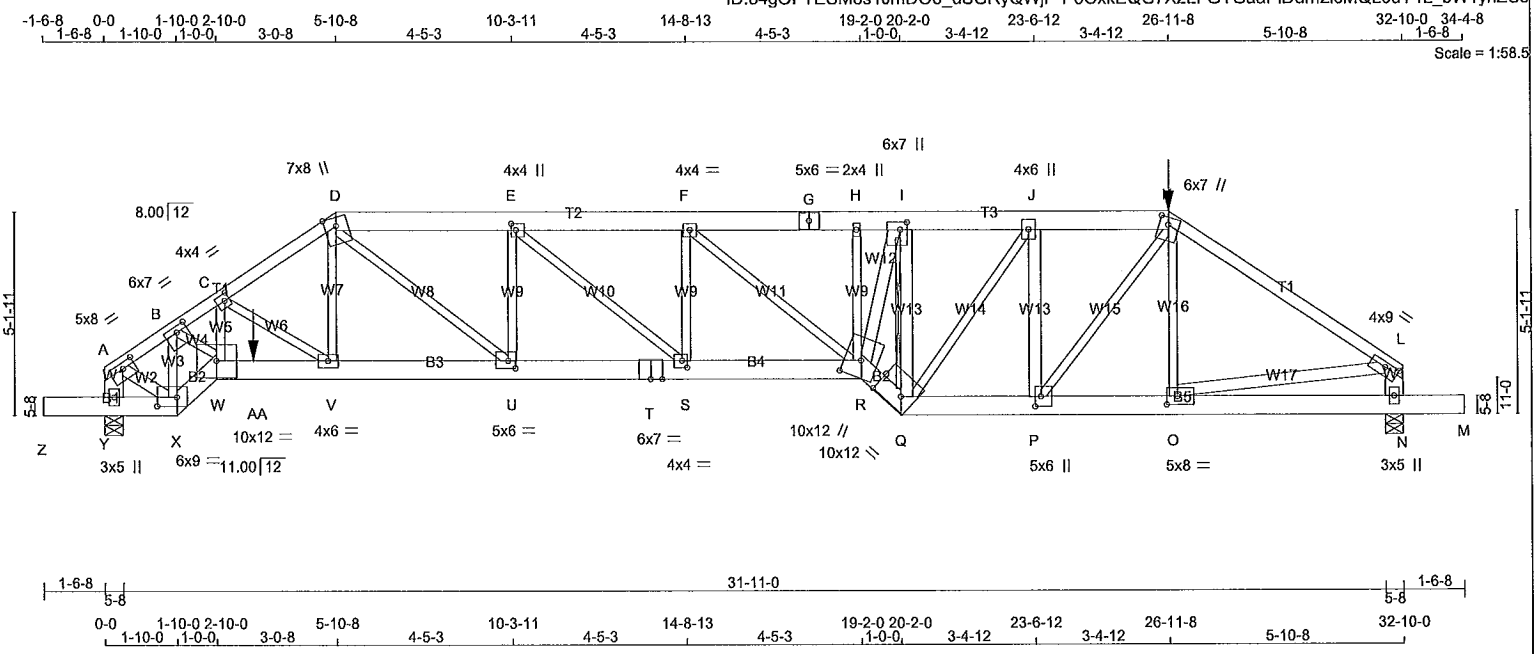

TOTAL WEIGHT = 187 lb

[M]

LUMBER

N. L. G. A. RULES

CHORDS	SIZE		LUMBER	DESCR.
A - D	2x4	DRY	1650F 1.5E	SPF
D - G	2x6	DRY	No.2	SPF
G - K	2x6	DRY	No.2	SPF
K - L	2x4	DRY	1650F 1.5E	SPF
Y - A	2x6	DRY	No.2	SPF
N - L	2x6	DRY	No.2	SPF
Z - X	2x6	DRY	No.2	SPF
X - W	2x6	DRY	No.2	SPF
W - T	2x6	DRY	1650F 1.5E	SPF
T - R	2x6	DRY	1650F 1.5E	SPF
R - Q	2x6	DRY	No.2	SPF
Q - M	2x6	DRY	No.2	SPF
ALL WEBS EXCEPT	2x3	DRY	No.2	SPF
R - I	2x4	DRY	No.2	SPF
Q - I	2x4	DRY	No.2	SPF
P - J	2x4	DRY	No.2	SPF
A - X	2x4	DRY	No.2	SPF
O - L	2x4	DRY	No.2	SPF

DRY: SEASONED LUMBER.

PLATES (table is in inches)

JT	TYPE	PLATES	W	LEN	Y	X
A	TMVW-t	MT20	5.0	8.0	1.75	3.75
B	TMWW-t	MT20	6.0	7.0	1.75	3.25
C	TMWW-t	MT20	4.0	4.0	2.00	1.50
D	TTWW+m	MT20	7.0	8.0	Edge	
E	TMWW+t	MT20	4.0	4.0	2.00	1.50
F	TMWW-t	MT20	4.0	4.0		
G	TS-t	MT20	5.0	6.0		
H	TMW+w	MT20	2.0	4.0		
I	TMWW+t	MT20	6.0	7.0	2.25	2.00
J	TMWW+t	MT20	4.0	6.0		
K	TTWW+m	MT20	6.0	7.0	2.25	2.75
L	TMVW-t	MT20	4.0	9.0	1.50	4.25
N	BMV1+p	MT20	3.0	5.0		
O	BMWW-t	MT20	5.0	8.0	2.50	3.25
P	BMWW+t	MT20	5.0	6.0	3.00	1.75
Q	BBWW-h	MT20	10.0	12.0	3.75	8.00

Note: Lateral brace(s) shown shall be 2x4 SPF#2.

REGISTERED PROFESSIONAL ENGINEER
08/15/2018
EDWIN C. FOK
PROVINCE OF ONTARIO

DIMENSIONS, SUPPORTS AND LOADINGS SPECIFIED BY FABRICATOR TO BE VERIFIED BY BUILDING DESIGNER

BEARINGS

JT	FACTORED GROSS REACTION VERT	HORZ	MAXIMUM FACTORED GROSS REACTION DOWN	HORZ	UPLIFT	INPUT BRG IN-SX	REQRD BRG IN-SX
Y	3354	0	3354	0	0	5-8	5-2
N	3169	0	3169	0	0	5-8	4-9

ALLOW FOR 0.3" OF HORIZONTAL MOVEMENT DUE TO TOTAL LOAD

UNFACTORED REACTIONS

JT	1ST LCASE COMBINED	SNOW	MAX./MIN. COMPONENT REACTIONS LIVE	PERM.LIVE	WIND	DEAD	SOIL
Y	2383	1498 / 0	0 / 0	0 / 0	0 / 0	886 / 0	0 / 0
N	2261	1371 / 0	0 / 0	0 / 0	0 / 0	890 / 0	0 / 0

BEARING MATERIAL TO BE SPF NO.2 OR BETTER AT JOINT(S) Y, N

BRACING

TOP CHORD TO BE SHEATHED OR MAX. PURLIN SPACING = 2.94 FT.
MAX. UNBRACED BOTTOM CHORD LENGTH = 10.00 FT OR RIGID CEILING DIRECTLY APPLIED.

ALL PITCH BREAKS AND PERIMETER CORNER JOINTS MUST BE LATERALLY RESTRAINED.

2x4 DRY SPF No.2 T-BRACE AT I-Q

FASTEN T AND I-BRACES TO NARROW EDGE OF WEB WITH ONE ROW PER PLY OF 3" COMMON WIRE NAILS @ 6" O.C. WITH 3" MINIMUM END DISTANCE. BRACE MUST COVER 90% OF WEB LENGTH.

END VERTICAL(S) MUST BE SHEATHED OR HAVE BRACES AS INDICATED IN THE MAX. UNBRACED LENGTH COLUMN OF THE TABLE BELOW

LOADING

TOTAL LOAD CASES: (4)

CHORDS

MEMB. FR-TO	MAX. FACTORED FORCE (LBS)	FACTORED VERT. LOAD (PLF) FROM	TO	LC1 CSI (LC)	MAX UNBRAC LENGTH
A- B	-3343 / 0	-78.0	-78.0	0.16 (1)	4.21
B- C	-5845 / 0	-78.0	-78.0	0.27 (1)	3.19
C- D	-5116 / 0	-78.0	-78.0	0.27 (1)	3.42
D- E	-6118 / 0	-78.0	-78.0	0.38 (1)	3.28
E- F	-7001 / 0	-78.0	-78.0	0.41 (1)	3.05
F- G	-6836 / 0	-78.0	-78.0	0.53 (1)	2.94
G- H	-6836 / 0	-78.0	-78.0	0.53 (1)	2.94
H- I	-6835 / 0	-153.5	-153.5	0.47 (1)	2.98
I- J	-5399 / 0	-153.5	-153.5	0.34 (1)	3.50
J- K	-4634 / 0	-153.5	-153.5	0.29 (1)	3.80
K- L	-4023 / 0	-78.0	-78.0	0.79 (1)	3.41
Y- A	-3126 / 0	0.0	0.0	0.22 (1)	5.93
N- L	-2926 / 0	0.0	0.0	0.21 (1)	6.10
Z- Y	0 / 0	-96.5	-96.5	0.08 (1)	10.00
Y- X	-1 / 0	-18.5	-18.5	0.08 (1)	10.00
X- W	0 / 3485	-18.5	-18.5	0.45 (1)	10.00
W-AA	0 / 4856	-18.5	-18.5	0.54 (1)	10.00
AA- V	0 / 4856	-112.0	-112.0	0.54 (1)	10.00
V- U	0 / 4249	-112.0	-112.0	0.46 (1)	10.00
U- T	0 / 6118	-112.0	-112.0	0.59 (1)	10.00
T- S	0 / 6118	-112.0	-112.0	0.59 (1)	10.00
S- R	0 / 7001	-112.0	-112.0	0.69 (1)	10.00
R- Q	0 / 7082	-36.4	-36.4	0.92 (1)	10.00
Q- P	0 / 4634	-36.4	-36.4	0.65 (1)	10.00
P- O	0 / 3361	-36.4	-36.4	0.49 (1)	10.00
O- N	0 / 0	-36.4	-36.4	0.14 (4)	10.00
N- M	0 / 0	-96.5	-96.5	0.08 (1)	10.00

WEBS

MEMB. FR-TO	MAX. FACTORED FORCE (LBS)	MAX CSI (LC)
X- B	-3569 / 0	0.59 (1)
B- W	0 / 3154	0.78 (1)
W- C	0 / 612	0.15 (1)
C- V	-695 / 0	0.16 (1)
V- D	0 / 969	0.24 (1)
D- U	0 / 2460	0.61 (1)
U- E	-1128 / 0	0.28 (1)
E- S	0 / 1159	0.29 (1)
S- F	-297 / 0	0.07 (1)
F- R	-216 / 0	0.12 (1)
R- H	-17 / 33	0.01 (4)
R- I	0 / 5492	0.97 (1)
Q- I	-5692 / 0	0.90 (1)
Q- J	0 / 1297	0.32 (1)
P- J	-1728 / 0	0.44 (1)
P- K	0 / 2177	0.54 (1)
O- K	-270 / 48	0.10 (1)
A- X	0 / 3000	0.53 (1)
O- L	0 / 3388	0.60 (1)

DESIGN CRITERIA

*** SPECIAL LOADS ANALYSIS ***
GEOMETRY AND/OR BASIC LOADS CHANGED BY USER.
LOADS WERE DERIVED FROM USER INPUT
NO FURTHER MODIFICATIONS WERE MADE

SPECIFIED LOADS:

TOP CH.	LL	=	21.0	PSF
	DL	=	6.0	PSF
BOT CH.	LL	=	0.0	PSF
	DL	=	7.4	PSF
TOTAL LOAD		=	34.4	PSF

SPACING = 24.0 IN. C/C

LOADING IN FLAT SECTION BASED ON A SLOPE OF 2.00/12 MINIMUM

GIRDER TYPE: CPrimeHip
SIDE SETBACK = 5-10-8
END SETBACK = 5-10-8
END WALL WIDTH = 0-0
CORNER FRAMING TYPE: CONVENTIONAL
END JACK TYPE: CONVENTIONAL
APPLIED TO FRONT SIDE
- ADDT'L LOADS BASED ON 55 % OF GSL.
LOADS APPLIED TO FIRST 13-8-0 OF SPAN MEASURED FROM THE RIGHT.

GIRDER TYPE: CStdGirder
START DISTANCE = 3-9-4
START SPAN CARRIED = 5-10-8
END DISTANCE = 19-2-0
END SPAN CARRIED = 5-10-8
END WALL WIDTH = 0-0
APPLIED TO FRONT SIDE OF BOTTOM CHORD.
- ADDT'L LOADS BASED ON 55 % OF GSL.

*** NON STANDARD GIRDER ***
ADDT'L USER-DEFINED LOADS APPLIED TO ALL LOAD CASES.

THIS TRUSS IS DESIGNED FOR RESIDENTIAL OR SMALL BUILDING REQUIREMENTS OF PART 9, NBCC 2010, NBCC 2015

THIS DESIGN COMPLIES WITH:
- PART 9 OF OBC 2012, OBC 2018
- CSA 086-09, CSA 086-14
- TPIC 2011, TPIC 2014

DESIGN ASSUMPTIONS
-OVERHANG NOT TO BE ALTERED OR CUT OFF.

(55 % OF 23.0 P.S.F. G.S.L. PLUS 8.4 P.S.F. RAIN LOAD) EQUALS 21.0 P.S.F. SPECIFIED ROOF LIVE LOAD

ALLOWABLE DEFL.(LL)= L/360 (1.09")
CALCULATED VERT. DEFL.(LL) = L/ 999 (0.33")
ALLOWABLE DEFL.(TL)= L/360 (1.09")
CALCULATED VERT. DEFL.(TL) = L/ 613 (0.64")

CANTILEVER DEFLECTION:
ALLOWABLE DEFL.(LL)= L/120 (0.19")
CALCULATED VERT. DEFL.(LL) = L/ 328 (0.06")

A-18082084

CONTINUED ON PAGE 2

JOB NAME	TRUSS NAME	QUANTITY	PLY	JOB DESC.	DRWG NO.
301041	H1TA	1	1	TRUSS DESC.	

PLATES (table is in inches)

JT	TYPE	PLATES	W	LEN	Y	X
R	BBWWW+m	MT20	10.0	12.0	5.25	5.00
S	BMWW-t	MT20	4.0	4.0	2.00	1.50
T	BS-t	MT20	6.0	7.0		
U	BMWW-t	MT20	5.0	6.0	2.25	2.25
V	BMWW-t	MT20	4.0	6.0		
W	BBWW-l	MT20	10.0	12.0		
X	BBWW-l	MT20	6.0	9.0	2.75	6.00
Y	BMV1+p	MT20	3.0	5.0		

Edge - INDICATES REFERENCE CORNER OF PLATE TOUCHES EDGE OF CHORD.

HANGERS NOTES

1) SPECIAL HANGER(S) OR CONNECTION(S) REQUIRED TO SUPPORT CONCENTRATED LOAD(S) 334.0 lbs FACTORED DOWN AT 26-11-8 ON TOP CHORD, AND 443.4 lbs FACTORED DOWN AT 3-9-4 ON BOTTOM CHORD. DESIGN FOR UNSPECIFIED CONNECTION(S) IS DELEGATED TO THE BUILDING DESIGNER.

Note: Lateral brace(s) shown shall be 2x4 SPF#2.

REGISTERED PROFESSIONAL ENGINEER
08/15/2018
EDWIN C. FOK
PROVINCE OF ONTARIO

FACTORED CONCENTRATED LOADS (LBS)

JT	LOC.	LC1	MAX-	MAX+	FACE	DIR.	TYPE
K	26-11-8	-334	-334	—	FRONT	VERT	TOTAL
AA	3-9-4	-443	-443	—	FRONT	VERT	TOTAL

ALLOWABLE DEFL.(TL)= L/120 (0.19")
CALCULATED VERT. DEFL.(TL) = L/ 170 (0.11")

CSI: TC=0.79/1.00 (K-L:1) , BC=0.92/1.00 (Q-R:1) , WB=0.97/1.00 (I-R:1) , SSI=0.25/1.00 (V-W:1)

DOL LUMBER=1.00 NAIL=1.00 LS BEND=1.00 COMP=1.00 SHEAR=1.00 TENS= 1.00

COMPANION LIVE LOAD FACTOR = 1.00

AUTOSOLVE HEELS OFF

TRUSS PLATE MANUFACTURER IS NOT RESPONSIBLE FOR QUALITY CONTROL IN THE TRUSS MANUFACTURING PLANT .

NAIL VALUES

PLATE	GRIP(DRY) (PSI) MAX	MIN	SHEAR (PLI) MAX	MIN	SECTION (PLI) MAX	MIN
MT20	618	354	1667	788	1987	1656

PLATE PLACEMENT TOL. = 0.250 inches

PLATE ROTATION TOL. = 5.0 Deg.

JSI GRIP= 0.90 (L) (INPUT = 0.90)
JSI METAL= 0.91 (T) (INPUT = 1.00)

A-1808208-4(2)

JOB NAME	TRUSS NAME	QUANTITY	PLY	JOB DESC.	DRWG NO.
291815	H55A	1	1	TRUSS DESC.	

Alpa Roof Truss, Maple

Version 8.200 S Jan 6 2018 MiTek Industries, Inc. Sat Feb 17 16:15:14 2018 Page 1

ID:84gOFYESM8s1JmDO6_uSGRyQWjP-sPnTFFk1KaeqR7bjvaFFz_Kie6wBVYK1bgqe7SzkBuR

Scale = 1:49.4

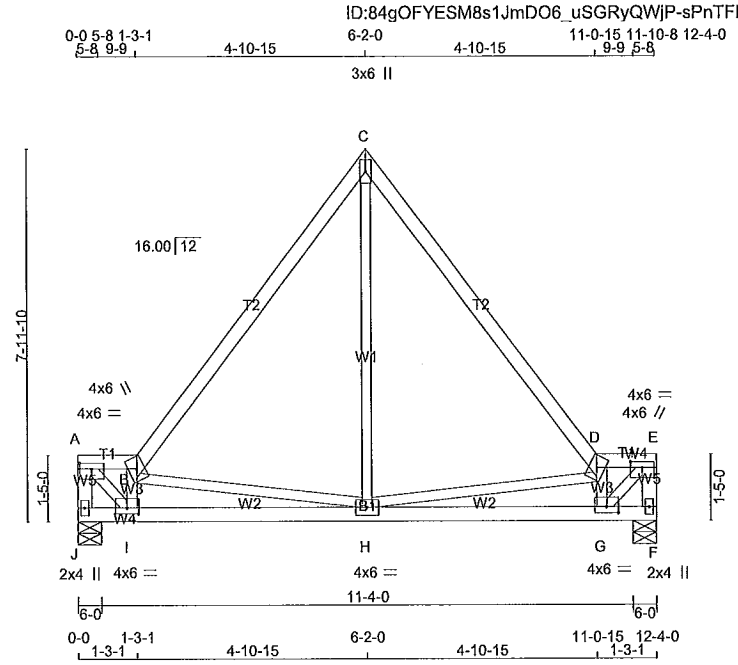

TOTAL WEIGHT = 55 lb

(M)

LUMBER

N. L. G. A. RULES

CHORDS	SIZE		LUMBER	DESCR.
J - A	2x4	DRY	No.2	SPF
A - B	2x4	DRY	No.2	SPF
B - C	2x4	DRY	No.2	SPF
C - D	2x4	DRY	No.2	SPF
D - E	2x4	DRY	No.2	SPF
F - E	2x4	DRY	No.2	SPF
J - F	2x4	DRY	No.2	SPF
ALL WEBS	2x3	DRY	No.2	SPF

F SEASONED LUMBER.

PLATES (table is in inches)

JT	TYPE	PLATES	W	LEN	Y	X
A	TMVW-t	MT20	4.0	6.0	1.50	3.00
B	TTWW+m	MT20	4.0	6.0		
C	TTW+p	MT20	3.0	6.0		
D	TTWW+m	MT20	4.0	6.0		
E	TMVW-t	MT20	4.0	6.0	1.50	3.00
F	BMV1+p	MT20	2.0	4.0		
G	BMWW-t	MT20	4.0	6.0	1.50	3.00
H	BMWWW-t	MT20	4.0	6.0		
I	BMWW-t	MT20	4.0	6.0	1.50	3.00
J	BMV1+p	MT20	2.0	4.0		

NOTE: Lateral brace(s) shown shall be 1x4 for Part 9 design as per OBC 9.23.13.11, and no less than 2x4 for Part 4 design

REGISTERED PROFESSIONAL ENGINEER
02/17/2018
EDWIN C. FOK
PROVINCE OF ONTARIO

DIMENSIONS, SUPPORTS AND LOADINGS SPECIFIED BY FABRICATOR TO BE VERIFIED BY BUILDING DESIGNER

BEARINGS

JT	FACTORED GROSS REACTION VERT	HORZ	MAXIMUM FACTORED GROSS REACTION DOWN	HORZ	UPLIFT	INPUT BRG IN-SX	REQRD BRG IN-SX
J	1171	0	1171	0	0	6-0	1-14
F	1171	0	1171	0	0	6-0	1-14

UNFACTORED REACTIONS

JT	1ST LCASE COMBINED	MAX./MIN. COMPONENT REACTIONS SNOW	LIVE	PERM.LIVE	WIND	DEAD	SOIL
J	835	510 / 0	0 / 0	0 / 0	0 / 0	325 / 0	0 / 0
F	835	510 / 0	0 / 0	0 / 0	0 / 0	325 / 0	0 / 0

BEARING MATERIAL TO BE SPF NO.2 OR BETTER AT JOINT(S) J, F

BRACING

TOP CHORD TO BE SHEATHED OR MAX. PURLIN SPACING = 5.74 FT.
MAX. UNBRACED BOTTOM CHORD LENGTH = 10.00 FT OR RIGID CEILING DIRECTLY APPLIED.

ALL PITCH BREAKS AND PERIMETER CORNER JOINTS MUST BE LATERALLY RESTRAINED.

LOADING

TOTAL LOAD CASES: (4)

CHORDS

MEMB. FR-TO	MAX. FACTORED FORCE (LBS)	FACTORED VERT. LOAD (PLF) FROM	TO	LC1 MAX CSI (LC)	MAX. UNBRAC LENGTH
J- A	-1202 / 0	0.0	0.0	0.13 (1)	7.26
A- B	-1228 / 0	-78.0	-78.0	0.04 (1)	5.74
B- C	-853 / 0	-78.0	-78.0	0.42 (1)	6.04
C- D	-853 / 0	-78.0	-78.0	0.42 (1)	6.04
D- E	-1228 / 0	-78.0	-78.0	0.04 (1)	5.74
F- E	-1202 / 0	0.0	0.0	0.13 (1)	7.26
J- I	0 / 0	-112.0	-112.0	0.16 (1)	10.00
I- H	0 / 1304	-112.0	-112.0	0.66 (1)	10.00
H- G	0 / 1304	-112.0	-112.0	0.66 (1)	10.00
G- F	0 / 0	-112.0	-112.0	0.16 (1)	10.00

WEBS

MEMB. FR-TO	MAX. FACTORED FORCE (LBS)	MAX CSI (LC)
A- I	0 / 1717	0.42 (1)
I- B	-799 / 0	0.12 (1)
B- H	-808 / 0	0.37 (1)
H- C	0 / 978	0.24 (1)
H- D	-808 / 0	0.37 (1)
G- D	-799 / 0	0.12 (1)
G- E	0 / 1717	0.42 (1)

DESIGN CRITERIA

SPECIFIED LOADS:

TOP CH.	LL	=	21.0	PSF
	DL	=	6.0	PSF
BOT CH.	LL	=	0.0	PSF
	DL	=	7.4	PSF
TOTAL LOAD		=	34.4	PSF

SPACING = 24.0 IN. C/C

LOADING IN ALL FLAT SECTIONS BASED ON A SLOPE OF 2.00/12 MINIMUM

GIRDER TYPE: CStdGirder
START DISTANCE = 0-0
START SPAN CARRIED = 5-10-8
END DISTANCE = 12-4-0
END SPAN CARRIED = 5-10-8
END WALL WIDTH = 0-0
APPLIED TO FRONT SIDE OF BOTTOM CHORD.
- ADDT'L LOADS BASED ON 55 % OF GSL.

THIS TRUSS IS DESIGNED FOR RESIDENTIAL OR SMALL BUILDING REQUIREMENTS OF PART 9, NBCC 2010, NBCC 2015

THIS DESIGN COMPLIES WITH:
- PART 9 OF OBC 2012, OBC 2018
- CSA 086-09, CSA 086-14
- TPIC 2011, TPIC 2014

(55 % OF 23.0 P.S.F. G.S.L. PLUS 8.4 P.S.F. RAIN LOAD) EQUALS 21.0 P.S.F. SPECIFIED ROOF LIVE LOAD

ALLOWABLE DEFL.(LL)= L/360 (0.41")
CALCULATED VERT. DEFL.(LL) = L/ 999 (0.05")
ALLOWABLE DEFL.(TL)= L/360 (0.41")
CALCULATED VERT. DEFL.(TL) = L/ 999 (0.11")

CSI: TC=0.42/1.00 (C-D:1) , BC=0.66/1.00 (H-I:1) , WB=0.42/1.00 (E-G:1) , SSI=0.27/1.00 (G-H:1)

DOL LUMBER=1.00 NAIL=1.00 LS BEND=1.00 COMP=1.00 SHEAR=1.00 TENS= 1.00

COMPANION LIVE LOAD FACTOR = 1.00

TRUSS PLATE MANUFACTURER IS NOT RESPONSIBLE FOR QUALITY CONTROL IN THE TRUSS MANUFACTURING PLANT .

NAIL VALUES

PLATE	GRIP(DRY) (PSI) MAX	MIN	SHEAR (PLI) MAX	MIN	SECTION (PLI) MAX	MIN
MT20	618	354	1667	788	1987	1656

PLATE PLACEMENT TOL. = 0.250 Inches

PLATE ROTATION TOL. = 5.0 Deg.

JSI GRIP= 0.90 (E) (INPUT = 0.90)
JSI METAL= 0.42 (D) (INPUT = 1.00)

A-18023589

JOB NAME	TRUSS NAME	QUANTITY	PLY	JOB DESC.	DRWG NO.
291815	H54T	2	1	TRUSS DESC.	

Alpa Roof Truss, Maple

Version 8.200 S Jan 6 2018 MiTek Industries, Inc. Sat Feb 17 16:14:46 2018 Page 1

ID:84gOFYESM8s1JmDO6_uSGRyQWjP-h04tNgOTwz7o4qSKGikhr4AzypU9xxTv9J1983zkBut

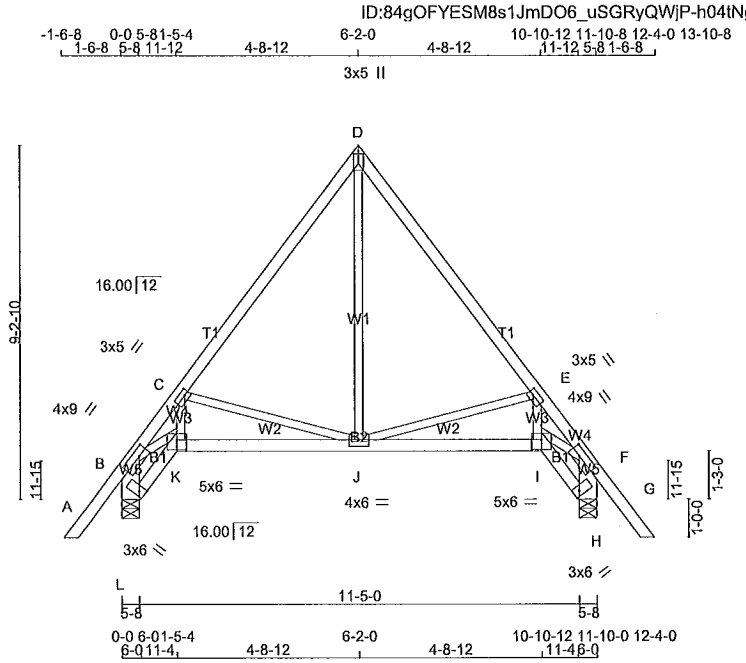

TOTAL WEIGHT = 2 X 66 = 131 lb

[M][F]

LUMBER

N. L. G. A. RULES

CHORDS	SIZE		LUMBER	DESCR.
A - D	2x4	DRY	No.2	SPF
D - G	2x4	DRY	No.2	SPF
L - B	2x6	DRY	No.2	SPF
H - F	2x6	DRY	No.2	SPF
L - K	2x4	DRY	No.2	SPF
K - I	2x4	DRY	No.2	SPF
I - H	2x4	DRY	No.2	SPF
ALL WEBS	2x3	DRY	No.2	SPF

EXCEPT

SEASONED LUMBER.

PLATES (table is in inches)

JT	TYPE	PLATES	W	LEN	Y	X
B	TMVW-t	MT20	4.0	9.0	2.00	3.00
C	TMWW-t	MT20	3.0	5.0	1.50	1.50
D	TTW+p	MT20	3.0	5.0	2.00	Edge
E	TMWW-t	MT20	3.0	5.0	1.50	1.50
F	TMVW-t	MT20	4.0	9.0	2.00	3.00
H	BVM1+l	MT20	3.0	6.0	Edge	
I	BBWW-l	MT20	5.0	6.0	3.00	3.00
J	BMWWW-t	MT20	4.0	6.0		
K	BBWW-l	MT20	5.0	6.0	3.00	3.00
L	BVM1+l	MT20	3.0	6.0	Edge	

Edge - INDICATES REFERENCE CORNER OF PLATE TOUCHES EDGE OF CHORD.

NOTE: Lateral brace(s) shown shall be 1x4 for Part 9 design as per OBC 9.23.13.11, and no less than 2x4 for Part 4 design

REGISTERED PROFESSIONAL ENGINEER
02/17/2018
EDWIN C. FOK
PROVINCE OF ONTARIO

DIMENSIONS, SUPPORTS AND LOADINGS SPECIFIED BY FABRICATOR TO BE VERIFIED BY BUILDING DESIGNER

BEARINGS

JT	FACTORED GROSS REACTION VERT	HORZ	MAXIMUM FACTORED GROSS REACTION DOWN	HORZ	UPLIFT	INPUT BRG IN-SX	REQRD BRG IN-SX
L	702	0	702	0	0	5-8	1-8
H	702	0	702	0	0	5-8	1-8

UNFACTORED REACTIONS

JT	1ST LCASE COMBINED	MAX./MIN. COMPONENT REACTIONS SNOW	LIVE	PERM.LIVE	WIND	DEAD	SOIL
L	499	317 / 0	0 / 0	0 / 0	0 / 0	182 / 0	0 / 0
H	499	317 / 0	0 / 0	0 / 0	0 / 0	182 / 0	0 / 0

BEARING MATERIAL TO BE SPF NO.2 OR BETTER AT JOINT(S) L, H
BEARING SIZE FACTOR = 1.15 AT JNT(S) L, H (BASED ON SUPPORT DEPTH = 1-8)

BRACING

TOP CHORD TO BE SHEATHED OR MAX. PURLIN SPACING = 5.93 FT.
MAX. UNBRACED BOTTOM CHORD LENGTH = 10.00 FT OR RIGID CEILING DIRECTLY APPLIED.

ALL PITCH BREAKS AND PERIMETER CORNER JOINTS MUST BE LATERALLY RESTRAINED.

LOADING

TOTAL LOAD CASES: (4)

CHORDS

MEMB. FR-TO	MAX. FORCE (LBS)	FACTORED VERT. LOAD (PLF) FROM	TO	LC1 MAX CSI (LC)	MAX. UNBRAC LENGTH
A- B	0 / 43	-78.0	-78.0	0.11 (1)	10.00
B- C	-1065 / 0	-78.0	-78.0	0.16 (1)	5.93
C- D	-421 / 0	-78.0	-78.0	0.21 (1)	6.25
D- E	-421 / 0	-78.0	-78.0	0.21 (1)	6.25
E- F	-1065 / 0	-78.0	-78.0	0.16 (1)	5.93
F- G	0 / 43	-78.0	-78.0	0.11 (1)	10.00
L- B	-689 / 0	0.0	0.0	0.05 (1)	7.81
H- F	-689 / 0	0.0	0.0	0.05 (1)	7.81
L- K	0 / 0	-18.5	-18.5	0.01 (4)	10.00
K- J	0 / 629	-18.5	-18.5	0.17 (4)	10.00
J- I	0 / 629	-18.5	-18.5	0.17 (4)	10.00
I- H	0 / 0	-18.5	-18.5	0.01 (4)	10.00

WEBS

MEMB. FR-TO	MAX. FORCE (LBS)	MAX CSI (LC)
J- D	0 / 333	0.08 (1)
J- E	-409 / 0	0.16 (1)
I- E	0 / 371	0.08 (1)
C- J	-409 / 0	0.16 (1)
K- C	0 / 371	0.08 (1)
B- K	0 / 730	0.16 (1)
I- F	0 / 730	0.16 (1)

DESIGN CRITERIA

SPECIFIED LOADS:

TOP CH.	LL	=	21.0	PSF
	DL	=	6.0	PSF
BOT CH.	LL	=	0.0	PSF
	DL	=	7.4	PSF
TOTAL LOAD		=	34.4	PSF

SPACING = 24.0 IN. C/C

THIS TRUSS IS DESIGNED FOR RESIDENTIAL OR SMALL BUILDING REQUIREMENTS OF PART 9, NBCC 2010, NBCC 2015

THIS DESIGN COMPLIES WITH:
- PART 9 OF OBC 2012, OBC 2018
- CSA 086-09, CSA 086-14
- TPIC 2011, TPIC 2014

DESIGN ASSUMPTIONS
-OVERHANG NOT TO BE ALTERED OR CUT OFF.

(55 % OF 23.0 P.S.F. G.S.L. PLUS 8.4 P.S.F. RAIN LOAD) EQUALS 21.0 P.S.F. SPECIFIED ROOF LIVE LOAD

ALLOWABLE DEFL.(LL)= L/360 (0.41")
CALCULATED VERT. DEFL.(LL) = L/ 999 (0.01")
ALLOWABLE DEFL.(TL)= L/360 (0.41")
CALCULATED VERT. DEFL.(TL) = L/ 999 (0.04")

CSI: TC=0.21/1.00 (D-E:1) , BC=0.17/1.00 (J-K:4) , WB=0.16/1.00 (B-K:1) , SSI=0.10/1.00 (D-E:1)

DOL LUMBER=1.00 NAIL=1.00 LS BEND=1.10 COMP=1.10 SHEAR=1.10 TENS= 1.10

COMPANION LIVE LOAD FACTOR = 1.00

AUTOSOLVE HEELS OFF

TRUSS PLATE MANUFACTURER IS NOT RESPONSIBLE FOR QUALITY CONTROL IN THE TRUSS MANUFACTURING PLANT .

NAIL VALUES

PLATE	GRIP(DRY) (PSI) MAX	MIN	SHEAR (PLI) MAX	MIN	SECTION (PLI) MAX	MIN
MT20	618	354	1667	788	1987	1656

PLATE PLACEMENT TOL. = 0.250 Inches

PLATE ROTATION TOL. = 5.0 Deg.

JSI GRIP= 0.55 (I) (INPUT = 0.90)
JSI METAL= 0.30 (I) (INPUT = 1.00)

A-18023588

JOB NAME	TRUSS NAME	QUANTITY	PLY	JOB DESC.	DRWG NO.
291815	H53T	2	1	TRUSS DESC.	

Alpa Roof Truss, Maple

Version 8.200 S Jan 6 2018 MiTek Industries, Inc. Sat Feb 17 16:14:39 2018 Page 1
ID:84gOFYESM8s1JmDO6_uSGRyQWjP-Og9EvHl4ZqEoklQ_Mk623cNmw?62opRtYjrlPzzkBv_

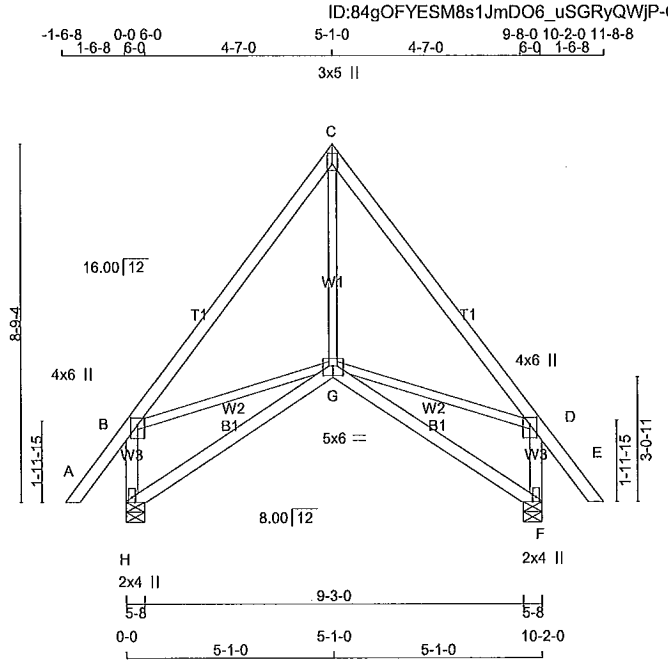

TOTAL WEIGHT = 2 X 55 = 111 lb

[M][F]

LUMBER
N. L. G. A. RULES

CHORDS	SIZE		LUMBER	DESCR.
A - C	2x4	DRY	No.2	SPF
C - E	2x4	DRY	No.2	SPF
H - B	2x4	DRY	No.2	SPF
F - D	2x4	DRY	No.2	SPF
H - G	2x4	DRY	No.2	SPF
G - F	2x4	DRY	No.2	SPF
ALL WEBS EXCEPT	2x3	DRY	No.2	SPF

SEASONED LUMBER.

PLATES (table is in inches)

JT	TYPE	PLATES	W	LEN	Y	X
B	TMVW+p	MT20	4.0	6.0	2.00	2.00
C	TTW+p	MT20	3.0	5.0	2.00	Edge
D	TMVW+p	MT20	4.0	6.0	2.00	2.00
F	BMV1+p	MT20	2.0	4.0	Edge	
G	BBWWW-p	MT20	5.0	6.0	2.75	3.00
H	BMV1+p	MT20	2.0	4.0	Edge	

Edge - INDICATES REFERENCE CORNER OF PLATE TOUCHES EDGE OF CHORD.

NOTE: Lateral brace(s) shown shall be 1x4 for Part 9 design as per OBC 9.23.13.11, and no less than 2x4 for Part 4 design

REGISTERED PROFESSIONAL ENGINEER
02/17/2018
EDWIN C. FOK
PROVINCE OF ONTARIO

DIMENSIONS, SUPPORTS AND LOADINGS SPECIFIED BY FABRICATOR TO BE VERIFIED BY BUILDING DESIGNER

BEARINGS

JT	FACTORED GROSS REACTION VERT	HORZ	MAXIMUM FACTORED GROSS REACTION DOWN	HORZ	UPLIFT	INPUT BRG IN-SX	REQRD BRG IN-SX
H	598	0	598	0	0	5-8	1-8
F	598	0	598	0	0	5-8	1-8

UNFACTORED REACTIONS

JT	1ST LCASE COMBINED	MAX./MIN. COMPONENT REACTIONS SNOW	LIVE	PERM.LIVE	WIND	DEAD	SOIL
H	424	271 / 0	0 / 0	0 / 0	0 / 0	153 / 0	0 / 0
F	424	271 / 0	0 / 0	0 / 0	0 / 0	153 / 0	0 / 0

BEARING MATERIAL TO BE SPF NO.2 OR BETTER AT JOINT(S) H, F

BRACING
TOP CHORD TO BE SHEATHED OR MAX. PURLIN SPACING = 6.25 FT.
MAX. UNBRACED BOTTOM CHORD LENGTH = 10.00 FT OR RIGID CEILING DIRECTLY APPLIED.

ALL PITCH BREAKS AND PERIMETER CORNER JOINTS MUST BE LATERALLY RESTRAINED.

LOADING
TOTAL LOAD CASES: (4)

CHORDS

MEMB. FR-TO	MAX. FACTORED FORCE (LBS)	FACTORED VERT. LOAD LC1 (PLF) FROM	TO	MAX CSI (LC)	MAX. UNBRAC LENGTH
A- B	0 / 43	-78.0	-78.0	0.11 (1)	10.00
B- C	-392 / 0	-78.0	-78.0	0.26 (1)	6.25
C- D	-392 / 0	-78.0	-78.0	0.26 (1)	6.25
D- E	0 / 43	-78.0	-78.0	0.11 (1)	10.00
H- B	-551 / 0	0.0	0.0	0.07 (1)	7.81
F- D	-551 / 0	0.0	0.0	0.07 (1)	7.81
H- G	0 / 0	-18.5	-18.5	0.14 (4)	10.00
G- F	0 / 0	-18.5	-18.5	0.14 (4)	10.00

WEBS

MEMB. FR-TO	MAX. FACTORED FORCE (LBS)	MAX CSI (LC)
G- C	0 / 231	0.05 (4)
B- G	0 / 245	0.06 (1)
G- D	0 / 245	0.06 (1)

DESIGN CRITERIA

SPECIFIED LOADS:

TOP CH.	LL	=	21.0	PSF
	DL	=	6.0	PSF
BOT CH.	LL	=	0.0	PSF
	DL	=	7.4	PSF
TOTAL LOAD		=	34.4	PSF

SPACING = 24.0 IN. C/C

THIS TRUSS IS DESIGNED FOR RESIDENTIAL OR SMALL BUILDING REQUIREMENTS OF PART 9, NBCC 2010, NBCC 2015

THIS DESIGN COMPLIES WITH:
- PART 9 OF OBC 2012, OBC 2018
- CSA 086-09, CSA 086-14
- TPIC 2011, TPIC 2014

(55 % OF 23.0 P.S.F. G.S.L. PLUS 8.4 P.S.F. RAIN LOAD) EQUALS 21.0 P.S.F. SPECIFIED ROOF LIVE LOAD

ALLOWABLE DEFL.(LL)= L/360 (0.34")
CALCULATED VERT. DEFL.(LL) = L/ 999 (0.01")
ALLOWABLE DEFL.(TL)= L/360 (0.34")
CALCULATED VERT. DEFL.(TL) = L/ 999 (0.04")

CSI: TC=0.26/1.00 (C-D:1) , BC=0.14/1.00 (F-G:4) , WB=0.06/1.00 (B-G:1) , SSI=0.09/1.00 (C-D:1)

DOL LUMBER=1.00 NAIL=1.00 LS BEND=1.10 COMP=1.10 SHEAR=1.10 TENS= 1.10

COMPANION LIVE LOAD FACTOR = 1.00

TRUSS PLATE MANUFACTURER IS NOT RESPONSIBLE FOR QUALITY CONTROL IN THE TRUSS MANUFACTURING PLANT .

NAIL VALUES

PLATE	GRIP(DRY) (PSI) MAX	MIN	SHEAR (PLI) MAX	MIN	SECTION (PLI) MAX	MIN
MT20	618	354	1667	788	1987	1656

PLATE PLACEMENT TOL. = 0.250 Inches

PLATE ROTATION TOL. = 5.0 Deg.

JSI GRIP= 0.70 (H) (INPUT = 0.90)
JSI METAL= 0.27 (H) (INPUT = 1.00)

A-18023587

JOB NAME	TRUSS NAME	QUANTITY	PLY	JOB DESC.	DRWG NO.
291815	H53S	1	1	TRUSS DESC.	

Alpa Roof Truss, Maple

Version 8.200 S Jan 6 2018 MiTek Industries, Inc. Sat Feb 17 16:14:33 2018 Page 1

ID:84gOFYESM8s1JmDO6_uSGRyQWjP-ZWozeDEJ__Ue0qyq?T?epL8kUa3PO5G?AoOzCKzkBv4

Scale = 1:55.4

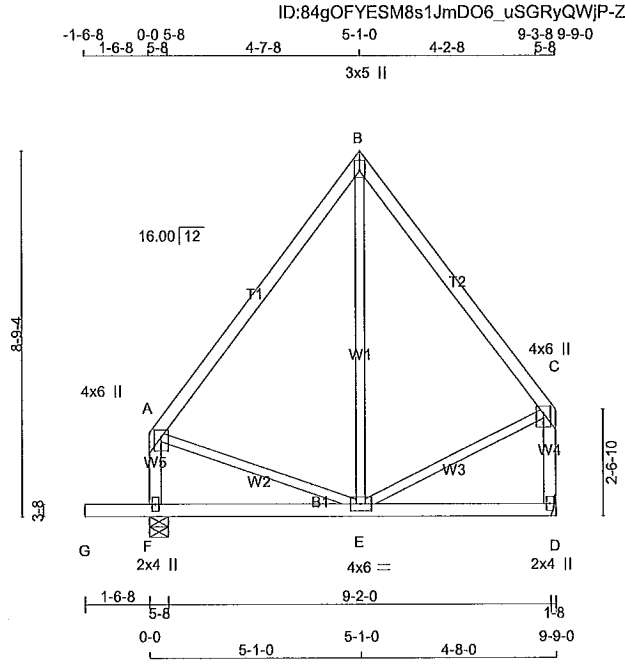

TOTAL WEIGHT = 51 lb

[M][F]

LUMBER

N. L. G. A. RULES

CHORDS	SIZE		LUMBER	DESCR.
A - B	2x4	DRY	No.2	SPF
B - C	2x4	DRY	No.2	SPF
F - A	2x4	DRY	No.2	SPF
D - C	2x4	DRY	No.2	SPF
G - D	2x4	DRY	No.2	SPF
ALL WEBS EXCEPT	2x3	DRY	No.2	SPF

DRY SEASONED LUMBER.

PLATES (table is in inches)

JT	TYPE	PLATES	W	LEN	Y	X
A	TMVW+p	MT20	4.0	6.0	2.00	2.00
B	TTW+p	MT20	3.0	5.0	2.00	Edge
C	TMVW+p	MT20	4.0	6.0	2.00	2.00
D	BMV1+p	MT20	2.0	4.0		
E	BMWWW-t	MT20	4.0	6.0		
F	BMV1+p	MT20	2.0	4.0		

Edge - INDICATES REFERENCE CORNER OF PLATE TOUCHES EDGE OF CHORD.

NOTE: Lateral brace(s) shown shall be 1x4 for Part 9 design as per OBC 9.23.13.11, and no less than 2x4 for Part 4 design

REGISTERED PROFESSIONAL ENGINEER
02/17/2018
EDWIN C. FOK
PROVINCE OF ONTARIO

DIMENSIONS, SUPPORTS AND LOADINGS SPECIFIED BY FABRICATOR TO BE VERIFIED BY BUILDING DESIGNER

BEARINGS

JT	FACTORED GROSS REACTION VERT	HORZ	MAXIMUM FACTORED GROSS REACTION DOWN	HORZ	UPLIFT	INPUT BRG IN-SX	REQRD BRG IN-SX
D	470	0	470	0	0	HANGER BY OTHERS MIN. SEAT SIZE: 1-8	
F	619	0	619	0	0	5-8	1-8

UNFACTORED REACTIONS

JT	1ST LCASE COMBINED	MAX./MIN. COMPONENT REACTIONS SNOW	LIVE	PERM.LIVE	WIND	DEAD	SOIL
D	335	205 / 0	0 / 0	0 / 0	0 / 0	131 / 0	0 / 0
F	441	269 / 0	0 / 0	0 / 0	0 / 0	172 / 0	0 / 0

BEARING MATERIAL TO BE SPF NO.2 OR BETTER AT JOINT(S) F

BRACING

TOP CHORD TO BE SHEATHED OR MAX. PURLIN SPACING = 6.25 FT.
MAX. UNBRACED BOTTOM CHORD LENGTH = 10.00 FT OR RIGID CEILING DIRECTLY APPLIED.

ALL PITCH BREAKS AND PERIMETER CORNER JOINTS MUST BE LATERALLY RESTRAINED.

LOADING

TOTAL LOAD CASES: (4)

CHORDS

MEMB. FR-TO	MAX. FACTORED FORCE (LBS)	FACTORED VERT. LOAD (PLF) FROM	TO	LC1 CSI (LC)	MAX UNBRAC LENGTH
A- B	-238 / 0	-78.0	-78.0	0.26 (1)	6.25
B- C	-238 / 0	-78.0	-78.0	0.22 (1)	6.25
F- A	-434 / 0	0.0	0.0	0.05 (1)	7.81
D- C	-438 / 0	0.0	0.0	0.06 (1)	7.81
G- F	0 / 0	-96.5	-96.5	0.16 (1)	10.00
F- E	0 / 0	-18.5	-18.5	0.13 (4)	10.00
E- D	0 / 0	-18.5	-18.5	0.13 (4)	10.00

WEBS

MEMB. FR-TO	MAX. FACTORED FORCE (LBS)	MAX CSI (LC)
E- B	0 / 79	0.03 (4)
A- E	0 / 150	0.03 (1)
E- C	0 / 157	0.04 (1)

DESIGN CRITERIA

SPECIFIED LOADS:

TOP CH.	LL	=	21.0	PSF
	DL	=	6.0	PSF
BOT CH.	LL	=	0.0	PSF
	DL	=	7.4	PSF
TOTAL LOAD		=	34.4	PSF

SPACING = 24.0 IN. C/C

THIS TRUSS IS DESIGNED FOR RESIDENTIAL OR SMALL BUILDING REQUIREMENTS OF PART 9, NBCC 2010, NBCC 2015

THIS DESIGN COMPLIES WITH:
- PART 9 OF OBC 2012, OBC 2018
- CSA 086-09, CSA 086-14
- TPIC 2011, TPIC 2014

(55 % OF 23.0 P.S.F. G.S.L. PLUS 8.4 P.S.F. RAIN LOAD) EQUALS 21.0 P.S.F. SPECIFIED ROOF LIVE LOAD

ALLOWABLE DEFL.(LL)= L/360 (0.32")
CALCULATED VERT. DEFL.(LL) = L/ 999 (0.00")
ALLOWABLE DEFL.(TL)= L/360 (0.32")
CALCULATED VERT. DEFL.(TL) = L/ 999 (0.02")

CANTILEVER DEFLECTION:
ALLOWABLE DEFL.(LL)= L/120 (0.19")
CALCULATED VERT. DEFL.(LL) = L/ 999 (0.01")
ALLOWABLE DEFL.(TL)= L/120 (0.19")
CALCULATED VERT. DEFL.(TL) = L/ 999 (0.01")

CSI: TC=0.26/1.00 (A-B:1) , BC=0.16/1.00 (F-G:1) , WB=0.04/1.00 (C-E:1) , SSI=0.12/1.00 (F-G:1)

DOL LUMBER=1.00 NAIL=1.00 LS BEND=1.10 COMP=1.10 SHEAR=1.10 TENS= 1.10

COMPANION LIVE LOAD FACTOR = 1.00

TRUSS PLATE MANUFACTURER IS NOT RESPONSIBLE FOR QUALITY CONTROL IN THE TRUSS MANUFACTURING PLANT .

NAIL VALUES

PLATE	GRIP(DRY) (PSI) MAX	MIN	SHEAR (PLI) MAX	MIN	SECTION (PLI) MAX	MIN
MT20	618	354	1667	788	1987	1656

PLATE PLACEMENT TOL. = 0.250 Inches

PLATE ROTATION TOL. = 5.0 Deg.

JSI GRIP= 0.26 (C) (INPUT = 0.90)
JSI METAL= 0.12 (A) (INPUT = 1.00)

A-18023586

JOB NAME	TRUSS NAME	QUANTITY	PLY	JOB DESC.	DRWG NO.
291815	H52S	3	1	TRUSS DESC.	

Alpa Roof Truss, Maple

Version 8.200 S Jan 6 2018 MiTek Industries, Inc. Sat Feb 17 16:14:27 2018 Page 1

ID:84gOFYESM8s1JmDO6_uSGRyQW|P-kMRIOA9YO8|VlvVhfDvEa4ukc9zD_EE6nsxf_gzkBvA

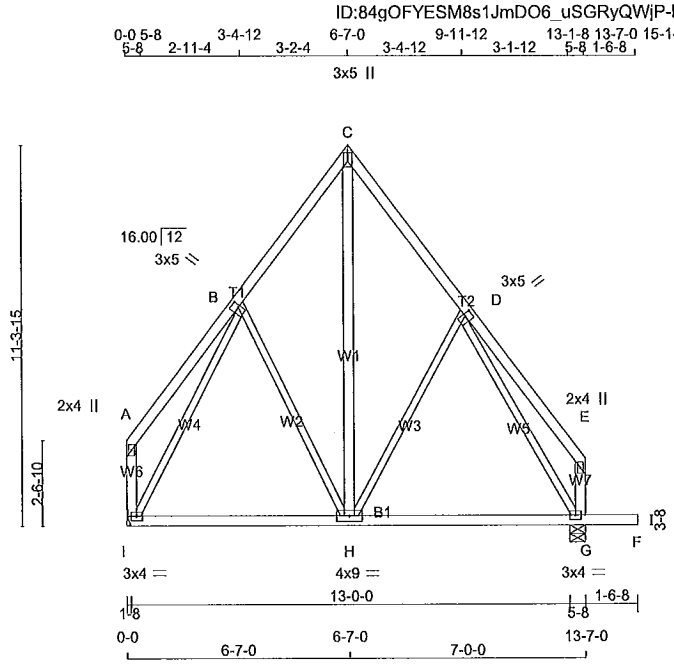

TOTAL WEIGHT = 3 X 83 = 248 lb

[M][F]

LUMBER

N. L. G. A. RULES

CHORDS	SIZE		LUMBER	DESCR.
A - C	2x4	DRY	No.2	SPF
C - E	2x4	DRY	No.2	SPF
I - A	2x4	DRY	No.2	SPF
G - E	2x4	DRY	No.2	SPF
I - F	2x4	DRY	No.2	SPF
ALL WEBS	2x3	DRY	No.2	SPF
EXCEPT				
H - C	2x4	DRY	No.2	SPF

SEASONED LUMBER.

PLATES (table is in inches)

JT	TYPE	PLATES	W	LEN	Y	X
A	TMV+p	MT20	2.0	4.0		
B	TMWW+t	MT20	3.0	5.0	2.25	0.75
C	TTW+p	MT20	3.0	5.0	2.00	Edge
D	TMWW+t	MT20	3.0	5.0	2.25	0.75
E	TMV+p	MT20	2.0	4.0		
G	BMVW1-t	MT20	3.0	4.0		
H	BMWWW-t	MT20	4.0	9.0		
I	BMVW1-t	MT20	3.0	4.0		

Edge - INDICATES REFERENCE CORNER OF PLATE TOUCHES EDGE OF CHORD.

NOTE: Lateral brace(s) shown shall be 1x4 for Part 9 design as per OBC 9.23.13.11, and no less than 2x4 for Part 4 design

REGISTERED PROFESSIONAL ENGINEER
02/17/2018
EDWIN C. FOK
PROVINCE OF ONTARIO

DIMENSIONS, SUPPORTS AND LOADINGS SPECIFIED BY FABRICATOR TO BE VERIFIED BY BUILDING DESIGNER

BEARINGS

JT	FACTORED GROSS REACTION VERT	HORZ	MAXIMUM FACTORED GROSS REACTION DOWN	HORZ	UPLIFT	INPUT BRG IN-SX	REQRD BRG IN-SX
I	655	0	655	0	0	HANGER BY OTHERS MIN. SEAT SIZE: 1-8	
G	804	0	804	0	0	5-8	1-8

UNFACTORED REACTIONS

JT	1ST LCASE COMBINED	MAX./MIN. COMPONENT REACTIONS SNOW	LIVE	PERM.LIVE	WIND	DEAD	SOIL
I	467	285 / 0	0 / 0	0 / 0	0 / 0	182 / 0	0 / 0
G	573	350 / 0	0 / 0	0 / 0	0 / 0	223 / 0	0 / 0

BEARING MATERIAL TO BE SPF NO.2 OR BETTER AT JOINT(S) G

BRACING

TOP CHORD TO BE SHEATHED OR MAX. PURLIN SPACING = 6.25 FT.
MAX. UNBRACED BOTTOM CHORD LENGTH = 10.00 FT OR RIGID CEILING DIRECTLY APPLIED.

ALL PITCH BREAKS AND PERIMETER CORNER JOINTS MUST BE LATERALLY RESTRAINED.

LOADING

TOTAL LOAD CASES: (4)

CHORDS

MEMB. FR-TO	MAX. FACTORED FORCE (LBS)	FACTORED VERT. LOAD LC1 (PLF) FROM	TO	MAX CSI (LC)	MAX. UNBRAC LENGTH
A- B	0 / 24	-78.0	-78.0	0.14 (1)	10.00
B- C	-377 / 0	-78.0	-78.0	0.10 (1)	6.25
C- D	-379 / 0	-78.0	-78.0	0.12 (1)	6.25
D- E	0 / 26	-78.0	-78.0	0.16 (1)	10.00
I- A	-95 / 0	0.0	0.0	0.01 (1)	7.81
G- E	-101 / 0	0.0	0.0	0.01 (1)	7.81
I- H	0 / 257	-18.5	-18.5	0.27 (4)	10.00
H- G	0 / 280	-18.5	-18.5	0.27 (4)	10.00
G- F	0 / 0	-96.5	-96.5	0.16 (1)	10.00

WEBS

MEMB. FR-TO	MAX. FACTORED FORCE (LBS)	MAX CSI (LC)
B- H	-96 / 0	0.10 (1)
H- C	0 / 357	0.06 (1)
H- D	-135 / 0	0.14 (1)
I- B	-575 / 0	0.58 (1)
D- G	-576 / 0	0.55 (1)

DESIGN CRITERIA

SPECIFIED LOADS:

TOP CH.	LL	=	21.0	PSF
	DL	=	6.0	PSF
BOT CH.	LL	=	0.0	PSF
	DL	=	7.4	PSF
TOTAL LOAD		=	34.4	PSF

SPACING = 24.0 IN. C/C

THIS TRUSS IS DESIGNED FOR RESIDENTIAL OR SMALL BUILDING REQUIREMENTS OF PART 9, NBCC 2010, NBCC 2015

THIS DESIGN COMPLIES WITH:
- PART 9 OF OBC 2012, OBC 2018
- CSA 086-09, CSA 086-14
- TPIC 2011, TPIC 2014

(55 % OF 23.0 P.S.F. G.S.L. PLUS 8.4 P.S.F. RAIN LOAD) EQUALS 21.0 P.S.F. SPECIFIED ROOF LIVE LOAD

ALLOWABLE DEFL.(LL)= L/360 (0.45")
CALCULATED VERT. DEFL.(LL) = L/ 999 (0.01")
ALLOWABLE DEFL.(TL)= L/360 (0.45")
CALCULATED VERT. DEFL.(TL) = L/ 999 (0.06")

CANTILEVER DEFLECTION:
ALLOWABLE DEFL.(LL)= L/120 (0.19")
CALCULATED VERT. DEFL.(LL) = L/ 999 (0.01")
ALLOWABLE DEFL.(TL)= L/120 (0.19")
CALCULATED VERT. DEFL.(TL) = L/ 999 (0.01")

CSI: TC=0.16/1.00 (D-E:1) , BC=0.27/1.00 (G-H:4) , WB=0.58/1.00 (B-I:1) , SSI=0.12/1.00 (F-G:1)

DOL LUMBER=1.00 NAIL=1.00 LS BEND=1.10 COMP=1.10 SHEAR=1.10 TENS= 1.10

COMPANION LIVE LOAD FACTOR = 1.00

TRUSS PLATE MANUFACTURER IS NOT RESPONSIBLE FOR QUALITY CONTROL IN THE TRUSS MANUFACTURING PLANT .

NAIL VALUES

PLATE	GRIP(DRY) (PSI) MAX	MIN	SHEAR (PLI) MAX	MIN	SECTION (PLI) MAX	MIN
MT20	618	354	1667	788	1987	1656

PLATE PLACEMENT TOL. = 0.250 Inches

PLATE ROTATION TOL. = 5.0 Deg.

JSI GRIP= 0.80 (B) (INPUT = 0.90)
JSI METAL= 0.37 (D) (INPUT = 1.00)

A-18023585

JOB NAME	TRUSS NAME	QUANTITY	PLY	JOB DESC.	DRWG NO.
291815	H51	1	1	TRUSS DESC.	

Alpa Roof Truss, Maple

Version 8.200 S Jan 6 2018 MiTek Industries, Inc. Sat Feb 17 16:14:06 2018 Page 1

ID:84gOFYESM8s1JmDO6_uSGRyQWjP-sKgm__vNLh4THgOewl0IDfW7mhr2ZtE0y5L2lOzkBvV

Scale = 1:56.3

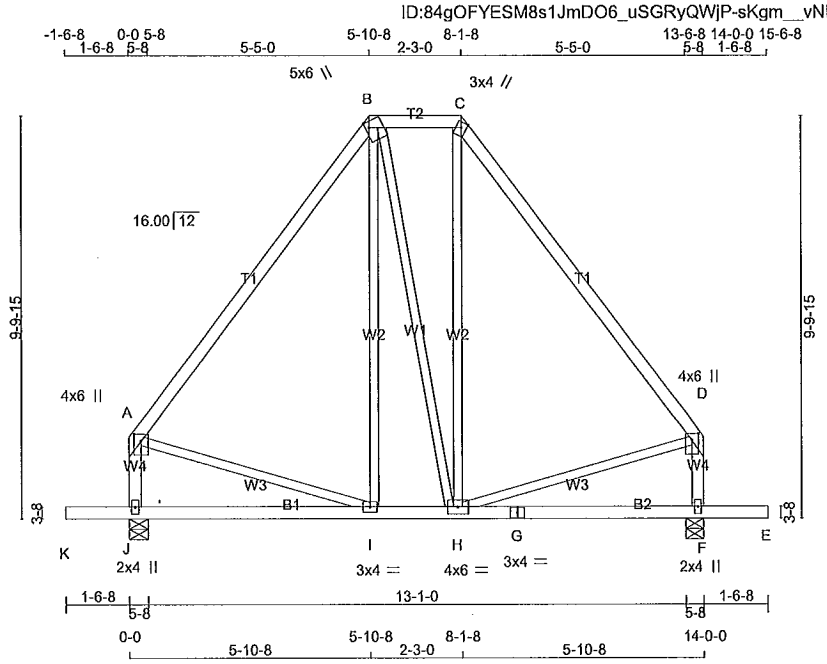

TOTAL WEIGHT = 81 lb

[M][F]

LUMBER

N. L. G. A. RULES

CHORDS	SIZE		LUMBER	DESCR.
A - B	2x4	DRY	1650F 1.5E	SPF
B - C	2x4	DRY	No.2	SPF
C - D	2x4	DRY	1650F 1.5E	SPF
J - A	2x4	DRY	No.2	SPF
F - D	2x4	DRY	No.2	SPF
K - G	2x4	DRY	No.2	SPF
G - E	2x4	DRY	No.2	SPF
ALL WEBS	2x3	DRY	No.2	SPF

EXCEPT

(S) SEASONED LUMBER.

PLATES (table is in inches)

JT	TYPE	PLATES	W	LEN	Y	X
A	TMVW+p	MT20	4.0	6.0	2.00	2.00
B	TTWW+m	MT20	5.0	6.0	1.75	1.00
C	TTW+m	MT20	3.0	4.0	Edge	
D	TMVW+p	MT20	4.0	6.0	2.00	2.00
F	BMV1+p	MT20	2.0	4.0		
G	BS-t	MT20	3.0	4.0		
H	BMWWW-t	MT20	4.0	6.0		
I	BMWW-t	MT20	3.0	4.0		
J	BMV1+p	MT20	2.0	4.0		

Edge - INDICATES REFERENCE CORNER OF PLATE TOUCHES EDGE OF CHORD.

NOTE: Lateral brace(s) shown shall be 1x4 for Part 9 design as per OBC 9.23.13.11, and no less than 2x4 for Part 4 design

REGISTERED PROFESSIONAL ENGINEER
02/17/2018
EDWIN C. FOK
PROVINCE OF ONTARIO

DIMENSIONS, SUPPORTS AND LOADINGS SPECIFIED BY FABRICATOR TO BE VERIFIED BY BUILDING DESIGNER

BEARINGS

JT	FACTORED GROSS REACTION VERT	HORZ	MAXIMUM FACTORED GROSS REACTION DOWN	HORZ	UPLIFT	INPUT BRG IN-SX	REQRD BRG IN-SX
J	824	0	824	0	0	5-8	1-8
F	824	0	824	0	0	5-8	1-8

UNFACTORED REACTIONS

JT	1ST LCASE COMBINED	MAX./MIN. COMPONENT REACTIONS SNOW	LIVE	PERM.LIVE	WIND	DEAD	SOIL
J	587	359 / 0	0 / 0	0 / 0	0 / 0	229 / 0	0 / 0
F	587	359 / 0	0 / 0	0 / 0	0 / 0	229 / 0	0 / 0

BEARING MATERIAL TO BE SPF NO.2 OR BETTER AT JOINT(S) J, F

BRACING

TOP CHORD TO BE SHEATHED OR MAX. PURLIN SPACING = 6.25 FT.
MAX. UNBRACED BOTTOM CHORD LENGTH = 10.00 FT OR RIGID CEILING DIRECTLY APPLIED.

ALL PITCH BREAKS AND PERIMETER CORNER JOINTS MUST BE LATERALLY RESTRAINED.

LOADING

TOTAL LOAD CASES: (4)

CHORDS

MEMB. FR-TO	MAX. FACTORED FORCE (LBS)	FACTORED VERT. LOAD (PLF) FROM	TO	LC1 MAX CSI (LC)	MAX. UNBRAC LENGTH
A- B	-416 / 0	-78.0	-78.0	0.29 (1)	6.25
B- C	-249 / 0	-78.0	-78.0	0.05 (1)	6.25
C- D	-416 / 0	-78.0	-78.0	0.29 (1)	6.25
J- A	-629 / 0	0.0	0.0	0.07 (1)	7.81
F- D	-629 / 0	0.0	0.0	0.07 (1)	7.81
K- J	0 / 0	-96.5	-96.5	0.16 (1)	10.00
J- I	0 / 0	-18.5	-18.5	0.14 (4)	10.00
I- H	0 / 249	-18.5	-18.5	0.16 (4)	10.00
H- G	0 / 0	-18.5	-18.5	0.13 (4)	10.00
G- F	0 / 0	-18.5	-18.5	0.13 (4)	10.00
F- E	0 / 0	-96.5	-96.5	0.16 (1)	10.00

WEBS

MEMB. FR-TO	MAX. FACTORED FORCE (LBS)	MAX CSI (LC)
I- B	0 / 65	0.02 (4)
B- H	0 / 1	0.00 (4)
H- C	0 / 67	0.02 (4)
A- I	0 / 257	0.06 (1)
H- D	0 / 257	0.06 (1)

DESIGN CRITERIA

SPECIFIED LOADS:

TOP CH.	LL	=	21.0	PSF
	DL	=	6.0	PSF
BOT CH.	LL	=	0.0	PSF
	DL	=	7.4	PSF
TOTAL LOAD		=	34.4	PSF

SPACING = 24.0 IN. C/C

LOADING IN FLAT SECTION BASED ON A SLOPE OF 2.00/12 MINIMUM

THIS TRUSS IS DESIGNED FOR RESIDENTIAL OR SMALL BUILDING REQUIREMENTS OF PART 9, NBCC 2010, NBCC 2015

THIS DESIGN COMPLIES WITH:
- PART 9 OF OBC 2012, OBC 2018
- CSA 086-09, CSA 086-14
- TPIC 2011, TPIC 2014

(55 % OF 23.0 P.S.F. G.S.L. PLUS 8.4 P.S.F. RAIN LOAD) EQUALS 21.0 P.S.F. SPECIFIED ROOF LIVE LOAD

ALLOWABLE DEFL.(LL)= L/360 (0.47")
CALCULATED VERT. DEFL.(LL) = L/ 999 (0.00")
ALLOWABLE DEFL.(TL)= L/360 (0.47")
CALCULATED VERT. DEFL.(TL) = L/ 999 (0.04")

CANTILEVER DEFLECTION:
ALLOWABLE DEFL.(LL)= L/120 (0.19")
CALCULATED VERT. DEFL.(LL) = L/ 999 (0.01")
ALLOWABLE DEFL.(TL)= L/120 (0.19")
CALCULATED VERT. DEFL.(TL) = L/ 999 (0.01")

CSI: TC=0.29/1.00 (C-D:1) , BC=0.16/1.00 (H-I:4) , WB=0.06/1.00 (D-H:1) , SSI=0.12/1.00 (J-K:1)

DOL LUMBER=1.00 NAIL=1.00 LS BEND=1.10 COMP=1.10 SHEAR=1.10 TENS= 1.10

COMPANION LIVE LOAD FACTOR = 1.00

TRUSS PLATE MANUFACTURER IS NOT RESPONSIBLE FOR QUALITY CONTROL IN THE TRUSS MANUFACTURING PLANT .

NAIL VALUES

PLATE	GRIP(DRY) (PSI) MAX	MIN	SHEAR (PLI) MAX	MIN	SECTION (PLI) MAX	MIN
MT20	618	354	1667	788	1987	1656

PLATE PLACEMENT TOL. = 0.250 inches

PLATE ROTATION TOL. = 5.0 Deg.

JSI GRIP= 0.62 (C) (INPUT = 0.90)
JSI METAL= 0.19 (D) (INPUT = 1.00)

A-18023584

JOB NAME	TRUSS NAME	QUANTITY	PLY	JOB DESC.	DRWG NO.
291815	H50	1	1	TRUSS DESC.	

Alpa Roof Truss, Maple

Version 8.200 S Jan 6 2018 MiTek Industries, Inc. Sat Feb 17 16:13:59 2018 Page 1
ID:84gOFYESM8s1JmDO6_uSGRyQWJP-Z_l6Wbq__XCTxbMI0KOfRAjrttSvQhs_LV9A?IzkBvc

Scale = 1:41.9

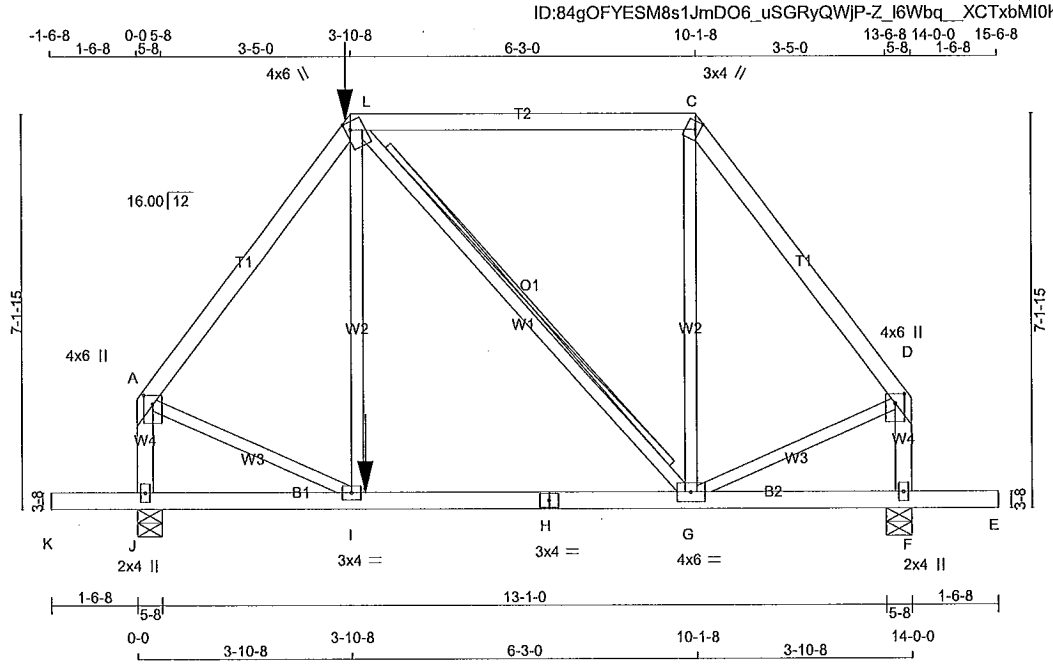

TOTAL WEIGHT = 70 lb
[M]

LUMBER
N. L. G. A. RULES

CHORDS	SIZE		LUMBER	DESCR.
A - B	2x4	DRY	No.2	SPF
B - C	2x4	DRY	No.2	SPF
C - D	2x4	DRY	No.2	SPF
J - A	2x4	DRY	No.2	SPF
F - D	2x4	DRY	No.2	SPF
K - H	2x4	DRY	No.2	SPF
H - E	2x4	DRY	No.2	SPF
ALL WEBS	2x3	DRY	No.2	SPF

[illegible] PT
[illegible] SEASONED LUMBER.

PLATES (table is in inches)

JT	TYPE	PLATES	W	LEN	Y	X
A	TMVW+p	MT20	4.0	6.0	2.00	2.00
B	TTWW+m	MT20	4.0	6.0	1.75	1.00
C	TTW+m	MT20	3.0	4.0	1.75	1.00
D	TMVW+p	MT20	4.0	6.0	2.00	2.00
F	BMV1+p	MT20	2.0	4.0		
G	BMWWW-t	MT20	4.0	6.0		
H	BS-t	MT20	3.0	4.0		
I	BMWW-t	MT20	3.0	4.0		
J	BMV1+p	MT20	2.0	4.0		

HANGERS NOTES
1) SPECIAL HANGER(S) OR CONNECTION(S) REQUIRED TO SUPPORT CONCENTRATED LOAD(S) 119.6 lbs FACTORED DOWN AT 3-10-8 ON TOP CHORD, AND 488.0 lbs FACTORED DOWN AT 4-1-8 ON BOTTOM CHORD. DESIGN FOR UNSPECIFIED CONNECTION(S) IS DELEGATED TO THE BUILDING DESIGNER.

NOTE: Lateral brace(s) shown shall be 1x4 for Part 9 design as per OBC 9.23.13.11, and no less than 2x4 for Part 4 design

REGISTERED PROFESSIONAL ENGINEER
02/17/2018
EDWIN C. FOK
PROVINCE OF ONTARIO

DIMENSIONS, SUPPORTS AND LOADINGS SPECIFIED BY FABRICATOR TO BE VERIFIED BY BUILDING DESIGNER

BEARINGS

JT	FACTORED GROSS REACTION VERT	HORZ	MAXIMUM FACTORED GROSS REACTION DOWN	HORZ	UPLIFT	INPUT BRG IN-SX	REQRD BRG IN-SX
J	1299	0	1299	0	0	5-8	1-15
F	1005	0	1005	0	0	5-8	1-8

UNFACTORED REACTIONS

JT	1ST LCASE COMBINED	MAX./MIN. COMPONENT REACTIONS SNOW	LIVE	PERM.LIVE	WIND	DEAD	SOIL
J	920	594 / 0	0 / 0	0 / 0	0 / 0	326 / 0	0 / 0
F	713	452 / 0	0 / 0	0 / 0	0 / 0	262 / 0	0 / 0

BEARING MATERIAL TO BE SPF NO.2 OR BETTER AT JOINT(S) J, F

BRACING
TOP CHORD TO BE SHEATHED OR MAX. PURLIN SPACING = 6.11 FT.
MAX. UNBRACED BOTTOM CHORD LENGTH = 10.00 FT OR RIGID CEILING DIRECTLY APPLIED.

ALL PITCH BREAKS AND PERIMETER CORNER JOINTS MUST BE LATERALLY RESTRAINED.

2x4 DRY SPF No.2 T-BRACE AT B-G

FASTEN T AND I-BRACES TO NARROW EDGE OF WEB WITH ONE ROW PER PLY OF 3" COMMON WIRE NAILS @ 6" O.C. WITH 3" MINIMUM END DISTANCE. BRACE MUST COVER 90% OF WEB LENGTH.

END VERTICAL(S) MUST BE SHEATHED OR HAVE BRACES AS INDICATED IN THE MAX. UNBRACED LENGTH COLUMN OF THE TABLE BELOW

LOADING
TOTAL LOAD CASES: (4)

CHORDS MEMB. FR-TO	MAX. FACTORED FORCE (LBS)	FACTORED VERT. LOAD (PLF) FROM	TO	LC1 MAX CSI (LC)	MAX. UNBRAC LENGTH	WEBS MEMB. FR-TO	MAX. FACTORED FORCE (LBS)	MAX CSI (LC)
A- B	-917 / 0	-78.0	-78.0	0.26 (1)	6.11	I- B	0 / 389	0.10 (1)
B- L	-391 / 0	-114.5	-114.5	0.59 (1)	6.25	B- G	-242 / 0	0.16 (1)
L- C	-391 / 0	-78.0	-78.0	0.59 (1)	6.25	G- C	0 / 128	0.04 (4)
C- D	-652 / 0	-78.0	-78.0	0.24 (1)	6.25	A- I	0 / 590	0.15 (1)
J- A	-1108 / 0	0.0	0.0	0.14 (1)	7.49	G- D	0 / 419	0.10 (1)
F- D	-832 / 0	0.0	0.0	0.10 (1)	7.81			
K- J	0 / 0	-96.5	-96.5	0.17 (1)	10.00			
J- I	0 / 0	-27.2	-27.2	0.14 (4)	10.00			
I- H	0 / 553	-18.5	-18.5	0.19 (4)	10.00			
H- G	0 / 553	-18.5	-18.5	0.19 (4)	10.00			
G- F	0 / 0	-18.5	-18.5	0.12 (4)	10.00			
F- E	0 / 0	-96.5	-96.5	0.17 (1)	10.00			

FACTORED CONCENTRATED LOADS (LBS)

JT	LOC.	LC1	MAX-	MAX+	FACE	DIR.	TYPE
B	3-10-8	-120	-120	—	FRONT	VERT	TOTAL
I	4-1-8	-488	-488	—	FRONT	VERT	TOTAL

DESIGN CRITERIA

*** SPECIAL LOADS ANALYSIS ***
GEOMETRY AND/OR BASIC LOADS CHANGED BY USER.
LOADS WERE DERIVED FROM USER INPUT
NO FURTHER MODIFICATIONS WERE MADE

SPECIFIED LOADS:

TOP CH.	LL	=	21.0	PSF
	DL	=	6.0	PSF
BOT CH.	LL	=	0.0	PSF
	DL	=	7.4	PSF
TOTAL LOAD		=	34.4	PSF

SPACING = 24.0 IN. C/C

LOADING IN FLAT SECTION BASED ON A SLOPE OF 2.00/12 MINIMUM

GIRDER TYPE: CPrimeHip
SIDE SETBACK = 3-10-8
END SETBACK = 3-10-8
END WALL WIDTH = 0-0
CORNER FRAMING TYPE: CONVENTIONAL
END JACK TYPE: CONVENTIONAL
APPLIED TO FRONT SIDE
- ADDT'L LOADS BASED ON 55 % OF GSL.
LOADS APPLIED TO FIRST 4-3-0 OF SPAN MEASURED FROM THE LEFT.

*** NON STANDARD GIRDER ***
ADDT'L USER-DEFINED LOADS APPLIED TO ALL LOAD CASES.

THIS TRUSS IS DESIGNED FOR RESIDENTIAL OR SMALL BUILDING REQUIREMENTS OF PART 9, NBCC 2010, NBCC 2015

THIS DESIGN COMPLIES WITH:
- PART 9 OF OBC 2012, OBC 2018
- CSA 086-09, CSA 086-14
- TPIC 2011, TPIC 2014

(55 % OF 23.0 P.S.F. G.S.L. PLUS 8.4 P.S.F. RAIN LOAD) EQUALS 21.0 P.S.F. SPECIFIED ROOF LIVE LOAD

ALLOWABLE DEFL.(LL)= L/360 (0.47")
CALCULATED VERT. DEFL.(LL) = L/ 999 (0.01")
ALLOWABLE DEFL.(TL)= L/360 (0.47")
CALCULATED VERT. DEFL.(TL) = L/ 999 (0.04")

CANTILEVER DEFLECTION:
ALLOWABLE DEFL.(LL)= L/120 (0.19")
CALCULATED VERT. DEFL.(LL) = L/ 999 (0.01")
ALLOWABLE DEFL.(TL)= L/120 (0.19")
CALCULATED VERT. DEFL.(TL) = L/ 999 (0.01")

CSI: TC=0.59/1.00 (B-C:1) , BC=0.19/1.00 (G-I:4) , WB=0.16/1.00 (B-G:1) , SSI=0.22/1.00 (B-C:1)

DOL LUMBER=1.00 NAIL=1.00 LS BEND=1.00 COMP=1.00 SHEAR=1.00 TENS= 1.00

COMPANION LIVE LOAD FACTOR = 1.00

A-18023583

CONTINUED ON PAGE 2

JOB NAME	TRUSS NAME	QUANTITY	PLY	JOB DESC.	DRWG NO.
292610	H4T	1	1	TRUSS DESC.	

Alpa Roof Truss, Maple

Version 8.200 S Jan 6 2018 MiTek Industries, Inc. Sat Feb 17 15:45:40 2018 Page 1

ID:MF8iiriaTok7DlbpT4B71Xys4PG-p7aqwfGG6W8XcVzm_0QE4usW0?W0r7Pvfg5mtGzkCK9

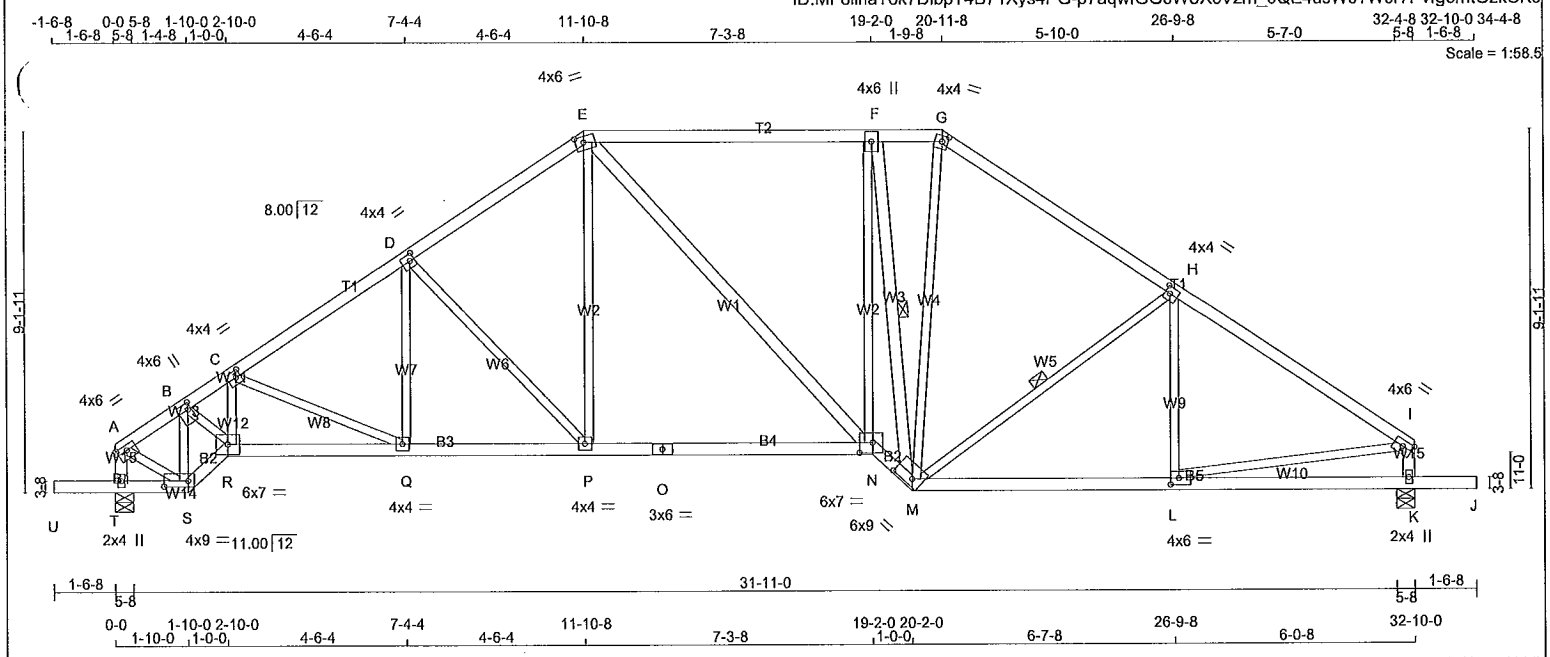

TOTAL WEIGHT = 161 lb

[M][F]

LUMBER

N. L. G. A. RULES

CHORDS	SIZE		LUMBER	DESCR.
A - E	2x4	DRY	No.2	SPF
E - G	2x4	DRY	No.2	SPF
G - I	2x4	DRY	No.2	SPF
T - A	2x4	DRY	No.2	SPF
K - I	2x4	DRY	No.2	SPF
U - S	2x4	DRY	No.2	SPF
S - R	2x4	DRY	No.2	SPF
R - O	2x4	DRY	No.2	SPF
O - N	2x4	DRY	No.2	SPF
N - M	2x4	DRY	No.2	SPF
	2x4	DRY	No.2	SPF
ALL WEBS EXCEPT	2x3	DRY	No.2	SPF
E - N	2x4	DRY	No.2	SPF
F - M	2x4	DRY	No.2	SPF

DRY: SEASONED LUMBER.

PLATES (table is in inches)

JT	TYPE	PLATES	W	LEN	Y	X
A	TMVW-t	MT20	4.0	6.0	1.50	3.00
B	TMWW+t	MT20	4.0	6.0	2.00	1.00
C, D, H						
C	TMWW-t	MT20	4.0	4.0	2.00	1.50
E	TTWW-m	MT20	4.0	6.0	1.75	2.50
F	TMWW+t	MT20	4.0	6.0		
G	TTW-m	MT20	4.0	4.0	1.75	1.75
I	TMVW-t	MT20	4.0	6.0	1.75	Edge
K	BMV1+p	MT20	2.0	4.0		
L	BMWW-t	MT20	4.0	6.0	2.00	2.50
M	BBWWW-h	MT20	6.0	9.0	2.00	6.00
N	BBWW-l	MT20	6.0	7.0	3.00	4.00
O	BS-t	MT20	3.0	6.0		
P	BMWW-t	MT20	4.0	4.0		
Q	BMWW-t	MT20	4.0	4.0		
R	BBWW-l	MT20	6.0	7.0		
S	BBWW-l	MT20	4.0	9.0	1.75	7.25
T	BMV1+p	MT20	2.0	4.0		

NOTE: Lateral brace(s) shown shall be 1x4 for Part 9 design as per OBC 9.23.13.11, and no less than 2x4 for Part 4 design

REGISTERED PROFESSIONAL ENGINEER
02/17/2018
EDWIN C. FOK
PROVINCE OF ONTARIO

DIMENSIONS, SUPPORTS AND LOADINGS SPECIFIED BY FABRICATOR TO BE VERIFIED BY BUILDING DESIGNER

BEARINGS

JT	FACTORED GROSS REACTION VERT	HORZ	MAXIMUM FACTORED GROSS REACTION DOWN	HORZ	UPLIFT	INPUT BRG IN-SX	REQRD BRG IN-SX
T	1736	0	1736	0	0	5-8	2-9
K	1729	0	1729	0	0	5-8	2-9

UNFACTORED REACTIONS

JT	1ST LCASE COMBINED	MAX./MIN. COMPONENT REACTIONS SNOW	LIVE	PERM.LIVE	WIND	DEAD	SOIL
T	1238	755 / 0	0 / 0	0 / 0	0 / 0	482 / 0	0 / 0
K	1233	752 / 0	0 / 0	0 / 0	0 / 0	480 / 0	0 / 0

BEARING MATERIAL TO BE SPF NO.2 OR BETTER AT JOINT(S) T, K

BRACING

TOP CHORD TO BE SHEATHED OR MAX. PURLIN SPACING = 4.22 FT.
MAX. UNBRACED BOTTOM CHORD LENGTH = 10.00 FT OR RIGID CEILING DIRECTLY APPLIED.

ALL PITCH BREAKS AND PERIMETER CORNER JOINTS MUST BE LATERALLY RESTRAINED.

1 LATERAL BRACE(S) AT 1/ 2 LENGTH OF F-M, H-M.

END VERTICAL(S) MUST BE SHEATHED OR HAVE BRACES AS INDICATED IN THE MAX. UNBRACED LENGTH COLUMN OF THE TABLE BELOW

LOADING

TOTAL LOAD CASES: (4)

CHORDS

MEMB. FR-TO	MAX. FACTORED FORCE (LBS)	FACTORED VERT. LOAD LC1 (PLF) FROM	TO	MAX CSI (LC)	MAX. UNBRAC LENGTH
A- B	-1502 / 0	-78.0	-78.0	0.09 (1)	5.29
B- C	-2583 / 0	-78.0	-78.0	0.13 (1)	4.22
C- D	-2231 / 0	-78.0	-78.0	0.25 (1)	4.37
D- E	-1840 / 0	-78.0	-78.0	0.23 (1)	4.74
E- F	-1636 / 0	-78.0	-78.0	0.57 (1)	4.50
F- G	-1409 / 0	-78.0	-78.0	0.43 (1)	4.95
G- H	-1634 / 0	-78.0	-78.0	0.40 (1)	4.76
H- I	-1966 / 0	-78.0	-78.0	0.45 (1)	4.39
T- A	-1508 / 0	0.0	0.0	0.15 (1)	6.68
K- I	-1537 / 0	0.0	0.0	0.16 (1)	6.64
U- T	0 / 0	-96.5	-96.5	0.16 (1)	10.00
T- S	0 / 0	-18.5	-18.5	0.12 (1)	10.00
S- R	0 / 1565	-18.5	-18.5	0.25 (1)	10.00
R- Q	0 / 2180	-18.5	-18.5	0.41 (1)	10.00
Q- P	0 / 1868	-18.5	-18.5	0.41 (1)	10.00
P- O	0 / 1518	-18.5	-18.5	0.35 (1)	10.00
O- N	0 / 1518	-18.5	-18.5	0.35 (1)	10.00
N- M	0 / 2187	-18.5	-18.5	0.35 (1)	10.00
M- L	0 / 1661	-18.5	-18.5	0.37 (1)	10.00
L- K	0 / 0	-18.5	-18.5	0.20 (4)	10.00
K- J	0 / 0	-96.5	-96.5	0.16 (1)	10.00

WEBS

MEMB. FR-TO	MAX. FACTORED FORCE (LBS)	MAX CSI (LC)
S- B	-1689 / 0	0.26 (1)
B- R	0 / 1464	0.33 (1)
R- C	0 / 79	0.02 (4)
C- Q	-341 / 0	0.13 (1)
Q- D	0 / 198	0.05 (4)
D- P	-519 / 0	0.43 (1)
P- E	0 / 506	0.11 (1)
E- N	0 / 174	0.03 (1)
N- F	0 / 1420	0.32 (1)
F- M	-2058 / 0	0.79 (1)
M- G	0 / 883	0.20 (1)
M- H	-410 / 0	0.19 (1)
L- H	-113 / 63	0.05 (1)
A- S	0 / 1374	0.31 (1)
L- I	0 / 1680	0.38 (1)

DESIGN CRITERIA

SPECIFIED LOADS:

TOP CH.	LL	=	21.0	PSF
	DL	=	6.0	PSF
BOT CH.	LL	=	0.0	PSF
	DL	=	7.4	PSF
TOTAL LOAD		=	34.4	PSF

SPACING = 24.0 IN. C/C

LOADING IN FLAT SECTION BASED ON A SLOPE OF 2.00/12 MINIMUM

THIS TRUSS IS DESIGNED FOR RESIDENTIAL OR SMALL BUILDING REQUIREMENTS OF PART 9, NBCC 2010, NBCC 2015

THIS DESIGN COMPLIES WITH:
- PART 9 OF OBC 2012, OBC 2018
- CSA 086-09, CSA 086-14
- TPIC 2011, TPIC 2014

DESIGN ASSUMPTIONS
-OVERHANG NOT TO BE ALTERED OR CUT OFF.

(55 % OF 23.0 P.S.F. G.S.L. PLUS 8.4 P.S.F. RAIN LOAD) EQUALS 21.0 P.S.F. SPECIFIED ROOF LIVE LOAD

ALLOWABLE DEFL.(LL)= L/360 (1.09")
CALCULATED VERT. DEFL.(LL) = L/ 999 (0.12")
ALLOWABLE DEFL.(TL)= L/360 (1.09")
CALCULATED VERT. DEFL.(TL) = L/ 999 (0.29")

CANTILEVER DEFLECTION:
ALLOWABLE DEFL.(LL)= L/120 (0.19")
CALCULATED VERT. DEFL.(LL) = L/ 999 (0.01")
ALLOWABLE DEFL.(TL)= L/120 (0.19")
CALCULATED VERT. DEFL.(TL) = L/ 756 (0.02")

CSI: TC=0.57/1.00 (E-F:1) , BC=0.41/1.00 (P-Q:1) , WB=0.79/1.00 (F-M:1) , SSI=0.27/1.00 (E-F:1)

DOL LUMBER=1.00 NAIL=1.00 LS BEND=1.10 COMP=1.10 SHEAR=1.10 TENS= 1.10

COMPANION LIVE LOAD FACTOR = 1.00

TRUSS PLATE MANUFACTURER IS NOT RESPONSIBLE FOR QUALITY CONTROL IN THE TRUSS MANUFACTURING PLANT .

NAIL VALUES

PLATE	GRIP(DRY) (PSI) MAX	MIN	SHEAR (PLI) MAX	MIN	SECTION (PLI) MAX	MIN
MT20	618	354	1667	788	1987	1656

PLATE PLACEMENT TOL. = 0.250 inches

PLATE ROTATION TOL. = 5.0 Deg.

JSI GRIP= 0.89 (B) (INPUT = 0.90)
JSI METAL= 0.52 (I) (INPUT = 1.00)

A-18023581

CONTINUED ON PAGE 2

JOB NAME	TRUSS NAME	QUANTITY	PLY	JOB DESC.	DRWG NO.
292610	H3T	1	1	TRUSS DESC.	

Alpa Roof Truss, Maple

Version 8.200 S Jan 6 2018 MiTek Industries, Inc. Sat Feb 17 15:45:28 2018 Page 1

ID:84gOFYESM8s1JmDO6_uSGRyQWjP-9psHPY6kwqdEAf2SHUCQbMMSh9Oh1j?8voB7SzzkCKL

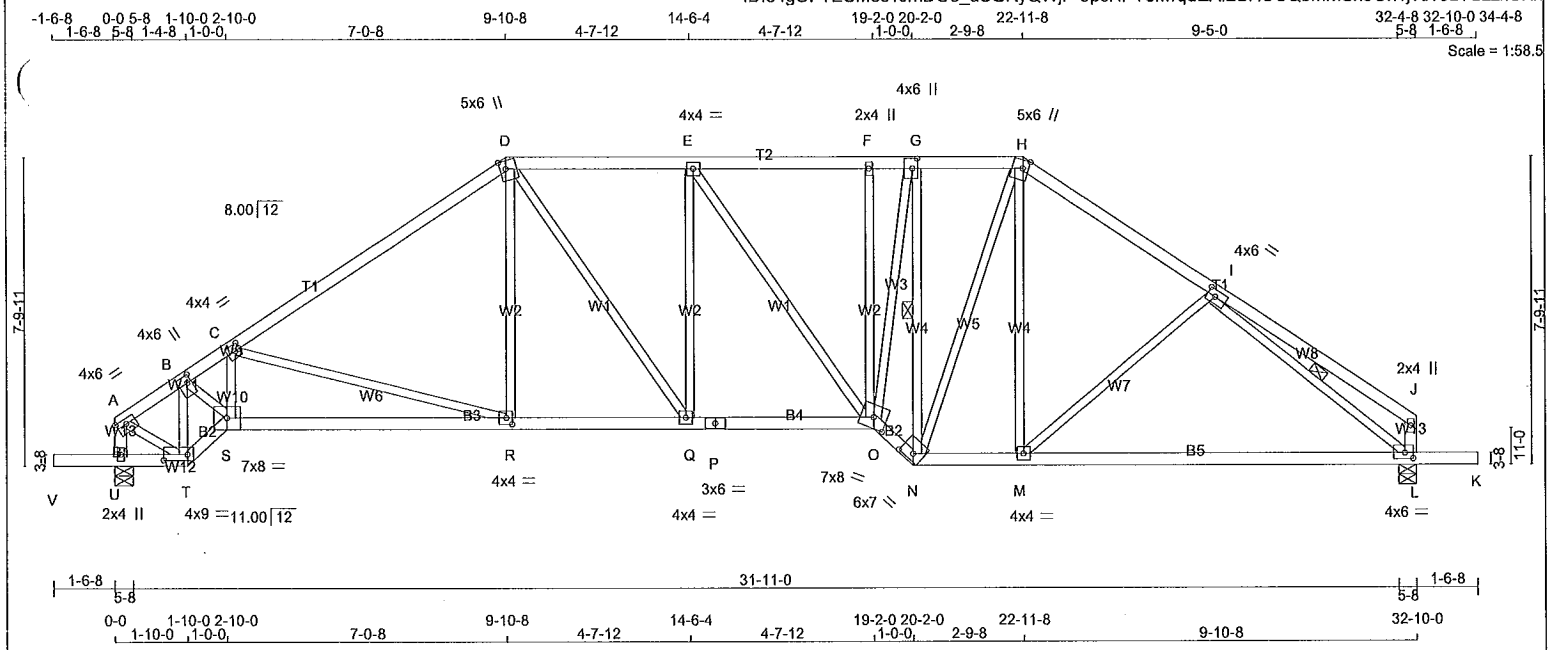

TOTAL WEIGHT = 159 lb

[M][F]

LUMBER

N. L. G. A. RULES

CHORDS	SIZE		LUMBER	DESCR.
A - D	2x4	DRY	No.2	SPF
D - H	2x4	DRY	No.2	SPF
H - J	2x4	DRY	No.2	SPF
U - A	2x4	DRY	No.2	SPF
L - J	2x4	DRY	No.2	SPF
V - T	2x4	DRY	No.2	SPF
T - S	2x4	DRY	No.2	SPF
S - P	2x4	DRY	No.2	SPF
P - O	2x4	DRY	No.2	SPF
O - N	2x4	DRY	No.2	SPF
	2x4	DRY	No.2	SPF
ALL WEBS EXCEPT	2x3	DRY	No.2	SPF

DRY: SEASONED LUMBER.

PLATES (table is in inches)

JT	TYPE	PLATES	W	LEN	Y	X
A	TMVW-t	MT20	4.0	6.0	1.50	3.00
B	TMWW+t	MT20	4.0	6.0	2.25	1.25
C	TMWW-t	MT20	4.0	4.0	2.00	1.50
D	TTWW+m	MT20	5.0	6.0	Edge	1.75
E	TMWW-t	MT20	4.0	4.0		
F	TMW+w	MT20	2.0	4.0		
G	TMWW+t	MT20	4.0	6.0	3.00	1.50
H	TTWW+m	MT20	5.0	6.0	Edge	1.75
I	TMWW-t	MT20	4.0	6.0	2.00	2.50
J	TMV+p	MT20	2.0	4.0		
L	BMVW1-t	MT20	4.0	6.0	1.75	2.50
M	BMWW-t	MT20	4.0	4.0		
N	BBWW-h	MT20	6.0	7.0	2.00	4.00
O	BBWWW-m	MT20	7.0	8.0	3.25	4.00
P	BS-t	MT20	3.0	6.0		
Q	BMWW-t	MT20	4.0	4.0		
R	BMWW-t	MT20	4.0	4.0	2.00	1.75
S	BBWW-l	MT20	7.0	8.0		
T	BBWW-l	MT20	4.0	9.0	1.75	7.25
U	BMV1+p	MT20	2.0	4.0		

NOTE: Lateral brace(s) shown shall be 1x4 for Part 9 design as per OBC 9.23.13.11, and no less than 2x4 for Part 4 design

REGISTERED PROFESSIONAL ENGINEER
02/17/2018
EDWIN C. FOK
PROVINCE OF ONTARIO

DIMENSIONS, SUPPORTS AND LOADINGS SPECIFIED BY FABRICATOR TO BE VERIFIED BY BUILDING DESIGNER

BEARINGS

JT	FACTORED GROSS REACTION VERT	HORZ	MAXIMUM FACTORED GROSS REACTION DOWN	HORZ	UPLIFT	INPUT BRG IN-SX	REQRD BRG IN-SX
U	1736	0	1736	0	0	5-8	2-9
L	1729	0	1729	0	0	5-8	1-13

UNFACTORED REACTIONS

1ST LCASE MAX./MIN. COMPONENT REACTIONS

JT	COMBINED	SNOW	LIVE	PERM.LIVE	WIND	DEAD	SOIL
U	1238	755 / 0	0 / 0	0 / 0	0 / 0	482 / 0	0 / 0
L	1233	752 / 0	0 / 0	0 / 0	0 / 0	480 / 0	0 / 0

BEARING MATERIAL TO BE SPF NO.2 OR BETTER AT JOINT(S) U, L

BRACING

TOP CHORD TO BE SHEATHED OR MAX. PURLIN SPACING = 3.80 FT.
MAX. UNBRACED BOTTOM CHORD LENGTH = 10.00 FT OR RIGID CEILING DIRECTLY APPLIED.

ALL PITCH BREAKS AND PERIMETER CORNER JOINTS MUST BE LATERALLY RESTRAINED.

1 LATERAL BRACE(S) AT 1/ 2 LENGTH OF G-N, I-L.

END VERTICAL(S) MUST BE SHEATHED OR HAVE BRACES AS INDICATED IN THE MAX. UNBRACED LENGTH COLUMN OF THE TABLE BELOW

LOADING

TOTAL LOAD CASES: (4)

CHORDS

MEMB. FR-TO	MAX. FACTORED FORCE (LBS)	FACTORED VERT. LOAD LC1 (PLF) FROM	TO	MAX CSI (LC)	MAX. UNBRAC LENGTH
A- B	-1485 / 0	-78.0	-78.0	0.15 (1)	5.24
B- C	-2595 / 0	-78.0	-78.0	0.46 (1)	3.80
C- D	-2023 / 0	-78.0	-78.0	0.59 (1)	4.19
D- E	-1965 / 0	-78.0	-78.0	0.25 (1)	4.59
E- F	-1920 / 0	-78.0	-78.0	0.25 (1)	4.64
F- G	-1918 / 0	-78.0	-78.0	0.09 (1)	4.80
G- H	-1647 / 0	-78.0	-78.0	0.08 (1)	5.11
H- I	-1798 / 0	-78.0	-78.0	0.28 (1)	4.73
I- J	0 / 24	-78.0	-78.0	0.30 (1)	10.00
U- A	-1508 / 0	0.0	0.0	0.15 (1)	6.68
L- J	-153 / 0	0.0	0.0	0.02 (1)	7.81
V- U	0 / 0	-96.5	-96.5	0.16 (1)	10.00
U- T	0 / 0	-18.5	-18.5	0.12 (1)	10.00
T- S	0 / 1527	-18.5	-18.5	0.25 (1)	10.00
S- R	0 / 2343	-18.5	-18.5	0.49 (1)	10.00
R- Q	0 / 1662	-18.5	-18.5	0.38 (1)	10.00
Q- P	0 / 1966	-18.5	-18.5	0.37 (1)	10.00
P- O	0 / 1966	-18.5	-18.5	0.37 (1)	10.00
O- N	0 / 2198	-18.5	-18.5	0.36 (1)	10.00
N- M	0 / 1477	-18.5	-18.5	0.57 (4)	10.00
M- L	0 / 1598	-18.5	-18.5	0.57 (4)	10.00
L- K	0 / 0	-96.5	-96.5	0.16 (1)	10.00

WEBS

MEMB. FR-TO	MAX. FACTORED FORCE (LBS)	MAX CSI (LC)
B- T	-1649 / 0	0.26 (1)
B- S	0 / 1720	0.39 (1)
S- C	-117 / 43	0.02 (1)
C- R	-712 / 0	0.76 (1)
R- D	0 / 315	0.07 (4)
D- Q	0 / 526	0.12 (1)
Q- E	-366 / 0	0.29 (1)
E- O	-79 / 0	0.10 (1)
O- F	-161 / 0	0.13 (1)
O- G	0 / 1795	0.40 (1)
N- G	-1957 / 0	0.75 (1)
N- H	0 / 485	0.11 (1)
M- H	0 / 293	0.08 (4)
M- I	-165 / 3	0.13 (1)
A- T	0 / 1341	0.30 (1)
I- L	-2093 / 0	0.62 (1)

DESIGN CRITERIA

SPECIFIED LOADS:

TOP CH.	LL	=	21.0	PSF
	DL	=	6.0	PSF
BOT CH.	LL	=	0.0	PSF
	DL	=	7.4	PSF
TOTAL LOAD		=	34.4	PSF

SPACING = 24.0 IN. C/C

LOADING IN FLAT SECTION BASED ON A SLOPE OF 2.00/12 MINIMUM

THIS TRUSS IS DESIGNED FOR RESIDENTIAL OR SMALL BUILDING REQUIREMENTS OF PART 9, NBCC 2010, NBCC 2015

THIS DESIGN COMPLIES WITH:
- PART 9 OF OBC 2012, OBC 2018
- CSA 086-09, CSA 086-14
- TPIC 2011, TPIC 2014

DESIGN ASSUMPTIONS
-OVERHANG NOT TO BE ALTERED OR CUT OFF.

(55 % OF 23.0 P.S.F. G.S.L. PLUS 8.4 P.S.F. RAIN LOAD) EQUALS 21.0 P.S.F. SPECIFIED ROOF LIVE LOAD

ALLOWABLE DEFL.(LL)= L/360 (1.09")
CALCULATED VERT. DEFL.(LL) = L/ 999 (0.13")
ALLOWABLE DEFL.(TL)= L/360 (1.09")
CALCULATED VERT. DEFL.(TL) = L/ 999 (0.34")

CANTILEVER DEFLECTION:
ALLOWABLE DEFL.(LL)= L/120 (0.19")
CALCULATED VERT. DEFL.(LL) = L/ 999 (0.02")
ALLOWABLE DEFL.(TL)= L/120 (0.19")
CALCULATED VERT. DEFL.(TL) = L/ 589 (0.03")

CSI: TC=0.59/1.00 (C-D:1) , BC=0.57/1.00 (M-N:4) , WB=0.76/1.00 (C-R:1) , SSI=0.28/1.00 (B-C:1)

DOL LUMBER=1.00 NAIL=1.00 LS BEND=1.10 COMP=1.10 SHEAR=1.10 TENS= 1.10

COMPANION LIVE LOAD FACTOR = 1.00

AUTOSOLVE LEFT HEEL ONLY

TRUSS PLATE MANUFACTURER IS NOT RESPONSIBLE FOR QUALITY CONTROL IN THE TRUSS MANUFACTURING PLANT .

NAIL VALUES

PLATE	GRIP(DRY) (PSI) MAX	MIN	SHEAR (PLI) MAX	MIN	SECTION (PLI) MAX	MIN
MT20	618	354	1667	788	1987	1656

PLATE PLACEMENT TOL. = 0.250 Inches

PLATE ROTATION TOL. = 5.0 Deg.

JSI GRIP= 0.89 (B) (INPUT = 0.90)
JSI METAL= 0.56 (P) (INPUT = 1.00)

A-18023580

CONTINUED ON PAGE 2

JOB NAME	TRUSS NAME	QUANTITY	PLY	JOB DESC.	DRWG NO.
292610	H2T	1	1	TRUSS DESC.	

Alpa Roof Truss, Maple

Version 8.200 S Jan 6 2018 MiTek Industries, Inc. Sat Feb 17 15:44:57 2018 Page 1

ID:84gOFYESM8s1JmDO6_uSGRyQW|P-ZrUZvykHEIjeyuBVzU89qpaCifq6HeLanUA_sGzkCKq

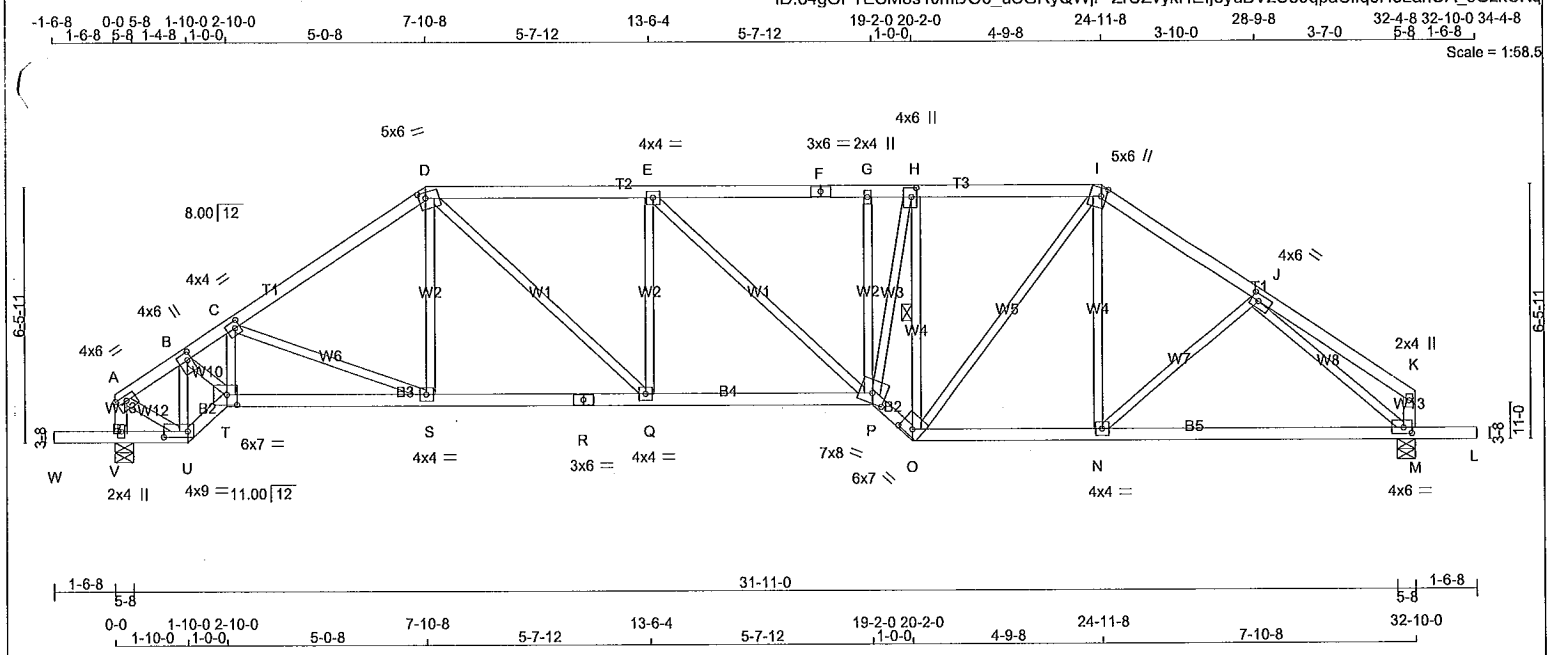

TOTAL WEIGHT = 147 lb

[M][F]

LUMBER

N. L. G. A. RULES

CHORDS	SIZE		LUMBER	DESCR.
A - D	2x4	DRY	No.2	SPF
D - F	2x4	DRY	No.2	SPF
F - I	2x4	DRY	No.2	SPF
I - K	2x4	DRY	No.2	SPF
V - A	2x4	DRY	No.2	SPF
M - K	2x4	DRY	No.2	SPF
W - U	2x4	DRY	No.2	SPF
U - T	2x4	DRY	No.2	SPF
T - R	2x4	DRY	No.2	SPF
[illegible]	2x4	DRY	No.2	SPF
[illegible]	2x4	DRY	No.2	SPF
[illegible]	2x4	DRY	No.2	SPF
ALL WEBS EXCEPT	2x3	DRY	No.2	SPF

DRY: SEASONED LUMBER.

PLATES (table is in inches)

JT	TYPE	PLATES	W	LEN	Y	X
A	TMVW-t	MT20	4.0	6.0	1.50	3.00
B	TMWW+t	MT20	4.0	6.0	2.25	1.25
C	TMWW-t	MT20	4.0	4.0	2.00	1.50
D	TTWW-m	MT20	5.0	6.0	1.75	2.00
E	TMWW-t	MT20	4.0	4.0		
F	TS-t	MT20	3.0	6.0		
G	TMW+w	MT20	2.0	4.0		
H	TMWW+t	MT20	4.0	6.0	2.75	1.50
I	TTWW+m	MT20	5.0	6.0	2.50	1.50
J	TMWW-t	MT20	4.0	6.0	2.00	2.25
K	TMV+p	MT20	2.0	4.0		
M	BMVW1-t	MT20	4.0	6.0	1.75	2.50
N, Q,-S						
N	BMWW-t	MT20	4.0	4.0		
O	BBWW-h	MT20	6.0	7.0	2.00	4.00
P	BBWWW-m	MT20	7.0	8.0	3.00	4.00
R	BS-t	MT20	3.0	6.0		
T	BBWW-l	MT20	6.0	7.0	3.00	3.00
U	BBWW-l	MT20	4.0	9.0	1.75	7.25
V	BMV1+p	MT20	2.0	4.0		

NOTE: Lateral brace(s) shown shall be 1x4 for Part 9 design as per OBC 9.23.13.11, and no less than 2x4 for Part 4 design

REGISTERED PROFESSIONAL ENGINEER
02/17/2018
EDWIN C. FOK
PROVINCE OF ONTARIO

DIMENSIONS, SUPPORTS AND LOADINGS SPECIFIED BY FABRICATOR TO BE VERIFIED BY BUILDING DESIGNER

BEARINGS

JT	FACTORED GROSS REACTION VERT	HORZ	MAXIMUM FACTORED GROSS REACTION DOWN	HORZ	UPLIFT	INPUT BRG IN-SX	REQRD BRG IN-SX
V	1736	0	1736	0	0	5-8	2-9
M	1729	0	1729	0	0	5-8	1-13

UNFACTORED REACTIONS

JT	1ST LCASE COMBINED	MAX./MIN. COMPONENT REACTIONS SNOW	LIVE	PERM.LIVE	WIND	DEAD	SOIL
V	1238	755 / 0	0 / 0	0 / 0	0 / 0	482 / 0	0 / 0
M	1233	752 / 0	0 / 0	0 / 0	0 / 0	480 / 0	0 / 0

BEARING MATERIAL TO BE SPF NO.2 OR BETTER AT JOINT(S) V, M

BRACING

TOP CHORD TO BE SHEATHED OR MAX. PURLIN SPACING = 4.06 FT.
MAX. UNBRACED BOTTOM CHORD LENGTH = 10.00 FT OR RIGID CEILING DIRECTLY APPLIED.

ALL PITCH BREAKS AND PERIMETER CORNER JOINTS MUST BE LATERALLY RESTRAINED.

1 LATERAL BRACE(S) AT 1/ 2 LENGTH OF H-O.

END VERTICAL(S) MUST BE SHEATHED OR HAVE BRACES AS INDICATED IN THE MAX. UNBRACED LENGTH COLUMN OF THE TABLE BELOW

LOADING

TOTAL LOAD CASES: (4)

CHORDS

MEMB. FR-TO	MAX. FACTORED FORCE (LBS)	FACTORED VERT. LOAD LC1 (PLF) FROM	TO	MAX CSI (LC)	MAX. UNBRAC LENGTH
A- B	-1496 / 0	-78.0	-78.0	0.11 (1)	5.27
B- C	-2587 / 0	-78.0	-78.0	0.24 (1)	4.10
C- D	-2177 / 0	-78.0	-78.0	0.30 (1)	4.36
D- E	-2440 / 0	-78.0	-78.0	0.39 (1)	4.06
E- F	-2419 / 0	-78.0	-78.0	0.38 (1)	4.08
F- G	-2419 / 0	-78.0	-78.0	0.38 (1)	4.08
G- H	-2416 / 0	-78.0	-78.0	0.23 (1)	4.22
H- I	-2025 / 0	-78.0	-78.0	0.24 (1)	4.55
I- J	-1881 / 0	-78.0	-78.0	0.18 (1)	4.75
J- K	0 / 18	-78.0	-78.0	0.17 (1)	10.00
V- A	-1508 / 0	0.0	0.0	0.15 (1)	6.68
M- K	-121 / 0	0.0	0.0	0.01 (1)	7.81
W- V	0 / 0	-96.5	-96.5	0.16 (1)	10.00
V- U	0 / 0	-18.5	-18.5	0.12 (1)	10.00
U- T	0 / 1552	-18.5	-18.5	0.25 (1)	10.00
T- S	0 / 2236	-18.5	-18.5	0.43 (1)	10.00
S- R	0 / 1799	-18.5	-18.5	0.36 (1)	10.00
R- Q	0 / 1799	-18.5	-18.5	0.36 (1)	10.00
Q- P	0 / 2440	-18.5	-18.5	0.46 (1)	10.00
P- O	0 / 2692	-18.5	-18.5	0.44 (1)	10.00
O- N	0 / 1550	-18.5	-18.5	0.41 (4)	10.00
N- M	0 / 1560	-18.5	-18.5	0.40 (4)	10.00
M- L	0 / 0	-96.5	-96.5	0.16 (1)	10.00

WEBS

MEMB. FR-TO	MAX. FACTORED FORCE (LBS)	MAX CSI (LC)
U- B	-1675 / 0	0.26 (1)
B- T	0 / 1551	0.35 (1)
T- C	0 / 56	0.02 (4)
C- S	-473 / 0	0.23 (1)
S- D	0 / 268	0.06 (1)
D- Q	0 / 875	0.20 (1)
Q- E	-496 / 0	0.23 (1)
E- P	-29 / 0	0.03 (1)
P- G	-144 / 0	0.07 (1)
P- H	0 / 2092	0.47 (1)
O- H	-2388 / 0	0.65 (1)
O- I	0 / 771	0.17 (1)
N- I	0 / 154	0.05 (4)
N- J	-16 / 46	0.02 (4)
A- U	0 / 1363	0.31 (1)
J- M	-2095 / 0	0.95 (1)

DESIGN CRITERIA

SPECIFIED LOADS:

TOP CH.	LL	=	21.0	PSF
	DL	=	6.0	PSF
BOT CH.	LL	=	0.0	PSF
	DL	=	7.4	PSF
TOTAL LOAD		=	34.4	PSF

SPACING = 24.0 IN. C/C

LOADING IN FLAT SECTION BASED ON A SLOPE OF 2.00/12 MINIMUM

THIS TRUSS IS DESIGNED FOR RESIDENTIAL OR SMALL BUILDING REQUIREMENTS OF PART 9, NBCC 2010, NBCC 2015

THIS DESIGN COMPLIES WITH:
- PART 9 OF OBC 2012, OBC 2018
- CSA 086-09, CSA 086-14
- TPIC 2011, TPIC 2014

DESIGN ASSUMPTIONS
-OVERHANG NOT TO BE ALTERED OR CUT OFF.

(55 % OF 23.0 P.S.F. G.S.L. PLUS 8.4 P.S.F. RAIN LOAD) EQUALS 21.0 P.S.F. SPECIFIED ROOF LIVE LOAD

ALLOWABLE DEFL.(LL)= L/360 (1.09")
CALCULATED VERT. DEFL.(LL) = L/ 999 (0.16")
ALLOWABLE DEFL.(TL)= L/360 (1.09")
CALCULATED VERT. DEFL.(TL) = L/ 999 (0.32")

CANTILEVER DEFLECTION:
ALLOWABLE DEFL.(LL)= L/120 (0.19")
CALCULATED VERT. DEFL.(LL) = L/ 999 (0.01")
ALLOWABLE DEFL.(TL)= L/120 (0.19")
CALCULATED VERT. DEFL.(TL) = L/ 618 (0.03")

CSI: TC=0.39/1.00 (D-E:1) , BC=0.46/1.00 (P-Q:1) , WB=0.95/1.00 (J-M:1) , SSI=0.21/1.00 (D-E:1)

DOL LUMBER=1.00 NAIL=1.00 LS BEND=1.10 COMP=1.10 SHEAR=1.10 TENS= 1.10

COMPANION LIVE LOAD FACTOR = 1.00

TRUSS PLATE MANUFACTURER IS NOT RESPONSIBLE FOR QUALITY CONTROL IN THE TRUSS MANUFACTURING PLANT .

NAIL VALUES

PLATE	GRIP(DRY) (PSI) MAX	MIN	SHEAR (PLI) MAX	MIN	SECTION (PLI) MAX	MIN
MT20	618	354	1667	788	1987	1656

PLATE PLACEMENT TOL. = 0.250 Inches

PLATE ROTATION TOL. = 5.0 Deg.

JSI GRIP= 0.90 (B) (INPUT = 0.90)
JSI METAL= 0.54 (R) (INPUT = 1.00)

A-18023579

CONTINUED ON PAGE 2

JOB NAME	TRUSS NAME	QUANTITY	PLY	JOB DESC.	DRWG NO.
291813	L2	3	1	TRUSS DESC.	

Alpa Roof Truss, Maple

Version 8.200 S Jan 6 2018 MiTek Industries, Inc. Sat Feb 17 15:25:52 2018 Page 1

ID:84gOFYESM8s1JmDO6_uSGRyQWjP-bZoibRt3tVT54w9ROW6fwMfYZ6?bVwC2UrJvA7zkCc

Scale = 1:22.3

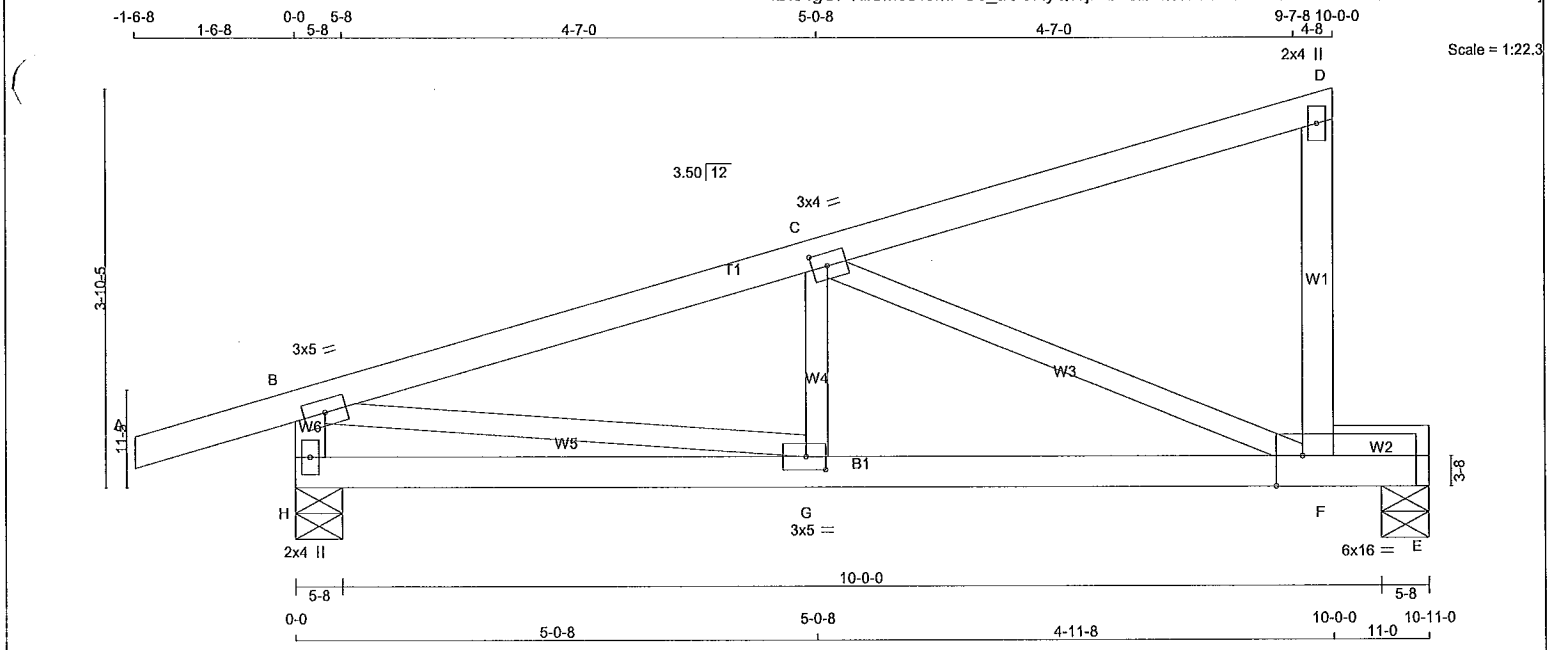

TOTAL WEIGHT = 3 X 41 = 122 lb

[M]

LUMBER

N. L. G. A. RULES

CHORDS	SIZE		LUMBER	DESCR.
A - D	2x4	DRY	No.2	SPF
F - D	2x4	DRY	No.2	SPF
H - B	2x4	DRY	No.2	SPF
H - E	2x4	DRY	No.2	SPF
F - E	2x4	DRY	No.2	SPF
ALL WEBS EXCEPT	2x3	DRY	No.2	SPF

P SEASONED LUMBER.

PLATES (table is in inches)

JT	TYPE	PLATES	W	LEN	Y	X
B	TMVW-t	MT20	3.0	5.0		
C	TMWW-t	MT20	3.0	4.0	1.50	1.75
D	TMV+p	MT20	2.0	4.0		
F	BMVWW-t	MT20	6.0	16.0	Edge	3.00
G	BMWW-t	MT20	3.0	5.0	1.50	2.25
H	BMV1+p	MT20	2.0	4.0		

Edge - INDICATES REFERENCE CORNER OF PLATE TOUCHES EDGE OF CHORD.

NOTE; Lateral brace(s) shown shall be 1x4 for Part 9 design as per OBC 9.23.13.11, and no less than 2x4 for Part 4 design

REGISTERED PROFESSIONAL ENGINEER
02/17/2018
EDWIN C. FOK
PROVINCE OF ONTARIO

DIMENSIONS, SUPPORTS AND LOADINGS SPECIFIED BY FABRICATOR TO BE VERIFIED BY BUILDING DESIGNER

BEARINGS

JT	FACTORED GROSS REACTION VERT	HORZ	MAXIMUM FACTORED GROSS REACTION DOWN	HORZ	UPLIFT	INPUT BRG IN-SX	REQRD BRG IN-SX
H	647	0	647	0	0	5-8	1-8
E	458	0	458	0	0	5-8	1-8

UNFACTORED REACTIONS

JT	1ST LCASE COMBINED	MAX./MIN. COMPONENT REACTIONS SNOW	LIVE	PERM.LIVE	WIND	DEAD	SOIL
H	459	294 / 0	0 / 0	0 / 0	0 / 0	165 / 0	0 / 0
E	328	192 / 0	0 / 0	0 / 0	0 / 0	136 / 0	0 / 0

BEARING MATERIAL TO BE SPF NO.2 OR BETTER AT JOINT(S) H, E

BRACING

TOP CHORD TO BE SHEATHED OR MAX. PURLIN SPACING = 6.13 FT.
MAX. UNBRACED BOTTOM CHORD LENGTH = 10.00 FT OR RIGID CEILING DIRECTLY APPLIED.

ALL PITCH BREAKS AND PERIMETER CORNER JOINTS MUST BE LATERALLY RESTRAINED.

LOADING

TOTAL LOAD CASES: (4)

CHORDS

MEMB. FR-TO	MAX. FACTORED FORCE (LBS)	FACTORED VERT. LOAD LC1 (PLF) FROM	TO	MAX CSI (LC)	MAX. UNBRAC LENGTH
A- B	0 / 17	-78.0	-78.0	0.14 (1)	10.00
B- C	-861 / 0	-78.0	-78.0	0.33 (1)	6.13
C- D	-13 / 0	-78.0	-78.0	0.30 (1)	6.25
F- D	-148 / 0	0.0	0.0	0.03 (1)	7.81
H- B	-627 / 0	0.0	0.0	0.06 (1)	7.81
H- G	0 / 0	-18.5	-18.5	0.20 (4)	10.00
G- F	0 / 838	-18.5	-18.5	0.70 (1)	10.00
F- E	0 / 0	-18.5	-18.5	0.23 (1)	10.00

WEBS

MEMB. FR-TO	MAX. FACTORED FORCE (LBS)	MAX CSI (LC)
C- G	0 / 134	0.05 (4)
C- F	-911 / 0	0.42 (1)
B- G	0 / 845	0.19 (1)

DESIGN CRITERIA

SPECIFIED LOADS:

TOP CH.	LL	=	21.0	PSF
	DL	=	6.0	PSF
BOT CH.	LL	=	0.0	PSF
	DL	=	7.4	PSF
TOTAL LOAD		=	34.4	PSF

SPACING = 24.0 IN. C/C

THIS TRUSS IS DESIGNED FOR RESIDENTIAL OR SMALL BUILDING REQUIREMENTS OF PART 9, NBCC 2010, NBCC 2015

THIS DESIGN COMPLIES WITH:
- PART 9 OF OBC 2012, OBC 2018
- CSA 086-09, CSA 086-14
- TPIC 2011, TPIC 2014

(55 % OF 23.0 P.S.F. G.S.L. PLUS 8.4 P.S.F. RAIN LOAD) EQUALS 21.0 P.S.F. SPECIFIED ROOF LIVE LOAD

ALLOWABLE DEFL.(LL)= L/360 (0.36")
CALCULATED VERT. DEFL.(LL) = L/ 999 (0.11")
ALLOWABLE DEFL.(TL)= L/360 (0.36")
CALCULATED VERT. DEFL.(TL) = L/ 563 (0.23")

CSI: TC=0.33/1.00 (B-C:1) , BC=0.70/1.00 (F-G:1) , WB=0.42/1.00 (C-F:1) , SSI=0.18/1.00 (B-C:1)

DOL LUMBER=1.00 NAIL=1.00 LS BEND=1.10 COMP=1.10 SHEAR=1.10 TENS= 1.10

COMPANION LIVE LOAD FACTOR = 1.00

AUTOSOLVE RIGHT HEEL ONLY

TRUSS PLATE MANUFACTURER IS NOT RESPONSIBLE FOR QUALITY CONTROL IN THE TRUSS MANUFACTURING PLANT .

NAIL VALUES

PLATE	GRIP(DRY) (PSI) MAX	MIN	SHEAR (PLI) MAX	MIN	SECTION (PLI) MAX	MIN
MT20	618	354	1667	788	1987	1656

PLATE PLACEMENT TOL. = 0.250 inches

PLATE ROTATION TOL. = 5.0 Deg.

JSI GRIP= 0.86 (G) (INPUT = 0.90)
JSI METAL= 0.28 (B) (INPUT = 1.00)

A-18023576

JOB NAME	TRUSS NAME	QUANTITY	PLY	JOB DESC.	DRWG NO.
291813	L1	1	1	TRUSS DESC.	

Alpa Roof Truss, Maple

Version 8.200 S Jan 6 2018 MiTek Industries, Inc. Sat Feb 17 15:25:05 2018 Page 1

ID:84gOFYESM8s1JmDO6_uSGRyQWjP-TXSxjMJby3Ymxi3P88mdXSCRP9yb_j07g1Qw0MzkCdS

Scale = 1:20.1

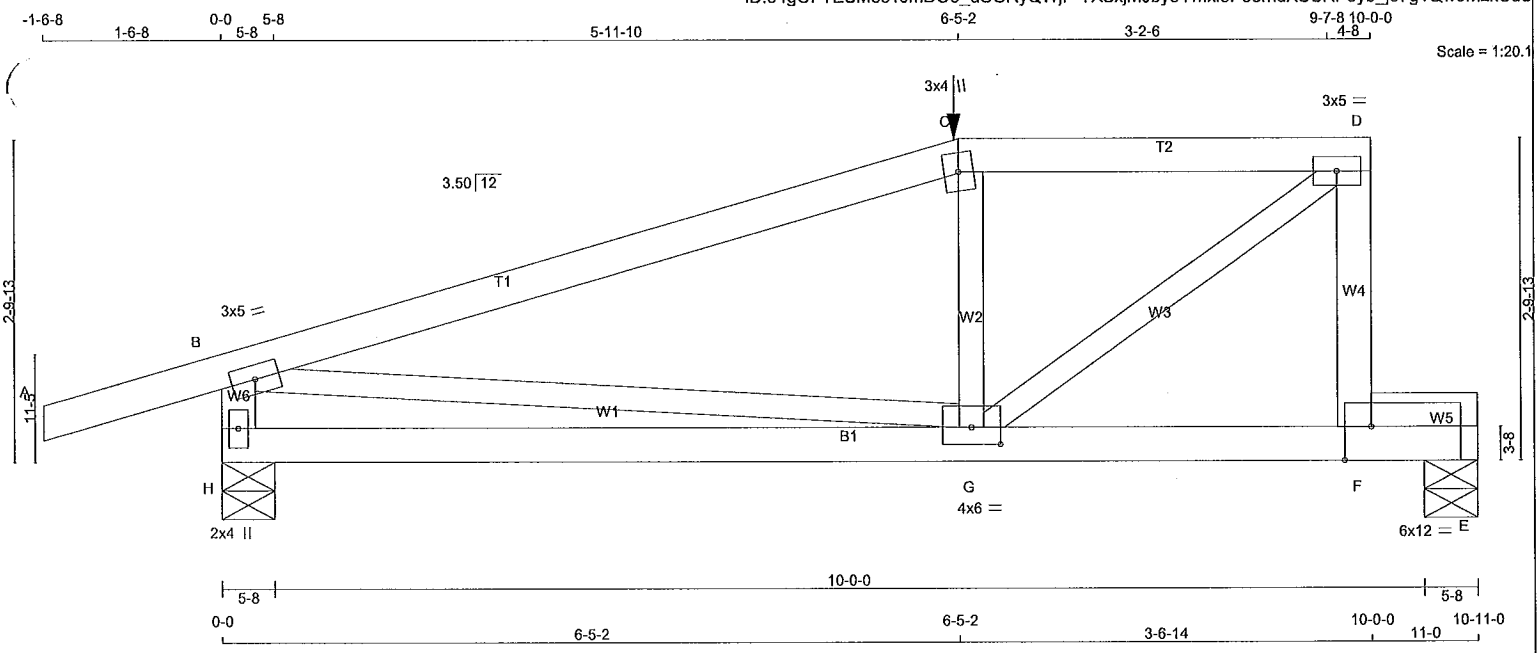

TOTAL WEIGHT = 40 lb

[M]

LUMBER

N. L. G. A. RULES

CHORDS	SIZE		LUMBER	DESCR.
A - C	2x4	DRY	No.2	SPF
C - D	2x4	DRY	No.2	SPF
F - D	2x4	DRY	No.2	SPF
H - B	2x4	DRY	No.2	SPF
H - E	2x4	DRY	No.2	SPF
F - E	2x4	DRY	No.2	SPF
ALL WEBS EXCEPT	2x3	DRY	No.2	SPF

EASONED LUMBER.

PLATES (table is in Inches)

JT	TYPE	PLATES	W	LEN	Y	X
B	TMVW-t	MT20	3.0	5.0		
C	TTW+m	MT20	3.0	4.0		
D	TMVW-t	MT20	3.0	5.0		
F	BMVW-t	MT20	6.0	12.0	Edge	2.75
G	BMWWW-t	MT20	4.0	6.0	1.75	3.00
H	BMV1+p	MT20	2.0	4.0		

Edge - INDICATES REFERENCE CORNER OF PLATE TOUCHES EDGE OF CHORD.

HANGERS NOTES

1) SPECIAL HANGER(S) OR CONNECTION(S) REQUIRED TO SUPPORT CONCENTRATED LOAD(S) 41.8 lbs FACTORED DOWN AT 6-5-2 ON TOP CHORD. DESIGN FOR UNSPECIFIED CONNECTION(S) IS DELEGATED TO THE BUILDING DESIGNER.

NOTE: Lateral brace(s) shown shall be 1x4 for Part 9 design as per OBC 9.23.13.11, and no less than 2x4 for Part 4 design

REGISTERED PROFESSIONAL ENGINEER
02/17/2018
EDWIN C. FOK
PROVINCE OF ONTARIO

DIMENSIONS, SUPPORTS AND LOADINGS SPECIFIED BY FABRICATOR TO BE VERIFIED BY BUILDING DESIGNER

BEARINGS

JT	FACTORED GROSS REACTION VERT	HORZ	MAXIMUM FACTORED GROSS REACTION DOWN	HORZ	UPLIFT	INPUT BRG IN-SX	REQRD BRG IN-SX
H	667	0	667	0	0	5-8	1-8
E	551	0	551	0	0	5-8	1-8

UNFACTORED REACTIONS

JT	1ST LCASE COMBINED	MAX./MIN. COMPONENT REACTIONS SNOW	LIVE	PERM.LIVE	WIND	DEAD	SOIL
H	473	305 / 0	0 / 0	0 / 0	0 / 0	168 / 0	0 / 0
E	392	242 / 0	0 / 0	0 / 0	0 / 0	150 / 0	0 / 0

BEARING MATERIAL TO BE SPF NO.2 OR BETTER AT JOINT(S) H, E

BRACING

TOP CHORD TO BE SHEATHED OR MAX. PURLIN SPACING = 5.94 FT.
MAX. UNBRACED BOTTOM CHORD LENGTH = 10.00 FT OR RIGID CEILING DIRECTLY APPLIED.

ALL PITCH BREAKS AND PERIMETER CORNER JOINTS MUST BE LATERALLY RESTRAINED.

LOADING

TOTAL LOAD CASES: (4)

CHORDS

MEMB. FR-TO	MAX. FACTORED FORCE (LBS)	FACTORED VERT. LOAD (PLF) FROM	TO	LC1 MAX CSI (LC)	MAX. UNBRAC LENGTH
A- B	0 / 17	-78.0	-78.0	0.15 (1)	10.00
B- C	-676 / 0	-78.0	-78.0	0.65 (1)	5.94
C- D	-630 / 0	-78.0	-78.0	0.19 (1)	6.25
F- D	-610 / 0	0.0	0.0	0.09 (1)	7.81
H- B	-627 / 0	0.0	0.0	0.07 (1)	7.81
H- G	0 / 0	-18.5	-18.5	0.25 (4)	10.00
G- F	0 / 0	-18.5	-18.5	0.70 (1)	10.00
F- E	0 / 0	-96.5	-96.5	0.29 (1)	10.00

WEBS

MEMB. FR-TO	MAX. FACTORED FORCE (LBS)	MAX CSI (LC)
G- C	-243 / 0	0.04 (1)
G- D	0 / 787	0.19 (1)
B- G	0 / 652	0.16 (1)

FACTORED CONCENTRATED LOADS (LBS)

JT	LOC.	LC1	MAX-	MAX+	FACE	DIR.	TYPE
C	6-5-2	-42	-42	---	FRONT	VERT	TOTAL

DESIGN CRITERIA

SPECIFIED LOADS:

TOP CH.	LL	=	21.0	PSF
	DL	=	6.0	PSF
BOT CH.	LL	=	0.0	PSF
	DL	=	7.4	PSF
TOTAL LOAD		=	34.4	PSF

SPACING = 24.0 IN. C/C

LOADING IN FLAT SECTION BASED ON A SLOPE OF 2.00/12 MINIMUM

GIRDER TYPE: CPrimeHip
LEFT SETBACK = 6-5-2
RIGHT SETBACK = 0-0
END SETBACK = 2-0-0
END WALL WIDTH = 0-0
CORNER FRAMING TYPE: CONVENTIONAL
END JACK TYPE: CONVENTIONAL
APPLIED TO FRONT SIDE
- ADDT'L LOADS BASED ON 55 % OF GSL.

THIS TRUSS IS DESIGNED FOR RESIDENTIAL OR SMALL BUILDING REQUIREMENTS OF PART 9, NBCC 2010, NBCC 2015

THIS DESIGN COMPLIES WITH:
- PART 9 OF OBC 2012, OBC 2018
- CSA 086-09, CSA 086-14
- TPIC 2011, TPIC 2014

(55 % OF 23.0 P.S.F. G.S.L. PLUS 8.4 P.S.F. RAIN LOAD) EQUALS 21.0 P.S.F. SPECIFIED ROOF LIVE LOAD

ALLOWABLE DEFL.(LL)= L/360 (0.36")
CALCULATED VERT. DEFL.(LL) = L/ 999 (0.08")
ALLOWABLE DEFL.(TL)= L/360 (0.36")
CALCULATED VERT. DEFL.(TL) = L/ 897 (0.15")

CSI: TC=0.65/1.00 (B-C:1) , BC=0.70/1.00 (F-G:1) , WB=0.19/1.00 (D-G:1) , SSI=0.24/1.00 (E-F:1)

DOL LUMBER=1.00 NAIL=1.00 LS BEND=1.00 COMP=1.00 SHEAR=1.00 TENS= 1.00

COMPANION LIVE LOAD FACTOR = 1.00

TRUSS PLATE MANUFACTURER IS NOT RESPONSIBLE FOR QUALITY CONTROL IN THE TRUSS MANUFACTURING PLANT .

NAIL VALUES

PLATE	GRIP(DRY) (PSI) MAX	MIN	SHEAR (PLI) MAX	MIN	SECTION (PLI) MAX	MIN
MT20	618	354	1667	788	1987	1656

PLATE PLACEMENT TOL. = 0.250 inches

PLATE ROTATION TOL. = 5.0 Deg.

JSI GRIP= 0.89 (G) (INPUT = 0.90)
JSI METAL= 0.24 (F) (INPUT = 1.00)

A-18023575

JOB NAME	TRUSS NAME	QUANTITY	PLY	JOB DESC.	DRWG NO.
292600	H31P	3	1	TRUSS DESC.	

Alpa Roof Truss, Maple

Version 8.200 S Jan 6 2018 MiTek Industries, Inc. Sat Feb 17 14:56:41 2018 Page 1
ID:MF8iirlaTok7DlbpT4B71Xys4PG-MiVm5ihkFWsYWrowJGB1T6eEIGVhk1uJrwfID7zkD24

Scale = 1:38.1

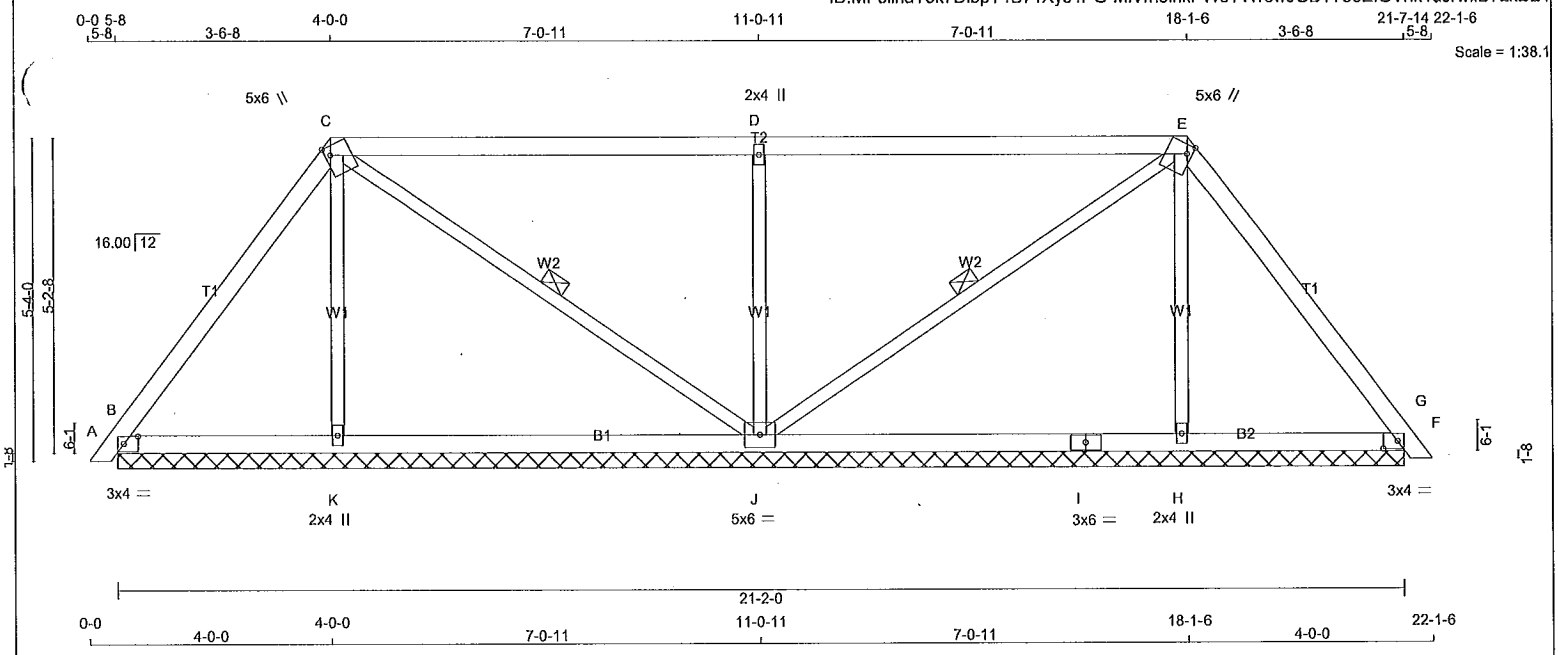

TOTAL WEIGHT = 3 X 80 = 240 lb

[M]

LUMBER
N. L. G. A. RULES

CHORDS	SIZE		LUMBER	DESCR.
A - C	2x4	DRY	No.2	SPF
C - E	2x4	DRY	No.2	SPF
E - G	2x4	DRY	No.2	SPF
B - I	2x4	DRY	No.2	SPF
I - F	2x4	DRY	No.2	SPF
ALL WEBS	2x3	DRY	No.2	SPF

DRY: SEASONED LUMBER.

PLATES (table is in inches)

JT	TYPE	PLATES	W	LEN	Y	X
B	TMB1-I	MT20	3.0	4.0	1.50	2.75
C	TTWW+m	MT20	5.0	6.0	1.75	1.00
D	TMW+w	MT20	2.0	4.0		
E	TTWW+m	MT20	5.0	6.0	1.75	1.00
F	TMB1-I	MT20	3.0	4.0	1.50	2.75
H	BMW1+w	MT20	2.0	4.0		
I	BS-t	MT20	3.0	6.0		
J	BMWWW1-t	MT20	5.0	6.0		
K	BMW1+w	MT20	2.0	4.0		

NOTE: Lateral brace(s) shown shall be 1x4 for Part 9 design as per OBC 9.23.13.11, and no less than 2x4 for Part 4 design

REGISTERED PROFESSIONAL ENGINEER
02/17/2018
EDWIN C. FOK
PROVINCE OF ONTARIO

DIMENSIONS, SUPPORTS AND LOADINGS SPECIFIED BY FABRICATOR TO BE VERIFIED BY BUILDING DESIGNER

BEARINGS

JT	FACTORED GROSS REACTION VERT	HORZ	MAXIMUM FACTORED GROSS REACTION DOWN	HORZ	UPLIFT	INPUT BRG IN-SX	REQRD BRG IN-SX
B	279	0	279	0	0	21-2-0 (5-2-8)-11-8	
K	318	0	318	0	0	21-2-0 (5-2-8)-11-8	
J	902	0	902	0	0	21-2-0 (5-2-8)-11-8	
H	318	0	318	0	0	21-2-0 (5-2-8)-11-8	
F	279	0	279	0	0	21-2-0 (5-2-8)-11-8	

VALUE IN PARENTHESIS INDICATES EFFECTIVE BEARING LENGTH

UNFACTORED REACTIONS

JT	1ST L.CASE COMBINED	MAX./MIN. COMPONENT REACTIONS SNOW	LIVE	PERM.LIVE	WIND	DEAD	SOIL
B	195	140 / 0	0 / 0	0 / 0	0 / 0	55 / 0	0 / 0
K	232	112 / 0	0 / 0	0 / 0	0 / 0	120 / 0	0 / 0
J	639	412 / 0	0 / 0	0 / 0	0 / 0	227 / 0	0 / 0
H	232	112 / 0	0 / 0	0 / 0	0 / 0	120 / 0	0 / 0
F	195	140 / 0	0 / 0	0 / 0	0 / 0	55 / 0	0 / 0

BEARING MATERIAL TO BE SPF NO.2 OR BETTER AT JOINT(S) B, K, J, H, F

BRACING
TOP CHORD TO BE SHEATHED OR MAX. PURLIN SPACING = 6.25 FT.
MAX. UNBRACED BOTTOM CHORD LENGTH = 10.00 FT OR RIGID CEILING DIRECTLY APPLIED.

ALL PITCH BREAKS AND PERIMETER CORNER JOINTS MUST BE LATERALLY RESTRAINED.

1 LATERAL BRACE(S) AT 1/ 2 LENGTH OF C-J, E-J.

LOADING
TOTAL LOAD CASES: (4)

CHORDS

MEMB. FR-TO	MAX. FACTORED FORCE (LBS)	FACTORED VERT. LOAD LC1 (PLF) FROM	TO	MAX CSI (LC)	MAX. UNBRAC LENGTH
A- B	0 / 10	-78.0	-78.0	0.01 (1)	10.00
B- C	-119 / 0	-78.0	-78.0	0.17 (1)	6.25
C- D	-8 / 0	-78.0	-78.0	0.66 (1)	10.00
D- E	-8 / 0	-78.0	-78.0	0.66 (1)	10.00
E- F	-119 / 0	-78.0	-78.0	0.17 (1)	6.25
F- G	0 / 10	-78.0	-78.0	0.01 (1)	10.00
B- K	0 / 70	-18.5	-18.5	0.14 (4)	10.00
K- J	0 / 65	-18.5	-18.5	0.20 (4)	10.00
J- I	0 / 65	-18.5	-18.5	0.20 (4)	10.00
I- H	0 / 65	-18.5	-18.5	0.20 (4)	10.00
H- F	0 / 70	-18.5	-18.5	0.14 (4)	10.00

WEBS

MEMB. FR-TO	MAX. FACTORED FORCE (LBS)	MAX CSI (LC)
K- C	-209 / 0	0.08 (1)
C- J	-69 / 0	0.03 (1)
J- D	-687 / 0	0.28 (1)
J- E	-69 / 0	0.03 (1)
H- E	-209 / 0	0.08 (1)

DESIGN CRITERIA

SPECIFIED LOADS:

TOP CH.	LL	=	21.0	PSF
	DL	=	6.0	PSF
BOT CH.	LL	=	0.0	PSF
	DL	=	7.4	PSF
TOTAL LOAD		=	34.4	PSF

SPACING = 24.0 IN. C/C

LOADING IN FLAT SECTION BASED ON A SLOPE OF 2.00/12 MINIMUM

THIS TRUSS IS DESIGNED FOR RESIDENTIAL OR SMALL BUILDING REQUIREMENTS OF PART 9, NBCC 2010, NBCC 2015

THIS DESIGN COMPLIES WITH:
- PART 9 OF OBC 2012, OBC 2018
- CSA 086-09, CSA 086-14
- TPIC 2011, TPIC 2014

(55 % OF 23.0 P.S.F. G.S.L. PLUS 8.4 P.S.F. RAIN LOAD) EQUALS 21.0 P.S.F. SPECIFIED ROOF LIVE LOAD

CSI: TC=0.66/1.00 (D-E:1) , BC=0.20/1.00 (J-K:4) , WB=0.28/1.00 (D-J:1) , SSI=0.27/1.00 (C-D:1)

DOL LUMBER=1.00 NAIL=1.00 LS BEND=1.10 COMP=1.10 SHEAR=1.10 TENS= 1.10

COMPANION LIVE LOAD FACTOR = 1.00

TRUSS PLATE MANUFACTURER IS NOT RESPONSIBLE FOR QUALITY CONTROL IN THE TRUSS MANUFACTURING PLANT .

NAIL VALUES

PLATE	GRIP(DRY) (PSI) MAX	MIN	SHEAR (PLI) MAX	MIN	SECTION (PLI) MAX	MIN
MT20	618	354	1667	788	1987	1656

PLATE PLACEMENT TOL. = 0.250 Inches

PLATE ROTATION TOL. = 5.0 Deg.

JSI GRIP= 0.64 (E) (INPUT = 0.90)
JSI METAL= 0.14 (D) (INPUT = 1.00)

A-18023558

JOB NAME	TRUSS NAME	QUANTITY	PLY	JOB DESC.	DRWG NO.
292600	H30P	2	1	TRUSS DESC.	

Alpa Roof Truss, Maple

Version 8.200 S Jan 6 2018 MiTek Industries, Inc. Sat Feb 17 14:56:34 2018 Page 1
ID:MF8iriaTok7DlbpT4B71Xys4PG-3Ma6dJcLuMzYAmlZPlZOger_sS54bucHEKStT1zkD2B

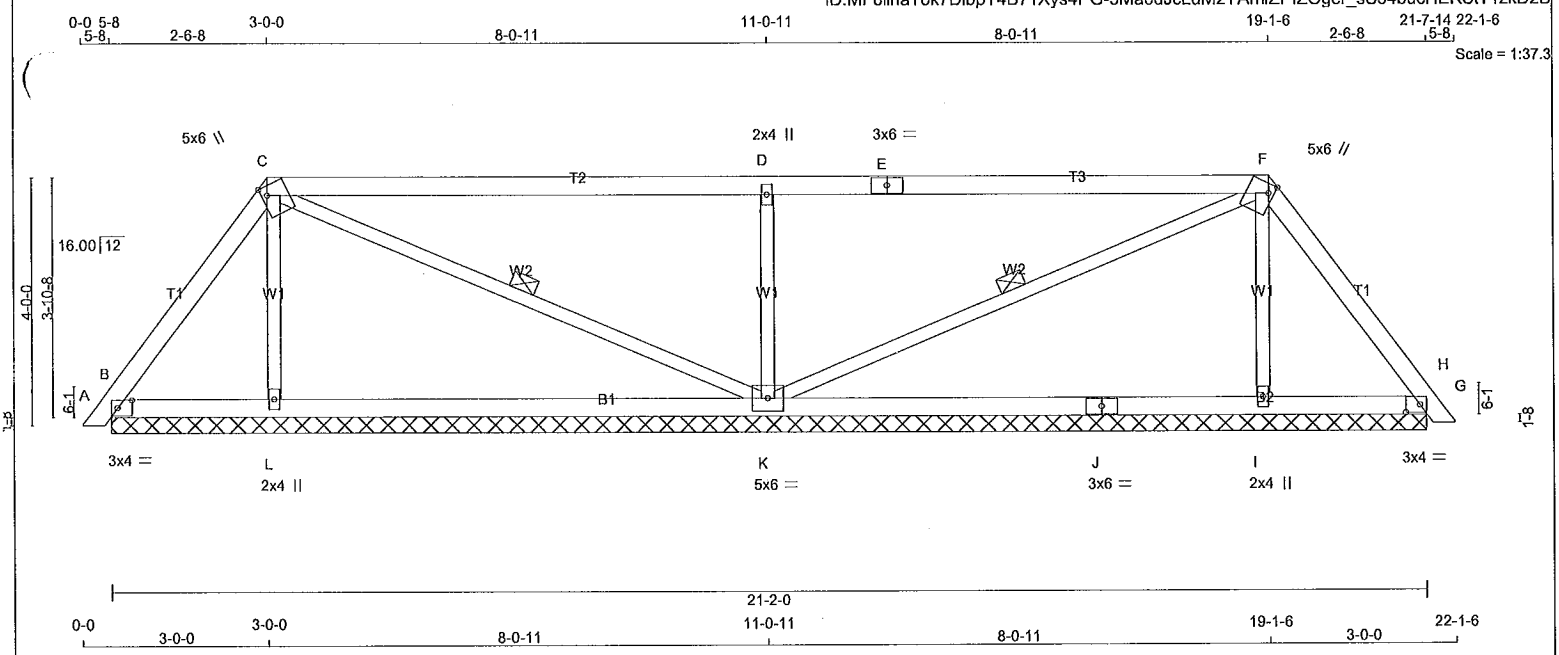

TOTAL WEIGHT = 2 X 76 = 151 lb

[M]

LUMBER

N. L. G. A. RULES

CHORDS	SIZE		LUMBER	DESCR.
A - C	2x4	DRY	No.2	SPF
C - E	2x4	DRY	No.2	SPF
E - F	2x4	DRY	No.2	SPF
F - H	2x4	DRY	No.2	SPF
B - J	2x4	DRY	No.2	SPF
J - G	2x4	DRY	No.2	SPF
ALL WEBS	2x3	DRY	No.2	SPF

DRY: SEASONED LUMBER.

PLATES (table is in inches)

JT	TYPE	PLATES	W	LEN	Y	X
B	TMB1-l	MT20	3.0	4.0	1.50	2.75
C	TTWW+m	MT20	5.0	6.0	1.75	1.00
D	TMW+w	MT20	2.0	4.0		
E	TS-t	MT20	3.0	6.0		
F	TTWW+m	MT20	5.0	6.0	1.75	1.00
G	TMB1-l	MT20	3.0	4.0	1.50	2.75
I	BMW1+w	MT20	2.0	4.0		
J	BS-t	MT20	3.0	6.0		
K	BMWWW1-t	MT20	5.0	6.0		
L	BMW1+w	MT20	2.0	4.0		

NOTE: Lateral brace(s) shown shall be 1x4 for Part 9 design as per OBC 9.23.13.11, and no less than 2x4 for Part 4 design

REGISTERED PROFESSIONAL ENGINEER
02/17/2018
EDWIN C. FOK
PROVINCE OF ONTARIO

DIMENSIONS, SUPPORTS AND LOADINGS SPECIFIED BY FABRICATOR TO BE VERIFIED BY BUILDING DESIGNER

BEARINGS

JT	FACTORED GROSS REACTION VERT	HORZ	MAXIMUM FACTORED GROSS REACTION DOWN	HORZ	UPLIFT	INPUT BRG IN-SX	REQRD BRG IN-SX
B	224	0	224	0	0	21-2-0 (5-2-8)	2-0-12
L	343	0	343	0	0	21-2-0 (5-2-8)	2-0-12
K	963	0	963	0	0	21-2-0 (5-2-8)	2-0-12
I	343	0	343	0	0	21-2-0 (5-2-8)	2-0-12
G	224	0	224	0	0	21-2-0 (5-2-8)	2-0-12

VALUE IN PARENTHESIS INDICATES EFFECTIVE BEARING LENGTH

UNFACTORED REACTIONS

JT	1ST LCASE COMBINED	MAX./MIN. COMPONENT REACTIONS SNOW	LIVE	PERM.LIVE	WIND	DEAD	SOIL
B	155	122 / 0	0 / 0	0 / 0	0 / 0	32 / 0	0 / 0
L	251	120 / 0	0 / 0	0 / 0	0 / 0	131 / 0	0 / 0
K	683	434 / 0	0 / 0	0 / 0	0 / 0	249 / 0	0 / 0
I	251	120 / 0	0 / 0	0 / 0	0 / 0	131 / 0	0 / 0
G	155	122 / 0	0 / 0	0 / 0	0 / 0	32 / 0	0 / 0

BEARING MATERIAL TO BE SPF NO.2 OR BETTER AT JOINT(S) B, L, K, I, G

BRACING

TOP CHORD TO BE SHEATHED OR MAX. PURLIN SPACING = 6.25 FT.
MAX. UNBRACED BOTTOM CHORD LENGTH = 10.00 FT OR RIGID CEILING DIRECTLY APPLIED.

ALL PITCH BREAKS AND PERIMETER CORNER JOINTS MUST BE LATERALLY RESTRAINED.

1 LATERAL BRACE(S) AT 1/ 2 LENGTH OF C-K, F-K.

LOADING

TOTAL LOAD CASES: (4)

CHORDS

MEMB. FR-TO	MAX. FACTORED FORCE (LBS)	FACTORED VERT. LOAD LC1 (PLF) FROM	TO	MAX CSI (LC)	MAX. UNBRAC LENGTH
A- B	0 / 10	-78.0	-78.0	0.01 (1)	10.00
B- C	-124 / 0	-78.0	-78.0	0.09 (1)	6.25
C- D	-41 / 0	-78.0	-78.0	0.86 (1)	6.25
D- E	-42 / 0	-78.0	-78.0	0.86 (1)	6.25
E- F	-42 / 0	-78.0	-78.0	0.86 (1)	6.25
F- G	-124 / 0	-78.0	-78.0	0.09 (1)	6.25
G- H	0 / 10	-78.0	-78.0	0.01 (1)	10.00
B- L	0 / 72	-18.5	-18.5	0.17 (4)	10.00
L- K	0 / 66	-18.5	-18.5	0.26 (4)	10.00
K- J	0 / 66	-18.5	-18.5	0.26 (4)	10.00
J- I	0 / 66	-18.5	-18.5	0.26 (4)	10.00
I- G	0 / 72	-18.5	-18.5	0.17 (4)	10.00

WEBS

MEMB. FR-TO	MAX. FACTORED FORCE (LBS)	MAX CSI (LC)
L- C	-223 / 0	0.05 (1)
C- K	-27 / 0	0.01 (1)
K- D	-784 / 0	0.18 (1)
K- F	-27 / 0	0.01 (1)
I- F	-223 / 0	0.05 (1)

DESIGN CRITERIA

SPECIFIED LOADS:

TOP CH.	LL	=	21.0	PSF
	DL	=	6.0	PSF
BOT CH.	LL	=	0.0	PSF
	DL	=	7.4	PSF
TOTAL LOAD		=	34.4	PSF

SPACING = 24.0 IN. C/C

LOADING IN FLAT SECTION BASED ON A SLOPE OF 2.00/12 MINIMUM

THIS TRUSS IS DESIGNED FOR RESIDENTIAL OR SMALL BUILDING REQUIREMENTS OF PART 9, NBCC 2010, NBCC 2015

THIS DESIGN COMPLIES WITH:
- PART 9 OF OBC 2012, OBC 2018
- CSA 086-09, CSA 086-14
- TPIC 2011, TPIC 2014

(55 % OF 23.0 P.S.F. G.S.L. PLUS 8.4 P.S.F. RAIN LOAD) EQUALS 21.0 P.S.F. SPECIFIED ROOF LIVE LOAD

CSI: TC=0.86/1.00 (D-F:1) , BC=0.26/1.00 (K-L:4) , WB=0.18/1.00 (D-K:1) , SSI=0.31/1.00 (C-D:1)

DOL LUMBER=1.00 NAIL=1.00 LS BEND=1.10 COMP=1.10 SHEAR=1.10 TENS= 1.10

COMPANION LIVE LOAD FACTOR = 1.00

TRUSS PLATE MANUFACTURER IS NOT RESPONSIBLE FOR QUALITY CONTROL IN THE TRUSS MANUFACTURING PLANT .

NAIL VALUES

PLATE	GRIP(DRY) (PSI) MAX	MIN	SHEAR (PLI) MAX	MIN	SECTION (PLI) MAX	MIN
MT20	618	354	1667	788	1987	1656

PLATE PLACEMENT TOL. = 0.250 inches

PLATE ROTATION TOL. = 5.0 Deg.

JSI GRIP= 0.80 (K) (INPUT = 0.90)
JSI METAL= 0.21 (J) (INPUT = 1.00)

A-18023557

JOB NAME	TRUSS NAME	QUANTITY	PLY	JOB DESC.	DRWG NO.
292600	H29P	2	1	TRUSS DESC.	

Alpa Roof Truss, Maple

Version 8.200 S Jan 6 2018 MiTek Industries, Inc. Sat Feb 17 14:56:28 2018 Page 1
ID:MF8iiriaTok7DlbpT4B71Xys4PG-ECCrMGXaIWDOSrIQ21S_RNb3q14eBCiPrO?ZGNzkD2H

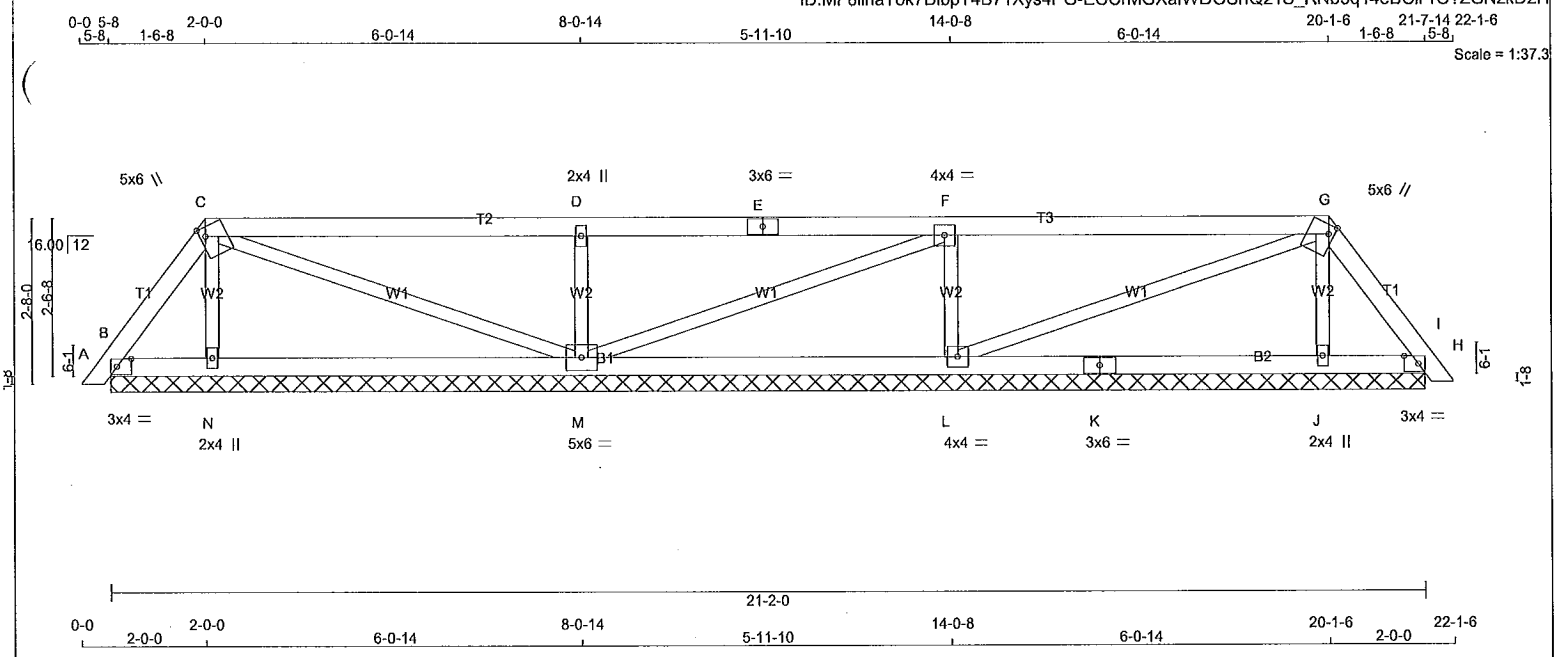

TOTAL WEIGHT = 2 X 74 = 147 lb

[M]

LUMBER
N. L. G. A. RULES

CHORDS	SIZE		LUMBER	DESCR.
A - C	2x4	DRY	No.2	SPF
C - E	2x4	DRY	No.2	SPF
E - G	2x4	DRY	No.2	SPF
G - I	2x4	DRY	No.2	SPF
B - K	2x4	DRY	No.2	SPF
K - H	2x4	DRY	No.2	SPF
ALL WEBS	2x3	DRY	No.2	SPF

DRY: SEASONED LUMBER.

PLATES (table is in Inches)

JT	TYPE	PLATES	W	LEN	Y	X
B	TMB1-I	MT20	3.0	4.0	1.50	2.75
C	TTWW+m	MT20	5.0	6.0	1.75	1.00
D	TMW+w	MT20	2.0	4.0		
E	TS-t	MT20	3.0	6.0		
F	TMWW-t	MT20	4.0	4.0		
G	TTWW+m	MT20	5.0	6.0	1.75	1.00
H	TMB1-I	MT20	3.0	4.0	1.50	2.75
J	BMW1+w	MT20	2.0	4.0		
K	BS-t	MT20	3.0	6.0		
L	BMWW1-t	MT20	4.0	4.0		
M	BMWWW1-t	MT20	5.0	6.0		
N	BMW1+w	MT20	2.0	4.0		

NOTE: Lateral brace(s) shown shall be 1x4 for Part 9 design as per OBC 9.23.13.11, and no less than 2x4 for Part 4 design

REGISTERED PROFESSIONAL ENGINEER
02/17/2018
EDWIN C. FOK
PROVINCE OF ONTARIO

DIMENSIONS, SUPPORTS AND LOADINGS SPECIFIED BY FABRICATOR TO BE VERIFIED BY BUILDING DESIGNER

BEARINGS

JT	FACTORED GROSS REACTION VERT	HORZ	MAXIMUM FACTORED GROSS REACTION DOWN	HORZ	UPLIFT	INPUT BRG IN-SX	REQRD BRG IN-SX
B	132	0	132	0	0	21-2-0 (5-2-8)-7-12	
N	273	0	273	0	0	21-2-0 (5-2-8)-7-12	
M	654	0	654	0	0	21-2-0 (5-2-8)-7-12	
L	623	0	623	0	0	21-2-0 (5-2-8)-7-12	
J	266	0	266	0	0	21-2-0 (5-2-8)-7-12	
H	148	0	148	0	0	21-2-0 (5-2-8)-7-12	

VALUE IN PARENTHESIS INDICATES EFFECTIVE BEARING LENGTH

UNFACTORED REACTIONS

JT	1ST LCASE COMBINED	MAX./MIN. COMPONENT REACTIONS SNOW	LIVE	PERM.LIVE	WIND	DEAD	SOIL
B	90	78 / 0	0 / 0	0 / 0	0 / 0	13 / 0	0 / 0
N	199	96 / 0	0 / 0	0 / 0	0 / 0	103 / 0	0 / 0
M	465	292 / 0	0 / 0	0 / 0	0 / 0	173 / 0	0 / 0
L	444	275 / 0	0 / 0	0 / 0	0 / 0	169 / 0	0 / 0
J	194	92 / 0	0 / 0	0 / 0	0 / 0	102 / 0	0 / 0
H	101	86 / 0	0 / 0	0 / 0	0 / 0	15 / 0	0 / 0

BEARING MATERIAL TO BE SPF NO.2 OR BETTER AT JOINT(S) B, N, M, L, J, H

BRACING
TOP CHORD TO BE SHEATHED OR MAX. PURLIN SPACING = 6.25 FT.
MAX. UNBRACED BOTTOM CHORD LENGTH = 10.00 FT OR RIGID CEILING DIRECTLY APPLIED.

ALL PITCH BREAKS AND PERIMETER CORNER JOINTS MUST BE LATERALLY RESTRAINED.

LOADING
TOTAL LOAD CASES: (4)

CHORDS

MEMB. FR-TO	MAX. FACTORED FORCE (LBS)	FACTORED VERT. LOAD (PLF) FROM	TO	LC1 MAX CSI (LC)	MAX. UNBRAC LENGTH
A- B	0 / 10	-78.0	-78.0	0.01 (1)	10.00
B- C	-70 / 0	-78.0	-78.0	0.03 (1)	6.25
C- D	0 / 7	-78.0	-78.0	0.39 (1)	10.00
D- E	0 / 7	-78.0	-78.0	0.39 (1)	10.00
E- F	0 / 7	-78.0	-78.0	0.39 (1)	10.00
F- G	-24 / 0	-78.0	-78.0	0.39 (1)	6.25
G- H	-88 / 0	-78.0	-78.0	0.03 (1)	6.25
H- I	0 / 10	-78.0	-78.0	0.01 (1)	10.00
B- N	0 / 40	-18.5	-18.5	0.10 (4)	10.00
N- M	0 / 31	-18.5	-18.5	0.14 (4)	10.00
M- L	0 / 24	-18.5	-18.5	0.14 (4)	10.00
L- K	0 / 42	-18.5	-18.5	0.14 (4)	10.00
K- J	0 / 42	-18.5	-18.5	0.14 (4)	10.00
J- H	0 / 50	-18.5	-18.5	0.10 (4)	10.00

WEBS

MEMB. FR-TO	MAX. FACTORED FORCE (LBS)	MAX CSI (LC)
N- C	-179 / 0	0.03 (1)
C- M	-40 / 0	0.03 (1)
M- D	-516 / 0	0.08 (1)
M- F	-33 / 0	0.02 (1)
L- F	-504 / 0	0.08 (1)
L- G	-19 / 0	0.01 (1)
J- G	-171 / 0	0.03 (1)

DESIGN CRITERIA

SPECIFIED LOADS:

TOP CH.	LL	=	21.0	PSF
	DL	=	6.0	PSF
BOT CH.	LL	=	0.0	PSF
	DL	=	7.4	PSF
TOTAL LOAD		=	34.4	PSF

SPACING = 24.0 IN. C/C

LOADING IN FLAT SECTION BASED ON A SLOPE OF 2.00/12 MINIMUM

THIS TRUSS IS DESIGNED FOR RESIDENTIAL OR SMALL BUILDING REQUIREMENTS OF PART 9, NBCC 2010, NBCC 2015

THIS DESIGN COMPLIES WITH:
- PART 9 OF OBC 2012, OBC 2018
- CSA 086-09, CSA 086-14
- TPIC 2011, TPIC 2014

(55 % OF 23.0 P.S.F. G.S.L. PLUS 8.4 P.S.F. RAIN LOAD) EQUALS 21.0 P.S.F. SPECIFIED ROOF LIVE LOAD

CSI: TC=0.39/1.00 (C-D:1) , BC=0.14/1.00 (J-L:4) , WB=0.08/1.00 (D-M:1) , SSI=0.22/1.00 (F-G:1)

DOL LUMBER=1.00 NAIL=1.00 LS BEND=1.10 COMP=1.10 SHEAR=1.10 TENS= 1.10

COMPANION LIVE LOAD FACTOR = 1.00

TRUSS PLATE MANUFACTURER IS NOT RESPONSIBLE FOR QUALITY CONTROL IN THE TRUSS MANUFACTURING PLANT .

NAIL VALUES

PLATE	GRIP(DRY) (PSI) MAX	MIN	SHEAR (PLI) MAX	MIN	SECTION (PLI) MAX	MIN
MT20	618	354	1667	788	1987	1656

PLATE PLACEMENT TOL. = 0.250 Inches

PLATE ROTATION TOL. = 5.0 Deg.

JSI GRIP= 0.89 (M) (INPUT = 0.90)
JSI METAL= 0.17 (E) (INPUT = 1.00)

A-18023556

JOB NAME	TRUSS NAME	QUANTITY	PLY	JOB DESC.	DRWG NO.
291813	H28	10	1	TRUSS DESC.	

Alpa Roof Truss, Maple

Version 8.200 S Jan 6 2018 MiTek Industries, Inc. Sat Feb 17 15:13:03 2018 Page 1

ID:MF8iiriaTok7DlbpT4B71Xys4PG-cdq?BUai_EaDKlserVpJGCJ3E7cwq8XsfiXjgCzkCok

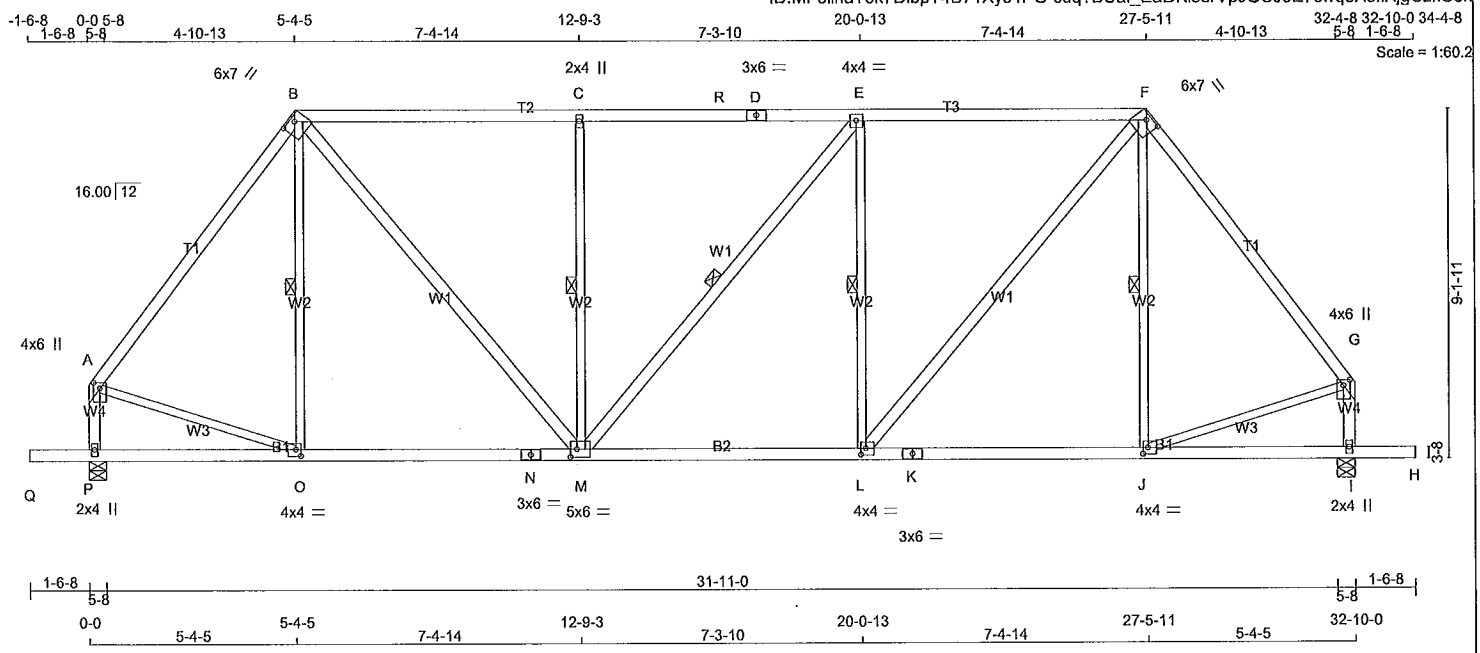

TOTAL WEIGHT = 10 X 166 = 1657 lb

[M][F]

LUMBER

N. L. G. A. RULES

CHORDS	SIZE		LUMBER	DESCR.
A - B	2x4	DRY	No.2	SPF
B - D	2x4	DRY	No.2	SPF
D - F	2x4	DRY	No.2	SPF
F - G	2x4	DRY	No.2	SPF
P - A	2x4	DRY	No.2	SPF
I - G	2x4	DRY	No.2	SPF
Q - N	2x4	DRY	No.2	SPF
N - K	2x4	DRY	No.2	SPF
K - H	2x4	DRY	No.2	SPF
EBS	2x3	DRY	No.2	SPF
PT				
B - M	2x4	DRY	No.2	SPF
M - E	2x4	DRY	No.2	SPF
L - F	2x4	DRY	No.2	SPF

DRY: SEASONED LUMBER.

PLATES (table is in inches)

JT	TYPE	PLATES	W	LEN	Y	X
A	TMVW+p	MT20	4.0	6.0	1.75	2.00
B	TTWW-h	MT20	6.0	7.0	1.50	3.75
C	TMW+w	MT20	2.0	4.0		
D	TS-t	MT20	3.0	6.0		
E	TMWW-t	MT20	4.0	4.0		
F	TTWW-h	MT20	6.0	7.0	1.50	3.75
G	TMVW+p	MT20	4.0	6.0	1.75	2.00
I	BMV1+p	MT20	2.0	4.0		
J, L, O						
J	BMWW-t	MT20	4.0	4.0	2.00	1.50
K	BS-t	MT20	3.0	6.0		
M	BMWWW-t	MT20	5.0	6.0	2.50	2.00
N	BS-t	MT20	3.0	6.0		
P	BMV1+p	MT20	2.0	4.0		

NOTE: Lateral brace(s) shown shall be 1x4 for Part 9 design as per OBC 9.23.13.11, and no less than 2x4 for Part 4 design

REGISTERED PROFESSIONAL ENGINEER
02/17/2018
EDWIN C. FOK
PROVINCE OF ONTARIO

DIMENSIONS, SUPPORTS AND LOADINGS SPECIFIED BY FABRICATOR TO BE VERIFIED BY BUILDING DESIGNER

BEARINGS

JT	FACTORED GROSS REACTION VERT	HORZ	MAXIMUM FACTORED GROSS REACTION DOWN	HORZ	UPLIFT	INPUT BRG IN-SX	REQRD BRG IN-SX
P	1815	0	1815	0	0	5-8	2-11
I	1815	0	1815	0	0	5-8	2-11

UNFACTORED REACTIONS

JT	1ST LCASE COMBINED	MAX./MIN. COMPONENT REACTIONS SNOW	LIVE	PERM.LIVE	WIND	DEAD	SOIL
P	1302	754 / 0	0 / 0	0 / 0	0 / 0	548 / 0	0 / 0
I	1302	754 / 0	0 / 0	0 / 0	0 / 0	548 / 0	0 / 0

BEARING MATERIAL TO BE SPF NO.2 OR BETTER AT JOINT(S) P, I

BRACING

FOR SECTION B-F, MAX. PURLIN SPACING = 2.00 FT.
FOR OTHER SECTIONS, TOP CHORD TO BE SHEATHED OR MAX. PURLIN SPACING = 5.08 FT.
MAX. UNBRACED BOTTOM CHORD LENGTH = 10.00 FT OR RIGID CEILING DIRECTLY APPLIED.

ALL PITCH BREAKS AND PERIMETER CORNER JOINTS MUST BE LATERALLY RESTRAINED.

1 LATERAL BRACE(S) AT 1/ 2 LENGTH OF B-O, C-M, E-M, E-L, F-J.

END VERTICAL(S) MUST BE SHEATHED OR HAVE BRACES AS INDICATED IN THE MAX. UNBRACED LENGTH COLUMN OF THE TABLE BELOW

LOADING

TOTAL LOAD CASES: (4)

CHORDS

MEMB. FR-TO	MAX. FACTORED FORCE (LBS)	FACTORED VERT. LOAD LC1 (PLF) FROM	TO	MAX CSI (LC)	MAX. UNBRAC LENGTH
A- B	-1454 / 0	-78.0	-78.0	0.38 (1)	5.08
B- C	-1552 / 0	-85.5	-85.5	0.61 (1)	2.00
C- R	-1553 / 0	-85.5	-85.5	0.54 (1)	2.00
R- D	-1553 / 0	-85.5	-85.5	0.54 (1)	2.00
D- E	-1553 / 0	-85.5	-85.5	0.54 (1)	2.00
E- F	-1553 / 0	-85.5	-85.5	0.61 (1)	2.00
F- G	-1453 / 0	-78.0	-78.0	0.38 (1)	5.08
P- A	-1630 / 0	0.0	0.0	0.19 (1)	6.48
I- G	-1630 / 0	0.0	0.0	0.19 (1)	6.48
Q- P	0 / 0	-96.5	-96.5	0.16 (1)	10.00
P- O	0 / 0	-18.5	-18.5	0.18 (4)	10.00
O- N	0 / 867	-18.5	-18.5	0.28 (4)	10.00
N- M	0 / 867	-18.5	-18.5	0.28 (4)	10.00
M- L	0 / 1554	-18.5	-18.5	0.36 (4)	10.00
L- K	0 / 867	-18.5	-18.5	0.29 (4)	10.00
K- J	0 / 867	-18.5	-18.5	0.29 (4)	10.00
J- I	0 / 0	-18.5	-18.5	0.18 (4)	10.00
I- H	0 / 0	-96.5	-96.5	0.16 (1)	10.00

WEBS

MEMB. FR-TO	MAX. FACTORED FORCE (LBS)	MAX CSI (LC)
O- B	-123 / 35	0.07 (1)
B- M	0 / 1065	0.17 (1)
M- C	-679 / 0	0.37 (1)
M- E	-2 / 0	0.00 (1)
L- E	-680 / 0	0.37 (1)
L- F	0 / 1067	0.17 (1)
J- F	-124 / 35	0.07 (1)
A- O	0 / 905	0.20 (1)
J- G	0 / 905	0.20 (1)

DESIGN CRITERIA

SPECIFIED LOADS:

TOP CH.	LL	=	21.0	PSF
	DL	=	6.0	PSF
BOT CH.	LL	=	0.0	PSF
	DL	=	7.4	PSF
TOTAL LOAD		=	34.4	PSF

SPACING = 24.0 IN. C/C

LOADING IN FLAT SECTION BASED ON PIGGYBACK TRUSS WITH SLOPES OF 6.00/12 AND -6.00/12 AND RESPECTIVE WALL HEIGHTS OF 0-0 AND 0-0 AND AN ADDITIONAL DEAD LOAD OF 3.0 P.S.F.

THIS TRUSS IS DESIGNED FOR RESIDENTIAL OR SMALL BUILDING REQUIREMENTS OF PART 9, NBCC 2010, NBCC 2015

THIS DESIGN COMPLIES WITH:
- PART 9 OF OBC 2012, OBC 2018
- CSA 086-09, CSA 086-14
- TPIC 2011, TPIC 2014

(55 % OF 23.0 P.S.F. G.S.L. PLUS 8.4 P.S.F. RAIN LOAD) EQUALS 21.0 P.S.F. SPECIFIED ROOF LIVE LOAD

ALLOWABLE DEFL.(LL)= L/360 (1.09")
CALCULATED VERT. DEFL.(LL) = L/ 999 (0.05")
ALLOWABLE DEFL.(TL)= L/360 (1.09")
CALCULATED VERT. DEFL.(TL) = L/ 999 (0.14")

CANTILEVER DEFLECTION:
ALLOWABLE DEFL.(LL)= L/120 (0.19")
CALCULATED VERT. DEFL.(LL) = L/ 999 (0.01")
ALLOWABLE DEFL.(TL)= L/120 (0.19")
CALCULATED VERT. DEFL.(TL) = L/ 999 (0.01")

CSI: TC=0.61/1.00 (E-F:1) , BC=0.36/1.00 (L-M:4) , WB=0.37/1.00 (E-L:1) , SSI=0.30/1.00 (E-F:1)

DOL LUMBER=1.00 NAIL=1.00 LS BEND=1.10 COMP=1.10 SHEAR=1.10 TENS= 1.10

COMPANION LIVE LOAD FACTOR = 1.00

TRUSS PLATE MANUFACTURER IS NOT RESPONSIBLE FOR QUALITY CONTROL IN THE TRUSS MANUFACTURING PLANT .

NAIL VALUES

PLATE	GRIP(DRY) (PSI) MAX	MIN	SHEAR (PLI) MAX	MIN	SECTION (PLI) MAX	MIN
MT20	618	354	1667	788	1987	1656

PLATE PLACEMENT TOL. = 0.250 Inches

PLATE ROTATION TOL. = 5.0 Deg.

JSI GRIP= 0.85 (P) (INPUT = 0.90)
JSI METAL= 0.53 (A) (INPUT = 1.00)

A-18023555

JOB NAME	TRUSS NAME	QUANTITY	PLY	JOB DESC.	DRWG NO.
292600	H27	1	1	TRUSS DESC.	

Alpa Roof Truss, Maple

Version 8.200 S Jan 6 2018 MiTek Industries, Inc. Sat Feb 17 14:55:47 2018 Page 1
ID:MF8iiriaTok7DlbpT4B71Xys4PG-xJELmE1syw2C1YfX9wDNGjOxMV0q4UpNQWauJFzkD2w

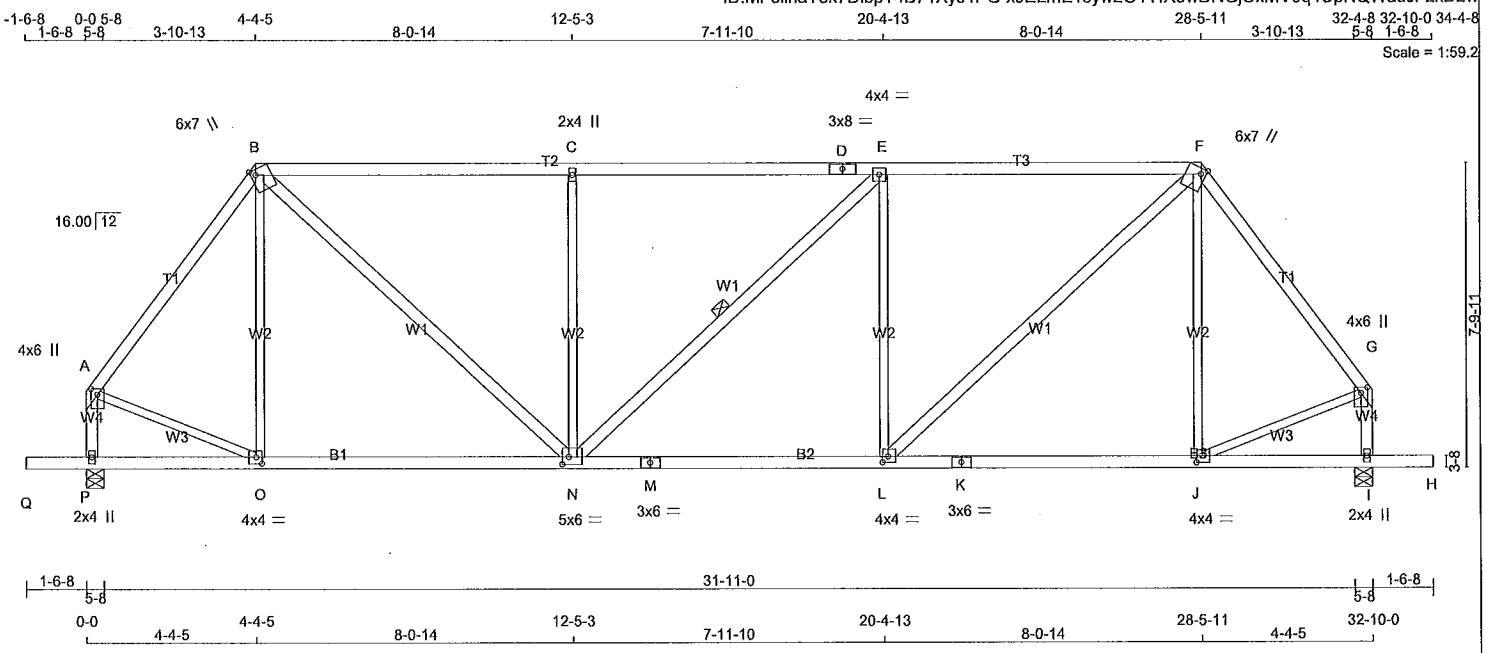

TOTAL WEIGHT = 157 lb

[M]

LUMBER
N. L. G. A. RULES

CHORDS	SIZE		LUMBER	DESCR.
A - B	2x4	DRY	No.2	SPF
B - D	2x4	DRY	No.2	SPF
D - F	2x4	DRY	No.2	SPF
F - G	2x4	DRY	No.2	SPF
P - A	2x4	DRY	No.2	SPF
I - G	2x4	DRY	No.2	SPF
Q - M	2x4	DRY	No.2	SPF
M - K	2x4	DRY	No.2	SPF
K - H	2x4	DRY	No.2	SPF
EBS	2x3	DRY	No.2	SPF
PT				
B - N	2x4	DRY	No.2	SPF
N - E	2x4	DRY	No.2	SPF
L - F	2x4	DRY	No.2	SPF

DRY: SEASONED LUMBER.

PLATES (table is in inches)

JT	TYPE	PLATES	W	LEN	Y	X
A	TMVW+p	MT20	4.0	6.0	1.75	2.00
B	TTWW+m	MT20	6.0	7.0	Edge	1.50
C	TMW+w	MT20	2.0	4.0		
D	TS-t	MT20	3.0	8.0		
E	TMWW-t	MT20	4.0	4.0		
F	TTWW+m	MT20	6.0	7.0	Edge	1.50
G	TMVW+p	MT20	4.0	6.0	1.75	2.00
I	BMV1+p	MT20	2.0	4.0		
J	BMWW-t	MT20	4.0	4.0	2.00	1.75
K	BS-t	MT20	3.0	6.0		
L	BMWW-t	MT20	4.0	4.0	1.75	1.75
M	BS-t	MT20	3.0	6.0		
N	BMWWW-t	MT20	5.0	6.0	2.25	2.00
O	BMWW-t	MT20	4.0	4.0	2.00	1.75
P	BMV1+p	MT20	2.0	4.0		

Edge - INDICATES REFERENCE CORNER OF PLATE TOUCHES EDGE OF CHORD.

NOTE: Lateral brace(s) shown shall be 1x4 for Part 9 design as per OBC 9.23.13.11, and no less than 2x4 for Part 4 design

REGISTERED PROFESSIONAL ENGINEER
02/17/2018
EDWIN C. FOK
PROVINCE OF ONTARIO

DIMENSIONS, SUPPORTS AND LOADINGS SPECIFIED BY FABRICATOR TO BE VERIFIED BY BUILDING DESIGNER

BEARINGS

JT	FACTORED GROSS REACTION VERT	HORZ	MAXIMUM FACTORED GROSS REACTION DOWN	HORZ	UPLIFT	INPUT BRG IN-SX	REQRD BRG IN-SX
P	1732	0	1732	0	0	5-8	2-9
I	1732	0	1732	0	0	5-8	2-9

UNFACTORED REACTIONS

JT	1ST LCASE COMBINED	MAX./MIN. COMPONENT REACTIONS SNOW	LIVE	PERM.LIVE	WIND	DEAD	SOIL
P	1235	754 / 0	0 / 0	0 / 0	0 / 0	481 / 0	0 / 0
I	1235	754 / 0	0 / 0	0 / 0	0 / 0	481 / 0	0 / 0

BEARING MATERIAL TO BE SPF NO.2 OR BETTER AT JOINT(S) P, I

BRACING
TOP CHORD TO BE SHEATHED OR MAX. PURLIN SPACING = 3.85 FT.
MAX. UNBRACED BOTTOM CHORD LENGTH = 10.00 FT OR RIGID CEILING DIRECTLY APPLIED.

ALL PITCH BREAKS AND PERIMETER CORNER JOINTS MUST BE LATERALLY RESTRAINED.

1 LATERAL BRACE(S) AT 1/ 2 LENGTH OF E-N.

END VERTICAL(S) MUST BE SHEATHED OR HAVE BRACES AS INDICATED IN THE MAX. UNBRACED LENGTH COLUMN OF THE TABLE BELOW

LOADING
TOTAL LOAD CASES: (4)

CHORDS

MEMB. FR-TO	MAX. FACTORED FORCE (LBS)	FACTORED VERT. LOAD (PLF) FROM	TO	LC1 MAX CSI (LC)	MAX. UNBRAC LENGTH
A- B	-1367 / 0	-78.0	-78.0	0.34 (1)	5.21
B- C	-1706 / 0	-78.0	-78.0	0.95 (1)	3.86
C- D	-1706 / 0	-78.0	-78.0	0.94 (1)	3.85
D- E	-1706 / 0	-78.0	-78.0	0.94 (1)	3.85
E- F	-1706 / 0	-78.0	-78.0	0.95 (1)	3.85
F- G	-1366 / 0	-78.0	-78.0	0.34 (1)	5.21
P- A	-1560 / 0	0.0	0.0	0.18 (1)	6.60
I- G	-1560 / 0	0.0	0.0	0.18 (1)	6.60
Q- P	0 / 0	-96.5	-96.5	0.16 (1)	10.00
P- O	0 / 0	-18.5	-18.5	0.18 (4)	10.00
O- N	0 / 813	-18.5	-18.5	0.31 (4)	10.00
N- M	0 / 1707	-18.5	-18.5	0.41 (1)	10.00
M- L	0 / 1707	-18.5	-18.5	0.41 (1)	10.00
L- K	0 / 813	-18.5	-18.5	0.32 (4)	10.00
K- J	0 / 813	-18.5	-18.5	0.32 (4)	10.00
J- I	0 / 0	-18.5	-18.5	0.18 (4)	10.00
I- H	0 / 0	-96.5	-96.5	0.16 (1)	10.00

WEBS

MEMB. FR-TO	MAX. FACTORED FORCE (LBS)	MAX CSI (LC)
B- O	-163 / 28	0.19 (1)
B- N	0 / 1216	0.20 (1)
N- C	-676 / 0	0.77 (1)
N- E	-1 / 0	0.00 (1)
L- E	-676 / 0	0.77 (1)
L- F	0 / 1217	0.20 (1)
J- F	-164 / 28	0.19 (1)
A- O	0 / 867	0.20 (1)
J- G	0 / 867	0.20 (1)

DESIGN CRITERIA

SPECIFIED LOADS:

TOP CH.	LL =	21.0	PSF
	DL =	6.0	PSF
BOT CH.	LL =	0.0	PSF
	DL =	7.4	PSF
TOTAL LOAD	=	34.4	PSF

SPACING = 24.0 IN. C/C

LOADING IN FLAT SECTION BASED ON A SLOPE OF 2.00/12 MINIMUM

THIS TRUSS IS DESIGNED FOR RESIDENTIAL OR SMALL BUILDING REQUIREMENTS OF PART 9, NBCC 2010, NBCC 2015

THIS DESIGN COMPLIES WITH:
- PART 9 OF OBC 2012, OBC 2018
- CSA 086-09, CSA 086-14
- TPIC 2011, TPIC 2014

(55 % OF 23.0 P.S.F. G.S.L. PLUS 8.4 P.S.F. RAIN LOAD) EQUALS 21.0 P.S.F. SPECIFIED ROOF LIVE LOAD

ALLOWABLE DEFL.(LL)= L/360 (1.09")
CALCULATED VERT. DEFL.(LL) = L/ 999 (0.07")
ALLOWABLE DEFL.(TL)= L/360 (1.09")
CALCULATED VERT. DEFL.(TL) = L/ 999 (0.16")

CANTILEVER DEFLECTION:
ALLOWABLE DEFL.(LL)= L/120 (0.19")
CALCULATED VERT. DEFL.(LL) = L/ 999 (0.01")
ALLOWABLE DEFL.(TL)= L/120 (0.19")
CALCULATED VERT. DEFL.(TL) = L/ 999 (0.01")

CSI: TC=0.95/1.00 (E-F:1) , BC=0.41/1.00 (L-N:1) , WB=0.77/1.00 (E-L:1) , SSI=0.29/1.00 (E-F:1)

DOL LUMBER=1.00 NAIL=1.00 LS BEND=1.10 COMP=1.10 SHEAR=1.10 TENS= 1.10

COMPANION LIVE LOAD FACTOR = 1.00

TRUSS PLATE MANUFACTURER IS NOT RESPONSIBLE FOR QUALITY CONTROL IN THE TRUSS MANUFACTURING PLANT .

NAIL VALUES

PLATE	GRIP(DRY) (PSI) MAX	MIN	SHEAR (PLI) MAX	MIN	SECTION (PLI) MAX	MIN
MT20	618	354	1667	788	1987	1656

PLATE PLACEMENT TOL. = 0.250 Inches

PLATE ROTATION TOL. = 5.0 Deg.

JSI GRIP= 0.89 (L) (INPUT = 0.90)
JSI METAL= 0.52 (M) (INPUT = 1.00)

A-18023554

CONTINUED ON PAGE 2

JOB NAME	TRUSS NAME	QUANTITY	PLY	JOB DESC.	DRWG NO.
292600	H26	1	1	TRUSS DESC.	

Alpa Roof Truss, Maple

Version 8.200 S Jan 6 2018 MiTek Industries, Inc. Sat Feb 17 14:55:41 2018 Page 1
ID:MF8lirlaTok7DlbpT4B71Xys4PG-69t4VBz5N4I3JdCOog6z1S8yg4yBgrZU2a7a6bzkD30

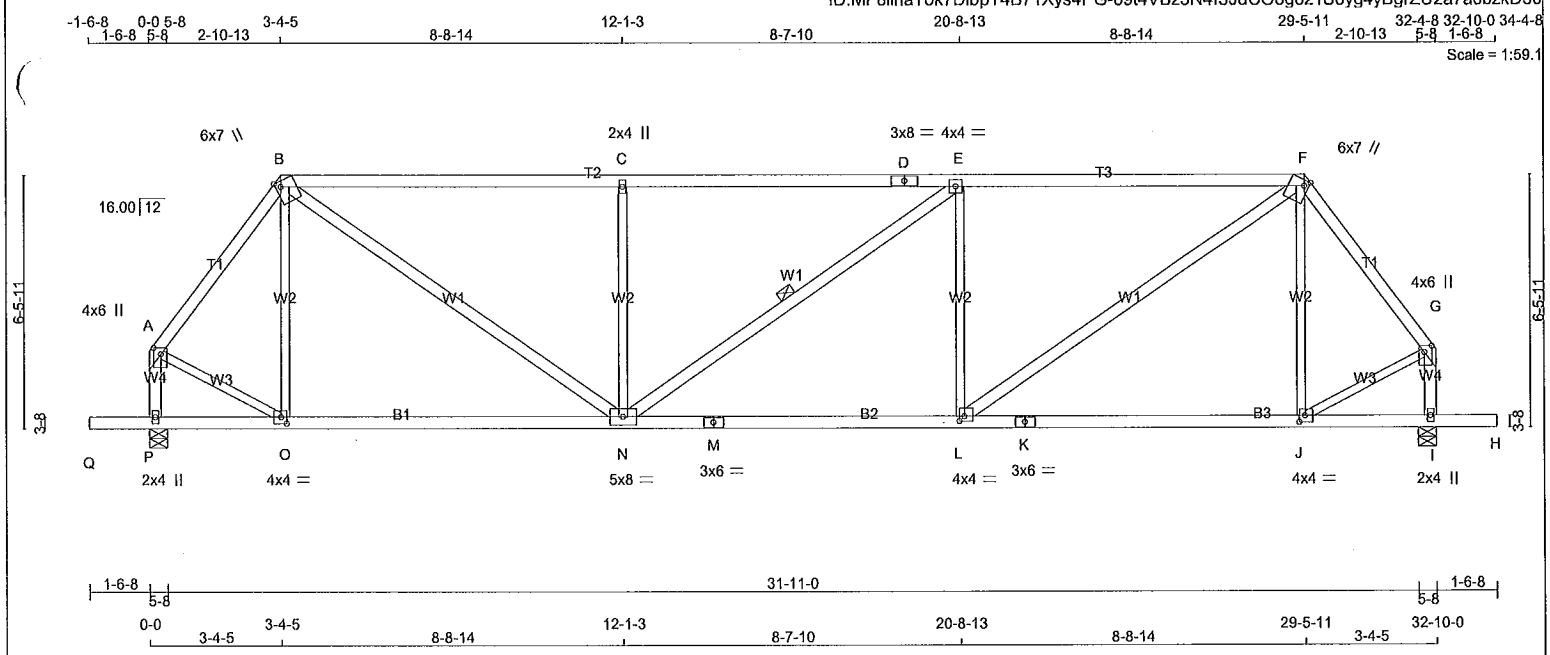

TOTAL WEIGHT = 148 lb

LUMBER
N. L. G. A. RULES

CHORDS	SIZE		LUMBER	DESCR.
A - B	2x4	DRY	No.2	SPF
B - D	2x4	DRY	2100F 1.8E	SPF
D - F	2x4	DRY	2100F 1.8E	SPF
F - G	2x4	DRY	No.2	SPF
P - A	2x4	DRY	No.2	SPF
I - G	2x4	DRY	No.2	SPF
Q - M	2x4	DRY	No.2	SPF
M - K	2x4	DRY	No.2	SPF
K - H	2x4	DRY	No.2	SPF
EBS	2x3	DRY	No.2	SPF
PT				
B - N	2x4	DRY	No.2	SPF
N - E	2x4	DRY	No.2	SPF
L - F	2x4	DRY	No.2	SPF

DRY: SEASONED LUMBER.

PLATES (table is in inches)

JT	TYPE	PLATES	W	LEN	Y	X
A	TMVW+p	MT20	4.0	6.0	2.00	2.25
B	TTWW+m	MT20	6.0	7.0	Edge	1.50
C	TMW+w	MT20	2.0	4.0		
D	TS-t	MT20	3.0	8.0		
E	TMWW-t	MT20	4.0	4.0		
F	TTWW+m	MT20	6.0	7.0	Edge	1.50
G	TMVW+p	MT20	4.0	6.0	2.00	2.25
I	BMV1+p	MT20	2.0	4.0		
J	BMWW-t	MT20	4.0	4.0	2.00	1.75
K	BS-t	MT20	3.0	6.0		
L	BMWW-t	MT20	4.0	4.0	1.50	1.50
M	BS-t	MT20	3.0	6.0		
N	BMWWW-t	MT20	5.0	8.0		
O	BMWW-t	MT20	4.0	4.0	2.00	1.75
P	BMV1+p	MT20	2.0	4.0		

Edge - INDICATES REFERENCE CORNER OF PLATE TOUCHES EDGE OF CHORD.

NOTE: Lateral brace(s) shown shall be 1x4 for Part 9 design as per OBC 9.23.13.11, and no less than 2x4 for Part 4 design

REGISTERED PROFESSIONAL ENGINEER
02/17/2018
EDWIN C. FOK
PROVINCE OF ONTARIO

DIMENSIONS, SUPPORTS AND LOADINGS SPECIFIED BY FABRICATOR TO BE VERIFIED BY BUILDING DESIGNER

BEARINGS

JT	FACTORED GROSS REACTION VERT	HORZ	MAXIMUM FACTORED GROSS REACTION DOWN	HORZ	UPLIFT	INPUT BRG IN-SX	REQRD BRG IN-SX
P	1732	0	1732	0	0	5-8	2-9
I	1732	0	1732	0	0	5-8	2-9

UNFACTORED REACTIONS

JT	1ST LCASE COMBINED	MAX./MIN. COMPONENT REACTIONS SNOW	LIVE	PERM.LIVE	WIND	DEAD	SOIL
P	1235	754 / 0	0 / 0	0 / 0	0 / 0	481 / 0	0 / 0
I	1235	754 / 0	0 / 0	0 / 0	0 / 0	481 / 0	0 / 0

BEARING MATERIAL TO BE SPF NO.2 OR BETTER AT JOINT(S) P, I

BRACING
TOP CHORD TO BE SHEATHED OR MAX. PURLIN SPACING = 4.80 FT.
MAX. UNBRACED BOTTOM CHORD LENGTH = 10.00 FT OR RIGID CEILING DIRECTLY APPLIED.

ALL PITCH BREAKS AND PERIMETER CORNER JOINTS MUST BE LATERALLY RESTRAINED.

1 LATERAL BRACE(S) AT 1/ 2 LENGTH OF E-N.

END VERTICAL(S) MUST BE SHEATHED OR HAVE BRACES AS INDICATED IN THE MAX. UNBRACED LENGTH COLUMN OF THE TABLE BELOW

LOADING
TOTAL LOAD CASES: (4)

CHORDS

MEMB. FR-TO	MAX. FACTORED FORCE (LBS)	FACTORED VERT. LOAD (PLF) FROM	TO	LC1 CSI (LC)	MAX UNBRAC LENGTH
A- B	-1340 / 0	-78.0	-78.0	0.19 (1)	5.40
B- C	-2068 / 0	-78.0	-78.0	0.71 (1)	4.81
C- D	-2069 / 0	-78.0	-78.0	0.70 (1)	4.80
D- E	-2069 / 0	-78.0	-78.0	0.70 (1)	4.80
E- F	-2069 / 0	-78.0	-78.0	0.71 (1)	4.80
F- G	-1340 / 0	-78.0	-78.0	0.19 (1)	5.40
P- A	-1578 / 0	0.0	0.0	0.18 (1)	6.57
I- G	-1578 / 0	0.0	0.0	0.18 (1)	6.57
Q- P	0 / 0	-96.5	-96.5	0.16 (1)	10.00
P- O	0 / 0	-18.5	-18.5	0.21 (4)	10.00
O- N	0 / 795	-18.5	-18.5	0.35 (4)	10.00
N- M	0 / 2069	-18.5	-18.5	0.49 (1)	10.00
M- L	0 / 2069	-18.5	-18.5	0.49 (1)	10.00
L- K	0 / 795	-18.5	-18.5	0.36 (4)	10.00
K- J	0 / 795	-18.5	-18.5	0.36 (4)	10.00
J- I	0 / 0	-18.5	-18.5	0.21 (4)	10.00
I- H	0 / 0	-96.5	-96.5	0.16 (1)	10.00

WEBS

MEMB. FR-TO	MAX. FACTORED FORCE (LBS)	MAX CSI (LC)
O- B	-235 / 1	0.16 (1)
B- N	0 / 1556	0.25 (1)
N- C	-732 / 0	0.50 (1)
N- E	0 / 0	0.00 (1)
L- E	-732 / 0	0.50 (1)
L- F	0 / 1557	0.25 (1)
J- F	-235 / 1	0.16 (1)
A- O	0 / 880	0.20 (1)
J- G	0 / 880	0.20 (1)

DESIGN CRITERIA

SPECIFIED LOADS:

TOP CH.	LL	=	21.0	PSF
	DL	=	6.0	PSF
BOT CH.	LL	=	0.0	PSF
	DL	=	7.4	PSF
TOTAL LOAD		=	34.4	PSF

SPACING = 24.0 IN. C/C

LOADING IN FLAT SECTION BASED ON A SLOPE OF 2.00/12 MINIMUM

THIS TRUSS IS DESIGNED FOR RESIDENTIAL OR SMALL BUILDING REQUIREMENTS OF PART 9, NBCC 2010, NBCC 2015

THIS DESIGN COMPLIES WITH:
- PART 9 OF OBC 2012, OBC 2018
- CSA 086-09, CSA 086-14
- TPIC 2011, TPIC 2014

(55 % OF 23.0 P.S.F. G.S.L. PLUS 8.4 P.S.F. RAIN LOAD) EQUALS 21.0 P.S.F. SPECIFIED ROOF LIVE LOAD

ALLOWABLE DEFL.(LL)= L/360 (1.09")
CALCULATED VERT. DEFL.(LL) = L/ 999 (0.08")
ALLOWABLE DEFL.(TL)= L/360 (1.09")
CALCULATED VERT. DEFL.(TL) = L/ 999 (0.20")

CANTILEVER DEFLECTION:
ALLOWABLE DEFL.(LL)= L/120 (0.19")
CALCULATED VERT. DEFL.(LL) = L/ 999 (0.01")
ALLOWABLE DEFL.(TL)= L/120 (0.19")
CALCULATED VERT. DEFL.(TL) = L/ 999 (0.01")

CSI: TC=0.71/1.00 (E-F:1) , BC=0.49/1.00 (L-N:1) , WB=0.50/1.00 (E-L:1) , SSI=0.32/1.00 (E-F:1)

DOL LUMBER=1.00 NAIL=1.00 LS BEND=1.10 COMP=1.10 SHEAR=1.10 TENS= 1.10

COMPANION LIVE LOAD FACTOR = 1.00

TRUSS PLATE MANUFACTURER IS NOT RESPONSIBLE FOR QUALITY CONTROL IN THE TRUSS MANUFACTURING PLANT .

NAIL VALUES

PLATE	GRIP(DRY) (PSI) MAX	MIN	SHEAR (PLI) MAX	MIN	SECTION (PLI) MAX	MIN
MT20	618	354	1667	788	1987	1656

PLATE PLACEMENT TOL. = 0.250 Inches

PLATE ROTATION TOL. = 5.0 Deg.

JSI GRIP= 0.90 (A) (INPUT = 0.90)
JSI METAL= 0.65 (M) (INPUT = 1.00)

A-18023553

CONTINUED ON PAGE 2

JOB NAME	TRUSS NAME	QUANTITY	PLY	JOB DESC.	DRWG NO.
292600	H25	1	1	TRUSS DESC.	

Alpa Roof Truss, Maple

Version 8.200 S Jan 6 2018 MiTek Industries, Inc. Sat Feb 17 15:01:00 2018 Page 1

ID:MF8iiriaTok7DlbpT4B71Xys4PG-HXegSGqBF4Uo4e5h_9KmSksPxgl9w3eROjuypczkD_1

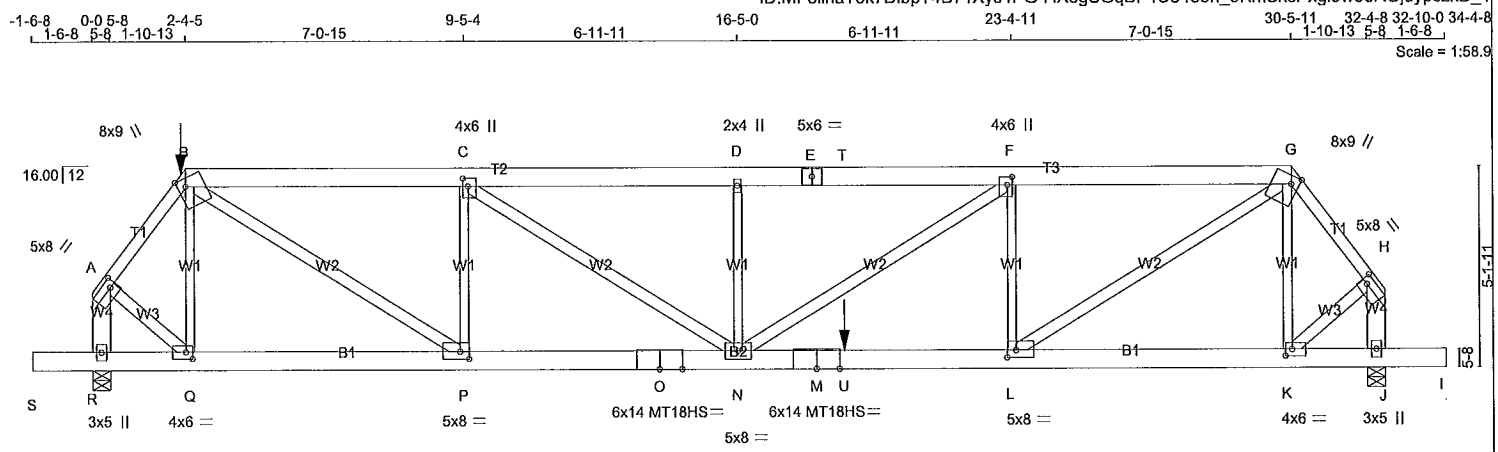

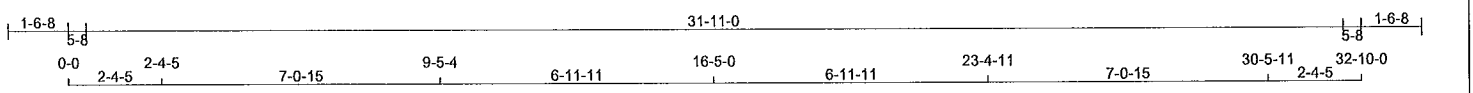

TOTAL WEIGHT = 190 lb

[M]

LUMBER

N. L. G. A. RULES

CHORDS	SIZE		LUMBER	DESCR.
A - B	2x4	DRY	No.2	SPF
B - E	2x6	DRY	No.2	SPF
E - G	2x6	DRY	No.2	SPF
G - H	2x4	DRY	No.2	SPF
R - A	2x6	DRY	No.2	SPF
J - H	2x6	DRY	No.2	SPF
S - O	2x6	DRY	2100F 1.8E	SPF
O - M	2x6	DRY	2100F 1.8E	SPF
M - I	2x6	DRY	2100F 1.8E	SPF
WEBS	2x4	DRY	No.2	SPF
BOTTOM CHORD				
Q - B	2x3	DRY	No.2	SPF
P - C	2x3	DRY	No.2	SPF
N - D	2x3	DRY	No.2	SPF
L - F	2x3	DRY	No.2	SPF
K - G	2x3	DRY	No.2	SPF

DRY: SEASONED LUMBER.

PLATES (table Is in Inches)

JT	TYPE	PLATES	W	LEN	Y	X
A	TMVW-t	MT20	5.0	8.0	2.25	2.00
B	TTWW+m	MT20	8.0	9.0	2.50	2.25
C	TMWW+t	MT20	4.0	6.0	2.50	1.50
D	TMW+w	MT20	2.0	4.0		
E	TS-t	MT20	5.0	6.0		
F	TMWW+t	MT20	4.0	6.0	2.50	1.50
G	TTWW+m	MT20	8.0	9.0	2.50	2.25
H	TMVW-t	MT20	5.0	8.0	2.25	2.00
J	BMV1+p	MT20	3.0	5.0		
K	BMWW-t	MT20	4.0	6.0	2.00	2.00
L	BMWW-t	MT20	5.0	8.0	2.25	2.75
M	BS-t	MT18HS	6.0	14.0		
N	BMWWW-t	MT20	5.0	8.0		
O	BS-t	MT18HS	6.0	14.0		
P	BMWW-t	MT20	5.0	8.0	2.25	2.75
Q	BMWW-t	MT20	4.0	6.0	2.00	2.00
R	BMV1+p	MT20	3.0	5.0		

NOTE: Lateral brace(s) shown shall be 1x4 for Part 9 design as per OBC 9.23.13.11, and no less than 2x4 for Part 4 design

REGISTERED PROFESSIONAL ENGINEER
02/17/2018
EDWIN C. FOK
PROVINCE OF ONTARIO

DIMENSIONS, SUPPORTS AND LOADINGS SPECIFIED BY FABRICATOR TO BE VERIFIED BY BUILDING DESIGNER

BEARINGS

JT	FACTORED GROSS REACTION VERT	HORZ	MAXIMUM FACTORED GROSS REACTION DOWN	HORZ	UPLIFT	INPUT BRG IN-SX	REQRD BRG IN-SX
R	3395	0	3395	0	0	5-8	3-4
J	2874	0	2874	0	0	5-8	2-11

UNFACTORED REACTIONS

JT	1ST LCASE COMBINED	MAX./MIN. COMPONENT REACTIONS SNOW	LIVE	PERM.LIVE	WIND	DEAD	SOIL
R	2413	1513 / 0	0 / 0	0 / 0	0 / 0	900 / 0	0 / 0
J	2038	1308 / 0	0 / 0	0 / 0	0 / 0	730 / 0	0 / 0

BEARING MATERIAL TO BE SPF NO.2 OR BETTER AT JOINT(S) R, J
BEARING SIZE FACTOR = 1.15 AT JNT(S) R, J (BASED ON SUPPORT DEPTH = 1-8)

BRACING

TOP CHORD TO BE SHEATHED OR MAX. PURLIN SPACING = 2.43 FT.
MAX. UNBRACED BOTTOM CHORD LENGTH = 10.00 FT OR RIGID CEILING DIRECTLY APPLIED.

ALL PITCH BREAKS AND PERIMETER CORNER JOINTS MUST BE LATERALLY RESTRAINED.

LOADING

TOTAL LOAD CASES: (4)

CHORDS

MEMB. FR-TO	MAX. FACTORED FORCE (LBS)	FACTORED VERT. LOAD (PLF) FROM	TO	LC1	MAX CSI (LC)	MAX. UNBRAC LENGTH
A- B	-2739 / 0	-78.0	-78.0	0.19 (1)	4.02	
B- C	-4993 / 0	-153.5	-153.5	0.84 (1)	2.95	
C- D	-6307 / 0	-153.5	-153.5	0.98 (1)	2.43	
D- E	-6307 / 0	-153.5	-153.5	0.65 (1)	3.00	
E- T	-6307 / 0	-153.5	-153.5	0.65 (1)	3.00	
T- F	-6307 / 0	-78.0	-78.0	0.65 (1)	3.00	
F- G	-4762 / 0	-78.0	-78.0	0.49 (1)	3.59	
G- H	-2217 / 0	-78.0	-78.0	0.16 (1)	4.43	
R- A	-3299 / 0	0.0	0.0	0.27 (1)	5.80	
J- H	-2688 / 0	0.0	0.0	0.22 (1)	6.32	
S- R	0 / 0	-96.5	-96.5	0.05 (1)	10.00	
R- Q	0 / 0	-36.4	-36.4	0.10 (4)	10.00	
Q- P	0 / 1626	-36.4	-36.4	0.18 (1)	10.00	
P- O	0 / 4993	-36.4	-36.4	0.51 (1)	10.00	
O- N	0 / 4993	-36.4	-36.4	0.51 (1)	10.00	
N- M	0 / 4762	-36.4	-36.4	0.78 (1)	10.00	
M- U	0 / 4762	-36.4	-36.4	0.78 (1)	10.00	
U- L	0 / 4762	-18.5	-18.5	0.78 (1)	10.00	
L- K	0 / 1310	-18.5	-18.5	0.27 (1)	10.00	
K- J	0 / 0	-18.5	-18.5	0.03 (4)	10.00	
J- I	0 / 0	-96.5	-96.5	0.05 (1)	10.00	

WEBS

MEMB. FR-TO	MAX. FACTORED FORCE (LBS)	MAX CSI (LC)
Q- B	-697 / 0	0.25 (1)
B- P	0 / 4035	0.71 (1)
P- C	-2118 / 0	0.75 (1)
C- N	0 / 1582	0.28 (1)
N- D	-920 / 0	0.33 (1)
N- F	0 / 1861	0.33 (1)
L- F	-1670 / 0	0.59 (1)
L- G	0 / 4137	0.73 (1)
K- G	-825 / 0	0.29 (1)
A- Q	0 / 1929	0.34 (1)
K- H	0 / 1561	0.28 (1)

FACTORED CONCENTRATED LOADS (LBS)

JT	LOC.	LC1	MAX-	MAX+	FACE	DIR.	TYPE
B	2-4-5	-134	-134	---	FRONT	VERT	TOTAL
U	19-1-8	-1061	-1061	---	FRONT	VERT	TOTAL

DESIGN CRITERIA

*** SPECIAL LOADS ANALYSIS ***
GEOMETRY AND/OR BASIC LOADS CHANGED BY USER.
LOADS WERE DERIVED FROM USER INPUT
NO FURTHER MODIFICATIONS WERE MADE

SPECIFIED LOADS:

TOP CH.	LL	=	21.0	PSF
	DL	=	6.0	PSF
BOT CH.	LL	=	0.0	PSF
	DL	=	7.4	PSF
TOTAL LOAD		=	34.4	PSF

SPACING = 24.0 IN. C/C

LOADING IN FLAT SECTION BASED ON A SLOPE OF 2.00/12 MINIMUM

GIRDER TYPE: CPrimeHip
SIDE SETBACK = 2-4-5
END SETBACK = 5-10-8
END WALL WIDTH = 0-0
CORNER FRAMING TYPE: CONVENTIONAL
END JACK TYPE: CONVENTIONAL
APPLIED TO FRONT SIDE
- ADDT'L LOADS BASED ON 55 % OF GSL.
LOADS APPLIED TO FIRST 19-1-8 OF SPAN MEASURED FROM THE LEFT.

*** NON STANDARD GIRDER ***
ADDT'L USER-DEFINED LOADS APPLIED TO ALL LOAD CASES.

THIS TRUSS IS DESIGNED FOR RESIDENTIAL OR SMALL BUILDING REQUIREMENTS OF PART 9, NBCC 2010, NBCC 2015

THIS DESIGN COMPLIES WITH:
- PART 9 OF OBC 2012, OBC 2018
- CSA 086-09, CSA 086-14
- TPIC 2011, TPIC 2014

(55 % OF 23.0 P.S.F. G.S.L. PLUS 8.4 P.S.F. RAIN LOAD) EQUALS 21.0 P.S.F. SPECIFIED ROOF LIVE LOAD

ALLOWABLE DEFL.(LL)= L/360 (1.09")
CALCULATED VERT. DEFL.(LL) = L/ 999 (0.30")
ALLOWABLE DEFL.(TL)= L/360 (1.09")
CALCULATED VERT. DEFL.(TL) = L/ 720 (0.55")

CANTILEVER DEFLECTION:
ALLOWABLE DEFL.(LL)= L/120 (0.19")
CALCULATED VERT. DEFL.(LL) = L/ 999 (0.00")
ALLOWABLE DEFL.(TL)= L/120 (0.19")
CALCULATED VERT. DEFL.(TL) = L/ 999 (0.00")

CSI: TC=0.98/1.00 (C-D:1) , BC=0.78/1.00 (L-N:1) , WB=0.75/1.00 (C-P:1) , SSI=0.51/1.00 (L-N:1)

DOL LUMBER=1.00 NAIL=1.00 LS BEND=1.00 COMP=1.00 SHEAR=1.00 TENS= 1.00

COMPANION LIVE LOAD FACTOR = 1.00

AUTOSOLVE HEELS OFF

A-18023552

CONTINUED ON PAGE 2

JOB NAME	TRUSS NAME	QUANTITY	PLY	JOB DESC.	DRWG NO.
292598	J1TB	1	1	TRUSS DESC.	

Alpa Roof Truss, Maple

Version 8.200 S Jan 6 2018 MiTek Industries, Inc. Sat Feb 17 14:46:32 2018 Page 1

ID:MF8iiriaTok7DlbpT4B71Xys4PG-hYCXHTKjfO7yyFkt8smDHhvI1nfvYfagogd0LwzkDBb

Scale = 1:30.5

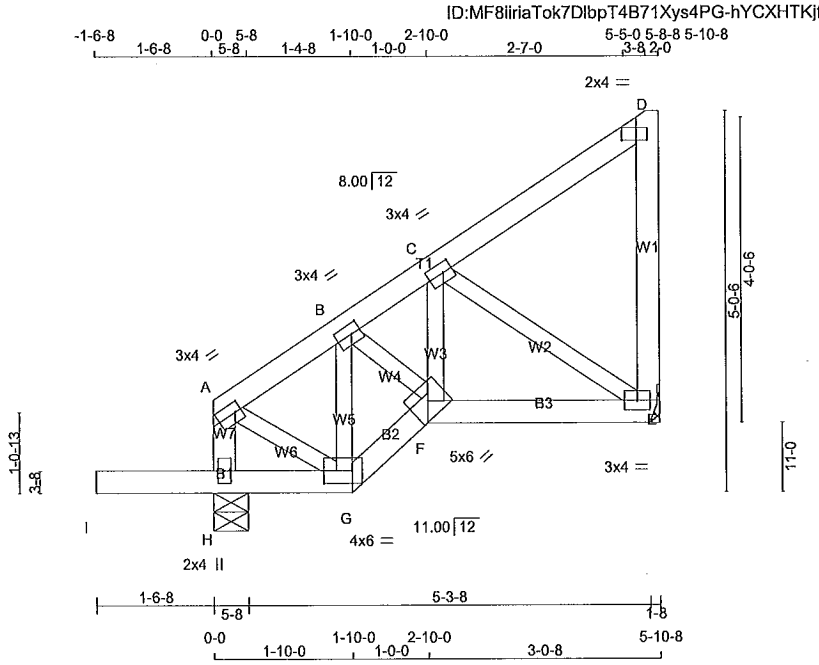

TOTAL WEIGHT = 30 lb

[M]

LUMBER

N. L. G. A. RULES

CHORDS	SIZE		LUMBER	DESCR.
A - D	2x4	DRY	No.2	SPF
E - D	2x4	DRY	No.2	SPF
H - A	2x4	DRY	No.2	SPF
I - G	2x4	DRY	No.2	SPF
G - F	2x4	DRY	No.2	SPF
F - E	2x4	DRY	No.2	SPF
ALL WEBS EXCEPT	2x3	DRY	No.2	SPF

EASONED LUMBER.

PLATES (table is in inches)

JT	TYPE	PLATES	W	LEN	Y	X
A	TMVW-t	MT20	3.0	4.0	1.50	1.00
B	TMWW-t	MT20	3.0	4.0	1.50	1.50
C	TMWW-t	MT20	3.0	4.0	1.50	1.50
D	TVM-p	MT20	2.0	4.0	0.50	2.25
E	BMVW1-t	MT20	3.0	4.0		
F	BBWW-h	MT20	5.0	6.0		
G	BBWW-l	MT20	4.0	6.0	2.00	4.50
H	BMV1+p	MT20	2.0	4.0		

NOTE: Lateral brace(s) shown shall be 1x4 for Part 9 design as per OBC 9.23.13.11, and no less than 2x4 for Part 4 design

REGISTERED PROFESSIONAL ENGINEER
02/17/2018
EDWIN C. FOK
PROVINCE OF ONTARIO

DIMENSIONS, SUPPORTS AND LOADINGS SPECIFIED BY FABRICATOR TO BE VERIFIED BY BUILDING DESIGNER

BEARINGS

JT	FACTORED GROSS REACTION VERT	HORZ	MAXIMUM FACTORED GROSS REACTION DOWN	HORZ	UPLIFT	INPUT BRG IN-SX	REQRD BRG IN-SX
E	264	0	264	0	0	HANGER BY OTHERS MIN. SEAT SIZE: 1-8	
H	452	0	452	0	0	5-8	1-8

UNFACTORED REACTIONS

JT	1ST LCASE COMBINED	MAX./MIN. COMPONENT REACTIONS SNOW	LIVE	PERM.LIVE	WIND	DEAD	SOIL
E	188	115 / 0	0 / 0	0 / 0	0 / 0	73 / 0	0 / 0
H	322	197 / 0	0 / 0	0 / 0	0 / 0	125 / 0	0 / 0

BEARING MATERIAL TO BE SPF NO.2 OR BETTER AT JOINT(S) H

BRACING

TOP CHORD TO BE SHEATHED OR MAX. PURLIN SPACING = 6.25 FT.
MAX. UNBRACED BOTTOM CHORD LENGTH = 10.00 FT OR RIGID CEILING DIRECTLY APPLIED.

ALL PITCH BREAKS AND PERIMETER CORNER JOINTS MUST BE LATERALLY RESTRAINED.

LOADING

TOTAL LOAD CASES: (4)

CHORDS

MEMB. FR-TO	MAX. FACTORED FORCE (LBS)	FACTORED VERT. LOAD (PLF) FROM	TO	LC1 MAX CSI (LC)	MAX. UNBRAC LENGTH
A- B	-165 / 0	-78.0	-78.0	0.04 (1)	6.25
B- C	-239 / 0	-78.0	-78.0	0.08 (1)	6.25
C- D	-11 / 0	-78.0	-78.0	0.08 (1)	6.25
E- D	-95 / 0	0.0	0.0	0.03 (1)	7.81
H- A	-223 / 0	0.0	0.0	0.02 (1)	7.81
I- H	0 / 0	-96.5	-96.5	0.16 (1)	10.00
H- G	0 / 0	-18.5	-18.5	0.16 (1)	10.00
G- F	0 / 173	-18.5	-18.5	0.03 (1)	10.00
F- E	0 / 216	-18.5	-18.5	0.07 (4)	10.00

WEBS

MEMB. FR-TO	MAX. FACTORED FORCE (LBS)	MAX CSI (LC)
G- B	-220 / 0	0.03 (1)
B- F	0 / 130	0.03 (1)
F- C	0 / 63	0.02 (4)
C- E	-259 / 0	0.06 (1)
A- G	0 / 154	0.03 (1)

DESIGN CRITERIA

SPECIFIED LOADS:

TOP CH.	LL	=	21.0	PSF
	DL	=	6.0	PSF
BOT CH.	LL	=	0.0	PSF
	DL	=	7.4	PSF
TOTAL LOAD		=	34.4	PSF

SPACING = 24.0 IN. C/C

THIS TRUSS IS DESIGNED FOR RESIDENTIAL OR SMALL BUILDING REQUIREMENTS OF PART 9, NBCC 2010, NBCC 2015

THIS DESIGN COMPLIES WITH:
- PART 9 OF OBC 2012, OBC 2018
- CSA 086-09, CSA 086-14
- TPIC 2011, TPIC 2014

DESIGN ASSUMPTIONS
-OVERHANG NOT TO BE ALTERED OR CUT OFF.

(55 % OF 23.0 P.S.F. G.S.L. PLUS 8.4 P.S.F. RAIN LOAD) EQUALS 21.0 P.S.F. SPECIFIED ROOF LIVE LOAD

ALLOWABLE DEFL.(LL)= L/360 (0.20")
CALCULATED VERT. DEFL.(LL) = L/ 999 (0.00")
ALLOWABLE DEFL.(TL)= L/360 (0.20")
CALCULATED VERT. DEFL.(TL) = L/ 999 (0.01")

CANTILEVER DEFLECTION:
ALLOWABLE DEFL.(LL)= L/120 (0.19")
CALCULATED VERT. DEFL.(LL) = L/ 999 (0.02")
ALLOWABLE DEFL.(TL)= L/120 (0.19")
CALCULATED VERT. DEFL.(TL) = L/ 588 (0.03")

CSI: TC=0.08/1.00 (B-C:1) , BC=0.16/1.00 (G-H:1) , WB=0.06/1.00 (C-E:1) , SSI=0.12/1.00 (H-I:1)

DOL LUMBER=1.00 NAIL=1.00 LS BEND=1.10 COMP=1.10 SHEAR=1.10 TENS= 1.10

COMPANION LIVE LOAD FACTOR = 1.00

TRUSS PLATE MANUFACTURER IS NOT RESPONSIBLE FOR QUALITY CONTROL IN THE TRUSS MANUFACTURING PLANT .

NAIL VALUES

PLATE	GRIP(DRY) (PSI) MAX	MIN	SHEAR (PLI) MAX	MIN	SECTION (PLI) MAX	MIN
MT20	618	354	1667	788	1987	1656

PLATE PLACEMENT TOL. = 0.250 inches

PLATE ROTATION TOL. = 5.0 Deg.

JSI GRIP= 0.50 (A) (INPUT = 0.90)
JSI METAL= 0.08 (D) (INPUT = 1.00)

A-18023551

JOB NAME	TRUSS NAME	QUANTITY	PLY	JOB DESC.	DRWG NO.
292598	J1TA	1	1	TRUSS DESC.	

Alpa Roof Truss, Maple

Version 8.200 S Jan 6 2018 MiTek Industries, Inc. Sat Feb 17 14:42:06 2018 Page 1
ID:MF8iiriaTok7DlbpT4B71Xys4PG-UM7zSW6tJgci1NPIZ?_rVburtYtQDLSXeHBy?LzkDFI

Scale = 1:22.5

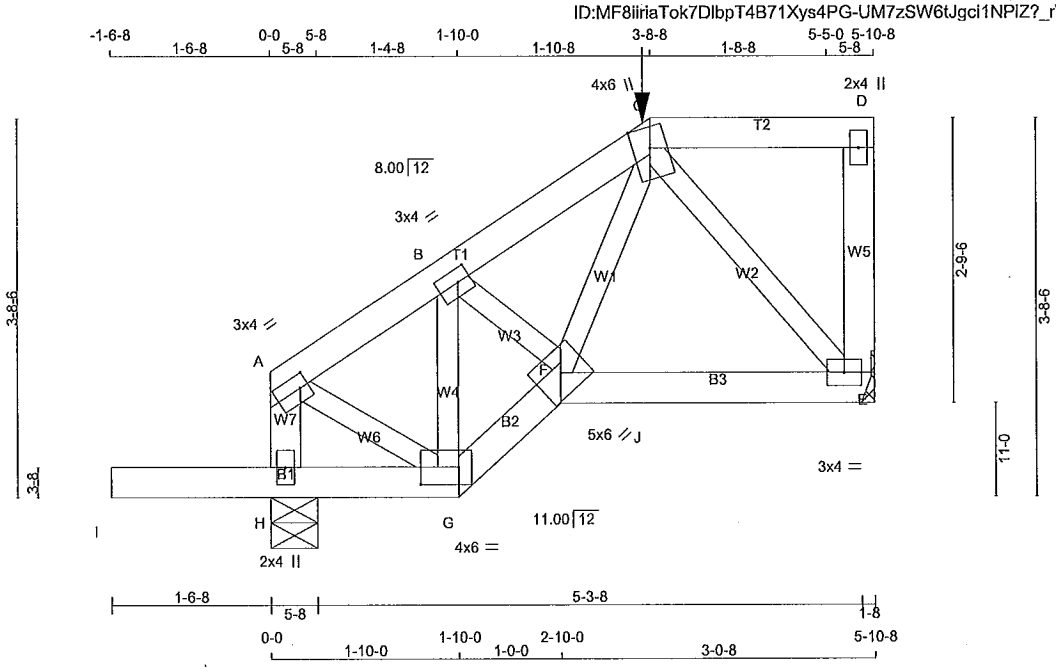

TOTAL WEIGHT = 28 lb

[M]

LUMBER

N. L. G. A. RULES

CHORDS	SIZE		LUMBER	DESCR.
A - C	2x4	DRY	No.2	SPF
C - D	2x4	DRY	No.2	SPF
E - D	2x4	DRY	No.2	SPF
H - A	2x4	DRY	No.2	SPF
I - G	2x4	DRY	No.2	SPF
G - F	2x4	DRY	No.2	SPF
F - E	2x4	DRY	No.2	SPF
ALL WEBS	2x3	DRY	No.2	SPF

[PT

[SEASONED LUMBER.

PLATES (table is in inches)

JT	TYPE	PLATES	W	LEN	Y	X
A	TMVW-t	MT20	3.0	4.0	1.50	1.00
B	TMWW-t	MT20	3.0	4.0	1.50	1.50
C	TTWW+m	MT20	4.0	6.0	Edge	
D	TMV+p	MT20	2.0	4.0		
E	BMVW1-t	MT20	3.0	4.0		
F	BBWW-h	MT20	5.0	6.0		
G	BBWW-l	MT20	4.0	6.0	2.00	4.50
H	BMV1+p	MT20	2.0	4.0		

Edge - INDICATES REFERENCE CORNER OF PLATE TOUCHES EDGE OF CHORD.

HANGERS NOTES

1) SPECIAL HANGER(S) OR CONNECTION(S) REQUIRED TO SUPPORT CONCENTRATED LOAD(S) 106.4 lbs FACTORED DOWN AT 3-8-8 ON TOP CHORD. DESIGN FOR UNSPECIFIED CONNECTION(S) IS DELEGATED TO THE BUILDING DESIGNER.

NOTE: Lateral brace(s) shown shall be 1x4 for Part 9 design as per OBC 9.23.13.11, and no less than 2x4 for Part 4 design

REGISTERED PROFESSIONAL ENGINEER
02/17/2018
EDWIN C. FOK
PROVINCE OF ONTARIO

DIMENSIONS, SUPPORTS AND LOADINGS SPECIFIED BY FABRICATOR TO BE VERIFIED BY BUILDING DESIGNER

BEARINGS

JT	FACTORED GROSS REACTION VERT	HORZ	MAXIMUM FACTORED GROSS REACTION DOWN	HORZ	UPLIFT	INPUT BRG	REQRD BRG
E	413	0	413	0	0	IN-SX	IN-SX
						HANGER BY OTHERS	
						MIN. SEAT SIZE: 1-8	
H	527	0	527	0	0	5-8	1-8

UNFACTORED REACTIONS

JT	1ST LCASE COMBINED	MAX./MIN. COMPONENT REACTIONS SNOW	LIVE	PERM.LIVE	WIND	DEAD	SOIL
E	294	183 / 0	0 / 0	0 / 0	0 / 0	111 / 0	0 / 0
H	377	225 / 0	0 / 0	0 / 0	0 / 0	152 / 0	0 / 0

BEARING MATERIAL TO BE SPF NO.2 OR BETTER AT JOINT(S) H

BRACING

TOP CHORD TO BE SHEATHED OR MAX. PURLIN SPACING = 6.25 FT.
MAX. UNBRACED BOTTOM CHORD LENGTH = 10.00 FT OR RIGID CEILING DIRECTLY APPLIED.

ALL PITCH BREAKS AND PERIMETER CORNER JOINTS MUST BE LATERALLY RESTRAINED.

LOADING

TOTAL LOAD CASES: (4)

CHORDS

MEMB. FR-TO	MAX. FACTORED FORCE (LBS)	FACTORED VERT. LOAD (PLF) FROM	TO	LC1	MAX CSI (LC)	MAX. UNBRAC LENGTH
A- B	-243 / 0	-78.0	-78.0	0.04 (1)	6.25	
B- C	-339 / 0	-78.0	-78.0	0.04 (1)	6.25	
C- D	0 / 0	-111.3	-111.3	0.10 (1)	10.00	
E- D	-121 / 0	0.0	0.0	0.02 (1)	7.81	
H- A	-292 / 0	0.0	0.0	0.03 (1)	7.81	
I- H	0 / 0	-96.5	-96.5	0.17 (1)	10.00	
H- G	0 / 0	-26.4	-26.4	0.17 (1)	10.00	
G- F	0 / 261	-26.4	-26.4	0.05 (1)	10.00	
F- J	0 / 223	-26.4	-26.4	0.10 (4)	10.00	
J- E	0 / 223	-26.4	-26.4	0.10 (4)	10.00	

WEBS

MEMB. FR-TO	MAX. FACTORED FORCE (LBS)	MAX CSI (LC)
G- B	-302 / 0	0.05 (1)
B- F	0 / 118	0.03 (1)
F- C	0 / 157	0.04 (1)
C- E	-338 / 0	0.07 (1)
A- G	0 / 231	0.06 (1)

FACTORED CONCENTRATED LOADS (LBS)

JT	LOC.	LC1	MAX-	MAX+	FACE	DIR.	TYPE
C	3-8-8	-106	-106	---	FRONT	VERT	TOTAL

DESIGN CRITERIA

SPECIFIED LOADS:

TOP CH.	LL	=	21.0	PSF
	DL	=	6.0	PSF
BOT CH.	LL	=	0.0	PSF
	DL	=	7.4	PSF
TOTAL LOAD		=	34.4	PSF

SPACING = 24.0 IN. C/C

LOADING IN FLAT SECTION BASED ON A SLOPE OF 2.00/12 MINIMUM

GIRDER TYPE: CPrimeHip
LEFT SETBACK = 3-8-8
RIGHT SETBACK = 0-0
END SETBACK = 3-8-8
END WALL WIDTH = 0-0
CORNER FRAMING TYPE: CONVENTIONAL
END JACK TYPE: CONVENTIONAL
APPLIED TO FRONT SIDE
- ADDT'L LOADS BASED ON 55 % OF GSL.

THIS TRUSS IS DESIGNED FOR RESIDENTIAL OR SMALL BUILDING REQUIREMENTS OF PART 9, NBCC 2010, NBCC 2015

THIS DESIGN COMPLIES WITH:
- PART 9 OF OBC 2012, OBC 2018
- CSA 086-09, CSA 086-14
- TPIC 2011, TPIC 2014

DESIGN ASSUMPTIONS
-OVERHANG NOT TO BE ALTERED OR CUT OFF.

(55 % OF 23.0 P.S.F. G.S.L. PLUS 8.4 P.S.F. RAIN LOAD) EQUALS 21.0 P.S.F. SPECIFIED ROOF LIVE LOAD

ALLOWABLE DEFL.(LL)= L/360 (0.20")
CALCULATED VERT. DEFL.(LL) = L/ 999 (0.00")
ALLOWABLE DEFL.(TL)= L/360 (0.20")
CALCULATED VERT. DEFL.(TL) = L/ 999 (0.01")

CANTILEVER DEFLECTION:
ALLOWABLE DEFL.(LL)= L/120 (0.19")
CALCULATED VERT. DEFL.(LL) = L/ 999 (0.02")
ALLOWABLE DEFL.(TL)= L/120 (0.19")
CALCULATED VERT. DEFL.(TL) = L/ 617 (0.03")

CSI: TC=0.10/1.00 (C-D:1) , BC=0.17/1.00 (G-H:1) , WB=0.07/1.00 (C-E:1) , SSI=0.13/1.00 (H-I:1)

DOL LUMBER=1.00 NAIL=1.00 LS BEND=1.00 COMP=1.00 SHEAR=1.00 TENS= 1.00

COMPANION LIVE LOAD FACTOR = 1.00

TRUSS PLATE MANUFACTURER IS NOT RESPONSIBLE FOR QUALITY CONTROL IN THE TRUSS MANUFACTURING PLANT .

A-18023550

CONTINUED ON PAGE 2

JOB NAME	TRUSS NAME	QUANTITY	PLY	JOB DESC.	DRWG NO.
292598	J1T	5	1	TRUSS DESC.	

Alpa Roof Truss, Maple

Version 8.200 S Jan 6 2018 MiTek Industries, Inc. Sat Feb 17 14:46:26 2018 Page 1
ID:MF8iirlaTok7DlbpT4B71Xys4PG-sOqG0QFy4YNpEKHjncfp1QfGYMcV8y5oQkAi7GzkDBh

Scale = 1:31.0

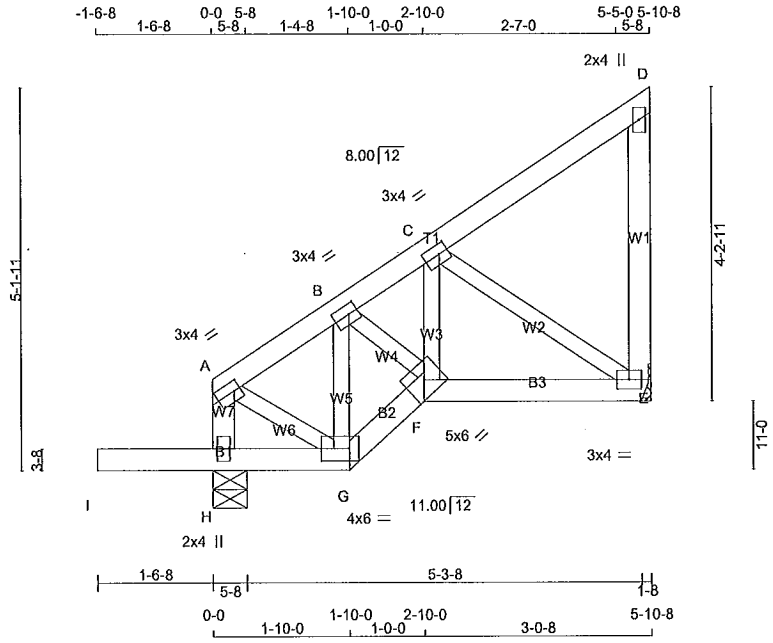

TOTAL WEIGHT = 5 X 30 = 150 lb

[M]

LUMBER
N. L. G. A. RULES

CHORDS	SIZE		LUMBER	DESCR.
H - A	2x4	DRY	No.2	SPF
A - D	2x4	DRY	No.2	SPF
E - D	2x4	DRY	No.2	SPF
I - G	2x4	DRY	No.2	SPF
G - F	2x4	DRY	No.2	SPF
F - E	2x4	DRY	No.2	SPF
ALL WEBS	2x3	DRY	No.2	SPF

DRY: SEASONED LUMBER.

PLATES (table is in inches)

JT	TYPE	PLATES	W	LEN	Y	X
A	TMVW-t	MT20	3.0	4.0	1.50	1.00
B	TMWW-t	MT20	3.0	4.0	1.50	1.50
C	TMWW-t	MT20	3.0	4.0	1.50	1.50
D	TMV+p	MT20	2.0	4.0		
E	BMVW1-t	MT20	3.0	4.0		
F	BBWW-h	MT20	5.0	6.0		
G	BBWW-l	MT20	4.0	6.0	2.00	4.50
H	BMV1+p	MT20	2.0	4.0		

NOTE: Lateral brace(s) shown shall be 1x4 for Part 9 design as per OBC 9.23.13.11, and no less than 2x4 for Part 4 design

REGISTERED PROFESSIONAL ENGINEER
02/17/2018
EDWIN C. FOK
PROVINCE OF ONTARIO

DIMENSIONS, SUPPORTS AND LOADINGS SPECIFIED BY FABRICATOR TO BE VERIFIED BY BUILDING DESIGNER

BEARINGS

JT	FACTORED GROSS REACTION VERT	HORZ	MAXIMUM FACTORED GROSS REACTION DOWN	HORZ	UPLIFT	INPUT BRG IN-SX	REQRD BRG IN-SX
H	452	0	452	0	0	5-8	1-8
E	264	0	264	0	0	HANGER BY OTHERS	
						MIN. SEAT SIZE: 1-8	

UNFACTORED REACTIONS

JT	1ST LCASE COMBINED	MAX./MIN. COMPONENT REACTIONS SNOW	LIVE	PERM.LIVE	WIND	DEAD	SOIL
H	322	197 / 0	0 / 0	0 / 0	0 / 0	125 / 0	0 / 0
E	188	115 / 0	0 / 0	0 / 0	0 / 0	73 / 0	0 / 0

BEARING MATERIAL TO BE SPF NO.2 OR BETTER AT JOINT(S) H

BRACING
TOP CHORD TO BE SHEATHED OR MAX. PURLIN SPACING = 6.25 FT.
MAX. UNBRACED BOTTOM CHORD LENGTH = 10.00 FT OR RIGID CEILING DIRECTLY APPLIED.

ALL PITCH BREAKS AND PERIMETER CORNER JOINTS MUST BE LATERALLY RESTRAINED.

LOADING
TOTAL LOAD CASES: (4)

CHORDS

MEMB. FR-TO	MAX. FACTORED FORCE (LBS)	FACTORED VERT. LOAD (PLF) FROM	TO	LC1 MAX CSI (LC)	MAX. UNBRAC LENGTH
H- A	-223 / 0	0.0	0.0	0.02 (1)	7.81
A- B	-165 / 0	-78.0	-78.0	0.04 (1)	6.25
B- C	-239 / 0	-78.0	-78.0	0.08 (1)	6.25
C- D	-11 / 0	-78.0	-78.0	0.08 (1)	6.25
E- D	-95 / 0	0.0	0.0	0.03 (1)	7.81
I- H	0 / 0	-96.5	-96.5	0.16 (1)	10.00
H- G	0 / 0	-18.5	-18.5	0.16 (1)	10.00
G- F	0 / 173	-18.5	-18.5	0.03 (1)	10.00
F- E	0 / 216	-18.5	-18.5	0.07 (4)	10.00

WEBS

MEMB. FR-TO	MAX. FACTORED FORCE (LBS)	MAX CSI (LC)
A- G	0 / 154	0.03 (1)
G- B	-220 / 0	0.03 (1)
B- F	0 / 130	0.03 (1)
F- C	0 / 63	0.02 (4)
C- E	-259 / 0	0.06 (1)

DESIGN CRITERIA

SPECIFIED LOADS:

TOP CH.	LL	=	21.0	PSF
	DL	=	6.0	PSF
BOT CH.	LL	=	0.0	PSF
	DL	=	7.4	PSF
TOTAL LOAD		=	34.4	PSF

SPACING = 24.0 IN. C/C

THIS TRUSS IS DESIGNED FOR RESIDENTIAL OR SMALL BUILDING REQUIREMENTS OF PART 9, NBCC 2010, NBCC 2015

THIS DESIGN COMPLIES WITH:
- PART 9 OF OBC 2012, OBC 2018
- CSA 086-09, CSA 086-14
- TPIC 2011, TPIC 2014

DESIGN ASSUMPTIONS
-OVERHANG NOT TO BE ALTERED OR CUT OFF.

(55 % OF 23.0 P.S.F. G.S.L. PLUS 8.4 P.S.F. RAIN LOAD) EQUALS 21.0 P.S.F. SPECIFIED ROOF LIVE LOAD

ALLOWABLE DEFL.(LL)= L/360 (0.20")
CALCULATED VERT. DEFL.(LL) = L/ 999 (0.00")
ALLOWABLE DEFL.(TL)= L/360 (0.20")
CALCULATED VERT. DEFL.(TL) = L/ 999 (0.01")

CANTILEVER DEFLECTION:
ALLOWABLE DEFL.(LL)= L/120 (0.19")
CALCULATED VERT. DEFL.(LL) = L/ 999 (0.02")
ALLOWABLE DEFL.(TL)= L/120 (0.19")
CALCULATED VERT. DEFL.(TL) = L/ 588 (0.03")

CSI: TC=0.08/1.00 (B-C:1) , BC=0.16/1.00 (G-H:1) , WB=0.06/1.00 (C-E:1) , SSI=0.12/1.00 (H-I:1)

DOL LUMBER=1.00 NAIL=1.00 LS BEND=1.10 COMP=1.10 SHEAR=1.10 TENS= 1.10

COMPANION LIVE LOAD FACTOR = 1.00

TRUSS PLATE MANUFACTURER IS NOT RESPONSIBLE FOR QUALITY CONTROL IN THE TRUSS MANUFACTURING PLANT .

NAIL VALUES

PLATE	GRIP(DRY) (PSI) MAX	MIN	SHEAR (PLI) MAX	MIN	SECTION (PLI) MAX	MIN
MT20	618	354	1667	788	1987	1656

PLATE PLACEMENT TOL. = 0.250 Inches

PLATE ROTATION TOL. = 5.0 Deg.

JSI GRIP= 0.50 (A) (INPUT = 0.90)
JSI METAL= 0.08 (E) (INPUT = 1.00)

A-18023549

JOB NAME	TRUSS NAME	QUANTITY	PLY	JOB DESC.	DRWG NO.
292597	H6P	3	1	TRUSS DESC.	

Alpa Roof Truss, Maple

Version 8.200 S Jan 6 2018 MiTek Industries, Inc. Sat Feb 17 14:25:22 2018 Page 1
ID:MF8iirlaTok7DlbpT4B71Xys4PG-tDSQkCy5lB79a4enk8_PptJFhqC9_Hilm4_pmXzkDVR

Scale = 1:19.5

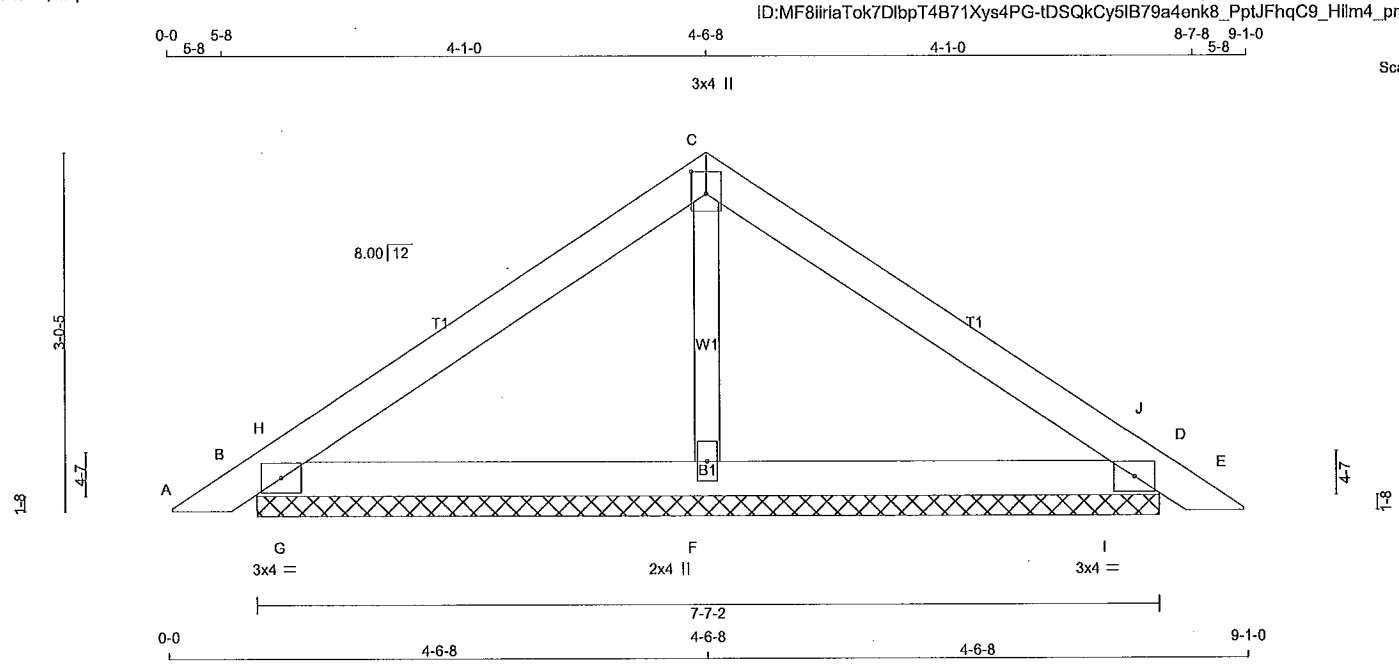

TOTAL WEIGHT = 3 X 23 = 69 lb

LUMBER
N. L. G. A. RULES

CHORDS	SIZE		LUMBER	DESCR.
A - C	2x4	DRY	No.2	SPF
C - E	2x4	DRY	No.2	SPF
B - D	2x4	DRY	No.2	SPF
ALL WEBS	2x3	DRY	No.2	SPF

DRY: SEASONED LUMBER.

S (table is in inches)

	PE	PLATES	W	LEN	Y	X
B	TMB1-I	MT20	3.0	4.0		
C	TTW+p	MT20	3.0	4.0	2.25	1.50
D	TMB1-I	MT20	3.0	4.0		
F	BMW1+w	MT20	2.0	4.0		

NOTE: Lateral brace(s) shown shall be 1x4 for Part 9 design as per OBC 9.23.13.11, and no less than 2x4 for Part 4 design

REGISTERED PROFESSIONAL ENGINEER
02/17/2018
EDWIN C. FOK
PROVINCE OF ONTARIO

DIMENSIONS, SUPPORTS AND LOADINGS SPECIFIED BY FABRICATOR TO BE VERIFIED BY BUILDING DESIGNER

BEARINGS

JT	FACTORED GROSS REACTION VERT	HORZ	MAXIMUM FACTORED GROSS REACTION DOWN	HORZ	UPLIFT	INPUT BRG IN-SX	REQRD BRG IN-SX
B	274	0	274	0	0	7-7-2	9-12
D	274	0	274	0	0	7-7-2	9-12
F	284	0	284	0	0	7-7-2	9-12

UNFACTORED REACTIONS

JT	1ST LCASE COMBINED	MAX./MIN. COMPONENT REACTIONS SNOW	LIVE	PERM.LIVE	WIND	DEAD	SOIL
B	193	130 / 0	0 / 0	0 / 0	0 / 0	63 / 0	0 / 0
D	193	130 / 0	0 / 0	0 / 0	0 / 0	63 / 0	0 / 0
F	205	112 / 0	0 / 0	0 / 0	0 / 0	92 / 0	0 / 0

BEARING MATERIAL TO BE SPF NO.2 OR BETTER AT JOINT(S) B, D, F

BRACING
TOP CHORD TO BE SHEATHED OR MAX. PURLIN SPACING = 6.25 FT.
MAX. UNBRACED BOTTOM CHORD LENGTH = 10.00 FT OR RIGID CEILING DIRECTLY APPLIED.

ALL PITCH BREAKS AND PERIMETER CORNER JOINTS MUST BE LATERALLY RESTRAINED.

LOADING
TOTAL LOAD CASES: (4)

CHORDS

MEMB. FR-TO	MAX. FACTORED FORCE (LBS)	FACTORED VERT. LOAD LC1 (PLF) FROM	TO	MAX CSI (LC)	MAX. UNBRAC LENGTH
A- B	0 / 13	-78.0	-78.0	0.02 (1)	10.00
B- H	-31 / 0	-78.0	-78.0	0.06 (1)	6.25
H- C	-116 / 0	-78.0	-78.0	0.13 (1)	6.25
C- J	-116 / 0	-78.0	-78.0	0.13 (1)	6.25
J- D	-31 / 0	-78.0	-78.0	0.06 (1)	6.25
D- E	0 / 13	-78.0	-78.0	0.02 (1)	10.00
B- G	0 / 91	-18.5	-18.5	0.13 (1)	10.00
G- F	0 / 91	-18.5	-18.5	0.13 (1)	10.00
F- I	0 / 91	-18.5	-18.5	0.13 (1)	10.00
I- D	0 / 91	-18.5	-18.5	0.13 (1)	10.00

WEBS

MEMB. FR-TO	MAX. FACTORED FORCE (LBS)	MAX CSI (LC)
F- C	-126 / 0	0.02 (1)
G- H	-293 / 0	0.00 (1)
I- J	-293 / 0	0.00 (1)

[M]

DESIGN CRITERIA

SPECIFIED LOADS:

TOP CH.	LL	=	21.0	PSF
	DL	=	6.0	PSF
BOT CH.	LL	=	0.0	PSF
	DL	=	7.4	PSF
TOTAL LOAD		=	34.4	PSF

SPACING = 24.0 IN. C/C

THIS TRUSS IS DESIGNED FOR RESIDENTIAL OR SMALL BUILDING REQUIREMENTS OF PART 9, NBCC 2010, NBCC 2015

THIS DESIGN COMPLIES WITH:
- PART 9 OF OBC 2012, OBC 2018
- CSA 086-09, CSA 086-14
- TPIC 2011, TPIC 2014

(55 % OF 23.0 P.S.F. G.S.L. PLUS 8.4 P.S.F. RAIN LOAD) EQUALS 21.0 P.S.F. SPECIFIED ROOF LIVE LOAD

CSI: TC=0.13/1.00 (C-J:1) , BC=0.13/1.00 (F-I:1) , WB=0.02/1.00 (C-F:1) , SSI=0.22/1.00 (B-G:1)

DOL LUMBER=1.00 NAIL=1.00 LS BEND=1.10 COMP=1.10 SHEAR=1.10 TENS= 1.10

COMPANION LIVE LOAD FACTOR = 1.00

TRUSS PLATE MANUFACTURER IS NOT RESPONSIBLE FOR QUALITY CONTROL IN THE TRUSS MANUFACTURING PLANT .

NAIL VALUES

PLATE	GRIP(DRY) (PSI) MAX	MIN	SHEAR (PLI) MAX	MIN	SECTION (PLI) MAX	MIN
MT20	618	354	1667	788	1987	1656

PLATE PLACEMENT TOL. = 0.250 Inches

PLATE ROTATION TOL. = 5.0 Deg.

JSI GRIP= 0.23 (B) (INPUT = 0.90)
JSI METAL= 0.06 (D) (INPUT = 1.00)

A-18023527

JOB NAME	TRUSS NAME	QUANTITY	PLY	JOB DESC.	DRWG NO.
292597	H5P	1	1	TRUSS DESC.	

Alpa Roof Truss, Maple

Version 8.200 S Jan 6 2018 MiTek Industries, Inc. Sat Feb 17 14:25:17 2018 Page 1
ID:MF8liriaTok7DlbpT4B71Xys4PG-WFfXhVuywfVsUJmqybOE6pcPTpWaJ0X0cpH25JzkDVW

Scale = 1:17.5

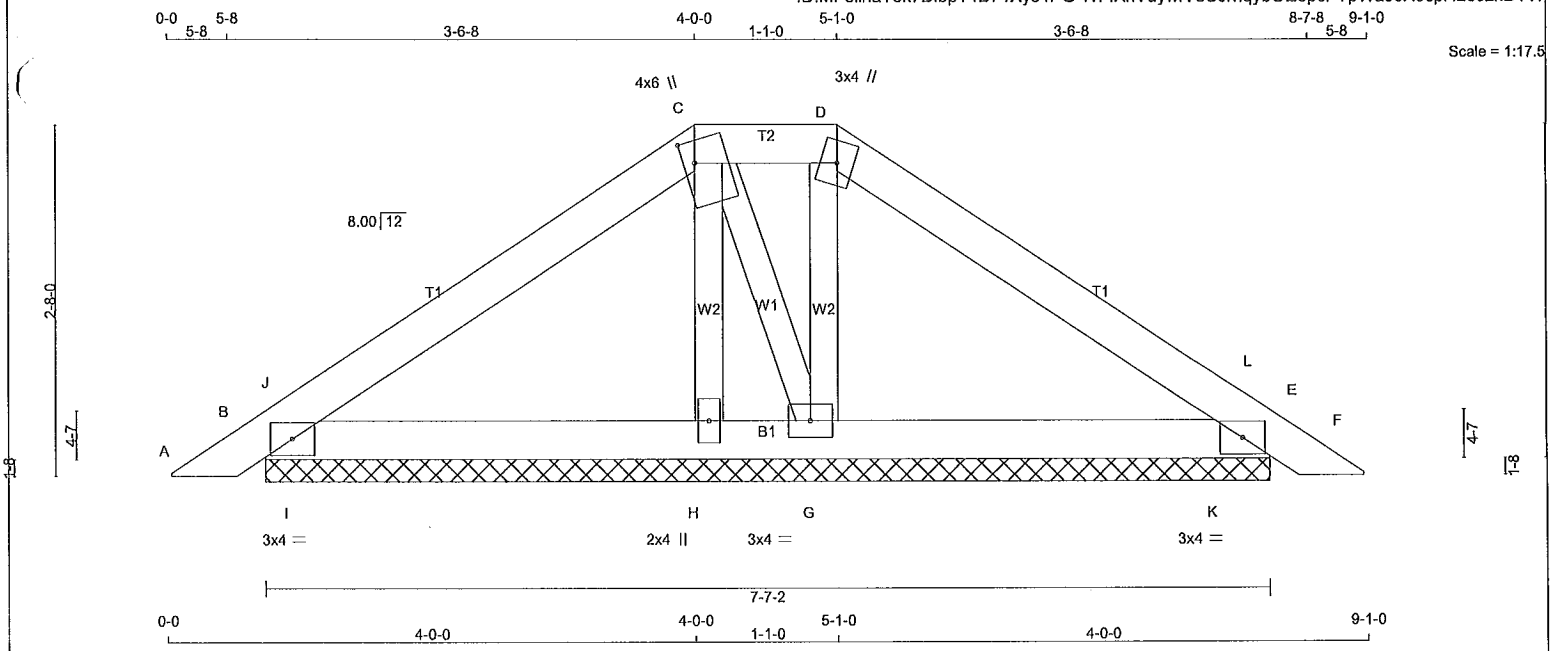

TOTAL WEIGHT = 26 lb

LUMBER
N. L. G. A. RULES

CHORDS	SIZE		LUMBER	DESCR.
A - C	2x4	DRY	No.2	SPF
C - D	2x4	DRY	No.2	SPF
D - F	2x4	DRY	No.2	SPF
B - E	2x4	DRY	No.2	SPF
ALL WEBS	2x3	DRY	No.2	SPF

DRY: SEASONED LUMBER.

.S (table is in inches)

JT	TYPE	PLATES	W	LEN	Y	X
B	TMB1-I	MT20	3.0	4.0		
C	TTWW+m	MT20	4.0	6.0	2.00	1.00
D	TTW+m	MT20	3.0	4.0		
E	TMB1-I	MT20	3.0	4.0		
G	BMWW1-t	MT20	3.0	4.0		
H	BMW1+w	MT20	2.0	4.0		

NOTE: Lateral brace(s) shown shall be 1x4 for Part 9 design as per OBC 9.23.13.11, and no less than 2x4 for Part 4 design

REGISTERED PROFESSIONAL ENGINEER
02/17/2018
EDWIN C. FOK
PROVINCE OF ONTARIO

DIMENSIONS, SUPPORTS AND LOADINGS SPECIFIED BY FABRICATOR TO BE VERIFIED BY BUILDING DESIGNER

BEARINGS

JT	FACTORED GROSS REACTION VERT	HORZ	MAXIMUM FACTORED GROSS REACTION DOWN	HORZ	UPLIFT	INPUT BRG IN-SX	REQRD BRG IN-SX
B	244	0	244	0	0	7-7-2	4-15
E	234	0	234	0	0	7-7-2	4-15
H	134	0	134	0	0	7-7-2	4-15
G	220	0	220	0	0	7-7-2	4-15

UNFACTORED REACTIONS

JT	1ST LCASE COMBINED	MAX./MIN. COMPONENT REACTIONS SNOW	LIVE	PERM.LIVE	WIND	DEAD	SOIL
B	172	115 / 0	0 / 0	0 / 0	0 / 0	58 / 0	0 / 0
E	166	109 / 0	0 / 0	0 / 0	0 / 0	56 / 0	0 / 0
H	97	51 / 0	0 / 0	0 / 0	0 / 0	46 / 0	0 / 0
G	157	98 / 0	0 / 0	0 / 0	0 / 0	59 / 0	0 / 0

BEARING MATERIAL TO BE SPF NO.2 OR BETTER AT JOINT(S) B, E, H, G

BRACING
TOP CHORD TO BE SHEATHED OR MAX. PURLIN SPACING = 6.25 FT.
MAX. UNBRACED BOTTOM CHORD LENGTH = 10.00 FT OR RIGID CEILING DIRECTLY APPLIED.

ALL PITCH BREAKS AND PERIMETER CORNER JOINTS MUST BE LATERALLY RESTRAINED.

LOADING
TOTAL LOAD CASES: (4)

CHORDS MEMB. FR-TO	MAX. FORCE (LBS)	FACTORED VERT. LOAD (PLF) FROM	TO	LC1	MAX CSI (LC)	MAX. UNBRAC LENGTH	WEBS MEMB. FR-TO	MAX. FORCE (LBS)	MAX CSI (LC)
A- B	0 / 13	-78.0	-78.0	0.02 (1)	10.00		H- C	-65 / 0	0.01 (1)
B- J	-42 / 0	-78.0	-78.0	0.03 (1)	6.25		C- G	-41 / 0	0.01 (1)
J- C	-88 / 0	-78.0	-78.0	0.10 (1)	6.25		G- D	-112 / 0	0.02 (1)
C- D	-50 / 0	-78.0	-78.0	0.02 (1)	6.25		I- J	-200 / 0	0.00 (1)
D- L	-71 / 0	-78.0	-78.0	0.10 (1)	6.25		K- L	-202 / 0	0.00 (1)
L- E	-30 / 0	-78.0	-78.0	0.03 (1)	6.25				
E- F	0 / 13	-78.0	-78.0	0.02 (1)	10.00				
B- I	0 / 70	-18.5	-18.5	0.09 (1)	10.00				
I- H	0 / 70	-18.5	-18.5	0.09 (1)	10.00				
H- G	0 / 67	-18.5	-18.5	0.07 (1)	10.00				
G- K	0 / 55	-18.5	-18.5	0.09 (1)	10.00				
K- E	0 / 55	-18.5	-18.5	0.09 (1)	10.00				

[M]

DESIGN CRITERIA

SPECIFIED LOADS:

TOP CH.	LL	=	21.0	PSF
	DL	=	6.0	PSF
BOT CH.	LL	=	0.0	PSF
	DL	=	7.4	PSF
TOTAL LOAD		=	34.4	PSF

SPACING = 24.0 IN. C/C

LOADING IN FLAT SECTION BASED ON A SLOPE OF 2.00/12 MINIMUM

THIS TRUSS IS DESIGNED FOR RESIDENTIAL OR SMALL BUILDING REQUIREMENTS OF PART 9, NBCC 2010, NBCC 2015

THIS DESIGN COMPLIES WITH:
- PART 9 OF OBC 2012, OBC 2018
- CSA 086-09, CSA 086-14
- TPIC 2011, TPIC 2014

(55 % OF 23.0 P.S.F. G.S.L. PLUS 8.4 P.S.F. RAIN LOAD) EQUALS 21.0 P.S.F. SPECIFIED ROOF LIVE LOAD

CSI: TC=0.10/1.00 (C-J:1) , BC=0.09/1.00 (B-I:1) , WB=0.02/1.00 (D-G:1) , SSI=0.16/1.00 (E-K:1)

DOL LUMBER=1.00 NAIL=1.00 LS BEND=1.10 COMP=1.10 SHEAR=1.10 TENS= 1.10

COMPANION LIVE LOAD FACTOR = 1.00

TRUSS PLATE MANUFACTURER IS NOT RESPONSIBLE FOR QUALITY CONTROL IN THE TRUSS MANUFACTURING PLANT .

NAIL VALUES

PLATE	GRIP(DRY) (PSI) MAX	MIN	SHEAR (PLI) MAX	MIN	SECTION (PLI) MAX	MIN
MT20	618	354	1667	788	1987	1656

PLATE PLACEMENT TOL. = 0.250 Inches

PLATE ROTATION TOL. = 5.0 Deg.

JSI GRIP= 0.20 (B) (INPUT = 0.90)
JSI METAL= 0.05 (B) (INPUT = 1.00)

A-18023526

JOB NAME	TRUSS NAME	QUANTITY	PLY	JOB DESC.	DRWG NO.
292597	H4	6	1	TRUSS DESC.	

Alpa Roof Truss, Maple

Version 8.200 S Jan 6 2018 MiTek Industries, Inc. Sat Feb 17 14:25:10 2018 Page 1

ID:MF8iiriaTok7DlbpT4B71Xys4PG-EvkuD6pZaVcs8EkU1dmbKLp7k?20Al__?D4BLDzkDVd

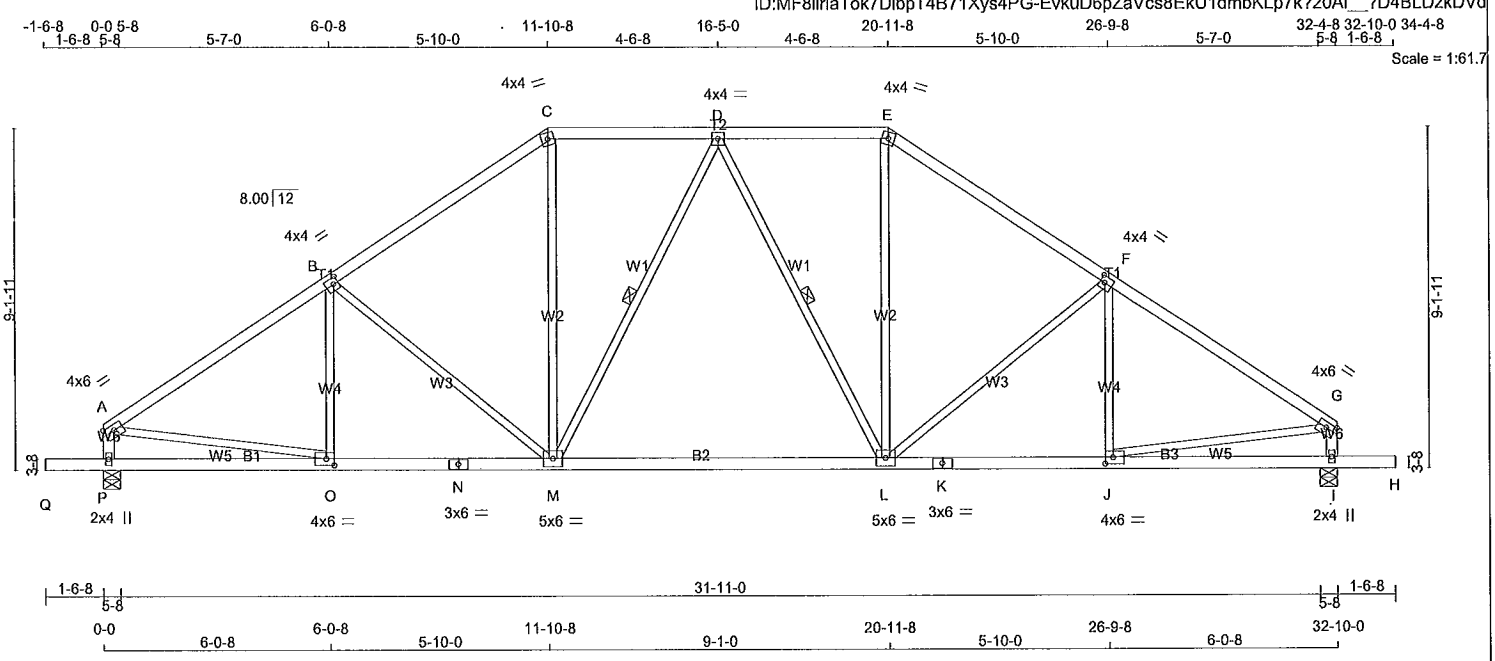

TOTAL WEIGHT = 6 X 145 = 868 lb

[M][F]

LUMBER

N. L. G. A. RULES

CHORDS	SIZE		LUMBER	DESCR.
A - C	2x4	DRY	No.2	SPF
C - E	2x4	DRY	No.2	SPF
E - G	2x4	DRY	No.2	SPF
P - A	2x4	DRY	No.2	SPF
I - G	2x4	DRY	No.2	SPF
Q - N	2x4	DRY	No.2	SPF
N - K	2x4	DRY	No.2	SPF
K - H	2x4	DRY	No.2	SPF
WEBS T	2x3	DRY	No.2	SPF

DRY: SEASONED LUMBER.

PLATES (table is in inches)

JT	TYPE	PLATES	W	LEN	Y	X
A	TMVW-t	MT20	4.0	6.0	1.75	Edge
B	TMWW-t	MT20	4.0	4.0	2.00	1.50
C	TTW-m	MT20	4.0	4.0		
D	TMWW-t	MT20	4.0	4.0		
E	TTW-m	MT20	4.0	4.0		
F	TMWW-t	MT20	4.0	4.0	2.00	1.50
G	TMVW-t	MT20	4.0	6.0	1.75	Edge
I	BMV1+p	MT20	2.0	4.0		
J	BMWW-t	MT20	4.0	6.0	2.00	2.50
K	BS-t	MT20	3.0	6.0		
L	BMWWW-t	MT20	5.0	6.0		
M	BMWWW-t	MT20	5.0	6.0		
N	BS-t	MT20	3.0	6.0		
O	BMWW-t	MT20	4.0	6.0	2.00	2.50
P	BMV1+p	MT20	2.0	4.0		

Edge - INDICATES REFERENCE CORNER OF PLATE TOUCHES EDGE OF CHORD.

NOTE: Lateral brace(s) shown shall be 1x4 for Part 9 design as per OBC 9.23.13.11, and no less than 2x4 for Part 4 design

REGISTERED PROFESSIONAL ENGINEER
02/17/2018
EDWIN C. FOK
PROVINCE OF ONTARIO

DIMENSIONS, SUPPORTS AND LOADINGS SPECIFIED BY FABRICATOR TO BE VERIFIED BY BUILDING DESIGNER

BEARINGS

JT	FACTORED GROSS REACTION VERT	HORZ	MAXIMUM FACTORED GROSS REACTION DOWN	HORZ	UPLIFT	INPUT BRG IN-SX	REQRD BRG IN-SX
P	1766	0	1766	0	0	5-8	2-10
I	1766	0	1766	0	0	5-8	2-10

UNFACTORED REACTIONS

JT	1ST LCASE COMBINED	MAX./MIN. COMPONENT REACTIONS SNOW	LIVE	PERM.LIVE	WIND	DEAD	SOIL
P	1262	754 / 0	0 / 0	0 / 0	0 / 0	509 / 0	0 / 0
I	1262	754 / 0	0 / 0	0 / 0	0 / 0	509 / 0	0 / 0

BEARING MATERIAL TO BE SPF NO.2 OR BETTER AT JOINT(S) P, I

BRACING

FOR SECTION C-E, MAX. PURLIN SPACING = 2.00 FT.
FOR OTHER SECTIONS, TOP CHORD TO BE SHEATHED OR MAX. PURLIN SPACING = 4.34 FT.
MAX. UNBRACED BOTTOM CHORD LENGTH = 10.00 FT OR RIGID CEILING DIRECTLY APPLIED.

ALL PITCH BREAKS AND PERIMETER CORNER JOINTS MUST BE LATERALLY RESTRAINED.

1 LATERAL BRACE(S) AT 1/ 2 LENGTH OF D-M, D-L.

END VERTICAL(S) MUST BE SHEATHED OR HAVE BRACES AS INDICATED IN THE MAX. UNBRACED LENGTH COLUMN OF THE TABLE BELOW

LOADING

TOTAL LOAD CASES: (4)

CHORDS

MEMB. FR-TO	MAX. FACTORED FORCE (LBS)	FACTORED VERT. LOAD LC1 (PLF) FROM	TO	MAX CSI (LC)	MAX. UNBRAC LENGTH
A- B	-2013 / 0	-78.0	-78.0	0.45 (1)	4.34
B- C	-1731 / 0	-78.0	-78.0	0.41 (1)	4.65
C- D	-1419 / 0	-85.5	-85.5	0.24 (1)	2.00
D- E	-1419 / 0	-85.5	-85.5	0.24 (1)	2.00
E- F	-1731 / 0	-78.0	-78.0	0.41 (1)	4.65
F- G	-2013 / 0	-78.0	-78.0	0.45 (1)	4.34
P- A	-1569 / 0	0.0	0.0	0.16 (1)	6.58
I- G	-1569 / 0	0.0	0.0	0.16 (1)	6.58
Q- P	0 / 0	-96.5	-96.5	0.16 (1)	10.00
P- O	0 / 0	-18.5	-18.5	0.14 (4)	10.00
O- N	0 / 1700	-18.5	-18.5	0.41 (1)	10.00
N- M	0 / 1700	-18.5	-18.5	0.41 (1)	10.00
M- L	0 / 1537	-18.5	-18.5	0.39 (4)	10.00
L- K	0 / 1700	-18.5	-18.5	0.41 (1)	10.00
K- J	0 / 1700	-18.5	-18.5	0.41 (1)	10.00
J- I	0 / 0	-18.5	-18.5	0.14 (4)	10.00
I- H	0 / 0	-96.5	-96.5	0.16 (1)	10.00

WEBS

MEMB. FR-TO	MAX. FACTORED FORCE (LBS)	MAX CSI (LC)
O- B	-146 / 22	0.06 (1)
B- M	-374 / 0	0.45 (1)
M- C	0 / 620	0.14 (1)
M- D	-262 / 0	0.19 (1)
D- L	-262 / 0	0.19 (1)
L- E	0 / 620	0.14 (1)
L- F	-374 / 0	0.45 (1)
J- F	-146 / 22	0.06 (1)
A- O	0 / 1719	0.39 (1)
J- G	0 / 1719	0.39 (1)

DESIGN CRITERIA

SPECIFIED LOADS:

TOP CH.	LL	=	21.0	PSF
	DL	=	6.0	PSF
BOT CH.	LL	=	0.0	PSF
	DL	=	7.4	PSF
TOTAL LOAD		=	34.4	PSF

SPACING = 24.0 IN. C/C

LOADING IN FLAT SECTION BASED ON PIGGYBACK TRUSS WITH SLOPES OF 6.00/12 AND -6.00/12 AND RESPECTIVE WALL HEIGHTS OF 0-0 AND 0-0 AND AN ADDITIONAL DEAD LOAD OF 3.0 P.S.F.

THIS TRUSS IS DESIGNED FOR RESIDENTIAL OR SMALL BUILDING REQUIREMENTS OF PART 9, NBCC 2010, NBCC 2015

THIS DESIGN COMPLIES WITH:
- PART 9 OF OBC 2012, OBC 2018
- CSA 086-09, CSA 086-14
- TPIC 2011, TPIC 2014

(55 % OF 23.0 P.S.F. G.S.L. PLUS 8.4 P.S.F. RAIN LOAD) EQUALS 21.0 P.S.F. SPECIFIED ROOF LIVE LOAD

ALLOWABLE DEFL.(LL)= L/360 (1.09")
CALCULATED VERT. DEFL.(LL) = L/ 999 (0.07")
ALLOWABLE DEFL.(TL)= L/360 (1.09")
CALCULATED VERT. DEFL.(TL) = L/ 999 (0.24")

CANTILEVER DEFLECTION:
ALLOWABLE DEFL.(LL)= L/120 (0.19")
CALCULATED VERT. DEFL.(LL) = L/ 999 (0.01")
ALLOWABLE DEFL.(TL)= L/120 (0.19")
CALCULATED VERT. DEFL.(TL) = L/ 999 (0.01")

CSI: TC=0.45/1.00 (F-G:1) , BC=0.41/1.00 (J-L:1) , WB=0.45/1.00 (F-L:1) , SSI=0.19/1.00 (F-G:1)

DOL LUMBER=1.00 NAIL=1.00 LS BEND=1.10 COMP=1.10 SHEAR=1.10 TENS= 1.10

COMPANION LIVE LOAD FACTOR = 1.00

TRUSS PLATE MANUFACTURER IS NOT RESPONSIBLE FOR QUALITY CONTROL IN THE TRUSS MANUFACTURING PLANT .

NAIL VALUES

PLATE	GRIP(DRY) (PSI) MAX	MIN	SHEAR (PLI) MAX	MIN	SECTION (PLI) MAX	MIN
MT20	618	354	1667	788	1987	1656

PLATE PLACEMENT TOL. = 0.250 Inches

PLATE ROTATION TOL. = 5.0 Deg.

JSI GRIP= 0.89 (O) (INPUT = 0.90)
JSI METAL= 0.54 (K) (INPUT = 1.00)

A-18023525

STRACON ENGINEERING INC.

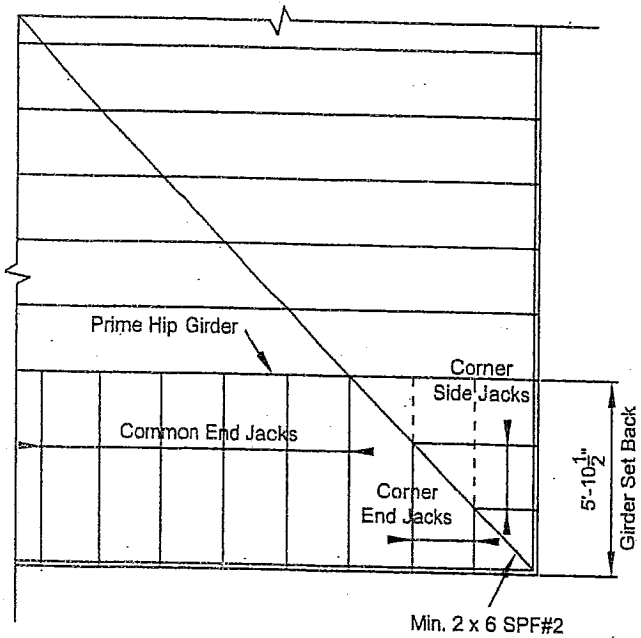

45° Hip End

LUMBER SPECIFICATION

TOP CHORD : 2 x 4 SPF#2
BOTTOM CHORD : 2 x 4 SPF#2
WEBS : 2 x 3 SPF#2
UNLESS OTHERWISE SHOWN

DESIGN LOAD

TOP CHORD SNOW LOAD	:	40.5 P.S.F.
TOP CHORD DEAD LOAD	:	3.0 P.S.F.
BOTTOM CHORD LIVE LOAD	:	0.0 P.S.F.
BOTTOM CHORD DEAD LOAD	:	7.0 P.S.F.
TOTAL LOAD	:	50.5 P.S.F

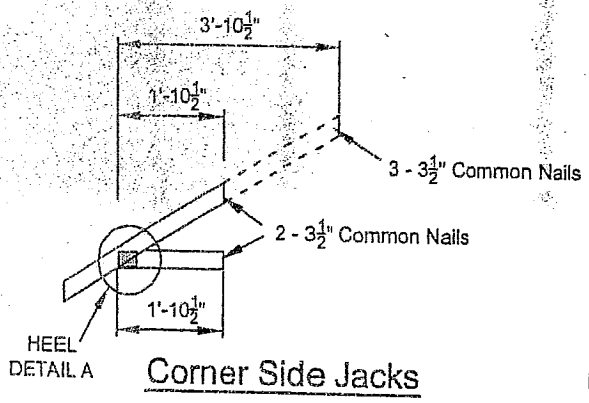

Corner Side Jacks

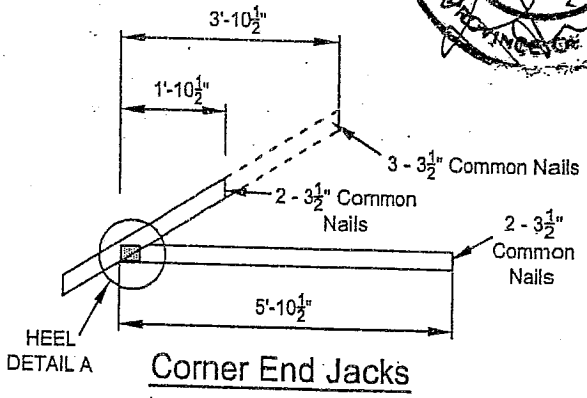

Corner End Jacks

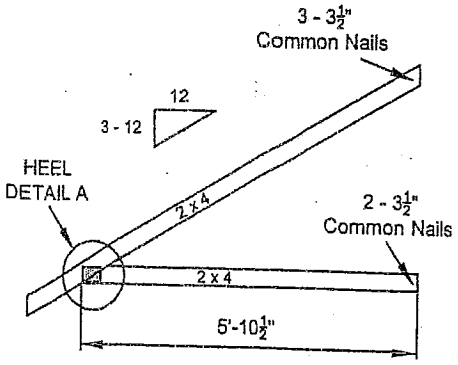

Common End Jacks

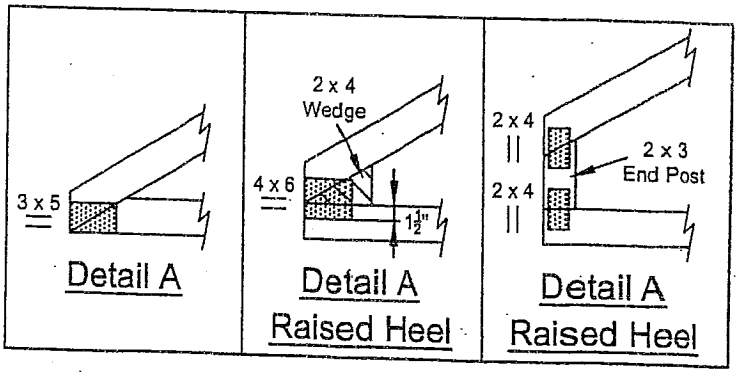

NOTE: DESIGN CONFORMS TO PART 9, O.B.C. 2012 (L.S.D. DESIGN)

CS-51008

STRACON ENGINEERING INC.

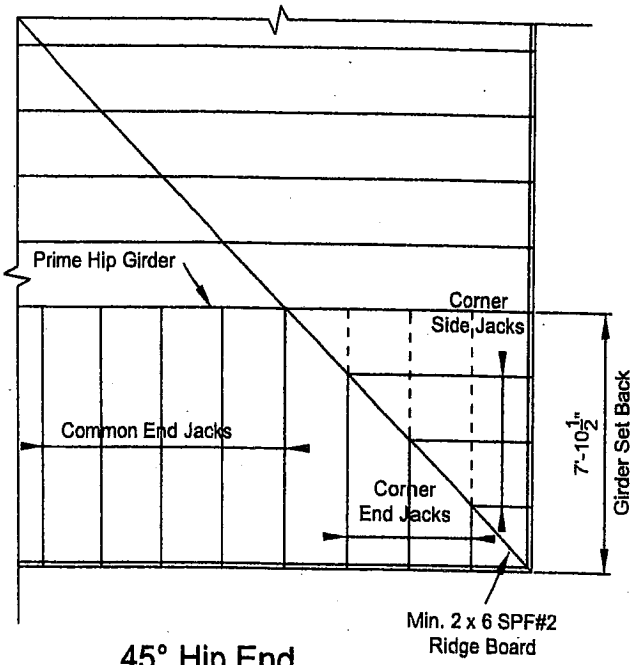

45° Hip End

LUMBER SPECIFICATION

TOP CHORD : 2 x 4 SPF#2
BOTTOM CHORD : 2 x 4 SPF#2
WEBS : 2 x 3 SPF#2
UNLESS OTHERWISE SHOWN

DESIGN LOAD

TOP CHORD SNOW LOAD	:	34.8 P.S.F.
TOP CHORD DEAD LOAD	:	3.0 P.S.F.
BOTTOM CHORD LIVE LOAD	:	0.0 P.S.F.
BOTTOM CHORD DEAD LOAD	:	7.0 P.S.F.
TOTAL LOAD	:	44.8 P.S.F

REGISTERED PROFESSIONAL ENGINEER
Sept 07
E. FOK
PROVINCE OF ONTARIO

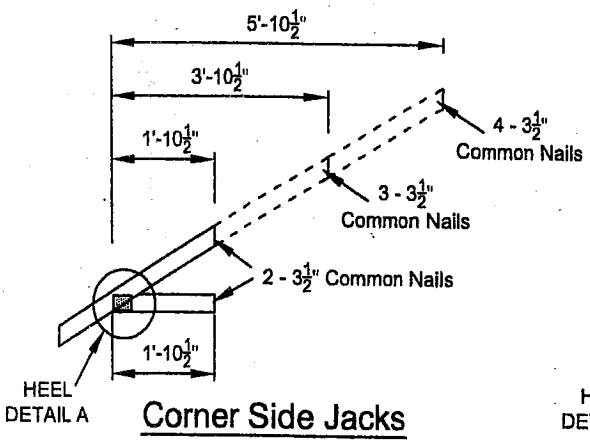

Corner Side Jacks

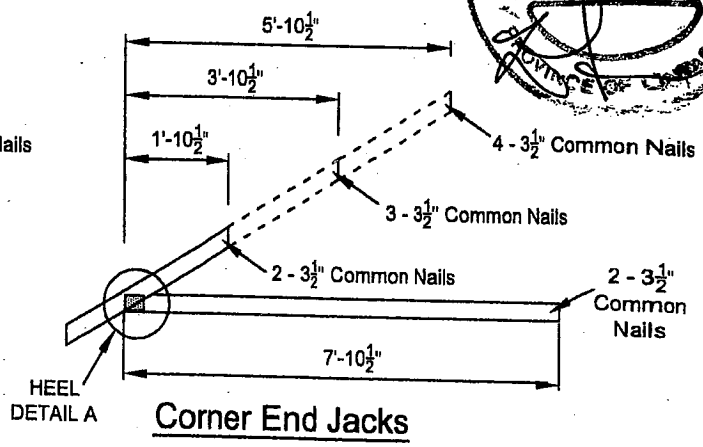

Corner End Jacks

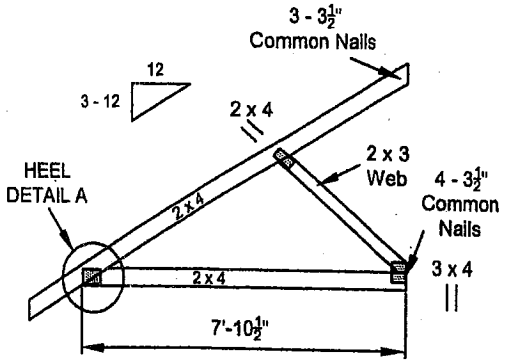

Common End Jacks

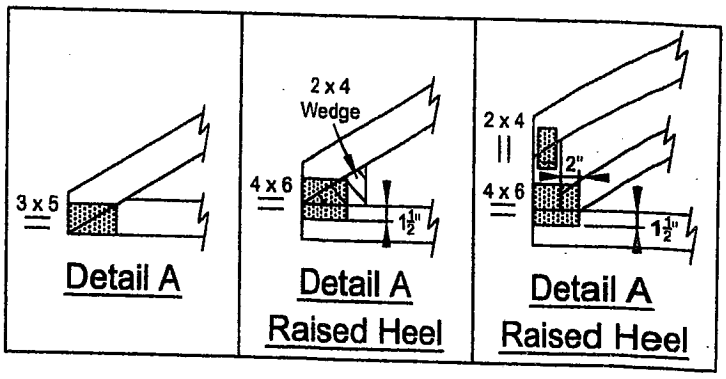

NOTE: DESIGN CONFORMS TO PART 9, O.B.C. 2012 (L.S.D. DESIGN)

CS-71008N

LUS – Double Shear Joist Hangers

SIMPSON Strong-Tie®

All LUS hangers have double shear nailing. This patented innovation distributes the load through two points on each joist nail for greater strength. It also allows the use of fewer nails, faster installation and the use of common nails for all connections.

Material: 18 gauge

Finish: G90 galvanized

Design:

- Factored resistances are in accordance with CSA O86-14.
- Uplift resistances have been increased 15%. No further increase is permitted.
- Wood shear is not considered in the factored resistances given. The specifier must ensure that the joist and header capacities are capable of withstanding these loads.

Installation:

- Use all specified fasteners.
- Nails: 16d = 0.162" dia. x 3½" long common wire, 10d = 0.148" x 3" long common wire.
- Double shear nails must be driven at an angle through the joist or truss into the header to achieve the table loads.
- Not designed for welded or nailer applications.

Options:

- These hangers cannot be modified

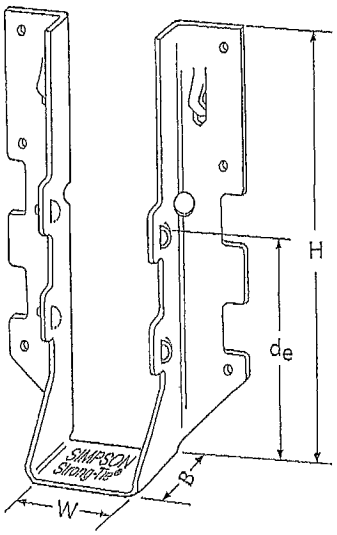

LUS28

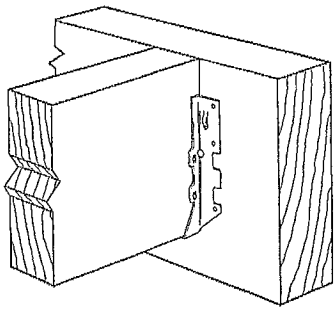

Typical LUS Installation

Model No.	Ga.	Dimensions (in.)				Fasteners		Factored Resistance (lb.)			
								D.Fir-L		S-P-F	
		W	H	B	d_e[1]	Face	Joist	Uplift (K_D=1.15)	Normal (K_D=1.00)	Uplift (K_D=1.15)	Normal (K_D=1.00)
LUS24	18	1 9/16	3 1/8	1 3/4	1 15/16	(4) 10d	(2) 10d	710	1630	645	1155
LUS24-2	18	3 1/8	3 1/8	2	1 13/16	(4) 16d	(2) 16d	835	2020	590	1435
LUS26	18	1 9/16	4 3/4	1 3/4	3 5/8	(4) 10d	(4) 10d	1420	2170	1290	1630
LUS26-2	18	3 1/8	4 7/8	2	4	(4) 16d	(4) 16d	1720	2595	1545	1920
LUS26-3	18	4 5/8	4 3/16	2	3 1/4	(4) 16d	(4) 16d	1720	2595	1545	2340
LUS28	18	1 9/16	6 5/8	1 3/4	3 3/4	(6) 10d	(6) 10d	1420	2520	1290	1790
LUS28-2	18	3 1/8	7	2	4	(6) 16d	(4) 16d	1720	3325	1545	2575
LUS28-3	18	4 5/8	6 1/4	2	3 1/4	(6) 16d	(4) 16d	1720	3325	1545	2375
LUS210	18	1 9/16	7 13/16	1 3/4	3 7/8	(8) 10d	(4) 10d	1420	2785	1290	2210
LUS210-2	18	3 1/8	9	2	6	(8) 16d	(6) 16d	2580	4500	2320	3195
LUS210-3	18	4 5/8	8 3/16	2	5 1/4	(8) 16d	(6) 16d	2580	3345	2320	2375

1. d_e is the distance from the seat of the hanger to the highest joist nail.

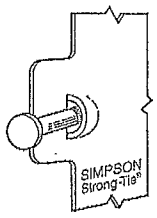

Dome Double Shear Nailing prevents tabs breaking off (available on some models).

U.S. Patent 5,603,580

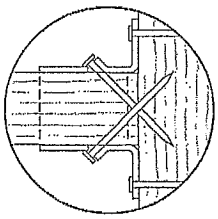

Double Shear Nailing Top View.

LICENSED PROFESSIONAL ENGINEER
4/5/2017
B. D. BUNTING
PROVINCE OF ONTARIO

LIMIT STATES DESIGN

This technical bulletin is effective until June 30, 2019, and reflects information available as of March 1, 2017. This information is updated periodically and should not be relied upon after June 30, 2019. Contact Simpson Strong-Tie for current information and limited warranty or see strongtie.com.

© 2017 Simpson Strong-Tie Company Inc.

(800) 999-5099
strongtie.com

TECHNICAL BULLETIN

HHUS – Double Shear Joist Hangers

SIMPSON Strong-Tie®

All HHUS hangers have double shear nailing. This patented innovation distributes the load through two points on each joist nail for greater strength. It also allows the use of fewer nails, faster installation and the use of common nails for all connections. Do not bend or remove tabs.

Material: 14 gauge

Finish: G90 galvanized

Design:

- Factored resistances are in accordance with CSA O86-14.
- Uplift resistances have been increased 15%. No further increase is permitted.
- Wood shear is not considered in the factored resistances given. The specifier must ensure that the joist and header capacities are capable of withstanding these loads.

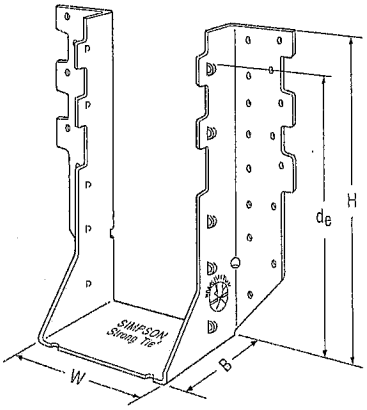

HHUS410

Installation:

- Use all specified fasteners
- Nails: 16d = 0.162" dia. x 3½" long common wire
- Double shear nails must be driven at an angle through the joist or truss into the header to achieve the table loads
- Not designed for welded or nailer applications

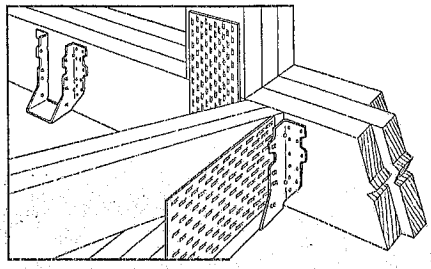

Typical HHUS Installation (Truss Designer to provide fastener quantity for connecting multiple members together)

Options:

- See current catalogue for options

Model No.	Ga.	Dimensions (in.)				Fasteners		Factored Resistance (lb.)			
								D.Fir-L		S-P-F	
		W	H	B	d_e[1]	Face	Joist	Uplift (K_D=1.15)	Normal (K_D=1.00)	Uplift (K_D=1.15)	Normal (K_D=1.00)
HHUS26-2	14	3 5/16	5 13/16	3	3 15/16	(14) 16d	(6) 16d	2850	7335	2065	5205
HHUS28-2	14	3 5/16	7 7/32	3	6 5/32	(22) 16d	(8) 16d	3765	8940	2675	6345
HHUS210-2	14	3 5/16	9 3/32	3	8	(30) 16d	(10) 16d	4745	9660	4310	7000
HHUS210-3	14	4 11/16	9	3	7 15/16	(30) 16d	(10) 16d	4745	10545	4310	7485
HHUS210-4	14	6 1/8	8 29/32	3	7 27/32	(30) 16d	(10) 16d	4745	10545	4310	7485
HHUS46	14	3 5/8	5 13/32	3	3 15/16	(14) 16d	(6) 16d	2540	7335	2065	5205
HHUS48	14	3 5/8	7 1/8	3	6 1/8	(22) 16d	(8) 16d	3765	8945	2267	6345
HHUS410	14	3 5/8	9	3	8	(30) 16d	(10) 16d	4745	9855	4310	7000
HHUS5.50/10	14	5 1/2	9	3	8	(30) 16d	(10) 16d	4745	10545	4310	7485
HHUS7.25/10	14	7 1/4	9	3 5/16	7 29/32	(30) 16d	(10) 16d	4745	10770	4310	7650

1. d_e is the distance from the seat of the hanger to the highest joist nail.

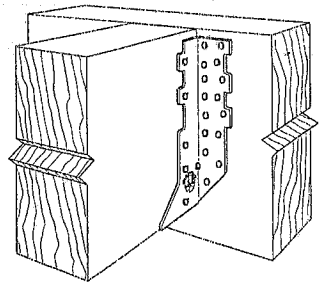

Typical HHUS Installation

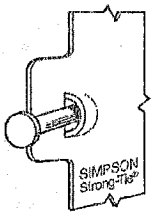

Dome Double Shear Nailing prevents tabs breaking off (available on some models).

U.S. Patent 5,603,580

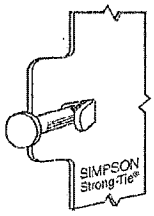

Double Shear Nailing Side View. Do not bend tab back.

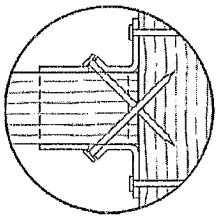

Double Shear Nailing Top View.

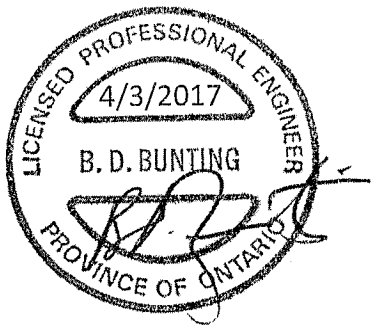

LIMIT STATES DESIGN

This technical bulletin is effective until June 30, 2019, and reflects information available as of March 1, 2017. This information is updated periodically and should not be relied upon after June 30, 2019. Contact Simpson Strong-Tie for current information and limited warranty or see strongtie.com.

© 2017 Simpson Strong-Tie Company Inc.

T-SPECHHUS17 3/17 exp. 6/19

(800) 999-5099
strongtie.com

TC – Truss Connectors

SIMPSON Strong-Tie®

The TC truss connector is an ideal connector for scissor trusses and can allow horizontal movement up to 1¼". The TC also attaches plated trusses to top plates or sill plates to resist uplift forces. Typically used on one or both ends of truss as determined by the building designer.

Material: 16 gauge

Finish: G90 galvanized

Design: Factored resistances are in accordance with CSA 086-14

Installation:

- Use all specified fasteners.
- Nails: 10d = 0.148" dia. x 3" long common wire, 10d x 1½ = 0.148" dia. x 1½" long.
- Drive 10d nails into the truss at the inside end of the slotted holes (inside end is towards the centre of the truss) and clinch on the back side. Do not seat these nails into the truss–allow room under the nail head for movement of the truss with respect to the wall.

Optional TC Installation:

- Bend one flange up 90°. Drive specified nails into the top and face of the top plates or install Titen® screws into the top and face of masonry wall. See optional load tables and installation details.

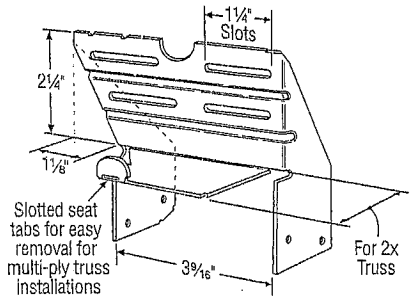

TC24
U.S. Patent 4,932,173

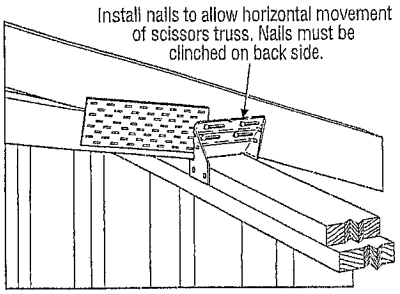

Typical TC24 Installation

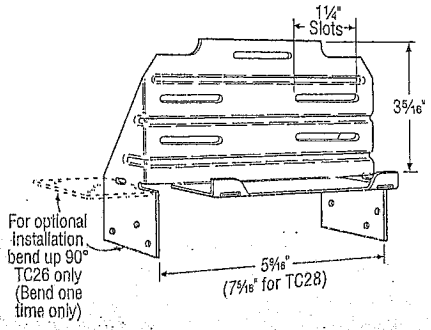

TC26
(TC28 Similar)

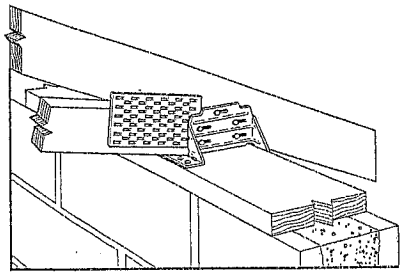

Optional TC26 Installation for Grouted Concrete Block using a Wood Nailer
(8", 10", 12" Wall Installation Similar)

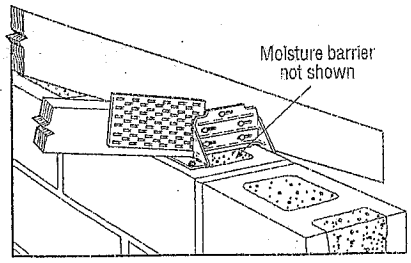

Optional TC26 Installation for Grouted Concrete Block using Titen Screws

Model No.	Fasteners		Factored Resistance	
	Truss	Wall Plates	D.Fir-L	S-P-F
			Uplift (K_D=1.15)	Uplift (K_D=1.15)
			lb.	lb.
TC24	(4) 10d	(4) 10d	605	430
TC26	(5) 10d	(6) 10d	1015	720
TC28	(5) 10d	(6) 10d	1015	720

1. Factored resistances have been increased 15% for earthquake or wind loading; no further increase allowed; reduce where other loads govern.
2. Grout strength is 15 MPa minimum.
3. Optional TC26 installation with 10d nails requires minimum 3" top plate thickness.
4. TC26 fastened to grouted concrete block with (6) – ⅜" x 2¼" Titen screws has a factored uplift resistance of 275 lb.

Optional TC Installation Table

Model No.	Fasteners		Factored Resistance	
	Truss	Wall Plates	D.Fir-L	S-P-F
			Uplift (K_D=1.15)	Uplift (K_D=1.15)
			lb.	lb.
TC26	(5) 10d	(6) 10d x 1½"	810	660
	(5) 10d	(6) 10d	930	660

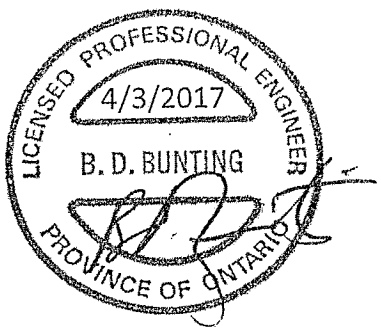

LIMIT STATES DESIGN

This technical bulletin is effective until June 30, 2019, and reflects information available as of March 1, 2017. This information is updated periodically and should not be relied upon after June 30, 2019. Contact Simpson Strong-Tie for current information and limited warranty or see strongtie.com.

© 2017 Simpson Strong-Tie Company Inc.

(800) 999-5099
strongtie.com